2013 GENERAL INFORMATION

Dangers, Warnings, and Cautions - Cruze

INTRODUCTION

DEFINITION OF DANGER, WARNING, CAUTION, AND NOTE

The diagnosis and repair procedures in a GM Service Information contain both general and specific Dangers, Warnings, Cautions, Notes or Importants. GM is dedicated to the presentation of service information that helps the technician to diagnose and repair the systems necessary for the proper operation of the vehicle, however, certain procedures may present a hazard to the technician if they are not followed in the recommended manner. Dangers, Warnings, Cautions and Notes or Importants are elements designed to prevent these hazards, however, not all hazards can be foreseen. This information is placed at strategic locations within the service manual. This information is designed to prevent the following from occurring:

- Serious bodily injury or death to the technician
- Damage to the vehicle
- Unnecessary vehicle repairs
- Unnecessary component replacement
- Improper repair or replacement of vehicle components.
- Any warning or caution that appears in this service category is referenced from the individual service categories.

DANGER Defined

When encountering a DANGER, you will be asked to take a necessary action or not to take a prohibited action. If a DANGER is not heeded, the following consequences may occur:

- Serious bodily injury or death to the technician
- Serious bodily injury or death to other technicians in the workplace area

WARNING Defined

When encountering a WARNING, you will be asked to take a necessary action or not to take a prohibited action. If a WARNING is not heeded, the following consequences may occur:

- Serious bodily injury to the technician
- Serious bodily injury to other technicians in the workplace area
- Serious bodily injury to the driver and/or passenger(s) of the vehicle, if the vehicle has been improperly repaired

CAUTION Defined

CAUTIONS call special attention to a necessary action or to a prohibited action. If a CAUTION is not heeded,

the following consequences may occur:

- Damage to the vehicle
- Unnecessary vehicle repairs
- Unnecessary component replacement
- Improper operation or performance of the system or component under repair
- Damage to any systems or components which are dependent upon the proper operation of the system or component under repair
- Improper operation or performance of any systems or components which are dependent upon the proper operation or performance of the system or component under repair
- Damage to fasteners, basic tools, or special tools
- The leakage of coolant, lubricant, or other vital fluids

NOTE or IMPORTANT Defined

NOTE and IMPORTANT statements emphasize a necessary characteristic of a diagnostic or repair procedure. NOTE or IMPORTANT statements are designed to do the following:

- Clarify a procedure
- Present additional information for accomplishing a procedure
- Give insight into the reason or reasons for performing a procedure in the manner recommended
- Present information that will help to accomplish a procedure in a more effective manner
- Present information that gives the technician the benefit of past experience in accomplishing a procedure with greater ease

ABS COMPONENT HANDLING WARNING

WARNING: Certain components in the Antilock Brake System (ABS) are not intended to be serviced individually. Attempting to remove or disconnect certain system components may result in personal injury and/or improper system operation. Only those components with approved removal and installation procedures should be serviced.

ACTIONS TO TAKE WHEN WORKING WITH FUEL WARNING

WARNING: Fuel Vapors can collect while servicing fuel system parts in enclosed areas such as a trunk. To reduce the risk of fire and increased exposure to vapors:

- **Use forced air ventilation such as a fan set outside of the trunk.**
- **Plug or cap any fuel system openings in order to reduce fuel vapor formation.**
- **Clean up any spilled fuel immediately.**

- **Avoid sparks and any source of ignition.**
- **Use signs to alert others in the work area that fuel system work is in process.**

APPROVED EQUIPMENT FOR COLLISION REPAIR WARNING

WARNING: To avoid personal injury when exposed to welding flashes or to galvanized (Zinc Oxide) metal toxic fumes while grinding/cutting on any type of metal or sheet molded compound, you must work in a properly ventilated area, wearing an approved respirator, eye protection, earplugs, welding gloves, and protective clothing.

ASSISTANT DRIVING WARNING

WARNING: An assistant should drive the vehicle while the technician checks for the location of the reported condition. Otherwise, personal injury could result.

BATTERY DISCONNECT WARNING

WARNING: Unless directed otherwise, the ignition and start switch must be in the OFF or LOCK position, and all electrical loads must be OFF before servicing any electrical component. Disconnect the negative battery cable to prevent an electrical spark should a tool or equipment come in contact with an exposed electrical terminal. Failure to follow these precautions may result in personal injury and/or damage to the vehicle or its components.

For Vehicles equipped with OnStar® (UE1) with Back Up Battery:

The Back Up Battery is a redundant power supply to allow limited OnStar® functionality in the event of a main vehicle battery power disruption to the VCIM (OnStar®module). Do not disconnect the main vehicle battery or remove the OnStar® fuse with the ignition key in any position other than OFF. Retained accessory power should be allowed to time out or be disabled (simply opening the driver door should disable retained accessory power) before disconnecting power. Disconnecting power to the OnStar® module in any way while the ignition is On or with retained accessory power activated may cause activation of the OnStar® Back-Up Battery system and will discharge and permanently damage the back-up battery. Once the Back-Up Battery is activated it will stay on until it has completely discharged. The back-up battery is not rechargeable and once activated the back-up battery must be replaced.

BRAKE DUST WARNING

WARNING: Avoid taking the following actions when you service wheel brake parts:

- **Do not grind brake linings.**
- **Do not sand brake linings.**
- **Do not clean wheel brake parts with a dry brush or with compressed air.**

Some models or aftermarket brake parts may contain asbestos fibers which can become airborne in dust. Breathing dust with asbestos fibers may cause serious bodily harm. Use a water-dampened cloth in order to remove any dust on brake parts. Equipment is available commercially in order to perform this washing function. These wet methods prevent fibers from becoming airborne.

BRAKE FLUID IRRITANT WARNING

WARNING: Brake fluid may irritate eyes and skin. In case of contact, take the following actions:

- **Eye contact-rinse thoroughly with water.**
- **Skin contact-wash with soap and water.**
- **If ingested-consult a physician immediately.**

BRAKE FLUID WARNING

WARNING: Use only Delco Supreme 11, GM P/N 12377967 (Canadian P/N 992667), or equivalent DOT 3 brake fluid from a clean, sealed container. Do not use fluid from an open container that may be contaminated with water. Improper or contaminated fluid could result in damage to components, or loss of braking, with possible injury.

CHECKING HOT TRANSMISSION FLUID THROUGH DRAIN PLUG HOLE WARNING

WARNING: The engine must be running when the transmission fluid fill plug is removed, or excessive fluid loss will occur. Transmission fluid may be hot. Since the actual fluid level is unknown, stand clear when removing the fill plug. Have a container ready to capture any lost fluid. Do not turn the engine off with the fill plug removed, as you can be injured by hot transmission fluid being expelled out of the oil fill opening.

CLEANING SOLVENT WARNING

WARNING: Bodily injury may occur if the cleaning solvent is inhaled or exposed to the skin.

CLUTCH ACTUATOR CYLINDER WARNING

WARNING: Do not apply any pressure to the clutch actuator cylinder with the transmission removed. The clutch actuator cylinder is not pressure-resistant and must only be actuated between two solid surfaces, such as the transmission and clutch assembly. Failure to follow this warning may cause personal injury and/or damage the clutch actuator cylinder.

COLLISION SECTIONING WARNING

WARNING: Sectioning should be performed only in the recommended areas. Failure to do so may compromise the structural integrity of the vehicle and cause personal injury if the vehicle is in a collision.

CRACKED WINDOW WARNING

WARNING: If a window is cracked but still intact, crisscross the window with masking tape in order to reduce the risk of damage or personal injury.

DEFROSTER OUTLET WARNING

WARNING: If broken glass falls into the defroster outlets, it can be blown into the passenger compartment and cause personal injury.

EXHAUST SERVICE WARNING

WARNING: In order to avoid being burned, do not service the exhaust system while it is still hot. Service the system when it is cool.

EXPRESS WINDOW DOWN WARNING

WARNING: Disconnect the power window switch when working inside the driver door. When operated, the Express Up/Down Feature allows the door window to move very quickly, without stopping, which could cause personal injury.

EYE PROTECTION WARNING

WARNING: Approved safety glasses and gloves should be worn when performing this procedure to reduce the chance of personal injury.

FOAM SOUND DEADENERS WARNING

WARNING: Foam sound deadeners must be removed from areas within 152.4 mm (6 in) of where flame is to be used for body repairs. When reinstalling foam sound deadeners, avoid inhaling fumes as bodily injury may result.

FUEL AND EVAPORATIVE EMISSION PIPE WARNING

WARNING: In order to reduce the risk of fire and personal injury observe the following items:

- **Replace all nylon fuel pipes that are nicked, scratched or damaged during installation, do not attempt to repair the sections of the nylon fuel pipes**
- **Do not hammer directly on the fuel harness body clips when installing new fuel pipes. Damage to the nylon pipes may result in a fuel leak.**
- **Always cover nylon vapor pipes with a wet towel before using a torch near them. Also, never expose the vehicle to temperatures higher than 115°C (239°F) for more than one hour, or more than 90°C (194°F) for any extended period.**
- **Apply a few drops of clean engine oil to the male pipe ends before connecting fuel pipe fittings. This will ensure proper reconnection and prevent a possible fuel leak. (During normal operation, the O-rings located in the female connector will swell and may prevent proper reconnection if not lubricated.)**

FUEL GAUGE LEAK WARNING

WARNING: Wrap a shop towel around the fuel pressure connection in order to reduce the risk of fire and personal injury. The towel will absorb any fuel leakage that occurs during the connection of the fuel pressure gauge. Place the towel in an approved container when the connection of the fuel pressure gauge is complete.

FUEL PIPE FITTING WARNING

WARNING: Always apply a few drops of clean engine oil to the male pipe ends before connecting the fuel pipe fittings. This will ensure proper reconnection and prevent a possible fuel leak. Always replace O-rings.

FUEL STORAGE WARNING

WARNING: Do not drain the fuel into an open container. Never store the fuel in an open container due to the possibility of a fire or an explosion.

FUEL VAPORS IN EVAPORATIVE EMISSION COMPONENTS WARNING

WARNING: Do not breathe the air through the EVAP component tubes or hoses. The fuel vapors inside the EVAP components may cause personal injury.

GASOLINE/GASOLINE VAPORS WARNING

WARNING: Gasoline or gasoline vapors are highly flammable. A fire could occur if an ignition source is present. Never drain or store gasoline or diesel fuel in an open container, due to the possibility of fire or explosion. Have a dry chemical (Class B) fire extinguisher nearby.

GLASS AND SHEET METAL HANDLING WARNING

WARNING: When working with any type of glass or sheet metal with exposed or rough edges, wear approved safety glasses and gloves in order to reduce the chance of personal injury.

HALOGEN BULB WARNING

WARNING: Halogen bulbs contain gas under pressure. Handling a bulb improperly could cause it to shatter into flying glass fragments. To help avoid personal injury:

- **Turn off the lamp switch and allow the bulb to cool before changing the bulb.**
- **Leave the lamp switch OFF until the bulb change is complete.**
- **Always wear eye protection when changing a halogen bulb.**
- **Handle the bulb only by its base. Avoid touching the glass.**
- **Keep dirt and moisture off the bulb.**
- **Properly dispose of the used bulb.**
- **Keep halogen bulbs out of the reach of children.**

HOOD HOLD-OPEN DEVICE WARNING

WARNING: When a hood hold open device is being removed or installed, provide alternate support to avoid the possibility of damage to the vehicle or personal injury.

HOT EXHAUST SYSTEM WARNING

WARNING: While engine is operating, the exhaust system will become extremely hot. To prevent burns avoid contacting a hot exhaust system.

MOVING PARTS AND HOT SURFACES WARNING

WARNING: Avoid contact with moving parts and hot surfaces while working around a running engine in order to prevent physical injury.

PARKING BRAKE AND DRIVE WHEELS WARNING

WARNING: Apply the parking brake and block the drive wheels before performing this procedure in order to prevent bodily injury.

PROTECTIVE GOGGLES AND GLOVE WARNING

WARNING: Always wear protective goggles and gloves when removing exhaust parts as falling rust and sharp edges from worn exhaust components could result in serious personal injury.

RELIEVING FUEL PRESSURE WARNING

WARNING: Remove the fuel tank cap and relieve the fuel system pressure before servicing the fuel system in order to reduce the risk of personal injury. After you relieve the fuel system pressure, a small amount of fuel may be released when servicing the fuel lines, the fuel injection pump, or the connections. In order to reduce the risk of personal injury, cover the fuel system components with a shop towel before disconnection. This will catch any fuel that may leak out. Place the towel in an approved container when the disconnection is complete.

ROAD TEST WARNING

WARNING: Road test a vehicle under safe conditions and while obeying all traffic laws. Do not attempt any maneuvers that could jeopardize vehicle control. Failure to adhere to these precautions could lead to serious personal injury and vehicle damage.

SAFETY GLASSES AND COMPRESSED AIR WARNING

WARNING: Wear safety glasses when using compressed air in order to prevent eye injury.

SAFETY GLASSES WARNING

WARNING: Wear safety glasses in order to avoid eye damage.

SAFETY GOGGLES AND FUEL WARNING

WARNING: Always wear safety goggles when working with fuel in order to protect the eyes from fuel splash.

SIR DEPLOYED INFLATOR MODULES ARE HOT WARNING

WARNING: After deployment, the metal surfaces of the SIR component may be very hot. To help avoid a fire or personal injury:

- **Allow sufficient time for cooling before touching any metal surface of the SIR component.**
- **Do not place the deployed SIR component near any flammable objects.**

SIR INFLATABLE MODULE DEPLOYMENT OUTSIDE VEHICLE WARNING

WARNING: When you are deploying an inflator module for disposal, perform the deployment procedures in the order listed. Failure to follow the procedures in the order listed may result in personal injury.

SIR INFLATOR MODULE DISPOSAL WARNING

WARNING: In order to prevent accidental deployment and the risk of personal injury, do not dispose of an undeployed inflator module as normal shop waste. Undeployed inflator modules contain substances that could cause severe illness or personal injury if their sealed containers are damaged during disposal. Use the following deployment procedures to safely dispose of an undeployed inflator module. Failure to observe the following disposal methods may be a violation of federal, state, or local laws.

SIR INFLATOR MODULE HANDLING AND STORAGE WARNING

WARNING: When carrying an undeployed inflator module:

- **Do not carry the inflator module by the wires or connector.**
- **Make sure the air bag opening points away from you.**

When storing an undeployed inflator module:

- **Make sure the air bag opening points away from the surface on which the inflator module rests.**
- **Provide free space for the air bag to expand in case of an accidental deployment.**
- **When storing a steering column, do not rest the column with the air bag opening facing down and the column vertical. Lay the column**

on its side.

Failure to observe these guidelines may result in personal injury.

SIR SEATBELT PRETENSIONER HANDLING WARNING

WARNING: When carrying an undeployed inflatable restraint seat belt retractor pretensioner:

- **Do not carry the seat belt pretensioner by the seat belt webbing or pigtail connector, if equipped.**
- **Carry the seat belt pretensioner by the housing, keeping hands and fingers away from the seat belt webbing.**
- **Make sure the opening, from which the seat belt webbing extends, faces downward and the seat belt webbing hangs freely.**

Failure to observe these guidelines may result in personal injury.

SIR SPECIAL TOOL WARNING

WARNING: Failure to observe the special tool recommendations and instructions could cause SIR deployment, personal injury, or unnecessary SIR system repairs.

SIR WARNING

WARNING: This vehicle is equipped with a Supplemental Inflatable Restraint (SIR) System. Failure to follow the correct procedure could cause the following conditions:

- **Air bag deployment**
- **Personal injury**
- **Unnecessary SIR system repairs**

In order to avoid the above conditions, observe the following guidelines:

- **Refer to SIR Component Views in order to determine if you are performing service on or near the SIR components or the SIR wiring.**
- **If you are performing service on or near the SIR components or the SIR wiring, disable the SIR system. Refer to SIR Disabling and Enabling .**

STEERING ANGLE SENSOR INITIALIZATION WARNING

WARNING: For vehicles with electric power steering (EPS) and without a vehicle stability enhancement program, the steering angle sensor MUST always be initialized after the battery has been disconnected. Failure to initialize the steering angle sensor could limit the operation of the EPS system and result in personal injury.

To ensure proper initialization of the EPS system, do the following:

1. **The engine should be on with the vehicle stationary.**
2. **Turn the steering wheel counterclockwise until it stops.**
3. **Turn the steering wheel clockwise until it stops.**

TORQUE-TO-YIELD FASTENER WARNING

WARNING: This component is equipped with torque-to-yield fasteners. Install a NEW torque-to-yield fastener when installing this component. Failure to replace the torque-to-yield fastener could cause bodily injury and damage to the vehicle or component.

WINDOW RETENTION WARNING

WARNING: When replacing stationary windows, only use a single component adhesive kit, or an adhesive system meeting GM Specifications, to maintain original installation integrity. Failure to use the single component adhesive kit will result in poor retention of the window which may allow unrestrained occupants to be ejected from the vehicle resulting in personal injury.

WORK STALL TEST WARNING

WARNING: One or more of the following guidelines may apply when performing specific required tests in the work stall:

- **When a test requires spinning the drive wheels with the vehicle jacked up, adhere to the following precautions:**
  - **Do not exceed 56 km/h (35 mph) when spinning one drive wheel with the other drive wheel stopped. This limit is necessary because the speedometer indicates only one-half the actual vehicle speed under these conditions. Personal injury may result from excessive wheel spinning.**
  - **If all of the drive wheels are spinning at the same speed, do not exceed 112 km/h (70 mph). Personal injury may result from excessive wheel spinning.**
  - **All persons should stay clear of the rotating components and the balance weight areas in order to avoid possible personal**

injury.

- **When running an engine in the repair stall for an extended period of time, use care not to overheat the engine and the transmission.**

- **When a test requires jacking up the vehicle and running with the wheels and brake rotors removed, adhere to the following precautions:**
  - **Support the suspension at normal ride height.**
  - **Do not apply the brake with the brake rotors removed.**
  - **Do not place the transmission in PARK with the drive axles spinning.**
  - **Turn Off the ignition in order to stop the powertrain components from spinning.**
- **When running an engine in the work stall, use the exhaust removal system to prevent breathing dangerous gases.**

AIR IN THE POWER STEERING SYSTEM CAUTION

CAUTION: If the power steering system has been serviced, an accurate fluid level reading cannot be obtained unless air is bled from the steering system. The air in the fluid may cause pump cavitation noise and may cause pump damage over a period of time.

AVOID CHIPPING OR SCRATCHING THE COATING CAUTION

CAUTION: Care should be taken to avoid chipping or scratching the coating when handling the suspension coil spring. Damage to the coating can cause premature failure.

BALL STUD REMOVAL CAUTION

CAUTION: Do not free the ball stud by using a pickle fork or a wedge-type tool. Damage to the seal or bushing may result.

BELT DRESSING CAUTION

CAUTION: Do not use belt dressing on the drive belt. Belt dressing causes the breakdown of the composition of the drive belt. Failure to follow this recommendation will damage the drive belt.

BRAKE CALIPER CAUTION

CAUTION: Support the caliper with a piece of wire to prevent damage to the brake

line.

BRAKE FLUID EFFECTS ON PAINT AND ELECTRICAL COMPONENTS CAUTION

CAUTION: Avoid spilling brake fluid onto painted surfaces, electrical connections, wiring, or cables. Brake fluid will damage painted surfaces and cause corrosion to electrical components. If any brake fluid comes in contact with painted surfaces, immediately flush the area with water. If any brake fluid comes in contact with electrical connections, wiring, or cables, use a clean shop cloth to wipe away the fluid.

CLEAN, DRY, LOW PRESSURE GAS SOURCE CAUTION

CAUTION: Use the Evaporative Emission (EVAP) System Tester (EEST) GE 41413-A in order to provide a clean, dry, low pressure nitrogen gas source. Do not substitute any other pressurized source, gas or otherwise. Damage may result to the EVAP system, test equipment or cause a safety risk.

CLEARCOAT/ULTRAVIOLET SCREENERS CAUTION

CAUTION: Removing more than 0.5 mils of the clearcoat can result in early paint failure. The clearcoat contains ultraviolet screeners. Do not finesse sand more than what is required to remove the defect.

CLUTCH ACTUATOR CYLINDER AND SEAL CAUTION

CAUTION: Do not contaminate the clutch actuator cylinder or the clutch actuator cylinder seal with oil. The clutch actuator cylinder and the clutch actuator cylinder seal are not oil resistant. Failure to follow this caution may cause a leak or damage to the clutch actuator cylinder.

CLUTCH ACTUATOR CYLINDER MOUNTING SLEEVE CAUTION

CAUTION: Use a mounting sleeve when installing the clutch actuator cylinder to the transmission. The transmission input shaft has sharp edges and can damage the clutch actuator cylinder. Failure to follow this caution may cause a leak and damage to the clutch actuator cylinder.

COMPONENT FASTENER TIGHTENING CAUTION

CAUTION: Replacement components must be the correct part number for the application. Components requiring the use of the thread locking compound, lubricants, corrosion inhibitors, or sealants are identified in the service procedure. Some replacement components may come with these coatings already applied. Do not use these coatings on components

unless specified. These coatings can affect the final torque, which may affect the operation of the component. Use the correct torque specification when installing components in order to avoid damage.

DRIVE AXLE CAUTION

CAUTION: Support the lower control arms in the normal horizontal position in order to avoid damage to the drive axles. Do not operate the vehicle in gear with the wheels hanging down at full travel.

ENGINE COOLANT THERMOSTAT HOUSING CAUTION

CAUTION: Use care when performing this procedure. Use of excessive force may damage the coolant thermostat.

EXTERIOR TRIM EMBLEM REMOVAL CAUTION

CAUTION: Use a plastic, flat-bladed tool to prevent paint damage when removing an emblem/name plate.

FASTENER CAUTION

CAUTION: Use the correct fastener in the correct location. Replacement fasteners must be the correct part number for that application. Do not use paints, lubricants, or corrosion inhibitors on fasteners, or fastener joint surfaces, unless specified. These coatings affect fastener torque and joint clamping force and may damage the fastener. Use the correct tightening sequence and specifications when installing fasteners in order to avoid damage to parts and systems. When using fasteners that are threaded directly into plastic, use extreme care not to strip the mating plastic part(s). Use hand tools only, and do not use any kind of impact or power tools. Fastener should be hand tightened, fully seated, and not stripped.

FILLING THE MASTER CYLINDER CAUTION

CAUTION: When filling the master cylinder, use only Delco Supreme 11, GM P/N 12377967 (Canadian P/N 992667), or equivalent DOT 3 brake fluid. Do not use a container which has been used for petroleum based fluids, or a container which is wet with water. Petroleum based fluids will cause swelling and distortion of rubber parts in the hydraulic brake system, and water will mix with brake fluid, lowering the boiling point. Keep all fluid containers capped to prevent contamination.

FUEL AND EVAPORATIVE EMISSION HOSE/PIPE CONNECTION CLEANING CAUTION

CAUTION: Clean all of the following areas before performing any disconnections in order to avoid possible contamination in the system:

- **The fuel pipe connections**
- **The hose connections**
- **The areas surrounding the connections**

HEATED OXYGEN AND OXYGEN SENSOR CAUTION

CAUTION: Do not remove the pigtail from either the heated oxygen sensor (HO2S) or the oxygen sensor (O2S). Removing the pigtail or the connector will affect sensor operation.

Handle the oxygen sensor carefully. Do not drop the HO2S. Keep the in-line electrical connector and the louvered end free of grease, dirt, or other contaminants. Do not use cleaning solvents of any type.

Do not repair the wiring, connector or terminals. Replace the oxygen sensor if the pigtail wiring, connector, or terminal is damaged.

This external clean air reference is obtained by way of the oxygen sensor signal and heater wires. Any attempt to repair the wires, connectors, or terminals could result in the obstruction of the air reference and degraded sensor performance.

The following guidelines should be used when servicing the heated oxygen sensor:

- **Do not apply contact cleaner or other materials to the sensor or vehicle harness connectors. These materials may get into the sensor causing poor performance.**
- **Do not damage the sensor pigtail and harness wires in such a way that the wires inside are exposed. This could provide a path for foreign materials to enter the sensor and cause performance problems.**
- **Ensure the sensor or vehicle lead wires are not bent sharply or kinked. Sharp bends or kinks could block the reference air path through the lead wire.**
- **Do not remove or defeat the oxygen sensor ground wire, where applicable. Vehicles that utilize the ground wired sensor may rely on this ground as the only ground contact to the sensor. Removal of the ground wire will cause poor engine performance.**
- **Ensure that the peripheral seal remains intact on the vehicle harness connector in order to prevent damage due to water intrusion. The engine harness may be repaired using Packard's Crimp and Splice**

Seals Terminal Repair Kit. Under no circumstances should repairs be soldered since this could result in the air reference being obstructed.

HEATED OXYGEN SENSOR RESISTANCE LEARN RESET CAUTION

CAUTION: When replacing the HO2S perform the following:

- **A code clear with a scan tool, regardless of whether or not a DTC is set**
- **HO2S heater resistance learn reset with a scan tool, where available**

Perform the above in order to reset the HO2S resistance learned value and avoid possible HO2S failure.

INSTALLING HOSES WITHOUT TWISTS OR BENDS CAUTION

CAUTION: The inlet and outlet hoses must not be twisted during installation. Do not bend or distort the inlet or outlet hoses to make installation easier. Failure to follow these procedures could result in component damage.

PIPE WRENCH POSITIONING CAUTION

CAUTION: The pipe wrench must be placed at the valve end of the steering gear and positioned up against the inner tie rod housing. Placing the pipe wrench in any other location will cause damage to the steering gear.

POWER STEERING HOSE DISCONNECTED CAUTION

CAUTION: Do not start the vehicle with any power steering gear inlet or outlet hoses disconnected. When disconnected, plug or cap all openings of components. Failure to do so could result in contamination or loss of power steering fluid and damage to the system.

SILICON CONTAMINATION OF HEATED OXYGEN SENSORS CAUTION

CAUTION: Contamination of the oxygen sensor can result from the use of an inappropriate RTV sealant (not oxygen sensor safe) or excessive engine coolant or oil consumption. Remove the HO2S and visually inspect the portion of the sensor exposed to the exhaust stream in order to check for contamination. If contaminated, the portion of the sensor exposed to the exhaust stream will have a white powdery coating. Silicon contamination causes a high but false HO2S signal voltage (rich exhaust indication). The control module will then reduce the amount of fuel delivered to the engine, causing a severe driveability problem. Eliminate the source of contamination before replacing the oxygen sensor.

STEERING COLUMN IN LOCK POSITION CAUTION

CAUTION: With wheels of the vehicle facing straight ahead, secure the steering wheel utilizing steering column anti-rotation pin, steering column lock, or a strap to prevent rotation. Locking of the steering column will prevent damage and a possible malfunction of the SIR system. The steering wheel must be secured in position before disconnecting the following components:

- **The steering column**
- **The steering shaft coupling**
- **The intermediate shaft(s)**

After disconnecting these components, do not rotate the steering wheel or move the front tires and wheels. Failure to follow this procedure may cause the SIR coil assembly to become un-centered and cause possible damage to the SIR coil. If you think the SIR coil has became un-centered, refer to your specific SIR coil's centering procedure to re-center SIR Coil.

STEERING GEAR PRELOAD ADJUSTMENT CAUTION

CAUTION: Do not change the steering gear preload adjustment before moving the inner tie rod from the steering gear. Changing the steering gear preload adjustment before moving the inner tie rod could result in damage to the pinion and the steering gear.

STEERING WHEEL IN THE FULL TURN POSITION CAUTION

CAUTION: Do not hold the steering wheel in the full turn position longer than 5 seconds, as damage to the steering pump may result.

STEERING WHEEL STRAIGHT AND COLUMN LOCKED CAUTION

CAUTION: With wheels of the vehicle facing straight ahead, secure the steering wheel utilizing steering column anti-rotation pin, steering column lock, or a strap to prevent rotation. Locking of the steering column will prevent damage and a possible malfunction of the SIR system. The steering wheel must be secured in position before disconnecting the following components:

- **The steering column**
- **The intermediate shaft(s)**
- **The steering gear**

After disconnecting these components, do not rotate the steering wheel or move the front tires and wheels. Failure to follow this procedure may cause the SIR coil assembly to become un-centered and cause possible

damage to the SIR coil. If you think the SIR coil has became un-centered, refer to your specific SIR coil's centering procedure to re-center SIR Coil.

TEST PROBE CAUTION

CAUTION: Do not insert test equipment probes (DMM etc.) into any connector or fuse block terminal. The diameter of the test probes will deform most terminals. A deformed terminal will cause a poor connection, which will result in a system failure. Always use the EL-35616 GM Approved Terminal Test Probe Kit in order to front probe terminals. Do not use paper clips or other substitutes to probe terminals.

When using the EL-35616 GM Approved Terminal Test Probe Kit, ensure the terminal test adapter choice is the correct size for the connector terminal. Do not visually choose the terminal test adapter because some connector terminal cavities may appear larger than the actual terminal in the cavity. Using a larger terminal test adapter will damage the terminal. Refer to the EL-35616 GM Approved Terminal Test Probe Kit label on the inside of the EL-35616 GM Approved Terminal Test Probe Kit for the correct adapter along with the connector end view.

THREE-WAY CATALYTIC CONVERTER DAMAGE CAUTION

CAUTION: In order to avoid damaging the replacement three-way catalytic converter, correct the engine misfire or mechanical fault before replacing the three-way catalytic converter.

TORQUE REACTION AGAINST TIMING DRIVE CHAIN CAUTION

CAUTION: A wrench must be used on the hex of the camshaft when loosening or tightening in order to prevent component damage. Failure to prevent the torque reaction against the timing drive chain can lead to timing drive chain failure.

TORQUE-TO-YIELD FASTENER CAUTION

CAUTION: This vehicle is equipped with torque-to-yield or single use fasteners. Install a NEW torque-to-yield or single use fastener when installing this component. Failure to replace the torque-to-yield or single use fastener could cause damage to the vehicle or component.

TRANSMISSION FLUID VENT CAP REMOVAL CAUTION

CAUTION: The fluid vent cap must be removed before checking the fluid level, in order to ensure the proper level. Improper fluid level may damage the

transmission.

TRANSMISSION OVERFILL CAUTION

CAUTION: Check the transmission fluid level immediately after adding fluid and before vehicle operation. Do not overfill the transmission. An overfilled transmission may result in foaming or fluid to be expelled out the vent tube when the vehicle is operated. Overfilling will result in possible damage to the transmission.

TRANSMISSION SHIFT FORK CAUTION

CAUTION: Do not move the transmission shift forks while removing or installing the transmission shifter. The shift forks must remain in the neutral position. Failure to follow this caution can cause severe damage to the transmission.

USING PROPER POWER STEERING FLUID CAUTION

CAUTION: When adding fluid or making a complete fluid change, always use the proper power steering fluid. Failure to use the proper fluid will cause hose and seal damage and fluid leaks.

VALVE LIFTER PRIMING CAUTION

CAUTION: Ensure each valve lifter is filled with clean engine oil and the valve lifter does not tip over (plunger down) before the installation of the valve lifters. The loss of oil in the valve lifter lower pressure chamber or the dry stroking/cycling of the valve lifter plunger will allow air to travel into the high pressure chamber of the valve lifter. Air in the high pressure chamber of the valve lifter may not be purged causing extensive engine component damage.

WINDOW EDGE DAMAGE CAUTION

CAUTION: Avoid damage to the window from impacting objects due to an exposed edge. The window must be 1 mm (0.025 in) below the surface of the sheet metal to avoid window damage.

2013 GENERAL INFORMATION

General Information - Cruze

SPECIFICATIONS

VOLATILE MEMORY PROGRAMMING

Electric Window Lifters

Move all the windows to the topmost position and hold the switch pressed down for 2 seconds.

Sliding Sunroof

Move the sliding roof to the respective end stops to recalibrate the sensors.

Initialize Steering Angle Sensor (Vehicles without ESP and with Electric Power Steering)

WARNING: For vehicles with electric power steering (EPS) and without a vehicle stability enhancement program, the steering angle sensor MUST always be initialized after the battery has been disconnected. Failure to initialize the steering angle sensor could limit the operation of the EPS system and result in personal injury.

To ensure proper initialization of the EPS system, do the following:

1. **The engine should be on with the vehicle stationary.**
2. **Turn the steering wheel counterclockwise until it stops.**
3. **Turn the steering wheel clockwise until it stops.**

INTRODUCTION

ARROWS AND SYMBOLS

This service manual uses various symbols in order to describe different service operations.

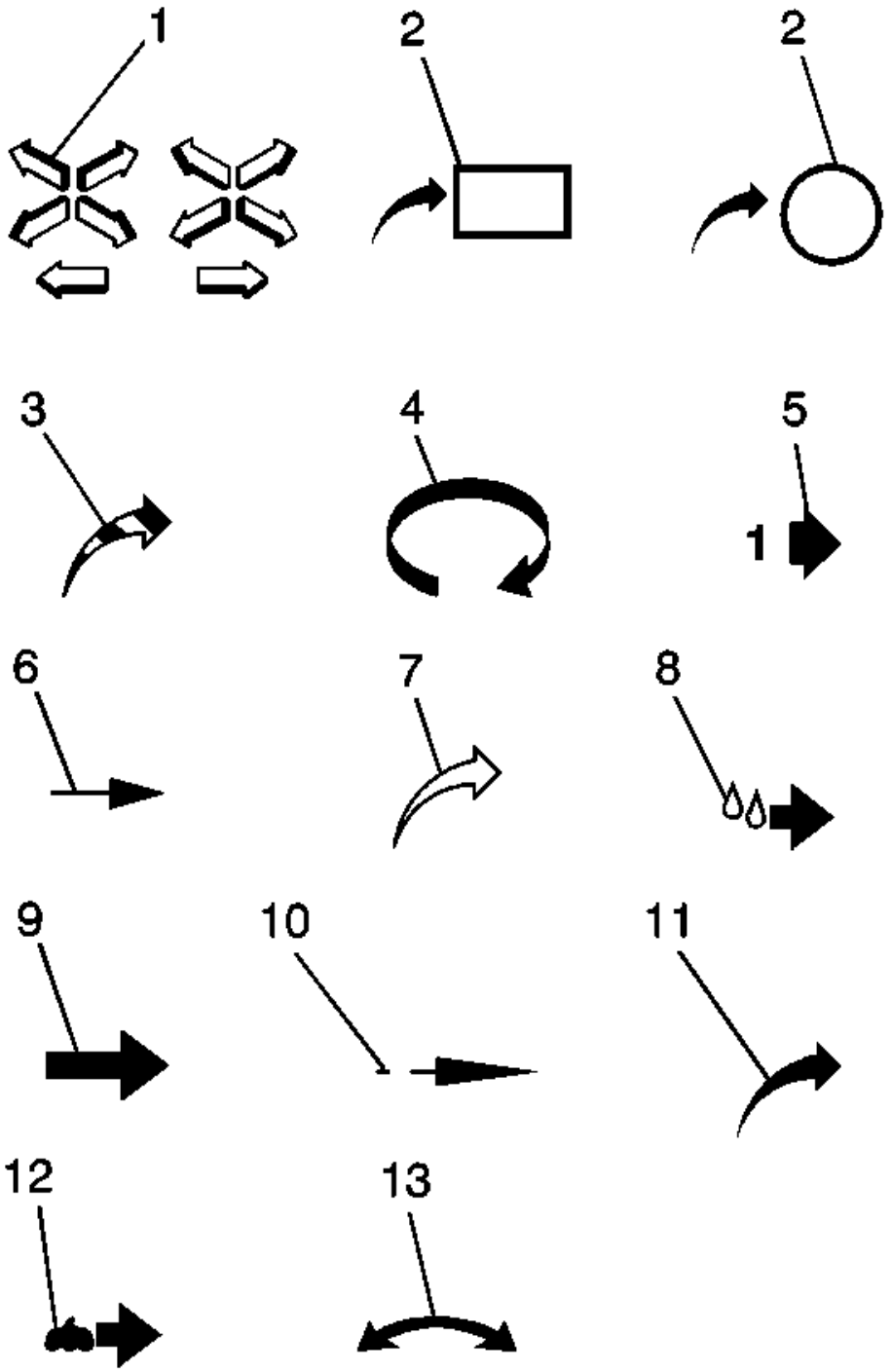

Fig. 1: Identifying Different Service Operations Symbols
Courtesy of GENERAL MOTORS COMPANY

Callout	Component Name

1	Front of Vehicle
2	View Detail
2	View Detail
3	Ambient Air Mixed with Another Gas or Indicate Temperature Change
4	Motion or Direction
5	View Angle
6	Dimension (1:2)
7	Ambient/Clean Air Flow or Cool Air Flow
8	Lubrication Point- Oil or Fluid
9	Task Related
10	Sectioning (1:3)
11	Gas Other Than Ambient Air or Hot Air Flow
12	Lubrication Point- Grease or Jelly
13	Multidirectional Arrow

ACRONYMS AND UNITS

Acronyms

Acronym	Meaning	Definition
2WD	Two-Wheel Drive	Indicates that a vehicle has 2 driven wheels OR that a 4WD vehicle uses only 2 wheels for propulsion. So it can be the description of a vehicle configuration OR the operational mode of the drivetrain.
4WD	Four-Wheel Drive	Four-wheeled vehicle with a drivetrain that allows all four wheels to receive power from the engine simultaneously which provides better control on various surfaces. Can be used to describe the configuration of the vehicle OR as the operational mode of the drivetrain. 4WD vehicles usually can turn 2 wheels off to be in a 2WD mode. See also AWD.
A/C	Air Conditioning	The cooling and dehumidification of indoor air for thermal comfort.
A/D	Analog to Digital	Used in context of converting electrical analog signals to digital signals.
ABS	Antilock Braking System	System on motor vehicles which prevents the wheels from locking while braking which helps the driver maintain control in heavy braking conditions.
AC	Alternating Current	An electrical current whose magnitude and direction vary cyclically.

AM	Amplitude Modulation	Method of impressing data onto an alternating-current (AC) carrier waveform.
APP	Accelerator Pedal Position	A pedal that controls the throttle valve.
AWD	All-Wheel Drive	All-wheel-drive systems are designed to function on all types of surfaces, both on- and off-road, and most of them cannot be switched off. This can also be called full-time four wheel drive. See also 4WD.
AWG	American Wire Gauge	American wire gauge is a standardized wire gauge system used since 1857 predominantly in the United States for the diameters of round, solid, nonferrous, electrically conducting wire. E.g. a wire of AWG10 has a diameter of 2.588mm, AWG20 corresponds to a diameter of 0.812mm.
B+	Battery Positive Voltage	The electrical potential on the positive terminal of the battery.
BARO	Barometric Pressure	Atmospheric pressure as measured by a barometer.
BCM	Body Control Module	This module supplies vehicle occupants with visual and audible information and controls various vehicle functions,
BECM	Battery Energy Control Module	Control module used to regulate the battery voltage.
BPP	Brake Pedal Position	Position of the foot pedal that moves a piston in the master brake cylinder.
CAN	Controller Area Network	Serial data connection between control modules by Bosch
CCM	Chassis Control Module	The module that controls various vehicle functions on the Chassis, like Engine/Trans Mount, Active Grille Air Shutter, Load Leveling, etc•••
CD	Compact Disc	A small optical disk on which data such as music, text, or graphic images is digitally encoded.
CNG	Compressed Natural Gas	This a substitute for gasoline or diesel fuel. It is made by compressing natural gas (which is mainly composed by methane (CH_4), in a percentage range of 70% to 98%)
CO	Carbon Monoxide	This is a product of the incomplete combustion of carbon-containing compounds, at room temperature this is a gas. It consists of one carbon atom covalently bonded to one oxygen atom.

CO_2	Carbon Dioxide	Chemical compound composed of two oxygen atoms covalently bonded to a single carbon atom.
CPA	Connector Position Assurance	Part of an electrical connector that prevents the connector from moving out of its socket. Usually needs to be pressed to unlock the connector when disconnecting it.
CPP	Clutch Pedal Position	A lever operated with the foot that controls the coupling that connects or disconnects driving and driven parts of a driving mechanism.
CV	Constant Velocity	Used in conjunction with CV joints, which connect two shafts at an angle while both shafts always have the same rotational speed without variations.
CVT	Continuously Variable Transmission	A transmission in which the ratio of the rotational speeds of two shafts, as the input shaft and output shaft of a vehicle or other machine, can be varied continuously within a given range, providing an infinite number of possible ratios which improves fuel economy.
D	Drive	D on the transmission gear selector lever.
DAB	Digital Audio Broadcast	Technology for broadcasting of audio using digital radio (carries information via digital signal) transmission.
DC	Direct Current	Continuous current, constant flow of electric charge.
DLC	Data Link Connector	This is an electronic connector typically located underneath the driver's side dashboard, just above the pedals. The connector has 16 pins.
DMM	Digital Multimeter	Electronic measuring instrument that combines several functions in one unit. The most basic instruments include an ammeter, voltmeter, and ohmmeter.
DOHC	Dual Overhead Camshaft	Dual overhead camshafts (DOHC) are higher performance engines, they produce more power, and can run at higher speeds because they allow an engine to have four valves per cylinder. Each camshaft operates two of the valves, one camshaft handles the intake valves, and one handles the exhaust valves
DPF	Diesel Particulate Filter	Device designed to remove diesel particulate matter or soot from the exhaust

		gas of a diesel engine.
DRL	Daytime Running Lamps	White lights mounted on the front of an automobile that automatically switch on when the key is turned and are intended for daytime use, to increase the visibility of the automobile.
DSCC	Distance Sensing Cruise Control	A type of cruise control that automatically maintains the distance between vehicles.
DSP	Digital Signal Processor	A specialized microprocessor designed specifically for digital signal processing, generally in real-time computing.
DTC	Diagnostic Trouble Code	An electronic signal stored in an automotive computer, indicating the presence of a fault detected by that computer.
DVD	DVD	A popular optical disc storage media format the size of a CD. Used mainly for movies but also for data. DVD has no spelled out version (officially it does not mean Digital Video Disc or Digital Versatile Disc, it just means DVD).
EBCM	Electronic Brake Control Module	This module contains a microprocessor and software for antilock braking system operation.
ECM	Engine Control Module	This electronic module works with a vehicle's sensors and engine control devices to insure that the engine operates at maximum efficiency and performance. It performs three vital functions. Receives electronic signals from engine sensors. Analyzes the data and makes an engine performance decision (based on the pre-set parameters within the unit). Sends an "output command" to an actuator that adjusts engine performance.
ECT	Engine Coolant Temperature	A measure of how hot or cold the fluid which flows through the engine in order to prevent its overheating, transferring the heat produced by the device to other devices that utilize or dissipate it.
EEPROM	Electrically Erasable Programmable Read-Only Memory	A non-volatile storage chip used in computers and other devices to store small amounts of volatile data, e.g. calibration tables or device configuration.
EGR	Exhaust Gas Recirculation	Is an NOx (nitrogen oxide and nitrogen dioxide) reduction technique used in most gasoline and diesel engines. EGR works by

		recirculating a portion of an engine's exhaust gas back to the engine cylinders.
EMI	Electromagnetic Interference	Electromagnetic interference (also called radio frequency interference) is a disturbance that affects an electrical circuit due to either electromagnetic conduction or electromagnetic radiation emitted from an external source.
ESD	Electrostatic Discharge	The sudden and momentary electric current that flows between two objects at different electrical potentials.
EV	Electric Vehicle	A category of vehicles that only have an electric drive system.
EVAP	Evaporative Emission	A system that controls the fuel fumes in the fuel tank.
FM	Frequency Modulation	In telecommunication this is a way to convey information over a carrier wave by varying its frequency.
FWD	Front-Wheel Drive	A form of engine/transmission layout used in motor vehicles, where the engine drives the front wheels only.
GMLAN	General Motors Local Area Network	A local-area network is a computer network covering a small geographic area, like a home or vehicle. This specific type of LAN connects several controllers inside the vehicle and was developed by General Motors.
GPS	Global Positioning System	Satellite-based navigation system made up of a network of 24 satellites placed into orbit by the U.S. Department of Defense.
GSM	Global System for Mobile Communications	Globally accepted standard for digital cellular communication.
GVW	Gross Vehicle Weight	Maximum total weight of a road vehicle or trailer that is loaded, including the weight of the vehicle itself plus fuel, passengers, cargo, and trailer tongue weight.
HD	Heavy Duty	Robust design to accommodate large work loads.
HID	High Intensity Discharge	A type of light that produces a bright light by using gas filled bulbs. (gas is usually mercury, metal halide, and high-pressure sodium) Uses very little battery power and is a very "cool" light.
		Heated oxygen sensors have an internal heater circuit that brings the sensor up to operating temperature more quickly than an

HO2S	Heated Oxygen Sensor	unheated sensor. An oxygen sensor must be hot (about 600-650°F) before it will generate a voltage signal. The hot exhaust from the engine will provide enough heat to bring an O2 sensor up to operating temperature.
HVAC	Heating Ventilation Air Conditioning	This system is sometimes referred to as climate control. Ventilation air ducts installed throughout a vehicle that supply conditioned air to a room through rectangular or round outlet vents.
I^2 C	Inter-Integrated Circuit	Serial data connection between Integrated Circuits (microchips) inside a control module invented by Phillips
IAT	Intake Air Temperature	Temperature of the air entering intake air flow system of the engine.
ICE	Internal Combustion Engine	An engine in which the combustion of fuel and an oxidizer (typically air) occurs in a confined space called a combustion chamber.
ID	Identification	Number or Code that identifies a component or control module. Can be written on the part or be transmitted on a bus or via radio.
ISP	Internet Service Provider	A company that furnishes corporations and individual consumers with various services, mainly access to the Internet.
ISS	Input Shaft Speed	Rotational speed of the input shaft of a transmission.
LAN	Local Area Network	Standard network connection PC's.
LCD	Liquid Crystal Display	A thin, flat display device made up of any number of color or monochrome pixels arrayed in front of a light source or reflector.
LED	Light Emitting Diode	Small light bulbs that fit easily into an electrical circuit they do not have a filament that will burn out, and they do not get especially hot. They are illuminated solely by the movement of electrons in a semiconductor material.
LIN	Local Interconnect Network	Computer networking bus system used within automotive network architectures. Similar to CAN, but cheaper and less powerful.
LPG	Liquefied Petroleum Gas	A mixture of mainly propane and butane, produced commercially and stored under

		pressure to keep it in a liquid state.
MAF	Mass Air Flow	The amount of air drawn into the engine
MAP	Manifold Absolute Pressure	Pressure in the engine intake system after the throttle valve referenced to a perfect vacuum.
MDI	Multiple Diagnostics Interface	A device used by GM dealers that enables a PC to communicate with the control modules in a vehicle.
MIL	Malfunction Indicator Lamp	An indicator of the internal status of a car engine.
MOST	Media Oriented Systems Transport	Serial communication bus to transmit audio and video information.
N	Neutral	A state of the transmission in which it is not engaged.
NiMH	Nickel Metal Hydride	A type of rechargeable battery that uses a hydrogen absorbing alloy for the negative electrode.
NOx	Nitrogen Oxides	Refers to any of the following oxygen compounds of nitrogen or a mixture of them. Nitric Oxide, Nitrogen dioxide, Nitrous Oxide, Dinitrogen trioxide, Dinitrogen tetroxide, Dinitrogen pentoxide.
O2	Oxygen	A colorless, odorless, tasteless, gaseous chemical element with the chemical symbol O and atomic number 8.
O2S	Oxygen Sensor	An electronic device that measures the proportion of oxygen (O2) in the gas or liquid being analyzed.
OBD	On-Board Diagnostic	A generic term referring to a vehicle's self-diagnostic and reporting capability.
OEM	Original Equipment Manufacturer	A producer that provides a product to its customers, who proceed to modify or bundle it before distributing it to their customers.
OSS	Output Shaft Speed	Rotational speed of the output shaft of a transmission.
P	Park	A state in which the transmission is set so one can leave the vehicle.
PCB	Printed Circuit Board	A thin plate on which chips and other electronic components are placed.
PCM	Powertrain Control Module	A control module that features the functions of both, the engine and the transmission control module.
		An international standards body and trade association with over 100 member

PCMCIA	Personal Computer Memory Card Industry Association	companies that was founded in 1989 to establish standards for Integrated Circuit cards and to promote interchangeability among mobile computers where ruggedness, low power, and small size were critical.
PIN	Personal Identification Number	A secret numeric password shared between a user and a system that can be used to authenticate the user to the system.
PPE	Personal Protective Equipment	Protective clothing, helmets, goggles, or other garment designed to protect the wearer's body from injury.
PRNDL	Park, Reverse, Neutral, Drive, Low	Park, Reverse, Neutral, Drive, Low (automatic transmission positions).
PTC	Positive Temperature Coefficient	Refers to materials that experience an increase in electrical resistance when their temperature is raised.
PTO	Power Take-Off	A splined driveshaft, usually on a tractor or truck that can be used to provide power to an attachment or separate machine. This mechanism allows implements to draw energy from the tractor's engine.
PVC	Polyvinyl Chloride	A thermoplastic copolymer.
PWM	Pulse Width Modulation	Square shaped type of signal that carries the information in the ratio between on and off times.
R	Reverse	Rearward: directed or moving toward the rear;
RAM	Random Access Memory	A type of computer data storage. It today takes the form of integrated circuits that allow the stored data to be accessed in any order.
RCT	Radiator Coolant Temperature	This is the heat intensity of the radiator coolant measured in degrees. The radiator is a part of the cooling system that removes the engine heat. Coolant is a mixture of water and antifreeze (ethylene glycol) which lowers the freezing point of the water in the coolant system, this fluid also picks up heat from the engine and transfers it to the air.
RDS	Radio Data System	A standard from the European Broadcasting Union for sending small amounts of digital information using conventional FM radio broadcasts.
		A frequency or rate of oscillation within the

RF	Radio Frequency	range of about 3 Hz and 300 GHz. This range corresponds to frequency of alternating current electrical signals used to produce and detect radio waves.
ROM	Read-Only Memory	A class of storage media used in computers and other electronic devices. Data stored in ROM cannot be modified.
RPO	Regular Production Option	A three digit/letter code given to parts, assemblies, and systems originally installed on the vehicle. These RPO codes designate options and are assigned by General Motors.
RSA	Rear Seat Audio	An auxiliary set of controls that operate the main audio system from the rear seat. Rear passengers can also operate a different media source than the front passengers.
RWD	Rear-Wheel Drive	A common engine/transmission layout in which the engine is in the front of the vehicle, but the front mid-engine, rear mid-engine and rear engine layouts are also used.
SCV	Speed Controlled Volume	The volume control is set for a desired sound level in the vehicle as the vehicle increases its speed, the sound level is adjusted.
SDM	Sensing and Diagnostic Module	The name given to air bag modules used in General Motors vehicles.
SIM	Subscriber Identity Module	Part of a removable smart card Integrated Circuit Card. This is used for mobile cellular telephone devices such as mobile computers and mobile phones. SIM cards securely store the service-subscriber key used to identify a subscriber. The SIM card allows users to change phones by simply removing the SIM card from one mobile phone and inserting it into another mobile phone or broadband telephony device.
SIR	Supplemental Inflatable Restraint	Technical term for the air bag. Air bag is a stretchable membrane, which inflates during an automobile accident to provide cushioning to the passenger's head and torso to prevent injury to the passengers.
SPI	Serial Peripheral Interface	This is an interface that enables the serial (one bit at a time) exchange of data between two devices. An SPI operates in full duplex mode. This means that data can be

		transferred in both directions at the same time. It is a standard bus technology like CAN or I2C.
SPS	Service Programming System	System that enables repair facilities to update the software in control modules.
SUV	Sport Utility Vehicle	A passenger vehicle which combines the towing capacity of a pickup truck with the passenger-carrying space of a minivan.
SVS	Service Vehicle Soon	Indicator lamp or symbol for a malfunction related to a vehicle component or system.
TA	Traffic Announcement	Message spoken on radio regarding the movement of vehicles or pedestrians through an area or along a route. The buttons on radios that enable this announcements are also often labeled TA.
TAC	Throttle Actuator Control	A motor which moves the engine throttle plate or valve, controlled by the engine control module. A throttle plate limits the amount of air entering a internal combustion gasoline engine.
TAP	Transmission Adaptive Pressure	The transmission control module learns each component's characteristics and adjusts fluid pressure accordingly.
TCC	Torque Converter Clutch	Resides in a torque converter to connect an engine to an automatic transmission. The clutch is applied when conditions are correct to achieve a 1:1 ratio of engine crankshaft to transmission input shaft.
TCM	Transmission Control Module	A module that controls electronic automatic transmissions. It uses sensors from the vehicle as well as data provided by the Engine Control Module to calculate how and when to change gears in the vehicle for optimum performance, fuel economy and shift quality.
TDC	Top Dead Center	The piston is in its highest position relative to the combustion chamber.
TIS	Techline Information System	The PC-based global dealership diagnostic software that provides the technician the ability to reference the most recent service information via the service department's computer.
TPA	Terminal Position Assurance	An additional locking mechanism inside an electric connector that holds the pins in place.
		A telecommunication system for

TV	Television	broadcasting and receiving moving pictures and sound over a distance.
USB	Universal Serial Bus	A type of communication bus connection between a computer and a peripheral device.
VCI	Vehicle Communications Interface	A diagnostic tool that communicates to modules of multiple communication protocols in a vehicle by converting vehicle serial data into PC serial data communication.
VIN	Vehicle Identification Number	Used by manufacturers to uniquely identify motor vehicles using 17 characters.
VSCM	Vehicle Stability Control Module	This module uses information from several sensors to detect a loss of vehicle traction, then works with the antilock brake system to apply individual brakes to help keep the vehicle on its intended path.
VSS	Vehicle Speed Sensor	Sends data regarding how fast the car is traveling at the moment of driving. It is designed to be able to record the rate at which the vehicle's crankshaft is spinning.
WOT	Wide Open Throttle	When the throttle blade or valve is at its maximum open position, allowing maximum air to enter an internal combustion gasoline engine.
WLAN	Wireless Local Area Network	Standard to transmit digital data via radio frequency.
XM	XM (Satellite Radio)	XM Satellite Radio Holdings (XM) is one of two satellite radio services in the United States and Canada. XM provides pay-for-service radio, analogous to cable television. Its service includes 73 different music channels, 39 news, sports, talk, and entertainment channels, 21 regional traffic and weather channels and 23 play-by-play sports channels (2008).
XML	Extensible Markup Language	A markup language that defines a set of rules for encoding documents in a format that is both human-readable and machine-readable.

Units

Unit	Meaning	Definition
m^2	Square Meter	Area
A	Ampere	Electrical

Ah	Ampere Hour	Electrical
C	Coulomb	Electrical
dBm	Decibel Meter	Electrical
dBmV	Decibel Millivolt	Electrical
mV/DIV	Millivolts per Division	Electrical
mV/s	Millivolts per Second	Electrical
ohms	Ohm	Electrical
V	Volt	Electrical
V/DIV	Volts per Division	Electrical
V/ms	Volts per Millisecond	Electrical
W	Watt	Electrical
mm^3 /stroke	Cubic Millimeters per Stroke	Flow
gal/h	Gallons per Hour	Flow
g/s	grams per second	Flow
g/stroke	Grams per Stroke	Flow
kg/100km	Kilograms per 100 Kilometer	Flow
kg/h	Kilograms per Hour	Flow
km/L	kilometer/liter	Flow
L/100km	Liters per 100 Kilometers	Flow
L/h	Liters per Hour	Flow
L/min	Liters per Minute	Flow
MPG	Miles per Gallon	Flow
mg/s	Milligrams per Second	Flow
mg/stroke	Milligrams per stroke	Flow
ft	feet	Length
in	Inch	Length
m	Meter	Length
mi	Mile	Length
bar	Bar	Mechanical
bar/min	Bars per Minute	Mechanical
in. H2O	Inches of Water	Mechanical
in. H2O/s	Inches of Water per second	Mechanical
kPa/s	Kilopascals per Second	Mechanical
N	Newton	Mechanical
	Newton Meter	Mechanical
Pa	Pascal	Mechanical
Pa/s	Pascals per Second	Mechanical
lb ft	Pound Foot	Mechanical
PSI	Pound-Force per Square Inch	Mechanical
Counts	Counts	Misc.
Cycles	Cycles	Misc.

dB	Decibel	Misc.
°	Degree	Misc.
°C	Degree Centigrade	Misc.
°CA	Degree Crankshaft Angle	Misc.
°F	Degree Fahrenheit	Misc.
°/s	Degree per Second	Misc.
Hz	Hertz	Misc.
kbit/s	Kilobit per second	Misc.
lx	Lux	Misc.
ppm	Parts per Million	Misc.
%	Percent	Misc.
%/min	Percents per Minute	Misc.
%/sec	Percents per Second	Misc.
Pulses	Pulses	Misc.
:1	Ratio	Misc.
RPM	Revolutions per Minute	Misc.
Steps	Steps	Misc.
W/m^2	Watts per Square Meter	Misc.
g	g (Acceleration)	Movement
km/h	Kilometers per Hour	Movement
m/s	Meters per Second	Movement
m/s^3	Meters per Second Cubed	Movement
m/s^2	Meters per Second Squared	Movement
MPH	Miles per Hour	Movement
mm/s	Millimeters per Second	Movement
d	Day	Time
h	Hour	Time
hh:mm:ss	Hour:Minute:Second	Time
ms/DIV	Milliseconds per Division	Time
min	Minute	Time
s	Second	Time
s/DIV	Seconds per Division	Time
yy-mm-dd	Year-Month-Day (2 digits)	Time
yyyy-mm-dd	Year-Month-Day (4 digits, preferred)	Time
m^3	Cubic Meter	Volume
gal	Gallon	Volume
L	Liter	Volume
mL	milliliters	Volume
US gal	US Gallon	Volume
US pt	US Pint	Volume

US qt	US Quart	Volume
kg	Kilogram	Weight

CUSTOMER CONCERN VERIFICATION SHEETS

The GM Customer Concern Verification Sheets have been designed to improve communications between the service customer and the technician. The more clearly the technician understands the concern and its symptoms, the more likely the concern will be fixed right the first time.

The GM-wide Customer Concern Verification Sheets are available in GM GlobalConnect. The Customer Concern Verification Sheets may be printed and reproduced locally.

TRAINING

Dealers

All U.S. Dealers participating in the Common Training Program can enroll through the Common Training System Website at https://www.gmtraining.com. Within the website, there are individual training paths that are designed to assist in planning the training needs for each individual. Technicians should advise their Service Manager of their training needs including course names and course numbers. Dealers who have questions about Common Training should contact the Common Training help desk at 1-888-748-2687. The help desk is available Monday through Friday, 8:00 am-8:00pm Eastern Standard Time, excluding holidays. For GM Access support, contact the GM Access Help Desk at 1-888-337-1010.

Fleets

GM Fleet customers with GM Warranty In-Shop agreements are able to participate in service technical training through Common Training/GM Service Technical College (STC).

Assistance for all GM fleet customers using GM STC products and services is provided on the Internet via www.gmtraining.com using the "Contact Us" button on the site and/or the Common Training Help Desk at 1-888-748-2687. To order GM STC Training Materials, please contact the GM Training Materials Headquarters at 1-800-393-4831.

Most GM STC course materials have associated charges.

To purchase authentic GM STC Training Materials, contact the GM Training Materials Headquarters at 1-800-393-4831.

Non-GM Dealer Technicians

Technicians training for non-GM dealers is available through ACDelco. This training is for ACDelco customers employed in the automotive or truck service industry.

ACDelco courses are available at all approved GM Training Centers. Availability and schedules can be obtained by calling 1-800-825-5886 or contact us via the web at www.acdelcotechconnect.com and select the training button. Clinics are also offered through ACDelco Warehouse Distributors. Contract your dealer directly

for more information.

VEHICLE, ENGINE AND TRANSMISSION ID AND VIN LOCATION, DERIVATIVE AND USAGE

VIN Plate

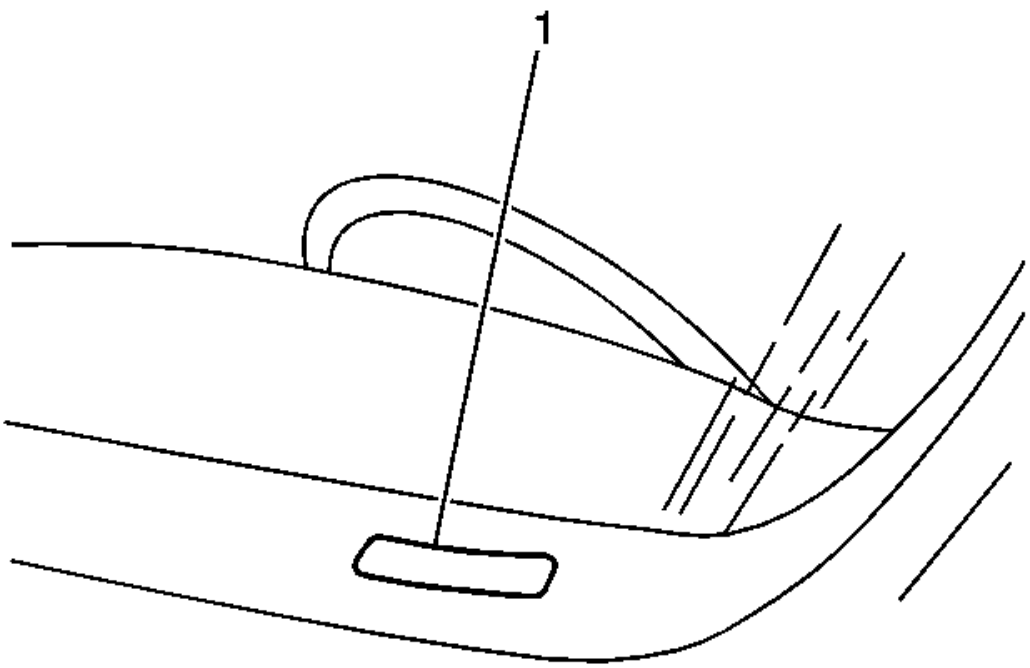

Fig. 2: View Of VIN Plate Location
Courtesy of GENERAL MOTORS COMPANY

The VIN plate is the legal identifier of the vehicle. The VIN plate is located on the upper left corner of the instrument panel (I/P) and can be seen through the windshield from the outside of the vehicle.

VIN Body Stamping

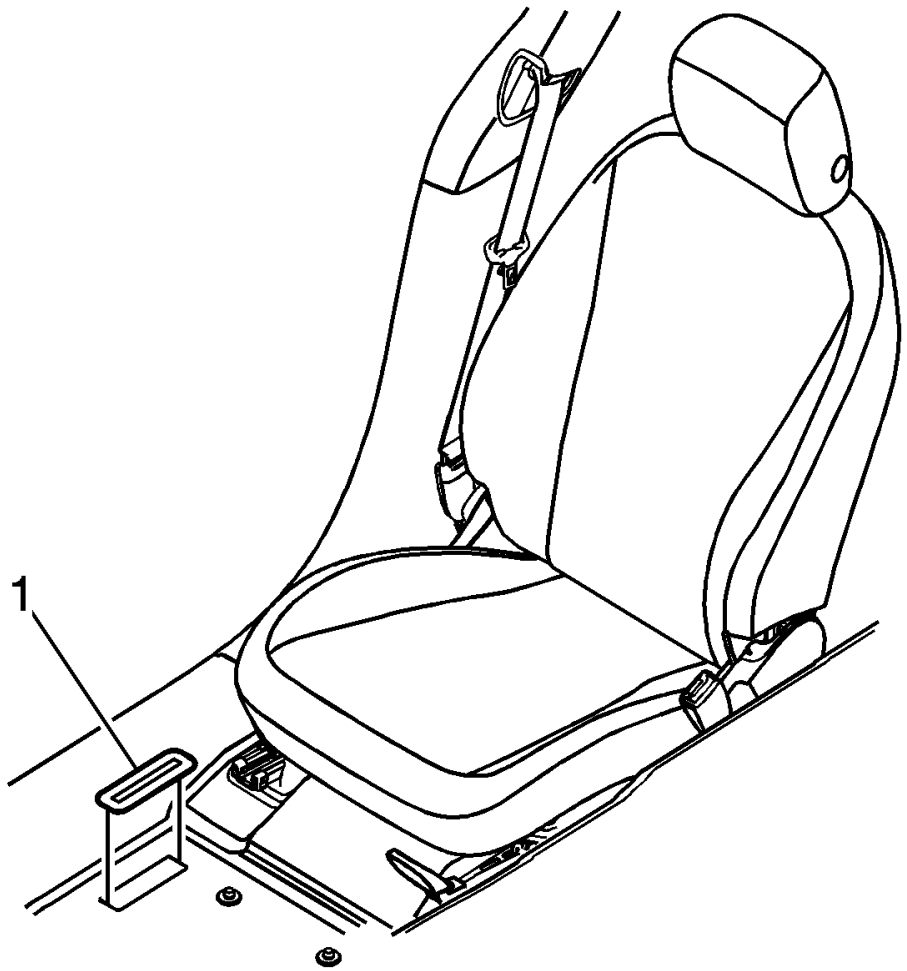

Fig. 3: VIN Body Stamping
Courtesy of GENERAL MOTORS COMPANY

The stamping is located on the front floor panel under the front right-hand floor mat. It can be seen under the VIN plate opening access cover (1).

Vehicle, Engine and Transmission ID and VIN Location, Derivative and Usage

Position	Definition	Character	Description
1	Region of Build	1	United States
2	Manufacturer	G	General Motors
3	Vehicle Brand/Type	1	Chevrolet Passenger Car
		P/A	Chevrolet Cruze 2LS (Canada - Automatic)
		P/B	Chevrolet Cruze 1LS (US - Manual)/2LS (Canada - Manual)
		P/C	Chevrolet Cruze 2LS (US - Automatic)/1LS (Canada - Automatic)

4-5	Vehicle Line/Series	P/D	Chevrolet Cruze 2LS (US - Manual)/1LS (Canada - Manual)
		P/E	Chevrolet Cruze 1FL (Automatic)
		P/F	Chevrolet Cruze 1LT (Automatic)
		P/G	Chevrolet Cruze 2LT (Automatic)
		P/H	Chevrolet Cruze LTZ (Automatic)
		P/J	Chevrolet Cruze Eco (Automatic)
		P/K	Chevrolet Cruze Eco (Manual)
		P/L	Chevrolet Cruze 1LT (Manual)
		P/M	Chevrolet Cruze 2LT (Manual)
6	Body Style	5	69 - Sedan, 4 - Door, 4 Window, Notchback
7	Restraint System	S	Active Manual Belts, Airbags - Driver & Passenger Front (1st row), Front Seat Side (1st row) & Rear Seat Side (2nd row), Roof Side (all seating rows), Knee (1st row)
8	Engine Type	B	LUV - ENGINE GAS, 4 CYL, 1.4L, MFI, DOHC, TURBO, VVT, ALUM, 0~9, X - Calculated by POMS GME E85 MAX
		G	LWE - ENGINE GAS, 4 CYL, 1.8L, MFI, DOHC, VVT, 103 KW, GME
		H	LUW - ENGINE GAS/ETHANOL, 4 CYL, 1.8L, MFI, 103KW, DOHC, E85
9	Check Digit	-	Check Digit
10	Model Year	D	2013
11	Plant Code	7	Lordstown, OH GMNA
12-17	Production Sequence Number	-	Production Sequence Number

1.4L (LUV) Engine ID and VIN Derivative Location

Refer to **Engine Identification** .

1.8L (LUW / LWE) Engine ID and VIN Derivative Location

Refer to **Engine Identification** .

Automatic Transmission - 6T30/6T40/6T45/6T50 ID and VIN Derivative Location

Refer to **Transmission Identification Information** .

Manual Transmission - M32 ID and VIN Derivative Location

Refer to **Transmission Identification Information** .

VEHICLE CERTIFICATION, TIRE PLACARD, ANTI-THEFT, AND SERVICE PARTS ID LABEL

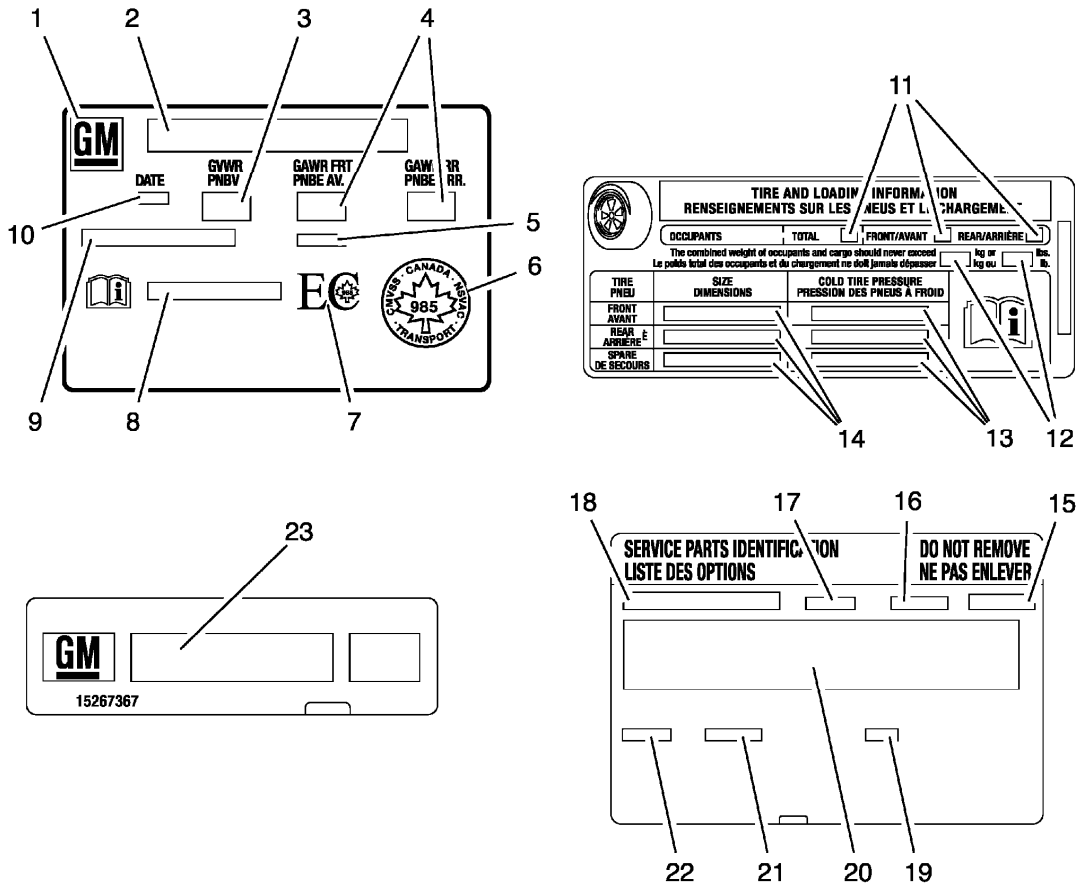

Fig. 4: Vehicle Certification, Tire Placard, Anti-Theft, and Service Parts ID Label
Courtesy of GENERAL MOTORS COMPANY

Vehicle Certification, Tire Placard, Anti-Theft, and Service Parts ID Label

Callout	Description
Vehicle Certification Label The vehicle certification label is located on the driver side B pillar and displays the following assessments: • Gross Vehicle Weight Rating (GVWR) • Gross Axle Weight Rating (GAWR), front and rear • The gross vehicle weight (GVW) is the weight of the vehicle and everything it carries. The gross	

vehicle weight must not exceed the Gross Vehicle Weight Rating. Include the following items when figuring the GVW:

- The base vehicle weight (factory weight)
- The weight of all vehicles accessories
- The weight of the driver and the passengers
- The weight of the cargo

1	Logo
2	Name of Manufacturer
3	Gross Vehicle Weight Rating
4	Gross Axle Weight Rating (Front, Rear)
5	Vehicle Class Type (Pass Car, etc.)
6	Canadian Safety Mark (w/RPO Z49)
7	National Emission Mark (w/RPO Z49)
8	Certification Statement
9	Vehicle Identification Number
10	Final Manufacturers Date (Month/Year)

Tire Placard

The tire placard label is located on the driver side B pillar and displays the following assessments:

11	Specified Occupant Seating Positions (Total, Front and Rear)
12	Maximum Vehicle Capacity Weight (kg and lbs)
13	Tire Pressure, Front, Rear, and Spare (Cold)
14	Original Equipment Tires Size

Service Parts ID Label

The vehicle service parts identification label is located on the inner side of the glove box lid. The label is use to help identify the vehicle original parts and options.

15	Model Designation (Vehicle Division, Line, and Body Style)
16	GM Order Number
17	Wheel Base
18	Vehicle Identification Number
19	Interior/Exterior Color (Number)
20	Regular Production Options/Special Equipment Options (RPO/SEO) Printed in Alpha-Numeric Sequence
21	Interior/Exterior Color (Number)
22	Paint Technology

Anti-Theft Label

23	The Federal law requires that General Motors label certain body parts on this vehicle with the VIN. The purpose of the law is to reduce the number of motor vehicle thefts by helping in the tracing and recovery of parts from stolen vehicles. Labels are permanently affixed to an interior surface of the part. The label on the replacement part contains the letter R, the manufacturer's logo, and the DOT symbol.

	The anti-theft label must be covered before any painting, rustproofing procedures, and uncovered after the procedures. Failure to follow the precautionary steps may result in liability for violation of the Federal Vehicle Theft Prevention Standard and possible suspicion to the owner that the part was stolen.

RPO CODE LIST

The following table provides the description of the Regular Production Option (RPO) codes that are available on the vehicle. The vehicle's RPO list is printed on the Service Parts Identification Label.

RPO	Description
01A	TRIM COLOR SEAT- JET BLACK
01B	TRIM COLOR SEAT- LT NEUTRAL
01K	TRIM COLOR SEAT- BRICK
01S	TRIM COLOR SEAT- MED TITANIUM
03C	TRIM COLOR SEAT- FURY RED
04Y	TRIM COLOR SEAT- Midnight Onyx
1AC	TRIM COLOR DR PANEL- LT NEUTRAL
1AR	TRIM COLOR DR PANEL- MED TITANIUM
1BF	TRIM COLOR DR PANEL- BRICK
1BY	TRIM COLOR DR PANEL - FURY RED
1CN	TRIM COLOR DR PANEL - Midnight Onyx
4AA	INTERIOR TRIM - JET BLACK
4BO	INTERIOR TRIM - COCOA/LIGHT NEUTRAL
5A7	WHEEL SPARE - NONE
5GN	TIRE ALL - 215/55R17 SL 94V BW ALS
5VM	ACCESSORY - GROUND EFFECTS PACKAGE - ALTERNATE DESIGN
9L3	TIRE SPARE - NONE
A51	SEAT - FRT BKT, CUSTOM
A64	SEAT RR - SPLIT, FOLDING, 40/60
A69	RESTRAINT - SEAT BELT TENSIONER, FRT, VAR. 2
AAW	INTERIOR TRIM CONFIG - #17
AAX	INTERIOR TRIM CONFIG - #18
AAY	INTERIOR TRIM CONFIG - #16
ABX	INTERIOR TRIM CONFIG - #19
ABY	INTERIOR TRIM CONFIG - #20
ACB	INTERIOR TRIM CONFIG - #21
ACI	INTERIOR TRIM CONFIG - #23
ACC	INTERIOR TRIM CONFIG - #22
ADS	ADJUSTER FRT ST - POWER, MULTI-DIRECTIONAL, RECLINER MANUAL, DRIVER

AEC	WINDOW - POWER OPERATED, DRIVER EXPRESS DOWN
AED	WINDOW - POWER OPERATED, PASSENGER, EXPRESS DOWN
AEQ	WINDOW - POWER OPERATED, RR DRS, EXPRESS DOWN
AFB	INTERIOR TRIM CONFIG - #2
AFC	INTERIOR TRIM CONFIG - #3
AFF	INTERIOR TRIM CONFIG - #6
AFG	INTERIOR TRIM CONFIG - #7
AFK	INTERIOR TRIM CONFIG - #11
AFN	INTERIOR TRIM CONFIG - #14
AFO	INTERIOR TRIM CONFIG - #15
AFP	INTERIOR TRIM CONFIG - #44
AG6	ADJUSTER PASS ST - MANUAL, 4 WAY
AH3	ADJUSTER FRT ST - MANUAL, 4 WAY, DRIVER
AHN	RESTRAINT PROVISIONS - LATCH
AJC	RESTRAINT - HEAD, FRT SEAT, UP/DOWN ADJUSTMENT
AKK	WINDSHIELD STYLE - ACOUSTIC PVB
AKP	WINDOW TYPE - SOLAR ABSORBING
AKX	WINDSHIELD TYPE - SOLAR ABSORBING
ASV	EQUIPMENT - SENSOR AIR MOISTURE& W/S TEMP
ATH	LOCK CONTROL, ENTRY - REMOTE ENTRY, EXTENDED RANGE, PASSIVE ENTRY
AU3	LOCK CONTROL - SIDE DR, ELEC
AWO	RESTRAINT SYSTEM RR - SEAT BELT, REAR, 3 POINT, CTR
AXG	WINDOW - POWER OPERATED-EXPRESS DRIVER UP/DOWN
AXJ	VEHICLE TYPE - PASSENGER CAR
AYF	RESTRAINT SYSTEM - SEAT, INFLATABLE, DRIVER& PASS FRT, FRT SEAT SIDE& RR SEAT SIDE, ROOF SIDE, KNEE
B34	COVERING FRT - FLOOR MATS, CARPETED INSERT
B35	COVERING REAR - FLOOR MATS, CARPETED INSERT
B76	CLUSTER COLOR - INST, BLACK
BAG	PARTS PKG - EXPORT
BAH	EQUIPMENT- SECURITY SYSTEM, IMMOBILIZATION, STEP TWO
BS1	INSULATION - ACOUSTICAL PKG
BTM	SWITCH-ENGINE START, KEYLESS
BTV	REMOTE START - ENGINE
BVG	KIT - BODY KIT, SPORT
C42	HVAC SYSTEM - HEATER, OUTSIDE AIR, DELUXE
C49	DEFOGGER- RR WINDOW, ELECTRIC
C67	HVAC SYSTEM- AIR CONDITIONER FRT, ELECTRONIC CONTROLS
C68	HVAC SYSTEM- AIR CONDITIONER FRT, AUTO, ELECTRONIC CONTROLS
C91	LAMP- INTR, ROOF, COURTESY

C95	LAMP- INTR, ROOF, COURTESY& DUAL READING
CF5	ROOF- SUN, GLASS, SLIDING, ELEC
D31	MIRROR I/S R/V- TILT
D6I	MIRROR I/S FRT VAN- SUNSHADE, DRIVER, W/MIRROR, COVER, ILLUM, PASS, W/MIRROR, COVER, ILLUM
D75	HANDLE O/S DOOR- BODY COLOR
D7A	HANDLE O/S DOOR- BODY COLOR, CHROME STRIP
DA1	ARM REST- RR SEAT, STORAGE
DBU	CONSOLE- FRT COMPT, FLOOR, ARM REST SLIDING
DD8	MIRROR I/S R/V- LT SENSITIVE
DLV	MIRROR I/S FRT VAN- SUNSHADE, DRIVER& PASS, W/MIRROR& COVER
DP6	MIRROR PROVISIONS- HOUSING, PAINTED
DT4	ASHTRAY-CIGARETTE LIGHTER
DWE	MIRROR O/S- LH& RH, RC, ELEC, HEAT, AUX WFOV/DRVR, MANFOLD, CNVX/PASS
DWT	MIRROR O/S- LH& RH, RC, MANFOLD, AUX WFOV/DRVR, CNVX/PASS
DWY	MIRROR O/S- LH& RH, RC, ELEC, MANFOLD, AUX WFOV/DRVR, CNVX/PASS
DVR	CLUSTER COLOR- INST, BLACK, TRANSLUCENT RINGS W/CHROME TOP
E17	BUMPER- 2.5 MPH
E3E	HANDLE- O/S, L/GATE, R/CMPT, CHROME
EA1	POCKET- FRONT SEAT BACK, LH
EA2	POCKET- FRONT SEAT BACK, RH
EBF	TRIM SEAT- LEATHER, MERIDIAN
EBJ	TRIM SEAT- CLOTH, MESH
EF7	COUNTRY - UNITED STATES OF AMERICA (USA)
EN4	COVER, RR COMPT - HARD, RR COMPT, CARGO
FCT	TRIM DOOR - MESH FABRIC
FCU	TRIM DOOR - PU LEATHER
FE9	CERTIFICATION - EMISSION, FEDERAL
FJW	VEHICLE FUEL - GASOLINE E15
FV1	RATIO - TRANSAXLE FINAL DRIVE 3.72
FW7	RATIO - TRANSAXLE FINAL DRIVE 3.83
FX1	RATIO - TRANSAXLE FINAL DRIVE 3.94
FX3	RIDE AND HANDLING - AUTOMATIC ELECTRONIC CONTROLLED
FXH	RATIO - TRANSAXLE FINAL DRIVE 3.53
GAN	PRIMARY COLOR - EXTERIOR, SWITCHBLADE SILVER MET (G) 636R
GAR	PRIMARY COLOR - EXTERIOR, CARBON FLASH MET (G) 501Q
GAZ	PRIMARY COLOR - EXTERIOR, OLYMPIC WHITE (G) 8624
GBE	PRIMARY COLOR - EXTERIOR, CRYSTAL CLARET TINTCOAT (G) 505Q

GBV	PRIMARY COLOR - EXTERIOR, CYBER GRAY MET (G) 637R
GCN	PRIMARY COLOR - EXTERIOR, VICTORY RED 9260
GGT	PRIMARY COLOR - EXTERIOR, SERAPH ORANGE MET (715S) (90U)
GNA	CHASSIS EQUIP FRONT - STRUT ASM
GNG	CHASSIS EQUIP REAR - REAR AXLE, COMPOUND CRANK, ADDITIONAL WATT LINKAGE
GNF	CHASSIS EQUIP REAR - REAR AXLE, COMPOUND CRANK
GTS	PRIMARY COLOR - EXTERIOR, LUXO BLUE MET (933L) (44U)
GWT	PRIMARY COLOR - EXTERIOR, CHAMPAGNE SILVER MET (102V)
GWY	PRIMARY COLOR - EXTERIOR, ATLANTIS MET (106V)
GXG	PRIMARY COLOR - EXTERIOR, IRIDIUM MET (121V)
J67	BRAKE SYSTEM - POWER, FRT& RR DISC, ABS, 15"
J93	BRAKE SYSTEM - POWER, FRT DISC, RR DRUM, ABS, 15"
JJ2	BRAKE LINING - BRAKE NOISE AND DUST PERFORMANCE
K34	CRUISE CONTROL - AUTOMATIC, ELECTRONIC
KA1	HEATER - SEAT, FRT
KC7	RECEPTACLE - ELECTRICAL, RR SEAT
KCL	HEATER - DUCT, RR PASS (2ND POSN)
KG8	GENERATOR - 130 AMP
KPK	HEATER - OIL PAN
KRD	FUEL RATING - OCTANE NO. 91
KTA	AUDIO INTERFACE
KTF	KEY- PRIMARY FOLDABLE, ADDITIONAL FOLDABLE
KTI	KIT, TIRE - INFLATOR
LHD	VEHICLE DRIVE - LEFTHAND DRIVE
LOD	PLANT CODE - LORDSTOWN, OH, USA
LUV	ENGINE - GAS, 4 CYL, 1.4L, MFI, DOHC, TURBO, VVT, ALUM, GME, E85 MAX
LUW	ENGINE - GAS, 4 CYL, 1.8L, MFI, 103KW, DOHC, E85 MAX
LWE	ENGINE - GAS, 4 CYL, 1.8L, MFI, DOHC, VVT, 103 KW, GME
MDB	MOLDING B/S UPPER - BLACK
MDC	MOLDING B/S UPPER - BRIGHT
MF3	TRANSMISSION - MAN 6 SPD, OPEL, 76.5 MM, 4.273 1ST, 2.158 2ND, 1.302 3RD, 0.959 4TH, 0.744 5TH, 0.614 6TH, M32-6 WR
MH8	TRANSMISSION - AUTO 6 SPD, HMD, X23F
MH9	TRANSMISSION - AUTO 6 SPD, HMD, X24F
MR5	TRANSMISSION - MAN 6 SPD, OPEL, 76.5 MM, 4.273 1ST, 2.353 2ND, 1.475 3RD, 1.067 4TH, 0.875 5TH, 0.744 6TH, M32-6 WR
MZ0	TRANSMISSION - MAN 6 SPD, OPEL, 76.5 MM, 3.82 1ST, 0.74 6TH, (M32 WR)
N34	STEERING WHEEL - LEATHER, 3 SPOKES
N37	STEERING COLUMN - TILT, TELESCOPING

N45	STEERING WHEEL - 3 SPOKES
NAG	COVER, WHEEL - BOLT-ON, VAR 1
NE1	CERTIFICATION - EMISSION, GEOGRAPHICALLY RESTRICTED REGISTRATION FOR VEHICLES UP TO 14, 000 LBS GVW
NJ1	STEERING - POWER, NON-VARIABLE RATIO, ELECTRIC
NL6	FUEL TANK - 49L, 13 GAL, SINGLE
NT7	EMISSION SYSTEM - FEDERAL, TIER 2
NU5	EMISSION SYSTEM - CALIFORNIA, BIN 4
NU6	EMISSION SYSTEM - CALIFORNIA, PZEV
PWM	WHEEL - 16 X 6.5, STEEL, DESIGN2
PZV	WHEEL - 18 X 7, 5, J, ALUMINUM, DESIGN 7
QOI	TIRE ALL - P225/45R18-SL 91W BW AL3
QYF	TIRE ALL - P225/50R17 SL 93 H BW AL3
QYW	TIRE ALL - P215/60R16-94S BW R/PE ST TL ALS
RBU	WHEEL - 17 X 7.0, J, ALUMINUM, DESIGN 17
RTN	WHEEL - 17 X 7.0, J, ALUMINUM, DESIGN 2
RU5	WHEEL SPARE - 16 X 4.0, J, STEEL, DESIGN 1
RWI	ACCESSORY - BODY SIDE MOLDINGS - CHROME
RWK	ACCESSORY - BODY SIDE MOLDINGS - PAINTED
RXZ	ACCESSORY - CRUISE CONTROL KIT
RYT	ACCESSORY - FIRST AID KIT
S0M	ACCESSORY - ILLUMINATED DOOR SILLS
S0O	ACCESSORY - ILLUMINATED FOOT WELLS
S3U	ACCESSORY - LAMP KIT - FRONT FOG
S47	ACCESSORY - LUG NUTS
S52	ACCESSORY - MOLDED HOOD PROTECTOR - SMOKED
SAH	ACCESSORY - SILL PLATES - CHROME
SAO	ACCESSORY - SMOKERS PACKAGE
SB2	ACCESSORY - SPOILER - DECKLID - FLUSH MOUNT
SBZ	ACCESSORY - SPORT PEDAL KIT
SE1	ACCESSORY - WHEEL - 17" - ALUMINUM - DESIGN 2
SFE	ACCESSORY - WHEEL LOCKS
SRR	MODEL CONVERSION - 2LT
T4A	HEADLAMPS- HALOGEN
T43	SPOILER- RR
T74	HEADLAMPS CONTROL- AUTOMATIC, DELAY
T83	HEADLAMPS CONTROL- AUTOMATIC ON-OFF
T3U	LAMP- FRT FOG
T3W	LAMP SYSTEM- DAYTIME RUNNING, REDUCED INTENSITY LOW BEAM
TM7	BATTERY- LN2, FLA, 12V, 60AH, 438 ENCCA

TPV	GRILLE- RADIATOR, BLACK, W/CHROME BAR
TS6	LAMP- STOP, HIGH LEVEL
TTX	RADIO EQUIPMENT- AUX CONNECTOR (LINE IN)
TU2	LAMP- MARKER, SIDE
U04	HORN- SINGLE NOTE
U07	HORN- FANFARE
U19	SPEEDOMETER- INST, KILO& MILES, KILO ODOMETER
U25	LAMP-INTR, RR COMPT, COURTESY
U91	ANTENNA - SHORT, ROOF, RADIO
U2K	DIGITAL AUDIO SYSTEM - S-BAND
UAG	INFOTAINMENT DISPLAY - GRAPHIC INFO DISPLAY (GID), VAR 1
UD0	SENSOR INDICATOR - INFLATABLE RESTRAINT, FRT RH/CHILD PRESENCE DETECTOR
UD7	SENSOR INDICATOR - REAR PARKING ASSIST
UDC	DISPLAY INSTRUMENT - DRIVER INFO ENHANCED (ONE COLOR GRAPHIC)
UDY	INFOTAINMENT DISPLAY - COLOR INFO DISPLAY (CID) 7", WVGA, TOUCH SCREEN
UE1	COMMUNICATION SYSTEM - VEHICLE, G.P.S. 1
UEC	SENSOR INDICATOR - AUTOMATIC AIR RECIRCULATION
UFG	SENSOR INDICATOR - REAR CROSS TRAFFIC ALERT
UFT	SENSOR INDICATOR - SIDE OBSTACLE DETECTION
UFU	RADIO - AM/FM STEREO, SINGLE CD, MP3 (AUX IN), USB
UH0	INDICATOR - SEAT BELT WARNING, LH
UH1	INDICATOR - SEAT BELT WARNING, RH
UHQ	RADIO - AM/FM STEREO, SINGLE CD, MP3 (AUX IN), USB, NAVIGATION
UJ2	INDICATOR - ENGINE OIL LIFE
UJM	TIRE PRESS INDICATOR - MANUAL LEARN
ULS	LOCK CONTROL - STEERING COLUMN
UMN	SPEEDOMETER - INST, MILES& KILO, MILES ODOMETER
UP9	WIRELESS INTERFACE - SHORT RANGE, VOICE RECOG, MUSIC NAVIGATOR, STREAMING AUDIO
UPF	WIRELESS INTERFACE - SHORT RANGE, VOICE REC
UQA	SPEAKER SYSTEM - PREMIUM AUDIO BRANDED WITH AMPLIFIER
USR	RECEPTACLE - USB
UTJ	THEFT DETERENT - ELECTRICAL, UNAUTHORIZED ENTRY
UVC	CAMERA - REAR VIEW
UYE	RADIO - AM/FM STEREO, CD-ROM, CAF, RSA, MUSIC NAVIGATOR (GMNA VERSION)
UZ6	SPEAKER SYSTEM - 6, PREMIUM
V48	COOLANT - ENGINE MAXIMUM PROTECTION

VAS	ACCESSORY - GRILLE / GRILLE INSERTS - ALTERNATE FINISH - BODY COLOR
VAV	ACCESSORY - FLOOR MATS - ALL WEATHER
VCG	PROVISIONS - INTERNATIONAL SWITCH/CONTROL SYMBOLS
VG1	PROTECTOR - UNDERHOOD COMPOUND, CORROSION PREVENTIVE, WATER BASED, CLEAR
VHY	PROTECTOR - BODY SHEET METAL, HIGH CORROSION PREVENTIVE
VK3	LICENSE PLATE FRONT - FRT MOUNTING PKG
VKX	ACCESSORY - SPARE WHEEL & TIRE
VKY	ACCESSORY - DOOR HANDLES - ALTERNATE FINISH - CHROME
VPH	VEHICLE PREPARATION - OVERSEAS DELIVERY
VQK	ACCESSORY - SPLASH GUARDS - CUSTOM MOLDED
VTB	ACCESSORY - PROTECTOR - REAR BUMPER
VTG	ACCESSORY - INTERIOR TRIM KIT
VTW	COMPARTMENT - STOWAGE, I/P, W/LID
VTX	COMPARTMENT - STOWAGE, I/P, WO/LID
VWC	PANEL CENTER - INSTRUMENT, HIGH GLOSS BLACK
VY7	KNOB - TRANS CONT LEVER, LEATHER
VYW	ACCESSORY - FLOOR MATS - PREMIUM CARPET
VZ3	LABEL - MERCURY DISPOSAL NOTIFICATION
W1Y	CONTROL - STEERING WHEEL, RADIO, REDUNDANT CONTROLS
W2D	ACCESSORY - CARGO NET
WA7	PERFORMANCE PACKAGE - AERO
WGK	ACCESSORY - INTERIOR TRIM KIT - DESIGN 1
WR6	WHEEL - 16 X 6.5, J, ALUMINUM, DESIGN 8
XJ2	CHASSIS - SPORT, LOWERED
XL7	FREQUENCIES RATING - 315 MHZ, LONG DISTANCE
Y8X	FUEL ECONOMY- ENGINE IMPROVEMENT
YF5	CERTIFICATION- EMISSION, CALIFORNIA
Z49	COUNTRY- CANADA
Z54	MODEL CONVERSION- LT
Z64	MODEL CONVERSION- LTZ
ZAD	TIRE SPARE-T115/70R16 SL 92M BW SPR

FASTENERS

Metric Fasteners

This vehicle provides fastener dimensions using the metric system. Most metric fasteners are approximate in diameter to equivalent English fasteners. Make replacements using fasteners of the same nominal diameter, thread pitch, and strength.

A number marking identifies the OE metric fasteners except cross-recess head screws. The number also

indicates the strength of the fastener material. A Posidrive® or Type 1A cross-recess identifies a metric cross-recess screw. For best results, use a Type 1A cross-recess screwdriver, or equivalent, in Posidrive® recess head screws.

GM Engineering Standards and North American Industries have adopted a portion of the ISO-defined standard metric fastener sizes. The purpose was to reduce the number of fastener sizes used while retaining the best thread qualities in each thread size. For example, the metric M6.0 X 1 screw, with nearly the same diameter and 25.4 threads per inch replaced the English 1/4-20 and 1/4-28 screws. The thread pitch is midway between the English coarse and fine thread pitches.

Fastener Strength Identification

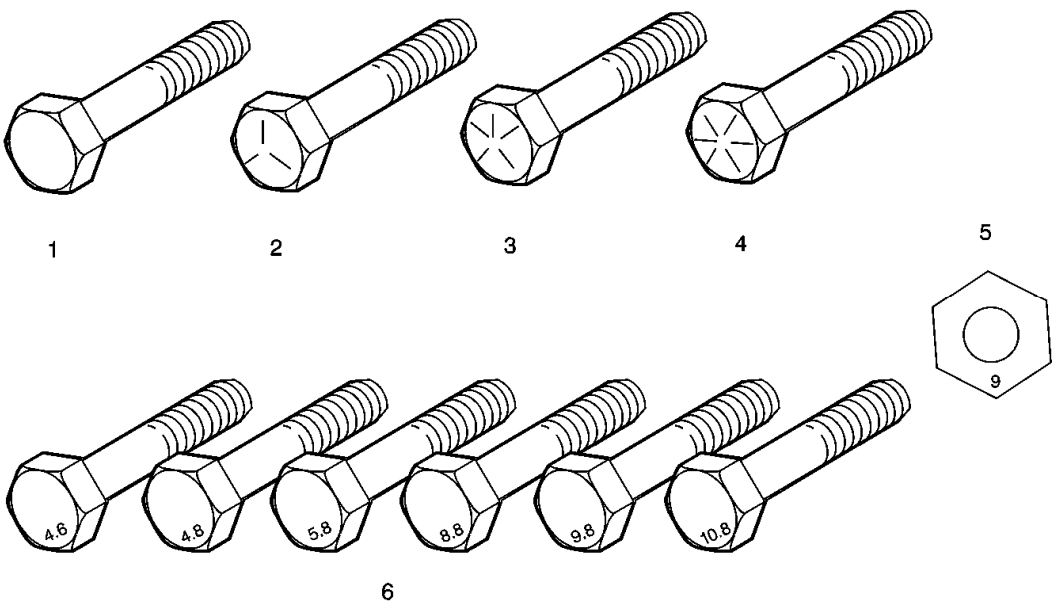

Fig. 5: Identifying Fastener Strength Marks
Courtesy of GENERAL MOTORS COMPANY

Callout	Component Name
1	English Bolt, Grade 2 (Strength Class)
2	English Bolt, Grade 5 (Strength Class)
3	English Bolt, Grade 7 (Strength Class)
4	English Bolt, Grade 8 (Strength Class)
5	Metric Nut, Strength Class 9
6	Metric Bolts, Strength Class Increases as Numbers Increase

The most commonly used metric fastener strength property classes are 9.8 and 10.9. The class identification is embossed on the head of each bolt. The English, inch strength classes range from grade 2 to grade 8. Radial

lines are embossed on the head of each bolt in order to identify the strength class. The number of lines on the head of the bolt is 2 lines less than the actual grade. For example, a grade 8 bolt will have 6 radial lines on the bolt head. Some metric nuts are marked with a single digit strength identification number on the nut face.

The correct fasteners are available through GM SPO. Many metric fasteners available in the aftermarket parts channels are designed to metric standards of countries other than the United States, and may exhibit the following:

- Lower strength
- No numbered head marking system
- Wrong thread pitch

The metric fasteners on GM products are designed to new, international standards. The following are the common sizes and pitches, except for special applications:

- M6.0 X 1
- M8 X 1.25
- M10 X 1.5
- M12 X 1.75
- M14 X 2.00
- M16 X 2.00

Prevailing Torque Fasteners

Prevailing torque fasteners create a thread interface between the fastener and the fastener counterpart in order to prevent the fastener from loosening.

All Metal Prevailing Torque Fasteners

These fasteners accomplish the thread interface by a designed distortion or deformation in the fastener.

Nylon Interface Prevailing Torque Fasteners

These fasteners accomplish the thread interface by the presence of a nylon material on the fastener threads.

Adhesive Coated Fasteners

These fasteners accomplish the thread interface by the presence of a thread-locking compound on the fastener threads. Refer to the appropriate repair procedure in order to determine if the fastener may be reused and the applicable thread-locking compound to apply to the fastener.

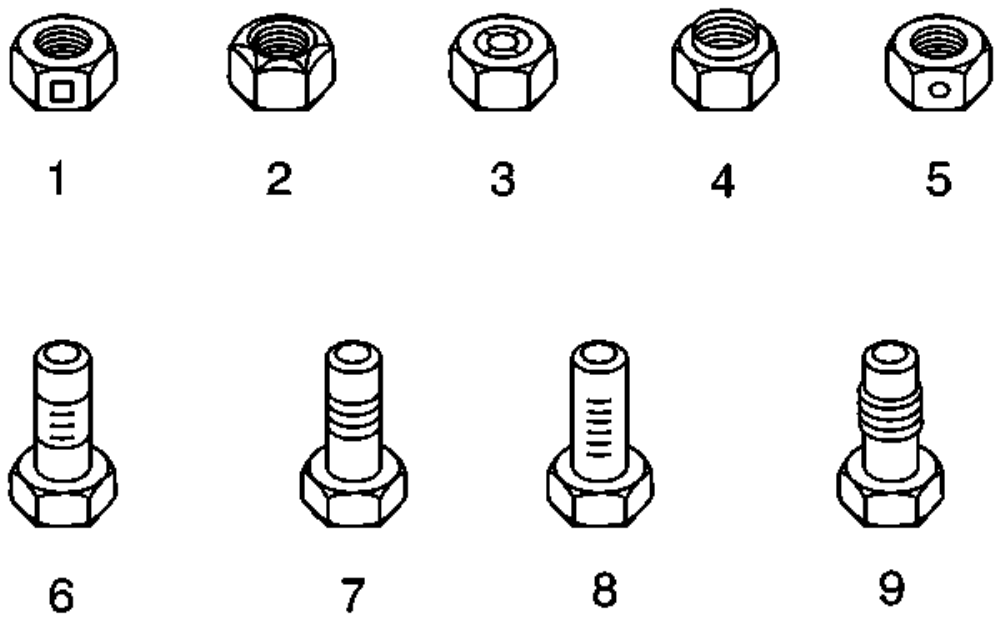

Fig. 6: Identifying Adhesive Coated Fasteners
Courtesy of GENERAL MOTORS COMPANY

Callout	Component Name
1	Prevailing Torque Nut, Center Lock Type
2	Prevailing Torque Nut, Top Lock Type
3	Prevailing Torque Nut, Nylon Patch Type
4	Prevailing Torque Nut, Nylon Washer Insert Type
5	Prevailing Torque Nut, Nylon Insert Type
6	Prevailing Torque Bolt, Dry Adhesive Coating Type
7	Prevailing Torque Bolt, Thread Profile Deformed Type
8	Prevailing Torque Bolt, Nylon Strip Type
9	Prevailing Torque Bolt, Out-of-Round Thread Area Type

A prevailing torque fastener may be reused ONLY if:

- The fastener and the fastener counterpart are clean and not damaged
- There is no rust on the fastener
- The fastener develops the specified minimum torque against its counterpart prior to the fastener seating

Metric Prevailing Torque Fastener Minimum Torque Development

Application	Specification	
	Metric	English
All Metal Prevailing Torque Fasteners		
• 6 mm	0.4 N.m	4 lb in
• 8 mm	0.8 N.m	7 lb in
• 10 mm	1.4 N.m	12 lb in
• 12 mm	2.1 N.m	19 lb in
• 14 mm	3 N.m	27 lb in
• 16 mm	4.2 N.m	37 lb in
• 20 mm	7 N.m	62 lb in
• 24 mm	10.5 N.m	93 lb in
Nylon Interface Prevailing Torque Fasteners		
• 6 mm	0.3 N.m	3 lb in
• 8 mm	0.6 N.m	5 lb in
• 10 mm	1.1 N.m	10 lb in
• 12 mm	1.5 N.m	13 lb in
• 14 mm	2.3 N.m	20 lb in
• 16 mm	3.4 N.m	30 lb in
• 20 mm	5.5 N.m	49 lb in
• 24 mm	8.5 N.m	75 lb in

English Prevailing Torque Fastener Minimum Torque Development

Application	Specification	
	Metric	English
All Metal Prevailing Torque Fasteners		
• 1/4 in	0.5 N.m	4.5 lb in
• 5/16 in	0.8 N.m	7.5 lb in
• 3/8 in	1.3 N.m	11.5 lb in
• 7/16 in	1.8 N.m	16 lb in
• 1/2 in	2.3 N.m	20 lb in
• 9/16 in	3.2 N.m	28 lb in

• 5/8 in	4 N.m	36 lb in
• 3/4 in	7 N.m	54 lb in
Nylon Interface Prevailing Torque Fasteners		
• 1/4 in	0.3 N.m	3 lb in
• 5/16 in	0.6 N.m	5 lb in
• 3/8 in	1 N.m	9 lb in
• 7/16 in	1.3 N.m	12 lb in
• 1/2 in	1.8 N.m	16 lb in
• 9/16 in	2.5 N.m	22 lb in
• 5/8 in	3.4 N.m	30 lb in
• 3/4 in	5 N.m	45 lb in

THREAD INSERTS

General Purpose Thread Repair Kits.

These kits are available commercially.

Repair Procedure

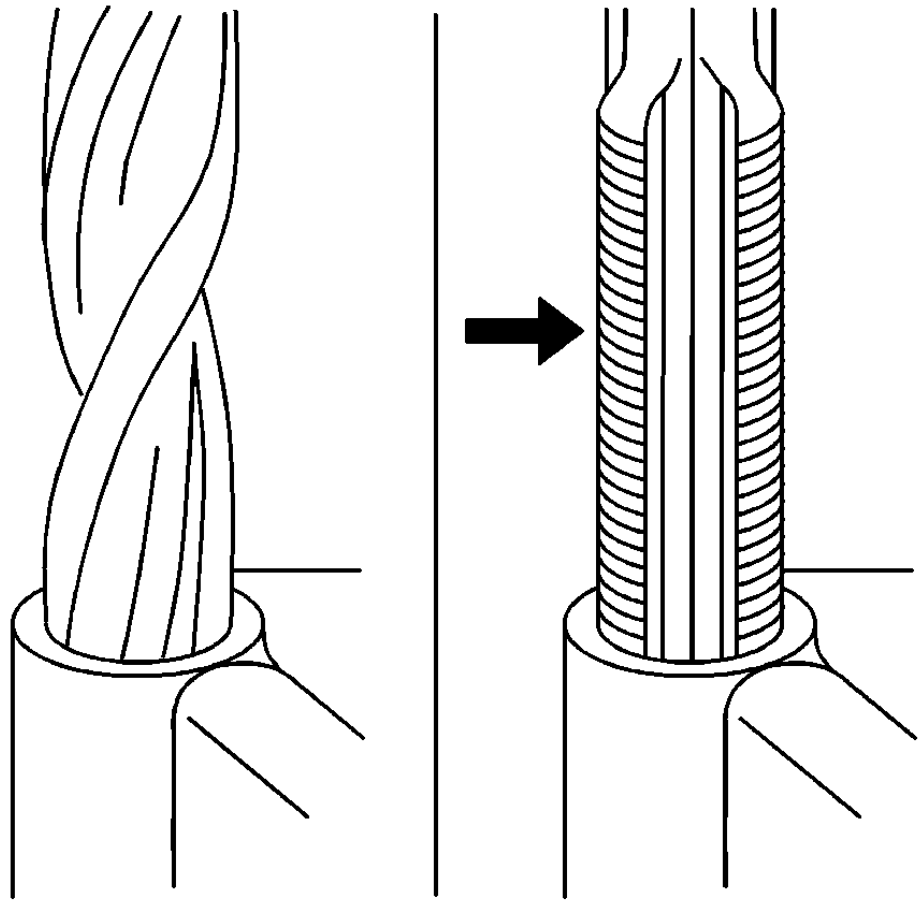

Fig. 7: Drilling & Tapping Damaged Threads
Courtesy of GENERAL MOTORS COMPANY

WARNING: Refer to Safety Glasses Warning .

NOTE: Refer to the thread repair kit manufacturer's instructions regarding the size of the drill and tap to use.

Avoid any buildup of chips. Back out the tap every few turns and remove the chips.

1. Determine the size, the pitch, and the depth of the damaged thread. If necessary, adjust the stop collars on the cutting tool and tap to the required depth.
2. Drill out the damaged threads. Clean out any chips.
3. Lubricate the tap with light engine oil. Tap the hole. Clean the threads.

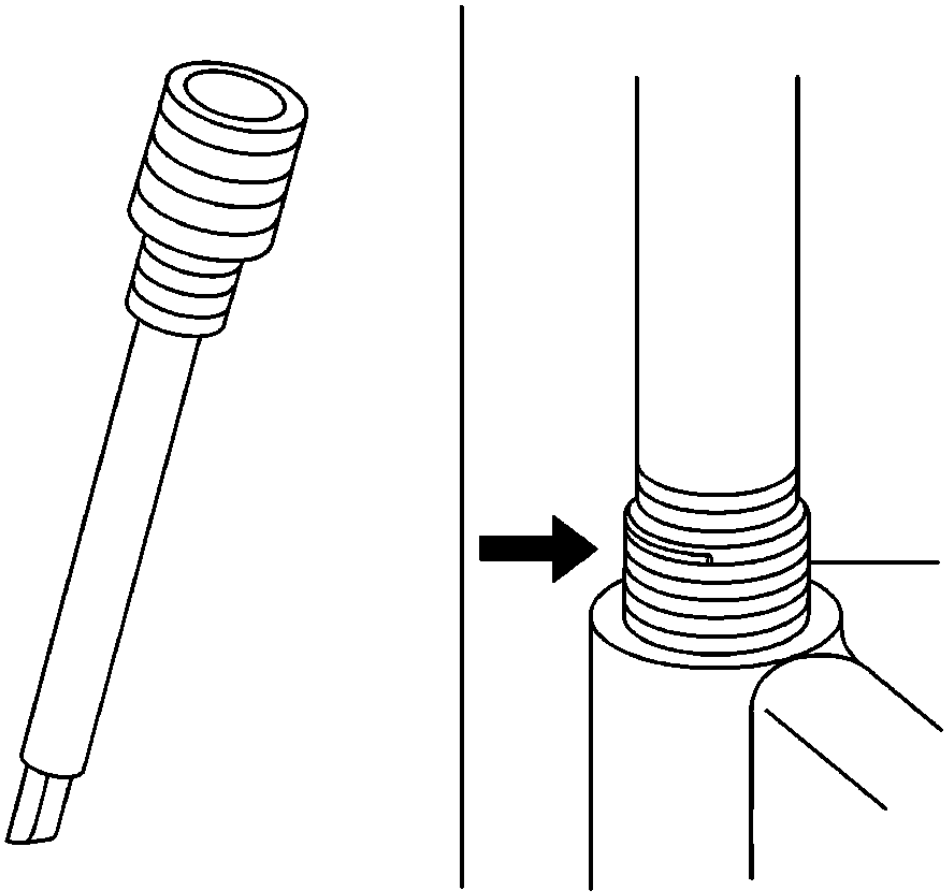

Fig. 8: View Of Thread Insert
Courtesy of GENERAL MOTORS COMPANY

4. Thread the thread insert onto the mandrel of the installer. Engage the tang of the insert onto the end of the mandrel.

NOTE: The insert should be flush to one turn below the surface.

5. Lubricate the insert with light engine oil, except when installing in aluminum and install the insert.
6. If the tang of the insert does not break off when backing out the installer, break the tang off with a drift.

REGISTERED AND NON-REGISTERED TRADEMARKS

Listed below are Registered Trademarks (®) or Non-Registered Trademarks (™) which may appear in this service information.

Registered and Non-Registered Trademarks

A
AC®
ACCUTURN®
ACDelco®
Active Fuel Management™
Acuzinc®
Airbank®
Allison®
AMMCO®
AUTOFUSE®
AUTOTRAC®
B
Bendix®
Bluetooth®
BON-AMI®
Bosch®
Bose®
C
Caterpillar®
CAT®
C-Quam®
D
Delco®
Delco Bose®
Delco Electronics®
Delco Freedom®
Delco LOC II®
Delco Moraine®
Delco Remy®
Delco Sound®
Delco Supreme®
Delco Tech®
DELCORE®
Delphi®
DEX-COOL®
DEXOIL®
DEXRON®
DEXSTEER™
DNR®
Dolby®
DR®

Duraguard®
Durastop®
Duramax™
E
Eaton Corporation®
EMD®
ETR®
F
FLO-LITE®
G
General Motors®
GM®
GM Goodwrench Service®
GM Optikleen®
GM Parts™
GM Pass®
GM Ultralite®
GMAC®
Goodwrench®
GTP®
H
Homelink™
HYDRA-MATIC®
I
Illumination®
INSTA-TRAC®
Intune®
L
LOCTITE™
Lord Fusor™
M
MAGNASTEER®
Maxifuse®
Metripack®
Micropack®
Minifuse®
Mr Goodwrench®
N
Northstar®
O
OnStar®

P
PASS-KEY®
PASS-KEYII®
PASSLOCK™
PK3®
Posidrive®
Pro®
Q
Quad 4®
R
RAINSENSE™
Rapid Fire®
S
ScotchBrite™
Scotchguard™
Signals®
Sikkens™
Soft-Ray®
Solar-Ray®
Stabilitrak®
Sunrayce®
Superlube®
Syclone®
T
Tech 2®
Techline®
Teflon®
Tefzel®
Theft-I®
Theftlock®
Tiltmaster®
TORX®
Transjel®
Transguide®
Twilight Sentinel®
U
Ultralite®
V
Velcro®
W
Weatherband™

KEY AND LOCK CYLINDER CODING

Special Tools

BO-49753 Assembly Tool

Ignition Lock Cylinder

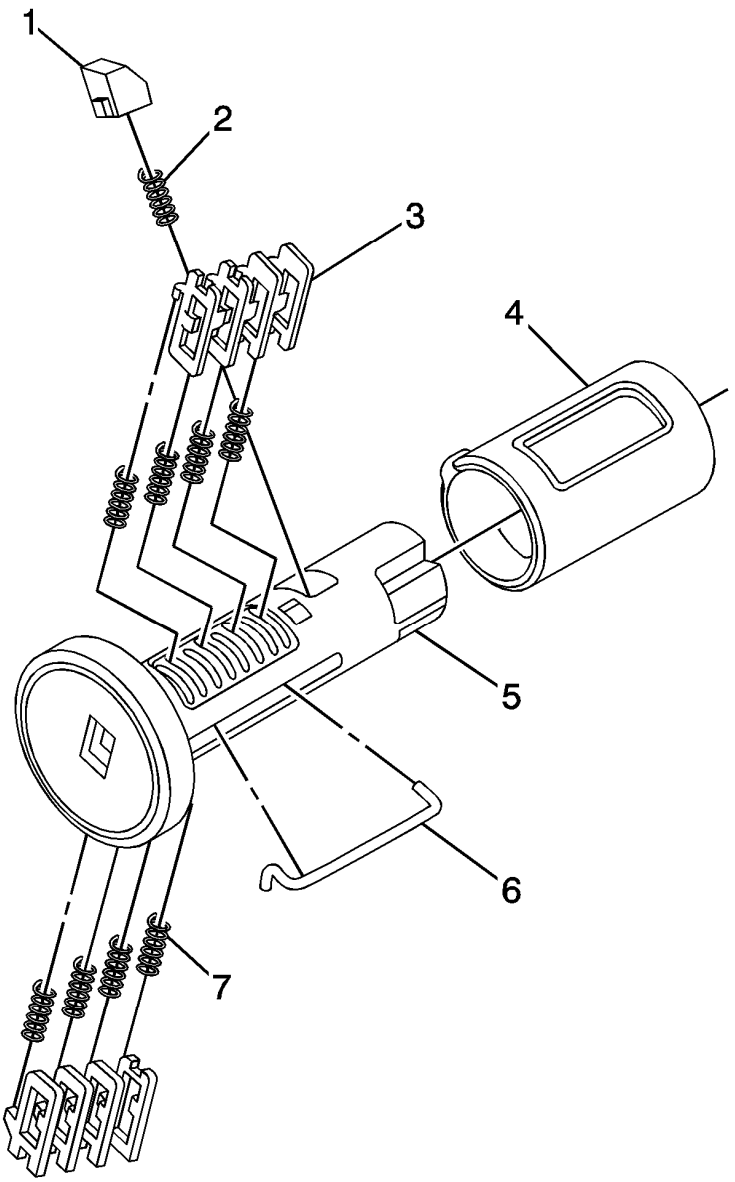

Fig. 9: Lock Cylinder Coding - Ignition
Courtesy of GENERAL MOTORS COMPANY

The ignition lock cylinder uses 8 key cut positions, 1-8. The ignition cylinder tumblers (3) are located on alternate sides of the cylinder (5). They are not snap-in and are not self-retaining. It follows the key code with

the first tumbler being the first depth of the key code, closest to the head of the key.

NOTE: All lock cylinders for side milled keys have right and left tumblers. The location of the tooth of the tumbler determines whether it is right of left. Illustrations in this procedure show the right tumblers on the top and the left tumblers on the bottom. All tumblers are marked 1R, 1L, 2R, or 2L. The number being cut depth and the letter meaning right or left.

1. Hold the ignition cylinder assembly (5) so the side with the tumbler spring pocket located closest to the head of the cylinder is facing up.
2. Insert the tumbler spring (7) into each of the 4 spring pockets of the cylinder assembly. This side of the cylinder used left tumblers.
3. The first tumbler (3) to be loaded will be the first key cut position, which is the first number in the key code. Install the tumbler in the slot over the spring. Install the remaining right tumblers following the key code and same process, pressing the tumblers in place until they are secure.
4. Rotate the cylinder assembly. Insert the tumbler spring into each of the spring pockets of the cylinder assembly. This side of the cylinder used right tumblers.
5. The first tumbler (3) to be loaded will be the second key cut position, the second number in the key code. Install the first tumbler in the slot over the spring. Install the remaining left tumblers following the key code and same process, pressing the tumblers in place until they are secure.
6. Inspect for correct loading of the tumblers by inserting the key into the cylinder. All tumblers should drop flush with the lock cylinder body diameter.
7. With the key in the cylinder assembly insert the round connector (6), insert the retainer spring (2) in the retainer slot located in the cylinder assembly. Insert the retainer (1) lining it up in the slot over the spring. Depress the retainer and hold.
8. Insert the cylinder into the sleeve (4) as shown in the print. Make sure the actuator stays located properly in the cylinder.
9. When the key is removed, the lock should stay together.
10. Lightly lubricate the outside surface in the tumbler area of in the lock body and down the key slot using the provided grease. Insert and extract the key 5 times to lubricate the keyway.
11. Insert the key and function the lock 3 times to distribute the grease inside the sleeve.
12. Verify the key position for inserting the lock into the column.

Front Side Door Lock Cylinder

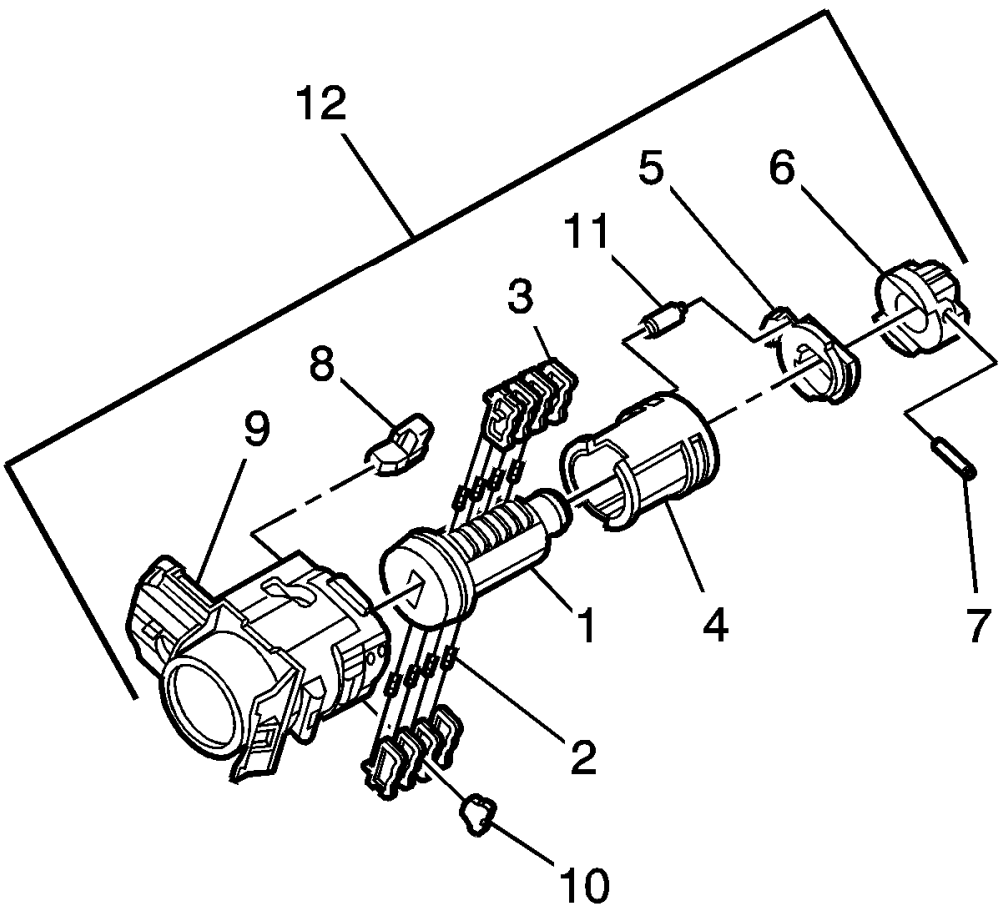

Fig. 10: Identifying Lock Components
Courtesy of GENERAL MOTORS COMPANY

The door lock cylinder uses 8 of the 8 cut positions. The tumbler positions are staggered from side to side, 4 on

one side and 4 on the other, are not self-retaining, and are not snap in.

NOTE: All lock cylinders for side milled keys have right and left tumblers. The location of the tooth of the tumbler determines whether it is right of left. Illustrations in this procedure show the right tumblers on the top and the left tumblers on the bottom. All tumblers are marked 1R, 1L, 2R, or 2L. The number being cut depth and the letter meaning right or left.

1. Hold the door lock cylinder (1) so the side with the 4 tumbler spring pockets faces up, pocket nearest to the cylinder head.
2. Insert the tumbler springs (2) into the 4 spring pockets. This side uses left tumblers.
3. Install the tumbler (3) for key cut position one in the slot nearest to the front of the lock cylinder. Install the remaining tumblers, key cut positions 3, 5, and 7, following the key code and same process. Press the tumblers in place until they are secure.
4. Check the correct loading of the tumblers by inserting the key into the cylinder. All tumblers should be flush with the lock cylinder body.
5. Turn the cylinder so the side with the 4 tumbler spring wells faces up. This side uses right tumblers.
6. Insert the tumbler springs into the 4 spring pockets.
7. The first tumbler closest to the front of the lock cylinder to be loaded will be the second key cut position, the second number in the key code. Install the remaining tumblers for the key cut positions 4, 6, and 8. Press the tumblers in place until they are secure.
8. Check the correct loading of the tumblers by inserting the key into the cylinder. All tumblers should be flush with the lock cylinder body.
9. Insert the key and lightly lubricate the cylinder body diameter and tumbler surfaces and a small amount in the head of the cylinder using the supplied grease.
10. Insert the sleeve (4) onto the cylinder assembly.
11. Insert the clutch (5) and driver (6) onto the cylinder (1).

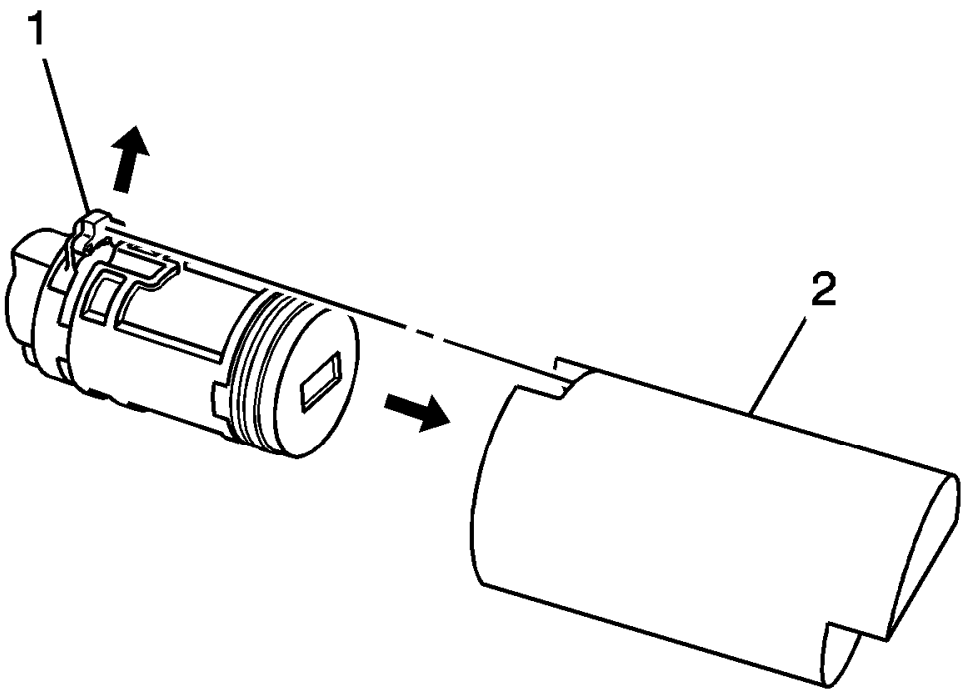

Fig. 11: Loading Cylinder Into Special Tool
Courtesy of GENERAL MOTORS COMPANY

12. Load the cylinder into the **BO-49753** assembly tool so that the clutch (1) indexes with the notch in the opening of the tool (2).

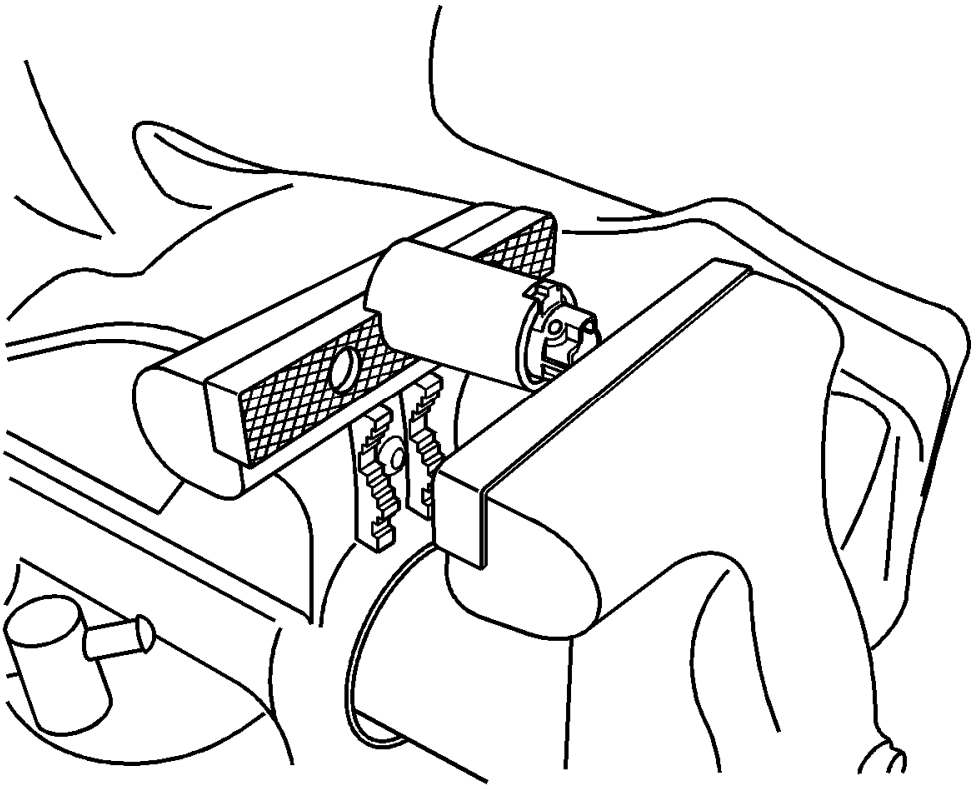

Fig. 12: Loading Assembly Tool Into Vise
Courtesy of GENERAL MOTORS COMPANY

13. Load the assembly tool with the lock cylinder into a vice and tighten the vice ONLY enough to hold the tool and lock the cylinder in place.

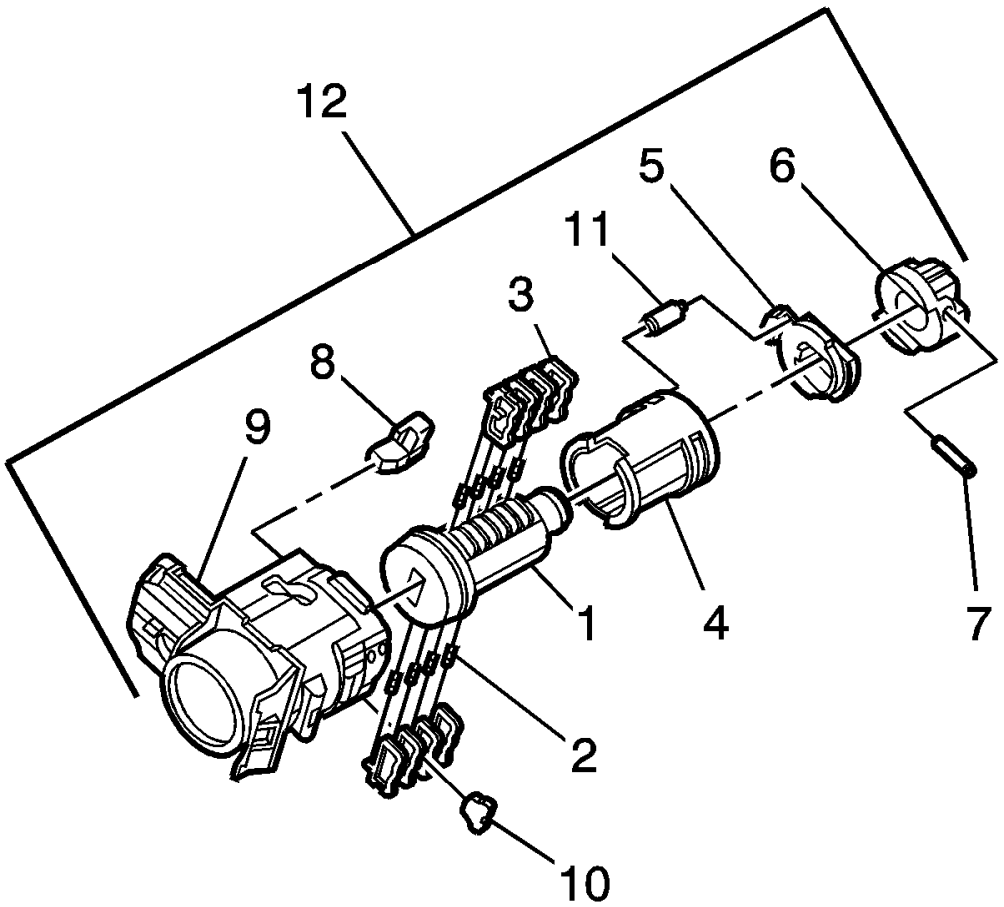

Fig. 13: Identifying Lock Components
Courtesy of GENERAL MOTORS COMPANY

14. Insert the roll pin (7) into the driver (6) and install it using a 1/16 inch pin punch.

15. Insert the buffer (8) in the case (9), verify the buffer is properly seated.
16. Install the free wheel pin (11) in the sleeve (4) and clutch (5) and insert the assembly into the case (9).
17. With the lock cylinder assembly installed in the case (9), install the retainer (10) and stake the retainer in place using a small punch and hammer to peen the case material onto the exposed ends of the installed retainer (10).
18. Insert the key into the lock and function the lock to check for proper assembly and smooth operation.

LIFTING AND JACKING THE VEHICLE

NOTE: The use of a LOW PROFILE LIFT ARMS SYSTEM may be required to avoid unwanted contact with the vehicle's body and structure depending on lifting equipment used. Refer to the manufacture's recommendation for their applications of low profile lift arms system for their lifting equipment.

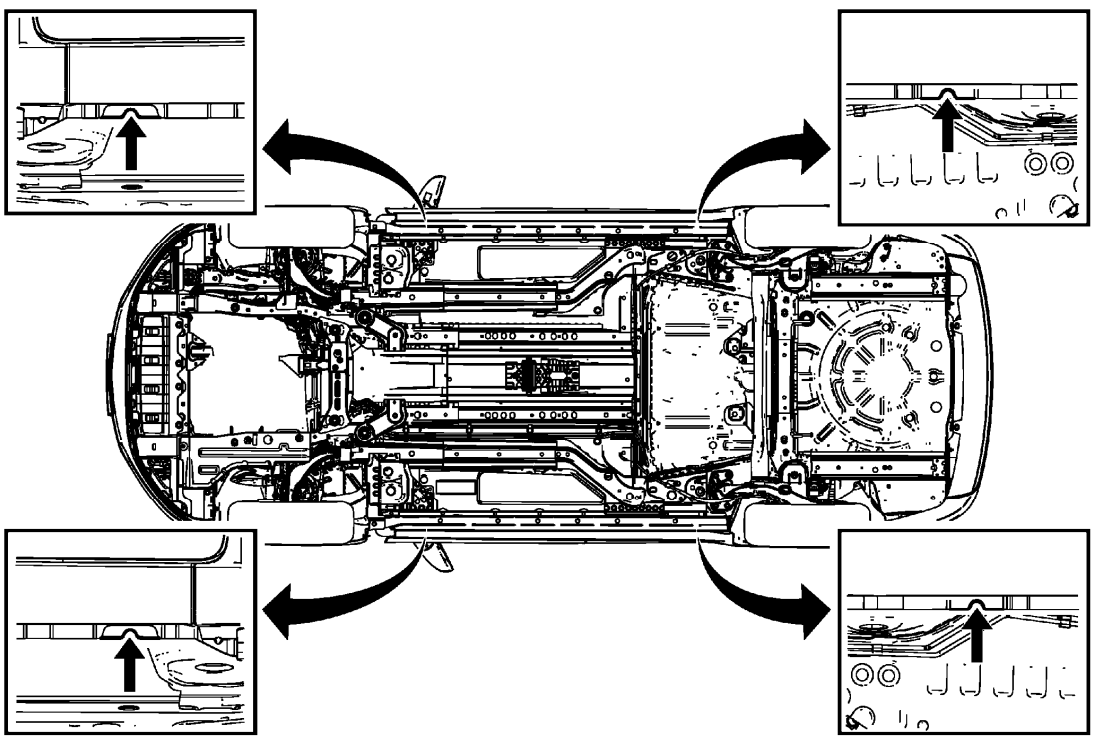

Fig. 14: Vehicle Lifting Points
Courtesy of GENERAL MOTORS COMPANY

WARNING: To avoid any vehicle damage, serious personal injury or death when major components are removed from the vehicle and the vehicle is supported by a hoist, support the vehicle with jack stands at the opposite end from which the components are being removed and strap the vehicle to the hoist.

WARNING: To avoid any vehicle damage, serious personal injury or death, always

use the jackstands to support the vehicle when lifting the vehicle with a jack.

CAUTION: Perform the following steps before beginning any vehicle lifting or jacking procedure:

- **Remove or secure all of the vehicle contents in order to avoid any shifting or any movement that may occur during the vehicle lifting or jacking procedure.**
- **The lifting equipment or the jacking equipment weight rating must meet or exceed the weight of the vehicle and any vehicle contents.**
- **The lifting equipment or the jacking equipment must meet the operational standards of the lifting equipment or jacking equipment manufacturer.**
- **Perform the vehicle lifting or jacking procedure on a clean, hard, dry, level surface.**
- **Perform the vehicle lifting or jacking procedure only at the identified lift points. DO NOT allow the lifting equipment or jacking equipment to contact any other vehicle components.**

Failure to perform the previous steps could result in damage to the lifting equipment or the jacking equipment, the vehicle, and/or the vehicle contents.

Vehicle Lifting- Frame Contact Lift

Front Lift Pads

When lifting the vehicle with a frame-contact lift, place the front lift pads on the rocker outer panel weld flange, as shown

Rear Lift Pads

When lifting the vehicle with a frame-contact lift, place the rear lift pads on the rocker outer panel weld flange, as shown.

Vehicle Jacking

CAUTION: When you are jacking the vehicle at the front locations, be certain that the jack or the jack lift pad does not contact the front fascia, front fascia air dam, or the front fenders. If such contact occurs, vehicle damage may result. When jacking at selected front locations additional clearance may be required for the jacking points.

NOTE: When you are lifting a vehicle with a service jack, block the wheels at the

opposite end from which you are lifting. Use jack stands to provide additional support.

Front of Vehicle

When using a service jack under the front of the vehicle use one of the following locations:

Place the service jack pad in the same location as shown for the front lift pads.

Rear of Vehicle

NOTE: Place jackstands ONLY under strong and stable vehicle structures.

Place the service jack pad in the same location as shown for the rear lift pads.

SPECIAL TOOLS AND EQUIPMENT

SPECIAL TOOLS ORDERING INFORMATION

The special service tools shown in this service manual that have product numbers beginning with BO, CH, DT, EL, EN, or GE are available for worldwide distribution from:

OE Tool and Equipment Group

Kent-Moore

28635 Mound Road

Warren

MI, U.S.A

48092-3499

Phone: 1-800-345-2233 or 586-574-2332

Monday through Friday

8:00 am-7:00 pm Eastern Standard Time

Fax: 1-800-578-7375 or 586-578-7321

The Multi Diagnostic Interface MDI and accessories can be purchased through:

Dealer Equipment and Services

5775 Enterprise Dr.

Warren

MI, U.S.A

48092-3463

Phone: 1-800-GM-TOOLS or 586-574-2332

Monday through Friday

8:00 am-6:00 pm EST

Fax: 1-586-578-7205

2013 GENERAL INFORMATION

Vehicle Diagnostic Information - Cruze

SPECIFICATIONS

BODY CONTROL MODULE SCAN TOOL INFORMATION

Body Control Module Scan Tool Data Parameters

Parameter	System State	Expected Value	Definition
Operating Conditions: Ignition ON, Vehicle in Park, All Doors Closed			
5 V Ignition Switch	-	Accessory / Key Out	The scan tool displays Off, Accessory, Run, or Crank. This parameter displays the ignition switch mode.
Accent Lighting 1 Command	-	Varies	This parameter displays the interior lighting ambient 1 command as a percentage.
Accessory	-	Active	The scan tool displays Active or Inactive.
Accessory Power Mode Indicator Command	-	Varies	This parameter displays ignition switch accessory LED PWM command as a percentage.
Accessory Relay Command	-	Active	The scan tool displays Active or Inactive.
Accessory/Retained Accessory Power Relay Command	-	Active	The scan tool displays Active or Inactive. This parameter displays the retained accessory power relay status.
All Door Lock Command	-	Inactive	The scan tool displays Active or Inactive. This parameter displays the door lock status.
Ambient Light Sensor	-	Varies	The scan tool displays volts. This parameter displays the ambient light sensor signal voltage.
Ambient Light Status	-	Night	The scan tool displays Unknown, Night, or Day. This parameter displays the ambient light level status.
Automatic Headlamps Disable Switch	-	Inactive	The scan tool displays Active or Inactive. This parameter displays the headlamp disable switch status.
Automatic Transmission Manual	-	Off	The scan tool displays Off or On. This parameter displays the

Shift Switch			transmission tap up tap down switch status.
Backup Lamps Relay Command	-	Inactive	The scan tool displays Active or Inactive. This parameter displays the backup lamps relay status.
Battery Low at Start	-	Inactive	The scan tool displays Active or Inactive. This parameter displays Active when the battery level is low when the vehicle starts.
Battery Reconnect Detected	-	No	The scan tool displays No or Yes when a battery disconnect/reconnect event has been detected.
Battery Voltage	-	Varies	The scan tool displays the current battery voltage.
BCM-Controlled Charging Voltage	-	Active	The scan tool displays Active or Inactive.
BCM-Requested Charging Voltage Reduction	-	Inactive	The scan tool displays Active or Inactive. This parameter displays Active when the BCM has detected a low battery voltage condition.
Boot Software Part Number	-	Varies	The scan tool displays the boot software part number.
Brake Lamp Command	-	Inactive	The scan tool displays Active or Inactive. This parameter displays the brake lamp command status.
Brake Pedal Initial Travel Position Achieved	-	No	The scan tool displays No or Yes.
Brake Pedal Position Sensor High Voltage During Learn	-	No	The scan tool displays No or Yes.
Brake Pedal Position Sensor Learn	-	No	The scan tool displays No or Yes. This parameter displays Yes when the brake pedal position sensor has learned.
Brake Pedal Position Sensor Learned Home Position	-	Yes	The scan tool displays No or Yes. This parameter displays Yes when the brake pedal position sensor has learned the home position.
Brake Pedal Position Sensor Low Voltage During Learn	-	No	The scan tool displays No or Yes.
Brake Pedal Position Sensor Move During Learn	-	No	The scan tool displays No or Yes. This parameter displays the brake pedal sensor learn status.
Brake Pedal Position Sensor Pulled Up from Home Position	-	No	The scan tool displays No or Yes.

Brake Pedal Position Sensor Reference	-	Varies	The scan tool displays the brake pedal position as voltage value. This parameter displays the current brake pedal position sensor reference.
Brake Pedal Pulled Up from Home Position	-	No	The scan tool displays No or Yes.
Brake Transmission Shift Interlock Solenoid Actuator	-	Inactive	The scan tool displays Active or Inactive. This parameter displays the remote start diagnostic status history.
Brake Transmission Shift Interlock Solenoid Actuator Command	-	Inactive	The scan tool displays Active or Inactive. This parameter displays the last remote start diagnostic status history.
Calibration Part Number 1-20	-	Varies	The scan tool displays the software module calibration part number.
Center Brake Lamp Command	-	Inactive	The scan tool displays Active or Inactive. This parameter displays the center brake lamp status.
Central Door Lock Switch on Center Console	-	Inactive	The scan tool displays Active or Inactive. This parameter displays the driver door lock switch status.
Child Security Lock Indicator Command	-	Inactive	The scan tool displays Active or Inactive. This parameter displays the child security lock indicator command status.
Content Theft Deterrent Alarm Status	-	Disarmed	The scan tool displays Off, Armed, or Disarmed. This parameter displays the content theft alarm status.
Content Theft Deterrent Disarmed Until Vehicle Closed	-	No	The scan tool displays No or Yes. This parameter displays the content theft deterrent system status.
Content Theft Deterrent Mode	-	Inactive	The scan tool displays Active or Inactive. This parameter displays the remote start diagnostic status history or the last remote start diagnostic status history.
Content Theft Deterrent Trigger History 1-3	-	None	The scan tool displays None, Driver door, Passenger door, Left rear door, Right rear door, Rear closure, Midgate, Tonneau Cover, Hood, Ignition Voltage, Intrusion, Inclination, Telematics enhanced service alarm, Battery reconnect

			detected, Unauthorized PWM change, Security Indicates Tamper, or Glass Breakage. This parameter displays the content theft deterrent trigger history status.
Courtesy Lamps Duty Cycle Command	-	Varies	This parameter displays the interior lights dimming command as a percentage.
Crank Abort	-	Inactive	This parameter displays the remote start diagnostic status history or the last remote start diagnostic status history.
Cruise Charging Set Level	-	Varies	This parameter displays cruise charging set level.
Cruise Control Switch Status	-	OFF	The scan tool displays CANCEL, OFF, ON, RESUME, SET or ERROR. This parameter displays the cruise control switch status.
Current Content Theft Deterrent Trigger	-	None	The scan tool displays None, Driver door, Passenger door, Left rear door, Right rear door, Rear closure, Midgate, Tonneau Cover, Hood, Ignition Voltage, Intrusion, Inclination, Telematics enhanced service alarm, Battery reconnect detected, Unauthorized PWM change, Security Indicates Tamper, Glass Breakage. This parameter displays the content theft deterrent current alarm trigger.
Current Driver	-	1-8	This parameter displays the current driver in vehicle.
Disable Battery Saver Relay Command	-	Inactive	The scan tool displays Active or Inactive.
Dome Lamp Switch	-	Inactive	The scan tool displays Active or Inactive. This parameter displays the dome lamp switch status.
Driver Door Ajar Switch	-	Inactive	The scan tool displays Active or Inactive. This parameter displays the driver door Ajar switch status.
Driver Door Unlock Command	-	Inactive	The scan tool displays Active or Inactive. This parameter displays the driver door unlock command status.
Driver Window Learned	-	Yes	The scan tool displays No or Yes.
			The scan tool displays Active or

Driver Window Main Control Down Switch	-	Inactive	Inactive. This parameter displays the driver window main control down switch input status.
Driver Window Main Control Express Switch	-	Inactive	The scan tool displays Active or Inactive. This parameter displays the driver window switch express input status.
Driver Window Main Control Up Switch	-	Inactive	The scan tool displays Active or Inactive. This parameter displays the driver window switch UP input status.
Driver Window Motor Mode	-	Local Switch Overridden	The scan tool displays Down, Express Down, Express, Up, Error, Inhibit, or Local Switch Overridden. This parameter displays the driver window motor mode status.
Enable Battery Saver Relay Command	-	Inactive	The scan tool displays Active or Inactive.
End Model Part Number	-	Varies	This parameter displays the end model part number.
Engine Stalled	-	Inactive	This parameter displays the remote start diagnostic status history or the last remote start diagnostic status history.
Environment Identification	-	Unknown	The parameter displays the vehicle environment identification successful status.
Environment Identification	-	Inactive	The scan tool displays Active or Inactive. This parameter displays the front fog lamps status.
Front Fog Lamps Relay Command	-	Inactive	The scan tool displays Active or Inactive. This parameter displays the front fog lamp relay status.
Front Fog Lamps Switch	-	Inactive	The scan tool displays Active or Inactive. This parameter displays the front fog lamp switch status.
Front Passenger Window Main Control Down Switch	-	Inactive	The scan tool displays Active or Inactive. This parameter displays the front passenger window down switch status.
Front Passenger Window Main Control Express Switch	-	Inactive	The scan tool displays Active or Inactive. This parameter displays the passenger window switch express input status.
			The scan tool displays Active or

Front Passenger Window Main Control Up Switch	-	Inactive	Inactive. This parameter displays the passenger window switch UP input status.
Front Tire Pressure on Placard	-	Varies	The scan tool displays kPa or PSI. This parameter displays the specified tire pressure placard information programmed in the BCM for tire pressure monitoring.
Fuel Economy Mode Inhibited - Low Charging Voltage	-	Inactive	The scan tool displays Active or Inactive. This parameter displays the fuel economy mode status.
Generator Regulator Setpoint	-	Varies	The scan tool displays percentage.
Hazard Lamps Switch	-	Inactive	The scan tool displays Active or Inactive. This parameter displays the hazard lamps switch status.
Hazard Lamps Switch Backlight Command	-	Varies	The scan tool displays percentage. This parameter displays hazard switch backlight level PWM command status.
Headlamps On Switch	-	Inactive	The scan tool displays Active or Inactive. This parameter displays the headlamp on switch status.
Headlamps Flash Switch	-	Inactive	The scan tool displays Active or Inactive. This parameter displays the headlamps flash to pass switch status.
High Beam Select Switch	-	Inactive	The scan tool displays Active or Inactive. This parameter displays the high beam switch status.
High Beam Command	-	Inactive	The scan tool displays Active or Inactive. This parameter displays the high beam command status.
Hood Ajar Switch	-	Inactive	This parameter display the remote start diagnostic status history or the last remote start diagnostic status history.
Hood Ajar Switch Signal 1	-	Inactive	This parameter display the remote start diagnostic status history or the last remote start diagnostic status history.
Hood Position	-	CLOSED	The scan tool displays CLOSED, AJAR, or OPENED. This parameter displays the hood position.
Horn Relay Command	-	Inactive	The scan tool displays Active or Inactive.

Horn Switch	-	Inactive	The scan tool displays Active or Inactive.
Idle Boost Level 2-3 Counter	-	Varies	This parameter displays the state of the idle boost level as counts.
Idle Charging Set Level	-	Varies	This parameter displays idle charging set level.
Ignition Mode Switch Dimming Command	-	Varies	The scan tool displays as a percentage.
Ignition Switch Reference	-	Varies	This parameter displays the ignition switch voltage reference.
Ignition Switch Signal Voltage	-	Varies	This parameter displays the ignition switch signal voltage.
Ignition Switch Status	-	Inactive	This parameter displays the ignition switch status.
Immobilizer Allows Engine To Start	-	Unknown	The scan tool displays Unknown, Incorrect, Not Allowed, or Valid. This parameter displays the immobilizer status.
Immobilizer Automatic Learn Timer	-	Inactive	The scan tool displays Active or Inactive. This parameter displays the automatic learn timer status.
Immobilizer Environment Device 1-4	-	Unknown	The scan tool displays Incorrect, Correct, Not Received, Not Programmed or Unknown. This parameter displays the immobilizer source status.
Immobilizer Password Learn	-	Inactive	The scan tool displays Active or Inactive. This parameter displays the password learn status.
Immobilizer Password Learn Scan Tool Delay	-	Varies	This parameter displays the auto learn timer status.
Immobilizer Security Code Accepted	-	No	The scan tool displays No or Yes.
Immobilizer Security Code Lockout	-	No	The scan tool displays No or Yes.
Immobilizer Security Code Programmed	-	Yes	The scan tool displays No or Yes.
In Park Switch Status	-	On	The scan tool displays On or Off. This parameter displays the park switch status.
Inadvertent Load Command	-	Active	The scan tool displays Active or Inactive.
Indicator Dimming Duty Cycle Command	-	Varies	The scan tool displays percentage. This parameter displays indicator lighting PWM command status.

Interior/Courtesy Lighting Master Switch	-	Door	The scan tool displays Door or other lighting switch status.
Interior Trunk Lid/Liftgate Window Unlatch Switch	-	Inactive	The scan tool displays Active or Inactive.
Key Capture Solenoid Actuator	-	Active	The scan tool display Active or Inactive. This parameter displays column lock input status.
Key Fob 1-4 Battery Status	-	OK	The scan tool displays OK or other key fob battery status. This parameter displays the key fob battery status.
Key Fob 1-4 Function	-	Undefined	The scan tool displays Inactive, Lock, Unlock Driver Door, All Door Unlock, Release Rear Closure, Actuate Left Sliding Door, Actuate Right Sliding door, Panic Alarm, Release Fuel door, Actuate Power Windows, Actuate Folding Top, Start Engine, Stop Engine, Programmed, Locator Alarm, Close Liftgate, Open Liftgate, Stop Liftgate While Closing, Stop Liftgate While opening, Deadlock All Doors, Stop Liftgate Motion, Start Liftgate Motion, Stop Left Sliding Door Motion, Stop Right Sliding Door Motion, Comfort open, or Comfort close. This parameter displays the key fob function status.
Key Fob in Vehicle	-	Inactive	This parameter displays the current key fob in the vehicle.
Key In Cylinder Switch	-	Active	The scan tool displays Active or Inactive.
Key In Cylinder Switch/Key Fob in Vehicle	-	Yes	The scan tool displays No or Yes.
Key in Ignition Status	-	Inactive	The scan tool displays Key Out or Key In. This parameter displays the key in ignition status.
Key Part Number	-	Varies	This parameter displays the key part number.
Key Type	-	Master Key	The scan tool displays Unknown, Master Key, Valet Key, Fleet Key, or Unconfigured. This parameter displays the key type.
			The scan tool displays NO Action,

Last Door Lock Function	-	All Doors Lock	PC UNDB Lock, PC Unlock, Unlock, Unlock Driver, Unlock Passenger, Unlock Left Rear, Unlock Right Rear, Unlock Cargo Liftgate, Unlock Driver Side, Unlock Passenger Side, Unlock Non Driver, Unlock All, Lock All, DBL Lock, or UNDBL Lock.
LED Backlight Dimming Command	-	Varies	The scan tool displays as a percentage. This parameter displays LED backlight dimming PWM command status.
Left Brake Lamp Command	-	Varies	The scan tool displays percentage. This parameter displays left brake lamp command status.
Left Dedicated Daytime Running Lamp Command	-	Varies	The scan tool displays percentage. This parameter displays left dedicated daytime running lamp command status.
Left Front Tire Pressure	-	Varies	This parameter displays left front tire pressure in PSI.
Left Front Tire Pressure Identification	-	Varies	This parameter displays left front tire pressure sensor ID.
Left Front Tire Pressure Sensor Location Learned	-	Yes	The scan tool displays No or Yes. This parameter display tire pressure monitor system learned status.
Left Front Tire Pressure Sensor Mode	-	Learn Mode - Pressure Triggered	The scan tool parameter displays Learn Mode, Undefined, Remeasure Data Mode, Rolling Mode, Enter Off Mode, Exit Off Mode, or Learn Mode Pressure Triggered.
Left Front Tire Pressure Status	-	Normal	The scan tool displays Unknown, Normal, Very Low Pressure, Low, Weak Signal, or High.
Left Front Turn Signal Bulb Out Feedback	-	Inactive	The scan tool displays Active or Inactive.
Left Front Turn Signal/Hazard Lamp Command	-	Inactive	The scan tool displays Active or Inactive.
Left Low Beam/Daytime Running Lamp Command	-	Varies	The scan tool displays percentage. This parameter displays left low beam/daytime running lamp status.
Left Park Lamps Command	-	Varies	The scan tool displays percentage. This parameter displays rear exterior lighting status.
			This parameter displays Active or

Left Rear Door Ajar Switch	-	Inactive	Inactive. This parameter displays the left rear door ajar switch status.
Left Rear Tire Pressure	-	Varies	This parameter displays left rear tire pressure in PSI.
Left Rear Tire Pressure Identification	-	Varies	This parameter displays left rear tire pressure sensor ID.
Left Rear Tire Pressure Sensor Location Learned	-	Yes	The scan tool displays No or Yes. This parameter displays tire pressure monitor system learned status.
Left Rear Tire Pressure Sensor Mode	-	Stationary	The scan tool displays Learn Mode, Undefined, Remeasure Data Mode, Rolling Mode, Enter Off Mode, Exit Off Mode, or Learn Mode Pressure Triggered.
Left Rear Tire Pressure Status	-	Normal	The scan tool displays Unknown, Normal, Very Low Pressure, Low, Weak Signal, or High.
Left Rear Turn Signal Bulb Out Feedback	-	Inactive	The scan tool displays Active or Inactive. The parameter displays turn lamp outage status.
Left Rear Turn Signal/Hazard Lamp Command	-	Inactive	The scan tool displays Active or Inactive.
Left Rear Window Main Control Down Switch	-	Inactive	The scan tool display Active or Inactive. This parameter displays driver window switch inputs.
Left Rear Window Main Control Express Switch	-	Inactive	The scan tool display Active or Inactive. This parameter displays driver window switch inputs.
Left Rear Window Main Control Up Switch	-	Inactive	The scan tool displays Active or Inactive. This parameter displays driver window switch inputs.
Left Rear Window Motor Mode	-	Local Switch Overridden	The scan tool displays Down, Express, Up, Inhibit, or Local Switch Overridden.
Left Rear Window Switch at Door	-	Inactive	The scan tool displays Active or Inactive.
Left Turn Signal Switch	-	Inactive	The scan tool displays Active or Inactive. This parameter displays the left turn signal switch status.
License Plate Lamps Command	-	Inactive	The scan tool displays Active or Inactive.
Load Reduction Level 2-3 Counter	-	Varies	The scan tool display as counts.
			The scan tool displays Active or

Low Beam Relay Command	-	Inactive	Inactive. This parameter displays the headlamp low beam relay status.
Manufacturers Enable Counter	-	Varies	This parameter tool displays various counter values.
Master Keys Learned	-	Varies	This parameter displays the total number of master keys learned.
Module Diagnostic Address	-	Varies	This parameter displays module diagnostic address.
Number of Key Fobs In Vehicle	-	1	This parameter displays the number of fobs located in the vehicle.
Odometer	-	Varies	This parameter displays the vehicle mileage.
Outside Rear View Mirror Courtesy Lamp Command	-	Inactive	The scan tool displays Active or Inactive. This parameter displays front exterior lighting status.
Park Brake Switch	-	Active	The scan tool displays Active or Inactive. This parameter displays front exterior lighting status.
Park Lamps Switch	-	Inactive	The scan tool displays Active or Inactive. This parameter displays Active when the parklamp switch is activated.
Passenger Door Ajar Switch	-	Inactive	The scan tool displays Active or Inactive. This parameter displays the passenger door ajar switch status.
Passenger Door Lock Switch	-	Inactive	The scan tool displays Active or Inactive. This parameter displays the passenger door lock switch status.
Passenger Door Unlock Switch	-	Inactive	The scan tool displays Active or Inactive. This parameter displays the passenger door unlock switch status.
Passenger Door(s) Unlock Command	-	Inactive	The scan tool displays Active or Inactive. This parameter displays the passenger door unlock status.
Passenger Window Learned	-	Yes	The scan tool displays No or Yes. This parameter displays the passenger window learned status.
Passenger Window Motor Mode	-	Local Switch Overridden	The scan tool displays Down, Express, Up, Inhibit, or Local Switch Overridden.
Passenger Window Switch at			The scan tool displays Active or

Door	-	Inactive	Inactive. This parameter displays the passenger window switch status.
Previous Key Type	-	Unknown	This parameter displays previous driver identification device type.
Primary Key Status	-	Yes	The scan tool displays No or Yes.
Push Button Ignition Switch	-	Inactive	The scan tool displays Active or Inactive.
Push Button Ignition Switch Voltage	-	Varies	This parameter displays the push button ignition switch voltage.
Rear Closure Ajar Switch	-	Active	The scan tool displays Active or Inactive.
Rear Closure Cylinder Lock Switch	-	Inactive	The scan tool displays Active or Inactive.
Rear Closure Cylinder Unlock Switch	-	Inactive	The scan tool displays Active or Inactive.
Rear Tire Pressure on Placard	-	Varies	This parameter displays the rear tire pressure in kPa or PSI. This parameter displays the specified tire pressure placard information programmed in the BCM for tire pressure monitoring.
Regulated Voltage Control Mode	-	Voltage	The scan tool displays voltage.
Remote Vehicle Start Attempts Exhausted	-	Varies	This parameter displays the remote start diagnostic status history or the last remote start diagnostic status history or remaining start attempts.
Remote Vehicle Start Crank Time	-	Inactive	This parameter displays the remote start diagnostic status history or the last remote start diagnostic status history.
Remote Vehicle Start Disabled by Driver	-	Inactive	This parameter displays the remote start diagnostic status history or the last remote start diagnostic status history.
Remote Vehicle Start Source	-	Ignition Switch Start	The scan tool displays Body Control module or Power Take-off Start.
Remote Vehicle Starts Exhausted	-	Varies	This parameter displays the remote start diagnostic status history or the last remote start diagnostic status history or remaining remote starts.
Right Brake Lamp Command	-	Varies	The scan tool display percentage. This parameter displays right brake lamp PWM command status.
			The scan tool display percentage.

Right Dedicated Daytime Running Lamp Command	-	Varies	This parameter displays right dedicated DRL PWM command status.
Right Front Tire Pressure	-	Varies	This parameter displays right front tire pressure in PSI.
Right Front Tire Pressure Identification	-	Varies	This parameter displays right front tire pressure sensor ID.
Right Front Tire Pressure Sensor Location Learned	-	Yes	The scan tool displays No or Yes.
Right Front Tire Pressure Sensor Mode	-	Stationary	The scan tool displays Learn Mode, Undefined, Remeasure Data Mode, Rolling Mode, Enter Off Mode, Exit Off Mode or Learn Mode Pressure Triggered.
Right Front Tire Pressure Status	-	Normal	The scan tool displays Unknown, Normal, Very Low Pressure, Low, Weak Signal, or High.
Right Front Turn Signal Bulb Out Feedback	-	Inactive	The scan tool displays Active or Inactive.
Right Front Turn Signal/Hazard Lamp Command	-	Inactive	The scan tool displays Active or Inactive.
Right Low Beam/Daytime Running Lamp Command	-	Varies	The scan tool displays percentage. This parameter displays right low beam/daytime running lamp status.
Right Park Lamps Command	-	Varies	The scan tool displays percentage. This parameter displays rear exterior lighting status.
Right Rear Door Ajar Switch	-	Inactive	The scan tool displays Active or Inactive.
Right Rear Tire Pressure	-	Varies	This parameter displays right rear tire pressure in PSI.
Right Rear Tire Pressure Identification	-	Varies	This parameter displays right rear tire pressure sensor ID.
Right Rear Tire Pressure Sensor Location Learned	-	Yes	The scan tool displays No or Yes.
Right Rear Tire Pressure Sensor Mode	-	Learn Mode - Pressure Triggered	The scan tool displays Learn Mode, Undefined, Remeasure Data Mode, Rolling Mode, Enter Off Mode, Exit Off Mode, or Learn Mode Pressure Triggered. This parameter displays the pressure sensor mode status.
Right Rear Tire Pressure Status	-	Normal	The scan tool displays Unknown, Normal, Very Low Pressure, Low, Weak Signal or High. This

			parameter displays the right rear tire pressure status.
Right Rear Turn Signal Bulb Out Feedback	-	Inactive	The scan tool displays Active or Inactive.
Right Rear Turn Signal/Hazard Lamp Command	-	Inactive	The scan tool displays Active or Inactive.
Right Rear Window Main Control Down Switch	-	Inactive	The scan tool displays Active or Inactive.
Right Rear Window Main Control Express Switch	-	Inactive	The scan tool displays Active or Inactive.
Right Rear Window Main Control Up Switch	-	Inactive	The scan tool displays Active or Inactive.
Right Rear Window Motor Mode	-	Local Switch Overridden	The scan tool displays Down, Express, Up, Inhibit, or Local Switch Overridden.
Right Rear Window Switch at Door	-	Inactive	The scan tool displays Active or Inactive.
Right Turn Signal Switch	-	Inactive	The scan tool displays Active or Inactive. This parameter displays the right turn signal switch status.
Run Abort	-	Inactive	This parameter displays the remote start diagnostic status history or the last remote start diagnostic status history.
Run Relay Command	-	Active	The scan tool displays Active or Inactive.
Run/Crank	-	Inactive	The scan tool displays Active or Inactive.
Run/Crank Relay Command	-	Active	The scan tool displays Active or Inactive.
Run/Start Power Mode Indicator Command	-	Varies	The scan tool displays percentage. This parameter displays ignition switch run LED PWM command status.
Secondary Key Status	-	No	The scan tool displays No or Yes.
Security Indicator Command	-	Varies	The scan tool displays percentage. This parameter displays security LED PWM command status.
Selected Front Tire Type	-	Standard Load	The scan tool displays No Tire Type, Metric Standard Load, Metric Extra Load, Load Range C, Load Range D, or Load Range E. This parameter displays the front tire type.
			The scan tool displays No Tire

Selected Rear Tire Type	-	Standard Load	Type, Metric Standard Load, Metric Extra Load, Load Range C, Load Range D, or Load Range E. This parameter displays the rear tire type.
Start-Up State of Charge	-	Varies	The scan tool displays percentage. This parameter displays startup state of charge status.
State of Charge	-	Varies	The scan tool displays percentage. This parameter displays state of charge status.
Sunroof Enabled	-	Active	The scan tool displays Active or Inactive.
Sunroof Motor Overtemperature	-	Inactive	The scan tool displays Active or Inactive.
Sunroof Not Learned	-	Inactive	The scan tool displays Active or Inactive.
Sunroof Position	-	Closed	The scan tool displays Closed, Open, Venting, Comfort Open, Closing, Opening. This parameter displays the current sunroof position.
Sunroof Remote Command	-	Inactive	The scan tool displays Sunroof Secure Close, Venting, Close, or Open. This parameter displays the last sunroof remote command.
Sunroof Slide Switch	-	Inactive	The scan tool displays Inactive, Express Open, Open, Express Close, Close, Short to Ground, Short to Battery, or Stuck. This parameter displays the sunroof slide switch status.
Sunroof Slide Switch	-	Inactive	The scan tool displays Inactive, Open, Close, Short to Ground, Short to Battery or Stuck. This parameter displays the sunroof tilt switch status. When the switch experiences a malfunction Short to Ground, Short to Battery or Stuck will be displayed.
Sunroof/Sunshade Motor Overtemperature	-	Inactive	The scan tool displays Active or Inactive.
Sunroof/Sunshade Switch	-	Inactive	The scan tool displays Inactive, Express Open, Open, Express Close, Close, Short to Ground, Short to Battery, or Stuck. This

			parameter displays the sunroof or sunshade switch status.
Sunshade Enabled	-	Active	The scan tool displays Active or Inactive.
Sunshade Not Learned	-	Inactive	The scan tool displays Active or Inactive.
Sunshade Position	-	Closed	The scan tool displays Ajar, Closed, Opened, Closing, or Opening. This parameter displays the sunshade position status.
Sunshade Remote Command	-	Inactive	The scan tool displays Close or Open. This parameter displays the last sunshade remote command.
Tamper Status	-	No	The scan tool displays No or Yes.
Telematics Enhanced Service Override Active	-	No	The scan tool displays No or Yes. This parameter displays vehicle theft deterrent system status.
Total Keys Learned	-	Varies	This parameter displays the number of keys learned.
Traction Control Switch	-	Inactive	The scan tool displays Active or Inactive. This parameter displays Active when the traction control switch is active.
Transponder Authentication	-	Initializing	The scan tool displays Inactive, Initializing, ID Received, Password Received, Data Reception Complete, or Data Transmission Complete. This parameter displays the transponder key communication status.
Transponder Key Status	-	OK	The scan tool displays OK, LIN Bus Initialization Malfunction, Antenna Initialization Malfunction, Password Error, No Valid Key Detected, LIN Bus Communication Malfunction, or Antenna Malfunction. This parameter displays the transponder key communication error status.
Trunk Lamp Command	-	Varies	The scan tool displays as percentage.
Trunk Lid/Liftgate Window Exterior Unlatch Switch	-	Inactive	The scan tool displays Active or Inactive.
Trunk Lid/Liftgate Window Unlatch Command	-	Inactive	The scan tool displays Active or Inactive.
			This parameter displays the number

Valet Keys Learned	-	Varies	of valet keys learned.
Valet Mode Status	-	Inactive	This parameter displays the remote start diagnostic status history or the last remote start diagnostic status history.
Valet switch	-	Inactive	The scan tool displays Active or Inactive. This parameter displays Active when the valet switch is on.
Vehicle Identification Number (VIN)	-	Varies	This parameter displays the vehicle identification number.
Window Lockout Switch	-	Inactive	The scan tool displays Active or Inactive.
Window Lockout Switch Indicator Command	-	Inactive	The scan tool displays Active or Inactive.
Windshield Washer Relay Command	-	Inactive	The scan tool displays Active or Inactive. This parameter displays the windshield washer relay status.
Windshield Washer Switch	-	Inactive	The scan tool displays Active or Inactive. This parameter displays the windshield washer switch status.
Windshield Wiper Park Switch	-	Active	The scan tool displays Active or Inactive.
Windshield Wiper High Speed Relay Command	-	Inactive	The scan tool displays Active or Inactive.
Windshield Wiper High Speed Switch	-	Inactive	The scan tool displays Active or Inactive.
Windshield Wiper Motor Relay Command	-	Inactive	The scan tool displays Active or Inactive. This parameter displays the windshield wiper relay status.
Windshield Wiper Stalled During Sweep	-	Inactive	The scan tool displays Active or Inactive.
Windshield Wiper Stalled in Park Position	-	Inactive	The scan tool displays Active or Inactive. This parameter displays the windshield wiper stalled status.
Windshield Wiper Switch	-	Off	The scan tool displays Off, Delay 1, Delay 2, Delay 3, Delay 4, Delay 5, or Low. This parameter displays the windshield wiper switch status.

Body Control Module Scan Tool Output Controls

Scan Tool Output Control	Description
Accent Lighting 1 Command	The BCM activates the accent lighting when you select On. The value should be 100%. All accent lighting should illuminate until commanded Off.

Accessory Power Mode Indicator Command	The BCM activates the accessory indicator when you select On. The value should be 100%. The yellow LED accessory indicator on start button should illuminate until commanded Off.
Accessory/Retained Accessory Power Relay Command	The BCM actuates the retained accessory power relay when you select On. The retained accessory power relay should turn on allowing specific vehicle functions to operate.
All Doors Lock Command	The BCM activates all doors lock when you select Lock. All doors should lock.
Backup Lamps Command	The BCM actuates the backup lamps relay when you select On. The backup lamps should illuminate until commanded Off. Engine must be running.
Battery Saver Relay	The BCM activates the battery saver relay when you select Enable. This command sets the low power mode relay in the state in which it does not supply power to the non-essential parts of the vehicle. This is used to prevent the battery from being depleted when the vehicle is not used for a long period of time.
Brake Pedal Position Sensor Learn	The BCM activates the brake pedal position sensor learn when you select Learn. The brake pedal position sensor learn procedure should start.
Center Brake Lamp Command	The BCM activates the center brake lamp when you select On. The center brake lamp should illuminate until commanded Off.
Child Security Lock Motors Command	The BCM actuates the child security door motor when you select Lock. The child security doors should lock.
Clear Driver Window Learned Values	When you select Clear the clear driver window learn procedure should start.
Clear Passenger Window Learned Values	When you select Clear the clear left rear window learn procedure should start.
Courtesy Lamps Command	The BCM activates the courtesy lamps when you select On. The value should be 100%. The courtesy lamps should illuminate until commanded Off.
Driver Door Unlatch Command	The BCM activates the output circuit to unlatch the driver door with a passive entry passive start when you select Unlatch. There is NO door handle on this type of vehicle to open the door. Instead, there is a pad that you press to unlatch the door.
Driver Door Unlock Command	The BCM pulses the driver door unlock motor when you select Unlock. The driver door should unlock.
Driver Window Motor Mode	The BCM activates the driver window motor when you select Up/Down/Stop/Express Up/Express Down. The driver window should follow the appropriate command.
Front Fog Lamps Command	The BCM actuates the front fog lamps relay when you select On. The front fog lamps relay should turn on.

Hazard Lamps Switch Backlight Command	The BCM activates the hazard lamps switch when you select On. The value should be 100%. The hazard lamps switch backlight should illuminate until commanded Off.
High Beams	The BCM activates the high beam command when you select On. The high beam lights should illuminate. The headlamps have to be on.
Horn Relay	The BCM activates the horn when you select On. The horn should sound.
Inadvertent Load Command	The BCM activates the inadvertent load command when you select On. (It is an electronic request to shut down an electrical or electronic device that is drawing power from the battery at a time when there should be no activity, usually after the key has been removed from the ignition for a period of time.)
LED Backlight Dimming Command	The BCM activates the LED backlight dimming when you select On. The values should be 100%. The LED backlight dimming for control switches should illuminate until commanded Off.
Left Brake Lamp Command	The BCM activates the left brake lamp when you select On. The values should be 100%. The left brake lamp should illuminate until commanded Off.
Left Dedicated Daytime Running Lamp Command	The BCM activates the left dedicated daytime running lamp when you select ON. The value changes to 100%. The left daytime running lamp should illuminate.
Left Front Turn Signal Lamp Command	The BCM activates the left front turn signal lamp when you select On. The left front turn signal lamp should illuminate until commanded Off.
Left Park Lamps Command	The BCM activates the left park lamps when you select ON with a value of 100%. The left park lamps should illuminate.
Left Rear Turn Signal Lamp Command	The BCM activates the left rear turn signal lamp when you select On. The left rear turn signal lamp should illuminate until commanded Off.
Left Rear Window Motor	The BCM activates the left rear window motor when you select Up/Down/Stop/Express Down. The left rear window should follow the appropriate command.
License Plate Lamps Command	The BCM activates the license plate lamps when you select On. The license plate lights should turn on until commanded Off.
Liftgate Unlatch	The BCM actuates the rear compartment lid release actuator when you select Unlatch. The trunk or liftgate should open.
LIN Bus Device Identification Data	When you select Update the LIN Bus Device part number and calibration part number should be updated.
	The BCM activates the low beams when you select On.

Low Beam Relay Command	The low beam lights should turn on.
Outside Rear View Mirror Courtesy Lamp Command	The BCM activates the outside rear view mirror courtesy lamp when you select On. The outside rear view mirror courtesy lamp (at the bottom) should illuminate.
Passenger Door(s) Unlatch Command	The BCM activates the output circuit to unlatch the passenger door with a passive entry passive start when you select Unlatch. There is NO door handle on this type of vehicle to open the door. Instead, there is a pad that you press to unlatch the door.
Passenger Door(s) Unlock Command	The BCM pulses the passenger door unlock motor when you select Unlock. The passenger door should unlock.
Passenger Window Motor	The BCM activates the passenger window motor when you select Up/Down/Stop/Express Up/Express Down. The passenger window should follow the appropriate command.
Right Brake Lamp Command	The BCM activates the right brake lamp when you select On. The value should be 100%. The right brake lamp should illuminate until commanded Off.
Right Dedicated Daytime Running Lamp Command	The BCM activates the right dedicated daytime running lamp when you select On. The value should be 100%. The right daytime running lamp should illuminate.
Right Front Turn Signal Lamp Command	The BCM activates the right front turn signal lamp when you select On. The right front turn signal/hazard lamp should illuminate.
Right Park Lamps Command	The BCM activates the right park lamps when you select ON with a value of 100%. The right park lamps should illuminate.
Right Rear Turn Signal Lamp Command	The BCM activates the right rear turn signal/hazard lamp when you select On. The right rear turn signal lamp should illuminate until commanded Off.
Right Rear Window Motor	The BCM activates the right rear window motor when you select Up/Down/Stop/Express Down. The right rear window should follow the appropriate command.
Run Relay Command	The BCM actuates the run relay when you select On. The run relay should turn on.
Run/Crank Relay Command	The BCM actuates the run/crank relay when you select On. The run/crank relay should turn on.
Run/Start Power Mode Indicator Command	The BCM activates the run/start lamp when you select On. The value should be 100%. The green LED on engine start/stop button should illuminate until commanded Off.
Security Indicator Command	The BCM activates the security indicator command when you select On. The security indicator at center of dash (or at DRL sensor) should illuminate until commanded Off.

Tire Pressure Sensors Learn	The BCM activates the tire pressure sensor learn procedure when you select Learn.
Tire Type/Pressure Selection	When you select OK, you can change tire type and load range.
Transmission Range Indicator	The BCM activates the transmission range indicator when you select On. The transmission range indicator at the shifter should illuminate until commanded Off.
Trunk Lamp Command	The BCM activates the trunk lamp when you select On. The value should be 100%. The trunk lamp should illuminate until commanded Off.
Windshield Washer Relay Command	The BCM actuates the windshield washer relay when you select On. The windshield washer relay should turn on.
Windshield Wiper High Speed Relay Command	The BCM actuates the windshield wiper high speed relay when you select On. The windshield wiper high speed relay should turn on.
Windshield Wiper Motor Relay Command	The BCM actuates the windshield wiper motor relay when you select On. The windshield wiper motor relay should turn on.

COMMUNICATION INTERFACE MODULE SCAN TOOL INFORMATION

Telematics Communication Interface Control Module Scan Tool Data Parameters

Parameter	System State	Expected Value	Description
Operating Conditions: Ignition ON			
GPS Data			
• Dead Reckoning Calibration Status	-	Calibrated or Not Calibrated	Indicates the dead reckoning calibration status.
• Position Calibration Method	-	Varies	Indicates the method used to determine current location. (0) GPS, (1) Wheel Speed Dead Reckoning only, (2) Combined Wheel Speed and GPS, (3) Gyro only, (4) Combined Gyro and GPS, (5) No Fix
• Month	-	MM	This displays the current month.
• Day	-	DD	This displays the current day of the month.
• Year	-	YY	This displays the current year.
• Hour	-	HH	This displays the GPS current hour (24 hour format - GMT).

• Minute	-	MM	This displays the GPS current minute.
• Second	-	SS	This displays the GPS current second.
• GPS Signal	-	Varies	The scan tool displays Yes or No. Yes is displayed if there is a GPS signal received by the telematics communication interface control module.
Signal Strength Data			
• Current Transceiver Identifier	-	Varies	The scan tool displays a 2-5 digit value. This is the transceiver identification number.
• GSM Signal Strength	-	Varies	The scan tool displays 0-127. This is the telematics communication interface control module signal strength.
• Signal Type	-	Digital	This is the signal type received by the telematics communication interface control module.
Bluetooth Data			
• Bluetooth	-	Enabled	Indicates if the Bluetooth system is enabled or disabled.
• Bluetooth Link Status	-	Varies	Indicates the current link status. (0) Unconnected, (1) Connected / Idle, (2) Call active, (3) 3-way calling active
• Bluetooth Link Quality	-	Varies	The scan tool displays a decimal value between 0 and 255.
• Bluetooth Phone to Telematics Communication Interface Control Module Authentication Status	-	Active or Inactive	Displays the bluetooth phone to telematics communication interface control module authentication status.
• Bluetooth Phone to Telematics Communication Interface Control Module Communication Status	-	Active or Inactive	Displays the bluetooth phone to telematics communication interface control module status.
			Displays the bluetooth

• Bluetooth Phone Voice Recognition Status	-	Active or Inactive	phone to voice recognition status.

Telematics Communication Interface Control Module Scan Tool Output Controls

Output Control	Description
B1000 Information	This shows the data recorded when DTC B1000 was set in the telematics communication interface control module.
Green Indicator	The telematics communication interface control module illuminates the green LED when ON is selected.
Phone Call Test	When ON is selected, telematics communication interface control module commands OnStar to connect to the OnStar Center.
Red Indicator	The telematics communication interface control module illuminates the red LED when ON is selected.
Preferred Roaming List Update	The telematics communication interface control module performs a preferred roaming list (PRL) update when this is selected.
Remote Vehicle Speed Limiting Reset	This function resets the speed limiting feature.

DRIVER SEAT AND PASSENGER SEAT HEATER CONTROL MODULE SCAN TOOL INFORMATION

Front Seat Heating Control Module Scan Tool Data Parameters

Parameter	Expected Value	Description
Operating Conditions: Engine Running		
Driver Seat Cushion Heating Command	Inactive	The scan tool displays Inactive or Active. This parameter displays the commanded output from the seat heating control module to the seat heater elements.
Driver Seat Cushion Temperature Sensor	Varies	The scan tool displays 0 - 5 V. The voltage displayed is an input to the seat heating control module from the seat cushion temperature sensor. Higher voltage readings indicate cooler seat temperatures while lower voltage readings indicate warmer seat temperatures.
Driver Seat Heating/Venting/Cooling Level	Off	The scan tool displays Off, High Medium, or Low. When the heated seat is active, this parameter displays the selected temperature setting.

Driver Seat Heating/Venting/Cooling Mode	Off	The scan tool displays Off or Back & Cushion Heat. This parameter indicates the heated seat mode of operation.
Passenger Seat Cushion Heating Command	Inactive	The scan tool displays Inactive or Active. This parameter displays the commanded output from the seat heating control module to the seat heater elements.
Passenger Seat Cushion Temperature Sensor	Varies	The scan tool displays 0 - 5 V. The voltage displayed is an input to the seat heating control module from the seat cushion temperature sensor. Higher voltage readings indicate cooler seat temperatures while lower voltage readings indicate warmer seat temperatures.
Passenger Seat Heating/Venting/Cooling Level	Off	The scan tool displays Off, High Medium, or Low. When the heated seat is active, this parameter displays the selected temperature setting.
Passenger Seat Heating/Venting/Cooling Mode	Off	The scan tool displays Off or Back & Cushion Heat. This parameter indicates the heated seat mode of operation.

Front Seat Heating Control Module Scan Tool Output Controls

Control Functions	Description
Operating Conditions: Engine Running	
Driver Seat Cushion Heating	This output control is used to command the driver seat heater elements On.
Passenger Seat Cushion Heating	This output control is used to command the passenger seat heater elements On.

ELECTRONIC BRAKE CONTROL MODULE SCAN TOOL INFORMATION

The electronic brake control module (EBCM) scan tool data parameters list contains all ABS related parameters that are available on the scan tool. The list is arranged in alphabetical order. A given parameter may appear in any one of the data lists.

Electronic Brake Control Module Scan Tool Data Parameters

Parameter	System State	Expected Value	Description
Operating Conditions: Ignition ON			

ABS Pump Motor Voltage	-	0 V	The scan tool displays the commanded pump motor voltage.
Acceleration Sensor Longitudinal Signal	-	Varies	The scan tool displays 0-5 V depending on the vehicle's longitudinal acceleration.
Antilock Braking System	-	On	The scan tool displays On or Off. Off is displayed when the ABS is disabled.
Brake Fluid Level Sensor	-	OK	The scan tool displays OK when the brake fluid is at correct level and Low when the brake fluid is low.
Brake Pedal Position Sensor	Brake pedal released	Inactive	The scan tool displays Inactive or Active depending on the state of the brake pedal.
	Brake pedal applied	Active	
Brake Pressure Sensor	Brake pedal released	0-1 V	The scan tool displays 0-5 V depending on the applied hydraulic brake pressure.
	Brake pedal applied	1-5 V	
Delivered Torque	-	Varies	The scan tool displays 0-100% depending on the how much torque the engine is delivering.
Dynamic Rear Proportioning Status	-	On	The scan tool displays On or Off. Off is displayed when the dynamic rear proportioning system is disabled.
Lateral Acceleration Signal	-	Varies	The scan tool displays 0-5 V depending on the vehicle's lateral acceleration.
Left Front Inlet Solenoid Valve Feedback	-	Inactive	The scan tool displays Inactive or Active. Active is displayed when the left front inlet solenoid valve is commanded ON.
Left Front Outlet Solenoid Valve Feedback	-	Inactive	The scan tool displays Inactive or Active. Active is displayed when the left front outlet solenoid valve is commanded ON.
Left Front Wheel Speed Sensor	-	0 km/h (0 MPH)	The scan tool displays km/h (MPH) depending on the current speed of the left front wheel speed sensor.
Left Rear Inlet Solenoid Valve Feedback	-	Inactive	The scan tool displays Inactive or Active. Active is displayed when the left rear inlet solenoid valve is commanded ON.

Left Rear Outlet Solenoid Valve Feedback	-	Inactive	The scan tool displays Inactive or Active. Active is displayed when the left rear outlet solenoid valve is commanded ON.
Left Rear Wheel Speed Sensor	-	0 km/h (0 MPH)	The scan tool displays km/h (MPH) depending on the current speed of the left rear wheel speed sensor.
Pump Motor Relay Feedback	-	Inactive	The scan tool displays Inactive or Active. Active is displayed when the pump motor is commanded ON.
Primary Isolation Solenoid Valve Feedback	-	Inactive	The scan tool displays Inactive or Active. Active is displayed when the isolation solenoid valve is commanded ON.
Primary Prime Solenoid Valve Feedback	-	Inactive	The scan tool displays Inactive or Active. Active is displayed when the prime solenoid valve is commanded ON.
Requested Torque	-	Varies	The scan tool displays 0-100% depending on the how much torque is requested.
Right Front Inlet Solenoid Valve Feedback	-	Inactive	The scan tool displays Inactive or Active. Active is displayed when the right front inlet solenoid valve is commanded ON.
Right Front Outlet Solenoid Valve Feedback	-	Inactive	The scan tool displays Inactive or Active. Active is displayed when the right front outlet solenoid valve is commanded ON.
Right Front Wheel Speed Sensor	-	0 km/h (0 MPH)	The scan tool displays km/h (MPH) depending on the current speed of the right front wheel speed sensor.
Right Rear Inlet Solenoid Valve Feedback	-	Inactive	The scan tool displays Inactive or Active. Active is displayed when the right rear inlet solenoid valve is commanded ON.
Right Rear Outlet Solenoid Valve Feedback	-	Inactive	The scan tool displays Inactive or Active. Active is displayed when the right rear outlet solenoid valve is commanded ON.
Right Rear Wheel Speed Sensor	-	0 km/h (0 MPH)	The scan tool displays km/h (MPH) depending on the current speed of the right rear wheel

			speed sensor.
Secondary Isolation Solenoid Valve Feedback	-	Inactive	The scan tool displays Inactive or Active. Active is displayed when the isolation solenoid valve is commanded ON.
Secondary Prime Solenoid Valve Feedback	-	Inactive	The scan tool displays Inactive or Active. Active is displayed when the prime solenoid valve is commanded ON.
Steering Column Position	Steering wheel in straight position	-5 to +5°	The scan tool displays °. This is the current position of the steering angle sensor.
	Steering wheel turned left until stop	450-550°	
	Steering wheel turned right until stop	-550 to -450°	
System Voltage	-	11-14 V	The scan tool displays V. This is the current battery voltage.
Traction Control System	Traction control switch released	On	The scan tool displays On or Off. Off is displayed when traction control is disabled.
	Traction control switch pressed	Off	
Variable Effort Steering Solenoid Valve Command	-	Varies	The scan tool displays A. This is the current applied to the variable effort steering solenoid valve.
Variable Effort Steering Solenoid Valve Feedback	-	Varies	The scan tool displays A. This is the variable effort steering solenoid valve feedback signal.
Vehicle Stability Enhancement System Relay Feedback	-	Inactive	The scan tool displays Inactive or Active depending on the state of the stability control.
Vehicle Stability System	Traction control switch released	On	The scan tool displays On or Off. Off is displayed when stability control is disabled.
	Traction control switch pressed for 5 s	Off	
Yaw Rate Signal	-	Varies	The scan tool displays 0-5 V depending on the vehicle's yaw rate.

Electronic Brake Control Module Scan Tool Output Controls

Output Control	Description
ABS Left Front Solenoid Valves	Commands the solenoid valves ON or OFF.
ABS Left Rear Solenoid Valves	Commands the solenoid valves ON or OFF.

ABS Pump Motor	Commands the ABS pump motor Increase or Decrease.
ABS Right Front Solenoid Valves	Commands the solenoid valves ON or OFF.
ABS Right Rear Solenoid Valves	Commands the solenoid valves ON or OFF.
Automated Brake Bleed	This is used in order to bleed ABS hydraulics. Refer to **Hydraulic Brake System Bleeding (Manual Bleeding)** , **Hydraulic Brake System Bleeding (Pressure Bleeding)**
Brake Pressure Sensor Calibration	This is used in order to calibrate the brake pressure sensor.
Pressure Control Solenoid Valve	Commands the variable effort steering solenoid valve Increase or Decrease.
Steering Wheel Angle Sensor Learn	This function activates the steering wheel angle sensor learn procedure.
Traction Control Left Front Solenoid Valves	Commands the solenoid valves ON or OFF.
Traction Control Left Rear Solenoid Valves	Commands the solenoid valves ON or OFF.
Traction Control Right Front Solenoid Valves	Commands the solenoid valves ON or OFF.
Traction Control Right Rear Solenoid Valves	Commands the solenoid valves ON or OFF.
Yaw Rate Sensor Learn	This function activates the yaw rate sensor learn procedure.

K20 ENGINE CONTROL MODULE: SCAN TOOL INFORMATION

The Engine Control Module Scan Tool Data List contains all engine related parameters that are available on the scan tool. The list is arranged in alphabetical order. A given parameter may appear in any one of the data lists, and in some cases may appear more than once, or in more than one data list in order to group certain related parameters together.

Use the Engine Scan Tool Data List only after the following is determined:

- The **Diagnostic System Check - Vehicle** is completed.
- No diagnostic trouble codes (DTCs) are set.
- On-board diagnostics are functioning properly.

The scan tool values from a properly running engine may be used for comparison with the engine you are diagnosing. The Engine Scan Tool Data List represents values that may be seen on a normally running engine.

NOTE: A scan tool that displays faulty data should not be used. The scan tool concern should be reported to the manufacturer. Use of a faulty scan tool can result in misdiagnosis and unnecessary parts replacement.

Only the parameters listed below are referenced in this service manual for use in diagnosis. If all values are within the typical range described below, refer to **Symptoms - Engine Controls** for engine diagnosis.

Engine Control Module Scan Tool Data Parameters

Parameter	System State	Expected Value	Description
Operating Conditions: Engine Idling/Radiator Hose Hot/Closed Throttle/Park or Neutral/Closed Loop/Accessories Off/Brake Pedal Released			
5 Volt Reference 1, 2, or 3	Ignition ON	5 V	This parameter displays the voltage sensed on the 5 V reference circuits at the control module. The scan tool will display a higher value at higher voltage. The scan tool will display a lower value at lower voltage.
5 Volt Reference 1, 2, or 3 Circuit Status	Ignition ON	OK	This parameter displays OK if there is no 5 V reference circuit condition. If the circuit is shorted to ground or shorted to B+, Fault is displayed.
A/C High Side Pressure Sensor	A/C OFF	0.75-1.5 V*	This parameter displays the voltage from the A/C high side pressure sensor signal circuit to the control module. *Varies with temperature and relative humidity.
	A/C ON	1.3-2.5 V*	
A/C High Side Pressure Sensor	A/C OFF	450-650 kPa* (65-95 (PSI)*	This parameter displays the pressure from the A/C high side pressure sensor signal circuit to the control module. *Varies with temperature and relative humidity.
	Engine Speed at 2 000 RPM	1 117-2 350 kPa* (162-341 PSI)*	
A/C Off for WOT	A/C ON	No	This parameter displays whether the control module is commanding the A/C compressor clutch relay OFF for wide open throttle (WOT).
A/C Disable A/C Pressure Out of Range	A/C ON	No	This parameter displays whether the A/C pressure is out of range for normal operation as determined by the control module.
A/C Compressor Clutch Relay Command	A/C ON	On	This parameter displays the state of the air conditioning (A/C) clutch relay control circuit as commanded by the control module.
			This parameter displays the

A/C Request Signal	A/C ON	Yes	state of the A/C request input to the control module from the heating, ventilation, and air conditioning (HVAC) controls.
Accelerator Pedal Position	Accelerator pedal not actuated	0%	This parameter displays the angle of the accelerator pedal position (APP) as calculated by the control module using the signals from the APP sensors.
	Accelerator pedal fully actuated	100%	
Air/Fuel Equivalence Ratio Command	-	Varies	This parameter displays the ratio of air to fuel as calculated by the control module based on various sensor inputs. The scan tool will display a lower air fuel ratio when a richer air to fuel mixture is commanded. The scan tool will display a higher air fuel ratio when a leaner air to fuel mixture is commanded. In closed loop operation the air fuel ratio should normally be approximately 14.7 : 1.
APP Sensor 1	Accelerator pedal not actuated	0.88-1.08 V	This parameter displays the actual voltage on the accelerator pedal position (APP) Sensor 1 signal circuit as measured by the control module.
	Accelerator pedal fully actuated	4.17-4.37 V	
APP Sensor 2	Accelerator pedal not actuated	0.39-0.59 V	This parameter displays the actual voltage on the accelerator pedal position (APP) Sensor 2 signal circuit as measured by the control module.
	Accelerator pedal fully actuated	2.02-2.22 V	
BARO	-	65-104 kPa (8-16 PSI) Varies with altitude	This parameter displays the barometric pressure (BARO). The control module uses the barometric pressure sensor input for fuel control to compensate for altitude differences.
Control Module			This parameter displays the state of the ignition system

Voltage Signal	-	B+	voltage available at the control module.
Cooling Fan Relay 1 Command	-	Varies	This parameter displays the commanded state of the cooling fan relay 1 control circuit. The cooling fan relay 1 should be ON when the scan tool indicates the fan control relay 1 command is ON. The cooling fan relay 1 should be OFF when the scan tool indicates the fan control Relay 1 Command is OFF.
Cooling Fan Relay 2 Command	-	Varies	This parameter displays the commanded state of the cooling fan relay 2 control circuit. The cooling fan relay 2 should be ON when the scan tool indicates the fan control Relay 2 command is ON. The cooling fan relay 2 should be OFF when the scan tool indicates the fan control Relay 2 command is OFF.
Cooling Fan Relay 3 Command	-	Varies	This parameter displays the commanded state of the cooling fan relay 3 control circuit. The cooling fan relay 3 should be ON when the scan tool indicates the fan control Relay 3 command is ON. The cooling fan relay 3 should be OFF when the scan tool indicates the fan control Relay 3 command is OFF.
CPP Learned Apply Position	-	V	This parameter displays the position learned for the clutch pedal position (CPP) sensor when the clutch pedal is fully applied during the associated learn procedure.
CPP Learned Release Position	-	V	This parameter displays the position learned for the clutch pedal position sensor when the clutch pedal is released.
			This parameter displays the displacement of the clutch

CPP Sensor	-	Varies	pedal (corrected and normalized based upon its learned released and fully applied positions), where 0% corresponds to the clutch pedal being released and 100% corresponds to the clutch pedal being fully applied.
CPP Sensor	-	Varies	This parameter displays the clutch pedal position sensor analog input as a percentage of its reference voltage.
Current Gear	Transmission in Park or Neutral	1-6	Displays Unknown, 1, 2, 3, 4, 5, or 6. This parameter indicates the current commanded gear position.
Desired ECT	-	Varies	This parameter displays the desired engine coolant temperature (ECT) in degrees.
Desired Idle Speed	-	600-950 RPM	This parameter displays the desired engine idle speed as commanded by the control module.
Desired Throttle Position	-	2-6%	This parameter displays the desired throttle position angle commanded by the control module.
Distance Since DTC Cleared	-	Varies	This parameter displays the distance accumulated since an emission diagnostic trouble code was cleared. The scan tool will display increasing distance as the vehicle is driven.
Distance Since Last Malfunction	-	Varies	This parameter displays the distance accumulated when the emission diagnostic trouble code last failed.
Distance This Driving Cycle	-	Varies	This parameter displays the distance accumulated since an emission diagnostic trouble code was cleared. The scan tool will display increasing distance as the vehicle is driven.

ECT Sensor 1	-	-39 to +140°C (-38 to +284°F) Varies	This parameter displays the temperature of the engine coolant based on input to the control module from the engine coolant temperature (ECT) sensor 1.
ECT Sensor 2	-	-39 to +140°C (-38 to +284°F) Varies	This parameter displays the temperature of the radiator coolant based on input to the control module from the radiator coolant temperature (ECT) sensor 2.
Engine Controls Ignition Relay Feedback Signal	-	B+	This parameter displays the voltage available at the engine control ignition relay pin of the control module.
Engine Coolant Temperature	-	-39 to +140°C (-38 to +284°F) Varies	This parameter displays the temperature of the engine coolant based on input to the control module from the engine coolant temperature (ECT) sensor 1.
Engine Coolant Thermostat Heater Command	-	0-100%	This parameter displays the commanded duty cycle for the engine coolant thermostat.
Engine Load	Engine Idling	11-20% Varies	This parameter displays the calculated engine load in percent based on inputs to the control module from various engine sensors.
	Engine speed at 2 500 RPM	25-40%	
Engine Oil Level Switch	-	OK	This parameter displays if the level of the engine oil is within range as determined by the control module from information received from the engine oil level switch.
Engine Oil Pressure Switch	-	OK	This parameter displays the state of the engine oil pressure as determined by the control module. The control module monitors the engine oil pressure switch to determine if the engine oil pressure is sufficient. The scan tool displays Low when the engine oil pressure is below a predetermined value.

Engine Run Time	Engine Operating	Varies	This parameter displays the time elapsed since the engine was started. The scan tool will display the time in hours, minutes and seconds. The engine run time will reset to zero when the engine stops running.
Engine Speed	Engine Cranking	Greater than 60 RPM	This parameter displays the speed of the engine crankshaft rotation from information received from the crankshaft position sensor.
	Engine Idling	Approximately 650-950 RPM	
EVAP Purge Solenoid Valve Command	-	10-20%	This parameter displays the on-time or duty cycle of the evaporative emission (EVAP) canister purge solenoid commanded by the control module. Zero percent indicates no purge. One hundred percent indicates full purge.
Exhaust Camshaft Position Active Counter	Engine Idling	0-255	This parameter displays an incrementing counter when the control module receives a signal from the exhaust camshaft position (CMP) sensor.
Exhaust Camshaft Position Command	-	45-75%	This parameter displays the commanded duty cycle for the exhaust camshaft as commanded by the control module.
Fuel Level Sensor	-	Varies	This parameter displays the approximate fuel level in the fuel tank as a voltage. The control module calculates this level using the signal from the sensor used to monitor the fuel in the tank. The scan tool will display a low reading when the fuel level in the tank is near empty. The scan tool will display a high reading when the fuel level in the tank is high or near full.
	Ignition ON, engine		This parameter displays the

Fuel Pump Relay Command	OFF	Fuel pump on for 2 s	control modules commanded state of the fuel pump relay control circuit.
	Engine idling	On	
Fuel Tank Pressure Sensor	-	0.00 inch	This parameter displays the pressure/vacuum inside the fuel tank. A negative value indicates a vacuum, while a positive value indicates a pressure.
Fuel Tank Pressure Sensor	-	1.3-1.7 V	This parameter displays the voltage signal received by the control module from the fuel tank pressure sensor.
Generator F-Terminal Signal	-	40-70%	This parameter indicates the generator field duty cycle as commanded by the voltage regulator or control module. The scan tool will display a higher value for a higher commanded generator output, and a lower value for a lower commanded generator output.
HO2S 1 or HO2S 2	Ignition ON, Engine OFF	50-900 mV	This parameter indicates the heated oxygen sensor (HO2S) sensor 1 or 2, output voltage as measured by the control module. The scan tool will display a higher value during a rich condition, and a lower value during a lean condition.
	Engine Operating	Varies	
HO2S Heater Sensor 1 or 2	-	0.42-0.62 A	This parameter displays the amperage of the HO2S heater commanded by the control module.
HO2S 1 or HO2S 2 Heater Command	-	0-99%	This parameter displays the commanded state of the HO2S 1 or HO2S 2 heater by the control module. The scan tool will display a higher value as the heater command is increased, and a lower value if the heater is not commanded ON.
IAT Sensor	-	-39 to +140°C (-38 to	This parameter displays the temperature of the air entering the air induction system based on input to the

		+284°F)	control module from the intake air temperature (IAT) sensor.
IAT Sensor	-	0-5 V	This parameter displays the voltage calculated by the control module from the intake air temperature sensor.
Ignition Accessory Signal	-	ON	This parameter displays the state of the ignition accessory position input to the control module from the ignition switch.
Ignition Switch Status	-	Active	This parameter displays active when the ignition switch is supplying battery voltage to the control module ignition circuit.
Intake Camshaft Position Command	-	45-75%	This parameter displays the commanded duty cycle for the intake camshaft as commanded by the control module.
Intake Manifold Tuning Control Valve Control Circuit Command	-	Off	This parameter displays the state of the intake manifold tuning valve solenoid control circuit as commanded by the control module.
Long Term Fuel Trim	-	-5 to +5%	This parameter displays the commanded Long Term Fuel Trim correction by the control module.
MAP Sensor	-	26-52 kPa	This parameter displays the pressure from the manifold absolute pressure (MAP) sensor to the control module.
MAP Sensor	-	0.98-1.42 V	This parameter displays the signal voltage from the MAP sensor to the control module.
Park/Neutral Position Switch	-	Park/Neutral	This parameter displays the position of the transmission selection as Park/Neutral or in gear.
Reduced Engine	-	Inactive	This parameter displays the status of the operating mode of the control module used to reduce engine power to

Power			prevent catalyst or engine damage or due to an affected throttle actuator control (TAC) system.
Remaining Fuel in Tank	-	0-100% Varies	This parameter displays the amount of fuel remaining in the fuel tank as measured in percentage. The control module determines the amount of fuel remaining in the tank by using information from the fuel level sensors. The scan tool will display a higher value with a full fuel tank, and a lower value with an empty fuel tank.
Reverse Position Switch	-	OFF	Manual Transmission Reverse Switch ON indicates that the reverse switch hard wire input to the ECM is active.
Short Term Fuel Trim	-	-5 to +5%	This parameter displays the short term correction to the fuel delivery by the control module in response to oxygen sensor. If the oxygen sensor indicates a lean air/fuel mixture, the control module will add fuel increasing the short term fuel trim above 0. If the oxygen sensor indicates a rich air/fuel mixture, the control module will reduce fuel decreasing the short term fuel trim below 0.
Starter Relay Command	-	OFF	The scan tool displays ON or OFF. The scan tool displays OFF until the ignition is placed into the CRANK position.
TAC Forced Engine Shutdown	-	NO	This parameter indicates the status of TAC control by the control module. The scan tool will display YES if the engine has been shut down due to a throttle control fault. The scan tool will display NO if

			the engine has not been shut down by a throttle control fault.
TAC Motor	-	Enabled	This parameter indicates the status of the TAC motor driver by the ECM. The scan tool will display Enabled if TAC motor operation is allowed. The scan tool will display disabled if the TAC motor is disabled.
TAC Motor Command	-	0-100% Varies	This parameter displays the percentage of the commanded state of the TAC motor by the control module.
Throttle Position	-	2-6%	This parameter displays the actual throttle position angle indicated by the control module using information from the two throttle position sensors.
Throttle Position Sensor 1	Accelerator pedal not actuated	4.14-4.34 V	This parameter displays the voltage signal sent to the control module from throttle position sensor 1 of the throttle assembly. The throttle position sensor 1 is a range of values indicating a high voltage when the throttle is closed to a low voltage when the throttle plate is fully open.
	Accelerator pedal fully actuated	3.50-3.37 V	
Throttle Position Sensor 2	Accelerator pedal not actuated	0.68-0.88 V	This parameter displays the voltage signal sent to the control module from throttle position sensor 2 of the throttle assembly. The throttle position sensor 2 is a range of values indicating a low voltage when the throttle is closed to a high voltage when the throttle plate is fully open.
	Accelerator pedal fully actuated	1.35-1.55 V	
Torque Delivered Signal	-	Varies	This parameter displays a calculated valve based on engine load, throttle position, and other engine inputs. This parameter is calculated to within 20 N m (15 lb ft) of

			actual measured engine torque.
Total Knock Retard	-	0 Degrees	This parameter indicates how much ignition spark timing is being retarded due to all control systems monitored by the control module. The scan tool will display a high valve during extreme conditions such as high temperatures and antilock braking. The scan tool will display a lower value during lighter driving conditions.
Total Misfire	-	Counts	This parameter displays the total number of cylinder firing events that the control module detected as misfires for the last 200 crankshaft revolution sample period.
Vehicle Speed Sensor	-	0 km/h (0 MPH)	This parameter displays the speed of the vehicle as calculated by the transmission control module (TCM) from information received from the vehicle speed sensor (VSS).
Warm-ups Since DTC Cleared	-	Varies	This parameter displays the number of warm-ups since the DTC was cleared.

Engine Control Module (ECM) Scan Tool Output Controls

Output Control	Description
A/C Clutch Relay	This function activates the A/C compressor relay. The normal commanded state of the A/C relay is None. The A/C compressor will turn ON or OFF when commanded ON or OFF. The system remains in the commanded state until cancelled by the scan tool. The scan tool initiates the test when the following conditions are met: • In the correct power mode • A/C high side pressure is in range • Engine speed is in range • Ignition voltage is in range. • There are no A/C pressure sensor DTCs set.
Clutch Pedal Position Learn	This device control is used to trigger the procedure to learn the

	clutch pedal fully applied position.
Cooling Fan	This function controls the cooling fan relay 1. The normal commanded state of the fan relay is None. The scan tool initiates the test when the following conditions are met: • Engine coolant temperature is not out of range • In the correct power mode.
Engine Oil Life Reset	This function is used to reset the engine oil life. The engine oil remaining life is determined from engine revolutions and the distance driven since the last oil change.
EVAP Purge Solenoid Valve	This function controls the EVAP purge solenoid valve. The normal commanded state is None. The system will increase or decrease the amount of purge by changing the duty cycle of the purge valve in 10% increments within a range of 0-100%. The scan tool initiates the test when the following conditions are met: • The vacuum level in the EVAP purge system is within range. • There are no EVAP DTCs set. • The EVAP system test is not in progress. • In the correct Power Mode.
EVAP Test	Activates the on-board EVAP diagnostic test.
EVAP Vent Solenoid Valve	This function controls the EVAP vent solenoid. The normal commanded state is none. When commanded ON, the vent valve switches to not venting. When commanded OFF, the vent valve switches to venting. The scan tool indicates the test when the following conditions are met: • The vacuum level in the EVAP purge system is within range. • There are no EVAP DTCs set. • The EVAP system test in not in process. • In the correct power mode.
Exhaust Camshaft Position Actuator	This function controls the selected camshaft actuator solenoid. The normal commanded state is None. The system will increase or decrease the angle of the selected camshaft in 5 degree increments. The scan tool initiates the test when the following conditions are met: • The engine is operating. • The commanded camshaft position is not out of range. • There are no crankshaft position or camshaft position sensor DTCs set.

	• Engine oil temperature is not out of range. • In the correct power mode. If the actuator is disabled after 30 s, the actuator control is not allowed again on the same actuator for 60 s.
Fuel Pump Relay	This function controls the fuel pump relay. The normal commanded state is None. When commanded ON or OFF, the ECM turns the fuel pump ON or OFF. The scan tool initiates the test when the following conditions are met: • The engine speed is 0 RPM. • In the correct power mode. • The output control timer has not expired. • The ignition voltage is within range.
Fuel Trim Reset	This function is used to reset the learned fuel trim values to their initial values.
Generator L-Terminal	This function is used to override the state of the generator L terminal output. The commanded states are ON and OFF. Selecting OFF commands the ECM to turn OFF the generator and stop generating an output voltage. The scan tool initiates the test when the following conditions are met: • The engine is operating to turn OFF the component. • The vehicle speed is 0 km/h (0 MPH). • In the correct power mode. • The output control timer has not expired.
HO2S Heater Sensor 1 or 2	This function controls the selected HO2S heater. The normal commanded state is None, on, and off. Commanding the HO2S heater ON turns on the heater driver. The scan tool initiates the test when the following conditions are met: • The engine is operating. • The exhaust temperature is within range. • In the correct power mode. • The HO2S heaters are not over temperature. • The ignition voltage is not out of range while commanding the heaters ON.
	This function controls the selected camshaft actuator solenoid. The normal commanded state is None. The system will increase or decrease the angle of the selected camshaft in 5 degree increments. The scan tool initiates the test when the following conditions are met:

Intake Camshaft Position Actuator	• The engine is operating. • The commanded camshaft position is not out of range. • There are no crankshaft position or camshaft position sensor DTCs set. • Engine oil temperature is not out of range. • In the correct power mode. If the actuator is disabled after 30 s, the actuator control is not allowed again on the same actuator for 60 s.
Intake Manifold Runner Control Valve	This device control is used to override the state of the intake manifold tuning valve output. A output test is used to select whether commanding the intake manifold tuning valve output on or off results in the valve being commanded closed or open.
Malfunction Indicator Lamp (MIL)	This function controls the malfunction indicator lamp (MIL). The normal commanded state is None. When commanded ON or OFF, the ECM turns the malfunction indicator lamp (MIL) ON or OFF. This output can also be monitored on the scan tool data parameter MIL Command. The system remains in the commanded state until cancelled by the scan tool.
Throttle Position	This function controls the throttle valve in 10% increments. The scan tool initiates the test when the following conditions are met: • The engine speed is 0 RPM. • The vehicle speed is 0 km/h (0 MPH). The system remains in the commanded state until cancelled by the scan tool.

FUEL PUMP FLOW CONTROL MODULE SCAN TOOL INFORMATION

Fuel Pump Flow Control Module Scan Tool Data Parameters

Parameter	System State	Expected Value	Description
Operating Conditions: Ignition ON/Engine Idling at Normal Operating Temperature / Vehicle is in Park or Neutral			
Desired Fuel Pressure	-	306.8 kPa (44.5 psi)	This displays kPa (psi). This is the desired fuel pressure.
Fuel Pump Command	-	On	The scan tool displays On or Off. This is the current state of the fuel pump command.

Fuel Pump Signal Command	-	Varies	This displays %. This is the commanded fuel pump signal measured in percentage.
Fuel Pressure Sensor	-	296.4-310.3 kPa (43-45 psi)	This displays kPa (psi). This is the current pressure at the fuel pressure sensor.
Fuel Pressure Sensor	-	4.90-5.01 Volts	This displays Volts. This is the fuel pressure sensor voltage.
Ignition 1 Signal	-	Varies	This displays Volts. This is the current ignition 1 signal.
LT Fuel Pump Trim	-	Varies	This displays a numeric value. This is the long term (LT) fuel pump trim.
ST Fuel Pump Trim	-	Varies	This displays a numeric value. This is the short term (ST) fuel pump trim.

Fuel Pump Flow Control Module Scan Tool Output Controls

Output Control	Description
Fuel Pressure Control	This output control is used to control the fuel pressure.
Fuel Pump	This output control is used to command the fuel pump ON and OFF.
Fuel Pump Trim Reset	This output control is used to reset the fuel pump trim.

Active Grille Air Shutter Scan Tool Data Parameters (If Equipped)

Parameter	System State	Expected Value	Description
Operating Conditions: Ignition ON/Engine Idling at Normal Operating Temperature / Vehicle is in Park or Neutral			
Active Grille Air Shutter Position Command	-	Varies	This displays %. This is the commanded active grille air shutter position.
Active Grille Air Shutter Position	-	Varies	This displays %. This is the actual active grille air shutter position.
Cold Temperature Mode	-	On / Off	The scan tool displays On or Off. This is the current state of the Cold Temperature Mode.
Ambient Air Temperature	-	Varies	The scan tool displays °C (°F). This is the current

			ambient air temperature.

Active Grille Air Shutter Scan Tool Output Controls (If Equipped)

Output Control	Description
Active Grille Air Shutter Actuator	This output control is used to perform the Active Grille Air Shutter Actuator test. It is used to cycle the active grille air shutter open and closed. The test result will display pass or fail based on the ability of the louvers to cycle open and closed.

Exhaust Flow Control Valve Scan Tool Data Parameters (If Equipped)

Parameter	System State	Expected Value	Description
Operating Conditions: Ignition ON/Engine Idling at Normal Operating Temperature / Vehicle is in Park or Neutral			
Exhaust Flow Control Valve Command	-	Open/Closed	Exhaust Flow Valve Commanded State
Exhaust Flow Control Valve Command	-	%	Exhaust Flow Valve Commanded Duty Cycle (0%-100%)
Exhaust Flow Control Valve Performance Mode	-	Active/Inactive	Exhaust Flow Valve Control Status
Exhaust Flow Control Valve Rumble Mode	-	Active/Inactive	Exhaust Flow Valve Control Status
Exhaust Flow Control Valve	-	Active/Inactive	Exhaust Flow Valve Control Status

Exhaust Flow Control Valve Scan Tool Output Controls (If Equipped)

Output Control	Description
Exhaust Flow Control Valve Command	This output control is used to cycle the exhaust flow control valve open and closed.

HEATING, VENTILATION AND AIR CONDITIONING CONTROL MODULE SCAN TOOL INFORMATION

Heating Ventilation and Air Conditioning Control Module Scan Tool Data Parameters

Parameter	System State	Expected Value	Description
Operating Conditions: Ignition ON			
A/C Compressor Clutch Inhibit Reason	-	Varies	The scan tool displays the reason why the activation of the A/C compressor is inhibit.
A/C Compressor Clutch Status	Engine running, A/C Off	Disengaged	The scan tool displays Engaged or Disengaged depending on the state of the A/C compressor.
	Engine running, A/C On	Engaged	

A/C Evaporator Temperature Sensor	-	-40 to +80°C (-40 to +176°F)	The scan tool displays °C (°F). This is the current temperature at the A/C evaporator temperature sensor.
A/C High Side Pressure Sensor	-	Varies	The scan tool displays kPa. This is the current pressure of the A/C refrigerant.
A/C Indicator	A/C Off	Off	The scan tool displays On or Off depending on the state of the A/C mode.
	A/C On	On	
A/C Request Signal	A/C Off	Inactive	The scan tool displays Active or Inactive depending on the state of the A/C mode.
	A/C On	Active	
A/C Switch	A/C Switch released	Inactive	The scan tool displays Active or Inactive depending on the state of the A/C switch.
	A/C Switch pressed	Active	
Air Recirculation LED	Air recirculation mode is deactivated	Off	The scan tool displays On or Off depending on the state of the Recirculation mode.
	Air recirculation mode is activated	On	
Air Recirculation Mode Switch	Air recirculation switch released	Inactive	The scan tool displays Active or Inactive depending on the state of the air recirculation mode switch.
	Air recirculation switch pressed	Active	
Ambient Air Temperature (Filtered)	-	-40 to +80°C (-40 to +176°F)	The scan tool displays °C (°F). This is the current temperature at the ambient air temperature sensor.
Air Quality Sensor Indicator	-	Varies	The scan tool displays On or Off depending on the state of the automatic recirculation switch.
Air Quality Sensor Switch	-	Varies	The scan tool displays On or Off depending on the state of the automatic recirculation switch.
Auto HVAC Button	Auto HVAC button released	Inactive	The scan tool displays On or Off depending on the state of the Auto HVAC button.
	Auto HVAC button pressed	Active	
Auto HVAC Indicator	Auto mode is deactivated	Off	The scan tool displays On or Off depending on the state

	Auto mode is activated	On	of the Auto mode.
Auxiliary Heater Output Status	-	OK	The scan tool displays OK or Malfunction. Malfunction is displayed if there is an auxiliary heater malfunction.
Battery Voltage	-	11-14 V	The scan tool displays V. This is the current battery voltage.
Blower Motor Speed	-	0-100%	The scan tool displays % depending on the state of the selected blower motor speed. The value increases stepwise from 0-100% depending the selected speed.
Blower Motor Speed Command	-	0-100%	The scan tool displays % depending on the state of the selected blower motor speed. The value increases stepwise from 0-100% depending the selected speed.
Blower Motor Switch	-	Varies	The scan tool displays OFF, 1-8 depending on the state of the selected blower motor speed.
Desired Left Duct Temperature	-	Varies	The scan tool displays °C (° F). This is the desired temperature at the left duct temperature sensor.
Desired Left Temperature	-	Varies	The scan tool displays °C (° F) depending on the selected left temperature.
Desired Left Temperature Motor Door Position	-	Varies	The scan tool displays Counts. This is the desired position of the left temperature actuator.
Engine Coolant Temperature	-	-40 to +215°C (-40 to +419°F)	The scan tool displays °C (° F). This is the current engine coolant temperature.
Enhanced Defrost Indicator	Enhanced defrost mode is deactivated	Off	The scan tool displays On or Off depending on the state of the enhanced defrost mode.
	Enhanced defrost mode is activated	On	
	Enhanced defrost switch released	Off	The scan tool displays On or Off depending on the state

Enhanced Defrost Switch	Enhanced defrost switch pressed	On	of the enhanced defrost switch.
Floor Mode Indicator	Floor mode is deactivated	Off	The scan tool displays On or Off depending on the state of the floor mode.
	Floor mode is activated	On	
Floor Mode Switch	Floor mode switch released	Off	The scan tool displays On or Off depending on the state of the floor mode switch.
	Floor mode switch pressed	On	
Front Defrost Indicator	Front defrost mode is deactivated	Off	The scan tool displays On or Off depending on the state of the front defrost mode.
	Front defrost mode is activated	On	
Front Defrost Switch	Front defrost switch released	Off	The scan tool displays On or Off depending on the state of the front defrost switch.
	Front defrost switch pressed	On	
Front HVAC System Status	-	Varies	The scan tool displays On or Off depending on the state of the POWER switch.
HVAC Actuators Supply Voltage	-	Active	The scan tool displays Active or Inactive. Inactive is displayed if there is a malfunction at the actuators supply voltage circuit.
Instrument Panel Vents Indicator	Instrument panel vents mode is deactivated	Off	The scan tool displays On or Off depending on the state of the instrument panel vents mode.
	Instrument panel vents mode is activated	On	
Instrument Panel Vents Switch	Instrument panel vents switch released	Inactive	The scan tool displays Active or Inactive depending on the state of the instrument panel vents switch.
	Instrument panel vents switch pressed	Active	
Left Front Seat Heating Switch	Left front seat heating switch released	Off	The scan tool displays On or Off depending on the state of the left front seat heating switch.
	Left front seat heating switch pressed	On	
Left Front Seat Ventilation Switch	Left front seat ventilation switch released	Off	The scan tool displays On or Off depending on the state of the left front seat ventilation switch.
	Left front seat ventilation switch pressed	On	
			The scan tool displays Stop, Increase or Decrease.

Left Mode Door Motor Direction	-	Varies	During the movement of the door, the scan tool shows Increase or Decrease depending the movement direction. When the position of the door is reached, the scan tool displays Stop.
Left Temperature Door Motor Calibration Status	-	Varies	The scan tool displays Not Running, In Progress, Complete or Failed depending the calibration status.
Left Temperature Door Motor Direction	-	-	The scan tool displays Stop, Increase or Decrease. During the movement of the left temperature door, the scan tool shows Increase or Decrease depending the movement direction. When the selected position of the door is reached, the scan tool displays Stop.
Left Temperature Door Position	-	Varies	The scan tool displays Counts. This is the current position of the left temperature actuator.
Left Temperature Knob Position	-	Varies	The scan tool displays counts. Only with C67 The value varies between -7 to +7 depending the selected temperature knob position. At the left end position is the value 16 and at the right end position -16. Only with C68 The value varies between -5 to +5 depending the selected temperature knob position. At the left end position is the value 18 and at the right end position -18.
Lower Left Duct Temperature Sensor	-	-40 to +80°C (-40 to + 176°F)	The scan tool displays °C (° F). This is the current temperature at the lower left duct temperature sensor.
			The scan tool displays Not

Mode Door Motor Calibration Status	-	Varies	Running, In Progress, Complete or Failed depending the calibration status.
Mode Switch	-	Varies	The scan tool displays Up or Inactive depending on the state of the mode switch.
Odor Sensor	-	5-95%	The scan tool displays %. The value increases with the increasing of the pollution of the ambient air.
Passenger Compartment Air Temperature (Filtered Data)	-	-40 to +80°C (-40 to + 176°F)	The scan tool displays °C (° F). This is the current temperature at the passenger compartment air temperature sensor.
Passenger Compartment Air Temperature (Unfiltered Data)	-	-40 to +80°C (-40 to + 176°F)	The scan tool displays °C (° F). This is the current temperature at the passenger compartment air temperature sensor.
Passenger Compartment Humidity	-	3-100%	The scan tool displays %. This is the current relative humidity level at the windshield temperature and inside moisture sensor.
Passenger Compartment Humidity Sensor Temperature	-	-40 to +80°C (-40 to + 176°F)	The scan tool displays °C (° F). This is the current temperature at the humidity sensing element temperature sensor.
Rear Defogger Indicator	Rear defogger is deactivated	Off	The scan tool displays On or Off depending on the state of the rear defogger.
	Rear defogger is activated	On	
Rear Defogger Status	Rear defogger is deactivated	Off	The scan tool displays On or Off depending on the state of the rear defogger.
	Engine running/Rear defogger is activated	On	
Rear Defogger Switch	Rear defogger switch released	Inactive	The scan tool displays Active or Inactive depending on the state of the rear defogger switch.
	Rear defogger switch pressed	Active	
	Air recirculation mode	Outside Air	The scan toll displays Stop, Outside Air, Increase, Recirculation, Decrease or

Recirculation Door Motor Direction	is deactivated		Not Used depending on the state of the recirculation door. During the movement of the door, the scan tool shows Increase or Decrease depending the movement direction.
	Air recirculation mode is activated	Recirculation	
Right Front Seat Heating Switch	Right front seat heating switch released	Inactive	The scan tool displays Active or Inactive depending on the state of the right front seat heating switch.
	Right front seat heating switch pressed	Active	
Right Front Seat Ventilation Switch	Right front seat ventilation switch released	Inactive	The scan tool displays Active or Inactive depending on the state of the right front seat ventilation switch.
	Right front seat ventilation switch pressed	Active	
Sun Azimuth	-	0-90°	The scan tool displays °. This is the current angle in the horizontal plane between the sun and the vehicle driving direction.
Sun Elevation	-	0-360°	The scan tool displays °. This is the current angle in the vertical sun height.
Sunload	-	0-1 200 W/m^2	The scan tool displays W/m^2 . This is the current sun heat intensity.
Upper Left Duct Temperature Sensor	-	-40 to +80°C (-40 to + 176°F)	The scan tool displays °C (° F). This is the current temperature at the upper left duct temperature sensor.
Windshield Temperature	-	-40 to +80°C (-40 to + 176°F)	The scan tool displays °C (° F). This is the current temperature at the windshield temperature sensor.

Heating Ventilation and Air Conditioning Control Module Scan Tool Output Controls

Output Control	Description
A/C Indicator	The HVAC control module illuminates the A/C indicator when commanded from the scan tool.
A/C Switch	This control function simulates the state of the A/C switch.
	The HVAC control module illuminates the Air

Air Recirculation LED Command	Recirculation indicator when commanded from the scan tool.
Air Recirculation Mode Switch	When On is selected, the HVAC control module commands the air recirculation door from outside air to recirculation. When Off is selected, the HVAC control module commands the air recirculation door from recirculation to outside air.
Auto HVAC Indicator	The HVAC control module illuminates the Auto indicator when commanded from the scan tool.
Auxiliary Heater Request	When On is selected, the HVAC control module sends a request signal to the auxiliary heater.
Blower Motor Switch	This control function simulates the state of the blower motor switch.
Enhanced Defrost Indicator	The HVAC control module illuminates the enhanced defrost indicator when commanded from the scan tool.
Floor Mode Indicator	The HVAC control module illuminates the floor mode indicator when commanded from the scan tool.
Front Defrost Indicator	The HVAC control module illuminates the front defrost indicator when commanded from the scan tool.
HVAC Actuators	The HVAC control module executes the Motor Learn Routine when commanded from the scan tool.
HVAC Afterblow Configuration	This control function disables and enables the afterblow configuration.
Instrument Panel Vents Indicator	The HVAC control module illuminates the instrument panel vents indicator when commanded from the scan tool.
Left Temperature Door Motor Direction	When Increase is selected, the left temperature door position increases stepwise. When Decrease is selected, the left temperature door position decreases stepwise.
Left Temperature Door Position	This commands the left temperature door position from Cold to Hot.
Mode Door Motor Command	The HVAC control module commands the mode actuator stepwise from defrost to floor and back again.
Mode Door Position	When Floor is selected, the HVAC control module commands the mode actuator to the floor position. When Defrost is selected, the HVAC control module commands the actuator to the defrost position.
Rear Defog	The HVAC control module commands the rear defogger On and Off.
Rear Defogger Indicator	The HVAC control module commands the rear defogger indicator On and Off.
Recirculation Door	The HVAC control module commands the recirculation actuator stepwise from outside air to recirculation and back again.

INFLATABLE RESTRAINT PASSENGER PRESENCE SYSTEM SCAN TOOL INFORMATION

Passenger Presence Module Scan Tool Data Parameters

Parameter	Expected Value	Definition
Operating Conditions: Ignition ON		
Base Model Part Number	Varies, 8 Digit Number	The scan tool displays the part number of the PPS module which is stored in non volatile memory.
Battery Voltage	Volts	The scan tool will display battery voltage.
Calibration Part Number	Varies, 8 Digit Number	The scan tool displays the part number of the calibration file in the PPS module.
End Model Part Number	Varies, 8 Digit Number	The scan tool displays the part number of the PPS module in production.
Manufacturer's Traceability Number	Varies, 16 Digit Number	The scan tool displays the 16 digit traceability number in the PPS module.
Passenger Classification	Empty Seat	The scan tool displays Unknown, Calibration Mode, Empty Seat, Small Occupant Type 1, Small Occupant Type 2, Small Occupant Type 3, Small Occupant Type 4, Large Occupant Type 1, Large Occupant Type 2, Large Occupant Type 3, Large Occupant Type 4, Module Setup, Not Available, Child Seat Facing Rearward, Child Seat Facing Forward, Child Seat Facing Unknown Direction. This is the state of what occupies the passenger seat, as monitored by the passenger presence system.
Passenger Presence Module Primary Key	Hex Value	The scan tool indicates the primary key Hex value.
Passenger Presence System Reporting DTC(s)	Yes/No	The PPS module will report if there are DTCs set in the passenger presence module.
Passenger Seat Occupancy Status	Empty Seat	The scan tool displays Undefined, Empty Seat, Occupied, or Invalid. This is the state of the passenger seat if it is occupied or empty and monitored by the passenger presence system.
Power Mode	Off / Accessory / Run / Crank	The scan tool will display the power

	Request	mode of the vehicle.
Primary Key Status	Valid/Invalid	The scan tool displays Valid if the primary key matches what is stored to memory in the PPS module.
Received Primary Key	Hex Value	The scan tool displays a Hex value indicating the PPS module received primary key data.
Software Part Number	Varies, 8 Digit Number	The scan tool displays the software part number in the PPS module.

INFLATABLE RESTRAINT SENSING AND DIAGNOSTIC MODULE SCAN TOOL INFORMATION

Sensing and Diagnostic Module Scan Tool Data Parameters

Parameter	Expected Value	Definition
Operating Conditions: Ignition ON		
2nd Row Left Seat Belt Reminder Sensor Pad Enable Status	Disabled/Enabled	The scan tool displays if the left rear seat belt reminder sensor pad is enabled to the SDM.
2nd Row Left Seat Belt Reminder Sensor Pad Learn Status	Learned/Not Learned	The scan tool displays Learned or Not Learned. Learned is displayed if the left rear seat belt reminder sensor pad has been learned by the SDM.
2nd Row Left Seat Belt Status	Buckled/Unbuckled	The scan tool displays Buckled or Unbuckled. This is the state of the left rear seat belt switch when the seat belt is buckled or unbuckled.
2nd Row Middle Seat Belt Reminder Sensor Pad Enable Status	Disabled/Enabled	The scan tool displays if the rear middle seat belt reminder sensor pad is enabled to the SDM.
2nd Row Middle Seat Belt Reminder Sensor Pad Learn Status	Learned/Not Learned	The scan tool displays Learned or Not Learned. Learned is displayed if the rear middle seat belt reminder sensor pad has been learned by the SDM.
2nd Row Middle Seat Belt Status	Buckled/Unbuckled	The scan tool displays Buckled or Unbuckled. This is the state of the middle rear seat belt switch when the seat belt is buckled or

		unbuckled.
2nd Row Middle Seat Belt Reminder Sensor Pad Enable Status	Disabled/Enabled	The scan tool displays if the rear right seat belt reminder sensor pad is enabled to the SDM.
2nd Row Middle Seat Belt Reminder Sensor Pad Learn Status	Learned/Not Learned	The scan tool displays Learned or Not Learned. Learned is displayed if the rear right seat belt reminder sensor pad has been learned by the SDM.
2nd Row Right Seat Belt Status	Buckled/Unbuckled	The scan tool displays Buckled or Unbuckled. This is the state of the right rear seat belt switch when the seat belt is buckled or unbuckled.
Air Bag Malfunction Indicator	On/Off/Flashes	The scan tool will display On or Flashes if there is a problem with the SIR system. Any problems within the SIR system will illuminate the air bag indicator. The indicator will either flash or stay on.
Base Model Part Number	Varies, 8 Digit Number	The scan tool displays the part number of the SDM which is stored in non volatile memory.
Calibration Part Number	Varies, 8 Digit Number	The scan tool displays the part number of the calibration file in the SDM.
Deployment Loop 1-18 Enable Status	Enabled/Disabled	The scan tool displays Enabled or Disabled. This is the status of the air bag or pretensioner.
Deployment Loop 1-18 Learn Status	Learned/Not Learned	The scan tool displays Learned or Not learned. Learned is displayed if the SDM has defined the number loop programmed from an air bag or pretensioner.
Deployment Loop 1-18 Resistance	1.44-4.25 Ohms	The scan tool displays the resistance of the learned loop of the air bag or

		pretensioner when connected to the SDM.
Deployment Loop 1-18 Type	Varies	The scan tool displays the name of the air bag or pretensioner associated with the loop type 1-18.
Driver Seat Belt Reminder Indicator	On/Off	The scan tool displays On if this indicator is on. If the indicator is on it means the seat belt has not been buckled.
Driver Seat Belt Sensor Enable Status	Enabled/Disabled	The scan tool displays if the seat belt sensor in the seat belt buckle is enabled to the SDM.
Driver Seat Belt Sensor Learn Status	Learned/Not learned	The scan tool displays Learned or Not Learned. Learned is displayed if the driver seat belt sensor has been learned by the SDM.
Driver Seat Belt Status	Buckled/Unbuckled	The scan tool displays Buckled or Unbuckled. This is the state of the driver seat belt switch when the seat belt is buckled or unbuckled.
Driver Seat Position Sensor	Rearward/Forward	The scan tool will display if the driver seat is forward or rearward of the sensor set position.
Driver Seat Position Sensor Enable Status	Enabled/Disabled	The scan tool displays if the seat position sensor is enabled to the SDM.
Driver Seat Position Sensor Learn Status	Learned/Not Learned	The scan tool displays Learned or Not Learned. Learned is displayed if the driver seat position sensor has been learned by the SDM.
End Model Part Number	Varies, 8 Digit Number	The scan tool displays the part number of the SDM in production.
Impact Sensor 1-8 Enable Status	Enabled/Disabled	The scan tool displays Enabled or Disabled This is the status of the impact sensor.

Impact Sensor 1-8 Learn Status	Learned/Not Learned	The scan tool displays Learned or Not learned. Learned is displayed if the SDM has learned and has assigned a number to that impact sensor.
Impact Sensor 1-8 Type	Equipped/Not Equipped	The scan tool displays the name of the impact sensor associated with the type 1-8.
Inflatable Restraint Sensing and Diagnostic Module Primary Key	Hex Value	The scan tool indicates the primary key Hex value.
Manufacturer's Traceability Number	Varies, 16 Digit Number	The scan tool displays the 16 digit traceability number in the SDM.
Module Setup	Incomplete/Complete	The scan tool indicates if the SDM is set up.
Passenger Air Bag Disabled Switch	On/Off	The scan tool displays Off when the customer manually turns the passenger airbag off with this switch.
Passenger Air Bag Off Indicator	On/Off	The scan tool displays Off when the passenger indicator is not illuminated. This indicator is off when the disable switch is in the off position or no one is sitting in the passenger seat.
Passenger Air Bag On Indicator	On/Off	The scan tool displays On when the passenger indicator is illuminated. This indicator is on when the disable switch is in the on position and someone is sitting in the passenger seat.
Passenger Air Bag Status	Enabled/Disabled	The scan tool displays if the passenger air bag is enabled to the SDM.
Passenger Air Bag Disable Indicator Enable Status	Enabled/Disabled	The scan tool displays if the passenger air bag disable indicator is enabled to the SDM.
Passenger Air Bag Disable Indicator Learn Status	Learned/Not Learned	The scan tool displays Learned or Not Learned. Learned is displayed if the SDM has learned the status

		of the passenger air bag disable indicator.
Passenger Air Bag Disable Switch Enable Status	Enabled/Disabled	The scan tool displays if the passenger air bag disable switch is enabled to the SDM.
Passenger Air Bag Disable Switch Learn Status	Learned/Not Learned	The scan tool displays Learned or Not Learned. Learned is displayed if the SDM has learned the status of the passenger air bag disable switch.
Passenger Air Bag Enable Indicator Enable Status	Enabled/Disabled	The scan tool displays if the passenger air bag enable indicator is enabled to the SDM.
Passenger Air Bag Enable Indicator Learn Status	Learned/Not Learned	The scan tool displays Learned or Not Learned. Learned is displayed if the SDM has learned the status of the passenger air bag enable indicator.
Passenger Classification	00-07	The scan tool will display what type of individual is sitting in the passenger seat.
Passenger Presence Detection System Enable Status	Enabled/Disabled	The scan tool displays if the passenger presence system is enabled to the SDM.
Passenger Presence Detection System Learn Status	Learned/Not Learned	The scan tool displays Learned or Not Learned. Learned is displayed if the SDM has learned the passenger presence system.
Passenger Presence Detection System Reporting DTC(s)	Yes/No	The SDM will report if there are DTCs set in the passenger presence module.
Passenger Seat Belt Reminder Indicator	On/Off	The scan tool displays On if this indicator is on. If the indicator is on it means the seat belt has not been buckled.
Passenger Seat Belt Reminder Indicator Enable Status	Disabled/Enabled	The scan tool displays if the passenger seat belt reminder indicator is enabled to the SDM.
		The scan tool displays

Passenger Seat Belt Reminder Indicator Learn Status	Learned/Not Learned	Learned or Not Learned. Learned is displayed if the passenger seat belt reminder indicator has been learned by the SDM.
Passenger Seat Belt Reminder Sensor Pad Enable Status	Disabled/Enabled	The scan tool displays if the passenger seat belt reminder sensor pad is enabled to the SDM.
Passenger Seat Belt Reminder Sensor Pad Learn Status	Learned/Not Learned	The scan tool displays Learned or Not Learned. Learned is displayed if the passenger seat belt reminder sensor pad has been learned by the SDM.
Passenger Seat Belt Sensor Enable Status	Enabled/Disabled	The scan tool displays if the seat position sensor is enabled to the SDM.
Passenger Seat Belt Sensor Learn Status	Learned/Not learned	The scan tool displays Learned or Not Learned. Learned is displayed if the passenger seat belt sensor has been learned by the SDM.
Passenger Seat Belt Status	Buckled/Unbuckled	The scan tool displays Buckled or Unbuckled. This is the state of the passenger seat belt switch when the seat belt is buckled or unbuckled.
Passenger Seat Occupancy Status	Empty Seat/Occupied	The scan tool displays Occupied if someone is sitting in the passenger seat.
Passenger Seat Position Sensor	Rearward/Forward	The scan tool will display if the passenger seat is forward or rearward of the sensor set position.
Passenger Seat Position Sensor Enable Status	Disabled/Enabled	The scan tool displays if the passenger seat position sensor pad is enabled to the SDM.
Passenger Seat Position Sensor Learn Status	Learned/Not Learned	The scan tool displays Learned or Not Learned. Learned is displayed if the passenger seat position sensor has been learned by

		the SDM.
Power Mode	Off/Accessory/Run/Crank Request	The scan tool will display the power mode of the vehicle.
Primary Key Status	Valid/Invalid	The scan tool displays Valid if the primary key matches what is stored to memory in the SDM.
Primary Key Status Last Ignition Cycle	Invalid/Valid	The SDM checks to see if the primary key data received is valid.
Received Primary Key	Hex Value	The scan tool displays a Hex value indicating the SDM received primary key data.
Rollover Sensor Enable Status	Disabled/Enabled	The scan tool displays if the rollover sensor is enabled to the SDM.
Rollover Sensor Learn Status	Learn/Unlearn	The scan tool displays Learned or Not Learned. Learned is displayed if the rollover sensor has been learned by the SDM.
Security Code Accepted	Yes/No	The SDM either accepts the security code or it does not. The scan tool displays Yes if the security code has been accepted by the SDM.
Security Code Lockout	Yes/No	The scan tool displays Yes if the SDM has been locked out because of the security code not being accepted.
Security Code Lockout Active Timer	Random Value	The SDM uses a timer before the security code is locked in the SDM.
Security Code Programmed	Yes/No	The scan tool displays Yes if the SDM has been programmed with the security code.
Security Code Programming Counter	Random Value	The SDM uses a counter for the value of the security code programming.
Security Code Reset Counter	Random Value	The SDM uses a counter to reset the value of the security code.
Software Part Number	Varies, 8 Digit Number	The scan tool displays the software part number in the

		SDM.
Vehicle Identification Number	Varies, 17 Digit Number	The VIN number of the vehicle programmed into the SDM.
VIN Programmed	Yes/No	The scan tool displays Yes if the VIN has been programmed into the SDM.
VIN Programming Counter	Random Value	The SDM uses this counter while programming the VIN.

INSTRUMENT CLUSTER SCAN TOOL INFORMATION

Instrument Cluster Scan Tool Data Parameters

Parameter	Expected Value	Description
Operating Conditions: Ignition ON		
Battery Voltage	12-14 V	The scan tool displays Volts. This is the current battery voltage signal.
Key in Ignition Status	Active/Inactive	The scan tool displays Active or Inactive. This is the state of the key in ignition switch.
Driver Information Center Switch	Varies	The scan tool displays Volts. This is the current driver information center switch input voltage.
Driver Information Center Switch	Inactive	The scan tool displays either Inactive, Up, Down, or Menu. This is the state of the driver information center switch.
Reset Switch	Active/Inactive	The scan tool displays Active or Inactive. This is the state of the reset switch.
Ambient Air Temperature	15°C	The scan tool displays outside temperature in °C.
Washer Fluid Level Switch	Open	The scan tool displays either Open, Closed, or Not Available.
Odometer Lock Status	Active/Inactive	The scan tool displays Active or Inactive depending on the state of the odometer.
Engine Speed	0 RPM	The scan tool displays the filtered value of engine speed.
Vehicle Speed	0 km/h	The scan tool displays the filtered vehicle speed value.
Fuel Level Sensor	-	The scan tool displays the filtered value of the fuel level.
		The scan tool displays the filtered

Engine Coolant Temperature	-	value of the engine coolant temperature.
Engine Oil Pressure	-	The scan tool displays the filtered value of the engine oil pressure.
Head-Up Display Dimming Level	percentage	The scan tool displays the current dimming intensity level.
Head-Up Display Switch	Head-Up Display Movement, Head Up Page Switch, Head-Up Display Dimming Level	The scan tool displays the current HUD button being pushed.
Steering Wheel Control Switches	Left, Select, Right, Volume UP, Volume Down	The scan tool displays the current steering wheel controls button being pushed.

Instrument Cluster Scan Tool Output Controls

Output Control	Description
Instrument Cluster Gauge Sweep	This function is used to command the gauges to sweep from minimum to maximum.
Driver Information Center Dimming	This function is used to command the dimming of the driver information display to Increase or Decrease by 10%.
Instrument Panel Dimmer Switch	This function is used to command the dimming of the instrument cluster to Increase or Decrease by 10%.
Driver Information Center Segments	This function is used to command the driver information center segments ON and OFF.
All Indicators	This function is used to command all the indicators ON or OFF.
Driver Information Center Options	This function is used to command the driver information center buttons using the scan tool.
CAN Bus Configuration Learn	This function is used to Reset the source ID for low speed CAN Bus communications.
Head Up Display Dimming Level	This function is used to command the dimming of the head up display to Increase or Decrease.
Head Up Display Pattern Check	This function is used to command the head up display to display a striped test pattern.

KEYLESS ENTRY CONTROL MODULE SCAN TOOL INFORMATION

Keyless Entry Control Module Scan Tool Data Parameters

Parameter	Expected Value	Definition
Operating Conditions: Ignition ON		
Battery Voltage	V	This parameter indicates the battery voltage as measured at the module
Driver Door Ajar Switch	Active/Inactive	This parameter indicates that the driver door is ajar; it is open, but the

		safety latch is engaged.
Driver Door Open Switch	Active/Inactive	This parameter indicates that the driver door is more than just ajar, it is open.
Driver Door Unlock Switch	Active/Inactive	This parameter indicates if the driver door is locked or unlocked.
Exterior Driver Door Handle Switch	Active/Inactive	This switch begins the challenge and response to determine if the door should be unlocked. If the vehicle responds correctly to the challenge, the door will be unlocked or unlatched.
Exterior Driver Door Handle Proximity Sensor	Active, Inactive, Fault	This is a capacitive proximity sensor on the exterior of the driver door handle. It allows the user to lock the door by pressing a small rectangle on the outside of the door handle if a key is detected leaving the vehicle.
Passenger Door Open Switch	Active/Inactive	This parameter indicates that the passenger door is more than just ajar, it is open.
Passenger Door Ajar Switch	Active/Inactive	This parameter indicates that the passenger door is ajar; it is open, but the safety latch is engaged.
Exterior Passenger Door Handle Switch	Active/Inactive	This switch begins the challenge and response to determine if the door should be unlocked. If the vehicle responds correctly to the challenge, the door will be unlocked or unlatched.
Exterior Passenger Door Handle Proximity Sensor	Active, Inactive, Fault	This is a capacitive proximity sensor on the exterior of the driver door handle. It allows the user to lock the door by pressing a small rectangle on the outside of the door handle if a key is detected leaving the vehicle.
Left Rear Door Ajar Switch	Active/Inactive	This parameter indicates that the driver's side rear door is ajar; it is open, yet the safety latch is engaged.
Exterior Left Rear Door Handle Switch	Active/Inactive	This switch begins the challenge and response to determine if the door should be unlocked. If the vehicle responds correctly to the challenge, the door will be unlocked or unlatched.
Right Rear Door Ajar		This parameter indicates that the

Switch	Active/Inactive	passenger's side rear door is ajar; it is open, yet the safety latch is engaged.
Exterior Right Rear Door Handle Switch	Active/Inactive	This switch begins the challenge and response to determine if the door should be unlocked. If the vehicle responds correctly to the challenge, the door will be unlocked or unlatched.
Liftgate Ajar Switch	Active/Not Active	This switch indicates if the rear closure of the vehicle is ajar.
Liftgate Handle Switch	Active/Inactive	This switch begins the challenge and response to determine if the rear closure should be unlatched. If the vehicle responds correctly to the challenge, the rear liftgate will be unlatched.

MULTIMEDIA PLAYER INTERFACE MODULE SCAN TOOL INFORMATION

Multimedia Player Interface Module Scan Tool Data Parameters

Parameter	Expected Value	Definition
Operating Conditions: Ignition ON/Engine OFF/Radio ON		
GM Part Number	Varies	The scan tool displays the part number.
Calibration Part Number 1	Varies	The scan tool displays the primary software part number.
Calibration Part Number 2	Varies	The scan tool displays the primary calibration part number
Battery Voltage	Varies	The scan tool displays volts. This is the voltage input supplied to the Multimedia Player Interface Module.
USB Device Detection	Inactive	The scan tool displays Active or Inactive. Being active indicates a USB device is connected.
Aux IN Detection	Inactive	The scan tool displays Active or Inactive. Sensing& Status. This parameter displays active when a device present on AUX In (ministereo plug).
USB Overcurrent Protection	Inactive	The scan tool displays Active or Inactive. USB over current detection indicates a USB device is drawing too much current and the USB functionality of the device is turned OFF.
Bluetooth Device Detection	Inactive	The scan tool displays Active or Inactive. Active indicates a Bluetooth device connected.

Mute Status	Mute OFF	The scan tool displays Mute OFF or Mute ON. This parameter displays the status of the mute.
Audio Source Status	Internal	The scan tool displays Internal Source, AUX or Bluetooth.This parameter displays the source of the audio.
USB Power Status	OFF	The scan tool displays OFF or ON. This is the status of the USB power.
Connected Device Type 1	None	The scan tool displays None, USB Mass Storage Device, USB Media Transfer Protocol Device, Media Player- iPod, Bluetooth, AUX, Media Player- Zune, or Device Inserted But Not Supported. This parameter displays the type of auxiliary input source connected.
Connected Device Type 2	None	The scan tool displays None, USB Mass Storage Device, USB Media Transfer Protocol Device, Media Player- iPod, Bluetooth, AUX, Media Player- Zune, or Device Inserted But Not Supported. This parameter displays the type of auxiliary input source connected.
Connected Device Type 3	None	The scan tool displays None, USB Mass Storage Device, USB Media Transfer Protocol Device, Media Player- iPod, Bluetooth, AUX, Media Player- Zune, or Device Inserted But Not Supported. This parameter displays the type of auxiliary input source connected.
Connected Device Type 4	None	The scan tool displays None, USB Mass Storage Device, USB Media Transfer Protocol Device, Media Player- iPod, Bluetooth, AUX, Media Player- Zune, or Device Inserted But Not Supported. This parameter displays the type of auxiliary input source connected.
Bluetooth Signal Strength	DB	The scan tool displays the signal strength of the Bluetooth connection.

OBJECT ALARM MODULE SCAN TOOL INFORMATION

Parking Assist Control Module Scan Tool Data Parameters

Parameter	System State	Expected Value	Description
Operating Conditions: Ignition ON/Engine OFF/Parking Assist ON			
			The scan tool displays Active or Inactive

Advanced Parking Assist Switch	-	Active/Inactive	depending on the state of the advanced parking assist switch.
Calculated Transmission Range	Transmission in reverse	Varies	The scan tool displays Park, Reverse, Neutral, Drive or Unknown depending on the state of the commanded gear.
Front Red LED	Parking assist Active, No object in front of the vehicle	Off	The scan tool displays On and Off.
	Parking assist Active, Object between 0.3-0.6 m (1-1.9 ft) in front of the vehicle	On	
Front Yellow 1 LED	Parking assist Active, No object in front of the vehicle	Off	The scan tool displays On and Off.
	Parking assist Active, Object between 1-2.5 m (3.3-8.2 ft) in front of the vehicle	On	
Front Yellow 2 LED	Parking assist Active, No object in front of the vehicle	Off	The scan tool displays On and Off.
	Parking assist Active, Object between 0.6-1 m (1.9-3.3 ft) in front of the vehicle	On	
Parking Assist Attached Object Status	-	Yes/No	The scan tool displays Yes or No. Yes is displayed if there is an object within the measuring range of the object sensors.
Parking Assist Chime	-	Varies	The scan tool displays On or Off. On is displayed if there is an object within the measuring range of the object sensors.
Parking Assist Disable History 1	-	Varies	The scan tool displays None, Manual Disable, Park Brake Applied, Trailer or Other Attached Object, Excessive Speed in Reverse, No or Invalid Sensor Signals, Sensor

			Disturbance, Sensors Dirty, Sound Signal Return Time Not Plausible. This is the state of the park assist disable history.
Parking Assist Disable History 2	-	Varies	The scan tool displays None, Manual Disable, Park Brake Applied, Trailer or Other Attached Object, Excessive Speed in Reverse, No or Invalid Sensor Signals, Sensor Disturbance, Sensors Dirty, Sound Signal Return Time Not Plausible. This is the state of the park assist disable history.
Parking Assist Disable History 3	-	Varies	The scan tool displays None, Manual Disable, Park Brake Applied, Trailer or Other Attached Object, Excessive Speed in Reverse, No or Invalid Sensor Signals, Sensor Disturbance, Sensors Dirty, Sound Signal Return Time Not Plausible. This is the state of the park assist disable history.
Parking Assist Disable History 4	-	Varies	The scan tool displays None, Manual Disable, Park Brake Applied, Trailer or Other Attached Object, Excessive Speed in Reverse, No or Invalid Sensor Signals, Sensor Disturbance, Sensors Dirty, Sound Signal Return Time Not Plausible. This is the state of the park assist disable history.
Parking Assist Disable	-	Varies	The scan tool displays None, Manual Disable, Park Brake Applied, Trailer or Other Attached Object, Excessive Speed in Reverse, No or Invalid

History 5			Sensor Signals, Sensor Disturbance, Sensors Dirty, Sound Signal Return Time Not Plausible. This is the state of the park assist disable history.
Parking Assist Disable History 6	-	Varies	The scan tool displays None, Manual Disable, Park Brake Applied, Trailer or Other Attached Object, Excessive Speed in Reverse, No or Invalid Sensor Signals, Sensor Disturbance, Sensors Dirty, Sound Signal Return Time Not Plausible. This is the state of the park assist disable history.
Parking Assist Disable History 7	-	Varies	The scan tool displays None, Manual Disable, Park Brake Applied, Trailer or Other Attached Object, Excessive Speed in Reverse, No or Invalid Sensor Signals, Sensor Disturbance, Sensors Dirty, Sound Signal Return Time Not Plausible. This is the state of the park assist disable history.
Parking Assist Sensors	-	Varies	The scan tool displays On or Off.
Parking Assist Sensors Reference Voltage	-	7.3-9.1 V	The scan tool displays V. This is the amount of voltage being sent to the object sensors.
Parking Assist Speaker Voltage	-	V	The scan tool displays V depending on the voltage supplied to the parking assist speaker.
Parking Assist Switch	-	Varies	The scan tool displays Active or Inactive depending on the state of the parking assist switch.
Parking Assist Switch LED	-	Varies	The scan tool displays On or Off depending on the state of the parking assist

			switch LED.
Parking Assist System Status	-	Enable	The scan tool displays Disable, Enable, Inhibited or Failed. This is the state of the parking assist system.
Power Mode	-	Run	The scan tool displays Off, Accessory, Run or Crank. This is the state of the ignition switch.
Rear Red LED	Parking assist Active, No object behind the vehicle	Off	The scan tool displays On and Off.
	Parking assist Active, Object between 0.3-0.6 m (1-1.9 ft) behind the vehicle	On	
Rear Yellow 1 LED	Parking assist Active, No object behind the vehicle	Off	The scan tool displays On and Off.
	Parking assist Active, Object between 1-2.5 m (3.3-8.2 ft) behind the vehicle	On	
Rear Yellow 2 LED	Parking assist Active, No object behind the vehicle	Off	The scan tool displays On and Off.
	Parking assist Active, Object between 0.6-1 m (1.9-3.3 ft) behind the vehicle	On	
Side Object Detection Disable History 1	-	Varies	The scan tool displays None, Invalid Signal Received, Manual Disable, Sensors Dirty, Temporarily Unavailable or Not Plausible. This is the state of the side object detection disable history.
Side Object Detection Disable History 2	-	Varies	The scan tool displays None, Invalid Signal Received, Manual Disable, Sensors Dirty, Temporarily Unavailable or Not Plausible. This is the state of the side object detection

			disable history.
Side Object Detection Disable History 3	-	Varies	The scan tool displays None, Invalid Signal Received, Manual Disable, Sensors Dirty, Temporarily Unavailable or Not Plausible. This is the state of the side object detection disable history.
Side Object Detection Disable History 4	-	Varies	The scan tool displays None, Invalid Signal Received, Manual Disable, Sensors Dirty, Temporarily Unavailable or Not Plausible. This is the state of the side object detection disable history.
Side Object Detection Disable History 5	-	Varies	The scan tool displays None, Invalid Signal Received, Manual Disable, Sensors Dirty, Temporarily Unavailable or Not Plausible. This is the state of the side object detection disable history.
Side Object Detection Disable History 6	-	Varies	The scan tool displays None, Invalid Signal Received, Manual Disable, Sensors Dirty, Temporarily Unavailable or Not Plausible. This is the state of the side object detection disable history.
Side Object Detection Disable History 7	-	Varies	The scan tool displays None, Invalid Signal Received, Manual Disable, Sensors Dirty, Temporarily Unavailable or Not Plausible. This is the state of the side object detection disable history.
System Voltage	-	11-14 V	The scan tool displays V. This is the current battery voltage.

Parking Assist Control Module Scan Tool Output Controls

Output Control	Description

Advanced Park Assist LED	The parking assist control module illuminates the advanced park assist LED of the when commanded from the scan tool.
Clear Disable History Data	The parking assist control module clears the disable history data when commanded from the scan tool.
Front Red LED	The parking assist control module illuminates the front red LED of the parking assist indicator when commanded from the scan tool.
Front Yellow 1 LED	The parking assist control module illuminates the 1st front yellow LED of the parking assist indicator when commanded from the scan tool.
Front Yellow 2 LED	The parking assist control module illuminates the 2nd front yellow LED of the parking assist indicator when commanded from the scan tool.
Rear Red LED	The parking assist control module illuminates the rear red LED of the parking assist indicator when commanded from the scan tool.
Rear Yellow 1 LED	The parking assist control module illuminates the 1st rear yellow LED of the parking assist indicator when commanded from the scan tool.
Rear Yellow 2 LED	The parking assist control module illuminates the 2nd rear yellow LED of the parking assist indicator when commanded from the scan tool.

POWER STEERING CONTROL MODULE SCAN TOOL INFORMATION

Power Steering Control Module Scan Tool Data Parameters

Parameter	System State	Expected Value	Description
Operating Conditions: Ignition ON			
Battery Voltage	-	Varies	This displays Volts. This is the current battery voltage.
Ignition Voltage	-	Varies	This displays Volts. This is the current ignition voltage.
Motor Voltage +	-	Varies	This displays Volts.
Motor Voltage -	-	Varies	This displays Volts.
Steering Calibration	-	Varies	This displays a numeric value.
Steering Shaft Torque	-	Varies	This displays Y.
Vehicle Speed	-	0 km/h (0 mph)	This displays km/h (mph). This is the current vehicle speed.

RADIO SCAN TOOL INFORMATION

Radio Scan Tool Data Parameters

Parameter	Expected Value	Definition
Operating Conditions: Ignition ON		
Antenna Module	Enabled	The scan tool displays Enabled or Disabled. This indicates if the system uses an antenna module and the output status between the radio and the antenna module.
Auxiliary Audio Input	Present	The scan tool displays Present or Not Present. This parameter displays active when an auxiliary input is connected.
Battery Voltage	Varies	The scan tool displays volts. This is the voltage at the input to the radio.
Digital Radio Receiver	Present	The scan tool displays Present or Not Present. This is the state of the Digital Audio Broadcast.
Phone Signal	Present	The scan tool displays Present or Not Present. This parameter will display wether this system uses discrete a phone arbitration or not.
Power Mode	Run	The scan tool displays Off, Accessory, Run or Crank Request. This is the power mode radio.
Rear Seat Audio	Not Present	The scan tool displays Present or Not Present. This parameter displays Present if the system detects a rear seat audio module.
Radio Signal Strength	Varies	This displays the signal strength in dB. This is the signal strength of the radio signal.
Theft Lock Armed	Learned VIN	The scan tool displays Learned VIN or No VIN. This is the state of the VIN programming in the radio.
Radio Theft Lock Status	Inactive	The scan tool displays Active or Inactive. This is the state of the theft lock system.
Valet Mode Status	Inactive	The scan tool displays Active or Inactive. This is the state of the valet mode.
Video Display 1	Inactive	The scan tool displays Active or Inactive. When the rear video display 1 is ON, the scan tool will display Active.
Video Display 2	Inactive	The scan tool displays Active or Inactive. When the rear video display 2 is ON, the scan tool will display Active.
End Model Part Number	Varies	The scan tool displays the end model part number.
Boot Software Part Number	Varies	The scan tool displays the boot software ID number.
Calibration Part Number 1	Varies	The scan tool displays the software module

		ID 1.
Calibration Part Number 2	Varies	The scan tool displays the software module ID 2.
Calibration Part Number 3	Varies	The scan tool displays the software module ID 3.
Calibration Part Number 4	Varies	The scan tool displays the software module ID 4.
Calibration Part Number 5	Varies	The scan tool displays the software module ID 5.
Calibration Part Number 6	Varies	The scan tool displays the software module ID 6.
Calibration Part Number 7	Varies	The scan tool displays the software module ID 7.
Calibration Part Number 8	Varies	The scan tool displays the software module ID 8.
Calibration Part Number 9	Varies	The scan tool displays the software module ID 9.
Calibration Part Number 10	Varies	The scan tool displays the software module ID 10.
Calibration Part Number 11	Varies	The scan tool displays the software module ID 11.
Calibration Part Number 12	Varies	The scan tool displays the software module ID 12.
Calibration Part Number 13	Varies	The scan tool displays the software module ID 13.
Calibration Part Number 14	Varies	The scan tool displays the software module ID 14.
Calibration Part Number 15	Varies	The scan tool displays the software module ID 15.
Calibration Part Number 16	Varies	The scan tool displays the software module ID 16.
Vin Digits 2-17	Varies	The scan tool displays the vin digits 2-17.
Digital Radio Receiver ID	Varies	The scan tool displays the Digital Audio Broadcast receiver ID.
DVD Region Code	Varies	The scan tool displays the DVD region code.
DVD Region Code Changes Remaining	Varies	The scan tool displays the number DVD region code changes remaining.

Radio Scan Tool Output Controls

Scan Tool Output Control	Description
Left Front Speaker	This output control is used to command the speaker ON and OFF. Commanding the speaker ON will generate a test tone to be

	generated through the selected loudspeaker.
Left Rear Speaker	This output control is used to command the speaker ON and OFF. Commanding the speaker ON will generate a test tone to be generated through the selected loudspeaker.
Right Front Speaker	This output control is used to command the speaker ON and OFF. Commanding the speaker ON will generate a test tone to be generated through the selected loudspeaker.
Right Rear Speaker	This output control is used to command the speaker ON and OFF. Commanding the speaker ON will generate a test tone to be generated through the selected loudspeaker.
Center Speaker	This output control is used to command the speaker ON and OFF. Commanding the speaker ON will generate a test tone to be generated through the selected loudspeaker.
Subwoofer Speaker	This output control is used to command the speaker ON and OFF. Commanding the speaker ON will generate a test tone to be generated through the selected loudspeaker.
Eject	This output is a reset command to eject the disc.
Info Display/Infotainment Faceplate Reset	This output is a reset command to reset the radio display.
Info Display/Infotainment Faceplate Wakeup	This output commands a wakeup at the display and the faceplate controls.
Clear Hard Disc Drive	This output commands a HDD to clear all customer data. This includes music files, eBooks and navigation addresses. This does not clear Nav database data.

STEERING COLUMN LOCK CONTROL MODULE SCAN TOOL INFORMATION

Scan Tool Data Parameters

Parameter	Expected Value	Description
Operating Conditions: Ignition ON		
Column Lock Status	Varies	The scan tool displays Failed, Unknown, Locked and Unlocked. The scan tool displays the current state of the column lock.
Turn Steering Wheel, Start Vehicle Again Display Message	On/Off	The scan tool displays On/Off. If the wheels are against a curb, the lock pin may not be able to pull out. A message for the driver that is displayed on the Driver Information

		Center. The scan tool displays the need to turn the steering wheel, turn off the vehicle and then restart the vehicle.
Steering Column Lock Indicator	On/Off	The scan tool displays On/Off. The scan tool displays the current state of the column lock.
Steering Column Lock Pin Position	counts	The scan tool displays the current counts of the column lock pin position.

TRANSMISSION CONTROL MODULE SCAN TOOL INFORMATION

The Transmission Control Module Scan Tool Data List contains all transmission related parameters that are available on the scan tool. The list is arranged in alphabetical order. A given parameter may appear in any one of the data lists, and in some cases may appear more than once, or in more than one data list in order to group certain related parameters together.

The values below represent a typical display recorded from a properly functioning system.

NOTE: Do not use a scan tool that displays faulty data. Report the condition to the scan tool manufacturer. The use of a faulty scan tool can result in misdiagnosis and the unnecessary replacement of components.

Only the parameters listed below are used/referenced in this manual for diagnosis. If a scan tool displays other parameters, those values are not recommended by General Motors for use in diagnosis.

If all values are within the expected range described below, refer to **Symptoms - Automatic Transmission** for diagnosis.

The scan tool values from a properly functioning transmission may be used for comparison with the transmission you are diagnosing. The values below represent a typical display recorded from a properly functioning system.

Scan Tool Data Parameters

Parameter	System State	Expected Value	Description
Operating Conditions: Engine at idle, upper radiator hose hot, closed throttle, transmission in Park, closed loop operation, accessories OFF, brake pedal not applied.			
1-2 Shift Time	Varies	Seconds	This parameter displays the actual time of the last adaptable 1-2 shift. The shift time is based on the gear ratio change after the commanded 1-2 shift.
2-3 Shift Time	Varies	Seconds	This parameter displays the actual time of the last adaptable 2-3 shift. The shift time is based on the gear ratio change after the commanded 2-3 shift.

3-4 Shift Time	Varies	Seconds	This parameter displays the actual time of the last adaptable 3-4 shift. The shift time is based on the gear ratio change after the commanded 3-4 shift.
4-5 Shift Time	Varies	Seconds	This parameter displays the actual time of the last adaptable 4-5 shift. The actual shift time is obtained by measuring the time required for the input shaft to decelerate from the previous ratio to the current ratio.
5-6 Shift Time	Varies	Seconds	This parameter displays the actual time of the last 5-6 shift. The shift time is base on the gear ratio change after the commanded 5-6 shift.
Brake Pedal Switch	Released	Applied/Released	This parameter displays the status of the brake switch circuit input. Applied indicates a zero voltage input, brake pedal applied. Released indicates a voltage input, brake pedal released. The scan tool displays Applied or Released.
Calculated Throttle Position	Varies	%	This parameter displays a calculated value, which is determined by the accelerator pedal position and the actual throttle position, used to optimize transmission controls. It represents the driver's intended request for torque or acceleration. The range is 0-100%, where 0% represents an idle or coast request and 100% represents a request for wide open throttle (WOT).
Control Module Voltage Signal	9-19	Volts	This parameter displays the system voltage measured at the module wake up signal feed.
Driver Shift Control Mode	Inactive	Active/Inactive	This parameter displays Active or Inactive. The scan tool displays Active when the gear selector is in the manual mode (M) position or left of the D position, which enables TAP shift. The scan tool displays Inactive when the gear selector is not in the M or left of D position, TAP shift disabled.
			This parameter displays the current request from the TAP Shift System.

Driver Shift Request	None	Upshift / Downshift / None / Invalid	This parameter will display up shift, downshift or invalid depending on the amount of voltage measured at the remote shift selector input and also will display none when there is no request.
Engine Coolant Temperature	Varies	°C (°F)	This parameter displays the input signal from the engine coolant temperature (ECT) sensor. ECT is high at 151°C (304°F) when the signal voltage is low (0 V). ECT is low at -40°C (-40°F) when the signal voltage is high (5 V). This parameter value is determined by the engine control module and communicated to the TCM through the High Speed GMLAN Serial Data link.
Engine Speed	Varies	RPM	This parameter displays the rotational speed of the engine expressed as revolutions per minute. This parameter value is determined by the engine control module and communicated to the TCM through the High Speed GMLAN Serial Data link.
Engine Torque	Varies	Y (lb ft)	This parameter displays a calculated value based on engine load, throttle position, mass air flow, and other engine inputs. This parameter is accurate to within 20 N.m (15 lb ft) of actual measured engine torque. This parameter value is determined by the engine control module and communicated to the TCM through the High Speed GMLAN Serial Data link.
Gear Command	1	1, 2, 3, 4, 5, or 6	This parameter displays the current commanded state of the shift solenoid valves. The scan tool displays 1, 2, 3, 4, 5, or 6.
Gear Ratio	Varies	Ratio	This parameter displays the actual transmission gear ratio. The scan tool displays the gear ratio calculated from the automatic transmission (AT) input speed sensor (ISS) and the automatic transmission (AT) output speed sensor (OSS) inputs.

High Side Driver 1	On	On/Off	This parameter displays the state of the High Side Driver 1. The scan tool displays On or Off.
High Side Driver 1 Circuit Low Voltage Test Status	OK	OK, Malfunction, Not Run	This parameter displays whether a short to ground exists in the high side driver 1 circuit. The scan tool displays OK, Malfunction, or Not Run.
High Side Driver 1 Circuit High Voltage Test Status	OK	OK, Malfunction, Not Run	This parameter displays whether a short to voltage exists in the high side driver 1 circuit. The scan tool displays OK, Malfunction, or Not Run.
High Side Driver 1 Circuit Open Test Status	OK	OK, Malfunction, Not Run	This parameter displays whether an open exists in the high side driver 1 circuit. The scan tool displays OK, Malfunction, or Not Run.
Ignition Voltage	9-19	Volts	This parameter displays the system voltage measured at the ignition feed.
Internal Mode Switch	Park	Park-Drive 1, Open, Invalid	This parameter displays PARK, PARK/REVERSE, REVERSE, REVERSE/NEUTRAL, NEUTRAL, NEUTRAL/DRIVE 4, DRIVE 4, DRIVE 4/DRIVE 3, DRIVE 3, DRIVE 3/DRIVE 2, DRIVE 2, DRIVE 2/DRIVE 1, DRIVE 1 or INVALID. The IMS Range display represents a decoded status of the four inputs from the IMS. The combination of IMS inputs are used to determine what position the manual valve is in at any time.
Internal Mode Switch A/B/C/P	Varies	High/Low	This parameter displays the status of the four A/B/C/P inputs from the automatic transmission internal mode switch. HI indicates an ignition voltage signal and LOW indicates a 0 voltage signal. The scan tool will display High/Low, High/Low, High/Low, High/Low.
ISS/OSS Supply Voltage	OK	OK, Out of Range	This parameter displays OK, Out of Range.
Last Shift Time	Varies	Seconds	This parameter displays the actual time of the last up shift. This value is only accurate if the shift was adaptable.

Line Pressure Control Solenoid Valve Control Circuit Low Voltage Test Status	OK	OK, Malfunction, Not Run	This parameter displays whether a short to ground exists in the line pressure control valve 2 control circuit. The scan tool displays OK, Malfunction, or Not Run.
Line Pressure Control Solenoid Valve Control Circuit High Voltage Test Status	OK	OK, Malfunction, Not Run	This parameter displays whether a short to ground exists in the line pressure control valve 2 control circuit. The scan tool displays OK, Malfunction, or Not Run.
Line Pressure Control Solenoid Valve Performance Test Status	OK	OK, Malfunction, Not Run	This parameter displays whether a performance issue exists in the line pressure control solenoid valve control circuit by comparing the commanded current with the expected current. The scan tool displays OK, Malfunction, or Not Run.
Line Pressure Control Solenoid Valve Pressure Command	Varies	kPa (psi)	This parameter displays results in kPa (psi).
Pressure Control Solenoid Valve 2 Control Circuit Low Voltage Test Status	OK	OK, Malfunction, Not Run	This parameter displays whether a short to ground exists in the pressure control solenoid valve 2 control circuit. The scan tool displays OK, Malfunction, or Not Run.
Pressure Control Solenoid Valve 2 Control Circuit High Voltage Test Status	OK	OK, Malfunction, Not Run	This parameter displays whether a short to voltage exists in the pressure control solenoid valve 2 control circuit. The scan tool displays OK, Malfunction, or Not Run.
Pressure Control Solenoid Valve 2 Performance Test Status	OK	OK, Malfunction, Not Run	This parameter displays whether a performance issue exists in the pressure control solenoid valve 2 control circuit by comparing the commanded current with the expected current. The scan tool displays OK, Malfunction, or Not Run.
Pressure Control Solenoid Valve 2 Pressure Command	Varies	kPa (psi)	This parameter displays kPa (psi).
Pressure Control Solenoid Valve 3 Control Circuit Low Voltage Test Status	OK	OK, Malfunction, Not Run	This parameter displays whether a short to ground exists in the pressure control solenoid valve 3 control circuit. The scan tool displays OK, Malfunction, or Not Run.

Pressure Control Solenoid Valve 3 Control Circuit High Voltage Test Status	OK	OK, Malfunction, Not Run	This parameter displays whether a short to voltage exists in the pressure control solenoid valve 3 control circuit. The scan tool displays OK, Malfunction, or Not Run.
Pressure Control Solenoid Valve 3 Performance Test Status	OK	OK, Malfunction, Not Run	This parameter displays whether a performance issue exists in the pressure control solenoid valve 3 control circuit by comparing the commanded current with the expected current. The scan tool displays OK, Malfunction, or Not Run.
Pressure Control Solenoid Valve 3 Pressure Command	Varies	kPa (psi)	This parameter displays kPa (psi).
Pressure Control Solenoid Valve 4 Control Circuit Low Voltage Test Status	OK	OK, Malfunction, Not Run	This parameter displays whether a short to ground exists in the pressure control solenoid valve 4 control circuit. The scan tool displays OK, Malfunction, or Not Run.
Pressure Control Solenoid Valve 4 Control Circuit High Voltage Test Status	OK	OK, Malfunction, Not Run	This parameter displays whether a short to voltage exists in the pressure control solenoid valve 4 control circuit. The scan tool displays OK, Malfunction, or Not Run.
Pressure Control Solenoid Valve 4 Performance Test Status	OK	OK, Malfunction, Not Run	This parameter displays whether a performance issue exists in the pressure control solenoid valve 4 control circuit by comparing the commanded current with the expected current. The scan tool displays OK, Malfunction, or Not Run.
Pressure Control Solenoid Valve 4 Pressure Command	Varies	kPa (psi)	This parameter displays kPa (psi).
Pressure Control Solenoid Valve 5 Control Circuit Low Voltage Test Status	OK	OK, Malfunction, Not Run	This parameter displays whether a short to ground exists in the pressure control solenoid valve 5 control circuit. The scan tool displays OK, Malfunction, or Not Run.
Pressure Control Solenoid Valve 5 Control Circuit High Voltage Test Status	OK	OK, Malfunction, Not Run	This parameter displays whether a short to voltage exists in the pressure control solenoid valve 5 control circuit. The scan tool displays OK, Malfunction, or Not Run.
			This parameter displays whether a

Pressure Control Solenoid Valve 5 Performance Test Status	OK	OK, Malfunction, Not Run	performance issue exists in the pressure control solenoid valve 5 control circuit by comparing the commanded current with the expected current. The scan tool displays OK, Malfunction, or Not Run.
Pressure Control Solenoid Valve 5 Pressure Command	Varies	kPa (psi)	This parameter displays kPa (psi).
Replicated OSS CKT Status	OK	OK, Open/Short to GND, Short to Volts, Indeterminate	This parameter displays OK, Open/Short to GND, Short to Volts, Indeterminate.
Shift Solenoid Valve 1	On	On/Off	This parameter displays the commanded state of the reverse, 1st shift solenoid valve (S1). The scan tool displays On/Off.
Shift Solenoid Valve 1 Control Circuit Low Voltage Test Status	OK	OK, Malfunction, Not Run	This parameter displays whether a short to ground exists in the shift solenoid valve 1 control circuit. The scan tool displays OK, Malfunction, or Not Run.
1-2 Shift Solenoid Valve Control Circuit High Voltage Test Status	OK	OK, Malfunction, Not Run	This parameter displays whether a short to voltage exists in the shift solenoid valve 1 control circuit. The scan tool displays OK, Malfunction, or Not Run.
Shift Solenoid Valve 1 Control Circuit Open Test Status	OK	OK, Malfunction, Not Run	This parameter displays whether an open exists in the shift solenoid valve 1 control circuit. The scan tool displays OK, Malfunction, or Not Run.
Steady State TAP 1st Gear	Varies	kPa (psi)	This parameter displays the amount of transmission adaptive pressure (TAP), which modifies the commanded clutch apply pressures.
Steady State TAP 1st Gear TCC Applied	Varies	kPa (psi)	This parameter displays the amount of transmission adaptive pressure (TAP), which modifies the commanded clutch apply pressures.
Steady State TAP 2nd Gear	Varies	kPa (psi)	This parameter displays the amount of transmission adaptive pressure (TAP), which modifies the commanded clutch apply pressures.
Steady State TAP 2nd Gear TCC Applied	Varies	kPa (psi)	This parameter displays the amount of transmission adaptive pressure (TAP), which modifies the

			commanded clutch apply pressures.
Steady State TAP 3rd Gear	Varies	kPa (psi)	This parameter displays the amount of transmission adaptive pressure (TAP), which modifies the commanded clutch apply pressures.
Steady State TAP 3rd Gear TCC Applied	Varies	kPa (psi)	This parameter displays the amount of transmission adaptive pressure (TAP), which modifies the commanded clutch apply pressures.
Steady State TAP 4th Gear	Varies	kPa (psi)	This parameter displays the amount of transmission adaptive pressure (TAP), which modifies the commanded clutch apply pressures.
Steady State TAP 4th Gear TCC Applied	Varies	kPa (psi)	This parameter displays the amount of transmission adaptive pressure (TAP), which modifies the commanded clutch apply pressures.
Steady State TAP 5th Gear	Varies	kPa (psi)	This parameter displays the amount of transmission adaptive pressure (TAP), which modifies the commanded clutch apply pressures.
Steady State TAP 5th Gear TCC Applied	Varies	kPa (psi)	This parameter displays the amount of transmission adaptive pressure (TAP), which modifies the commanded clutch apply pressures.
Steady State TAP 6th Gear	Varies	kPa (psi)	This parameter displays the amount of transmission adaptive pressure (TAP), which modifies the commanded clutch apply pressures.
Steady State TAP 6th Gear TCC Applied	Varies	kPa (psi)	This parameter displays the amount of transmission adaptive pressure (TAP), which modifies the commanded clutch apply pressures.
Steady State TAP Reverse	Varies	kPa (psi)	This parameter displays the amount of transmission adaptive pressure (TAP), which modifies the commanded clutch apply pressures.
TCC Pressure Control Solenoid Valve Control Circuit Low Voltage Test Status	OK	OK, Malfunction, Not Run	This parameter displays whether a short to ground exists in the TCC pressure control solenoid valve control circuit. The scan tool displays OK, Malfunction, or Not Run.
TCC Pressure Control Solenoid Valve Control Circuit High Voltage	OK	OK, Malfunction, Not Run	This parameter displays whether a short to voltage exists in the TCC pressure control solenoid valve control circuit. The scan tool displays

Test Status			OK, Malfunction, or Not Run.
TCC Pressure Control Solenoid Valve Performance Test Status	OK	OK, Malfunction, Not Run	This parameter displays whether a performance issue exist in the TCC pressure control solenoid valve control circuit by comparing the commanded current with the expected current. The scan tool displays OK, Malfunction, or Not Run.
TCC Pressure Control Solenoid Valve Pressure Command	Varies	kPa (psi)	This parameter displays results in kPa (psi).
TCC Slip Speed	Varies	RPM	This parameter displays the difference between transmission input speed and engine speed. A negative value indicates that the engine speed is less than the input speed, deceleration. A positive value indicates that the engine speed is greater than the input speed, acceleration. A value of zero indicates that the engine speed is equal to the input speed, TCC applied.
TCM Power-Up Temperature	Varies	°C (°F)	This displays the value of the temperature sensor inside the control solenoid and valve assembly.
TCM Temperature	Varies	°C (°F)	This displays the temperature of the TCM. This parameter displays results in °C (°F).
Transmission Fluid Pressure Switch 1	High/Low	High/Low	This parameter indicates the state of the normally closed transmission fluid pressure switch 1. Pressure to the switch is dependent on the position of the 3-5-Reverse clutch regulator valve. The scan tool displays High/Low.
Transmission Fluid Pressure Switch 3	High/Low	High/Low	This parameter indicates the state of the normally closed transmission fluid pressure switch 1. Pressure to the switch is dependent on the position of the 2-6 clutch regulator valve. The scan tool displays High/Low.
			This parameter indicates the state of the normally closed transmission fluid pressure switch 1. Pressure to

Transmission Fluid Pressure Switch 4	High/Low	High/Low	the switch is dependent on the position of the 1-2-3-4 clutch regulator valve. The scan tool displays High/Low.
Transmission Fluid Pressure Switch 5	High/Low	High/Low	This parameter indicates the state of the normally closed transmission fluid pressure switch 1. Pressure to the switch is dependent on the position of the R1/4-5-6 clutch regulator valve. The scan tool displays High/Low.
Transmission Fluid Life	Varies	%	This parameter displays the transmission oil life remaining. The scan tool displays the remaining oil life as a percentage. The transmission oil life is calculated based on fluid temperature and engine run time.
Transmission Fluid Temperature	Varies	°C (°F)	This parameter displays the input signal of the transmission fluid temperature sensor. Transmission fluid temperature is high 151°C (304° F) when signal voltage is low, 0 V, and transmission fluid temperature is low -40°C (-40°F) when signal voltage is high, 5 V.
Transmission Hot Mode	On/Off	On/Off	When The transmission fluid temperature is above a temperature which varies by calibration, the TCM will alter the shift pattern until the temperature drops below a value which varies by calibration.
Transmission ISS	Varies	RPM	This parameter displays the rotational speed of the transmission input shaft. The scan tool displays input shaft speed is revolutions per minute (RPM).
Transmission OSS	Varies	RPM	This parameter displays the rotational speed of the transmission output shaft expressed as revolutions per minute.

Scan Tool Output Controls

Output Control	Description
	• The transmission control module (TCM) commands the torque converter clutch pressure control (TCC PC) solenoid pressure in order to apply and release the TCC. • When the ignition is ON, and the engine is OFF, there are

TCC Pressure Control Solenoid Valve	no limits to this control. The solenoid remains ON until commanded OFF and vice versa.
	• When the engine is running, the following control limits apply:
	  ○ If the transmission range is Park, and the transmission is in hot mode, the TCC PC solenoid may not be commanded OFF. If the solenoid is requested OFF, the message "TCC OFF command disabled in Hot Mode" appears on the scan tool display.
	  ○ The TCC PC solenoid may not be commanded OFF for more than a calibrated amount of time. If the solenoid is commanded OFF, for a certain amount of time, the message "TCC OFF time has been exceeded" appears on the scan tool display.

Shift Solenoid:
• Shift Solenoid Valve 1
	• The TCM commands Shift Solenoid 1 ON and OFF.
	• When the ignition is ON, and the engine is OFF, there are no limits to this control. The solenoid remains ON until commanded OFF, and vice versa. When the output control is exited, the solenoid state is determined by the TCM.
	• When the engine is running, the following control limits apply:
	  ○ The transmission range must be in Park or Neutral. If the transmission range is not Park or Neutral, the message "Engine running and transmission range is not Park/Neutral" appears on the scan tool display.
	  ○ The solenoid remains ON until commanded OFF, and vice versa. When the output control is exited, the solenoid state is determined by the TCM.
	  ○ Transmission range DTCs must not be active. If a transmission range DTC is active, the message "Engine running with transmission DTC present" appears on the scan tool display.

	• The scan tool is used to request pressure in increments of 207 kPa (30 psi) from 0-1862 kPa (0-270 psi). The TCM will then command the solenoid to achieve the requested pressure. • When the ignition is ON, and the engine is OFF, the pressure request may be controlled within calibrated limits. There are no limits to the output control when the engine is OFF. • When the engine is running, the following control limits apply: ○ When the transmission range is Park or Neutral, the pressure request may be controlled within calibrated

Line Pressure Control Solenoid Valve	limits. The engine speed must be less than 1, 500 RPM. If the engine speed is greater than 1, 500 RPM, the message "TR in park/neutral and engine speed over 1, 500 RPM" appears on the scan tool display. ○ When the transmission range is not Park or Neutral, the requested pressure can only be controlled equal to or greater than the pressure determined by the TCM. The TCM does not allow a pressure to be selected that may cause damage to the transmission. If the requested pressure is less than allowed by the TCM, the message "Requested pressure for the Line PC Solenoid is too low" appears on the scan tool display. ○ Transmission range DTCs must not be active. If a transmission range DTC is active, the message "Engine running with transmission DTC present" appears on the scan tool display.
Clutch PC Solenoids: • Pressure Control Solenoid Valve 2 • Pressure Control Solenoid Valve 3 • Pressure Control Solenoid Valve 4 • Pressure Control Solenoid Valve 5	• The TCM commands the pressure control solenoids in order to apply and release the clutches. • When the ignition is ON, and the engine is OFF, there are no limits to this control. The solenoid remains ON until commanded OFF, and vice versa. When the output control is exited, the solenoid state is determined by the TCM. • When the engine is running, the following control limits apply: ○ The transmission range must be in Park or Neutral. If the transmission range is not Park or Neutral, the message "Engine running and transmission range is not Park/Neutral" appears on the scan tool display. ○ The solenoid remains ON until commanded OFF, and vice versa. When the output control is exited, the solenoid state is determined by the TCM. ○ Transmission range DTCs must not be active. If a transmission range DTC is active, the message "Engine running with transmission DTC present" appears on the scan tool display.
	• The TCM commands upshifts and downshifts. The scan tool Commanded Gear parameter should correspond with the shift solenoid combination. Refer to **Shift Solenoid Valve State and Gear Ratio** . • When the ignition is ON, and the engine is OFF, there are no limits to this control. The scan tool shift solenoid states change to match the Commanded Gear selected. • When the engine is running, the following control limits apply:

Shift Transmission Gear	○ The TCM does not allow a shift if it causes the engine RPM to exceed a calibrated limit. If a gear is requested and the engine speed is too high, the message "Engine speed too high" appears on the scan tool display. ○ The TCM does not allow a 3-2 or 2-1 downshift if the vehicle speed exceeds a calibrated limit. If either downshift is requested and the vehicle speed is too high, the message "Eng. is on and veh. speed too hi for 3-2 or 2-1 downshift" appears on the scan tool display. ○ The TCM does not allow a 4-3 downshift if the vehicle speed exceeds a calibrated limit. If a 4-3 downshift is requested and the vehicle speed is too high, the message "Vehicle speed too high" appears on the scan tool display. ○ The TCM does not allow an upshift if the vehicle speed exceeds a calibrated limit. If an upshift is requested and the vehicle speed is too high, the message "Vehicle speed too high" appears on the scan tool display. ○ The TCM does not allow an upshift that is greater than the current selected transmission range (PRNDL). For example, 3rd gear is not allowed if the transmission range is D2. If an upshift is requested that is greater than the current selected transmission range, the message "Eng. running and gear request is greater than the current TR" appears on the scan tool display.
Transmission Adaptive Values Learn	The TCM commands pressure to the clutches to learn the transmission adaptive values. As the procedure is being performed, the scan tool provides operator instructions. Test may not start or may abort for the following conditions: • Transmission fluid temperature must be between 70-100°C (158-212°F). • Brakes and brake switch must function properly. • Closed throttle and engine speed increases above 1500 RPM. • Park/neutral position switch must be properly adjusted and functioning. • Line pressure control is able to command 1, 000 kPa (145 psi). • Vehicle must be stopped. • Vehicle must not be vibrating excessive.

DIAGNOSTIC INFORMATION AND PROCEDURES

STRATEGY BASED DIAGNOSIS

The goal of Strategy Based Diagnosis is to provide guidance when you create a plan of action for each specific diagnostic situation. Following a similar plan for each diagnostic situation, you will achieve maximum efficiency when you diagnose and repair vehicles. Although each of the Strategy Based Diagnosis boxes is numbered, you are not required to complete every box in order to successfully diagnose a customer concern. The first step of your diagnostic process should always be Understand and Verify the Customer's Concern. The final step of your diagnostic process should be Repair and verify the Fix. Refer to the following chart for the correct Strategy Based Diagnosis.

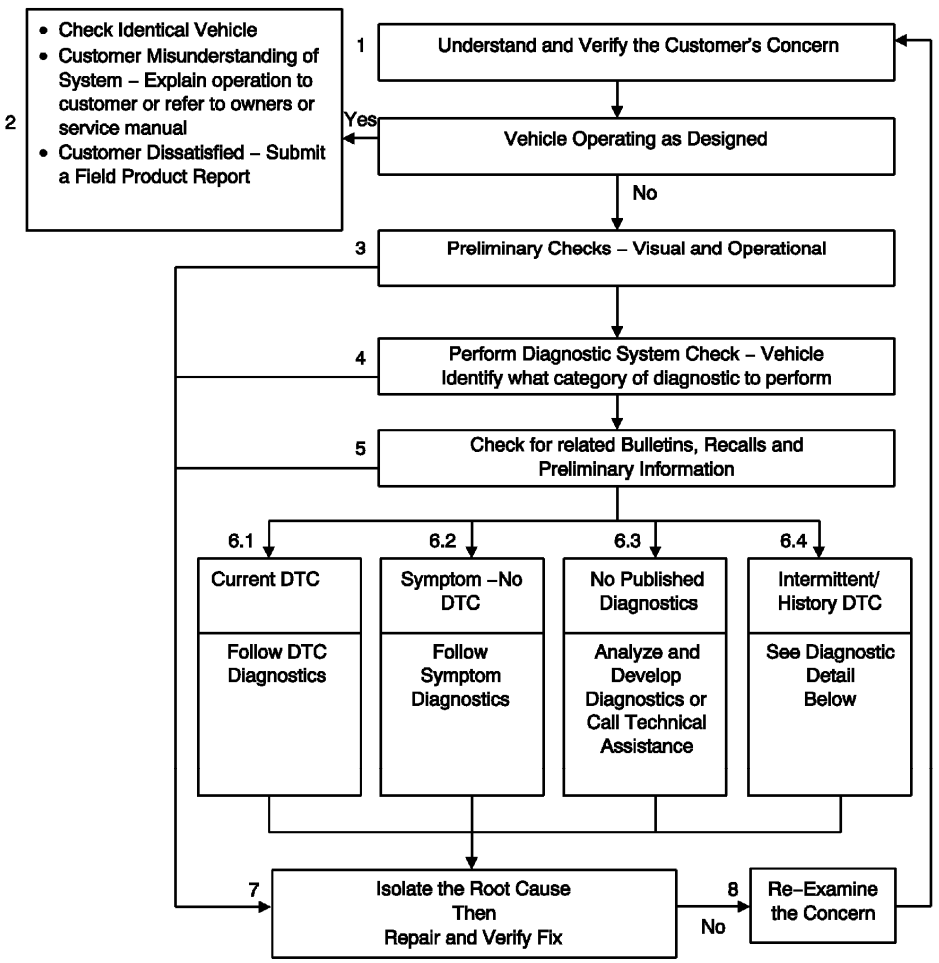

Fig. 1: Strategy Based Diagnosis Flow Chart
Courtesy of GENERAL MOTORS COMPANY

1. Understand and Verify the Customer's Concern: The first part of this step is to obtain as much information as possible from the customer. Are there aftermarket accessories on the vehicle? When does the condition occur? Where does the condition occur? How long does the condition last? How often does

the condition occur? In order to verify the concern, the technician should be familiar with the normal operation of the system and refer to the owner or service manual for any information needed.

2. Vehicle Operating as Designed: This condition exists when the vehicle is found to operate normally. The condition described by the customer may be normal. Compare with another like vehicle that is operating normally under the same conditions described by the customer. Explain your findings and the operation of the system to the customer. If the customer is dissatisfied submit a Field Product Report.
3. Preliminary Checks: Conduct a thorough visual inspection. Review the service history. Detect unusual sounds or odors. Gather diagnostic trouble code (DTC) information in order to achieve an effective repair.
4. Perform Published Diagnostic System Check- Vehicle: The **Diagnostic System Check - Vehicle** verifies the proper operation of the system. This will lead the technician in an organized approach to diagnostics and identify what category of diagnostic to perform.
5. Check for related Bulletins, Recalls and Preliminary Information (PI).
6. Diagnostic categories:
    1. Current DTC: Follow the designated DTC diagnostic in order to make an effective repair. Refer to **Diagnostic Trouble Code (DTC) List - Vehicle**.
    2. Symptom - No DTC: Select the appropriate symptom diagnostic. Follow the diagnostic steps or suggestions in order to complete the repair. Refer to **Symptoms - Vehicle**.
    3. No Published Diagnostics: Analyze the Concern. Develop a plan for the diagnostics. The service manual schematics will help you to see system power, ground, input, and output circuits. You can also identify splices and other areas where multiple circuits are tied together. Look at component locations to see if components, connectors or harnesses may be exposed to extreme temperature, moisture, or corrosives (road salt, battery acid, oil or other fluids). Utilize the wiring diagrams, system description and operation, and system circuit description.
    4. Intermittent/History DTC: An intermittent condition is one that does not occur continuously, may be difficult to duplicate, and will only occur when certain conditions are met. Generally, an intermittent is caused by faulty electrical connections and wiring, malfunctioning components, electromagnetic/radio frequency interference, driving conditions, or aftermarket equipment. The following approaches/tools may prove to be beneficial in locating and repairing an intermittent condition or history DTC.
        - Combining technicians knowledge with the available service information.
        - Evaluate the symptoms and conditions described by the customer on the **Customer Concern Verification Sheets** .
        - Follow the suggestions on **Testing for Intermittent Conditions and Poor Connections** .
        - Use the available scan tool, digital multi-meter, or **J-42598-B** vehicle data recorder with data capturing capabilities.
7. Isolate the Root Cause then Repair and Verify Fix: After isolating the root cause, make the repairs and validate for the correct operation by performing the **Diagnostic Repair Verification**. Verifying that the DTC or symptom has been corrected may involve road testing the vehicle.
8. Re-examine the Concern: If a technician cannot successfully find or isolate the concern, a re-evaluation is necessary. Re-verify the concern. The concern could be an intermittent or normal condition.

DIAGNOSTIC PROCEDURE INSTRUCTIONS

The following is an overview of instructions for all 16 categories which may be included in a diagnostic procedure.

Diagnostic Instructions

A link to the **Diagnostic System Check - Vehicle** is provided here. This procedure should be performed prior to performing other diagnostic procedures, as this prevents misdiagnosis where there are integrated system dependencies.

A link to the **Strategy Based Diagnosis** is provided here. This provides an overview on how a technician should diagnose a vehicle.

A link to the **Diagnostic Procedure Instructions** is provided here. This information is an overview of instructions for all 16 categories which may be included in a diagnostic procedure.

DTC Descriptor

Describes what DTCs are diagnosed in this procedure. The DTC number, with Symptom Description when applicable, and descriptor are written out.

Diagnostic Fault Information

The diagnostic Fault Information table identifies each circuit that makes up an electrical subsystem and the associated circuit faults. DTCs and symptoms are listed in the table for all circuit fault modes. This information can be used to diagnose an electrical fault, or as a quick visual aid showing how the different symptoms and DTCs apply for the subsystem being diagnosed.

Even though all the DTCs and symptoms are shown in this table it does not mean they will all be diagnosed in the same procedure.

An example table from an engine coolant temperature (ECT) procedure:

Circuit	Short to Ground	Open/High Resistance	Short to Voltage	Signal Performance
ECT Sensor Signal	P0117	P0118	P0118	P0125, P0128
ECT Low Reference	-	P0118	P0118	P0125, P0128

Typical Scan Tool Data

The Typical Scan Tool Data table identifies a scan tool data parameter and its value in reference to potential circuit faults.

An example table from an ECT procedure:

ECT Sensor Temperature - PCM

Circuit	Short to Ground	Open	Short to Voltage
Operating Conditions: Engine Running			

Parameter Normal Range: -32 to +130°C (-26 to +275°F)			
ECT Signal	140°C (284°F)	-40°C (-40°F)	-40°C (-40°F)
Low Reference	-	-40°C (-40°F)	-40°C (-40°F)*
* Internal ECM damage may occur if shorted to B+			

Circuit/System Description

Circuit/System Description identifies how a circuit/system normally functions.

Conditions for Running the DTC

Conditions for Running the DTC, identifies what conditions must be present to allow the diagnostic to run.

Conditions for Setting the DTC

Conditions for Setting the DTC, identifies the condition(s) that must be present in order to fail the diagnostic and when to set the DTC.

Action Taken When the DTC Sets

Actions Taken When the DTC sets, identifies the default actions taken when a control module sets a DTC.

Conditions for Clearing the DTC

Conditions for Clearing the DTC, identifies the conditions that must be met in order to clear the DTC.

Diagnostic Aids

Diagnostic Aids are suggestions which explain other methods to diagnose the condition. It also provides unique information about the system used to assist the technician in finding and repairing a vehicle condition.

Reference Information

Reference Information includes links providing additional information for the diagnostic procedure.

For example:

- Schematic Reference
- Connector End View Reference
- Description and Operation
- Electrical Information Reference
- DTC Type Reference
- Scan Tool Reference
- Special Tools Required

Circuit/System Verification

The diagnostic format does not force a technician to any of the 3 diagnostic categories (Circuit/System Verification, Circuit/System Testing and Component Testing). However, performing the Circuit/System Verification category first, aids in determining if a vehicle condition is current. Some diagnostic categories may state that another category must be performed first when there are testing dependencies.

This category also serves to route the technician to other diagnostic procedures which should be performed first; for example, a DTC with a higher priority.

NOTE: Any diagnostic step that asks if a DTC is set is referring to a Set, Current, Present, Active DTC status. This does not include any other DTC status. For example History, Not Run, Passed and Failed.

Circuit/System Verification is a non-intrusive procedure outlining how to verify that a system or a portion of a system is functioning correctly. During the verification process, the vehicle is kept intact and tested as a complete system. This verification is used to assist the technician in determining whether a condition is current or intermittent. When a condition is determined to be intermittent, a technician can use the link in Electrical Information Reference: **Testing for Intermittent Conditions and Poor Connections** for additional testing information.

The technician should be able to identify if the fault is occurring on the input circuit - signal or on the output circuit - control when applicable. The technician will need to decide from the verification results if the system is working correctly or if further diagnosis needs to be performed in either Circuit/System Testing and/or Component Testing.

To assist the technician in identifying a common part a component code is used. These codes are not translated so they will always be the same even though the part name may have slight variance. The component codes will always be the same once assigned to a unique part name and will be found on the schematics and in the diagnostic procedure categories Circuit/System Verification, Circuit/System Testing, and Component Testing categories.

Component Codes

The component codes used on the schematics will have the base code with an extension to identify location or quantity. For example the ABS wheel speed sensors are identified on the schematic with a base code (B5) and a location extension (LF, RF, LR, and RR) as seen below:

- B5LF Wheel Speed Sensor (WSS)-Left Front
- B5RF Wheel Speed Sensor (WSS)-Right Front
- B5LR Wheel Speed Sensor (WSS)-Left Rear
- B5RR Wheel Speed Sensor (WSS)-Right Rear

B5 is the base code for the wheel speed sensor and the LF, RF, LR, and RR indicate the on vehicle location.

The diagnostic procedures will use the base code (B5) for a wheel speed sensor but may or may not use the extension identifying location (LF, RF, LR, and RR). Example: Ignition OFF, disconnect the harness connector at the appropriate B5 wheel speed sensor. This is done so the diagnostic procedure can be common for all four wheel speed sensors and not have to take into account part location or quantity.

Where the diagnostic states "the appropriate" it is up to the technician to identify which component is being diagnosed by the symptom stated on the RO (drivers door lock is inoperative) or by the DTC descriptor (DTC C0585 04: Left Rear Actuator Circuit Open).

Circuit/System Testing

The diagnostic format does not force a technician to any of the 3 diagnostic categories (Circuit/System Verification, Circuit/System Testing and Component Testing). However, beginning with the Circuit/System Verification category aids in determining if a vehicle condition is current. Some diagnostic categories may state that another category must be performed first when there are testing dependencies.

Circuit/System Testing is a step by step, positive-flow, testing sequence which allows the technician to perform each test step, in sequence, until a fault is detected. If the result of a numbered test step is achieved, the normal flow is to proceed to the next numbered test step (indicated by the down pass arrow). If the result of a numbered test step is NOT achieved, the right repair arrow bullet below the failed test will identify what actions need to take place.

Intrusive diagnostics are performed to locate the system fault. System harness connections are disconnected from the module or component to test individual circuit functions. The module or component will be used to assist in verifying the circuit function. When a test does not pass, the repair steps (right arrow) will indicate what circuit faults to test for example, short to voltage, short to ground or open/high resistance.

When testing for individual circuit faults, the technician is expected to include terminal inspections such as connection surfaces and terminal tension at both the harness and component/module. Additionally, a technician can use the links in Electrical Information Reference: **Testing for Intermittent Conditions and Poor Connections** , or **Circuit Testing** for additional information.

The control modules and components will also be diagnosed during these test steps. A retest of a control module or component should always be performed before replacement. For example, re-connect all components and modules and retest the system to verify the condition still exists before replacing modules or components.

Component Testing

The diagnostic format does not force a technician to any of the 3 diagnostic categories (Circuit/System Verification, Circuit/System Testing and Component Testing). However, beginning with the Circuit/System Verification category aids in determining if a vehicle condition is current. Some diagnostic categories may state that another category must be performed first when there are testing dependencies.

Component Testing can offer static and/or dynamic component tests. These tests can be used to verify if a component is operating correctly to avoid unnecessary replacement.

Testing modules in this category will not be offered. In most cases, the module is used to verify the harness circuits in the Circuit/System Testing category and a retest of the module should always be performed before replacement.

Repair Instructions

Repair Instructions provides a link to **Diagnostic Repair Verification**. This link describes how to verify the

vehicle is repaired.

All links to Repair or Replacement procedures are located here.

Repair Verification

Repair Verification describes how to verify the vehicle is repaired when additional instructions are needed beyond what is in Diagnostic Repair Verification.

DIAGNOSTIC SYSTEM CHECK INSTRUCTIONS

The following is an overview of instructions for the general information and 13 step System Verification included in the Diagnostic System Check - Vehicle procedure.

Diagnostic Instructions

A link to **Strategy Based Diagnosis** is provided as an overview on how a technician should diagnose a vehicle.

A link to the Diagnostic System Check Instructions is provided. This provides an overview of instructions and examples for the general information and 13 step System Verification included in the Diagnostic System Check - Vehicle procedure. The examples in this document are intended to give the technician a general idea of what the test step is referring to. They are not intended to list every possible condition or situation.

Diagnostic Systems Check steps are listed by priority to guide the technician to the appropriate diagnostic procedure to correct the customer concern. There are many ways to determine the priority of diagnosing a vehicle concern. Some faults can cause customer perceived symptoms in areas unrelated to the fault. Using an example from the System Check, after reading DTCs, the technician is asked to verify there are no Electronic Control Unit Internal Performance Faults present. It is important that any internal performance issues are addressed prior to continuing through the System Check. There is no benefit addressing other DTCs that could be set due to an internal fault to a control module. If the fault is present, performing the diagnostic procedure for that fault will likely correct the customer perceived concern and possibly eliminate other DTCs that may be set.

Not all steps of the Diagnostic System Check have to be performed. The Diagnostic System Check tries to prioritize the test steps with the highest priority faults first. The technician is then lead to another document to do the actual diagnosis or repair. The strategy is to repair higher level faults that may be the cause of other system or component level symptoms. Additionally, the Diagnostic System Check can only be used for a single fault at a time. If additional faults are present, the technician must perform the diagnostic system check for each concern until all customer concerns are corrected.

Once a repair has been completed, General Motors diagnostic strategy is to always have the technician verify that the customer concern has been corrected. This is to prevent comebacks and to ensure customer satisfaction with their dealership experience. Therefore a link has been provided to **Diagnostic Repair Verification** procedure for the technician to verify the customer concern has been corrected.

There are some assumptions made when General Motors prepares service information. They include the following areas which are presumed to function as designed:

- The 12-volt battery is fully charged. General Motors assumes the majority of vehicles brought in for

repair will be able to start and be driven into the service stall. If the vehicle has a dead battery, it is slow cranking or for any other reason the technician feels the customer concern may be battery related, a link is provided to **Battery Inspection/Test** . This procedure will guide the technician through inspecting and verifying the battery functions properly.

- Fuses should not be open. General Motors does not call out in diagnostic procedures to verify a fuse. The technician is expected to find an open fuse when the diagnostic test step states to check for an open circuit condition. Therefore a link has been provided to **Power Distribution Schematics** , and **Electrical Center Identification Views** for technicians to reference power sources and fuse locations if they feel there may be loss of power due to an open fuse condition.
- Ground circuits are clean, tight, and in the correct location. General Motors assumes that the original ground circuits have not been compromised. The technician is expected to find a poor ground connection when the diagnostic test step states to test the ground circuit for an open/high resistance. Therefore a link has been provided to **Ground Distribution Schematics** , and **Harness Routing Views** for technicians to reference ground locations and which ground circuits may be related to the customer concern.
- All connections/connectors are fully seated. General Motors assumes that all connections are properly installed. The technician is expected to find an open or poor connection when the diagnostic test step asks to test the circuit for an open/high resistance. Therefore a link has been provided to **COMPONENT CONNECTOR END VIEWS - INDEX** for technicians to reference which connections may be related to the customer concern.
- There are no aftermarket devices that affect the operation of the system. General Motors can only author diagnostic and repair information for vehicle systems and components that are original equipment or genuine GM Accessories. Aftermarket equipment can negatively affect original equipment operation and lead a technician's diagnosis of a concern in the wrong direction. Therefore a link has been provided to **Checking Aftermarket Accessories** that guides a technician through the possible causes of vehicle problems related to aftermarket accessories.
- The scan tool powers up. General Motors assumes that power is available at the Data Link Connector and the scan tool will power on. Therefore a link has been provided to **Scan Tool Does Not Power Up** if the technician finds that the scan tool does not power on.

Diagnostic System Check

1. VERIFY CUSTOMER CONCERN-This step is to obtain as much information as possible from the customer. Are there aftermarket accessories on the vehicle? When does the condition occur? Where does the condition occur? How long does the condition last? How often does the condition occur? Review the service history of the vehicle for previous repairs that could help diagnose the current concern.

   Now that the technician understands the customer concern, they should validate the concern on the vehicle. In order to verify the concern, the technician should be familiar with the normal operation of the system and refer to the owner or service manual for any information needed. Inspect the visible system components for obvious damage or conditions that could cause the concern. Conduct a thorough visual inspection. Detect unusual sounds or odors.

   The condition described by the customer may be normal. If the technician finds the vehicle to operate normally, compare with another like vehicle that is operating normally, under the same conditions described by the customer. If this is the case, explain your findings and the operation of the system to the customer. If the customer is dissatisfied, submit a Field Product Report.

2. BULLETIN SEARCH-By searching for related bulletins, recall/field actions and preliminary information documents, a procedure for a known field issue may resolve the customer concern with little or no diagnosis necessary saving the technician diagnostic time.
3. MECHANICAL CONCERNS-This step is designed to take the technician directly to a list of symptom diagnostic procedures. The technician is asked to verify the symptoms exhibited by the system are mechanical in nature and not related to an electrical system, see some examples below. If the technician feels the concern could be related to an electrical system, they should continue through the Diagnostic System Check to verify the electrical functionality of vehicle. If the technician feels the concern is exclusively related to a mechanical system, a link to **Symptoms - Vehicle** is provided to select the appropriate symptom diagnostic procedure for the customer concern.

   Examples:

   - Brake noise or diagnosing irregular pad wear
   - Water leak diagnosis
   - Engine or transmission fluid leak diagnosis
   - Manual window or door lock diagnosis
   - Vehicle vibration diagnosis
   - Exhaust noise or leak diagnosis
4. VEHICLE POWER UP VERIFICATION-The technician is asked in this step to turn the ignition key ON and verify that the vehicle powers up. The technician should look for clues that multiple vehicle systems are receiving vehicle powermode messages, such as the cluster waking up, the radio powers on, the HVAC blower is operational, windshield wipers turn on, etc, with the key ON. This would be a rare condition as both the powermode master and back-up powermode master would have to be inoperable, however, if the vehicle does not power up, a link to **Power Mode Mismatch** is provided.
5. CONTROL MODULE COMMUNICATION and DTC CHECK-The technician is asked in this step to record the following three pieces of data on the Repair Order; any control module that the scan tool determined is not communicating, any DTC and symptom byte set current or history, and the control module that has set the DTC.

   This is considered a setup step for the rest of the Diagnostic System Check. The technician is not expected to do anything other than record the three pieces of data provided by the scan tool on the Repair Order. This provides the information needed to complete the rest of the diagnostic system check.

   To complete this step, the technician is asked to utilize the scan tool Vehicle DTC Information function. This function will query every possible control module on the vehicle requesting all DTCs. During the DTC query, the scan tool will try to establish communication with each control module. If the scan tool can communicate with the control module during the DTC request, it will display PRESENT and provide the number of DTCs set in the control module. If the scan tool cannot communicate with a control module, it will only display NOT COMMUNICATING. Since the scan tool cannot determine if a given control module should be present or not, the technician is asked in a future step to verify that the vehicle was not built with control modules listed as NOT COMMUNICATING.

   If the scan tool cannot establish communications with ALL of the vehicles control modules, a link to **Data Link References** is provided. A faulty control module or fault with the serial data circuit can cause

no communication with all of the control modules on the vehicle. If any control module communicates on the serial data circuit, continue through the Diagnostic System check, as a future step will address any specific non communicating or group of non communicating control modules.

Once the scan tool has completed the routine, the technician should review each control module that has set a DTC and document them on the Repair Order. When reviewing the DTCs, the technician should take notice if any DTCs are powertrain related, and if so, navigate in the scan tool to the Powertrain area and utilize the Capture Info function. This will upload any Freeze Frame/Failure Records stored in the control module to the scan tool in case the data is lost from the control module. As an example, if the technician commands a Clear DTCs function on a powertrain controller, all diagnostic information stored in the controller is erased. This includes Freeze Frame/Failure Records and Inspection/Maintenance System Status indicators, if required for your region.

6. CONTROL MODULE INTERNAL PERFORMANCE FAULTS-The technician is asked to review the DTCs recorded in step 5 and verify there are no control module internal performance faults set current. This type of fault may be the cause of other symptoms or DTCs displayed by the vehicle. By addressing this fault first, the technician may find the other concerns are resolved. The technician should always follow the diagnostic procedure for these types of faults prior to replacing any control module. If the technician finds a control module has an internal performance fault, a link is provided to **Diagnostic Trouble Code (DTC) List - Vehicle** to select the appropriate DTC diagnostic procedure.

   Examples:

   - B1000 Electronic Control Unit Performance
   - B101D ECU Hardware Performance
   - C0550 Electronic Control Unit Performance
   - C056D ECU Hardware Performance
   - C0570 Auxiliary Electronic Control Unit Performance
   - P0606 Control Module Internal Performance
   - P0607 Control Module Performance
7. CONTROL MODULE COMMUNICATION VERIFICATION-This step is used to ensure the control modules that are NOT COMMUNICATING were not built on the vehicle. To understand if the vehicle was built with that option, we provide a link to the **Data Link References** , document where Regular Production Options (RPOs) are listed next to the names of optional ECU's and can be compared to those the vehicle was built with. If the technician determines that a control that is NOT COMMUNICATING should be present, the technician is asked to follow the appropriate diagnostic procedure listed in the **Data Link References** document.
8. COMMUNICATION and POWERMODE FAULTS-This step is asking the technician to look for communication DTCs or DTCs related to control modules powering up based on power mode, communication enable or wake-up circuits. See in the below table some examples of the DTCs the technician should diagnose prior to continuing through the Diagnostic System Check. The technician should review the list of DTCs recorded in step 4 and verify that none of these type of DTCs are present. If so, the technician is referred to the **Diagnostic Trouble Code (DTC) List - Vehicle** to select the appropriate DTC diagnostic procedure.

   Examples:

- U0140 Lost Communication With Body Control Module
- U0164 Lost Communication With HVAC Control Module
- U0170 Lost Communication With Passenger Presence Detection Module
- U0402 Invalid Data Received From Transmission Control Module
- U0452 Invalid Data Received From Inflatable Restraint Sensing and Diagnostic Module
- U1814 Powertrain High Speed Communication Enable Circuit
- B1428 Ignition Switched Power Run/Crank Relay Circuit
- B137B Accessory Power Module Wake Up Circuit
- C0897 Control Module Power Moding
- P2536 Ignition Accessory Switch Circuit

9. POWER MODE VERIFICATION-This step verifies the Power Mode Master is receiving the proper output state of the ignition switch. The technician should use the main power mode input, this being either the ignition key or, on vehicles equipped with Passive Entry Passive Start, the push button switch. The test should not be performed using a key fob, if the MIL is illuminated the powertrain controller may disable this input. The technician is asked to perform the test with the driver door open. This ensures the retained accessory power mode is inactive during this test which could result in different scan tool readings. The technician is only asked to verify the current Power Mode parameter in the power mode data display list. If the parameter does not match the actual ignition switch position, a link is provided to perform the **Power Mode Mismatch** diagnostic procedure.
10. ENGINE CRANK and RUN VERIFICATION-Here the technician is asked to verify that the engine cranks and runs. The technician should use the main power mode input, this being either the ignition key or, on vehicles equipped with Passive Entry Passive Start, the push button switch, to complete this step. The test should not be performed using a key fob, if the MIL is illuminated the powertrain controller may disable this input. The technician should know at this point whether the engine cranks and runs without having to actually performing this test step. One of the follow has probably already occurred and this step can be skipped: The technician drove the vehicle into the stall or verified when checking the Crank and Run parameter in step 8. If the technician has not already somehow verified the engine cranks in previous steps, the technician should perform this test step. Regardless of how this step was performed, if the engine does not crank, a link is provided to **Engine Does Not Crank**, or if the engine cranks but does not run, a link is provided to **Engine Cranks But Does Not Run** for the technician to choose the correct diagnostic procedure for the actual engine application being used.
11. REMAINING DTC REVIEW-Here the technician is asked to review any remaining DTCs that were not addressed in previous steps. The technician is asked first to verify there are no control module supply voltage, system voltage or 5V circuit DTCs present. Control modules, systems or components with insufficient or zero voltage can cause one or multiple symptoms to exist on the vehicle. Control module voltage issues could also be the cause of failures during a programming event. The technician should correct voltage issues prior to addressing any programming or configuration DTCs. The technician should then check for any ECU programming, setup or configuration DTCs. By programming software or configuring a control module, the technician could correct the customer concern unobtrusively. The remaining DTCs, which are usually specific system or component faults, are diagnosed last. They can include ECU input and output circuit DTCs or individual circuit faults that usually cause single symptoms or failure modes on the vehicle and can be fixed following the proper DTC diagnostic procedure. In general, the technician should think about what DTCs or faults could be caused by another DTC or fault. A failed sensor may set a component DTC and then the system may set a DTC indicating the system cannot operate properly. By correcting the sensor fault, the system may now operate properly and the

system level DTC will transition to history. Refer to the examples within each category below to understand the differences between these DTCs. If DTCs of these type are current, the technician is referred to **Diagnostic Trouble Code (DTC) List - Vehicle** to choose the correct DTC diagnostic procedure.

1. Voltage DTCs
    - B1325 Device Power 1 Circuit
    - C0875 Device Voltage Reference Input 2 Circuit
    - C1001 Adaptive Cruise Control Indicators Supply Voltage Circuit
    - P0641 5-Volt Reference Circuit
    - P0787 Downshift Timing Solenoid Control Circuit Low Voltage
2. Programming, Setup, Configuration or Software Performance DTCs
    - B3943 Steering Column Lock has Not Learned Column Integration Module
    - B101E ECU Software Performance
    - B1019 System Configuration Error
    - C0558 Calibration Data Not Programmed
    - P0630 VIN Not Programmed or Mismatched - Powertrain Control Module (PCM)
3. Component related DTCs
    - B0013 Driver Frontal Deployment Loop Stage 2
    - B0163 Passenger Compartment Temp Sensor Circuit
    - C0045 Left Rear Wheel Speed Sensor Circuit
    - P0565 Cruise Control Switch Circuit
    - P0751 1-2 Shift Solenoid (SS) Valve Performance
4. System related DTCs
    - B1010 System Sensors Data Mismatch
    - C0176 System Thermal Error
    - C0561 System Disabled Information Stored
    - P1564 Vehicle Acceleration Too High - Cruise Control Disabled
    - P1625 Transmission Control Module (TCM) System Reset
5. Any other remaining DTCs-The technician should diagnose and correct any other DTCs that are left that were not from the categories above.

12. EMISSION RELATED INSPECTION/MAINTENANCE TESTING CONCERNS-Several regions require that a vehicle pass on-board diagnostic system tests and the inspection/maintenance emission tests in order to renew license plates or vehicle registration. This is accomplished by viewing the Inspection/Maintenance System Status display on a scan tool. Using a scan tool, the technician can observe the Inspection/Maintenance System Status in order to verify that the vehicle meets the criteria that comply with the local area requirements. If inspection and maintenance checks are required in your region, and the customer concern is related to not passing an Inspection/Maintenance test, a link is provided to **Inspection/Maintenance System Check** where the technician can choose the appropriate Inspection/Maintenance System Check for the actual engine application being used.
13. SYMPTOM DIAGNOSIS-At this step, the diagnostics are assuming that the only information the technician has available to diagnose the customer concern are symptoms of a problem. There are no

DTCs set current or history. There may be a Driver Information Center display message or a system indicator to aid in identifying the root cause. The technician should evaluate the symptoms and conditions described by the customer and perform the symptoms diagnostics for the area of customer concern. A link is provided to **Symptoms - Vehicle** which contains a list of all symptoms related to this service manual publication.

DIAGNOSTIC STARTING POINT - VEHICLE

Begin the system diagnosis with **Diagnostic System Check - Vehicle**. The Diagnostic System Check - Vehicle will provide a complete strategy to locate and repair a mechanical or electrical vehicle fault. Not following this strategy may cause additional diagnostic time and/or misdiagnosis.

The Diagnostic System Check - Vehicle will provide the following strategy:

- When to verify the customer concern and identify related bulletins, recalls and preliminary information
- When to identify a control module that is not communicating, a control module that has set a DTC, and the DTC diagnostic priority
- When to address power mode concerns
- When to verify the engine cranks and runs
- When to diagnose symptom related concerns

DIAGNOSTIC SYSTEM CHECK - VEHICLE

Diagnostic Instructions

- Review **Strategy Based Diagnosis** for an overview of the diagnostic approach.
- **Diagnostic System Check Instructions** provides an overview of each diagnostic step.
- Continue through the Diagnostic System Check until you are directed to follow a particular diagnostic or repair procedure. Once a repair has been completed, perform the **Diagnostic Repair Verification** and verify the customer concern has been corrected.

The diagnostic procedures within this manual are developed on the assumption that the following areas function as designed:

- The 12 V battery is fully charged and cables are clean and tight. Refer to **Battery Inspection/Test** .
- Fuses are not open. Refer to **Power Distribution Schematics** , and **Electrical Center Identification Views** .
- Ground circuits for the area of customer concern are clean, tight, and in the correct location. Refer to **Ground Distribution Schematics** , and **Harness Routing Views** .
- All connections/connectors for the area of concern are fully seated. Refer to **COMPONENT CONNECTOR END VIEWS - INDEX** .
- There are no aftermarket devices that affect the operation of the system. Refer to **Checking Aftermarket Accessories** .
- The scan tool powers up. Refer to **Scan Tool Does Not Power Up** .

Diagnostic System Check

1. VERIFY CUSTOMER CONCERN-Understand and validate the customer concern. Inspect the visible system components for obvious damage or conditions that may cause the concern.
2. BULLETIN SEARCH-Check for related bulletins, recall/field actions and preliminary information.
3. MECHANICAL CONCERNS-Verify the symptom is not exclusively a mechanical concern.
   - **If the symptom is exclusively a mechanical concern**

     Refer to **Symptoms - Vehicle**.

   - **If the symptom is not a mechanical concern**

   NOTE: Do not clear any DTCs unless instructed to do so by a diagnostic procedure. If any DTC is Powertrain related, select Capture Info to store DTC and Freeze Frame/Failure Records to the scan tool.

4. VEHICLE POWER UP VERIFICATION-Ignition ON, verify the vehicle powers up.
   - **If the vehicle does not power up**

     Refer to **Power Mode Mismatch** .

   - **If the vehicle powers up**
5. CONTROL MODULE COMMUNICATION and DTC CHECK-Using a scan tool, perform the Vehicle DTC Information function and verify at least one control module communicates with the scan tool. Record on the Repair Order the following information:
   - Any control module that is not communicating.
   - Any DTC, including symptom byte, and the control module that has set the DTC.
   - **If the scan tool does not communicate with any control module on the vehicle**

     Refer to **Data Link References** .

   - **If the scan tool communicates with any control module**
6. CONTROL MODULE INTERNAL PERFORMANCE FAULTS-Verify there are no current control module Internal Hardware Performance DTCs set.
   - **If any DTC of this type is set**

     Refer to **Diagnostic Trouble Code (DTC) List - Vehicle**.

   - **If no DTC of this type is set**
7. CONTROL MODULE COMMUNICATION VERIFICATION-Verify the vehicle is not built with any control module listed as not communicating with the scan tool, refer to **Data Link References** .
   - **If the vehicle is built with a control module that is not communicating**

     Refer to **Data Link References** .

- **If all control modules the vehicle is built with are communicating**

8. COMMUNICATION and POWERMODE FAULTS-Verify there are no current control module Power Mode or Communication DTCs set.
   - **If any DTC of this type is set**

     Refer to **Diagnostic Trouble Code (DTC) List - Vehicle**.

   - **If no DTC of this type is set**

NOTE: The engine may start during this test. Ensure the vehicle is out of gear and the parking brake is applied. Turn the engine OFF as soon as the crank power mode parameter has been observed.

9. POWER MODE VERIFICATION-Driver door open, observe the scan tool Power Mode parameter while cycling the ignition switch through all the power modes. Verify the current Power Mode parameter matches the actual ignition switch positions.
   - **If the Power Mode parameter does not match the actual ignition switch positions**

     Refer to **Power Mode Mismatch** .

   - **If the Power Mode parameter matches the actual ignition switch positions**
10. ENGINE CRANK and RUN VERIFICATION-Verify that the engine cranks and runs.
    - **If the engine does not crank**

      Refer to **Engine Does Not Crank**.

    - **If the engine does not run**

      Refer to **Engine Cranks But Does Not Run**.

    - **If the engine cranks and runs**
11. REMAINING DTC REVIEW-Verify there are no other DTCs set.
    - **If other DTCs are set**

      Diagnose them in the order listed below. Refer to **Diagnostic Trouble Code (DTC) List - Vehicle**.

      1. Voltage DTCs
      2. Programming, Setup, Configuration or Software Performance DTCs
      3. Component related DTCs
      4. System related DTCs
      5. Any remaining DTCs

    - **If no other DTCs are set**
12. EMISSION RELATED INSPECTION/MAINTENANCE TESTING CONCERNS-If inspection and

maintenance checks are required in your region, verify the customer concern is not related to inspection/maintenance testing.

- **If the customer concern is related to inspection/maintenance testing**

  Refer to **Inspection/Maintenance System Check**.

- **If the customer concern is not related to inspection/maintenance testing**

13. SYMPTOM DIAGNOSIS-Diagnose any remaining customer concern. Refer to **Symptoms - Vehicle**.

POWERTRAIN DIAGNOSTIC TROUBLE CODE (DTC) TYPE DEFINITIONS

Emissions Related DTCs

Action Taken When the DTC Sets - Type A

- The control module illuminates the malfunction indicator lamp (MIL) when the diagnostic runs and fails.
- The control module records the operating conditions at the time the diagnostic fails. The control module stores this information in the Freeze Frame/Failure Records.

Action Taken When the DTC Sets - Type B

- The control module illuminates the MIL on the second consecutive ignition cycle that the diagnostic runs and fails.
- The control module records the operating conditions at the time the diagnostic fails. The first time the diagnostic fails, the control module stores this information in the Failure Records. If the diagnostic reports a failure on the second consecutive ignition cycle, the control module records the operating conditions at the time of the failure. The control module writes the operating conditions to the Freeze Frame and updates the Failure Records.

- The following applies to misfire DTCs:
  - If the control module detects a low level or an emission level misfire condition during 2 consecutive trips, the control module illuminates the MIL.
  - If the control module detects a high level or catalyst damaging misfire, the control module flashes the MIL at a rate of once per second.
  - If the control module detects a misfire during 2 non-consecutive trips, the stored conditions are compared with the current conditions. The control module illuminates the MIL when the following conditions occur:
    - The engine load is within 20 percent of the previous test that failed.
    - The engine speed is within 375 RPM of the previous test that failed.
    - The engine coolant temperature is in the same range of the previous test that failed.
- The following applies to fuel trim DTCs:
  - If the control module detects a fuel trim condition during 2 consecutive trips, the control module illuminates the MIL.
  - If the control module detects a fuel trim condition during 2 non-consecutive trips, the stored

conditions are compared with the current conditions. The control module illuminates the MIL when the following conditions occur:

- The engine load is within 20 percent of the previous test that failed.
- The engine speed is within 375 RPM of the previous test that failed.
- The engine coolant temperature is in the same range of the previous test that failed.

Conditions for Clearing the MIL/DTC - Type A or Type B

- The control module turns OFF the MIL after 4 consecutive ignition cycles that the diagnostic runs and does not fail.
- A current DTC, Last Test Failed, clears when the diagnostic runs and passes.
- A history DTC clears after 40 consecutive warm-up cycles, if no failures are reported by this or any other emission related diagnostic.
- Clear the MIL and the DTC with a scan tool.

Non-Emissions Related DTCs

Action Taken When the DTC Sets - Type C

- The control module stores the DTC information into memory when the diagnostic runs and fails.
- The MIL will not illuminate.
- The control module records the operating conditions at the time the diagnostic fails. The control module stores this information in the Failure Records.
- The driver information center, if equipped, may display a message.

Conditions for Clearing the DTC - Type C

- A current DTC Last Test Failed clears when the diagnostic runs and passes.
- A history DTC clears after 40 consecutive warm-up cycles, if no failures are reported by this or any other non-emission related diagnostic.
- Clear the DTC with a scan tool.

DIAGNOSTIC CODE INDEX

DIAGNOSTIC CODE INDEX

DTC	Description
Diagnostic Trouble Code (DTC) List - Vehicle	

DIAGNOSTIC TROUBLE CODE (DTC) LIST - VEHICLE

This master DTC list includes all applicable DTCs in alphanumeric order.

Diagnostic Trouble Code (DTC) List - Vehicle

DTC	Diagnostic Procedure

B0012 B0013	**DTC B0012 or B0013**
B0014	**DTC B0014, B0021, B0031, or B0038**
B0015	**DTC B0015, B001A, B001B, or B0022**
B0016	**DTC B0016, B0018, B0023, or B0025**
B0017	**DTC B0017 or B0024**
B0018	**DTC B0016, B0018, B0023, or B0025**
B0019	**DTC B0019 or B0020**
B001A B001B	**DTC B0015, B001A, B001B, or B0022**
B0020	**DTC B0019 or B0020**
B0021	**DTC B0014, B0021, B0031, or B0038**
B0022	**DTC B0015, B001A, B001B, or B0022**
B0023	**DTC B0016, B0018, B0023, or B0025**
B0024	**DTC B0017 or B0024**
B0025	**DTC B0016, B0018, B0023, or B0025**
B0031 B0038	**DTC B0014, B0021, B0031, or B0038**
B0052	**DTC B0052**
B0074	**DTC B0074**
B0081	**DTC B0081 (Passenger Presence Module)** , **DTC B0081 (Inflatable Restraint Sensing and Diagnostic Module)**
B0083 B0084	**DTC B0083 or B0084**
B0085	**DTC B0085 or B0088**
B0086 B0087	**DTC B0086 or B0087**
B0088	**DTC B0085 or B0088**
B0158	**DTC B0158**
B0163	**DTC B0163**
B0173 B0178	**DTC B0173, B0178, or B3933**
B0183	**DTC B0183**
B018A	**DTC B018A, B048C, B048F, or B1395**
B0193	HVAC Control Module - Automatic - **DTC B0193** or HVAC Control Module - Manual - **DTC B0193**
B0223 B0233 B023A	HVAC Control Module - Automatic - **DTC B0223, B0233, B023A, or B0408** or HVAC Control Module - Manual - **DTC B0223, B0233, B023A, or B0408**
B0283	**DTC B0283**
B0408	HVAC Control Module - Automatic - **DTC B0223, B0233, B023A, or B0408** or

	HVAC Control Module - Manual - **DTC B0223, B0233, B023A, or B0408**
B048C B048F	**DTC B018A, B048C, B048F, or B1395**
B0550	**DTC B0550**
B067F B0680	**DTC B067F or B0680**
B0958 B0959 B0960 B0961	**DTC B0958, B0959, B0960, or B0961**
B096A	**DTC B096A**
B1000	**DTC B1000**
B1001	All Modules - Data Communications - **DTC B1001** or SDM - **DTC B1001 (Passenger Presence System)** , **DTC B1001 (Inflatable Restraint Sensing and Diagnostic Module)**
B1015	**DTC B1015**
B1019	**DTC B1019**
B101D	**DTC B101D**
B101E	**DTC B101E**
B1020	**DTC B1020**
B1025 B1035 B1045 B1055	**DTC B1025, B1035, B1045, or B1055**
B125A	**DTC B125A**
B125C	**DTC B125C**
B1271	**DTC B1271**
B1278 B1279	**DTC B1278 or B1279**
B1325 B1330	**DTC B1325, B1330, B1517, C0800, P0560, P0562, or P0563**
B1370	Displays and Gages - **DTC B1370** or Wiring Systems and Power Management - **DTC B1370-B1379, B1380-B1389, or B1440-B1443**
B1371 B1372 B1373 B1374	**DTC B1370-B1379, B1380-B1389, or B1440-B1443**
B1375 B1376 B1377 B1378	**DTC B1370-B1379, B1380-B1389, or B1440-B1443**

B1379	
B1380 B1381 B1382 B1383 B1384	**DTC B1370-B1379, B1380-B1389, or B1440-B1443**
B1385 B1386 B1387 B1388 B1389	**DTC B1370-B1379, B1380-B1389, or B1440-B1443**
B1395	BCM - **DTC B1395** or HVAC Control Module - Automatic - **DTC B018A, B048C, B048F, or B1395**
B1405	BCM - **DTC B1405** or Object Alarm Module - **DTC B1405**
B1440 B1441 B1442 B1443	**DTC B1370-B1379, B1380-B1389, or B1440-B1443**
B1448	**DTC B1448**
B144B	**DTC B144B**
B1451	**DTC B1451**
B147E	
B147F	
B1516	**DTC B1516**
B1517	**DTC B1325, B1330, B1517, C0800, P0560, P0562, or P0563**
B151A	**DTC B151A**
B1527	**DTC B1527**
B1529	**DTC B1529**
B1925 B2170	**DTC B1925 or B2170**
B2345	**DTC B2345**
B2425	**DTC B2425 or B2430**
B242A	**DTC B242A**
B2430	**DTC B2425 or B2430**
B2455	**DTC B2455**
B2462	**DTC B2462**
B2470	**DTC B2470**
B2476 B2482	**DTC B2476 or B2482**
B2530	**DTC B2530**
B2545	**DTC B2545**

B2575	**DTC B2575 or B2699**
B257A	**DTC B257A**
B257B	**DTC B257B**
B2585	**DTC B2585 or B3867**
B2645	**DTC B2645**
B2699	**DTC B2575 or B2699**
B270A	**DTC B270A**
B2745	**DTC B2745**
B2750	**DTC B2750**
B2955	**DTC B2955 (with BTM)** , **DTC B2955 (without BTM)**
B3006	**DTC B3006**
B302A	**DTC B302A**
B3031	**DTC B3031**
B3055	**DTC B3055**
B305C	**DTC B305C**
B3060	**DTC B3060**
B3101	**DTC B3101**
B3105	**DTC B3105**
B3106	**DTC B3106**
B3109 B3110	**DTC B3109-B3113**
B310D B310E B310F	**DTC B310D-B310F**
B3111 B3112 B3113	**DTC B3109-B3113**
B3119	**DTC B3119**
B3120	**DTC B3120**
B3121	**DTC B3121**
B3122	**DTC B3122**
B3123	**DTC B3123**
B3124	**DTC B3124**
B3125 B3130 B3135	**DTC B3125, B3130, or B3135**
B3140 B3150	**DTC B3140 or B3150**
B316B B317A B318A B319A	**DTC B316B, B317A, B318A, or B319A (AEC)** , **DTC B316B, B317A, B318A, or B319A (AXG)**
B3205	**DTC B3205**

B3265	**DTC B3265**
B3567	**DTC B3567**
B3596	**DTC B3596**
B3600	**DTC B3600**
B3618	**DTC B3618**
B3622	**DTC B3622**
B3650	**DTC B3650**
B3697	**DTC B3697**
B3715	**DTC B3715 or B3875**
B3794	**Cruise Control Malfunction - DTC B3794, P0564, P0565, P0567, P0568, P056C, P0580, P0581, P155A-P155C, or P162C**
B3806	**DTC B3806**
B3843	**DTC B3843**
B3867	**DTC B2585 or B3867**
B3873	**DTC B3873**
B3875	**DTC B3715 or B3875**
B3883	**DTC B3883**
B389A	**DTC B389A**
B3902	**DTC B3902**
B3930	**DTC B3930**
B3933	HVAC Control Module - Manual - **DTC B3933** or HVAC Control Module - Automatic - **DTC B0173, B0178, or B3933**
B3935	**DTC B3935**
B3948 B3949	**DTC B3948 or B3949**
B3950 B3951	**DTC B3950 or B3951**
B3976	**DTC B3976**
B3984	**DTC B3984**
C0035 C0040 C0045 C0050	**DTC C0035, C0040, C0045, or C0050**
C0110	**DTC C0110**
C0131	**DTC C0131**
C0161	**DTC C0161**
C0176	**DTC C0176**
C0186 C018B C0196 C019B	**DTC C0186, C018B, C0196, C019B, or C0287**
C0267	**DTC C0267**

C0277	**DTC C0277 or C0890**
C0280	**DTC C0280**
C0287	**DTC C0186, C018B, C0196, C019B, or C0287**
C0475	**DTC C0475 (NJ1)**
C047A	**DTC C047A (NJ1)**
C0545	**DTC C0545 (NJ1)**
C0565	**DTC C0565 (NJ1)**
C0569	Power Steering Control Module - **DTC C0569 (NJ1)** or Tire Pressure Monitoring - **DTC C0569**
C056D	**DTC C056D**
C056E	**DTC C056E**
C0710	**DTC C0710**
C0750 C0755 C0760 C0765	**DTC C0750, C0755, C0760, or C0765**
C0775	**DTC C0775**
C1207 C1208 C1209 C1210	**DTC C1207-C1210, C1221-C1228, or C1232-C1235**
C1221 C1222 C1223 C1224 C1225 C1226	**DTC C1207-C1210, C1221-C1228, or C1232-C1235**
C1227 C1228 C1232 C1233 C1234 C1235	**DTC C1207-C1210, C1221-C1228, or C1232-C1235**
C0800	**DTC B1325, B1330, B1517, C0800, P0560, P0562, or P0563**
C0890	**DTC C0277 or C0890**
P0010	**DTC P0010, P0013, or P2088-P2091** or **DTC P0010, P0013, or P2088-P2091**
P0011	**DTC P0011 or P0014**
P0013	**DTC P0010, P0013, or P2088-P2091** or **DTC P0010, P0013, or P2088-P2091**
P0014	**DTC P0011 or P0014**

P0016 P0017	ECM - 1.2L (L2Q LDC LWD) or 1.4L (L2I L2N L2Z LDD LUH LUJ LUV) engine - **DTC P0016 or P0017** or ECM - 1.6L (LDE LED LFJ LGE LLU LXV) or 1.8L (2H0 LFH LUW LWE) engine - **DTC P0016 or P0017**
P0030 P0031 P0032	ECM - 1.2L (L2Q LDC LWD) or 1.4L (L2I L2N L2Z LDD LUH LUJ LUV) engine - **DTC P0030-P0032, P0036-P0038, P0053, P0054, P0135, or P0141** or ECM - 1.6L (LDE LED LFJ LGE LLU LXV) or 1.8L (2H0 LFH LUW LWE) engine - **DTC P0030-P0032, P0036-P0038, P0053, P0054, P0135, or P0141**
P0033 P0034 P0035	**DTC P0033-P0035**
P0036 P0037 P0038	ECM - 1.2L (L2Q LDC LWD) or 1.4L (L2I L2N L2Z LDD LUH LUJ LUV) engine - **DTC P0030-P0032, P0036-P0038, P0053, P0054, P0135, or P0141** or ECM - 1.6L (LDE LED LFJ LGE LLU LXV) or 1.8L (2H0 LFH LUW LWE) engine - **DTC P0030-P0032, P0036-P0038, P0053, P0054, P0135, or P0141**
P0053 P0054	ECM - 1.2L (L2Q LDC LWD) or 1.4L (L2I L2N L2Z LDD LUH LUJ LUV) engine - **DTC P0030-P0032, P0036-P0038, P0053, P0054, P0135, or P0141** or ECM - 1.6L (LDE LED LFJ LGE LLU LXV) or 1.8L (2H0 LFH LUW LWE) engine - **DTC P0030-P0032, P0036-P0038, P0053, P0054, P0135, or P0141**
P0053 P0054	**DTC P0030-P0032, P0036-P0038, P0053, P0054, P0135, or P0141**
P0068	ECM - 1.2L (L2Q LDC LWD) or 1.4L (L2I L2N L2Z LDD LUH LUJ LUV) engine - **DTC P0068 or P1101** or ECM - 1.6L (LDE LED LFJ LGE LLU LXV) or 1.8L (2H0 LFH LUW LWE) engine - **DTC P0068 or P1101**
P0096	ECM - 1.2L (L2Q LDC LWD) or 1.4L (L2I L2N L2Z LDD LUH LUJ LUV) engine - **DTC P0096 or P0111** or ECM - 1.6L (LDE LED LFJ LGE LLU LXV) or 1.8L (2H0 LFH LUW LWE) engine - **DTC P0096 or P0111**
P0097 P0098	**DTC P0097 or P0098**
P00B3 P00B4	**DTC P00B3 or P00B4**
P00B6	**DTC P00B6**
P00B7	**DTC P00B7**
P00C7	**DTC P00C7**
P00E9	**DTC P00E9**
P00EA P00EB	**DTC P00EA or P00EB**

P0101	ECM - 1.2L (L2Q LDC LWD) or 1.4L (L2I L2N L2Z LDD LUH LUJ LUV) engine - **DTC P0101** or ECM - 1.6L (LDE LED LFJ LGE LLU LXV) or 1.8L (2H0 LFH LUW LWE) engine - **DTC P0101**
P0102 P0103	ECM - 1.2L (L2Q LDC LWD) or 1.4L (L2I L2N L2Z LDD LUH LUJ LUV) engine - **DTC P0102 or P0103** or ECM - 1.6L (LDE LED LFJ LGE LLU LXV) or 1.8L (2H0 LFH LUW LWE) engine - **DTC P0102 or P0103**
P0106	ECM - 1.2L (L2Q LDC LWD) or 1.4L (L2I L2N L2Z LDD LUH LUJ LUV) engine - **DTC P0106** or ECM - 1.6L (LDE LED LFJ LGE LLU LXV) or 1.8L (2H0 LFH LUW LWE) engine - **DTC P0106**
P0107 P0108	ECM - 1.2L (L2Q LDC LWD) or 1.4L (L2I L2N L2Z LDD LUH LUJ LUV) engine - **DTC P0107 or P0108** or ECM - 1.6L (LDE LED LFJ LGE LLU LXV) or 1.8L (2H0 LFH LUW LWE) engine - **DTC P0107 or P0108**
P0111	ECM - 1.2L (L2Q LDC LWD) or 1.4L (L2I L2N L2Z LDD LUH LUJ LUV) engine - **DTC P0096 or P0111** or ECM - 1.6L (LDE LED LFJ LGE LLU LXV) or 1.8L (2H0 LFH LUW LWE) engine - **DTC P0096 or P0111**
P0112 P0113 P0114	ECM - 1.2L (L2Q LDC LWD) or 1.4L (L2I L2N L2Z LDD LUH LUJ LUV) engine - **DTC P0112, P0113, or P0114** or ECM - 1.6L (LDE LED LFJ LGE LLU LXV) or 1.8L (2H0 LFH LUW LWE) engine - **DTC P0112, P0113, or P0114**
P0116	ECM - 1.2L (L2Q LDC LWD) or 1.4L (L2I L2N L2Z LDD LUH LUJ LUV) engine - **DTC P0116** or ECM - 1.6L (LDE LED LFJ LGE LLU LXV) or 1.8L (2H0 LFH LUW LWE) engine - **DTC P0116 (LUW)**
P0117 P0118 P0119	ECM - 1.2L (L2Q LDC LWD) or 1.4L (L2I L2N L2Z LDD LUH LUJ LUV) engine - **DTC P0117, P0118, or P0119** or ECM - 1.6L (LDE LED LFJ LGE LLU LXV) or 1.8L (2H0 LFH LUW LWE) engine - **DTC P0117, P0118, or P0119**
P0121 P0122 P0123	ECM - 1.2L (L2Q LDC LWD) or 1.4L (L2I L2N L2Z LDD LUH LUJ LUV) engine - **DTC P0121-P0123, P0222, P0223, or P2135 (LUV)** or ECM - 1.6L (LDE LED LFJ LGE LLU LXV) or 1.8L (2H0 LFH LUW LWE) engine - **DTC P0121-P0123, P0222, P0223, or P2135**
	ECM - 1.2L (L2Q LDC LWD) or 1.4L (L2I L2N L2Z LDD LUH LUJ LUV)

P0128	engine - **DTC P0128** or ECM - 1.6L (LDE LED LFJ LGE LLU LXV) or 1.8L (2H0 LFH LUW LWE) engine - **DTC P0128**
P0131 P0132	ECM - 1.2L (L2Q LDC LWD) or 1.4L (L2I L2N L2Z LDD LUH LUJ LUV) engine - **DTC P0131, P0132, P0134, P0137, P0138, or P0140** or ECM - 1.6L (LDE LED LFJ LGE LLU LXV) or 1.8L (2H0 LFH LUW LWE) engine - **DTC P0131, P0132, P0134, P0137, P0138, or P0140**
P0133	ECM - 1.2L (L2Q LDC LWD) or 1.4L (L2I L2N L2Z LDD LUH LUJ LUV) engine - **DTC P0133, P013A, P013B, P013E, P013F, P015A, P015B, P2270, or P2271** or ECM - 1.6L (LDE LED LFJ LGE LLU LXV) or 1.8L (2H0 LFH LUW LWE) engine - **DTC P0133, P013A, P013B, P013E, P013F, P015A, P015B, P2270, or P2271**
P0134	ECM - 1.2L (L2Q LDC LWD) or 1.4L (L2I L2N L2Z LDD LUH LUJ LUV) engine - **DTC P0131, P0132, P0134, P0137, P0138, or P0140** or ECM - 1.6L (LDE LED LFJ LGE LLU LXV) or 1.8L (2H0 LFH LUW LWE) engine - **DTC P0131, P0132, P0134, P0137, P0138, or P0140**
P0135	ECM - 1.2L (L2Q LDC LWD) or 1.4L (L2I L2N L2Z LDD LUH LUJ LUV) engine - **DTC P0030-P0032, P0036-P0038, P0053, P0054, P0135, or P0141** or ECM - 1.6L (LDE LED LFJ LGE LLU LXV) or 1.8L (2H0 LFH LUW LWE) engine - **DTC P0030-P0032, P0036-P0038, P0053, P0054, P0135, or P0141**
P0137 P0138	ECM - 1.2L (L2Q LDC LWD) or 1.4L (L2I L2N L2Z LDD LUH LUJ LUV) engine - **DTC P0131, P0132, P0134, P0137, P0138, or P0140** or ECM - 1.6L (LDE LED LFJ LGE LLU LXV) or 1.8L (2H0 LFH LUW LWE) engine - **DTC P0131, P0132, P0134, P0137, P0138, or P0140**
P013A P013B P013E P013F	ECM - 1.2L (L2Q LDC LWD) or 1.4L (L2I L2N L2Z LDD LUH LUJ LUV) engine - **DTC P0133, P013A, P013B, P013E, P013F, P015A, P015B, P2270, or P2271** or ECM - 1.6L (LDE LED LFJ LGE LLU LXV) or 1.8L (2H0 LFH LUW LWE) engine - **DTC P0133, P013A, P013B, P013E, P013F, P015A, P015B, P2270, or P2271**
P0140	ECM - 1.2L (L2Q LDC LWD) or 1.4L (L2I L2N L2Z LDD LUH LUJ LUV) engine - **DTC P0131, P0132, P0134, P0137, P0138, or P0140** or ECM - 1.6L (LDE LED LFJ LGE LLU LXV) or 1.8L (2H0 LFH LUW LWE) engine - **DTC P0131, P0132, P0134, P0137, P0138, or P0140**
P0141	ECM - 1.2L (L2Q LDC LWD) or 1.4L (L2I L2N L2Z LDD LUH LUJ LUV) engine - **DTC P0030-P0032, P0036-P0038, P0053, P0054, P0135, or P0141** or ECM - 1.6L (LDE LED LFJ LGE LLU LXV) or 1.8L (2H0 LFH LUW LWE)

	engine - **DTC P0030-P0032, P0036-P0038, P0053, P0054, P0135, or P0141**
P015A P015B	ECM - 1.2L (L2Q LDC LWD) or 1.4L (L2I L2N L2Z LDD LUH LUJ LUV) engine - **DTC P0133, P013A, P013B, P013E, P013F, P015A, P015B, P2270, or P2271** or ECM - 1.6L (LDE LED LFJ LGE LLU LXV) or 1.8L (2H0 LFH LUW LWE) engine - **DTC P0133, P013A, P013B, P013E, P013F, P015A, P015B, P2270, or P2271**
P0171 P0172	ECM - 1.2L (L2Q LDC LWD) or 1.4L (L2I L2N L2Z LDD LUH LUJ LUV) engine - **DTC P0171 or P0172** or ECM - 1.6L (LDE LED LFJ LGE LLU LXV) or 1.8L (2H0 LFH LUW LWE) engine - **DTC P0171 or P0172**
P018B P018C P018D	ECM - 1.2L (L2Q LDC LWD) or 1.4L (L2I L2N L2Z LDD LUH LUJ LUV) engine - **DTC P018B-P018D** or ECM - 1.6L (LDE LED LFJ LGE LLU LXV) or 1.8L (2H0 LFH LUW LWE) engine - **DTC P018B-P018D**
P0201 P0202 P0203 P0204	ECM - 1.2L (L2Q LDC LWD) or 1.4L (L2I L2N L2Z LDD LUH LUJ LUV) engine - **DTC P0201, P0202, P0203, P0204, P0261, P0262, P0264, P0265, P0267, P0268, P0270, or P0271** or ECM - 1.6L (LDE LED LFJ LGE LLU LXV) or 1.8L (2H0 LFH LUW LWE) engine - **DTC P0201, P0202, P0203, P0204, P0261, P0262, P0264, P0265, P0267, P0268, P0270, or P0271**
P0222 P0223	ECM - 1.2L (L2Q LDC LWD) or 1.4L (L2I L2N L2Z LDD LUH LUJ LUV) engine - **DTC P0121-P0123, P0222, P0223, or P2135 (LUV)** or ECM - 1.6L (LDE LED LFJ LGE LLU LXV) or 1.8L (2H0 LFH LUW LWE) engine - **DTC P0121-P0123, P0222, P0223, or P2135**
P0231 P0232	ECM - 1.2L (L2Q LDC LWD) or 1.4L (L2I L2N L2Z LDD LUH LUJ LUV) engine - **DTC P0231, P0232, or P023F** or ECM - 1.6L (LDE LED LFJ LGE LLU LXV) or 1.8L (2H0 LFH LUW LWE) engine - **DTC P0231, P0232, or P023F**
P0234	**DTC P0234 or P0299**
P0236	**DTC P0236**
P0237 P0238	**DTC P0237 or P0238**
P023F	ECM - 1.2L (L2Q LDC LWD) or 1.4L (L2I L2N L2Z LDD LUH LUJ LUV) engine - **DTC P0231, P0232, or P023F** or ECM - 1.6L (LDE LED LFJ LGE LLU LXV) or 1.8L (2H0 LFH LUW LWE) engine - **DTC P0231, P0232, or P023F**
P0243 P0245	**DTC P0243, P0245, or P0246**

P0246	
P025A	ECM - 1.2L (L2Q LDC LWD) or 1.4L (L2I L2N L2Z LDD LUH LUJ LUV) engine - **DTC P025A** or ECM - 1.6L (LDE LED LFJ LGE LLU LXV) or 1.8L (2H0 LFH LUW LWE) engine - **DTC P025A**
P0261 P0262 P0264 P0265	ECM - 1.2L (L2Q LDC LWD) or 1.4L (L2I L2N L2Z LDD LUH LUJ LUV) engine - **DTC P0201, P0202, P0203, P0204, P0261, P0262, P0264, P0265, P0267, P0268, P0270, or P0271** or ECM - 1.6L (LDE LED LFJ LGE LLU LXV) or 1.8L (2H0 LFH LUW LWE) engine - **DTC P0201, P0202, P0203, P0204, P0261, P0262, P0264, P0265, P0267, P0268, P0270, or P0271**
P0267 P0268 P0270 P0271	ECM - 1.2L (L2Q LDC LWD) or 1.4L (L2I L2N L2Z LDD LUH LUJ LUV) engine - **DTC P0201, P0202, P0203, P0204, P0261, P0262, P0264, P0265, P0267, P0268, P0270, or P0271** or ECM - 1.6L (LDE LED LFJ LGE LLU LXV) or 1.8L (2H0 LFH LUW LWE) engine - **DTC P0201, P0202, P0203, P0204, P0261, P0262, P0264, P0265, P0267, P0268, P0270, or P0271**
P0299	**DTC P0234 or P0299**
P0300	ECM - 1.2L (L2Q LDC LWD) or 1.4L (L2I L2N L2Z LDD LUH LUJ LUV) engine - or ECM - 1.6L (LDE LED LFJ LGE LLU LXV) or 1.8L (2H0 LFH LUW LWE) engine - **DTC P0300-P0304 or P0313**
P0301 P0302 P0303 P0304	**DTC P0300-P0304 or P0313**
P0313	**DTC P0300-P0304 or P0313**
P0315	ECM - 1.2L (L2Q LDC LWD) or 1.4L (L2I L2N L2Z LDD LUH LUJ LUV) engine - **DTC P0315** or ECM - 1.6L (LDE LED LFJ LGE LLU LXV) or 1.8L (2H0 LFH LUW LWE) engine - **DTC P0315 (LUW)**
P0324	ECM - 1.2L (L2Q LDC LWD) or 1.4L (L2I L2N L2Z LDD LUH LUJ LUV) engine - **DTC P0324, P0326, or P06B6** or ECM - 1.6L (LDE LED LFJ LGE LLU LXV) or 1.8L (2H0 LFH LUW LWE) engine - **DTC P0324, P0326, or P06B6**
P0325	ECM - 1.2L (L2Q LDC LWD) or 1.4L (L2I L2N L2Z LDD LUH LUJ LUV) engine - **DTC P0325, P0327, or P0328** or ECM - 1.6L (LDE LED LFJ LGE LLU LXV) or 1.8L (2H0 LFH LUW LWE) engine - **DTC P0325, P0327, or P0328**

P0326	ECM - 1.2L (L2Q LDC LWD) or 1.4L (L2I L2N L2Z LDD LUH LUJ LUV) engine - **DTC P0324, P0326, or P06B6** or ECM - 1.6L (LDE LED LFJ LGE LLU LXV) or 1.8L (2H0 LFH LUW LWE) engine - **DTC P0324, P0326, or P06B6**
P0327 P0328	ECM - 1.2L (L2Q LDC LWD) or 1.4L (L2I L2N L2Z LDD LUH LUJ LUV) engine - **DTC P0325, P0327, or P0328** or ECM - 1.6L (LDE LED LFJ LGE LLU LXV) or 1.8L (2H0 LFH LUW LWE) engine - **DTC P0325, P0327, or P0328**
P0335 P0336	ECM - 1.2L (L2Q LDC LWD) or 1.4L (L2I L2N L2Z LDD LUH LUJ LUV) engine - **DTC P0335 or P0336** or ECM - 1.6L (LDE LED LFJ LGE LLU LXV) or 1.8L (2H0 LFH LUW LWE) engine - **DTC P0335 or P0336**
P0340 P0341	ECM - 1.2L (L2Q LDC LWD) or 1.4L (L2I L2N L2Z LDD LUH LUJ LUV) engine - **DTC P0340, P0341, P0365, or P0366** or ECM - 1.6L (LDE LED LFJ LGE LLU LXV) or 1.8L (2H0 LFH LUW LWE) engine - **DTC P0340, P0341, P0365, or P0366**
P0351 P0352 P0353 P0354	ECM - 1.2L (L2Q LDC LWD) or 1.4L (L2I L2N L2Z LDD LUH LUJ LUV) engine - **DTC P0351-P0354** or ECM - 1.6L (LDE LED LFJ LGE LLU LXV) or 1.8L (2H0 LFH LUW LWE) engine - **DTC P0351-P0354**
P0365 P0366	ECM - 1.2L (L2Q LDC LWD) or 1.4L (L2I L2N L2Z LDD LUH LUJ LUV) engine - **DTC P0340, P0341, P0365, or P0366** or ECM - 1.6L (LDE LED LFJ LGE LLU LXV) or 1.8L (2H0 LFH LUW LWE) engine - **DTC P0340, P0341, P0365, or P0366**
P0411	**DTC P0411**
P0412 P0418	**DTC P0412 or P0418**
P0420	ECM - 1.2L (L2Q LDC LWD) or 1.4L (L2I L2N L2Z LDD LUH LUJ LUV) engine - **DTC P0420** or ECM - 1.6L (LDE LED LFJ LGE LLU LXV) or 1.8L (2H0 LFH LUW LWE) engine - **DTC P0420**
P0442	ECM - 1.2L (L2Q LDC LWD) or 1.4L (L2I L2N L2Z LDD LUH LUJ LUV) engine - **DTC P0442** or ECM - 1.6L (LDE LED LFJ LGE LLU LXV) or 1.8L (2H0 LFH LUW LWE) engine - **DTC P0442**
P0443	ECM - 1.2L (L2Q LDC LWD) or 1.4L (L2I L2N L2Z LDD LUH LUJ LUV) engine - **DTC P0443** or

	ECM - 1.6L (LDE LED LFJ LGE LLU LXV) or 1.8L (2H0 LFH LUW LWE) engine - **DTC P0443**
P0446	ECM - 1.2L (L2Q LDC LWD) or 1.4L (L2I L2N L2Z LDD LUH LUJ LUV) engine - **DTC P0446** or ECM - 1.6L (LDE LED LFJ LGE LLU LXV) or 1.8L (2H0 LFH LUW LWE) engine - **DTC P0446**
P0449	ECM - 1.2L (L2Q LDC LWD) or 1.4L (L2I L2N L2Z LDD LUH LUJ LUV) engine - **DTC P0449** or ECM - 1.6L (LDE LED LFJ LGE LLU LXV) or 1.8L (2H0 LFH LUW LWE) engine - **DTC P0449**
P0451 P0452 P0453 P0454	ECM - 1.2L (L2Q LDC LWD) or 1.4L (L2I L2N L2Z LDD LUH LUJ LUV) engine - **DTC P0451-P0454** or ECM - 1.6L (LDE LED LFJ LGE LLU LXV) or 1.8L (2H0 LFH LUW LWE) engine - **DTC P0451-P0454**
P0455	ECM - 1.6L (LDE LED LFJ LGE LLU LXV) or 1.8L (2H0 LFH LUW LWE) engine - **DTC P0455** or ECM - 1.2L (L2Q LDC LWD) or 1.4L (L2I L2N L2Z LDD LUH LUJ LUV) engine - **DTC P0455**
P0461 P0462 P0463 P0464	**DTC P0461-P0464**
P0496	ECM - 1.2L (L2Q LDC LWD) or 1.4L (L2I L2N L2Z LDD LUH LUJ LUV) engine - **DTC P0496** or ECM - 1.6L (LDE LED LFJ LGE LLU LXV) or 1.8L (2H0 LFH LUW LWE) engine - **DTC P0496**
P0502 P0503	**DTC P0502 or P0503**
P0506 P0507	ECM - 1.2L (L2Q LDC LWD) or 1.4L (L2I L2N L2Z LDD LUH LUJ LUV) engine - **DTC P0506 or P0507** or ECM - 1.6L (LDE LED LFJ LGE LLU LXV) or 1.8L (2H0 LFH LUW LWE) engine - **DTC P0506 or P0507**
P0513	**DTC P0513**
P0520	**DTC P0520**
P0521	**DTC P0521**
P0530 P0532 P0533	**DTC P0530, P0532, or P0533**
P0560	**DTC B1325, B1330, B1517, C0800, P0560, P0562, or P0563**
P0562	

P0563	**DTC B1325, B1330, B1517, C0800, P0560, P0562, or P0563**
P0564 P0565 P0567 P0568 P056C	**Cruise Control Malfunction - DTC B3794, P0564, P0565, P0567, P0568, P056C, P0580, P0581, P155A-P155C, or P162C**
P057C P057D	**DTC P057C or P057D**
P0580 P0581	**Cruise Control Malfunction - DTC B3794, P0564, P0565, P0567, P0568, P056C, P0580, P0581, P155A-P155C, or P162C**
P0597 P0598 P0599	**DTC P0597-P0599**
P0601	• ECM - 1.2L (L2Q LDC LWD) or 1.4L (L2I L2N L2Z LDD LUH LUJ LUV) engine - **DTC P0601-P0604, P0606, P062B, P062F, P0630, P16F3, or P262B (ECM)** • ECM - 1.6L (LDE LED LFJ LGE LLU LXV) or 1.8L (2H0 LFH LUW LWE) engine - **DTC P0601-P0604, P0606, P062B, P062F, P0630, P16F3, or P262B (ECM)** • Fuel Pump Control Module - 1.2L (L2Q LDC LWD) or 1.4L (L2I L2N L2Z LDD LUH LUJ LUV) engine - **DTC P0601-P0604, P0606, or P062F (Fuel Pump Control Module)** • Fuel Pump Control Module - 1.6L (LDE LED LFJ LGE LLU LXV) or 1.8L (2H0 LFH LUW LWE) engine - **DTC P0601-P0604, P0606, or P062F (Fuel Pump Control Module)** • All Modules - Data Communications - **DTC P0601-P0604, P0606, or P062F** • TCM - Automatic Transmission 6T30/6T40/6T45/6T50 - **DTC P0601, P0603, P0604, or P062F**
P0602	• ECM - 1.2L (L2Q LDC LWD) or 1.4L (L2I L2N L2Z LDD LUH LUJ LUV) engine - **DTC P0601-P0604, P0606, P062B, P062F, P0630, P16F3, or P262B (ECM)** • ECM - 1.6L (LDE LED LFJ LGE LLU LXV) or 1.8L (2H0 LFH LUW LWE) engine - **DTC P0601-P0604, P0606, P062B, P062F, P0630, P16F3, or P262B (ECM)** • Fuel Pump Control Module - 1.2L (L2Q LDC LWD) or 1.4L (L2I L2N L2Z LDD LUH LUJ LUV) engine - **DTC P0601-P0604, P0606, or P062F (Fuel Pump Control Module)** • Fuel Pump Control Module - 1.6L (LDE LED LFJ LGE LLU LXV) or 1.8L (2H0 LFH LUW LWE) engine - **DTC P0601-P0604, P0606, or P062F (Fuel Pump Control Module)** • All Modules - Data Communications - **DTC P0601-P0604, P0606, or P062F**

P0603 P0604	• ECM - 1.2L (L2Q LDC LWD) or 1.4L (L2I L2N L2Z LDD LUH LUJ LUV) engine - **DTC P0601-P0604, P0606, P062B, P062F, P0630, P16F3, or P262B (ECM)** • ECM - 1.6L (LDE LED LFJ LGE LLU LXV) or 1.8L (2H0 LFH LUW LWE) engine - **DTC P0601-P0604, P0606, P062B, P062F, P0630, P16F3, or P262B (ECM)** • Fuel Pump Control Module - 1.2L (L2Q LDC LWD) or 1.4L (L2I L2N L2Z LDD LUH LUJ LUV) engine - **DTC P0601-P0604, P0606, or P062F (Fuel Pump Control Module)** • Fuel Pump Control Module - 1.6L (LDE LED LFJ LGE LLU LXV) or 1.8L (2H0 LFH LUW LWE) engine - **DTC P0601-P0604, P0606, or P062F (Fuel Pump Control Module)** • All Modules - Data Communications - **DTC P0601-P0604, P0606, or P062F** • TCM - Automatic Transmission 6T30/6T40/6T45/6T50 - **DTC P0601, P0603, P0604, or P062F**
P0606	• ECM - 1.2L (L2Q LDC LWD) or 1.4L (L2I L2N L2Z LDD LUH LUJ LUV) engine - **DTC P0601-P0604, P0606, P062B, P062F, P0630, P16F3, or P262B (ECM)** • ECM - 1.6L (LDE LED LFJ LGE LLU LXV) or 1.8L (2H0 LFH LUW LWE) engine - **DTC P0601-P0604, P0606, P062B, P062F, P0630, P16F3, or P262B (ECM)** • Fuel Pump Control Module - 1.2L (L2Q LDC LWD) or 1.4L (L2I L2N L2Z LDD LUH LUJ LUV) engine - **DTC P0601-P0604, P0606, or P062F (Fuel Pump Control Module)** • Fuel Pump Control Module - 1.6L (LDE LED LFJ LGE LLU LXV) or 1.8L (2H0 LFH LUW LWE) engine - **DTC P0601-P0604, P0606, or P062F (Fuel Pump Control Module)** • All Modules - Data Communications - **DTC P0601-P0604, P0606, or P062F**
P0615 P0616 P0617	**DTC P0615, P0616, or P0617**
P0621	**DTC P0621**
P0622	**DTC P0622**
P0627 P0628 P0629	ECM - 1.2L (L2Q LDC LWD) or 1.4L (L2I L2N L2Z LDD LUH LUJ LUV) engine - **DTC P0627-P0629** or ECM - 1.6L (LDE LED LFJ LGE LLU LXV) or 1.8L (2H0 LFH LUW LWE) engine - **DTC P0627-P0629**
	• ECM - 1.2L (L2Q LDC LWD) or 1.4L (L2I L2N L2Z LDD LUH LUJ LUV) engine - **DTC P0601-P0604, P0606, P062B, P062F, P0630, P16F3, or P262B (ECM)**

P062F	• ECM - 1.6L (LDE LED LFJ LGE LLU LXV) or 1.8L (2H0 LFH LUW LWE) engine - **DTC P0601-P0604, P0606, P062B, P062F, P0630, P16F3, or P262B (ECM)** • Fuel Pump Control Module - 1.2L (L2Q LDC LWD) or 1.4L (L2I L2N L2Z LDD LUH LUJ LUV) engine - **DTC P0601-P0604, P0606, or P062F (Fuel Pump Control Module)** • Fuel Pump Control Module - 1.6L (LDE LED LFJ LGE LLU LXV) or 1.8L (2H0 LFH LUW LWE) engine - **DTC P0601-P0604, P0606, or P062F (Fuel Pump Control Module)** • All Modules - Data Communications - **DTC P0601-P0604, P0606, or P062F** • TCM - Automatic Transmission 6T30/6T40/6T45/6T50 - **DTC P0601, P0603, P0604, or P062F**
P0630	ECM - 1.2L (L2Q LDC LWD) or 1.4L (L2I L2N L2Z LDD LUH LUJ LUV) engine - **DTC P0601-P0604, P0606, P062B, P062F, P0630, P16F3, or P262B (ECM)** or ECM - 1.6L (LDE LED LFJ LGE LLU LXV) or 1.8L (2H0 LFH LUW LWE) engine - **DTC P0601-P0604, P0606, P062B, P062F, P0630, P16F3, or P262B (ECM)**
P0633	**DTC P0633**
P0634	**DTC P0634**
P0641	• ECM - 1.2L (L2Q LDC LWD) or 1.4L (L2I L2N L2Z LDD LUH LUJ LUV) engine - **DTC P0641, P0651, P0697, or P06A3 (ECM)** • ECM - 1.6L (LDE LED LFJ LGE LLU LXV) or 1.8L (2H0 LFH LUW LWE) engine - **DTC P0641, P0651, P0697, or P06A3 (ECM)** • Fuel Pump Control Module - 1.2L (L2Q LDC LWD) or 1.4L (L2I L2N L2Z LDD LUH LUJ LUV) engine - **DTC P0641 or P06A6 (Fuel Pump Control Module)** • Fuel Pump Control Module - 1.6L (LDE LED LFJ LGE LLU LXV) or 1.8L (2H0 LFH LUW LWE) engine - **DTC P0641 or P06A6 (Fuel Pump Control Module)**
P0645 P0646 P0647	HVAC Control Module - Automatic - **DTC P0645, P0646, or P0647** or HVAC Control Module - Manual - **DTC P0645, P0646, or P0647**
P064A	ECM - 1.2L (L2Q LDC LWD) or 1.4L (L2I L2N L2Z LDD LUH LUJ LUV) engine - **DTC P1255 or P064A** or ECM - 1.6L (LDE LED LFJ LGE LLU LXV) or 1.8L (2H0 LFH LUW LWE) engine - **DTC P1255 or P064A**
P0650	ECM - 1.2L (L2Q LDC LWD) or 1.4L (L2I L2N L2Z LDD LUH LUJ LUV) engine - **DTC P0650** or ECM - 1.6L (LDE LED LFJ LGE LLU LXV) or 1.8L (2H0 LFH LUW LWE)

	engine - **DTC P0650, P263A, or P263B**
P0651	ECM - 1.2L (L2Q LDC LWD) or 1.4L (L2I L2N L2Z LDD LUH LUJ LUV) engine - **DTC P0641, P0651, P0697, or P06A3 (ECM)** or ECM - 1.6L (LDE LED LFJ LGE LLU LXV) or 1.8L (2H0 LFH LUW LWE) engine - **DTC P0641, P0651, P0697, or P06A3 (ECM)**
P0658 P0659	**DTC P0658 or P0659**
P0660 P0661 P0662	**DTC P0660, P0661, or P0662**
P0667 P0668 P0669	**DTC P0667, P0668, or P0669**
P0685 P0686 P0687 P0689 P0690	ECM - 1.2L (L2Q LDC LWD) or 1.4L (L2I L2N L2Z LDD LUH LUJ LUV) engine - **DTC P0685, P0686, P0687, P0689, P0690, or P1682** or ECM - 1.6L (LDE LED LFJ LGE LLU LXV) or 1.8L (2H0 LFH LUW LWE) engine - **DTC P0685-P0687, P0689, P0690, or P1682**
P0697	ECM - 1.2L (L2Q LDC LWD) or 1.4L (L2I L2N L2Z LDD LUH LUJ LUV) engine - **DTC P0641, P0651, P0697, or P06A3 (ECM)** or ECM - 1.6L (LDE LED LFJ LGE LLU LXV) or 1.8L (2H0 LFH LUW LWE) engine - **DTC P0641, P0651, P0697, or P06A3 (ECM)**
P069E	ECM - 1.2L (L2Q LDC LWD) or 1.4L (L2I L2N L2Z LDD LUH LUJ LUV) engine - **DTC P069E** or ECM - 1.6L (LDE LED LFJ LGE LLU LXV) or 1.8L (2H0 LFH LUW LWE) engine - **DTC P069E**
P06A3	ECM - 1.2L (L2Q LDC LWD) or 1.4L (L2I L2N L2Z LDD LUH LUJ LUV) engine - **DTC P0641, P0651, P0697, or P06A3 (ECM)** or ECM - 1.6L (LDE LED LFJ LGE LLU LXV) or 1.8L (2H0 LFH LUW LWE) engine - **DTC P0641, P0651, P0697, or P06A3 (ECM)**
P06A6	ECM - 1.2L (L2Q LDC LWD) or 1.4L (L2I L2N L2Z LDD LUH LUJ LUV) engine - **DTC P0641 or P06A6 (Fuel Pump Control Module)** or ECM - 1.6L (LDE LED LFJ LGE LLU LXV) or 1.8L (2H0 LFH LUW LWE) engine - **DTC P0641 or P06A6 (Fuel Pump Control Module)**
P06AC P06AD P06AE	**DTC P06AC, P06AD, or P06AE**
P06B6	ECM - 1.2L (L2Q LDC LWD) or 1.4L (L2I L2N L2Z LDD LUH LUJ LUV) engine - **DTC P0324, P0326, or P06B6** or ECM - 1.6L (LDE LED LFJ LGE LLU LXV) or 1.8L (2H0 LFH LUW LWE)

	engine - **DTC P0324, P0326, or P06B6**
P0700	ECM - 1.2L (L2Q LDC LWD) or 1.4L (L2I L2N L2Z LDD LUH LUJ LUV) engine - **DTC P0700** or ECM - 1.6L (LDE LED LFJ LGE LLU LXV) or 1.8L (2H0 LFH LUW LWE) engine - **DTC P0700**
P0703	**DTC P0703**
P0711 P0712 P0713	**DTC P0711-P0713**
P0716 P0717	**DTC P0716, P0717, P07BF, or P07C0**
P071D	**DTC P071D**
P0722 P0723	**DTC P0722, P0723, P077C, or P077D**
P0741 P0742	**DTC P0741 or P0742 (Gen 2 with 1.4L (LUV) 1.8L (LUW, LWE))**
P0751 P0752	**DTC P0751 or P0752 (Gen 2 with 1.4L (LUV) 1.8L (LUW, LWE))**
P0776 P0777	**DTC P0776 or P0777 (Gen 2 with 1.4L (LUV) 1.8L (LUW, LWE))**
P077C P077D	**DTC P0722, P0723, P077C, or P077D**
P0796 P0797	**DTC P0796 or P0797 (Gen 2 with 1.4L (LUV) 1.8L (LUW, LWE))**
P07BF P07C0	**DTC P0716, P0717, P07BF, or P07C0**
P0806 P0807 P0808	**DTC P0806-P0808**
P080A	**DTC P080A**
P0815 P0816 P0826	**DTC P0815, P0816, or P0826**
P0850 P0851 P0852	**DTC P0850-P0852**
P0856	**DTC P0856**
P0961 P0962 P0963	**DTC P0961-P0963**
P0965 P0966 P0967	**DTC P0965-P0967**
P0969	

P0970 P0971	**DTC P0969-P0971**
P0973 P0974	**DTC P0973 or P0974**
P1101	ECM - 1.2L (L2Q LDC LWD) or 1.4L (L2I L2N L2Z LDD LUH LUJ LUV) engine - **DTC P0068 or P1101** or ECM - 1.6L (LDE LED LFJ LGE LLU LXV) or 1.8L (2H0 LFH LUW LWE) engine - **DTC P0068 or P1101**
P11C2 P11C3	**DTC P11C2 or P11C3**
P1255	ECM - 1.2L (L2Q LDC LWD) or 1.4L (L2I L2N L2Z LDD LUH LUJ LUV) engine - **DTC P1255 or P064A** or ECM - 1.6L (LDE LED LFJ LGE LLU LXV) or 1.8L (2H0 LFH LUW LWE) engine - **DTC P1255 or P064A**
P1400	ECM - 1.2L (L2Q LDC LWD) or 1.4L (L2I L2N L2Z LDD LUH LUJ LUV) engine - **DTC P1400** or ECM - 1.6L (LDE LED LFJ LGE LLU LXV) or 1.8L (2H0 LFH LUW LWE) engine - **DTC P1400**
P150C	ECM - 1.2L (L2Q LDC LWD) or 1.4L (L2I L2N L2Z LDD LUH LUJ LUV) engine - **DTC P150C** or ECM - 1.6L (LDE LED LFJ LGE LLU LXV) or 1.8L (2H0 LFH LUW LWE) engine - **DTC P150C**
P1516	ECM - 1.2L (L2Q LDC LWD) or 1.4L (L2I L2N L2Z LDD LUH LUJ LUV) engine - **DTC P1516, P2101, P2119, or P2176** or ECM - 1.6L (LDE LED LFJ LGE LLU LXV) or 1.8L (2H0 LFH LUW LWE) engine - **DTC P1516, P2101, P2119, or P2176**
P155A P155B P155C	**Cruise Control Malfunction - DTC B3794, P0564, P0565, P0567, P0568, P056C, P0580, P0581, P155A-P155C, or P162C**
P162B	**DTC P162B**
P162C	**Cruise Control Malfunction - DTC B3794, P0564, P0565, P0567, P0568, P056C, P0580, P0581, P155A-P155C, or P162C**
P1631	**DTC P1631**
P1649	**DTC P1649**
P1682	ECM - 1.2L (L2Q LDC LWD) or 1.4L (L2I L2N L2Z LDD LUH LUJ LUV) engine - **DTC P0685, P0686, P0687, P0689, P0690, or P1682** or ECM - 1.6L (LDE LED LFJ LGE LLU LXV) or 1.8L (2H0 LFH LUW LWE) engine - **DTC P0685-P0687, P0689, P0690, or P1682**
	ECM - 1.2L (L2Q LDC LWD) or 1.4L (L2I L2N L2Z LDD LUH LUJ LUV) engine - **DTC P0601-P0604, P0606, P062B, P062F, P0630, P16F3, or P262B**

P16F3	**(ECM)** or ECM - 1.6L (LDE LED LFJ LGE LLU LXV) or 1.8L (2H0 LFH LUW LWE) engine - **DTC P0601-P0604, P0606, P062B, P062F, P0630, P16F3, or P262B (ECM)**
P1761	**DTC P1761**
P182E	**DTC P182E or P1915**
P1876	**DTC P1876**
P1915	**DTC P182E or P1915**
P2070 P2071	**DTC P2070 or P2071**
P2076	**DTC P2076**
P2077 P2078	**DTC P2077 or P2078**
P2088 P2089 P2090 P2091	**DTC P0010, P0013, or P2088-P2091** or **DTC P0010, P0013, or P2088-P2091**
P2096	ECM - 1.2L (L2Q LDC LWD) or 1.4L (L2I L2N L2Z LDD LUH LUJ LUV) engine - **DTC P2096** or ECM - 1.6L (LDE LED LFJ LGE LLU LXV) or 1.8L (2H0 LFH LUW LWE) engine - **DTC P2096**
P2097	ECM - 1.2L (L2Q LDC LWD) or 1.4L (L2I L2N L2Z LDD LUH LUJ LUV) engine - **DTC P2097** or ECM - 1.6L (LDE LED LFJ LGE LLU LXV) or 1.8L (2H0 LFH LUW LWE) engine - **DTC P2097**
P2101	ECM - 1.2L (L2Q LDC LWD) or 1.4L (L2I L2N L2Z LDD LUH LUJ LUV) engine - **DTC P1516, P2101, P2119, or P2176** or ECM - 1.6L (LDE LED LFJ LGE LLU LXV) or 1.8L (2H0 LFH LUW LWE) engine - **DTC P1516, P2101, P2119, or P2176**
P2119	ECM - 1.2L (L2Q LDC LWD) or 1.4L (L2I L2N L2Z LDD LUH LUJ LUV) engine - **DTC P1516, P2101, P2119, or P2176** or ECM - 1.6L (LDE LED LFJ LGE LLU LXV) or 1.8L (2H0 LFH LUW LWE) engine - **DTC P1516, P2101, P2119, or P2176**
P2122 P2123 P2127 P2128	ECM - 1.2L (L2Q LDC LWD) or 1.4L (L2I L2N L2Z LDD LUH LUJ LUV) engine - **DTC P2122, P2123, P2127, P2128, or P2138** or ECM - 1.6L (LDE LED LFJ LGE LLU LXV) or 1.8L (2H0 LFH LUW LWE) engine - **DTC P2122, P2123, P2127, P2128, or P2138**
P2135	ECM - 1.2L (L2Q LDC LWD) or 1.4L (L2I L2N L2Z LDD LUH LUJ LUV) engine - **DTC P0121-P0123, P0222, P0223, or P2135 (LUV)** or

	ECM - 1.6L (LDE LED LFJ LGE LLU LXV) or 1.8L (2H0 LFH LUW LWE) engine - **DTC P0121-P0123, P0222, P0223, or P2135**
P2138	ECM - 1.2L (L2Q LDC LWD) or 1.4L (L2I L2N L2Z LDD LUH LUJ LUV) engine - **DTC P2122, P2123, P2127, P2128, or P2138** or ECM - 1.6L (LDE LED LFJ LGE LLU LXV) or 1.8L (2H0 LFH LUW LWE) engine - **DTC P2122, P2123, P2127, P2128, or P2138**
P2176	ECM - 1.2L (L2Q LDC LWD) or 1.4L (L2I L2N L2Z LDD LUH LUJ LUV) engine - **DTC P1516, P2101, P2119, or P2176** or ECM - 1.6L (LDE LED LFJ LGE LLU LXV) or 1.8L (2H0 LFH LUW LWE) engine - **DTC P1516, P2101, P2119, or P2176**
P2199	**DTC P2199**
P2227 P2228 P2229 P2230	**DTC P2227-P2230**
P2261	**DTC P2261**
P2270 P2271	ECM - 1.2L (L2Q LDC LWD) or 1.4L (L2I L2N L2Z LDD LUH LUJ LUV) engine - **DTC P0133, P013A, P013B, P013E, P013F, P015A, P015B, P2270, or P2271** or ECM - 1.6L (LDE LED LFJ LGE LLU LXV) or 1.8L (2H0 LFH LUW LWE) engine - **DTC P0133, P013A, P013B, P013E, P013F, P015A, P015B, P2270, or P2271**
P2430 P2431	**DTC P2430 or P2431**
P2432 P2433	**DTC P2432 or P2433**
P2440	**DTC P2440**
P2444	**DTC P2444**
P2534	ECM - 1.2L (L2Q LDC LWD) or 1.4L (L2I L2N L2Z LDD LUH LUJ LUV) engine - **DTC P2534 (Fuel Pump Control Module)** or ECM - 1.6L (LDE LED LFJ LGE LLU LXV) or 1.8L (2H0 LFH LUW LWE) engine - **DTC P2534 (Fuel Pump Control Module)**
P2544	**DTC P2544**
P2610	ECM - 1.2L (L2Q LDC LWD) or 1.4L (L2I L2N L2Z LDD LUH LUJ LUV) engine - **DTC P0601-P0604, P0606, P062B, P062F, P0630, P16F3, or P262B (ECM)** or ECM - 1.6L (LDE LED LFJ LGE LLU LXV) or 1.8L (2H0 LFH LUW LWE) engine - **DTC P0601-P0604, P0606, P062B, P062F, P0630, P16F3, or P262B (ECM)**
	ECM - 1.2L (L2Q LDC LWD) or 1.4L (L2I L2N L2Z LDD LUH LUJ LUV) engine - **DTC P2635 (Fuel Pump Control Module)**

P2635	or ECM - 1.6L (LDE LED LFJ LGE LLU LXV) or 1.8L (2H0 LFH LUW LWE) engine - **DTC P2635 (Fuel Pump Control Module)**
P263A P263B	**DTC P0650, P263A, or P263B**
P2714 P2715	**DTC P2714 or P2715 (Gen 2 with 1.4L (LUV) 1.8L (LUW, LWE))**
P2719 P2720 P2721	**DTC P2719-P2721**
P2723 P2724	**DTC P2723 or P2724 (Gen 2 with 1.4L (LUV) 1.8L (LUW, LWE))**
P2728 P2729 P2730	**DTC P2728-P2730**
P2762 P2763 P2764	**DTC P2762, P2763, or P2764**
U0001	**DTC U0001**
U0020	**DTC U0020**
U0073	**DTC U0073 or U2100**
U0074	**DTC U0074**
U0078	**DTC U0078**
U0100-U02FF	**DTC U0100-U02FF**
U0301 U0302 U0315	**DTC U0300-U0336**
U0400-U05FF	**DTC U0400-U05FF**
U1500-U15BF	**DTC U1500-U15FF**
U1814	**DTC U1814**
U18B9 U18BF	**DTC U18B9-U18BF**
U2099	**DTC U2099**
U2100	**DTC U0073 or U2100**

SYMPTOM BYTE LIST

Symptom Byte List

Symptom Byte	Symptom Byte Description	Symptom Byte Definition
(00-0F) General Electrical Failures This category includes standard wiring failure modes (for example, shorts and opens), direct current (DC) quantities related by Ohm's Law and quantities related to amplitude, frequency or rate of change, and wave shape.		
		This sub type is used for failures

00	-	that cannot be assigned to a specific sub type. No additional information is available.
01	Short to Battery	This sub type is used for failures where the Electronic Control Unit measures vehicle system (battery positive) potential for greater than a specified time period or when some other value is expected.
02	Short to Ground	This sub type is used for failures where the Electronic Control Unit measures ground (battery negative) potential for greater than a specified time period or when some other value is expected.
03	Low Voltage	This sub type is used for failures where the Electronic Control Unit measures a voltage below a specified range but not necessarily a short to ground.
04	Open	This sub type is used for failures where the Electronic Control Unit determines an open circuit via lack of bias voltage, low current flow, no change in state of an input in response to an output, etc.
05	High Voltage/Open	This sub type is used for failures where the condition detected by the Electronic Control Unit is the same for either indicated failure mode.
06	Low Voltage/Open	This sub type is used for failures where the condition detected by the Electronic Control Unit is the same for either indicated failure mode.
07	High Voltage	This sub type is used for failures where the Electronic Control Unit measures a voltage above a specified range but not necessarily a short to battery.
08	Performance - Signal Invalid	This sub type is used for failures where the value of the signal is not plausible given the operating

		conditions.
09	Too Fast Transitions	This sub type is used for failures where the signal transitions more quickly than is reasonably allowed.
0A	Too Slow Transitions	This sub type is used for failures where the signal transitions more slowly than is reasonably allowed.
0B	High Current	This sub type is used for failures where the Electronic Control Unit measures current flow above a specified range.
0C	Low Current	This sub type is used for failures where the Electronic Control Unit measures current flow below a specified range.
0D	High Resistance	This sub type is used for failures where the Electronic Control Unit infers a circuit resistance above a specified range.
0E	Low Resistance	This sub type is used for failures where the Electronic Control Unit infers a circuit resistance below a specified range.
0F	Signal Erratic	This sub type is used for failures where the signal is momentarily implausible (not long enough for Signal Invalid) or discontinuous.
(10-1F) Additional General Electrical Failures This category includes the overflow from category 0.		
10	-	Currently not used.
11	High Input	This sub type is used for failures where some circuit quantity is above a specified range.
12	Low Input	This sub type is used for failures where some circuit quantity is below a specified range.
13	Low Voltage/High Temperature	This sub type is used for failures where a temperature sensor with a negative temperature coefficient detects a voltage below a specified range.
		This sub type is used for failures where a temperature sensor with

14	High Voltage/Low Temperature	a negative temperature coefficient detects a voltage above a specified range.
15	Performance - Signal Rising Time Failure	This sub type is used for failures where the signal rise time is outside a specified range.
16	Performance - Signal Falling Time Failure	This sub type is used for failures where the signal fall time is outside a specified range.
17	Performance - Signal Shape/Waveform Failure	This sub type is used for failures where the shape of the signal (plot of the amplitude with respect to time) is not correct (for example, improper circuit impedance.)
18	Low Signal Amplitude	This sub type is used for failures where the Electronic Control Unit measures a signal voltage below a specified range but not necessarily a short to ground (for example, gain too low).
19	High Signal Amplitude	This sub type is used for failures where the Electronic Control Unit measures a signal voltage above a specified range but not necessarily a short to battery (for example, gain too high).
1A	Performance - Bias Level Out of Range	This sub type is used for failures where the Electronic Control Unit applies a bias voltage to a circuit upon which is superimposed a signal voltage (for example, Oxygen Sensor Circuit.)
1B	Signal Cross Coupled	This sub type is used for failures where the Electronic Control Unit detects a circuit shorted to another circuit when both circuits are controlled by the Electronic Control Unit.
1C	-	Currently not used.
1D	-	Currently not used.
1E	-	Currently not used.
1F	Erratic	This sub type is used for failures where the Electronic Control Unit momentarily detects one of

		the conditions defined above but not long enough to set a specific sub type.
(20-2F) FM / PWM Failures This category includes faults related to Frequency Modulated (FM) and Pulse Width Modulated (PWM) inputs and outputs of the Electronic Control Unit and faults where position is determined by counts.		
20	-	Currently not used.
21	Incorrect Period	This sub type is used for failures where the Electronic Control Unit measures an incorrect duration for one cycle of the output.
22	Too Short Low-Time	This sub type is used for failures where the Electronic Control Unit detects the low pulse is too narrow with respect to time.
23	Too Long Low-Time	This sub type is used for failures where the Electronic Control Unit detects the low pulse is too wide with respect to time.
24	Too Short High-Time	This sub type is used for failures where the Electronic Control Unit detects the high pulse is too narrow with respect to time.
25	Too Long High-Time	This sub type is used for failures where the Electronic Control Unit detects the high pulse is too wide with respect to time.
26	Low Frequency	This sub type is used for failures where the Electronic Control Unit detects too few cycles in a given time period.
27	High Frequency	This sub type is used for failures where the Electronic Control Unit detects too many cycles in a given time period.
28	Incorrect Frequency	This sub type is used for failures where the Electronic Control Unit measures an incorrect number of cycles in a given time period.
29	Too Few Pulses	This sub type is used for failures where the Electronic Control Unit measures too few pulses (for example, position is calibrated in counts from one

		extreme to the other).
2A	Too Many Pulses	This sub type is used for failures where the Electronic Control Unit measures too many pulses (for example, position is calibrated in counts from one extreme to the other).
2B	Missing Reference	This sub type is used for failures where the Electronic Control Unit does not detect a reference for a signal circuit or a group of signal circuits.
2C	-	Currently not used.
2D	-	Currently not used.
2E	-	Currently not used.
2F	-	Currently not used.
(30-3F) Electronic Control Unit Internal Failures This category includes faults related to memory, software, and internal electrical circuitry; requiring component replacement.		
30	-	Currently not used.
31	Internal Checksum Error	This sub type is used by the Electronic Control Unit to indicate an incorrect checksum calculation where memory type is not specified.
32	General Memory Malfunction	This sub type is used by the Electronic Control Unit to indicate a memory failure where memory type is not specified.
33	Special Memory Malfunction	This sub type is used by the Electronic Control Unit to indicate a memory failure where the specific memory type is not defined in this category.
34	RAM Malfunction	This sub type is used by the Electronic Control Unit to indicate a Random Access Memory (RAM) failure.
35	ROM Malfunction	This sub type is used by the Electronic Control Unit to indicate a Read Only Memory (ROM) failure.
36	EEPROM Performance/Malfunction	This sub type is used by the Electronic Control Unit to indicate an Electrically Erasable Programmable Read Only

		Memory (EEPROM) failure.
37	Software Malfunction	This sub type is used by the Electronic Control Unit to indicate a failure in the execution of operational software
38	Supervision Software Malfunction	This sub type is used by the Electronic Control Unit to indicate a loop time error in the execution of the operational software.
39	Internal Malfunction	This sub type is used by the Electronic Control Unit to indicate the detection of an internal circuit failure.
3A	Incorrect Component Installed	This sub type is used by the Electronic Control Unit to indicate a mismatch between the hardware connected to the Electronic Control Unit and the hardware expected by the Electronic Control Unit.
3B	Self-Test Malfunction	This sub type is used by the Electronic Control Unit to indicate a sensor self-test failure launched by an Electronic Control Unit command.
3C	Internal Communication Malfunction	This sub type is used by the Electronic Control Unit to indicate loss of an internal communication line, for example, between microprocessors in a dual microprocessor configuration.
3D	-	Currently not used.
3E	-	Currently not used.
3F	-	Currently not used.
(40-4F) Electronic Control Unit Programming Failures This category includes faults related to operational software, calibrations, and options; remedied by programming the Electronic Control Unit.		
40	-	Currently not used.
41	Not Programmed	This sub type is used to indicate that only boot software is present in the Electronic Control Unit.
		This sub type is used to indicate

42	Calibration Not Programmed	that operational software is present but calibration data is not.
43	EEPROM Incorrect Programming	This sub type is used to indicate an EEPROM error that may be remedied by reprogramming the module.
44	Security Access Not Activated	This sub type is used to indicate that programming was attempted without unlocking the Electronic Control Unit.
45	Variant Not Programmed	This sub type is used to indicate the need to enter (program) the sub system option content.
46	Configuration Not Programmed	This sub type is used to indicate the need to enter (program) the vehicle option content.
47	VIN Not Programmed	This sub type is used to indicate the need to enter (program) the vehicle identification number (VIN).
48	Security Code Not Programmed	This sub type is used to indicate the need to enter (program) the theft / security code.
49	RAM Incorrect Programming	This sub type is used by the Electronic Control Unit to indicate a Random Access Memory (RAM) error remedied by reprogramming.
4A	Programming Checksum Error	This sub type is used by the Electronic Control Unit to indicate an incorrect checksum calculation where memory type is not specified.
4B	Calibration Not Learned	This sub type is used by the Electronic Control Unit to indicate that a password, operational range, etc. for a sensor or actuator must be learned by the Electronic Control Unit.
4C	DTC Memory Full	This sub type is used by the Electronic Control Unit to indicate that more DTCs have been detected than can be accommodated by the memory

		allocated for DTC storage.
4D	Stack Overflow	This subtype is used by the Electronic Control Unit to indicate that more memory has been used in a stack than is allocated to a program.
4E	-	Currently not used.
4F	-	Currently not used.
(50-5F) Algorithm Based Failures This category includes faults based on comparing two or more input parameters for plausibility or comparing a single parameter to itself with respect to time.		
50	-	Currently not used.
51	-	Currently not used.
52	-	Currently not used.
53	Low Temperature	This sub type is used for failures where the Electronic Control Unit calculates a low temperature condition based upon the duration of certain operating parameters.
54	High Temperature	This sub type is used for failures where the Electronic Control Unit calculates a high temperature condition based upon the duration of certain operating parameters.
55	Too Few Transitions	This sub type is used for failures where the Electronic Control Unit monitors a parameter over time within specified limits and detects fewer than the expected number of transitions.
56	Too Many Transitions	This sub type is used for failures where the Electronic Control Unit monitors a parameter over time within specified limits and detects more than the expected number of transitions.
57	-	Currently not used.
58	Performance	This sub type is used for failures where the Electronic Control Unit does not see the expected change to a parameter or group of parameters in response to a particular event.
		This sub type is used for failures

59	Protection Time-Out	where the Electronic Control Unit detects a function is active for greater than a specified time period.
5A	Not Plausible	This sub type is used for failures where the Electronic Control Unit compares two or more input parameters for plausibility.
5B	-	Currently not used.
5C	-	Currently not used.
5D	-	Currently not used.
5E	-	Currently not used.
5F	-	Currently not used.
(60-6F) Mechanical Failures This category includes faults detected by inappropriate motion in response to an Electronic Control Unit controlled output.		
60	-	Currently not used.
61	Stuck	This sub type is used for failures where the Electronic Control Unit does not detect any motion in response to energizing a motor, solenoid, relay, etc.
62	Stuck Open	This sub type is used for failures where the Electronic Control Unit does not detect any motion upon commanding the operation of a motor, solenoid, relay, etc., to close some piece of equipment.
63	Stuck Closed	This sub type is used for failures where the Electronic Control Unit does not detect any motion upon commanding the operation of a motor, solenoid, relay, etc., to open some piece of equipment.
64	Slip Detected	This sub type is used for failures where the Electronic Control Unit detects excessive duration to command a motor, solenoid, relay, etc., to move a piece of equipment to a desired position.
65	Emergency Position Not Achievable	This sub type is used for failures where the Electronic Control Unit is unable to command a motor, solenoid, relay, etc., to

		move a piece of equipment to the emergency position.
66	Incorrect Mounting	This sub type is used for failures where the server detects incorrectly mounted components, for example, acceleration sensor showing a position error of 90°.
67	Incorrect Assembly	This sub type is used for failures where the control module has detected that the component has been incorrectly installed (for example, hydraulic pipes crossed over, circuits cross wired) or polarity errors.
68	-	Currently not used.
69	-	Currently not used.
6A	-	Currently not used.
6B	-	Currently not used.
6C	-	Currently not used.
6D	-	Currently not used.
6E	-	Currently not used.
6F	-	Currently not used.
(70-7F) Bus Signal / Message Failures This category includes faults related to bus hardware and signal integrity. This category is also used when the physical input for a signal is located in one Electronic Control Unit and another Electronic Control Unit diagnoses the circuit.		
70	-	Currently not used.
71	Invalid Data	This sub type is used by the Electronic Control Unit to indicate a signal was received with the corresponding validity bit equal to Invalid or post processing of the signal determines it is invalid.
72	Message Counter Incorrect	This sub type is used by the Electronic Control Unit to indicate a signal was received without the corresponding rolling count value being properly updated.
73	Parity Error	This sub type is used by the Electronic Control Unit to indicate a message was processed with an incorrect

		parity calculation.
74	Bus Signal Checksum Error	This sub type is used by the Electronic Control Unit to indicate a message was processed with an incorrect protection (checksum) calculation.
75	Serial Data Link High Input	This sub type is used for failures where some circuit quantity, reported via serial data, is above a specified range.
76	Serial Data Link Low Input	This sub type is used for failures where some circuit quantity, reported via serial data, is below a specified range.
77	-	Currently not used.
78	-	Currently not used.
79	-	Currently not used.
7A	-	Currently not used.
7B	-	Currently not used.
7C	-	Currently not used.
7D	-	Currently not used.
7E	-	Currently not used.
7F	Bus Signal Erratic	This sub type is used for failures where the signal, reported via serial data, is momentarily implausible or discontinuous.
(80-FF) Reserved Unique System Specific - See specific diagnostic procedures for symptom byte information if these symptom bytes are used.		

SYMPTOMS - VEHICLE

Body Repair

Symptoms - Bolted Exterior Body Panels and Closures

Body Systems

- **Symptoms - Fixed and Moveable Windows**
- **Symptoms - Horns**
- **Symptoms - Lighting**
- **Symptoms - Mirrors**
- **Symptoms - Vehicle Access**

- **Symptoms - Wiper/Washer Systems**

Brakes

- **Symptoms - Antilock Brake System**
- **Symptoms - Hydraulic Brakes**
- **Symptoms - Park Brake**

Driveline/Axle

Symptoms - Wheel Drive Shafts

Driver Information and Entertainment

- **Symptoms - Cellular Communication**
- **Symptoms - Entertainment**
- **Symptoms - Displays and Gauges**
- **Symptoms - Secondary and Configurable Customer Controls**

Engine

- **Symptoms - Cruise Control**
- **Symptoms - Engine Controls** for the 1.2L (L2Q LDC LWD) or 1.4L (L2I L2N LDD LUH LUJ LUV) engine
- **Symptoms - Engine Controls** for the 1.6L (LDE LED LFJ LGE LLU LXV) or 1.8L (2H0 LFH LUW LWE) engine
- **Symptoms - Engine Cooling**
- **Symptoms - Engine Electrical**
- **Symptoms - Engine Exhaust**
- **Symptoms - Engine Mechanical** for the 1.2L (L2Q LDC LWD) or 1.4L (L2I L2N LDD LUH LUJ LUV) engine
- **Symptoms - Engine Mechanical** for the 1.6L (LDE LED LFJ LGE LLU LXV) or 1.8L (2H0 LFH LUW LWE) engine

General Information

- **Symptoms - Squeaks and Rattles**
- **Symptoms - Vibration Diagnosis and Correction**

HVAC

- **Symptoms - HVAC Systems - Automatic**
- **Symptoms - HVAC Systems - Manual**

Power and Signal Distribution

- **Symptoms - Data Communications**
- **Symptoms - Power Outlets**
- **Symptoms - Wiring Systems**

Roof

Symptoms - Roof

Safety and Security

- **Symptoms - Immobilizer**
- **Symptoms - Object Detection**
- **Symptoms - Remote Functions**
- **Symptoms - Seat Belts**
- **Symptoms - SIR**
- **Symptoms - Theft Deterrent**

Seats

- **Symptoms - Power Seats**
- **Symptoms - Seat Heating and Cooling**

Steering

- **Symptoms - Power Steering System**
- **Symptoms - Steering Wheel and Column**

Suspension

- **Symptoms - Suspension General Diagnosis**
- **Symptoms - Tire Pressure Monitoring**

Transmission

- **Symptoms - Automatic Transmission**
- **Symptoms - Clutch**
- **Symptoms - Manual Transmission**
- **Symptoms - Automatic Transmission Shift Lock Control**

ENGINE DOES NOT CRANK

Refer to the appropriate diagnostic procedure below for the symptom observed.

- **Starter Solenoid Does Not Click**
- **Starter Solenoid Clicks, Engine Does Not Crank**
- **Engine Cranks Slowly**

ENGINE CRANKS BUT DOES NOT RUN

Refer to the appropriate diagnostic procedure below for the vehicle being serviced.

- **Engine Cranks But Does Not Run** for the 1.2L (L2Q LDC LWD) or 1.4L (L2I L2N LDD LUH LUJ LUV) engine
- **Engine Cranks But Does Not Run** for the 1.6L (LDE LED LFJ LGE LLU LXV) or 1.8L (2H0 LFH LUW LWE) engine

INSPECTION/MAINTENANCE SYSTEM CHECK

Refer to the appropriate diagnostic procedure below for the vehicle being serviced.

- **Inspection/Maintenance System Check** for the 1.2L (L2Q LDC LWD) or 1.4L (L2I L2N LDD LUH LUJ LUV) engine
- **Inspection/Maintenance System Check** for the 1.6L (LDE LED LFJ LGE LLU LXV) or 1.8L (2H0 LFH LUW LWE) engine

DIAGNOSTIC REPAIR VERIFICATION

NOTE: After a repair has been made, some DTCs require the ignition to be turned OFF then back ON before the scan tool function will clear the DTC.

1. Ignition OFF.
2. Install any components or connectors that have been removed or replaced during diagnosis.
3. Perform any adjustment, programming or setup procedures that are required when a component or module is removed or replaced.
4. Ignition ON.
5. Clear the DTCs.
6. Turn the ignition OFF for 60 seconds.
7. If the repair was related to a DTC, duplicate the Conditions for Running the DTC and use the Freeze Frame/Failure Records, if applicable, in order to verify the DTC does not set. If the DTC sets or another DTC is present, refer to the **Diagnostic Trouble Code (DTC) List - Vehicle** and perform the appropriate diagnostic procedure.

   Or

   If the repair was symptom related, duplicate the conditions under which the customer concern occurred to verify the repair. If the customer concern reoccurs or another symptom is present, return to **Symptoms - Vehicle** and perform the appropriate symptom diagnostic.

2013 GENERAL INFORMATION

Vibration Diagnosis and Correction - Cruze

SPECIFICATIONS

TIRE AND WHEEL RUNOUT SPECIFICATIONS

Tire and Wheel Runout Specifications

Application	Specification	
	Metric	English
Tire and Wheel Assembly- Lateral and Radial		
• Off-Vehicle	1.27 mm	0.050 in
• On-Vehicle	1.52 mm	0.060 in
Wheel, Aluminum		
• Lateral	0.762 mm	0.030 in
• Radial	0.762 mm	0.030 in
Wheel, Steel		
• Lateral	1.143 mm	0.045 in
• Radial	1.015 mm	0.040 in
Wheel Hub/Axle Flange- Guideline	0.132 mm	0.0052 in
Wheel Stud- Guideline	0.25 mm	0.010 in

DIAGNOSTIC INFORMATION AND PROCEDURES

VIBRATION ANALYSIS - ROAD TESTING

Special Tools

EL-38792-A Electronic Vibration Analyzer

For equivalent regional tools, refer to **Special Tools and Equipment**.

Test Description

The numbers below refer to the step numbers on the diagnostic table.

4

Obtaining rotational speed for the components rotating at tire/wheel speed is critical to systematically eliminating specific vehicle component groups. These component rotational speeds can be generated by using an electronic vibration analyzer, or through calculating them manually.

9

NOTE: Be certain to OBSERVE for disturbances that match the customer's description FIRST, then look at the vibration analyzer frequency which corresponds with that disturbance.

Proper location of the vibration analyzer sensor onto the component which is most excited by the vibration disturbance is critical to obtaining an accurate frequency reading.

This test will duplicate virtually any disturbance which occurs while the vehicle is in motion.

10

Accelerate to a speed high enough above the speed of the disturbance to allow for the time needed to shift into NEUTRAL and for the engine to decrease in RPM to idle speed, before coasting down through the disturbance range.

11

This test will either eliminate or confirm the engine as a contributing cause of the customer concern.

Vibration Analysis - Road Testing

Step	Action	Yes	No
WARNING: **Refer to Road Test Warning .**			
1	Did the customer concern indicate that the vibration occurs ONLY while the vehicle is standing still?	Go to **Step 5**	Go to **Step 2**
2	Visually inspect the tire and wheel assemblies, steering components and suspension components for any possible faults. Are the tire and wheel assemblies, steering components and suspension components in good working condition?	Go to **Step 4**	Go to **Step 3**
3	**NOTE: Do NOT operate the vehicle until the faults are corrected.** Correct the faults with the tire and wheel assemblies, steering components, and/or the suspension components before proceeding.Did you correct the faults with the tire and wheel assemblies, steering components, and/or the suspension components?	Go to **Step 4**	Go to **Step 2**
	1. Obtain the drive axle final drive ratio.		

4	2. If the vibration analyzer has suitable software, obtain the transmission gear ratios. 3. If the a vibration analyzer is not available, take note of the tire size on each axle, then calculate the tire rotational speed for each size tire used. Refer to **Component Rotational Speed Calculation**. Did you obtain the powertrain ratios for use with the vibration analyzer, or calculate the component rotational speeds, if a vibration analyzer is NOT available?	Go to **Step 5**	-
5	1. Install a scan tool. 2. With the scan tool, bring up the Powertrain Control Module data list and select Engine Speed. Is the scan tool operating properly?	Go to **Step 6**	-
6	Using a vibration analyzer is the preferred method for gathering necessary vibration frequency data. If a vibration analyzer is not available, the necessary vibration frequency data will have to be obtained based on symptoms observed during testing. Review **Symptoms - Vibration Diagnosis and Correction** to become familiar with the possible frequency ranges. Review Symptoms - Vibration Diagnosis and Correction, as necessary throughout the remainder of diagnostics. Is a vibration analyzer available for use?	Go to **Step 7**	Go to **Step 8**
7	Install the vibration analyzer. Is the vibration analyzer operating properly?	Go to **Step 8**	Check the Vibration Analyzer
8	Did the customer concern indicate that the vibration occurs ONLY while the vehicle is standing still?	Go to **Vibration Analysis - Engine**	Go to **Step 9**
	1. Install the vibration analyzer sensor, if available, to the component identified by the customer as most respondent to the vibration. If no component was identified, install the vibration analyzer sensor, if available, to the steering column. You may have to move the sensor to other locations later.		

9	2. Select a smooth, level road and slowly accelerate the vehicle up to highway speed. 3. Observe the vehicle for disturbances that match the customer's description and note the following conditions: • The vehicle speed • The engine RPM • The transmission gear range and the specific gear • The vibration frequency reading, if detected by the vibration analyzer • The feel and/or sound of the disturbance 4. If the vibration seems to excite a particular component of the vehicle more than the steering column, then move the vibration analyzer sensor, if available, onto that component and repeat steps 2 and 3. Were you able to duplicate the customer's concern?	Go to **Step 10**	Go to **Vibration Diagnostic Aids**
10	1. Accelerate the vehicle to a speed higher than the speed at which the disturbance occurs. **NOTE:** **If the vehicle is equipped with an automatic transmission, let the vehicle coast to a stop before shifting back into gear.** 2. Shift the vehicle into NEUTRAL and allow the vehicle to coast down through the disturbance range. Does the disturbance still occur while coasting-down in NEUTRAL?	Go to **Step 12**	Go to **Step 11**
11	1. Select a smooth, level road and slowly accelerate the vehicle up to the speed at which the disturbance occurs. 2. Decelerate and safely downshift by one gear range. 3. Operate the vehicle at the same VEHICLE SPEED at which the disturbance occurs.		

	Does the same disturbance still occur while going the same vehicle speed in a lower gear range?	Go to **Vibration Analysis - Hub and/or Axle Input**	Go to **Vibration Analysis - Engine**
12	If the vibration analyzer is not available, refer to **Symptoms - Vibration Diagnosis and Correction**. Did the vibration analyzer detect a dominant frequency?	Go to **Step 13**	Go to **Symptoms - Vibration Diagnosis and Correction**
13	1. If the vibration analyzer HAS the features, use the drive axle final drive ratio, the specific transmission gear ratio, and the engine RPM to make a comparison to the dominant frequency reading recorded. 2. If the vibration analyzer does NOT have the features, compare the dominant frequency reading recorded to the component rotational data which you calculated previously. Does the frequency data clearly fall within the tire/wheel parameters ONLY?	Go to **Vibration Analysis - Tire and Wheel**	Go to **Symptoms - Vibration Diagnosis and Correction**

COMPONENT ROTATIONAL SPEED CALCULATION

Special Tools

EL-38792-A Electronic Vibration Analyzer (EVA) 2

For equivalent regional tools, refer to **Special Tools and Equipment**.

Tire Rotational Speed

Determining Tire Revolutions Per Second at 8 km/h (5 mph) - Using EVA

Tire and wheel assembly rotational speed can be obtained through using the **EL-38792-A** Electronic Vibration Analyzer (EVA) 2. Perform the following steps using the **EL-38792-A** Electronic Vibration Analyzer (EVA) 2 to obtain the rotational speed at 8 km/h (5 mph). Use the Enter key to advance and the Exit key to backup.

1. On the Main Menu screen, select Auto Mode.
2. On the Suspected Source screen, select Vehicle Speed.
3. On the Tire Info Source screen, select Manual Entry.
4. On the Tire Width screen, enter the specific width of the tires.

   For example: For a P245/45/R18 tire, enter 245.

5. On the Aspect Ratio screen, enter the specific aspect ratio of the tires.

For example: For a P245/45/R18 tire, enter 0.45.

6. On the Rim Diameter screen, enter the specific rim diameter size.

   For example: For a P245/45/R18 tire, enter 18.0.

7. On the Driveshaft Configuration screen, enter FWD, even if the vehicle is a rear wheel drive.
8. The next screen will display the tire size just entered for confirmation.

   For example: 245 0.45 18.0 -Front Wheel Drive. If the tire size displayed is correct, press Enter.

9. On the Vehicle Speed Units screen, press Enter, disregard mph or km/h.
10. Press the Exit key several times slowly while watching the backwards progression of the screens. Stop at the Tire Info Source screen.
11. On the Tire Info Source screen, select RPS at 5 mph.
12. The next screen will display the revolutions per second (RPS) at 8 km/h (5 mph) for that specific tire size.

    For example: The P245/45/R18 will display 1.08 RPS.

Calculating Tire Revolutions Per Second at 8 km/h (5 mph) - Without EVA

If the **EL-38792-A** Electronic Vibration Analyzer (EVA) 2 is not available, the tire and wheel assembly rotational speed can be calculated approximately by performing the following steps.

1. Convert the rim diameter size from inches to centimeters.

   For example: For a P245/45/R18 tire, the rim diameter of 18 in X 2.54 converts to 45.72 cm.

2. Calculate the radius of the rim by dividing the rim diameter by 2.

   For example: For a P245/45/R18 tire, the rim diameter of 18 is converted to 45.72 cm divided by 2 = rim radius 22.86 cm.

3. Calculate the approximate tire sidewall height by multiplying the specific tire tread width by the aspect ratio, then reduce 7 percent from the amount by multiplying by 93 percent to approximate load on the tire reducing the sidewall height.

   For example: For a P245/45/R18 tire, tread width 245 mm X aspect ratio as a decimal 0.45 = 110 mm X 0.93 = approximate sidewall height 102.30 mm.

4. Convert the calculated approximate tire sidewall height from millimeters to centimeters.

   For example: For a P245/45/R18 tire, approximate sidewall height 102.30 mm converts to 10.23 cm.

5. Calculate the approximate tire and wheel assembly radius by adding the rim radius and approximate sidewall height, both in cm.

For example: For a P245/45/R18 tire, rim radius 22.86 cm + 10.23 cm = approximate tire and wheel assembly radius 33.09 cm.

6. Calculate the approximate circumference of the tire and wheel assembly by multiplying 2 X pi, or 6.283185 X the approximate tire and wheel assembly radius.

   For example: For a P245/45/R18 tire, 6.283185 X approximate tire and wheel assembly radius 33.09 cm = approximate tire and wheel assembly circumference 207.911 cm.

7. Calculate the approximate revolutions per kilometer by dividing the number of cm in 1 km, 100, 000 cm by the approximate tire and wheel assembly circumference.

   For example: For a P245/45/R18 tire, 100, 000 cm divided by approximate tire and wheel assembly circumference 207.911 cm = approximate revolutions per kilometer 480.975.

8. Calculate the approximate revolutions per second (RPS), or Hz, by dividing the approximate revolutions per kilometer by the number of seconds to travel 1 km at a speed of 8 km per hour, 450 seconds.

   For example: For a P245/45/R18 tire, approximate revolutions per kilometer 480.975 divided by the number of seconds to travel 1 km at a speed of 8 km per hour, 450 seconds = approximate RPS, or Hz 1.069 rounded to 1.07.

Calculating Tire Revolutions Per Second, or Hz at Concern Speed

A size P235/75R15 tire rotates ONE complete revolution per second (RPS), or 1 Hz, at a vehicle speed of 8 km/h (5 mph). This means that at 16 km/h (10 mph), the same tire will make TWO complete revolutions in one second, 2 Hz, and so on.

1. Determine the rotational speed of the tires in revolutions per second (RPS), or Hertz (Hz), at 8 km/h (5 mph), based on the size of the tires. Refer to the preceding Tire Rotational Speed information.

   For example: According to the Tire Rotational Speed information, a P245/45R18 tire makes 1.08 revolutions per second (Hz) at a vehicle speed of 8 km/h (5 mph). This means that for every increment of 8 km/h (5 mph) in vehicle speed, the tire's rotation increases by 1.08 revolutions per second, or Hz.

2. Determine the number of increments of 8 km/h (5 mph) that are present, based on the vehicle speed in km/h (mph) at which the disturbance occurs.

   For example: Assume that a disturbance occurs at a vehicle speed of 96 km/h (60 mph). A speed of 96 km/h (60 mph) has 12 INCREMENTS of 8 km/h (5 mph):

   96 km/h (60 mph) divided by 8 km/h (5 mph) = 12 increments

3. Determine the rotational speed of the tires in revolutions per second, or Hz, at the specific vehicle speed in km/h (mph) at which the disturbance occurs.

   For example: To determine the tire rotational speed at 96 km/h (60 mph), multiply the number of increments of 8 km/h (5 mph) by the revolutions per second, or Hz, for one increment:

12 increments X 1.08 Hz = 12.96 Hz, rounded to 13 Hz

NOTE: If the EL-38792-A Electronic Vibration Analyzer (EVA) 2 is not available, compare the calculated rotational speed to the frequency range associated with the symptoms of the vibration concern. Refer to Symptoms - Vibration Diagnosis and Correction.

4. Compare the rotational speed of the tires at the specific vehicle speed at which the disturbance occurs, to the dominant frequency recorded on the **EL-38792-A** Electronic Vibration Analyzer (EVA) 2 during testing. If the frequencies match, then a first-order disturbance related to the rotation of the tire/wheel assemblies is present.

   If the frequencies do not match, then the disturbance may be related to a higher order of tire/wheel assembly rotation.

5. To compute higher order tire/wheel assembly rotation related disturbances, multiply the rotational speed of the tires at the specific vehicle speed at which the disturbance occurs, by the order number:

   13 Hz X 2, for second order = 26 Hz second-order tire/wheel assembly rotation related

   13 Hz X 3, for third order = 39 Hz third-order tire/wheel assembly rotation related

   If any of these computations match the frequency of the disturbance, a disturbance of that particular order, relating to the rotation of the tire/wheel assemblies and/or driveline components, also rotating at the same speed, is present.

Component Rotational Speed Worksheet

Utilize the following worksheet as an aid in calculating the first, second and third order of tire/wheel assembly rotational speed related disturbances that may be present in the vehicle.

If after completing the Tire/Wheel Rotation Worksheet, the frequencies calculated do NOT match the dominant frequency of the disturbance recorded during testing, either recheck the data, or attempt to rematch the figures allowing for 1 1/2 -8 km/h (1-5 mph) of speedometer error.

If the possible tire/wheel assembly rotational speed related frequencies still do not match the dominant frequency of the disturbance, the disturbance is most likely torque/load sensitive.

If after completing the Tire/Wheel Rotation Worksheet, one of the frequencies calculated DOES match the dominant frequency of the disturbance, the disturbance is related to the rotation of that component group - tire/wheel assembly related.

TIRE/WHEEL ROTATION WORKSHEET

Vehicle Information

Complaint Speed: _____ mph Year: _____ Model: _____
Symptom: _____ VIN: _____
Frequency: _____ Engine: _____ Trans: _____
Engine Speed: _____ rpm Tire Size: _____ Axle Ratio: _____ : ___
Gear: _____ TPC Spec: _____

Tire/Wheel Speed

Vibration Occurs at:	[ ]	mph ÷ 8 (km/h) 5 (mph)		=	[ ]	increments of 8 km/h / 5 mph
						Tire/Wheel Speed, RPS (Hz)
8 km/h / 5 mph increments	[ ]	x	[ ] tire RPS * at 8 km/h / 5 mph (from table)	=	[ ]	**1st order**
1st order	[ ]	x 2		=	[ ]	**2nd order**
1st order	[ ]	x 3		=	[ ]	**3rd order**

*RPS revolutions per second; equates to cycles per second (Hz).

Fig. 1: Tire/Wheel Rotation Worksheet
Courtesy of GENERAL MOTORS COMPANY

VIBRATION ANALYSIS - TIRE AND WHEEL

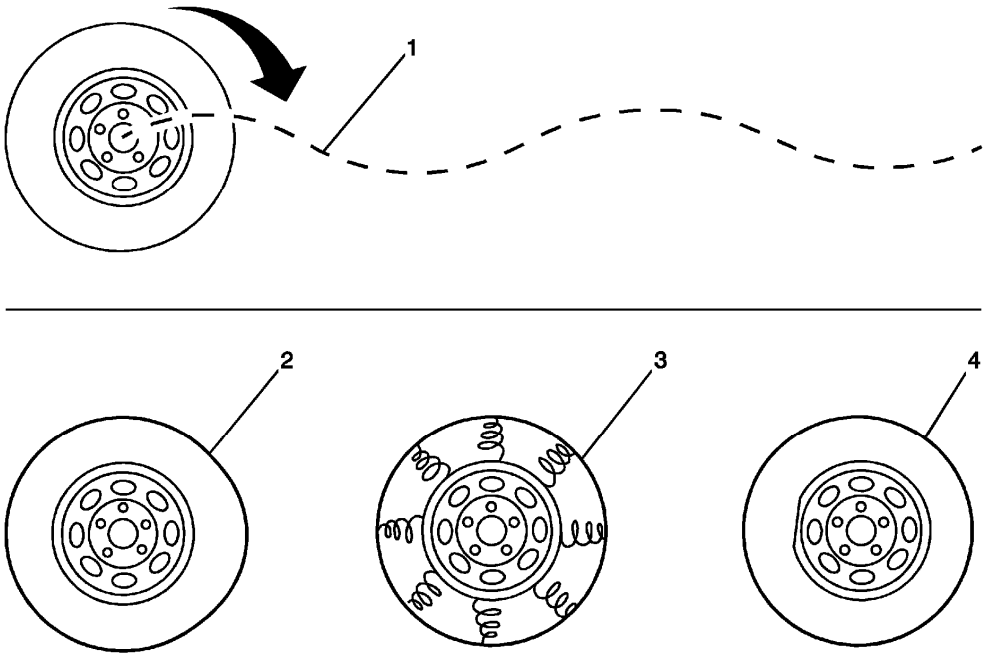

Fig. 2: Tire & Wheel Vibration Analysis
Courtesy of GENERAL MOTORS COMPANY

WARNING: Refer to Work Stall Test Warning .

Wheel imbalance causes most highway speed vibration problems. A vibration can remain after dynamic balancing because:

- A tire is out of round (2).
- A rim is out of round (4).
- A tire stiffness variation exists (3).

Measuring tire and wheel free runout will uncover only part of the problem. All 3 causes, known as loaded radial runout (1), must be checked using a method of substituting known good tire and wheel assemblies on the problem vehicle.

Low-speed variations, which occur below 64 km/h (40 mph), are usually caused by runout. High-speed vibrations, which occur above 64 km/h (40 mph), can be caused by either imbalance or runout.

Correcting Non-Uniform Tires

There are 2 ways to correct properly balanced tires which still vibrate. One method uses an automatic machine which loads the tire and buffs small amounts of rubber from high spots on the outer 2 tread rows. Correction by this method is usually permanent and, if it is done properly, does not significantly affect the appearance or the tread life of the tire. Tire truing with a blade type machine is not recommended because it substantially reduces

the tread life and often does not correct the problem permanently.

Another method is to dismount the tire and rotate it 180 degrees on the rim. Do this only on the tire and wheel assemblies which are known to be causing a vibration because this method is just as likely to cause good assemblies to vibrate.

VIBRATION ANALYSIS - HUB AND/OR AXLE INPUT

Test Description

The numbers below refer to the step numbers on the diagnostic table:

2

This test will determine the effect of turning input on the vibration.

6

This test will determine the effect of an initial heavy torque load on the vibration.

7

Damaged or worn wheel drive shafts may cause a noise or vibration that may be transferred into the passenger compartment.

8

Damaged or worn wheel bearings may cause a noise or vibration that may be transferred into the passenger compartment.

9

Damaged or worn suspension components may cause a noise or vibration that may be transferred into the passenger compartment.

10

Damaged or worn powertrain mounts and/or exhaust mounts may cause a noise or vibration that may be transferred into the passenger compartment.

11

Incorrect trim height may cause binding and/or interference between components that may produce a vibration.

Vibration Analysis - Hub and/or Axle Input

Step	Action	Yes	No

WARNING:

Refer to Road Test Warning .

1	Has the Vibration Analysis - Road Testing table been completed?	Go to **Step 2**	Go to **Vibration Analysis - Road Testing**
2	1. Operate the vehicle at the speed of the vibration concern. 2. While maintaining the concern speed, drive the vehicle through slow, sweeping turns - first in one direction, then in the other direction. 3. Observe the vehicle for changes in the vibration disturbance. 4. Select a smooth, level surface, such as an empty parking lot or a remote road. 5. While maintaining the vehicle at the concern speed if possible, drive the vehicle through sharp turns; 360 degrees - first in one direction, then in the other direction. 6. Observe the vehicle for changes in the vibration disturbance. Did the characteristics of the vibration change significantly-become worse or go away-during these steps?	Go to **Step 3**	Go to **Step 6**
3	Did you hear a clicking noise and/or feel a shudder during these steps?	Go to **Step 7**	Go to **Step 4**
4	Did you hear a growling noise during these steps?	Go to **Step 8**	Go to **Step 5**
5	Did you hear a popping noise during these steps?	Go to **Step 9**	Go to **Step 12**
6	1. With the vehicle at a stand-still, apply the regular brake and place the transmission in the lowest forward gear. **NOTE:** **Do not accelerate to the point of causing the drive wheels to squeal, slip or hop-this would obscure the results of the test.** 2. Release the regular brakes and accelerate aggressively to 32 km/h (20 mph). 3. Observe the vehicle for changes in the vibration disturbance. Did you feel a shudder or shaking during these steps?	Go to **Step 7**	Go to **Vibration Diagnostic Aids**

7	1. Inspect the wheel drive shafts, if equipped, for damage, abnormal and/or excessive wear. 2. If the inspection indicated that a wheel drive shaft is damaged, abnormally and/or excessively worn, replace the shaft. Did you find and correct a condition?	Go to **Step 12**	Go to **Step 9**
8	1. Inspect the wheel bearings for wear and/or damage. 2. Replace any of the wheel bearings found to be worn and/or damaged. Did you find and correct a condition?	Go to **Step 12**	Go to **Vibration Diagnostic Aids**
9	1. Inspect the following suspension components for wear, damage, looseness and/or possible contact with other vehicle components: • Struts/shock absorbers • Springs • Bushings • Insulators 2. Replace any of the suspension components found to be worn, damaged, loose and/or contacting other vehicle components. Did you find and correct a condition?	Go to **Step 12**	Go to **Step 10**
	1. Inspect the powertrain mounts-engine, transmission, transfer case, and direct-mount differential, if equipped-and any powertrain braces for the following conditions: • Loose and/or missing fasteners • Improper alignment • Cracked, dry-rotted, and/or oil-soaked insulators • Twisted, broken, torn, and/or collapsed insulators • Bent, twisted, and/or deformed brackets 2. Replace powertrain mounts as necessary. 3. Inspect the exhaust system components for the following: • Loose and/or missing fasteners o Heat Shields o Joints and/or couplings:		

	Nuts, bolts, studs, clamps, straps ○ Bracket and/or insulator mounting • Inadequate clearance to body and/or chassis components Inspect with the exhaust system both COLD and HOT; in NEUTRAL, FORWARD and REVERSE gears • Improper alignment • Disconnected and/or missing insulators • Cracked, dry-rotted, and/or oil-soaked insulators • Stretched, twisted, broken, torn, and/or collapsed insulators • Bent, twisted, cracked, and/or deformed brackets		
10	4. Repair, replace, and/or realign exhaust system components as necessary. Did you find and correct a condition?	Go to **Step 12**	Go to **Step 11**
11	Inspect the vehicle trim height and adjust as necessary. Refer to **Trim Height Inspection** . Did you find and correct a condition?	Go to **Step 12**	Go to **Vibration Diagnostic Aids**
12	1. Install or connect any components that were removed or disconnected during diagnosis. 2. Perform the Vibration Analysis - Road Testing table. Refer to **Vibration Analysis - Road Testing**. Is the vibration still present?	Go to **Step 2**	System OK

VIBRATION ANALYSIS - ENGINE

Special Tools

EL-38792-A Electronic Vibration Analyzer (EVA) 2

For equivalent regional tools, refer to **Special Tools and Equipment**.

Test Description

The numbers below refer to the step numbers on the diagnostic table.

2

If powertrain related DTCs are present, there may be a powertrain performance condition present which could be a contributing cause to the customer's concern.

5

Making comparisons of the customer's vehicle with an equally equipped, same model year and type, KNOWN GOOD vehicle will help determine if certain disturbances may be characteristic of a vehicle design.

Vibration Analysis - Engine

Step	Action	Yes	No
WARNING: **Refer to Work Stall Test Warning .**			
1	Has the Vibration Analysis - Road Testing table been completed?	Go to **Step 2**	Go to **Vibration Analysis - Road Testing**
2	Using a scan tool, determine if any DTCs are set. Were any DTCs set?	-	Go to **Step 3**
3	1. Block the front wheels. 2. Apply BOTH the service brakes and the park brake. 3. With the scan tool and the **EL-38792-A** analyzer (EVA) 2, if available, still installed, start the engine. 4. Place the transmission in NEUTRAL or PARK. 5. Slowly increase the engine RPM to the level at which the disturbance is most noticeable. 6. Record the engine RPM obtained on the scan tool and the most dominant frequency reading if obtained on the **EL-38792-A** analyzer (EVA) 2, if available. 7. Place the transmission in DRIVE. 8. Slowly increase the engine RPM to the level at which the disturbance is most noticeable.		

	9. Record the engine RPM obtained on the scan tool and the most dominant frequency reading if obtained on the **EL-38792-A** analyzer (EVA) 2, if available. 10. If no frequency data was obtained, or if the **EL-38792-A** analyzer (EVA) 2, is not available, place the transmission into REVERSE, then repeat steps 8 and 9. Reverse-loading of the powertrain may increase or change the characteristics of the vibration. Were you able to duplicate the customer's concern?	Go to **Step 4**	Go to **Vibration Diagnostic Aids**
4	Did the **EL-38792-A** analyzer (EVA) 2 detect a dominant frequency, or was a significant vibration present?	Go to **Vibration Analysis - Engine/Accessory Isolation**	Go to **Step 5**
	Compare the test results of the customer's vehicle to the results of the same tests run, at the same engine RPM, on an equally-equipped, same model year and type, KNOWN GOOD vehicle. Refer to **Vehicle-to-Vehicle Diagnostic Comparison**. 1. Install a scan tool into the known good vehicle. 2. Install the **EL-38792-A** analyzer (EVA) 2, if available, into the known good vehicle; place the sensor in exactly the same location as it was placed in the customer's vehicle. 3. Block the front wheels. 4. Apply BOTH the service brakes and the park brake.		

5	5. Start the engine. 6. Place the transmission in NEUTRAL or PARK. 7. Slowly increase the engine RPM to the level at which the disturbance was most noticeable in the customer's vehicle. 8. Record the engine RPM obtained on the scan tool and the most dominant frequency reading if obtained on the **EL-38792-A** analyzer (EVA) 2, if available. 9. Place the transmission in DRIVE. 10. Slowly increase the engine RPM to the level at which the disturbance was most noticeable in the customer's vehicle. 11. Record the engine RPM obtained on the scan tool and the most dominant frequency reading if obtained on the **EL-38792-A** analyzer (EVA) 2, if available. 12. If no frequency data was obtained, or if the **EL-38792-A** analyzer (EVA) 2, is not available, place the transmission into REVERSE, then repeat steps 10 and 11. Reverse-loading of the powertrain may increase or change the characteristics of the vibration. Did both of the vehicles exhibit the same characteristics?	Go to **Vibration Diagnostic Aids**	Go to **Vibration Analysis - Engine/Accessory Isolation**

ENGINE ORDER CLASSIFICATION

Special Tools

EL-38792-VS Vibrate Software

For equivalent regional tools, refer to **Special Tools and Equipment**.

Engine First Order Classification

1. Convert the engine speed in revolutions per minute (RPM), recorded during duplication of the disturbance into Hertz, revolutions per second (RPS), by dividing the RPM by 60 seconds. Refer to the following example:

   1.200 RPM divided by 60 = 20 Hz (or RPS)

2. Compare the dominant frequency in Hz, recorded during duplication of the disturbance with the engine speed just converted into Hz, to determine if they are related.
3. If the dominant frequency in Hz, recorded during duplication of the disturbance and the engine speed, converted into Hz, ARE related, then an engine FIRST ORDER related disturbance is present. Engine first order disturbances are usually related to an imbalanced component. Refer to the Engine Order Related Disturbances table.
4. If the dominant frequency in Hz, recorded during duplication of the disturbance and the engine speed, converted into Hz, are NOT related, then determine if the disturbance is related to the engine's firing frequency. Proceed to Engine Firing Frequency Classification.

Engine Firing Frequency Classification

Engine firing frequency is a term used to describe the number of firing pulses (one firing pulse = one cylinder firing) that occur during ONE complete revolution of the crankshaft, multiplied by the number of crankshaft revolutions per second, Hz.

1. Calculate the engine firing frequency.
   - To determine the firing frequency of a 4-stroke engine during ONE complete revolution of the crankshaft, multiply the engine speed, converted into Hz, by HALF of the total number of cylinders in the engine.
   - For example: The engine speed, converted into Hz, was 20 Hz; if the vehicle was equipped with a V8 engine, 4 of the 8 cylinders would actually fire during ONE complete revolution of the crankshaft.
     - Multiply the converted engine speed (20 Hz) by 4 cylinders firing.

       20 Hz X 4 = 80 Hz

     - The engine firing frequency for a V8 engine at the original engine speed of 1, 200 RPM, recorded during duplication of the disturbance, would be 80 Hz.
     - In like manner, a 6-cylinder engine would have a firing frequency of 60 Hz at the same engine speed of 1, 200 RPM.

20 Hz X 3 = 60 Hz

2. Compare the dominant frequency in Hz, recorded during duplication of the disturbance with the engine firing frequency in Hz, just calculated, to determine if they are related.
3. If the dominant frequency in Hz, recorded during duplication of the disturbance and the engine firing frequency in Hz, just calculated ARE related, then an engine FIRING FREQUENCY related disturbance is present. Engine firing frequency disturbances are usually related to improper isolation of a component. Refer to the Engine Order Related Disturbances table.
4. If the dominant frequency in Hz, recorded during duplication of the disturbance and the engine firing frequency in Hz, just calculated are NOT related, then determine if the disturbance is related to another engine order classification. Proceed to Other Engine Order Classification.

Other Engine Order Classification

1. Multiply the engine speed, converted into Hz, recorded during duplication of the disturbance by different possible order-numbers, other than 1 (first order) or the number used to determine the firing frequency of the engine.
2. Compare the dominant frequency in Hz, recorded during duplication of the disturbance with the other possible engine orders just calculated, to determine if they are related.
3. If the dominant frequency in Hz, recorded during duplication of the disturbance and one of the other engine order frequencies in Hz, just calculated ARE related, then an engine related disturbance of that order is present. If an engine related disturbance is present that is NOT related to first order or firing frequency, then it could be related to an engine driven accessory system. Proceed to Engine Driven Accessories Related to Engine Order.

Engine Driven Accessories Related to Engine Order

Engine driven accessory systems can be related to specific engine orders depending upon the relationship of the accessory pulley diameter to the crankshaft pulley diameter. For example:

- If the crankshaft pulley measured 20 cm (8 in) in diameter and one of the engine driven accessory pulleys measured 10 cm (4 in) in diameter, then that accessory pulley would rotate 2 times for every one rotation of the crankshaft pulley. If that accessory system was not isolated properly, or was not operating properly, it would be identifiable as a 2nd order engine related disturbance.
- In like manner, if an engine driven accessory pulley measured 5 cm (2 in) in diameter, then that accessory pulley would rotate 4 times for every one rotation of the crankshaft pulley. If that accessory system was not isolated properly, or was not operating properly, it would be identifiable as a 4th order engine related disturbance.

Engine driven accessories that contribute to, are excited by, or are the sole cause of a disturbance are usually doing so because of improper isolation that causes a transfer path into the passenger compartment or to another major component of the vehicle body.

Using the **EL-38792-VS** software, accurately measuring the diameters of the accessory pulleys and the crankshaft pulley, and performing the appropriate diagnostic procedures completely will lead to the specific accessory system which is either contributing to, or causing the customer's concern.

Engine Order Related Disturbances

Engine Order	Engine Arrangement	
	L4 W/O Balance Shaft	L4 With Balance Shaft
1/2 Order Torque Sensitive	Abnormal - Likely Single Cylinder Misfire	Abnormal - Likely Single Cylinder Misfire
1st Order	Abnormal - Likely Component Imbalance	Abnormal - Likely Component Imbalance
1 1/2 Order Torque Sensitive	Possible Engine Driven Accessory Related	Possible Engine Driven Accessory Related
2nd Order Non Torque Sensitive	Characteristic of Engine Arrangement - Possible Powertrain Isolation Related	Possible Engine Driven Accessory Related
2nd Order Torque Sensitive	Characteristic - ENGINE FIRING FREQUENCY - Possible Powertrain Isolation Related	Characteristic - ENGINE FIRING FREQUENCY - Possible Powertrain Isolation Related
	Possible Engine Driven Accessory Related	Possible Engine Driven Accessory Related
2 1/2 Order Torque Sensitive	Possible Engine Driven Accessory Related	Possible Engine Driven Accessory Related
3rd Order Torque Sensitive	Possible Engine Driven Accessory Related	Possible Engine Driven Accessory Related
4th Order Torque Sensitive	Characteristic - Minimal Amount - of Engine Arrangement - Possible Powertrain Isolation Related	Characteristic - Minimal Amount - of Engine Arrangement - Possible Powertrain Isolation Related
	Possible Engine Driven Accessory Related	Possible Engine Driven Accessory Related

VIBRATION ANALYSIS - ENGINE/ACCESSORY ISOLATION

Test Description

The numbers below refer to the step numbers on the diagnostic table.

5

A loose, damaged, misaligned, or defective powertrain insulator and/or bracket may create a transfer path into the passenger compartment.

6

A loose, damaged, misaligned, or defective exhaust system insulator and/or bracket may create a transfer path into the passenger compartment.

7

Incorrectly seated and/or aligned powertrain components and/or exhaust system components may create a transfer path into the passenger compartment.

When loosening powertrain mounts in order to re-bed the powertrain observe the following:

Do not loosen the mount bracket-to-engine bolts/nuts, do not loosen the mount bracket-to-vehicle frame bolts/nuts if mount brackets are used.

Loosen the mount-to-mount bracket bolts/nuts if mount brackets are used, or loosen the mount-to-slotted holes in vehicle frame bolts/nuts if a direct-mount design is used.

8

Non-rotating engine driven accessory component systems can no longer produce a unique disturbance.

9

Non-rotating engine driven accessory components can no longer produce a unique disturbance. If a disturbance is still present, but the characteristics have been altered, it is possible that these component systems are acting as a transfer path for engine firing frequency or a first order engine disturbance.

If a disturbance is still present, but the characteristics have NOT been altered, it is NOT likely that these component systems are acting as a transfer path for engine firing frequency or a first order engine disturbance.

10

If the mark placed on the face of an engine driven accessory pulley seems to stand still while running this test, then that accessory system is either responding to an existing frequency, such as engine firing pulses, or creating a disturbance.

11

A loose, damaged, misaligned, or defective engine driven accessory system insulator and/or bracket may create a transfer path into the passenger compartment.

12

Removing the engine driven accessory and bracket, or brackets from the engine allows a thorough inspection to determine if any conditions are present that may create a transfer path into the passenger compartment.

Vibration Analysis - Engine/Accessory Isolation

Step	Action	Yes	No

WARNING:

Refer to Work Stall Test Warning .

1	Were you sent here from the Vibration Analysis - Engine table?	Go to **Step 2**	Go to **Vibration Analysis - Engine**
2	Is the **EL-38792-A** Electronic Vibration Analyzer (EVA) 2, available?	Go to **Step 3**	Go to **Step 5**
3	1. Using the engine RPM and frequency data recorded for the customer's vehicle, determine the order of engine rotation to which the disturbance is related. 2. Determine the possible causes of the disturbance as it relates to a specific order of engine rotation. Refer to **Engine Order Classification**.Does the Engine Order Classification table indicate that the disturbance is of the same order as the engine firing frequency?	Go to **Step 5**	Go to **Step 4**
4	Does the Engine Order Classification table indicate that the disturbance is likely related to engine driven accessories?	Go to **Step 8**	Go to **Step 5**
5	Inspect the powertrain mounts-engine, transmission, transfer case, and direct-mount drive axle, if equipped-and any powertrain braces for the following conditions: • Loose and/or missing fasteners • Improper alignment • Cracked, dry-rotted, and/or oil-soaked insulators • Twisted, broken, torn, and/or collapsed insulators • Bent, twisted, and/or deformed brackets Realign or replace powertrain mounts as indicated by the inspection. Did you find and correct a condition?	Go to **Step 13**	Go to **Step 6**
	Inspect the exhaust system components for the following: • Loose and/or missing fasteners o Heat Shields o Joints and/or couplings:		

6	Nuts, bolts, studs, clamps, straps ○ Bracket and/or insulator mounting • Inadequate clearance to body and/or chassis components Inspect with the exhaust system both COLD and HOT; in NEUTRAL, FORWARD and REVERSE gears • Improper alignment • Disconnected and/or missing insulators • Cracked, dry-rotted, and/or oil-soaked insulators • Stretched, twisted, broken, torn, and/or collapsed insulators • Bent, twisted, cracked, and/or deformed brackets Repair, replace, and/or realign exhaust system components as indicated by the inspection. Did you find and correct a condition?	Go to **Step 13**	Go to **Step 7**
7	Perform the Powertrain Mount Balance Procedure if available or perform the following procedure to re-bed the powertrain: 1. Loosen, but do not remove, all powertrain mounts and exhaust system hangers. 2. Ensure that the exhaust flexible coupling, if equipped, moves freely. 3. Start the engine. 4. Settle the powertrain by shifting the transmission from DRIVE to REVERSE. 5. Place the transmission into NEUTRAL. 6. Turn OFF the ignition. 7. Tighten all of the loosened fasteners with the powertrain in a relaxed position. Did you complete the operation?	Go to **Step 13**	-
	CAUTION: **Do not run the engine for longer than 60**		

8	**seconds with the accessory drive belt, or belts removed, or overheating and/or damage may result.** 1. Remove the engine accessory drive belt, or belts. 2. Block the front wheels. 3. Apply BOTH the service brakes and the park brake. 4. With the scan tool still installed, start the engine. 5. Place the transmission in NEUTRAL or PARK. 6. Increase the engine RPM to the level recorded during duplication of the disturbance. 7. Allow the engine to idle, then place the transmission in DRIVE. 8. Increase the engine RPM to the level recorded during duplication of the disturbance. 9. Turn OFF the ignition. 10. Install the engine accessory drive belt, or belts. Was the disturbance significantly reduced or eliminated?	Go to **Step 10**	Go to **Step 9**
9	Were the characteristics of the disturbance altered but still present?	Go to **Step 11**	Go to **Step 15**
	1. Mark the face of the suspected accessory pulleys, including any related idler pulleys, near the outer edge with a paint mark. 2. Install the **EN-38792-25** Inductive Pickup Timing Light, to the **EL-38792-A** Electronic Vibration Analyzer (EVA) 2. For information on the use of the EVA features, refer to **Electronic Vibration Analyzer (EVA) Description and Operation**. 3. Block the front wheels. 4. Apply BOTH the service brakes and the		

10	park brake. 5. With the scan tool and the **EL-38792-A** Electronic Vibration Analyzer (EVA) 2, still installed, start the engine. 6. Select the Smart Strobe feature on the **EL-38792-A** Electronic Vibration Analyzer (EVA) 2. 7. Enter the recorded frequency of the disturbance as the initial frequency for strobe operation. 8. Have an assistant place the transmission in NEUTRAL or PARK. 9. Slowly increase the engine RPM to the level recorded during duplication of the disturbance, then maintain that speed. 10. Using the **EL-38792-A** Inductive Pickup Timing Light, check each of the suspected accessory pulleys to determine if any of them is related to the frequency of the disturbance. Check each of the accessory systems, both engaged and under maximum load and disengaged or under minimum load. 11. Allow the engine to idle, then place the transmission in DRIVE. 12. Slowly increase the engine RPM to the level recorded during duplication of the disturbance, then maintain that speed closely. 13. Using the **EN-38792-25** Inductive Pickup Timing Light, check each of the suspected accessory pulleys to determine if any of them is related to the frequency of the disturbance. Check each of the accessory systems, both engaged and under maximum load and disengaged or under minimum load. 14. Turn OFF the ignition. Did you identify an engine driven accessory system as being related to the frequency of the	Go to **Step 11**	Go to **Vibration Diagnostic Aids**

	disturbance?		

11	Inspect the components of the engine driven accessory system for the following:
	• Loose and/or missing fasteners
	  ○ Heat Shields, if equipped
	  ○ Joints and/or couplings:
	  Nuts, bolts, studs, clamps, straps
	  ○ Bracket and/or insulator mounting
	• Inadequate clearance to body and/or chassis components
	Inspect with the accessory system both under a LOAD and NOT loaded
	• Improper alignment
	• Bent or damaged pulleys
	• Disconnected and/or missing insulators
	• Cracked, dry-rotted, and/or oil-soaked component insulators
	• Stretched, twisted, broken, torn, and/or collapsed component insulators
	• Bent, twisted, cracked and/or deformed component brackets
	Repair, replace, and/or realign the engine driven accessory system components as indicated by the inspection.
	Did you find and correct a condition?
		Go to **Step 13**	Go to **Step 12**

12	1. Remove the engine driven accessory and bracket, or brackets from the engine. 2. Thoroughly inspect the accessory bracket, or brackets, bolts/nuts/studs, and the accessory itself for signs of the following: Bent, twisted, cracked and/or deformed conditions 3. Replace any of the components found to exhibit any of these conditions.		

	4. Reinstall the components to the engine. Did you find and correct a condition?	Go to **Step 13**	Go to **Step 17**
13	Check the vehicle to determine if the disturbance is now significantly reduced or eliminated. Perform the following steps: 1. Install a scan tool into the customer's vehicle. 2. Install the **EL-38792-A** Electronic Vibration Analyzer (EVA) 2, if available, into the customer's vehicle; place the sensor in exactly the same location as it was originally placed in the vehicle. 3. Block the front wheels. 4. Apply BOTH the service brakes and the park brake. 5. Start the engine. 6. Place the transmission in NEUTRAL or PARK. 7. Slowly increase the engine RPM to the level at which the disturbance was most noticeable. 8. Record the engine RPM obtained on the scan tool and the most dominant frequency reading if obtained on the **EL-38792-A** Electronic Vibration Analyzer (EVA) 2, if available. 9. Place the transmission in DRIVE. 10. Slowly increase the engine RPM to the level at which the disturbance was most noticeable. 11. Record the engine RPM obtained on the scan tool and the most dominant frequency reading if obtained on the **EL-38792-A** Electronic Vibration Analyzer (EVA) 2, if available. 12. If the disturbance has been significantly reduced or eliminated, confirm the results by placing the transmission into REVERSE, then repeat steps 10 and 11. Reverse-loading of the powertrain may increase or change the characteristics of the vibration.		

	Has the disturbance been significantly reduced or eliminated?	Go to **Step 18**	Go to **Step 14**
14	Have you investigated powertrain isolation as a possible cause of the disturbance?	Go to **Step 15**	Go to **Step 5**
15	Have you investigated engine driven accessories as a possible cause of the disturbance?	Go to **Vibration Analysis - Engine Balance**	Go to **Step 16**
16	Is the **EL-38792-A** Electronic Vibration Analyzer (EVA) 2 available?	Go to **Step 8**	Go to **Vibration Diagnostic Aids**
17	Replace the engine driven accessory component causing the disturbance. Did you complete the replacement?	Go to **Step 18**	-
18	1. Install or connect any components that were removed or disconnected during diagnosis. 2. Perform the Vibration Analysis - Road Testing table. Refer to **Vibration Analysis - Road Testing**. Is the disturbance still present?	Go to **Step 2**	System OK

VIBRATION ANALYSIS - ENGINE BALANCE

Test Description

The numbers below refer to the step numbers on the diagnostic table.

4

If sufficient clearance exists to separate the transmission torque converter from the engine flywheel/flexplate, then further tests can be used to isolate the transmission from the engine.

5

An engine flywheel/flexplate that has excessive lateral runout, when combined with the mass of the transmission torque converter, can produce a disturbance.

6

An engine flywheel/flexplate that is loose at the engine crankshaft or that is cracked or damaged, when combined with the mass of the transmission torque converter, can produce a disturbance.

7

This step is designed to isolate the transmission from the engine to determine if the disturbance is related

to the engine ONLY.

9

Re-indexing the transmission torque converter to the engine flywheel/flexplate alters the balance relationship between the torque converter and the rear of the engine.

11

Placing the **EL-38792-A** Electronic Vibration Analyzer (EVA) 2 sensor onto the underside of the engine oil pan along the FRONT and the REAR edge allows for a determination to be made, which will help to narrow down the cause of the disturbance.

13

An engine flywheel that has excessive lateral runout, when combined with the extra mass of the clutch pressure plate and clutch driven plate, can produce a disturbance.

14

The clutch pressure plate and the engine flywheel are marked for proper indexing of the heavy-spot of one to the light-spot of the other. Improper indexing of the pressure plate to the flywheel can produce a disturbance.

15

An engine flywheel that is loose at the engine crankshaft or that is cracked, damaged and/or missing balance weights; and/or a clutch pressure plate and clutch driven plate that has loose springs, cracks, warpage, damage and/or missing balance weights - can produce a disturbance when their mass is combined.

16

An engine flywheel that is loose at the engine crankshaft or that is cracked, damaged and/or missing balance weights; and/or a clutch pressure plate and clutch driven plate that has loose springs, cracks, warpage, damage and/or missing balance weights - can produce a disturbance when their mass is combined.

17

Re-indexing the pressure plate to the engine flywheel alters the balance relationship between the pressure plate/flywheel assembly and the rear of the engine.

18

An engine flywheel/flexplate that is damaged, misaligned, and/or imbalanced, can produce a disturbance.

19

An engine crankshaft balancer that is damaged, misaligned, and/or imbalanced, can produce a disturbance.

Vibration Analysis - Engine Balance

Step	Action	Yes	No
1	Were you sent here from the Vibration Analysis - Engine/Accessory Isolation table?	Go to **Step 2**	Go to **Vibration Analysis - Engine/Accessory Isolation**
2	Is the **EL-38792-A** Electronic Vibration Analyzer (EVA) 2, available?	Go to **Step 3**	Go to **Vibration Diagnostic Aids**
3	Is the vehicle equipped with a manual transmission?	Go to **Step 11**	Go to **Step 4**
4	1. Raise and support the vehicle. Refer to **Lifting and Jacking the Vehicle** . 2. Remove the flywheel/flexplate-to-torque converter bolts access cover, if equipped. 3. Determine if sufficient clearance exists to separate the transmission torque converter away from the engine flywheel/flexplate and safely secure the torque converter from accidentally engaging with the flywheel/flexplate. Is there sufficient clearance to separate and safely secure the transmission torque converter away from the engine flywheel/flexplate?	Go to **Step 5**	Go to **Step 11**
5	1. With the flywheel/flexplate-to-torque converter access cover still removed, and with the vehicle still raised, mark the position of the transmission torque converter in relation to the engine flywheel/flexplate. 2. Disconnect the torque converter and move it away from the flywheel/flexplate. 3. Secure the transmission torque converter away from the engine flywheel/flexplate to avoid accidental engagement with the		

	flywheel/flexplate. 4. Lower the vehicle, start the engine and allow the engine to idle. 5. Raise and support the vehicle. Refer to **Lifting and Jacking the Vehicle** . 6. Visually inspect the flywheel/flexplate for excessive lateral runout. 7. Lower the vehicle. 8. Turn OFF the ignition. Did the flywheel/flexplate exhibit excessive lateral runout?	Go to **Step 8**	Go to **Step 6**
6	1. Raise and support the vehicle. Refer to **Lifting and Jacking the Vehicle** . 2. Inspect the flywheel/flexplate for the following: • Looseness at the engine crankshaft • Cracks and/or damage • Missing balance weights Did the flywheel/flexplate exhibit any of the conditions listed?	Go to **Step 8**	Go to **Step 7**
7	1. With the transmission torque converter still secured away from the engine flywheel/flexplate to avoid accidental engagement with the flywheel/flexplate, lower the vehicle. 2. Block the front wheels. 3. Apply BOTH the service brakes and the park brake. 4. With the scan tool and the **EL-38792-A** Electronic Vibration Analyzer (EVA) 2 still installed, start the engine. 5. Place the transmission in NEUTRAL or PARK. 6. Slowly increase the engine RPM to the level at which the disturbance is most noticeable. 7. Record the engine RPM obtained on the scan tool and the most dominant		

	frequency reading if obtained on the **EL-38792-A** Electronic Vibration Analyzer (EVA) 2. 8. Turn OFF the ignition. Has the disturbance been significantly reduced or eliminated?	Go to **Step 9**	Go to **Step 11**
8	1. If the flywheel/flexplate is loose at the engine crankshaft, tighten the flywheel/flexplate mounting bolts in sequence and to specification. 2. If the flywheel/flexplate is cracked, damaged, and/or has missing balance weights, replace the damaged flywheel/flexplate. Did you complete the tightening or replacement?	Go to **Step 20**	-
9	1. Raise and support the vehicle. Refer to **Lifting and Jacking the Vehicle** . 2. Re-index the transmission torque converter to the engine flywheel/flexplate, 120 degrees from its original position. 3. Reconnect the transmission torque converter to the engine flywheel/flexplate. 4. Lower the vehicle. 5. Block the front wheels. 6. Apply BOTH the service brakes and the park brake. 7. With the scan tool and the **EL-38792-A** Electronic Vibration Analyzer (EVA) 2 still installed, start the engine. 8. Place the transmission in NEUTRAL or PARK. 9. Slowly increase the engine RPM to the level at which the disturbance is most noticeable. 10. Record the engine RPM obtained on the scan tool and the most dominant frequency reading if obtained on the **EL-38792-A** Electronic Vibration		

	Analyzer (EVA) 2. 11. If the disturbance is still noticeable, re-index the torque converter again to obtain the least amount of disturbance. Has the disturbance been significantly reduced or eliminated?	Go to **Step 20**	Go to **Step 10**
10	Replace the out-of-balance transmission torque converter. Did you complete the replacement?	Go to **Step 20**	-
11	1. Raise and support the vehicle. Refer to **Lifting and Jacking the Vehicle** . 2. Position the **EL-38792-A** Electronic Vibration Analyzer (EVA) 2 sensor onto the underside of the engine oil pan, along the FRONT edge. 3. Lower the vehicle. 4. Block the front wheels. 5. Apply BOTH the service brakes and the park brake. 6. With the scan tool and the **EL-38792-A** Electronic Vibration Analyzer (EVA) 2, still installed, start the engine. 7. Place the transmission in NEUTRAL or PARK. 8. Slowly increase the engine RPM to the level at which the disturbance is most noticeable. 9. Record the engine RPM obtained on the scan tool and the most dominant frequency reading if obtained on the **EL-38792-A** Electronic Vibration Analyzer (EVA) 2 from the underside of the engine oil pan. 10. Repeat steps 1 through 9, placing the **EL-38792-A** Electronic Vibration Analyzer (EVA) 2 sensor onto the underside of the engine oil pan, along the REAR edge. Is the disturbance greater along the FRONT of the engine?	Go to **Step 19**	Go to **Step 12**

12	Is the vehicle equipped with an automatic transmission?	Go to **Step 18**	Go to **Step 13**
13	1. Raise and support the vehicle. Refer to **Lifting and Jacking the Vehicle** . 2. Remove the flywheel inspection cover. 3. Start the engine. Allow the engine to idle. 4. Visually inspect the engine flywheel clutch surface for excessive lateral runout. Does the engine flywheel clutch surface exhibit excessive lateral runout?	Go to **Step 18**	Go to **Step 14**
14	Inspect the clutch pressure plate to engine flywheel mounting for proper factory indexing. Is the clutch pressure plate properly indexed to the engine flywheel?	Go to **Step 16**	Go to **Step 15**
15	1. Remove the clutch pressure plate and clutch driven plate from the engine flywheel. 2. Inspect the engine flywheel for the following: • Looseness at the engine crankshaft • Cracks, warpage and/or damage • Missing balance weights 3. Inspect the clutch pressure plate and clutch driven plate for the following: • Loose and/or damaged clutch driven plate damper springs • Loose and/or damaged clutch pressure plate diaphragm springs • Cracks, warpage and/or damage • Missing balance weights Do any of the above conditions exist?	Go to **Step 18**	Go to **Step 17**
	1. Remove the clutch pressure plate and clutch driven plate from the engine		

16	flywheel. 2. Inspect the engine flywheel for the following: • Looseness at the engine crankshaft • Cracks, warpage and/or damage • Missing balance weights 3. Inspect the clutch pressure plate and clutch driven plate for the following: • Loose and/or damaged clutch driven plate damper springs • Loose and/or damaged clutch pressure plate diaphragm springs • Cracks, warpage and/or damage • Missing balance weights Do any of the above conditions exist?	Go to **Step 18**	Go to **Vibration Diagnostic Aids**
17	Re-index the pressure plate to the engine flywheel. Did you complete the re-indexing?	Go to **Step 20**	-
18	Replace the engine flywheel/flexplate. Did you complete the replacement?	Go to **Step 20**	-
19	Replace the engine crankshaft balancer. Did you complete the replacement?	Go to **Step 20**	-
	Check the vehicle to determine if the disturbance is now significantly reduced or eliminated. Perform the following steps: 1. Install or connect any components that were removed or disconnected during diagnosis. 2. Install a scan tool into the customer's vehicle. 3. Install the **EL-38792-A** Electronic Vibration Analyzer (EVA) 2, if available, into the customer's vehicle; place the sensor in exactly the same location as it was originally placed in the vehicle. 4. Block the front wheels.		

20	5. Apply BOTH the service brakes and the park brake. 6. Start the engine. 7. Place the transmission in NEUTRAL or PARK. 8. Slowly increase the engine RPM to the level at which the disturbance was most noticeable. 9. Record the engine RPM obtained on the scan tool and the most dominant frequency reading if obtained on the **EL-38792-A** Electronic Vibration Analyzer (EVA) 2, if available. 10. Place the transmission in DRIVE. 11. Slowly increase the engine RPM to the level at which the disturbance was most noticeable. 12. Record the engine RPM obtained on the scan tool and the most dominant frequency reading if obtained on the **EL-38792-A** Electronic Vibration Analyzer (EVA) 2, if available. 13. If the disturbance has been significantly reduced or eliminated, confirm the results by placing the transmission into REVERSE, then repeat steps 11 and 12. Reverse-loading of the powertrain may increase or change the characteristics of the vibration. Has the disturbance been significantly reduced or eliminated?	Go to **Step 21**	Go to **Vibration Diagnostic Aids**
21	Perform the Vibration Analysis - Road Testing table. Refer to **Vibration Analysis - Road Testing**. Is the disturbance still present?	Go to **Vibration Diagnostic Aids**	System OK

VIBRATION DIAGNOSTIC AIDS

The diagnostic information contained in this diagnostic aids section will help you determine the correct course of action to take for the following 4 main conditions. Refer to the appropriate condition from this list:

- **Vibration Diagnostic Aids - Vibration Intermittent or Not Duplicated**

- **Vibration Diagnostic Aids - Vibration Duplicated, Component Not Identified**
- **Vibration Diagnostic Aids - Vibration Duplicated, Difficult to Isolate/Balance Component**
- **Vibration Diagnostic Aids - Vibration Duplicated, Appears to Be Potential Operating Characteristic**

VIBRATION DIAGNOSTIC AIDS - VIBRATION INTERMITTENT OR NOT DUPLICATED

NOTE: If you have not completed the Vibration Analysis tables as indicated and reviewed Vibration Diagnostic Aids, refer to Vibration Diagnostic Aids BEFORE proceeding.

If you have not been able to duplicate the vibration concern or have only been able to duplicate the concern intermittently, review the following information.

Most vibration concerns that cannot be duplicated are due to either specific conditions that are not present during the duplicating attempts, or due to not following the procedures designed to duplicate concerns properly and in the sequence indicated.

Specific Conditions Can Affect the Condition

Consider the following conditions which may not have been present while attempts were made to duplicate the vibration concern. Attempt to obtain more specific information from the customer as to the EXACT conditions that are present when they experience the vibration which they are concerned about. Attempt to duplicate the vibration concern again while recreating the EXACT conditions necessary, except those which pose a safety concern or are outside the boundaries of normal operating conditions, such as loading the vehicle beyond its designed weight ratings, etc.

Most attempts to duplicate a vibration concern are made after the vehicle has been driven to the repair facility and perhaps even sat inside the building for a time; the vehicle may be too warm to detect the concern during duplication efforts. The opposite could also occur; perhaps the vehicle has sat out in the cold for a time and fails to reach full operating temperatures during attempts to duplicate the concern.

Temperature, Ground-Out, Accessory Load

Flat Spots on Tires

Tires which have sat and been cool for a time can develop flat spots.

Irregular Wear on Tire Treads

Tires which have sat and been cool for a time will be stiffer and any irregular wear conditions will be more noticeable than they will be once the tires have warmed and softened.

Exhaust System Growth

Exhaust systems may exhibit a ground-out condition when cool which goes away once the system is hot. The opposite may be true that the exhaust system is fine when cool but a ground-out condition occurs once the

system reaches operating temperatures. Exhaust systems can grow by 2 1/2 -5 cm (1-2 in) when hot.

Engine-Driven Accessory Noises

NOTE: When a stethoscope equipped with a probe is used to assist in identifying possible vibrating components, the results must be compared to the sound quality of the same accessory, in a equally-equipped, same model year and type, KNOWN GOOD vehicle, and under the same conditions. Refer to Vehicle-to-Vehicle Diagnostic Comparison.

A stethoscope equipped with a probe can be used as an additional means to assist in identifying accessories which may be causing or contributing to a vibration concern.

- Belt Whipping

  An engine accessory drive belt, or belts could exhibit a whipping condition if a belt is deteriorating and deposits are building up on the underside of the belt.

- Loose Mounting Brackets or Component Ground-Out

  Engine-driven accessories such as a generator, a power steering pump, or an air conditioning compressor could exhibit noise conditions due to either loose mounting brackets or due to related components of the system in a ground-out condition during certain operation of that accessory system.

- Cold or Hot

  Accessories could exhibit noise conditions when cool which go away once they are fully warmed-up, or the opposite may be true.

- Load on an Accessory Component

  Accessories could exhibit a noise condition while under a heavy load - perhaps when combined with a cool or fully warmed-up condition.

- Bent or Misaligned Pulleys

  Bent or mis-aligned pulleys in one or more engine-driven accessory systems could contribute to a noise or vibration condition.

- Fluid Level in Accessory Systems

  Accessories could exhibit a noise condition due to an abnormal amount of fluid contained in the system of which the accessory is a part. For example:

  - An improper power steering fluid level could produce noises in the power steering system.
  - An improper air conditioning refrigerant level or an excessive amount of refrigerant oil could produce noises or possibly vibrations in the air conditioning system.

- Incorrect Fluid Type in Accessory Systems

  Accessories could exhibit a noise condition due to the incorrect type of fluid contained in the system of which the accessory is a part.

Vehicle Payload

The vibration concern may only occur when the vehicle is carrying heavy payloads or towing a trailer; the vehicle may have been empty during duplication efforts.

Heavy Payload

The vehicle may have been empty during attempts to duplicate the vibration concern, but the customer may actually experience the vibration concern while the vehicle is carrying a large payload.

Trailer Towing

The customer may experience the vibration concern only while towing a trailer.

Roadway Selection

The selection of roadways used to perform the vibration duplication procedures is likely to be in the near vicinity of the repair facility and may not provide a road surface that is similar enough to the surface on which the customer usually drives the vehicle.

The customer may only experience the vibration on a particular roadway. Perhaps the roadway is overly crowned or is very bumpy or rough.

VIBRATION DIAGNOSTIC AIDS - VIBRATION DUPLICATED, COMPONENT NOT IDENTIFIED

NOTE: If you have not completed the Vibration Analysis tables as indicated and reviewed Vibration Diagnostic Aids, refer to Vibration Diagnostic Aids BEFORE proceeding.

Aftermarket Add-On Accessories

Aftermarket accessories which have been added to the vehicle can actually transmit and magnify INHERENT component rotational frequencies, if the accessories were not installed correctly.

An accessory should be installed in such a way that it is isolated from becoming a possible transfer path into the rest of the vehicle. For example, if a set of running boards has been installed improperly and they are sensitive to a particular frequency of a rotating component, the running boards could begin to respond to the frequency and actually create a disturbance once the amplitude of the frequency reaches a high enough point, probably at a higher vehicle speed.

If the same set of running boards were installed properly-isolated properly-the transfer path would be removed and the disturbance would no longer be present.

VIBRATION DIAGNOSTIC AIDS - VIBRATION DUPLICATED, DIFFICULT TO ISOLATE/BALANCE COMPONENT

NOTE: If you have not completed the Vibration Analysis tables as indicated and reviewed Vibration Diagnostic Aids, refer to Vibration Diagnostic Aids BEFORE proceeding.

If you have duplicated the vibration concern but have had difficulty in balancing a component or isolating a component, refer to the following information.

Most vibration concerns are corrected or eliminated through correcting excessive runout of a component, correcting balance of a component or isolating a component which has come into abnormal contact with another object/component.

Components which can generate a lot of energy and are experiencing excessive runout, imbalance or ground-out can produce a vibration with a strong enough amplitude that the vibration can transmit to components which are closely related. This type of a condition is usually related to and sensitive to torque-load. The most likely system that could exhibit this type of a condition is the driveline.

VIBRATION DIAGNOSTIC AIDS - VIBRATION DUPLICATED, APPEARS TO BE POTENTIAL OPERATING CHARACTERISTIC

NOTE: If you have not completed the Vibration Analysis tables as indicated and reviewed Vibration Diagnostic Aids, refer to Vibration Diagnostic Aids BEFORE proceeding.

Check Service Bulletins

If BOTH of the following statements are TRUE, then check service bulletins for the condition identified. If the condition has already been identified and investigated prior to this vehicle, and has been determined to be something that is not truly an operating characteristic or that perhaps is not design-intent, there will likely be adjustments or corrections identified which will address the condition.

- You CAREFULLY followed the steps indicated through reviewing the Diagnostic Starting Point - Vibration Diagnosis and completing the Vibration Analysis tables identified and you have duplicated the vibration concern.
- You have come to the conclusion through comparison with a very equally-equipped, same model year and type, KNOWN GOOD vehicle that the customer's concern is a condition that appears to be a potential operating characteristic of the vehicle.

SYMPTOMS - VIBRATION DIAGNOSIS AND CORRECTION

NOTE: Perform the following steps in sequence BEFORE using these symptom tables.

Perform the **Vibration Analysis - Road Testing** table before using these symptom tables in order to duplicate and effectively diagnose the customer's concern.

Symptom Tables

Refer to a Vibration Analysis table as indicated in the following symptom tables, based on the most dominant characteristic of the customer's vibration concern, felt or heard, that is evident during the appropriate condition of the occurrence.

Vibration Symptoms that are Felt

Category	Description	Typical Frequency Range	Condition of Occurrence	Area of Focus
Shake	Can sometimes be seen or felt in the steering wheel, seat or console. Related terminology: shimmy, wobble, waddle, shudder, hop	5-20 Hz	Vehicle Speed Sensitive Still occurs during coast down in NEUTRAL	Go to **Vibration Analysis - Tire and Wheel**
			Vehicle Speed Sensitive Affected by torque/load and/or steering input	Go to **Vibration Analysis - Hub and/or Axle Input**
			Engine Speed Sensitive	Go to **Vibration Analysis - Engine**
Roughness	Similar to the feeling of holding a jigsaw.	20-50 Hz	Vehicle Speed Sensitive Still occurs during coast down in NEUTRAL	Go to **Vibration Analysis - Tire and Wheel**
			Vehicle Speed Sensitive Affected by torque/load and/or steering input	Go to **Vibration Analysis - Hub and/or Axle Input**
			Engine Speed Sensitive	Go to **Vibration Analysis - Engine**
Buzz	Similar to the feeling of holding an electric razor. May be felt in the hands through the steering wheel, in the feet through the floor, or in the seat of the pants.	50-100 Hz	Vehicle Speed Sensitive Affected by torque/load and/or steering input	Go to **Vibration Analysis - Hub and/or Axle Input**
			Engine Speed Sensitive	Go to **Vibration Analysis - Engine**
Tingling	May produce a "pins and needles" sensation or may put hands or feet "to sleep". Highest vibration frequency range that can	Greater than 100 Hz	Vehicle Speed Sensitive Affected by torque/load and/or steering input	Go to **Vibration Analysis - Hub and/or Axle Input**
			Engine Speed	Go to **Vibration**

	still be felt.		Sensitive	**Analysis - Engine**

Vibration Symptoms that are Heard

Category	Description	Typical Frequency Range	Condition of Occurrence	Area of Focus
Boom	Usually heard as an interior noise similar to the noise of a bowling ball rolling down an alley, deep thunder, or a bass drum. • Related terminology- droning, growling, moaning, roaring, rumbling, humming • May not be accompanied by a perceptible vibration or roughness	20-60 Hz	Vehicle Speed Sensitive Still occurs during coast down in NEUTRAL	Go to **Vibration Analysis - Tire and Wheel**
			Vehicle Speed Sensitive Affected by torque/load and/or steering input	Go to **Vibration Analysis - Hub and/or Axle Input**
Moan or Drone	Similar to the sound of a bumblebee or blowing air across the top of a bottle. • Related terminology- humming, buzzing, resonance • May be accompanied by a perceptible vibration such as a buzz	60-120 Hz	Vehicle Speed Sensitive Affected by torque/load and/or steering input	Go to **Vibration Analysis - Hub and/or Axle Input**
			Engine Speed Sensitive	Go to **Vibration Analysis - Engine**
Howl	Similar to the sound of the wind howling.	120-300 Hz	Vehicle Speed Sensitive Affected by torque/load and/or steering input	Go to **Vibration Analysis - Hub and/or Axle Input**
			Engine Speed Sensitive	Go to **Vibration Analysis - Engine**
Whine	Similar to the sound of mosquitoes, turbine engines, or vacuum cleaners.	300-500 Hz	Vehicle Speed Sensitive Affected by torque/load	Go to transmission diagnostic information

VEHICLE-TO-VEHICLE DIAGNOSTIC COMPARISON

Comparing the customer's vehicle to a KNOWN GOOD vehicle that is essentially identical will help determine

if the customer's concern may be characteristic of a vehicle design. To arrive at a valid conclusion, the comparison must be performed under the same conditions, using the same criteria, on a vehicle that has the same option content as the customer's vehicle.

The comparison vehicle must match the customer's vehicle in the following areas:

- Model Year
- Make
- Model
- Body style
- Powertrain configuration
- Driveline configuration
- Final drive ratio
- Tire/wheel size and type
- Suspension package
- Trailering package
- GVW rating
- Performance options
- Luxury options

TIRE AND WHEEL INSPECTION

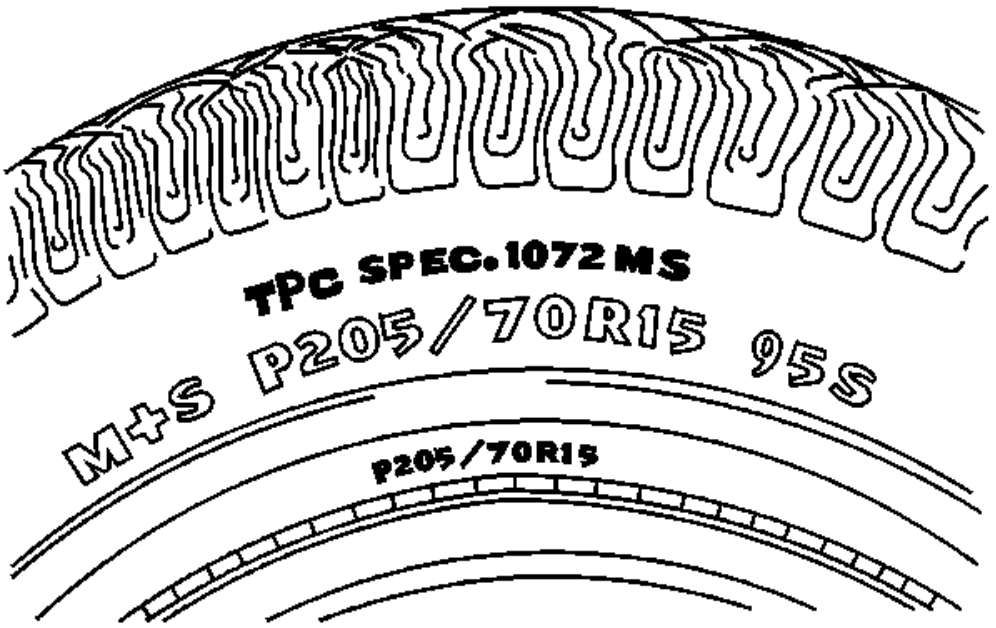

Fig. 3: Identifying Tire Performance Criteria (TPC) Rating Markings
Courtesy of GENERAL MOTORS COMPANY

The tires on all new production models have a tire performance criteria (TPC) rating number molded on the sidewall. The TPC rating will appear as a 4-digit number preceded by the letters TPC SPEC on the tire wall near the tire size. A replacement tire should have the same TPC rating.

Tire Wear

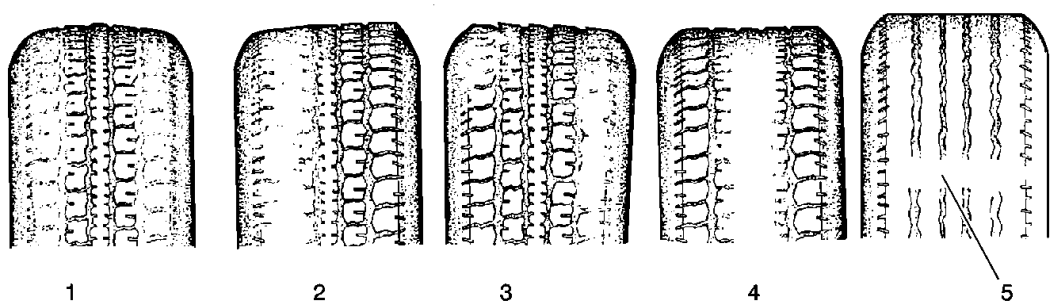

Fig. 4: Identifying Types Of Tire Wear
Courtesy of GENERAL MOTORS COMPANY

Callout	Component Name
1	Hard Cornering/Underinflation
2	Incorrect Alignment/Lack of Rotation
3	Incorrect Alignment/Non-uniform Tire
4	Heavy Acceleration/Over inflation
5	Wear Indicator

Inspect the tire and wheel assemblies for the following conditions:

- Unusual wear such as cupping, flat spots, and/or heel-and-toe wear

  These conditions can cause tire growl, tire howl, slapping noises, and/or vibrations throughout the vehicle.

- Proper inflation to specifications for the vehicle
- Bulges in the sidewalls

  Do not confuse bulges, which are an abnormal condition, with normal ply splices which are commonly seen as indentations in the sidewall.

- Bent rim flanges

TIRE AND WHEEL ASSEMBLY RUNOUT MEASUREMENT - ON-VEHICLE

1. Raise and support the vehicle.
2. Closely inspect each tire for proper and even bead seating.
3. If any of the tire beads were not properly or evenly seated, reseat the tire bead, then proceed to step 4. Refer to **Tire and Wheel Removal and Installation** .

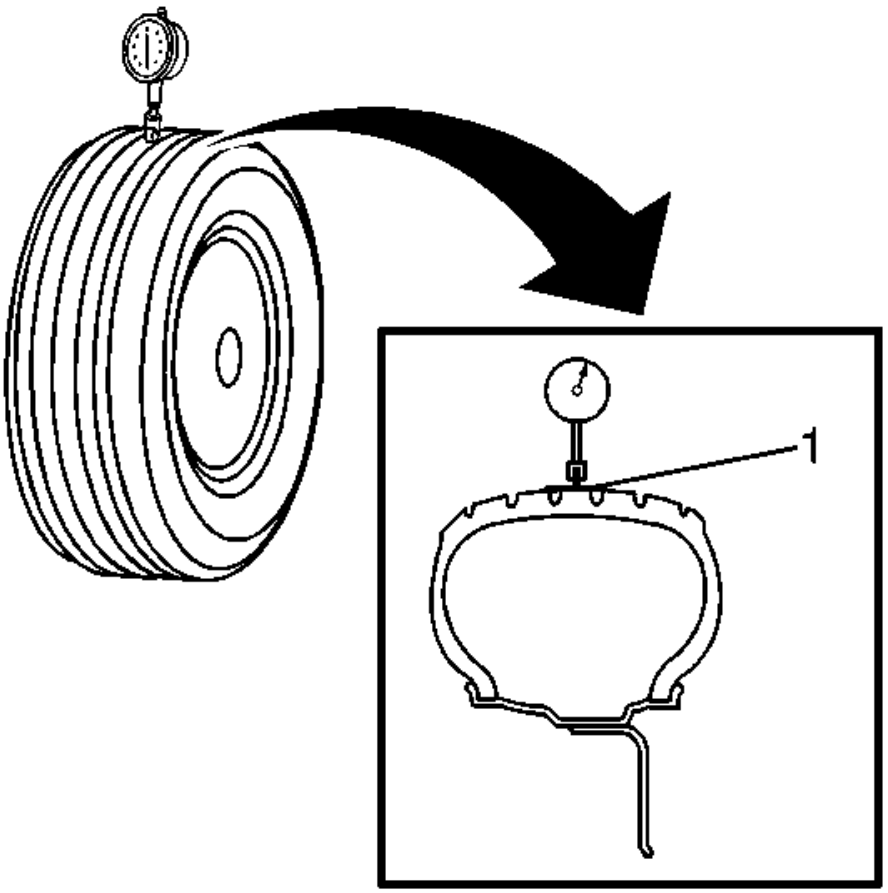

Fig. 5: Measuring Tire & Wheel Assembly Radial Runout
Courtesy of GENERAL MOTORS COMPANY

4. Wrap the circumference of each tire with tape (1) in the center tread area.

   Wrapping the tread with tape allows for a smooth and accurate reading of radial runout to be obtained.

5. Position the dial indicator on the taped portion of the tire tread such that the dial indicator is perpendicular to the tire tread surface.
6. Slowly rotate the tire and wheel assembly one complete revolution in order to find the low spot.
7. Set the dial indicator to zero at the low spot.
8. Slowly rotate the tire and wheel assembly one more complete revolution and measure the total amount of radial runout.

Specification

Maximum tire and wheel assembly radial runout - measured on-vehicle: 1.52 mm (0.060 in)

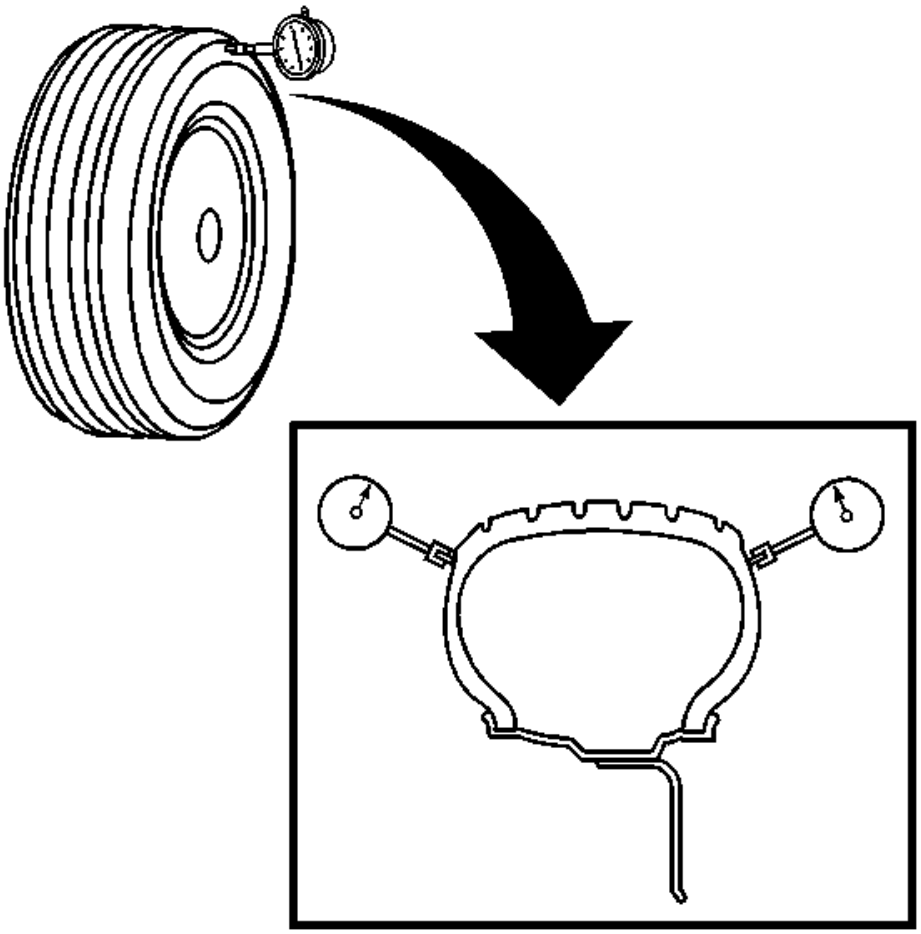

Fig. 6: Measuring Tire & Wheel Assembly Lateral Runout
Courtesy of GENERAL MOTORS COMPANY

9. Position the dial indicator on a smooth portion of the tire sidewall, as close to the tread as possible, such that the dial indicator is perpendicular to the tire sidewall surface.
10. Slowly rotate the tire and wheel assembly one complete revolution in order to find the low spot. Ignore any jumps or dips due to sidewall splices.
11. Set the dial indicator to zero at the low spot.
12. Slowly rotate the tire and wheel assembly one more complete revolution and measure the total amount of lateral runout. Ignore any jumps or dips due to sidewall splices and attain an average runout measurement.

Specification

Maximum tire and wheel assembly lateral runout - measured on-vehicle: 1.52 mm (0.060 in)

13. Repeat steps 4 through 12 until all of the tire and wheel assembly radial and lateral runout measurements have been taken.

14. Lower the vehicle.

TIRE AND WHEEL ASSEMBLY RUNOUT MEASUREMENT - OFF VEHICLE

1. Raise and support the vehicle.
2. Mark the location of the wheels to the wheel studs and mark the specific vehicle position on each tire and wheel - LF, LR, RF, RR.
3. Remove the tire and wheel assemblies from the vehicle.
4. Closely inspect each tire for proper and even bead seating.
5. If any of the tire beads were not properly or evenly seated, reseat the tire bead, then proceed to step 6. Refer to **Tire and Wheel Removal and Installation** .
6. Mount a tire and wheel assembly on a spin-type wheel balancer.

   Locate the tire and wheel assembly on the balancer with a cone through the back side of the center pilot hole.

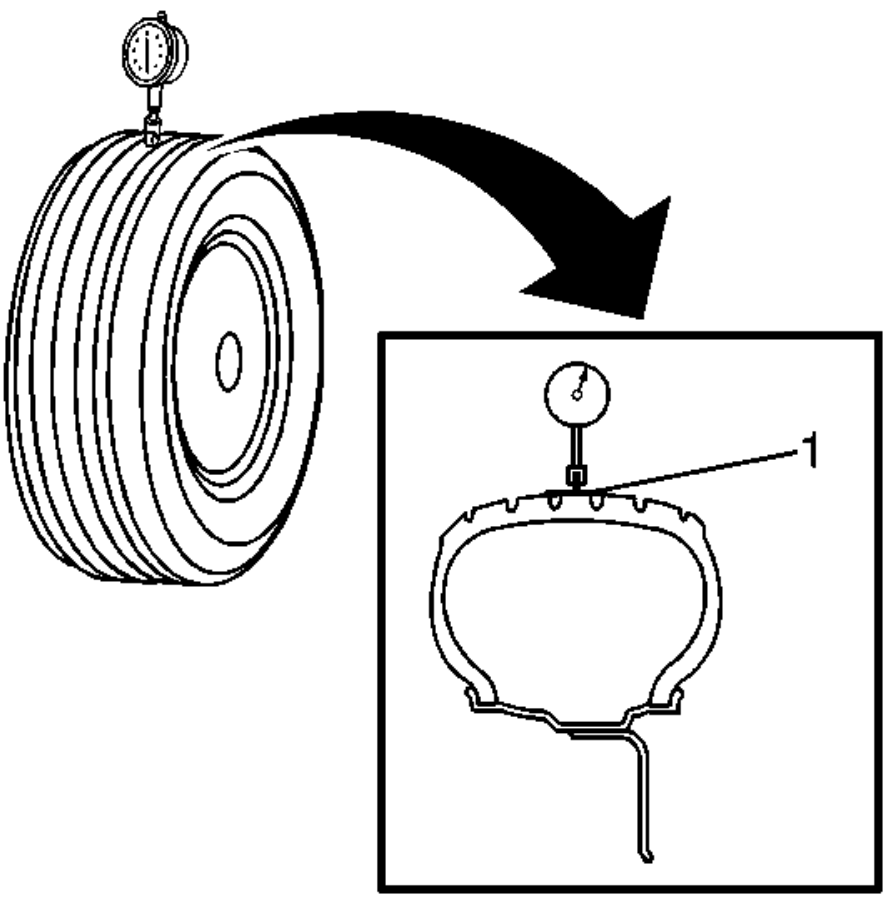

Fig. 7: Measuring Tire & Wheel Assembly Radial Runout

Courtesy of GENERAL MOTORS COMPANY

7. Wrap the outer circumference of each tire with tape (1) in the center tread area.

   Wrapping the tread with tape allows for a smooth and accurate reading of radial runout to be obtained.

8. Position the dial indicator on the taped portion of the tire tread such that the dial indicator is perpendicular to the tire tread surface.
9. Slowly rotate the tire and wheel assembly one complete revolution in order to find the low spot.
10. Set the dial indicator to zero at the low spot.
11. Slowly rotate the tire and wheel assembly one more complete revolution and measure the total amount of radial runout.

Specification

Maximum tire and wheel assembly radial runout - measured off-vehicle: 1.27 mm (0.050 in)

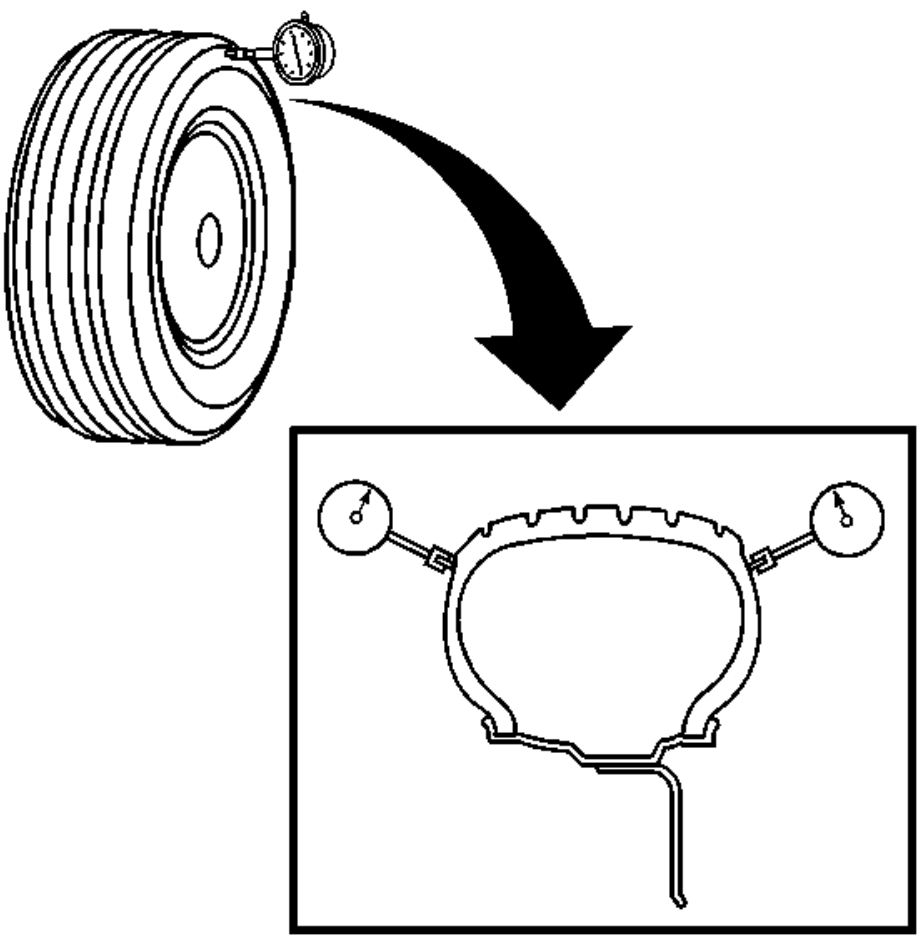

Fig. 8: Measuring Tire & Wheel Assembly Lateral Runout

Courtesy of GENERAL MOTORS COMPANY

12. Position the dial indicator on a smooth portion of the tire sidewall, as close to the tread as possible, such that the dial indicator is perpendicular to the tire sidewall surface.
13. Slowly rotate the tire and wheel assembly one complete revolution in order to find the low spot. Ignore any jumps or dips due to sidewall splices.
14. Set the dial indicator to zero at the low spot.
15. Slowly rotate the tire and wheel assembly one more complete revolution and measure the total amount of lateral runout. Ignore any jumps or dips due to sidewall splices and attain an average runout measurement.

Specification

Maximum tire and wheel assembly lateral runout - measured off-vehicle: 1.27 mm (0.050 in)

16. Repeat steps 6 through 15 until all of the tire and wheel assembly radial and lateral runout measurements have been taken.
17. If ANY of the tire and wheel assembly runout measurements were NOT within specifications, proceed to step 19.
18. If ALL of the tire and wheel assembly runout measurements WERE within specifications, then the off-vehicle tire and wheel assembly runout is considered acceptable.

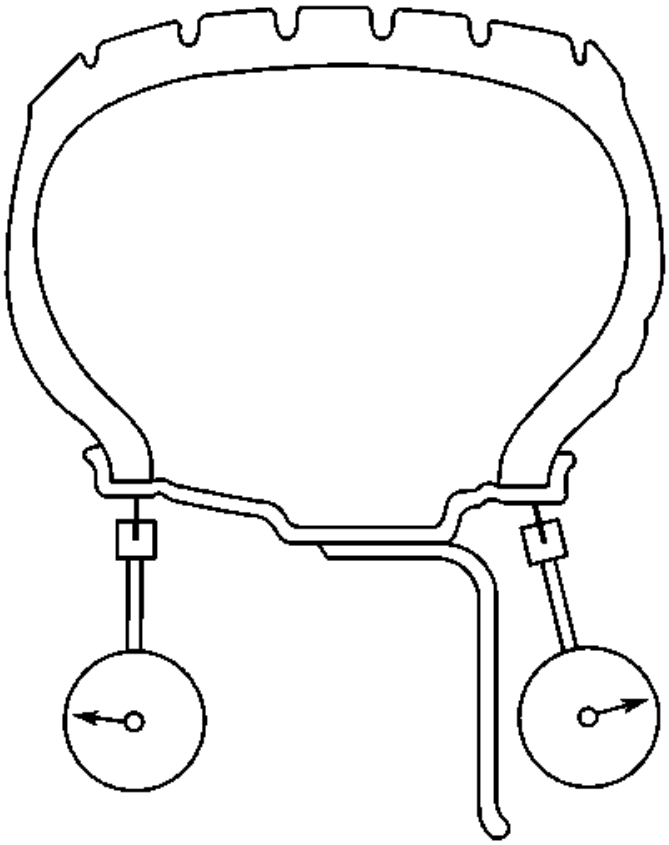

Fig. 9: Measuring Wheel Radial Runout (Off-Vehicle, Tire Mounted)
Courtesy of GENERAL MOTORS COMPANY

19. Position the dial indicator on the horizontal outer surface of the wheel rim flange - with the tire still mounted - such that the dial indicator is perpendicular to the rim flange surface.

    Wheel runout should be measured on both the inboard and outboard rim flanges, unless wheel design will not permit. Ignore any jumps or dips due to paint drips, chips, or welds.

20. Slowly rotate the tire and wheel assembly one complete revolution in order to find the low spot.
21. Set the dial indicator to zero at the low spot.
22. Slowly rotate the tire and wheel assembly one more complete revolution and measure the total amount of wheel radial runout.

Specification

- Maximum aluminum wheel radial runout - measured off-vehicle, tire mounted: 0.762 mm (0.030

in)

- Maximum steel wheel radial runout - measured off-vehicle, tire mounted: 1.015 mm (0.040 in)

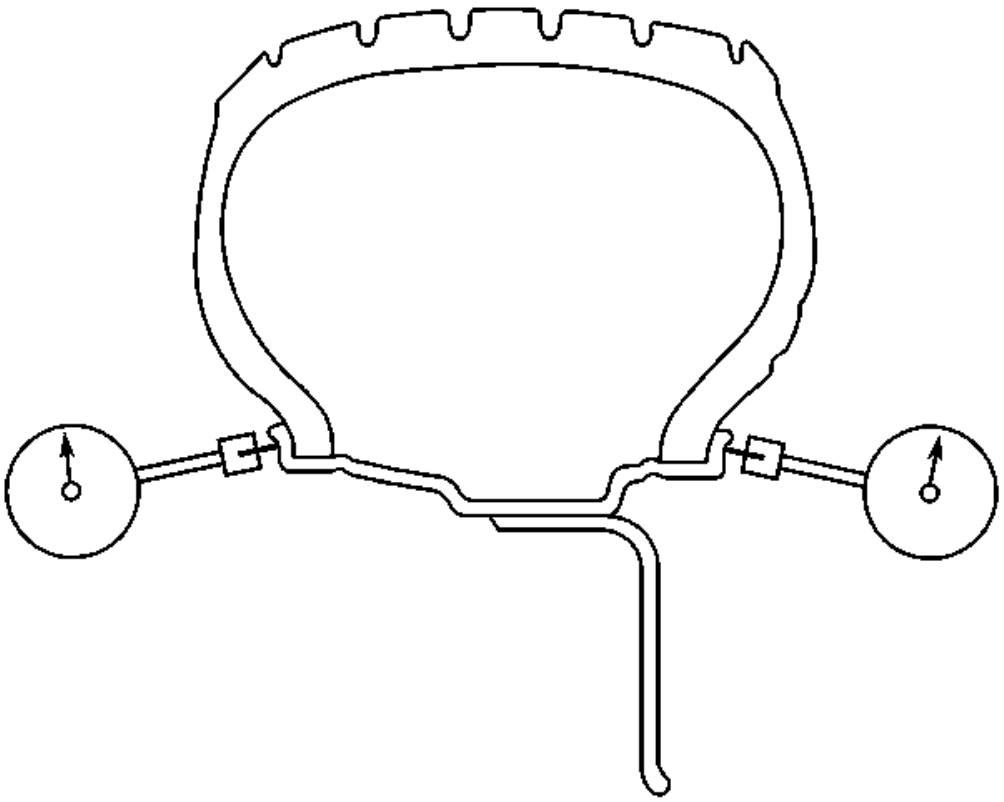

Fig. 10: Measuring Wheel Lateral Runout (Off-Vehicle, Tire Mounted)
Courtesy of GENERAL MOTORS COMPANY

23. Position the dial indicator on the vertical outer surface of the wheel rim flange - with the tire still mounted - such that the dial indicator is perpendicular to the rim flange surface.

    Wheel runout should be measured on both the inboard and outboard rim flanges, unless wheel design will not permit. Ignore any jumps or dips due to paint drips, chips, or welds.

24. Slowly rotate the tire and wheel assembly one complete revolution in order to find the low spot.
25. Set the dial indicator to zero at the low spot.
26. Slowly rotate the tire and wheel assembly one more complete revolution and measure the total amount of wheel lateral runout.

Specification

- Maximum aluminum wheel lateral runout - measured off-vehicle, tire mounted: 0.762 mm (0.030 in)
- Maximum steel wheel lateral runout - measured off-vehicle, tire mounted: 1.143 mm (0.045 in)

27. Repeat steps 19 through 26 until all of the wheel radial and lateral runout measurements have been taken on each of the - tire and wheel - assemblies with assembly runout measurements which were NOT within specifications.
28. If any of the wheel runout measurements were NOT within specifications, proceed to Measuring Wheel Runout - Tire Dismounted.
29. For any of the wheel runout measurements which WERE within specifications, while the - tire and wheel - assembly runout measurements were NOT within specifications, replace the tire, then balance the assembly. Refer to **Tire and Wheel Assembly Balancing - Off Vehicle**.
30. After replacement of any tires, always re-measure the runout of the affected tire and wheel assembly, or assemblies.
31. Using the matchmarks made prior to removal, install the tire and wheel assemblies to the vehicle.
32. Lower the vehicle.

Wheel Runout Measurement - Tire Dismounted

1. On the tire and wheel assembly, or assemblies with wheel runout measurements - tire mounted - which were NOT within specifications, mark each tire and wheel in relation to each other.
2. Dismount the tire from the wheel. Refer to **Tire Dismounting and Mounting** .
3. Mount the wheel on a spin-type wheel balancer.
4. Locate the wheel on the balancer with a cone through the back side of the center pilot hole.

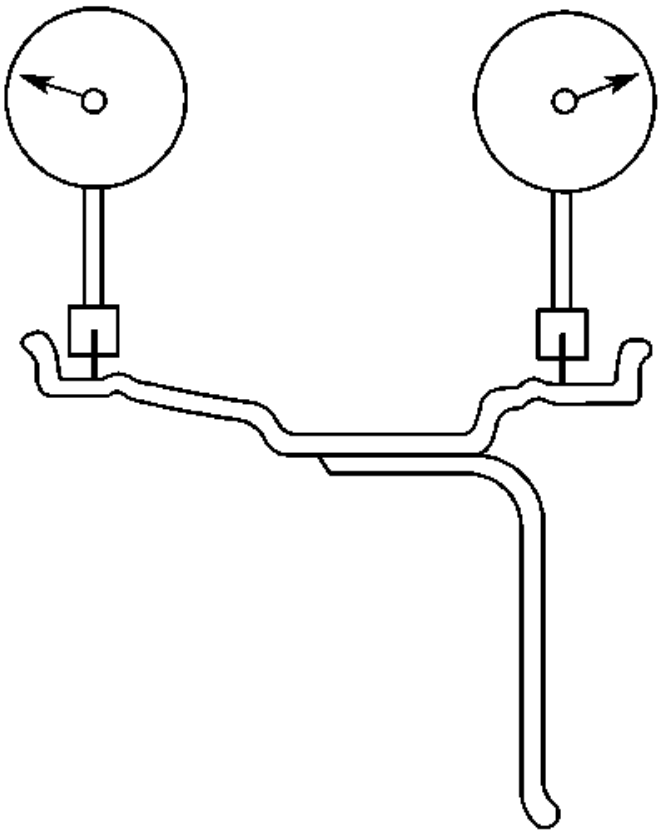

Fig. 11: Measuring Wheel Radial Runout (Off-Vehicle, Tire Dismounted)
Courtesy of GENERAL MOTORS COMPANY

5. Position the dial indicator on the horizontal inner surface of the wheel rim flange - with the tire dismounted - such that the dial indicator is perpendicular to the rim flange surface.

   Wheel runout should be measured on both the inboard and outboard rim flanges. Ignore any jumps or dips due to paint drips, chips, or welds.

6. Slowly rotate the wheel one complete revolution in order to find the low spot.
7. Set the dial indicator to zero at the low spot.
8. Slowly rotate the wheel one more complete revolution and measure the total amount of wheel radial runout.

Specification

- Maximum aluminum wheel radial runout - measured off-vehicle, tire dismounted: 0.762 mm (0.030

in)

- Maximum steel wheel radial runout - measured off-vehicle, tire dismounted: 1.015 mm (0.040 in)

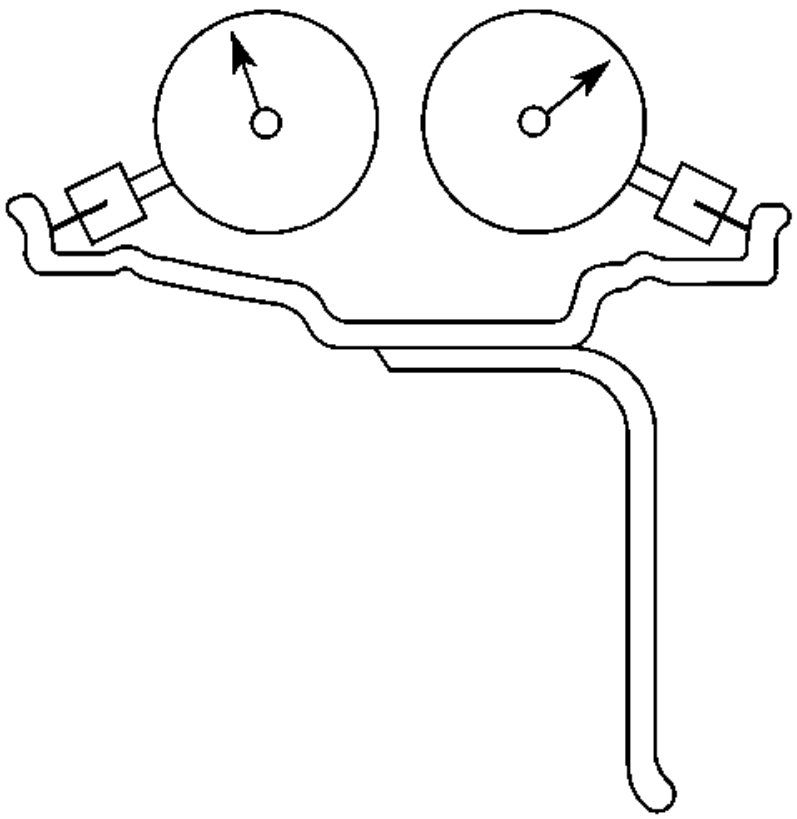

Fig. 12: Measuring Wheel Lateral Runout (Off-Vehicle, Tire Dismounted)
Courtesy of GENERAL MOTORS COMPANY

9. Position the dial indicator on the vertical inner surface of the wheel rim flange - with the tire dismounted - such that the dial indicator is perpendicular to the rim flange surface.

   Wheel runout should be measured on both the inboard and outboard rim flanges. Ignore any jumps or dips due to paint drips, chips, or welds.

10. Slowly rotate the wheel one complete revolution in order to find the low spot.
11. Set the dial indicator to zero at the low spot.
12. Slowly rotate the wheel one more complete revolution and measure the total amount of wheel lateral runout.

Specification

- Maximum aluminum wheel lateral runout - measured off-vehicle, tire dismounted: 0.762 mm (0.030 in)
- Maximum steel wheel lateral runout - measured off-vehicle, tire dismounted: 1.143 mm (0.045 in)

13. Repeat steps 2 through 12 until all of the wheel radial and lateral runout measurements - tire dismounted - have been taken on each wheel with runout measurements - tire mounted - which were NOT within specifications.
14. If any of the wheel runout measurements - tire dismounted - were NOT within specifications, replace the wheel.

    Always measure the runout of any replacement wheels.

15. For any of the wheel runout measurements which WERE within specifications, while the - tire and wheel - assembly runout measurements were NOT within specifications, replace the tire, then balance the assembly. Refer to **Tire and Wheel Assembly Balancing - Off Vehicle**.
16. Using the matchmarks made prior to dismounting the tire, or tires, mount the tire, or tires to the wheel, or wheels, then balance the assembly, or assemblies. Refer to **Tire and Wheel Assembly Balancing - Off Vehicle**.

    Always measure the runout of any of the tire and wheel assemblies which have had the tires dismounted and mounted.

17. Using the matchmarks made prior to removal, install the tire and wheel assemblies to the vehicle.
18. Lower the vehicle.

BRAKE ROTOR/DRUM BALANCE INSPECTION

1. Support the vehicle drive axle on a suitable hoist. Refer to **Lifting and Jacking the Vehicle** .
2. Remove the tire and wheel assemblies from the drive axle. Refer to **Tire and Wheel Removal and Installation** .

   WARNING: Refer to Work Stall Test Warning .

3. Reinstall the wheel nuts in order to retain the brake rotors.
4. Run the vehicle at the concern speed while inspecting for the presence of the vibration.

   CAUTION: Do not depress the brake pedal with the brake rotors and/or the brake drums removed, or with the brake calipers repositioned away from the brake rotors, or damage to the brake system may result.

5. If the vibration is still present, remove the rotors from the drive axle, then run the vehicle back to the concern speed.

6. If the vibration is eliminated when the brake rotors are removed from the drive axle, repeat the test with one rotor installed at a time. Replace the rotor that is causing or contributing to the vibration concern.

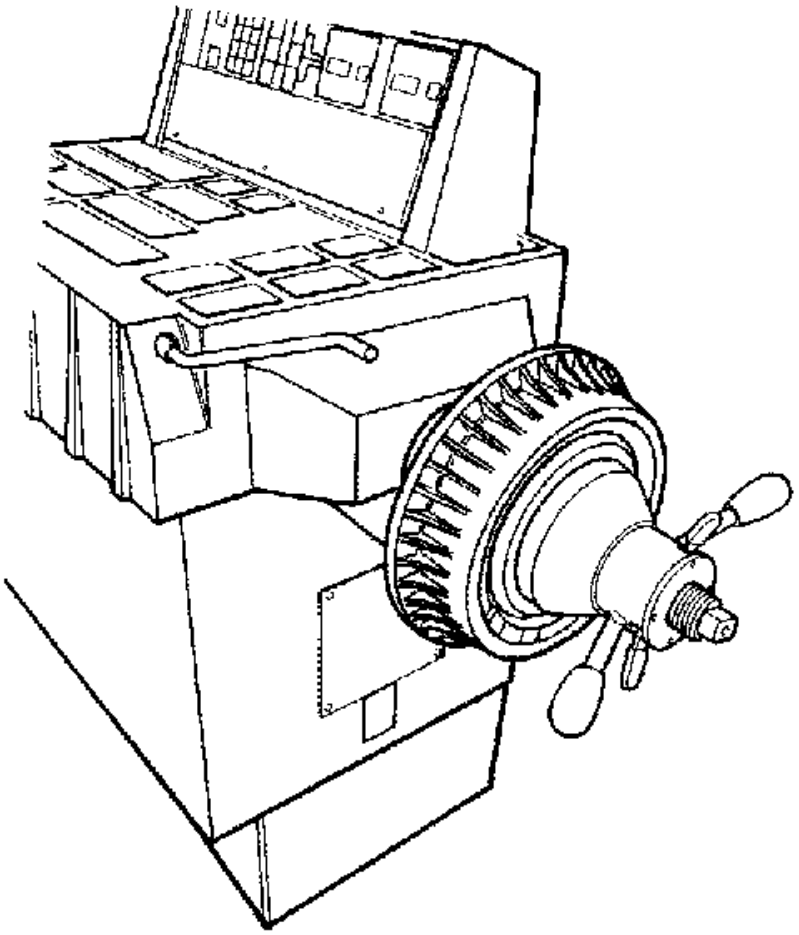

Fig. 13: Balancing Brake Drum
Courtesy of GENERAL MOTORS COMPANY

7. If a brake rotor was replaced as a result of following the previous steps, or if necessary to confirm the results obtained during the previous steps, and/or to check the non-drive axle components, perform the following:
    1. Mount the brake rotor/drum on a balancer in the same manner as a tire and wheel assembly.

        NOTE: Check brake rotors/drums for static imbalance only; ignore the dynamic imbalance readings.

    2. Inspect the rotor/drum for static imbalance.

There is not a set tolerance for brake rotor/drum static imbalance. However, any brake rotor/drum measured in

this same manner which is over 21 g (3/4 oz) may have the potential to cause or contribute to a vibration. Rotors/drums suspected of causing or contributing to a vibration should be replaced. Any rotor/drum that is replaced should be checked for imbalance in the same manner.

HUB/AXLE FLANGE AND WHEEL STUD RUNOUT INSPECTION

Special Tools

GE-8001 Dial Indicator Set, or equivalent

1. Raise and support the vehicle. Refer to **Lifting and Jacking the Vehicle** .
2. Mark the location of the wheels to the wheel studs and mark the specific vehicle position on each tire and wheel - LF, LR, RF, RR.
3. Remove the tire and wheel assemblies from the vehicle. Refer to **Tire and Wheel Removal and Installation** .
4. Remove the brake rotors and/or brake drums from the vehicle. Clean the mounting surfaces of the brake rotors, the brake drums, if equipped, and the hub/axle flanges of any loose debris, rust, and corrosion.

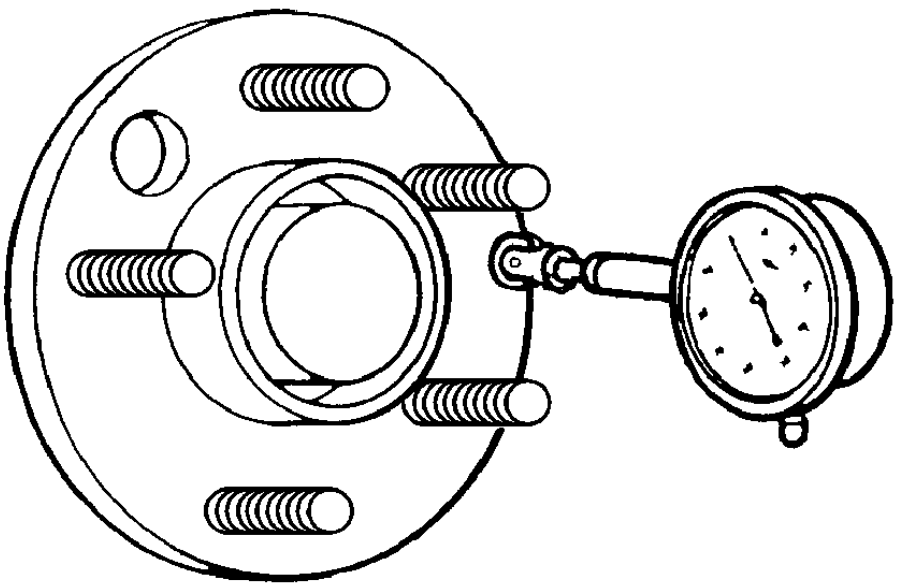

Fig. 14: Measuring Wheel Hub/Axle Flange Runout
Courtesy of GENERAL MOTORS COMPANY

5. Position the **GE-8001** Dial Indicator Set, or equivalent, on the machined surface of the wheel hub/axle flange outside of the wheel studs.
6. Rotate the hub one complete revolution in order to find the low spot.
7. Set the **GE-8001** Dial Indicator Set, or equivalent, to zero at the low spot.
8. Rotate the hub one more complete revolution and measure the total amount of wheel hub/axle flange runout.

Specification - Guideline

Wheel hub/axle flange runout tolerance guideline: 0.132 mm (0.005 in)

9. If the runout of the wheel hub/axle flange IS within specification and the vehicle is equipped with wheel studs, proceed to step 13.
10. If the runout of the wheel hub/axle flange IS within specification and the vehicle is equipped with wheel

bolts, proceed to step 19.

11. If the runout of the wheel hub/axle flange is marginal, the wheel hub may or may not be the source of the disturbance.
12. If the runout of the wheel hub/axle flange is excessive, replace the wheel hub/axle flange. Measure the runout of the new wheel hub/axle flange.

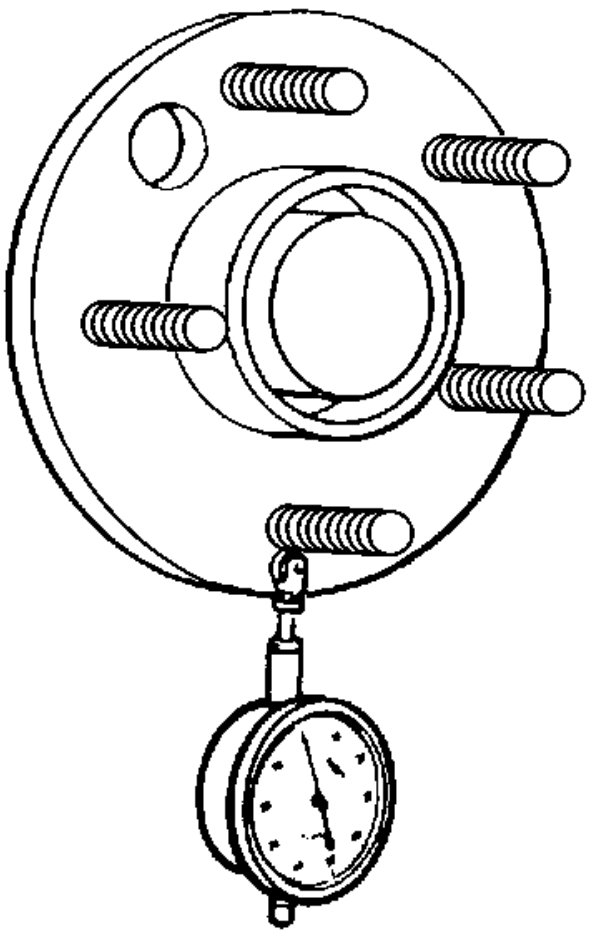

Fig. 15: Measuring Wheel Stud Runout
Courtesy of GENERAL MOTORS COMPANY

13. Position the **GE-8001** Dial Indicator Set, or equivalent, in order to contact the wheel mounting studs.

    Measure the stud runout as close to the flange as possible.

14. Turn the hub one complete revolution to register on each of the wheel studs.
15. Zero the **GE-8001** Dial Indicator Set, or equivalent, on the lowest stud.
16. Rotate the hub one more complete revolution and measure the total amount of wheel stud - stud circle - runout.

Specification - Guideline

Wheel stud runout tolerance guideline: 0.254 mm (0.010 in)

17. If the runout of the wheel studs - stud circle - is marginal, the wheel studs may or may not be contributing to the disturbance.
18. If the runout of the wheel studs - stud circle - is excessive, replace the wheel studs as necessary. Measure the runout of the new wheel studs.
19. Inspect the threads and the tapered seat portion on each of the wheel bolts for damage.
20. Wheel bolts exibiting damaged threads and/or damaged tapered seats require replacement.
21. Place the threaded portion of each wheel bolt along a straight edge to inspect for straightness.
22. Wheel bolts that are not straight require replacement.

TIRE AND WHEEL ASSEMBLY ISOLATION TEST

Force Variation

Force variation refers to a radial or lateral movement of the tire and wheel assembly which acts much like runout, however, force variation has to do with variations in the construction of the tire. These variations in tire construction may actually cause vibration in a vehicle, even though the tire and wheel assembly runout and balance may be within specifications.

Radial Force Variation

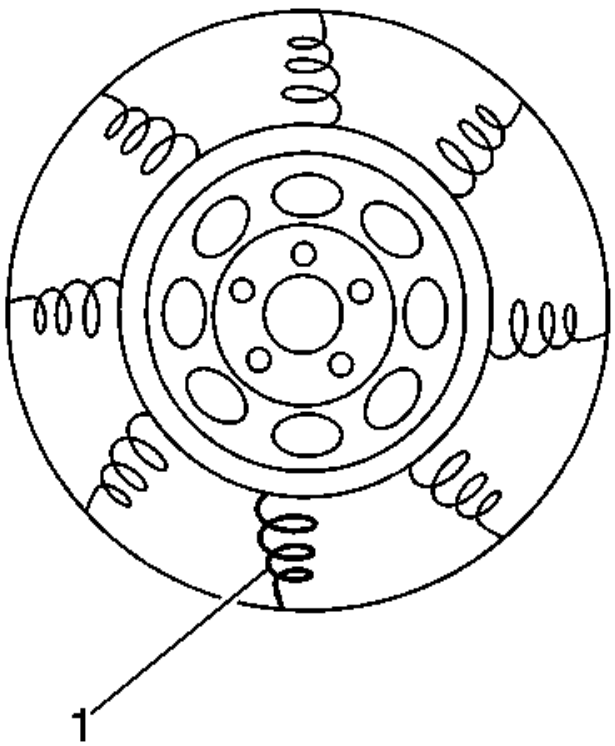

Fig. 16: Identifying Radial Force Variation
Courtesy of GENERAL MOTORS COMPANY

Radial force variation refers to the difference in the stiffness of a tire sidewall as the tire rotates and contacts the road. Tire sidewalls have some stiffness due to splices in the different plies of the tire, but these stiffness differences do not cause a problem unless the force variation is excessive. Stiff spots (1) in a tire sidewall can deflect a tire and wheel assembly upward as the assembly contacts the road.

Lateral Force Runout

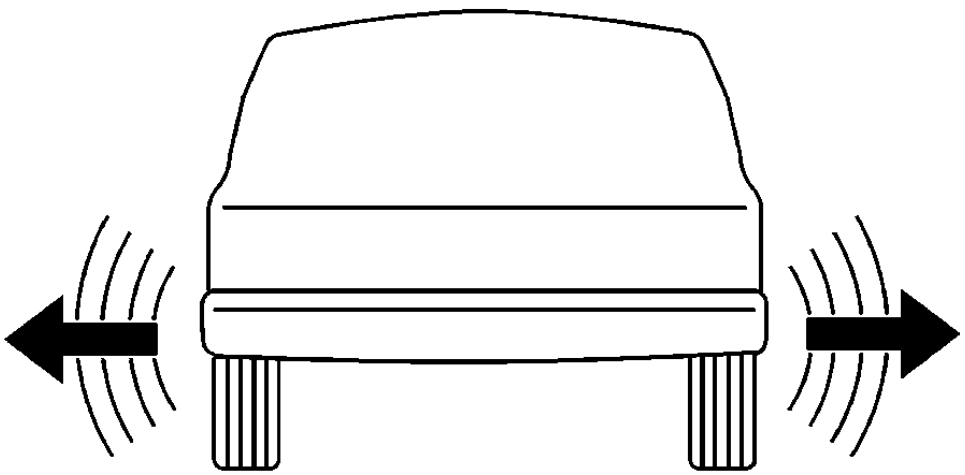

Fig. 17: Identifying Tire Wobble/Waddle
Courtesy of GENERAL MOTORS COMPANY

Lateral force variation refers to the difference in the stiffness or conformity of the belts within a tire as the tire rotates and contacts the road. Tire belts may have some stiffness or conformity differences, but these differences do not cause a problem unless the force variation is excessive. These variations in the belts of the tire can deflect the vehicle sideways or laterally. A shifted belt inside a tire may cause lateral force variation.

In most cases where excessive lateral force variation exists, the vehicle will display a wobble or waddle at low speeds, 8-40 km/h (5-25 mph), on a smooth road surface.

Isolation Test Procedure

Perform the following test in order to determine if force variation is present in the vehicle.

1. Substitute a set of KNOWN GOOD, pre-tested tire and wheel assemblies of the same size and type for the suspected original assemblies. Refer to **Tire and Wheel Removal and Installation** .
2. Road test the vehicle to determine if the vibration is still present. Refer to **Vibration Analysis - Road**

Testing.

3. If the vibration is still present while using the known good set of tire and wheel assemblies, then force variation is not the cause of the vibration.
4. If the vibration is eliminated when using the known good set of tire and wheel assemblies, install one of the original tire and wheel assemblies using the matchmarks made prior to removal. Refer to **Tire and Wheel Removal and Installation** . Road test the vehicle to determine if the vibration has returned. Refer to **Vibration Analysis - Road Testing**.
5. Continue the process of installing the original tire and wheel assemblies one at a time, then road testing the vehicle, until the tire and wheel assembly, or assemblies which is causing the vibration has been identified.
6. Replace the tire, or tires on the vibration-causing tire and wheel assembly, or assemblies, then balance the assembly, or assemblies. Refer to **Tire and Wheel Assembly Balancing - Off Vehicle**.

REPAIR INSTRUCTIONS

TIRE AND WHEEL ASSEMBLY BALANCING - OFF VEHICLE

WARNING: Failure to adhere to the following precautions before tire balancing can result in personal injury or damage to components:

- **Clean away any dirt or deposits from the inside of the wheels.**
- **Remove any stones from the tread.**
- **Wear eye protection.**
- **Use coated weights on aluminum wheels.**

Tire and Wheel Assembly Balancer Calibration

Tire and wheel balancers can drift out of calibration over time, or can become inaccurate as a result of heavy use. There will likely not be any visual evidence that a calibration problem exists. If a balancer is not calibrated within specifications, and a tire and wheel assembly is balanced on that machine, the assembly may actually be imbalanced.

Tire and wheel assembly balancer calibration should be checked approximately every 2 weeks, if the machine is used frequently, and/or whenever the balance readings are questionable.

Tire and Wheel Assembly Balancer Calibration Test

NOTE: If the balancer fails any of the steps in this calibration test, the balancer should be calibrated according to the manufacturer's instructions. If the balancer cannot be calibrated, contact the manufacturer for assistance.

Inspect the calibration of the tire and wheel assembly balancer according to the manufacturer's recommendations, or perform the following test.

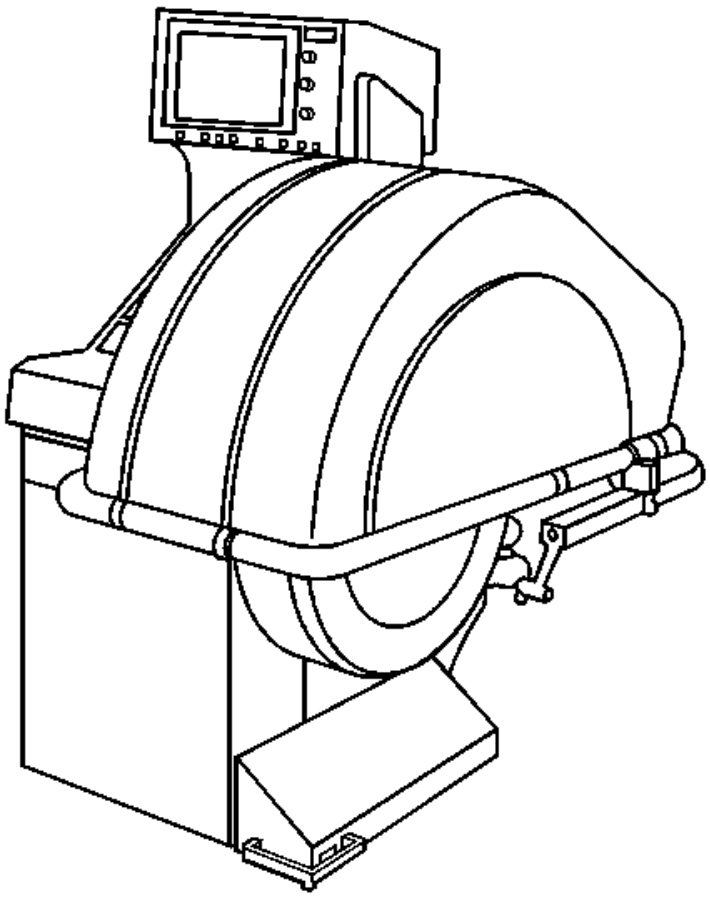

Fig. 18: View Of Tire & Wheel Assembly Balancer
Courtesy of GENERAL MOTORS COMPANY

1. Spin the balancer without a wheel or any of the adapters on the shaft.
2. Inspect the balancer readings.

Specification

Zero within 7 g (1/4 oz)

3. If the balancer is within the specification range, balance a tire and wheel assembly - that is within radial and lateral runout tolerances - to ZERO, using the same balancer.
4. After the tire and wheel assembly has been balanced, add an 85 g (3 oz) test weight to the wheel at any location.
5. Spin the tire and wheel assembly again. Note the readings.
    - In the static and dynamic modes, the balancer should call for 85 g (3 oz) of weight, 180 degrees opposite the test weight.
    - In the dynamic mode, the weight should be called for on the flange of the wheel opposite the test

weight.

6. With the assembly imbalanced to 85 g (3 oz), cycle the balancer 5 times.
7. Inspect the balancer readings:

   Specification

   Maximum variation: 7 g (1/4 oz)

8. Index the tire and wheel assembly on the balancer shaft, 90 degrees from the previous location.
9. Cycle the balancer with the assembly at the new location.
10. Inspect the balancer readings:

    Specification

    Maximum variation: 7 g (1/4 oz)

11. Repeat steps 8 through 10 until the tire and wheel assembly has been cycled and checked at each of the 4 locations on the balancer shaft.

Tire and Wheel Assembly Balancing Guidelines

There are 2 types of tire and wheel balance:

Static Balance

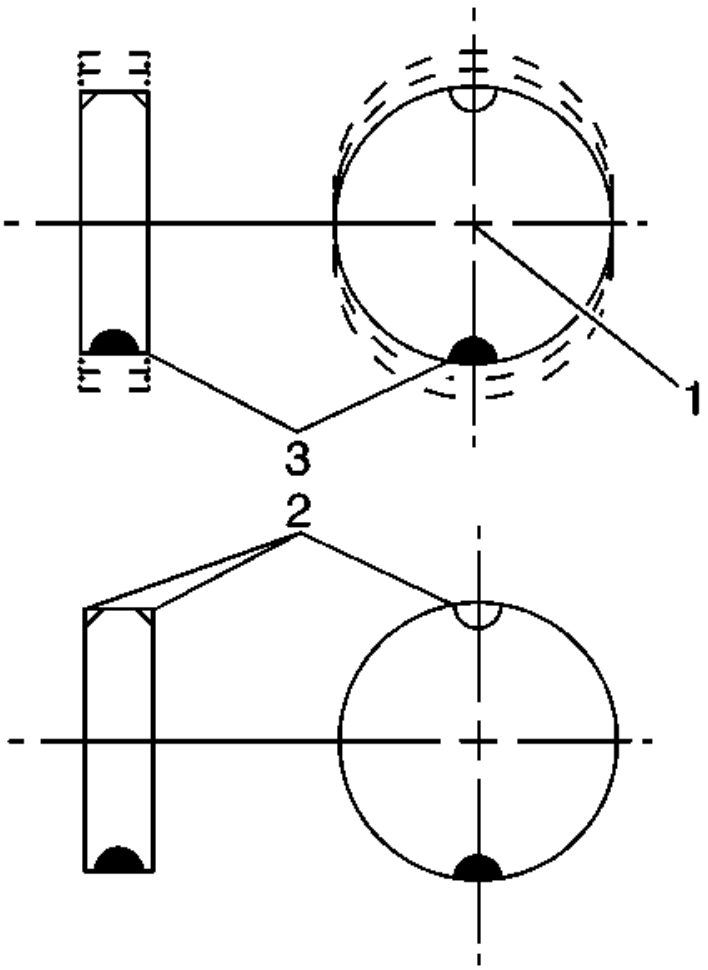

Fig. 19: View Of Static Balance
Courtesy of GENERAL MOTORS COMPANY

Static balance is the equal distribution of weight around the wheel circumference. The wheel balance weights (2) are positioned on the wheel in order to offset the effects of a heavy spot (3). Wheels that have static imbalance can produce a bouncing action called tramp.

Dynamic Balance

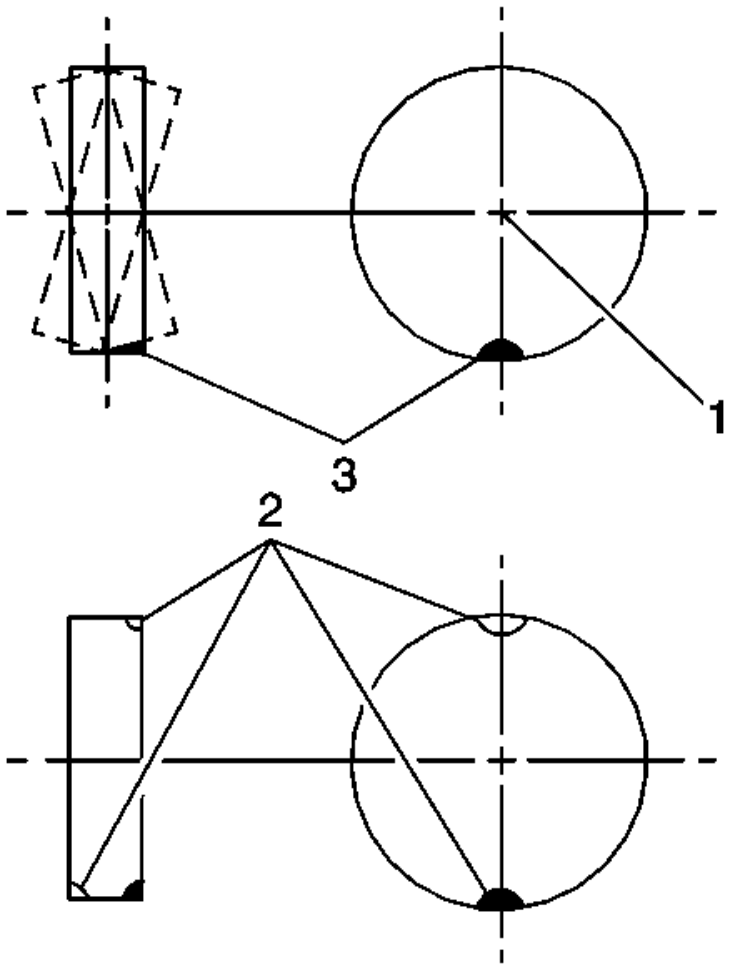

Fig. 20: View Of Dynamic Balance
Courtesy of GENERAL MOTORS COMPANY

Dynamic balance is the equal distribution of weight on each side of the tire and wheel assembly centerline. The wheel balance weights (2) are positioned on the wheel in order to offset the effects of a heavy spot (3). Wheels that have dynamic imbalance have a tendency to move from side to side and can cause an action called shimmy.

Most off-vehicle balancers are capable of checking both types of balance simultaneously.

As a general rule, most vehicles are more sensitive to static imbalance than to dynamic imbalance; however, vehicles equipped with low profile, wide tread path, high performance tires and wheels are susceptible to small amounts of dynamic imbalance. As little as 14-21 g (1/2 - 3/4 oz) imbalance is capable of inducing a vibration in some vehicle models.

Balancing Procedure

NOTE: When balancing tire and wheel assemblies, use a known good, recently calibrated, off-vehicle, two-plane dynamic balancer set to the finest balance

mode available.

1. Raise and support the vehicle. Refer to **Lifting and Jacking the Vehicle** .
2. Mark the location of the wheels to the wheel studs and mark the specific vehicle position on each tire and wheel - LF, LR, RF, RR.
3. Remove the tire and wheel assemblies one at a time and mount on a spin-type wheel balancer. Refer to **Tire and Wheel Removal and Installation** .
4. Carefully follow the wheel balancer manufacturer's instructions for proper mounting techniques to be used on different types of wheels.

   Regard aftermarket wheels, especially those incorporating universal lug patterns, as potential sources of runout and mounting concerns.

5. Be sure to use the correct type of wheel balance weights for the type of wheel rim being balanced. Be sure to use the correct type of coated wheel balance weights on aluminum wheels. Refer to Wheel Weight Usage.
6. Balance all four tire and wheel assemblies as close to zero as possible.
7. Using the matchmarks made prior to removal, install the tire and wheel assemblies to the vehicle. Refer to **Tire and Wheel Removal and Installation** .
8. Lower the vehicle.

Wheel Weight Usage

Tire and wheel assemblies can be balanced using either the static or dynamic method.

Clip-on Weights

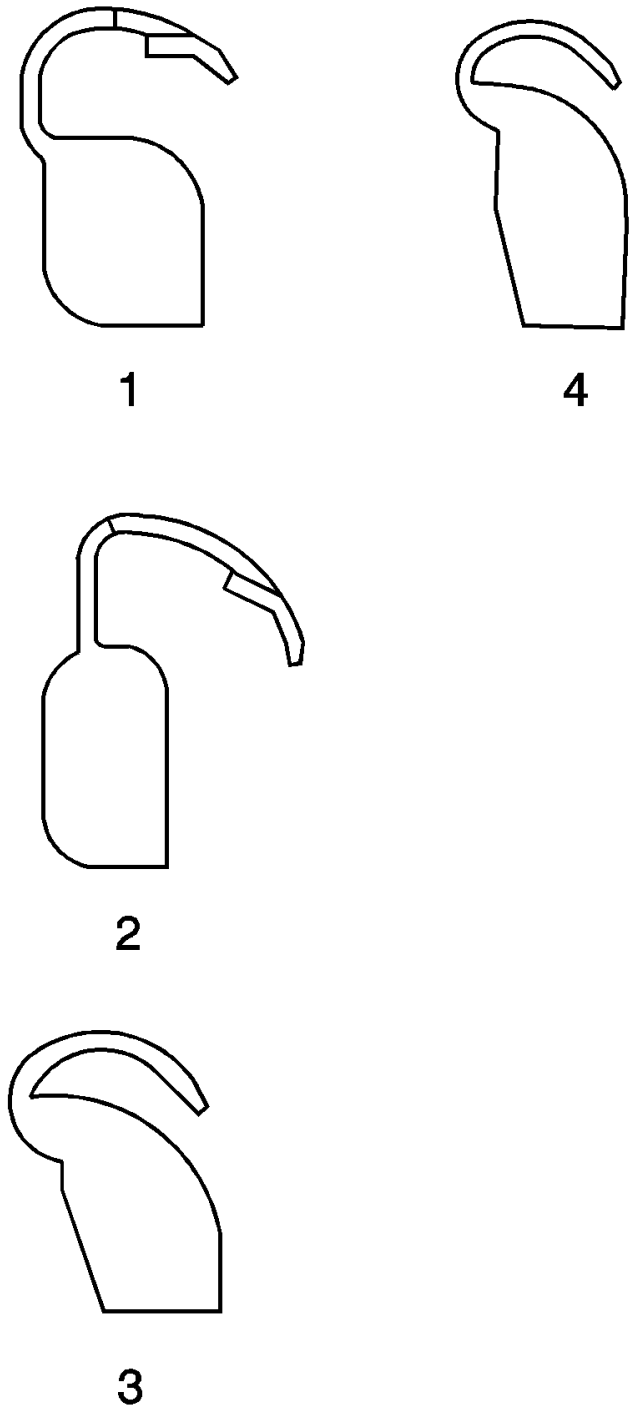

Fig. 21: Identifying Clip-On Wheel Weight Types
Courtesy of GENERAL MOTORS COMPANY

NOTE: When balancing factory aluminum wheels with clip-on wheel balance weights,

be sure to use special polyester-coated weights. These coated weights reduce the potential for corrosion and damage to aluminum wheels.

These coated weights reduce the potential for corrosion and damage to aluminum wheels.

- MC (1) and AW (2) series weights are approved for use on aluminum wheels.
- P (3) series weights are approved for use on steel wheels only.
- T (4) series coated weights are approved for use on both steel and aluminum wheels.

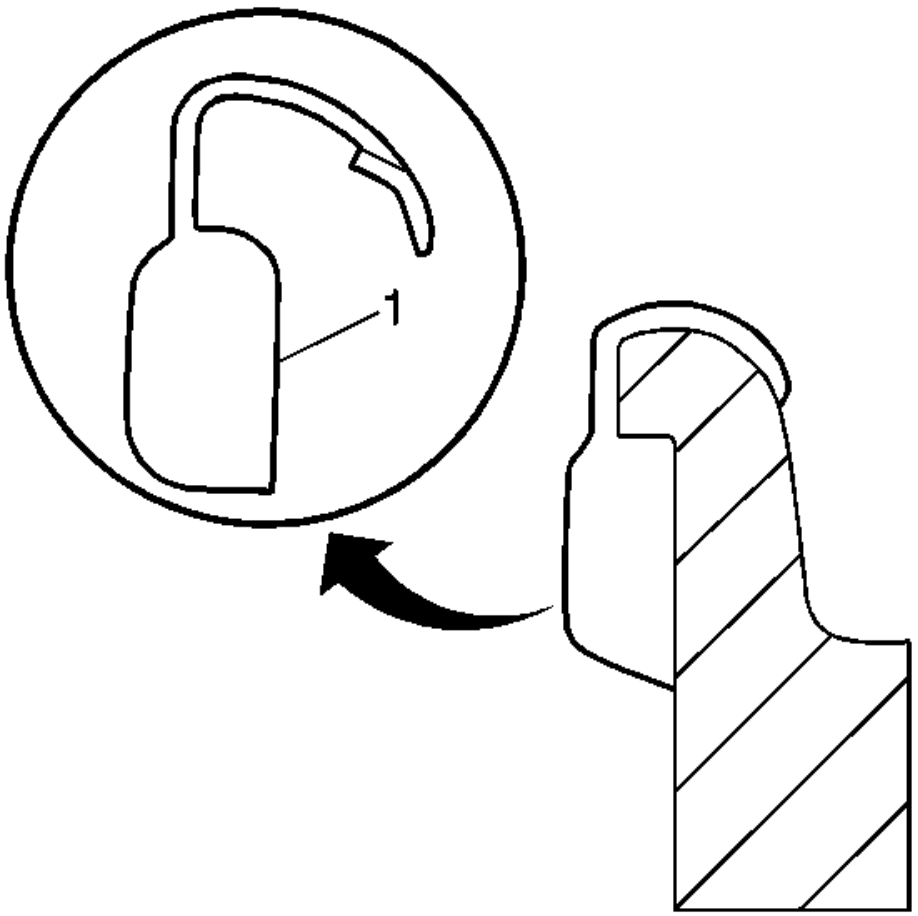

Fig. 22: Attaching Clip-On Wheel Weight
Courtesy of GENERAL MOTORS COMPANY

NOTE: Use a nylon or plastic-tipped hammer when installing coated clip-on wheel balance weights to minimize the possibility of damage to the polyester coating.

The contour and style of the wheel rim flange will determine which type of clip-on wheel weight (1) should be used. The weight should follow the contour of the rim flange. The weight clip should firmly grip the rim flange.

Wheel Weight Placement - Clip-on Weights

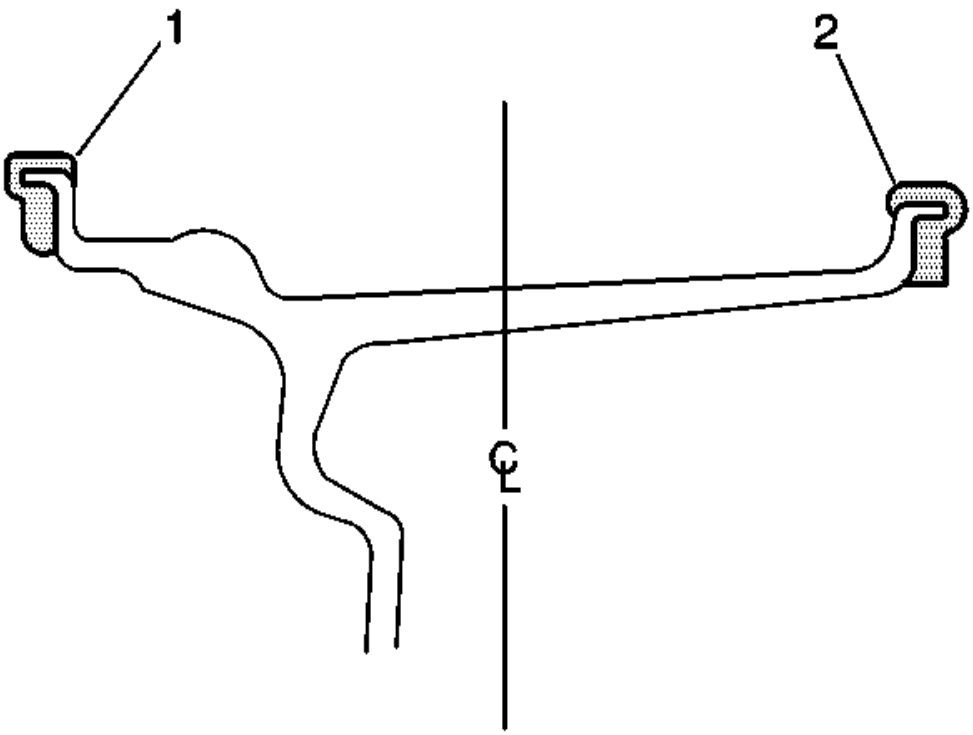

Fig. 23: View Of Wheel Weight Placement - Static Balancing
Courtesy of GENERAL MOTORS COMPANY

When static balancing, locate the wheel balance weights on the inboard flange (2) if only 28 g (1 oz) or less is called for. If more than 28 g (1 oz) is called for, split the weights as equally as possible between the inboard (2) and outboard (1) flanges.

When dynamic balancing, locate the wheel balance weights on the inboard (2) and outboard (1) rim flanges at the positions specified by the wheel balancer.

Adhesive Weights

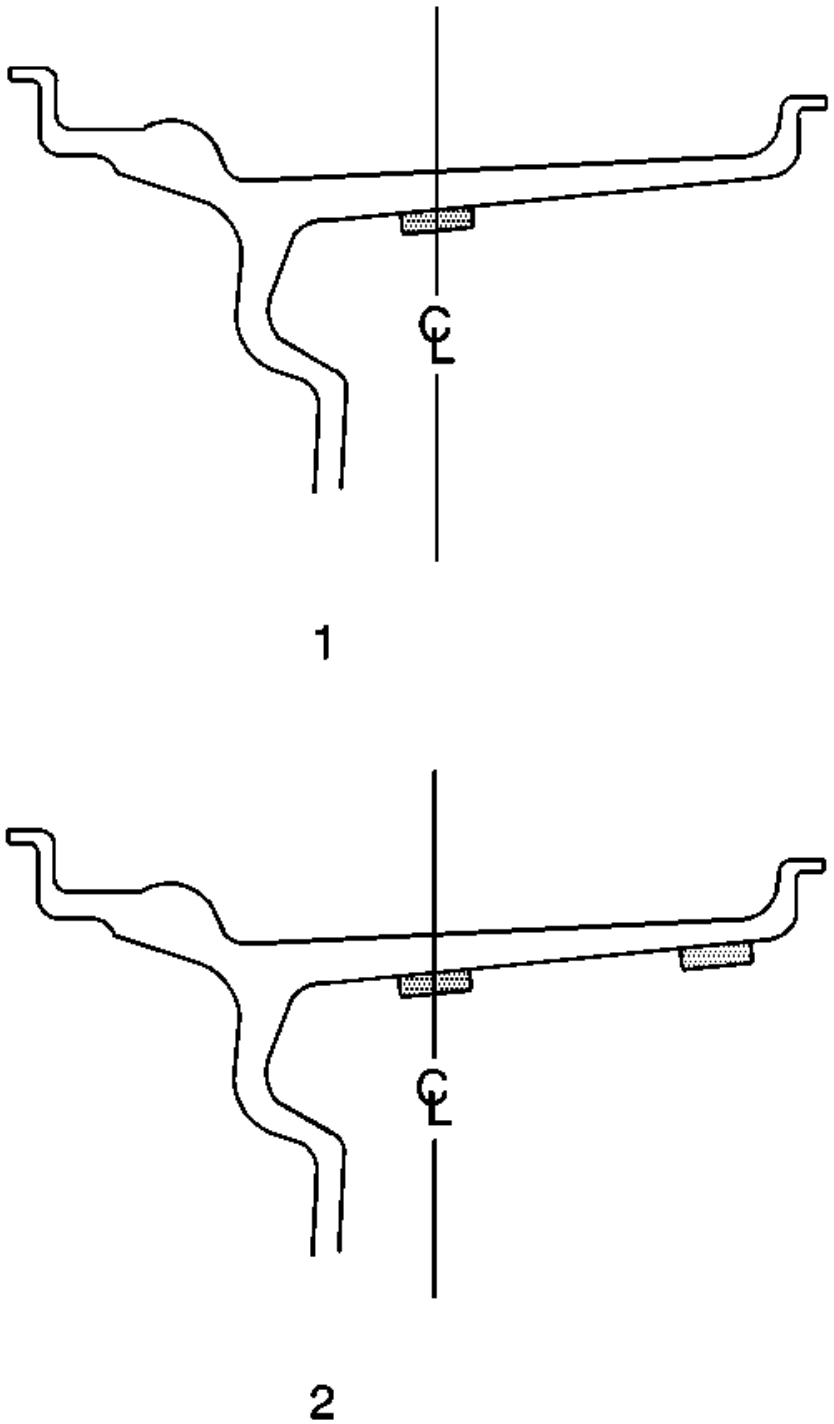

Fig. 24: Identifying Adhesive Weight Wheel Placement
Courtesy of GENERAL MOTORS COMPANY

NOTE: When installing adhesive balance weights on flangeless wheels, do NOT install the weight on the outboard surface of the rim.

Adhesive wheel balance weights may be used on factory aluminum wheels. Perform the following procedure to install adhesive wheel balance weights.

1. Determine the correct areas for placement of the wheel weights on the wheel.
   - When static balancing, locate the wheel balance weights along the wheel centerline (1) on the inner wheel surface if only 28 g (1 oz) or less is called for. If more than 28 g (1 oz) is called for, split the weights as equally as possible between the wheel centerline and the inboard edge of the inner wheel surface (2).
   - When dynamic balancing, locate the wheel balance weights along the wheel centerline and the inboard edge of the inner wheel surface (2) at the positions specified by the wheel balancer.
2. Ensure that there is sufficient clearance between the wheel weights and brake system components.

NOTE: Do not use abrasives to clean any surface of the wheel.

3. Using a clean cloth or paper towel with a general purpose cleaner, thoroughly clean the designated balance weight attachment areas of any corrosion, overspray, dirt or any other foreign material.
4. To ensure there is no remaining residue, wipe the balance weight attachment areas again, using a clean cloth or paper towel with a mixture of half isopropyl alcohol and half water.
5. Dry the attachment areas with hot air until the wheel surface is warm to the touch.
6. Warm the adhesive backing on the wheel balance weights to room temperature.
7. Remove the protective covering from the adhesive backing on the back of the balance weights. DO NOT touch the adhesive surface.
8. Apply the wheel balance weights to the wheel, press into place with hand pressure.
9. Secure the wheel balance weights to the wheel with a 90 N (21 lb) force applied with a roller.

TIRE AND WHEEL ASSEMBLY BALANCING - ON-VEHICLE

Special Tools

EL-38792-A Electronic Vibration Analyzer (EVA) 2

For equivalent regional tools. Refer to **Special Tools and Equipment**.

If after following the tire and wheel vibration diagnostic process, some amount of tire and wheel vibration is still evident, an on-vehicle high-speed spin balancer may be used to perform an on-vehicle balance in an attempt to finish balance the tire and wheel assemblies, wheel hubs, brake rotors, brake drums, if equipped, and wheel trim, if equipped, simultaneously. On-vehicle balancing can also compensate for minor amounts of residual runout encountered as a result of mounting the tire and wheel assembly on the vehicle, as opposed to the balance which was achieved on the off-vehicle balancer.

In order to perform an on-vehicle balancing procedure, carefully follow the on-vehicle balancer manufacturer's

specific operating instructions and carefully consider the following information before proceeding:

- Vehicles equipped with low profile, wide tread path, high performance tires and wheels are susceptible to small amounts of dynamic imbalance.
- When performing an on-vehicle balance, great care must be taken when placing the wheel balance weights on the wheels. If the wheel balance weights are not placed accurately, they can actually induce dynamic imbalance and thus increase the severity of the vibration.
- Inspect the vehicle wheel bearings to ensure that they are in good condition.
- Thoroughly inspect all on-vehicle balancing equipment and ensure that it is fully within the manufacturer's recommended specifications.
- Do not remove the off-vehicle balance weights. The purpose of on-vehicle balance is to fine tune the assembly balance already achieved off-vehicle, not to start over.
- Leave all wheel trim installed whenever possible.
- If the on-vehicle balancer calls for more than 56 g (2 oz) of additional weight, split the weight between the inboard and outboard flanges of the wheel, so as not to upset the dynamic balance of the assembly achieved in the off-vehicle balance. For wheel balance weight information, refer to **Tire and Wheel Assembly Balancing - Off Vehicle**.
- If available, tape-off an area on top of the fenders and the quarter panels, then place the vibration sensor of the **EL-38792-A** analyzer on the fender or quarter panel above the specific tire and wheel assembly while it is being on-vehicle balanced.

  The **EL-38792-A** analyzer will provide a visual indication of the amplitude of the vibration, and the effect that the on-vehicle balance has on it.

TIRE-TO-WHEEL MATCH-MOUNTING (VECTORING)

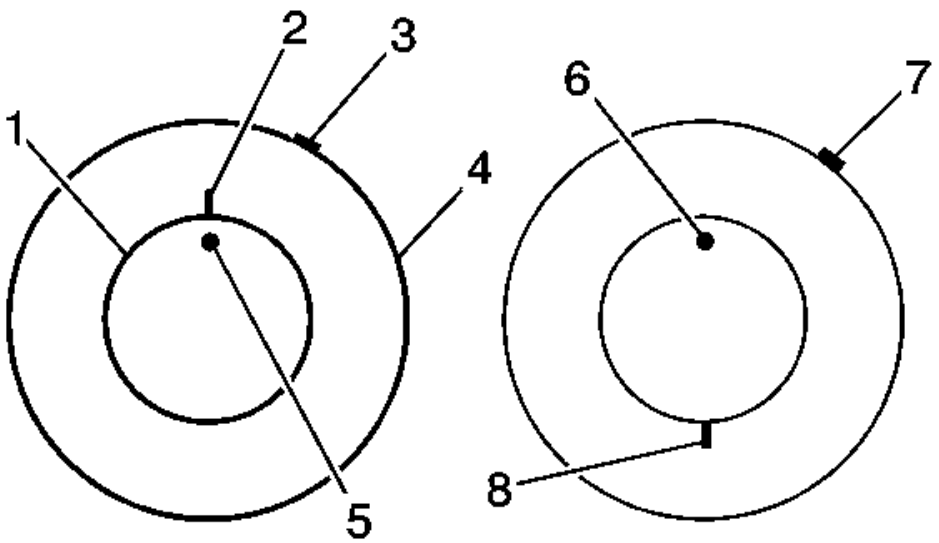

Fig. 25: View Of Tire-to-Wheel Match-Mounting
Courtesy of GENERAL MOTORS COMPANY

NOTE: **After remounting a tire to a wheel or after replacing a tire and/or a wheel, remeasure the tire and wheel assembly runout in order to verify that the amount of runout has been reduced and brought to within tolerances. Ensure that the tire and wheel assembly is properly balanced before reinstalling to the vehicle.**

1. Mark the location of the high spot (3) on the tire as determined during the off-vehicle tire and wheel assembly runout measurement.
2. Place a reference mark (2) on the tire sidewall at the location of the valve stem (5).
   - Always refer to the valve stem as the 12 o'clock position.
   - Refer to the location of the high spot (3) by its clock position on the wheel, relative to the valve stem.
3. Mount the tire and wheel assembly on a tire machine and break down the bead. Do not dismount the tire from the wheel at this time.

4. Rotate the tire 180 degrees on the rim so that the valve stem reference mark (8) is now at the 6 o'clock position in relation to the valve stem (6). You may need to lubricate the bead in order to easily rotate the tire on the wheel.
5. Reinflate the tire and seat the bead properly.
6. Mount the assembly on the tire balancer and remeasure the runout. Mark the new location of the assembly runout high spot on the tire.
7. If the assembly runout has been reduced and is within tolerance, no further steps are necessary. Balance the tire and wheel assembly, then install the assembly to the vehicle. Refer to the following:
   - **Tire and Wheel Assembly Balancing - Off Vehicle**
   - **Tire and Wheel Removal and Installation**
8. If the clock location of the high spot remained at or near the original clock location of the high spot (7) and the assembly runout has NOT been reduced, the wheel is the major contributor to the assembly runout concern.

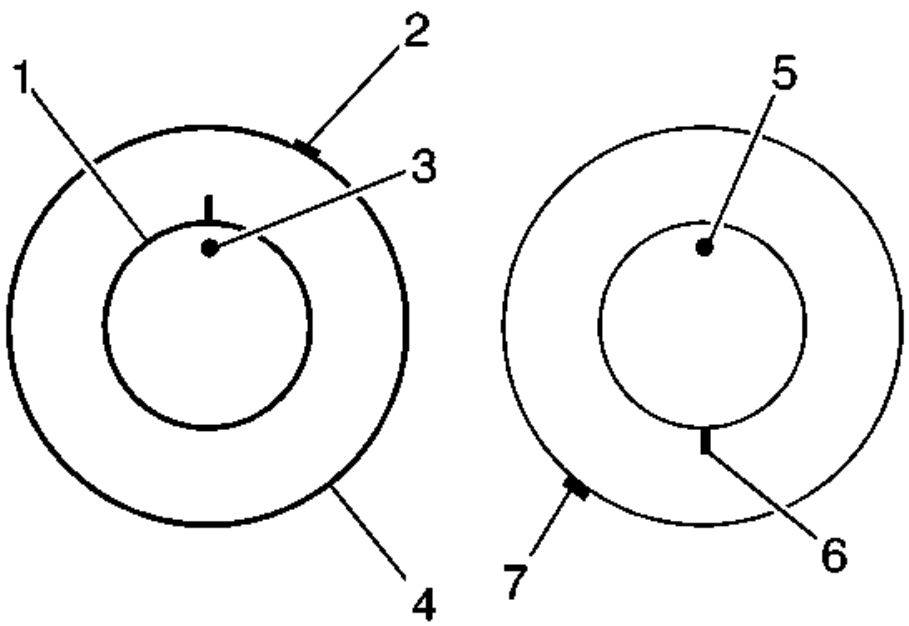

Fig. 26: View Of Match-Mounting Tire-To-Wheel
Courtesy of GENERAL MOTORS COMPANY

9. If the clock location of the high spot has moved, however the assembly runout has NOT been reduced, perform the following steps:
    1. If the clock location of the high spot (7) is now at or near a position 180 degrees from the original clock location of the high spot, the tire is the major contributor to the assembly runout concern.
    2. If the clock location of the high spot is now in-between the 2 extremes, then both the tire and the wheel are both contributing to the assembly runout concern. Rotate the tire an additional 90 degrees in both the clockwise and the counterclockwise directions to obtain the lowest amount of assembly runout.

TIRE AND WHEEL ASSEMBLY-TO-HUB/AXLE FLANGE MATCH-MOUNTING

NOTE: After remounting a tire and wheel assembly to a hub/axle flange, remeasure the tire and wheel assembly on-vehicle runout in order to verify that the amount of runout has been reduced and brought to within tolerances.

1. Mark the location of the high spot on the tire and wheel assembly as determined during the on-vehicle tire and wheel assembly runout measurement.
2. Place a reference mark on the wheel stud that is located closest to the wheel valve stem.
    - Always refer to the reference mark on the wheel stud as the 12 o'clock position.
    - Refer to the location of the high spot by its clock position on the tire and wheel assembly, relative to the marked wheel stud.
3. Remove the tire and wheel assembly from the hub/axle flange. Refer to **Tire and Wheel Removal and Installation** .
4. Rotate the tire and wheel assembly as close to 180 degrees as possible on the hub/axle flange, so that the wheel valve stem is now approximately at the 6 o'clock position in relation to the marked wheel stud.
5. Reinstall the wheel lug nuts to secure the tire and wheel assembly in the new position. Refer to **Tire and Wheel Removal and Installation** .
6. Remeasure the tire and wheel assembly on-vehicle runout. Mark the new location of the assembly on-vehicle runout high spot on the tire. Refer to **Tire and Wheel Assembly Runout Measurement - On-Vehicle**.
7. If the assembly on-vehicle runout has been reduced and is within tolerance, no further steps are necessary.
8. If the assembly runout has NOT been reduced, perform the following steps:
    1. If the clock location of the high spot remained at or near the original clock location of the high spot, the hub/axle flange and/or the brake rotor/drum mounting flange is the major contributor to the assembly on-vehicle runout concern.
    2. If the clock location of the high spot is now at or near a position 180 degrees from the original clock location of the high spot, the tire and wheel assembly is the major contributor to the assembly on-vehicle runout concern.
    3. If the clock location of the high spot is now in-between the 2 extremes, then both the tire and wheel assembly and the hub/axle flange are contributing to the assembly on-vehicle runout concern. Rotate the tire and wheel assembly as close to an additional 90 degrees as possible in both the clockwise and the counterclockwise directions to obtain the lowest amount of assembly on-vehicle runout.

DESCRIPTION AND OPERATION

VIBRATION THEORY AND TERMINOLOGY

Vibration Theory

The designs and engineering requirements of vehicles have undergone drastic changes over the last several years.

Vehicles are stiffer and provide more isolation from road input than they did previously. The structures of today's stiffer vehicles are less susceptible to many of the vibrations which could be present in vehicles of earlier designs, however, vibrations can still be detected in a more modern vehicle if a transfer path is created between a rotating component and the body of the vehicle.

There are not as many points of isolation from the road in many vehicles today. If a component produces a strong enough vibration, it may overcome the existing isolation and the component needs to be repaired or replaced.

The presence/absence of unwanted noise and vibration is linked to the customer's perception of the overall quality of the vehicle.

Vibration is the repetitive motion of an object, back and forth, or up and down. The following components cause most vehicle vibrations:

- A rotating component
- The engine combustion process firing impulses

Rotating components will cause vibrations when excessive imbalance or runout is present. During vibration diagnosis, the amount of allowable imbalance or runout should be considered a TOLERANCE and not a SPECIFICATION. In other words, the less imbalance or runout the better.

Rotating components will cause a vibration concern when they not properly isolated from the passenger compartment: Engine firing pulses can be detected as a vibration if a motor mount is collapsed.

A vibrating component operates at a consistent rate (km/h, mph, or RPM). Measure the rate of vibration in question. When the rate/speed is determined, relate the vibration to a component that operates at an equal rate/speed in order to pinpoint the source. Vibrations also tend to transmit through the body structure to other components. Therefore, just because the seat vibrates does not mean the source of vibration is in the seat.

Vibrations consist of the following three elements:

- The source - the cause of the vibration
- The transfer path - the path the vibration travels through the vehicle
- The responder - the component where the vibration is felt

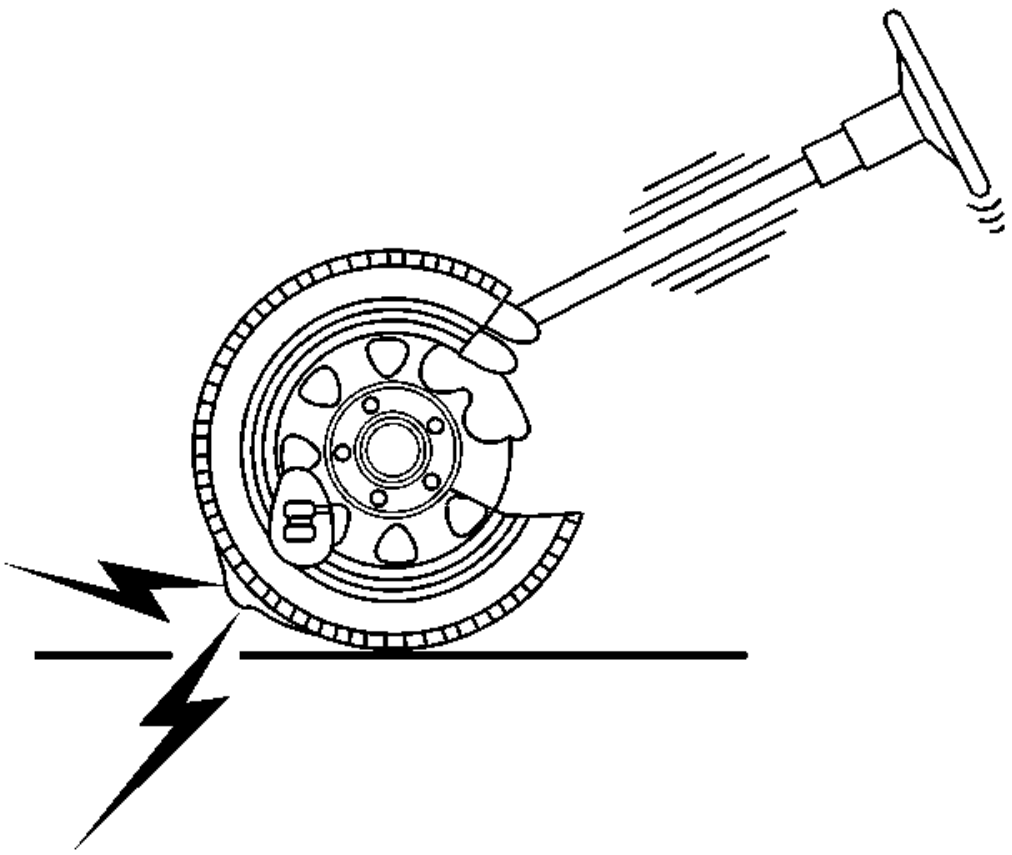

Fig. 27: Identifying Unbalanced Tire Vibration
Courtesy of GENERAL MOTORS COMPANY

In the preceding picture, the source is the unbalanced tire. The transfer path is the route the vibrations travels through the vehicle's suspension system into the steering column. The responder is the steering wheel, which the customer reports as vibrating. Eliminating any one of these three elements will usually correct the condition. Decide, from the gathered information, which element makes the most sense to repair. Adding a brace to the steering column may keep the steering wheel from vibrating, but adding a brace is not a practical solution. The most direct and effective repair would be to properly balance the tire.

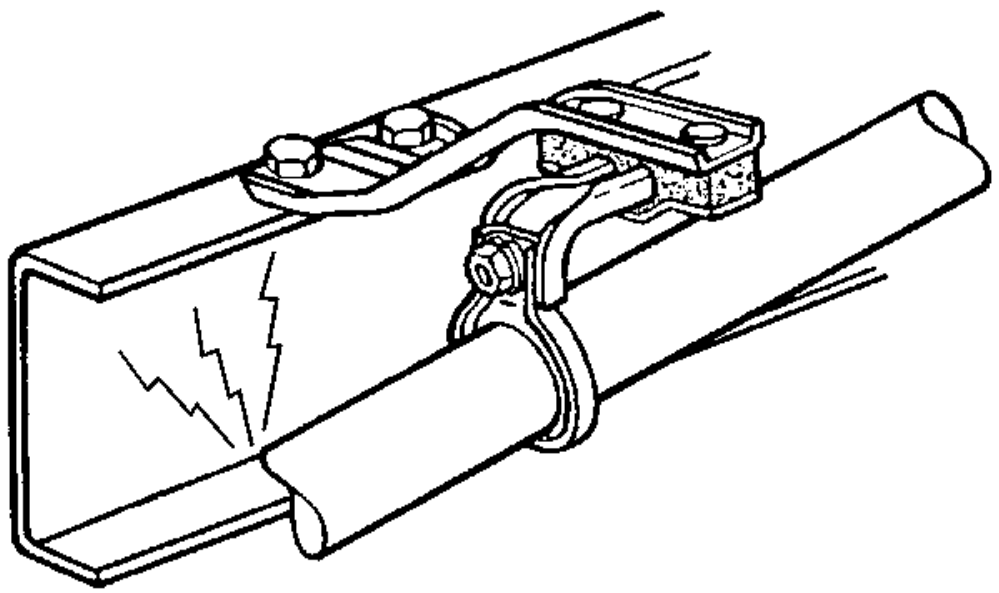

Fig. 28: Identifying Exhaust Pipe Noise
Courtesy of GENERAL MOTORS COMPANY

Vibration can also produce noise. As an example, consider a vehicle that has an exhaust pipe grounded to the frame. The source of the vibration is the engine firing impulses traveling through the exhaust. The transfer path is a grounded or bound-up exhaust hanger. The responder is the frame. The floor panel vibrates, acting as a large speaker, which produces noise. The best repair would be to eliminate the transfer path. Aligning the exhaust system and correcting the grounded condition at the frame would eliminate the transfer path.

Basic Vibration Terminology

The following are the 2 primary components of vibration diagnosis:

- The physical properties of objects
- The object's properties of conducting mechanical energy

The repetitive up and down or back and forth movement of a component cause most customer vibration complaints. The following are the common components that vibrate:

- The steering wheel
- The seat cushion
- The frame
- The IP

Vibration diagnosis involves the following simple outline:

1. Measure the repetitive motion and assign a value to the measurement in cycles per second or cycles per minute.
2. Relate the frequency back on terms of the rotational speed of a component that is operating at the same rate or speed.
3. Inspect and test the components for conditions that cause vibration.

For example, performing the following steps will help demonstrate the vibration theory:

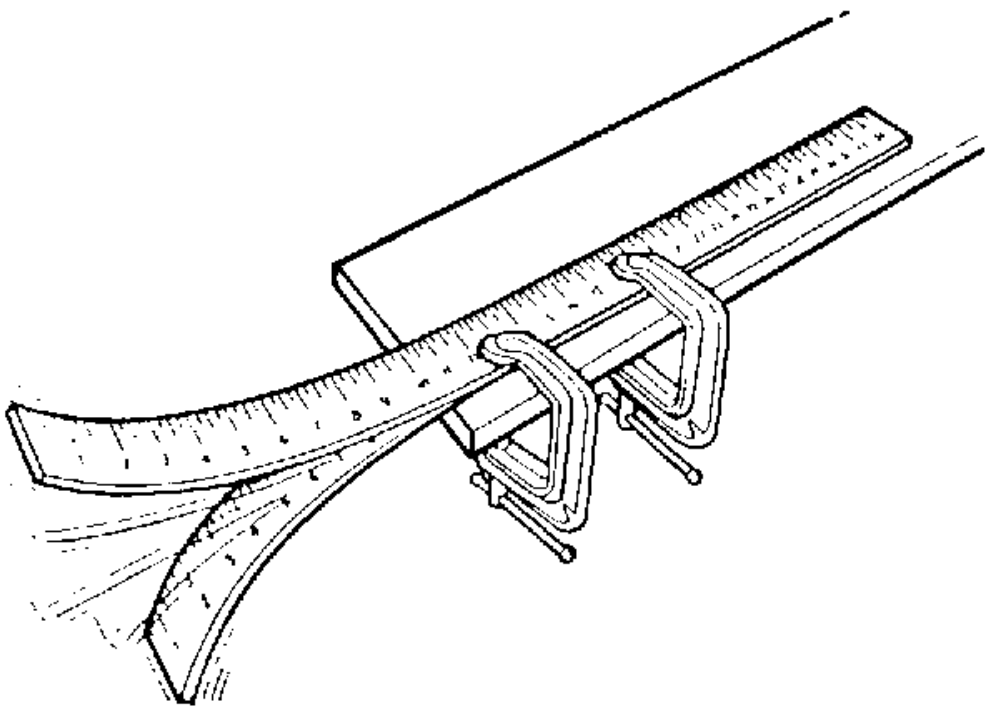

Fig. 29: Demonstrating Vibration Theory

Courtesy of GENERAL MOTORS COMPANY

1. Clamp a yardstick to the edge of a table, leaving about 50 cm (20 in) hanging over the edge of the table.
2. Pull down on the edge of the stick and release while observing the movement of the stick.

The motion of the stick occurs in repetitive cycles. The cycle begins at midpoint, continues through the lowest extreme of travel, then back past the midpoint, through the upper extreme of travel, and back to the midpoint where the cycle begins again.

The cycle occurs over and over again at the same rate, or frequency. In this case, about 10 cycles in one second. If we measure the frequency to reflect the number of complete cycles that the yardstick made in one minute, the measure would be 10 cycles x 60 seconds = 600 cycles per minute (cpm).

We have also found a specific amount of motion, or amplitude, in the total travel of the yardstick from the very top to the very bottom. Redo the experiment as follows:

1. Reclamp the yardstick to the edge of a table, leaving about 25 cm (10 in) hanging over the edge of the table.
2. Pull down on the edge of the stick and release while observing the movement of the stick.

The stick vibrates at a much faster frequency: 30 cycles per second (1, 800 cycles per minute).

Cycle

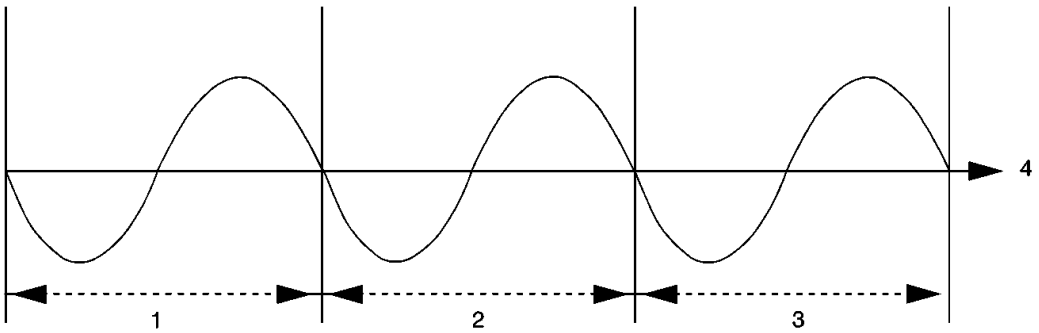

Fig. 30: Identifying Powertrain Vibration Cycles
Courtesy of GENERAL MOTORS COMPANY

Callout	Component Name
1	1st Cycle
2	2nd Cycle
3	3rd Cycle
4	Time

Vibration Cycles in Powertrain Components

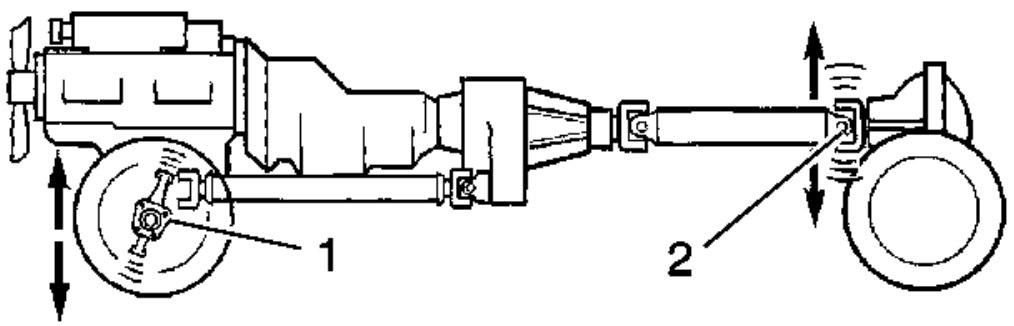

Fig. 31: Identifying Vibration Cycles In Powertrain Components
Courtesy of GENERAL MOTORS COMPANY

Callout	Component Name
1	Spindle
2	Pinion Nose

The word cycle comes from the same root as the word circle. A circle begins and ends at the same point, as thus, so does a cycle. All vibrations consist of repetitive cycles.

Frequency

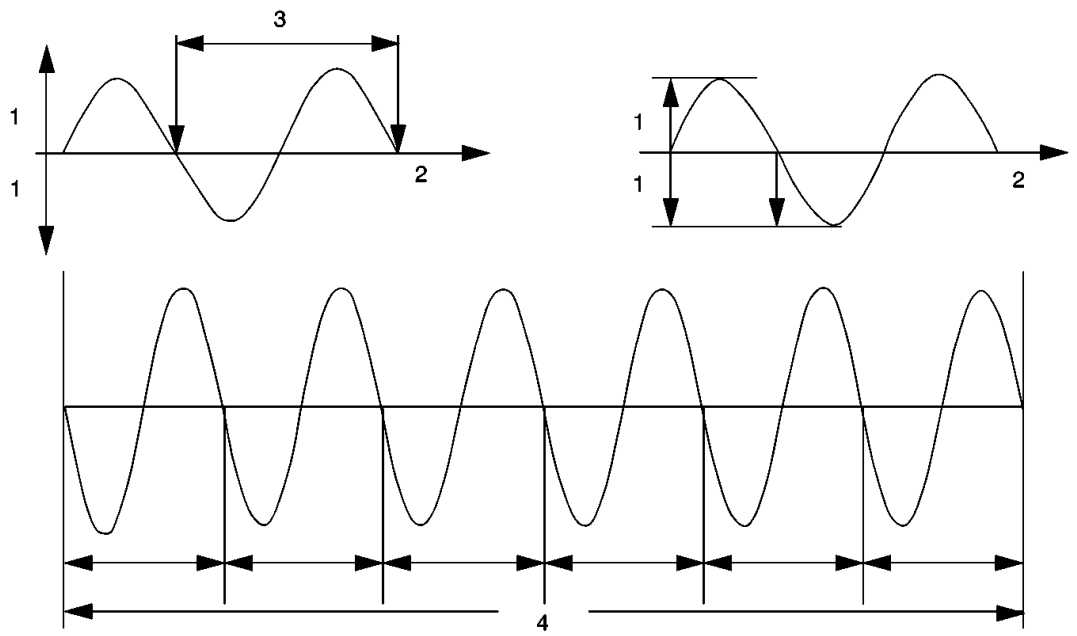

Fig. 32: Identifying Vibration Frequency
Courtesy of GENERAL MOTORS COMPANY

Callout	Component Name
1	Amplitude
2	Reference
3	Time in Seconds
4	1 Second

Frequency is defined as the rate at which an event occurs during a given period of time. With a vibration, the event is a cycle, and the period of time is 1 second. Thus, frequency is expressed in cycles per second.

The proper term for cycles per seconds is Hertz (Hz). This is the most common way to measure frequency. Multiply the Hertz by 60 to get the cycles or revolutions per minute (RPM).

Amplitude

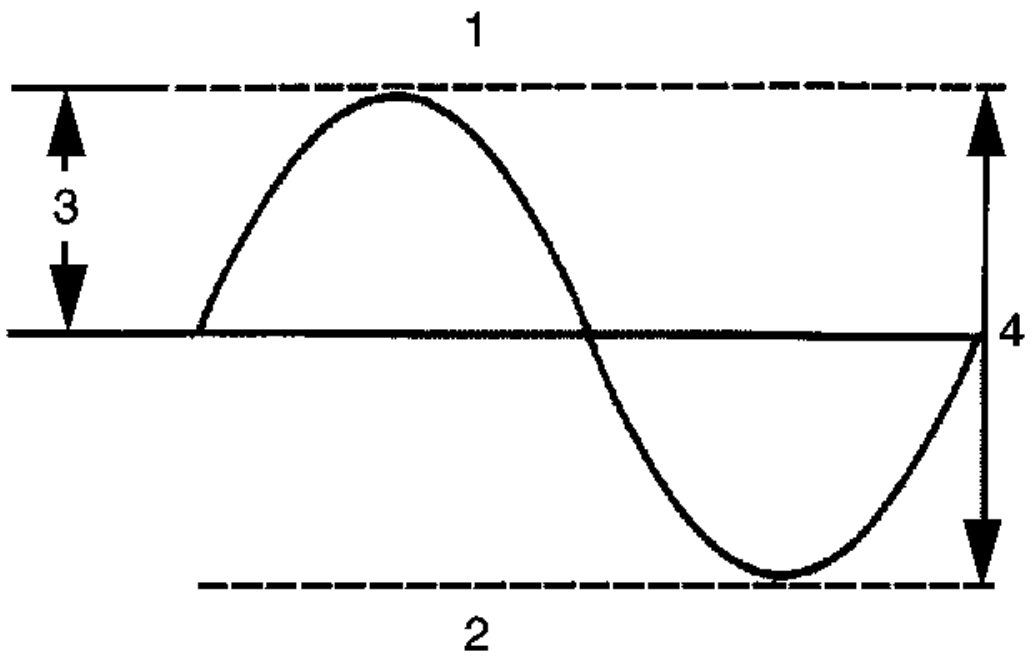

Fig. 33: Identifying Vibration Amplitude
Courtesy of GENERAL MOTORS COMPANY

Callout	Component Name
1	Maximum
2	Minimum
3	Zero-to-Peak Amplitude
4	Peak-to-Peak Amplitude

Amplitude is the maximum value of a periodically varying quantity. Used in vibration diagnostics, we are referring it to the magnitude of the disturbance. A severe disturbance would have a high amplitude; a minor disturbance would have a low amplitude.

Amplitude is measured by the amount of actual movement, or the displacement. For example, consider the vibration caused by an out-of-balance wheel at 80 km/h (50 mph) as opposed to 40 km/h (25 mph). As the speed increases, the amplitude increases.

Free Vibration

Free vibration is the continued vibration in the absence of any outside force. In the yardstick example, the yardstick continued to vibrate even after the end was released.

Forced Vibration

Forced vibration is when an object is vibrating continuously as a result of an outside force.

Centrifugal Force Due to an Imbalance

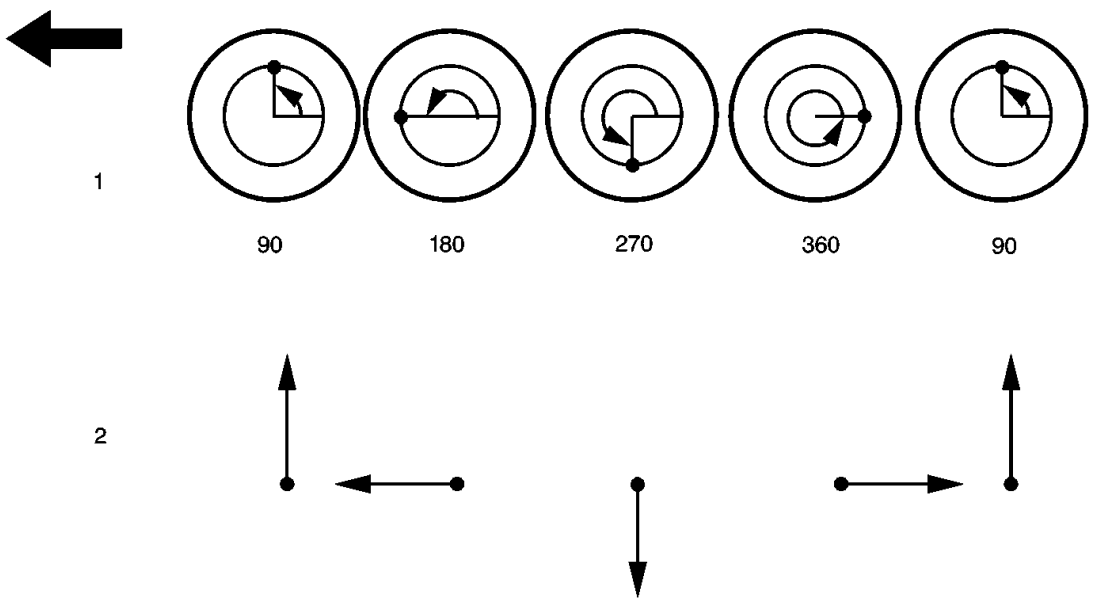

Fig. 34: Identifying Centrifugal Force Components
Courtesy of GENERAL MOTORS COMPANY

Callout	Component Name
1	Location of Imbalance (Degrees)
2	Centrifugal Force Acting on Spindle

A spinning object with an imbalance generates a centrifugal force. Performing the following steps will help to demonstrate centrifugal force:

1. Tie a nut to a string.
2. Hold the string. The nut hangs vertically due to gravity.
3. Spin the string. The nut will spin in a circle.

Centrifugal force is trying to make the nut fly outward, causing the pull you feel on your hand. An unbalanced tire follows the same example. The nut is the imbalance in the tire. The string is the tire, wheel, and suspension assembly. As the vehicle speed increases, the disturbing force of the unbalanced tire can be felt in the steering wheel, the seat, and the floor. This disturbance will be repetitive (Hz) and the amplitude will increase. At higher speeds, both the frequency and the amplitude will increase. As the tire revolves, the imbalance, or the centrifugal force, will alternately lift the tire up and force the tire downward, along with the spindle, once for each revolution of the tire.

Natural or Resonant Frequency

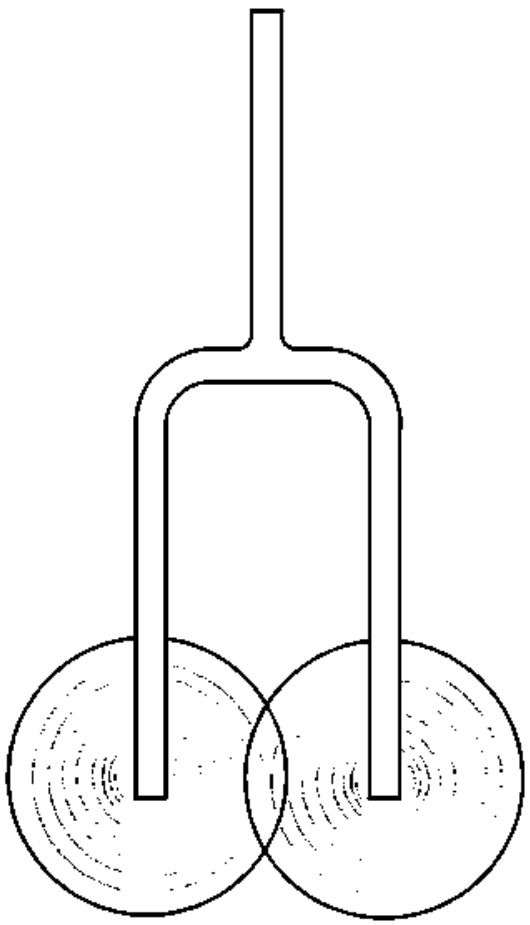

Fig. 35: View Of Natural Frequency
Courtesy of GENERAL MOTORS COMPANY

The natural frequency is the frequency at which an object tends to vibrate. Bells, guitar strings, and tuning forks are all examples of objects that tend to vibrate at specific frequencies when excited by an external force.

Suspension systems, and even engines within the mounts, have a tendency to vibrate at certain frequencies. This is why some vibration complaints occur only at specific vehicle speeds or engine RPM.

The stiffness and the natural frequency of a material have a relationship. Generally, the stiffer the material, the higher the natural frequency. The opposite is also true. The softer a material, the lower the natural frequency. Conversely, the greater the mass, the lower the natural frequency.

Resonance

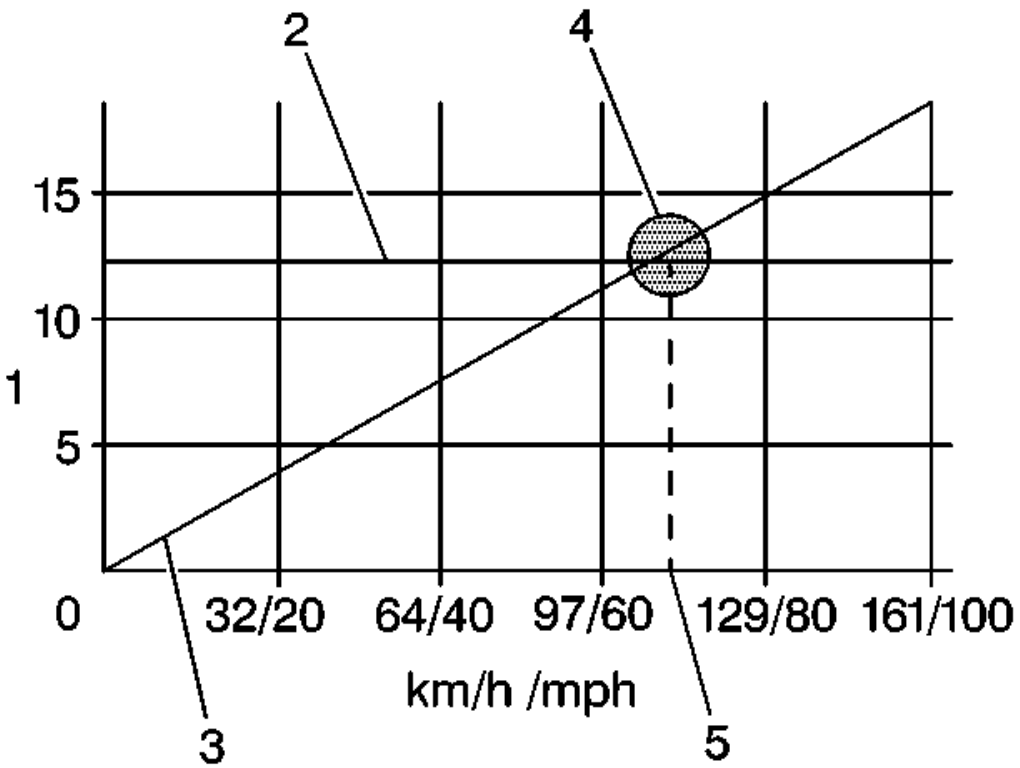

Fig. 36: Natural Frequency Of A Typical Automotive Front Suspension
Courtesy of GENERAL MOTORS COMPANY

Callout	Component Name
1	Frequency - cps
2	Suspension Frequency
3	Unbalanced Excitation
4	Point of Resonance
5	Problem Speed

All objects have natural frequencies. The natural frequency of a typical automotive front suspension is in the

10-15 Hz range. This natural frequency is the result of the suspension design. The suspension's natural frequency is the same at all vehicle speeds. As the tire speed increases along with the vehicle speed, the disturbance created by the tire increases in frequency. Eventually, the frequency of the unbalanced tire will intersect with the natural frequency of the suspension. This causes the suspension to vibrate. The intersecting point is called the resonance.

The amplitude of a vibration will be greatest at the point of resonance. While the vibration may be felt above and below the problem speed, the vibration may be felt the most at the point of resonance.

Damping

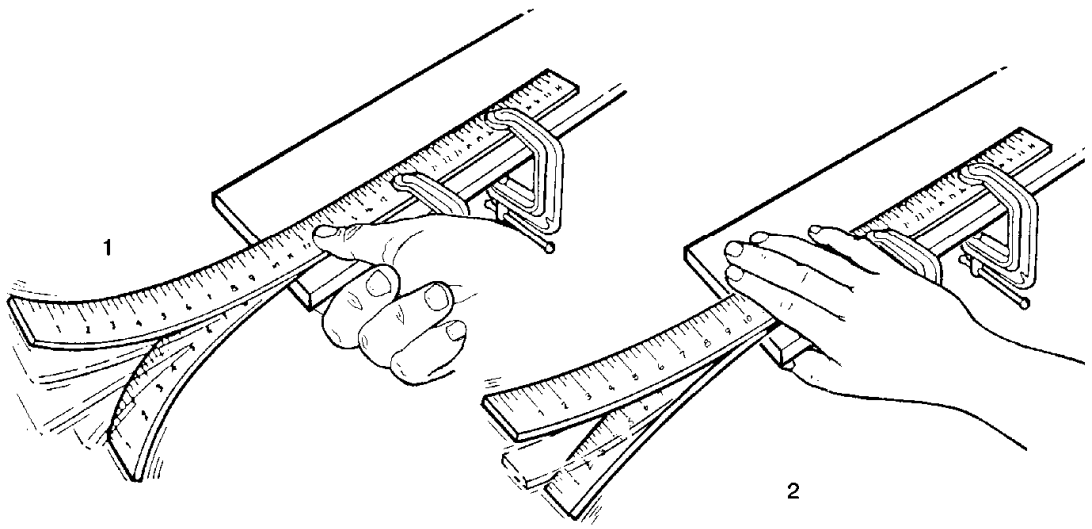

Fig. 37: Identifying Low & High Damping
Courtesy of GENERAL MOTORS COMPANY

Callout	Component Name
1	Low Damping
2	High Damping

Damping is the ability of an object or material to dissipate or absorb vibration. The automotive shock absorber is a good example. The function of the shock absorber is to absorb or dampen the oscillations of the suspension system.

Beating (Phasing)

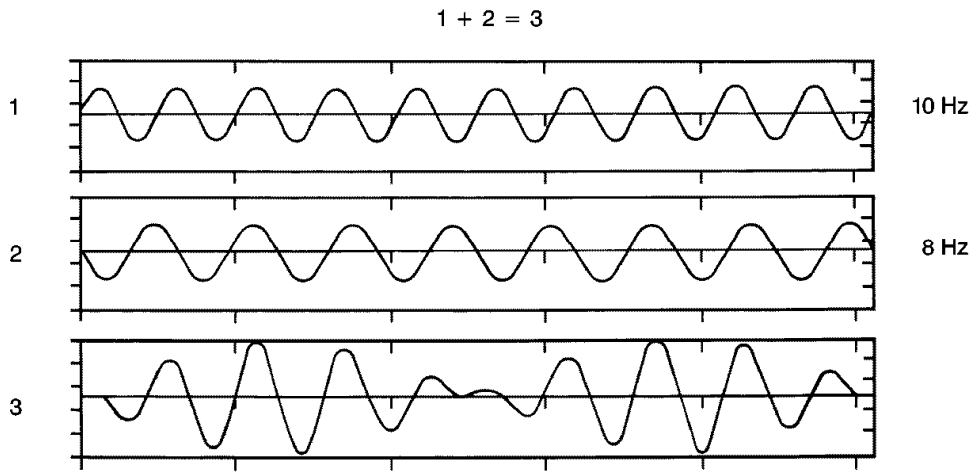

Fig. 38: Identifying Beating Or Phasing
Courtesy of GENERAL MOTORS COMPANY

Two separate disturbances that are relatively close together in frequency will lead to a condition called beating, or phasing. A beating vibration condition will increase in intensity or amplitude in a repetitive fashion as the vehicle travels at a steady speed. This beating vibration can produce the familiar droning noise heard in some vehicles.

Beating occurs when 2 vibrating forces are adding to each other's amplitude. However, 2 vibrating forces can also subtract from each other's amplitude. The adding and subtracting of amplitudes in similar frequencies is called beating. In many cases, eliminating either one of the disturbances can correct the condition.

Order

Order refers to how many times an event occurs during 1 revolution of a rotating component.

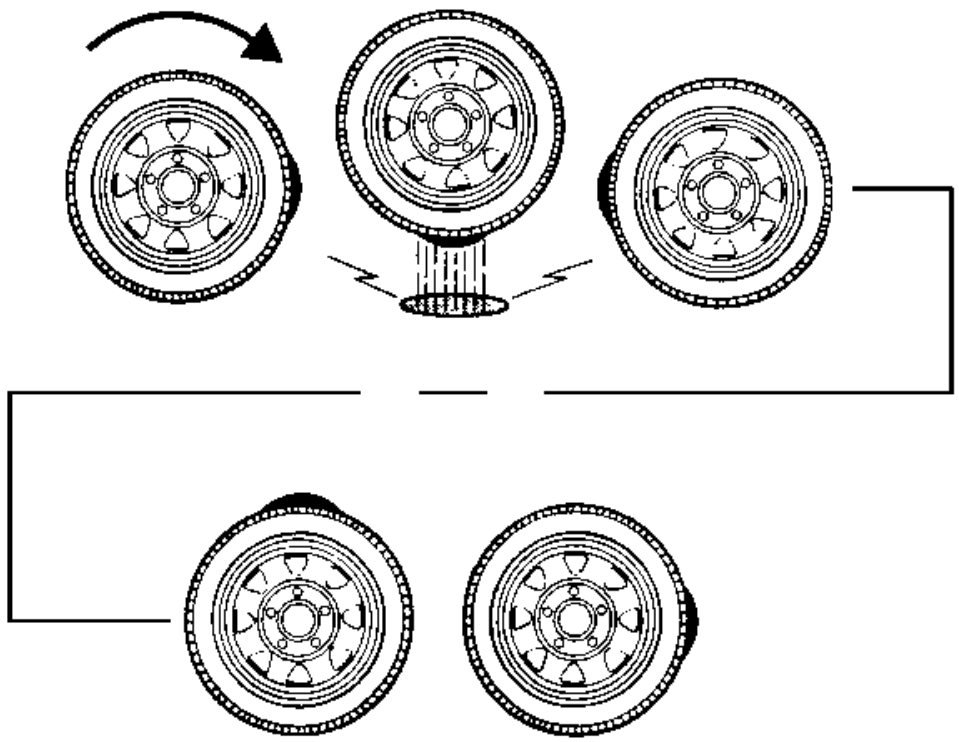

Fig. 39: Identifying First-Order Vibration
Courtesy of GENERAL MOTORS COMPANY

For example, a tire with 1 high spot would create a disturbance once for every revolution of the tire. This is called first-order vibration.

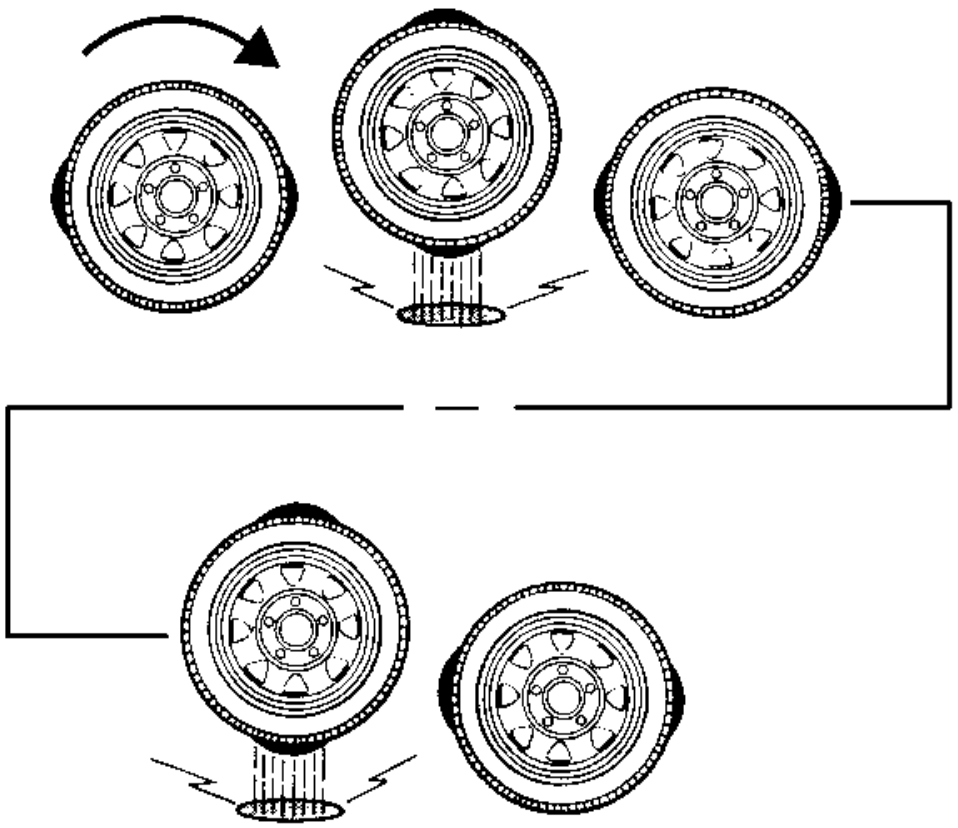

Fig. 40: Identifying Second-Order Vibration
Courtesy of GENERAL MOTORS COMPANY

An oval-shaped tire with 2 high spots would create a disturbance twice for every revolution. This is called second-order vibration. Three high spots would be third-order, and so forth. Two first-order vibrations may add or subtract from the overall amplitude of the disturbance, but that is all. Two first-order vibrations do not equal a second-order. Due to centrifugal force, an unbalanced component will always create at least a first-order vibration.

ELECTRONIC VIBRATION ANALYZER (EVA) DESCRIPTION AND OPERATION

Special Tools

- **EL-38792-25** Inductive Pickup Timing Light
- **EL-38792-A** Electronic Vibration Analyzer 2 (EVA 2)

For equivalent regional tools, refer to **Special Tools and Equipment**.

The **EL-38792-A** Electronic Vibration Analyzer 2 (EVA 2), is a 12-volt powered hand-held device, similar to a scan tool, which receives input from an attached vibration sensor or accelerometer and displays the most dominate input frequency(ies) (up to three) on its liquid crystal display. The vibration concern frequency(ies) are obtained through the use of the **EL-38792-A** Electronic Vibration Analyzer 2 (EVA 2) while following the Vibration Analysis Diagnostic Tables. The frequency(ies) obtained, when applied to the Vibration Analysis Diagnostic Tables, are used as a primary input to help determine the source of the vibration concern.

EVA Vibration Sensor

The **EL-38792-A** Electronic Vibration Analyzer 2 (EVA 2) vibration sensor incorporates a 6.1 m (20 ft) cord, that allows the sensor to be placed on virtually any component of the vehicle where a vibration concern is felt.

The **EL-38792-A** Electronic Vibration Analyzer 2 (EVA 2) contains 2 sensor input ports which can be activated individually to allow for 2 individual vibration sensor inputs. The vibration sensors can then be placed in 2 different locations in the vehicle and their individual inputs can be read without having to stop a test, move the sensor and resume the test. The use of 2 vibration sensors can help in more quickly finding and recording an accurate frequency of the vibration concern, and in more quickly making comparisons between 2 different areas of a single component, or a vehicle system, during the diagnostic process.

EVA Vibration Sensor Placement

Proper placement of the **EL-38792-A** Electronic Vibration Analyzer 2 (EVA 2) vibration sensor (accelerometer) is critical to ensure that proper vibration readings are obtained by the **EL-38792-A** Electronic Vibration Analyzer 2 (EVA 2). The vibration sensor should be placed on the specific vehicle component identified as being the most respondent to the vibration. If no component has been identified, install the sensor to the steering column as a starting point.

EVA Vibration Sensor-to-Component Attachment

NOTE: The EL-38792-A Electronic Vibration Analyzer 2 (EVA 2) vibration sensor must be attached to vehicle components in the manner indicated in order to achieve accurate frequency readings of the vibration disturbance.

The vibration sensor of the **EL-38792-A** Electronic Vibration Analyzer 2 (EVA 2) is designed to pickup disturbances which primarily occur in the vertical plane, since most vibrations are felt in that same up-and-down direction. The **EL-38792-A** Electronic Vibration Analyzer 2 (EVA 2) vibration sensor is therefore directional sensitive and must be attached to vehicle components such that the side of the sensor marked UP is always facing upright and the sensor body is as close to horizontal as possible. The sensor must be installed in the exact same position each time tests are repeated or comparisons are made to other vehicles.

The **EL-38792-A** Electronic Vibration Analyzer 2 (EVA 2) vibration sensor can be attached to vehicle components in various ways. For non-ferrous surfaces, such as the shroud of a steering column, the sensor can be attached using putty, or hook and loop fasteners. For ferrous surfaces, the sensor can be attached using a magnet supplied with the sensor.

EVA Software Cartridge

The **EL-38792-A** Electronic Vibration Analyzer 2 (EVA 2) uses a software cartridge, the GE-38792-60, which

provides various information to the **EL-38792-A** Electronic Vibration Analyzer 2 (EVA 2). The GE-38792-60 provides the **EL-38792-A** Electronic Vibration Analyzer 2 (EVA 2) with an additional feature which can be selected and utilized to assist in diagnosing vibration concerns.

NOTE: The Auto-Mode function of the EL-38792-A Electronic Vibration Analyzer 2 (EVA 2) cartridge, GE-38792-60, is designed to be used in SUPPORT of the Vibration Analysis Diagnostic Tables ONLY.

This support-feature is available through the **EL-38792-A** Electronic Vibration Analyzer 2 (EVA 2) Auto-Mode function. When selected, the **EL-38792-A** Electronic Vibration Analyzer 2 (EVA 2) will prompt the user to select which one of 2 vehicle systems (vehicle speed or engine speed), is the SUSPECTED source of the vibration concern. Using the inputted vehicle data parameters along with the most dominate vibration frequency obtained, it will identify a SUSPECTED source of the vibration concern, such as first-order tire and wheel. This can be a useful feature when used in conjunction with the Vibration Analysis Diagnostic Tables, to confirm results obtained through the diagnostic process.

EVA Smart Strobe Function

The **EL-38792-A** Electronic Vibration Analyzer 2 (EVA 2) can be used to identify some rotating components/systems which exhibit imbalance IF the component rotational speed is the dominant frequency of the vibration concern. The **EL-38792-A** Electronic Vibration Analyzer 2 (EVA 2) is equipped with a strobe light trigger wire which can be used with an inductive pickup timing light, **EL-38792-25** Inductive Pickup Timing Light, or equivalent included with the GE-38792-25-KIT, or available separately. Using the Smart Strobe function enables the user to input the vibration frequency to which the strobe will flash. By marking the suspected rotating component, such as a pulley, adjusting the strobe frequency to match the dominant vibration frequency at the engine RPM noted during diagnosis, and then operating the engine at that specific RPM, the mark on the object will appear to be stationary if that object is imbalanced.

EVA Strobe Balancing Function

The **EL-38792-A** Electronic Vibration Analyzer 2 (EVA 2) can be used to identify the light spot on a propeller shaft IF the propeller shaft rotational speed is the dominant frequency of the vibration concern. The **EL-38792-A** Electronic Vibration Analyzer 2 (EVA 2) is equipped with a strobe light trigger wire which can be used with an inductive pickup timing light, **GE-38792-25** Inductive Pickup Timing Light, or equivalent included with the J-38792-25-KIT, or available separately, and in conjunction with the **EL-38792-A** Electronic Vibration Analyzer 2 (EVA 2) vibration sensor to identify the light spot on a propeller shaft and to help in making a determination as to when propeller shaft balance is obtained.

Averaging/Non-Averaging Modes

The EVA provides 2 modes of displaying the most dominate frequencies which the EVA vibration sensor (accelerometer) detects; averaging and non-averaging (instantaneous).

The averaging mode uses multiple vibration samples taken over a period of time and then displays the most dominant frequencies which have been averaged-out. Using the averaging mode minimizes the distractions caused by a sudden vibration frequency being displayed that is not related to the concern vibration, such as from pot holes or from uneven road surfaces.

The non-averaging (instantaneous) mode is more sensitive to vibration disturbances than the averaging mode. Using the non-averaging mode will generate instantaneous frequency displays which are not averaged across multiple samples over a period of time; the specific vibration frequencies that occur at a specific moment during diagnostic testing will be displayed at that moment. The non-averaging (instantaneous) mode is useful when measuring a vibration disturbance that exists for only a short period of time or during acceleration/deceleration testing.

When operating the EVA in the averaging mode along with the Auto Mode, "A" will be displayed along the top of the screen to the left of the vibration sensor input port being used. When operating the EVA in the averaging mode and the Manual Mode, "AVG" will be displayed along the top center of the screen.

When operating the EVA in the non-averaging (instantaneous) mode along with the Auto Mode, "I" will be displayed along the top of the screen to the left of the vibration sensor input port being used. When operating the EVA in the non-averaging (instantaneous) mode and the Manual Mode, the top center of the screen will be blank.

EVA Display

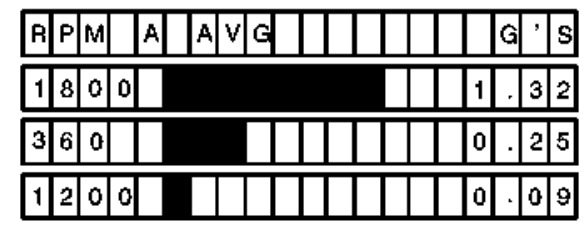

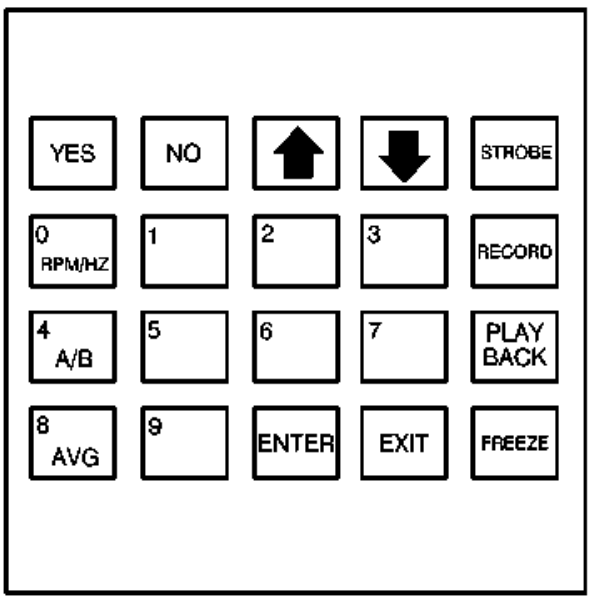

Fig. 41: View Of EVA Display
Courtesy of GENERAL MOTORS COMPANY

The most dominant input frequencies, up to three, received from the **EL-38792-A** Electronic Vibration Analyzer 2 (EVA 2) vibration sensor, are displayed in descending order of amplitude strength.

The frequency readings are displayed along the left side of the screen, followed to the right by either a bar graph or the suspected source of the vibration - depending upon the mode selected, then the amplitude reading for each frequency along the right side of the screen. The top row of the screen indicates the units of measure being displayed for the frequencies along the left side and for the amplitudes along the right side. The top row also indicates the vibration sensor input port which was selected on the keypad (A or B) and which mode was selected: averaging or non-averaging (instantaneous).

The frequency(ies) can be displayed in either revolutions per minute (RPM) or revolutions per second; Hertz (Hz). The selected display type (RPM or Hz) will be indicated at the left side of the screen, above the frequency readings.

When the AUTO MODE function is not in use, a bar graph is displayed next to each frequency to provide a quick visual indication of the relative amplitude strength.

When the AUTO MODE function is being used, the suspected source of the vibration is displayed next to each frequency to provide support to the diagnostic process.

The actual amplitude strength of each frequency is displayed at the right side of the screen and shown in G's-of-acceleration force.

VIBRATE SOFTWARE DESCRIPTION AND OPERATION

The **EL-38792-VS** Vibrate Software, is a computer software program which is designed to be used in support of the Vibration Analysis diagnostic tables, along with the **EL-38792-A** Electronic Vibration Analyzer (EVA) 2, and a scan tool, to help in determining the source of a vibration concern. The **EL-38792-VS** Vibrate Software is designed to provide quick calculations and produce a chart of the rotational speeds and frequency ranges for specific vehicle systems and components, based upon vehicle data parameters inputted by the user.

The **EL-38792-VS** Vibrate Software uses the vehicle data parameters, such as axle ratio, number of engine cylinders, etc. to create the base chart, depicting the relationships of the various vehicle systems and/or components. The chart view can be modified to show data related to vehicle speed only, engine speed only, or both vehicle speed and engine speed. The user can then plot the dominant frequency reading obtained on the **EL-38792-A** Electronic Vibration Analyzer (EVA) 2 which correlates with the vibration concern, and the engine RPM obtained on a scan tool which correlates with the concern. Once these pieces of data are correctly plotted, the chart will point to the source of the vibration concern, which should confirm the results obtained through the Vibration Analysis diagnostic tables.

REED TACHOMETER DESCRIPTION

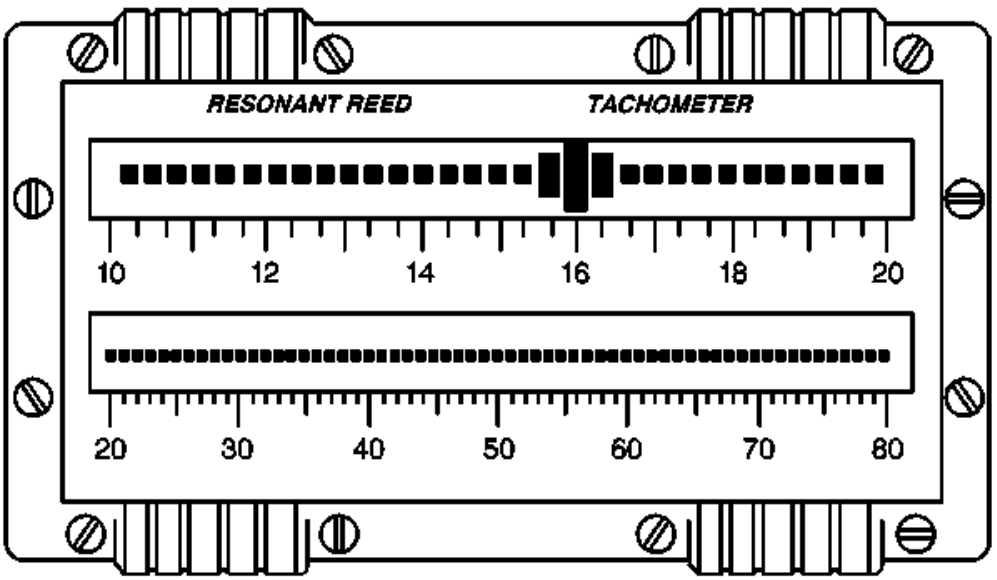

Fig. 42: Identifying Reed Tachometer
Courtesy of GENERAL MOTORS COMPANY

The reed tachometer consists of 2 rows of reeds arranged side-by-side. Each reed is tuned to vibrate or resonate when it is excited by a specific frequency. The reeds are arranged by their specific resonant frequency, increasing from left to right, ranging from 10-80 Hz. This arrangement allows for a visual display of the most dominate frequencies which fall within this range.

The reed tachometer can be a helpful diagnostic tool, however it is extremely sensitive to external inputs that are not related to the vibration concern, such as rough road surfaces, etc., and it is difficult to master its use. Due to these conditions, the reed tachometer has limited diagnostic capability.

Due to the limited diagnostic capability, limited availability and increasing costs of the reed tachometer, it is NOT recommended as the primary tool to use in diagnosing a vibration concern.

When diagnosing a vibration concern, use the **EL-38792-A** Electronic Vibration Analyzer (EVA) 2. The **EL-38792-A** Electronic Vibration Analyzer (EVA) 2 has been designed to overcome the shortcomings to the reed tachometer. Refer to **Electronic Vibration Analyzer (EVA) Description and Operation**.

SPECIAL TOOLS AND EQUIPMENT

Illustration	Tool Number / Description
	EL-38792-A J-38792 Electronic Vibration Analyzer

2013 DTC INDEX

Cruz

ANTILOCK BRAKE SYSTEM - DIAGNOSTIC TROUBLE CODES

ANTILOCK BRAKE SYSTEM - DIAGNOSTIC TROUBLE CODES

DTC	Description
DTC B2745	DTC B2745 02 Traction Control Switch Circuit Short to Ground
DTC C0035, C0040, C0045, or C0050	DTC C0035 06 Left Front Wheel Speed Sensor Circuit Low Voltage/Open DTC C0035 0F Left Front Wheel Speed Sensor Circuit Signal Erratic DTC C0035 18 Left Front Wheel Speed Sensor Circuit Low Signal Amplitude DTC C0035 5A Left Front Wheel Speed Sensor Circuit Not Plausible DTC C0040 06 Right Front Wheel Speed Sensor Circuit Low Voltage/Open DTC C0040 0F Right Front Wheel Speed Sensor Circuit Signal Erratic DTC C0040 18 Right Front Wheel Speed Sensor Circuit Low Signal Amplitude DTC C0040 5A Right Front Wheel Speed Sensor Circuit Not Plausible DTC C0045 06 Left Rear Wheel Speed Sensor Circuit Low Voltage/Open DTC C0045 0F Rear Wheel Speed Sensor Circuit Signal Erratic DTC C0045 18 Left Rear Wheel Speed Sensor Circuit Low Signal Amplitude DTC C0045 5A Left Rear Wheel Speed Sensor Circuit Not Plausible DTC C0050 06 Right Rear Wheel Speed Sensor Circuit Low Voltage/Open DTC C0050 0F Right Rear Wheel Speed Sensor Circuit Signal Erratic DTC C0050 18 Right Rear Wheel Speed Sensor Circuit Low Signal Amplitude DTC C0050 5A Right Rear Wheel Speed Sensor Circuit Not Plausible
DTC C0110	DTC C0110 00 Pump Motor Circuit Malfunction DTC C0110 04 Pump Motor Circuit Open DTC C0110 61 Pump Motor Stuck
DTC C0131	DTC C0131 00 Traction Control System Pressure Circuit Malfunction DTC C0131 4B Traction Control System Pressure Circuit Calibration Not Learned DTC C0131 5A Traction Control System Pressure Circuit Not Plausible
DTC C0161	DTC C0161 5A Antilock Braking System Brake Switch Circuit Not Plausible
DTC C0186, C018B, C0196, C019B, or C0287	DTC C0186 5A Lateral Acceleration Sensor Circuit Not Plausible DTC C0186 71 Lateral Acceleration Sensor Circuit Invalid Data DTC C018B 5A Multi-Axis Acceleration Sensor Signal Not Plausible

	DTC C0196 00 Yaw Rate Circuit Malfunction DTC C0196 5A Yaw Rate Signal Not Plausible DTC C0196 71 Yaw Rate Signal Invalid Data DTC C019B 5A Yaw Rate Signal Not Plausible DTC C0287 4B Longitudinal Acceleration Sensor Circuit Calibration Not Learned DTC C0287 5A Longitudinal Acceleration Sensor Circuit Not Plausible DTC C0287 71 Longitudinal Acceleration Sensor Circuit Invalid Data
DTC C0280	DTC C0280 54 Stability System Active Too Long High Temperature
DTC C0710	DTC C0710 00 Steering Position Signal Malfunction DTC C0710 42 Steering Position Signal Calibration Not Programmed DTC C0710 71 Steering Position Signal Invalid Data DTC C0710 5A Steering Position Signal Not Plausible
DTC C1207-C1210, C1221-C1228, or C1232-C1235	DTC C1207 00 Left Front Wheel Speed Sensor Circuit High Input DTC C1208 00 Right Front Wheel Speed Sensor Circuit High Input DTC C1209 00 Left Rear Wheel Speed Sensor Circuit High Input DTC C1210 00 Right Rear Wheel Speed Sensor Circuit High Input DTC C1221 00 Left Front Wheel Speed Sensor Circuit Malfunction DTC C1222 00 Right Front Wheel Speed Sensor Circuit Malfunction DTC C1223 00 Left Rear Wheel Speed Sensor Circuit Malfunction DTC C1224 00 Right Rear Wheel Speed Sensor Circuit Malfunction
DTC C1251	DTC C1251 Lateral Acceleration Sensor Performance
DTC P0856	DTC P0856 Traction Control Torque Request Circuit

AUTOMATIC TRANSMISSION - 6T40 - DIAGNOSTIC TROUBLE CODES

AUTOMATIC TRANSMISSION - 6T40 - DIAGNOSTIC TROUBLE CODES

DTC	Description
DTC P0562 or P0563	DTC P0562 System Voltage Low Voltage DTC P0563 System Voltage High Voltage
DTC P057C or P057D	DTC P057C Brake Pedal Position Sensor Circuit Low Voltage DTC P057D Brake Pedal Position Sensor Circuit High Voltage
DTC P0601-P0604 or P062F	DTC P0601 Control Module Read Only Memory Performance DTC P0602 Control Module Not Programmed DTC P0603 Control Module Long Term Memory Reset DTC P0604 Control Module Random Access Memory Performance DTC P062F Control Module Long Term Memory Performance
DTC P0634	DTC P0634 Control Module Overtemperature
DTC P0658 or P0659	DTC P0658 Actuator High Control Circuit Group 1 Low Voltage DTC P0659 Actuator High Control Circuit Group 1 High Voltage
DTC P0667, P0668, or P0669	DTC P0667 Control Module Temperature Sensor Performance DTC P0668 Control Module Temperature Sensor Circuit Low Voltage DTC P0669 Control Module Temperature Sensor Circuit High Voltage
DTC P06AC, P06AD, or	DTC P06AC Control Module Power Up Temperature Sensor

P06AE	Performance DTC P06AD Control Module Power Up Temperature Sensor Circuit Low Voltage DTC P06AE Control Module Power Up Temperature Sensor Circuit High Voltage
DTC P0711-P0713	DTC P0711 Transmission Fluid Temperature Sensor Performance DTC P0712 Transmission Fluid Temperature Sensor Circuit Low Voltage DTC P0713 Transmission Fluid Temperature Sensor Circuit High Voltage
DTC P0716, P0717, P07BF, or P07C0	DTC P0716 Input Speed Sensor Performance DTC P0717 Input Speed Sensor Circuit No Signal DTC P07BF Input Speed Sensor Circuit Low Voltage DTC P07C0 Input Speed Sensor Circuit High Voltage
DTC P071D	DTC P071D Transmission Sport Mode Switch circuit
DTC P0722, P0723, P077C, or P077D	DTC P0722 Output Speed Sensor Circuit No Signal DTC P0723 Output Speed Sensor Intermittent DTC P077C Output Speed Sensor Circuit Low Voltage DTC P077D Output Speed Sensor Circuit High Voltage
DTC P0741 or P0742 (Gen 2 with 1.4L - LUJ)	DTC P0741 Torque Converter Clutch (TCC) System Stuck Off DTC P0742 Torque Converter Clutch (TCC) System Stuck On
DTC P0741 or P0742 (Gen 1 with 1.8L - LUW)	DTC P0741 Torque Converter Clutch (TCC) System Stuck Off DTC P0742 Torque Converter Clutch (TCC) System Stuck On
DTC P0751 or P0752 (Gen 2 with 1.4L - LUJ)	DTC P0751 Shift Solenoid 1 Valve Performance - Stuck Off DTC P0752 Shift Solenoid 1 Valve Performance - Stuck On
DTC P0751 or P0752 (Gen 1 with 1.8L - LUW)	DTC P0751 Shift Solenoid 1 Valve Performance - Stuck Off DTC P0752 Shift Solenoid 1 Valve Performance - Stuck On
DTC P0776 or P0777 (Gen 1 with 1.8L - LUW)	DTC P0776 Pressure Control Solenoid Valve 2 Stuck Off DTC P0777 Pressure Control Solenoid Valve 2 Stuck On
DTC P0776 or P0777 (Gen 2 with 1.4L - LUJ)	DTC P0776 Pressure Control Solenoid Valve 2 Stuck Off DTC P0777 Pressure Control Solenoid Valve 2 Stuck On
DTC P0796 or P0797 (Gen 1 with 1.8L - LUW)	DTC P0796 Pressure Control Solenoid Valve 3 Stuck Off DTC P0797 Pressure Control Solenoid Valve 3 Stuck On
DTC P0796 or P0797 (Gen 2 with 1.4L - LUJ)	DTC P0796 Pressure Control Solenoid Valve 3 Stuck Off DTC P0797 Pressure Control Solenoid Valve 3 Stuck On
DTC P0815, P0816, or P0826	DTC P0815 Upshift Switch Circuit DTC P0816 Downshift Switch Circuit DTC P0826 Up and Down Shift Switch Circuit
DTC P0842 or P0843 (Gen 1 with 1.8L - LUW)	DTC P0842 Transmission Fluid Pressure Switch 1 Circuit Low Voltage DTC P0843 Transmission Fluid Pressure Switch 1 Circuit High Voltage
DTC P0850-P0852	DTC P0850 Park/Neutral Position Switch Circuit DTC P0851 Park/Neutral Position Switch Circuit Low Voltage DTC P0852 Park/Neutral Position Switch Circuit High Voltage
DTC P0872 or P0873 (Gen 1 with 1.8L - LUW)	DTC P0872 Transmission Fluid Pressure Switch 3 Circuit Low Voltage DTC P0873 Transmission Fluid Pressure Switch 3 Circuit High Voltage

DTC P0877 or P0878 (Gen 1 with 1.8L - LUW)	DTC P0877 Transmission Fluid Pressure Switch 4 Circuit Low Voltage DTC P0878 Transmission Fluid Pressure Switch 4 Circuit High Voltage
DTC P0961-P0963	DTC P0961 Line Pressure Control Solenoid Valve System Performance DTC P0962 Line Pressure Control Solenoid Valve Control Circuit Low Voltage DTC P0963 Line Pressure Control Solenoid Valve Control Circuit High Voltage
DTC P0965-P0967	DTC P0965 Pressure Control Solenoid Valve 2 Performance DTC P0966 Pressure Control Solenoid Valve 2 Control Circuit Low Voltage DTC P0967 Pressure Control Solenoid Valve 2 Control Circuit High Voltage
DTC P0969-P0971	DTC P0969 Pressure Control Solenoid Valve 3 Performance DTC P0970 Pressure Control Solenoid Valve 3 Control Circuit Low Voltage DTC P0971 Pressure Control Solenoid Valve 3 Control Circuit High Voltage
DTC P0973 or P0974	DTC P0973 Shift Solenoid Valve 1 Control Circuit Low Voltage DTC P0974 Shift Solenoid Valve 1 Control Circuit High Voltage
DTC P0989 or P0990 (Gen 1 with 1.8L - LUW)	DTC P0989 Transmission Fluid Pressure Switch 5 Circuit Low Voltage DTC P0990 Transmission Fluid Pressure Switch 5 Circuit High Voltage
DTC P150C	DTC P150C Transmission Control Module Engine Speed Request Signal Message Counter Incorrect
DTC P1761	DTC P1761 Up and Down Shift Switch Signal Message Counter Incorrect
DTC P182E or P1915	DTC P182E Internal Mode Switch Indicates Invalid Range DTC P1915 Internal Mode Switch Does Not Indicate Park/Neutral During Start
DTC P1876	DTC P1876 Up and Down Shift Enable Switch Circuit Low Voltage
DTC P2534	DTC P2534 Ignition On/Start Switch Circuit Low Voltage
DTC P2537	DTC P2537 Ignition Accessory Switch Circuit Low Voltage
DTC P2714 or P2715 (Gen 1 with 1.8L - LUW)	DTC P2714 Pressure Control Solenoid Valve 4 Stuck Off DTC P2715 Pressure Control Solenoid Valve 4 Stuck On
DTC P2714 or P2715 (Gen 2 with 1.4L - LUJ)	DTC P2714 Pressure Control Solenoid Valve 4 Stuck Off DTC P2715 Pressure Control Solenoid Valve 4 Stuck On
DTC P2719-P2721	DTC P2719 Pressure Control Solenoid Valve 4 Performance DTC P2720 Pressure Control Solenoid Valve 4 Control Circuit Low Voltage DTC P2721 Pressure Control Solenoid Valve 4 Control Circuit High Voltage
DTC P2723 or P2724 (Gen 1 with 1.8L - LUW)	DTC P2723 Pressure Control Solenoid Valve 5 Stuck Off DTC P2724 Pressure Control Solenoid Valve 5 Stuck On
DTC P2723 or P2724 (Gen 2 with 1.4L - LUJ)	DTC P2723 Pressure Control Solenoid Valve 5 Stuck Off DTC P2724 Pressure Control Solenoid Valve 5 Stuck On
DTC P2728-P2730	DTC P2728 Pressure Control Solenoid Valve 5 System Performance

	DTC P2729 Pressure Control Solenoid Valve 5 Control Circuit Low Voltage DTC P2730 Pressure Control Solenoid Valve 5 Control Circuit High Voltage
DTC P2762, P2763, or P2764	DTC P2762 Torque Converter Clutch (TCC) Pressure Control Solenoid Valve Performance DTC P2763 Torque Converter Clutch (TCC) Pressure Control Solenoid Valve Control Circuit High Voltage DTC P2764 Torque Converter Clutch (TCC) Pressure Control Solenoid Valve Control Circuit Low Voltage

BATTERY, CHARGING SYSTEM AND STARTING SYSTEM - DIAGNOSTIC TROUBLE CODES

BATTERY, CHARGING SYSTEM AND STARTING SYSTEM - DIAGNOSTIC TROUBLE CODES

DTC	Description
DTC B1325, B1330, B1517, C0800, P0560, P0562, or P0563	DTC B1325 03 Control Module Power Circuit Low Voltage DTC B1325 07 Control Module Power Circuit High Voltage DTC B1330 03 Device Power 2 Circuit Low Voltage DTC B1517 03 Battery Voltage Low Voltage DTC B1517 07 Battery Voltage High Voltage DTC B1517 5A Battery Voltage Plausibility Failure DTC C0800 03 Control Module Power Circuit Low Voltage DTC C0800 07 Control Module Power Circuit High Voltage DTC C0800 08 Control Module Power Circuit Voltage Signal Invalid DTC C0800 11 Control Module Power Circuit High Input DTC C0800 12 Control Module Power Circuit Low Input DTC C0800 0D Control Module Power Circuit High Resistance DTC P0560 System Voltage DTC P0562 System Voltage Low Voltage DTC P0563 System Voltage High Voltage
DTC B1516	DTC B1516 08 Battery Current Sensor Performance - Signal Invalid DTC B1516 66 Battery Current Sensor Incorrect Mounting
DTC B151A	DTC B151A 58 Battery Capacity Performance
DTC B1527	DTC B1527 00 Parasitic Load
DTC P0615, P0616, or P0617	DTC P0615 Starter Relay Control Circuit DTC P0616 Starter Relay Control Circuit Low Voltage DTC P0617 Starter Relay Control Circuit High Voltage
DTC P0621	DTC P0621 Generator L-Terminal Circuit
DTC P0622	DTC P0622 Generator F-Terminal Circuit

CELLULAR SYSTEM, ENTERTAINMENT SYSTEM, AND NAVIGATION SYSTEM - DIAGNOSTIC TROUBLE CODES

CELLULAR SYSTEM, ENTERTAINMENT SYSTEM, AND NAVIGATION SYSTEM - DIAGNOSTIC

TROUBLE CODES

DTC	Description
DTC B0000	DTC B0000 5A Vehicle Speed Information Circuit Not Plausible
DTC B0997	DTC B0997 00 Info Display Module Malfunction
DTC B1020	DTC B1020 00 Auxiliary Electronic Control Unit (ECU) Performance
DTC B1025, B1035, B1045, or B1055	DTC B1025 01 Left Front Audio Output Circuit Short to Battery DTC B1025 02 Left Front Audio Output Circuit Short to Ground DTC B1025 04 Left Front Audio Output Circuit Open DTC B1035 01 Front Audio Output Circuit Short to Battery DTC B1035 02 Right Front Audio Output Circuit Short to Ground DTC B1035 04 Right Front Audio Output Circuit Open DTC B1045 01 Left Rear Audio Output Circuit Short to Battery DTC B1045 02 Left Rear Audio Output Circuit Short to Ground DTC B1045 04 Left Rear Audio Output Circuit Open DTC B1055 01 Right Rear Audio Output Circuit Short to Battery DTC B1055 02 Right Rear Audio Output Circuit Short to Ground DTC B1055 04 Right Rear Audio Output Circuit Open
DTC B125A	DTC B125A 02 Antenna Signal Circuit Short to Ground DTC B125A 04 Antenna Signal Circuit Open Circuit
DTC B125C	DTC B125C 01 Satellite Antenna Circuit Short to Battery DTC B125C 02 Satellite Antenna Circuit Short to Ground DTC B125C 04 Satellite Antenna Circuit Open
DTC B1265	DTC B1265 02 Switched 14 Volt Performance Short to Ground
DTC B1271	DTC B1271 00 Theft Protection Active
DTC B1278 or B1279	DTC B1278 01 Left Auxiliary Input Signal Circuit Short to Battery DTC B1278 02 Left Auxiliary Input Signal Circuit Short to Ground DTC B1279 01 Right Auxiliary Input Signal Circuit Short to Battery DTC B1279 02 Right Auxiliary Input Signal Circuit Short to Ground
DTC B1287	DTC B1287 01 Amplifier Control Signal Circuit Short to Battery DTC B1287 02 Amplifier Control Signal Circuit Short to Ground DTC B1287 04 Amplifier Control Signal Circuit Open
DTC B1446 or B1447	DTC B1446 Replace Backup Power Source Below Minimum Threshold DTC B1447 Backup Power Source Open Circuit
DTC B2455	DTC B2455 02 Cellular Phone Microphone Circuit Short to Ground DTC B2455 04 Cellular Phone Microphone Circuit Open/High Resistance
DTC B2462	DTC B2462 01 Global Positioning System Short to Battery DTC B2462 02 Global Positioning System Short to Ground DTC B2462 04 Global Positioning System Open
DTC B2470	DTC B2470 02 Cellular Phone Antenna Circuit Malfunction Short to Ground DTC B2470 04 Cellular Phone Antenna Circuit Malfunction Open Circuit
DTC B2476 or B2482	DTC B2476 04 Cellular Phone Select Service Switch Open DTC B2476 59 Cellular Phone Select Service Switch Protection Time-

	out DTC B2482 00 Cellular Phone Select Service Switch Range/Performance
DTC B2485	DTC B2485 02 Wireless Communication (BT) Antenna Circuit Short to Ground DTC B2485 04 Wireless Communication (BT) Antenna Circuit Open
DTC U0255-U0257	DTC U0255 Lost Communication with Info Display Module DTC U0256 Lost Communication with Infotainment Faceplate Control Module DTC U0257 Lost Communication with Info Display Module/Infotainment Faceplate Control Module

CRUISE CONTROL SYSTEM - DIAGNOSTIC TROUBLE CODES

CRUISE CONTROL SYSTEM - DIAGNOSTIC TROUBLE CODES

DTC	Description
DTC P0571	DTC P0571 Cruise Control Brake Switch Circuit
DTC P0572 or P0573	DTC P0572 Brake Switch Circuit 1 Low Voltage DTC P0573 Brake Switch Circuit 1 High Voltage
DTC P0575	DTC P0575 Cruise Control Switch Signal Message Counter Incorrect
DTC P0703	DTC P0703 Brake Switch Signal Message Counter Incorrect

DATA COMMUNICATIONS SYSTEM - DIAGNOSTIC TROUBLE CODES

DATA COMMUNICATIONS SYSTEM - DIAGNOSTIC TROUBLE CODES

DTC	Description
DTC B1000	DTC B1000 Electronic Control Unit
DTC B1001	DTC B1001 Option Configuration
DTC B101D	DTC B101D Electronic Control Unit Hardware
DTC B101E	DTC B101E Electronic Control Unit Software
DTC C056D	DTC C056D Electronic Control Unit Hardware
DTC C056E	DTC C056E Electronic Control Unit Software
DTC P0601-P0604, P0606, or P062F	DTC P0601 Control Module Read Only Memory Performance DTC P0602 Control Module Not Programmed DTC P0603 Control Module Long Term Memory Reset DTC P0604 Control Module Random Access Memory Performance DTC P0606 Control Module Processor Performance DTC P062F Control Module Long Term Memory Performance
DTC U0001	DTC U0001 00 High Speed CAN Communication Bus Malfunction
DTC U0020	DTC U0020 Low Speed CAN Bus
DTC U0073 or U2100	DTC U0073 Control Module Communication Bus A Off DTC U2100 CAN Bus Communication
DTC U0074	DTC U0074 Control Module Communication Bus B Off

DTC U0077	DTC U0077 00 Control Module Communication Chassis Expansion CAN Bus Off
DTC U0078	DTC U0078 Control Module Communication Low Speed CAN Bus Off
DTC U0100-U02FF	See **Control Module U Code List**
DTC U0300-U0336	See **Control Module U Code List**
DTC U0400-U05FF	See **Control Module U Code List**
DTC U1500-U15FF	See **Control Module U Code List**
DTC U1814	DTC U1814 Powertrain Wake-Up Communication Circuit
DTC U18B9-U18BF	DTC U18B9 Primary High Speed CAN Bus Subnet Configuration List DTC U18BF Secondary High Speed CAN Bus Subnet Configuration List
DTC U2099	DTC U2099 High Speed Communication Enable Circuit

ENGINE CONTROLS/FUEL - 1.4L - DIAGNOSTIC TROUBLE CODES

ENGINE CONTROLS/FUEL - 1.4L - DIAGNOSTIC TROUBLE CODES

DTC	Description
DTC P0010 or P0013 (LUJ)	DTC P0010 Intake Camshaft Position Actuator Solenoid Valve Control Circuit DTC P0013 Exhaust Camshaft Position Actuator Solenoid Valve Control Circuit
DTC P0011 or P0014 (LUJ)	DTC P0011 Intake Camshaft Position System Performance DTC P0014 Exhaust Camshaft Position System Performance
DTC P0016 or P0017 (LUJ)	DTC P0016 Crankshaft Position - Intake Camshaft Position Not Plausible DTC P0017 Crankshaft Position - Exhaust Camshaft Position Not Plausible
DTC P0030, P0036, P0053, P0054, P0135, or P0141 (LUJ)	DTC P0030 HO2S Heater Control Circuit Sensor 1 DTC P0036 HO2S Heater Control Circuit Sensor 2 DTC P0053 HO2S Heater Resistance Sensor 1 DTC P0054 HO2S Heater Resistance Sensor 2 DTC P0135 HO2S Heater Performance Sensor 1 DTC P0141 HO2S Heater Performance Sensor 2
DTC P0033-P0035	DTC P0033 Turbocharger Bypass Solenoid Valve Control Circuit DTC P0034 Turbocharger Bypass Solenoid Valve Control Circuit Low Voltage DTC P0035 Turbocharger Bypass Solenoid Valve Control Circuit High Voltage
DTC P0068 or P1101	DTC P0068 Throttle Body Airflow Performance DTC P1101 Intake Air Flow System Performance
DTC P0096 or P0111	DTC P0096 Intake Air Temperature (IAT) Sensor 2 Performance DTC P0111 Intake Air Temperature (IAT) Sensor 1 Performance
DTC P0097 or P0098	DTC P0097 Intake Air Temperature (IAT) Sensor 2 Circuit Low Voltage DTC P0098 Intake Air Temperature (IAT) Sensor 2 Circuit High Voltage
DTC P00C7	DTC P00C7 Intake Air Pressure Measurement System - Multiple Sensors Not Plausible
DTC P0101	DTC P0101 Mass Air Flow (MAF) Sensor Performance

DTC P0102 or P0103	DTC P0102 Mass Air Flow (MAF) Sensor Circuit Low Frequency DTC P0103 Mass Air Flow (MAF) Sensor Circuit High Frequency
DTC P0106	DTC P0106 Manifold Absolute Pressure (MAP) Sensor Performance
DTC P0107 or P0108	DTC P0107 Manifold Absolute Pressure (MAP) Sensor Circuit Low Voltage DTC P0108 Manifold Absolute Pressure (MAP) Sensor Circuit High Voltage
DTC P0112, P0113, or P0114	DTC P0112 Intake Air Temperature (IAT) Sensor Circuit Low Voltage DTC P0113 Intake Air Temperature (IAT) Sensor Circuit High Voltage DTC P0114 Intake Air Temperature (IAT) Sensor Circuit Intermittent
DTC P0116 (LUJ)	DTC P0116 Engine Coolant Temperature (ECT) Sensor Performance
DTC P0117 or P0118 (LUJ)	DTC P0117 Engine Coolant Temperature (ECT) Sensor Circuit Low Voltage DTC P0118 Engine Coolant Temperature (ECT) Sensor Circuit High Voltage
DTC P0119 (LUJ)	DTC P0119 Engine Coolant Temperature (ECT) Sensor Circuit Intermittent
DTC P0121-P0123, P0222, P0223, or P2135 (LUJ)	DTC P0121 Throttle Position Sensor 1 Performance DTC P0122 Throttle Position Sensor 1 Circuit Low Voltage DTC P0123 Throttle Position Sensor 1 Circuit High Voltage DTC P0222 Throttle Position Sensor 2 Circuit Low Voltage DTC P0223 Throttle Position Sensor 2 Circuit High Voltage DTC P2135 Throttle Position Sensors 1-2 Not Plausible
DTC P0128	DTC P0128 Engine Coolant Temperature (ECT) Below Thermostat Regulating Temperature
DTC P0131, P0132, P0134, P0137, P0138, or P0140	DTC P0131 HO2S Circuit Low Voltage Sensor 1 DTC P0132 HO2S Circuit High Voltage Sensor 1 DTC P0134 HO2S Circuit Insufficient Activity Sensor 1 DTC P0137 HO2S Circuit Low Voltage Sensor 2 DTC P0138 HO2S Circuit High Voltage Sensor 2 DTC P0140 HO2S Circuit Insufficient Activity Sensor 2
DTC P0133, P013A, P013B, P013E, P013F, P015A, P015B, P2270, or P2271	DTC P0133 HO2S Slow Response Sensor 1 DTC P013A HO2S Slow Response Rich to Lean Sensor 2 DTC P013B HO2S Slow Response Lean to Rich Sensor 2 DTC P013E HO2S Delayed Response Rich to Lean Sensor 2 DTC P013F HO2S Delayed Response Lean to Rich Sensor 2 DTC P015A HO2S Delayed Response Rich to Lean Bank 1 Sensor 1 DTC P015B HO2S Delayed Response Lean to Rich Bank 1 Sensor 1 DTC P2270 HO2S Signal Stuck Lean Sensor 2 DTC P2271 HO2S Signal Stuck Rich Sensor 2
DTC P0171 or P2097	DTC P0171 Fuel Trim System Lean DTC P2097 Post Catalyst Fuel Trim System High Limit
DTC P0172 or P2096	DTC P0172 Fuel Trim System Rich DTC P2096 Post Catalyst Fuel Trim System Low Limit
DTC P018B-P018D	DTC P018B Fuel Pressure Sensor Performance DTC P018C Fuel Pressure Sensor Circuit Low Voltage DTC P018D Fuel Pressure Sensor Circuit High Voltage

DTC P0201-P0204	DTC P0201 Cylinder 1 Injector Control Circuit DTC P0202 Cylinder 2 Injector Control Circuit DTC P0203 Cylinder 3 Injector Control Circuit DTC P0204 Cylinder 4 Injector Control Circuit
DTC P0231, P0232, or P023F	DTC P0231 Fuel Pump Control Circuit Low Voltage DTC P0232 Fuel Pump Control Circuit High Voltage DTC P023F Fuel Pump Control Circuit
DTC P0234 or P0299	DTC P0234 Engine Overboost DTC P0299 Engine Underboost
DTC P0236	DTC P0236 Turbocharger Boost Sensor Performance
DTC P0237 or P0238	DTC P0237 Turbocharger Boost Sensor Circuit Low Voltage DTC P0238 Turbocharger Boost Sensor Circuit High Voltage
DTC P0243, P0245, or P0246	DTC P0243 Turbocharger Wastegate Solenoid Valve Control Circuit DTC P0245 Turbocharger Wastegate Solenoid Valve Control Circuit Low Voltage DTC P0246 Turbocharger Wastegate Solenoid Valve Control Circuit High Voltage
DTC P025A	DTC P025A Fuel Pump Control Module Enable Circuit
DTC P0300 (LUJ)	DTC P0300 Engine Misfire Detected
DTC P0315 (LUJ)	DTC P0315 Crankshaft Position System Variation Not Learned
DTC P0324, P0326, or P06B6	DTC P0324 Knock Sensor Module Performance DTC P0326 Knock Sensor Performance DTC P06B6 Control Module Knock Sensor Processor 1 Performance
DTC P0325, P0327, or P0328	DTC P0325 Knock Sensor Circuit DTC P0327 Knock Sensor Circuit Low Voltage DTC P0328 Knock Sensor Circuit High Voltage
DTC P0335 or P0336 (LUJ)	DTC P0335 Crankshaft Position Sensor Circuit DTC P0336 Crankshaft Position Sensor Performance
DTC P0340 or P0365 (LUJ)	DTC P0340 Intake Camshaft Position Sensor Circuit DTC P0365 Exhaust Camshaft Position Sensor Circuit
DTC P0341 or P0366 (LUJ)	DTC P0341 Intake Camshaft Position Sensor Performance DTC P0366 Exhaust Camshaft Position Sensor Performance
DTC P0351-P0354 (LUJ)	DTC P0351 Ignition Coil 1 Control Circuit DTC P0352 Ignition Coil 2 Control Circuit DTC P0353 Ignition Coil 3 Control Circuit DTC P0354 Ignition Coil 4 Control Circuit
DTC P0420 (LUJ)	DTC P0420 Catalyst System Low Efficiency
DTC P0442	DTC P0442 Evaporative Emission (EVAP) System Small Leak Detected
DTC P0443	DTC P0443 Evaporative Emission (EVAP) Purge Solenoid Valve Control Circuit
DTC P0446	DTC P0446 Evaporative Emissions (EVAP) Vent System Performance
DTC P0449	DTC P0449 Evaporative Emission (EVAP) Vent Solenoid Valve Control Circuit
DTC P0451-P0454	DTC P0451 Fuel Tank Pressure Sensor Performance DTC P0452 Fuel Tank Pressure Sensor Circuit Low Voltage

	DTC P0453 Fuel Tank Pressure Sensor Circuit High Voltage DTC P0454 Fuel Tank Pressure Sensor Circuit Intermittent
DTC P0455	DTC P0455 Evaporative Emission (EVAP) System Large Leak Detected
DTC P0496	DTC P0496 Evaporative Emission (EVAP) System Flow During Non-Purge
DTC P0506 or P0507 (LUJ)	DTC P0506 Idle Speed Low DTC P0507 Idle Speed High
DTC P0601-P0604, P0606, or P062F (Fuel Pump Control Module)	DTC P0601 Control Module Read Only Memory (ROM) DTC P0602 Control Module Not Programmed DTC P0603 Control Module Long Term Memory Reset DTC P0604 Control Module Random Access Memory (RAM) DTC P0606 Control Module Internal Performance DTC P062F Control Module Long Term Memory Performance
DTC P0601-P0604, P0606, P062F, P16F3, or P2610 (LUJ)	DTC P0601 Control Module Read Only Memory Performance DTC P0602 Control Module Not Programmed DTC P0603 Control Module Long Term Memory Reset DTC P0604 Control Module Random Access Memory Performance DTC P0606 Control Module Processor Performance DTC P062F Control Module Long Term Memory Performance DTC P16F3 Control Module Redundant Memory Performance DTC P2610 Control Module Ignition Off Timer Performance
DTC P0627-P0629	DTC P0627 Fuel Pump Enable Circuit DTC P0628 Fuel Pump Enable Circuit Low Voltage DTC P0629 Fuel Pump Enable Circuit High Voltage
DTC P0630 (LUJ)	DTC P0630 VIN Not Programmed or Mismatched - Engine Control Module (ECM)
DTC P0641 or P06A6 (Fuel Pump Control Module)	DTC P0641 5 V Reference Circuit DTC P06A6 5 V Reference Performance
DTC P0641, P0651, P0697, or P06A3 (LUJ)	DTC P0641 5V Reference 1 Circuit DTC P0651 5V Reference 2 Circuit DTC P0697 5V Reference 3 Circuit DTC P06A3 5V Reference 4 Circuit
DTC P0650 (LUJ)	DTC P0650 Malfunction Indicator Lamp (MIL) Control Circuit
DTC P0685, P0689, P0690, or P1682	DTC P0685 Engine Controls Ignition Relay Control Circuit DTC P0689 Engine Controls Ignition Relay Feedback Circuit Low Voltage DTC P0690 Engine Controls Ignition Relay Feedback Circuit High Voltage DTC P1682 Ignition 1 Switch Circuit 2
DTC P069E	DTC P069E Fuel Pump Control Module Requested MIL Illumination
DTC P0700 (LUJ)	DTC P0700 Transmission Control Module Requested MIL Illumination
DTC P112B	DTC P112B Intake Air Temperature (IAT) Sensor 3 Performance
DTC P112C or P112D	DTC P112C Intake Air Temperature (IAT) Sensor 3 Circuit Low Voltage DTC P112D Intake Air Temperature (IAT) Sensor 3 Circuit High Voltage
DTC P11C2 or P11C3	DTC P11C2 Intake Air Humidity Sensor Circuit Low Voltage DTC P11C3 Intake Air Humidity Sensor Circuit High Voltage
DTC P1255 or P064A	DTC P064A Fuel Pump Control Module Performance

	DTC P1255 Fuel Pump Control Module Driver Over-temperature
DTC P1400	DTC P1400 Cold Start Emission Reduction Control System
DTC P150C (LUJ)	DTC P150C Transmission Control Module Engine Speed Request Signal Message Counter Incorrect
DTC P1516, P2101, P2119, or P2176 (LUJ)	DTC P1516 Throttle Actuator Control (TAC) Module Throttle Actuator Position Performance DTC P2101 Throttle Actuator Position Performance DTC P2119 Throttle Closed Position Performance DTC P2176 Minimum Throttle Position Not Learned
DTC P2122, P2123, P2127, P2128, or P2138 (LUJ)	DTC P2122 Accelerator Pedal Position (APP) Sensor 1 Circuit Low Voltage DTC P2123 Accelerator Pedal Position (APP) Sensor 1 Circuit High Voltage DTC P2127 Accelerator Pedal Position (APP) Sensor 2 Circuit Low Voltage DTC P2128 Accelerator Pedal Position (APP) Sensor 2 Circuit High Voltage DTC P2138 Accelerator Pedal Position (APP) Sensors 1-2 Not Plausible
DTC P2199	DTC P2199 Intake Air Temperature (IAT) Sensor 1-2 Correlation
DTC P2227-P2230 (LUJ)	DTC P2227 Barometric Pressure (BARO) Sensor Performance DTC P2228 Barometric Pressure (BARO) Sensor Circuit Low Voltage DTC P2229 Barometric Pressure (BARO) Sensor Circuit High Voltage DTC P2230 Barometric Pressure (BARO) Sensor Circuit Erratic
DTC P2261	DTC P2261 Turbocharger Bypass Valve Stuck
DTC P2534 (Fuel Pump Control Module)	DTC P2534 Ignition 1 Switch Circuit Low Voltage
DTC P2544	DTC P2544 72 Transmission Torque Request Circuit Message Counter Incorrect DTC P2544 74 Transmission Torque Request Circuit Bus Signal Checksum Error
DTC P2635 (Fuel Pump Control Module)	DTC P2635 Fuel Pump Flow Performance

ENGINE CONTROLS/FUEL - 1.8L - DIAGNOSTIC TROUBLE CODES

ENGINE CONTROLS/FUEL - 1.8L - DIAGNOSTIC TROUBLE CODES

DTC	Description
DTC P0010 Or P0013 (LUW)	DTC P0010 Intake Camshaft Position Actuator Solenoid Valve Control Circuit DTC P0013 Exhaust Camshaft Position Actuator Solenoid Valve Control Circuit
DTC P0011 Or P0014 (LUW)	DTC P0011 Intake Camshaft Position System Performance DTC P0014 Exhaust Camshaft Position System Performance
DTC P0016 Or P0017 (LUW)	DTC P0016 Crankshaft Position - Intake Camshaft Position Not Plausible

	DTC P0017 Crankshaft Position - Exhaust Camshaft Position Not Plausible
DTC P0030-P0032, P0036-P0038, P0053, P0054, P0135, Or P0141 (LUW)	
DTC P0068 Or P1101 (LUW)	DTC P0068 Throttle Body Air Flow Performance DTC P1101 Intake Air Flow System Performance
DTC P0101 (LUW)	DTC P0101 Mass Air Flow (Maf) Sensor Performance
DTC P0102 Or P0103 (LUW)	DTC P0102 Mass Air Flow (Maf) Sensor Circuit Low Frequency DTC P0103 Mass Air Flow (Maf) Sensor Circuit High Frequency
DTC P0106 (LUW)	DTC P0106 Manifold Absolute Pressure (Map) Sensor Performance
DTC P0107 Or P0108 (LUW)	DTC P0107 Manifold Absolute Pressure (Map) Sensor Circuit Low Voltage DTC P0108 Manifold Absolute Pressure (Map) Sensor Circuit High Voltage
DTC P0111 (LUW)	DTC P0111 Intake Air Temperature (Iat) Sensor Performance
DTC P0112, P0113, Or P0114 (LUW)	DTC P0112 Intake Air Temperature (Iat) Sensor Circuit Low Voltage DTC P0113 Intake Air Temperature (Iat) Sensor Circuit High Voltage DTC P0114 Intake Air Temperature (Iat) Sensor Circuit Intermittent
DTC P0116 (LUW)	DTC P0116 Engine Coolant Temperature (Ect) Sensor Performance
DTC P0117 Or P0118 (LUW)	DTC P0117 Engine Coolant Temperature (Ect) Sensor Circuit Low Voltage DTC P0118 Engine Coolant Temperature (Ect) Sensor Circuit High Voltage
DTC P0119 (LUW)	DTC P0119 Engine Coolant Temperature (Ect) Sensor Circuit Intermittent
DTC P0121-P0123, P0222, P0223, Or P2135 (LUW)	DTC P0121 Throttle Position Sensor 1 Performance DTC P0122 Throttle Position Sensor 1 Circuit Low Voltage DTC P0123 Throttle Position Sensor 1 Circuit High Voltage DTC P0222 Throttle Position Sensor 2 Circuit Low Voltage DTC P0223 Throttle Position Sensor 2 Circuit High Voltage DTC P2135 Throttle Position Sensors 1-2 Not Plausible
DTC P0128	DTC P0128 Engine Coolant Temperature (Ect) Below Thermostat Regulating Temperature
DTC P0131, P0132, P0134, P0137, P0138, Or P0140 (LUW)	DTC P0131 HO2S Circuit Low Voltage Sensor 1 DTC P0132 HO2S Circuit High Voltage Sensor 1 DTC P0134 HO2S Circuit Insufficient Activity Sensor 1 DTC P0137 HO2S Circuit Low Voltage Sensor 2 DTC P0138 HO2S Circuit High Voltage Sensor 2 DTC P0140 HO2S Circuit Insufficient Activity Sensor 2
DTC P0133, P013A, P013B, P013E, P013F, P015A, P015B, P2270, Or P2271 (LUW)	DTC P0133 HO2S Slow Response Sensor 1 DTC P013A HO2S Slow Response Rich To Lean Sensor 2 DTC P013B HO2S Slow Response Lean To Rich Sensor 2 DTC P013E HO2S Delayed Response Rich To Lean Sensor 2 DTC P013F HO2S Delayed Response Lean To Rich Sensor 2

	DTC P015A HO2S Delayed Response Rich To Lean Sensor 1 DTC P015B HO2S Delayed Response Lean To Rich Sensor 1 DTC P2270 HO2S Signal Stuck Lean Sensor 2 DTC P2271 HO2S Signal Stuck Rich Sensor 2
DTC P0171 Or P2097 (LUW)	DTC P0171 Fuel Trim System Lean DTC P2097 Post Catalyst Fuel Trim System High Limit
DTC P0172 Or P2096 (LUW)	DTC P0172 Fuel Trim System Rich DTC P2096 Post Catalyst Fuel Trim System Low Limit
DTC P018B-P018D	DTC P018B Fuel Pressure Sensor Performance DTC P018C Fuel Pressure Sensor Circuit Low Voltage DTC P018D Fuel Pressure Sensor Circuit High Voltage
DTC P0201-P0204 (LUW)	DTC P0201 Cylinder 1 Injector Control Circuit DTC P0202 Cylinder 2 Injector Control Circuit DTC P0203 Cylinder 3 Injector Control Circuit DTC P0204 Cylinder 4 Injector Control Circuit
DTC P025A	DTC P025A Fuel Pump Control Module Enable Circuit
DTC P0231, P0232, Or P023F	DTC P0231 Fuel Pump Control Circuit Low Voltage DTC P0232 Fuel Pump Control Circuit High Voltage DTC P023F Fuel Pump Control Circuit
DTC P0300-P0304 Or P0313 (LUW)	DTC P0300 Engine Misfire Detected DTC P0301 Cylinder 1 Misfire Detected DTC P0302 Cylinder 2 Misfire Detected DTC P0303 Cylinder 3 Misfire Detected DTC P0304 Cylinder 4 Misfire Detected DTC P0313 Misfire Detected With Low Fuel Level
DTC P0315 (LUW)	DTC P0315 Crankshaft Position System Variation Not Learned
DTC P0324, P0326, Or P06B6	DTC P0324 Knock Sensor Module Performance DTC P0326 Knock Sensor Performance DTC P06B6 Control Module Knock Sensor Processor 1 Performance
DTC P0325, P0327, Or P0328 (LUW)	DTC P0325 Knock Sensor Circuit DTC P0327 Knock Sensor Circuit Low Voltage DTC P0328 Knock Sensor Circuit High Voltage
DTC P0335 Or P0336 (LUW)	DTC P0335 Crankshaft Position Sensor Circuit DTC P0336 Crankshaft Position Sensor Performance
DTC P0340 Or P0365 (LUW)	DTC P0340 Intake Camshaft Position Sensor Circuit DTC P0365 Exhaust Camshaft Position Sensor Circuit
DTC P0341 Or P0366 (LUW)	DTC P0341 Intake Camshaft Position Sensor Performance DTC P0366 Exhaust Camshaft Position Sensor Performance
DTC P0351-P0354 (LUW)	DTC P0351 Ignition Coil 1 Control Circuit DTC P0352 Ignition Coil 2 Control Circuit DTC P0353 Ignition Coil 3 Control Circuit DTC P0354 Ignition Coil 4 Control Circuit
DTC P0420 (LUW)	DTC P0420 Catalyst System Low Efficiency
DTC P0442	DTC P0442 Evaporative Emission (Evap) System Small Leak Detected

DTC P0443	DTC P0443 Evaporative Emission (Evap) Purge Solenoid Valve Control Circuit
DTC P0446	DTC P0446 Evaporative Emissions (Evap) Vent System Performance
DTC P0449	DTC P0449 Evaporative Emission (Evap) Vent Solenoid Valve Control Circuit
DTC P0451-P0454	DTC P0451 Fuel Tank Pressure Sensor Performance DTC P0452 Fuel Tank Pressure Sensor Circuit Low Voltage DTC P0453 Fuel Tank Pressure Sensor Circuit High Voltage DTC P0454 Fuel Tank Pressure Sensor Circuit Intermittent
DTC P0455	DTC P0455 Evaporative Emission (Evap) System Large Leak Detected
DTC P0496	DTC P0496 Evaporative Emission (Evap) System Flow During Non-Purge
DTC P0506 Or P0507 (LUW)	DTC P0506 Idle Speed Low DTC P0507 Idle Speed High
DTC P0601-P0604, P0606, Or P062F (Fuel Pump Control Module)	DTC P0601 Control Module Read Only Memory (Rom) DTC P0602 Control Module Not Programmed DTC P0603 Control Module Long Term Memory Reset DTC P0604 Control Module Random Access Memory (Ram) DTC P0606 Control Module Internal Performance DTC P062F Control Module Long Term Memory Performance
DTC P0601-P0604, P0606, P062F, P16F3, Or P2610 (LUW, ECM)	DTC P0601 Control Module Read Only Memory Performance DTC P0602 Control Module Not Programmed DTC P0603 Control Module Long Term Memory Reset DTC P0604 Control Module Random Access Memory Performance DTC P0606 Control Module Processor Performance DTC P062F Control Module Long Term Memory Performance DTC P16F3 Control Module Redundant Memory Performance DTC P2610 Control Module Ignition Off Timer Performance
DTC P0627-P0629 (LUW)	DTC P0627 Fuel Pump Enable Circuit Open DTC P0628 Fuel Pump Enable Circuit Low Voltage DTC P0629 Fuel Pump Enable Circuit High Voltage
DTC P0630 (LUW)	DTC P0630 Vin Not Programmed Or Mismatched - Engine Control Module (ECM)
DTC P0641 Or P06A6 (Fuel Pump Control Module)	DTC P0641 5 V Reference Circuit DTC P06A6 5 V Reference Performance
DTC P0641, P0651, P0697, Or P06A3 (LUW, ECM)	DTC P0641 5V Reference 1 Circuit DTC P0651 5V Reference 2 Circuit DTC P0697 5V Reference 3 Circuit DTC P06A3 5V Reference 4 Circuit
DTC P0650 (LUW)	DTC P0650 Malfunction Indicator Lamp (Mil) Control Circuit
DTC P0660 (LUW)	DTC P0660 Intake Manifold Tuning Control Valve Control Circuit
DTC P0685, P0689, P0690, Or P1682 (LUW)	DTC P0685 Engine Controls Ignition Relay Control Circuit DTC P0689 Engine Controls Ignition Relay Feedback Circuit Low Voltage

	DTC P0690 Engine Controls Ignition Relay Feedback Circuit High Voltage DTC P1682 Ignition 1 Switch Circuit 2
DTC P069E (LUW)	DTC P069E Fuel Pump Control Module Requested Mil Illumination
DTC P0700 (LUW)	DTC P0700 Transmission Control Module Requested Mil Illumination
DTC P1255 Or P064A	DTC P064A Fuel Pump Control Module Performance DTC P1255 Fuel Pump Control Module Driver Over-Temperature
DTC P1400 (LUW)	DTC P1400 Cold Start Emission Reduction Control System
DTC P150C (LUW)	DTC P150C Transmission Control Module Engine Speed Request Signal Message Counter Incorrect
DTC P1516, P2101, P2119, Or P2176 (LUW)	DTC P1516 Throttle Actuator Control (Tac) Module Throttle Actuator Position Performance DTC P2101 Throttle Actuator Position Performance DTC P2119 Throttle Closed Position Performance DTC P2176 Minimum Throttle Position Not Learned
DTC P2070 Or P2071 (LUW)	DTC P2070 Intake Manifold Tuning Control Valve Stuck Open DTC P2071 Intake Manifold Tuning Control Valve Stuck Closed
DTC P2076, P2077, Or P2078 (LUW)	DTC P2076 Intake Manifold Tuning Control Valve Position Sensor Performance DTC P2077 Intake Manifold Tuning Control Valve Position Sensor Circuit Low Voltage DTC P2078 Intake Manifold Tuning Control Valve Position Sensor Circuit High Voltage
DTC P2122, P2123, P2127, P2128, Or P2138 (LUW)	DTC P2122 Accelerator Pedal Position (App) Sensor 1 Circuit Low Voltage DTC P2123 Accelerator Pedal Position (App) Sensor 1 Circuit High Voltage DTC P2127 Accelerator Pedal Position (App) Sensor 2 Circuit Low Voltage DTC P2128 Accelerator Pedal Position (App) Sensor 2 Circuit High Voltage DTC P2138 Accelerator Pedal Position (App) Sensors 1-2 Not Plausible
DTC P2534 (Fuel Pump Control Module)	DTC P2534 Ignition 1 Switch Circuit Low Voltage
DTC P2635 (Fuel Pump Control Module)	DTC P2635 Fuel Pump Flow Performance

ENGINE COOLING SYSTEM - DIAGNOSTIC TROUBLE CODES

ENGINE COOLING SYSTEM - DIAGNOSTIC TROUBLE CODES

DTC	Description
DTC P00B3 or P00B4	DTC P00B3 Radiator Coolant Temperature (RCT) Sensor Circuit Low Voltage DTC P00B4 Radiator Coolant Temperature (RCT) Sensor Circuit High

	Voltage
DTC P00B6	DTC P00B6 Radiator Coolant Temperature (RCT)-Engine Coolant Temperature (ECT) Not Plausible
DTC P00B7	DTC P00B7 Engine Coolant Flow Insufficient
DTC P0480, P0481, P0691, P0692, P0693, or P0694	DTC P0480 Cooling Fan Relay 1 Control Circuit DTC P0481 Cooling Fan Relays 2 and 3 Control Circuit DTC P0691 Cooling Fan Relay 1 Control Circuit Low Voltage DTC P0692 Cooling Fan Relay 1 Control Circuit High Voltage DTC P0693 Cooling Fan Relays 2 and 3 Control Circuit Low Voltage DTC P0694 Cooling Fan Relays 2 and 3 Control Circuit High Voltage
DTC P0597-P0599	DTC P0597 Engine Coolant Thermostat Heater Control Circuit DTC P0598 Engine Coolant Thermostat Heater Control Circuit Low Voltage DTC P0599 Engine Coolant Thermostat Heater Control Circuit High Voltage
DTC P2181	DTC P2181 Engine Cooling System Performance

FIXED AND MOVEABLE WINDOWS - DIAGNOSTIC TROUBLE CODES

FIXED AND MOVEABLE WINDOWS - DIAGNOSTIC TROUBLE CODES

DTC	Description
DTC B0283	DTC B0283 02 Rear Defrost Circuit Short To Ground DTC B0283 05 Rear Defrost Circuit Short To Battery or Open
DTC B316B, B317A, B318A, or B319A (AEC)	DTC B316B Driver Window Switch DTC B317A Passenger Window Switch DTC B318A Left Rear Window Switch DTC B319A Right Rear Window Switch
DTC B316B, B317A, B318A, or B319A (AXG)	DTC B316B Driver Window Switch DTC B317A Passenger Window Switch DTC B318A Left Rear Window Switch DTC B319A Right Rear Window Switch
DTC B3205	DTC B3205 Driver Window Motor

HORN SYSTEM - DIAGNOSTIC TROUBLE CODES

HORN SYSTEM - DIAGNOSTIC TROUBLE CODES

DTC	Description
DTC B2750	DTC B2750 Horn Relay Secondary Circuit

HVAC SYSTEM - AUTOMATIC - DIAGNOSTIC TROUBLE CODES

HVAC SYSTEM - AUTOMATIC - DIAGNOSTIC TROUBLE CODES

DTC	Description
DTC B0163	DTC B0163 02 Passenger Compartment Temperature Sensor Circuit

	Short to Ground DTC B0163 05 Passenger Compartment Temperature Sensor Circuit High Voltage/Open
DTC B0173, B0178, or B3933	DTC B0173 02 Upper Left Duct Air Temperature Sensor Circuit Short to Ground DTC B0173 05 Upper Left Duct Air Temperature Sensor Circuit High Voltage/Open DTC B0178 02 Lower Left Duct Air Temperature Sensor Circuit Short to Ground DTC B0178 05 Lower Left Duct Air Temperature Sensor Circuit High Voltage/Open DTC B3933 02 Air Conditioning Evaporator Temperature Sensor Circuit Short to Ground DTC B3933 05 Air Conditioning Evaporator Temperature Sensor Circuit High Voltage/Open
DTC B018A, B048C, B048F, or B1395	DTC B018A 02 Windshield Temperature Sensor Circuit Short to Ground DTC B018A 05 Windshield Temperature Sensor Circuit High Voltage/Open DTC B048C 02 Humidity Sensor Humidity Circuit Short to Ground DTC B048C 05 Humidity Sensor Humidity Circuit High Voltage/Open DTC B048F 02 Humidity Sensor Temperature Circuit Short to Ground DTC B048F 05 Humidity Sensor Temperature Circuit High Voltage/Open DTC B1395 03 Control Module Voltage Reference Output Circuit Low Voltage DTC B1395 07 Control Module Voltage Reference Output Circuit High Voltage
DTC B0183	DTC B0183 02 Solar Load Sensor Circuit Short to Ground DTC B0183 05 Solar Load Sensor Circuit High Voltage/Open
DTC B0193	DTC B0193 01 Front Blower Motor Speed Circuit Short to Battery DTC B0193 06 Front Blower Motor Speed Circuit Low Voltage/Open
DTC B0223, B0233, B023A, or B0408	DTC B0223 01 Recirculate Position Command 1 Circuit Short to Battery DTC B0223 06 Recirculate Position Command 1 Circuit Low Voltage/Open DTC B0233 01 Air Flow Control Circuit Short to Battery DTC B0233 06 Air Flow Control Circuit Low Voltage/Open DTC B023A 02 HVAC Actuators Supply Voltage Short to Ground DTC B0408 01 Main Temperature Control Circuit Short to Battery DTC B0408 06 Main Temperature Control Circuit Low Voltage/Open
DTC B3843	DTC B3843 02 Air Quality Sensor Circuit Short to Ground DTC B3843 05 Air Quality Sensor Circuit High Voltage/Open DTC B3843 08 Air Quality Sensor Circuit Performance - Signal Invalid

DTC B393B	DTC B393B 04 Air Conditioning Compressor Valve Control Circuit Open DTC B393B 0B Air Conditioning Compressor Valve Control Circuit High Current
DTC P0530, P0532, or P0533	DTC P0530 03 Air Conditioning (A/C) Refrigerant Pressure Sensor Circuit Low Voltage DTC P0530 07 Air Conditioning (A/C) Refrigerant Pressure Sensor Circuit High Voltage DTC P0532 00 Air Conditioning (A/C) Refrigerant Pressure Sensor Circuit Low Voltage DTC P0533 00 Air Conditioning (A/C) Refrigerant Pressure Sensor Circuit High Voltage
DTC P0645, P0646, or P0647	DTC P0645 Air Conditioning (A/C) Compressor Clutch Relay Control Circuit DTC P0646 Air Conditioning (A/C) Compressor Clutch Relay Control Circuit Low Voltage DTC P0647 Air Conditioning (A/C) Compressor Clutch Relay Control Circuit High Voltage

HVAC SYSTEM - MANUAL - DIAGNOSTIC TROUBLE CODES

HVAC SYSTEM - MANUAL - DIAGNOSTIC TROUBLE CODES

DTC	Description
DTC B0193	DTC B0193 01 Front Blower Motor Speed Circuit Short to Battery DTC B0193 06 Front Blower Motor Speed Circuit Low Voltage/Open
DTC B0223, B0233, B023A, or B0408	DTC B0223 01 Recirculate Position Command 1 Circuit Short to Battery DTC B0223 06 Recirculate Position Command 1 Circuit Low Voltage/Open DTC B0233 01 Air Flow Control Circuit Short to Battery DTC B0233 06 Air Flow Control Circuit Low Voltage/Open DTC B023A 02 HVAC Actuators Supply Voltage Short to Ground DTC B0408 01 Main Temperature Control Circuit Short to Battery DTC B0408 06 Main Temperature Control Circuit Low Voltage/Open
DTC B3933	DTC B3933 02 Air Conditioning Evaporator Temperature Sensor Circuit Short to Ground DTC B3933 05 Air Conditioning Evaporator Temperature Sensor Circuit High Voltage/Open DTC B3933 13 Air Conditioning Evaporator Temperature Sensor Circuit High Temperature
DTC B393B	DTC B393B 04 Air Conditioning Compressor Valve Control Circuit Open DTC B393B 0B Air Conditioning Compressor Valve Control Circuit High Current
DTC P0532 or P0533	DTC P0532 00 Air Conditioning (A/C) Refrigerant Pressure Sensor Circuit Low Voltage DTC P0533 00 Air Conditioning (A/C) Refrigerant Pressure Sensor

	Circuit High Voltage
DTC P0645, P0646, or P0647	DTC P0645 Air Conditioning (A/C) Compressor Clutch Relay Control Circuit DTC P0646 Air Conditioning (A/C) Compressor Clutch Relay Control Circuit Low Voltage DTC P0647 Air Conditioning (A/C) Compressor Clutch Relay Control Circuit High Voltage

HYDRAULIC BRAKE SYSTEM - DIAGNOSTIC TROUBLE CODES

HYDRAULIC BRAKE SYSTEM - DIAGNOSTIC TROUBLE CODES

DTC	Description
DTC C0267	DTC C0267 00 Low Brake Fluid Indicated
DTC C027B	DTC C027B 00 Brake Booster Electric Vacuum Pump
DTC C0299	DTC C0299 5A Brake Booster Large Vacuum Leak Detected Not Plausible
DTC C1100	DTC C1100 00 Brake Booster Vacuum Sensor Circuit Malfunction DTC C1100 01 Brake Booster Vacuum Sensor Circuit Short to Battery DTC C1100 02 Brake Booster Vacuum Sensor Circuit Short to Ground DTC C1100 08 Brake Booster Vacuum Sensor Circuit Performance Signal Invalid DTC C1100 09 Brake Booster Vacuum Sensor Circuit Too Fast Transitions

IMMOBILIZER SYSTEM - DIAGNOSTIC TROUBLE CODES

IMMOBILIZER SYSTEM - DIAGNOSTIC TROUBLE CODES

DTC	Description
DTC B2955 (with BTM)	DTC B2955 Security Sensor Data Circuit
DTC B2955 (without BTM)	DTC B2955 Security Sensor Data Circuit
DTC B302A	DTC B302A Mobile Telephone Communications Interface Requested Immobilization
DTC B3031	DTC B3031 Security Controller In Learn Mode
DTC B3055	DTC B3055 No Transponder Modulation or No Transponder
DTC B305C	DTC B305C Immobilizer Transponder of Wrong Type Programmed
DTC B3060	DTC B3060 Unprogrammed Transponder Identification Code Received
DTC B389A	DTC B389A Environment Identification
DTC B3902	DTC B3902 Incorrect Immobilizer Identifier Received
DTC B3935	DTC B3935 Transponder Authentication
DTC B3976	DTC B3976 Unconfigured Transponder
DTC B3984	DTC B3984 Device 1 Environment Identifier Not Programmable
DTC P0513	DTC P0513 Immobilizer Key Incorrect
DTC P0633	DTC P0633 Immobilizer Key Not Programmed
DTC P162B	DTC P162B Remote Vehicle Speed Limiting Signal Message Counter Incorrect

DTC P1630	DTC P1630 Immobilizer Learn Mode Active
DTC P1631	DTC P1631 Immobilizer Fuel Enable Signal Not Correct
DTC P1649	DTC P1649 Immobilizer Security Code Not Programmed

INSTRUMENT PANEL SYSTEM DISPLAYS AND GAUGES - DIAGNOSTIC TROUBLE CODES

INSTRUMENT PANEL SYSTEM DISPLAYS AND GAUGES - DIAGNOSTIC TROUBLE CODES

DTC	Description
DTC B0158	DTC B0158 02 Ambient Air Temperature Sensor Circuit Short to Ground DTC B0158 05 Ambient Air Temperature Sensor Circuit High Voltage/Open
DTC B0550	DTC B0550 32 Odometer Circuit General Memory Malfunction
DTC B1370	DTC B1370 01 Control Module Ignition On and Start Circuit Short to Battery DTC B1370 06 Control Module Ignition On and Start Circuit Open
DTC B3567	DTC B3567 01 Info Display Select Switch Circuit Short to Battery DTC B3567 02 Info Display Select Switch Circuit Short to Ground DTC B3567 04 Info Display Select Switch Circuit Open DTC B3567 59 Info Display Select Switch Circuit Protection Time-Out
DTC P0461-P0464	DTC P0461 Fuel Level Sensor Performance DTC P0462 Fuel Level Sensor Circuit Low Voltage DTC P0463 Fuel Level Sensor Circuit High Voltage DTC P0464 Fuel Level Sensor Circuit Intermittent
DTC P0520	DTC P0520 Engine Oil Pressure Switch Circuit
DTC P0521	DTC P0521 Engine Oil Pressure Sensor Performance

KEYLESS ENTRY SYSTEM AND REMOTE FUNCTIONS - DIAGNOSTIC TROUBLE CODES

KEYLESS ENTRY SYSTEM AND REMOTE FUNCTIONS - DIAGNOSTIC TROUBLE CODES

DTC	Description
DTC B3101	DTC B3101 Keyless Entry Data Link Circuit
DTC B3105	DTC B3105 Keyless Entry Transmitters
DTC B3106	DTC B3106 Keyless Entry Data Link
DTC B3109-B3113	DTC B3109 Keyless Entry Transmitter 1 Battery DTC B3110 Keyless Entry Transmitter 2 Battery DTC B3111 Keyless Entry Transmitter 3 Battery DTC B3112 Keyless Entry Transmitter 4 Battery DTC B3113 Keyless Entry Transmitter 5 Battery
DTC B310D-B310F	DTC B310D Keyless Entry Transmitter 6 Battery DTC B310E Keyless Entry Transmitter 7 Battery DTC B310F Keyless Entry Transmitter 8 Battery

DTC B3119	DTC B3119 Keyless Entry Antenna 1
DTC B3120	DTC B3120 Keyless Entry Antenna 2 Short to Ground DTC B3120 Keyless Entry Antenna 2 High Voltage/Open
DTC B3121	DTC B3121 Keyless Entry Antenna 3 Short to Ground DTC B3121 Keyless Entry Antenna 3 High Voltage/Open
DTC B3122	DTC B3122 Keyless Entry Antenna 4 Short to Ground DTC B3122 Keyless Entry Antenna 4 High Voltage/Open
DTC B3123	DTC B3123 Keyless Entry Antenna 5 Short to Ground DTC B3123 Keyless Entry Antenna 5 High Voltage/Open
DTC B3124	DTC B3124 Keyless Entry Antenna 6 Short to Ground DTC B3124 Keyless Entry Antenna 6 High Voltage/Open

LIGHTING SYSTEM - DIAGNOSTIC TROUBLE CODES

LIGHTING SYSTEM - DIAGNOSTIC TROUBLE CODES

DTC	Description
DTC B096A	DTC B096A 01 Hazard Lamps Switch Backlighting Circuit Short to Battery DTC B096A 02 Hazard Lamps Switch Backlighting Circuit Short to Ground DTC B096A 04 Hazard Lamps Switch Backlighting Circuit Open
DTC B1395	DTC B1395 03 Control Module Voltage Reference Output 1 Circuit Low Voltage DTC B1395 07 Control Module Voltage Reference Output 1 Circuit High Voltage
DTC B1480	DTC B1480 02 Battery Rundown Protection Circuit Short to Ground
DTC B2530	DTC B2530 01 Front Fog Lamps Control Circuit Short to Battery DTC B2530 02 Front Fog Lamps Control Circuit Short to Ground DTC B2530 04 Front Fog Lamps Control Circuit Open
DTC B2545	DTC B2545 01 Backup Lamps Circuit Short to Battery DTC B2545 02 Backup Lamps Circuit Short to Ground DTC B2545 04 Backup Lamps Circuit Open
DTC B2575 or B2699	DTC B2575 01 Headlamps Control Circuit Short to Battery DTC B2575 02 Headlamps Control Circuit Short to Ground DTC B2575 04 Headlamps Control Circuit Open DTC B2699 01 Right Headlamp Control Circuit Short to Battery DTC B2699 02 Right Headlamp Control Circuit Short to Ground DTC B2699 04 Right Headlamp Control Circuit Open
DTC B257A	DTC B257A 00 Headlamp Switch Input Signals Correlation Malfunction
DTC B257B	DTC B257B 03 Lighting Control Switch Signal Low Voltage DTC B257B 07 Lighting Control Switch Signal High Voltage
DTC B2580	DTC B2580 01 High Beam Control Circuit Short to Battery DTC B2580 02 High Beam Control Circuit Short to Ground DTC B2580 04 High Beam Control Circuit Open
DTC B2585 or B3867	DTC B2585 01 Left Park Lamps Control Circuit Short to Battery DTC B2585 02 Left Park Lamps Control Circuit Short to Ground DTC B2585 04 Left Park Lamps Control Circuit Open

	DTC B3867 01 Right Park Lamps Control Circuit Short to Battery DTC B3867 02 Right Park Lamps Control Circuit Short to Ground DTC B3867 04 Right Park Lamps Control Circuit Open
DTC B2645	DTC B2645 03 Ambient Light Sensor Circuit Low Voltage DTC B2645 07 Ambient Light Sensor Circuit High Voltage
DTC B3596	DTC B3596 00 Hazard Lamps Request Circuit Malfunction
DTC B3600	DTC B3600 03 Passenger Compartment Dimming Request Signal Circuit Low Voltage DTC B3600 07 Passenger Compartment Dimming Request Signal Circuit High Voltage
DTC B3650	DTC B3650 08 High Beam Request Signal Circuit Performance - Signal Invalid
DTC B3806	DTC B3806 00 High Beam and Headlamp Flash Select Circuit Malfunction
DTC B3883	DTC B3883 01 License Plate Lamp Circuit Short to Battery DTC B3883 02 License Plate Lamp Circuit Short to Ground DTC B3883 04 License Plate Lamp Circuit Open
DTC B3948 or B3949	DTC B3948 01 Left Front Turn Signal Circuit Short to Battery DTC B3948 02 Left Front Turn Signal Circuit Short to Ground DTC B3948 04 Left Front Turn Signal Circuit Open DTC B3949 01 Right Front Turn Signal Circuit Short to Battery DTC B3949 02 Right Front Turn Signal Circuit Short to Ground DTC B3949 04 Right Front Turn Signal Circuit Open
DTC B3950 or B3951	DTC B3950 01 Left Rear Turn Signal Circuit Short to Battery DTC B3950 02 Left Rear Turn Signal Circuit Short to Ground DTC B3950 04 Left Rear Turn Signal Circuit Open DTC B3951 01 Right Rear Turn Signal Circuit Short to Battery DTC B3951 02 Right Rear Turn Signal Circuit Short to Ground DTC B3951 04 Right Rear Turn Signal Circuit Open
DTC C0277 or C0890	DTC C0277 06 Brake Pedal Position Sensor Circuit Low Voltage/Open DTC C0277 07 Brake Pedal Position Sensor Circuit High Voltage DTC C0277 09 Brake Pedal Position Sensor Circuit Too Fast Transitions DTC C0277 4B Brake Pedal Position Sensor Circuit Calibration Not Learned DTC C0890 03 Control Module Voltage Reference Output 3 Circuit Low Voltage DTC C0890 07 Control Module Voltage Reference Output 3 Circuit High Voltage
DTC C0297	DTC C0297 02 Brake Applied Output Circuit Short to Ground

MANUAL TRANSMISSION - M32 - DIAGNOSTIC TROUBLE CODES

MANUAL TRANSMISSION - M32 - DIAGNOSTIC TROUBLE CODES

DTC	Description
DTC P0502 or P0503	DTC P0502 Vehicle Speed Sensor (VSS) Circuit - Low Voltage DTC P0503 Vehicle Speed Sensor (VSS) Circuit - Intermittent
DTC P0806-P0808	DTC P0806 Clutch Pedal Position (CPP) Sensor Performance

	DTC P0807 Clutch Pedal Position (CPP) Sensor Circuit Low Voltage DTC P0808 Clutch Pedal Position (CPP) Sensor Circuit High Voltage
DTC P080A	DTC P080A Clutch Pedal Position (CPP) Not Learned
DTC P0812	DTC P0812 00 Reverse Position Switch Circuit - Malfunction

OBJECT DETECTION SYSTEM - PARK ASSIST SYSTEM - DIAGNOSTIC TROUBLE CODES

OBJECT DETECTION SYSTEM - PARK ASSIST SYSTEM - DIAGNOSTIC TROUBLE CODES

DTC	Description
DTC B094B or B094C	DTC B094B 00 Left Side Object Detection Control Module - Malfunction DTC B094B 08 Left Side Object Detection Control Module - Performance - Signal Invalid DTC B094B 45 Left Side Object Detection Control Module - Variant Not Programmed DTC B094B 54 Left Side Object Detection Control Module - High Temperature DTC B094B 58 Left Side Object Detection Control Module - Performance DTC B094C 00 Right Side Object Detection Control Module - Malfunction DTC B094C 08 Right Side Object Detection Control Module - Performance - Signal Invalid DTC B094C 45 Right Side Object Detection Control Module - Variant Not Programmed DTC B094C 54 Right Side Object Detection Control Module - High Temperature DTC B094C 58 Right Side Object Detection Control Module - Performance
DTC B094D or B094E	DTC B094D 01 Left Side Object Detection Indicator Circuit Short to Battery DTC B094D 02 Left Side Object Detection Indicator Circuit Short to Ground DTC B094E 01 Right Side Object Detection Indicator Circuit Short to Battery DTC B094E 02 Right Side Object Detection Indicator Circuit Short to Ground
DTC B0958, B0959, B0960, or B0961	DTC B0958 01 Parking Assist Rear Sensor Left Corner Circuit Short to Battery DTC B0958 06 Parking Assist Rear Sensor Left Corner Circuit Low Voltage/Open DTC B0958 08 Parking Assist Rear Sensor Left Corner Circuit Performance - Signal Invalid DTC B0958 21 Parking Assist Rear Sensor Left Corner Circuit

	Incorrect Period DTC B0958 3A Parking Assist Rear Sensor Left Corner Circuit Incorrect Component Installed DTC B0959 01 Parking Assist Rear Sensor Left Middle Circuit Short to Battery DTC B0959 06 Parking Assist Rear Sensor Left Middle Circuit Low Voltage/Open DTC B0959 08 Parking Assist Rear Sensor Left Middle Circuit Performance - Signal Invalid DTC B0959 21 Parking Assist Rear Sensor Left Middle Circuit Incorrect Period DTC B0959 3A Parking Assist Rear Sensor Left Middle Circuit Incorrect Component Installed DTC B0960 01 Parking Assist Rear Sensor Right Middle Circuit Short to Battery DTC B0960 06 Parking Assist Rear Sensor Right Middle Circuit Low Voltage/Open DTC B0960 08 Parking Assist Rear Sensor Right Middle Circuit Performance - Signal Invalid DTC B0960 21 Parking Assist Rear Sensor Right Middle Circuit Incorrect Period DTC B0960 3A Parking Assist Rear Sensor Right Middle Circuit Incorrect Component Installed DTC B0961 01 Parking Assist Rear Sensor Right Corner Circuit Short to Battery DTC B0961 06 Parking Assist Rear Sensor Right Corner Circuit Low Voltage/Open DTC B0961 08 Parking Assist Rear Sensor Right Corner Circuit Performance - Signal Invalid DTC B0961 21 Parking Assist Rear Sensor Right Corner Circuit Incorrect Period DTC B0961 3A Parking Assist Rear Sensor Right Corner Circuit Incorrect Component Installed
DTC B0967 or B0968	DTC B0967 02 Parking Assist On/Off Switch Circuit Short to Ground DTC B0968 01 Parking Assist On/Off Switch Indicator Circuit Short to Battery DTC B0968 06 Parking Assist On/Off Switch Indicator Circuit Low Voltage/Open
DTC B1015	DTC B1015 00 Vehicle Identification Number Information Malfunction
DTC B1405	DTC B1405 02 Control Module Voltage Reference Output 2 Circuit Short to Ground DTC B1405 03 Control Module Voltage Reference Output 2 Circuit Low Voltage DTC B1405 07 Control Module Voltage Reference Output 2 Circuit High Voltage

POWER DOOR LOCK SYSTEM AND RELEASE SYSTEMS - DIAGNOSTIC TROUBLE CODES

POWER DOOR LOCK SYSTEM AND RELEASE SYSTEMS - DIAGNOSTIC TROUBLE CODES

DTC	Description
DTC B1474 or B3849	DTC B1474 02 Passenger Exterior Door Handle Switch Circuit Short to Ground DTC B3849 02 Driver Exterior Door Handle Switch Circuit Short to Ground
DTC B1534 or B1535	DTC B1534 02 Left Rear Door Handle Switch Circuit Short to Ground DTC B1535 02 Right Rear Door Handle Switch Circuit Short to Ground
DTC B2494	DTC B2494 00 Liftgate Handle Switch Circuit Malfunction
DTC B297B or B297C	DTC B297B 5A Driver Door Open Switch Circuit Not Plausible DTC B297C 5A Passenger Door Open Switch Circuit Not Plausible
DTC B3125, B3130, or B3135	DTC B3125 Driver Door Only Unlock Circuit DTC B3130 All Doors Unlock Circuit DTC B3135 All Doors Lock Circuit
DTC B3140 or B3150	DTC B3140 00 Driver Door Unlock Switch Circuit DTC B3150 00 Driver Front Door Lock Switch Circuit
DTC B3265	DTC B3265 Trunk Lid Unlatch Output Circuit
DTC B3618	DTC B3618 00 Exterior Liftgate Unlatch Switch Circuit Malfunction
DTC B3930	DTC B3930 02 Child Security Lock Motors Circuit Short to Ground

POWER STEERING SYSTEM - DIAGNOSTIC TROUBLE CODES

POWER STEERING SYSTEM - DIAGNOSTIC TROUBLE CODES

DTC	Description
DTC C005B (NJ1)	DTC C005B 00 Power Steering Softstops Learn
DTC C0176	DTC C0176 54 Control Module Temperature Sensor High Temperature
DTC C044A (NJ1)	DTC C044A 71 Steering System Engine Speed Signal Circuit Invalid Data
DTC C0456 (NJ1)	DTC C0456 4B Steering Position Sensor Calibration not Learned
DTC C0460 (NJ1)	DTC C0460 00 Steering Wheel Angle Sensor Malfunction DTC C0460 4B Steering Wheel Angle Sensor Calibration Not Learned
DTC C0475 (NJ1)	DTC C0475 00 Electric Steering Motor Circuit Malfunction DTC C0475 59 Electric Steering Motor Circuit Protection Time-Out
DTC C047A (NJ1)	DTC C047A Electric Steering Motor Position Sensor Circuit Malfunction
DTC C0544 (NJ1)	DTC C0544 5A Steering Wheel Angle Sensor Signal Not Plausible
DTC C0545 (NJ1)	DTC C0545 Steering Wheel Torque Sensor Malfunction
DTC C055C (NJ1)	DTC C055C 00 Steering Gear Performance Malfunction DTC C055C 64 Steering Gear Performance Slip Detected
DTC C0565 (NJ1)	DTC C0565 5A Vehicle Identification Number Not Plausible
DTC C0569 (NJ1)	DTC C0569 3A System Configuration Incorrect Component Installed
DTC C056E (NJ1)	DTC C056E 41 Electronic Control Unit Hardware Not Programmed

	DTC C056E 4B Electronic Control Unit Hardware Calibration Not Learned
DTC C0710 (NJ1)	DTC C0710 71 Steering Position Signal Invalid Data

SEAT BELT SYSTEM - DIAGNOSTIC TROUBLE CODES

SEAT BELT SYSTEM - DIAGNOSTIC TROUBLE CODES

DTC	Description
DTC B0072 or B0073	DTC B0072 Driver Seat Belt Switch Circuit DTC B0073 Passenger Seat Belt Switch Circuit
DTC B059A	DTC B059A 01 Passenger Seat Belt Indicator Circuit Short to Battery DTC B059A 02 Passenger Seat Belt Indicator Circuit Short to Ground DTC B059A 04 Passenger Seat Belt Indicator Circuit Open

SEAT HEATING SYSTEM AND SEAT COOLING SYSTEM - DIAGNOSTIC TROUBLE CODES

SEAT HEATING SYSTEM AND SEAT COOLING SYSTEM - DIAGNOSTIC TROUBLE CODES

DTC	Description
DTC B1925 or B2170	DTC B1925 02 Driver Seat Cushion Heater Sensor Circuit Short to Ground DTC B1925 05 Driver Seat Cushion Heater Sensor Circuit High Voltage/Open DTC B2170 02 Passenger Seat Cushion Heater Sensor Circuit Short to Ground DTC B2170 05 Passenger Seat Cushion Heater Sensor Circuit High Voltage/Open
DTC B2345	DTC B2345 13 Seat Heater Disable Circuit Low Voltage High/Temperature
DTC B2425 or B2430	DTC B2425 0B Driver Seat Cushion Heater Circuit High Current DTC B2425 0D Driver Seat Cushion Heater Circuit High Resistance DTC B2425 0E Driver Seat Cushion Heater Circuit Low Resistance DTC B2430 0B Passenger Seat Cushion Heater Circuit High Current DTC B2430 0D Passenger Seat Cushion Heater Circuit High Resistance DTC B2430 0E Passenger Seat Cushion Heater Circuit Low Resistance
DTC B242A	DTC B242A 01 Seat Heaters Common Circuit Short to Battery DTC B242A 02 Seat Heaters Common Circuit Short to Ground

SECONDARY AND CONFIGURABLE CUSTOMER CONTROL SYSTEM - DIAGNOSTIC TROUBLE CODES

SECONDARY AND CONFIGURABLE CUSTOMER CONTROL SYSTEM - DIAGNOSTIC TROUBLE CODES

DTC	Description
DTC B242A	DTC B1405 03 Control Module Voltage Reference Output 2 Circuit Low Voltage DTC B1405 07 Control Module Voltage Reference Output 2 Circuit High

	Voltage
DTC B1529	DTC B1529 03 Control Module Voltage Reference Output 5 Circuit Low Voltage DTC B1529 07 Control Module Voltage Reference Output 5 Circuit High Voltage
DTC B3622	DTC B3622 07 Steering Wheel Controls Signal Circuit High Voltage

SHIFT LOCK CONTROL SYSTEM - DIAGNOSTIC TROUBLE CODES

SHIFT LOCK CONTROL SYSTEM - DIAGNOSTIC TROUBLE CODES

DTC	Description
DTC B270A	DTC B270A 01 Park Lock Solenoid Control Circuit Short to Battery DTC B270A 02 Park Lock Solenoid Control Circuit Short to Ground DTC B270A 04 Park Lock Solenoid Control Circuit Open

SUNROOF SYSTEM - DIAGNOSTIC TROUBLE CODES

SUNROOF SYSTEM - DIAGNOSTIC TROUBLE CODES

DTC	Description
DTC B3664	DTC B3664 02 Sunroof Position Select Switch High Signal Circuit Short to Ground DTC B3664 05 Sunroof Position Select Switch High Signal Circuit High Voltage/Open DTC B3664 59 Sunroof Position Select Switch High Signal Circuit Protection Time-Out
DTC B3697	DTC B3697 00 Sunroof Actuator Malfunction DTC B3697 39 Sunroof Actuator Internal Malfunction DTC B3697 42 Sunroof Actuator Calibration Not Programmed DTC B3697 4B Sunroof Actuator Calibration Not Learned
DTC B369C	DTC B369C 02 Sunroof Tilt Position Select Switch Circuit Short to Ground DTC B369C 05 Sunroof Tilt Position Select Switch Circuit High Voltage/Open DTC B369C 59 Sunroof Tilt Position Select Switch Circuit Protection Time-Out

SUPPLEMENTAL INFLATABLE RESTRAINT SYSTEM - DIAGNOSTIC TROUBLE CODES

SUPPLEMENTAL INFLATABLE RESTRAINT SYSTEM - DIAGNOSTIC TROUBLE CODES

DTC	Description
DTC B0012 or B0013	DTC B0012 01 Driver Steering Wheel Air Bag Deployment Loop Stage 1 Short to Battery DTC B0012 02 Driver Steering Wheel Air Bag Deployment Loop Stage 1 Short to Ground

	DTC B0012 04 Driver Steering Wheel Air Bag Deployment Loop Stage 1 Open DTC B0012 0D Driver Steering Wheel Air Bag Deployment Loop Stage 1 High Resistance DTC B0012 0E Driver Steering Wheel Air Bag Deployment Loop Stage 1 Low Resistance
DTC B0014, B0021, B0031, or B0038	DTC B0014 01 Driver Seat Side Air Bag Deployment Loop Short to Battery DTC B0014 02 Driver Seat Side Air Bag Deployment Loop Short to Ground DTC B0014 04 Driver Seat Side Air Bag Deployment Loop Open DTC B0014 0D Driver Seat Side Air Bag Deployment Loop High Resistance DTC B0014 0E Driver Seat Side Air Bag Deployment Loop Low Resistance DTC B0021 01 Passenger Seat Side Air Bag Deployment Loop Short to Battery DTC B0021 02 Passenger Seat Side Air Bag Deployment Loop Short to Ground DTC B0021 04 Passenger Seat Side Air Bag Deployment Loop Open DTC B0021 0D Passenger Seat Side Air Bag Deployment Loop High Resistance DTC B0021 0E Passenger Seat Side Air Bag Deployment Loop Low Resistance DTC B0031 01 Left Rear Seat Side Air Bag Deployment Loop Short to Battery DTC B0031 02 Left Rear Seat Side Air Bag Deployment Loop Short to Ground DTC B0031 04 Left Rear Seat Side Air Bag Deployment Loop Open DTC B0031 0D Left Rear Seat Side Air Bag Deployment Loop High Resistance DTC B0031 0E Left Rear Seat Side Air Bag Deployment Loop Low Resistance DTC B0038 01 Right Rear Seat Side Air Bag Deployment Loop Short to Battery DTC B0038 02 Right Rear Seat Side Air Bag Deployment Loop Short to Ground DTC B0038 04 Right Rear Seat Side Air Bag Deployment Loop Open DTC B0038 0D Right Rear Seat Side Air Bag Deployment Loop High Resistance DTC B0038 0E Right Rear Seat Side Air Bag Deployment Loop Low Resistance
DTC B0015, B001A, B001B, or B0022	DTC B0015 01 Driver Seat Belt Retractor Pretensioner Deployment Loop Short to Battery DTC B0015 02 Driver Seat Belt Retractor Pretensioner Deployment Loop Short to Ground DTC B0015 04 Driver Seat Belt Retractor Pretensioner Deployment Loop Open

	DTC B0015 0D Driver Seat Belt Retractor Pretensioner Deployment Loop High Resistance DTC B0015 0E Driver Seat Belt Retractor Pretensioner Deployment Loop Low Resistance DTC B001A 01 Driver Seat Belt Anchor Pretensioner Deployment Loop Short to Battery DTC B001A 02 Driver Seat Belt Anchor Pretensioner Deployment Loop Short to Ground DTC B001A 04 Driver Seat Belt Anchor Pretensioner Deployment Loop Open DTC B001A 0D Driver Seat Belt Anchor Pretensioner Deployment Loop High Resistance DTC B001A 0E Driver Seat Belt Anchor Pretensioner Deployment Loop Low Resistance DTC B001B 01 Passenger Seat Belt Anchor Pretensioner Deployment Loop Short to Battery DTC B001B 02 Passenger Seat Belt Anchor Pretensioner Deployment Loop Short to Ground DTC B001B 04 Passenger Seat Belt Anchor Pretensioner Deployment Loop Open DTC B001B 0D Passenger Seat Belt Anchor Pretensioner Deployment Loop High Resistance DTC B001B 0E Passenger Seat Belt Anchor Pretensioner Deployment Loop Low Resistance DTC B0022 01 Passenger Seat Belt Retractor Pretensioner Deployment Loop Short to Battery DTC B0022 02 Passenger Seat Belt Retractor Pretensioner Deployment Loop Short to Ground DTC B0022 04 Passenger Seat Belt Retractor Pretensioner Deployment Loop Open Circuit DTC B0022 0D Passenger Seat Belt Retractor Pretensioner Deployment Loop High Resistance DTC B0022 0E Passenger Seat Belt Retractor Pretensioner Deployment Loop Low Resistance
DTC B0016, B0018, B0023, or B0025	DTC B0016 01 Left Roof Rail Air Bag Deployment Loop Short to Battery DTC B0016 02 Left Roof Rail Air Bag Deployment Loop Short to Ground DTC B0016 04 Left Roof Rail Air Bag Deployment Loop Open DTC B0016 0D Left Roof Rail Air Bag Deployment Loop High Resistance DTC B0016 0E Left Roof Rail Air Bag Deployment Loop Low Resistance DTC B0023 01 Right Roof Rail Air Bag Deployment Loop Short to Battery DTC B0023 02 Right Roof Rail Air Bag Deployment Loop Short to Ground DTC B0023 04 Right Roof Rail Air Bag Deployment Loop Open DTC B0023 0D Right Roof Rail Air Bag Deployment Loop High Resistance DTC B0023 0E Right Roof Rail Air Bag Deployment Loop Low

	Resistance
DTC B0017 or B0024	DTC B0017 01 Driver Knee Air Bag Deployment Loop Short to Battery DTC B0017 02 Driver Knee Air Bag Deployment Loop Short to Ground DTC B0017 04 Driver Knee Air Bag Deployment Loop Open DTC B0017 0D Driver Knee Air Bag Deployment Loop High Resistance DTC B0017 0E Driver Knee Air Bag Deployment Loop Low Resistance DTC B0024 01 Passenger Knee Air Bag Deployment Loop Short to Battery DTC B0024 02 Passenger Knee Air Bag Deployment Loop Short to Battery DTC B0024 04 Passenger Knee Air Bag Deployment Loop Open DTC B0024 0D Passenger Knee Air Bag Deployment Loop High Resistance DTC B0024 0E Passenger Knee Air Bag Deployment Loop Low Resistance
DTC B0019 or B0020	DTC B0019 01 Passenger Instrument Panel Air Bag Deployment Loop Stage 1 Short to Battery DTC B0019 02 Passenger Instrument Panel Air Bag Deployment Loop Stage 1 Short to Ground DTC B0019 04 Passenger Instrument Panel Air Bag Deployment Loop Stage 1 Open DTC B0019 0D Passenger Instrument Panel Air Bag Deployment Loop Stage 1 High Resistance DTC B0019 0E Passenger Instrument Panel Air Bag Deployment Loop Stage 1 Low Resistance DTC B0020 01 Passenger Instrument Panel Air Bag Deployment Loop Stage 2 Short to Battery DTC B0020 02 Passenger Instrument Panel Air Bag Deployment Loop Stage 2 Short to Ground DTC B0020 04 Passenger Instrument Panel Air Bag Deployment Loop Stage 2 Open DTC B0020 0D Passenger Instrument Panel Air Bag Deployment Loop Stage 2 High Resistance DTC B0020 0E Passenger Instrument Panel Air Bag Deployment Loop Stage 2 Low Resistance
DTC B0052	DTC B0052 00 Deployment Commanded DTC B0052 56 Deployment Commanded Too Many Transitions
DTC B0074	DTC B0074 0D Passenger Presence Sensor High Resistance DTC B0074 0E Passenger Presence Sensor Low Resistance
DTC B0081 (Inflatable Restraint Sensing and Diagnostic Module)	DTC B0081 00 Passenger Presence Module Malfunction DTC B0081 3A Passenger Presence Module Incorrect Component Installed DTC B0081 71 Passenger Presence Module Invalid Serial Data Received
DTC B0081 (Passenger Presence Module)	DTC B0081 11 Passenger Presence Module High Input DTC B0081 4B Calibration Not Programmed
DTC B0083 or B0084	DTC B0083 02 Left Front Impact Sensor Short to Ground DTC B0083 05 Left Front Impact Sensor High Voltage/Open

	DTC B0083 39 Left Front Impact Sensor Internal Electronic Failure DTC B0083 3A Left Front Impact Sensor Incorrect Component Installed DTC B0083 71 Left Front Impact Sensor Invalid Serial Data Received DTC B0084 02 Right Front Impact Sensor Short to Ground DTC B0084 05 Right Front Impact Sensor High Voltage/Open DTC B0084 39 Right Front Impact Sensor Internal Electronic Failure DTC B0084 3A Right Front Impact Sensor Incorrect Component Installed DTC B0084 71 Right Front Impact Sensor Invalid Serial Data Received
DTC B0085 or B0088	DTC B0085 02 Left Front Side Impact Sensor Short to Ground DTC B0085 05 Left Front Side Impact Sensor High Voltage/Open DTC B0085 39 Left Front Side Impact Sensor Internal Malfunction DTC B0085 3A Left Front Side Impact Sensor Incorrect Component Installed DTC B0085 71 Left Front Side Impact Sensor Invalid Data DTC B0088 02 Right Rear Side Impact Sensor Short to Ground DTC B0088 05 Right Rear Side Impact Sensor High Voltage/Open DTC B0088 39 Right Rear Side Impact Sensor Internal Malfunction DTC B0088 3A Right Rear Side Impact Sensor Incorrect Component Installed DTC B0088 71 Right Rear Side Impact Sensor Invalid Data
DTC B0086 or B0087	DTC B0086 02 Right Front Side Impact Sensor Short to Ground DTC B0086 05 Right Front Side Impact Sensor High Voltage/Open DTC B0086 39 Right Front Side Impact Sensor Internal Malfunction DTC B0086 3A Right Front Side Impact Sensor Incorrect Component Installed DTC B0086 71 Right Front Side Impact Sensor Invalid Data DTC B0087 02 Left Rear Side Impact Sensor Short to Ground DTC B0087 05 Left Rear Side Impact Sensor High Voltage/Open DTC B0087 39 Left Rear Side Impact Sensor Internal Malfunction DTC B0087 3A Left Rear Side Impact Sensor Incorrect Component Installed DTC B0087 71 Left Rear Side Impact Sensor Invalid Data
DTC B067F or B0680	DTC B067F 01 Passenger Air Bag On Indicator Circuit Short to Battery DTC B067F 02 Passenger Air Bag On Indicator Circuit Short to Ground DTC B067F 04 Passenger Air Bag On Indicator Circuit Open DTC B0680 01 Passenger Air Bag Off Indicator Circuit Short to Battery DTC B0680 02 Passenger Air Bag Off Indicator Circuit Short to Ground DTC B0680 04 Passenger Air Bag Off Indicator Circuit Open
DTC B1001 (Passenger Presence System)	DTC B1001 00 Option Configuration Error
DTC B1001 (Inflatable Restraint Sensing and Diagnostic Module)	DTC B1001 00 Option Configuration
DTC B1019	DTC B1019 00 System Configuration Error

TIRE PRESSURE MONITORING SYSTEM - DIAGNOSTIC TROUBLE CODES

TIRE PRESSURE MONITORING SYSTEM - DIAGNOSTIC TROUBLE CODES

DTC	Description
DTC C0569	DTC C0569 00 System Configuration Malfunction
DTC C0750, C0755, C0760, or C0765	DTC C0750 03 Left Front Tire Pressure Sensor Low Voltage DTC C0750 29 Left Front Tire Pressure Sensor Too Few Pulses DTC C0750 39 Left Front Tire Pressure Sensor Internal Malfunction DTC C0755 03 Right Front Tire Pressure Sensor Low Voltage DTC C0755 29 Right Front Tire Pressure Sensor Too Few Pulses DTC C0755 39 Right Front Tire Pressure Sensor Internal Malfunction DTC C0760 03 Left Rear Tire Pressure Sensor Low Voltage DTC C0760 29 Left Rear Tire Pressure Sensor Too Few Pulses DTC C0760 39 Left Rear Tire Pressure Sensor Internal Malfunction DTC C0765 03 Right Rear Tire Pressure Sensor Low Voltage DTC C0765 29 Right Rear Tire Pressure Sensor Too Few Pulses DTC C0765 39 Right Rear Tire Pressure Sensor Internal Malfunction
DTC C0775	DTC C0775 00 Tire Pressure Monitoring System Sensors Malfunction

WIPER SYSTEM AND WASHER SYSTEM - DIAGNOSTIC TROUBLE CODES

WIPER SYSTEM AND WASHER SYSTEM - DIAGNOSTIC TROUBLE CODES

DTC	Description
DTC B3715 or B3875	DTC B3715 01 Windshield Wiper Relay Circuit Short to Battery DTC B3715 02 Windshield Wiper Relay Circuit Short to Ground DTC B3715 04 Windshield Wiper Relay Circuit Open DTC B3875 01 Windshield Wiper High Speed Relay Circuit Short to Battery DTC B3875 02 Windshield Wiper High Speed Relay Circuit Short to Ground DTC B3875 04 Windshield Wiper High Speed Relay Circuit Open
DTC B3873	DTC B3873 01 Front Washer Relay Circuit Short to Battery DTC B3873 02 Front Washer Relay Circuit Short to Ground DTC B3873 04 Front Washer Relay Circuit Open Circuit

WIRING SYSTEMS AND POWER MANAGEMENT - DIAGNOSTIC TROUBLE CODES

WIRING SYSTEMS AND POWER MANAGEMENT - DIAGNOSTIC TROUBLE CODES

DTC	Description
DTC B097B	DTC B097B 00 Power Mode Start Switch Circuit Malfunction DTC B097B 02 Power Mode Start Switch Circuit Short to Ground DTC B097B 04 Power Mode Start Switch Circuit Open DTC B097B 05 Power Mode Start Switch Circuit High Voltage/Open DTC B097B 08 Power Mode Start Switch Circuit Performance - Signal Invalid DTC B097B 61 Power Mode Start Switch Circuit Stuck

DTC B097C	DTC B097C 01 Power Mode Run/Start Indicator Circuit Short to Battery DTC B097C 02 Power Mode Run/Start Indicator Circuit Short to Ground DTC B097C 04 Power Mode Run/Start Indicator Circuit Open
DTC B1370-B1379, B1380-B1389, or B1440-B1443	DTC B1370 01 Control Module Ignition ON and Start Circuit Short to Battery DTC B1370 04 Control Module Ignition ON and Start Circuit Open DTC B1380 01 Control Module Ignition Accessory Circuit Short to Battery DTC B1380 04 Control Module Ignition Accessory Circuit Open DTC B1441 01 Control Module Ignition OFF, Run, and Start Circuit Short to Battery DTC B1441 04 Control Module Ignition OFF, Run, and Start Circuit Open
DTC B1448	DTC B1448 01 Accessory Power Relay Circuit Short to Battery DTC B1448 02 Accessory Power Relay Circuit Short to Ground DTC B1448 04 Accessory Power Relay Circuit Open
DTC B144B	DTC B144B 01 Run/Crank Power Relay Circuit Short to Battery DTC B144B 02 Run/Crank Power Relay Circuit Short to Ground DTC B144B 04 Run/Crank Power Relay Circuit Open
DTC B1451	DTC B1451 01 Accessory Power Circuit Short to Battery DTC B1451 02 Accessory Power Circuit Short to Ground DTC B1451 04 Accessory Power Circuit Open
DTC B147E	DTC B147E 01 Battery Saver Relay Set Secondary Circuit Short to Battery DTC B147E 02 Battery Saver Relay Set Secondary Circuit Short to Ground DTC B147E 04 Battery Saver Relay Set Secondary Circuit Open
DTC B147F	DTC B147F 01 Battery Saver Relay Reset Secondary Circuit Short to Battery DTC B147F 02 Battery Saver Relay Reset Secondary Circuit Short to Ground DTC B147F 04 Battery Saver Relay Reset Secondary Circuit Open

2013 ACCESSORIES & EQUIPMENT

Cellular, Entertainment, and Navigation - Cruze

SPECIFICATIONS

FASTENER TIGHTENING SPECIFICATIONS

Fastener Tightening Specifications

Application	Specification	
	Metric	English
Mobile Telephone Control Module Bolt	5 N.m	44 lb in
Radio Antenna Base	10 N.m	89 lb in
Radio Antenna Module Bolt	8 N.m	71 lb in
Radio Bolt	2.5 N.m	22 lb in
Radio Front Side Door Speaker Bolt	2.5 N.m	22 lb in
Radio Front Speaker Bolt	2.5 N.m	22 lb in
Radio Rear Compartment Speaker Bolt	2.5 N.m	22 lb in
Radio Rear Side Door Speaker Bolt	2.5 N.m	22 lb in
Radio Speaker Amplifier Nut	9 N.m	80 lb in
Radio Antenna Coil Nut	8 N.m	71 lb in
Radio Control Module Bolt	2.5 N.m	22 lb in

SCHEMATIC WIRING DIAGRAMS

RADIO/NAVIGATION SYSTEM WIRING SCHEMATICS

Power, Ground, Serial Data, Antenna, and Display Wiring Schematics

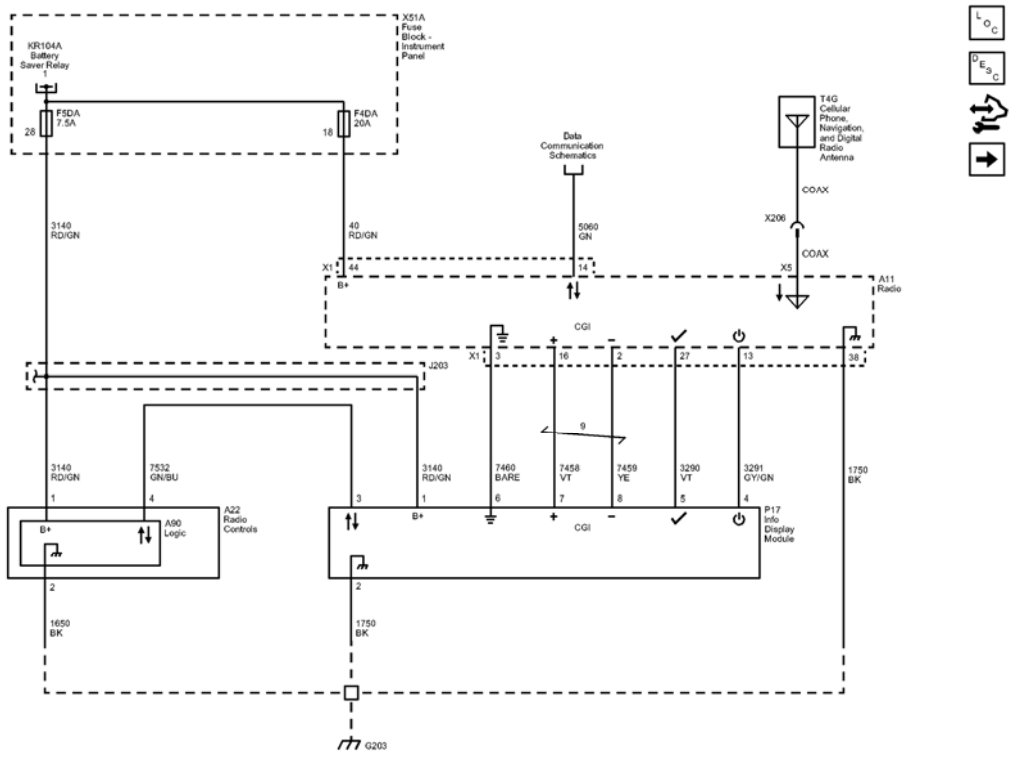

Fig. 1: Power, Ground, Serial Data, Antenna, and Display Wiring Schematics
Courtesy of GENERAL MOTORS COMPANY

Callout	Component Name
CAV_28	28
CAV 18	18
3140	Battery Positive Voltage
CAV_1	1
3140_RD/GN	3140 RD/GN
3140_RD/GN	3140 RD/GN
40	Battery Positive Voltage
40_RD/GN	40 RD/GN
CAV_44	44
CONN_X1	X1
5060	Low Speed GMLAN Serial Data
5060_GN	5060 GN
CAV_14	14
CONN_X5	X5
COAX	COAX
COAX	COAX

7532	Linear Interconnect Network Bus 10
7532_GN/BU	7532 GN/BU
CAV_4	4
CAV_3	3
3140_RD/GN	3140 RD/GN
CAV_1	1
7460	Integrated Center Stack Serial Data Shield
7460_BARE	7460 BARE
CAV_6	6
CAV_3	3
CONN_X1	X1
7458	Center Integrated Center Stack Serial Data High
7458_VT	7458 VT
CAV_7	7
CAV_16	16
7459	Integrated Center Stack Serial Data Low
7459_YE	7459 YE
CAV_8	8
CAV_2	2
3290	Integrated Center Stack Reset Signal
3290_VT	3290 VT
CAV_5	5
CAV_27	27
3291	Integrated Center Stack Wake Up Signal
3291_GY/GN	3291 GY/GN
CAV_4	4
CAV_13	13
1750	Ground
1750_BK	1750 BK
CAV_38	38
CAV_2	2
1750_BK	1750 BK
1650	Ground
1650_BK	1650 BK
CAV_2	2
F5DA	F5DA 7.5A

F4DA	F4DA 20A
X206	X206
TWIST_9	9
Data_Communication_Schematics_REF	Data Communication Schematics
P17	
A11	
A22	
A90	Logic
T4G	
KR104A	
X51A	

Door Speakers (without UQA) Wiring Schematics

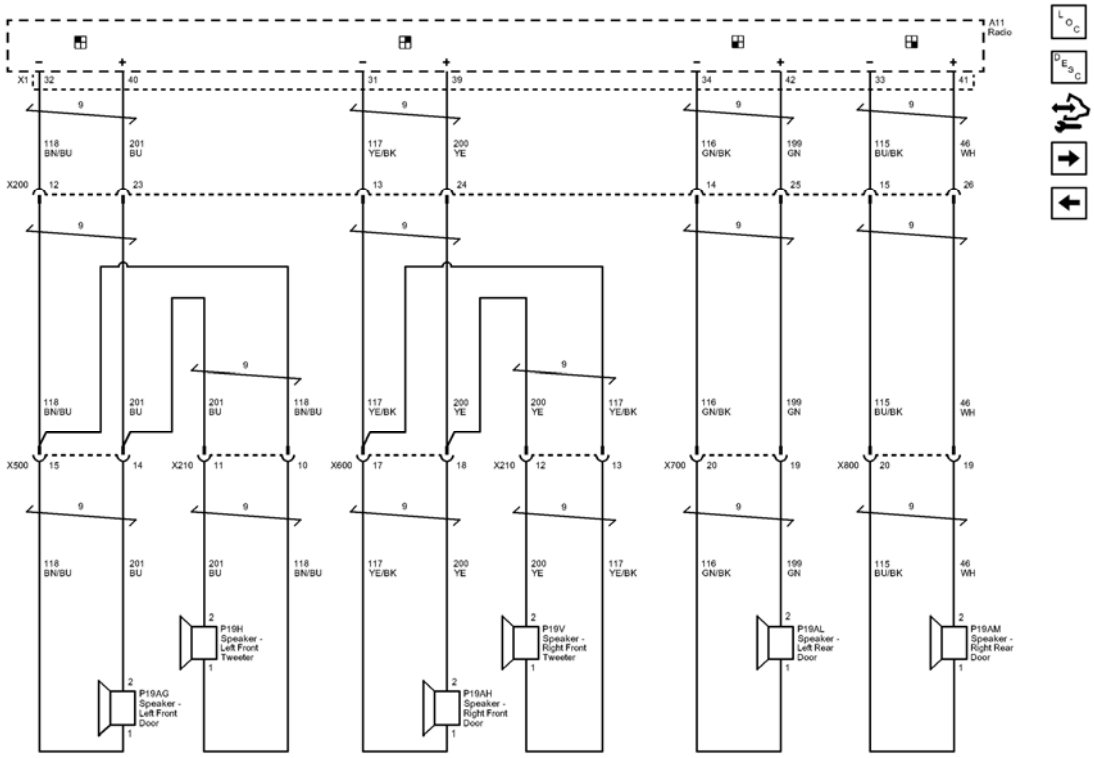

Fig. 2: Door Speakers (without UQA) Wiring Schematics
Courtesy of GENERAL MOTORS COMPANY

Callout	Component Name
118	Left Front Speaker Signal (-) (1)
118 BN/BU	118 BN/BU

CAV_1	1
CAV_32	32
CONN_X1	X1
201	Left Front Speaker (+) (1)
201_BU	201 BU
CAV_2	2
CAV_40	40
117	Right Front Speaker Signal (-) (1)
117_YE/BK	117 YE/BK
CAV_1	1
CAV_31	31
200	Right Front Speaker (+) (1)
200_YE	200 YE
CAV_2	2
CAV_39	39
116	Left Rear Speaker Signal (-)
116_GN/BK	116 GN/BK
CAV_1	1
CAV_34	34
199	Left Rear Speaker (+)
199_GN	199 GN
CAV_2	2
CAV_42	42
115	Right Rear Speaker Signal (-)
115_BU/BK	115 BU/BK
CAV_1	1
CAV_33	33
46	Right Rear Speaker (+)
46_WH	46 WH
CAV_2	2
CAV_41	41
118_BN/BU	118 BN/BU
201_BU	201 BU
117_YE/BK	117 YE/BK
200_YE	200 YE
116_GN/BK	116 GN/BK
199_GN	199 GN
115_BU/BK	115 BU/BK
46_WH	46 WH
CAV_1	1
201_BU	201 BU

	2
CAV_1	1
200_YE	200 YE
CAV_2	2
118_BN/BU	118 BN/BU
117_YE/BK	117 YE/BK
118_BN/BU	118 BN/BU
201_BU	201 BU
201_BU	201 BU
118_BN/BU	118 BN/BU
117_YE/BK	117 YE/BK
200_YE	200 YE
200 YE	200 YE
117_YE/BK	117 YE/BK
116_GN/BK	116 GN/BK
199_GN	199 GN
115_BU/BK	115 BU/BK
46_WH	46 WH
X500	X500
CAV_15	15
CAV_14	14
X210	X210
CAV_11	11
CAV_10	10
X600	X600
CAV_17	17
CAV_18	18
X210	X210
CAV_12	12
CAV 13	13
X700	X700
CAV_20	20
CAV_19	19
X800	X800
CAV_20	20
CAV_19	19
X200	X200
CAV_12	12
CAV_23	23
CAV_13	13
CAV_24	24
CAV_14	

	14
CAV_25	25
CAV_15	15
CAV_26	26
TWIST_9	9
TWIST_9	9
TWIST_9	9
TWIST_9	9
TWIST_9	9
TWIST_9	9
TWIST_9	9
TWIST_9	9
TWIST_9	9
TWIST 9	9
TWIST_9	9
TWIST_9	9
TWIST_9	9
TWIST_9	9
TWIST_9	9
TWIST_9	9
TWIST_9	9
X500	X500
X210	X210
X600	X600
X210	X210
X700	X700
X800	X800
X200	X200
A11	
P19H	
P19V	
P19AG	
P19AH	
P19AL	
P19AM	

Amplifier (UQA) Wiring Schematics

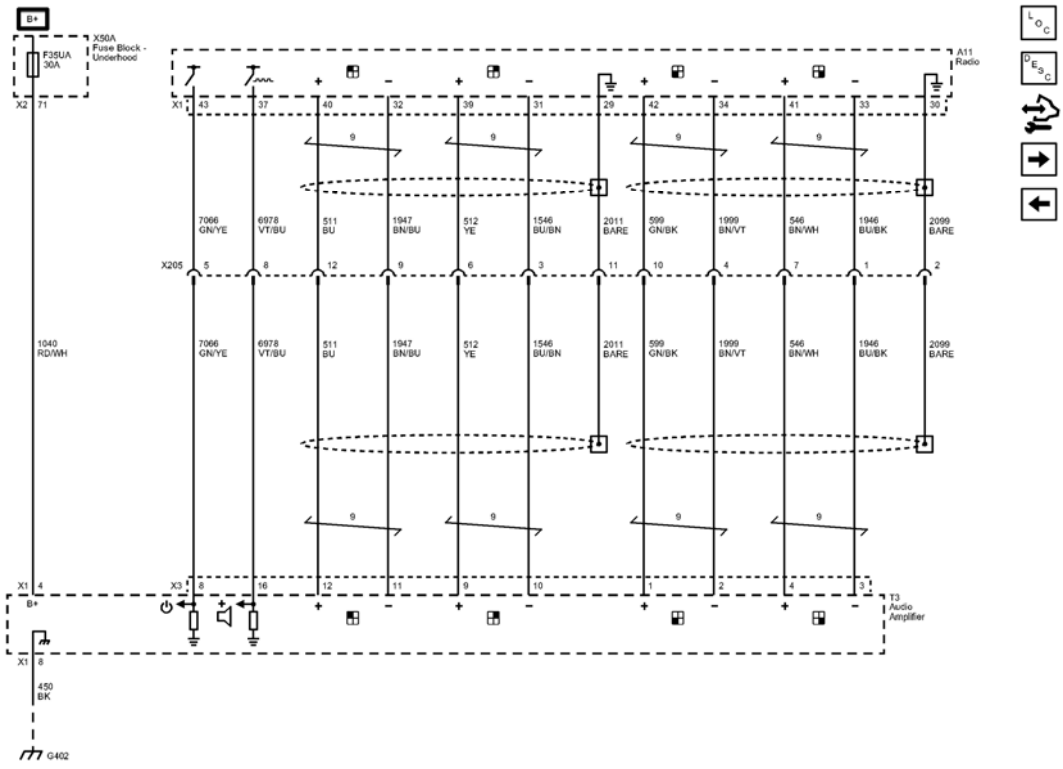

Fig. 3: Amplifier (UQA) Wiring Schematics
Courtesy of GENERAL MOTORS COMPANY

Callout	Component Name
1040	Battery Positive Voltage
1040 RD/WH	1040 RD/WH
CAV_4	4
CONN_X1	X1
CAV_71	71
CONN_X2	X2
450	Ground
450_BK	450 BK
CAV_8	8
CONN_X1	X1
7066	Entertainment Remote Enable Signal
7066_GN/YE	7066 GN/YE
CAV_8	8
CONN_X3	X3
CAV_43	43
CONN_X1	X1
6978	Amplifier Control

6978_VT/BU	6978 VT/BU
CAV_16	16
CAV_37	37
511	Left Front Low Level Audio Signal
511_BU	511 BU
CAV_12	12
CAV_40	40
1947	Left Front Low Level Audio (-)
1947_BN/BU	1947 BN/BU
CAV_11	11
CAV_32	32
512	Right Front Low Level Audio Signal
512 YE	512 YE
CAV_9	9
CAV_39	39
1546	Front Low Level Audio (-)
1546_BU/BN	1546 BU/BN
CAV_10	10
CAV_31	31
2011	Left Front Audio Drain Wire
2011_BARE	2011 BARE
CAV_29	29
599	Left Rear Low Level Audio Signal
599_GN/BK	599 GN/BK
CAV_1	1
CAV_42	42
1999	Left Rear Low Level Audio (-)
1999 BN/VT	1999 BN/VT
CAV_2	2
CAV 34	34
546	Right Rear Low Level Audio Signal
546_BN/WH	546 BN/WH
CAV_4	4
CAV_41	41
1946	Right Rear Low Level Audio (-)
1946_BU/BK	1946 BU/BK
CAV_3	3
CAV_33	33
2099	Left Rear Audio Drain Wire
CAV_30	30
2099_BARE	2099 BARE
7066_GN/VT	

	7066 GN/YE
6978_VT/BU	6978 VT/BU
511_BU	511 BU
1947_BN/BU	1947 BN/BU
512_YE	512 YE
1546_BU/BN	1546 BU/BN
2011_BARE	2011 BARE
599_GN/BK	599 GN/BK
1999_BN/VT	1999 BN/VT
546_BN/WH	546 BN/WH
1946_BU/BK	1946 BU/BK
2099_BARE	2099 BARE
X205	X205
CAV_5	5
CAV_8	8
CAV_12	12
CAV_9	9
CAV_6	6
CAV_3	3
CAV_11	11
CAV_10	10
CAV_4	4
CAV_7	7
CAV_1	1
CAV_2	2
G402	G402
F35UA	F35UA 30A
TWIST 9	9
TWIST_9	9
TWIST 9	9
TWIST_9	9
TWIST_9	9
TWIST_9	9
TWIST_9	9
TWIST_9	9
X205	X205
X50A	
T3	(UQA)
A11	

Door Speakers (UQA) Wiring Schematics

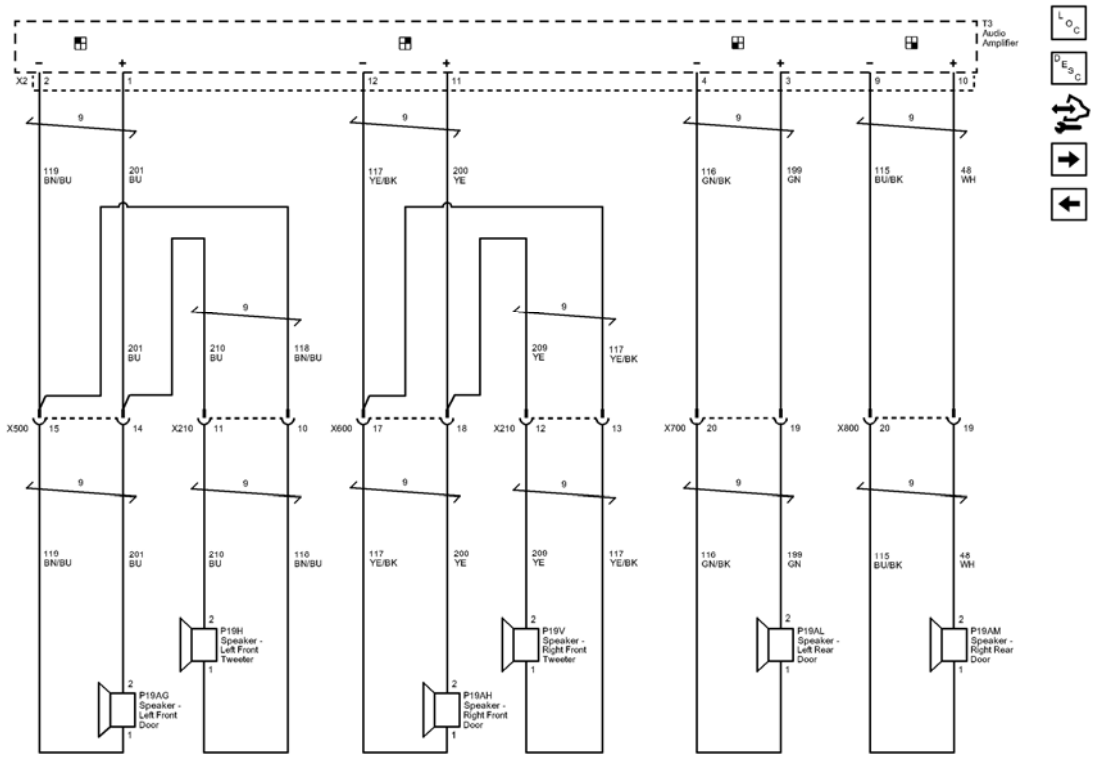

Fig. 4: Door Speakers (UQA) Wiring Schematics
Courtesy of GENERAL MOTORS COMPANY

Callout	Component Name
119	Mode Door Control
CAV 1	1
CAV_2	2
CONN_X2	X2
201	Left Front Speaker (+) (1)
201_BU	201 BU
CAV_2	2
CAV_1	1
CAV_1	1
117	Right Front Speaker Signal (-) (1)
CAV_1	1
CAV_12	12
200	Right Front Speaker (+) (1)
CAV_2	2
CAV_11	11
116	Left Rear Speaker Signal (-)
CAV_1	1

CAV_4	4
115	Right Rear Speaker Signal (-)
CAV_1	1
CAV_9	9
199	Left Rear Speaker (+)
CAV_2	2
CAV_3	3
48	Clutch Pedal Position Switch Anticipate Signal
CAV_2	2
CAV_10	10
118	Left Front Speaker Signal (-) (1)
CAV_1	1
210	Passenger Power Seat Lumbar Motor Rearward Control
CAV_2	2
117_YE/BK	117 YE/BK
CAV_1	1
209	Low Brake Fluid Indicator Control
CAV_2	2
119_BN/BU	119 BN/BU
119_BN/BU	119 BN/BU
201_BU	201 BU
201_BU	201 BU
210_BU	210 BU
210_BU	210 BU
118_BN/BU	118 BN/BU
118_BN/BU	118 BN/BU
117_YE/BK	117 YE/BK
117 YE/BK	117 YE/BK
200_YE	200 YE
200 YE	200 YE
209_YE	209 YE
209_YE	209 YE
117_YE/BK	117 YE/BK
116_GN/BK	116 GN/BK
116_GN/BK	116 GN/BK
199_GN	199 GN
199_GN	199 GN
115_BU/BK	115 BU/BK
115_BU/BK	115 BU/BK
48_WH	48 WH
48_WH	48 WH
X500	

	X500
CAV_15	15
CAV_14	14
X210	X210
CAV_11	11
CAV_10	10
X600	X600
CAV_17	17
CAV_18	18
X210	X210
CAV_12	12
CAV_13	13
X700	X700
CAV_20	20
CAV_19	19
X800	X800
CAV_20	20
CAV_19	19
TWIST_9	9
TWIST_9	9
TWIST_9	9
TWIST_9	9
TWIST_9	9
TWIST_9	9
TWIST_9	9
TWIST_9	9
TWIST_9	9
TWIST 9	9
TWIST_9	9
TWIST 9	9
X500	X500
X210	X210
X600	X600
X210	X210
X700	X700
X800	X800
P19H	
P19V	
T3	(UQA)
P19AG	
P19AH	

P19AM	

Center Speaker and Subwoofers (UQA) Wiring Schematics

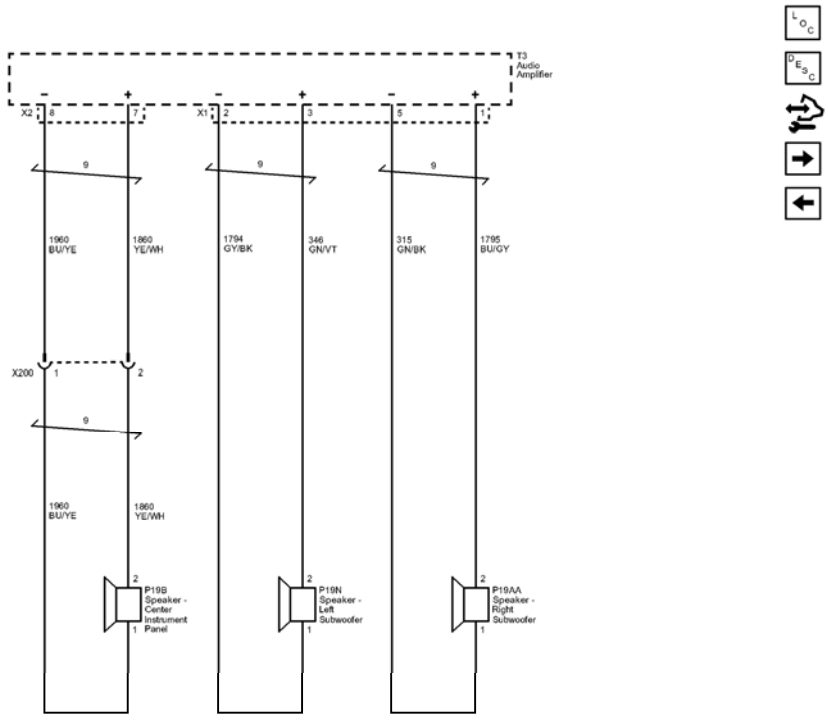

Fig. 5: Center Speaker and Subwoofers (UQA) Wiring Schematics
Courtesy of GENERAL MOTORS COMPANY

Callout	Component Name
1960	Front Center Speaker (-)
CAV_1	1
CAV_8	8
CONN X2	X2
1960_BU/YE	1960 BU/YE
1960 BU/YE	1960 BU/YE
1860	Front Center Speaker (+)
CAV_2	2
CAV_7	7
1860_YE/WH	1860 YE/WH
1860_YE/WH	1860 YE/WH
1794	Left/Rear Subwoofer Speaker (-)

1794_GY/BK	1794 GY/BK
CAV_1	1
CAV_2	2
CONN_X1	X1
346	Left/Rear Subwoofer Speaker (+)
346_GN/VT	346 GN/VT
CAV_2	2
CAV_3	3
315	Right Subwoofer Speaker (-)
315_GN/BK	315 GN/BK
CAV_1	1
CAV_5	5
1795	Right Subwoofer Speaker (+)
1795_BU/GY	1795 BU/GY
CAV_2	2
CAV_1	1
X200	X200
CAV_1	1
CAV_2	2
TWIST_9	9
TWIST_9	9
TWIST_9	9
TWIST_9	9
X200	X200
T3	(UQA)
P19N	
P19AA	
P19B	(UQA)

Navigation System (UHQ) Wiring Schematics

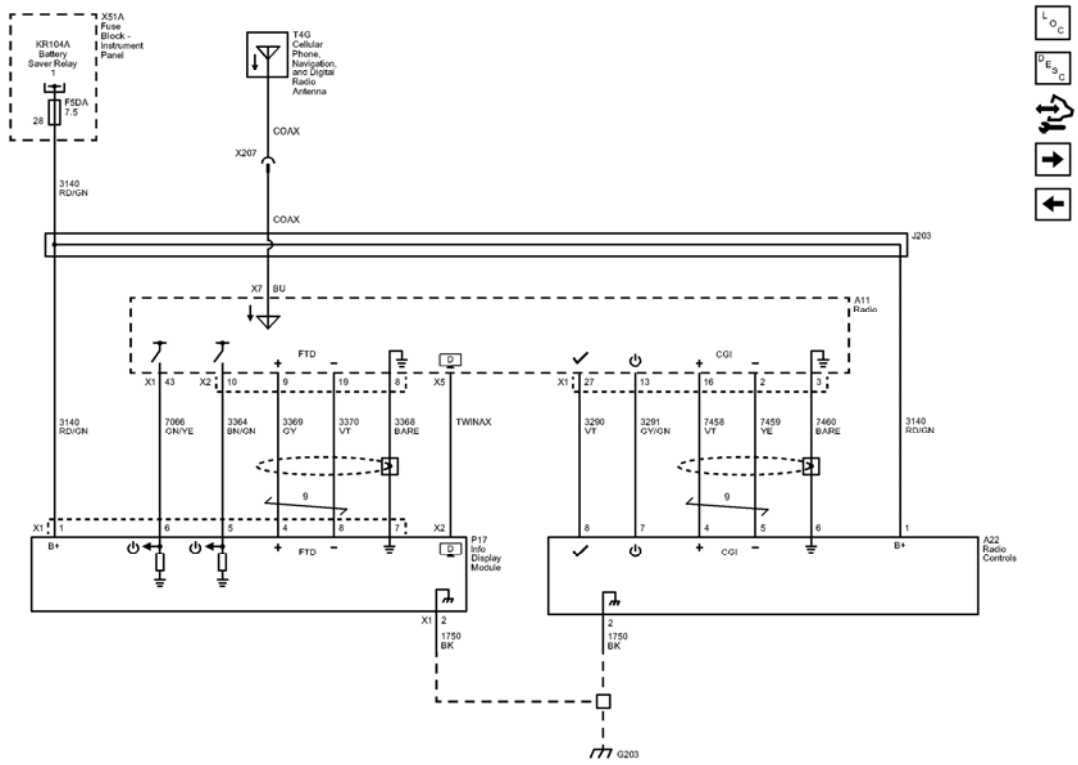

Fig. 6: Navigation System (UHQ) Wiring Schematics
Courtesy of GENERAL MOTORS COMPANY

Callout	Component Name
CAV_28	28
CAV BU	BU
CONN_X7	X7
COAX	COAX
COAX	COAX
3140	Battery Positive Voltage
CAV_1	1
CONN_X1	X1
3140_RD/GN	3140 RD/GN
3140_RD/GN	3140 RD/GN
7066	Entertainment Remote Enable Signal
7066_GN/YE	7066 GN/YE
CAV_6	6
CAV_43	43
CONN_X1	X1
3364	Navigation Display Reset Signal
3364_BN/GN	3364 BN/GN

CAV_5	5
CAV_10	10
CONN_X2	X2
3369	Touch Screen Display Signal (+)
3369_GY	3369 GY
CAV_4	4
CAV_9	9
3370	Touch Screen Display Signal (-)
3370_VT	3370 VT
CAV_8	8
CAV_19	19
3368	Touch Screen Display Drain Wire
3368 BARE	3368 BARE
CAV_7	7
CAV_8	8
TWINAX	TBD
TWINAX	TWINAX
CONN_X2	X2
CONN_X5	X5
1750	Ground
1750_BK	1750 BK
CAV_2	2
1750_BK	1750 BK
CAV_2	2
CONN_X1	X1
3290	Integrated Center Stack Reset Signal
3290_VT	3290 VT
CAV 8	8
CAV_27	27
CONN X1	X1
3291	Integrated Center Stack Wake Up Signal
3291_GY/GN	3291 GY/GN
CAV_7	7
CAV_13	13
7458	Center Integrated Center Stack Serial Data High
7458_VT	7458 VT
CAV_4	4
CAV_16	16
7459	Integrated Center Stack Serial Data Low
7459_YE	7459 YE
CAV_5	5

	2
7460	Integrated Center Stack Serial Data Shield
7460_BARE	7460 BARE
CAV_6	6
CAV_3	3
3140_RD/GN	3140 RD/GN
CAV_1	1
G203	G203
F5DA	F5DA 7.5
X207	X207
TWIST_9	9
TWIST_9	9
J203	J203
A11	
P17	
A22	
T4G	
KR104A	
X51A	

Audio Input (without KTA) Wiring Schematics

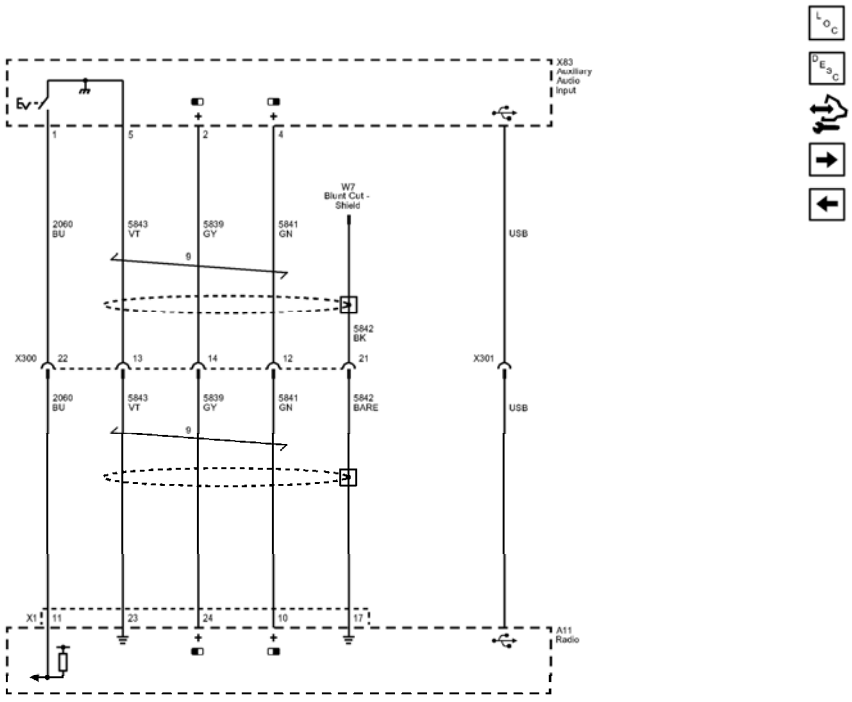

Fig. 7: Audio Input (without KTA) Wiring Schematics
Courtesy of GENERAL MOTORS COMPANY

Callout	Component Name
2060	Auxiliary Detection Signal
2060_BU	2060 BU
CAV_11	11
CONN_X1	X1
CAV_1	1
5843	Auxiliary Audio Common Signal
5843_VT	5843 VT
CAV_23	23
CAV_5	5
5839	Left Auxiliary Audio Signal (2)
5839_GY	5839 GY
CAV_24	24
CAV_2	2
5841	Right Auxiliary Audio Signal (2)
5841_GN	5841 GN
CAV_10	10
CAV_4	4

5842	Auxiliary Audio Screen (2)
5842_BARE	5842 BARE
CAV_17	17
5842_BK	5842 BK
2060_BU	2060 BU
5843_VT	5843 VT
5839_GY	5839 GY
5841_GN	5841 GN
USB	USB Cable
USB	USB
USB	USB
X300	X300
CAV_21	21
CAV_12	12
CAV_14	14
CAV_13	13
CAV_22	22
X301	X301
X300	X300
W7	
A11	
X83	

Multimedia Player Interface (KTA) Wiring Schematics

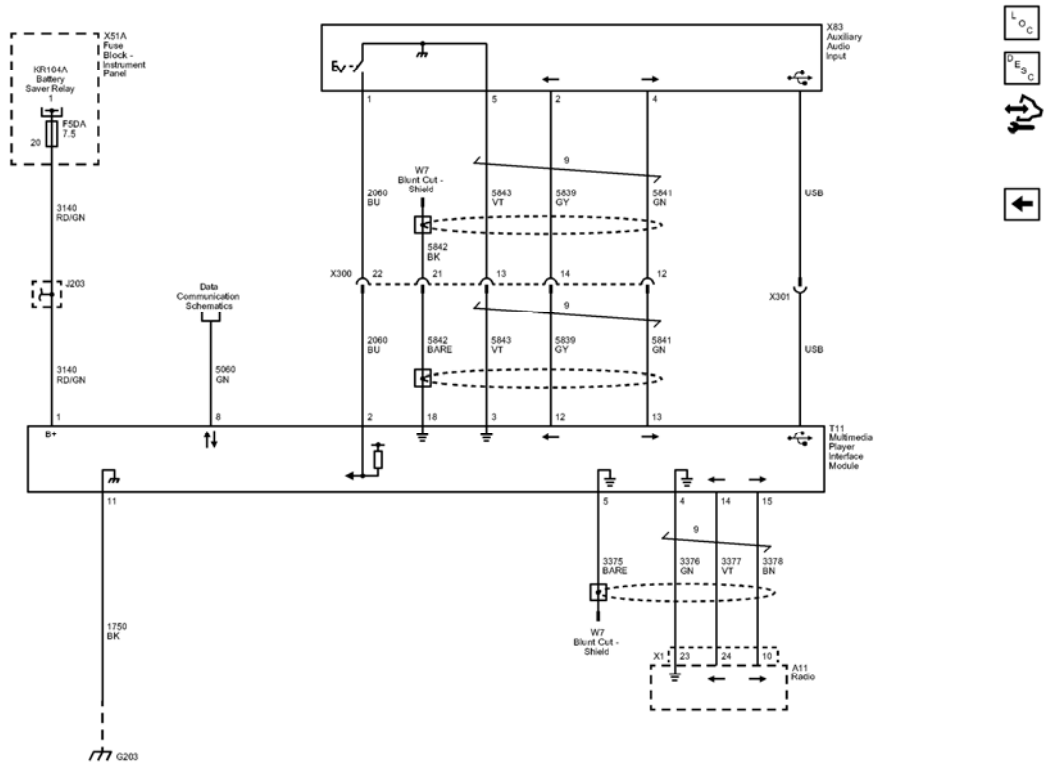

Fig. 8: Multimedia Player Interface (KTA) Wiring Schematics
Courtesy of GENERAL MOTORS COMPANY

Callout	Component Name
CAV_20	20
3140	Battery Positive Voltage
3140_RD/GN	3140 RD/GN
CAV_1	1
3140_RD/GN	3140 RD/GN
5060	Low Speed GMLAN Serial Data
5060_GN	5060 GN
CAV_8	8
2060	Auxiliary Detection Signal
2060_BU	2060 BU
CAV_2	2
CAV_1	1
5842	Auxiliary Audio Screen (2)
5842_BK	5842 BK
CAV_18	18
5842_BARE	5842 BARE

5843	Auxiliary Audio Common Signal
5843_VT	5843 VT
CAV_3	3
CAV_5	5
5839	Left Auxiliary Audio Signal (2)
5839_GY	5839 GY
CAV_12	12
CAV_2	2
5841	Right Auxiliary Audio Signal (2)
5841_GN	5841 GN
CAV_13	13
CAV_4	4
USB	USB Cable
USB	USB
2060_BU	2060 BU
5843_VT	5843 VT
5839_GY	5839 GY
5841_GN	5841 GN
3375	Auxiliary Audio Drain Wire (3)
3375_BARE	3375 BARE
CAV_5	5
3376	Auxiliary Audio Common Signal (3)
3376_GN	3376 GN
CAV_23	23
CONN_X1	X1
CAV_4	4
3377	Left Auxiliary Audio Signal (3)
3377_VT	3377 VT
CAV_24	24
CAV_14	14
3378	Right Auxiliary Audio Signal (3)
3378_BN	3378 BN
CAV_10	10
CAV_15	15
1750	Ground

1750_BK	1750 BK
CAV_11	11
USB	USB
X300	X300
CAV_22	22
CAV_21	21
CAV_13	13
CAV_14	14
CAV_12	12
G203	G203
F5DA	F5DA 7.5
X301	X301
TWIST 9	9
TWIST_9	9
X300	X300
A11	
T11	(KTA)
Data_Communication_Schematics_REF	Data Communication Schematics
W7	
W7	
X83	
KR104A	
X51A	

ONSTAR WIRING SCHEMATICS

Power, Ground, Serial Data, Microphone, and Display Wiring Schematics

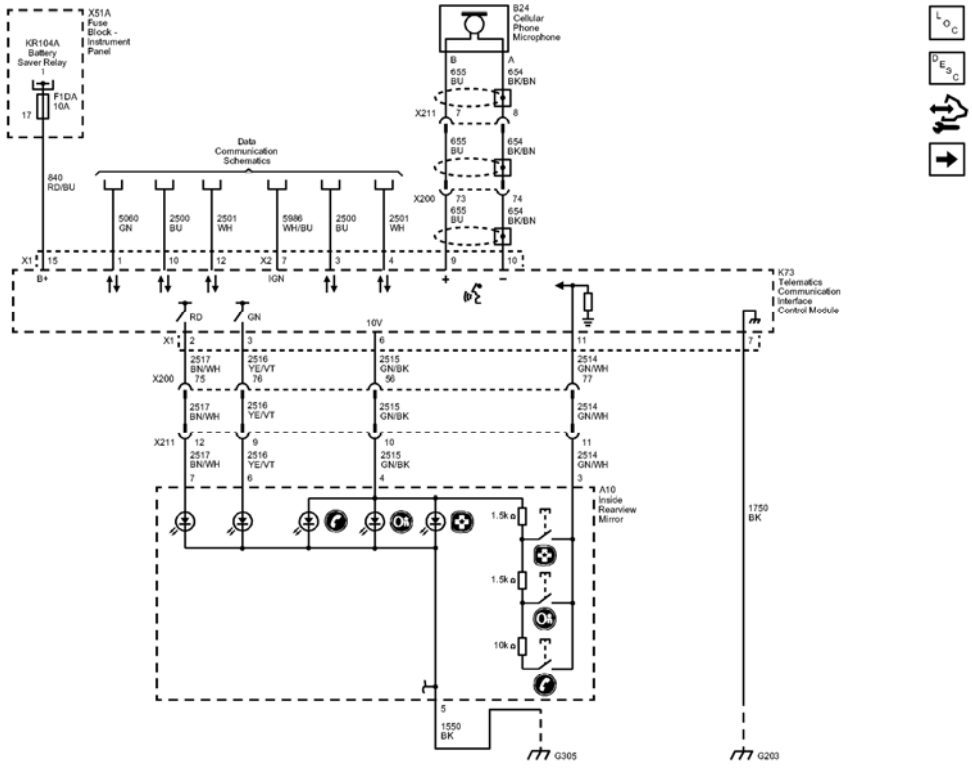

Fig. 9: Power, Ground, Serial Data, Microphone, and Display Wiring Schematics
Courtesy of GENERAL MOTORS COMPANY

Callout	Component Name
CAV_17	17
840	Battery Positive Voltage
840_RD/BU	840 RD/BU
CAV_15	15
CONN_X1	X1
5060	Low Speed GMLAN Serial Data
5060_GN	5060 GN
CAV_1	1
2500	High Speed GMLAN Serial Data (+) (1)
2500_BU	2500 BU
CAV_10	10
2501	High Speed GMLAN Serial Data (-) (1)
2501_WH	2501 WH
CAV_12	12

5986	Serial Data Communication Enable
5986_WH/BU	5986 WH/BU
CAV_7	7
2500_BU	2500 BU
CAV_3	3
2501_WH	2501 WH
CAV_4	4
655	Cellular Telephone Microphone Signal
CAV_B	B
654	Cellular Telephone Microphone Low Reference
CAV_10	10
CAV_A	A
CONN_X2	X2
CAV_9	9
655_BU	655 BU
655_BU	655 BU
655_BU	655 BU
654_BK/BN	654 BK/BN
654_BK/BN	654 BK/BN
654_BK/BN	654 BK/BN
2517	Keypad Red LED
2517_BN/WH	2517 BN/WH
CAV_7	7
CAV_2	2
CONN_X1	X1
2516	Keypad Green LED
2516_YE/VT	2516 YE/VT
CAV_6	6
CAV_3	3
2515	Keypad Supply Voltage
2515_GN/BK	2515 GN/BK
CAV_4	4
CAV_6	6
2514	Keypad Signal
2514_GN/WH	2514 GN/WH
CAV_3	3
CAV_11	11
2517_BN/WH	2517 BN/WH
2517_BN/WH	2517 BN/WH

2516_YE/VT	2516 YE/VT
2516_YE/VT	2516 YE/VT
2515_GN/BK	2515 GN/BK
2515_GN/BK	2515 GN/BK
2514_GN/WH	2514 GN/WH
2514_GN/WH	2514 GN/WH
1750	Ground
1750_BK	1750 BK
1550	Ground
1550_BK	1550 BK
CAV_5	5
CAV_7	7
X211	X211
CAV_7	7
CAV_8	8
X200	X200
CAV_73	73
CAV_74	74
X211	X211
CAV_12	12
CAV_9	9
CAV_10	10
CAV_11	11
X200	X200
CAV_75	75
CAV_76	76
CAV_56	56
CAV 77	77
F1DA	F1DA 10A
G203	G203
G305	G305
X211	X211
X200	X200
X211	X211
X200	X200
K73	(UE1)
B24	(UE1)
Data_Communication_Schematics_REF	Data Communication Schematics
A10	(DD8)
KR104A	

X51A	

Antenna Wiring Schematics

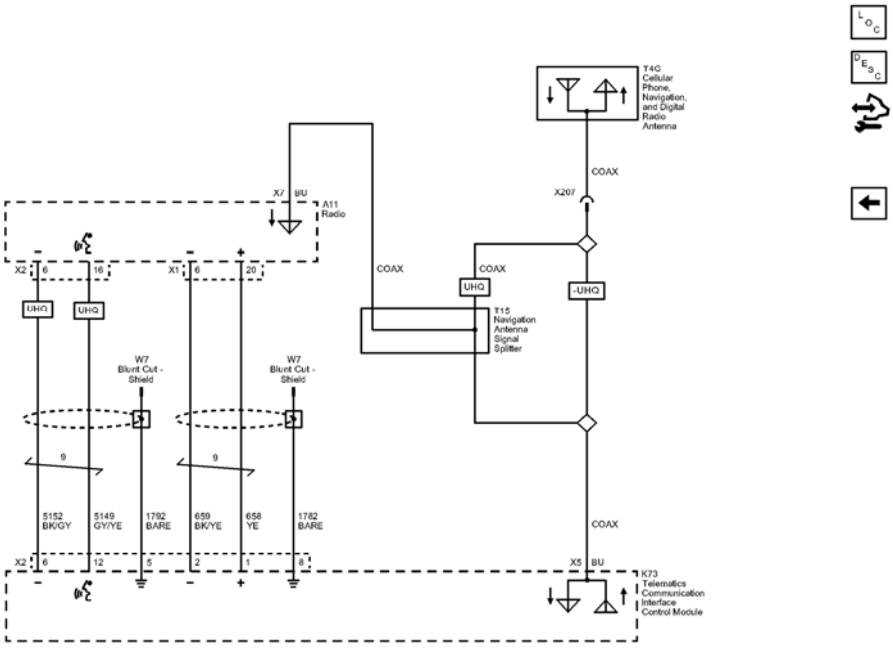

Fig. 10: Antenna Wiring Schematics
Courtesy of GENERAL MOTORS COMPANY

Callout	Component Name
CAV_BU	BU
CONN_X5	X5
COAX	COAX
COAX	COAX
COAX	COAX
COAX	COAX
CAV BU	BU
CONN_X7	X7
5152	Voice Recognition Audio Low Reference
5152_BK/GY	5152 BK/GY
CAV_6	6
CONN_X2	X2
CAV_6	6

CONN_X2	X2
5149	Voice Recognition Audio Signal
5149_GY/YE	5149 GY/YE
CAV_12	12
CAV_16	16
659	Cellular Telephone Voice Low Reference
659_BK/YE	659 BK/YE
CAV_2	2
CAV_6	6
CONN_X1	X1
658	Cellular Telephone Voice Signal
658_YE	658 YE
CAV 1	1
CAV_20	20
1782	Drain Wire
1782_BARE	1782 BARE
CAV_8	8
1792	Drain Wire
1792_BARE	1792 BARE
CAV_5	5
UHQ	RADIO-AM/FM STEREO, SINGLE CD, MP3 (AUX IN), USB, NAVIGATION (GMNA VERSION)
UHQ	RADIO-AM/FM STEREO, SINGLE CD, MP3 (AUX IN), USB, NAVIGATION (GMNA VERSION)
UHQ	RADIO-AM/FM STEREO, SINGLE CD, MP3 (AUX IN), USB, NAVIGATION (GMNA VERSION)
UHQ	RADIO-AM/FM STEREO, SINGLE CD, MP3 (AUX IN), USB, NAVIGATION (GMNA VERSION)
X207	X207
TWIST_9	9
TWIST_9	9
A11	
W7	
T15	(UE1 and UYS)
K73	(UE1)
W7	
T4G	

DIAGNOSTIC INFORMATION AND PROCEDURES

DIAGNOSTIC CODE INDEX

DIAGNOSTIC CODE INDEX

DTC	Description
DTC B0000	DTC B0000 5A Vehicle Speed Information Circuit Not Plausible
DTC B0997	DTC B0997 00 Info Display Module Malfunction
DTC B1020	DTC B1020 00 Auxiliary Electronic Control Unit (ECU) Performance
DTC B1025, B1035, B1045, or B1055	DTC B1025 01 Left Front Audio Output Circuit Short to Battery DTC B1025 02 Left Front Audio Output Circuit Short to Ground DTC B1025 04 Left Front Audio Output Circuit Open DTC B1035 01 Front Audio Output Circuit Short to Battery DTC B1035 02 Right Front Audio Output Circuit Short to Ground DTC B1035 04 Right Front Audio Output Circuit Open DTC B1045 01 Left Rear Audio Output Circuit Short to Battery DTC B1045 02 Left Rear Audio Output Circuit Short to Ground DTC B1045 04 Left Rear Audio Output Circuit Open DTC B1055 01 Right Rear Audio Output Circuit Short to Battery DTC B1055 02 Right Rear Audio Output Circuit Short to Ground DTC B1055 04 Right Rear Audio Output Circuit Open
DTC B125A	DTC B125A 02 Antenna Signal Circuit Short to Ground DTC B125A 04 Antenna Signal Circuit Open Circuit
DTC B125C	DTC B125C 01 Satellite Antenna Circuit Short to Battery DTC B125C 02 Satellite Antenna Circuit Short to Ground DTC B125C 04 Satellite Antenna Circuit Open
DTC B1265	DTC B1265 02 Switched 14 Volt Performance Short to Ground
DTC B1271	DTC B1271 00 Theft Protection Active
DTC B1278 or B1279	DTC B1278 01 Left Auxiliary Input Signal Circuit Short to Battery DTC B1278 02 Left Auxiliary Input Signal Circuit Short to Ground DTC B1279 01 Right Auxiliary Input Signal Circuit Short to Battery DTC B1279 02 Right Auxiliary Input Signal Circuit Short to Ground
DTC B1287	DTC B1287 01 Amplifier Control Signal Circuit Short to Battery DTC B1287 02 Amplifier Control Signal Circuit Short to Ground

	DTC B1287 04 Amplifier Control Signal Circuit Open
DTC B1446 or B1447	DTC B1446 Replace Backup Power Source Below Minimum Threshold DTC B1447 Backup Power Source Open Circuit
DTC B2455	DTC B2455 02 Cellular Phone Microphone Circuit Short to Ground DTC B2455 04 Cellular Phone Microphone Circuit Open/High Resistance
DTC B2462	DTC B2462 01 Global Positioning System Short to Battery DTC B2462 02 Global Positioning System Short to Ground DTC B2462 04 Global Positioning System Open
DTC B2470	DTC B2470 02 Cellular Phone Antenna Circuit Malfunction Short to Ground DTC B2470 04 Cellular Phone Antenna Circuit Malfunction Open Circuit
DTC B2476 or B2482	DTC B2476 04 Cellular Phone Select Service Switch Open DTC B2476 59 Cellular Phone Select Service Switch Protection Time-out DTC B2482 00 Cellular Phone Select Service Switch Range/Performance
DTC B2485	DTC B2485 02 Wireless Communication (BT) Antenna Circuit Short to Ground DTC B2485 04 Wireless Communication (BT) Antenna Circuit Open
DTC U0255-U0257	DTC U0255 Lost Communication with Info Display Module DTC U0256 Lost Communication with Infotainment Faceplate Control Module DTC U0257 Lost Communication with Info Display Module/Infotainment Faceplate Control Module

DTC B0000

Diagnostic Instructions

- Perform the **Diagnostic System Check - Vehicle** prior to using this diagnostic procedure.
- Review **Strategy Based Diagnosis** for an overview of the diagnostic approach.
- **Diagnostic Procedure Instructions** provides an overview of each diagnostic category.

DTC Descriptor

DTC B0000 5A

Vehicle Speed Information Circuit Not Plausible

Diagnostic Fault Information

Circuit	Short to Ground	Open/High Resistance	Short to Voltage	Signal Performance
Vehicle Speed Signal Circuit	B0000 5A	B0000 5A	B0000 5A	B0000 5A

Circuit/System Description

The radio receives a vehicle speed signal from the electronic brake control module in order to correlate actual vehicle speed to the movement of the vehicle calculated by the navigation system and reported serial data.

Conditions for Running the DTC

- Radio ON.
- Battery voltage must be between 9-16 V.

Conditions for Setting the DTC

- Vehicle speed from serial data is more than 5 km/h (3 mph) and vehicle speed pulse from the electronic brake control module is 0 km/h (0 mph).
- Vehicle speed calculated from the navigation processing software is more than 36 km/h (22 mph) and vehicle speed pulse from the electronic brake control module is 0 km/h (0 mph) for 10 seconds continuously.

Action Taken When the DTC Sets

- Turn by turn route navigation may be inoperative.
- Vehicle indicated location may be inaccurate.

Conditions for Clearing the DTC

- The condition responsible for setting the DTC no longer exists.
- A history DTC clears after 100 malfunction-free ignition cycles.

Reference Information

Schematic Reference

Radio/Navigation System Schematics

Connector End View Reference

COMPONENT CONNECTOR END VIEWS - INDEX

Description and Operation

Radio/Audio System Description and Operation (with Color Display), **Radio/Audio System Description and Operation (with Monochrome Display)**

Electrical Information Reference

- **Circuit Testing**
- **Connector Repairs**
- **Testing for Intermittent Conditions and Poor Connections**
- **Wiring Repairs**

Scan Tool Reference

Control Module References for scan tool information

Circuit/System Testing

NOTE: Diagnose any antilock brake system (ABS) related DTCs before performing this diagnostic.

1. Ignition OFF, disconnect the X2 harness connector at the A11 Radio.
2. Ignition ON.
3. Test for less than 1 V between the signal circuit terminal 20 and ground.
   - **If 1 V or greater**
   1. Ignition OFF, disconnect the harness connector at the K17 Electronic Brake Control Module. Ignition ON.
   2. Test for less than 1 V between the signal circuit and ground.
      - If 1 V or greater, repair the short to voltage on the circuit.
      - If less than 1 V, replace the K17 Electronic Brake Control Module.
   - **If less than 1 V**
4. Test for 3-7 Hz between the signal circuit terminal 20 and ground while operating the vehicle drive wheels at 5 mph (8 km/h).
   - **If not 3-7 Hz**
   1. Ignition OFF, disconnect the harness connector at the K17 Electronic Brake Control Module.
   2. Test for infinite resistance between the signal circuit and ground.
      - If less than infinite resistance, repair the short to ground on the circuit.
      - If infinite resistance
   3. Test for less than 2 ohms in the signal circuit end to end.
      - If 2 ohms or greater, repair the open/high resistance in the circuit.
      - If less than 2 ohms, replace the K17 Electronic Brake Control Module.
   - **If 3-7 Hz**
5. Test or replace the A11 Radio.

Repair Instructions

Perform the **Diagnostic Repair Verification** after completing the repair.

Control Module References for radio or electronic brake control module replacement, programming, and setup.

DTC B0997

Diagnostic Instructions

- Perform the **Diagnostic System Check - Vehicle** prior to using this diagnostic procedure.
- Review **Strategy Based Diagnosis** for an overview of the diagnostic approach.
- **Diagnostic Procedure Instructions** provides an overview of each diagnostic category.

DTC Descriptor

DTC B0997 00

Info Display Module Malfunction

Circuit/System Description

The radio communicates with the information display via serial data. This DTC indicates a fault in the information display. No external circuits are involved. The radio and display may continue to operate normally when this DTC is set.

Conditions for Running the DTC

- Ignition is ON or in the ACC position.
- The system voltage is at least 9.5 V and no more than 15.5 V.
- All the above conditions are present for greater than 10 seconds.

Conditions for Setting the DTC

The radio receives an improper status response indicating an internal ECU fault in the information display.

Action Taken when the DTC Sets

No action is taken.

Conditions for Clearing the DTC

- A current DTC clears when the radio receives a proper status response message back from the information display.
- A history DTC clears after 50 malfunction-free ignition cycles.

Diagnostic Aids

- This DTC may be stored as a history DTC without affecting the operation of the information display.
- If stored only as a history DTC and not retrieved as a current DTC, do not replace the information

display.

- If this DTC is retrieved as both a current and history DTC, replace the information display.

Reference Information

Schematic Reference

Radio/Navigation System Schematics

Connector End View Reference

COMPONENT CONNECTOR END VIEWS - INDEX

Description and Operation

Radio/Audio System Description and Operation (with Color Display), **Radio/Audio System Description and Operation (with Monochrome Display)**

Electrical Information Reference

- **Circuit Testing**
- **Connector Repairs**
- **Testing for Intermittent Conditions and Poor Connections**
- **Wiring Repairs**

Scan Tool Reference

Control Module References for scan tool information

Circuit/System Verification

1. Ignition ON
2. Verify DTC B0997 is not set
    - **If DTC B0997 is set**

      Replace the P17 Info Display Module

    - **If DTC B0997 is not set**
3. All OK.

Repair Instructions

Perform the **Diagnostic Repair Verification** after completing the repair.

Driver Information Display Replacement

DTC B1020

Diagnostic Instructions

- Perform the **Diagnostic System Check - Vehicle** prior to using this diagnostic procedure.
- Review **Strategy Based Diagnosis** for an overview of the diagnostic approach.
- **Diagnostic Procedure Instructions** provides an overview of each diagnostic category.

DTC Descriptor

DTC B1020 00

Auxiliary Electronic Control Unit (ECU) Performance

Circuit/System Description

The radio communicates with the radio controls via serial data. This DTC indicates a fault in the radio controls. The radio may continue to respond normally to faceplate functions when this DTC is set.

Conditions for Running the DTC

- Ignition is ON or in the ACC position.
- The system voltage is at least 9.5 V and no more than 15.5 V.
- All the above conditions are present for greater than 10 seconds.

Conditions for Setting the DTC

The radio receives an improper status response indicating an internal ECU fault in the radio controls.

Action Taken when the DTC Sets

No action is taken.

Conditions for Clearing the DTC

- A current DTC clears when the radio receives a proper status response message back from the radio control assembly.
- A history DTC clears after 50 malfunction-free ignition cycles.

Diagnostic Aids

- This DTC may be stored as a history DTC without affecting the operation of the radio controls.
- If stored only as a history DTC and not retrieved as a current DTC, do not replace the radio controls.
- If this DTC is retrieved as both a current and history DTC, replace the radio controls.

Reference Information

Schematic Reference

Radio/Navigation System Schematics

Connector End View Reference

COMPONENT CONNECTOR END VIEWS - INDEX

Description and Operation

Radio/Audio System Description and Operation (with Color Display), **Radio/Audio System Description and Operation (with Monochrome Display)**

Electrical Information Reference

- **Circuit Testing**
- **Connector Repairs**
- **Testing for Intermittent Conditions and Poor Connections**
- **Wiring Repairs**

Scan Tool Reference

Control Module References for scan tool information

Circuit/System Verification

1. Ignition ON.
2. Verify DTC B1020 is not set.
   - **If DTC B1020 is set**

     Replace the A22 Radio Controls.

   - **If DTC B1020 is not set**
3. All OK.

Repair Instructions

Perform the **Diagnostic Repair Verification** after completing the repair.

Control Module References for radio controls replacement, programming, and setup.

DTC B1025, B1035, B1045, OR B1055

Diagnostic Instructions

- Perform the **Diagnostic System Check - Vehicle** prior to using this diagnostic procedure.

- Review **Strategy Based Diagnosis** for an overview of the diagnostic approach.
- **Diagnostic Procedure Instructions** provide an overview of each diagnostic category.

DTC Descriptors

DTC B1025 01

Left Front Audio Output Circuit Short to Battery

DTC B1025 02

Left Front Audio Output Circuit Short to Ground

DTC B1025 04

Left Front Audio Output Circuit Open

DTC B1035 01

Front Audio Output Circuit Short to Battery

DTC B1035 02

Right Front Audio Output Circuit Short to Ground

DTC B1035 04

Right Front Audio Output Circuit Open

DTC B1045 01

Left Rear Audio Output Circuit Short to Battery

DTC B1045 02

Left Rear Audio Output Circuit Short to Ground

DTC B1045 04

Left Rear Audio Output Circuit Open

DTC B1055 01

Right Rear Audio Output Circuit Short to Battery

DTC B1055 02

Right Rear Audio Output Circuit Short to Ground

DTC B1055 04

Right Rear Audio Output Circuit Open

Diagnostic Fault Information

Circuit	Short to Ground	Open/High Resistance	Short to Voltage	Signal Performance
Left Front Audio Signal Circuit	B1025 02*	B1025 04**	B1025 01*	-
Right Front Audio Signal Circuit	B1035 02*	B1035 04**	B1035 01*	-
Left Rear Audio Signal Circuit	B1045 02*	B1045 04**	B1045 01*	-
Right Rear Audio Signal Circuit	B1055 02*	B1055 04**	B1055 01*	-
* Noticeable audio distortion possible. ** No or reduced sound from speaker.				

Circuit/System Description

Each of the audio output channel circuits (+) and (-), at the radio and audio amplifier have a DC bias voltage that is approximately one half of battery voltage. When using a DMM, each of the audio output channel circuits will measure approximately 6.5 V DC. The audio being played on the system is produced by a varying AC voltage that is centered around the DC bias voltage on the same circuit. The AC voltage is what causes the speaker cone to move and produce sound. The frequency (Hz) of the AC voltage signal is directly related to the frequency of the input (audio source playing) to the audio system. Both the DC bias voltage and the AC voltage signals are needed for the audio system to properly produce sound.

Conditions for Running the DTC

- Ignition is ON or in the ACC position
- The system voltage is 9-16 V
- The test is run once during radio wake up

Conditions for Setting the DTC

B1025 01, B1035 01, B1045 01, B1055 01

The radio detects a short to voltage on the specified audio (+) or (-) circuit.

B1025 02, B1035 02, B1045 02, B1055 02

The radio detects a short to ground on the specified audio (+) or (-) circuit.

B1025 04, B1035 04, B1045 04, B1055 04

The radio detects an open on the specified audio (+) or (-) circuit.

Action Taken When the DTC Sets

The radio continues to send the output signal to the speaker signal circuit with the current fault.

Conditions for Clearing the DTC

- A current DTC clears when the conditions for setting the DTC are no longer present and the ignition has been cycled from OFF to ON.
- A history DTC clears after 50 malfunction-free ignition cycles.

Diagnostic Aids

- Improper speaker mounting or loose trim may cause an audible buzz or distortion. Inspect the appropriate speaker and the surrounding interior trim for proper and secure mounting. If the speaker or surrounding interior trim is found to be loose or improperly secured, correctly secure the item.
- When equipped with an amplifier, the radio does not set DTCs for the audio outputs.

Reference Information

Schematic Reference

Radio/Navigation System Schematics

Connector End View Reference

COMPONENT CONNECTOR END VIEWS - INDEX

Description and Operation

Radio/Audio System Description and Operation (with Color Display), **Radio/Audio System Description and Operation (with Monochrome Display)**

Electrical Information Reference

- **Circuit Testing**
- **Connector Repairs**
- **Testing for Intermittent Conditions and Poor Connections**
- **Wiring Repairs**

Scan Tool Reference

Control Module References for scan tool information

Circuit/System Verification

1. Ignition ON, A11 Radio ON, mute OFF.
2. Verify clear audio is heard from each speaker, adjusting fade and balance controls to test each speaker individually.
    - **If audio is inoperative from one or more speakers, or the audio emitted is not clear.**

      Refer to Circuit/System Testing below.

    - **If clear audio is heard from all speakers.**
3. All OK.

Circuit/System Testing

1. Ignition OFF, disconnect the harness connector at the appropriate P19 Speaker. Ignition ON, A11 Radio ON, mute OFF.
2. Test for 5-7 V between each audio signal circuit terminal 1 and terminal 2 and ground.
    - **If less than 5 V**
    1. Ignition OFF, disconnect the X1 harness connector at the A11 Radio.
    2. Test for infinite resistance between the signal circuit and ground.
        - If less than infinite resistance, repair the short to ground on the circuit.
        - If infinite resistance
    3. Test for less than 2 ohms in the signal circuit end to end.
        - If 2 ohms or greater, repair the open/high resistance in the circuit.
        - If less than 2 ohms, replace the A11 Radio.
    - **If greater than 7 V**
    1. Ignition OFF, disconnect the X1 harness connector at the A11 Radio. Ignition ON.
    2. Test for less than 1 V between the signal circuit and ground.
        - If 1 V or greater, repair the short to voltage on the circuit.
        - If less than 1 V, replace the A11 Radio.
    - **If between 5-7 V**
3. Test or replace the P19 Speaker.

Repair Instructions

Perform the **Diagnostic Repair Verification** after completing the repair.

- **Speaker Replacement Reference**
- **Control Module References** for radio replacement, programming, and setup.

DTC B125A

Diagnostic Instructions

- Perform the **Diagnostic System Check - Vehicle** prior to using this diagnostic procedure.
- Review **Strategy Based Diagnosis** for an overview of the diagnostic approach.
- **Diagnostic Procedure Instructions** provides an overview of each diagnostic category.

DTC Descriptors

DTC B125A 02

Antenna Signal Circuit Short to Ground

DTC B125A 04

Antenna Signal Circuit Open Circuit

Diagnostic Fault Information

Circuit	Short to Ground	Open/High Resistance	Short to Voltage	Signal Performance
Radio Antenna Coax	B125A 02	B125A 04	1	-
Ground	-	1	-	-
1. May exhibit possible AM/FM interference.				

Circuit/System Description

The multi-band antenna is located on the roof of the vehicle. The radio antenna is enabled when the radio is turned on. The radio provides battery voltage to the antenna using the center conductor of the antenna coaxial cable. When a 12 V signal is seen on the center conductor of the antenna coax, both AM and FM signals are amplified.

Conditions for Running the DTC

- Ignition ON.
- Battery voltage must be between 9-16 V.

Conditions for Setting the DTC

B125A 02

The radio detects a short to ground in the antenna signal circuit center conductor.

B125A 04

The radio detects an open in the antenna signal circuit center conductor.

Action Taken When the DTC Sets

Radio reception may be poor or not available.

Conditions for Clearing the DTC

- The condition responsible for setting the DTC no longer exists.
- A history DTC will clears after 50 consecutive malfunction-free ignition cycles have occurred.

Reference Information

Schematic Reference

Radio/Navigation System Schematics

Connector End View Reference

COMPONENT CONNECTOR END VIEWS - INDEX

Description and Operation

Radio/Audio System Description and Operation (with Color Display), **Radio/Audio System Description and Operation (with Monochrome Display)**

Electrical Information Reference

- **Circuit Testing**
- **Connector Repairs**
- **Testing for Intermittent Conditions and Poor Connections**
- **Wiring Repairs**

Scan Tool Reference

Control Module References for scan tool information

Circuit/System Verification

1. Ignition ON, A11 Radio ON.
2. Verify station reception is normal when tuned to several known good AM and FM stations.
    - **If AM or FM reception is poor.**

      Refer to Circuit/System Testing below

    - **If reception is normal**
3. All OK.

Circuit/System Testing

1. Ignition OFF, disconnect the radio antenna coax cable from the A11 Radio and from the T4G Cellular Phone, Navigation, and Digital Radio Antenna.
2. Verify the antenna coax cable passes the coax cable component test. Refer to Component Testing below.
   - **If the coax cable does not pass the test**

     Replace the antenna coax cable

   - **If the coax cable passes the test**
3. Connect the radio antenna coax cable to the A11 Radio.
4. Ignition ON, A11 Radio ON. Verify a test lamp illuminates between the antenna coax cable center terminal and ground at the T4G Cellular Phone, Navigation, and Digital Radio Antenna.
   - **If the test lamp does not illuminate**

     replace the A11 Radio.

   - **If the test lamp illuminates**
5. Test or replace the T4G Cellular Phone, Navigation, and Digital Radio Antenna.

Component Testing

CAUTION: Refer to Test Probe Caution .

NOTE: Before testing the coax cable, check the cable exterior for being pinched, cut, damaged, or having loose connections at the components, which can cause reception issues.

To prevent false reading when testing the center coax terminals, use care not to ground the test probe on the outer housing/shield.

Coax Cable Test

1. Ignition OFF, disconnect the coax cable at both components.
2. Test for less than 5 ohms between coax cable center terminal end to end.
   - **If 5 ohms or greater**

     Replace the coax cable

   - **If less than 5 ohms**
3. Test for less than 5 ohms between the coax cable outer shield end to end.
   - **If 5 ohms or greater**

     Replace the coax cable

- **If less than 5 ohms**

4. Test for infinite resistance between the coax cable center terminal and the coax cable outer shield.
   - **If less than infinite resistance**

     Replace the coax cable

   - **If infinite resistance**
5. All OK

Repair Instructions

Perform the **Diagnostic Repair Verification** after completing the repair.

- **Radio Antenna Base Replacement**
- **Control Module References** for Radio replacement, programming, and setup.

DTC B125C

Diagnostic Instructions

- Perform the **Diagnostic System Check - Vehicle** prior to using this diagnostic procedure.
- Review **Strategy Based Diagnosis** for an overview of the diagnostic approach.
- **Diagnostic Procedure Instructions** provides an overview of each diagnostic category.

DTC Descriptors

DTC B125C 01

Satellite Antenna Circuit Short to Battery

DTC B125C 02

Satellite Antenna Circuit Short to Ground

DTC B125C 04

Satellite Antenna Circuit Open

Circuit/System Description

The digital radio receiver, located inside the radio, receives digital radio information from the digital radio antenna located on the outside of the vehicle. The digital radio receiver is connected to the digital radio antenna via a shielded coax cable. The digital radio antenna contains an amplifier which is powered by the radio through the coax cable.

Conditions for Running the DTC

This DTC is run every 300 milliseconds.

Conditions for Setting the DTC

The radio detects a circuit fault in the digital radio antenna.

Action Taken When the DTC Sets

The radio displays No XM Signal or Check Antenna.

Conditions for Clearing the DTC

- A current DTC clears when the condition for setting the DTC is no longer present.
- A history DTC clears after 100 malfunction-free ignition cycles.

Diagnostic Aids

The digital radio antenna requires a clear line of sight to the sky to operate properly. Reception may be limited, intermittent, or unavailable inside structures.

Reference Information

Schematic Reference

Radio/Navigation System Schematics

Connector End View Reference

COMPONENT CONNECTOR END VIEWS - INDEX

Description and Operation

Radio/Audio System Description and Operation (with Color Display), **Radio/Audio System Description and Operation (with Monochrome Display)**

Electrical Information Reference

- **Circuit Testing**
- **Connector Repairs**
- **Testing for Intermittent Conditions and Poor Connections**
- **Wiring Repairs**

Special Tools

EL-48028 Digital Radio Test Antenna

Circuit/System Verification

1. With the vehicle outside in an area with an unobstructed view of the southern sky, tune to XM.
2. Verify DTC B125C is not set as current and the No XM Signal message is not displayed on the radio.
   - **If DTC B125C is set as current or the No XM Signal message is displayed.**

     Refer to Circuit/System Testing below.

   - **If DTC B125C is not set as current and the No XM Signal message is not displayed.**
3. All OK.

Circuit/System Testing

1. Ignition OFF, disconnect the digital radio antenna coax cable from the A11 Radio. Connect the **EL-48028** Digital Radio Test Antenna to the radio and place on the roof of the vehicle.
2. Ignition ON, radio tuned to XM channel 1.
3. Verify DTC B125C is not set as current and XM reception is improved.
   - **If DTC B125C is set as current or XM reception is not improved**

     Replace the A11 Radio.

   - **If DTC B125C is not set as current and XM reception is improved**
4. Ignition OFF, disconnect the digital radio antenna coax cable from the T4G Cellular Phone, Navigation, and Digital Radio Antenna.
5. Verify the digital radio antenna coax cable passes the coax cable component test. Refer to Component Testing below.
   - **If the coax cable does not pass the test**

     Replace the antenna coax cable

   - **If the coax cable passes the test**
6. Test or replace the T4G Cellular Phone, Navigation, and Digital Radio Antenna.

Component Testing

CAUTION: Refer to Test Probe Caution .

NOTE: Before testing the coax cable, check the cable exterior for being pinched, cut, damaged, or having loose connections at the components, which can cause reception issues.

To prevent false reading when testing the center coax terminals, use care not to ground the test probe on the outer housing/shield.

Coax Cable Test

1. Ignition OFF, disconnect the coax cable at both components.
2. Test for less than 5 ohms between coax cable center terminal end to end.
   - **If 5 ohms or greater**

     Replace the coax cable

   - **If less than 5 ohms**
3. Test for less than 5 ohms between the coax cable outer shield end to end.
   - **If 5 ohms or greater**

     Replace the coax cable

   - **If less than 5 ohms**
4. Test for infinite resistance between the coax cable center terminal and the coax cable outer shield.
   - **If less than infinite resistance**

     Replace the coax cable

   - **If infinite resistance**
5. All OK

Repair Instructions

Perform the **Diagnostic Repair Verification** after completing the repair.

- **Radio Antenna Base Replacement**
- **Control Module References** for Radio replacement, programming, and setup.

DTC B1265

Diagnostic Instructions

- Perform the **Diagnostic System Check - Vehicle** prior to using this diagnostic procedure.
- Review **Strategy Based Diagnosis** for an overview of the diagnostic approach.
- **Diagnostic Procedure Instructions** provides an overview of each diagnostic category.

DTC Descriptor

DTC B1265 02

Switched 14 Volt Performance Short to Ground

Diagnostic Fault Information

Circuit	Short to Ground	Open/High Resistance	Short to Voltage	Signal Performance
Remote Enable	DTC B1265 0 *	**	***	-
* all components requiring remote enable inoperative ** fault may affect one or more components, dependant on fault location and vehicle equipment *** components will not power off with infotainment system				

Circuit/System Description

When the radio is on, a discrete 12 V signal is supplied on the entertainment remote enable circuit to the Audio Amplifier and the Color/Navigation Info Display Module (if equipped). This signal is used to control the power state of the components.

Conditions for Running the DTC

The following are conditions that must be present in order for the radio to enable diagnostics:

- The radio is ON.
- The system voltage is 9 -16 V

Conditions for Setting the DTC

- The radio detects a short to ground on the entertainment remote enable circuit.
- The above condition is present for greater than 250 mS.

Action Taken When the DTC Sets

- The radio implements a current limiting mode and disables the output on the entertainment remote enable circuit.
- All components connected on the entertainment remote enable circuit will be inoperative.

Conditions for Clearing the DTC

- The condition for setting the DTC no longer exists.
- After the ignition has been OFF for a sufficient amount of time to allow the radio to enter a low power/sleep state, the radio will re-enable the output on the following ignition cycle and the DTC will become history.
- A history DTC clears after 50 malfunction-free ignition cycles.

Diagnostic Aids

- This DTC may be stored as a history DTC without affecting the operation of the radio/infotainment systems.
- The radio's current limiting logic may not re-enable the output on the entertainment remote enable circuit until after the radio performs a full power-down. It may be necessary to wait 5 minutes between each test

attempt with the key OFF and retained accessory power OFF.

Reference Information

Schematic Reference

Radio/Navigation System Schematics

Connector End View Reference

COMPONENT CONNECTOR END VIEWS - INDEX

Description and Operation

Radio/Audio System Description and Operation (with Color Display), **Radio/Audio System Description and Operation (with Monochrome Display)**

Electrical Information Reference

- **Circuit Testing**
- **Connector Repairs**
- **Testing for Intermittent Conditions and Poor Connections**
- **Wiring Repairs**

Scan Tool Reference

Control Module References for scan tool information

Circuit/System Testing

1. Ignition OFF, radio OFF, radio B+ fuse removed. Disconnect all of the harness connectors listed below:
    - T3 Audio Amplifier X3 (if equipped)
    - P17 Info Display Module X1 (if equipped)
2. Install the radio B+ fuse. Ignition ON, A11 Radio ON.
3. Verify that a test lamp illuminates between the control circuit terminals listed below and ground:
    - T3 Audio Amplifier X3 terminal 8 (if equipped)
    - P17 Info Display Module X1 terminal 6 (if equipped)
    - **If the test lamp does not illuminate.**
        1. Ignition OFF. Disconnect the X1 harness at the A11 Radio.
        2. Test for infinite resistance between the control circuit and ground.
            - If less than infinite resistance, repair the short to ground on the circuit.
            - If infinite resistance.
        3. Test for less than 2 ohms in the control circuit end to end.

- If greater than 2 ohms, repair the open/high resistance in the circuit.
- If less than 2 ohms, replace the A11 Radio.

- **If the test lamp illuminates.**

4. Verify that DTC B1265 does NOT set as each component is connected one at a time.
   - **If DTC B1265 sets.**

     Replace the module/component that was just connected

   - **If DTC B1265 does not set.**
5. All OK.

Repair Instructions

Perform the **Diagnostic Repair Verification** after completing the repair.

- **Driver Information Display Replacement**
- **Control Module References** for radio and amplifier replacement, programming, and setup.

DTC B1271

Diagnostic Instructions

- Perform the **Diagnostic System Check - Vehicle** prior to using this diagnostic procedure.
- Review **Strategy Based Diagnosis** for an overview of the diagnostic approach.
- **Diagnostic Procedure Instructions** provides an overview of each diagnostic category.

DTC Descriptor

DTC B1271 00

Theft Protection Active

Circuit/System Description

When the radio is initially installed in the vehicle, the radio receives VIN information via serial data. The radio stores a portion of the VIN and compares this sequence to the VIN information received each time the radio powers on. The VIN in the radio is a single one-time learn.

The radio theft deterrent system is intended to disable or limit radio functionality if incorrect vehicle information is received by the radio. The radio disables functionality if the VIN information received by the radio does not match the VIN information that has been learned by the radio. This DTC is generated by the module when the Theft Protection is activated.

Conditions for Running the DTC

This DTC test runs when the radio changes from OFF to ON.

Conditions for Setting the DTC

The radio has learned a correct VIN sequence and the VIN information received via serial data does NOT match the learned VIN sequence.

Action Taken When the DTC Sets

- The radio may be disabled or have limited functionality.
- The radio display will indicate that theft protection is active.

Conditions for Clearing the DTC

The radio receives the correct VIN information via serial data.

Diagnostic Aids

A possible cause of incorrect VIN info could be the radio was originally installed in another vehicle.

Reference Information

Schematic Reference

Radio/Navigation System Schematics

Connector End View Reference

COMPONENT CONNECTOR END VIEWS - INDEX

Description and Operation

Radio/Audio System Description and Operation (with Color Display), **Radio/Audio System Description and Operation (with Monochrome Display)**

Electrical Information Reference

- **Circuit Testing**
- **Connector Repairs**
- **Testing for Intermittent Conditions and Poor Connections**
- **Wiring Repairs**

Scan Tool Reference

Control Module References for scan tool information

Circuit/System Verification

1. Ignition ON, A11 Radio ON.
2. Verify DTC B1271 is not set.
   - **If DTC B1271 is set**

     Replace the A11 Radio.

   - **If DTC B1271 is not set**
3. All OK.

Repair Instructions

Perform the **Diagnostic Repair Verification** after completing the repair.

Control Module References for Radio replacement, programming, and setup

DTC B1278 OR B1279

Diagnostic Instructions

- Perform the **Diagnostic System Check - Vehicle** prior to using this diagnostic procedure.
- Review **Strategy Based Diagnosis** for an overview of the diagnostic approach.
- **Diagnostic Procedure Instructions** provides an overview of each diagnostic category.

DTC Descriptors

DTC B1278 01

Left Auxiliary Input Signal Circuit Short to Battery

DTC B1278 02

Left Auxiliary Input Signal Circuit Short to Ground

DTC B1279 01

Right Auxiliary Input Signal Circuit Short to Battery

DTC B1279 02

Right Auxiliary Input Signal Circuit Short to Ground

Diagnostic Fault Information

Circuit	Short to Ground	Open/High Resistance	Short to Voltage	Signal Performance
B+	-	U0237, 4	-	-

Detection Signal Circuit	4	5	5	-
Left Audio Signal Terminal 12	B1278 02, 3	3	B1278 01, 3	-
Left Audio Signal Terminal 14	3	3	3	-
Right Audio Signal Terminal 13	B1279 02, 2	2	B1279 01, 2	-
Right Audio Signal Terminal 15	2	2	2	-
Audio Common Circuit	-	1, 5	-	-
Ground	-	4	-	-
1. No or distorted audio from both sides 2. No or distorted right side audio 3. No or distorted left side audio 4. External audio inputs inoperative 5. AUX selection always available with or without device connected				

Circuit/System Description

A remote 3.5 mm auxiliary stereo jack allows playback of audio signals from remote devices (e.g., laptop computer, IPOD, MP3 player, etc.). The auxiliary audio jack has an internal mechanical detection switch. The switch is normally closed, connecting the detection circuit to the audio common circuit. When a device is inserted to the auxiliary audio jack, the switch opens and the multimedia player interface module detects a high voltage on the detection circuit. A serial data message is sent to the radio, the radio will switch to AUX as the audio source. The multimedia player interface module receives the analog audio signals from the connected device and sends the signals to the radio.

Conditions for Running the DTC

- Ignition in RUN or ACC position.
- The system voltage is at least 9.5 V and no more than 15.5 V.
- The multimedia player interface module detects a device has been connected to the auxiliary audio input jack.

Conditions for Setting the DTC

B1278 01, B1279 01

- The multimedia player interface module detects a short to battery on either of the audio signal circuits from the auxiliary audio jack.
- The condition is present for greater than 250 mS.

B1278 02, B1279 02

- The multimedia player interface module detects a short to ground on either of the audio signal circuits from the auxiliary audio jack.

- The condition is present for greater than 250 mS.

Action Taken When the DTC Sets

No or reduced audio is heard from the remote audio device.

Conditions for Clearing the DTC

- The conditions for setting the DTC are no longer present on the auxiliary input signal circuits.
- A history DTC clears after 50 malfunction-free ignition cycles.

Diagnostic Aids

- Playback of an audio device that is connected to the 3.5 mm jack can only be controlled using the controls on the device.
- The volume control on the device may need to be adjusted to ensure sufficient playback volume through the infotainment system.
- This DTC may be stored as a history DTC without affecting the operation of the module.
- If stored only as a history DTC and not retrieved as a current DTC, do not replace the module.

Reference Information

Schematic Reference

Radio/Navigation System Schematics

Connector End View Reference

COMPONENT CONNECTOR END VIEWS - INDEX

Description and Operation

Radio/Audio System Description and Operation (with Color Display), **Radio/Audio System Description and Operation (with Monochrome Display)**

Electrical Information Reference

- **Circuit Testing**
- **Connector Repairs**
- **Testing for Intermittent Conditions and Poor Connections**
- **Wiring Repairs**

Scan Tool Reference

Control Module References for scan tool information

Circuit/System Verification

Auxiliary Audio Input Jack

1. Ignition ON, radio ON.
2. Verify the infotainment system switches to AUX as the audio source with a portable audio playback device connected to the auxiliary audio input jack.
   - **If the infotainment system does not switch to AUX as the audio source**

     Refer to **Auxiliary Audio Input Malfunction**.

   - **If the infotainment system switches to AUX as the audio source**
3. Verify DTC B1278 or DTC B1279 is not set.
   - **If DTC B1278 or DTC B1279 is set**

     Refer to Circuit/System Testing below.

   - **If DTC B1278 or DTC B1279 is not set**
4. Verify the audio from the device is heard through the vehicle infotainment system while operating the device to begin audio playback, adjusting the volume on the device if necessary.
   - **If audio is not heard from the device**
   1. Connect a different device to the auxiliary audio jack.
   2. Verify the audio from the device is heard through the vehicle infotainment system while operating the device to begin audio playback, adjusting the volume on the device if necessary.
      - If audio cannot be heard from any device connected to the auxiliary audio input jack, refer to **Auxiliary Audio Input Malfunction**.
      - If audio can be heard from device.
   3. The malfunction is related to the external device connected to the input.
   - **If audio is heard from the device**
5. All OK

Circuit/System Testing

1. Ignition OFF, disconnect the X1 harness connector at the X83 Auxiliary Audio Input. Ignition ON, radio ON.
2. Test for less than 1 V between the signal circuits listed below and ground:
   - left auxiliary audio signal circuit terminal 2
   - right auxiliary audio signal circuit terminal 4
   - auxiliary audio common signal circuit terminal 5
   - **If 1 V greater**
   1. Ignition OFF, disconnect the harness connector at the T11 Multimedia Player Interface Module. Ignition ON.

2. Test for less than 1 V between the signal circuit and ground.
    - If 1 V or greater, repair the short to voltage on the circuit.
    - If less than 1 V, replace the T11 Multimedia Player Interface Module.
- **If less than 1 V**

3. Ignition OFF, disconnect the harness connector at the T11 Multimedia Player Interface Module.
4. Test for infinite resistance between the signal circuits listed below and ground:
    - auxiliary audio common signal circuit terminal 3
    - left auxiliary audio signal circuit terminal 12
    - right auxiliary audio signal circuit terminal 13
    - **If less than infinite resistance**

      Repair the short to ground on the circuit.

    - **If infinite resistance**
5. Test for less than 5 ohms between the signal circuit terminals listed below:
    - T11 Multimedia Player Interface Module X1 terminal 3 and the X83 Auxiliary Audio Input X1 terminal 5
    - T11 Multimedia Player Interface Module X1 terminal 12 and the X83 Auxiliary Audio Input X1 terminal 2
    - T11 Multimedia Player Interface Module X1 terminal 13 and the X83 Auxiliary Audio Input X1 terminal 4
    - **If 5 ohms greater**

      Repair the open/high resistance in the circuit.

    - **If less than 5 ohms**
6. Replace the X83 Auxiliary Audio Input. Connect all harness connectors.
7. Connect and operate the portable audio playback device.
8. Verify DTC B1278 or DTC B1279 is not set.
    - **If DTC B1278 or DTC B1279 is set**

      Replace the T11 Multimedia Player Interface Module.

    - **If DTC B1278 or DTC B1279 is not set**
9. All OK.

Repair Instructions

Perform the **Diagnostic Repair Verification** after completing the repair.

- **Audio Disc Player Receptacle Replacement**
- **Control Module References** for multimedia player interface module replacement, programming, and

setup.

DTC B1287

Diagnostic Instructions

- Perform the **Diagnostic System Check - Vehicle** prior to using this diagnostic procedure.
- Review **Strategy Based Diagnosis** for an overview of the diagnostic approach.
- **Diagnostic Procedure Instructions** provides an overview of each diagnostic category.

DTC Descriptors

DTC B1287 01

Amplifier Control Signal Circuit Short to Battery

DTC B1287 02

Amplifier Control Signal Circuit Short to Ground

DTC B1287 04

Amplifier Control Signal Circuit Open

Diagnostic Fault Information

Circuit	Short to Ground	Open/High Resistance	Short to Voltage	Signal Performance
Amplifier Control	DTC B1287 02,**	DTC B1287 04,**	DTC B1287 01,*	-
* No audio output. ** 4 Channel unmute, possible noise in speakers when radio muted or turned off				

Circuit/System Description

The radio amplifier control circuit provides varying pulse width modulated (PWM) signals to control overall muting of the amplifier. The PWM signals are varying duty cycle percentages ranging from 0-100 percent. A low duty cycle unmutes all amplifier channels and a high duty cycle mutes all amplifier channels. The amplifier control circuit will measure less than 1 V when the mute function is OFF, and approximately 8 V DC when at full mute. The radio monitors the amp control circuit for faults.

Conditions for Running the DTC

The following are conditions that must be present in order for the radio to enable the diagnostics.

- The radio is in ACCESSORY, RUN, or RAP power mode.

- The system voltage is 9-16 V.
- The radio performs the test once during wake up.

Conditions for Setting the DTC

The radio detects a fault on the amplifier control circuit 400 ms after radio activates the remote enable circuit.

Action Taken When the DTC Sets

Radio sets the DTC and continues to output correct state.

Conditions for Clearing the DTC

- The condition must be corrected.
- A history DTC clears after 100 malfunction-free ignition cycles.

Reference Information

Schematic Reference

Radio/Navigation System Schematics

Connector End View Reference

COMPONENT CONNECTOR END VIEWS - INDEX

Description and Operation

Radio/Audio System Description and Operation (with Color Display), **Radio/Audio System Description and Operation (with Monochrome Display)**

Electrical Information Reference

- **Circuit Testing**
- **Connector Repairs**
- **Testing for Intermittent Conditions and Poor Connections**
- **Wiring Repairs**

Scan Tool Reference

Control Module References for scan tool information

Circuit/System Testing

NOTE: To prevent misdiagnosis, the door chime must be OFF during testing. Ensure the driver door latch is closed during testing.

1. Ignition OFF, disconnect the X3 harness connector at the T3 Audio Amplifier. Ignition ON, A11 Radio ON, mute ON.
2. Test for 7.5-8.5 V between the control circuit terminal 16 and ground.
    - **If greater than 8.5 V**
    1. Ignition OFF, disconnect the X1 harness connector at the A11 Radio. Ignition ON.
    2. Test for less than 1 V between the control circuit and ground.
        - If 1 V or greater, repair the short to voltage on the circuit.
        - If less than 1 V, replace the A11 Radio.
    - **If less than 7.5 V**
    1. Ignition OFF, disconnect the X1 harness connector at the A11 Radio.
    2. Test for infinite resistance between the control circuit and ground.
        - If less than infinite resistance, repair the short to ground on the circuit.
        - If infinite resistance
    3. Test for less than 2 ohms in the control circuit end to end.
        - If 2 ohms or greater, repair the open/high resistance in the circuit.
        - If less than 2 ohms, replace the A11 Radio.
    - **If between 7.5-8.5 V**
3. A11 Radio ON, mute OFF.
4. Test for less than 1 V between the control circuit terminal 16 and ground.
    - **If 1 V or greater**

      Replace the A11 Radio.

    - **If less than 1 V**
5. Test or replace the T3 Audio Amplifier.

Repair Instructions

Perform the **Diagnostic Repair Verification** after completing the repair.

Control Module References for radio and audio amplifier replacement, programming, and setup.

DTC B1446 OR B1447

Diagnostic Instructions

- Perform the **Diagnostic System Check - Vehicle** prior to using this diagnostic procedure.
- Review **Strategy Based Diagnosis** for an overview of the diagnostic approach.
- **Diagnostic Procedure Instructions** provides an overview of each diagnostic category.

DTC Descriptors

DTC B1446

Replace Backup Power Source Below Minimum Threshold

DTC B1447

Backup Power Source Open Circuit

For symptom byte information refer to **Symptom Byte List**

Diagnostic Fault Information

Circuit	Short to Ground	Open/High Resistance	Short to Voltage	Signal Performance
Backup Battery B+	B1447 03	B1447 04	-	-
Backup Battery Low Reference	B1447 03	B1447 04	-	-

Circuit/System Description

The backup power source provides voltage to the telematics tommunication interface control module, to be able to successfully place a call in the event of a main battery disconnect during a collision event.

Conditions for Running the DTC

B1446 03

- Ignition is ON.
- System voltage is between 9.5 and 15.5 V.
- DTC B1447 is not set.

B1447 04

- Ignition is ON.
- System voltage is between 9.5 and 15.5 V.
- The above conditions are present for greater than 10 s.

Conditions for Setting the DTC

B1446 03

The telematics communication interface control module detects that the backup power source voltage has dropped below the minimum threshold value.

B1447 04

The telematics communication interface control module detects no voltage from the backup power source.

Action Taken When the DTC Sets

B1446 03

The OnStar® status LED turns red.

B1447 04

- The OnStar® status LED turns red.
- The telematics communication interface control module will be unable to place a call in the event of a main battery disconnect during a collision event.

Conditions for Clearing the DTC

- A current DTC B1446 will clear when the telematics communication interface control module detects the voltage of the backup power source is above the minimum threshold value.
- A current DTC B1447 will clear when the telematics communication interface control module detects voltage from the backup power source.
- A history DTC clears after 50 malfunction-free ignition cycles.

Diagnostic Aids

- Shorting the backup power source positive voltage circuit to the backup power source ground circuit or chassis ground will activate the internal circuit protection of the backup power source, rendering the backup power source inoperative.
- DTC B1447 may set if the K73 Telematics Communication Interface Control Module has been incorrectly disconnected or serviced. When disconnecting the K73 Telematics Communication Interface Control Module, disconnect the harness connector X1 at the K73 Telematics Communication Interface Control Module prior to disconnecting any other harness connectors. This will ensure the backup power source is preserved when voltage is removed from the K73 Telematics Communication Interface Control Module.

Reference Information

Schematic Reference

OnStar Schematics

Connector End View Reference

COMPONENT CONNECTOR END VIEWS - INDEX

Description and Operation

OnStar Description and Operation

Electrical Information Reference

- **Testing for Intermittent Conditions and Poor Connections**
- **Circuit Testing**
- **Wiring Repairs**
- **Connector Repairs**

Circuit/System Testing

1. Ignition OFF and all vehicle systems OFF, disconnect the X1 harness connector at the K73 Telematics Communication Interface Control Module. It may take up to 2 minutes for all vehicle systems to power down.
2. Test for greater than 9.5 V between the B+ circuit terminal 14 and the low reference circuit terminal 13.
   - **If 9.5 V or less**

     Test or replace the C3 Telematics Communication Interface Control Module Battery.

   - **If greater than 9.5 V**
3. Replace the K73 Telematics Communication Interface Control Module.

Repair Instructions

Perform the **Diagnostic Repair Verification** after completing the repair.

- **Communication Interface Module Battery Replacement**
- **Control Module References** for telematics communication interface control module replacement, programming and setup.

DTC B2455

Diagnostic Instructions

- Perform the **Diagnostic System Check - Vehicle** prior to using this diagnostic procedure.
- Review **Strategy Based Diagnosis** for an overview of the diagnostic approach.
- **Diagnostic Procedure Instructions** provide an overview of each diagnostic category.

DTC Descriptors

DTC B2455 02

Cellular Phone Microphone Circuit Short to Ground

DTC B2455 04

Cellular Phone Microphone Circuit Open/High Resistance

Diagnostic Fault Information

Circuit	Short to Ground	Open/High Resistance	Short to Voltage	Signal Performance
Microphone Signal	B2455 02	B2455 04	B2455 04	-
Microphone Low Signal	B2455 02	B2455 04	B2455 04	-

Circuit/System Description

The telematics communication interface control module provides the cellular phone microphone with a supplied voltage on the cellular phone microphone high signal circuit. When the microphone is in use, voice data from the user is sent back to the telematics communication interface control module on the microphone low signal circuit.

Conditions for Running the DTC

- The ignition must be in the RUN or ACC position.
- The system voltage is at least 9.5 V and no more than 15.5 V.
- All the above conditions are present for greater than 10 s.

Conditions for Setting the DTC

B2455 02

The telematics communication interface control module detects an short to ground in the cellular phone microphone high signal circuit for 10 s or greater.

B2455 04

The following conditions will set this DTC:

- The telematics communication interface control module detects an open/high resistance in the cellular phone microphone high signal circuit for 10 s or greater.
- The telematics communication interface control module detects an open/high resistance in the microphone low signal circuit for 10 s or greater.

Action Taken When the DTC Sets

- The OnStar® status LED turns red.
- The telematics communication interface control module will not receive a signal from the cellular phone microphone.
- Calls can be placed but the caller cannot be heard.

Conditions for Clearing the DTC

- The condition responsible for setting the DTC no longer exists.

- A history DTC will clear once 50 consecutive malfunction-free ignition cycles have occurred.

Reference Information

Schematic Reference

OnStar Schematics

Connector End View Reference

COMPONENT CONNECTOR END VIEWS - INDEX

Description and Operation

OnStar Description and Operation

Electrical Information Reference

- **Circuit Testing**
- **Connector Repairs**
- **Testing for Intermittent Conditions and Poor Connections**
- **Wiring Repairs**

Scan Tool Reference

Control Module References for scan tool information

Circuit/System Testing

1. Ignition OFF, disconnect the harness connector at the B24 Cellular Phone Microphone, ignition ON.
2. Test for 8.0-10.5 V between the signal circuit terminal B and ground.
    - **If less than 8.0 V**
    1. Ignition OFF, disconnect the X2 harness connector at the K73 Telematics Communication Interface Control Module.
    2. Test for infinite resistance between the signal circuit and ground.
        - If less than infinite resistance, repair the short to ground in the circuit.
        - If infinite resistance
    3. Test for less than 2 ohms in the signal circuit end to end.
        - If 2 ohms or greater, repair the open/high resistance in the circuit.
        - If less than 2 ohms, replace the vehicle K73 Telematics Communication Interface Control Module.
    - **If greater than 10.5 V**
    1. Ignition OFF, disconnect the X2 harness connector at the K73 Telematics Communication Interface Control Module, ignition ON.

2. Test for less than 1 V between the signal circuit and ground.
    - If 1 V or greater, repair the short to voltage on the circuit.
    - If less than 1 V, replace the K73 Telematics Communication Interface Control Module.
- **If between 8.0-10.5 V**

3. Test for less than 1 V between the signal circuit terminal A and ground.
    - **If greater than 1 V**
    1. Ignition OFF, disconnect the X2 harness connector at the K73 Telematics Communication Interface Control Module, ignition ON.
    2. Test for less than 1 V between the signal circuit and ground.
        - If 1 V or greater, repair the short to voltage in the circuit.
        - If less than 1 V, repair the K73 Telematics Communication Interface Control Module.
    - **If less than 1 V**
4. Test for greater than 8 V between the signal circuit terminal B and the signal circuit terminal A.
    - **If less than 8 V**
    1. Ignition OFF, disconnect the X2 harness connector at the K73 Telematics Communication Interface Control Module.
    2. Test for infinite resistance between the low signal circuit and ground.
        - If less than infinite resistance, repair the short to ground in the circuit.
        - If infinite resistance
    3. Test for less than 2 ohms in the signal circuit end to end.
        - If 2 ohms or greater, repair the open/high resistance in the circuit.
        - If less than 2 ohms, replace the vehicle K73 Telematics Communication Interface Control Module.
    - **If greater than 8 V**
5. Test or replace the B24 Cellular Phone Microphone.

Repair Instructions

Perform the **Diagnostic Repair Verification** after completing the repair.

- **Mobile Telephone Microphone Replacement**
- **Control Module References** for telematics communication interface control module replacement, programming and setup.

DTC B2462

Diagnostic Instructions

- Perform the **Diagnostic System Check - Vehicle** prior to using this diagnostic procedure.
- Review **Strategy Based Diagnosis** for an overview of the diagnostic approach.
- **Diagnostic Procedure Instructions** provides an overview of each diagnostic category.

DTC Descriptors

DTC B2462 01

Global Positioning System Short to Battery

DTC B2462 02

Global Positioning System Short to Ground

DTC B2462 04

Global Positioning System Open

Circuit/System Description

The navigation antenna is connected to the telematics communication interface control module and the radio through the navigation signal splitter. The navigation signal splitter distributes the navigation signal to both the telematics communication interface control module and the navigation radio. The telematics communication interface control module supplies 5 V through the coax cable to power the internal antenna amplifier through the signal splitter. The radio supplies 5 V through the center conductor of the coax cable to power the splitter.

Conditions for Running the DTC

- Radio On.
- System voltage is greater than 9 V and less than 16 V.
- The navigation radio tests the GPS antenna every 10 seconds.

Conditions for Setting the DTC

B2462 01

The navigation radio detects a short to B+ on the GPS antenna signal circuit.

B2462 02

The navigation radio detects a short to ground on the GPS antenna signal circuit.

B2462 04

The navigation radio detects an open/high resistance on the GPS antenna signal circuit.

Action Taken When the DTC Sets

- The radio uses the last reported position and the vehicle speed signal to calculate the vehicle position.
- Route guidance may be inaccurate.
- Turn by turn navigation may be inaccurate or inoperative.

Conditions for Clearing the DTC

- The condition responsible for setting the DTC no longer exists.
- A history DTC will clear once 50 consecutive malfunction-free ignition cycles have occurred.

Diagnostic Aids

- This DTC can only be retrieved from the radio. The telematics communication interface control module does not set this DTC.
- The radio only monitors the connection between the navigation signal splitter and the radio. The radio cannot detect faults between the signal splitter and the navigation antenna. Faults between the signal splitter and the navigation antenna will result in a loss of GPS signal without setting DTC B2462.
- The navigation antenna requires a clear line of sight to the sky to operate properly. The GPS may have limited, intermittent, or no reception near tall buildings or inside structures.

Reference Information

Schematic Reference

- **OnStar Schematics**
- **Radio/Navigation System Schematics**

Connector End View Reference

COMPONENT CONNECTOR END VIEWS - INDEX

Description and Operation

- **OnStar Description and Operation**
- **Radio/Audio System Description and Operation (with Color Display)**, **Radio/Audio System Description and Operation (with Monochrome Display)**

Electrical Information Reference

- **Circuit Testing**
- **Connector Repairs**
- **Testing for Intermittent Conditions and Poor Connections**
- **Wiring Repairs**

Scan Tool Reference

Control Module References for scan tool information

Special Tools

EL-49903 OnStar Antenna Diagnostic Tool Kit

Circuit/System Testing

1. Ignition OFF, disconnect the navigation antenna coax cable connector at the A11 Radio. Connect the **EL-49903** GM OnStar antenna diagnostic tool kit to the A11 Radio, place the test antenna on the roof of the vehicle.
2. Ignition ON, radio ON, navigation selected.
3. Verify DTC B2462 is not set.
   - **If DTC B2462 is set**

     Replace the A11 Radio.

   - **If DTC B2462 is not set**
4. Ignition OFF, disconnect the radio navigation coax cable at the T15 Navigation Antenna Signal Splitter.
5. Verify the radio navigation coax cable passes the coax cable component test. Refer to Component Testing below.
   - **If the coax cable does not pass the test**

     Replace the coax cable

   - **If the coax cable passes the test**
6. Test or replace the T15 Navigation Antenna Signal Splitter.

Component Testing

CAUTION: Refer to Test Probe Caution .

NOTE: Before testing the coax cable, check the cable exterior for being pinched, cut, damaged, or having loose connections at the components, which can cause reception issues.

To prevent false reading when testing the center coax terminals, use care not to ground the test probe on the outer housing/shield.

Coax Cable Test

1. Ignition OFF, disconnect the coax cable at both components.
2. Test for less than 5 ohms between coax cable center terminal end to end.
   - **If 5 ohms or greater**

     Replace the coax cable

   - **If less than 5 ohms**
3. Test for less than 5 ohms between the coax cable outer shield end to end.

- **If 5 ohms or greater**

  Replace the coax cable

- **If less than 5 ohms**

4. Test for infinite resistance between the coax cable center terminal and the coax cable outer shield.
   - **If less than infinite resistance**

     Replace the coax cable

   - **If infinite resistance**
5. All OK

Repair Instructions

Perform the **Diagnostic Repair Verification** after completing the repair.

- **Navigation Signal Splitter Replacement**
- **Control Module References** for radio replacement, programming, and setup.

DTC B2470

Diagnostic Instructions

- Perform the **Diagnostic System Check - Vehicle** prior to using this diagnostic procedure.
- Review **Strategy Based Diagnosis** for an overview of the diagnostic approach.
- **Diagnostic Procedure Instructions** provides an overview of each diagnostic category.

DTC Descriptors

DTC B2470 02

Cellular Phone Antenna Circuit Malfunction Short to Ground

DTC B2470 04

Cellular Phone Antenna Circuit Malfunction Open Circuit

Diagnostic Fault Information

Circuit	Short to Ground	Open/High Resistance	Short to Voltage	Signal Performance
Cellular Antenna Signal	B2470 02	B2470 04	-	-

Circuit/System Description

The cellular phone and navigation antenna is connected to the telematics communication interface control module. This module supplies 5 V to the cellular phone and navigation antenna to power the internal amplifier. When the vehicle is equipped with the optional navigation radio, a navigation antenna signal splitter is installed to distribute the GPS signal to both the telematics communication interface control module and the navigation radio. The navigation radio supplies 5 V through the GPS antenna coaxial cable to the navigation antenna signal splitter to power the internal navigation radio signal amplifier.

Conditions for Running the DTC

- Ignition in the RUN or ACC position.
- System voltage is between 9.5 volts and 15.5 volts.
- The above conditions are present for greater than 1 s.

Conditions for Setting the DTC

- The telematics communication interface control module does not detect the presence of a cellular antenna.
- The above conditions are present for greater than 1 s.

Action Taken When the DTC Sets

- The vehicle is unable to connect to the OnStar® Call Center.
- The OnStar® status LED turns red.

Conditions for Clearing the DTC

- The telematics communication interface control module detects the presence of a cellular antenna.
- A history DTC clears after 50 malfunction-free ignition cycles.

Reference Information

Schematic Reference

OnStar Schematics

Connector End View Reference

COMPONENT CONNECTOR END VIEWS - INDEX

Description and Operation

OnStar Description and Operation

Electrical Information Reference

- **Circuit Testing**
- **Connector Repairs**

- **Testing for Intermittent Conditions and Poor Connections**
- **Wiring Repairs**

Scan Tool Reference

Control Module References for scan tool information

Special Tools

EL-49903 GM OnStar Antenna Diagnostic Tool Kit

Circuit/System Testing

NOTE:

- **The vehicle may be equipped with sectioned coax. Test each section and replace only the faulty section, not the entire length of coax.**
- **The following verification requires the vehicle to be outside with an unobstructed view of the southern sky. Allow 5 minutes after turning the ignition ON for the GPS satellites to acquire vehicle signal.**

Without Navigation Radio

1. Ignition OFF and all vehicle systems OFF, disconnect the GPS and cellular coax cable connector at the K73 Telematics Communication Interface Control Module. It may take up to 2 min for all vehicle systems to power down.
2. Using the EL-49903-3 kit (EL-49903-5 adapter and EL-49903-4 coax cable), connect the **EL-49903** GM OnStar antenna diagnostic tool kit to the K73 Telematics Communication Interface Control Module. Place the test antenna on the roof of the vehicle, ignition ON.
3. Verify the DTC does not set while operating the vehicle within the conditions for running the DTC.
   - **If the DTC sets**

     Replace the K73 Telematics Communications Interface Control Module.

   - **If the DTC does not set**
4. Ignition OFF.
5. Disconnect the **EL-49903** GM OnStar antenna diagnostic tool kit from the K73 Telematics Communication Interface Control Module
6. Test the coax cable. Refer to Component Testing below.
   - **If the coax cable does not pass the test**

     Replace the coax cable.

   - **If the coax cable passes the test**
7. Test or replace the T4G Cellular Phone, Navigation, and Digital Radio Antenna.

With Navigation Radio

1. Ignition OFF and all vehicle systems OFF, disconnect the GPS and cellular coax cable connector at the K73 Telematics Communication Interface Control Module. It may take up to 2 min for all vehicle systems to power down.
2. Using the EL-49903-3 kit (EL-49903-5 adapter and EL-49903-4 coax cable), connect the **EL-49903** GM OnStar antenna diagnostic tool kit to the K73 Telematics Communication Interface Control Module. Place the test antenna on the roof of the vehicle, ignition ON.
3. Verify the DTC does not set while operating the vehicle within the conditions for running the DTC.
    - **If the DTC sets**

      Replace the K73 Telematics Communication Interface Control Module.

    - **If the DTC does not set**
4. Ignition OFF.
5. Disconnect the **EL-49903** GM OnStar antenna diagnostic tool kit from the K73 Telematics Communication Interface Control Module
6. Connect the coax cable to the K73 Telematics Communications Interface Control Module and disconnect the coax cable from the T15 Navigation Antenna Signal Splitter, ignition ON.
7. Test for 4.5-5.5 V between the coax cable center conductor and the outer shield.
    - **If less than 4.5 V**
    1. Ignition OFF.
    2. Test the coax cable. Refer to Component Testing below.
        - If the coax cable does not pass the test, replace the coax cable.
        - If the coax cable passes the test, test or replace the K73 Telematics Communications Interface Control Module.
    - **If greater than 5.5 V**
    1. Ignition OFF.
    2. Test the coax cable. Refer to Component Testing below.
        - If the coax cable does not pass the test, replace the coax cable.
        - If the coax cable passes the test, test or replace the K73 Telematics Communications Interface Control Module.
    - **If between 4.5-5.5 V**
8. Ignition OFF, connect the coax cable to the T15 Navigation Antenna Signal Splitter and disconnect the coax cable from the T4G Cellular Phone, Navigation, and Digital Radio Antenna, ignition ON.
9. Test for 4.5-5.5 V between the coax cable center conductor and the outer shield.
    - **If less than 4.5 V**
    1. Ignition OFF.
    2. Test the coax cable. Refer to Component Testing below.
        - If the coax cable does not pass the test, replace the coax cable.
        - If the coax cable passes the test, test or replace the T15 Navigation Antenna Signal Splitter.

- **If greater than 5.5 V**

1. Ignition OFF.
2. Test the coax cable. Refer to Component Testing below.
   - If the coax cable does not pass the test, replace the coax cable.
   - If the coax cable passes the test, test or replace the T15 Navigation Antenna Signal Splitter.

- **If between 4.5-5.5 V**

10. Test or replace the T4G Cellular Phone, Navigation, and Digital Radio Antenna.

Component Testing

CAUTION: Refer to Test Probe Caution

NOTE:

- **Before testing the coax cable, check the cable exterior for being pinched, cut, damaged, or having loose connections at the components, which can cause reception issues.**
- **To prevent false readings when testing the center coax terminals, use care not to ground the test probe on the outer housing/shield.**

Coax Cable Test

1. Ignition OFF, disconnect the coax cable at both components.
2. Test for less than 5 ohms between the coax cable center terminal end to end.
   - **If 5 ohms or greater**

     Replace the coax cable.

   - **If less than 5 ohms**
3. Test for greater than 5 ohms between the coax cable outer shield end to end.
   - **If 5 ohms or greater**

     Replace the coax cable.

   - **If less than 5 ohms**
4. Test for infinite resistance between the coax cable center terminal and the coax cable outer shield.
   - **If less than infinite resistance**

     Replace the coax cable.

   - **If infinite resistance**
5. All OK.

Repair Instructions

Perform the **Diagnostic Repair Verification** after completing the repair.

- **Navigation Signal Splitter Replacement**
- **Radio Antenna Base Replacement**
- **Control Module References** for Telematics Communication Interface Control Module replacement, programming and setup.

DTC B2476 OR B2482

Diagnostic Instructions

- Perform the **Diagnostic System Check - Vehicle** prior to using this diagnostic procedure.
- Review **Strategy Based Diagnosis** for an overview of the diagnostic approach.
- **Diagnostic Procedure Instructions** provides an overview of each diagnostic category.

DTC Descriptors

DTC B2476 04

Cellular Phone Select Service Switch Open

DTC B2476 59

Cellular Phone Select Service Switch Protection Time-out

DTC B2482 00

Cellular Phone Select Service Switch Range/Performance

Diagnostic Fault Information

Circuit	Short to Ground	Open/High Resistance	Short to Voltage	Signal Performance
10 V Reference	B2476 04	B2476 04	B2476 04	-
Signal Terminal 3	1	B2476 04	B2476 59	B2476 59, B2482 00
Ground	-	B2476 04	-	-
1. OnStar® Buttons Inoperative				

Circuit/System Description

The OnStar® button assembly consists of 3 buttons: Call/Answer, OnStar® Call Center, and OnStar® Emergency. The telematics communication interface control module supplies the OnStar® button assembly with 10 V via the 10 V reference circuit. Each of the buttons, when pressed, completes the circuit across a resistor allowing a specific voltage to be returned to the telematics communication interface control module

over the keypad signal circuit. Depending upon the voltage range returned, the telematics communication interface control module is able to identify which button has been pressed.

Conditions for Running the DTC

- Ignition ON.
- Battery voltage must be between 9-16 V.

Conditions for Setting the DTC

B2476 04

The telematics communication interface control module detects a short to voltage or an open/high resistance on the keypad 10 V reference circuit.

B2482 and B2476 59

The telematics communication interface control module detects a valid signal on the keypad signal circuit for longer than 15 s. If one of the OnStar® buttons is held or stuck for 15 s or greater, the telematics communication interface control module will set this DTC.

Action Taken When the DTC Sets

- The OnStar® status LED turns red.
- No calls can be placed.
- The telematics communication interface control module will ignore all inputs from the OnStar® button assembly.

Conditions for Clearing the DTC

- The condition responsible for setting the DTC no longer exists.
- A history DTC will clear once 50 consecutive malfunction-free ignition cycles have occurred.

Reference Information

Schematic Reference

OnStar Schematics

Connector End View Reference

COMPONENT CONNECTOR END VIEWS - INDEX

Description and Operation

OnStar Description and Operation

Electrical Information Reference

- **Circuit Testing**
- **Connector Repairs**
- **Testing for Intermittent Conditions and Poor Connections**
- **Wiring Repairs**

Scan Tool Reference

Control Module References for scan tool information

Circuit/System Verification

NOTE: Contact the OnStar® Call Center first before pressing the emergency button in order to notify them of the test.

1. Ignition ON.
2. Verify that each button of the S51 Telematics Button Assembly operates normally by pressing each button individually.
   - **If none of the buttons operate normally**

     Refer to Circuit/System testing below

   - **If some, but not all, of the buttons operate normally**

     Test or replace the A10 Inside Rearview Mirror

   - **If all of the buttons operate normally**
3. All OK.

Circuit/System Testing

1. Ignition OFF and all vehicle systems OFF, disconnect the harness connector at the A10 Inside Rearview Mirror. It may take up to 2 min for all vehicle systems to power down.
2. Test for less than 10 ohms between the ground circuit terminal 5 and ground.
   - **If 10 ohms or greater**
     1. Ignition OFF.
     2. Test for less than 2 ohms in the ground circuit end to end.
        - If 2 ohms or greater, repair the open/high resistance in the circuit.
        - If less than 2 ohms, repair the open/high resistance in the ground connection.
   - **If less than 10 ohms**
3. Ignition ON.
4. Test for 8.0-10.5 V between the 10 V reference circuit terminal 4 and ground.

- **If less than 8.0 V**

1. Ignition OFF, disconnect the harness connector at the K73 Telematics Communication Interface Control Module.
2. Test for infinite resistance between the 10 V reference circuit and ground.
   - If less than infinite resistance, repair the short to ground on the circuit.
   - If infinite resistance
3. Test for less than 2 ohms in the 10 V reference circuit end to end.
   - If 2 ohms or greater, repair the open/high resistance in the circuit.
   - If less than 2 ohms, replace the K73 Telematics Communication Interface Control Module.

- **If greater than 10.5 V**

1. Ignition OFF, disconnect the harness connector at the K73 Telematics Communication Interface Control Module, ignition ON.
2. Test for less than 1 V between the 10 V reference circuit and ground.
   - If 1 V or greater, repair the short to voltage on the circuit.
   - If less than 1 V, replace the K73 Telematics Communication Interface Control Module.

- **If between 8.0-10.5 V**

5. Ignition OFF.
6. Test for 500-900 ohms between the signal circuit terminal 3 and ground.
   - **If less than 500 ohms**

   1. Disconnect the X1 harness connector at the K73 Telematics Communication Interface Control Module.
   2. Test for infinite resistance between the signal circuit and ground.
      - If less than infinite resistance, repair the short to ground on the circuit.
      - If infinite resistance, replace the K73 Telematics Communication Interface Control Module.

   - **If greater than 900 ohms**

   1. Disconnect the X1 harness connector at the K73 Telematics Communication Interface Control Module, ignition ON.
   2. Test for less than 1 V between the signal circuit and ground.
      - If 1 V or greater, repair the short to voltage on the circuit.
      - If less than 1 V
   3. Ignition OFF.
   4. Test for less than 2 ohms in the signal circuit end to end.
      - If 2 ohms or greater, repair the open/high resistance in the circuit.
      - If less than 2 ohms, replace the K73 Telematics Communication Interface Control Module.

   - **If between 500-900 ohms**

7. Test or replace the A10 Inside Rearview Mirror.

Repair Instructions

Perform the **Diagnostic Repair Verification** after completing the repair procedure.

- **Inside Rearview Mirror Replacement**
- **Control Module References** for telematics communication interface control module replacement, programming, and setup.

DTC B2485

Diagnostic Instructions

- Perform the **Diagnostic System Check - Vehicle** prior to using this diagnostic procedure.
- Review **Strategy Based Diagnosis** for an overview of the diagnostic approach.
- **Diagnostic Procedure Instructions** provide an overview of each diagnostic category.

DTC Descriptors

DTC B2485 02

Wireless Communication (BT) Antenna Circuit Short to Ground

DTC B2485 04

Wireless Communication (BT) Antenna Circuit Open

Diagnostic Fault Information

Circuit	Short to Ground	Open/High Resistance	Short to Voltage	Signal Performance
Signal	B2485 02	B2485 04	-	-

Circuit/System Description

Bluetooth ® wireless technology is a short-range communications technology intended to replace the cables connecting portable and/or fixed devices while maintaining high levels of security. The operating range of the signal is approximately 30 feet.

The Bluetooth ® antenna is a small fixed antenna connected directly to the telematics communication interface control module and is used to send and receive signals from a Bluetooth ® enabled cellular phone.

Conditions for Running the DTC

- The ignition is in OFF, ACCESSORY or RUN position.
- The system voltage is between 9-16 V.
- The telematics communication interface control module tests the antenna once every second.

Conditions for Setting the DTC

B2485 02

- The signal voltage is less than 1 V.
- The above conditions must be met for 500 ms.

B2485 04

- The signal voltage is greater than 2 V.
- The above conditions must be met for 500 ms.

Actions Taken When the DTC Sets

- The OnStar ® status LED turns red.
- Bluetooth ® functionality is disabled.

Conditions for Clearing the DTC

- The condition responsible for setting the DTC no longer exists.
- A history DTC will clear once 100 consecutive malfunction-free ignition cycles have occurred.

Diagnostic Aids

- Verify the mobile device is properly configured for the feature being used. Refer to the device manufacturers information.
- Verify the function/feature that is being used is supported by the mobile device.
- The device must be paired to the telematics communication interface control module to use the available Bluetooth ® feature(s). The pairing process must only be performed once for each device, unless that device's information is deleted.
- The system can store pairing information for multiple devices, but can only be actively connected to one at any given time.

Reference Information

Schematic Reference

OnStar Schematics

Connector End View Reference

COMPONENT CONNECTOR END VIEWS - INDEX

Description and Operation

OnStar Description and Operation

Electrical Information Reference

- **Circuit Testing**
- **Connector Repairs**
- **Testing for Intermittent Conditions and Poor Connections**
- **Wiring Repairs**

Special Tools

EL-50334-20 Multi-Media Interface Tester (Multi-Media Interface Tool)

Circuit/System Testing

1. Verify that the T4S Wireless Communication Antenna - Bluetooth ® is properly connected to the K73 Telematics Communication Interface Control Module and is not damaged.
    - **If the antenna is disconnected**

      Connect the T4S Wireless Communication Antenna - Bluetooth ® to the module.

    - **If the antenna is damaged**

      Test or replace the T4S Wireless Communication Antenna - Bluetooth ®.

    - **If the antenna is connected and not damaged**

NOTE: The Multi-Media Interface Tool tool can be used to test either cellular phone or streaming audio functions. Refer to the tool instructions, and perform the appropriate test(s) related to the customers concern in the following steps.

2. Ignition ON, infotainment system ON.
3. Verify the infotainment system successfully pairs with the Multi-Media Interface Tool.
    - **If the infotainment system does not successfully pair with the Multi-Media Interface Tool.**
    1. Test or replace the T4S Wireless Communication Antenna - Bluetooth ®.
    2. Clear the DTC, ignition OFF.
    3. Ignition ON.
    4. Verify the DTC is not set.
        - If the DTC is set, replace the K73 Telematics Communication Interface Control Module.
        - If the DTC is not set
    5. All OK.
    - **If the infotainment system successfully pairs with the Multi-Media Interface Tool.**
4. All OK.

Repair Instructions

Perform the **Diagnostic Repair Verification** after completing the repair.

Control Module References for telematics communication interface control module replacement, programming and setup.

DTC U0255-U0257

Diagnostic Instructions

- Perform the **Diagnostic System Check - Vehicle** prior to using this diagnostic procedure.
- Review **Strategy Based Diagnosis** for an overview of the diagnostic approach.
- **Diagnostic Procedure Instructions** provides an overview of each diagnostic category.

DTC Descriptors

DTC U0255

Lost Communication with Info Display Module

DTC U0256

Lost Communication with Infotainment Faceplate Control Module

DTC U0257

Lost Communication with Info Display Module/Infotainment Faceplate Control Module

Circuit/System Description

The radio information display and controls are separate components from the radio. One or more configurations may be possible, dependent upon the available content for the vehicle. The DTC(s) that can set when a malfunction occurs can vary due to calibration differences required for the vehicle content.

Diagnosis of these communication DTCs is based upon the symptom observed in the vehicle.

Monochrome Displays

When the vehicle is equipped with a monochrome display, the radio and the display communicate with each other via CGI serial data. The radio controls communicate with the display via LIN communications, and the control messages are passed through to the radio.

When the display and controls are combined in an assembly, the communication between the two components occurs within the assembly. If the two components are separate, the communication between the display and the controls is external, via the wiring harness.

Color Displays

When the vehicle is equipped with a color display, the display and controls communicate individually with the radio. The radio communicates directly with the controls via CGI serial data. A dedicated video cable is used to communicate graphical information between the radio and the display.

For non-touch color displays, a dedicated dimming circuit is used. The radio provides an output to the display based on dimming level information the radio receives.

Touch screen color displays use touch serial data communication between the display and the radio to exchange touch data, backlighting, and dimming levels.

Diagnostic Aids

- When equipped with a monochrome display, if the display is inoperative, the main radio controls will also be inoperative.
- The functions available on the steering wheel controls (if equipped) will continue to operate if the main radio controls are inoperative.
- The DTC may be stored as a history DTC without affecting the operation of the display or controls.

Reference Information

Schematic Reference

Radio/Navigation System Schematics

Connector End View Reference

COMPONENT CONNECTOR END VIEWS - INDEX

Description and Operation

Radio/Audio System Description and Operation (with Color Display), **Radio/Audio System Description and Operation (with Monochrome Display)**

Electrical Information Reference

- **Circuit Testing**
- **Connector Repairs**
- **Testing for Intermittent Conditions and Poor Connections**
- **Wiring Repairs**

Scan Tool Reference

Control Module References for scan tool information

Circuit/System Verification

1. Ignition ON, A11 Radio ON.
2. Verify the P17 Info Display Module turns on and information is shown on the display.
   - **If P17 Info Display Module does not turn on, or information is not shown in the display.**

     Refer to **Radio Information Display Malfunction (with Monochrome Display)**, **Radio Information Display Malfunction (with Color Display)**.

   - **If the P17 Info Display Module turns on and information is shown on the display.**
3. Verify that all radio controls operate and perform the correct function.
   - **If some, but not all, controls operate normally.**

     Replace the appropriate A20 Radio/HVAC Controls or the A22 Radio Controls.

   - **If all controls are inoperative.**

     Refer to **Radio Controls Malfunction (with Monochrome Display)**, **Radio Controls Malfunction (with Color Display)**.

   - **If all controls operate and perform the correct function.**
4. All OK.

Repair Instructions

Perform the **Diagnostic Repair Verification** after completing the repair.

SYMPTOMS - CELLULAR COMMUNICATION

NOTE: The following steps must be completed before using the symptom table.

1. Perform the **Diagnostic System Check - Vehicle** before using the Symptom Tables in order to verify that all of the following are true:
   - There are no DTCs set.
   - The control modules can communicate via the serial data link.
2. Review the system operation in order to familiarize yourself with the system functions. Refer to **OnStar Description and Operation**.

Visual/Physical Inspection

- Inspect for aftermarket devices which could affect the operation of the Radio/Audio System. Refer to **Checking Aftermarket Accessories** .
- Inspect for easily accessible or visible system components for obvious damage or conditions which could cause the symptom.

Intermittent

Faulty electrical connections or wiring may be the cause of intermittent conditions. Refer to **Testing for Intermittent Conditions and Poor Connections** .

Symptom List

Refer to a symptom diagnostic procedure from the following list in order to diagnose the symptom:

- **Bluetooth Malfunction (Radio)**, **Bluetooth Malfunction (OnStar)**
-
- **OnStar Microphone Malfunction**
- **OnStar Audio Malfunction**
- **OnStar Button LED Malfunction**
- **OnStar Call Center Remote Function Requests Malfunction**
- **OnStar Button Malfunction**
- **Unable to Contact OnStar Call Center**
- **OnStar Voice Recognition Malfunction**
- **OnStar Steering Wheel Control Functions Malfunction**

SYMPTOMS - ENTERTAINMENT

IMPORTANT: The following steps must be completed before using the symptom table.

1. Perform the **Diagnostic System Check - Vehicle** before using the Symptom Tables in order to verify that all of the following are true:
   - There are no DTCs set.
   - The control modules can communicate via the serial data link.
2. Review the system operation in order to familiarize yourself with the system functions. Refer to **Radio/Audio System Description and Operation (with Color Display)**, **Radio/Audio System Description and Operation (with Monochrome Display)**.

Visual/Physical Inspection

- Inspect for aftermarket devices which could affect the operation of the Radio/Audio System. Refer to **Checking Aftermarket Accessories** .
- Inspect for easily accessible or visible system components for obvious damage or conditions which could cause the symptom.

Intermittent

Faulty electrical connections or wiring may be the cause of intermittent conditions. Refer to **Testing for Intermittent Conditions and Poor Connections** .

Symptom List

Refer to a symptom diagnostic procedure from the following list in order to diagnose the symptom:

- **Application Malfunction**
- **Auxiliary Audio Input Malfunction**
- **Bluetooth Malfunction (Radio)**, **Bluetooth Malfunction (OnStar)**
- **Digital Radio Poor or No Reception**
- **Navigation System - Voice Recognition Malfunction**
- **No Global Positioning System (GPS) Reception**
- **Radio Controls Malfunction (with Monochrome Display)**, **Radio Controls Malfunction (with Color Display)**
- **Radio Information Display Malfunction (with Monochrome Display)**, **Radio Information Display Malfunction (with Color Display)**
- **Radio Poor Reception**
- **Speaker Malfunction**

APPLICATION MALFUNCTION

Diagnostic Instructions

- Perform the **Diagnostic System Check - Vehicle** prior to using this diagnostic procedure.
- Review **Strategy Based Diagnosis** for an overview of the diagnostic approach.
- **Diagnostic Procedure Instructions** provide an overview of each diagnostic category.

Circuit/System Description

The term application refers to any piece of software that works on a system (hardware) that is being operated by its own software. Applications are typically small software programs which uses the hardware to perform a specific task, as opposed to operating the entire system.

Diagnostic Aids

- For an application to be used, it must be installed on both the vehicle infotainment system and a compatible mobile device.
- The application must work correctly on the device to work with the vehicle infotainment system.
- The user may be required to log-in to the application on the mobile device before using the application from the vehicle controls.
- Applications use the mobile device and connection to a service provider to operate. Connection quality issues, or service provider data transmission issues can give the appearance of a vehicle malfunction.
- The device must be connected to the system. This may be done wirelessly via Bluetooth ®, or via the vehicle USB port.

  When a mobile device is connected via Bluetooth®, some or all of the device controls may be unavailable from the radio controls. This varies dependant upon the device being used. Refer to the vehicle owners manual, supplements, and the device manufacturers information for information on devices, control, and

operation.

Refer to the device manufacturers information for the preferred connection method.

- The device must be unlocked, and any additional applications should be closed.
- If the device has any sound enhancement features such as noise reduction or echo control, these features should be turned off.
- A low battery condition in the mobile device may not allow the device to connect to the system, or can create communication issues with the device. Verify the device battery state of charge and re-charge or replace as needed.
- If a 'Please See Device' or similar type error message is displayed, this may indicate the device has lost its connection to the vehicle, or the device has lost its external data connection.
- If a cable is used for connection, attempt to connect the device using a different cable; cables can deteriorate over time or become damaged.

Reference Information

Schematic Reference

Radio/Navigation System Schematics

Connector End View Reference

COMPONENT CONNECTOR END VIEWS - INDEX

Description and Operation

Radio/Audio System Description and Operation (with Color Display), **Radio/Audio System Description and Operation (with Monochrome Display)**

Electrical Information Reference

- **Circuit Testing**
- **Connector Repairs**
- **Testing for Intermittent Conditions and Poor Connections**
- **Wiring Repairs**

Scan Tool Reference

Control Module References for scan tool information

Circuit/System Verification

1. Verify the application is installed on the mobile device and is up to date.
    - **If the application is not installed or is not up to date.**

Install or update the application on the device.

- **If the application is installed on the mobile device and is up to date**

2. Verify the application operates correctly on the mobile device.
   - **If the application is not operating correctly on the mobile device.**

     Refer to the application website.

   - **If the application is operating correctly on the mobile device.**
3. Verify the A11 Radio calibrations are current.
   - **If the radio calibrations are not current**

     Reprogram the A11 Radio and re-evaluate the concern.

   - **If no update calibrations are available**
4. Verify the application is installed on the A11 Radio and is up to date.
   - **If the application is not installed or is not up to date.**

     Install or update the application on the A11 Radio.

   - **If the application is installed on the A11 Radio and is up to date**
5. Ignition ON, A11 Radio ON.
6. Verify the mobile device can connect to the infotainment system. Refer to the owners manual for information on the preferred connection method for the device.
   - **If the mobile device cannot connect to the vehicle infotainment system.**
   - If unable to connect via Bluetooth, refer to **Bluetooth Malfunction (Radio)**, **Bluetooth Malfunction (OnStar)**.
   - If unable to connect via USB, refer to **Auxiliary Audio Input Malfunction**.
   - **If the mobile device connects to the vehicle infotainment system.**
7. Launch the application.
8. Verify the applications operates properly with the vehicle infotainment system.
   - **If the application does not function properly**

     Refer to diagnostic aids.

   - **If the application functions properly**
9. All OK.

Repair Instructions

Perform the **Diagnostic Repair Verification** after completing the repair.

Control Module References for radio replacement, programming, and setup.

AUXILIARY AUDIO INPUT MALFUNCTION

Diagnostic Instructions

- Perform the **Diagnostic System Check - Vehicle** prior to using this diagnostic procedure.
- Review **Strategy Based Diagnosis** for an overview of the diagnostic approach.
- **Diagnostic Procedure Instructions** provide an overview of each diagnostic category.

Diagnostic Fault Information

Circuit	Short to Ground	Open/High Resistance	Short to Voltage	Signal Performance
Multimedia Player B+	-	4	-	-
Detection Signal Circuit	4	5	5	-
Left Audio Signal Multimedia Player Terminal 12	B1278 02, 3	3	B1278 01, 3	-
Left Audio Signal Radio Terminal 24	3	3	3	-
Right Audio Signal Multimedia Player Terminal 13	B1279 02, 2	2	B1279 01, 2	-
Right Audio Signal Radio Terminal 10	2	2	2	-
Audio Common Circuit Multimedia Player Terminal 3	-	1, 5	-	-
Audio Common Circuit Radio Terminal 23	-	1	-	-
USB Cable	6	6	6	-
Multimedia Player Ground	-	4	-	-

1. No or distorted audio from both sides
2. No or distorted right side audio
3. No or distorted left side audio
4. External audio inputs inoperative
5. AUX selection always available with or without device connected
6. USB port Inoperative

Circuit/System Description

Auxiliary Audio Input Jack

The 3.5 mm (1/8 in.) auxiliary audio input jack is located in the console. The auxiliary input jack circuits may be connected directly to the radio, or to the multimedia player interface module (if equipped). When a portable audio playback device is connected to the auxiliary jack, an internal switch opens the detection signal circuit and the radio will switch to AUX as the audio source.

When not equipped with the multimedia player interface module, all circuits from the auxiliary jack are connected directly to the radio. When a device is connected to the auxiliary jack an internal switch opens. The radio detects the device and switches to AUX as the audio source. Audio signals from the device are sent to the radio from the auxiliary input jack via the left, right, and common audio signal circuits.

When equipped with the multimedia player interface module, all circuits from the auxiliary jack are connected directly to the multimedia player interface module. When a device is connected to the auxiliary jack an internal switch opens. The multimedia player interface module detects the device and sends a serial data request to radio to switch to AUX as the audio source. Audio signals from the device are sent to the multimedia player interface module from the auxiliary input jack via the left, right, and common audio signal circuits. The multimedia player interface module then outputs these signals to the radio.

USB Port (USR)

The vehicle may be equipped with a USB port in the console. When equipped with the console USB port, the vehicle will also be equipped with a multimedia player interface module. This port allows USB connectivity to the infotainment system from portable media players or a USB storage device (memory stick/ flash drive). When a device is connected to the USB port, the system detects the device and switches to USB as the audio source. Once connected, the device can be controlled from the radio controls.

The USB port is connected to the multimedia player interface module via a standard USB cable. A Mini type USB connector is used to connect the cable at the USB port and at the multimedia player interface module. Standard USB male to female connections are typically used for connecting USB cables together where an in-line connection is required. An in-line cable connection is typically found between the console and I/P harness.

Not all portable media player devices are compatible. Memory stick/flash drive capability is limited to MP3 and WMA file types only. Video transfer from any device is not supported. Refer to the owner's manual for information on USB devices, control, and operation.

Multimedia Player Interface Module (if equipped)

The multimedia player interface module is a device that is capable of receiving inputs from analog or digital audio playback devices. Inputs can be received via the auxiliary input jack or USB. The multimedia player interface module and the radio communicate via serial data. Messages are used for the radio to control the input source, and for the multimedia player interface module to send detection information to the radio when devices are connected. The multimedia player interface module is used to provide capability for these inputs in systems where the radio does not provide native support.

The multimedia player interface module receives the inputs from the device, and transfers the audio signals to the radio for playback. All multimedia player interface module inputs are transferred to the radio as analog audio signals via left, right, and common audio circuits.

Diagnostic Aids

Auxiliary Audio Input Jack

- When a device is first connected to the 3.5 mm (1/8 in) input jack the infotainment system automatically switches to that device. If an auxiliary device has already been connected, press the AUX or CD/AUX

button to select the device.

- If the system detects the device, but the audio is not heard or is not clear, attempt to connect the device using a different cable; cables can deteriorate over time or become damaged.
- Playback of an audio device that is connected to the 3.5 mm jack can only be controlled using the controls on the device.
- The volume control on the device may need to be adjusted to ensure sufficient playback volume through the infotainment system.

USB

- When a device is first connected to the USB port, the infotainment system automatically switches to that device. If an auxiliary device has already been connected, press the AUX or CD/AUX button to select the device.
- A low battery condition in a portable media player may not allow the device to connect to the system, or can create communication issues with the device. Verify the device battery state of charge and re-charge or replace as needed.
- Connect the device directly to the USB port if possible. Only use a cable if it is required to connect the device. The use of extension cables can cause communication issues.
- If a cable is required for connection, attempt to connect the device using a different cable; cables can deteriorate over time or become damaged.
- Attempt audio playback from multiple USB devices when diagnosing USB concerns. Device compatibility can vary based on vehicle equipment. If the infotainment system is capable of operating any USB type device, the cause of the concern is not with the vehicle system. The inoperative device(s) may be incompatible or contain no recognized media types.
- If a 'Device Not Supported' or similar type error message is displayed, this indicates the system has connected to the device but cannot communicate with it properly. This does not indicate an issue with the vehicle system. The device may be incompatible, may require a 'reset', or may require an update to its software/firmware.
- If a 'No Supported Data Found' or similar type error message is displayed, this indicates the system has connected to the device and is communicating, but cannot find any compatible files/data. This does not indicate an issue with the vehicle system. Verify the device contains compatible media/ file types.
- Poor connections or damaged USB cables can cause intermittent or no operation of USB devices. Inspect connectors, terminals, and cables for damage and replace components as necessary. Ensure all USB inline connections and connections at components are fully seated and connector position retainers/locks are secure.

Reference Information

Schematic Reference

Radio/Navigation System Schematics

Connector End View Reference

COMPONENT CONNECTOR END VIEWS - INDEX

Description and Operation

Radio/Audio System Description and Operation (with Color Display), **Radio/Audio System Description and Operation (with Monochrome Display)**

Electrical Information Reference

- **Circuit Testing**
- **Connector Repairs**
- **Testing for Intermittent Conditions and Poor Connections**
- **Wiring Repairs**

Scan Tool Reference

Control Module References for scan tool information

Special Tools

- **EL-50334-20** Multi-Media Interface Tester (MIT)
- **EL-50334-50** USB Cable and Adapter Kit

Circuit/System Verification

Auxiliary Audio Input Jack

1. Verify no DTCs are present.
    - **If any DTCs are present**

      Refer to **Diagnostic Trouble Code (DTC) List - Vehicle** .

    - **If no DTCs are present**
2. Ignition ON, A11 Radio ON.
3. Verify the infotainment system switches to AUX as the audio source with the **EL-50334-20** Multi-Media Interface Tester (MIT) connected to the auxiliary audio input jack.
    - **If the infotainment system does not switch to AUX as the audio source**

      Refer to Circuit/System Testing below- Auxiliary Input Jack.

    - **If the infotainment system switches to AUX as the audio source**
4. Verify the audio from the **EL-50334-20** Multi-Media Interface Tester (MIT) is heard through the vehicle infotainment system while operating the test tool to begin audio playback.
    - **If audio is not heard from the test tool.**

      Refer to Circuit/System Testing below- Auxiliary Input Jack.

- **If audio is heard from the test tool.**

5. All OK.

USB Port

1. Verify no DTCs are present.
   - **If any DTCs are present**

     Refer to **Diagnostic Trouble Code (DTC) List - Vehicle** .

   - **If no DTCs are present**
2. Ignition ON, A11 Radio ON.
3. Verify the infotainment system switches to USB as the audio source with the **EL-50334-20** Multi-Media Interface Tester (MIT) connected to the USB port.
   - **If the infotainment system does not switch to USB as the audio source**

     Refer to Circuit/System Testing below- USB Port.

   - **If the infotainment system switches to USB as the audio source**
4. Verify the audio from the **EL-50334-20** Multi-Media Interface Tester (MIT) is heard through the vehicle infotainment system while operating the system to play audio from the test tool.
   - **If audio is not heard from the test tool.**

     Refer to Circuit/System Testing below- USB Port.

   - **If audio is heard from the device**
5. All OK.

Circuit/System Testing

Auxiliary Audio Input Jack without Multimedia Player Interface Module

1. Ignition OFF, disconnect the X1 harness connector at the X83 Auxiliary Audio Input. Ignition ON, A11 Radio ON.
2. Test for 2.5-3.5 V between the signal circuit terminal 5 and ground.
   - **If less than 2.5 V**
   1. Ignition OFF, disconnect the X1 harness connector at the A11 Radio.
   2. Test for infinite resistance between the signal circuit and ground.
      - If less than infinite resistance, repair the short to ground on the circuit.
      - If infinite resistance
   3. Test for less than 2 ohms in the signal circuit end to end
      - If 2 ohms or greater, repair the open/high resistance in the circuit.
      - If less than 2 ohms, replace the A11 Radio.

- **If greater than 3.5 V**

1. Ignition OFF, disconnect the X1 harness connector at the A11 Radio, ignition ON.
2. Test for less than 1 V between the detection circuit and ground.
   - If 1 V or greater, repair the short to voltage on the circuit.
   - If less than 1 V, replace the A11 Radio.

- **If between 2.5-3.5 V**

3. Test for less than 1 V between the signal circuits listed below and ground:
   - left auxiliary audio signal circuit terminal 1
   - right auxiliary audio signal circuit terminal 2
   - auxiliary audio common signal circuit terminal 3
   - **If 1 V greater**

   1. Ignition OFF, disconnect the X1 harness connector at the A11 Radio. Ignition ON.
   2. Test for less than 1 V between the signal circuit and ground.
      - If 1 V or greater, repair the short to voltage on the circuit.
      - If less than 1 V, replace the A11 Radio.

   - **If less than 1 V**

4. Ignition OFF, disconnect the X1 harness connector at the A11 Radio.
5. Test for infinite resistance between the signal circuits listed below and ground:
   - auxiliary audio common signal circuit terminal 23
   - left auxiliary audio signal circuit terminal 24
   - right auxiliary audio signal circuit terminal 10
   - **If less than infinite resistance**

     Repair the short to ground on the circuit.

   - **If infinite resistance**
6. Test for less than 5 ohms between the signal circuit terminals listed below:
   - A11 Radio terminal 24 X1 and the X83 Auxiliary Audio Input terminal 1 X1
   - A11 Radio terminal 10 X1 and the X83 Auxiliary Audio Input terminal 2 X1
   - A11 Radio terminal 23 X1 and the X83 Auxiliary Audio Input terminal 3 X1
   - **If 5 ohms greater**

     Repair the open/high resistance in the circuit.

   - **If less than 5 ohms**
7. Replace the X83 Auxiliary Audio Input. Connect all harness connectors.
8. Connect and operate the **EL-50334-20** Multi-Media Interface Tester (MIT).
9. Verify the audio from the test tool is heard through the vehicle infotainment system.
   - **If audio is not heard from the test tool**

Replace the A11 Radio.

- **If audio is heard from the test tool**

10. All OK.

Auxiliary Audio Input Jack with Multimedia Player Interface Module

1. Ignition OFF, disconnect the X1 harness connector at the X83 Auxiliary Audio Input. Ignition ON, A11 Radio ON.
2. Test for 2.5-3.5 V between the signal circuit terminal 5 and ground.
   - **If less than 2.5 V**
   1. Ignition OFF, disconnect the X1 harness connector at the T11 Multimedia Player Interface Module.
   2. Test for infinite resistance between the signal circuit and ground.
      - If less than infinite resistance, repair the short to ground on the circuit.
      - If infinite resistance
   3. Test for less than 2 ohms in the signal circuit end to end
      - If 2 ohms or greater, repair the open/high resistance in the circuit.
      - If less than 2 ohms, replace the T11 Multimedia Player Interface Module.
   - **If greater than 3.5 V**
   1. Ignition OFF, disconnect the X1 harness connector at the T11 Multimedia Player Interface Module, ignition ON.
   2. Test for less than 1 V between the detection circuit and ground.
      - If 1 V or greater, repair the short to voltage on the circuit.
      - If less than 1 V, replace the T11 Multimedia Player Interface Module.
   - **If between 2.5-3.5 V**
3. Test for less than 1 V between the signal circuits listed below and ground:
   - left auxiliary audio signal circuit terminal 1
   - right auxiliary audio signal circuit terminal 2
   - auxiliary audio common signal circuit terminal 3
   - **If 1 V greater**
   1. Ignition OFF, disconnect the X1 harness connector at the T11 Multimedia Player Interface Module. Ignition ON.
   2. Test for less than 1 V between the signal circuit and ground.
      - If 1 V or greater, repair the short to voltage on the circuit.
      - If less than 1 V, replace the T11 Multimedia Player Interface Module.
   - **If less than 1 V**
4. Ignition OFF, disconnect the X1 harness connector at the T11 Multimedia Player Interface Module.
5. Test for infinite resistance between the signal circuits listed below and ground:
   - auxiliary audio common signal circuit terminal 3
   - left auxiliary audio signal circuit terminal 12

- right auxiliary audio signal circuit terminal 13
- **If less than infinite resistance**

  Repair the short to ground on the circuit.

- **If infinite resistance**

6. Test for less than 5 ohms between the signal circuit terminals listed below:
   - T11 Multimedia Player Interface Module terminal 12 X1 and the X83 Auxiliary Audio Input terminal 1 X1
   - T11 Multimedia Player Interface Module terminal 13 X1 and the X83 Auxiliary Audio Input terminal 2 X1
   - T11 Multimedia Player Interface Module terminal 3 X1 and the X83 Auxiliary Audio Input terminal 3 X1
   - **If 5 ohms greater**

     Repair the open/high resistance in the circuit.

   - **If less than 5 ohms**
7. Ignition ON.
8. Test for less than 1 V between the signal circuits listed below and ground:
   - T11 Multimedia Player Interface Module terminal 4 X1
   - T11 Multimedia Player Interface Module terminal 14 X1
   - T11 Multimedia Player Interface Module terminal 15 X1
   - **If 1 V greater**
     1. Ignition OFF, disconnect the X1 harness connector at the A11 Radio. Ignition ON.
     2. Test for less than 1 V between the signal circuit and ground.
        - If 1 V or greater, repair the short to voltage on the circuit.
        - If less than 1 V, replace the A11 Radio.
   - **If less than 1 V**
9. Ignition OFF, disconnect the X1 harness connector at the A11 Radio.
10. Test for infinite resistance between the signal circuits listed below and ground:
    - auxiliary audio common signal circuit terminal 23
    - left auxiliary audio signal circuit terminal 24
    - right auxiliary audio signal circuit terminal 10
    - **If less than infinite resistance**

      Repair the short to ground on the circuit.

    - **If infinite resistance**
11. Test for less than 5 ohms between the signal circuit terminals listed below:
    - A11 Radio terminal 10 X1 and the T11 Multimedia Player Interface Module terminal 15 X1

- A11 Radio terminal 23 X1 and the T11 Multimedia Player Interface Module terminal 4 X1
- A11 Radio terminal 24 X1 and the T11 Multimedia Player Interface Module terminal 14 X1

- **If 5 ohms greater**

  Repair the open/high resistance in the circuit.

- **If less than 5 ohms**

12. Replace the X83 Auxiliary Audio Input. Connect all harness connectors.
13. Connect and operate the **EL-50334-20** Multi-Media Interface Tester (MIT).
14. Verify the audio from the test tool is heard through the vehicle infotainment system.
    - **If audio is not heard from the test tool**
    1. Replace the T11 Multimedia Player Interface Module.
    2. Connect and operate the **EL-50334-20** Multi-Media Interface Tester (MIT).
    3. Verify the audio from the test tool is heard through the vehicle infotainment system.
       - If audio is not heard from the test tool

         Replace the A11 Radio.

       - If audio is heard from the test tool
    4. All OK.
    - **If audio is heard from the test tool**
15. All OK.

USB Port

1. Ignition OFF, disconnect the USB cable connection at the T11 Multimedia Player Interface Module.

   NOTE: USB cables and adapters for the following tests are found in the EL-50334-50 USB cable and adapter kit.

2. Connect the EL-50334-2 Type A female to Mini B male USB Cable to the T11 Multimedia Player Interface Module. Ignition ON, radio ON.
3. Connect the **EL-50334-20** Multi-Media Interface Tester (MIT) to the EL-50334-2 cable.
4. Verify the infotainment system switches to USB as the audio source.
   - **If the infotainment system does not switch to USB as the audio source**

     Replace the T11 Multimedia Player Interface Module.

   - **If the infotainment system switches to USB as the audio source**
5. Ignition OFF, connect the vehicle USB cable to the T11 Multimedia Player Interface Module. Disconnect the I/P to floor console inline USB cable connector. Ignition ON, radio ON.

NOTE: The EL-50334-3 or EL-50334-4 adapter may be required for the following test.

6. Connect the **EL-50334-20** Multi-Media Interface Tester (MIT) to the I/P side of the inline USB cable connector.
7. Verify the infotainment system switches to USB as the audio source.
   - **If the infotainment system does not switch to USB as the audio source**

     Replace the I/P USB cable assembly.

   - **If the infotainment system switches to USB as the audio source**
8. Ignition OFF, connect the I/P to floor console inline USB cable connector.
9. Disconnect the USB cable at the X83 Auxiliary Audio Input. Connect the EL-50334-4 Type A female to Mini B female adapter to the USB cable. Ignition ON, radio ON.
10. Connect the **EL-50334-20** Multi-Media Interface Tester (MIT) to the EL-50334-4 adapter.
11. Verify the infotainment system switches to USB as the audio source.
    - **If the infotainment system does not switch to USB as the audio source**

      Replace the console USB cable assembly.

    - **If the infotainment system switches to USB as the audio source**
12. Ignition OFF, connect the vehicle USB cable to the X83 Auxiliary Audio Input. Ignition ON, radio ON.
13. Connect the **EL-50334-20** Multi-Media Interface Tester (MIT) to the X83 Auxiliary Audio Input.
14. Verify the infotainment system switches to USB as the audio source.
    - **If the infotainment system does not switch to USB as the audio source**

      Replace the X83 Auxiliary Audio Input.

    - **If the infotainment system switches to USB as the audio source**
15. Ignition OFF, disconnect the X1 harness connector at the T11 Multimedia Player Interface Module. Ignition ON.
16. Test for less than 1 V between the signal circuits listed below and ground:
    - T11 Multimedia Player Interface Module terminal 4 X1
    - T11 Multimedia Player Interface Module terminal 14 X1
    - T11 Multimedia Player Interface Module terminal 15 X1
    - **If 1 V greater**
    1. Ignition OFF, disconnect the X1 harness connector at the A11 Radio. Ignition ON.
    2. Test for less than 1 V between the signal circuit and ground.
       - If 1 V or greater, repair the short to voltage on the circuit.
       - If less than 1 V, replace the A11 Radio.

    - **If less than 1 V**

17. Ignition OFF, disconnect the X1 harness connector at the A11 Radio.
18. Test for infinite resistance between the signal circuits listed below and ground:
    - auxiliary audio common signal circuit terminal 23
    - left auxiliary audio signal circuit terminal 24
    - right auxiliary audio signal circuit terminal 10
    - **If less than infinite resistance**

      Repair the short to ground on the circuit.

    - **If infinite resistance**
19. Test for less than 5 ohms between the signal circuit terminals listed below:
    - A11 Radio terminal 10 X1 and the T11 Multimedia Player Interface Module terminal 15 X1
    - A11 Radio terminal 23 X1 and the T11 Multimedia Player Interface Module terminal 4 X1
    - A11 Radio terminal 24 X1 and the T11 Multimedia Player Interface Module terminal 14 X1
    - **If 5 ohms greater**

      Repair the open/high resistance in the circuit.

    - **If less than 5 ohms**
20. Replace the T11 Multimedia Player Interface Module. Connect all harness connectors. Ignition ON, radio ON.
21. Connect and operate the **EL-50334-20** Multi-Media Interface Tester (MIT).
22. Verify the audio from the test tool is heard through the vehicle infotainment system.
    - **If audio is not heard from the test tool**

      Replace the A11 Radio.

    - **If audio is heard from the test tool**
23. All OK.

Repair Instructions

Perform the **Diagnostic Repair Verification** after completing the repair.

- **Audio Disc Player Receptacle Replacement**
- **USB Receptacle Replacement**
- **Control Module References** for radio or multimedia player interface module replacement, programming, and setup

BLUETOOTH MALFUNCTION (RADIO)

Diagnostic Instructions

- Perform the **Diagnostic System Check - Vehicle** prior to using this diagnostic procedure.
- Review **Strategy Based Diagnosis** for an overview of the diagnostic approach.
- **Diagnostic Procedure Instructions** provide an overview of each diagnostic category.

Circuit/System Description

Bluetooth ® wireless technology is a short-range communications technology intended to replace the cables connecting portable and/or fixed devices while maintaining high levels of security. The operating range of the signal is approximately 30 feet.

The available features and functions are determined by the type of device and the software within the devices being used. For a feature or function to operate, it must be supported in both devices.

The Bluetooth ® hardware is internal to the radio. The radio supports streaming of data (music, voice, information) from cellular phones and other mobile devices that support those features. The radio may also be capable of interfacing with cellular phones for hands-free features.

Refer to the vehicle owners manual, supplements, and the device manufacturers information for information on devices, control, operation. and pairing instructions.

Diagnostic Aids

- Verify the mobile device is properly configured for the feature being used. Refer to the device manufacturers information.
- Verify the function/feature that is being used is supported by the mobile device.
- The device must be paired to the radio to use the available Bluetooth ® feature(s). The pairing process must only be performed once for each device, unless that device's information is deleted.
- The system can store pairing information for multiple devices, but can only be actively connected to one at any given time.

Reference Information

Schematic Reference

Radio/Navigation System Schematics

Connector End View Reference

COMPONENT CONNECTOR END VIEWS - INDEX

Description and Operation

Radio/Audio System Description and Operation (with Color Display), **Radio/Audio System Description and Operation (with Monochrome Display)**

Electrical Information Reference

- **Circuit Testing**
- **Connector Repairs**
- **Testing for Intermittent Conditions and Poor Connections**
- **Wiring Repairs**

Scan Tool Reference

Control Module References for scan tool information

Special Tools

EL-50334-20 Multi-Media Interface Tester (MIT)

Circuit/System Verification

1. Verify no DTCs are present.
   - **If any DTCs are present**

     Refer to **Diagnostic Trouble Code (DTC) List - Vehicle** .

   - **If no DTCs are present**
2. Verify the A11 Radio calibrations are current.
   - **If the radio calibrations are not current**

     Reprogram the A11 Radio and re-evaluate the concern.

   - **If no update calibrations are available**

NOTE: The MIT tool can be used to test either cellular phone or streaming audio functions. Refer to the tool instructions, and perform the appropriate test (s) related to the customers concern in the following steps.

3. Ignition ON, infotainment system ON.
4. Verify the infotainment system successfully pairs with the MIT tool.
   - **If the infotainment system does not successfully pair with the MIT tool.**

     Replace the A11 Radio.

   - **If the infotainment system successfully pairs with the MIT tool.**
5. Verify the infotainment system successfully completes the desired feature test using the MIT tool.
   - **If the feature test is not successful**

     Replace the A11 Radio.

- **If the feature test is successful**

6. All OK. Refer to Diagnostic Aids.

Repair Instructions

Perform the **Diagnostic Repair Verification** after completing the repair.

Control Module References for radio replacement, programming, and setup

BLUETOOTH MALFUNCTION (ONSTAR)

Diagnostic Instructions

- Perform the **Diagnostic System Check - Vehicle** prior to using this diagnostic procedure.
- Review **Strategy Based Diagnosis** for an overview of the diagnostic approach.
- **Diagnostic Procedure Instructions** provide an overview of each diagnostic category.

Circuit/System Description

The Bluetooth ® antenna is internal to, or is a small fixed antenna connected directly to, the telematics communication interface control module and is used to send and receive signals from a Bluetooth ® enabled cellular phone. The antenna utilizes no cabling and is not external to the vehicle.

In order to use hands-free calling, the cellular phone must be paired to the vehicle. Up to five devices can be paired to the vehicle at one time, but only one can be connected at any given time. To pair a phone, the customer must know how to operate the Bluetooth ® functionality of their phone. The pairing process must only be done one time for each phone, unless that phone's information is deleted. For safety reasons, the pairing process is disabled while the vehicle is moving.

Diagnostic Aids

- The purpose of this diagnostic is to verify the ability of the telematics communication interface control module to pair to a Bluetooth ® device.
- Before performing this test, verify compatibility of the cellular phone(s) the customer is attempting to use with the vehicle. Based on the cellular phone's service provider and the manufacturer's implementation of Bluetooth ®, not all phones support all available Bluetooth ® functionality. A vehicle and feature compatibility list will be provided via the GM Bluetooth ® website: http://www.onstar.com/web/Bluetooth/
- If the vehicle passes the following tests and a compatible device is being used, the concern may be due to a device malfunction or an incomplete/improper pairing attempt.
- A Bluetooth ® test tool or equivalent can also be used to verify the ability of the customers cellular phone (s) to pair with another device.

Schematic Reference

OnStar Schematics

Connector End View Reference

COMPONENT CONNECTOR END VIEWS - INDEX

Description and Operation

OnStar Description and Operation

Electrical Information Reference

- **Circuit Testing**
- **Connector Repairs**
- **Testing for Intermittent Conditions and Poor Connections**
- **Wiring Repairs**

Scan Tool Reference

Control Module References for scan tool information

Special Tools

EL-50334-20 Multi-Media Interface Tester (Multi-Media Interface Tool)

Circuit/System Verification

1. Ignition ON.
2. Verify DTC B2485 is not set.
    - **If DTC B2485 is set**

      Refer to **DTC B2485**

    - **If DTC B2485 is not set**

NOTE: The Multi-Media Interface Tool can be used to test either cellular phone or streaming audio functions. Refer to the tool instructions, and perform the appropriate test(s) related to the customers concern in the following steps.

3. Ignition ON, infotainment system ON.
4. Verify the infotainment system successfully pairs with the Multi-Media Interface Tool.
    - **If the infotainment system does not successfully pair with the Multi-Media Interface Tool.**
    1. Verify the vehicle is equipped with an external Bluetooth® Antenna.
        - If not equipped with an external Bluetooth® Antenna, replace the K73 Telematics Communication Interface Control Module
        - If equipped with an external Bluetooth® Antenna

2. Replace the Bluetooth® Antenna.
3. Verify the infotainment system successfully pairs with the Multi-Media Interface Tool.
    - If the infotainment system does not successfully pair with the Multi-Media Interface Tool, replace the K73 Telematics Communication Interface Control Module.
    - If the infotainment system successfully pairs with the Multi-Media Interface Tool.
4. All OK.
    - **If the infotainment system successfully pairs with the Multi-Media Interface Tool.**
5. All OK.

Repair Instructions

Perform the **Diagnostic Repair Verification** after completing the repair procedure.

Control Module References for telematics communication interface control module replacement, programming, and setup.

DIGITAL RADIO POOR OR NO RECEPTION

Diagnostic Instructions

- Perform the **Diagnostic System Check - Vehicle** prior to using this diagnostic procedure.
- Review **Strategy Based Diagnosis** for an overview of the diagnostic approach.
- **Diagnostic Procedure Instructions** provides an overview of each diagnostic category.

DTC Descriptors

DTC B125C 01

Satellite Antenna Circuit Short to Battery

DTC B125C 02

Satellite Antenna Circuit Short to Ground

DTC B125C 04

Satellite Antenna Circuit Open

Circuit/System Description

The digital radio receiver, located inside the radio, receives digital radio information from the digital radio antenna located on the outside of the vehicle. The digital radio receiver is connected to the digital radio antenna via a shielded coax cable. The digital radio antenna contains an amplifier which is powered by the radio through the coax cable.

Conditions for Running the DTC

This DTC is run every 300 milliseconds.

Conditions for Setting the DTC

The radio detects a circuit fault in the digital radio antenna.

Action Taken When the DTC Sets

The radio displays No XM Signal or Check Antenna.

Conditions for Clearing the DTC

- A current DTC clears when the condition for setting the DTC is no longer present.
- A history DTC clears after 100 malfunction-free ignition cycles.

Diagnostic Aids

The digital radio antenna requires a clear line of sight to the sky to operate properly. Reception may be limited, intermittent, or unavailable inside structures.

Reference Information

Schematic Reference

Radio/Navigation System Schematics

Connector End View Reference

COMPONENT CONNECTOR END VIEWS - INDEX

Description and Operation

Radio/Audio System Description and Operation (with Color Display), **Radio/Audio System Description and Operation (with Monochrome Display)**

Electrical Information Reference

- **Circuit Testing**
- **Connector Repairs**
- **Testing for Intermittent Conditions and Poor Connections**
- **Wiring Repairs**

Special Tools

EL-48028 Digital Radio Test Antenna

Circuit/System Verification

1. With the vehicle outside in an area with an unobstructed view of the southern sky, tune to XM.
2. Verify DTC B125C is not set as current and the No XM Signal message is not displayed on the radio.
   - **If DTC B125C is set as current or the No XM Signal message is displayed.**

     Refer to Circuit/System Testing below.

   - **If DTC B125C is not set as current and the No XM Signal message is not displayed.**
3. All OK.

Circuit/System Testing

1. Ignition OFF, disconnect the digital radio antenna coax cable from the A11 Radio. Connect the **EL-48028** Digital Radio Test Antenna to the radio and place on the roof of the vehicle.
2. Ignition ON, radio tuned to XM channel 1.
3. Verify DTC B125C is not set as current and XM reception is improved.
   - **If DTC B125C is set as current or XM reception is not improved**

     Replace the A11 Radio.

   - **If DTC B125C is not set as current and XM reception is improved**
4. Ignition OFF, disconnect the digital radio antenna coax cable from the T4G Cellular Phone, Navigation, and Digital Radio Antenna.
5. Verify the digital radio antenna coax cable passes the coax cable component test. Refer to Component Testing below.
   - **If the coax cable does not pass the test**

     Replace the antenna coax cable

   - **If the coax cable passes the test**
6. Test or replace the T4G Cellular Phone, Navigation, and Digital Radio Antenna.

Component Testing

CAUTION: Refer to Test Probe Caution .

NOTE: Before testing the coax cable, check the cable exterior for being pinched, cut, damaged, or having loose connections at the components, which can cause reception issues.

To prevent false reading when testing the center coax terminals, use care not to ground the test probe on the outer housing/shield.

Coax Cable Test

1. Ignition OFF, disconnect the coax cable at both components.
2. Test for less than 5 ohms between coax cable center terminal end to end.
   - **If 5 ohms or greater**

     Replace the coax cable

   - **If less than 5 ohms**
3. Test for less than 5 ohms between the coax cable outer shield end to end.
   - **If 5 ohms or greater**

     Replace the coax cable

   - **If less than 5 ohms**
4. Test for infinite resistance between the coax cable center terminal and the coax cable outer shield.
   - **If less than infinite resistance**

     Replace the coax cable

   - **If infinite resistance**
5. All OK

Repair Instructions

Perform the **Diagnostic Repair Verification** after completing the repair.

- **Radio Antenna Base Replacement**
- **Control Module References** for Radio replacement, programming, and setup.

ONSTAR MICROPHONE MALFUNCTION

Diagnostic Instructions

- Perform the **Diagnostic System Check - Vehicle** prior to using this diagnostic procedure.
- Review **Strategy Based Diagnosis** for an overview of the diagnostic approach.
- **Diagnostic Procedure Instructions** provides an overview of each diagnostic category.

Diagnostic Fault Information

Circuit	Short to Ground	Open/High Resistance	Short to Voltage	Signal Performance
Microphone High Signal Terminal 9	B2455 02	B2455 04	B2455 04	-

Microphone Low Signal Terminal 10	B2455 02	B2455 04	B2455 04	-
Cellular Telephone Voice Signal Terminal 6	2	1	2	-
Cellular Telephone Voice Low Signal Terminal 12	-	2	2	-
1. Voice Cannot be Heard by Telephone Conversation Partner 2. Customer Voice may be distorted for Telephone Conversation Partner				

Circuit/System Description

The telematics communication interface control module provides the Cellular Phone Microphone with a supplied voltage on the cellular phone microphone signal circuit. When the cellular phone microphone is in use, voice data from the user is sent back to the telematics communication interface control module on the signal circuit.

Reference Information

Schematic Reference

OnStar Schematics

Connector End View Reference

COMPONENT CONNECTOR END VIEWS - INDEX

Description and Operation

OnStar Description and Operation

Electrical Information Reference

- **Circuit Testing**
- **Connector Repairs**
- **Testing for Intermittent Conditions and Poor Connections**
- **Wiring Repairs**

Scan Tool Reference

Control Module References for scan tool information

Circuit/System Verification

NOTE: **It is necessary to have the vehicle in a quiet, open outside area where a cellular call can be successfully placed and GPS data can be received from satellites.**

1. Ignition ON.
2. Verify that DTC B2455 is not set.
   - **If DTC B2455 is set**

     Refer to **DTC B2455**.

   - **If DTC B2455 is not set**
3. Verify that a successful OnStar voice command can be made.
   - **If your voice can not be heard clearly**

     Refer to Circuit/System Testing below- Microphone Malfunction.

   - **If your voice can be heard clearly**
4. Verify that your voice is heard clearly by the OnStar Call Center after completing a blue button press.
   - **If your voice can not be heard clearly**

     Refer to Circuit/System Testing below - Cellular Telephone Voice Malfunction.

   - **If your voice can be heard clearly**
5. All OK.

Circuit/System Testing

Microphone Malfunction

1. Ignition OFF, disconnect the harness connector at the B24 Cellular Phone Microphone, ignition ON.
2. Test for 8.0-10.5 V between the signal circuit terminal B and ground.
   - **If less than 8.0 V**
   1. Ignition OFF, disconnect the X2 harness connector at the K73 Telematics Communication Interface Control Module.
   2. Test for infinite resistance between the signal circuit and ground.
      - If less than infinite resistance, repair the short to ground in the circuit.
      - If infinite resistance
   3. Test for less than 2 ohms in the signal circuit end to end.
      - If 2 ohms or greater, repair the open/high resistance in the circuit.
      - If less than 2 ohms, replace the vehicle K73 Telematics Communication Interface Control Module.
   - **If greater than 10.5 V**
   1. Ignition OFF, disconnect the X2 harness connector at the K73 Telematics Communication Interface Control Module, ignition ON.
   2. Test for less than 1 V between the signal circuit and ground.
      - If 1 V or greater, repair the short to voltage on the circuit.

- If less than 1 V, replace the K73 Telematics Communication Interface Control Module.
- **If between 8.0-10.5 V**

3. Test for less than 1 V between the signal circuit terminal A and ground.
   - **If greater than 1 V**
   1. Ignition OFF, disconnect the X2 harness connector at the K73 Telematics Communication Interface Control Module, ignition ON.
   2. Test for less than 1 V between the signal circuit and ground.
      - If 1 V or greater, repair the short to voltage in the circuit.
      - If less than 1 V, repair the K73 Telematics Communication Interface Control Module.
   - **If less than 1 V**
4. Test for greater than 8 V between the signal circuit terminal B and the signal circuit terminal A.
   - **If less than 8 V**
   1. Ignition OFF, disconnect the X2 harness connector at the K73 Telematics Communication Interface Control Module.
   2. Test for infinite resistance between the signal circuit and ground.
      - If less than infinite resistance, repair the short to ground in the circuit.
      - If infinite resistance
   3. Test for less than 2 ohms in the signal circuit end to end.
      - If 2 ohms or greater, repair the open/high resistance in the circuit.
      - If less than 2 ohms, replace the vehicle K73 Telematics Communication Interface Control Module.
   - **If greater than 9 V**
5. Test or replace the B24 Cellular Phone Microphone.

Cellular Telephone Voice Malfunction

1. Ignition OFF and vehicle systems OFF, disconnect the X2 harness connector at the K73 Telematics Communication Interface Control Module and the X4 harness connector at the A11 Radio, ignition ON.
2. Test for less than 1 V between the signal circuits listed below and ground.
   - K73 Telematics Communication Interface Control Module signal circuit Terminal 6
   - K73 Telematics Communication Interface Control Module signal circuit Terminal 15
   - **If greater than 1 V**

     Repair the short to voltage in the circuit.

   - **If less than 1 V**
3. Ignition OFF.
4. Test for infinite resistance between the between the signal circuits listed below and ground.
   - K73 Telematics Communication Interface Control Module signal circuit Terminal 6
   - K73 Telematics Communication Interface Control Module signal circuit Terminal 15

- **If less than infinite resistance**

  Repair the short to ground on the circuit.

- **If infinite resistance**

5. Test for less than 2 ohms in the the signal circuits listed below end to end.
   - K73 Telematics Communication Interface Control Module signal circuit Terminal 6
   - K73 Telematics Communication Interface Control Module signal circuit Terminal 15
   - **If 2 ohms or greater**

     Repair the open/high resistance in the circuit.

   - **If less than 2 ohms**
6. Replace the K73 Telematics Communication Interface Control Module.
7. Verify that your voice is heard clearly by the OnStar Call Center after completing a blue button press.
   - **If your voice can not be heard clearly**

     Replace the A11 Radio.

   - **If your voice can be heard clearly**
8. All OK.

Repair Instructions

Perform the **Diagnostic Repair Verification** after completing the repair procedure.

- **Mobile Telephone Microphone Replacement**
- **Control Module References** for radio or telematics communication interface control module replacement, programming, and setup.

NAVIGATION SYSTEM - VOICE RECOGNITION MALFUNCTION

Diagnostic Instructions

- Perform the **Diagnostic System Check - Vehicle** prior to using this diagnostic procedure.
- Review **Strategy Based Diagnosis** for an overview of the diagnostic approach.
- **Diagnostic Procedure Instructions** provide an overview of each diagnostic category.

Diagnostic Fault Information

Circuit	Short to Ground	Open/High Resistance	Short to Voltage	Signal Performance
Voice Recognition Audio Signal	1	1	1	-

Voice Recognition Audio Low Reference	-	1	-	-
1. navigation voice recognition inoperative				

Circuit/System Description

When voice recognition for the navigation equipped infotainment system is started, voice signals from the cellular phone microphone are passed through the telematics communication interface control module to the radio via the voice recognition audio circuits.

Diagnostic Aids

- Refer to the Navigation System Owners Manual for voice recognition use and commands.
- Voice recognition only works if the map database is installed in the system.
- Navigation voice commands are not available until the OK button has been selected.
- If the radio is off, the only commands available will be Hands Free and Help.
- When the system recognizes the command the system will either perform the function or ask to confirm the choice by clearly saying "yes" or "no".
- If experiencing difficulty with the system recognizing a command, confirm that the command is correct.
- Background noise such as a climate control fan positioned on high, open windows, or very loud outside noises, can cause voice commands to be misunderstood.

Reference Information

Schematic Reference

OnStar Schematics

Connector End View Reference

COMPONENT CONNECTOR END VIEWS - INDEX

Description and Operation

Radio/Audio System Description and Operation (with Color Display), **Radio/Audio System Description and Operation (with Monochrome Display)**

Electrical Information Reference

- **Circuit Testing**
- **Connector Repairs**
- **Testing for Intermittent Conditions and Poor Connections**
- **Wiring Repairs**

Scan Tool Reference

Control Module References for scan tool information

Circuit/System Verification

1. Verify the OnStar ® voice recognition system is operating normally.
   - **If the OnStar ® voice recognition system is not operating normally.**

     Refer to **OnStar Voice Recognition Malfunction**.

   - **If the OnStar ® voice recognition system is operating normally.**
2. Ignition ON, radio ON.

NOTE: Refer to the Navigation System Owners Manual for voice recognition use and commands.

3. Begin voice recognition for the radio and clearly speak one of the available commands.
4. Verify the infotainment system responds correctly to the command.
   - **If the infotainment system does not respond correctly to the command.**
   1. Clearly speak a different command.
   2. Verify the infotainment system responds correctly to the command.
      - If the infotainment system does not respond correctly to any commands, refer to Circuit/System Testing below.
      - If the infotainment system responds correctly to the command.
   3. Refer to the navigation system owners manual for hints on speaking commands.
   - **If the infotainment system responds correctly to the command.**
5. All OK

Circuit/System Testing

1. Ignition OFF, disconnect the X2 harness connector at the K73 Telematics Communication Interface Control Module.
2. Test for less than 10 ohms between the low reference circuit terminal 12 and ground.
   - **If 10 ohms or greater**
   1. Ignition OFF, disconnect the X2 harness connector at the A11 Radio.
   2. Test for less than 2 ohms in the low reference circuit end to end.
      - If 2 ohms or greater, repair the open/high resistance in the circuit.
      - If less than 2 ohms, replace the A11 Radio.
   - **If less than 10 ohms**
3. Ignition ON, radio ON.
4. Test for less than 1 V between the signal circuit terminal 6 and ground.
   - **If 1 V greater**
   1. Ignition OFF, disconnect the X2 harness connector at the A11 Radio. Ignition ON.

2. Test for less than 1 V between the signal circuit and ground.
    - If 1 V or greater, repair the short to voltage on the circuit.
    - If less than 1 V, replace the A11 Radio.
- **If less than 1 V**

5. Ignition OFF, disconnect the X2 harness connector at the A11 Radio.
6. Test for infinite resistance between the circuits listed below and ground:
    - voice recognition signal circuit A11 Radio X2 terminal 6
    - voice recognition low reference circuit A11 Radio X2 terminal 16
    - **If less than infinite resistance**

      Repair the short to ground on the circuit.

    - **If infinite resistance**
7. Test for less than 5 ohms between the terminals listed below:
    - A11 Radio X2 terminal 6 and the K73 Telematics Communication Interface Control Module X2 terminal 6
    - A11 Radio X2 terminal 16 and the K73 Telematics Communication Interface Control Module X2 terminal 12
    - **If 5 ohms greater**

      Repair the open/high resistance in the circuit.

    - **If less than 5 ohms**
8. Replace the A11 Radio. Connect all harness connectors.

NOTE: Refer to the Navigation System Owners Manual for voice recognition use and commands.

9. Begin voice recognition for the radio and clearly speak one of the available commands.
10. Verify the infotainment system responds correctly to the command.
    - **If the infotainment system does not respond correctly to the command**
    1. Clearly speak a different command.
    2. Verify the infotainment system responds correctly to the command.
        - If the infotainment system does not respond correctly to any commands, replace the K73 Telematics Communication Interface Control Module.
    - **If the infotainment system responds correctly to the command**
11. All OK

Repair Instructions

Perform the **Diagnostic Repair Verification** after completing the repair.

Control Module References for radio or telematics communication interface control module replacement, programming, and setup.

ONSTAR AUDIO MALFUNCTION

Diagnostic Instructions

- Perform the **Diagnostic System Check - Vehicle** prior to using this diagnostic procedure.
- Review **Strategy Based Diagnosis** for an overview of the diagnostic approach.
- **Diagnostic Procedure Instructions** provides an overview of each diagnostic category.

Diagnostic Fault Information

Circuit	Short to Ground	Open/High Resistance	Short to Voltage	Signal Performance
Audio High Signal terminal 1	1	1	1	-
Audio Low Signal terminal 2	1	1	1	-
1. No (or Noisy) OnStar® Audio				

Circuit/System Description

When an OnStar® keypress is made, a serial data message is sent to the audio system to mute all radio functions and output OnStar® originated audio. After the audio system is muted, the telematics communication interface control module transmits signals to the audio system on the audio signal and audio common circuits.

Reference Information

Schematic Reference

- **OnStar Schematics**
- **Radio/Navigation System Schematics**

Connector End View Reference

COMPONENT CONNECTOR END VIEWS - INDEX

Description and Operation

OnStar Description and Operation

Electrical Information Reference

- **Circuit Testing**
- **Connector Repairs**

- **Testing for Intermittent Conditions and Poor Connections**
- **Wiring Repairs**

Scan Tool Reference

Control Module References for scan tool information

Circuit/System Verification

1. Ignition ON, radio ON.
2. Verify that audio is heard clearly through all speaker channels when tuning radio to a known good station.
   - **If audio is not heard clearly**

     Refer to **Speaker Malfunction**

   - **If audio is heard clearly**
3. Verify that the Connecting to OnStar® message is heard clearly through the audio system when the OnStar® blue button is pressed.
   - **If OnStar message is noisy or distorted**

     Refer to Circuit/System Testing below

   - **If OnStar message is heard clearly**
4. All OK.

Circuit/System Testing

1. Ignition OFF and vehicle systems OFF, disconnect the X2 harness connector at the K73 Telematics Communication Interface Control Module, ignition ON.
2. Test for less than 4 V between each of the signal circuits listed below and ground:
   - Terminal 1
   - Terminal 2
   - **If 4 V or greater**
   1. Ignition OFF, disconnect the X1 harness connector at the A11 Radio, ignition ON.
   2. Test for less than 1 V between the signal circuits and ground.
      - If greater than 1 V, repair the short to voltage in the circuit.
      - If less then 1 V, replace the A11 Radio.
   - **If less than 4 V**
3. Ignition OFF.
4. Test for infinite resistance between each of the signal circuits listed below and ground:
   - Terminal 1
   - Terminal 2

- **If less than infinite resistance**

  Repair the short to ground on the circuit.

- **If infinite resistance**

5. Disconnect the X1 harness connector at the A11 Radio.
6. Test for less than 2 ohms in each of the signal circuits listed below end to end:
   - K73 Telematics Communication Interface Control Module Terminal 1 X2
   - K73 Telematics Communication Interface Control Module Terminal 2 X2
   - **If 2 ohms or greater**

     Repair the open/high resistance in the circuit.

   - **If less than 2 ohms**
7. Replace the K73 Telematics Communication Interface Control Module.
8. Verify that the Connecting to OnStar® message is heard clearly through the audio system when the OnStar® blue button is pressed.
   - **If audio is not heard clearly**

     Replace the A11 Radio.

   - **If audio is heard clearly**
9. All OK.

Repair Instructions

Perform the **Diagnostic Repair Verification** after completing the repair procedure.

Control Module References for radio or telematics communication interface control module replacement, programming, and setup.

NO GLOBAL POSITIONING SYSTEM (GPS) RECEPTION

Diagnostic Instructions

- Perform the **Diagnostic System Check - Vehicle** prior to using this diagnostic procedure.
- Review **Strategy Based Diagnosis** for an overview of the diagnostic approach.
- **Diagnostic Procedure Instructions** provides an overview of each diagnostic category.

Circuit/System Description

The navigation antenna is connected to the telematics communication interface control module. The module supplies 5 V to the antenna to power the internal amplifier through the center conductor of the antenna coax cable.

When the vehicle is equipped with the optional navigation radio, a navigation signal splitter is installed to distribute the navigation signal to both the telematics communication interface control module and the navigation radio. The telematics communication interface control module supplies 5 V through the coax cable to power the internal antenna amplifier through the signal splitter.

Diagnostic Aids

- The telematics communication interface control module GPS signal title on the scan tool will display a Yes or No dependent upon whether or not the module sees an increment of the seconds transmitted by GPS signals to the telematics communication interface control module. Upon entering this screen, the GPS signal title will initially display Yes, regardless of the presence of time increment, for at least 2 seconds, while the algorithm in the scan tool determines the status of the clock. If increment is found, Yes is continually displayed. If the clock remains static, No is displayed. The scan tool looks for increment every second, regardless of current display.
- Inaccurate or aged GPS position concerns which are no longer present may have been due to the temporary loss of GPS signal reception by the vehicle. Conditions such as tunnels or parking structures will restrict the cellular phone and navigation antenna from a clear view of the satellites in the sky and may have caused this temporary data loss.
- The GPS requires a clear line of sight to the sky to operate properly. In most cases the GPS will not have reception near tall buildings or inside structures.

Reference Information

Schematic Reference

- **OnStar Schematics**
- **Radio/Navigation System Schematics**

Connector End View Reference

COMPONENT CONNECTOR END VIEWS - INDEX

Description and Operation

- **OnStar Description and Operation**
- **Radio/Audio System Description and Operation (with Color Display)**, **Radio/Audio System Description and Operation (with Monochrome Display)**

Electrical Information Reference

- **Circuit Testing**
- **Connector Repairs**
- **Testing for Intermittent Conditions and Poor Connections**
- **Wiring Repairs**

Scan Tool Reference

Control Module References for scan tool information

Special Tools

EL-49903 GM OnStar Antenna Diagnostic Tool Kit

Circuit/System Verification

NOTE: The following verification requires the vehicle to be outside with an unobstructed view of the southern sky. Allow 5 minutes after turning the ignition ON for the GPS satellites to acquire vehicle signal.

1. Ignition ON.
2. Verify that no DTCs are set.
   - **If any DTCs are set**

     Refer to **Diagnostic Trouble Code (DTC) List - Vehicle**

   - **If no DTCs are set**
3. Verify that an OnStar advisor can locate the vehicle after performing a blue button press.
   - **If the advisor can not locate the vehicle and the vehicle is not equipped with a navigation radio**

     Refer to Circuit System Testing below - Without Navigation Radio.

   - **If the advisor can not locate the vehicle and the vehicle is equipped with a navigation radio**

     Refer to Circuit System Testing below - With Navigation Radio.

   - **If the advisor can locate the vehicle**
4. Verify that the NO GPS symbol/message is not displayed on the radio.
   - **If the NO GPS symbol/message is displayed**

     Refer to Circuit System Testing below - With Navigation Radio.

   - **If the NO GPS symbol/message is not displayed**
5. All OK.

Circuit/System Testing (without Navigation Radio)

NOTE:

- **The vehicle may be equipped with sectioned coax. Test each section and replace only the faulty section, not the entire length of coax.**
- **The following verification requires the vehicle to be outside with an unobstructed view of the southern sky. Allow 5 minutes after turning the**

ignition ON for the GPS satellites to acquire vehicle signal.

1. Ignition OFF, disconnect the GPS and cellular coax cable connector at the K73 Telematics Communication Interface Control Module.
2. Using the EL-49903-3 kit (EL-49903-5 adapter and EL-49903-4 coax cable), connect the **EL-49903** GM OnStar antenna diagnostic tool kit to the K73 telematics communication interface module. Place the test antenna on the roof of the vehicle, ignition ON.
3. Verify that an OnStar advisor can locate the vehicle after performing a blue button press.
   - **If the advisor can not locate the vehicle**

     Replace the K73 Telematics Communication Interface Control Module.

   - **If the advisor can locate the vehicle**
4. Ignition OFF, disconnect the **EL-49903** GM OnStar antenna diagnostic tool kit from the K73 Telematics Communication Interface Control Module
5. Disconnect the K73 telematics communication interface module coax at the T4G Cellular Phone, Navigation, and Digital Radio Antenna.
6. Test the coax cable between the K73 Telematics Communication Interface Control Module and the T4G Cellular Phone, Navigation, and Digital Radio Antenna. Refer to component testing.
   - **If the coax cable does not pass the test**

     Replace the coax cable.

   - **If the coax cable passes the test**
7. Test or replace the T4G Cellular Phone, Navigation, and Digital Radio Antenna.

Circuit/System Testing (with Navigation Radio)

NOTE:

- **The vehicle may be equipped with sectioned coax. Test each section and replace only the faulty section, not the entire length of coax.**
- **The following verification requires the vehicle to be outside with an unobstructed view of the southern sky. Allow 5 minutes after turning the ignition ON for the GPS satellites to acquire vehicle signal.**

1. Ignition OFF, disconnect the coax cable at the T15 Navigation Antenna Signal Splitter.
2. Using the EL-49903-3 kit (EL-49903-5 adapter and EL-49903-4 coax cable), connect the **EL-49903** GM OnStar antenna diagnostic tool kit to the T15 Navigation Antenna Signal Splitter. Place the test antenna on the roof of the vehicle, ignition ON.
3. Verify that the customer GPS concern is still present.
   - **If the GPS concern is not present**
     1. Ignition OFF, disconnect the **EL-49903** GM OnStar antenna diagnostic tool kit from the K73 Telematics Communication Interface Control Module
     2. Connect the GPS, T15 navigation antenna signal splitter, and cellular coax cable connector at the

K73 telematics communication interface control module.

3. Disconnect the coax cable at the T4G Cellular Phone, Navigation, and Digital Radio Antenna.
4. Test the coax cable between the T15 Navigation Antenna Signal Splitter and the T4G Cellular Phone, Navigation, and Digital Radio Antenna. Refer to Component Testing below.
   - If the coax cable does not pass the test

     Replace the coax cable.

   - If the coax cable passes the test
5. Replace the T4G Cellular Phone, Navigation, and Digital Radio Antenna.

- **If the GPS concern is still present**

4. Ignition OFF, disconnect the coax cable between the T15 Navigation Antenna Signal Splitter and the K73 Telematics Communication Interface Control Module.
5. Using the EL-49903-3 kit (EL-49903-5 adapter and EL-49903-4 coax cable), connect the **EL-49903** GM OnStar antenna diagnostic tool kit to the telematics communication interface module. Place the test antenna on the roof of the vehicle, ignition ON
6. Verify that an OnStar advisor can locate the vehicle after performing a blue button press.
   - **If the advisor can not locate the vehicle**

     Replace the K73 Telematics Communication Interface Control Module.

   - **If the advisor can locate the vehicle**
7. Ignition OFF.
8. Test the coax cable between the T15 Navigation Antenna Signal Splitter and the K73 Telematics Communication Interface Control Module. Refer to Component Testing below.
   - **If the coax cable does not pass the test**

     Replace the coax cable.

   - **If the coax cable passes the test**
9. Ignition OFF, disconnect the coax cable between the T15 Navigation Antenna Signal Splitter and the A11 Radio.
10. Connect the test antenna to the radio and place the test antenna on the roof of the vehicle.
11. Ignition ON.
12. Verify that the NO GPS symbol/message is not displayed on the radio.
    - **If the NO GPS symbol/message is displayed**

      Replace the A11 Radio

    - **If the NO GPS symbol/message is not displayed**
13. Ignition OFF.
14. Test the coax cable between the T15 Navigation Antenna Signal Splitter and the A11 Radio. Refer to

Component Testing below.

- **If the coax cable does not pass the test**

  Replace the coax cable.

- **If the coax cable passes the test**

15. Replace the T15 Navigation Antenna Signal Splitter.

Component Testing

CAUTION: Refer to Test Probe Caution .

NOTE: Before testing the coax cable, check the cable exterior for being pinched, cut, damaged, or having loose connections at the components, which can cause reception issues.

To prevent false reading when testing the center coax terminals, use care not to ground the test probe on the outer housing/shield.

Coax Cable Test

1. Ignition OFF, disconnect the coax cable at both components.
2. Test for less than 5 ohms between the coax cable center terminal end to end.
   - **If 5 ohms or greater**

     Replace the coax cable.

   - **If less than 5 ohms**
3. Test for greater than 5 ohms between the coax cable outer shield end to end.
   - **If 5 ohms or greater**

     Replace the coax cable.

   - **If less than 5 ohms**
4. Test for infinite resistance between the coax cable center terminal and the coax cable outer shield.
   - **If less than infinite resistance**

     Replace the coax cable.

   - **If infinite resistance**
5. All OK.

Repair Instructions

Perform the **Diagnostic Repair Verification** after completing the repair.

- **Navigation Signal Splitter Replacement**
- **Radio Antenna Base Replacement**
- **Control Module References** for telematics communication interface control module replacement, programming and setup.

ONSTAR BUTTON LED MALFUNCTION

Diagnostic Instructions

- Perform the **Diagnostic System Check - Vehicle** prior to using this diagnostic procedure.
- Review **Strategy Based Diagnosis** for an overview of the diagnostic approach.
- **Diagnostic Procedure Instructions** provides an overview of each diagnostic category.

DTC Descriptors

DTC B2476 04

Cellular Phone Select Service Switch Open

DTC B2476 59

Cellular Phone Select Service Switch Protection Time-out

DTC B2482 00

Cellular Phone Select Service Switch Range/Performance

Diagnostic Fault Information

Circuit	Short to Ground	Open/High Resistance	Short to Voltage	Signal Performance
10 V Reference	B2476 04	B2476 04	B2476 04	-
Control Terminal 6	1	1	2	-
Control Terminal 7	1	1	2	-
Signal Terminal 3	B2476 04	B2476 04	B2476 59	B2476 59, B2482 00
Ground	-	B2476 04	-	-
1. OnStar® LED Inoperative 2. LED Illuminated At All Times				

Circuit Description

The OnStar® status LEDs are located in the inside rearview mirror telematic button assembly. The green LED is illuminated when the system is ON and operating normally. When the green LED is green and flashing, it is

an indication that a call is in progress. When the red LED is illuminated, a system malfunction is present. In the event there is a system malfunction and the OnStar® system is still able to make a call, the LED will flash red during the call. The OnStar® LEDs are controlled by the telematics communication interface control module via the keypad green LED control circuit and the keypad red LED control circuit.

Conditions for Running the DTC

- Ignition ON.
- Battery voltage must be between 9-16 V.

Conditions for Setting the DTC

B2476 04

The telematics communication interface control module detects a short to voltage or an open/high resistance on the keypad 10 V reference circuit.

B2482 and B2476 59

The telematics communication interface control module detects a valid signal on the keypad signal circuit for longer than 15 s. If one of the OnStar® buttons is held or stuck for 15 s or greater, the telematics communication interface control module will set this DTC.

Action Taken When the DTC Sets

- The OnStar® status LED turns red.
- No calls can be placed.
- The telematics communication interface control module will ignore all inputs from the OnStar® button assembly.

Conditions for Clearing the DTC

- The condition responsible for setting the DTC no longer exists.
- A history DTC will clear once 50 consecutive malfunction-free ignition cycles have occurred.

Reference Information

Schematic Reference

OnStar Schematics

Connector End View Reference

COMPONENT CONNECTOR END VIEWS - INDEX

Description and Operation

OnStar Description and Operation

Electrical Information Reference

- **Circuit Testing**
- **Connector Repairs**
- **Testing for Intermittent Conditions and Poor Connections**
- **Wiring Repairs**

Scan Tool Reference

Control Module References for scan tool information

Circuit/System Verification

NOTE: If the green LED is off with the ignition ON and the LED functions correctly when commanded with the scan tool, contact the OnStar Center to confirm the vehicle has a current subscription.

1. Ignition ON.
2. Verify no DTC are set.
   - **If any DTC are set**

     Refer to **Diagnostic Trouble Code (DTC) List - Vehicle**

   - **If no DTC are set**
3. Verify that the green LED turns ON and OFF when commanding the Green Indicator ON and OFF with a scan tool.
   - **If the green LED does not turn ON and OFF**

     Refer to Circuit/System Testing below - Green LED Test

   - **If the green LED turns ON and OFF**
4. Verify that the red LED turns ON and OFF when commanding the Red Indicator ON and OFF with a scan tool.
   - **If the red LED does not turn ON and OFF**

     Refer to Circuit/System Testing below - Red LED Test

   - **If the red LED turns ON and OFF**
5. All OK.

Circuit/System Testing

Green LED Test

1. Ignition OFF, and all vehicle systems OFF, disconnect the harness connector at the A10 Inside Rearview Mirror. It may take up to 2 min for all vehicle systems to power down. Doors closed, courtesy lamps OFF.
2. Test for less than 10 ohms between the ground circuit terminal 5 and ground.
    - **If 10 ohms or greater**
    1. Ignition OFF.
    2. Test for less than 2 ohms in the ground circuit end to end.
        - If 2 ohms or greater, repair the open/high resistance in the circuit.
        - If less than 2 ohms, repair the open/high resistance in the ground connection.
    - **If less than 10 ohms**
3. Ignition ON.
4. Test for less than 1 V between the control circuit terminal 6 and ground while commanding the Green Indicator OFF with a scan tool.
    - **If 1 V or greater**
    1. Ignition OFF, disconnect the X1 harness connector at the K73 Telematics Communication Interface Control Module, ignition ON.
    2. Test for less than 1 V between the control circuit terminal 6 and ground.
        - If 1 V or greater, repair the short to voltage on the circuit.
        - If less than 1 V, replace the K73 Telematics Communication Interface Control Module.
    - **If less than 1 V**
5. Test for greater than 8 V between the control circuit terminal 6 and ground while commanding the Green Indicator ON with a scan tool.
    - **If 8 V or less**
    1. Ignition OFF, disconnect the X1 harness connector at the K73 Telematics Communication Interface Control Module.
    2. Test for infinite resistance between the control circuit terminal 6 and ground.
        - If less than infinite resistance, repair the short to ground on the circuit.
        - If infinite resistance
    3. Test for less than 2 ohms in the control circuit end to end.
        - If 2 ohms or greater, repair the open/high resistance in the circuit.
        - If less than 2 ohms, replace the K73 Telematics Communication Interface Control Module.
    - **If greater than 8 V**
6. Test or replace the A10 Inside Rearview Mirror.

Red LED Test

1. Ignition OFF, and all vehicle systems OFF, disconnect the harness connector at the A10 Inside Rearview Mirror. It may take up to 2 min for all vehicle systems to power down. Doors closed, courtesy lamps OFF.
2. Test for less than 10 ohms between the ground circuit terminal 5 and ground.

- **If 10 ohms or greater**

1. Ignition OFF.
2. Test for less than 2 ohms in the ground circuit end to end.
   - If 2 ohms or greater, repair the open/high resistance in the circuit.
   - If less than 2 ohms, repair the open/high resistance in the ground connection.

- **If less than 10 ohms**

3. Ignition ON.
4. Test for less than 1 V between the control circuit terminal 7 and ground while commanding the Red Indicator OFF with a scan tool.
   - **If 1 V or greater**

   1. Ignition OFF, disconnect the X1 harness connector at the K73 Telematics Communication Interface Control Module, ignition ON.
   2. Test for less than 1 V between the control circuit terminal 7 and ground.
      - If 1 V or greater, repair the short to voltage on the circuit.
      - If less than 1 V, replace the K73 Telematics Communication Interface Control Module.

   - **If less than 1 V**

5. Test for greater than 8 V between the control circuit terminal 7 and ground while commanding the Red Indicator ON with a scan tool.
   - **If 8 V or less**

   1. Ignition OFF, disconnect the X1 harness connector at the K73 Telematics Communication Interface Control Module.
   2. Test for infinite resistance between the control circuit terminal 7 and ground.
      - If less than infinite resistance, repair the short to ground on the circuit.
      - If infinite resistance
   3. Test for less than 2 ohms in the control circuit end to end.
      - If 2 ohms or greater, repair the open/high resistance in the circuit.
      - If less than 2 ohms, replace the K73 Telematics Communication Interface Control Module.

   - **If greater than 8 V**

6. Test or replace the A10 Inside Rearview Mirror.

Repair Instructions

Perform the **Diagnostic Repair Verification** after completing the repair.

- **Inside Rearview Mirror Replacement**
- **Control Module References** for telematics communication interface control module replacement, programming and setup.

ONSTAR CALL CENTER REMOTE FUNCTION REQUESTS MALFUNCTION

Diagnostic Instructions

- Perform the **Diagnostic System Check - Vehicle** prior to using this diagnostic procedure.
- Review **Strategy Based Diagnosis** for an overview of the diagnostic approach.
- **Diagnostic Procedure Instructions** provides an overview of each diagnostic category.

Circuit/System Description

The telematics communication interface control module has the capability of commanding the horn, initiating door lock/unlock, or operating the exterior lamps using the serial data circuits. These functions are commanded by the OnStar® Call Center per a customer request.

Diagnostic Aids

The customer concern may have been due to a lack of cellular service in a given area, or a failure in the National Cellular Network infrastructure that has since been corrected.

Reference Information

Schematic Reference

OnStar Schematics

Connector End View Reference

COMPONENT CONNECTOR END VIEWS - INDEX

Description and Operation

OnStar Description and Operation

Electrical Information Reference

- **Circuit Testing**
- **Connector Repairs**
- **Testing for Intermittent Conditions and Poor Connections**
- **Wiring Repairs**

Scan Tool Reference

Control Module References for scan tool information

Circuit/System Verification

NOTE:

- **It is necessary to inform the OnStar® Call Center advisor that this call is for vehicle diagnostic purposes.**
- **It is necessary to have the vehicle in an open outside area where a cellular**

call can be successfully placed and GPS data can be received from satellites.

1. Ignition ON.
2. Verify that the horn, lights, and the door locks on the vehicle operate properly.
   - **If an applicable vehicle system does not operate properly**

     Refer to **Diagnostic System Check - Vehicle** .

   - **If all applicable vehicle systems operate properly**
3. Verify that a call can be successfully placed to the OnStar Call Center by pressing the blue OnStar button.
   - **If unable to contact the OnStar® call center**

     Refer to **Unable to Contact OnStar Call Center**

   - **If able to contact the OnStar Call Center**
4. Verify with the OnStar advisor that all remote functions (door locks, lights, and horn) work.
   - **If the remote functions do not operate when requested**

     Replace the K73 Telematics Communication Interface Control Module

   - **If the remote functions operate when requested**
5. All OK.

Repair Instructions

Perform the **Diagnostic Repair Verification** after completing the repair.

Control Module References for telematics communication interface control module replacement, programming and setup.

ONSTAR BUTTON MALFUNCTION

Diagnostic Instructions

- Perform the **Diagnostic System Check - Vehicle** prior to using this diagnostic procedure.
- Review **Strategy Based Diagnosis** for an overview of the diagnostic approach.
- **Diagnostic Procedure Instructions** provides an overview of each diagnostic category.

DTC Descriptors

DTC B2476 04

Cellular Phone Select Service Switch Open

DTC B2476 59

Cellular Phone Select Service Switch Protection Time-out

DTC B2482 00

Cellular Phone Select Service Switch Range/Performance

Diagnostic Fault Information

Circuit	Short to Ground	Open/High Resistance	Short to Voltage	Signal Performance
10 V Reference	B2476 04	B2476 04	B2476 04	-
Signal Terminal 3	B2476 04	B2476 04	B2476 59	B2476 59, B2482 00
Ground	-	B2476 04	-	-
1. OnStar® Buttons Inoperative				

Circuit/System Description

The OnStar® button assembly consists of 3 buttons: Call/Answer, OnStar® Call Center, and OnStar® Emergency. The telematics communication interface control module supplies the OnStar® button assembly with 10 V via the 10 V reference circuit. Each of the buttons, when pressed, completes the circuit across a resistor allowing a specific voltage to be returned to the telematics communication interface control module over the keypad signal circuit. Depending upon the voltage range returned, the telematics communication interface control module is able to identify which button has been activated.

Conditions for Running the DTC

- Ignition ON.
- Battery voltage must be between 9-16 V.

Conditions for Setting the DTC

B2476 04

The telematics communication interface control module detects a short to voltage or an open/high resistance on the keypad 10 V reference circuit.

B2482 and B2476 59

The telematics communication interface control module detects a valid signal on the keypad signal circuit for longer than 15 s. If one of the OnStar® buttons is held or stuck for 15 s or greater, the telematics communication interface control module will set this DTC.

Action Taken When the DTC Sets

- The OnStar® status LED turns red.

- No calls can be placed.
- The telematics communication interface control module will ignore all inputs from the OnStar® button assembly.

Conditions for Clearing the DTC

- The condition responsible for setting the DTC no longer exists.
- A history DTC will clear once 50 consecutive malfunction-free ignition cycles have occurred.

Reference Information

Schematic Reference

OnStar Schematics

Connector End View Reference

COMPONENT CONNECTOR END VIEWS - INDEX

Description and Operation

OnStar Description and Operation

Electrical Information Reference

- **Circuit Testing**
- **Connector Repairs**
- **Testing for Intermittent Conditions and Poor Connections**
- **Wiring Repairs**

Scan Tool Reference

Control Module References for scan tool information

Circuit/System Verification

NOTE: Contact the OnStar® Call Center first before pressing the emergency button in order to notify them of the test.

1. Ignition ON.
2. Verify no DTCs are set.
    - **If any DTCs are set**

Diagnostic Trouble Code (DTC) List - Vehicle

- **If no DTCs are set**

3. Verify that each button of the S51 Telematics Button Assembly operates normally by pressing each button individually.
   - **If none of the buttons operate normally**

     Refer to Circuit/System Testing below.

   - **If some, but not all, of the buttons operate normally**

     Test or replace the A10 Inside Rearview Mirror.

   - **If all of the buttons operate normally**
4. All OK.

Circuit/System Testing

1. Ignition OFF and all vehicle systems OFF, disconnect the harness connector at the A10 Inside Rearview Mirror. It may take up to 2 min for all vehicle systems to power down.
2. Test for less than 10 ohms between the ground circuit terminal 5 and ground.
   - **If 10 ohms or greater**
   1. Ignition OFF.
   2. Test for less than 2 ohms in the ground circuit end to end.
      - If 2 ohms or greater, repair the open/high resistance in the circuit.
      - If less than 2 ohms, repair the open/high resistance in the ground connection.
   - **If less than 10 ohms**
3. Ignition ON.
4. Test for 8.0-10.5 V between the 10 V reference circuit terminal 4 and ground.
   - **If less than 8.0 V**
   1. Ignition OFF, disconnect the harness connector at the K73 Telematics Communication Interface Control Module.
   2. Test for infinite resistance between the 10 V reference circuit and ground.
      - If less than infinite resistance, repair the short to ground on the circuit.
      - If infinite resistance
   3. Test for less than 2 ohms in the 10 V reference circuit end to end.
      - If 2 ohms or greater, repair the open/high resistance in the circuit.
      - If less than 2 ohms, replace the K73 Telematics Communication Interface Control Module.
   - **If greater than 10.5 V**
   1. Ignition OFF, disconnect the harness connector at the K73 Telematics Communication Interface Control Module, ignition ON.
   2. Test for less than 1 V between the 10 V reference circuit and ground.
      - If 1 V or greater, repair the short to voltage on the circuit.

        - If less than 1 V, replace the K73 Telematics Communication Interface Control Module.
    - **If between 8.0-10.5 V**
5. Ignition OFF.
6. Test for 500-900 ohms between the signal circuit terminal 3 and ground.
    - **If less than 500 ohms**
    1. Disconnect the X1 harness connector at the K73 Telematics Communication Interface Control Module.
    2. Test for infinite resistance between the signal circuit and ground.
        - If less than infinite resistance, repair the short to ground on the circuit.
        - If infinite resistance, replace the K73 Telematics Communication Interface Control Module.
    - **If greater than 900 ohms**
    1. Disconnect the X1 harness connector at the K73 Telematics Communication Interface Control Module, ignition ON.
    2. Test for less than 1 V between the signal circuit and ground.
        - If 1 V or greater, repair the short to voltage on the circuit.
        - If less than 1 V
    3. Ignition OFF.
    4. Test for less than 2 ohms in the signal circuit end to end.
        - If 2 ohms or greater, repair the open/high resistance in the circuit.
        - If less than 2 ohms, replace the K73 Telematics Communication Interface Control Module.
    - **If between 500-900 ohms**
7. Test or replace the A10 Inside Rearview Mirror.

Repair Instructions

Perform the **Diagnostic Repair Verification** after completing the repair.

- **Inside Rearview Mirror Replacement**
- **Control Module References** for telematics communication interface control module replacement, programming and setup.

ONSTAR STEERING WHEEL CONTROL FUNCTIONS MALFUNCTION

Some vehicles equipped with the OnStar® system have the capability of accessing voice mailboxes and other automated phone systems by means of the steering wheel controls, while the OnStar® Personal Calling feature is in use. If the "Talk" or "Mute" button (depending upon the vehicle) on the steering wheel controls is depressed during an OnStar® Personal Calling call, the telematics communication interface control module receives the message on the serial data bus from either the radio or body control module. This message is interpreted as a request to turn any spoken numbers into dual tone multi-frequency tones to be delivered over the airwaves to the phone system the user is communicating with. Complete instructions for operation of these features can be found in the information provided to the customer with the OnStar® system.

The steering wheel controls are a resistor network that consist of multiple momentary contact switches and a series of resistors. The switches and resistor network are arranged so that each switch has a different resistance value. When a switch is pressed, a voltage drop occurs in the resistor network, which produces a specific voltage value unique to the switch selected, to be interpreted by either the radio or BCM. In the event the OnStar® steering wheel control functions are inoperative, technicians should refer to **Steering Wheel Controls Malfunction** , to begin diagnosis of the steering wheel control concern.

RADIO CONTROLS MALFUNCTION (WITH MONOCHROME DISPLAY)

Diagnostic Instructions

- Perform the **Diagnostic System Check - Vehicle** prior to using this diagnostic procedure.
- Review **Strategy Based Diagnosis** for an overview of the diagnostic approach.
- **Diagnostic Procedure Instructions** provides an overview of each diagnostic category.

Diagnostic Fault Information

Circuit	Short to Ground	Open/High Resistance	Short to Voltage	Signal Performance
Radio Controls B+	U0257, 1, 2, 3	2, 4	-	-
Radio Display B+	U0257, 1, 2, 3	U0257, 1, 3, 4	-	-
Radio Display Reset	U0257, 1, 2	-	-	-
Radio Display Wakeup	-	U0257, 1, 2	U0257, 1, 2	-
CGI Serial Data +	U0257, 1, 2	U0257, 1, 2	U0257, 1, 2	-
CGI Serial Data -	U0257, 1, 2	U0257, 1, 2	U0257, 1, 2	-
LIN Serial Data	2	2	2	-
Radio Controls ground	-	2	-	-
Radio Display Ground	-	-	-	-

1. Display Inoperative
2. Controls inoperative
3. Fault affects multiple components, dependant on vehicle equipment additional communication DTCs may be set
4. Fault may affect one or more components, dependant on fault location

Circuit/System Description

The radio controls and information display are separate components from the radio. Each component is supplied battery voltage and ground. The radio uses the wake up circuit to control the power state of the display. The radio controls communicate with the info display module through the LIN serial data circuit. Display backlighting dimming level, graphical data, and radio control inputs are communicated over the CGI data circuits between the display and the radio.

Reference Information

Schematic Reference

Radio/Navigation System Schematics

Connector End View Reference

COMPONENT CONNECTOR END VIEWS - INDEX

Description and Operation

Radio/Audio System Description and Operation (with Color Display), **Radio/Audio System Description and Operation (with Monochrome Display)**

Electrical Information Reference

- **Circuit Testing**
- **Connector Repairs**
- **Testing for Intermittent Conditions and Poor Connections**
- **Wiring Repairs**

Scan Tool Reference

Control Module References for scan tool information

Circuit/System Verification

1. Ignition ON, A11 Radio ON.
2. Verify that all radio controls operate and perform the correct function.
    - **If some, but not all, controls operate normally.**

      Replace the A22 Radio Controls.

    - **If all controls are inoperative.**

      Refer to Circuit/System Testing below

    - **If all radio controls operate and perform the correct function.**
3. All OK.

Circuit/System Testing

1. Ignition OFF, disconnect the harness connector at the A22 Radio Controls.
2. Test for less than 10 ohms between the ground circuit terminal 2 and ground.
    - **If 10 ohms or greater**
    1. Ignition OFF.
    2. Test for less than 2 ohms in the ground circuit end to end.
        - If 2 ohms or greater, repair the open/high resistance in the circuit.

- If less than 2 ohms, repair the open/high resistance in the ground connection.
- **If less than 10 ohms**

3. Verify that a test lamp illuminates between the B+ circuit terminal 1 and ground.
   - **If the test lamp does not illuminate and the circuit fuse is good.**
   1. Ignition OFF.
   2. Test for less than 2 ohms in the B+ circuit end to end.
      - If 2 ohms or greater, repair the open/high resistance in the circuit.
      - If less than 2 ohms, refer to **Power Mode Mismatch** .
   - **If the test lamp does not illuminate and the circuit fuse is open.**
   1. Ignition OFF.
   2. Test for infinite resistance between the B+ circuit and ground.
      - If less than infinite resistance, repair the short to ground on the circuit.
      - If infinite resistance, replace the A22 Radio Controls.
   - **If the test lamp illuminates.**
4. Ignition ON.
5. Test for 2-11.5 V between the serial data circuit terminal 4 and ground.
   - **If less than 2 V**
   1. Ignition OFF, disconnect the X1 harness connector at the P17 Info Display Module.
   2. Test for infinite resistance between the serial data circuit and ground.
      - If less than infinite resistance, repair the short to ground on the circuit.
      - If infinite resistance
   3. Test for less than 2 ohms in the serial data circuit end to end.
      - If 2 ohms or greater, repair the open/high resistance in the circuit.
      - If less than 2 ohms, replace the P17 Info Display Module.
   - **If greater than 11.5 V**
   1. Ignition OFF, disconnect the X1 harness connector at the P17 Info Display Module. Ignition ON.
   2. Test for less than 1 V between the serial data circuit and ground.
      - If 1 V or greater, repair the short to voltage on the circuit.
      - If less than 1 V, replace the P17 Info Display Module.
   - **If between 2-11.5 V**
6. Test or replace the A22 Radio Controls.

Repair Instructions

Perform the **Diagnostic Repair Verification** after completing the repair.

- **Driver Information Display Replacement**
- **Control Module References** for radio control assembly replacement, programming, and setup.

RADIO CONTROLS MALFUNCTION (WITH COLOR DISPLAY)

Diagnostic Instructions

- Perform the **Diagnostic System Check - Vehicle** prior to using this diagnostic procedure.
- Review **Strategy Based Diagnosis** for an overview of the diagnostic approach.
- **Diagnostic Procedure Instructions** provides an overview of each diagnostic category.

Diagnostic Fault Information

Circuit	Short to Ground	Open/High Resistance	Short to Voltage	Signal Performance
Radio Controls B+	U0257, 1, 2, 3	2, 4	-	-
Radio Display B+	U0257, 1, 2, 3	U0257, 1, 3, 4	-	-
Remote Enable Circuit	U0257, 1, 4	U0257, 1, 4	-	-
Radio Controls Reset	U0257, 1, 2	-	-	-
Radio Controls Wakeup	-	U0257, 1, 2	U0257, 1, 2	-
Radio Display Reset	U0257, 1	-	-	-
CGI Serial Data +	U0257, 1, 2	U0257, 1, 2	U0257, 1, 2	-
CGI Serial Data -	U0257, 1, 2	U0257, 1, 2	U0257, 1, 2	-
Touch Screen Serial Data +	U0257, 1	U0257, 1	U0257, 1	-
Touch Screen Serial Data -	-	U0257, 1	U0257, 1	-
Radio Controls ground	-	2	-	-
Radio Display Ground	-	-	-	-

1. Display Inoperative
2. Controls inoperative
3. Fault affects multiple components, dependant on vehicle equipment additional communication DTCs may be set
4. Fault may affect one or more components, dependant on fault location

Circuit/System Description

The radio controls are supplied battery voltage and ground. The radio controls the power state of the controls via a wake up circuit. Communications between the radio controls and the radio are through the CGI serial data circuits.

Reference Information

Schematic Reference

Radio/Navigation System Schematics

Connector End View Reference

COMPONENT CONNECTOR END VIEWS - INDEX

Description and Operation

Radio/Audio System Description and Operation (with Color Display), **Radio/Audio System Description and Operation (with Monochrome Display)**

Electrical Information Reference

- **Circuit Testing**
- **Connector Repairs**
- **Testing for Intermittent Conditions and Poor Connections**
- **Wiring Repairs**

Scan Tool Reference

Control Module References for scan tool information

Circuit/System Verification

1. Ignition ON, A11 Radio ON.
2. Verify that all radio controls operate and perform the correct function.
    - **If some, but not all, controls operate normally.**

      Replace the A22 Radio Controls.

    - **If all controls are inoperative.**

      Refer to Circuit/System Testing below

    - **If all radio controls operate and perform the correct function.**
3. All OK.

Circuit/System Testing

1. Ignition OFF, disconnect the harness connector at the A22 Radio Controls.
2. Test for less than 10 ohms between the ground circuit terminal 2 and ground.
    - **If 10 ohms or greater**
    1. Ignition OFF.
    2. Test for less than 2 ohms in the ground circuit end to end.
        - If 2 ohms or greater, repair the open/high resistance in the circuit.
        - If less than 2 ohms, repair the open/high resistance in the ground connection.
    - **If less than 10 ohms**
3. Test for less than 20 ohms between the data shield circuit terminal 6 and ground.
    - **If 20 ohms or greater**

1. Ignition OFF, disconnect the X1 connector at the A11 Radio.
2. Test for less than 2 ohms in the data shield circuit end to end.
    - If 2 ohms or greater, repair the open/high resistance in the circuit.
    - If less than 2 ohms, replace the A11 Radio.

- **If less than 20 ohms**

4. Verify that a test lamp illuminates between the B+ circuit terminal 1 and ground.
    - **If the test lamp does not illuminate and the circuit fuse is good**

    1. Ignition OFF.
    2. Test for less than 2 ohms in the B+ circuit end to end.
        - If 2 ohms or greater, repair the open/high resistance in the circuit.
        - If less than 2 ohms, refer to **Power Mode Mismatch** .

    - **If the test lamp does not illuminate and the circuit fuse is open**

    1. Ignition OFF.
    2. Test for infinite resistance between the B+ circuit and ground.
        - If less than infinite resistance, repair the short to ground on the circuit.
        - If infinite resistance, replace the A22 Radio Controls.

    - **If the test lamp illuminates.**
5. Ignition ON.
6. Test for 2-3 V between the serial data circuit terminals listed below and ground.
    - terminal 4
    - terminal 5

    - **If less than 2 V**

    1. Ignition OFF, disconnect the X1 harness connector at the A11 Radio.
    2. Test for infinite resistance between the serial data circuit and ground.
        - If less than infinite resistance, repair the short to ground on the circuit.
        - If infinite resistance
    3. Test for less than 2 ohms in the serial data circuit end to end.
        - If 2 ohms or greater, repair the open/high resistance in the circuit.
        - If less than 2 ohms, replace the A11 Radio.

    - **If greater than 3 V**

    1. Ignition OFF, disconnect the X1 harness connector at the A11 Radio. Ignition ON.
    2. Test for less than 1 V between the serial data circuit and ground.
        - If 1 V or greater, repair the short to voltage on the circuit.
        - If less than 1 V, replace the A11 Radio.

    - **If between 2-3 V**
7. Test for less than 1 V between the control circuit terminals listed below and ground.
    - terminal 7
    - terminal 8

- **If greater than 1 V**

1. Ignition OFF, disconnect the X1 harness connector at the A11 Radio. Ignition ON.
2. Test for less than 1 V between the control circuit and ground.
   - If 1 V or greater, repair the short to voltage on the circuit.
   - If less than 1 V, replace the A11 Radio.

- **If less than 1 V**

8. Ignition OFF, disconnect the X1 harness connector at the A11 Radio.
9. Test for infinite resistance between the control circuit terminals listed below and ground.
   - A22 Radio Controls terminal 7
   - A22 Radio Controls terminal 8
   - **If less than infinite resistance,**

     Repair the short to ground on the circuit.

   - **If infinite resistance**
10. Test for less than 2 ohms between the control circuits listed below.
    - A22 Radio Controls terminal 7 and the A11 Radio terminal 13 X1
    - A22 Radio Controls terminal 8 and the A11 Radio terminal 27 X1
    - **If 2 ohms or greater**

      Repair the open/high resistance in the circuit.

    - **If less than 2 ohms.**
11. Replace the A22 Radio Controls. Connect all harness connectors.
12. Ignition ON, radio ON.
13. Verify that all radio controls operate and perform the correct function.
    - **If the radio controls still malfunction.**

      Replace the A11 Radio.

    - **If all radio controls operate and perform the correct function.**
14. All OK

Repair Instructions

Perform the **Diagnostic Repair Verification** after completing the repair.

Control Module References for radio or radio control assembly replacement, programming, and setup.

RADIO INFORMATION DISPLAY MALFUNCTION (WITH MONOCHROME DISPLAY)

Diagnostic Instructions

- Perform the **Diagnostic System Check - Vehicle** prior to using this diagnostic procedure.
- Review **Strategy Based Diagnosis** for an overview of the diagnostic approach.
- **Diagnostic Procedure Instructions** provides an overview of each diagnostic category.

Diagnostic Fault Information

Circuit	Short to Ground	Open/High Resistance	Short to Voltage	Signal Performance
Radio Controls B+	U0257, 1, 2, 3	2, 4	-	-
Radio Display B+	U0257, 1, 2, 3	U0257, 1, 3, 4	-	-
Radio Display Reset	U0257, 1, 2	-	-	-
Radio Display Wakeup	-	U0257, 1, 2	U0257, 1, 2	-
Serial Data +	U0257, 1, 2	U0257, 1, 2	U0257, 1, 2	-
Serial Data -	U0257, 1, 2	U0257, 1, 2	U0257, 1, 2	-
LIN Serial Data	2	2	2	-
Radio Controls Ground	-	2	-	-
Radio Display Ground	-	-	-	-

1. Display Inoperative
2. Controls inoperative
3. Fault affects multiple components, dependant on vehicle equipment additional communication DTCs may be set
4. Fault may affect one or more components, dependant on fault location

Circuit/System Description

The radio controls and information display are separate components from the radio. Each component is supplied battery voltage and ground. The radio uses the wake up circuit to control the power state of the display. The radio controls communicate with the info display module through the LIN serial data circuit. Display backlighting dimming level, graphical data, and radio control inputs are communicated over the data circuits between the display and the radio.

Reference Information

Schematic Reference

Radio/Navigation System Schematics

Connector End View Reference

COMPONENT CONNECTOR END VIEWS - INDEX

Description and Operation

Radio/Audio System Description and Operation (with Color Display), **Radio/Audio System Description and Operation (with Monochrome Display)**

Electrical Information Reference

- **Circuit Testing**
- **Connector Repairs**
- **Testing for Intermittent Conditions and Poor Connections**
- **Wiring Repairs**

Scan Tool Reference

Control Module References for scan tool information

Circuit/System Testing

1. Ignition OFF, disconnect the harness connector at the P17 Info Display Module.
2. Test for less than 10 ohms between the ground circuit terminal 2 and ground.
    - **If 10 ohms or greater.**
    1. Ignition OFF.
    2. Test for less than 2 ohms in the ground circuit end to end.
        - If 2 ohms or greater, repair the open/high resistance in the circuit.
        - If less than 2 ohms, repair the open/high resistance in the ground connection.
    - **If less than 10 ohms.**
3. Test for less than 20 ohms between the data shield circuit terminal 6 and ground.
    - **If 20 ohms or greater.**
    1. Ignition OFF, disconnect the X1 connector at the A11 Radio.
    2. Test for less than 2 ohms in the data shield circuit end to end.
        - If 2 ohms or greater, repair the open/high resistance in the circuit.
        - If less than 2 ohms, replace the A11 Radio.
    - **If less than 20 ohms.**
4. Verify that a test lamp illuminates between the B+ circuit terminal 1 and ground.
    - **If the test lamp does not illuminate and the circuit fuse is good.**
    1. Ignition OFF.
    2. Test for less than 2 ohms in the B+ circuit end to end.
        - If 2 ohms or greater, repair the open/high resistance in the circuit.
        - If less than 2 ohms, refer to **Power Mode Mismatch** .
    - **If the test lamp does not illuminate and the circuit fuse is open.**
    1. Ignition OFF.
    2. Test for infinite resistance between the B+ circuit and ground.
        - If less than infinite resistance, repair the short to ground on the circuit.
        - If infinite resistance, replace the P17 Info Display Module.
    - **If the test lamp illuminates.**

5. Ignition ON.
6. Test for 2-3 V between the data circuit terminals listed below and ground.
    - terminal 7
    - terminal 8
    - **If less than 2 V**
    1. Ignition OFF, disconnect the X1 harness connector at the A11 Radio.
    2. Test for infinite resistance between the data circuit and ground.
        - If less than infinite resistance, repair the short to ground on the circuit.
        - If infinite resistance
    3. Test for less than 2 ohms in the data circuit end to end.
        - If 2 ohms or greater, repair the open/high resistance in the circuit.
        - If less than 2 ohms, replace the A11 Radio.
    - **If greater than 3 V**
    1. Ignition OFF, disconnect the X1 harness connector at the A11 Radio. Ignition ON.
    2. Test for less than 1 V between the signal circuit and ground.
        - If 1 V or greater, repair the short to voltage on the circuit.
        - If less than 1 V, replace the A11 Radio.
    - **If 2-3 V**
7. Test for less than 1 V between the control circuit terminals listed below and ground.
    - terminal 4
    - terminal 5
    - **If greater than 1 V**
    1. Ignition OFF, disconnect the X1 harness connector at the A11 Radio. Ignition ON.
    2. Test for less than 1 V between the control circuit and ground.
        - If 1 V or greater, repair the short to voltage on the circuit.
        - If less than 1 V, replace the A11 Radio.
    - **If less than 1 V**
8. Ignition OFF, disconnect the X1 harness connector at the A11 Radio.
9. Test for infinite resistance between the control circuit terminals listed below and ground.
    - P17 Info Display Module terminal 4
    - P17 Info Display Module terminal 5
    - **If less than infinite resistance,**

      Repair the short to ground on the circuit.

    - **If infinite resistance**
10. Test for less than 2 ohms between the control circuits listed below.
    - P17 Info Display Module terminal 4 and the A11 Radio terminal 13 X1

- P17 Info Display Module terminal 5 and the A11 Radio terminal 27 X1
  - **If 2 ohms or greater**

    Repair the open/high resistance in the circuit.

  - **If less than 2 ohms.**

11. Replace the P17 Information Display Module. Connect all harness connectors.
12. Ignition ON, radio ON.
13. Verify the P17 Info Display Module turns on and information is shown on the display.
    - **If the information display still malfunctions.**

      Replace the A11 Radio.

    - **If the info display module turns on and information is shown on the display.**
14. All OK.

Repair Instructions

Perform the **Diagnostic Repair Verification** after completing the repair.

- **Driver Information Display Replacement**
- **Control Module References** for radio replacement, programming, and setup.

RADIO INFORMATION DISPLAY MALFUNCTION (WITH COLOR DISPLAY)

Diagnostic Instructions

- Perform the **Diagnostic System Check - Vehicle** prior to using this diagnostic procedure.
- Review **Strategy Based Diagnosis** for an overview of the diagnostic approach.
- **Diagnostic Procedure Instructions** provides an overview of each diagnostic category.

Diagnostic Fault Information

Circuit	Short to Ground	Open/High Resistance	Short to Voltage	Signal Performance
Radio Controls B+	U0257, 1, 2, 3	2, 4	-	-
Radio Display B+	U0257, 1, 2, 3	U0257, 1, 3, 4	-	-
Remote Enable Circuit	U0257, 1, 4	U0257, 1, 4	-	-
Radio Controls Reset	U0257, 1, 2	-	-	-
Radio Controls Wakeup	-	U0257, 1, 2	U0257, 1, 2	-
Radio Display Reset	U0257, 1	-	-	-
CGI Serial Data +	U0257, 1, 2	U0257, 1, 2	U0257, 1, 2	-
CGI Serial Data -	U0257, 1, 2	U0257, 1, 2	U0257, 1, 2	-

Touch Screen Serial Data +	U0257, 1	U0257, 1	U0257, 1	-
Touch Screen Serial Data -	-	U0257, 1	U0257, 1	-
Radio Controls ground	-	2	-	-
Radio Display Ground	-	-	-	-

1. Display Inoperative
2. Controls inoperative
3. Fault affects multiple components, dependant on vehicle equipment additional communication DTCs may be set
4. Fault may affect one or more components, dependant on fault location

Circuit/System Description

The radio info display module is supplied battery voltage and ground. The radio controls the power state of the display through the remote enable circuit, which is also used to control the power state of other infotainment devices. The info display module receives digital video data from the radio for on-screen display information through the video signal circuits. The radio communicates with the info display module over the touch screen serial data circuits for touch screen inputs and backlighting dimming level.

Reference Information

Schematic Reference

Radio/Navigation System Schematics

Connector End View Reference

COMPONENT CONNECTOR END VIEWS - INDEX

Description and Operation

Radio/Audio System Description and Operation (with Color Display), **Radio/Audio System Description and Operation (with Monochrome Display)**

Electrical Information Reference

- **Circuit Testing**
- **Connector Repairs**
- **Testing for Intermittent Conditions and Poor Connections**
- **Wiring Repairs**

Scan Tool Reference

Control Module References for scan tool information

Circuit/System Verification

1. Verify DTC B1265 is not set.
    - **If DTC B1265 is set.**

      Refer to **Diagnostic Trouble Code (DTC) List - Vehicle** .

    - **If DTC B1265 is not set.**
2. Ignition ON, A11 Radio ON.
3. Verify the P17 Info Display Module turns on and information is shown on the display.
    - **If the P17 Info Display Module does not turn on, or information is not shown in the display.**

      Refer to Circuit/System Testing below

    - **If the P17 Info Display Module turns on and information is shown on the display.**
4. All OK.

Circuit/System Testing

1. Ignition OFF.
2. Verify the video interface cable is properly connected at the P17 Info Display Module X2 and A11 Radio X3 connections and there is no damage to the cable or connections.
    - **If connection problems or cable damage is noted.**

      Perform the appropriate repair or replacement to correct any issues.

    - **If no issues are found with the video interface cable.**
3. Disconnect the X1 harness connector at the P17 Info Display Module.
4. Test for less than 10 ohms between the ground circuit terminal 2 and ground.
    - **If 10 ohms or greater**
    1. Ignition OFF.
    2. Test for less than 2 ohms in the ground circuit end to end.
        - If 2 ohms or greater, repair the open/high resistance in the circuit.
        - If less than 2 ohms, repair the open/high resistance in the ground connection.
    - **If less than 10 ohms**
5. Test for less than 20 ohms between the data shield circuit terminal 7 and ground.
    - **If 20 ohms or greater**
    1. Ignition OFF, disconnect the X1 connector at the A11 Radio.
    2. Test for less than 2 ohms in the data shield circuit end to end.
        - If 2 ohms or greater, repair the open/high resistance in the circuit.
        - If less than 2 ohms, replace the A11 Radio.
    - **If less than 20 ohms**
6. Verify that a test lamp illuminates between the B+ circuit terminal 1 and ground.

- **If the test lamp does not illuminate and the circuit fuse is good**

1. Ignition OFF.
2. Test for less than 2 ohms in the B+ circuit end to end.
    - If 2 ohms or greater, repair the open/high resistance in the circuit.
    - If less than 2 ohms, refer to **Power Mode Mismatch** .

- **If the test lamp does not illuminate and the circuit fuse is open**

1. Ignition OFF.
2. Test for infinite resistance between the B+ circuit and ground.
    - If less than infinite resistance, repair the short to ground on the circuit.
    - If infinite resistance, replace the P17 Info Display Module.

- **If the test lamp illuminates.**

7. Ignition ON, radio ON.
8. Verify that a test lamp illuminates between the control circuit terminal 6 and ground.
    - **If the test lamp does not illuminate.**

    1. Ignition OFF, disconnect the X1 harness connector at the A11 Radio.
    2. Test for infinite resistance between the control circuit and ground.
        - If less than infinite resistance, repair the short to ground on the circuit.
        - If infinite resistance
    3. Test for less than 2 ohms in the control circuit end to end.
        - If 2 ohms or greater, repair the open/high resistance in the circuit.
        - If less than 2 ohms, replace the A11 Radio.

    - **If the test lamp illuminates.**

9. Test for 2-3 V between the data circuit terminals listed below and ground.
    - terminal 4
    - terminal 8

    - **If less than 2 V**

    1. Ignition OFF, disconnect the X1 harness connector at the A11 Radio.
    2. Test for infinite resistance between the data circuit and ground.
        - If less than infinite resistance, repair the short to ground on the circuit.
        - If infinite resistance
    3. Test for less than 2 ohms in the data circuit end to end.
        - If 2 ohms or greater, repair the open/high resistance in the circuit.
        - If less than 2 ohms, replace the A11 Radio.

    - **If greater than 3 V**

    1. Ignition OFF, disconnect the X1 harness connector at the A11 Radio. Ignition ON.
    2. Test for less than 1 V between the signal circuit and ground.
        - If 1 V or greater, repair the short to voltage on the circuit.
        - If less than 1 V, replace the A11 Radio.

- **If between 2-3 V**

10. Ignition ON.
11. Test for less than 1 V between the control circuit terminal 5 and ground.
    - **If greater than 1 V**
    1. Ignition OFF, disconnect the X2 harness connector at the A11 Radio. Ignition ON.
    2. Test for less than 1 V between the control circuit and ground.
        - If 1 V or greater, repair the short to voltage on the circuit.
        - If less than 1 V, replace the A11 Radio.
    - **If less than 1 V**
12. Ignition OFF, disconnect the X2 harness connector at the A11 Radio.
13. Test for infinite resistance between the P17 Info Display Module control circuit terminal 5 X1 and ground.
    - **If less than infinite resistance,**

      Repair the short to ground on the circuit.

    - **If infinite resistance**
14. Test for less than 2 ohms between the P17 Info Display Module control circuit terminal 5 X1 and the A11 Radio control circuit terminal 10 X2.
    - **If 2 ohms or greater**

      Repair the open/high resistance in the circuit.

    - **If less than 2 ohms.**
15. Replace the video interface cable.
16. Connect all harness connectors.
17. Ignition ON, radio ON.
18. Verify the P17 Info Display Module turns on and information is shown on the display.
    - **If the P17 Info Display Module does not turn on, or information is not shown in the display.**
    1. Replace the P17 Info Display Module.
    2. Ignition ON, radio ON.
    3. Verify the P17 Info Display Module turns on and information is shown on the display.
        - If the information display malfunctions, replace the A11 Radio.
        - If the info display module turns on and information is shown on the display.
    4. All OK.
    - **If the info display module turns on and information is shown on the display.**
19. All OK

Repair Instructions

Perform the **Diagnostic Repair Verification** after completing the repair.

- **Driver Information Display Replacement**
- **Control Module References** for radio replacement, programming, and setup.

RADIO POOR RECEPTION

Diagnostic Instructions

- Perform the **Diagnostic System Check - Vehicle** prior to using this diagnostic procedure.
- Review **Strategy Based Diagnosis** for an overview of the diagnostic approach.
- **Diagnostic Procedure Instructions** provides an overview of each diagnostic category.

DTC Descriptors

DTC B125A 02

Antenna Signal Circuit Short to Ground

DTC B125A 04

Antenna Signal Circuit Open Circuit

Diagnostic Fault Information

Circuit	Short to Ground	Open/High Resistance	Short to Voltage	Signal Performance
Radio Antenna Coax	B125A 02	B125A 04	1	-
Ground	-	1	-	-
1. May exhibit possible AM/FM interference.				

Circuit/System Description

The multi-band antenna is located on the roof of the vehicle. The radio antenna is enabled when the radio is turned on. The radio provides battery voltage to the antenna using the center conductor of the antenna coaxial cable. When a 12 V signal is seen on the center conductor of the antenna coax, both AM and FM signals are amplified.

Conditions for Running the DTC

- Ignition ON.
- Battery voltage must be between 9-16 V.

Conditions for Setting the DTC

B125A 02

The radio detects a short to ground in the antenna signal circuit center conductor.

B125A 04

The radio detects an open in the antenna signal circuit center conductor.

Action Taken When the DTC Sets

Radio reception may be poor or not available.

Conditions for Clearing the DTC

- The condition responsible for setting the DTC no longer exists.
- A history DTC will clears after 50 consecutive malfunction-free ignition cycles have occurred.

Reference Information

Schematic Reference

Radio/Navigation System Schematics

Connector End View Reference

COMPONENT CONNECTOR END VIEWS - INDEX

Description and Operation

Radio/Audio System Description and Operation (with Color Display), **Radio/Audio System Description and Operation (with Monochrome Display)**

Electrical Information Reference

- **Circuit Testing**
- **Connector Repairs**
- **Testing for Intermittent Conditions and Poor Connections**
- **Wiring Repairs**

Scan Tool Reference

Control Module References for scan tool information

Circuit/System Verification

1. Ignition ON, A11 Radio ON.
2. Verify station reception is normal when tuned to several known good AM and FM stations.
    - **If AM or FM reception is poor.**

Refer to Circuit/System Testing below

- **If reception is normal**

3. All OK.

Circuit/System Testing

1. Ignition OFF, disconnect the radio antenna coax cable from the A11 Radio and from the T4G Cellular Phone, Navigation, and Digital Radio Antenna.
2. Verify the antenna coax cable passes the coax cable component test. Refer to Component Testing below.
   - **If the coax cable does not pass the test**

     Replace the antenna coax cable

   - **If the coax cable passes the test**
3. Connect the radio antenna coax cable to the A11 Radio.
4. Ignition ON, A11 Radio ON. Verify a test lamp illuminates between the antenna coax cable center terminal and ground at the T4G Cellular Phone, Navigation, and Digital Radio Antenna.
   - **If the test lamp does not illuminate**

     replace the A11 Radio.

   - **If the test lamp illuminates**
5. Test or replace the T4G Cellular Phone, Navigation, and Digital Radio Antenna.

Component Testing

CAUTION: Refer to Test Probe Caution .

NOTE: Before testing the coax cable, check the cable exterior for being pinched, cut, damaged, or having loose connections at the components, which can cause reception issues.

To prevent false reading when testing the center coax terminals, use care not to ground the test probe on the outer housing/shield.

Coax Cable Test

1. Ignition OFF, disconnect the coax cable at both components.
2. Test for less than 5 ohms between coax cable center terminal end to end.
   - **If 5 ohms or greater**

     Replace the coax cable

- **If less than 5 ohms**

3. Test for less than 5 ohms between the coax cable outer shield end to end.
   - **If 5 ohms or greater**

     Replace the coax cable

   - **If less than 5 ohms**
4. Test for infinite resistance between the coax cable center terminal and the coax cable outer shield.
   - **If less than infinite resistance**

     Replace the coax cable

   - **If infinite resistance**
5. All OK

Repair Instructions

Perform the **Diagnostic Repair Verification** after completing the repair.

- **Radio Antenna Base Replacement**
- **Control Module References** for Radio replacement, programming, and setup.

SPEAKER REPLACEMENT REFERENCE

Speaker Replacement Reference

Component	Repair Instruction
Center I/P Speaker	**Radio Front Speaker Replacement**
Front Side Door Speakers	**Radio Front Side Door Speaker Replacement**
Front Tweeter Speakers	**Radio Windshield Side Garnish Molding Speaker Replacement**
Rear Side Door Speakers	**Radio Rear Side Door Speaker Replacement**
Subwoofer Speakers	**Radio Rear Compartment Speaker Replacement**

SPEAKER MALFUNCTION

Diagnostic Instructions

- Perform the **Diagnostic System Check - Vehicle** prior to using this diagnostic procedure.
- Review **Strategy Based Diagnosis** for an overview of the diagnostic approach.
- **Diagnostic Procedure Instructions** provides an overview of each diagnostic category.

Diagnostic Fault Information

	Short to	Open/High	Short to	

Circuit	Ground	Resistance	Voltage	Signal Performance
Amplifier B+	1	1	-	-
Amplifier Center Audio Signal	2	2	2, 3	2
Amplifier LF Audio Signal	2	2	2, 3	2
Amplifier LR Audio Signal	2	2	2, 3	2
Amplifier RF Audio Signal	2	2	2, 3	2
Amplifier RR Audio Signal	2	2	2, 3	2
Amplifier Subwoofer Audio Signal	2	2	2, 3	2
Radio LF Audio Signal	B1025 02*, 2	B1025 02*, 2	B1025 02*, 2, 3	2
Radio LR Audio Signal	B1035 02*, 2	B1035 02*, 2	B1035 02*, 2, 3	2
Radio RF Audio Signal	B1045 02*, 2	B1045 02*, 2	B1045 02*, 2, 3	2
Radio RR Audio Signal	B1055 02*, 2	B1055 02*, 2	B1055 02*, 2, 3	2
Remote Enable Signal	B1265 02, 1	1, 4	-	-
Amplifier Control	B1287 02	B1287 04	B1287 01	-
Amplifier Ground	1	1	-	-

1. Audio inoperative, no sound from all speakers.
2. No or reduced audio from speaker(s) on the affected audio circuit.
3. Noticeable audio distortion may be present.
4. Fault may affect one or more components, dependant on vehicle equipment.
* When equipped with an amplifier, the radio does not set this DTC.

Circuit/System Description

Each of the audio output channel circuits (+) and (-), at the radio and audio amplifier have a DC bias voltage that is approximately one half of battery voltage. When using a DMM, each of the audio output channel circuits will measure approximately 6.5 V DC. The audio being played on the system is produced by a varying AC voltage that is centered around the DC bias voltage on the same circuit. The AC voltage is what causes the speaker cone to move and produce sound. The frequency (Hz) of the AC voltage signal is directly related to the frequency of the input (audio source playing) to the audio system. Both the DC bias voltage and the AC voltage signals are needed for the audio system to properly produce sound.

Diagnostic Aids

- Improper speaker mounting or loose trim may cause an audible buzz or distortion. Inspect the appropriate speaker and the surrounding interior trim for proper and secure mounting.

  The EL-50334-6 Audio System Diagnostic CD contains audio tracks that can be used to duplicate and isolate such concerns. Tracks 11 and 12 contain audio sweep tones for testing for speaker and grill rattles.

If the speaker or surrounding interior trim is found to be loose or improperly secured, correctly secure the item.

- The test tones on the CD may be copied to a USB drive or other device to use during testing.
- When equipped with an amplifier, it is possible for some individual circuit faults to affect more than one speakers operation. Perform diagnostic tests in the sequence listed to avoid misdiagnosis.
- The amplifier control circuit will measure less than 1 V when the mute function is OFF, and approximately 8 V DC when at full mute. When mute is active, the radio stops sending the varying AC voltage to the amplifier/speakers.

Reference Information

Schematic Reference

Radio/Navigation System Schematics

Connector End View Reference

COMPONENT CONNECTOR END VIEWS - INDEX

Description and Operation

Radio/Audio System Description and Operation (with Color Display), **Radio/Audio System Description and Operation (with Monochrome Display)**

Electrical Information Reference

- **Circuit Testing**
- **Connector Repairs**
- **Testing for Intermittent Conditions and Poor Connections**
- **Wiring Repairs**

Scan Tool Reference

Control Module References for scan tool information

Special Tools

EL-50334-50 USB Cable and Adapter Kit

Circuit/System Verification

Without Amplifier

1. Ignition ON, A11 Radio ON, mute OFF.
2. Verify clear audio is heard from each speaker, adjusting fade and balance controls to test each speaker

individually.

- **If audio is inoperative from one or more speakers, or the audio emitted is not clear**

  Refer to Speaker Malfunction below - without Amplifier.

- **If clear audio is heard from all speakers**

3. All OK.

With Amplifier

1. Ignition ON, A11 Radio ON, mute OFF.
2. Verify clear audio is heard from each speaker, adjusting fade and balance controls to test each speaker individually.
   - **If audio is inoperative from one or more speakers, or the audio emitted is not clear**

     Refer to Speaker Malfunction below- with Amplifier.

   - **If clear audio is heard from all speakers**
3. All OK.

Circuit/System Testing

Speaker Malfunction - without Amplifier

1. Ignition OFF, disconnect the harness connector at the appropriate P19 Speaker. Ignition ON, radio ON, mute OFF.
2. Test for 5-7 V between each audio signal circuit terminal 1 and terminal 2 and ground.
   - **If less than 5 V**
   1. Ignition OFF, disconnect the X1 harness connector at the A11 Radio.
   2. Test for infinite resistance between the signal circuit and ground.
      - If less than infinite resistance, repair the short to ground on the circuit.
      - If infinite resistance
   3. Test for less than 2 ohms in the signal circuit end to end.
      - If 2 ohms or greater, repair the open/high resistance in the circuit.
      - If less than 2 ohms, replace the A11 Radio.
   - **If greater than 7 V**
   1. Ignition OFF, disconnect the X1 harness connector at the A11 Radio. Ignition ON.
   2. Test for less than 1 V between the signal circuit and ground.
      - If 1 V or greater, repair the short to voltage on the circuit.
      - If less than 1 V, replace the A11 Radio.
   - **If between 5-7 V**

NOTE: In the following tests, audio signal frequencies (Hz) will be tested. To prevent misdiagnosis, the door chime must be OFF during testing. Ensure the driver door latch is closed during testing.

3. Play track number three (50 Hz bass test tone) from the EL-50334-6 Audio Test CD.
4. Test for 49-51 Hz AC between each signal circuit terminal 1 and terminal 2 and ground.
   - **If not between 49-51 Hz AC**

     Replace the A11 Radio.

   - **If between 49-51 Hz AC**
5. Test or replace the P19 Speaker.

Speaker Malfunction- with Amplifier

NOTE: In the following tests, audio signal frequencies (Hz) will be tested. To prevent misdiagnosis, the door chime must be OFF during testing. Ensure the driver door latch is closed during testing.

1. Ignition OFF, disconnect the X1 harness connector at the T3 Audio Amplifier.
2. Test for less than 10 ohms between the ground circuit terminal 8 and ground.
   - **If 10 ohms or greater**
   1. Ignition OFF.
   2. Test for less than 2 ohms in the ground circuit end to end.
      - If 2 ohms or greater, repair the open/high resistance in the circuit.
      - If less than 2 ohms, repair the open/high resistance in the ground connection.
   - **If less than 10 ohms**
3. Verify that a test lamp illuminates between the B+ circuit terminal 4 and ground.
   - **If the test lamp does not illuminate and the circuit fuse is good**
   1. Ignition OFF.
   2. Test for less than 2 ohms in the B+ circuit end to end.
      - If 2 ohms or greater, repair the open/high resistance in the circuit.
      - If less than 2 ohms, refer to **Power Mode Mismatch** .
   - **If the test lamp does not illuminate and the circuit fuse is open**
   1. Ignition OFF.
   2. Test for infinite resistance between the B+ circuit and ground.
      - If less than infinite resistance, repair the short to ground on the circuit.
      - If infinite resistance, replace the T3 Audio Amplifier.
   - **If the test lamp illuminates**
4. Disconnect the X3 harness connector at the T3 Audio Amplifier.

5. Verify a test lamp does not illuminate between the control circuit terminal 8 and ground.
    - **If the test lamp illuminates**
    1. Disconnect the X1 harness at the A11 Radio.
    2. Verify a test lamp does not illuminate between the control circuit and ground.
        - If the test lamp illuminates, repair the short to voltage on the circuit.
        - If the test lamp does not illuminate, replace the A11 Radio.
    - **If the test lamp does not illuminate**
6. Ignition ON, A11 Radio ON.
7. Verify a test lamp illuminates between the control circuit terminal 8 and ground.
    - **If the test lamp does not illuminate**
    1. Ignition OFF. Disconnect the X1 harness at the A11 Radio.
    2. Test for less than 2 ohms in the control circuit end to end.
        - If 2 ohms or greater, repair the open/high resistance in the circuit.
        - If less than 2 ohms, replace the A11 Radio.
    - **If the test lamp illuminates**
8. Radio ON, mute ON.
9. Test for 7.5-8.5 V between the control circuit terminal 16 and ground.
    - **If greater than 8.5 V**
    1. Ignition OFF, disconnect the X1 harness connector at the A11 Radio. Ignition ON.
    2. Test for less than 1 V between the control circuit and ground.
        - If 1 V or greater, repair the short to voltage on the circuit.
        - If less than 1 V, replace the A11 Radio.
    - **If less than 7.5 V**
    1. Ignition OFF, disconnect the X1 harness connector at the A11 Radio.
    2. Test for infinite resistance between the control circuit and ground.
        - If less than infinite resistance, repair the short to ground on the circuit.
        - If infinite resistance
    3. Test for less than 2 ohms in the signal circuit end to end.
        - If 2 ohms or greater, repair the open/high resistance in the circuit.
        - If less than 2 ohms, replace the A11 Radio.
    - **If between 7.5-8.5 V**
10. Radio ON, mute OFF.
11. Test for less than 1 V between the control circuit terminal 16 and ground.
    - **If greater than 1 V**

      Replace the A11 Radio.

    - **If less than 1 V**

12. Test for 5-7 V between the signal circuit terminals listed below and ground:
    - Left front low level audio signal (+) terminal 12
    - Left front low level audio signal (-) terminal 11
    - Right front low level audio signal (+) terminal 9
    - Right front low level audio signal (-) terminal 10
    - Left rear low level audio signal (+) terminal 1
    - Left rear low level audio signal (-) terminal 2
    - Right rear low level audio signal (+) terminal 4
    - Right rear low level audio signal (-) terminal 3
    - **If less than 5 V**
    1. Ignition OFF, disconnect the X1 harness connector at the A11 Radio.
    2. Test for infinite resistance between the signal circuit and ground.
        - If less than infinite resistance, repair the short to ground on the circuit.
        - If infinite resistance
    3. Test for less than 2 ohms in the signal circuit end to end.
        - If 2 ohms or greater, repair the open/high resistance in the circuit.
        - If less than 2 ohms, replace the A11 Radio.
    - **If greater than 7 V**
    1. Ignition OFF, disconnect the X1 harness connector at the A11 Radio. Ignition ON.
    2. Test for less than 1 V between the signal circuit and ground.
        - If 1 V or greater, repair the short to voltage on the circuit.
        - If less than 1 V, replace the A11 Radio.
    - **If between 5-7 V**
13. Play track number three (50 Hz bass test tone) from the EL-50334-6 Audio Test CD.
14. Test for 49-51 Hz AC between the audio signal circuit terminals listed below and ground:
    - Left front low level audio signal (+) terminal 12
    - Left front low level audio signal (-) terminal 11
    - Right front low level audio signal (+) terminal 9
    - Right front low level audio signal (-) terminal 10
    - Left rear low level audio signal (+) terminal 1
    - Left rear low level audio signal (-) terminal 2
    - Right rear low level audio signal (+) terminal 4
    - Right rear low level audio signal (-) terminal 3
    - **If not between 49-51 Hz AC**

      Replace the A11 Radio.

    - **If between 49-51 Hz AC**

15. Ignition OFF, connect all harness connectors.
16. Disconnect the harness connector at the appropriate P19 Speaker. Ignition ON, A11 Radio ON.
17. Test for 5-7 V between each signal circuit terminal 1 and terminal 2 and ground.
    - **If less than 5 V**
    1. Ignition OFF, disconnect the X1 and X2 harness connectors at the T3 Audio Amplifier.
    2. Test for infinite resistance between the signal circuit and ground.
        - If less than infinite resistance, repair the short to ground on the circuit.
        - If infinite resistance
    3. Test for less than 2 ohms in the signal circuit end to end.
        - If 2 ohms or greater, repair the open/high resistance in the circuit.
        - If less than 2 ohms, replace the T3 Audio Amplifier.
    - **If greater than 7 V**
    1. Ignition OFF, disconnect the X1 and X2 harness connectors at the T3 Audio Amplifier. Ignition ON.
    2. Test for less than 1 V between the signal circuit and ground.
        - If 1 V or greater, repair the short to voltage on the circuit.
        - If less than 1 V, replace the T3 Audio Amplifier.
    - **If between 5-7 V**
18. Play track number three (50 Hz bass test tone) from the EL-50334-6 Audio Test CD.
19. Test for 49-51 Hz AC between each signal circuit terminal 1 and terminal 2 and ground.
    - **If not between 49-51 Hz AC**

      Replace the T3 Audio Amplifier.

    - **If between 49-51 Hz AC**
20. Test or replace the P19 Speaker.

Repair Instructions

Perform the **Diagnostic Repair Verification** after completing the repair.

- **Speaker Replacement Reference**
- **Control Module References** for amplifier or radio replacement, programming and setup

UNABLE TO CONTACT ONSTAR CALL CENTER

Diagnostic Instructions

- Perform the **Diagnostic System Check - Vehicle** prior to using this diagnostic procedure.
- Review **Strategy Based Diagnosis** for an overview of the diagnostic approach.
- **Diagnostic Procedure Instructions** provides an overview of each diagnostic category.

Circuit/System Description

The telematics communication interface control module is a cellular device that allows the user to communicate data and voice signals over the national cellular network. When an OnStar® keypress is made, the telematics communication interface control module activates and connects the system to the cellular carriers communication system by interacting with the national cellular infrastructure. The module sends and receives all cellular communications over the cellular phone and navigation antenna and cellular antenna coax.

Diagnostic Aids

- The customer concern may have been due to a lack of cellular service in a given area. A failure in the National Cellular Network infrastructure at the time of the customers failed connection that has since been repaired may also have been the cause.
- If an OnStar® emergency call is able to successfully connect the vehicle to the OnStar® Call Center when an OnStar® Call Center button press is not, there may be a failure in the ability of the OnStar® system in the vehicle to be recognized by the local cellular carrier.
- If the prompt "OnStar® request ended" is heard, without pressing the white dot button at the end of the OnStar® keypress, the OnStar® system at one time has made a successful cellular connection, but was unable to complete the call.
- It is important to have the vehicle in an open outside area where a cellular call can be successfully placed and GPS data can be received from satellites.

Reference Information

Schematic Reference

OnStar Schematics

Connector End View Reference

COMPONENT CONNECTOR END VIEWS - INDEX

Description and Operation

OnStar Description and Operation

Electrical Information Reference

- **Circuit Testing**
- **Connector Repairs**
- **Testing for Intermittent Conditions and Poor Connections**
- **Wiring Repairs**

Scan Tool Reference

Control Module References for scan tool information

Special Tools

EL-49903 GM OnStar Antenna Diagnostic Tool Kit

Circuit/System Verification

NOTE: The following verification requires the vehicle to be outside with an unobstructed view of the southern sky. Allow 5 min after turning the ignition ON for the GPS satellites to acquire vehicle signal.

1. Ignition ON.
2. Verify that DTC B2470 is not set.
   - **If DTC B2470 is set**

     Refer to **DTC B2470**

   - **If DTC B2470 is not set**
3. Verify that a call can be successfully placed to the OnStar Call Center by pressing the blue OnStar button.
   - **If unable to connect with the OnStar Call Center.**

     Refer to Circuit/System Testing below.

   - **If able to connect with the OnStar Call Center**
4. All OK.

Circuit/System Testing

NOTE:

- **The vehicle may be equipped with sectioned coax. Test each section and replace only the faulty section, not the entire length of coax.**
- **The following verification requires the vehicle to be outside with an unobstructed view of the southern sky. Allow 5 min after turning the ignition ON for the GPS satellites to acquire vehicle signal.**

Without Navigation Radio

1. Ignition OFF and all vehicle systems OFF, disconnect the GPS and cellular coax cable connector at the K73 Telematics Communication Interface Control Module. It may take up to 2 min for all vehicle systems to power down.
2. Using the EL-49903-3 kit (EL-49903-5 adapter and EL-49903-4 coax cable), connect the **EL-49903** GM OnStar antenna diagnostic tool kit to the K73 Telematics Communication Interface Control Module. Place the test antenna on the roof of the vehicle, ignition ON.
3. Verify the DTC does not set while operating the vehicle within the conditions for running the DTC.
   - **If the DTC sets**

Replace the K73 Telematics Communications Interface Control Module.

- **If the DTC does not set**

4. Ignition OFF.
5. Disconnect the **EL-49903** GM OnStar antenna diagnostic tool kit from the K73 Telematics Communication Interface Control Module
6. Test the coax cable. Refer to Component Testing below.
   - **If the coax cable does not pass the test**

     Replace the coax cable.

   - **If the coax cable passes the test**
7. Test or replace the T4G Cellular Phone, Navigation, and Digital Radio Antenna.

With Navigation Radio

1. Ignition OFF and all vehicle systems OFF, disconnect the GPS and cellular coax cable connector at the K73 Telematics Communication Interface Control Module. It may take up to 2 min for all vehicle systems to power down.
2. Using the EL-49903-3 kit (EL-49903-5 adapter and EL-49903-4 coax cable), connect the **EL-49903** GM OnStar antenna diagnostic tool kit to the K73 Telematics Communication Interface Control Module. Place the test antenna on the roof of the vehicle, ignition ON.
3. Verify the DTC does not set while operating the vehicle within the conditions for running the DTC.
   - **If the DTC sets**

     Replace the K73 Telematics Communication Interface Control Module.

   - **If the DTC does not set**
4. Ignition OFF.
5. Disconnect the **EL-49903** GM OnStar antenna diagnostic tool kit from the K73 Telematics Communication Interface Control Module
6. Connect the coax cable to the K73 Telematics Communications Interface Control Module and disconnect the coax cable from the T15 Navigation Antenna Signal Splitter, ignition ON.
7. Test for 4.5-5.5 V between the coax cable center conductor and the outer shield.
   - **If less than 4.5 V**
   1. Ignition OFF.
   2. Test the coax cable. Refer to Component Testing below.
      - If the coax cable does not pass the test, replace the coax cable.
      - If the coax cable passes the test, test or replace the K73 Telematics Communications Interface Control Module.
   - **If greater than 5.5 V**
   1. Ignition OFF.

2. Test the coax cable. Refer to Component Testing below.
    - If the coax cable does not pass the test, replace the coax cable.
    - If the coax cable passes the test, test or replace the K73 Telematics Communications Interface Control Module.
- **If between 4.5-5.5 V**

8. Ignition OFF, connect the coax cable to the T15 Navigation Antenna Signal Splitter and disconnect the coax cable from the T4G Cellular Phone, Navigation, and Digital Radio Antenna, ignition ON.
9. Test for 4.5-5.5 V between the coax cable center conductor and the outer shield.
    - **If less than 4.5 V**
    1. Ignition OFF.
    2. Test the coax cable. Refer to Component Testing below.
        - If the coax cable does not pass the test, replace the coax cable.
        - If the coax cable passes the test, test or replace the T15 Navigation Antenna Signal Splitter.
    - **If greater than 5.5 V**
    1. Ignition OFF.
    2. Test the coax cable. Refer to Component Testing below.
        - If the coax cable does not pass the test, replace the coax cable.
        - If the coax cable passes the test, test or replace the T15 Navigation Antenna Signal Splitter.
    - **If between 4.5-5.5 V**
10. Test or replace the T4G Cellular Phone, Navigation, and Digital Radio Antenna.

Component Testing

CAUTION: Refer to Test Probe Caution .

NOTE: Before testing the coax cable, check the cable exterior for being pinched, cut, damaged, or having loose connections at the components, which can cause reception issues.

To prevent false reading when testing the center coax terminals, use care not to ground the test probe on the outer housing/shield.

Coax Cable Test

1. Ignition OFF, disconnect the coax cable at both components.
2. Test for less than 5 ohms between the coax cable center terminal end to end.
    - **If 5 ohms or greater**

      Replace the coax cable.

- **If less than 5 ohms**

3. Test for greater than 5 ohms between the coax cable outer shield end to end.
   - **If 5 ohms or greater**

     Replace the coax cable.

   - **If less than 5 ohms**
4. Test for infinite resistance between the coax cable center terminal and the coax cable outer shield.
   - **If less than infinite resistance**

     Replace the coax cable.

   - **If infinite resistance**
5. All OK.

Repair Instructions

Perform the **Diagnostic Repair Verification** after completing the repair procedure.

-
- **Control Module References** for telematics communication interface control module replacement, programming, and setup.

ONSTAR VOICE RECOGNITION MALFUNCTION

Diagnostic Instructions

- Perform the **Diagnostic System Check - Vehicle** prior to using this diagnostic procedure.
- Review **Strategy Based Diagnosis** for an overview of the diagnostic approach.
- **Diagnostic Procedure Instructions** provides an overview of each diagnostic category.

Circuit/System Description

The telematics communication interface control module is capable of interpreting voice commands received over the cellular microphone circuit. Speech recognition allows the user to speak to one computer in the vehicle, and one reached over the cellular communication network. The module attempts to understand the users command, and responds by speaking back, or by taking the appropriate action, e.g. dialing the phone.

Reference Information

Schematic Reference

OnStar Schematics

Connector End View Reference

COMPONENT CONNECTOR END VIEWS - INDEX

Description and Operation

OnStar Description and Operation

Electrical Information Reference

- **Circuit Testing**
- **Connector Repairs**
- **Testing for Intermittent Conditions and Poor Connections**
- **Wiring Repairs**

Circuit/System Verification

NOTE:

- **It is necessary to have the vehicle in an open outside area where a cellular call can be successfully placed and GPS data can be received from satellites.**
- **The vehicle should be located in a quiet area.**

1. Ignition ON, press the blue OnStar Call button.
2. Verify that your voice is heard clearly by the OnStar Call center.
    - **If your voice can not be heard clearly**

      Refer to **OnStar Microphone Malfunction**

    - **If your voice can be heard clearly**
3. Verify that the system responds appropriately to all voice commands by pressing the voice command button and attempting to operate the system using multiple voice commands.
    - **If the OnStar system does not respond to any voice commands**

      Replace the K73 Telematics Communication Interface Control Module

    - **If the OnStar system responds to some, but not all voice commands**

      Refer to **OnStar Description and Operation** for tips on proper pronunciation

    - **If the OnStar system responds to all voice commands**
4. All OK.

Repair Instructions

Perform the **Diagnostic Repair Verification** after completing the repair procedure.

Control Module References for telematics communication interface control module replacement, programming, and setup.

REPAIR INSTRUCTIONS

MOBILE TELEPHONE MICROPHONE REPLACEMENT

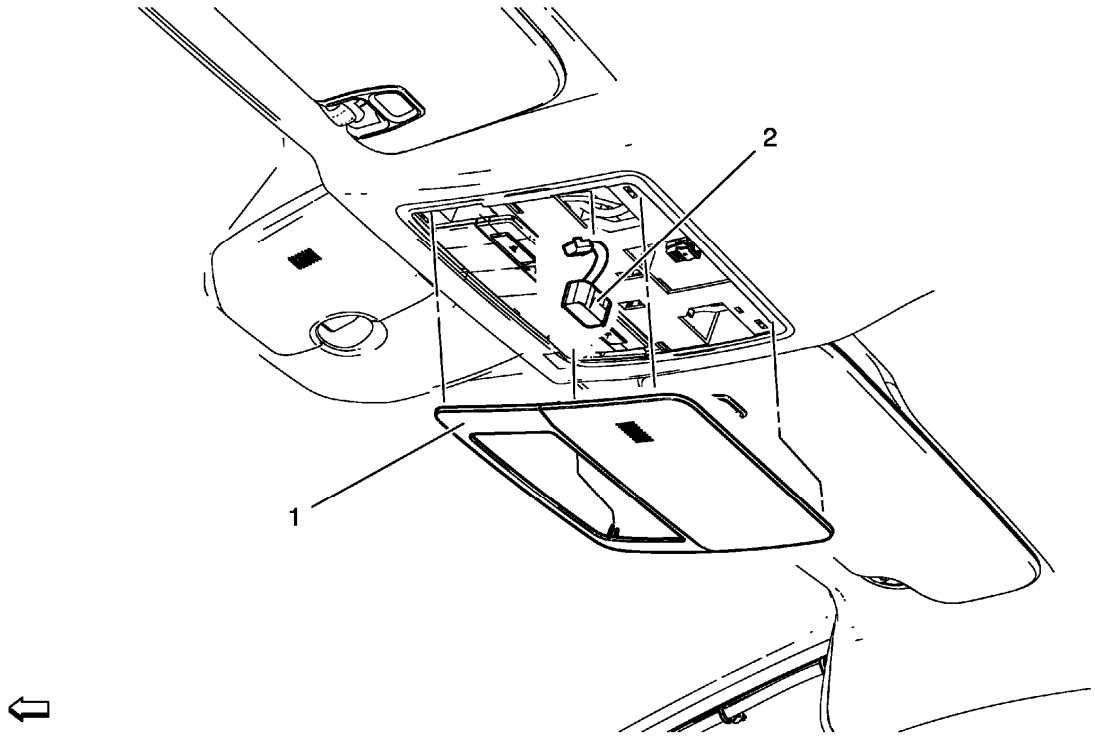

Fig. 11: Mobile Telephone Microphone
Courtesy of GENERAL MOTORS COMPANY

Mobile Telephone Microphone Replacement

Callout	Component Name
1	Dome Lamp Bezel
2	Mobile Telephone Microphone **Procedure** Disconnect electrical connector.

COMMUNICATION INTERFACE MODULE REPLACEMENT

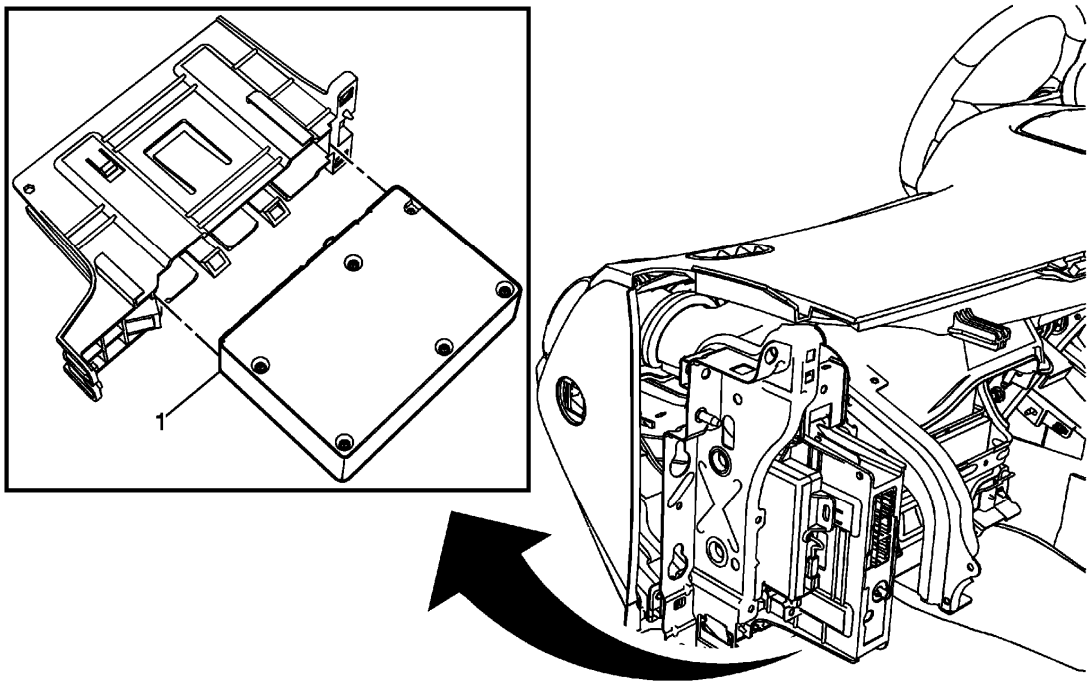

Fig. 12: Communication Interface Module
Courtesy of GENERAL MOTORS COMPANY

Communication Interface Module Replacement

Callout	Component Name
Preliminary Procedure Remove the communication interface module bracket. Refer to **Communication Interface Module Bracket Replacement**.	
1	Communication Interface Module **Procedure** 1. Disconnect the electrical connections. 2. If replacing the communication interface module be sure to transfer Bluetooth antenna, if equipped. 3. For programming and set up procedures, refer to **Control Module References** .

COMMUNICATION INTERFACE MODULE BATTERY REPLACEMENT

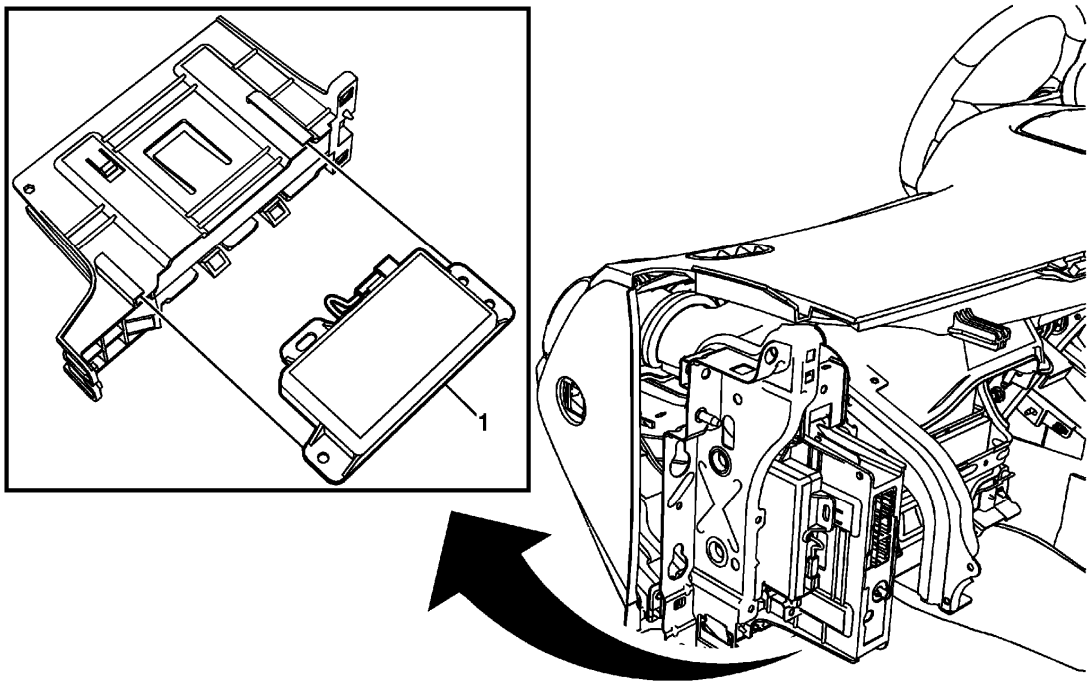

Fig. 13: Communication Interface Module Battery
Courtesy of GENERAL MOTORS COMPANY

Communication Interface Module Battery Replacement

Callout	Component Name
Preliminary Procedure Remove the communication interface module bracket. Refer to **Communication Interface Module Bracket Replacement**.	
1	Communication Interface Module Battery **Procedure** 1. Disconnect the electrical connector. 2. Reprogramming of the Module may be necessary after losing battery power. 3. For programming and set up procedures, refer to **Control Module References** .

WIRELESS COMMUNICATION INTERFACE ANTENNA REPLACEMENT

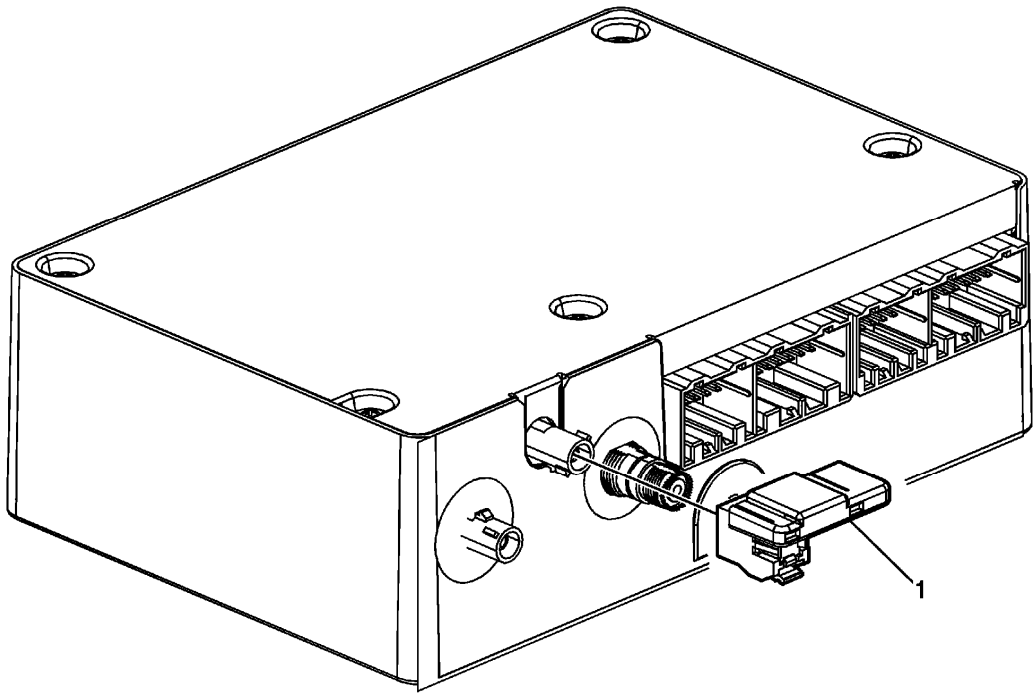

Fig. 14: View Of Wireless Communication Interface Antenna Module
Courtesy of GENERAL MOTORS COMPANY

Wireless Communication Interface Antenna Replacement

Callout	Component Name
Preliminary Procedure Remove the communication interface module. Refer to **Communication Interface Module Replacement**	
1	Wireless Communication Interface Antenna Bluetooth Module **Procedure** Unsnap the Antenna from Communication Module.

COMMUNICATION INTERFACE MODULE BRACKET REPLACEMENT

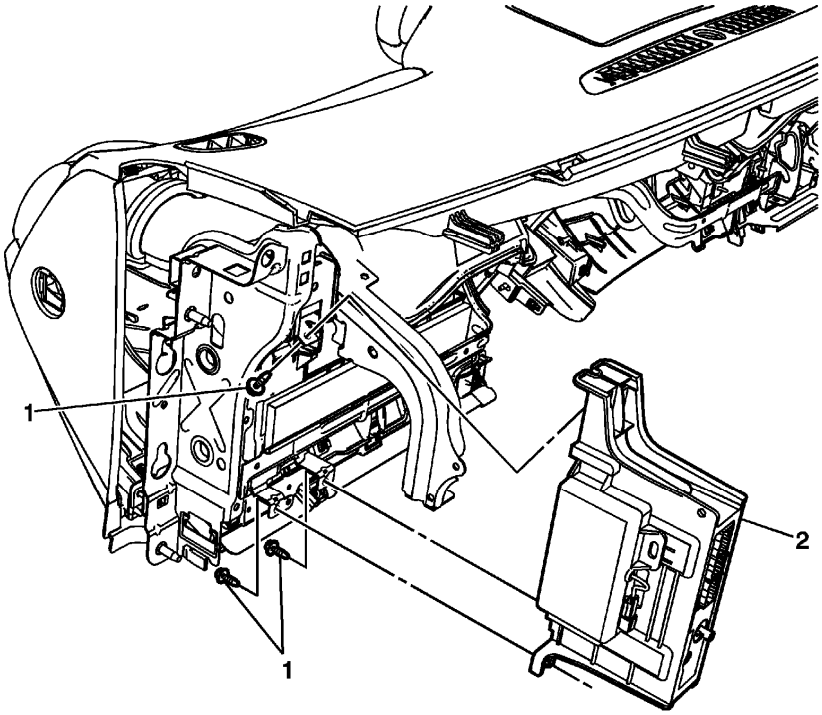

Fig. 15: Communication Interface Module Bracket
Courtesy of GENERAL MOTORS COMPANY

Communication Interface Module Bracket Replacement

Callout	Component Name
Preliminary Procedure Remove the instrument panel compartment. Refer to **Instrument Panel Compartment Replacement**	
1	Communication Interface Module Bracket Bolts (Qty: 3) **CAUTION:** **Refer to Fastener Caution .**
2	Communication Interface Module Bracket **Procedure** 1. Disconnect the electrical connector. 2. Transfer components as necessary.

COMPACT DISC CARE AND CLEANING

Care of CDs

Handle CDs carefully. Store them in their original cases or other protective cases and away from direct sunlight and dust. The CD player scans the bottom surface of the disc. If the surface of a CD is damaged, such as cracked, broken, scratched, or wrinkled labeling, the CD will not play properly or not at all. If the surface of a

CD is soiled, take a soft, lint free cloth or dampen a clean, soft cloth in a mild, neutral detergent solution mixed with water, and clean it. Make sure the wiping process starts from the center to the edge. Do not touch the bottom side of a CD while handling it. This could damage the surface. Pick up CDs by grasping the outer edges or the edge of the hole and the outer edge.

Care of CD Player

The use of CD lens cleaners for CD players is not advised, due to the risk of contaminating the internal lens of the CD optics with lubricants.

Stuck CDs

Interrupting the battery power by pulling the fuse will sometimes release a stuck CD. If a CD is stuck, and removed, inspect it for warps, cracks, etc. If the CD is damaged, do not replace the radio.

Labelling CDs

Paper labels can eventually warp and wrinkle, and this will cause the disc to jam inside the CD player. Try labeling the top of the discs with a soft magic marker instead.

RADIO REPLACEMENT

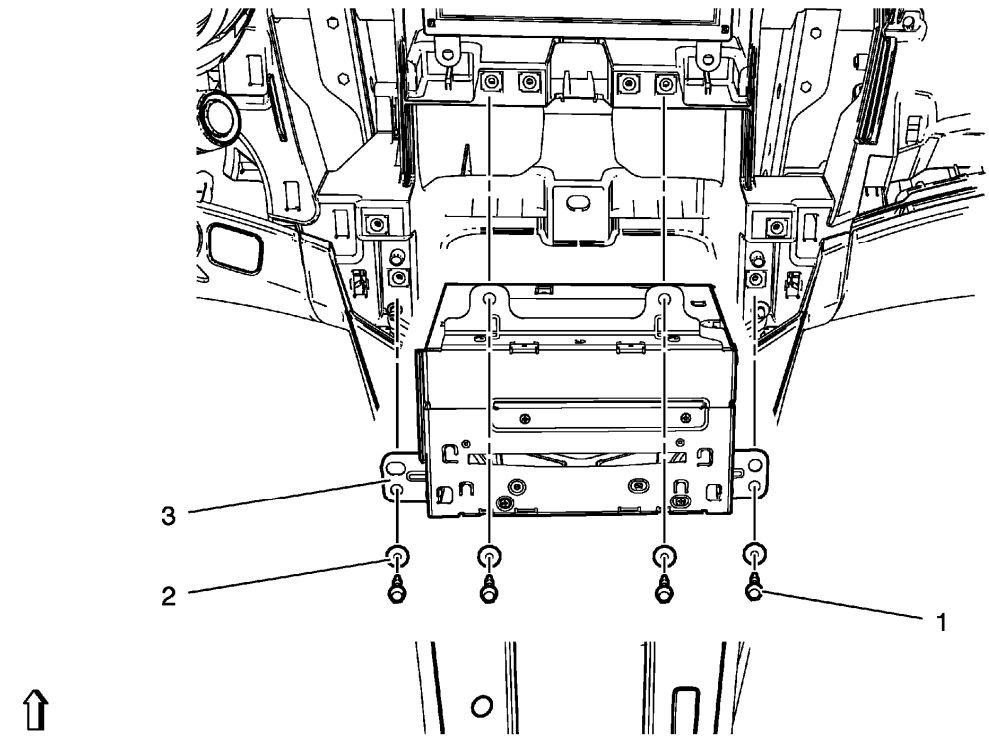

Fig. 16: Radio Mounting Hardware
Courtesy of GENERAL MOTORS COMPANY

Radio Replacement

Callout	Component Name
Preliminary Procedures 1. Disconnect the battery negative cable. Refer to **Battery Negative Cable Disconnection and Connection** . 2. Remove the radio control module. Refer to **Radio Control Module Replacement**. 3. Remove the driver information display bezel. Refer to **Driver Information Display Bezel Replacement** .	
1	Radio Bolt (Qty: 4) **CAUTION:** **Refer to Fastener Caution .**
2	Radio Bolt Washer (Qty: 4)
3	Radio **Procedure** 1. Disconnect electrical components. 2. After replacement, refer to **Control Module References** for programming and set up information.

AUDIO DISC PLAYER RECEPTACLE REPLACEMENT

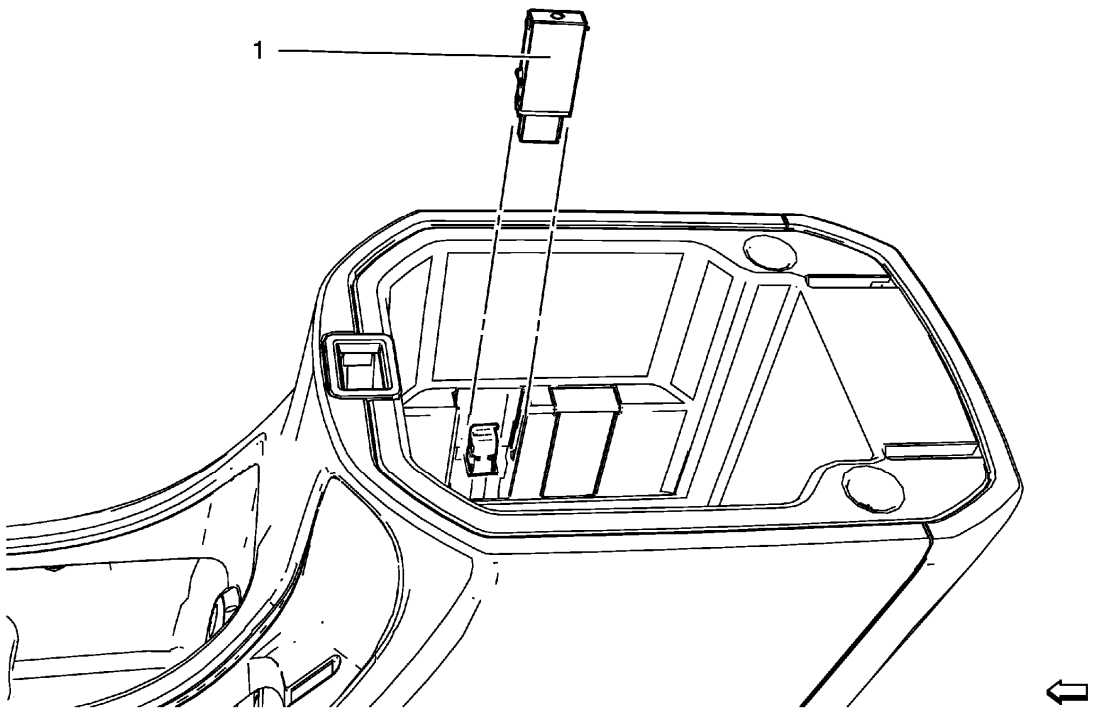

Fig. 17: Audio Disc Player Receptacle

Courtesy of GENERAL MOTORS COMPANY

Audio Disc Player Receptacle Replacement

Callout	Component Name
Preliminary Procedures Open armrest floor console.	
1	Audio Disc Player Receptacle **WARNING:** **Refer to Battery Disconnect Warning .** **Procedure** Disconnect electrical connector.

AUDIO DISC PLAYER, USB, AUXILIARY IN, AND MEMORY CARD RECEPTACLE REPLACEMENT

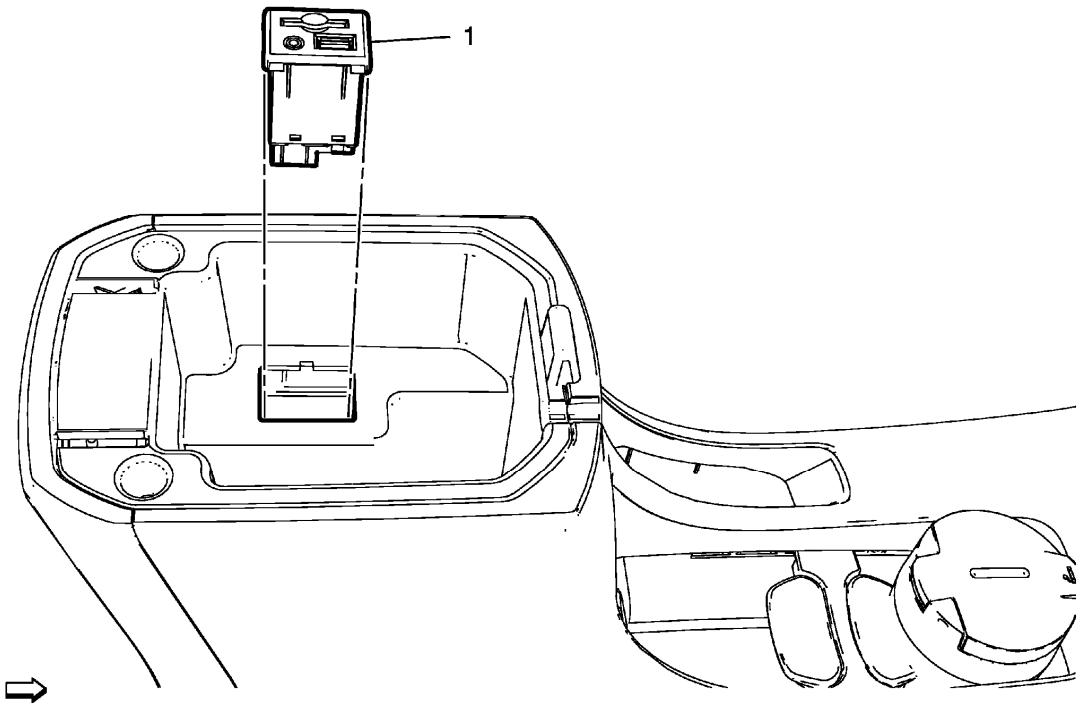

Fig. 18: Audio Disc Player, USB, Auxiliary In, and Memory Card Receptacle
Courtesy of GENERAL MOTORS COMPANY

Audio Disc Player, USB, Auxiliary In, and Memory Card Receptacle Replacement

Callout	Component Name
Preliminary Procedure Remove the front floor console compartment. Refer to **Front Floor Console Compartment**	

Replacement .	
1	Audio Disc Player and USB and Auxiliary In and Memory Card Receptacle **Procedure** 1. Use a suitable screwdriver in order to disengage receptacle from the front floor console. 2. Disconnect electrical components.

RADIO SPEAKER AMPLIFIER REPLACEMENT

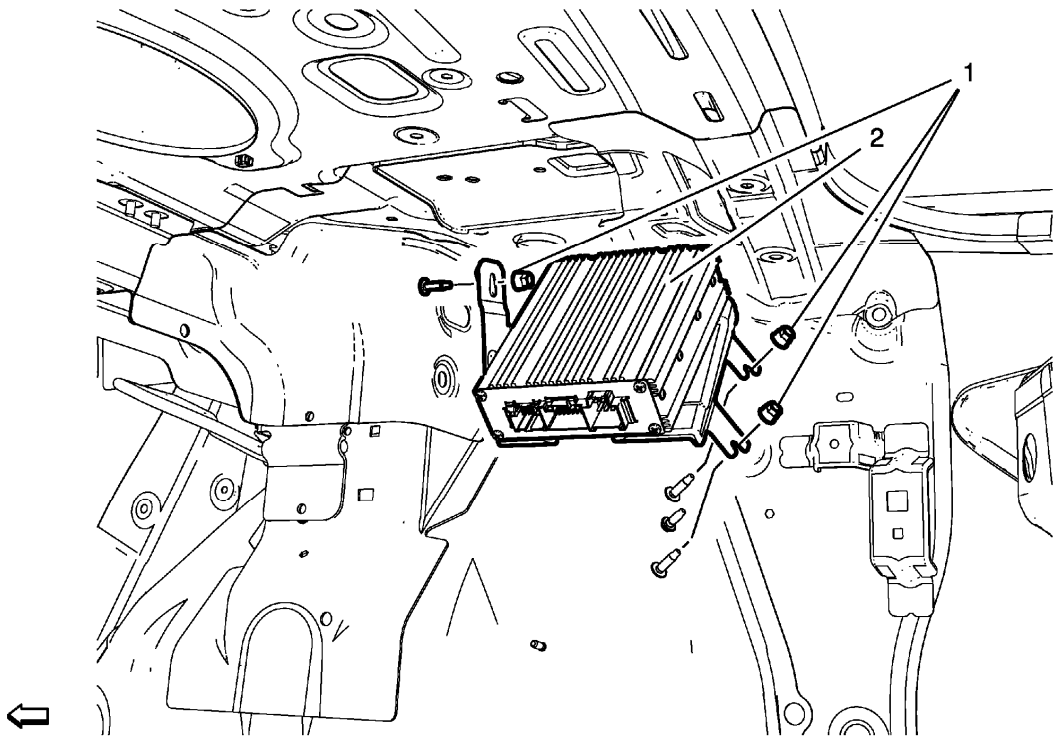

Fig. 19: Radio Speaker Amplifier & Nuts
Courtesy of GENERAL MOTORS COMPANY

Radio Speaker Amplifier Replacement

Callout	Component Name
Preliminary Procedure 1. Disconnect negative battery cable. Refer to **Battery Negative Cable Disconnection and Connection** . 2. Remove rear compartment side trim. Refer to **Rear Compartment Side Trim Replacement - Right Side** .	
	Radio Speaker Amplifier Nuts (Qty: 3)

1	**CAUTION:** **Refer to Fastener Caution .** **Tighten** 9 N.m(80 lb in)
2	Radio Speaker Amplifier. **Procedure** 1. Disconnect electrical components. 2. After repairs, refer to **Control Module References** .

MULTIMEDIA PLAYER INTERFACE MODULE REPLACEMENT

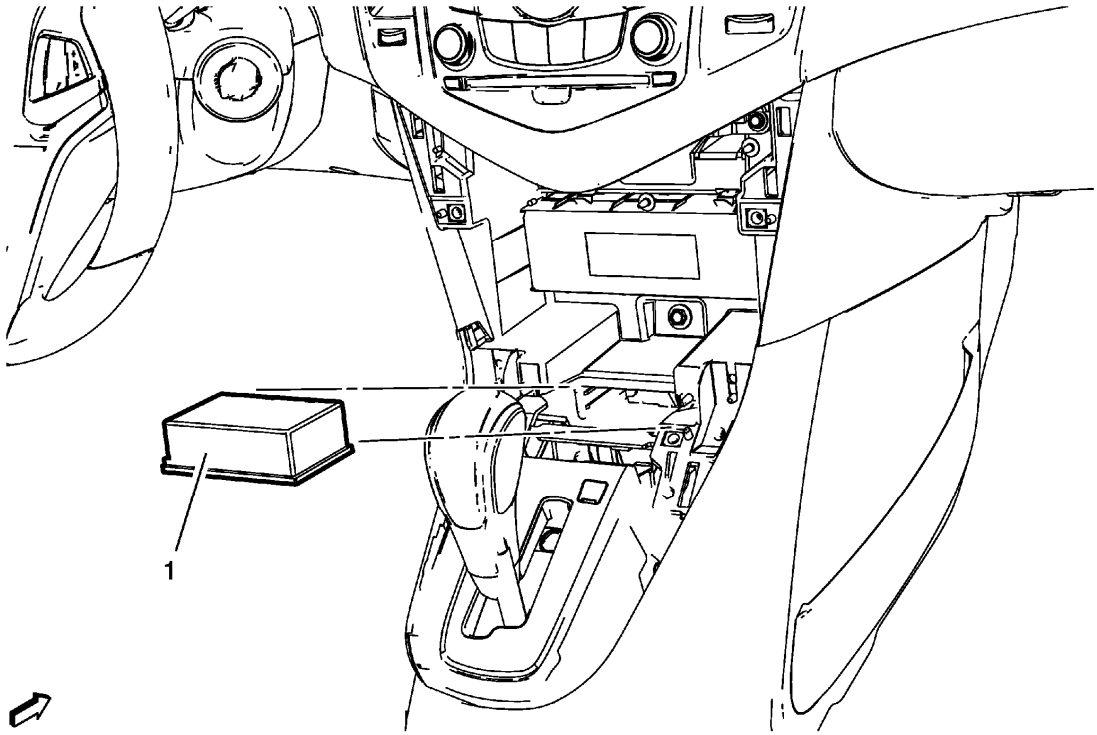

Fig. 20: Multimedia Player Interface Module
Courtesy of GENERAL MOTORS COMPANY

Multimedia Player Interface Module Replacement

Callout	Component Name
Preliminary Procedures 1. Remove heater and air conditioning control. Refer to **Heater and Air Conditioning Control Replacement** .	

2. Remove front floor console storage tray. Refer to **Front Floor Console Stowage Tray Replacement** .	
1	Multimedia Player Interface Module **Procedure** 1. Disconnect electrical connector. 2. After repair, refer to **Control Module References** for programming and set up procedures.

NAVIGATION SIGNAL SPLITTER REPLACEMENT

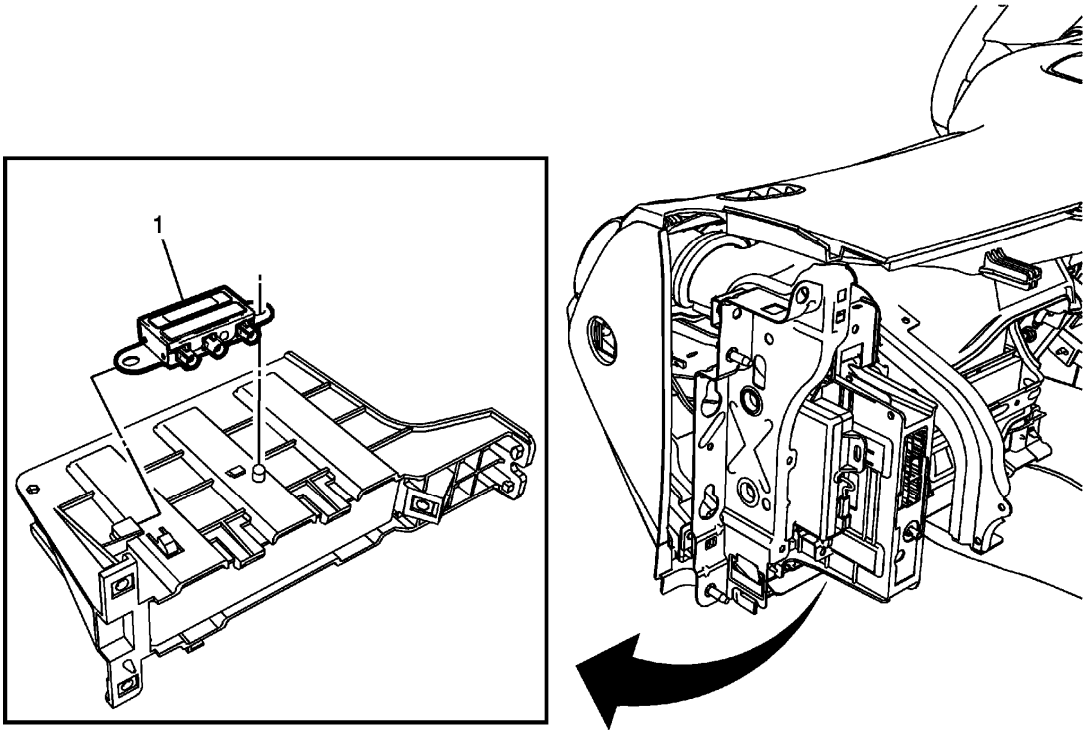

Fig. 21: Navigation Signal Splitter
Courtesy of GENERAL MOTORS COMPANY

Navigation Signal Splitter Replacement

Callout	Component Name
Preliminary Procedure Remove the communication interface module bracket. Refer to **Communication Interface Module Bracket Replacement**.	
1	Navigation Signal Splitter **Procedure**

	1. Disconnect the electrical connections. 2. For programming and set up procedures, refer to **Control Module References** .

MOBILE TELEPHONE CONTROL MODULE REPLACEMENT

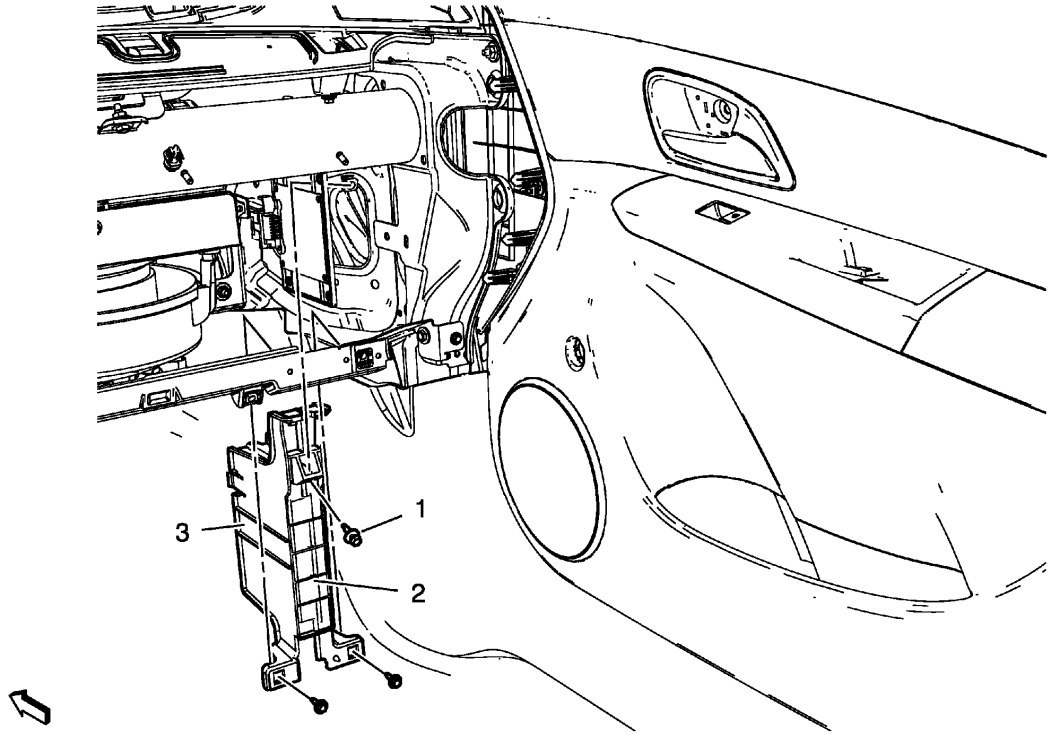

Fig. 22: Mobile Telephone Control Module
Courtesy of GENERAL MOTORS COMPANY

Mobile Telephone Control Module Replacement

Callout	Component Name
Preliminary Procedures Remove instrument panel compartment. Refer to **Instrument Panel Compartment Replacement** .	
1	Mobile Telephone Control Module Bolt (Qty: 3) **CAUTION:** **Refer to Fastener Caution .** **Tighten** 2.5 N.m(23 lb in)
2	Telephone Transceiver Bracket.
	Mobile Telephone Control Module Assembly.

3	**Procedure** 1. Disconnect electrical components. 2. For programming and set up procedures, refer to **Control Module References** .

RADIO ANTENNA COIL REPLACEMENT - HIGH SIDE

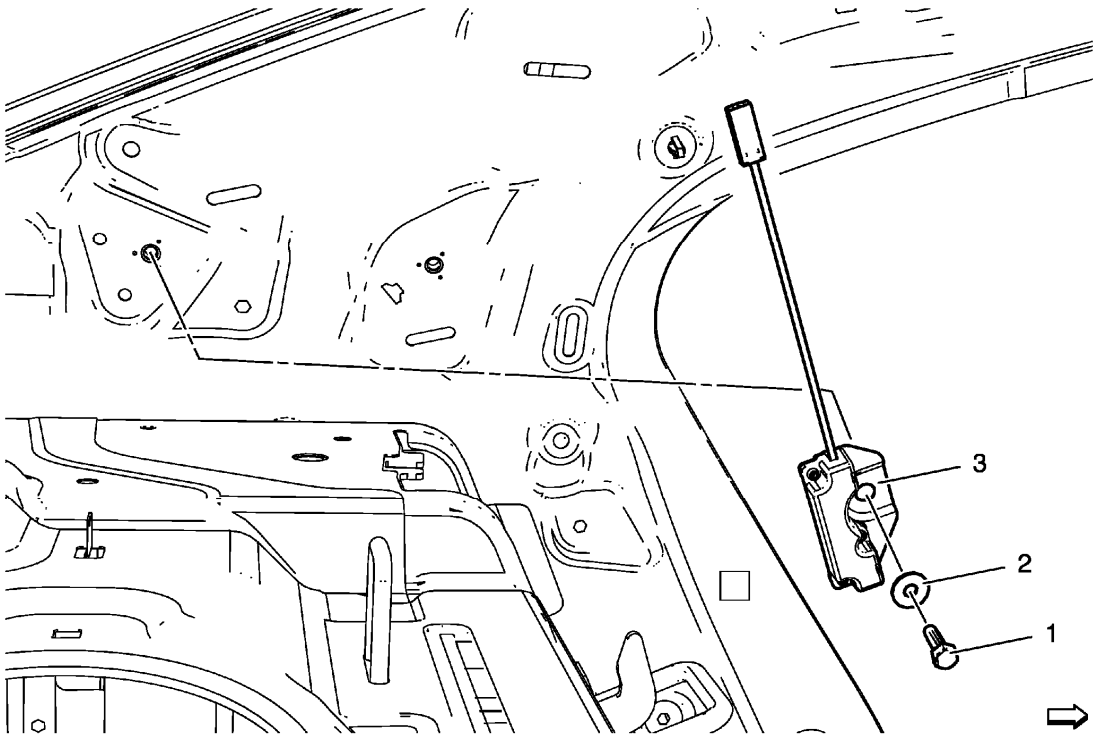

Fig. 23: Radio Antenna Coil Replacement - High Side
Courtesy of GENERAL MOTORS COMPANY

Radio Antenna Coil Replacement - High Side

Callout	Component Name
Preliminary Procedures Remove quarter window garnish molding. Refer to **Quarter Window Garnish Molding Replacement** .	
1	Radio Antenna High Side Coil Bolt **CAUTION:** **Refer to Fastener Caution .** **Tighten** 8 N.m(71 lb in)
2	Radio Antenna High Side Coil Washer

3	Radio Antenna Coil - High Side **Procedure** Disconnect electrical connector.

RADIO ANTENNA COIL REPLACEMENT - GROUND SIDE

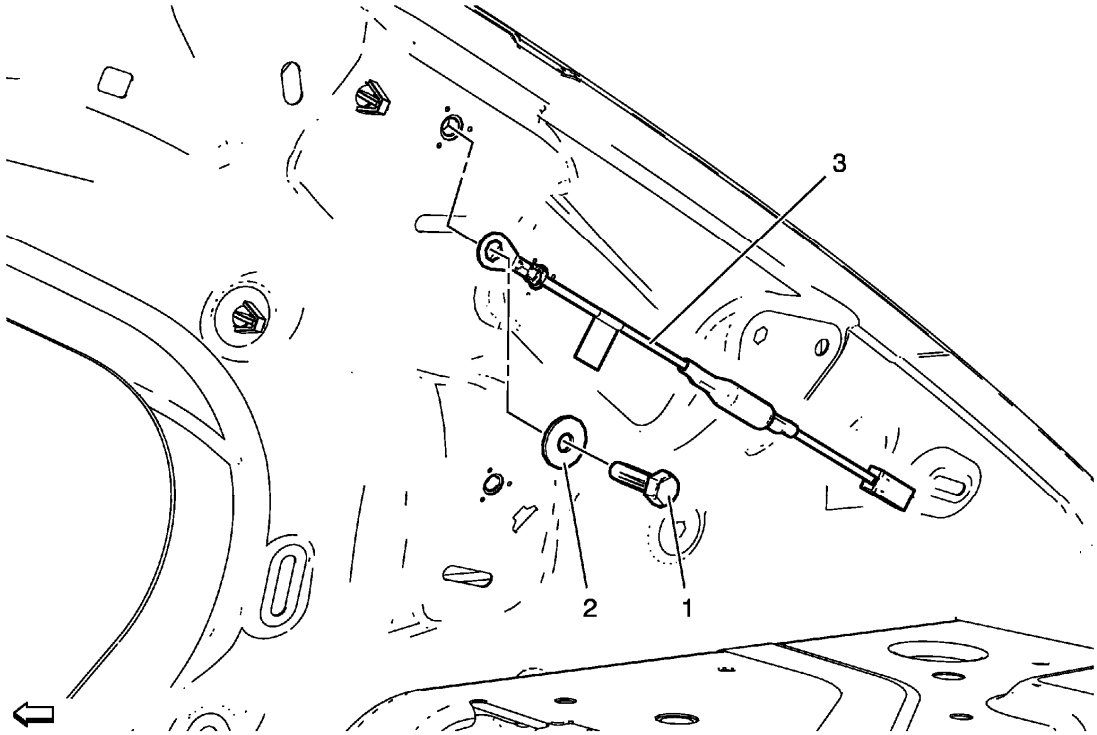

Fig. 24: Radio Antenna Coil Replacement - Ground Side
Courtesy of GENERAL MOTORS COMPANY

Radio Antenna Coil Replacement - Ground Side

Callout	Component Name
Preliminary Procedures Remove the quarter window garnish molding. Refer to **Quarter Window Garnish Molding Replacement** .	
1	Radio Antenna Coil Bolt **CAUTION:** **Refer to Fastener Caution .** **Tighten** 8 N.m(71 lb in)
2	Radio Antenna Coil Washer
	Radio Antenna Coil - Ground Side

3	**Procedure** Disconnect electrical connector.

RADIO ANTENNA BASE REPLACEMENT

Removal Procedure

1. Remove headlining trim panel. Refer to **Headlining Trim Panel Replacement (without Sunroof)** , **Headlining Trim Panel Replacement (with Sunroof)** .

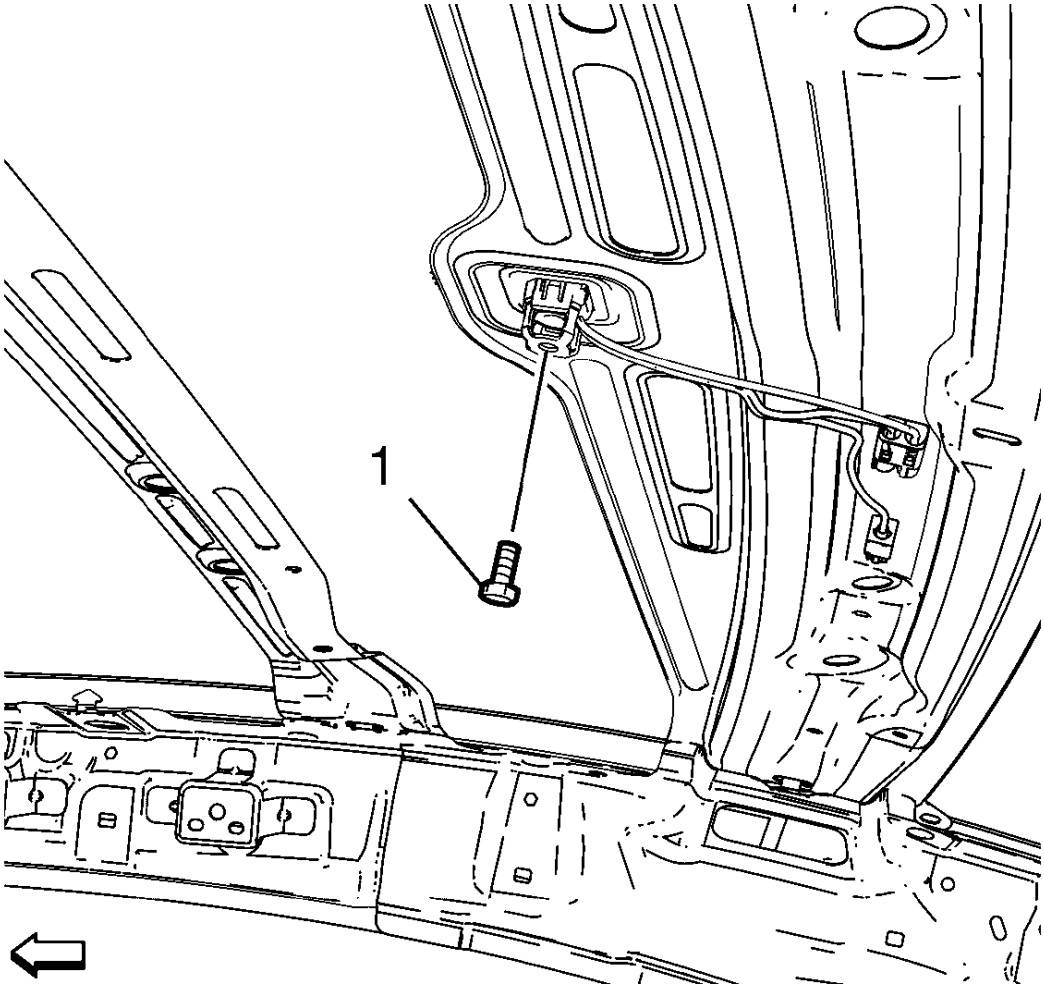

Fig. 25: Radio Antenna Base Bolt
Courtesy of GENERAL MOTORS COMPANY

2. Remove the radio antenna base bolt (1).

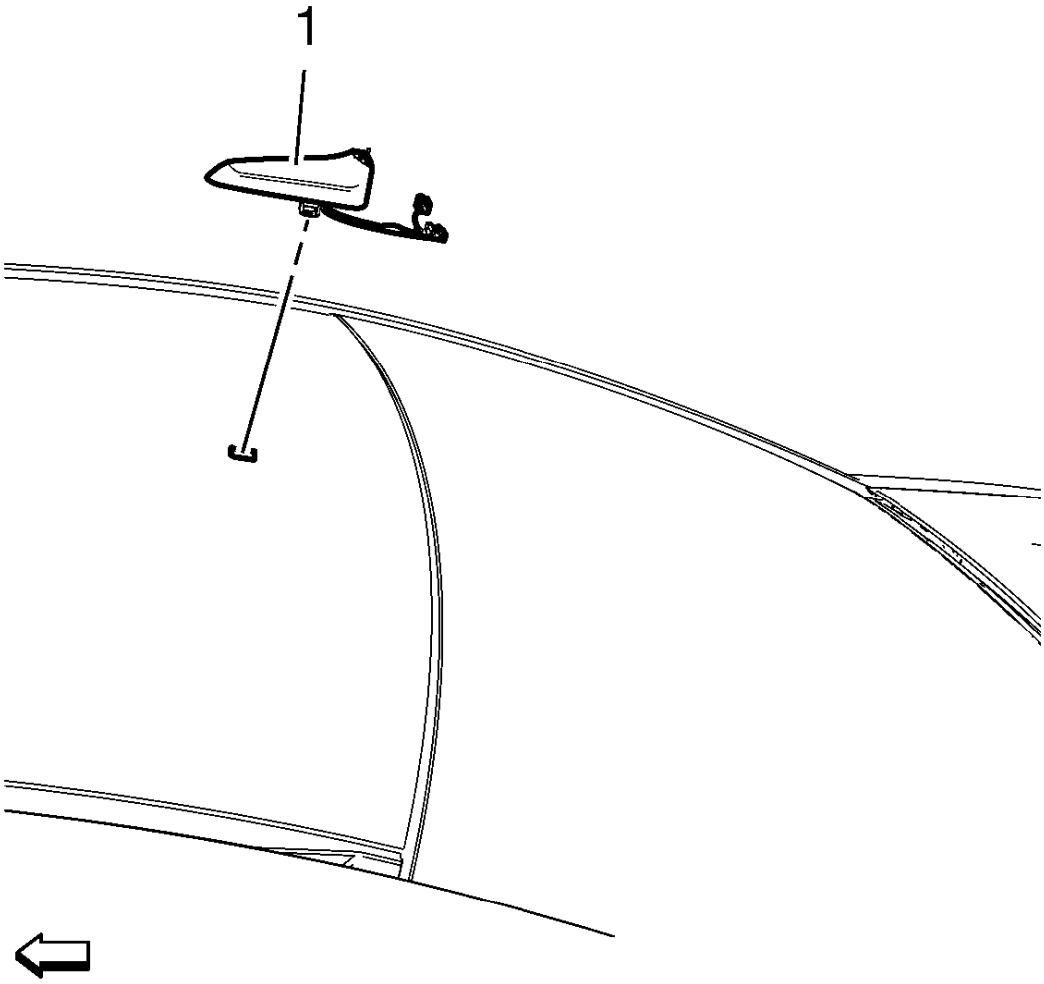

Fig. 26: Radio Antenna Base
Courtesy of GENERAL MOTORS COMPANY

3. Remove the radio antenna base (1).
4. Disconnect the electrical connectors.

Installation Procedure

1. Connect the electrical connectors.

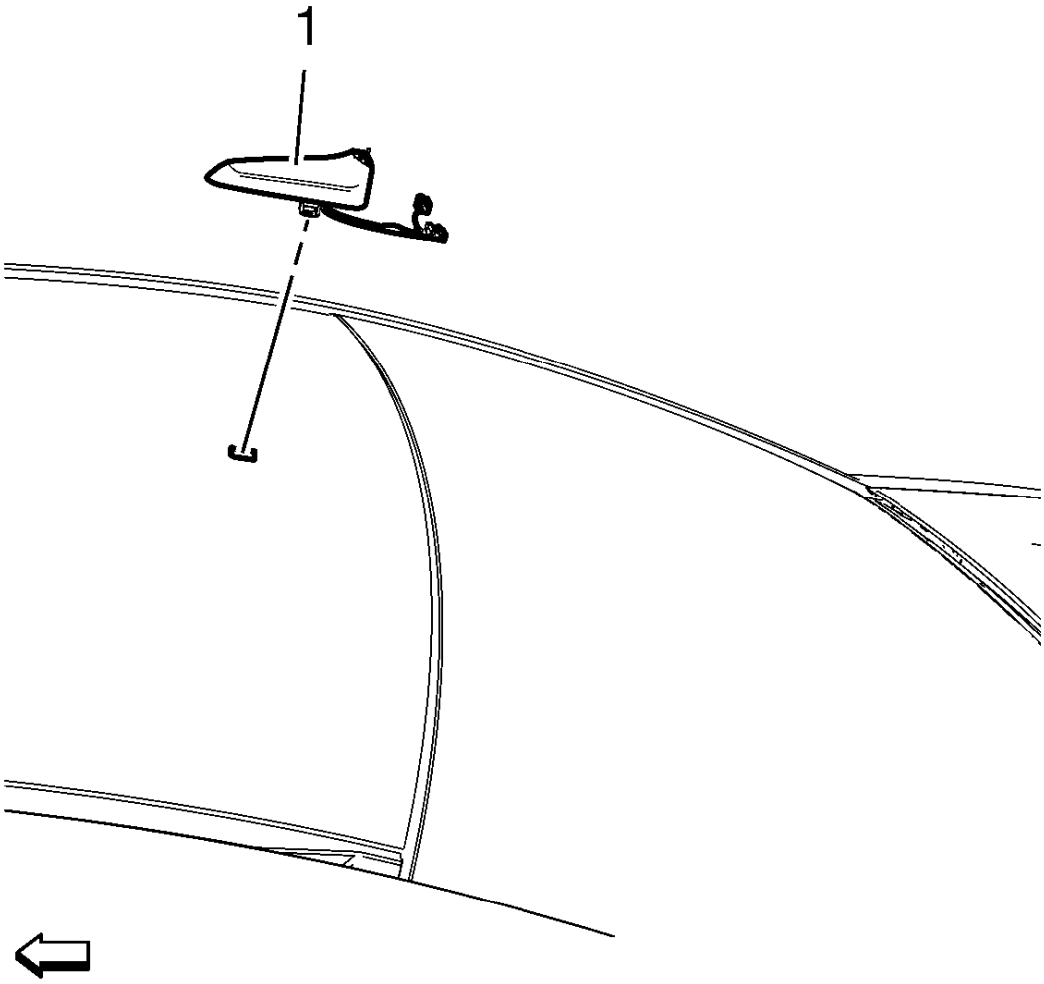

Fig. 27: Radio Antenna Base
Courtesy of GENERAL MOTORS COMPANY

2. Install the radio antenna base (1).

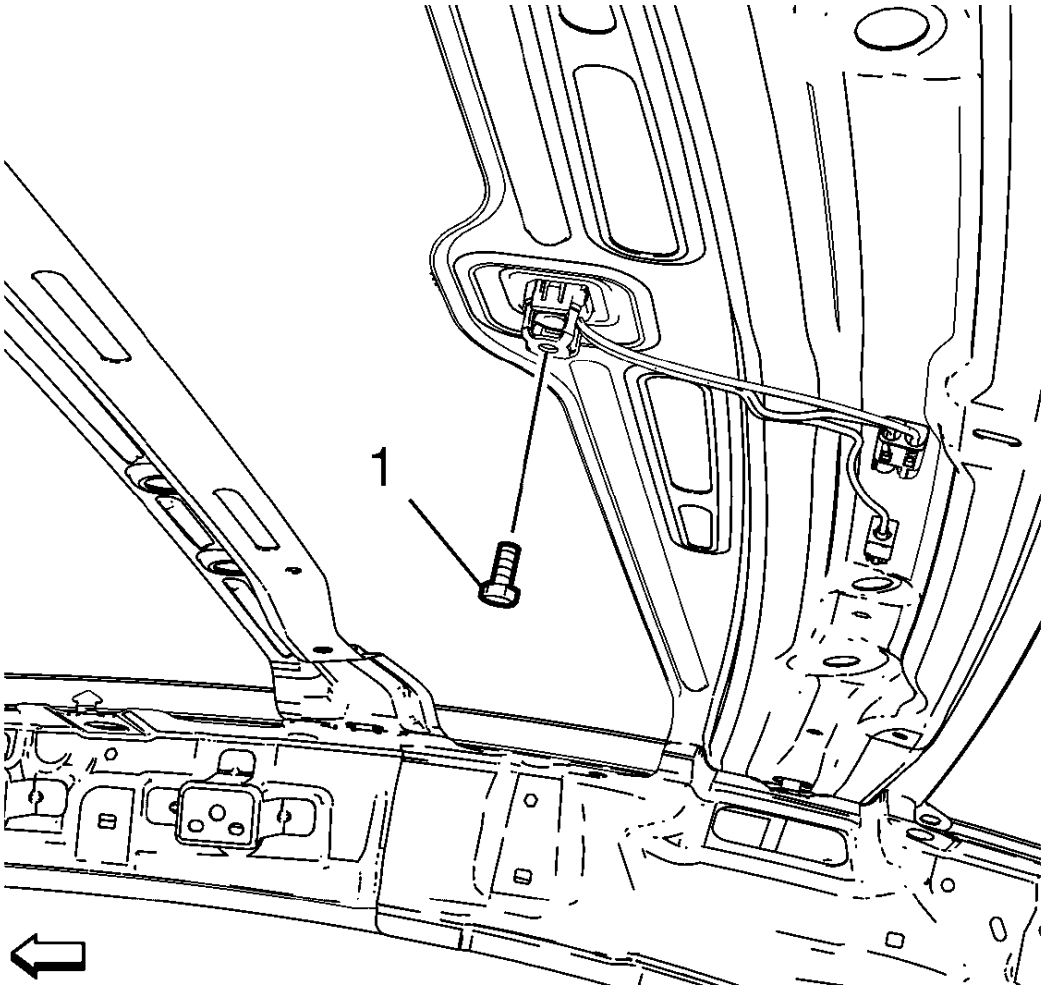

Fig. 28: Radio Antenna Base Bolt
Courtesy of GENERAL MOTORS COMPANY

CAUTION: Refer to Fastener Caution .

3. Install the radio antenna base bolt (1) and tighten to 10 N.m (89 lb in).
4. Install the headlining trim panel. Refer to **Headlining Trim Panel Replacement (without Sunroof)** , **Headlining Trim Panel Replacement (with Sunroof)** .

RADIO ANTENNA REPLACEMENT

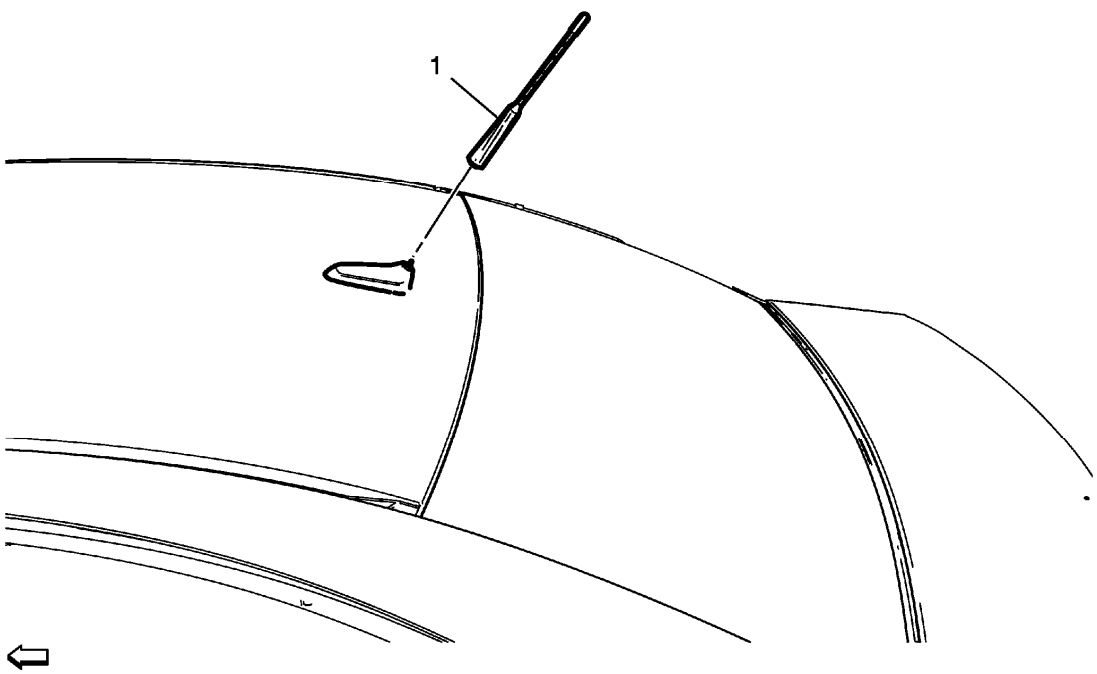

Fig. 29: Radio Antenna
Courtesy of GENERAL MOTORS COMPANY

Radio Antenna Replacement

Callout	Component Name
1	Radio Antenna

RADIO CONTROL MODULE REPLACEMENT

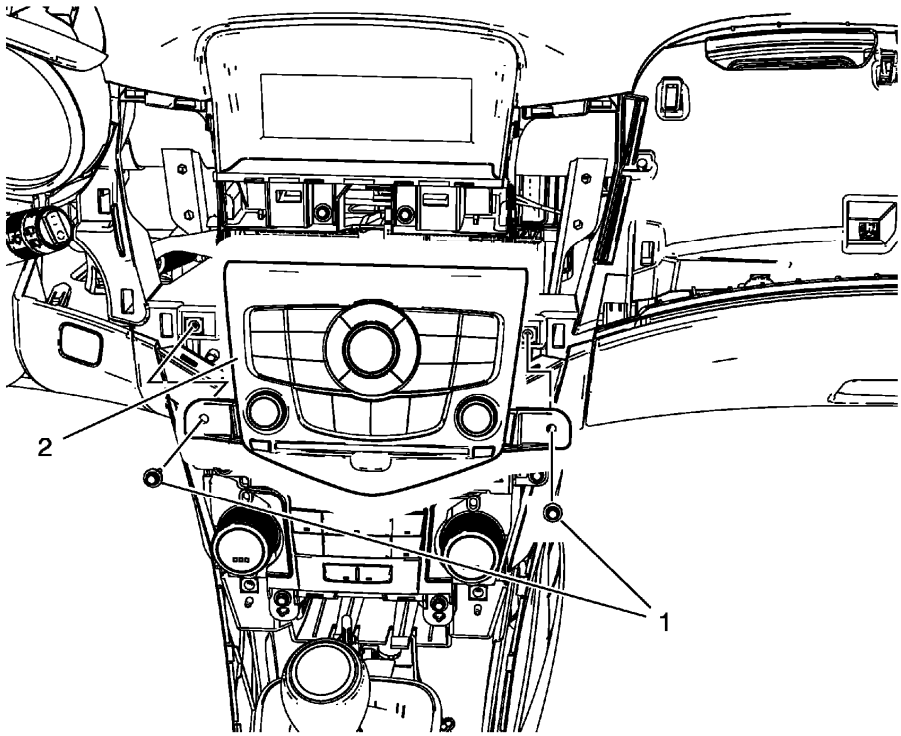

Fig. 30: Radio Control Module
Courtesy of GENERAL MOTORS COMPANY

Radio Control Module Replacement

Callout	Component Name
Preliminary Procedures Remove instrument panel accessory bezel. Refer to **Instrument Panel Accessory Bezel Replacement** .	
1	Radio Control Module Bolts (Qty: 2) **CAUTION:** **Refer to Fastener Caution .** **Tighten** 2.5 N.m (22 lb in)
2	Radio Control Module **Procedure** Disconnect electrical connectors.

DIGITAL RADIO ANTENNA CABLE REPLACEMENT

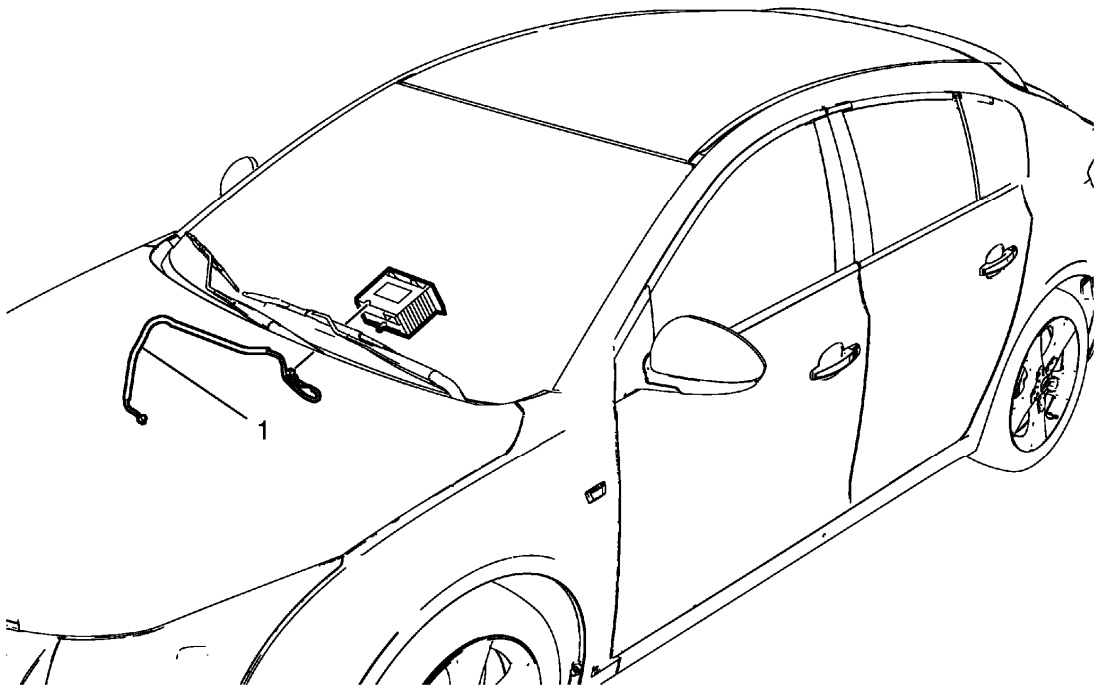

Fig. 31: Radio Antenna Cable (Radio Cable)
Courtesy of GENERAL MOTORS COMPANY

Digital Radio Antenna Cable Replacement

Callout	Component Name
Preliminary Procedures Remove the instrument panel assembly. Refer to **Instrument Panel Assembly Replacement** .	
1	Digital Radio Antenna Cable **Procedures** 1. Locate the digital radio antenna cable in the instrument panel wiring harness assembly. 2. Carefully cut the electrical tape. 3. Disconnect electrical connectors. 4. Replace the radio antenna cable. 5. Secure the radio antenna cable within the electrical conduit.

DIGITAL RADIO, MOBILE TELEPHONE, AND VEHICLE LOCATION ANTENNA CABLE REPLACEMENT (DIGITAL SATELLITE CABLE)

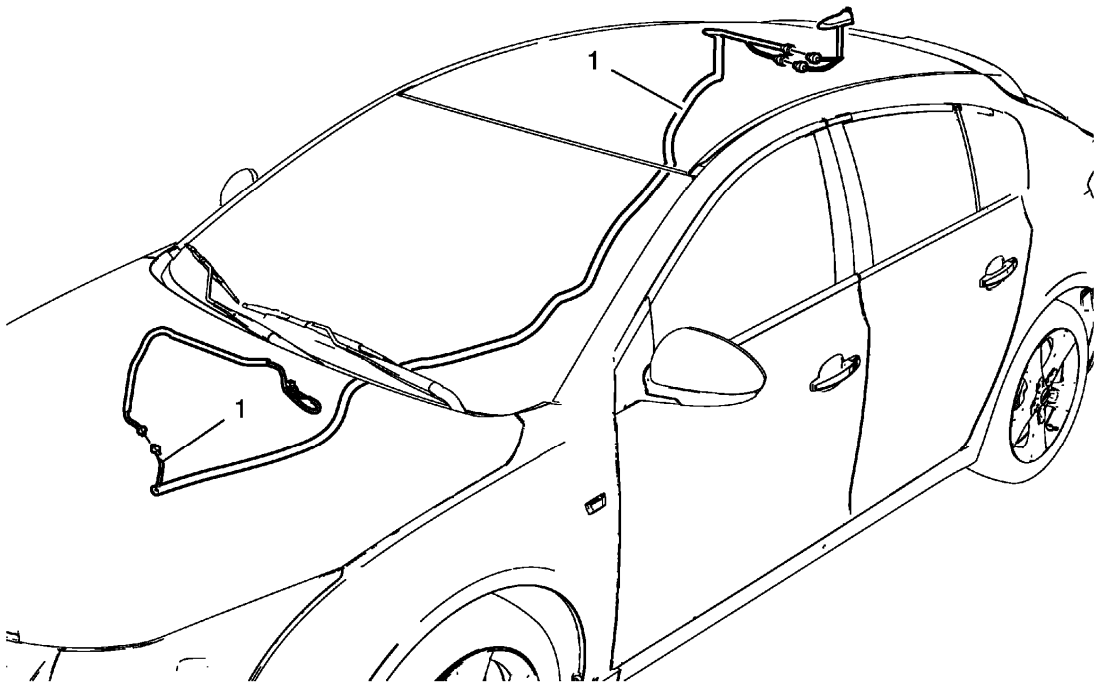

Fig. 32: Radio, Mobile Telephone And Vehicle Location Antenna Cable
Courtesy of GENERAL MOTORS COMPANY

Digital Radio, Mobile Telephone, and Vehicle Location Antenna Cable Replacement (Digital Satellite Cable)

Callout	Component Name
Preliminary Procedures 1. Remove the front floor panel carpet. Refer to **Front Floor Panel Carpet Replacement** . 2. Remove the headlining trim panel. Refer to **Headlining Trim Panel Replacement (without Sunroof)** , **Headlining Trim Panel Replacement (with Sunroof)** .	
1	Radio, Mobile Telephone, and Vehicle Location Antenna Cable **Procedures** 1. Locate the radio, mobile telephone and vehicle location antenna cable in the body wiring harness assembly. 2. Carefully cut the electrical tape. 3. Disconnect electrical connectors. 4. Replace the radio antenna cable. 5. Secure the radio antenna cable within the electrical conduit.

DIGITAL RADIO, MOBILE TELEPHONE, AND VEHICLE LOCATION ANTENNA CABLE REPLACEMENT (GPS CELLULAR CABLE)

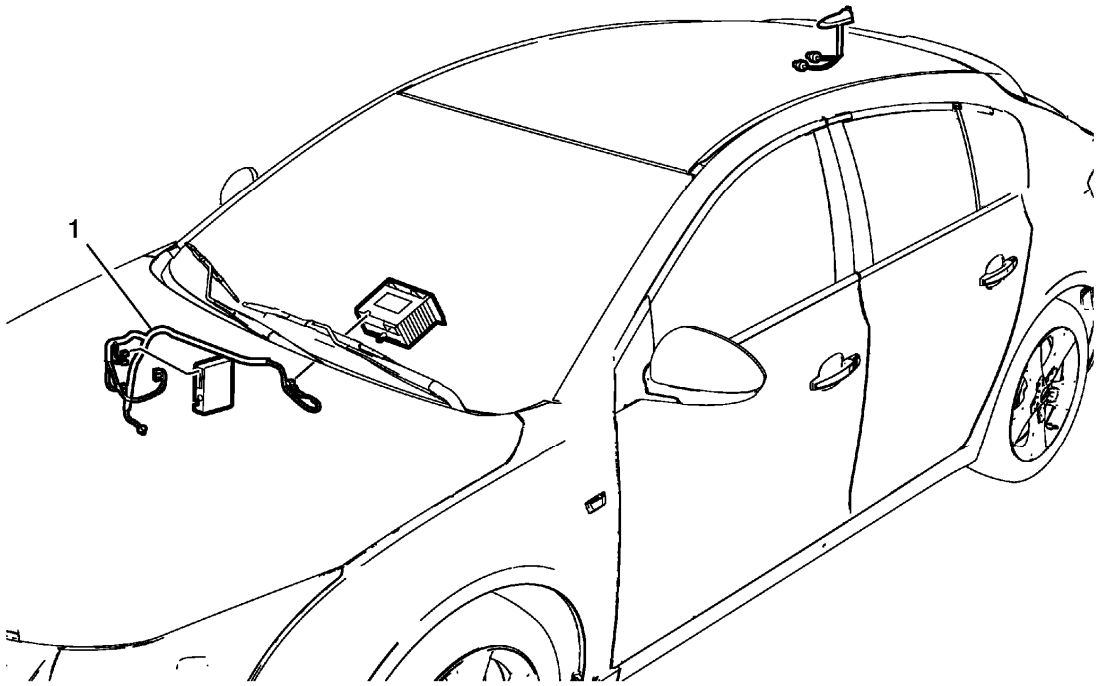

Fig. 33: Radio, Mobile Telephone And Vehicle Location Antenna Cable (GPS Cellular Cable)
Courtesy of GENERAL MOTORS COMPANY

Digital Radio, Mobile Telephone, and Vehicle Location Antenna Cable Replacement (GPS Cellular Cable)

Callout	Component Name
Preliminary Procedures Remove the instrument panel assembly. Refer to **Instrument Panel Assembly Replacement** .	
1	Radio, Mobile Telephone, and Vehicle Location Antenna Cable **Procedures** 1. Locate the radio, mobile telephone and vehicle location antenna cable in the instrument panel wiring harness assembly. 2. Carefully cut the electrical tape. 3. Disconnect electrical connectors. 4. Replace the radio antenna cable. 5. Secure the radio antenna cable within the electrical conduit.

RADIO, MOBILE TELEPHONE, AND VEHICLE LOCATION ANTENNA CABLE REPLACEMENT (GPS CELLULAR CABLE)

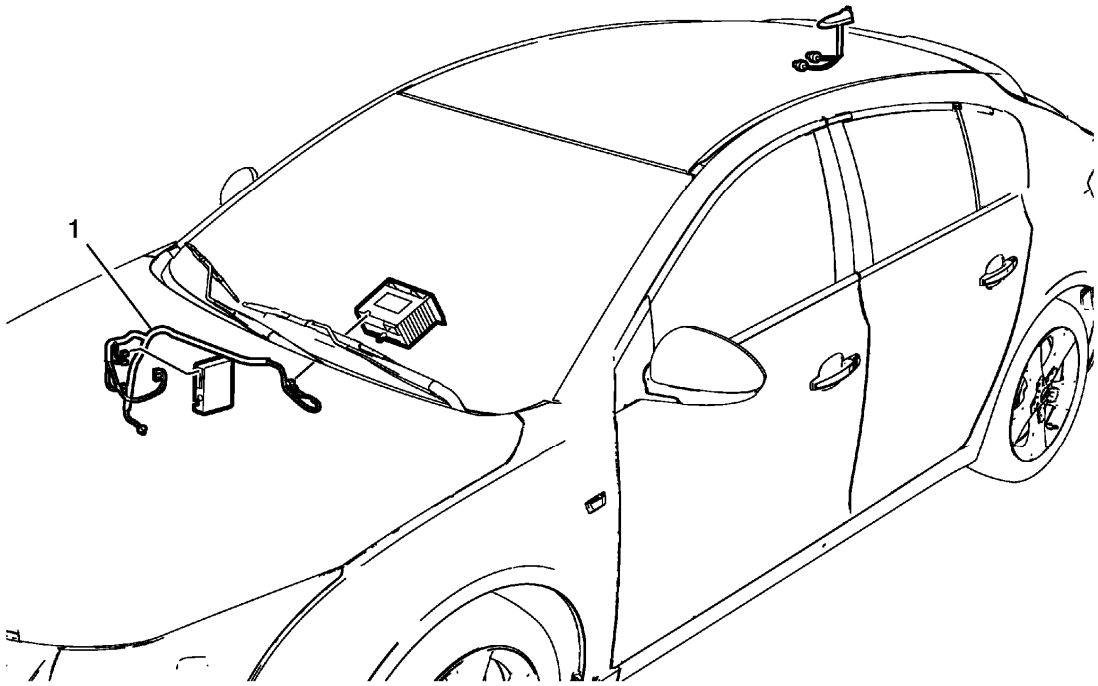

Fig. 34: Radio, Mobile Telephone And Vehicle Location Antenna Cable (GPS Cellular Cable)
Courtesy of GENERAL MOTORS COMPANY

Radio, Mobile Telephone, and Vehicle Location Antenna Cable Replacement (GPS Cellular Cable)

Callout	Component Name
Preliminary Procedures Remove the instrument panel assembly. Refer to **Instrument Panel Assembly Replacement** .	
1	Radio, Mobile Telephone, and Vehicle Location Antenna Cable **Procedures** 1. Locate the radio, mobile telephone and vehicle location antenna cable in the instrument panel wiring harness assembly. 2. Carefully cut the electrical tape. 3. Disconnect electrical connectors. 4. Replace the radio antenna cable. 5. Secure the radio antenna cable within the electrical conduit.

RADIO, MOBILE TELEPHONE, AND VEHICLE LOCATION ANTENNA CABLE REPLACEMENT (DIGITAL SATELLITE CABLE)

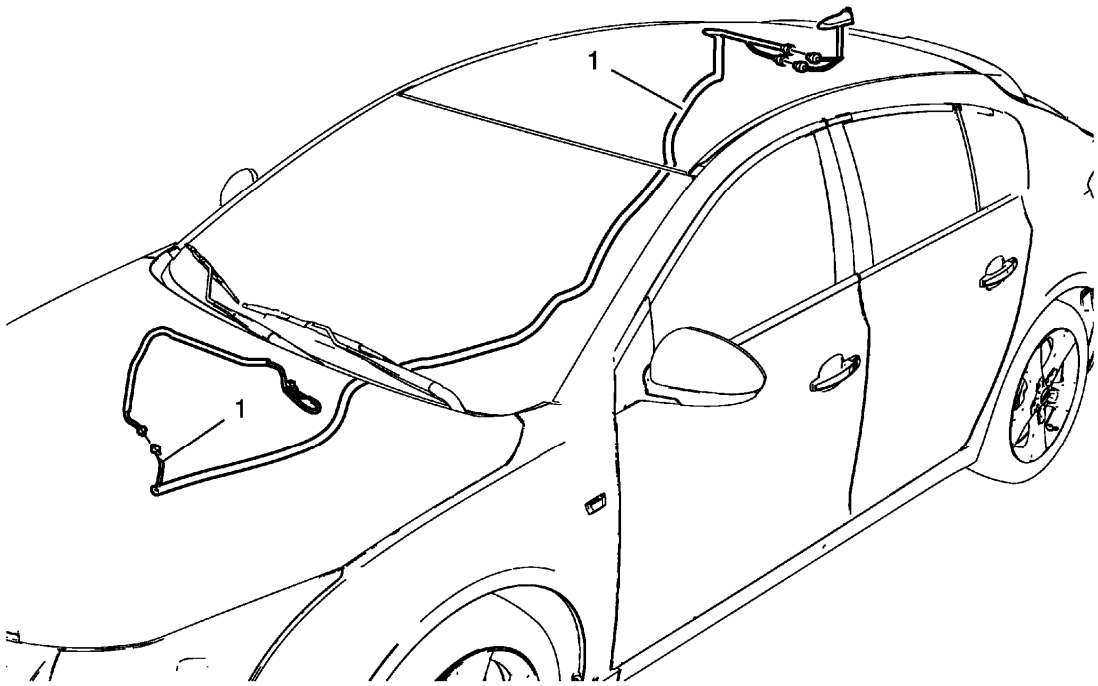

Fig. 35: Radio, Mobile Telephone And Vehicle Location Antenna Cable
Courtesy of GENERAL MOTORS COMPANY

Radio, Mobile Telephone, and Vehicle Location Antenna Cable Replacement (Digital Satellite Cable)

Callout	Component Name
Preliminary Procedures 1. Remove the front floor panel carpet. Refer to **Front Floor Panel Carpet Replacement** . 2. Remove the headlining trim panel. Refer to **Headlining Trim Panel Replacement (without Sunroof)** , **Headlining Trim Panel Replacement (with Sunroof)** .	
1	Radio, Mobile Telephone, and Vehicle Location Antenna Cable **Procedures** 1. Locate the radio, mobile telephone and vehicle location antenna cable in the body wiring harness assembly. 2. Carefully cut the electrical tape. 3. Disconnect electrical connectors. 4. Replace the radio antenna cable. 5. Secure the radio antenna cable within the electrical conduit.

RADIO ANTENNA CABLE REPLACEMENT (ANTENNA CABLE)

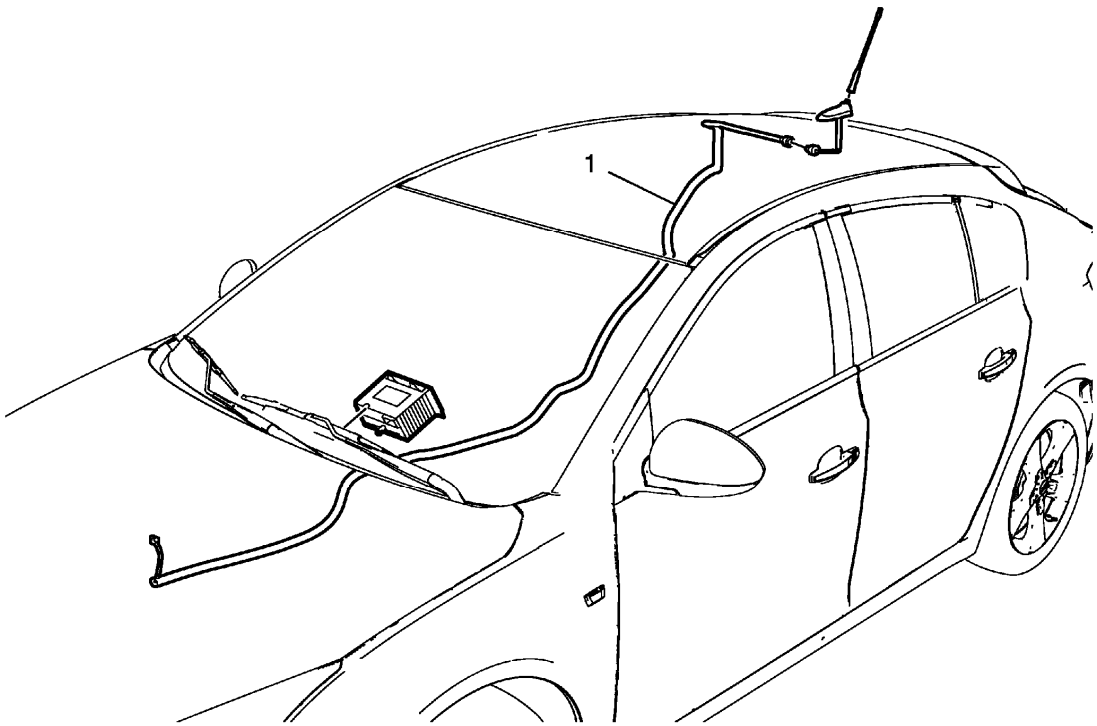

Fig. 36: Radio Antenna Cable
Courtesy of GENERAL MOTORS COMPANY

Radio Antenna Cable Replacement (Antenna Cable)

Callout	Component Name
Preliminary Procedures 1. Remove the front floor panel carpet. Refer to **Front Floor Panel Carpet Replacement** . 2. Remove the headlining trim panel. Refer to **Headlining Trim Panel Replacement (without Sunroof)** , **Headlining Trim Panel Replacement (with Sunroof)** .	
1	Radio Antenna Cable **Procedures** 1. Locate the radio antenna cable in the body wiring harness assembly. 2. Carefully cut the electrical tape. 3. Disconnect electrical connectors. 4. Replace the radio antenna cable. 5. Secure the radio antenna cable within the electrical conduit.

RADIO ANTENNA CABLE REPLACEMENT (RADIO CABLE)

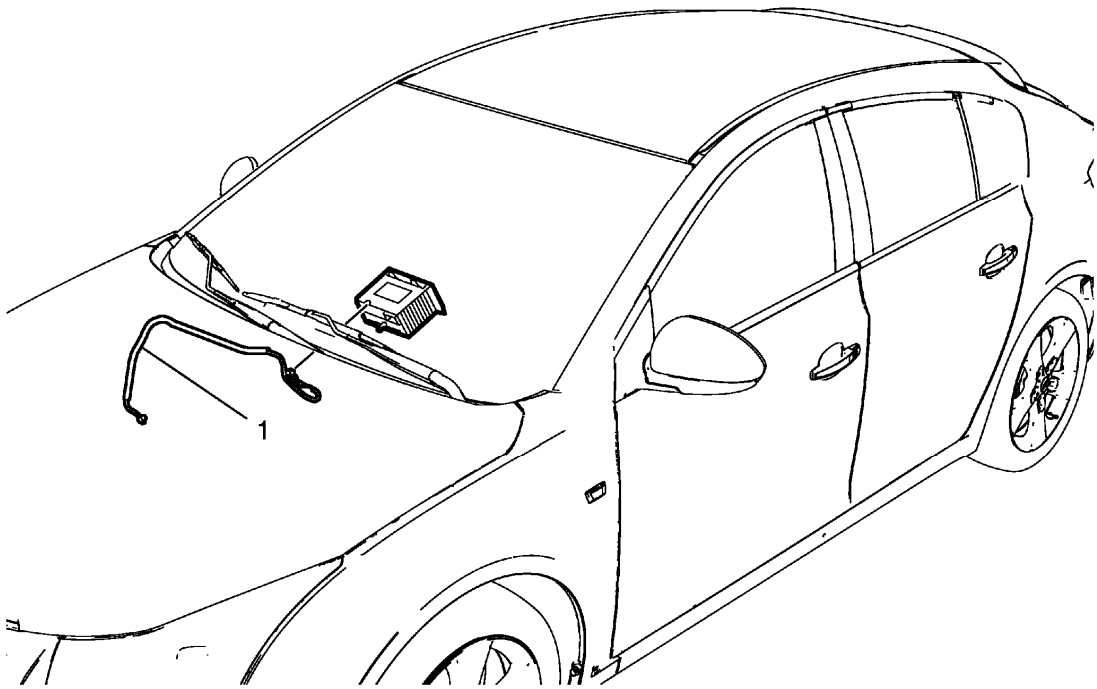

Fig. 37: Radio Antenna Cable (Radio Cable)
Courtesy of GENERAL MOTORS COMPANY

Radio Antenna Cable Replacement (Radio Cable)

Callout	Component Name
Preliminary Procedures Remove the instrument panel assembly. Refer to **Instrument Panel Assembly Replacement** .	
1	Radio Antenna Cable **Procedures** 1. Locate the radio antenna cable in the instrument panel wiring harness assembly. 2. Carefully cut the electrical tape. 3. Disconnect electrical connectors. 4. Replace the radio antenna cable. 5. Secure the radio antenna cable within the electrical conduit.

RADIO FRONT SPEAKER REPLACEMENT

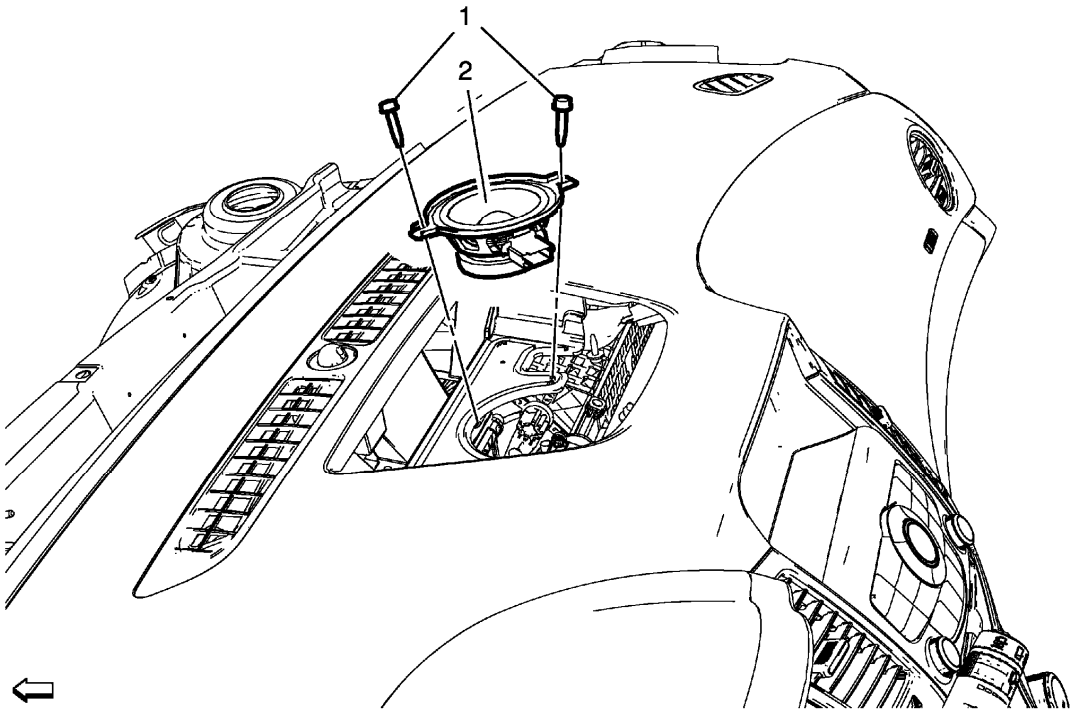

Fig. 38: Radio Front Speaker
Courtesy of GENERAL MOTORS COMPANY

Radio Front Speaker Replacement

Callout	Component Name
Preliminary Procedure Remove instrument panel upper trim pad insert. Refer to **Instrument Panel Upper Trim Pad Insert Replacement** .	
1	Radio Front Speaker Bolt (Qty: 2) **CAUTION:** **Refer to Fastener Caution .** **Tighten** 2.5 N.m (22 lb in)
2	Radio Front Speaker

RADIO WINDSHIELD SIDE GARNISH MOLDING SPEAKER REPLACEMENT

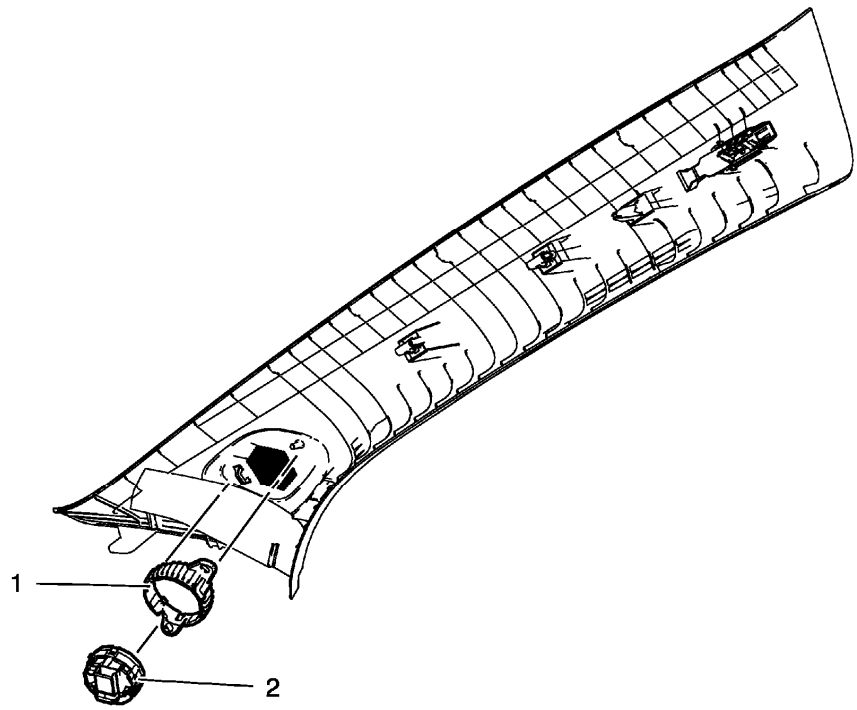

Fig. 39: Radio Windshield Side Garnish Molding Speaker
Courtesy of GENERAL MOTORS COMPANY

Radio Windshield Side Garnish Molding Speaker Replacement

Callout	Component Name
Preliminary Procedure Remove windshield garnish molding. Refer to **Windshield Garnish Molding Replacement** .	
1	Radio Windshield Side Garnish Molding Speaker Bracket
2	Radio Windshield Side Garnish Molding Speaker

USB RECEPTACLE REPLACEMENT

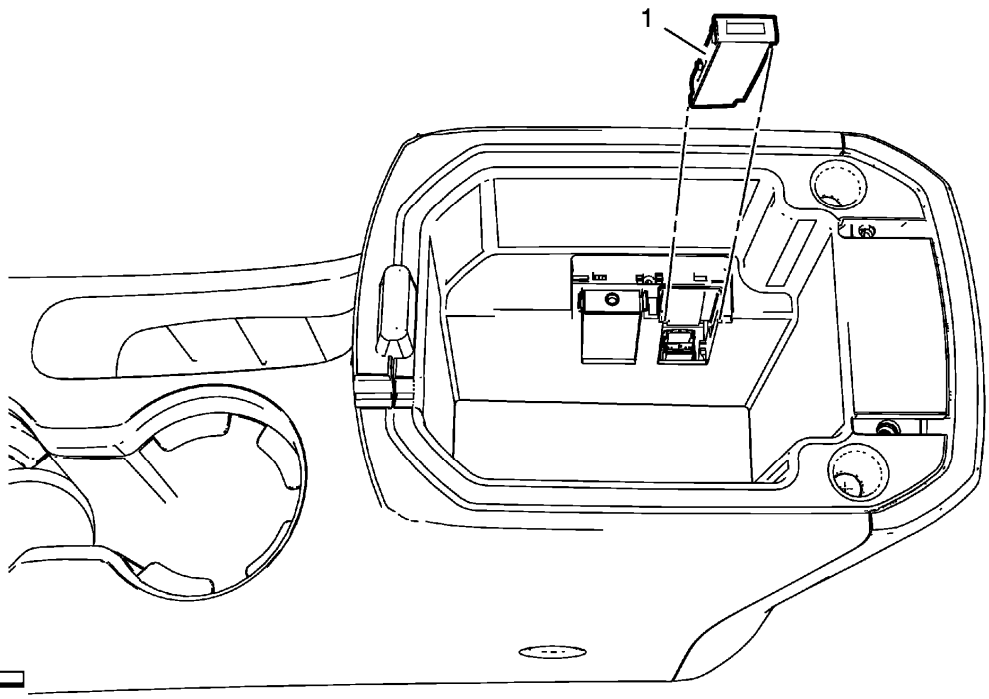

Fig. 40: USB Receptacle
Courtesy of GENERAL MOTORS COMPANY

USB Receptacle Replacement

Callout	Component Name
Preliminary Procedures 1. Disconnect the negative battery cable. Refer to **Battery Negative Cable Disconnection and Connection** . 2. Open armrest floor console.	
1	USB Receptacle **Procedure** Disconnect electrical connector.

RADIO FRONT SIDE DOOR SPEAKER REPLACEMENT

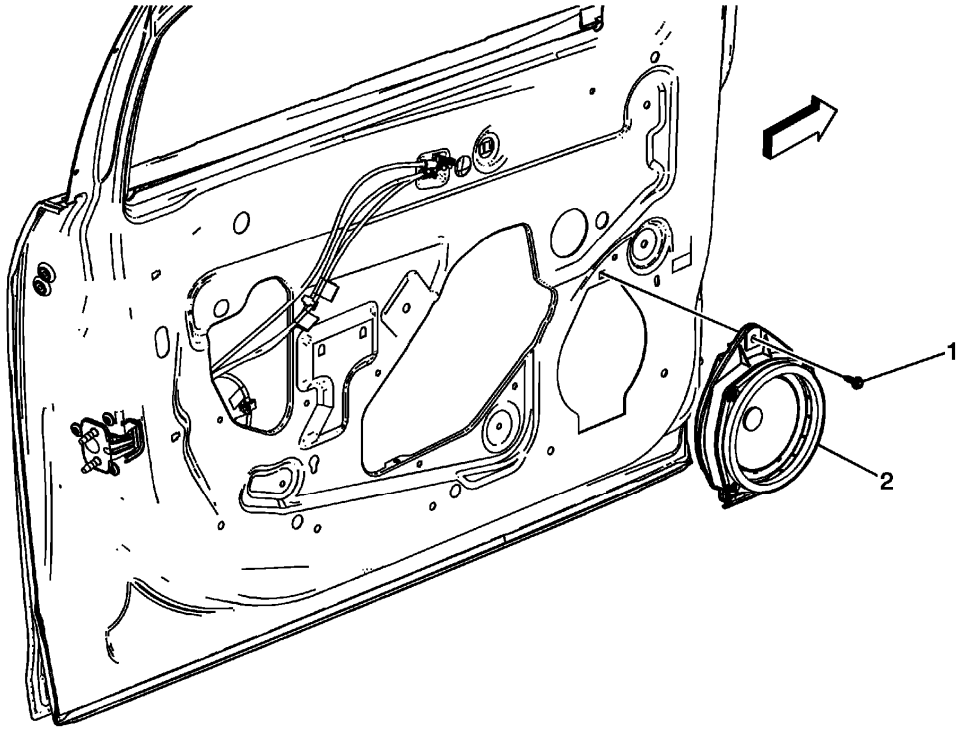

Fig. 41: View Of Radio Front Side Door Lower Speaker
Courtesy of GENERAL MOTORS COMPANY

Radio Front Side Door Speaker Replacement

Callout	Component Name
Preliminary Procedures Remove front side door trim replacement. Refer to **Front Side Door Trim Replacement** .	
1	Radio Front Side Door Speaker Bolt **CAUTION:** **Refer to Fastener Caution .** **Tighten** 2.5 N.m (22 lb in)
2	Radio Front Side Door Speaker **Procedure** Disconnect the electrical connector.

RADIO CONTROL SWITCH REPLACEMENT - STEERING WHEEL

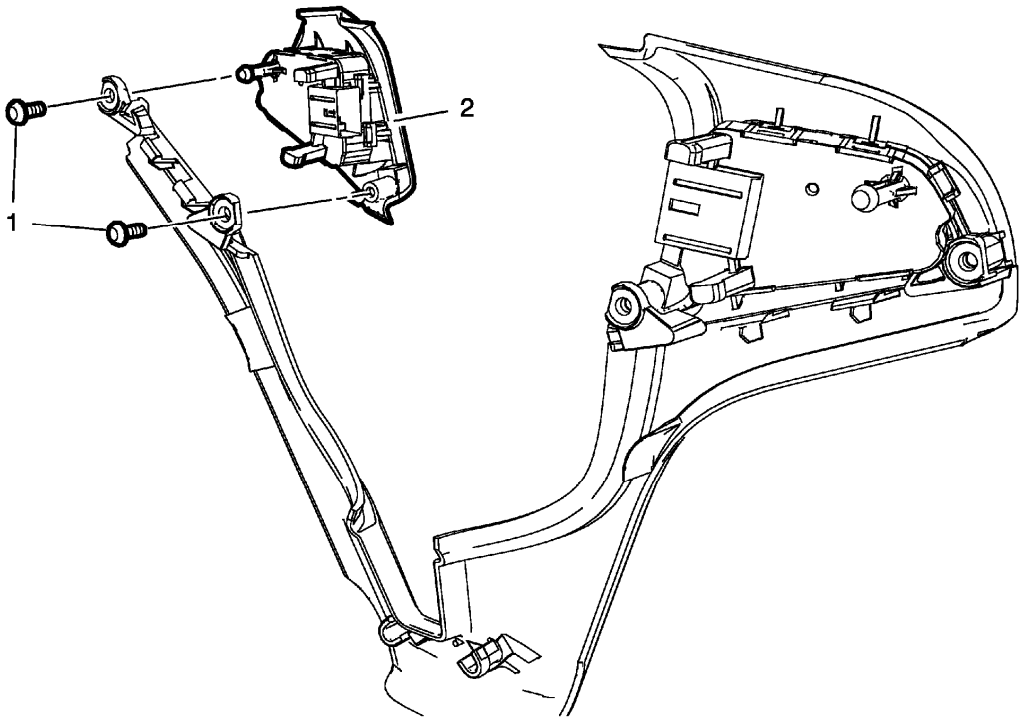

Fig. 42: Steering Wheel Radio Control Switch
Courtesy of GENERAL MOTORS COMPANY

Radio Control Switch Replacement - Steering Wheel

Callout	Component Name
Preliminary Procedures 1. Disconnect the negative battery cable. Refer to **Battery Negative Cable Disconnection and Connection** . 2. Remove inflatable restraint steering wheel module. Refer to **Airbag Steering Wheel Module Replacement** . 3. Remove the steering wheel spoke lower cover. Refer to **Steering Wheel Spoke Lower Cover Replacement**	
1	Radio Control Switch Bolt - Steering Wheel (Qty:2)
2	Radio Control Switch - Steering Wheel

RADIO REAR SIDE DOOR SPEAKER REPLACEMENT

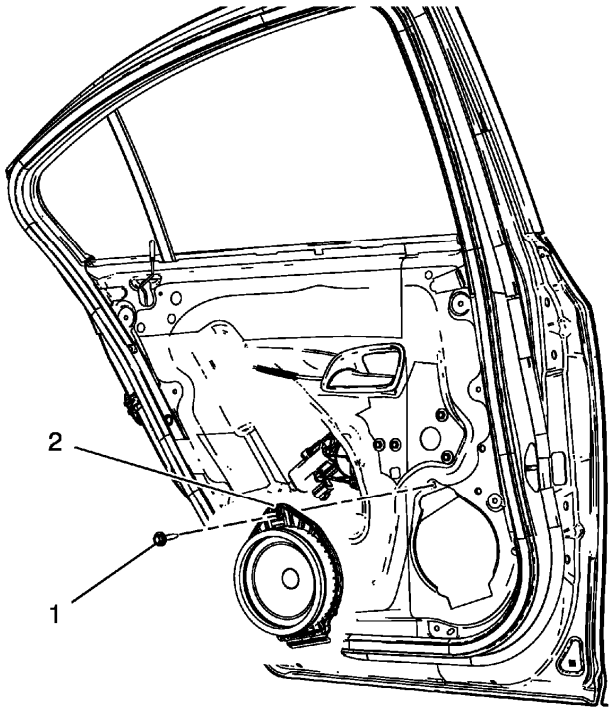

Fig. 43: Radio Rear Side Door Speaker
Courtesy of GENERAL MOTORS COMPANY

Radio Rear Side Door Speaker Replacement

Callout	Component Name
Preliminary Procedure Remove rear side door trim replacement. Refer to **Rear Side Door Trim Replacement** .	
1	Radio Rear Side Door Speaker Bolt **CAUTION:** **Refer to Fastener Caution .** **Tighten** 2.5 N.m (22 lb in)
2	Radio Rear Side Door Speaker **Procedure** Disconnect electrical connector.

RADIO REAR COMPARTMENT SPEAKER REPLACEMENT

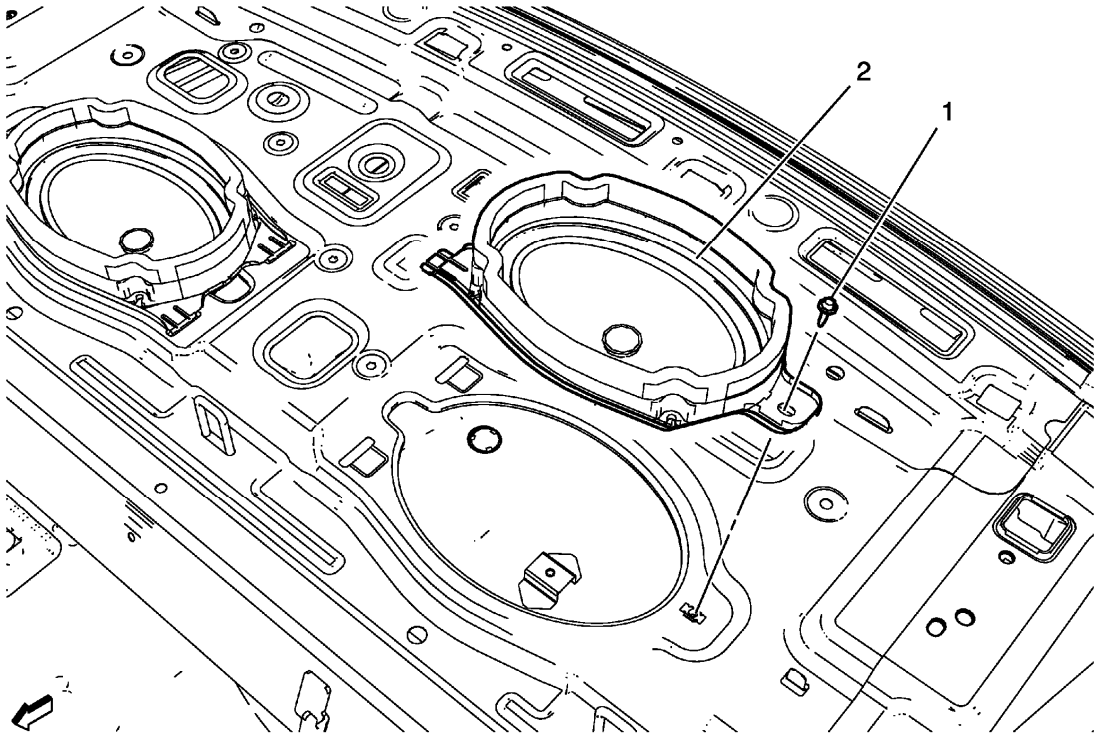

Fig. 44: Radio Rear Compartment Speaker & Bolt
Courtesy of GENERAL MOTORS COMPANY

Radio Rear Compartment Speaker Replacement

Callout	Component Name
Preliminary Procedure Remove rear window panel trim. Refer to **Rear Window Panel Trim Replacement** .	
1	Radio Rear Speaker Compartment Bolt **CAUTION:** **Refer to Fastener Caution .** **Tighten** 2.5 N.m (22 lb in)
2	Radio Rear Compartment Speaker **Procedure** Disconnect electrical connector.

DESCRIPTION AND OPERATION

ONSTAR DESCRIPTION AND OPERATION

This OnStar® system consists of the following components:

- Telematics communication interface control module
- OnStar® three button assembly
- Microphone
- Cellular antenna
- Navigation antenna
- Bluetooth® antenna (If equipped)
- Back up battery (If equipped)

This system also interfaces with the factory installed vehicle audio system.

Telematics Communication Interface Control Module

The telematics communication interface control module is a cellular device that allows the user to communicate data and voice signals over the national cellular network. Power is provided by a dedicated, fused B+ circuit. Ground is provided through the vehicle wiring harness attached to the module. The ignition state is determined by the telematics communication interface control module through serial data messaging.

Dedicated circuits are used to connect the telematics communication interface control module to a microphone, the button assembly, and to command the status LED. The telematics communication interface control module communicates with the rest of the vehicle over the serial data bus.

The module houses 2 technology systems, one to process GPS data, and another for cellular information. The cellular system connects the OnStar® system to the cellular carrier's communication system by interacting with the national cellular infrastructure. The module sends and receives all cellular communications over the cellular antenna and cellular antenna coax. GPS satellites orbiting earth are constantly transmitting signals of their current location. The OnStar® system uses the GPS signals to provide location on demand.

The module also has the capability of activating the horn, initiating door lock/unlock, or activating the exterior lamps using the serial data circuits. These functions can be commanded by the OnStar® Call Center per a customer request.

OnStar® Three Button Assembly

Base Mirror

- The OnStar® button assembly may be part of the rearview mirror, or a separate, stand alone unit. The button assembly is comprised of 3 buttons and a status LED. The buttons are defined as follows:
  - The answer/end call button, which is black with a white phone icon, allows the user to answer and end calls or initiate speech recognition.
  - The blue OnStar® call center button, which displays the OnStar® logo, allows the user to connect to the OnStar® call center.
  - The emergency button, which displays a white cross with a red background, sends a high priority emergency call to the OnStar® call center when pressed.

The telematics communication interface control module supplies 10 volts to the OnStar® button assembly on

the keypad supply voltage circuit. When pressed, each button completes a circuit across a resistor allowing a specific voltage to be returned to the telematics communication interface control module on the keypad signal circuit. Depending upon the voltage range returned the telematics communication interface control module is able to identify which button has been pressed.

The OnStar® status LED is located with the button assembly. The LED is green when the system is ON and operating normally. When the status LED is green and flashing, it is an indication that a call is in progress. When the LED is red, this indicates a system malfunction is present. In the event there is a system malfunction and the OnStar® system is still able to make a call, the LED will flash red during the call.

If the mirror has the rear vision camera display in the mirror, the LED's are then interior to the mirror and controlled via data communication on the Low Speed GMLAN bus from the Telematics Communication Interface Control Module to the mirror.

If the LED does not illuminate, this may indicate that the customers OnStar® subscription is not active or has expired. Push the blue OnStar button to connect to an advisor who can then verify the account status.

Each LED is controlled by the telematics communication interface control module over dedicated LED signal circuits. Ground for the LED is provided by the wiring harness attached to the button assembly.

Prismatic Mirror (If Equipped)

- The OnStar® button assembly is apart of the rearview mirror. The button assembly is comprised of 3 capacitive touch buttons and a status LED. The buttons are defined as follows:
  - The answer/end call button, which is a white driver figure seated with voice signals near it's face, allows the user to answer and end calls or initiate speech recognition.
  - The blue OnStar® call center button, which displays the blue OnStar® logo, allows the user to connect to the OnStar® call center.
  - The emergency button, which displays red letters "SOS" as an illuminated Indicator, sends a high priority emergency call to the OnStar® call center when pressed.

The telematics communication interface control module supplies 10 volts to the OnStar® button assembly on the keypad supply voltage circuit. When pressed, each button press is processed and completes a circuit across an internal resistor allowing a specific voltage to be returned to the telematics communication interface control module on the keypad signal circuit. Depending upon the voltage range returned the telematics communication interface control module is able to identify which button has been pressed.

The OnStar® status LED is located within the mirror near the buttons. The LED is green when the system is ON and operating normally. When the status LED is green and flashing, it is an indication that a call is in progress. When the LED is red, this indicates a system malfunction is present. In the event there is a system malfunction and the OnStar® system is still able to make a call, the LED will flash red during the call.

If the LED does not illuminate, this may indicate that the customers OnStar® subscription is not active or has expired. Push the blue OnStar button to connect to an advisor who can then verify the account status.

Each LED is controlled by the telematics communication interface control module over dedicated LED signal circuits. Ground for the LED is provided by the wiring harness attached to the button assembly.

Electrochromic Mirror (If Equipped)

- The OnStar® button assembly is apart of the rearview mirror. The button assembly is comprised of 3 capacitive touch buttons and an error indicator. The buttons are defined as follows:
  - The answer/end call button, which is a white driver figure seated with voice signals near it's face, allows the user to answer and end calls or initiate speech recognition.
  - The blue OnStar® call center button, which displays the blue OnStar® logo, allows the user to connect to the OnStar® call center.
  - The emergency button, which displays red letters "SOS" as an illuminated Indicator, sends a high priority emergency call to the OnStar® call center when pressed.

The telematics communication interface control module supplies 10 volts to the OnStar® button assembly on the keypad supply voltage circuit. When pressed, each button press is processed and completes a circuit across an internal resistor allowing a specific voltage to be returned to the telematics communication interface control module on the keypad signal circuit. Depending upon the voltage range returned the telematics communication interface control module is able to identify which button has been pressed and illuminate associated indicator above each button.

The OnStar® error indicator is located within the mirror above the buttons between the OnStar® indicator and emergency "SOS" indicator. All three indicators associated with a button press are illuminated when the system is ON and operating normally. When any indicator is illuminated and flashing, it is an indication that a call is in progress. When the OnStar® error indicator is illuminated, this indicates a system malfunction is present. In the event there is a system malfunction and the OnStar® system is still able to make a call, the OnStar® error indicator will remain illuminated during the call.

If the indicators do not illuminate, this may indicate that the customers OnStar® subscription is not active or has expired. Push the blue OnStar button to connect to an advisor who can then verify the account status.

Secondary OnStar® Controls

Some vehicles may have an additional button that when pushed can engage the OnStar® system. The button may be a symbol of a face with sound waves, or may say MUTE, or be a symbol of a radio speaker with a slash through it.

By engaging the OnStar® system with this feature, the user can interact with the system by use of voice commands. A complete list of these commands is supplied in the information provided to the customer. If the information is not available for reference, at any command prompt the user can say "HELP" and the telematics communication interface control module will return an audible list of available commands.

OnStar® Microphone

The OnStar®, or cellular microphone, can be a part of the rearview mirror assembly, or on some vehicle lines, a separate, stand alone unit. In either case, the telematics communication interface control module supplies approximately 10 volts to the microphone on the cellular microphone signal circuit, and voice data from the user is sent back to the telematics communication interface control module over the same circuit. A cellular microphone low reference circuit or a drain wire provides a ground for the microphone.

Cellular and GPS Antennas

This vehicle will be equipped with one of the following types of antennas:

- A combination cellular and navigation antenna, which brings the functions of both into a single part
- A cellular, GPS, and digital radio receiver antenna, which also incorporates the functionality of the digital radio receiver satellite antenna (XM).
- A cellular, GPS, and digital radio receiver antenna, which also incorporates the AM/FM antenna.

The cellular antenna is the component that allows the OnStar® system to send and receive data over airwaves by means of cellular technology. The antenna is connected at the base to a coax cable that plugs directly into the telematics communication interface control module.

The GPS antenna is used to collect the signals of the orbiting GPS satellites. Within the antenna is housed a low noise amplifier that allows for a more broad and precise reception of this data. The antenna is connected at the base to a coax cable that plugs directly into the telematics communication interface control module. The cable also provides a path for DC current for powering the antenna.

The OnStar® Call Center also has the capability of communicating with the vehicle during an OnStar® call to retrieve the latest GPS location and transmit it to the OnStar® Call Center. A history location of the last recorded position of the vehicle is stored in the module and marked as aged, for as long as the module power is not removed. Actual GPS location may take up to 10 minutes to register in the event of a loss of power.

OnStar® RemoteLink

OnStar® RemoteLink is a mobile app to link mobile devices to a vehicle for limited diagnostics and feature controls. After downloading the app and registering the device, vehicle owners with an eligible vehicle can use their mobile devices to access real-time data from their vehicle and perform specific commands remotely.

All communication between the app and the vehicle is powered by OnStar's® advanced connected vehicle technology. An active OnStar® account as well as a valid OnStar® username and password are required to use the app. The remote commands must be enabled by logging into the user's OnStar® account prior to using the app.

Vehicle Control Features

- Lock/Unlock doors
- Start vehicle remotely
- Activate your Horn & Lights
- Contact an OnStar Advisor, Roadside Assistance or your Preferred Dealer

Available Vehicle Data:

- Real-time fuel information, including fuel range, fuel remaining, and lifetime MPG
- Lifetime mileage
- Remaining oil life

- Current tire pressure information
- OnStar® account information

Compass Heading

The telematics communication interface module has a compass feature to calculate vehicle direction which is displayed via the instrument panel cluster or designated display. The compass heading is determined by dead reckoning until the GPS 3d fix is established. The dead reckoning is accomplished by using the yaw rate sensors and wheel ticks to determine heading changes from a GPS known heading. The GPS 3d fix heading is determined by the deferential of two locations.

Bluetooth® (If Equipped)

Bluetooth® wireless technology is a short-range communications technology intended to replace the cables connecting portable and/or fixed devices while maintaining high levels of security. Only vehicles with steering wheel controls will have Bluetooth® functionality. In order to utilize the vehicle's Bluetooth® system, a Bluetooth® equipped cellular phone is required.

The Bluetooth® antenna is a small fixed antenna connected directly to the telematics communication interface control module and is used to send and receive signals from a Bluetooth® enabled cellular phone. The antenna utilizes no cabling and is not external to the vehicle. The available features and functions are determined by the software within the device being used and the telematics communication interface control module. The operating range of the signal from the vehicle is approximately 30 feet. Note that the operating range is dependent upon the cellular phone being used and battery level of the phone.

With Bluetooth® technology customers can experience hands-free calling as their Bluetooth® capable cellular phones are wirelessly connected to the vehicle. It will allow customers to place and receive calls using the steering wheel controls and voice recognition. The vehicle audio system will allow you to listen to your call through the vehicle speakers and adjust volume through steering wheel or radio controls.

Not all Bluetooth® cellular phones are guaranteed to work with the vehicle's Bluetooth® system. Based on the cellular phone's service provider and the manufacturer's implementation of Bluetooth®, not all phones support all available Bluetooth® functionality. Bluetooth® enabled cellular phones will be tested for vehicle compatibility and a feature compatibility list will be provided via the GM Bluetooth® website: http://www.gm.com/vc/bluetooth/

Bluetooth® Features Supported

The following is a list of features supported by the Bluetooth® system. Note that not all devices will support all of the listed functions.

- Automatic reconnection - highest priority phone will automatically be connected to vehicle when vehicle ignition is on
- Hands-free dialing- via digits, redial, name tags (phone number saved to a nametag via voice recognition)
- Answering a call
- Ending a call

- Mute a Call
- Rejecting a call - ignore an incoming call
- Call Waiting
- Three-way Calling - initiated from hands-free system
- Send Number During a Call - this is used when calling a menu-driven phone system
- Transfer a Call - transfer call from vehicle to cellular phone and visa versa
- Voice Pass-Thru - allow access to the voice recognition commands on the cellular phone

Pairing a Bluetooth® Cellular Phone to the Vehicle

In order to use hands-free calling, the cellular phone must be paired to the vehicle. Up to five devices can be paired to the vehicle at one time, but only one can be connected at any given time. To pair a phone, the customer must know how to operate the Bluetooth® functionality of their phone. The pairing process must only be done one time for each phone, unless that phone's information is deleted. For safety reasons, the pairing process is disabled while the vehicle is moving.

Once the Bluetooth® cellular phone has been paired with vehicle, it will automatically connect to the vehicle when the ignition is on and the device is on. When more than one paired phone is in the vehicle, the phone with the highest priority will be connected. If the cellular phone is in use while getting into the vehicle, the phone can be switched to hands-free mode with the press of a button. In addition, a call in progress can be transferred from the vehicle hands-free mode to the phone to continue the call as the customer exits the vehicle.

Complete pairing instructions are provided in the Vehicle Owners Manual.

Back-up Battery (If Equipped)

IMPORTANT: Do not disconnect the main vehicle battery or remove the OnStar® fuse with the ignition key in any position other than OFF. Disconnecting power to the OnStar® module in any way while the ignition is ON or with retained accessory power activated may cause activation of the OnStar® Back-Up Battery. This action is per design as the back-up battery is designed to provide power to the telematics communication interface control module so an emergency notification call can be made after an event where the main battery is disabled. Once the Back-Up Battery is activated it will stay on until the power is restored back to the telematics communication interface control module. The telematics communication interface control module naturally chooses the main supply voltage as it's default supply, but if the main supply is removed or lost for any reason the OnStar® module will use the Back-Up Battery as a power supply as long as the default supply can not be detected. The back-up battery is not rechargeable and once discharged below 9.5 volts the back-up battery must be replaced.

Certain OnStar® equipped vehicles may also be equipped with a back-up battery. The back-up battery is a non-rechargeable, lithium battery intended to provide an auxiliary power source for the telematics communication interface control module in the event where power from the main vehicle battery is lost.

The back-up battery is intended to have a limited life span of approximately 4 years and is designed to maintain an open circuit voltage between 16 V and 9 V throughout this period. This allows the battery to power the basic functions of the telematics communication interface control module for least one 200 second (5 minute) call at the end of the 4 year span, should the main vehicle battery be lost. In the case of a vehicle losing vehicle battery power, OnStar will switch over to the backup battery based on an internal algorithm. It will look for an air-bag deploy, or near-deploy, messages from the SDM. If there are no messages the OnStar module will stay wake for a few minutes longer and monitor the buttons in the mirror. If not pressed, the modules will power down and shut off completely.

The back-up battery is connected to the telematics communication interface control module through the back-up battery positive voltage circuit and back-up battery ground circuit and is protected from a short circuit by means of an internal fuse. In the event the back-up battery, battery positive voltage circuit is shorted to the back-up battery ground circuit or chassis ground, the fuse will open and render the back-up battery permanently inoperable. The status of the back-up battery and its associated wiring is monitored by the telematics communication interface control module.

Audio System Interface

When the OnStar® requires audio output, a serial data message is sent to the audio system to mute all radio functions and transmit OnStar® originated audio. The OnStar® audio is transmitted to the vehicle audio system by a dedicated signal circuit and a low reference circuit.

The audio system will mute and an audible ring will be heard though the speakers if the vehicle receives a call with the radio ON.

On some vehicles, the HVAC blower speed may be reduced when the OnStar® system is active to aid in reducing interior noise. When the system is no longer active, the blower speed will return to its previous setting.

OnStar® Sleep Cycle

The OnStar® system uses a unique sleep cycle to allow the system to receive cellular calls while the ignition is in the OFF position and retained accessory power mode has ended. This cycle enables the telematics communication interface control module to perform remote functions, such as door unlock, as commanded over the air by the OnStar® Call Center, and to continue to maintain an acceptable level of battery electrical drain.

The OnStar® system uses 4 states of readiness, depending upon the type of cellular market the vehicle is in when the ignition is put into the OFF state:

- High power
- Low power
- Sleep
- Digital standby

The high power state is in effect whenever the ignition is in the ON or RUN position, or retained accessory power is enabled, and the OnStar® system is sending or receiving calls or when the system is performing a remote function.

The low power state is in effect when the OnStar® system is idle with the ignition in the ON or RUN position, or with retained accessory power enabled.

The sleep state is entered after the vehicle has been shut off and the retained accessory power has timed out while in an analog cellular area. At a predetermined time recorded within the telematics communication interface control module, the system re-enters the low power state to listen for a call from the OnStar® Call Center for 1 minute. After this interval, the system will again return to the sleep state for 9 minutes. If a call is sent during the 1 minute interval, the OnStar® system will receive the call and immediately go into the high power mode to perform any requested functions. If no call is received during the 1 minute interval, the system will go back into the sleep mode for another 9 minutes. This process will continue for up to 48 hours, after which the OnStar® system will turn off until the ignition is turned to the ON or RUN position.

The digital standby power state is entered after the vehicle has been shut off and the retained accessory power has timed out while in a digital cellular area. When in digital standby mode, the OnStar® module is able to perform all remote functions as commanded by an OnStar® advisor at any time, for a continuous 120 hours. After 120 hours, the OnStar® module will go into sleep mode until a wake up signal from the vehicle is seen by the telematics communication interface control module. If the OnStar module loses the digital cellular signal it will revert to analog mode and follow the standard sleep state (9 minutes OFF, 1 minute standby) based on the time of the GPS signals, this will continue until a digital cellular signal is again received.

If the OnStar® system loses battery power while the system is in a standby or sleep mode, the system will remain OFF until battery power is restored and the ignition is turned to the ON or RUN position.

Features

OnStar® Personal Calling

The hands free, OnStar® personal calling cellular phone feature is an additional feature of the OnStar® system. This feature is embedded within the telematics communication interface control module; however it must be activated by an OnStar® advisor. OnStar® personal calling operates similar to most hand held cellular phones in that the availability for its usage is based on minutes or units. The customer must have a current OnStar® subscription, as this feature cannot be utilized without it. To use OnStar® personal calling, the customer must also purchase units (minutes) as outlined in the owners guide provided with the OnStar® system. Units begin to deplete, 1 unit is equal to 1 minute, as the customer makes outbound phone calls, answers inbound phone calls, or while connected to the OnStar® virtual advisor. In addition, units may also have an expiration date, depending upon the type of units purchased.

Customers have the ability to store telephone numbers within the module, referenced by a nametag for the convenience of frequently dialed numbers. After storing a nametag, the user can dial this number by initiating the OnStar® personal calling feature, speaking the word "call," and repeating the nametag assigned.

Turn by Turn Navigation

Turn by Turn Navigation allows the driver to contact OnStar® to obtain directions for driving from a current location to a desired location. The Turn by Turn Navigation system stores your planned route and continually checks your position along that route, when you deviate from the planned route, the system will recognize this and prompt the driver with verbal prompts for how to proceed. The driver then responds verbally to direct the system to continue the current routing or to recalculate the route because of a missed turn.

Advisor Record Feature

The Advisor Record Feature allows the user to store any information given during a call with an OnStar® Advisor. Recording is activated by pressing the blue OnStar button during a call; pressing the button a second time stops the recording. The stored information can be played back by pressing the phone button on the three button assembly and using the voice command "Advisor Playback".

Deactivated OnStar® Accounts

In the event a customer has not renewed their OnStar® account after expiration or the account was never activated, OnStar® will make a discrete cellular call to the vehicle to deactivate the OnStar® system. Before taking this action, customers are notified that the OnStar® system in their vehicle will be deactivated unless they elect to renew the account. After the OnStar® account has been deactivated, customers will experience the following:

- The OnStar® status LED will not illuminate.
- The OnStar® system will NOT attempt to connect to the OnStar® Call Center in the event of a collision or if the vehicle's front air bags deploy for any other reason.
- An emergency button press will play a demo message indicating the service has been deactivated.
- An OnStar® Call Center button press will connect the customer with a dedicated sales team who can sell an OnStar® subscription and reactivate the vehicle. Depending on the type of OnStar® hardware in the vehicle, the customer may first hear a demonstration message stating there is no current OnStar® subscription for the vehicle, and directing the customer what to do to activate services.
- OnStar® personal calling will not be available, as this feature requires the customer to have a current OnStar® account. Attempts to use this feature may result in cellular connection failure messages and the inability to connect to the number dialed.

Certain vehicles that have never had an active OnStar® account, or that have been deactivated, may be unable to establish a connection with the OnStar® Call Center. When normal published diagnostic procedures do not indicate a possible cause for the no connect concern, the vehicle may have been deactivated. For deactivated vehicles, a no connect response should be considered normal operation. Further diagnosis and subsequent repair is only necessary should the customer elect to become an active OnStar® subscriber or renew the account subscription.

OnStar® Cellular, GPS, and Diagnostic Limitations

The proper operation of the OnStar® System is dependent on several elements outside the components integrated into the vehicle. These include the National Cellular Network Infrastructure, the cellular telephone carriers within the network, and the GPS.

The cellular operation of the OnStar® system may be inhibited by factors such as the users range from an analog or digital cellular tower, the state of the cellular carrier's equipment, and the location where the call is placed. Making an OnStar® key press in areas that lack sufficient cellular coverage or have a temporary equipment failure will result in either the inability of a call to complete with a data transfer or the complete inability to connect to the OnStar® Call Center. The OnStar® system may also experience connection issues if the identification numbers for the module, station identification number, electronic serial number or manufacturers electronic ID, are not recognized by the cellular carriers local signal receiving towers.

The satellites that orbit earth providing the OnStar system with GPS data have almost no failures associated with them. In the event of a no GPS concern, the failure will likely lie with the inability of the system to gain GPS signals because of its location, i.e. in a parking structure, hardware failure, or being mistaken with an OnStar® call which has reached the Call Center without vehicle data.

During diagnostic testing of the OnStar® system, the technician should ensure the vehicle is located in an area that has a clear unobstructed view of the open sky, and preferably, an area where analog or digital cellular calls have been successfully placed. These areas can be found by successfully making an OnStar® keypress in a known good OnStar® equipped vehicle and confirming success with the OnStar® Call Center advisor. Such places can be used as a permanent reference for future OnStar® testing.

Mobile Identification Number and Mobile Directory Number

The telematics communication interface control module utilizes 2 numbers for cellular device identification, call routing and connection, a mobile identification number and a mobile directory number. The mobile identification number represents the number used by the cellular carrier for call routing purposes while the mobile directory number represents the number dialed to reach the cellular device.

Operation of the OnStar® Speech Recognition Systems

OnStar® users communicate with 2 speech recognition systems. Speech recognition allows the user to speak to one computer in the vehicle, and one reached over a phone line. The computer tries to understand the users command, and responds by speaking back, or by taking the appropriate action, e.g. dialing the phone.

- Personal Calling uses a speech recognition system that resides in the vehicle. When the user presses the phone button, the system states, Ready, and listens for the user's command. The user can speak commands to control the hands-free phone.
- Virtual advisor is a remote speech recognition system that the caller can access by making a phone call. The user connects to virtual advisor by requesting it during personal calling use. The user is then transferred to the virtual advisor server and talks to it via a cellular connection.

The OnStar® speech recognition systems use speech technology that is designed to understand a wide range of American English speakers. Although there is no one right way to speak English, the system will work best when users try to modify their pronunciation should they encounter difficulty. Users who do not obtain good results are advised to try the tips and workarounds found in this section.

General Tips for Better Speech Recognition

Concern	Tip for Better Result
Noise	Noise may confuse the speech recognition system. You usually get better performance from the system in quieter conditions: • The HVAC fan creates noise. Turn it down or OFF for better speech system performance. • Driving at high speeds creates louder engine noise and wind noise. You may get better results at lower speeds. • An open window or an open sunroof allows more noise to enter the vehicle. Close all windows for better results.

	• Noisy rainstorms can also reduce performance. • If passengers are talking while you use the speech system, it may be confused by their speech. You will get better results if all occupants of the vehicle are quiet while the system is listening for commands.
When to Speak	In Personal Calling, the system is only listening after it prompts you to speak with a beep. • When the system prompts you to speak, you have about 5 seconds to respond. If the system does not hear a response, it will prompt you again, or cancel the transaction. • If you begin to speak too soon, try pausing for a half second before speaking after the beep. • In the Virtual Advisor, the system is always listening for commands, even while it is speaking.
How to Speak	Speak forcefully, and clearly. • The noisier the environment, the louder you need to speak. If you are in the driver seat, speak facing the front of the car. If you are a passenger, speak facing the rearview mirror. • Speak calmly, and naturally. The system may sometimes fail your repeated attempts to give a command. If your speech is distorted by shouting or frustration, this may cause more errors. • People with high-pitched voices may have better results by speaking in a deeper, lower-pitched voice. However, do not lower the volume of the voice. • Avoid speaking with a rising intonation, like asking a question. Use a flat or falling intonation, like giving an answer.
What to Say	Personal Calling: One-word commands • The Personal Calling system listens for only one word at a time. There are some exceptions, 2-word phrases that are spoken and understood as a single word, e.g. "virtual advisor", "voice feedback", and "my number". You can enter phone numbers only one digit at a time, and the system repeats each digit as it hears it. • Say "Help" at the Ready prompt to hear the list of Personal Calling commands. • Virtual Advisor can understand sentences with more than one word. It also expects to hear a 4-digit number all at once when it asks for your PIN.

	• Say, "What are my choices?" to hear a list of commands that the Virtual Advisor understands.
Entering a phone number	• If you have trouble getting numbers correctly into the system, store your frequently-called number in the directory, so the system will remember them. After you have stored a number with a nametag, then you simply say "call" and the nametag in order to call the number. • If the system cannot understand your numbers, ask another person to help you enter your frequently-called numbers. This person can speak the numbers, then you can speak the nametag.
Storing or dialing a number	When you have finished speaking your phone number, you do not need to say "store" or "dial" to indicate that you are done. If you pause and say nothing, the system will ask you if you want to store or dial. Say "yes".
Creating nametags	• Short nametags that are similar may be easily confused by the system. You may get better recognition of your nametags if you make them longer, for example "George Washington" without pause, instead of "George" only. • If you want to use nametags while driving, it is best to store the nametag with some vehicle noise in the background. If you are in park while you are storing nametags, you can turn the fan on low or open windows in order to create some background noise.
Virtual Advisor 4-digit PIN	Say the 4 digits in a natural way, without pausing between digits.
Interrupting	• When the Virtual Advisor is speaking, you can interrupt it with another command. The first word in your command helps to get its attention. • If the Virtual Advisor has trouble understanding your commands when you interrupt, try speaking the first word loudly and clearly, then pause for an instant, then continue with the rest of the command. For example: "Get... my weather" or "Lookup... a quote for General Motors".

RADIO/AUDIO SYSTEM DESCRIPTION AND OPERATION (WITH COLOR DISPLAY)

The entertainment system on this vehicle may have several different configurations available to it. To determine the specific configuration of the vehicle, please see the Service Parts ID Label, and refer to **RPO Code List** .

Each item in the list below represents topics covered in detail below.

- Radio Circuit Operation
- Information Display and Controls
- Antenna System

- Radio Reception
- Speaker Operation
- Audio Amplifier (If equipped)
- Theft Deterrent
- Bluetooth ® (UP9) (if equipped)
- Applications (if equipped)
- Auxiliary Audio Input Jack (If equipped)
- USB Port (If equipped)
- Navigation System Components and Features (if equipped)
- OnStar ®
- Steering Wheel Controls (If equipped)
- Auto Volume Control

Radio Circuit Operation

Radio Power

The radio does not use a discrete ignition feed circuit for power moding. The power mode master provides the system power mode to the radio via serial data messages. The power mode master determines the system power mode by processing power mode information from ignition switch inputs. Serial data power modes supported by the radio are OFF, ACCESSORY, RUN, and CRANK REQUEST.

Radio Grounds

The vehicle harness provides a ground for the radio circuits. The radio may also be case grounded.

Radio Data Link Communication

The radio communicates with other modules via serial data.

Radio Audio Outputs

Each of the audio output channel circuits (+) and (-), at the radio have a DC bias voltage that is approximately one half of battery voltage. The audio being played on the system is produced by a varying AC voltage that is centered around the DC bias voltage on the same circuit. The AC voltage is what causes the speaker cone to move and produce sound. The frequency (Hz) of the AC voltage signal is directly related to the frequency of the input (audio source playing) to the audio system. Both the DC bias voltage and the AC voltage signals are needed for the audio system to properly produce sound.

Remote Enable Output

The remote enable circuit is a discrete 12 V signal supplied to infotainment system components when the radio is producing audio, needs the front display on, needs video entertainment system components on, or needs to produce chimes. This signal is used to control the power state of the components. There is no output on radio

the remote enable circuit when the vehicle is in the CRANK powermode, this is to minimize current consumption from the attached modules and also to avoid audio pops during crank events.

Information Display and Controls

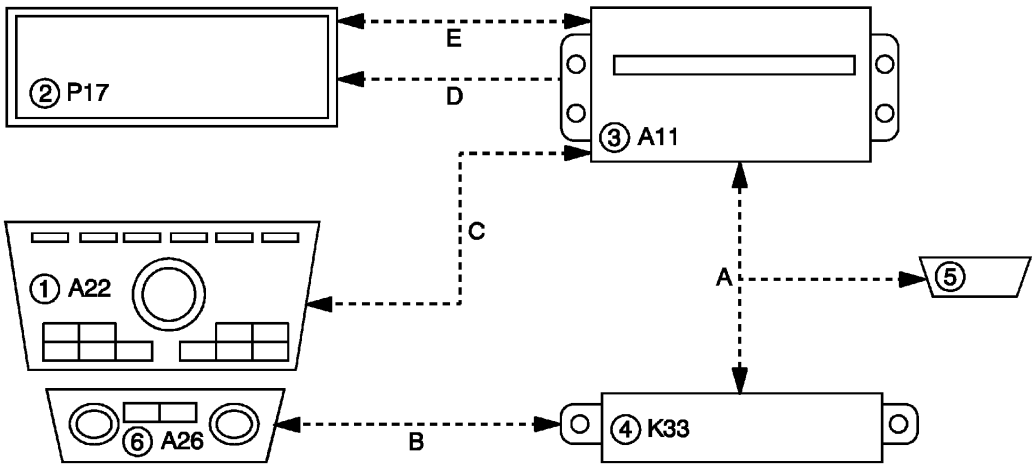

Fig. 45: Radio/HVAC Communications Diagram
Courtesy of GENERAL MOTORS COMPANY

Callout	Component Name
1	Radio Controls
2	Info Display Module
3	Radio
4	HVAC Control Module
5	Data Link Connector
6	HVAC Controls
a	GMLAN
b	Local Interconnect Network- HVAC
c	CAN Graphical Interface
d	Digital Video
e	Touch Screen Serial Data

The info display module has continuous power and ground. When the radio is on, a discrete 12 V signal is supplied on the remote enable circuit to the color display module. This signal is used to control the power state of the module, which is active when the signal is high and inactive when the signal is low.

The info display module receives digital video data from the radio for on-screen display information through a dedicated video cable. The radio communicates with the info display module over the touch screen serial data circuits for touch screen inputs and backlighting dimming level.

The radio controls communicate radio control inputs directly to the radio through the CAN Graphical Interface (CGI) data circuits. After receiving the message the radio will perform the requested function. Messages communicated between the radio and the radio/HVAC controls include the following:

- Button presses/knob rotations
- Commands for the state of indicators
- Radio control back-lighting

The HVAC controls are a separate component from the radio controls. HVAC data for controls and status indicators is communicated between the HVAC controls and the HVAC control module with a separate LIN serial data circuit. HVAC status screen information from the HVAC control module is transmitted to the radio on the GMLAN serial data circuit. The radio then displays the desired screen information on the info display using the video data circuits.

Antenna System

Multi-Band Antenna

The multi-band antenna is located on the roof of the vehicle. This type of antenna may be used with the AM/FM radio, but is primarily for cellular and GPS signals, if the vehicle has these features. Keep this antenna clear of snow and ice build up for clear reception. If the vehicle has a sunroof, the performance of the system may be affected if the sunroof is open. Loading items onto the roof of the vehicle can interfere with the performance of the system, ensure the multi-band antenna is not obstructed.

The radio antenna is enabled when the radio is turned on. The radio provides battery voltage to the antenna using the center conductor of the antenna coaxial cable. This DC voltage does not affect the incoming radio signal. When a 12 V signal is seen by the on the center conductor of the antenna coax, both AM and FM signals are amplified.

Radio Reception

AM/FM Radio Signal

The radio signal is sent from a broadcast station and is then received by an antenna. The strength of the signal received depends on the following:

- The power output (wattage) of the broadcasting station
- The location of the vehicle (or receiver) relative to the broadcast tower.
- Height of the broadcast antenna
- Height of the receiving antenna
- Obstacles between the tower and the receiver
- Atmospheric conditions
- What band (AM or FM) the station is broadcasting
- Type of antenna and the ground plane

Digital Radio Receiver (If equipped)

The XM satellite receiver is integrated into the radio. XM satellite radio provides digital radio reception. The XM signal is broadcast from two satellites and, where necessary, terrestrial repeaters. The high power satellites

allow the antenna to receive the XM signal even when foliage and other partial obstructions block the antennas view of the satellite. Terrestrial repeaters are used in dense urban areas. These repeaters will receive the satellite signal and re-broadcast them at much higher power levels in order to ensure reception in areas with densely packed tall buildings. A service fee is required in order to receive the XM service.

Radio Data System (RDS)

The RDS feature is available only on FM stations that broadcast RDS information. This system relies upon receiving specific information from these stations and only works when the information is available. While the radio is tuned to an FM-RDS station, the station name or call letters display. RDS data is carried in what is known as a "subcarrier". A subcarrier is a frequency that the FM broadcaster is authorized to use to send data that is not audible in the main audio program.

RDS functions will only work with FM broadcast stations that are broadcasting RDS data. Not all FM Broadcast stations broadcast RDS data or offer all of the RDS services.

The information displayed is dependent upon the information broadcast by the particular station. The information may vary greatly between stations. RDS functions may not work properly when reception is weak, reception is of poor quality, or RDS is not implemented properly by the FM Broadcaster. In some cases, a radio station broadcasting incorrect information may cause the RDS features of the radio to appear to work improperly.

With RDS, the radio can do the following:

- Display text information such as: station identification, type of programming, and general information (artist and song title, station messages, call in phone numbers, etc.).
- Seek to stations broadcasting the selected type of programming
- Receive announcements concerning local and national emergencies
- Receive alert warnings of local or national emergencies. When an alert announcement comes on the current radio station, ALERT! displays. You will hear the announcement, even if the volume is low or a CD is playing. If a CD is playing, play stops during the announcement. Alert announcements cannot be turned off. ALERT! is not affected by tests of the emergency broadcast system. This feature is not supported by all RDS stations.

Speaker Operation

Speakers turn electrical energy into mechanical energy to move air, using a permanent magnet and an electromagnet. The electromagnet is energized when the radio or amplifier (if equipped) delivers current to the voice coil on the speaker. The voice coil will form a north and south pole that will cause the voice coil and the speaker cone to move in relation to the permanent magnet. The current delivered to the speaker is rapidly changing alternating current (A/C). This causes the speaker cone to move in two directions producing sound.

Audio Amplifier (If equipped)

Amplifier Interface

A fused battery voltage circuit provides the main amplifier power. A switched 12 V output from the radio is

used to control the power - state of the amplifier. To respond quickly to audio input and control signals, the amplifier is ON in all vehicle power modes except OFF and CRANK Request. The internal amplifier bridges are fully powered and unmuted when the amplifier receives the switched 12 V input.

Amplifier Operation

The purpose of the amplifier is to increase the power of a voltage or current signal. The output signal of an amplifier may consist of the same frequencies as the input signal or it may consist of only a portion of the frequencies as in the case of a subwoofer or midrange speaker. The radio creates a low level stereo audio output signal, which is sent at the user-defined volume level to the audio amplifier. The audio amplifier amplifies the signal and sends it to the appropriate speakers. Each of the audio output channel circuits (+) and (-), from the amplifier have a DC bias voltage that is approximately one half of battery voltage. The audio being played on the system is produced by a varying AC voltage that is centered around the DC bias voltage on the same circuit. The AC voltage is what causes the speaker cone to move and produce sound. The frequency (Hz) of the AC voltage signal is directly related to the frequency of the input (audio source playing) to the audio system. Both the DC bias voltage and the AC voltage signals are needed for the audio system to properly produce sound.

Theft Deterrent

The radio theft deterrent system is intended to disable or limit radio functionality if incorrect vehicle information is received by the radio. The radio disables functionality if the VIN information received by the radio does not match the VIN information that has been learned by the radio. The radio receives this information via serial data. A possible cause of incorrect VIN info could be the radio was originally installed in another vehicle.

The radio has the following theft operating modes as part of the theft deterrent system:

- Normal Mode: The radio has learned a correct VIN sequence and the VIN information received via serial data matches the learned VIN sequence. In this mode the radio has full functionality.
- No VIN Mode: The radio has not received or learned a correct VIN sequence. In this mode the radio has limited functionality.
- Theft Detected Mode: The radio has learned a correct VIN sequence and the VIN information received via serial data does NOT match the learned VIN sequence. In this mode the radio may be disabled or have limited functionality. The radio display will indicate that theft protection is active.

Bluetooth ® (UP9) (If equipped)

Bluetooth ® wireless technology is a short-range communications technology intended to replace the cables connecting portable and/or fixed devices while maintaining high levels of security. The operating range of the signal is approximately 30 feet.

The available features and functions are determined by the type of device and the software within the devices being used. For a feature or function to operate, it must be supported in both devices.

The first connection between devices is established through a process called pairing. In order to pair two devices, a password (passkey) has to be exchanged between the two devices. One device will generate the password, the other device accepts the password to complete the process. Once the devices are paired, future

connections between the devices will occur automatically when the devices are on and within range of each other.

The Bluetooth ® hardware is internal to the radio. The radio supports streaming of data (music, voice, information) from cellular phones and other mobile devices that support those features. The radio may also be capable of interfacing with cellular phones for hands-free features.

- The device must be paired to the radio to use the available Bluetooth ® feature(s). The pairing process must only be performed once for each device, unless that device's information is deleted.
- Up to five devices can be paired to the system, but only one can be connected at any given time.
- Streaming Audio allows playing music from the mobile device wirelessly. Music stored on the mobile device can be viewed and controlled from the display.
- To stream audio from a mobile device, the device must be unlocked, and any additional applications should be closed.

Refer to the vehicle owners manual, supplements, and the device manufacturers information for pairing instructions.

Applications (If equipped)

When the system is equipped with Bluetooth ®, the system is capable of using applications, commonly referred to as apps.

The term application refers to any piece of software that works on a system (hardware) that is being operated by it's own software. Applications are typically small software programs which uses the hardware to perform a specific task, as opposed to operating the entire system.

- For an application to be used, it must be installed on both the vehicle infotainment system and a compatible mobile device.
- The device must be connected to the system. this may be done wirelessly via Bluetooth ®, or via the vehicle USB port. Refer to the device manufacturers information for the proper connection method.
- When the device is connected, the application on the radio is used to remotely access and control the application on the mobile device.
- The application must work correctly on the device to work with the vehicle infotainment system.
- The user may be required to log-in to the application on the mobile device before using the application from the vehicle controls.
- Using applications will use the device's data plan.
- The device must be unlocked, and any additional applications should be closed.

Refer to the owner's manual and supplements for information on mobile devices, control, and operation.

Auxiliary Audio Input Jack (If equipped)

The infotainment system may have a 3.5mm (1/8 in.) auxiliary audio input jack located in the center console. The auxiliary audio input jack interfaces directly with the radio. When a portable audio playback device is

connected to the auxiliary jack, an internal switch detects the connection and the radio will switch to AUX as the audio source. Audio signals from the device are sent to the radio from the auxiliary jack via the left, right, and common audio signal circuits.

- When a device is first connected to the 3.5mm (1/8 in.) input jack the infotainment system automatically switches to that device. If an auxiliary device has already been connected, press the AUX or CD/AUX button to select the device.
- Playback of an audio device that is connected to the 3.5mm jack can only be controlled using the controls on the device.
- The volume control on the device may need to be adjusted to ensure sufficient playback volume through the infotainment system.

USB Port (If Equipped)

The infotainment system may have a USB connector located in the center console. The USB connector interfaces directly with the radio. The USB connector supports both USB standards 1.1 and 2.0.

USB Supported Devices:

- USB Flash Sticks (Thumb Drives)
- Portable USB Hard Drives
- Portable Digital Media Players (iPOD®, ZUNE®, etc)

Depending on the USB device, some devices may not be recognized, or some features/functions may not be able to be controlled with the radio controls. USB HUB devices are not supported.

Refer to the owner's manual for information on USB devices, control, and operation.

Navigation System Components and Features (if equipped)

The navigation system, if equipped, provides the following:

- Connection to the global positioning system (GPS) antenna, which provides the vehicle position information.
- Map data for navigation and map route guidance, stored internally.
- Route guidance with verbal prompts to the operator.
- Traffic and weather information for display on the navigation system map (with active subscription, where available).

Global Positioning System (GPS) Antenna

The global positioning system (GPS) antenna is part of the multi-band antenna located on the roof of the vehicle. The GPS antenna is used to collect the signals of the orbiting GPS satellites. Within the antenna is housed a low noise amplifier that allows for a more broad and precise reception of this data. The GPS antenna amplifier is powered through the coaxial cable.

The antenna is connected to the navigation radio through a signal splitter. The signal splitter is a component for dividing the navigation signal into two paths without any transmission loss. This allows the use of a single GPS antenna to provide a signal to both the navigation radio and the telematics communication interface module.

Route Guidance

The map will display the route to the selected destination. Voice prompts alert the operator of upcoming events (turns) and arrivals at the destination. The navigation system will automatically recalculate if the route is not followed. The navigation radio uses data received from the global positioning system (GPS) satellites, the vehicle speed signal. and serial data information to accurately display the current position of the vehicle.

Points of Interest

The map database provides point of interest information. Points of interests are locations that are frequently visited. Points of interest can be can be displayed on the map or set as a destination. The following are some of the available Points of interests:

- Gas Station
- Restaurant
- College
- Police Station

OnStar ® (If equipped)

When OnStar is activated, a serial data message is sent to the radio that activates a software program. When the software begins its process, the fade goes to the front, Bass and Treble are set to the mid range, the outputs are mono, and the audio source is OnStar. OnStar takes priority over any other audio source. All of these actions are preset values stored in the radio.

For additional OnStar information, refer to **OnStar Description and Operation**.

Steering Wheel Controls (If equipped)

Some audio functions are available using the steering wheel controls. The steering wheel controls duplicate the function of the primary controls available on the radio.

For additional information on steering wheel controls, refer to **Steering Wheel Controls Description and Operation** .

Auto Volume Control

With auto volume control, the audio system will adjust automatically to make up for road and wind noise as you drive, by increasing the volume as vehicle speed increases. To use auto volume control, set the volume at the desired level, and then select either Low, Medium, or High. To turn auto volume control off, select the Off screen button.

RADIO/AUDIO SYSTEM DESCRIPTION AND OPERATION (WITH MONOCHROME DISPLAY)

The entertainment system on this vehicle may have several different configurations available to it. To determine the specific configuration of the vehicle, please see the Service Parts ID Label, and refer to **RPO Code List** .

The entertainment system on this vehicle is configured with either a base or an uplevel system. The base and uplevel systems each contain a radio, antenna, speakers, and on some systems an audio amplifier. The uplevel system differs from the base system by providing the customer with enhanced audio system features.

Each item in the list below represents topics covered in detail below.

- Radio Circuit Operation
- Information Display and Controls
- Antenna System
- Radio Reception
- Speaker Operation
- Audio Amplifier (If equipped)
- Radio Data System (RDS)
- Theft Deterrent
- Auxiliary Audio Input Jack (If equipped)
- USB Port (If equipped)
- Multimedia Player Interface Module (If equipped)
- OnStar ®
- Steering Wheel Controls (If equipped)
- Auto Volume Control

Radio Circuit Operation

Radio Power

The radio does not use a discrete ignition feed circuit for power moding. The power mode master provides the system power mode to the radio via serial data messages. The power mode master determines the system power mode by processing power mode information from ignition switch inputs. Serial data power modes supported by the radio are OFF, ACCESSORY, RUN, and CRANK REQUEST.

Radio Grounds

The vehicle harness provides a ground for the radio circuits. The radio may also be case grounded.

Radio Data Link Communication

The radio communicates with other modules via serial data.

Radio Audio Outputs

Each of the audio output channel circuits (+) and (-), at the radio have a DC bias voltage that is approximately

one half of battery voltage. The audio being played on the system is produced by a varying AC voltage that is centered around the DC bias voltage on the same circuit. The AC voltage is what causes the speaker cone to move and produce sound. The frequency (Hz) of the AC voltage signal is directly related to the frequency of the input (audio source playing) to the audio system. Both the DC bias voltage and the AC voltage signals are needed for the audio system to properly produce sound.

Remote Enable Output

The remote enable circuit is a discrete 12 V signal supplied to infotainment system components when the radio is producing audio, needs the front display on, needs video entertainment system components on, or needs to produce chimes. This signal is used to control the power state of the components. There is no output on radio the remote enable circuit when the vehicle is in the CRANK powermode, this is to minimize current consumption from the attached modules and also to avoid audio pops during crank events.

Information Display and Controls

Radio/HVAC Communications

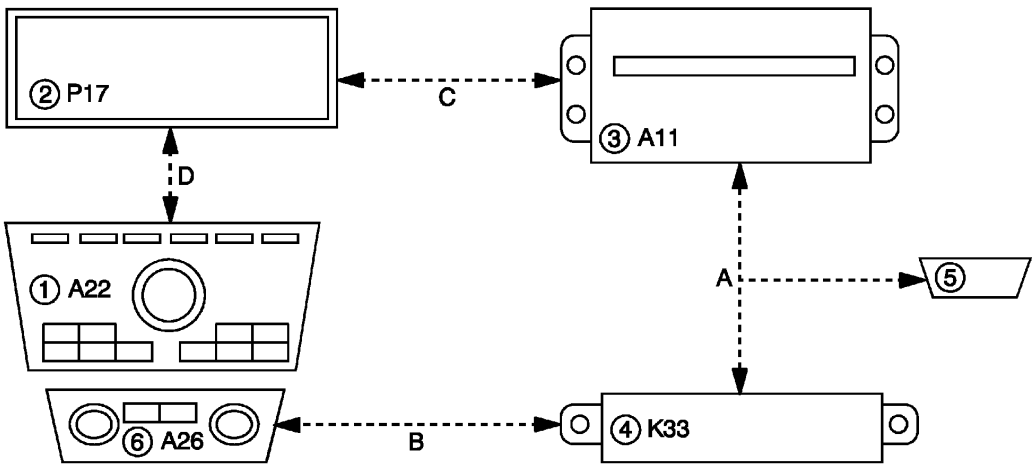

Fig. 46: Radio/HVAC Communication Diagram
Courtesy of GENERAL MOTORS COMPANY

Callout	Component Name
1	Radio Controls
2	Info Display Module
3	Radio
4	HVAC Control Module
5	Data Link Connector
6	HVAC Controls
a	GMLAN
b	Local Interconnect Network-HVAC
c	CAN Graphical Interface
d	Local Interconnect Network-Radio

The radio controls are a separate component from the radio. The radio controls contain the radio control knobs and buttons for all audio functions.

The radio controls operate radio functions through serial data messages. The radio controls communicate to the info display module through LIN serial data. The info display module communicates to the radio through CGI serial data.

Messages communicated between the radio, the radio controls, and the info display include the following:

- Button presses/knob rotations
- Info display module dimming
- Radio controls back-lighting
- Graphics and text information

The HVAC controls are a separate component from the radio controls. HVAC data for controls and status indicators is communicated between the HVAC controls and the HVAC control module with a separate LIN serial data circuit. HVAC status screen information from the HVAC control module is transmitted to the radio on the GMLAN serial data circuit. The radio then displays the desired screen information on the info display using the CGI data circuits.

Antenna System

Multi-Band Antenna

The multi-band antenna is located on the roof of the vehicle. This type of antenna may be used with the AM/FM radio, but is primarily for OnStar® cellular and GPS signals and the XM™ Satellite Radio Service System, if the vehicle has these features. Keep this antenna clear of snow and ice build up for clear reception. If the vehicle has a sunroof, the performance of the system may be affected if the sunroof is open. Loading items onto the roof of the vehicle can interfere with the performance of the system, ensure the multi-band antenna is not obstructed.

The radio antenna is enabled when the radio is turned on. The radio provides battery voltage to the antenna using the center conductor of the antenna coaxial cable. This DC voltage does not affect the incoming radio signal. When a 12 V signal is seen by the on the center conductor of the antenna coax, both AM and FM signals are amplified.

Radio Reception

AM/FM Radio Signal

The radio signal is sent from a broadcast station and is then received by an antenna. The strength of the signal received depends on the following:

- The power output (wattage) of the broadcasting station
- The location of the vehicle (or receiver) relative to the broadcast tower.
- Height of the broadcast antenna
- Height of the receiving antenna

- Obstacles between the tower and the receiver
- Atmospheric conditions
- What band (AM or FM) the station is broadcasting
- Type of antenna and the ground plane

Digital Radio Receiver (If equipped)

The XM satellite receiver is integrated into the radio. XM satellite radio provides digital radio reception. The XM signal is broadcast from two satellites and, where necessary, terrestrial repeaters. The high power satellites allow the antenna to receive the XM signal even when foliage and other partial obstructions block the antennas view of the satellite. Terrestrial repeaters are used in dense urban areas. These repeaters will receive the satellite signal and re-broadcast them at much higher power levels in order to ensure reception in areas with densely packed tall buildings. A service fee is required in order to receive the XM service.

Radio Data System (RDS)

The RDS feature is available only on FM stations that broadcast RDS information. This system relies upon receiving specific information from these stations and only works when the information is available. While the radio is tuned to an FM-RDS station, the station name or call letters display. RDS data is carried in what is known as a "subcarrier". A subcarrier is a frequency that the FM broadcaster is authorized to use to send data that is not audible in the main audio program.

RDS functions will only work with FM broadcast stations that are broadcasting RDS data. Not all FM Broadcast stations broadcast RDS data or offer all of the RDS services.

The information displayed is dependent upon the information broadcast by the particular station. The information may vary greatly between stations. RDS functions may not work properly when reception is weak, reception is of poor quality, or RDS is not implemented properly by the FM Broadcaster. In some cases, a radio station broadcasting incorrect information may cause the RDS features of the radio to appear to work improperly.

With RDS, the radio can do the following:

- Display text information such as: station identification, type of programming, and general information (artist and song title, station messages, call in phone numbers, etc.).
- Seek to stations broadcasting the selected type of programming
- Receive announcements concerning local and national emergencies
- Receive alert warnings of local or national emergencies. When an alert announcement comes on the current radio station, ALERT! displays. You will hear the announcement, even if the volume is low or a CD is playing. If a CD is playing, play stops during the announcement. Alert announcements cannot be turned off. ALERT! is not affected by tests of the emergency broadcast system. This feature is not supported by all RDS stations.

Speaker Operation

Speakers turn electrical energy into mechanical energy to move air, using a permanent magnet and an

electromagnet. The electromagnet is energized when the radio or amplifier (if equipped) delivers current to the voice coil on the speaker. The voice coil will form a north and south pole that will cause the voice coil and the speaker cone to move in relation to the permanent magnet. The current delivered to the speaker is rapidly changing alternating current (A/C). This causes the speaker cone to move in two directions producing sound.

Audio Amplifier (If equipped)

Amplifier Interface

A fused battery voltage circuit provides the main amplifier power. A switched 12 V output from the radio is used to control the power - state of the amplifier. To respond quickly to audio input and control signals, the amplifier is ON in all vehicle power modes except OFF and CRANK Request. The internal amplifier bridges are fully powered and unmuted when the amplifier receives the switched 12 V input.

Amplifier Operation

The purpose of the amplifier is to increase the power of a voltage or current signal. The output signal of an amplifier may consist of the same frequencies as the input signal or it may consist of only a portion of the frequencies as in the case of a subwoofer or midrange speaker. The radio creates a low level stereo audio output signal, which is sent at the user-defined volume level to the audio amplifier. The audio amplifier amplifies the signal and sends it to the appropriate speakers. Each of the audio output channel circuits (+) and (-), from the amplifier have a DC bias voltage that is approximately one half of battery voltage. The audio being played on the system is produced by a varying AC voltage that is centered around the DC bias voltage on the same circuit. The AC voltage is what causes the speaker cone to move and produce sound. The frequency (Hz) of the AC voltage signal is directly related to the frequency of the input (audio source playing) to the audio system. Both the DC bias voltage and the AC voltage signals are needed for the audio system to properly produce sound.

Theft Deterrent

The radio theft deterrent system is intended to disable or limit radio functionality if incorrect vehicle information is received by the radio. The radio disables functionality if the VIN information received by the radio does not match the VIN information that has been learned by the radio. The radio receives this information via serial data. A possible cause of incorrect VIN info could be the radio was originally installed in another vehicle.

The radio has the following theft operating modes as part of the theft deterrent system:

- Normal Mode: The radio has learned a correct VIN sequence and the VIN information received via serial data matches the learned VIN sequence. In this mode the radio has full functionality.
- No VIN Mode: The radio has not received or learned a correct VIN sequence. In this mode the radio has limited functionality.
- Theft Detected Mode: The radio has learned a correct VIN sequence and the VIN information received via serial data does NOT match the learned VIN sequence. In this mode the radio may be disabled or have limited functionality. The radio display will indicate that theft protection is active.

Auxiliary Audio Input Jack (If equipped)

The infotainment system may have a 3.5mm (1/8 in.) auxiliary audio input jack located in the center console. The auxiliary audio input jack may interface directly with the radio, or be connected to the infotainment system via a Multimedia Player Interface Module. When a portable audio playback device is connected to the auxiliary jack, an internal switch detects the connection and the radio will switch to AUX as the audio source. Audio signals from the device are sent to the radio from the auxiliary jack via the left, right, and common audio signal circuits.

- When a device is first connected to the 3.5mm (1/8 in.) input jack the infotainment system automatically switches to that device. If an auxiliary device has already been connected, press the AUX or CD/AUX button to select the device.
- Playback of an audio device that is connected to the 3.5mm jack can only be controlled using the controls on the device.
- The volume control on the device may need to be adjusted to ensure sufficient playback volume through the infotainment system.

USB Port (If Equipped)

The infotainment system may have a USB connector located in the center console. The USB connector may interface directly with the radio, or be connected to the infotainment system via a Multimedia Player Interface Module. The USB connector supports both USB standards 1.1 and 2.0.

USB Supported Devices:

- USB Flash Sticks (Thumb Drives)
- Portable USB Hard Drives
- Portable Digital Media Players (iPOD®, ZUNE®, etc)

Depending on the USB device, some devices may not be recognized, or some features/functions may not be able to be controlled with the radio controls. USB HUB devices are not supported.

Refer to the owner's manual for information on USB devices, control, and operation.

Multimedia Player Interface Module (MPIM) (If Equipped)

The vehicle may be equipped with a Multimedia Player Interface Module. This module can receive signals via the USB connector, the auxiliary audio input jack, or a Bluetooth® connection. This module receives the incoming signals, then sends the signals as analog audio inputs to the radio.

To allow the radio controls to be used to control portable media devices (USB, Bluetooth, iPOD®, ZUNE®, etc); the MPIM translates the USB signals to GMLAN signals to allow the bi-directional communication between the radio and the device. Depending on the device, some devices may not be recognized, or some features/functions may not be able to be controlled with the radio controls. USB HUB devices are not supported.

OnStar ® (If equipped)

When OnStar is activated, a serial data message is sent to the radio that activates a software program. When the

software begins its process, the fade goes to the front, Bass and Treble are set to the mid range, the outputs are mono, and the audio source is OnStar. OnStar takes priority over any other audio source. All of these actions are preset values stored in the radio.

For additional OnStar information, refer to **OnStar Description and Operation**.

Steering Wheel Controls (If equipped)

Some audio functions are available using the steering wheel controls. The steering wheel controls duplicate the function of the primary controls available on the radio.

For additional information on steering wheel controls, refer to **Steering Wheel Controls Description and Operation** .

Auto Volume Control

With auto volume control, the audio system will adjust automatically to make up for road and wind noise as you drive, by increasing the volume as vehicle speed increases. To use auto volume control, set the volume at the desired level, and then select either Low, Medium, or High. To turn auto volume control off, select the Off screen button.

SPECIAL TOOLS AND EQUIPMENT

SPECIAL TOOLS

Illustration	Tool Number/Description
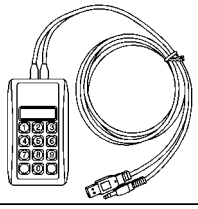	EL-50334-20 Multi-Media Interface Tester (MIT)
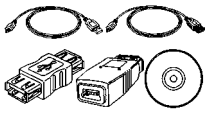	EL-50334-50 USB Cable and Adapter Kit
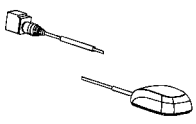	EL-48028 Digital Radio Test Antenna
	EL-49903 OnStar Antenna Diagnostic Tool Kit

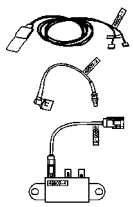	

2013 ACCESSORIES & EQUIPMENT

Cruise Control - Cruze

SCHEMATIC WIRING DIAGRAMS

CRUISE CONTROL WIRING SCHEMATICS

K34 Wiring Schematics

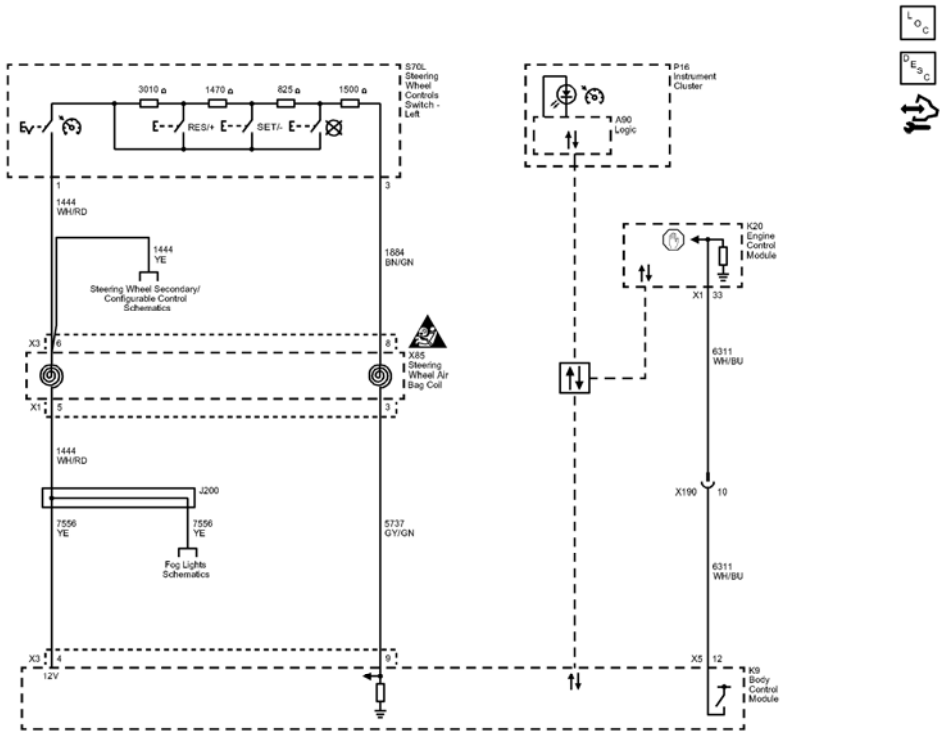

Fig. 1: Cruise Control (K34) Wiring Schematics
Courtesy of GENERAL MOTORS COMPANY

Callout	Component Name
1444	12 Volt Reference
1444_WH/RD	1444 WH/RD
CAV 6	6
CONN_X3	X3
CAV_1	1
1444_YE	1444 YE
1884	Cruise Control Set/Coast/Resume/Accelerate

	Switch Signal
1884_BN/GN	1884 BN/GN
CAV_8	8
CAV_3	3
1444_WH/RD	1444 WH/RD
CAV_5	5
CONN_X1	X1
5737	Adaptive Cruise Control Gap Up/Down Switch Signal
5737_GY/GN	5737 GY/GN
CAV_9	9
CAV_3	3
7556	Lighting Control Switch Reference
7556_YE	7556 YE
CAV_4	4
CONN_X3	X3
7556_YE	7556 YE
6311	Cruise/ETC/TCC Brake Signal
6311_WH/BU	6311 WH/BU
CAV_12	12
CONN_X5	X5
CAV_33	33
CONN_X1	X1
6311_WH/BU	6311 WH/BU
CAV_10	10
SD	Serial Data
Data_Communication_Schematics_REF	Data Communication Schematics
J200	J200
X190	X190
A90	Logic
K20	
P16	
X85	
K9	
S70L	(K34)
Fog_Lights_Schematics_REF	Fog Lights Schematics
Steering_Wheel_Secondary/Configurable_Control_Schematics_REF	Steering Wheel Secondary/Configurable Control Schematics

DIAGNOSTIC INFORMATION AND PROCEDURES

DIAGNOSTIC CODE INDEX

DIAGNOSTIC CODE INDEX

DTC	Description
DTC P0571	DTC P0571 Cruise Control Brake Switch Circuit
DTC P0572 or P0573	DTC P0572 Brake Switch Circuit 1 Low Voltage DTC P0573 Brake Switch Circuit 1 High Voltage
DTC P0575	DTC P0575 Cruise Control Switch Signal Message Counter Incorrect
DTC P0703	DTC P0703 Brake Switch Signal Message Counter Incorrect

DTC P0571

Diagnostic Instructions

- Perform the **Diagnostic System Check - Vehicle** prior to using this diagnostic procedure.
- Review **Strategy Based Diagnosis** for an overview of the diagnostic approach.
- **Diagnostic Procedure Instructions** provides an overview of each diagnostic category.

DTC Descriptor

DTC P0571

Cruise Control Brake Switch Circuit

Circuit/System Description

The engine control module (ECM) monitors the brake pedal position sensor. When the brake pedal is applied, the ECM detects a predetermined voltage signal. The ECM sends a serial data message to the engine control module (BCM) indicating the status of the stop lamps.

This diagnostic test functions on the assumption that a sudden decrease in vehicle speed is caused by a brake pedal application. When the ECM detects that there is a 4.2 km/h (2.6 mph) or greater decrease in vehicle speed within 0.25 seconds without a transition of the stop lamp switch, the ECM sets DTC P0571.

Conditions for Running the DTC

- The engine speed is greater than 700 RPM.
- The traction control system or the antilock brake system are not active and have not failed.
- The vehicle speed is greater than 48 km/h (30 mph).
- The diagnostic will disable when the wheel speed is less than 16 km/h (10 mph).

Conditions for Setting the DTC

The BCM detects either a low voltage signal on the stop lamp switch signal circuit when the serial data message from the ECM indicates the brakes are applied, or a high voltage signal on the stop lamp switch signal circuit when the serial data message from the ECM indicates the brakes are not applied.

Actions Taken When the DTC Sets

- The cruise control system is disabled.
- The malfunction indicator lamp (MIL) will not illuminate.

Conditions for Clearing the DTC

- The condition responsible for setting the DTC no longer exists.
- A history DTC will clear after 40 malfunction-free ignition cycles have occurred.

Reference Information

Schematic Reference

- **Cruise Control Schematics**
- **Exterior Lights Schematics**
- **Antilock Brake System Schematics**

Connector End View Reference

COMPONENT CONNECTOR END VIEWS - INDEX

Description and Operation

Cruise Control Description and Operation

Electrical Information Reference

- **Circuit Testing**
- **Connector Repairs**
- **Testing for Intermittent Conditions and Poor Connections**
- **Wiring Repairs**

Scan Tool Reference

Control Module References for scan tool information

Circuit/System Verification

1. Ignition ON.

2. Verify that no DTCs are set, except DTC P0571.
    - **If any other DTC is set, except DTC P0571**

      Refer to **Diagnostic Trouble Code (DTC) List - Vehicle** .

    - **If only DTC P0571 is set**
3. Replace the K20 Engine Control Module.
4. Verify DTC P0571 does not set when operating the vehicle within the conditions for running the DTC.
    - **If the DTC sets**

      Replace the K 9 Body Control Module.

    - **If the DTC does not set**
5. All OK.

Repair Instructions

Perform the **Diagnostic Repair Verification** after completing the repair.

Control Module References for BCM or ECM replacement, programming and setup.

DTC P0572 OR P0573

Diagnostic Instructions

- Perform the **Diagnostic System Check - Vehicle** prior to using this diagnostic procedure.
- Review **Strategy Based Diagnosis** for an overview of the diagnostic approach.
- **Diagnostic Procedure Instructions** provides an overview of each diagnostic category.

DTC Descriptors

DTC P0572

Brake Switch Circuit 1 Low Voltage

DTC P0573

Brake Switch Circuit 1 High Voltage

Diagnostic Fault Information

Circuit	Short to Ground	Open/High Resistance	Short to Voltage	Signal Performance
Stop Lamp Switch Signal	C0297 02, P0572	P0572	P0573	P0572, P0573

Circuit/System Description

The stop lamp switch signal circuit is a B+ input from the body control module (BCM) to the engine control module (ECM). The ECM monitors the stop lamp switch circuit to detect when the brake pedal has been applied. The BCM monitors the brake pedal position sensor to determine when the brake pedal is applied. When the brake pedal is applied, the BCM supplies B+ on the stop lamp switch signal circuit and also sends a serial data message to the ECM indicating that the brake pedal has been applied.

Conditions for Running the DTC

- The engine is running.
- Battery voltage is greater than 11.5 V.
- Brakes applied.

Conditions for Setting the DTC

P0572

This DTC will set when the ECM detects a short to ground or an open on the discrete brake signal circuit when the serial data message from the BCM indicates the brakes are applied. This diagnostic will run when the serial data message and the voltage signal on the brake switch signal circuit do not match for 8 out 10 times, and the condition is present for greater than 2 seconds.

P0573

This DTC will set when the ECM detects a short to voltage on the discrete brake signal circuit when the serial data message from the BCM indicates the brakes are NOT applied. This diagnostic will run when the serial data message and the voltage signal on the brake switch signal circuit do not match for 8 out 10 times, and the condition is present for greater than 2 seconds.

Actions Taken When the DTC Sets

- The malfunction indicator lamp (MIL) will not illuminate.
- The cruise control system is disabled.

Conditions for Clearing the DTC

- The condition responsible for setting the DTC no longer exists.
- A history DTC will clear after 40 malfunction-free ignition cycles have occurred.

Reference Information

Schematic Reference

Cruise Control Schematics

Connector End View Reference

COMPONENT CONNECTOR END VIEWS - INDEX

Description and Operation

Cruise Control Description and Operation

Electrical Information Reference

- **Circuit Testing**
- **Connector Repairs**
- **Testing for Intermittent Conditions and Poor Connections**
- **Wiring Repairs**

Scan Tool Reference

Control Module References for scan tool information

Circuit/System Testing

1. Ignition OFF, disconnect the X1 harness connector at the K20 Engine Control Module, ignition ON.
2. Connect a test lamp between the signal circuit terminal 57 and ground.
3. Verify the test lamp turns ON and OFF when pressing and releasing the brake pedal.
    - **If the test lamp is always OFF**
    1. Ignition OFF, disconnect the harness connector at the K9 Body Control Module.
    2. Test for infinite resistance between the signal circuit and ground.
        - If not infinite resistance, repair the short to ground on the circuit.
        - If infinite resistance.
    3. Test for less than 2 ohms in the signal circuit end to end.
        - If 2 ohms or greater, repair the open/high resistance in the circuit.
        - If less than 2 ohms, replace the K9 Body Control Module.
    - **If the test lamp is always ON**
    1. Ignition OFF, disconnect the harness connector at the K9 Body Control Module, ignition ON.
    2. Test for less than 1 V between the signal circuit and ground.
        - If 1 V or greater, repair the short to voltage on the circuit.
        - If less than 1 V replace the K9 Body Control Module.
    - **If the test lamp turns ON and OFF**
4. Replace the K20 Engine Control Module.

Repair Instructions

Perform the **Diagnostic Repair Verification** after completing the repair.

Control Module References for BCM or ECM programming, replacement, and setup

DTC P0575

Diagnostic Instructions

- Perform the **Diagnostic System Check - Vehicle** prior to using this diagnostic procedure.
- Review **Strategy Based Diagnosis** for an overview of the diagnostic approach.
- **Diagnostic Procedure Instructions** provides an overview of each diagnostic category.

DTC Descriptor

DTC P0575

Cruise Control Switch Signal Message Counter Incorrect

Circuit/System Description

When a cruise control function switch is activated, the body control module (BCM) detects a predetermined voltage. The BCM sends a serial data message to the engine control module (ECM) indicating the function that has been requested.

Conditions for Running the DTC

- The ignition is ON.
- The vehicle speed is greater than 40 km/h (25 MPH) and the cruise control is engaged.

Conditions for Setting the DTC

- The ECM receives an invalid cruise control switch status serial data message from the BCM.
- This diagnostic runs continuously.

Actions Taken When the DTC Sets

DTC P0575 is a type C DTC.

Conditions for Clearing the DTC

DTC P0575 is a type C DTC.

Reference Information

Schematic Reference

Cruise Control Schematics

Connector End View Reference

COMPONENT CONNECTOR END VIEWS - INDEX

Description and Operation

Cruise Control Description and Operation

Electrical Information Reference

- **Circuit Testing**
- **Connector Repairs**
- **Testing for Intermittent Conditions and Poor Connections**
- **Wiring Repairs**

DTC Type Reference

Powertrain Diagnostic Trouble Code (DTC) Type Definitions

Scan Tool Reference

Control Module References for scan tool information

Circuit/System Verification

1. Ignition ON.
2. Verify that no DTCs are set, except DTC P0575.
   - **If any other DTC is set, except DTC P0575**

     Refer to **Diagnostic Trouble Code (DTC) List - Vehicle** .

   - **If only DTC P0575 is set**
3. Replace the K9 Body Control Module.
4. Verify DTC P0575 does not set when operating the vehicle within the Conditions for Running the DTC.
   - **If the DTC sets**

     Replace the K20 Engine Control Module.

   - **If the DTC does not set**
5. All OK.

Repair Instructions

Perform the **Diagnostic Repair Verification** after completing the repair.

Control Module References for BCM or ECM programming, replacement, and setup.

DTC P0703

Diagnostic Instructions

- Perform the **Diagnostic System Check - Vehicle** prior to using this diagnostic procedure.
- Review **Strategy Based Diagnosis** for an overview of the diagnostic approach.
- **Diagnostic Procedure Instructions** provides an overview of each diagnostic category.

DTC Descriptor

DTC P0703

Brake Switch Signal Message Counter Incorrect

Circuit/System Description

The body control module (BCM) monitors the brake pedal position sensor. When the brake pedal is applied, the BCM detects a predetermined voltage signal. The BCM sends a serial data message to the engine control module (ECM) indicating the status of the stop lamps.

Conditions for Running the DTC

The engine is ON.

Conditions for Setting the DTC

- The ECM receives an invalid brake pedal status serial data message from the BCM.
- This diagnostic runs continuously.

Actions Taken When the DTC Sets

- The malfunction indicator lamp (MIL) will not illuminate.
- The cruise control system is disabled.

Conditions for Clearing the DTC

- The condition responsible for setting the DTC no longer exists.
- A history DTC will clear after 40 malfunction-free ignition cycles have occurred.

Reference Information

Schematic Reference

Cruise Control Schematics

Connector End View Reference

COMPONENT CONNECTOR END VIEWS - INDEX

Description and Operation

Cruise Control Description and Operation

Electrical Information Reference

- **Circuit Testing**
- **Connector Repairs**
- **Testing for Intermittent Conditions and Poor Connections**
- **Wiring Repairs**

Scan Tool Reference

Control Module References for scan tool information

Circuit/System Verification

1. Ignition ON.
2. Verify that no DTCs are set, except DTC P0703.
    - **If any other DTC is set, except DTC P0703**

      Refer to **Diagnostic Trouble Code (DTC) List - Vehicle** .

    - **If only DTC P0703 is set**
3. Replace the K9 Body Control Module.
4. Verify DTC P0703 does not set when operating the vehicle within the conditions for running the DTC.
    - **If the DTC sets**

      Replace the K20 Engine Control Module.

    - **If the DTC does not set**
5. All OK.

Repair Instructions

Perform the **Diagnostic Repair Verification** after completing the repair.

Control Module References for BCM or ECM programming, replacement, and setup.

SYMPTOMS - CRUISE CONTROL

NOTE: The following steps must be completed before using the symptom tables.

1. Before using the symptom diagnostic table, perform the **Diagnostic System Check - Vehicle** in order to verify the following conditions:
   - There are no DTCs set.
   - The module can communicate via the serial data.
2. Review the system operation in order to understand the system functions. Refer to **Cruise Control Description and Operation**.

Visual/Physical Inspection

- Inspect for aftermarket devices which can affect the operation of the Cruise Control System. Refer to **Checking Aftermarket Accessories** .
- Inspect the accessible system components or the visible system components for obvious damage or for obvious conditions which can cause the symptom.

Intermittent

Faulty electrical connections or wiring may be the cause of intermittent conditions. Refer to **Testing for Intermittent Conditions and Poor Connections** .

Symptom List

Refer to a symptom diagnostic procedure from the following list in order to diagnose the symptom:

- **Cruise Control Malfunction - DTC B3794, P0564, P0565, P0567, P0568, P056C, P0580, P0581, P155A-P155C, or P162C**
- **Cruise Control Indicator Malfunction**

CRUISE CONTROL INDICATOR MALFUNCTION

Diagnostic Instructions

- Perform the **Diagnostic System Check - Vehicle** prior to using this diagnostic procedure.
- Review **Strategy Based Diagnosis** for an overview of the diagnostic approach.
- **Diagnostic Procedure Instructions** provides an overview of each diagnostic category.

Circuit/System Description

The instrument cluster illuminates the cruise control engaged indicator based on serial data messages received from the engine control module (ECM). The indicator is commanded ON when the cruise control system is controlling vehicle speed, and turned OFF with the system disengaged.

Reference Information

Schematic Reference

Cruise Control Schematics

Connector End View Reference

COMPONENT CONNECTOR END VIEWS - INDEX

Description and Operation

Cruise Control Description and Operation

Electrical Information Reference

- **Circuit Testing**
- **Connector Repairs**
- **Testing for Intermittent Conditions and Poor Connections**
- **Wiring Repairs**

Scan Tool Reference

Control Module References for scan tool information

Circuit/System Verification

1. Ignition ON.
2. Verify the cruise control indicator turns ON and OFF when commanding the All Indicators ON and OFF with a scan tool.
    - **If the indicator does not turn ON and OFF**

      Replace the P16 Instrument Cluster.

    - **If the indicator turns ON and OFF**
3. All OK.

Repair Instructions

Perform the **Diagnostic Repair Verification** after completing the repair.

Control Module References for instrument cluster replacement, programming and setup.

CRUISE CONTROL MALFUNCTION - DTC B3794, P0564, P0565, P0567, P0568, P056C, P0580, P0581, P155A-P155C, OR P162C

Diagnostic Instructions

- Perform the **Diagnostic System Check - Vehicle** prior to using this diagnostic procedure.
- Review **Strategy Based Diagnosis** for an overview of the diagnostic approach.
- **Diagnostic Procedure Instructions** provides an overview of each diagnostic category.

DTC Descriptors

DTC B3794 08

Cruise Control Function Request Circuit

DTC B3794 61

Cruise Control Function Request Circuit

DTC P0564

Cruise Control Multifunction Switch Circuit

DTC P0565

Cruise Control Switch Circuit

DTC P0567

Cruise Control Resume Switch Circuit

DTC P0568

Cruise Control Set Switch Circuit

DTC P056C

Cruise Control Cancel Switch Circuit

DTC P0580

Cruise Control Multifunction Switch Circuit Low Voltage

DTC P0581

Cruise Control Multifunction Switch Circuit High Voltage

DTC P155A

Cruise Control Switch State Undetermined

DTC P155B

Cruise Control Set/Coast Switch 2 Circuit

DTC P155C

Cruise Control Resume/Acceleration Switch 2 Circuit

DTC P162C

Vehicle Speed Limiting/Warning Switch Circuit

Diagnostic Fault Information

Circuit	Short to Ground	Open/High Resistance	Short to Voltage	Signal Performance
Ignition	1	1	-	-
Signal	1	P0564	B3794 08, P0567, P0568	B3794 61, P0564
1. Cruise Control Malfunction				

Circuit/System Description

The cruise control switch is an input to the body control module (BCM). The BCM monitors the cruise control on/off, set/coast, resume/accelerate and cancel switches via the cruise control switch signal circuit in order to detect when the driver has requested to perform a cruise control function. The BCM detects a specific voltage signal on the cruise control switch signal circuit when a switch is applied. The engine control module (ECM) receives the requested cruise control switch function from the BCM via a serial data message.

Conditions for Running the DTC

- The cruise switch is ON.
- The ignition is ON.

Conditions for Setting the DTC

B3794 08

The BCM detects an invalid voltage signal on the cruise control switch signal circuit for 1 second.

B3794 61

Stuck switch for either Resume/Accel or Set/Coast button for 60 seconds.

P0564, P0565, P0567, P0568, P056C

- The BCM detects an invalid voltage signal on the cruise control switch signal circuit for greater than 2 seconds and sends a serial data message to the ECM. The ECM sets these DTCs when the message is received.
- The ECM runs this diagnostic continuously.

P0580, P0581

- The ECM detects an invalid voltage signal on the cruise control switch signal circuit.
- The above condition is present for greater than 2 seconds.
- The ECM runs this diagnostic continuously.

P155A

The ECM is unable to determine the state of the cruise control switch.

P162C

The ECM is unable to determine the state of the vehicle speed limiting switch.

Actions Taken When the DTC Sets

B3794

- The malfunction indicator lamp (MIL) will not illuminate.
- The cruise control system is disabled.

P0564, P0565, P0567, P0568, P056C, P0580, P0581, P155A, P162C

DTCs P0564, P0565, P0567, P0568, P056C, P0580, P0581, P155A and P162C are type C DTCs

Conditions for Clearing the DTC

B3794

- The condition responsible for setting the DTC no longer exists.
- A history DTC will clear after 40 malfunction-free ignition cycles have occurred.

P0564, P0565, P0567, P0568, P056C, P0580, P0581, P155A, P162C

DTCs P0564, P0565, P0567, P0568, P056C, P0580, P0581, P155A and P162C are type C DTCs.

Reference Information

Schematic Reference

Cruise Control Schematics

Connector End View Reference

COMPONENT CONNECTOR END VIEWS - INDEX

Description and Operation

Cruise Control Description and Operation

Electrical Information Reference

- **Circuit Testing**
- **Connector Repairs**
- **Testing for Intermittent Conditions and Poor Connections**
- **Wiring Repairs**

Scan Tool Reference

Control Module References for scan tool information

Circuit/System Verification

1. Ignition ON.
2. Verify the scan tool ECM Cruise Control Switch Status parameter changes between Off and On, Resume and Set when switching between each position on the cruise control switch.
   - **If the parameter does not change**

     Refer to Circuit/System Testing.

   - **If the parameter changes**
3. All OK.

Circuit/System Testing

NOTE:

- **An open ignition circuit or fuse before the control module will cause communication DTCs or power mode mismatch DTCs to set against or in the control module. This failure mode will be diagnosed in the no communications diagnostic procedure or power mode mismatch.**
- **This test assumes the ignition circuit has a driver that will open under a high current condition before the fuse opens.**
- **The driver can open under normal conditions such as battery run down protection or a retained accessory power mode.**

1. Ignition OFF, disconnect the harness connector at the S70L Steering Wheel Controls Switch-Left, ignition ON.
2. Verify a test lamp illuminates between the ignition circuit terminal 1 and ground.
   - **If the test lamp does not illuminate**
     1. Ignition OFF, disconnect the harness connector at the K9 Body Control Module.
     2. Test for greater than 100 ohms between the ignition circuit and ground.
        - If 100 ohms or less, repair the short to ground on the circuit.

- If greater than 100 ohms

3. Test for less than 2 ohms in the ignition circuit end to end.
   - If 2 ohms or greater, repair the open/high resistance in the circuit.
   - If less than 2 ohms, test or replace the K9 Body Control Module.

- **If the test lamp illuminates**

3. Verify the scan tool ECM Cruise Control Switch Status parameter is Off.
   - **If not Off**
   1. Ignition OFF, disconnect the harness connector at the K9 Body Control Module, ignition ON.
   2. Test for less than 1 V between the signal circuit terminal 3 and ground.
      - If 1 V or greater, repair the short to voltage on the circuit.
      - If less than 1 V, replace the K9 Body Control Module.
   - **If Off**
4. Install a 3 A fused jumper wire between the signal circuit terminal 3 and the ignition circuit terminal 1.
5. Verify the scan tool ECM Cruise Control parameter is Disabled.
   - **If not Error**
   1. Ignition OFF, disconnect the harness connector at the K9 Body Control Module.
   2. Test for infinite resistance between the signal circuit terminal 9 and ground.
      - If less than infinite resistance, repair the short to ground on the circuit.
      - If infinite resistance
   3. Test for less than 2 ohms in the signal circuit end to end.
      - If 2 ohms or greater, repair the open/high resistance in the circuit.
      - If less than 2 ohms, replace the K9 Body Control Module.
   - **If Error**
6. Test or replace the S70L Steering Wheel Controls Switch-Left.

Repair Instructions

Perform the **Diagnostic Repair Verification** after completing the repair.

Control Module References for BCM replacement, programming and setup.

REPAIR INSTRUCTIONS

CRUISE CONTROL SWITCH REPLACEMENT

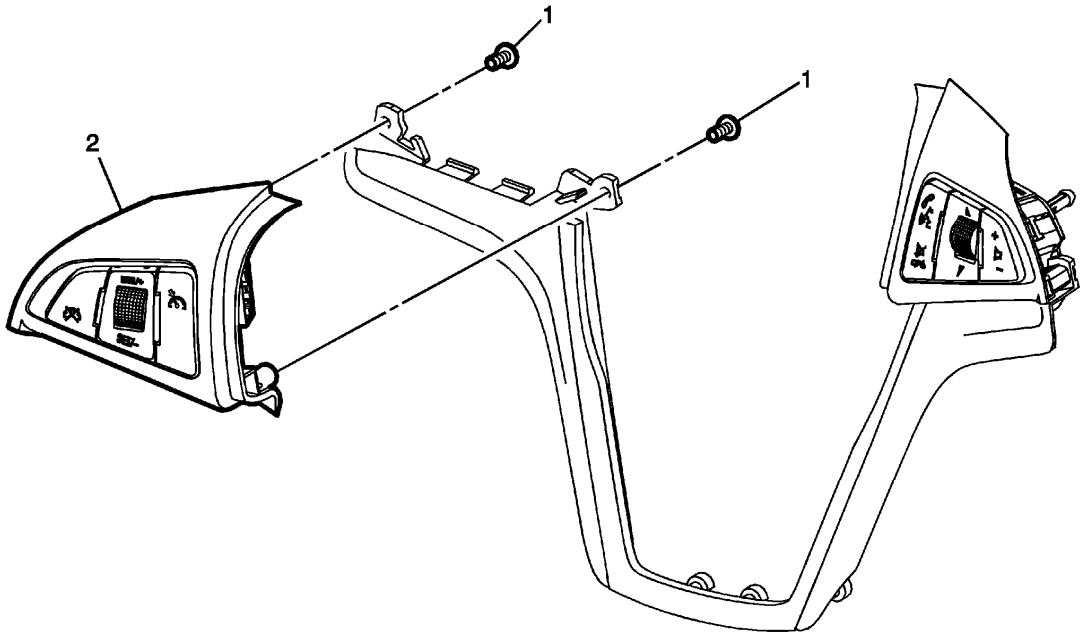

Fig. 2: Cruise Control Switch & Steering Wheel Lower Cover Fasteners
Courtesy of GENERAL MOTORS COMPANY

Cruise Control Switch Replacement

Callout	Component Name
Preliminary Procedure Remove the steering wheel lower cover. Refer to **Steering Wheel Spoke Lower Cover Replacement** .	
1	Steering Wheel Lower Cover Fastener (Qty: 2) **CAUTION:** **Refer to Fastener Caution .**
2	Cruise Control Switch Assembly **Procedure** Disconnect the electrical connector.

DESCRIPTION AND OPERATION

CRUISE CONTROL DESCRIPTION AND OPERATION

Cruise control is a speed control system that maintains a desired vehicle speed under normal driving conditions at speeds above 40 km/h (25 mph). Steep grades may cause variations in the selected vehicle speeds.

The following are the main components of the Cruise Control System:

- The accelerator pedal

- The brake pedal position (BPP) sensor
- The body control module (BCM)
- The cruise on/off switch
- The cruise control cancel switch
- The + RES switch (equivalent to resume/accel switch)
- The - SET switch (equivalent to set/coast switch)
- The engine control module (ECM)
- The throttle actuator control (TAC) motor
- The vehicle speed sensor

The body control module (BCM) monitors the signal circuit of the cruise control switches, which are located on the steering wheel. The BCM relays the cruise control switch status to the engine control module (ECM) via the serial data circuit. The ECM uses the status of the cruise control switch to determine when to capture and maintain the vehicle speed. The ECM monitors the vehicle speed signal circuit in order to determine the desired vehicle speed.

Voltage is supplied to the cruise control switch via the steering wheel control switch reference voltage circuit supplied by the BCM. The cruise control function switches are arranged in a resistive ladder design, with each cruise control function switch having a different resistance value. The BCM detects a specific voltage value that is associated with the cruise control function switch being activated. The BCM sends a serial data message to the ECM indicating that the on/off switch is active. Similarly, when the normally open + RES switch or the normally open - SET switch are pressed, the switch closes and the BCM detects the predetermined voltage signal on the cruise control resume/accel and set/coast switch signal circuit. The BCM sends a serial data message to the ECM indicating that the + RES switch or the - SET switch is active. The + RES switch or the - SET switch will remain inactive when the BCM has not received the predetermined voltage signal from the on/off switch.

Cruise Control Engaged

The Cruise Control System will engage and adjust vehicle speeds, based on the activation of the following cruise control switches, which are located on the steering wheel:

- On/Off
- + RES
- - SET

To engage the Cruise Control System, ensure that the vehicle speed is above 40.2 km/h (25 mph), turn the cruise On/Off switch ON and momentarily press the - SET switch. The ECM will engage the Cruise Control System and record the vehicle speed. The ECM sends a serial data message to the instrument panel cluster (IPC) in order to illuminate the Cruise Engaged indicator in the IPC. Refer to the vehicle owner's manual for the location and operation of the cruise control On/Off indicators and driver information center (DIC) messages.

Pressing the accelerator pedal while the Cruise Control System is engaged, allows the driver to override the Cruise Control System in order to accelerate the vehicle beyond the current set vehicle speed. When the accelerator pedal is released, the vehicle will decelerate and resume the current set vehicle speed.

The driver can also override the current set vehicle speed via the - SET switch and the + RES switch. When the Cruise Control System is engaged, pressing and holding the - SET switch will allow the vehicle to decelerate from the current set vehicle speed without deactivating the Cruise Control System. When the - SET switch is released, the ECM will record the vehicle speed and maintain the vehicle speed as the new set vehicle speed. When the Cruise Control System is engaged, momentarily pressing the - SET switch will allow the vehicle to decelerate at 1.6 km/h (1 mph) increments for each time that the - SET is momentarily pressed, with a minimum vehicle speed of 38 km/h (24 mph).

Pressing and holding the + RES switch, when the Cruise Control System is engaged, will allow the vehicle to accelerate to a greater vehicle speed than the current set vehicle speed. When the + RES switch is released, the ECM will record the vehicle speed and maintain the vehicle speed as the new set vehicle speed. When the Cruise Control System is engaged, momentarily pressing the + RES switch will allow the vehicle to accelerate at 1.6 km/h (1 mph) increments for each time that the + RES switch is momentarily pressed. Momentarily activating the + RES switch will recall the previous vehicle speed, after the cruise control system has been disengaged by pressing the brake pedal, or CANCEL switch.

Cruise Control Disengaged

The engine control module (ECM) disengages the cruise control operation based on the signals from the following switches:

- The brake pedal position (BPP) sensor
- The On/Off switch
- The cruise control cancel switch

The Cruise Control System will disengage when the brake pedal is applied. The body control module (BCM) monitors the BPP sensor via the BPP sensor signal circuit as the voltage signal increases while the pedal reaches the fully applied position. The ECM monitors the BPP signal through a discrete input and a serial data message signal from the BCM indicating the brake status. When either signal indicates the brake pedal is applied, the ECM will disengage the cruise control system.

The Cruise Control System will also disengage when the cruise control on/off switch is switched OFF, or the cruise control cancel switch is activated. The body control module (BCM) determines when the cruise control cancel switch is activated. When the normally open cancel switch is closed, the BCM detects the predetermined voltage signal on the cruise control function switch circuit. The vehicle speed stored in the memory of the engine control module will be erased when the cruise control On/Off switch is turned OFF, or the ignition switch is turned OFF. The BCM sends a serial data message to the ECM in order to disengage the cruise control system. When the Cruise Control System has been disengaged, the ECM sends a serial message to the instrument panel cluster (IPC) in order to turn OFF the Cruise Engaged indicator.

Every time the Cruise Control System is disengaged, the ECM will keep track of the reason for system disengagement. The last 8 disengagement reasons will be recorded within the ECM memory. The scan tool will display the last 8 Cruise Disengage History parameters, in which one out of approximately 50 possible reasons will be displayed in each of these 8 parameters. For the disengagement reason to be displayed within the scan tool parameter the Cruise Control System is active and disengagement is requested.

When engagement of the system is requested but an engagement inhibit is present, the most recent inhibit

reason is recorded in the ECM history. The scan tool will display the most recent inhibit reason, in which one out of approximately 50 possible reasons will be displayed.

Cruise Control Inhibited

The engine control module (ECM) inhibits the cruise control operation when any of the following conditions exist:

- The ECM has not detected a brake pedal activation from the body control module (BCM) this ignition cycle.
- A Cruise Control System DTC has been set.
- The vehicle speed is less than 38.6 km/h (24 mph).
- The vehicle speed is too high.
- The vehicle is in PARK, REVERSE, NEUTRAL, or 1st gear.
- The engine RPM is low.
- The engine RPM is high.
- The system voltage is not between 9 volts and 16 volts.
- The Antilock Brake System (ABS)/Traction Control System (TCS) is active for more than 0.5 seconds.

Cruise Control Inhibit Reasons

This is a general list of inhibit reasons. Not every inhibit reason is applicable to all vehicles. Refer to the scan tool inhibit reason list for the last 8 reasons that have been recorded during the current ignition cycle.

Scan Tool Name	Description	Long Description
BRAKE	Brake pedal apply	Brake Pedal was applied.
PEDAL INITIALIZE	Brake before cruise	The brake pedal has not been seen as applied prior to driver request to engage cruise with set switch. A brake pedal apply must be seen before allowing cruise engagement during each key cycle. On a vehicle equipped with a manual transmission, a clutch pedal apply may satisfy the brake pedal apply criteria.
CANCEL	Cancel switch active	Cancel Switch was depressed.
CLUTCH	Clutch switch active	Clutch Pedal was applied.
COAST DISENGAGE	Coast disengage	Cruise control is in coast mode with the Set/Coast switch depressed and is requesting no throttle
COAST SPEED LOW	Coast below low speed inhibit	Set / Coast switch was depressed. Vehicle slowed below minimum cruise operating speed.

TAC INHIBIT	ETC prevents cruise operation	Electronic Throttle Control has detected a failure in the throttle control hardware
ACCEL RATE	High acceleration	Vehicle acceleration rate is too high.
DECEL RATE	High deceleration	Vehicle deceleration rate is too high.
HIGH SPEED	Vehicle speed exceeds high speed threshold	Vehicle speed has exceeded maximum cruise operating speed
ILLEGAL MODE	Illegal cruise mode	Cruise control mode is incorrect based on switch states.
LOW SPEED	Vehicle speed drops below low speed threshold	Vehicle speed dropped below the cruise control minimum operating speed. May be due to hilly terrain and low vehicle speed. Manual transmission gear selection and engine torque may contribute to this disengagement reason.
NONE	None	This disengagement reason may be displayed after a dead battery repair or module replacement.
CRUISE SW. OFF	On/Off switch in Off state	Cruise On/Off switch turned Off
OVER SET SPEED	Over schedule	Vehicle speed has exceeded driver selected set speed by more than an allowable amount. This may occur while driving down a significant grade or driver overriding cruise while performing a passing maneuver.
S/C ON SPEED HI	Over schedule tap-down	Set/Coast switch selected, vehicle speed is above set speed and does not decrease. May be due to traveling down hill
ECM INHIBIT	PCM/ECM inhibit (RAM corruption)	ECM internal communication error
SIMUL S/C-R/A	SET and RESUME switches simultaneously active	Set/Coast and Resume Accelerate switches pressed simultaneously
TCS	Traction control active	Traction Control was Active
UNDER SET SPEED	Under schedule	Vehicle speed is below cruise control set speed by more than an allowable amount
DLC OVERRIDE	ALDL	Scan Tool plugged into ALDL connector
MEMORY DTC	Memory Failure	Control module memory failure detected.
ENG RUN TIME	Engine run time not elapsed	Engine has not been running long enough, typically five seconds.

ENGINE SPEED	Engine speed too low or too high	Engine RPM too low (near stall) or too high (near engine RPM fuel shutoff).
DTC SET	Malfunction in PCM/ECM (DTC active)	DTC is active or in history that inhibits cruise control operation.
RPM LIMIT	Injectors Disabled (Engine overspeed fuel cut-off active)	Engine RPM limiter active with fuel cut off active.
FIRST GEAR	1st Gear	Transmission is engaged in 1st gear
APP OVERRIDE	Pedal greater than cruise (override)	Driver has overridden cruise control set speed with accelerator pedal for greater than an allowable time.
LOW VOLTAGE	Voltage below low voltage threshold	Ignition Voltage Low at ECM (typically 9 volts)
LOST FWD GEAR	Transmission in neutral. Reverse or park	Gear selector not in forward gear
MPH LIMIT	MPH Limited Fuel (Vehicle overspeed fuel cut-off active)	Vehicle overspeed protection active with fuel cut off active
SW. INVALID	Analog cruise switch input out of range	Cruise switch voltage signal in invalid range
HIGH VOLTAGE	Voltage above high voltage threshold	Ignition Voltage High at ECM (typically 18 volts)
D WHL SPD LOW	Un-driven Whl speed Greater	Non Driven wheel speed greater than driven wheel speed
D WHL SPD HI	Driven Whl Spd Greater (wheel slip detection)	Driven wheel speed greater than Non Driven wheel speed (slip detection)
CRUISE S/W	Sequence of completion checks	Cruise control software execution error has occurred.
CRUISE SW DATA	Serial data fault (Cruise switch serial communication fault)	Cruise switch serial data fault is active or communication has been lost with module sending cruise switch states
ECT OVERTEMP	Engine metal overtemp active	Engine over temperature. Overheated.
VSES	Vehicle stability active	Vehicle Stability Control was active
AXLE RANGE	Rear Axle Low	Rear axle in low range
TRANS DTC	Trans Gear Fault	Transmission DTC is active or in history that inhibits cruise control operation
BPP DATA	DTC P0703 active or maximum time elapsed without receiving valid Brake Pedal Position signal.	Serial data fault is active or communication has been lost with module sending brake pedal apply state
BPP DTC	Brake Pedal Position signal invalid	Brake Pedal Apply Circuit fault has been detected.
PARK BRAKE	Park Brake Switch signal Active	Parking Brake Applied

ACC INHIBIT	Adaptive Cruise Control Inhibited	Adaptive Cruise Control Inhibited
ACC BRAKE INOP	Adaptive Cruise Control Automatic Braking Failed	Adaptive Cruise Control Automatic Braking Inoperative
ACC OPTION	Adaptive Cruise Control option mismatch	Cruise control type (adaptive cruise or conventional cruise) mismatched between ECM and BCM.
ACC DATA	Serial data fault for Adaptive Cruise Control Throttle Control and Brake Control signals sent by Adaptive Cruise Control module	Adaptive Cruise Control Module serial data fault is active or communication has been lost between ACC module and ECM.
PTO ACTIVE	Power Take Off Active	Power Take Off is active.
ECM RESET	ECM Running Reset	ECM Running Reset occurred
Ram DTC	Processor Integrity Fault (Ram corruption)	ECM software error has occurred
BPP Not Learned	Brake Apply Sensor Home Position Not Learned	Brake Pedal Position Sensor Released Position Not Learned.
Accel Time	Rate Limiting Fault	Cruise torque request rate limiting active too long
4WD Low	4WD Low	Transfer case in low range
M/T Gear Changed	Manual transmission out of gear with no clutch pedal apply	Manual transmission shifted to Neutral without clutch pedal being applied.
Brk Ped Press	Brake Pedal Driver Applied Pressure Detected	A Brake Pedal Apply has been detected based on brake pedal pressure as measured by the EBCM.
SL/W Sys On	Speed Limiter / Warning On/Off switch turned on	Driver has turned on the Speed Limiter/Warning on/off switch. Cruise is disabled / inhibited and cruise on/off switch will be set to OFF.
Calc Eng Torque	Calculated Torque	Engine torque calculation is incorrect.
Cruise Brk Inop	Brake System Malfunction	EBCM has detected a failure that does not allow automatic braking to be performed.
Auto Brk Data	Automatic Braking Engine Torque Request Signal Communication Malfunction	ECM to EBCM serial data fault is active or communication has been lost between ECM and EBCM.

2013 ACCESSORIES & EQUIPMENT

Data Communications - Cruze

SPECIFICATIONS

FASTENER TIGHTENING SPECIFICATIONS

Fastener Tightening Specifications

Application	Specification	
	Metric	English
Body Control Module Bracket Bolt	2.5 N.m	22 lb in

SCHEMATIC WIRING DIAGRAMS

DATA COMMUNICATION WIRING SCHEMATICS

Low Speed GMLAN Wiring Schematics

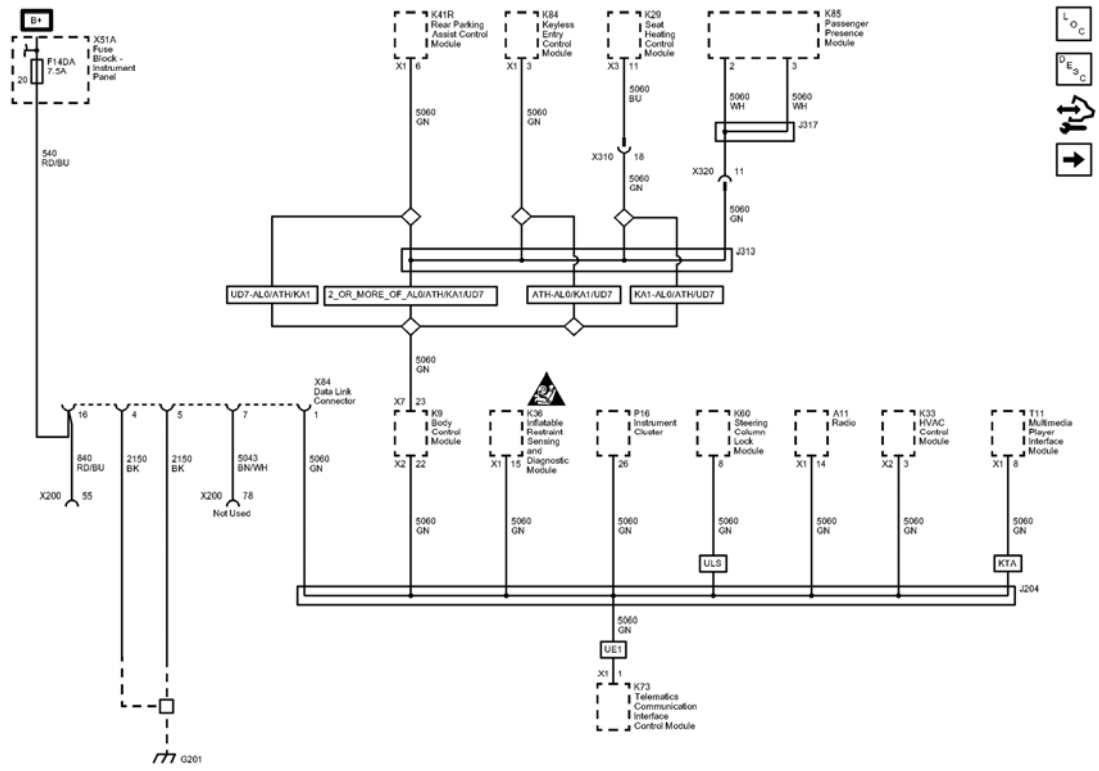

Fig. 1: Low Speed GMLAN Wiring Schematics
Courtesy of GENERAL MOTORS COMPANY

Callout	Component Name
CAV_20	20
540	Battery Positive Voltage
540_RD/BU	540 RD/BU
5060	Low Speed GMLAN Serial Data
5060_GN	5060 GN
CAV_23	23
CONN_X7	X7
CAV_6	6
CONN_X1	X1
CAV_3	3
CONN_X1	X1
5060 BU	5060 BU
CAV_11	11
CONN_X3	X3
5060_GN	5060 GN
5060_WH	5060 WH
CAV_2	2
5060_WH	5060 WH
CAV_3	3
5060_GN	5060 GN
5060_GN	5060 GN
840	Battery Positive Voltage
840_RD/BU	840 RD/BU
2150	Ground
2150_BK	2150 BK
2150_BK	2150 BK
5043	Keyword 2000 Serial Data
5043_BN/WH	5043 BN/WH
5060 GN	5060 GN
CAV_16	16
CAV_4	4
CAV_5	5
CAV_7	7
CAV_1	1
5060_GN	5060 GN
CAV_22	22
CONN_X2	X2
5060_GN	5060 GN
CAV_15	15
CONN_X1	X1
5060_GN	

	5060 GN
CAV_1	1
CONN_X1	X1
CAV_26	26
5060_GN	5060 GN
CAV_8	8
5060_GN	5060 GN
CAV_14	14
CONN_X1	X1
5060_GN	5060 GN
CAV_3	3
CONN_X2	X2
5060 GN	5060 GN
CAV_8	8
CONN_X1	X1
5060_GN	5060 GN
KTA	AUDIO INTERFACE-
ULS	STEERING COLUMN LOCK-MECHANICAL
UE1	COMMUNICATION SYSTEM-VEHICLE, ONSTAR
5060_GN	5060 GN
CAV_18	18
CAV_11	11
KA1	HEATER SEAT FRT-DRVR and PASS
AL0	
ATH	LOCK CONTROL, ENTRY-REMOTE ENTRY, EXTENDED RANGE, PASSIVE ENTRY, ALL DOORS
UD7	PARK ASSIST-REAR
ATH	LOCK CONTROL, ENTRY-REMOTE ENTRY, EXTENDED RANGE, PASSIVE ENTRY, ALL DOORS
AL0	
KA1	HEATER SEAT FRT-DRVR and PASS
UD7	PARK ASSIST-REAR
UD7	PARK ASSIST-REAR
AL0	
ATH	LOCK CONTROL, ENTRY-REMOTE ENTRY, EXTENDED RANGE, PASSIVE ENTRY, ALL DOORS
KA1	HEATER SEAT FRT-DRVR and PASS
CAV_78	78
CAV_55	55

2ORMOREOFAL0	
ATH	LOCK CONTROL, ENTRY-REMOTE ENTRY, EXTENDED RANGE, PASSIVE ENTRY, ALL DOORS
KA1	HEATER SEAT FRT-DRVR and PASS
UD7	PARK ASSIST-REAR
G201	G201
F14DA	F14DA 7.5A
X310	X310
X320	X320
J317	J317
J313	J313
J204	J204
X200	X200
X200	X200
K9	
P16	
A11	
K33	
X84	
K36	
T11	(KTA)
K73	(UE1)
K60	(ULS)
K29	(KA1)
K84	(ATH)
K41R	(UD7)
X51A	
K85	Passenger Presence Module

High Speed GMLAN Wiring Schematics

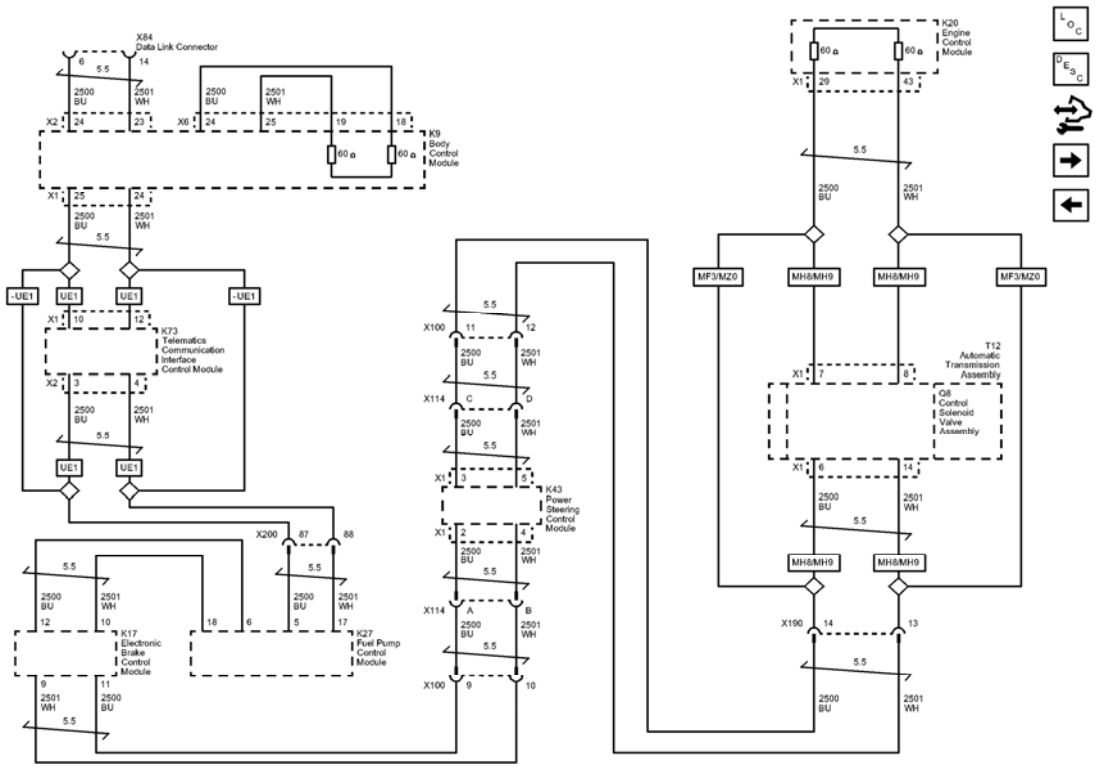

Fig. 2: High Speed GMLAN Wiring Schematics
Courtesy of GENERAL MOTORS COMPANY

Callout	Component Name
2500	High Speed GMLAN Serial Data (+) (1)
2500_BU	2500 BU
CAV_24	24
CONN_X2	X2
2501	High Speed GMLAN Serial Data (-) (1)
2501_WH	2501 WH
CAV_23	23
2500_BU	2500 BU
CAV_18	18
CAV_24	24
CONN_X6	X6
2501_WH	2501 WH
CAV_19	19
CAV_25	25
2500_BU	2500 BU
CAV_7	7
CONN_X1	X1

CAV_29	29
CONN_X1	X1
2501_WH	2501 WH
CAV_8	8
CAV_43	43
2501_WH	2501 WH
2500_BU	2500 BU
2501_WH	2501 WH
CAV_5	5
CAV_14	14
2500_BU	2500 BU
CAV_3	3
CONN_X1	X1
CAV_6	6
CONN_X1	X1
2501_WH	2501 WH
CAV_9	9
CAV_4	4
2500_BU	2500 BU
CAV_11	11
CAV_2	2
CONN_X1	X1
2501_WH	2501 WH
CAV_18	18
CAV_10	10
2500_BU	2500 BU
CAV_6	6
CAV_12	12
2500_BU	2500 BU
CAV_10	10
CONN_X1	X1
CAV_25	25
CONN_X1	X1
2501_WH	2501 WH
CAV_12	12
CAV_24	24
2500_BU	2500 BU
CAV_5	5
CAV_3	3
CONN_X2	X2
2501_WH	2501 WH

	17
CAV_4	4
UE1	COMMUNICATION SYSTEM-VEHICLE, ONSTAR
UE1	COMMUNICATION SYSTEM-VEHICLE, ONSTAR
CAV_6	6
CAV_14	14
2501_WH	2501 WH
2500_BU	2500 BU
2501_WH	2501 WH
2500_BU	2500 BU
2501_WH	2501 WH
2500_BU	2500 BU
2501_WH	2501 WH
2500_BU	2500 BU
2501_WH	2501 WH
2500_BU	2500 BU
UE1	COMMUNICATION SYSTEM-VEHICLE, ONSTAR
UE1	COMMUNICATION SYSTEM-VEHICLE, ONSTAR
UE1	COMMUNICATION SYSTEM-VEHICLE, ONSTAR
UE1	COMMUNICATION SYSTEM-VEHICLE, ONSTAR
MH8	TRANSMISSION-AUTO 6 SPD, HMD, X23F
MH9	TRANSMISSION-AUTO 6 SPD, HMD, X24F
MH8	TRANSMISSION-AUTO 6 SPD, HMD, X23F
MH9	TRANSMISSION-AUTO 6 SPD, HMD, X24F
MH8	TRANSMISSION-AUTO 6 SPD, HMD, X23F
MH9	TRANSMISSION-AUTO 6 SPD, HMD, X24F
MH8	TRANSMISSION-AUTO 6 SPD, HMD, X23F
MH9	TRANSMISSION-AUTO 6 SPD, HMD, X24F
MF3	TRANSMISSION-MAN 6 SPD, OPEL, 76.5 MM, 4.273 1ST, 2.158 2ND, 1.302 3RD, 0.959 4TH, 0.744 5TH, 0.614 6TH, M32-6 WR
MZ0	TRANSMISSION-MAN 6 SPD, OPEL, 76.5 MM, 3.82 1ST, 0.74 6TH, (M32 WR)
MF3	TRANSMISSION-MAN 6 SPD, OPEL, 76.5 MM, 4.273 1ST, 2.158 2ND, 1.302 3RD, 0.959 4TH, 0.744 5TH, 0.614 6TH, M32-6 WR
MZ0	TRANSMISSION-MAN 6 SPD, OPEL, 76.5 MM, 3.82 1ST, 0.74 6TH, (M32 WR)
X190	X190
CAV_13	13
CAV_14	14
X100	X100

CAV_12	12
CAV_11	11
X114	X114
CAV_C	C
CAV_D	D
X114	X114
CAV_A	A
CAV_B	B
X100	X100
CAV_10	10
CAV_9	9
X200	X200
CAV_88	88
CAV_87	87
TWIST_5.5	5.5
TWIST_5.5	5.5
TWIST_5.5	5.5

X84	

Chassis Expansion Bus Wiring Schematics

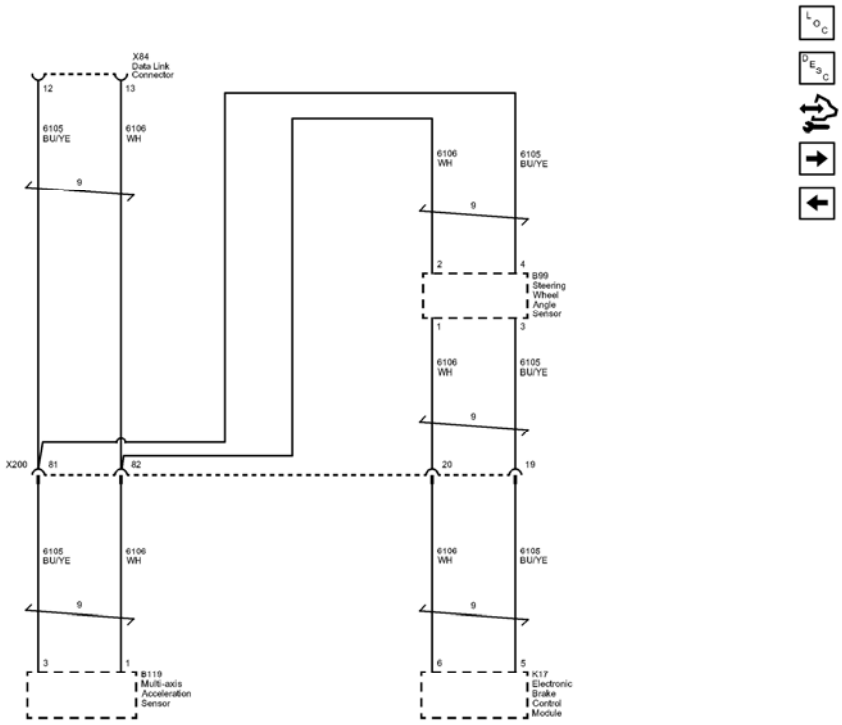

Fig. 3: Chassis Expansion Bus Wiring Schematics
Courtesy of GENERAL MOTORS COMPANY

Callout	Component Name
6105	High Speed GMLAN Serial Data (+) (2)
6105_BU/YE	6105 BU/YE
CAV_3	3
6106	High Speed GMLAN Serial Data (-) (2)
6106_WH	6106 WH
CAV_1	1
6106_WH	6106 WH
CAV_2	2
6105_BU/YE	6105 BU/YE
CAV_4	4
6106_WH	6106 WH
CAV_6	6

CAV_1	1
6105_BU/YE	6105 BU/YE
CAV_5	5
CAV_3	3
6105_BU/YE	6105 BU/YE
6106_WH	6106 WH
6106_WH	6106 WH
6105_BU/YE	6105 BU/YE
CAV_12	12
CAV_13	13
X200	X200
CAV_19	19
CAV 20	20
CAV_81	81
CAV_82	82
TWIST_9	9
TWIST_9	9
TWIST_9	9
TWIST_9	9
TWIST_9	9
X200	X200
K17	
B99	(FX3)
X84	
B119	(FX3)

Enable Serial Data Wiring Schematics

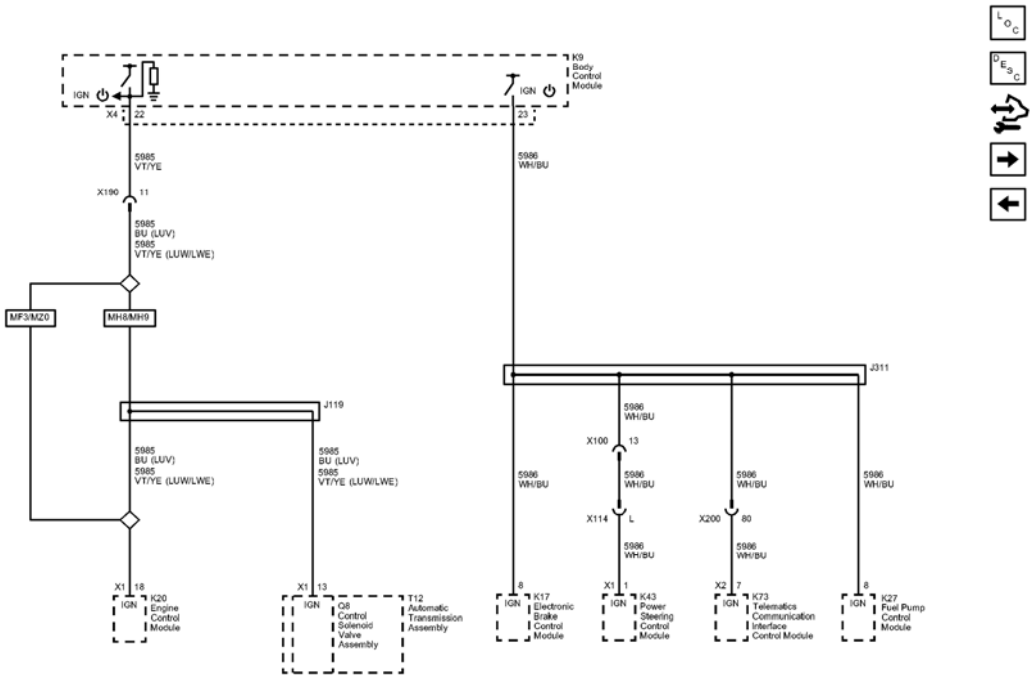

Fig. 4: Enable Serial Data Wiring Schematics
Courtesy of GENERAL MOTORS COMPANY

Callout	Component Name
5985	Accessory Wakeup Serial Data
5985 VT/YE	5985 VT/YE
CAV_18	18
CONN_X1	X1
CAV_22	22
CONN_X4	X4
5985_VT/YE	5985 VT/YE
5985_VT/YE	5985 VT/YE
5985_BU	5985 BU
5985_BU	5985 BU
5985_VT/YE	5985 VT/YE
CAV_13	13
CONN_X1	X1
5985_BU	5985 BU
5986	Serial Data Communication Enable
5986_WH/BU	5986 WH/BU
CAV_8	8

CAV_23	23
5986_WH/BU	5986 WH/BU
CAV_1	1
CONN_X1	X1
5986_WH/BU	5986 WH/BU
CAV_7	7
CONN_X2	X2
5986_WH/BU	5986 WH/BU
CAV_8	8
5986_WH/BU	5986 WH/BU
5986_WH/BU	5986 WH/BU
5986_WH/BU	5986 WH/BU
5986 WH/BU	5986 WH/BU
CAV_80	80
CAV_L	L
CAV_13	13
CAV_11	11
LUV	ENGINE-GAS, 4 CYL, 1.4L, MFI, DOHC, TURBO, VVT, ALUM, GME, E85 MAX
LUW	ENGINE-GAS, 4 CYL, 1.8L, MFI, 103KW, DOHC, E85 MAX
LWE	ENGINE-GAS, 4 CYL, 1.8L, MFI, DOHC, VVT, 103 KW, GME
LUV	ENGINE-GAS, 4 CYL, 1.4L, MFI, DOHC, TURBO, VVT, ALUM, GME, E85 MAX
LUV	ENGINE-GAS, 4 CYL, 1.4L, MFI, DOHC, TURBO, VVT, ALUM, GME, E85 MAX
LUW	ENGINE-GAS, 4 CYL, 1.8L, MFI, 103KW, DOHC, E85 MAX
LWE	ENGINE-GAS, 4 CYL, 1.8L, MFI, DOHC, VVT, 103 KW, GME
LUW	ENGINE-GAS, 4 CYL, 1.8L, MFI, 103KW, DOHC, E85 MAX
LWE	ENGINE-GAS, 4 CYL, 1.8L, MFI, DOHC, VVT, 103 KW, GME
MH8	TRANSMISSION-AUTO 6 SPD, HMD, X23F
MH9	TRANSMISSION-AUTO 6 SPD, HMD, X24F
MF3	TRANSMISSION-MAN 6 SPD, OPEL, 76.5 MM, 4.273 1ST, 2.158 2ND, 1.302 3RD, 0.959 4TH, 0.744 5TH, 0.614 6TH, M32-6 WR
MZ0	TRANSMISSION-MAN 6 SPD, OPEL, 76.5 MM, 3.82 1ST, 0.74 6TH, (M32 WR)
X200	X200

X114	X114
X100	X100
X190	X190
J119	J119
J311	J311
Q8	(MH8/MH9)
T12	(MH8/MH9)
K9	
K20	
K17	
K43	
K73	(UE1)
K27	

Linear Interconnect Network (LIN) Serial Data Wiring Schematics

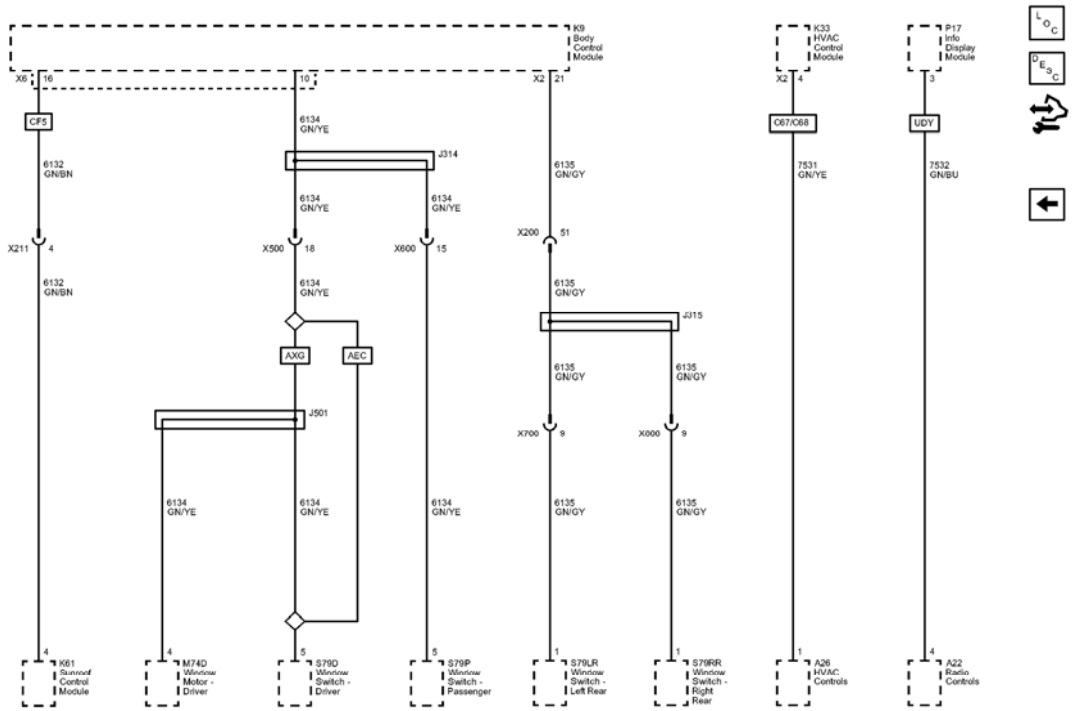

Fig. 5: Linear Interconnect Network (LIN) Serial Data Wiring Schematics
Courtesy of GENERAL MOTORS COMPANY

Callout	Component Name
6132	Linear Interconnect Network Bus 1

6132_GN/BN	6132 GN/BN
CAV_4	4
CAV_16	16
CONN_X6	X6
6134	Linear Interconnect Network Bus 3
6134_GN/YE	6134 GN/YE
CAV_5	5
CAV_10	10
6134_GN/YE	6134 GN/YE
CAV_5	5
6135	Linear Interconnect Network Bus 4
6135_GN/GY	6135 GN/GY
CAV_1	1
CAV_21	21
CONN_X2	X2
7531	Linear Interconnect Network Bus 9
7531_GN/YE	7531 GN/YE
CAV_1	1
CAV_4	4
CONN_X2	X2
6135_GN/GY	6135 GN/GY
CAV_1	1
6134_GN/YE	6134 GN/YE
CAV_4	4
7532	Linear Interconnect Network Bus 10
7532_GN/BU	7532 GN/BU
CAV_4	4
CAV_3	3
6135_GN/GY	6135 GN/GY
6135_GN/GY	6135 GN/GY
6135_GN/GY	6135 GN/GY
6135_GN/GY	6135 GN/GY
6134_GN/YE	6134 GN/YE
6134_GN/YE	6134 GN/YE
6134_GN/YE	6134 GN/YE
6134_GN/YE	6134 GN/YE
6132_GN/BN	6132 GN/BN
CAV_4	4
CAV_18	18
CAV_15	15
CAV_51	51

	9
CAV_9	9
AXG	WINDOW-POWER OPERATED-EXPRESS DRIVER UP/DOWN
AEC	WINDOW-POWER OPERATED, DRIVER EXPRESS DOWN
CF5	ROOF-SUN, GLASS, SLIDING, ELEC
C67	HVAC SYSTEM-AIR CONDITIONER FRT, ELECTRONIC CONTROLS
C68	HVAC SYSTEM-AIR CONDITIONER FRT, AUTO, ELECTRONIC CONTROLS
UDY	"INFOTAINMENT DISPLAY-COLOR INFO DISPLAY (CID) 7"", WVGA, TOUCH SCREEN"
X211	X211
X500	X500
X600	X600
X200	X200
X700	X700
X800	X800
J315	J315
J501	J501
J314	J314
K61	(CF5)
M74D	
S79D	
S79P	
S79LR	
S79RR	
K33	
P17	
A22	
K9	
A26	

BODY CONTROL SYSTEM WIRING SCHEMATICS

Power, Ground, Data Communications, and Subsystem References (1 of 4) Wiring Schematics

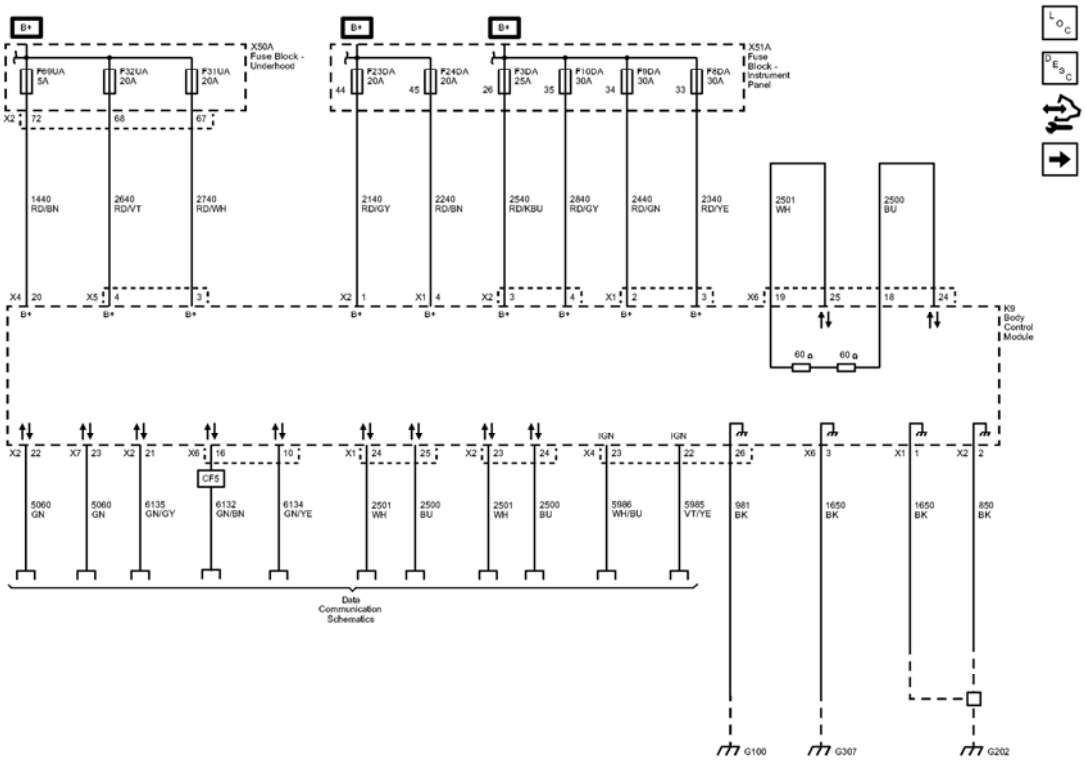

Fig. 6: Power, Ground, Data Communications, and Subsystem References (1 of 4) Wiring Schematics
Courtesy of GENERAL MOTORS COMPANY

Callout	Component Name
CAV_44	44
CAV_45	45
CAV_26	26
CAV_35	35
CAV_34	34
CAV_33	33
1440	Battery Positive Voltage
1440_RD/BN	1440 RD/BN
CAV_20	20
CONN_X4	X4
CAV_72	72
CONN_X2	X2
2640	Battery Positive Voltage
2640_RD/VT	2640 RD/VT
CAV_4	4
CONN_X5	X5
CAV_68	68

2740	Battery Positive Voltage
2740_RD/WH	2740 RD/WH
CAV_3	3
CAV_67	67
2140	Battery Positive Voltage
2140_RD/GY	2140 RD/GY
CAV_1	1
CONN_X2	X2
2240	Battery Positive Voltage
2240_RD/BN	2240 RD/BN
CAV_4	4
CONN_X1	X1
2540	Battery Positive Voltage
2540_RD/KBU	2540 RD/KBU
CAV_3	3
CONN_X2	X2
2840	Battery Positive Voltage
2840_RD/GY	2840 RD/GY
CAV_4	4
2440	Battery Positive Voltage
2440_RD/GN	2440 RD/GN
CAV_2	2
CONN_X1	X1
2340	Battery Positive Voltage
2340_RD/YE	2340 RD/YE
CAV_3	3
2501	High Speed GMLAN Serial Data (-) (1)
2501_WH	2501 WH
CAV_19	19
CONN_X6	X6
CAV_25	25
2500	High Speed GMLAN Serial Data (+) (1)
2500_BU	2500 BU
CAV_18	18
CAV_24	24
5060	Low Speed GMLAN Serial Data
5060_GN	5060 GN
CAV_22	22
CONN_X2	X2

5060_GN	5060 GN
CAV_23	23
CONN_X7	X7
6135	Linear Interconnect Network Bus 4
6135_GN/GY	6135 GN/GY
CAV_21	21
CONN_X2	X2
6132	Linear Interconnect Network Bus 1
6132_GN/BN	6132 GN/BN
CAV_16	16
CONN_X6	X6
6134	Linear Interconnect Network Bus 3
6134_GN/YE	6134 GN/YE
CAV_10	10
2501_WH	2501 WH
CAV_24	24
CONN_X1	X1
2500_BU	2500 BU
CAV_25	25
2501_WH	2501 WH
CAV_23	23
CONN_X2	X2
2500_BU	2500 BU
CAV_24	24
5986	Serial Data Communication Enable
5986_WH/BU	5986 WH/BU
CAV_23	23
CONN_X4	X4
5985	Accessory Wakeup Serial Data
5985_VT/YE	5985 VT/YE
CAV_22	22
CF5	ROOF-SUN, GLASS, SLIDING, ELEC
981_BK	981 BK
CAV_26	26
1650	Ground
1650_BK	1650 BK

CAV_3	3
CONN_X6	X6
1650_BK	1650 BK
CAV_1	1
CONN_X1	X1
850	Ground
850_BK	850 BK
CAV_2	2
CONN_X2	X2
G100	G100
G202	G202
G307	G307
F69UA	F69UA 5A
F32UA	F32UA 20A
F31UA	F31UA 20A
F23DA	F23DA 20A
F24DA	F24DA 20A
F3DA	F3DA 25A
F10DA	F10DA 30A
F9DA	F9DA 30A
F8DA	F8DA 30A
X50A	
K9	
X51A	
Data_Communication_Schematics_REF	Data Communication Schematics

Subsystem References (2 of 4) Wiring Schematics

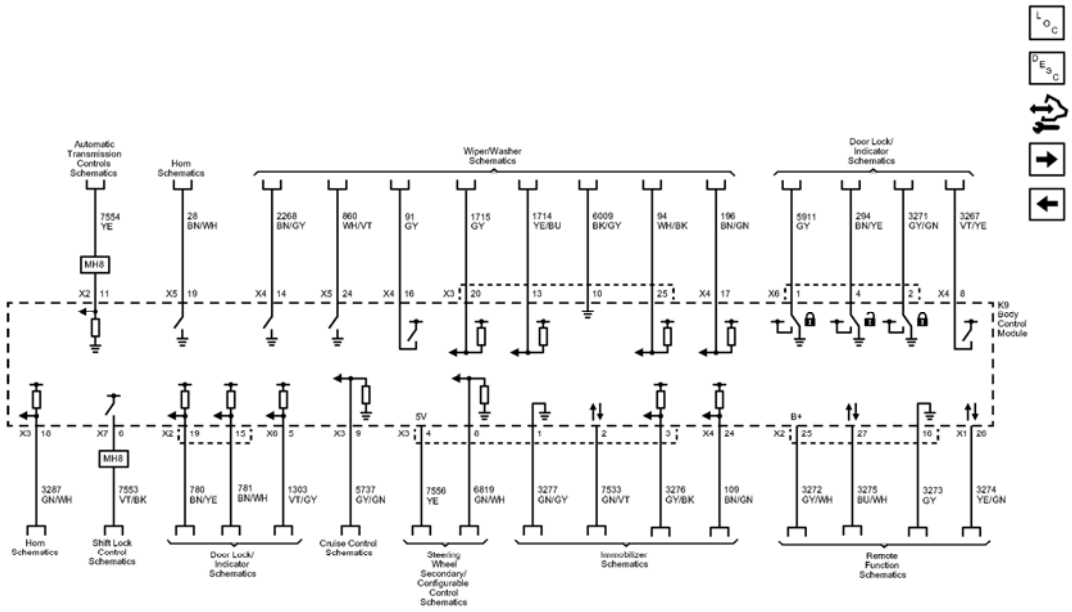

Fig. 7: Subsystem References (2 of 4) Wiring Schematics
Courtesy of GENERAL MOTORS COMPANY

Callout	Component Name
7554	Park Lock Solenoid Soft Control
7554_YE	7554 YE
CAV_11	11
CONN_X2	X2
28	Horn Relay Control
28_BN/WH	28 BN/WH
CAV_19	19
CONN_X5	X5
2268	Windshield Washer Relay Control
2268_BN/GY	2268 BN/GY
CAV_14	14
CONN_X4	X4
860	Front Windshield Wiper Switch High Signal
860_WH/VT	860 WH/VT

CAV_24	24
CONN_X5	X5
91	Windshield Wiper Motor Relay Coil Supply Voltage
91_GY	91 GY
CAV_16	16
CONN_X4	X4
1715	Windshield Wiper Switch High Signal
1715_GY	1715 GY
CAV_20	20
CONN X3	X3
1714	Windshield Wiper Switch Low Signal
1714_YE/BU	1714 YE/BU
CAV_13	13
6009	Windshield Wiper Switch Low Reference
6009_BK/GY	6009 BK/GY
CAV_10	10
94	Windshield Washer Switch Signal
94_WH/BK	94 WH/BK
CAV_25	25
196	Windshield Wiper Motor Park Switch Signal
196 BN/GN	196 BN/GN
CAV_17	17
CONN X4	X4
5911	Door Lock Actuator Lock Control 2
5911_GY	5911 GY
CAV_1	1
CONN_X6	X6
294	Door Lock Actuator Unlock Control
294_BN/YE	294 BN/YE
CAV_4	4
3271	Door Lock Control (2)
3271_GY/GN	3271 GY/GN
CAV_2	2
3267	Child Security Lock Relay

	Control
3267_VT/YE	3267 VT/YE
CAV_8	8
CONN_X4	X4
3287	Horn Switch Signal
3287_GN/WH	3287 GN/WH
CAV_18	18
CONN_X3	X3
7553	Park Lock Solenoid Control
7553_VT/BK	7553 VT/BK
CAV_6	6
CONN_X7	X7
780	Driver Door Lock Switch Lock Signal
780_BN/YE	780 BN/YE
CAV_19	19
CONN_X2	X2
781	Driver Door Lock Switch Unlock Signal
781_BN/WH	781 BN/WH
CAV 15	15
1303	Lift Gate Ajar Switch Signal (1)
1303_VT/GY	1303 VT/GY
CAV 5	5
CONN_X6	X6
5737	Adaptive Cruise Control Gap Up/Down Switch Signal
5737_GY/GN	5737 GY/GN
CAV_9	9
CONN_X3	X3
7556	Lighting Control Switch Reference
7556_YE	7556 YE
CAV_4	4
CONN_X3	X3
6819	Steering Wheel Resistor Ladder Signal #2
6819_GN/WH	6819 GN/WH
CAV_8	8

3277	Vehicle Anti-Theft System Immobilizer Return
3277_GN/GY	3277 GN/GY
CAV 1	1
7533	Linear Interconnect Network Bus 11
7533_GN/VT	7533 GN/VT
CAV_2	2
3276	Vehicle Anti-Theft System Immobilizer Supply Voltage
3276_GY/BK	3276 GY/BK
CAV_3	3
109	Hood Ajar Switch Signal
109_BN/GN	109 BN/GN
CAV_24	24
CONN_X4	X4
3272	Remote Function Actuator Supply Voltage
3272_GY/WH	3272 GY/WH
CAV_25	25
CONN_X2	X2
3275	Remote Function Actuator Receive Signal
3275_BU/WH	3275 BU/WH
CAV_27	27
3273	Remote Function Actuator Return
3273_GY	3273 GY
CAV_16	16
3274	Remote Function Actuator Transmit Signal
3274_YE/GN	3274 YE/GN
CAV_26	26
CONN_X1	X1
MH8	TRANSMISSION-AUTO 6 SPD, HMD, X23F
MH8	TRANSMISSION-AUTO 6 SPD, HMD, X23F
Horn_Schematics_REF	Horn Schematics
Wiper/Washer_Schematics_REF	Wiper/Washer Schematics
Horn Schematics REF	Horn Schematics
	Shift Lock Control

Shift_Lock_Control_Schematics_REF	Schematics
Steering_Wheel_Secondary/Configurable_Control_Schematics_REF	Steering Wheel Secondary/Configurable Control Schematics
Immobilizer_Schematics_REF	Immobilizer Schematics
Remote_Function_Schematics_REF	Remote Function Schematics
K9	
Automatic_Transmission_Controls_Schematics_REF	Automatic Transmission Controls Schematics
Door_Lock/Indicator_Schematics_REF	Door Lock/Indicator Schematics
Cruise_Control_Schematics_REF	Cruise Control Schematics
Door_Lock/Indicator_Schematics_REF	Door Lock/Indicator Schematics

Subsystem References (3 of 4) Wiring Schematics

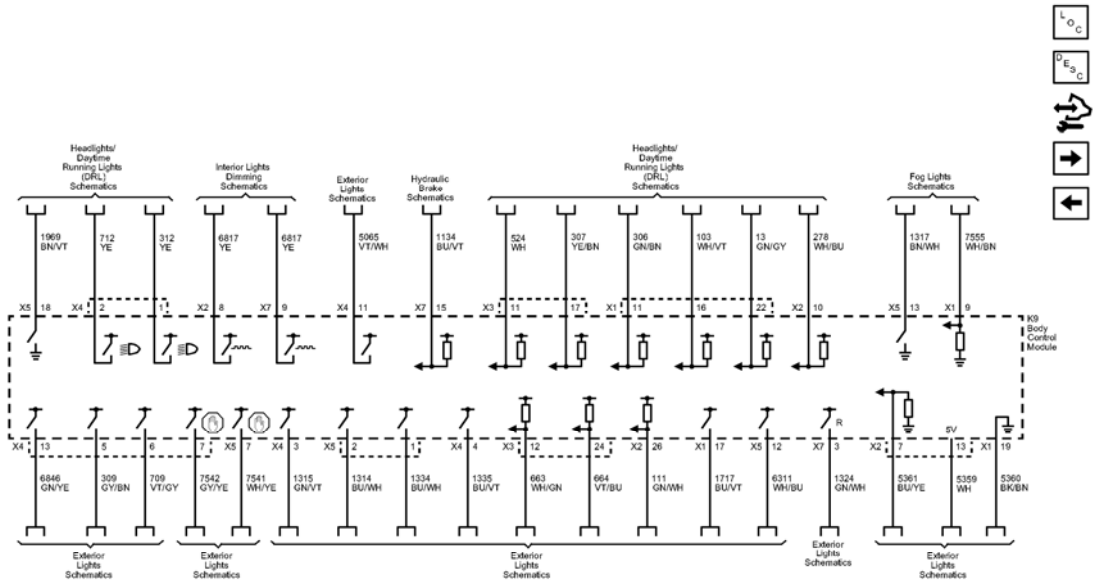

Fig. 8: Subsystem References (3 of 4) Wiring Schematics
Courtesy of GENERAL MOTORS COMPANY

Callout	Component Name

1969	Headlamp High Beam Relay Control
1969_BN/VT	1969 BN/VT
CAV_18	18
CONN_X5	X5
712	Left Headlamp Low Beam Supply Voltage
712_YE	712 YE
CAV_2	2
CONN_X4	X4
312	Right Headlamp Low Beam Supply Voltage
312_YE	312 YE
CAV_1	1
6817	LED Backlight Dimming Control
6817_YE	6817 YE
CAV_8	8
CONN_X2	X2
6817_YE	6817 YE
CAV_9	9
CONN_X7	X7
5065	Stop Lamp Relay Coil Supply Voltage
5065_VT/WH	5065 VT/WH
CAV_11	11
CONN_X4	X4
1134	Park Brake Switch Signal
1134_BU/VT	1134 BU/VT
CAV_15	15
CONN_X7	X7
524	Headlamp Dimmer Switch High Beam Signal
524_WH	524 WH
CAV_11	11
CONN_X3	X3
307	Headlamp Switch Flash To Pass Signal
307_YE/BN	307 YE/BN
CAV_17	17
306	Headlamp Switch Headlamps Off Signal Control

306_GN/BN	306 GN/BN
CAV_11	11
CONN_X1	X1
103	Headlamp Switch On Signal
103_WH/VT	103 WH/VT
CAV_16	16
13	Headlamp Switch Park Lamp Signal
13_GN/GY	13 GN/GY
CAV_22	22
278	Ambient Light Sensor Signal
278_WH/BU	278 WH/BU
CAV_10	10
CONN_X2	X2
1317	Fog Lamp Relay Control
1317_BN/WH	1317 BN/WH
CAV_13	13
CONN_X5	X5
7555	Lighting Control Switch Signal
7555_WH/BN	7555 WH/BN
CAV_9	9
CONN_X1	X1
6846	Rear License Lamp Supply Voltage
6846_GN/YE	6846 GN/YE
CAV_13	13
CONN_X4	X4
309	Right Park Lamp Supply Voltage
309_GY/BN	309 GY/BN
CAV_5	5
709	Left Park Lamp Supply Voltage
709_VT/GY	709 VT/GY
CAV_6	6
7542	Left Rear Stop Lamp Supply Voltage
7542_GY/YE	7542 GY/YE
CAV_7	7
7541	Right Rear Stop Lamp Supply Voltage
7541_WH/YE	7541 WH/YE
CAV_7	7

CONN_X5	X5
1315	Right Front Turn Signal Lamp Supply Voltage
1315 GN/VT	1315 GN/VT
CAV_3	3
CONN_X4	X4
1314	Left Front Turn Signal Lamp Supply Voltage
1314_BU/WH	1314 BU/WH
CAV_2	2
CONN_X5	X5
1334	Left Rear Turn Signal Lamp Supply Voltage
1334_BU/WH	1334 BU/WH
CAV_1	1
1335	Right Rear Turn Signal Lamp Supply Voltage
1335_BU/VT	1335 BU/VT
CAV_4	4
CONN_X4	X4
663	Hazard Switch Left Turn Signal
663_WH/GN	663 WH/GN
CAV_12	12
CONN_X3	X3
664	Hazard Switch Right Turn Signal
664_VT/BU	664 VT/BU
CAV_24	24
111	Hazard Switch Signal
111_GN/WH	111 GN/WH
CAV_26	26
CONN_X2	X2
1717	Hazard Switch Turn Flasher Control
1717_BU/VT	1717 BU/VT
CAV_17	17
CONN_X1	X1
6311	Cruise/ETC/TCC Brake Signal
6311_WH/BU	6311 WH/BU
CAV_12	12
CONN_X5	X5
1324	Backup Lamp Supply Voltage

1324_GN/WH	1324 GN/WH
CAV_3	3
CONN_X7	X7
5361	Brake Apply Sensor Signal
5361_BU/YE	5361 BU/YE
CAV_7	7
CONN_X2	X2
5359	Brake Apply Sensor Supply Voltage
5359_WH	5359 WH
CAV_13	13
5360	Brake Apply Sensor Low Reference
5360 BK/BN	5360 BK/BN
CAV_19	19
CONN_X1	X1
Exterior_Lights_Schematics_REF	Exterior Lights Schematics
Interior_Lights_Dimming_Schematics_REF	Interior Lights Dimming Schematics
K9	
Headlights/Daytime_Running_Lights_(DRL)_Schematics_REF	Headlights/Daytime Running Lights (DRL) Schematics
Hydraulic_Brake_Schematics_REF	Hydraulic Brake Schematics
Exterior_Lights_Schematics_REF	Exterior Lights Schematics
Exterior_Lights_Schematics_REF	Exterior Lights Schematics
Exterior Lights Schematics REF	Exterior Lights Schematics
Exterior_Lights_Schematics_REF	Exterior Lights Schematics
Exterior Lights Schematics REF	Exterior Lights Schematics
Fog_Lights_Schematics_REF	Fog Lights Schematics
Headlights/Daytime_Running_Lights_(DRL)_Schematics_REF	Headlights/Daytime Running Lights (DRL) Schematics

Subsystem References (4 of 4) Wiring Schematics

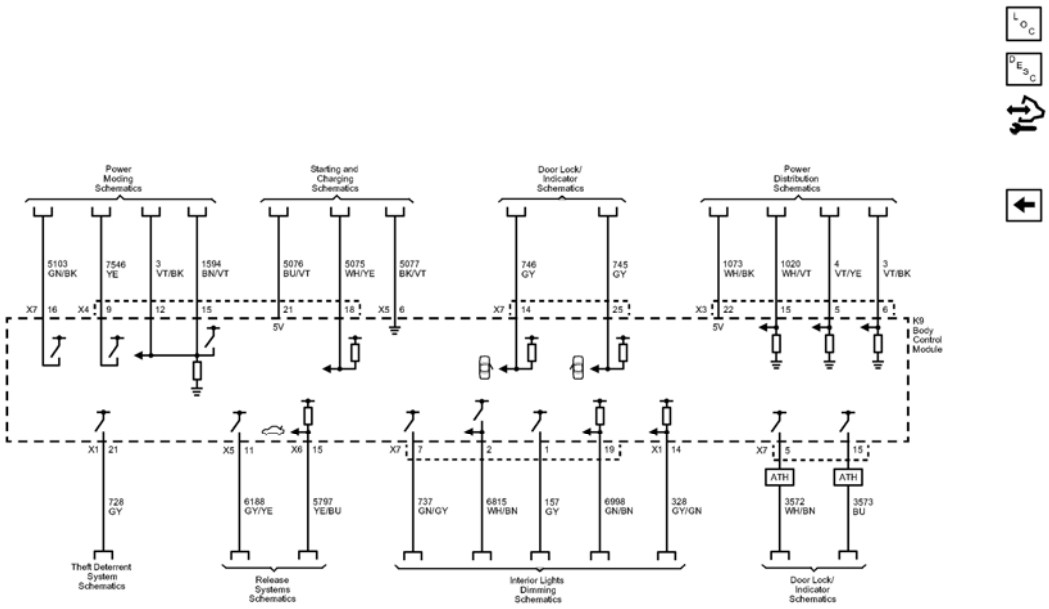

Fig. 9: Subsystem References (4 of 4) Wiring Schematics
Courtesy of GENERAL MOTORS COMPANY

Callout	Component Name
5103	Technology Identification
5103 GN/BK	5103 GN/BK
CAV_16	16
CONN_X7	X7
7546	Logistics Relay Control
7546_YE	7546 YE
CAV_9	9
CONN_X4	X4
3	Run/Crank Ignition 1 Voltage
3_VT/BK	3 VT/BK
CAV 12	12
1594	Ignition 3 Relay Control
1594_BN/VT	1594 BN/VT
CAV_15	15
5076	Current Sensor Supply Voltage

5076_BU/VT	5076 BU/VT
CAV_21	21
5075	Current Sensor Signal
5075_WH/YE	5075 WH/YE
CAV_18	18
5077	Current Sensor Low Reference
5077_BK/VT	5077 BK/VT
CAV_6	6
CONN_X5	X5
746	Right Front Door Ajar Switch Signal
746_GY	746 GY
CAV 14	14
CONN_X7	X7
745	Left Front Door Ajar Switch Signal
745_GY	745 GY
CAV_25	25
1073	Ignition Key Resistor Signal
1073_WH/BK	1073 WH/BK
CAV_22	22
CONN_X3	X3
1020	Off/Run/Crank Voltage
1020 WH/VT	1020 WH/VT
CAV_15	15
4	Accessory Voltage
4_VT/YE	4 VT/YE
CAV_5	5
3_VT/BK	3 VT/BK
CAV_6	6
728	Security Indicator Control
728_GY	728 GY
CAV_21	21
CONN_X1	X1
6188	Lift Glass/Trunk Motor Release Control
6188_GY/YE	6188 GY/YE
CAV_11	11
CONN_X5	X5
	Rear Closure Handle

5797	Switch Open Signal
5797_YE/BU	5797 YE/BU
CAV_15	15
CONN_X6	X6
737	Trunk Lamp Control
737_GN/GY	737 GN/GY
CAV_7	7
CONN_X7	X7
6815	Inadvertent Power Control
6815_WH/BN	6815 WH/BN
CAV_2	2
157	Interior Lamp Control
157 GY	157 GY
CAV_1	1
6998	Inadvertent Load 1 Supply Voltage
6998_GN/BN	6998 GN/BN
CAV_19	19
328	Interior Lamp Defeat Switch Signal
328_GY/GN	328 GY/GN
CAV_14	14
CONN_X1	X1
3572	Driver Door Unlatch Enable Signal
3572_WH/BN	3572 WH/BN
CAV_5	5
CONN_X7	X7
ATH	LOCK CONTROL, ENTRY-REMOTE ENTRY, EXTENDED RANGE, PASSIVE ENTRY, ALL DOORS
3573	Non Driver Door Unlatch Enable Signal
3573_BU	3573 BU
CAV_15	15
ATH	LOCK CONTROL, ENTRY-REMOTE ENTRY, EXTENDED RANGE, PASSIVE ENTRY, ALL DOORS
K9	

Power_Moding_Schematics_REF	Power Moding Schematics
Starting_and_Charging_Schematics_REF	Starting and Charging Schematics
Theft_Deterrent_System_Schematics_REF	Theft Deterrent System Schematics
Interior_Lights_Dimming_Schematics_REF	Interior Lights Dimming Schematics
Door_Lock/Indicator_Schematics_REF	Door Lock/Indicator Schematics
Power_Distribution_Schematics_REF	Power Distribution Schematics
Release_Systems_Schematics_REF	Release Systems Schematics
Door_Lock/Indicator_Schematics_REF	Door Lock/Indicator Schematics

DIAGNOSTIC INFORMATION AND PROCEDURES

DIAGNOSTIC CODE INDEX

DIAGNOSTIC CODE INDEX

DTC	Description
Control Module U Code List	
DTC B1000	DTC B1000 Electronic Control Unit
DTC B1001	DTC B1001 Option Configuration
DTC B101D	DTC B101D Electronic Control Unit Hardware
DTC B101E	DTC B101E Electronic Control Unit Software
DTC C056D	DTC C056D Electronic Control Unit Hardware
DTC C056E	DTC C056E Electronic Control Unit Software
DTC P0601-P0604, P0606, or P062F	DTC P0601 Control Module Read Only Memory Performance DTC P0602 Control Module Not Programmed DTC P0603 Control Module Long Term Memory Reset DTC P0604 Control Module Random Access Memory Performance DTC P0606 Control Module Processor Performance DTC P062F Control Module Long Term Memory Performance
DTC U0001	DTC U0001 00 High Speed CAN Communication Bus Malfunction
DTC U0020	DTC U0020 Low Speed CAN Bus
DTC U0073 or U2100	DTC U0073 Control Module Communication Bus A Off

	DTC U2100 CAN Bus Communication
DTC U0074	DTC U0074 Control Module Communication Bus B Off
DTC U0077	DTC U0077 00 Control Module Communication Chassis Expansion CAN Bus Off
DTC U0078	DTC U0078 Control Module Communication Low Speed CAN Bus Off
DTC U0100-U02FF	
DTC U0300-U0336	
DTC U0400-U05FF	
DTC U1500-U15FF	
DTC U1814	DTC U1814 Powertrain Wake-Up Communication Circuit
DTC U18B9-U18BF	DTC U18B9 Primary High Speed CAN Bus Subnet Configuration List DTC U18BF Secondary High Speed CAN Bus Subnet Configuration List
DTC U2099	DTC U2099 High Speed Communication Enable Circuit

CONTROL MODULE U CODE LIST

This list includes all Data Communications related U-code DTCs in alphanumeric order with descriptors for all devices. Not all DTCs listed will be applicable to all vehicles.

For symptom byte information, refer to **Symptom Byte List** .

Control Module U Code List

DTC	DTC Descriptor
U0001	High Speed CAN Bus Malfunction
U0002	High Speed CAN Bus
U0020	Low Speed CAN Bus
U0028	MOST Bus
U0029	MOST Bus Performance
U0073	Control Module Communication Bus A Off
U0074	Control Module Communication Bus B Off
U0075	Control Module Communication Object Detection CAN Bus Off
U0077	Control Module Communication Chassis Expansion CAN Bus Off
U0078	Control Module Communication Low Speed CAN Bus Off
U007A	Control Module Communication High Voltage Energy Management CAN Bus Off
U0100	Lost Communication With Engine Control Module
U0101	Lost Communication With Transmission Control Module

U0102	Lost Communication with Transfer Case Control Module
U0103	Lost Communication with Shift Lever Module
U0104	Lost Communication With Cruise Control Module
U0105	Lost Communication with Fuel Injector Control Module
U0109	Lost Communication with Fuel Pump Control Module
U010E	Lost Communication with Reductant Sensor Module
U010F	Lost Communication with Air Conditioning Control Module
U0111	Lost Communication with Battery Energy Control Module
U0112	Lost Communication with Battery Energy Control Module
U0115	Lost Communication with Engine Control Module B
U0117	Lost Communication With Power Take-Off Control Module
U0121	Lost Communication With Electronic Brake Control Module
U0122	Lost Communication With Vehicle Stability Control Module
U0125	Lost Communication With Multi-axis Acceleration Sensor Module
U0126	Lost Communication With Steering Wheel Angle Sensor Module
U0128	Lost Communication With Park Brake Control Module
U0129	Lost Communication with Brake System Control Module
U012A	Lost Communication With Chassis Control Module
U0130	Lost Communication With Electric Power Steering Control Module
U0131	Lost Communication With Power Steering Control Module
U0132	Lost Communication With Suspension Control Module
U0133	Lost Communication With Air Suspension Control Module
U0136	Lost Communication With Differential Control Module - Rear
U0137	Lost Communication with Trailer Brake Control Module
U0139	Lost Communication With Suspension Control Module
U0140	Lost Communication With Body Control Module
U0146	Lost Communication with Infotainment Gateway Module
U0151	Lost Communication With Inflatable Restraint Sensing and Diagnostic Module
U0155	Lost Communication With Instrument Cluster
U0158	Lost Communication With Head-Up Display
U0159	Lost Communication With Parking Assist Control Module
U0160	Lost Communication With Chime Alarm Control Module
U0164	Lost Communication with HVAC Control Module
U0166	Lost Communication with Auxiliary Heater Control Module
U0167	Lost Communication with Immobilizer Control Module
U0168	Lost Communication With Keyless Entry Control Module
U016B	Lost Communication with Electric A/C Compressor Control Module
U0170	Lost Communication with Passenger Presence Detection Sensor Module
U0181	Lost Communication With Headlamp Leveling Control Module
U0182	Lost Communication With Lighting Control Module - Front

U0184	Lost Communication With Radio
U0186	Lost Communication With Speaker Amplifier Module
U0196	Lost Communication With Rear Audio Control Module
U0191	Lost Communication With Television
U0193	Lost Communication With Digital Radio Receiver Control Module
U0197	Lost Communication With Telephone Control Module
U0198	Lost Communication With Telematic Control Module
U0201	Lost Communication With Transfer Case Control Module
U0203	Lost Communication With Left Rear Door Switch Panel Control Module
U0204	Lost Communication With Right Rear Door Switch Panel Control Module
U0207	Lost Communication With Moveable Roof Control Module
U0208	Lost Communication with Seat Memory Control Module
U0209	Lost Communication With Front Seat Heating Control Module
U0210	Lost Communication With Rear Seat Heating Control Module
U0230	Lost Communication With Liftgate Control Module
U0232	Lost Communication with Side Object Detection Control Module - Left
U0233	Lost Communication with Side Object Detection Control Module - Right
U0236	Lost Communication With Steering Column Lock Module
U0237	Lost Communication With Multimedia Player Interface Module
U023A	Lost Communication With Vehicle Direction Camera Control Module *(without UGN)*
	Lost Communication With Active Safety Control Module *(with UGN)*
U0248	Lost Communication with Remote Accessory Module
U0249	Lost Communication with Entertainment Control Module - Rear
U0250	Lost Communication with Impact Classification System Module
U0252	Lost Communication With Trailer Interface Control Module
U0254	Lost Communication With Remote Start Module
U0255	Lost Communication With Info Display Module
U0256	Lost Communication With Infotainment Faceplate Control Module
U0257	Lost Communication With Info Display Module/Infotainment Faceplate Control Module
U0264	Lost Communication With Camera Module - Rear
U0265	Lost Communication with Left Front Short Range Radar Sensor Module
U0268	Lost Communication with Right Front Short Range Radar Sensor Module
U0269	Lost Communication with Front Long Range Object Sensor
U026A	Lost Communication with Frontview Camera Module
U026B	Lost Communication with Rear Short Range Object Sensor
U0293	Lost Communication with Hybrid/EV Powertrain Control Module
U029D	Lost Communication with NOx Sensor 1 Module
U029E	Lost Communication with NOx Sensor 2 Module
U0301	Software Incompatibility with Engine Control Module

U0302	Software Incompatibility with Transmission Control Module
U0305	Software Incompatibility With Cruise Control Module
U0315	Software Incompatibility with Electronic Brake Control Module
U0401	Invalid Data Received From Engine Control Module
U0402	Invalid Data Received From Transmission Control Module
U0403	Invalid Data Received From Transfer Case Control Module
U0405	Invalid Data Received From Cruise Control Module
U0415	Invalid Data Received From Electronic Brake Control Module
U0416	Invalid Data Received From Vehicle Dynamics Control Module
U0417	Invalid Data Received From Park Brake Control Module
U0418	Invalid Data Received From Brake System Control Module
U0420	Invalid Data Received From Power Steering Control Module
U0421	Invalid Data Received From Suspension Control Module
U0422	Invalid Data Received From Body Control Module
U0423	Invalid Data Received From Instrument Cluster
U0424	Invalid Data Received From HVAC Control Module
U0428	Invalid Data Received From Steering Wheel Angle Sensor Module
U0431	Invalid Data Received From Body Control Module "A"
U0432	Invalid Data Received From Multi-axis Acceleration Sensor Module
U0437	Invalid Data Received From Differential Control Module - Rear
U0438	Invalid Data Received From Trailer Brake Control Module
U0452	Invalid Data Received From Inflatable Restraint Sensing and Diagnostic Module
U0465	Invalid Data Received From Power Take-Off Control Module
U0499	Invalid Data Received From Telematic Control Module
U053B	Invalid Data Received From Active Safety Control Module
U056B	Invalid Data Received From Camera Module - Front
U0594	Invalid Data Received From Hybrid/EV Powertrain Control Module
U1501	LIN Bus 1
U1502	LIN Bus 2
U1505	LIN Bus 5
U150E	LIN Bus 14
U150F	LIN Bus 15
U1510	(K9 Body Control Module) LIN Bus 1 Lost Communication With Device 0 (B67 Ultrasonic Intrusion Sensor)
	(K33 HVAC Control Module) LIN Bus 1 Lost Communication With Device 0 (A26 HVAC Controls)
	(A11 Radio) LIN Bus 1 Lost Communication with Device 0 (A20 Radio/HVAC Control)
	(P16 Instrument Cluster) LIN Bus 1 Lost Communication with Device 0 (S70R Steering Wheel Controls Switch - Right)
	(K26 Headlamp Control Module / K28 Headlamp Leveling Control Module)

U1511	LIN Bus 1 Lost Communication With Device 1 (E13L Headlamp - Left)
	(K40 Seat Memory Control Module) LIN Bus 1 Lost Communication With Device 1 (K99 Steering Column Position Control Module)
U1512	(K26 Headlamp Control Module / K28 Headlamp Leveling Control Module) LIN Bus 1 Lost Communication With Device 2 (E13R Headlamp - Right)
U1513	(K26 Headlamp Control Module / K28 Headlamp Leveling Control Module) LIN Bus 1 Lost Communication With Device 3 (E13L Headlamp - Left)
U1514	(K26 Headlamp Control Module / K28 Headlamp Leveling Control Module) LIN Bus 1 Lost Communication With Device 4 (E13R Headlamp - Right)
U1515	(K9 Body Control Module) LIN Bus 1 Lost Communication With Device 5 (M75 Windshield Wiper Motor)
U1516	(K9 Body Control Module) LIN Bus 1 Lost Communication With Device 6 (B110 Battery Sensor Module)
U1517	(K9 Body Control Module) LIN Bus 1 Lost Communication With Device 7 (K62 Sunroof Sunshade Motor Module)
U1518	(P16 Instrument Cluster) LIN Bus 1 Lost Communication with Device 8 (P29 Head-Up Display)
U1519	(K40 Seat Memory Control Module) LIN Bus 1 Lost Communication With Device 9 (S52 Outside Rearview Mirror Switch)
	(K40 Seat Memory Control Module) LIN Bus 1 Lost Communication With Device 9 (K96 Mirror Control Module / K96L Mirror Control Module - Left)
U151A	(K9 Body Control Module) LIN Bus 1 Lost Communication With Device 10 (B117 Rain Sensor)
U151B	(K9 Body Control Module) LIN Bus 1 Lost Communication With Device 11 (K61 Sunroof Control Module)
	(K40 Seat Memory Control Module) LIN Bus 1 Lost Communication With Device 11 (S79P Window Switch - Passenger)
U151C	(K33 HVAC Control Module) LIN Bus 1 Lost Communication With Device 0 (K33A HVAC Control Module - Auxiliary)
U1520	(K9 Body Control Module) LIN Bus 2 Lost Communication With Device 0 (P25 Power Sounder Content Theft Deterrent Alarm Module)
U1521	(K26 Headlamp Control Module / K28 Headlamp Leveling Control Module) LIN Bus 2 Lost Communication With Device 1 (E13L Headlamp - Left)
U1522	(K9 Body Control Module) LIN Bus 2 Lost Communication With Device 2 (K65 Tire Pressure Indicator Module)
	(K26 Headlamp Control Module / K28 Headlamp Leveling Control Module) LIN Bus 2 Lost Communication With Device 2 (E13R Headlamp - Right)
U1523	(K26 Headlamp Control Module / K28 Headlamp Leveling Control Module) LIN Bus 2 Lost Communication With Device 3 (E13L Headlamp - Left)
U1524	(K9 Body Control Module) LIN Bus 2 Lost Communication With Device 4 (K29F Seat Heating Control Module - Front)
	(K26 Headlamp Control Module / K28 Headlamp Leveling Control Module) LIN Bus 2 Lost Communication With Device 4 (E13R Headlamp - Right)
U1526	(K9 Body Control Module) LIN Bus 2 Lost Communication With Device 6

	(K29R Seat Heating Control Module - Rear)
U152C	(K9 Body Control Module) LIN Bus 2 Lost Communication With Device 12 (K18 Compass Module)
U152D	(K9 Body Control Module) LIN Bus 2 Lost Communication With Device 13 (P2 Transmission Shift Lever Position Indicator)
U1530	(K9 Body Control Module) LIN Bus 3 Lost Communication With Device 0 (M74P Window Motor - Passenger)
U1531	(K26 Headlamp Control Module / K28 Headlamp Leveling Control Module) LIN Bus 3 Lost Communication with Device 1 (E13LA Headlamp Assembly - Left)
U1532	(K26 Headlamp Control Module / K28 Headlamp Leveling Control Module) LIN Bus 3 Lost Communication with Device 2 (E13RA Headlamp Assembly - Right)
U1534	(K9 Body Control Module) LIN Bus 3 Lost Communication With Device 4 (M74D Window Motor - Driver)
U1538	(K9 Body Control Module) LIN Bus 3 Lost Communication With Device 8 (S79D Window Switch - Driver)
U153A	(K9 Body Control Module) LIN Bus 3 Lost Communication With Device 10 (S79P Window Switch - Passenger)
U1540	(K9 Body Control Module) LIN Bus 4 Lost Communication With Device 0 (M74RR Window Motor - Right Rear)
U1544	(K9 Body Control Module) LIN Bus 4 Lost Communication With Device 4 (M74LR Window Motor - Left Rear)
U1548	(K9 Body Control Module) LIN Bus 4 Lost Communication With Device 8 (S79LR Window Switch - Left Rear)
U154A	(K9 Body Control Module) LIN Bus 4 Lost Communication With Device 10 (S79RR Window Switch - Right Rear)
U154B	(K9 Body Control Module) LIN Bus 4 Lost Communication With Device 11 (K49 Rear Seat Control Module)
U1556	(K38 Chassis Control Module) LIN Bus 5 Lost Communication with Device 6 (K133 Trailer Brake Power Control Module)
U15E1	(A11 Radio) LIN Bus 14 Lost Communication with Device 1 (A26 HVAC Controls)
U15E3	(A11 Radio) LIN Bus 14 Lost Communication with Device 3
U15F0	(K74 Human Interface Control Module) LIN Bus 15 Lost Communication with Device 0 (P17 Info Display Module)
U1793	14V Power Module Lost Communication with Hybrid/EV Powertrain Control Module on Powertrain Expansion Communication Bus
U1795	14V Power Module Powertrain Expansion Communication Bus Off
U179A	Lost Communication with Hybrid/EV Powertrain Control Module 2
U1803	Lost Communication with Hybrid/EV Powertrain Control Module 2
U1804	Lost Communication with Inside Rearview Mirror Control Module
U1806	Battery Energy Control Module High Voltage Energy Management CAN Bus Off

U1807	Battery Charger Control Module High Voltage Energy Management CAN Bus Off
U180A	Electric A/C Compressor Control Module High Speed CAN Bus Off
U180B	Battery Energy Control Module High Speed CAN Bus Off
U180C	Battery Charger Control Module High Speed CAN Bus Off
U180D	Electronic Brake Control Module Chassis Expansion CAN Bus Off
U1811	Battery Energy Control Module Powertrain Expansion CAN Bus Off
U1814	Powertrain Wake-Up Communication Circuit
U1815	Lost Communication with Drive Motor Control Module 1 on Bus B
U1816	Lost Communication with Drive Motor Control Module B on Bus B
U1817	Lost Communication with Hybrid/EV Powertrain Control Module on Powertrain Expansion CAN Bus
U1818	Lost Communication with Engine Control Module on Powertrain Expansion Communication Bus
U1821	Lost Communication with 14V Power Module on Powertrain Expansion Communication Bus
U1826	Lost Communication with Multi-Axis Acceleration Sensor Module on Powertrain Expansion CAN Bus
U1827	Lost Communication with Steering Angle Sensor Module on Powertrain Expansion CAN Bus
U182A	Hybrid/EV Powertrain Control Module Lost Communication with Battery Energy Control Module on Powertrain Expansion CAN Bus
U182D	Lost Communication with Hybrid/EV Powertrain Control Module 2 on Powertrain Expansion Communication Bus
U182E	Drive Motor Control Module 1 Lost Communication with Hybrid/EV Powertrain Control Module 2 on Powertrain Expansion Communication Bus
U182F	Drive Motor Control Module 2 Lost Communication with Hybrid/EV Powertrain Control Module 2 on Powertrain Expansion Communication Bus
U1831	Drive Motor Control Module 1 Lost Communication with Hybrid/EV Powertrain Control Module on Powertrain Expansion CAN Bus
U1833	Lost Communication with Electronic Brake Control Module on Chassis Expansion CAN Bus
U1838	Lost Communication with Battery Charger Control Module on High Voltage Energy Management CAN Bus
U1839	Auxiliary Transmission Fluid Pump Control Module Lost Communication with Engine Control Module
U183A	Lost Communication with Telematics Communication Interface Control Module on High Speed CAN Bus
U183B	Auxiliary Transmission Fluid Pump Control Module Lost Communication with Transmission Control Module
U183C	Auxiliary Transmission Fluid Pump Control Module Lost Communication with Hybrid/EV Powertrain Control Module 2 on Powertrain Expansion Communication Bus
	Lost Communication with Telematics Communication Interface Control

U183E	Module on Low Speed CAN Bus
U1844	Battery Energy Control Module Lost Communication with Hybrid/EV Powertrain Control Module on Bus B
U1845	Drive Motor Control Module 1 Lost Communication with Hybrid/EV Powertrain Control Module
U1846	Drive Motor Control Module 2 Lost Communication with Hybrid/EV Powertrain Control Module
U1847	Drive Motor Control Module 1 Lost Communication with Battery Energy Control Module on Powertrain Expansion CAN Bus
U1849	Drive Motor Control Module 1 Lost Communication with Transmission Control Module
U184A	Lost Communication with Body Control Module on Low Speed CAN Bus
U184B	Lost Communication with Remote Heater and Air Conditioning Control Module on Low Speed CAN Bus
U184C	Lost Communication with Instrument Cluster on Low Speed CAN Bus
U184D	Lost Communication with Radio on Low Speed CAN Bus
U184E	Lost Communication with Inflatable Restraint Sensing and Diagnostic Module on Low Speed CAN Bus
U184F	Electric A/C Compressor Control Module Lost Communication with Engine Control Module
U1850	Drive Motor Control Module 2 Lost Communication with Transmission Control Module
U1858	Electronic Brake Control Module Lost Communication with Hybrid/EV Powertrain Control Module on Chassis Expansion CAN Bus
U185A	Lost Communication with Battery Energy Control Module on High Voltage Energy Management CAN Bus
U185B	Battery Energy Control Module Lost Communication with Hybrid/EV Powertrain Control Module 2 on High Voltage Energy Management CAN Bus
U185C	Battery Charger Control Module Lost Communication with Hybrid/EV Powertrain Control Module 2 on High Voltage Energy Management CAN Bus
U185D	Fuel Injector Control Module Lost Communication with Engine Control Module
U185E	Fuel Injector Control Module Lost Communication with Body Control Module
U1860	Electric A/C Compressor Control Module Lost Communication with Hybrid/EV Powertrain Control Module 2
U1861	Battery Charger Control Module Lost Communication with Engine Control Module
U186A	Electronic Brake Control Module Lost Communication with Engine Control Module
U186B	Electronic Brake Control Module Lost Communication with Transmission Control Module

U1875	Drive Motor Control Module 1 Lost Communication with Battery Energy Control Module
U1876	Drive Motor Control Module 1 Lost Communication with Engine Control Module
U1879	Drive Motor Control Module 2 Lost Communication with Engine Control Module
U1885	Battery Energy Control Module Lost Communication with Hybrid/EV Powertrain Control Module
U1886	Battery Energy Control Module Lost Communication with Engine Control Module
U1888	Hybrid/EV Powertrain Control Module Lost Communication with Battery Energy Control Module
U18A1	Lost Communication with Coolant Temperature Control Module on High Voltage Energy Management CAN Bus
U18A2	Lost Communication with Fuel Pump Driver Control Module
U18A3	Lost Communication with Human Machine Interface Control Module
U18A4	Lost Communication with Hybrid/EV Battery DC Charging Communications Gateway Module on High Voltage Energy Management CAN Bus
U18A5	Lost Communication with Fuel Injector Control Module on Powertrain Expansion CAN Bus
U18B9	Primary High Speed CAN Bus Subnet Configuration List
U18BF	Secondary High Speed CAN Bus Subnet Configuration List
U1900	Lost Communication With Speech to Text Interface Module
U1901	Lost Communication with Infotainment Multifunction Switch Module
U2098	MOST Communication Enable Circuit
U2099	High Speed Communication Enable Circuit
U209E	Object Detection Control Module High Speed Communication Enable Circuit 1
U209F	Object Detection Control Module High Speed Communication Enable Circuit 2
U2100	CAN Bus Communication
U2101	CAN Bus Maximum List of Control Modules
U2103	Fewer Controllers On Bus Than Programmed
U2105	Lost Communication with Engine Control Module
U2106	Lost Communication with Transmission Control Module
U2107	Lost Communication with Body Control Module
U2108	Lost Communication with Electronic Brake Control Module
U2125	Lost Communication with Telematic Unit
U2127	Lost Communication with Front HVAC Control Module
U2139	Lost Communication with Column Integration Module
U2144	Lost Communication with Distance Sensing Cruise Control Module
U2176	Lost Communication with Power Take-Off Control Module
U2178	Lost Communication With Trailer Interface Control Module

U2400	Fuel Injector Control Module High Speed CAN Bus Off
U2401	Battery Energy Control Module Dedicated Bus 1 Off
U2501	Invalid Data Received From Hybrid/EV Powertrain Control Module 2
U2502	Invalid Data Received From Electronic Brake Control Module on Chassis Expansion CAN Bus
U2503	Invalid Data Received From Object Detection Control Module
U2504	Invalid Data Received From Trailer Brake Driver Control Module
U2505	Invalid Data Received from Human Machine Interface Control Module on MOST Bus
U2506	Invalid Data Received From Dual Battery Control Module
U2507	Invalid Data Received from Instrument Cluster on MOST Bus
U2508	Invalid Data Received from Audio Amplifier on MOST Bus
U2602	Battery Energy Control Module Lost Communication with Hybrid/EV Powertrain Control Module 2
U2603	Battery Energy Control Module Lost Communication with Hybrid/EV Battery Interface Control Module 1
U2604	Battery Energy Control Module Lost Communication with Hybrid/EV Battery Interface Control Module 2
U2605	Battery Energy Control Module Lost Communication with Hybrid/EV Battery Interface Control Module 3
U2606	Battery Energy Control Module Lost Communication with Hybrid/EV Battery Interface Control Module 4
U2608	Electric A/C Compressor Control Module Lost Communication with Hybrid/EV Powertrain Control Module
U2609	Battery Charger Control Module Lost Communication with Hybrid/EV Powertrain Control Module
U2611	Auxiliary Transmission Fluid Pump Control Module Lost Communication with Hybrid/EV Powertrain Control Module
U2612	Battery Charger Control Module Lost Communication with Hybrid/EV Powertrain Control Module 2
U2613	Drive Motor 1 Control Module Lost Communication with Hybrid/EV Powertrain Control Module 2
U2614	Drive Motor 2 Control Module Lost Communication with Hybrid/EV Powertrain Control Module 2
U2615	Auxiliary Transmission Fluid Pump Control Module Lost Communication with Hybrid/EV Powertrain Control Module 2
U2616	Fuel Pump Driver Control Module Lost Communication with ECM
U2617	Battery Energy Control Module Lost Communication with Hybrid/EV Battery Interface Control Module 5
U2618	Battery Energy Control Module Lost Communication with Hybrid/EV Battery Interface Control Module 6
U2619	Battery Energy Control Module Lost Communication with Hybrid/EV Battery Interface Control Module 7
	Battery Energy Control Module Lost Communication with Hybrid/EV

U2620	Battery Interface Control Module 8
U2621	Battery Energy Control Module Lost Communication with Hybrid/EV Battery Interface Control Module 9
U2622	Battery Energy Control Module Lost Communication with Hybrid/EV Battery Interface Control Module 10

DTC B1000

Diagnostic Instructions

- Perform the **Diagnostic System Check - Vehicle** prior to using this diagnostic procedure.
- Review **Strategy Based Diagnosis** for an overview of the diagnostic approach.
- **Diagnostic Procedure Instructions** provides an overview of each diagnostic category.

DTC Descriptor

DTC B1000

Electronic Control Unit

For symptom byte information, refer to **Symptom Byte List** .

Circuit/System Description

The internal fault detection is handled inside the device. The symptom byte information is for engineering reference only. No external circuit diagnosis is involved.

Conditions for Running the DTC

The device runs the program to detect an internal fault when power up is commanded. The only requirements are voltage and ground. This program runs even if the voltage is out of the valid operating range.

Conditions for Setting the DTC

The device has detected an internal malfunction.

Action Taken When the DTC Sets

The device refuses all additional inputs.

Conditions for Clearing the DTC

- A current DTC clears when the malfunction is no longer present.
- A history DTC clears when the device ignition cycle counter reaches the reset threshold of 50, without a repeat of the malfunction.

Diagnostic Aids

- This DTC may be stored as a history DTC without affecting the operation of the device.
- If stored only as a history DTC and not retrieved as a current DTC, do not replace the device.
- If this DTC is retrieved as both a current and history DTC, replace the device that set the DTC.

Reference Information

Schematic Reference

- **Data Communication Schematics**
- **Control Module References**

Connector End View Reference

COMPONENT CONNECTOR END VIEWS - INDEX

Description and Operation

Data Link Communications Description and Operation

Electrical Information Reference

- **Circuit Testing**
- **Connector Repairs**
- **Testing for Intermittent Conditions and Poor Connections**
- **Wiring Repairs**

Scan Tool Reference

Control Module References for scan tool information

Circuit/System Verification

1. Ignition ON.
2. Verify DTC B1000 is not set.
    - **If DTC B1000 is set**

      Replace the device that set the DTC.

    - **If DTC B1000 is not set**
3. All OK

Repair Instructions

Perform the **Diagnostic Repair Verification** after completing the repair.

Control Module References for device replacement, programming and setup

DTC B1001

Diagnostic Instructions

- Perform the **Diagnostic System Check - Vehicle** prior to using this diagnostic procedure.
- Review **Strategy Based Diagnosis** for an overview of the diagnostic approach.
- **Diagnostic Procedure Instructions** provides an overview of each diagnostic category.

DTC Descriptor

DTC B1001

Option Configuration

For symptom byte information, refer to **Symptom Byte List** .

Circuit/System Description

Some devices must be configured with serial numbers, vehicle options, or other information. If a device was not properly configured after installation that device may set DTC B1001. The symptom byte information is for engineering reference only. No external circuit diagnosis is involved.

Conditions for Running the DTC

Battery voltage is between 9-16 V and data link communications operate normally.

Conditions for Setting the DTC

The device is not configured properly.

Conditions for Clearing the DTC

- A current DTC clears when the malfunction is no longer present.
- A history DTC clears when the device ignition cycle counter reaches the reset threshold, without a repeat of the malfunction.

Reference Information

Schematic Reference

- **Data Communication Schematics**
- **Control Module References**

Connector End View Reference

COMPONENT CONNECTOR END VIEWS - INDEX

Description and Operation

Data Link Communications Description and Operation

Electrical Information Reference

- **Circuit Testing**
- **Connector Repairs**
- **Testing for Intermittent Conditions and Poor Connections**
- **Wiring Repairs**

Scan Tool Reference

Control Module References for scan tool information

Circuit/System Verification

1. Ignition ON.
2. Verify DTC B1001 is not set.
    - **If DTC B1001 is set**
    1. Program the device that set the DTC.
    2. Verify the DTC does not set.
        - If the DTC sets, replace the device that set the DTC.
        - If the DTC does not set
    3. All OK.
    - **If DTC B1001 is not set**
3. All OK

Repair Instructions

Perform the **Diagnostic Repair Verification** after completing the repair.

Control Module References for device replacement, programming and setup

DTC B101D

Diagnostic Instructions

- Perform the **Diagnostic System Check - Vehicle** prior to using this diagnostic procedure.
- Review **Strategy Based Diagnosis** for an overview of the diagnostic approach.
- **Diagnostic Procedure Instructions** provides an overview of each diagnostic category.

DTC Descriptor

DTC B101D

Electronic Control Unit Hardware

For symptom byte information, refer to **Symptom Byte List** .

Circuit/System Description

The internal fault detection is handled inside the device. The symptom byte information is for engineering reference only. No external circuit diagnosis is involved.

Conditions for Running the DTC

- The device runs the program to detect an internal fault when power up is commanded. The only requirements are voltage and ground. This program runs even if the voltage is out of the valid operating range.
- The keyless entry control module will set this DTC with symptom byte 39 when the keyless entry control module antenna is activated.

Conditions for Setting the DTC

The device has detected an internal malfunction.

Action Taken When the DTC Sets

The device refuses all additional inputs.

Conditions for Clearing the DTC

- A current DTC clears when the malfunction is no longer present.
- A history DTC clears when the device ignition cycle counter reaches the reset threshold of 50, without a repeat of the malfunction.

Diagnostic Aids

- This DTC may be stored as a history DTC without affecting the operation of the device.
- Do not replace a device based only on DTC B101D being set in history with the exception of the following devices:
  - K36 Inflatable Restraint Sensing and Diagnostic Module (SDM)
  - K85 Passenger Presence Detection Module
- If DTC B101D is set as current, replace the appropriate device.

Reference Information

Schematic Reference

- **Data Communication Schematics**
- **Control Module References**

Connector End View Reference

COMPONENT CONNECTOR END VIEWS - INDEX

Description and Operation

Data Link Communications Description and Operation

Electrical Information Reference

- **Circuit Testing**
- **Connector Repairs**
- **Testing for Intermittent Conditions and Poor Connections**
- **Wiring Repairs**

Scan Tool Reference

Control Module References for scan tool information

Circuit/System Verification

1. Ignition ON.
2. Verify DTC B101D is not set.
    - **If DTC B101D is set with symptom byte 43**
    1. Program the device that set the DTC.
    2. Verify the DTC does not set.
        - If the DTC sets, replace the device that set the DTC.
        - If the DTC does not set
    3. All OK.
    - **If DTC B101D is set with any symptom byte, except symptom byte 43**

      Replace the device that set the DTC.

    - **If DTC B101D is not set**
3. All OK

Repair Instructions

Perform the **Diagnostic Repair Verification** after completing the repair.

Control Module References for device replacement, programming and setup

DTC B101E

Diagnostic Instructions

- Perform the **Diagnostic System Check - Vehicle** prior to using this diagnostic procedure.
- Review **Strategy Based Diagnosis** for an overview of the diagnostic approach.
- **Diagnostic Procedure Instructions** provides an overview of each diagnostic category.

DTC Descriptor

DTC B101E

Electronic Control Unit Software

For symptom byte information, refer to **Symptom Byte List** .

Circuit/System Description

Some devices must be configured with specific software, serial numbers, vehicle options, or other information. If a device was not properly configured after installation that module may set DTC B101E. The symptom byte information is for engineering reference only. No external circuit diagnosis is involved.

Conditions for Running the DTC

Battery voltage is between 9-16 V and data link communications operate normally.

Conditions for Setting the DTC

The device is not configured properly.

Conditions for Clearing the DTC

- A current DTC clears when the malfunction is no longer present.
- A history DTC clears when the device ignition cycle counter reaches the reset threshold, without a repeat of the malfunction.

Reference Information

Schematic Reference

- **Data Communication Schematics**
- **Control Module References**

Connector End View Reference

COMPONENT CONNECTOR END VIEWS - INDEX

Description and Operation

Data Link Communications Description and Operation

Electrical Information Reference

- **Circuit Testing**
- **Connector Repairs**
- **Testing for Intermittent Conditions and Poor Connections**
- **Wiring Repairs**

Scan Tool Reference

Control Module References for scan tool information

Circuit/System Verification

1. Ignition ON.
2. Verify that DTC U0028 or U0029 is not set.
   - **If any of the DTCs are set**

     Refer to **Diagnostic Trouble Code (DTC) List - Vehicle** .

   - **If none of the DTCs are set**
3. Verify DTC B101E is not set.
   - **If DTC B101E is set**
   1. Program the device that set the DTC.
   2. Verify the DTC does not set.
      - If the DTC sets, replace the device that set the DTC.
      - If the DTC does not set
   3. All OK.
   - **If DTC B101E is not set**
4. All OK

Repair Instructions

Perform the **Diagnostic Repair Verification** after completing the repair.

Control Module References for device replacement, programming and setup

DTC C056D

Diagnostic Instructions

- Perform the **Diagnostic System Check - Vehicle** prior to using this diagnostic procedure.
- Review **Strategy Based Diagnosis** for an overview of the diagnostic approach.
- **Diagnostic Procedure Instructions** provides an overview of each diagnostic category.

DTC Descriptor

DTC C056D

Electronic Control Unit Hardware

For symptom byte information, refer to **Symptom Byte List** .

Circuit/System Description

The internal fault detection is handled inside the device. The symptom byte information is for engineering reference only. No external circuit diagnosis is involved.

Conditions for Running the DTC

The device runs the program to detect an internal fault when power up is commanded. The only requirements are voltage and ground. This program runs even if the voltage is out of the valid operating range.

Conditions for Setting the DTC

The device has detected an internal malfunction.

Action Taken When the DTC Sets

The device refuses all additional inputs.

Conditions for Clearing the DTC

- A current DTC clears when the malfunction is no longer present.
- A history DTC clears when the device ignition cycle counter reaches the reset threshold of 50, without a repeat of the malfunction.

Diagnostic Aids

- This DTC may be stored as a history DTC without affecting the operation of the device.
- If stored only as a history DTC and not retrieved as a current DTC, do not replace the device.
- If this DTC is retrieved as both a current and history DTC, replace the device that set the DTC.

Reference Information

Schematic Reference

- **Data Communication Schematics**

- **Control Module References**

Connector End View Reference

COMPONENT CONNECTOR END VIEWS - INDEX

Description and Operation

Data Link Communications Description and Operation

Electrical Information Reference

- **Circuit Testing**
- **Connector Repairs**
- **Testing for Intermittent Conditions and Poor Connections**
- **Wiring Repairs**

Scan Tool Reference

Control Module References for scan tool information

Circuit/System Verification

1. Ignition ON.
2. Verify DTC C056D is not set.
    - **If DTC C056D is set in a device that can be programmed**
    1. Program the device that set the DTC.
    2. Verify the DTC does not set.
        - If the DTC sets, replace the device that set the DTC.
        - If the DTC does not set
    3. All OK.
    - **If DTC C056D is set in a device that cannot be programmed**

      Replace the device that set the DTC.

    - **If DTC C056D is not set**
3. All OK

Repair Instructions

Perform the **Diagnostic Repair Verification** after completing the repair.

Control Module References for device replacement, programming and setup

DTC C056E

Diagnostic Instructions

- Perform the **Diagnostic System Check - Vehicle** prior to using this diagnostic procedure.
- Review **Strategy Based Diagnosis** for an overview of the diagnostic approach.
- **Diagnostic Procedure Instructions** provides an overview of each diagnostic category.

DTC Descriptor

DTC C056E

Electronic Control Unit Software

For symptom byte information, refer to **Symptom Byte List** .

Circuit/System Description

Some devices must be configured with specific software, serial numbers, vehicle options, or other information. If a device was not properly configured after installation that module may set DTC C056E. The symptom byte information is for engineering reference only. No external circuit diagnosis is involved.

Conditions for Running the DTC

Battery voltage is between 9-16 V and data link communications operate normally.

Conditions for Setting the DTC

The device is not configured properly.

Conditions for Clearing the DTC

- A current DTC clears when the malfunction is no longer present.
- A history DTC clears when the device ignition cycle counter reaches the reset threshold, without a repeat of the malfunction.

Reference Information

Schematic Reference

Data Communication Schematics

Connector End View Reference

COMPONENT CONNECTOR END VIEWS - INDEX

Description and Operation

Data Link Communications Description and Operation

Electrical Information Reference

- **Circuit Testing**
- **Connector Repairs**
- **Testing for Intermittent Conditions and Poor Connections**
- **Wiring Repairs**

Scan Tool References

Control Module References for scan tool information

Circuit/System Verification

1. Ignition ON.
2. Verify DTC C056E is not set.
    - **If DTC C056E is set**
    1. Program the device that set the DTC.
    2. Verify the DTC does not set.
        - If the DTC sets, replace the device that set the DTC.
        - If the DTC does not set
    3. All OK.
    - **If DTC C056E is not set**
3. All OK

Repair Instructions

Perform the **Diagnostic Repair Verification** after completing the repair.

Control Module References for device replacement, programming and setup

DTC P0601-P0604, P0606, OR P062F

Diagnostic Instructions

- Perform the **Diagnostic System Check - Vehicle** prior to using this diagnostic procedure.
- Review **Strategy Based Diagnosis** for an overview of the diagnostic approach.
- **Diagnostic Procedure Instructions** provides an overview of each diagnostic category.

DTC Descriptor

DTC P0601

Control Module Read Only Memory Performance

DTC P0602

Control Module Not Programmed

DTC P0603

Control Module Long Term Memory Reset

DTC P0604

Control Module Random Access Memory Performance

DTC P0606

Control Module Processor Performance

DTC P062F

Control Module Long Term Memory Performance

For symptom byte information, refer to **Symptom Byte List** .

Circuit/System Description

This diagnostic applies to internal microprocessor integrity conditions within the device. This diagnostic also addresses if the device is not programmed. The device monitors its ability to read and write to the memory. It also monitors a timing function. No external circuits are involved.

Conditions for Running the DTC

- The ignition is ON.
- The system voltage is greater than 9.5 V.

Conditions for Setting the DTC

The device detects an internal malfunction or incomplete programming.

Action Taken When the DTC Sets

DTCs P0601, P0602, P0603, P0604, P0606, and P062F are Type A DTCs.

Conditions for Clearing the DTC

DTCs P0601, P0602, P0603, P0604, P0606, and P062F are Type A DTCs.

Diagnostic Aids

If stored only as a history DTC and not retrieved as a current DTC, do not replace the device.

Reference Information

Schematic Reference

Data Communication Schematics

Connector End View Reference

COMPONENT CONNECTOR END VIEWS - INDEX

Description and Operation

Data Link Communications Description and Operation

Electrical Information Reference

- **Circuit Testing**
- **Connector Repairs**
- **Testing for Intermittent Conditions and Poor Connections**
- **Wiring Repairs**

DTC Type Reference

Powertrain Diagnostic Trouble Code (DTC) Type Definitions

Scan Tool References

Control Module References for scan tool information

Circuit/System Verification

1. Ignition ON.
2. Verify DTC P0602 is not set.
    - **If DTC P0602 is set**
    1. Program the device that set the DTC.
    2. Verify the DTC does not set.
        - If the DTC sets, replace the device that set the DTC.
        - If the DTC does not set
    3. All OK.
    - **If DTC P0602 is not set**
3. Verify DTC P0601, P0603, P0604, P0606, or P062F is not set.
    - **If DTC P0601, P0603, P0604, P0606, or P062F is set**

Replace the device that set the DTC.

- **If DTC P0601, P0603, P0604, P0606, or P062F is not set**

4. All OK

Repair Instructions

Perform the **Diagnostic Repair Verification** after completing the repair.

Control Module References for device replacement, programming and setup

DTC U0001

Diagnostic Instructions

- Perform the **Diagnostic System Check - Vehicle** prior to using this diagnostic procedure.
- Review **Strategy Based Diagnosis** for an overview of the diagnostic approach.
- **Diagnostic Procedure Instructions** provides an overview of each diagnostic category.

DTC Descriptor

DTC U0001 00

High Speed CAN Communication Bus Malfunction

Circuit Description

Devices connected to the GMLAN serial data circuits monitor for serial data communications on the GMLAN network during normal vehicle operation. Operating information and commands are exchanged among the devices. Each device on GMLAN network maintains a transmit error counter and a receive error counter. The counter values increase with detected errors and will decrease with error-free messages. If the transmit error counter value exceeds 255 the device removes itself from the network and a DTC U0001 will be set.

Conditions for Running the DTC

- System voltage is in the normal operating voltage range.
- The vehicle power mode requires serial data communication to occur.

Conditions for Setting the DTC

A certain number of no valid transmitted messages on the GMLAN serial data circuits are detected by the device.

Action Taken When the DTC Sets

- The device suspends all message transmission.
- The device uses default values for all parameters received on the GMLAN serial data circuits.

- The device inhibits the setting of all other GMLAN communication DTCs.

Conditions for Clearing the DTC

- A current DTC clears when the malfunction is no longer present.
- A history DTC clears when the device ignition cycle counter reaches the reset threshold, without a repeat of the malfunction.

Circuit/System Verification

This DTC may not be retrieved with a current status. Diagnosis is accomplished via the symptom, Scan Tool Does Not Communicate with High Speed GMLAN Device. Refer to **Scan Tool Does Not Communicate with High Speed GMLAN Device** in order to isolate an intermittent condition caused by a short on the GMLAN serial data circuits.

DTC U0020

Diagnostic Instructions

- Perform the **Diagnostic System Check - Vehicle** prior to using this diagnostic procedure.
- Review **Strategy Based Diagnosis** for an overview of the diagnostic approach.
- **Diagnostic Procedure Instructions** provides an overview of each diagnostic category.

DTC Descriptors

DTC U0020

Low Speed CAN Bus

For symptom byte information, refer to **Symptom Byte List** .

Circuit/System Description

Devices connected to the GMLAN serial data circuits monitor for serial data communications during normal vehicle operation. Operating information and commands are exchanged among the devices. The devices have programmed information about what messages are needed to be exchanged on the serial data circuits. The messages are also supervised and some periodic messages are used by the receiver device as an availability indication of the transmitter device.

Conditions for Running the DTCs

- Supply voltage to the devices is in the normal operating range.
- The vehicle power mode requires serial data communication to occur.
- The DTC U2100 does not have a current status.

Conditions for Setting the DTC

A supervised periodic message that includes the transmitter device availability has not been received.

Action Taken When the DTCs Sets

The device uses a default value for the missing parameter.

Conditions for Clearing the DTC

- A current DTC clears when the malfunction is no longer present.
- A history DTC clears when the device ignition cycle counter reaches the reset threshold, without a repeat of the malfunction.

Circuit/System Verification

Diagnosis of this DTC is accomplished via the symptom or an additional DTC. Refer to **Scan Tool Does Not Communicate with Low Speed GMLAN Device**, or **Diagnostic Trouble Code (DTC) List - Vehicle** .

DTC U0073 OR U2100

Diagnostic Instructions

- Perform the **Diagnostic System Check - Vehicle** prior to using this diagnostic procedure.
- Review **Strategy Based Diagnosis** for an overview of the diagnostic approach.
- **Diagnostic Procedure Instructions** provides an overview of each diagnostic category.

DTC Descriptors

DTC U0073

Control Module Communication Bus A Off

DTC U2100

CAN Bus Communication

For symptom byte information, refer to **Symptom Byte List** .

Circuit/System Description

The serial data circuits are used to communicate information between the devices. The serial data circuits also connect directly to the data link connector (DLC).

Conditions for Running the DTCs

- Supply voltage to the devices is in the normal operating range.
- The vehicle power mode requires serial data communications.

Conditions for Setting the DTC

The device setting the DTC has attempted to establish communications on the serial data circuits more than 3 times in 5 s.

Action Taken When the DTCs Sets

- The device suspends all message transmission.
- The device uses default values for all parameters received on the serial data circuits.
- In the transmission control module, DTC U0073 will cause the transmission to go into default gears.
- In the engine control module and transmission control module, DTC U0073 will cause the malfunction indicator lamp (MIL) to illuminate.
- If equipped with eAssist, DTC U0073 in the hybrid powertrain control module is a type B DTC and will cause the malfunction indicator lamp to illuminate and result in the engine operating in conventional engine mode and will maintain 14 V module operation.
- The device inhibits the setting of all other communication DTCs.

Conditions for Clearing the DTC

- The engine control module or transmission control module turns OFF the MIL after 4 consecutive ignition cycles that the diagnostic runs and does not fail.
- If equipped with eAssist, the hybrid powertrain control module turns off the MIL after the diagnostic runs and does not fail during subsequent ignition cycles. Normal operation will resume 5 s after subsequent ignition cycle.
- A current DTC clears when the malfunction is no longer present.
- A history DTC clears when the device ignition cycle counter reaches the reset threshold of 50, without a repeat of the malfunction.

Circuit/System Verification

1. Refer to **Data Link References** to determine which serial data communication system is used for a specific device.
2. This DTC may not be retrieved with a current status. Diagnosis is accomplished using the symptom. Refer to **Symptoms - Data Communications**.

DTC U0074

Diagnostic Instructions

- Perform the **Diagnostic System Check - Vehicle** prior to using this diagnostic procedure.
- Review **Strategy Based Diagnosis** for an overview of the diagnostic approach.
- **Diagnostic Procedure Instructions** provides an overview of each diagnostic category.

DTC Descriptor

DTC U0074

Control Module Communication Bus B Off

For symptom byte information, refer to **Symptom Byte List** .

Diagnostic Fault Information

Circuit	Short to Ground	Open/High Resistance	Short to Voltage	Signal Performance
Chassis High Speed GMLAN Serial Data (+)	U0074	U0074, U0100-U02FF*	U0074	-
Chassis High Speed GMLAN Serial Data (-)	U0074	U0074, U0100-U02FF*	U0074	-
Ground (DLC, terminal 5)	-	1	-	-
* An open between the data link connector (DLC) and the first splice/device will only affect the communication with the scan tool. The devices will still communicate. An open in only one chassis high speed GMLAN serial data circuit may allow degraded communication between the devices. 1. No communication with any chassis high speed GMLAN device.				

Circuit/System Description

The devices connected to the chassis high speed GMLAN serial data circuits monitor for serial data communications during normal vehicle operation. Operating information and commands are exchanged among the devices when the ignition switch is in any position other than OFF. The chassis high speed GMLAN serial data bus uses terminating resistors that are in parallel with the chassis high speed GMLAN (+) and (-) circuits.

Conditions for Running the DTC

The system voltage is between 9-16 V.

Conditions for Setting the DTC

A supervised periodic message that includes the transmitter device availability has not been received.

Action Taken When the DTC Sets

Specific subsystems will not function.

Conditions for Clearing the DTC

- A current DTC clears when the malfunction is no longer present.
- A history DTC clears when the device ignition cycle counter reaches the reset threshold of 50, without a repeat of the malfunction.

Diagnostic Aids

- Use the **Data Link References** to identify the chassis high speed GMLAN devices.
- Sometimes, while diagnosing a specific customer concern or after a repair, you may notice a history U-code present. However, there is no associated "current" or "active" status. Loss-of-communication U-codes such as these can set for a variety of reasons. Many times, they are transparent to the vehicle operator and technician, and/or have no associated symptoms. Eventually, they will erase themselves automatically after a number of fault-free ignition cycles. This condition would most likely be attributed to one of these scenarios:
  - A device on the data communication circuit was disconnected while the communication circuit is awake.
  - Power to one or more devices was interrupted during diagnosis.
  - A low battery condition was present, so some devices stop communicating when battery voltage drops below a certain threshold.
  - Battery power was restored to the vehicle and devices on the communication circuit did not all re-initialize at the same time.
  - If a loss-of-communication U code appears in history for no apparent reason, it is most likely associated with one of the scenarios above. These are all temporary conditions and should never be interpreted as an intermittent fault, causing you to replace a part.
- Do not replace a device reporting a U code. The U code identifies which device needs to be diagnosed for a communication issue.
- Communication may be available between some devices and the scan tool with the chassis high speed GMLAN serial data system inoperative. This condition is due to those devices using multiple serial data communication systems.
- An open in the DLC ground circuit terminal 5 will allow the scan tool to operate but not communicate with the vehicle.
- Technicians may find various Local Area Network (LAN) communication Diagnostic Trouble Codes (DTC).
- Some devices may not have internal protection for specific voltage outputs and may open a battery positive voltage or ignition voltage source fuse. If a voltage input fuse is open and no short is found in that circuit, ensure that no device output voltage circuit is shorted to ground before replacing the device.

Reference Information

Schematic Reference

- **Data Communication Schematics**
- **Control Module References**

Connector End View Reference

COMPONENT CONNECTOR END VIEWS - INDEX

Description and Operation

Data Link Communications Description and Operation

Electrical Information Reference

- **Circuit Testing**
- **Connector Repairs**
- **Testing for Intermittent Conditions and Poor Connections**
- **Wiring Repairs**

Scan Tool Reference

Control Module References for scan tool information

Circuit/System Verification

1. Ignition ON.
2. Verify two or more devices are not communicating on the chassis high speed GMLAN serial data circuit. Refer to **Data Link References** to determine how many devices should be communicating on the bus.
    - **If only one device is not communicating**

      Refer to Circuit/System Testing below - Testing the Device Circuits.

    - **If two or more devices are not communicating**
3. Ignition OFF, all access doors closed, all vehicle systems OFF, and all keys at least 3 m (9.8 ft) away from vehicle. Disconnect the scan tool from the X84 Data Link Connector. The following tests will be done at the X84 Data Link Connector. It may take up to 2 minutes for all vehicle systems to power down.
4. Test for less than 10 ohms between the ground circuit terminal 5 and ground.
    - **If 10 ohms or greater**
    1. Ignition OFF.
    2. Test for less than 2 ohms in the ground circuit end to end.
        - If 2 ohms or greater, repair the open/high resistance in the circuit.
        - If less than 2 ohms, repair the open/high resistance in the ground connection.
    - **If less than 10 ohms**
5. Ignition ON.
6. Test for less than 4.5 V between the serial data circuits listed below and ground:
    - Chassis high speed GMLAN serial data terminal 12
    - Chassis high speed GMLAN serial data terminal 13
    - **If 4.5 V or greater**

      Refer to Circuit/System Testing below- Testing the Serial Data Circuits for a Short to Voltage.

    - **If less than 4.5 V**
7. Ignition OFF, all access doors closed, all vehicle systems OFF, and all keys at least 3 m (9.8 ft) away from vehicle. It may take up to 2 minutes for all vehicle systems to power down.

8. Test for greater than 100 ohms between the serial data circuits listed below and ground:
   - Chassis high speed GMLAN serial data terminal 12
   - Chassis high speed GMLAN serial data terminal 13
   - **If 100 ohms or less**

     Refer to Circuit/System Testing below- Testing the Serial Data Circuits for a Short to Ground.

   - **If greater than 100 ohms**
9. Test for 50-70 ohms between the serial data circuit terminals 12 and 13:
   - **If less than 35 ohms**

     Refer to Circuit/System Testing below- Testing the Serial Data Circuits for a Short between the Circuits.

   - **If between 35-50 ohms**

     There may be a third terminating resistor between the serial data circuits. This can happen if the incorrect device is installed. Some devices are available with and without the terminating resistors installed to reduce the need of terminating resistors in the wiring harness. Refer to Circuit/System Testing below- Testing the Serial Data Circuits for a Short between the Circuits.

   - **If greater than 70 ohms but less than infinite**

     Refer to Circuit/System Testing below- Testing the Serial Data Circuits for an Open/High Resistance.

   - **If infinite resistance**

     Repair the open/high resistance in the circuit between the X84 Data Link Connector and the first splice/device in the serial data circuit.

   - **If between 50-70 ohms**
10. Refer to Circuit/System Testing below- Testing the Device Circuits.

Circuit/System Testing

NOTE: Each device may need to be disconnected to isolate a circuit fault.

Use the schematic to identify the following:

- **Chassis high speed GMLAN devices the vehicle is equipped with**
- **Chassis high speed GMLAN serial data circuit terminating resistors**
- **Device locations on the chassis high speed GMLAN serial data circuits**
- **Each device's ground, B+, ignition, and chassis high speed GMLAN serial**

data circuit terminals

Some devices with an internal terminating resistor have a loop in the harness that connects the internal terminating resistor to the serial data circuit. When wired this way, test these loop circuits for the appropriate failure mode short to voltage, short to ground, or open/high resistance prior to replacing the device for each of the following tests.

Testing the Serial Data Circuits for a Short to Voltage

1. Ignition OFF, disconnect the harness connectors with the chassis high speed GMLAN serial data circuits at an easily accessible device, ignition ON.
2. Test for greater than 4.5 V between each serial data circuit at the device connector that was just disconnected and ground.
    - **If each serial data circuit is 4.5 V or less**
    1. Ignition OFF.
    2. Test for less than 10 ohms between each of the device's ground circuit terminals and ground.
        - If 10 ohms or greater, repair the open/high resistance in the circuit.
        - If less than 10 ohms, replace the device that was disconnected.
    - **If any serial data circuit is greater than 4.5 V**
3. Ignition OFF, disconnect the harness connectors with the chassis high speed GMLAN serial data circuits at another device, in the direction of the circuit shorted to voltage, ignition ON.
4. Test for greater than 4.5 V between each serial data circuit at the device connector that was just disconnected and ground.
    - **If each serial data circuit is 4.5 V or less**
    1. Ignition OFF.
    2. Test for less than 10 ohms between each of the device's ground circuit terminals and ground.
        - If 10 ohms or greater, repair the open/high resistance in the circuit.
        - If less than 10 ohms, replace the device that was disconnected.
    - **If any serial data circuit is greater than 4.5 V**
5. Repeat step 3 until one of the following conditions are isolated:
    - A short to voltage on the serial data circuit between two devices or splice packs, if equipped.
    - A short to voltage on the serial data circuit between a device and a terminating resistor.

Testing the Serial Data Circuits for a Short to Ground

1. Ignition OFF, all access doors closed, all vehicle systems OFF, and all keys at least 3 m (9.8 ft) away from vehicle. It may take up to 2 minutes for all vehicle systems to power down.
2. Disconnect the harness connectors with the chassis high speed GMLAN serial data circuits at an easily accessible device.
3. Test for greater than 100 ohms between each serial data circuit at the device connector that was just disconnected and ground.

- **If each serial data circuit is 100 ohms or greater**

  Replace the device that was disconnected.

- **If any serial data circuit is less than 100 ohms**

4. Disconnect the harness connectors with the chassis high speed GMLAN serial data circuits at another device, in the direction of the circuit shorted to ground.
5. Test for greater than 100 ohms between each serial data circuit at the device connector that was just disconnected and ground.
   - **If both serial data circuits are 100 ohms or greater**

     Replace the device that was disconnected.

   - **If any serial data circuit is less than 100 ohms**
6. Repeat step 4 until one of the following conditions are isolated:
   - A short to ground on the serial data circuit between two devices or splice packs, if equipped.
   - A short to ground on the serial data circuit between a device and a terminating resistor.
   - A short to ground on the serial data circuit between the X84 Data Link Connector and the first device or splice pack.

Testing the Serial Data Circuits for a Short between the Circuits

1. Ignition OFF, all access doors closed, all vehicle systems OFF, and all keys at least 3 m (9.8 ft) away from vehicle. It may take up to 2 minutes for all vehicle systems to power down.
2. Disconnect the harness connectors with the chassis high speed GMLAN serial data circuits at an easily accessible device that is not communicating.
3. Test for greater than 110 ohms between each pair of serial data circuits at the device connector that was just disconnected.
   - **If each pair of serial data circuits is 110 ohms or greater**

     Replace the device that was disconnected.

   - **If any pair of serial data circuits is less than 110 ohms**
4. Connect the harness connectors at the device that was disconnected.
5. Disconnect the harness connectors with the chassis high speed GMLAN serial data circuits at another device, in the direction of the circuit shorted together.
6. Test for greater than 110 ohms between each pair of serial data circuits at the device connector that was just disconnected.
   - **If each pair of serial data circuits is 110 ohms or greater**

     Replace the device that was disconnected.

   - **If any pair of serial data circuits is less than 110 ohms**

7. Repeat step 4 until one of the following conditions are isolated:
    - Serial data circuits shorted together between two devices or splice packs, if equipped.
    - Serial data circuits shorted together between a device and a terminating resistor.
    - Serial data circuits shorted together between the X84 Data Link Connector and the first device or splice pack.
    - A shorted terminating resistor.

Testing the Serial Data Circuits for an Open/High Resistance

1. Ignition OFF, all access doors closed, all vehicle systems OFF, and all keys at least 3 m (9.8 ft) away from vehicle. It may take up to 2 minutes for all vehicle systems to power down.
2. Disconnect the harness connectors with the chassis high speed GMLAN serial data circuits at an easily accessible device that is not communicating.
3. Test for less than 130 ohms between each pair of serial data circuits at the device connector that was just disconnected.
    - **If each pair of serial data circuits is 130 ohms or less**

      Replace the device that was disconnected.

    - **If any pair of serial data circuits is greater than 130 ohms**
4. Connect the harness connectors at the device that was disconnected.
5. Disconnect the harness connectors with the chassis high speed GMLAN serial data circuits at another device, in the direction of the circuit with the open/high resistance.
6. Test for less than 130 ohms between each pair of serial data circuits at the device connector that was just disconnected.
    - **If each pair of serial data circuits is 130 ohms or less**

      Replace the device that was disconnected.

    - **If any pair of serial data circuits is greater than 130 ohms**
7. Repeat step 4 until one of the following conditions are isolated:
    - An open/high resistance on the serial data circuit between two devices or splice packs, if equipped.
    - An open/high resistance on the serial data circuit between a device and a terminating resistor.
    - An open/high resistance terminating resistor.

Testing the Device Circuits

1. Ignition OFF, all access doors closed, all vehicle systems OFF, and all keys at least 3 m (9.8 ft) away from vehicle. It may take up to 2 minutes for all vehicle systems to power down.
2. Disconnect the harness connectors at an easily accessible device that is not communicating.
3. Test for less than 10 ohms between each ground circuit terminal and ground.
    - **If 10 ohms or greater**

1. Ignition OFF.
2. Test for less than 2 ohms in the ground circuit end to end.
    - If 2 ohms or greater, repair the open/high resistance in the circuit.
    - If less than 2 ohms, repair the open/high resistance in the ground connection.

- **If less than 10 ohms**

4. If equipped, verify a test lamp illuminates between each B+ circuit terminal and ground.
    - **If the test lamp does not illuminate and the circuit fuse is good**

    1. Ignition OFF.
    2. Test for less than 2 ohms in the B+ circuit end to end.
        - If 2 ohms or greater, repair the open/high resistance in the circuit.
        - If less than 2 ohms, verify the fuse is not open and there is voltage at the fuse.

    - **If the test lamp does not illuminate and the circuit fuse is open**

    1. Ignition OFF.
    2. Test for infinite resistance between the B+ circuit and ground.
        - If less than infinite resistance, repair the short to ground on the circuit.
        - If infinite resistance, replace the disconnected device.

    - **If the test lamp illuminates**

5. Ignition ON.
6. If equipped, verify a test lamp illuminates between each ignition circuit terminal, which has a fuse in the circuit, and ground.
    - **If the test lamp does not illuminate and the circuit fuse is good**

    1. Ignition OFF.
    2. Test for less than 2 ohms in the ignition circuit end to end.
        - If 2 ohms or greater, repair the open/high resistance in the circuit.
        - If less than 2 ohms, verify the fuse is OK and there is voltage at the fuse.

    - **If the test lamp does not illuminate and the circuit fuse is open**

    1. Ignition OFF.
    2. Test for infinite resistance between the ignition circuit and ground.
        - If less than infinite resistance, repair the short to ground on the circuit.
        - If infinite resistance, replace the disconnected device.

    - **If the test lamp illuminates**

7. If equipped, verify a test lamp illuminates between each ignition circuit terminal, which is controlled by a control module, and ground.
    - **If the test lamp does not illuminate**

    1. Ignition OFF, disconnect the harness connectors at the control module that controls the ignition circuit.
    2. Test for infinite resistance between the ignition circuit and ground.
        - If less than infinite resistance, repair the short to ground on the circuit.

- If infinite resistance

3. Test for less than 2 ohms in the ignition circuit end to end.
   - If 2 ohms or greater, repair the open/high resistance in the circuit.
   - If less than 2 ohms, replace the control module that controls the ignition circuit.

- **If the test lamp illuminates**

8. Ignition OFF, all access doors closed, all vehicle systems OFF, and all keys at least 3 m (9.8 ft) away from vehicle. It may take up to 2 minutes for all vehicle systems to power down.
9. Test for less than 130 ohms between each pair of chassis high speed GMLAN serial data circuits at the device connector that was just disconnected.
   - **If any pair of serial data circuits is greater than 130 ohms**

     Repair the open/high resistance in the serial data circuits between the disconnected device and the circuit splice in the serial data circuits.

   - **If each pair of serial data circuits is 130 ohms or less**
10. Replace the device that was disconnected.

Repair Instructions

Perform the **Diagnostic Repair Verification** after completing the repair.

- **GMLAN and Media Oriented Systems Transport (MOST) Wiring Repairs**
- **Control Module References** for device replacement, programming and setup

DTC U0077

Diagnostic Instructions

- Perform the **Diagnostic System Check - Vehicle** prior to using this diagnostic procedure.
- Review **Strategy Based Diagnosis** for an overview of the diagnostic approach.
- **Diagnostic Procedure Instructions** provides an overview of each diagnostic category.

DTC Descriptor

DTC U0077 00

Control Module Communication Chassis Expansion CAN Bus Off

Diagnostic Fault Information

Circuit	Short to Ground	Open/High Resistance	Short to Voltage	Signal Performance
Chassis High Speed GMLAN Serial Data (+)	U0077	U0077, U0100-U02FF*	U0077	-

Chassis High Speed GMLAN Serial Data (-)	U0077	U0077, U0100-U02FF*	U0077	-
Ground (DLC, terminal 5)	-	1	-	-
* An open between the data link connector (DLC) and the first splice/device will only affect the communication with the scan tool. The devices will still communicate. An open in only one chassis high speed GMLAN serial data circuit may allow degraded communication between the devices. 1. No communication with any chassis high speed GMLAN device.				

Circuit/System Description

The devices connected to the chassis high speed GMLAN serial data circuits monitor for serial data communications during normal vehicle operation. Operating information and commands are exchanged among the devices when the ignition switch is in any position other than OFF. The chassis high speed GMLAN serial data bus uses terminating resistors that are in parallel with the chassis high speed GMLAN (+) and (-) circuits.

Conditions for Running the DTC

The system voltage is between 9-16 V.

Conditions for Setting the DTC

A supervised periodic message that includes the transmitter device availability has not been received.

Action Taken When the DTC Sets

Specific subsystems will not function.

Conditions for Clearing the DTC

- A current DTC clears when the malfunction is no longer present.
- A history DTC clears when the device ignition cycle counter reaches the reset threshold of 50, without a repeat of the malfunction.

Diagnostic Aids

- Use the **Data Link References** to identify the chassis high speed GMLAN devices.
- Sometimes, while diagnosing a specific customer concern or after a repair, you may notice a history U-code present. However, there is no associated "current" or "active" status. Loss-of-communication U-codes such as these can set for a variety of reasons. Many times, they are transparent to the vehicle operator and technician, and/or have no associated symptoms. Eventually, they will erase themselves automatically after a number of fault-free ignition cycles. This condition would most likely be attributed to one of these scenarios:
  - A device on the data communication circuit was disconnected while the communication circuit is awake.
  - Power to one or more devices was interrupted during diagnosis.
  - A low battery condition was present, so some devices stop communicating when battery voltage

drops below a certain threshold.
    - Battery power was restored to the vehicle and devices on the communication circuit did not all re-initialize at the same time.
    - If a loss-of-communication U-code appears in history for no apparent reason, it is most likely associated with one of the scenarios above. These are all temporary conditions and should never be interpreted as an intermittent fault, causing you to replace a part.
- Do not replace a device reporting a U code. The U code identifies which device needs to be diagnosed for a communication issue.
- Communication may be available between some devices and the scan tool with the chassis high speed GMLAN serial data system inoperative. This condition is due to those devices using multiple serial data communication systems.
- An open in the DLC ground circuit terminal 5 will allow the scan tool to operate but not communicate with the vehicle.
- Technicians may find various Local Area Network (LAN) communication Diagnostic Trouble Codes (DTC).
- Some devices may not have internal protection for specific voltage outputs and may open a battery positive voltage or ignition voltage source fuse. If a voltage input fuse is open and no short is found in that circuit, ensure that no device output voltage circuit is shorted to ground before replacing the device.

Reference Information

Schematic Reference

- **Data Communication Schematics**
- **Control Module References**

Connector End View Reference

COMPONENT CONNECTOR END VIEWS - INDEX

Description and Operation

Data Link Communications Description and Operation

Electrical Information Reference

- **Circuit Testing**
- **Connector Repairs**
- **Testing for Intermittent Conditions and Poor Connections**
- **Wiring Repairs**

Scan Tool Reference

Control Module References for scan tool information

Circuit/System Verification

1. Ignition ON.
2. Verify DTC U0077 is not set.
   - **If DTC U0077 is set**

     Refer to **Scan Tool Does Not Communicate with Chassis High Speed GMLAN Device**.

   - **If DTC U0077 is not set**
3. All OK

Repair Instructions

Perform the **Diagnostic Repair Verification** after completing the repair.

- **GMLAN and Media Oriented Systems Transport (MOST) Wiring Repairs**
- **Control Module References** for device replacement, programming and setup

DTC U0078

Diagnostic Instructions

- Perform the **Diagnostic System Check - Vehicle** prior to using this diagnostic procedure.
- Review **Strategy Based Diagnosis** for an overview of the diagnostic approach.
- **Diagnostic Procedure Instructions** provides an overview of each diagnostic category.

DTC Descriptor

DTC U0078

Control Module Communication Low Speed CAN Bus Off

For symptom byte information, refer to **Symptom Byte List** .

Circuit/System Description

The low speed GMLAN serial data bus is used to communicate information between the devices. The serial data is transmitted over a single wire to the appropriate devices. The low speed GMLAN serial data circuits also connect directly to the data link connector (DLC).

Conditions for Running the DTC

- Supply voltage to the devices are in the normal operating range.
- The vehicle power mode requires serial data communications.

Conditions for Setting the DTC

The device setting the DTC has attempted to establish communications on the serial data circuits more than 3 times in 5 s.

Action Taken When the DTC Sets

- The device suspends all message transmission.
- The device uses default values for all parameters received on the serial data circuits.
- The device inhibits the setting of all other communication DTCs.

Conditions for Clearing the DTC

- A current DTC clears when the malfunction is no longer present.
- A history DTC clears when the device ignition cycle counter reaches the reset threshold of 50, without a repeat of the malfunction.

Circuit/System Verification

1. Ignition ON.
2. Verify DTC U0078 is not set.
    - **If DTC U0078 is set**

      Refer to **Scan Tool Does Not Communicate with Low Speed GMLAN Device**.

    - **If DTC U0078 is not set**
3. All OK

DTC U0100-U02FF

Diagnostic Instructions

- Perform the **Diagnostic System Check - Vehicle** prior to using this diagnostic procedure.
- Review **Strategy Based Diagnosis** for an overview of the diagnostic approach.
- **Diagnostic Procedure Instructions** provides an overview of each diagnostic category.

DTC Descriptor

For device DTC descriptors, refer to **Control Module U Code List**.

Diagnostic Fault Information

Circuit	Short to Ground	Open/High Resistance	Short to Voltage	Signal Performance
B+	U0100-U02FF	U0100-U02FF	-	-
Ignition	U0100-U02FF,	U0100-U02FF	-	-

	U1814, U2099			
Object High Speed GMLAN Serial Data (+)	U0075	U0100-U02FF	U0075	-
Object High Speed GMLAN Serial Data (-)	U0075	U0100-U02FF	U0075	-
Chassis High Speed GMLAN Serial Data (+)	U0074, U0077	U0100-U02FF	U0074, U0077	-
Chassis High Speed GMLAN Serial Data (-)	U0074, U0077	U0100-U02FF	U0074, U0077	-
Mid Speed GMLAN Serial Data (+)	U0074	U0100-U02FF	U0074	-
Mid Speed GMLAN Serial Data (-)	U0074	U0100-U02FF	U0074	-
High Speed GMLAN Serial Data (+)	U0073, 2	U0100-U02FF	U0073, 2	-
High Speed GMLAN Serial Data (-)	U0073, 2	U0100-U02FF	U0073, 2	-
Low Speed GMLAN Serial Data	U0078, 1	U0100-U02FF	U0078, 1	-
Ground	-	U0100-U02FF	-	-
1. Scan tool does not communicate with most low speed GMLAN device 2. Scan tool does not communicate with most high speed GMLAN device				

Circuit/System Description

The serial data circuit is the means by which the devices in the vehicle communicate with each other. Once the scan tool is connected to the serial data circuit through the data link connector (DLC), the scan tool can be used to monitor each device for diagnostic purposes and to check for DTCs. When the ignition switch is in RUN, each device communicating on the serial data circuit sends a state of health message to ensure that the device is operating properly. When a device stops communicating on the serial data circuit, for example if the device loses power or ground, the state of health message it normally sends on the serial data circuit disappears. Other devices on the serial data circuit, which expect to receive that state of health message, detect its absence; those devices in turn set a DTC associated with the loss of state of health of the non-communicating device. The DTC is unique to the device which is not communicating and one or more devices may set the same exact code. A loss of serial data communications DTC does not represent a failure of the devices that contain the stored code.

Conditions for Running the DTC

The system voltage is between 9-16 V.

Conditions for Setting the DTC

A supervised periodic message that includes the transmitter device availability has not been received.

Action Taken When the DTC Sets

- Specific subsystems will not function.
- DTC U0100 in the transmission control module will cause the transmission to go into default gears.
- Both DTC U0100 in the transmission control module and DTC U0101 in the engine control module will cause the MIL to illuminate.

Conditions for Clearing the DTC

- The engine control module or transmission control module turns OFF the MIL after 4 consecutive ignition cycles that the diagnostic runs and does not fail.
- A current DTC clears when the malfunction is no longer present.
- A history DTC clears when the device ignition cycle counter reaches the reset threshold of 50, without a repeat of the malfunction.

Diagnostic Aids

- Sometimes, while diagnosing a specific customer concern or after a repair, you may notice a history U-code present. However, there is no associated "current" or "active" status. Loss-of- communication U-codes such as these can set for a variety of reasons. Many times, they are transparent to the vehicle operator and technician, and/or have no associated symptoms. Eventually, they will erase themselves automatically after a number of fault-free ignition cycles. This condition would most likely be attributed to one of these scenarios:
  - A device on the data communication circuit was disconnected while the communication circuit is awake.
  - Power to one or more devices was interrupted during diagnosis.
  - A low battery condition was present, so some devices stop communicating when battery voltage drops below a certain threshold.
  - Battery power was restored to the vehicle and devices on the communication circuit did not all re-initialize at the same time.
  - If a loss-of-communication U code appears in history for no apparent reason, it is most likely associated with one of the scenarios above. These are all temporary conditions and should never be interpreted as an intermittent fault, causing you to replace a part.
- A device may have a U-code stored in history that does not require any repairs. Issues with late or corrupted messages between devices can be temporary with no apparent symptom or complaint; this does not mean the device is faulty. Do not replace a device based only on a history U-code.
- Do not replace a device reporting a U-code. The U-code identifies which device needs to be diagnosed for a communication issue.
- Communication may be available between some devices and the scan tool with either the low or high speed GMLAN serial data system inoperative. This condition is due to those devices using multiple serial data communication systems.
- Use **Data Link References** to determine what serial data communications the device uses.
- Some devices may not have internal protection for specific control circuits and may open a B+ or ignition fuse. If a fuse is open and the B+ or ignition circuit is not shorted to ground, ensure none of the control circuits are shorted to ground before replacing the device.
- Some intermittent communication concerns may be caused by fretting corrosion on the serial data circuit

terminals. Inspect all connectors at the device that set the communication DTC, the device that the communication DTC was set against, and any inline harness connectors between the two devices. Do not replace a device based only on fretting corrosion. Refer to bulletin 09-06-03-004 for assistance with the diagnosis and repair of this condition, if applicable.

- This diagnostic can be used for any device that is not communicating, regardless of the type of serial data circuit it is connected to, providing the vehicle is equipped with the device.

Reference Information

Schematic Reference

- **Data Communication Schematics**
- **Control Module References**

Connector End View Reference

COMPONENT CONNECTOR END VIEWS - INDEX

Description and Operation

Data Link Communications Description and Operation

Electrical Information Reference

- **Circuit Testing**
- **Connector Repairs**
- **Testing for Intermittent Conditions and Poor Connections**
- **Wiring Repairs**

Scan Tool Reference

Control Module References for scan tool information

Circuit/System Verification

1. Determine the device that is not communicating. Refer to **Control Module U Code List**.
2. Verify that DTC U0073, U2100, U0074, U0078, U1814, U2099, B1325, B1330, B1370, B1380, B1424, B1440, B1441, B1517, C0800, C0899, C12E1, P0560, or P0562 is not set.
   - **If any of the DTCs are set**

     Refer to **Diagnostic Trouble Code (DTC) List - Vehicle** .

   - **If none of the DTCs are set**
3. Verify that DTC U0125 and DTC U0126 are not set together.
   - **If both of the DTCs are set together**

Refer to **Scan Tool Does Not Communicate with Chassis High Speed GMLAN Device**.

- **If both of the DTCs are not set together**

4. Engine running for 10 s.
5. Ignition ON, engine OFF, verify that DTC U0100-U02FF is not set.
   - **If the DTC U0100-U02FF is set in any device, except the K17 Electronic Brake Control Module**

     Refer to Circuit/System Testing below.

   - **If the DTC U0100-U02FF is set in the K17 Electronic Brake Control Module with any symptom byte, except symptom bytes 71, 72, and 74**

     Refer to Circuit/System Testing below.

   - **If the DTC U0100-U02FF is set in the K17 Electronic Brake Control Module with symptom byte 71, 72, or 74 along with other DTCs set**

     Diagnose all other DTCs first. Refer to **Diagnostic Trouble Code (DTC) List - Vehicle** .

   - **If the DTC U0100-U02FF is set in the K17 Electronic Brake Control Module with symptom byte 71, 72, or 74 and without other DTCs set**

   1. Program the K17 Electronic Brake Control Module.
   2. Verify the DTC does not set.
      - If the DTC sets, replace the K17 Electronic Brake Control Module.
      - If the DTC does not set
   3. All OK.

   - **If the DTC U0100-U02FF is not set**

6. All OK.

Circuit/System Testing

NOTE: Use the schematics and connector end views to identify the device's ground, B+, ignition, accessory wakeup serial data, serial data communication enable, and serial data circuit terminals.

1. Ignition OFF, all access doors closed, all vehicle systems OFF, and all keys at least 3 m (9.8 ft) away from vehicle. Disconnect all the harness connectors at the device that is not communicating. It may take up to 2 minutes for all vehicle systems to power down.
2. Test for less than 10 ohms between each ground circuit terminal and ground.
   - **If 10 ohms or greater**

   1. Ignition OFF.
   2. Test for less than 2 ohms in the ground circuit end to end.

- If 2 ohms or greater, repair the open/high resistance in the circuit.
- If less than 2 ohms, repair the open/high resistance in the ground connection.

- **If less than 10 ohms**

3. Ignition ON.
4. If equipped, verify a test lamp illuminates between each B+ circuit terminal and ground.
   - **If the test lamp does not illuminate and the circuit fuse is good**
   1. Ignition OFF.
   2. Test for less than 2 ohms in the B+ circuit end to end.
      - If 2 ohms or greater, repair the open/high resistance in the circuit.
      - If less than 2 ohms, verify the fuse is not open and there is voltage at the fuse.
   - **If the test lamp does not illuminate and the circuit fuse is open**
   1. Ignition OFF.
   2. Test for infinite resistance between the B+ circuit and ground.
      - If less than infinite resistance, repair the short to ground on the circuit.
      - If infinite resistance, replace the disconnected device.
   - **If the test lamp illuminates**
5. Ignition ON.
6. If equipped, verify a test lamp illuminates between each ignition circuit terminal and ground.
   - **If the test lamp does not illuminate and the circuit fuse is good**
   1. Ignition OFF.
   2. Test for less than 2 ohms in the ignition circuit end to end.
      - If 2 ohms or greater, repair the open/high resistance in the circuit.
      - If less than 2 ohms, verify the fuse is OK and there is voltage at the fuse.
   - **If the test lamp does not illuminate and the circuit fuse is open**
   1. Ignition OFF.
   2. Test for infinite resistance between the ignition circuit and ground.
      - If less than infinite resistance, repair the short to ground on the circuit.
      - If infinite resistance, replace the disconnected device.
   - **If the test lamp illuminates**
7. Ignition ON.
8. If equipped, verify a test lamp illuminates between each ignition circuit terminal, which is controlled by a control module, and ground.
   - **If the test lamp does not illuminate**
   1. Ignition OFF, disconnect the harness connectors at the control module that controls the ignition circuit.
   2. Test for infinite resistance between the ignition circuit and ground.
      - If less than infinite resistance, repair the short to ground on the circuit.
      - If infinite resistance

3. Test for less than 2 ohms in the ignition circuit end to end.
    - If 2 ohms or greater, repair the open/high resistance in the circuit.
    - If less than 2 ohms, replace the control module that controls the ignition circuit.
- **If the test lamp illuminates**

NOTE: This test step is only applicable to a low speed GMLAN device.

9. Test for less than 4.5 V between each low speed GMLAN serial data circuit terminal and ground.
    - **If 4.5 V or greater**

      Refer to **Scan Tool Does Not Communicate with Low Speed GMLAN Device** to test for a short to voltage in the serial data circuit.

    - **If less than 4.5 V**
10. Ignition OFF, all access doors closed, all vehicle systems OFF, and all keys at least 3 m (9.8 ft) away from vehicle. It may take up to 2 minutes for all vehicle systems to power down.
11. Test for less than 2 ohms in each of the serial data circuits end to end between the device harness connector and the X84 Data Link Connector terminals listed below.
    - Low speed GMLAN serial data circuit terminal 1
    - High speed GMLAN serial data circuit terminal 6 or 14
    - Mid speed GMLAN serial data circuit terminal 3 or 11
    - Chassis high speed GMLAN serial data circuit terminal 12 or 13
    - Object high speed GMLAN serial data circuit terminal 3 or 11
    - **If 2 ohms or greater**

      Repair the open/high resistance in the serial data circuit between the non communicating device and the device setting the DTC or a serial data splice pack.

    - **If less than 2 ohms**

NOTE: The following test step is only applicable to a high speed GMLAN device with 2 pairs of serial data circuits or a high speed GMLAN device with an internal terminating resistor.

12. Test for 110-130 ohms between each pair of high speed GMLAN serial data circuits.
    - **If less than 110 ohms**

      Refer to **Scan Tool Does Not Communicate with High Speed GMLAN Device** to test for a short to ground or a short between the serial data circuits.

    - **If greater than 130 ohms**

      Refer to **Scan Tool Does Not Communicate with High Speed GMLAN Device** to test for an

open/high resistance in the serial data circuit.

- **If between 110-130 ohms**

13. Replace the device that is not communicating.

Repair Instructions

Perform the **Diagnostic Repair Verification** after completing the repair.

- **GMLAN and Media Oriented Systems Transport (MOST) Wiring Repairs**
- **Control Module References** for device replacement, programming and setup

DTC U0300-U0336

Diagnostic Instructions

- Perform the **Diagnostic System Check - Vehicle** prior to using this diagnostic procedure.
- Review **Strategy Based Diagnosis** for an overview of the diagnostic approach.
- **Diagnostic Procedure Instructions** provides an overview of each diagnostic category.

DTC Descriptor

Refer to **Control Module U Code List**.

Circuit/System Description

Some devices must be configured with specific software, serial numbers, vehicle options, or other information. If a device was not properly configured after installation that device may set the appropriate communication DTCs. No external circuit diagnosis is involved.

Conditions for Running the DTC

Battery voltage is between 9-16 V and data link communications operate normally.

Conditions for Setting the DTC

The device is not configured properly.

Conditions for Clearing the DTC

- A current DTC clears when the malfunction is no longer present.
- A history DTC clears when the device ignition cycle counter reaches the reset threshold, without a repeat of the malfunction.

Reference Information

Schematic Reference

- **Data Communication Schematics**
- **Control Module References**

Connector End View Reference

COMPONENT CONNECTOR END VIEWS - INDEX

Description and Operation

Data Link Communications Description and Operation

Electrical Information Reference

- **Circuit Testing**
- **Connector Repairs**
- **Testing for Intermittent Conditions and Poor Connections**
- **Wiring Repairs**

Scan Tool Reference

Control Module References for scan tool information

Circuit/System Verification

1. Ignition ON.
2. Verify DTC U0300-U0336 is not set.
    - **If DTC U0300-U0336 is set**
    1. Program the device specified by the DTC descriptor.
    2. Verify the DTC does not set.
        - If the DTC sets, replace the device specified by the DTC descriptor.
        - If the DTC does not set
    3. All OK.
    - **If DTC U0300-U0336 is not set**
3. All OK

Repair Instructions

Perform the **Diagnostic Repair Verification** after completing the repair.

Control Module References for device replacement, programming and setup

DTC U0400-U05FF

Diagnostic Instructions

- Perform the **Diagnostic System Check - Vehicle** prior to using this diagnostic procedure.
- Review **Strategy Based Diagnosis** for an overview of the diagnostic approach.
- **Diagnostic Procedure Instructions** provides an overview of each diagnostic category.

DTC Descriptor

Refer to **Control Module U Code List**.

Circuit/System Description

Some devices are constantly receiving information from other devices through serial data communication network. The invalid data code will be set when a receiving device detects a discrepancy in information it receives from another device causing its integrity to be questioned. The symptom byte listed in the DTC Descriptor is for engineering reference only. No external circuit diagnosis is involved.

Conditions for Running the DTC

Battery voltage is between 9-16 V and data link communications operate normally.

Conditions for Setting the DTC

The device is not configured properly.

Conditions for Clearing the DTC

- A current DTC clears when the malfunction is no longer present.
- A history DTC clears when the device ignition cycle counter reaches the reset threshold, without a repeat of the malfunction.

Reference Information

Schematic Reference

- **Data Communication Schematics**
- **Control Module References**

Connector End View Reference

COMPONENT CONNECTOR END VIEWS - INDEX

Description and Operation

Data Link Communications Description and Operation

Electrical Information Reference

- **Circuit Testing**

- **Connector Repairs**
- **Testing for Intermittent Conditions and Poor Connections**
- **Wiring Repairs**

Scan Tool Reference

Control Module References for scan tool information

Circuit/System Verification

1. Engine running for 10 s.
2. Ignition ON, engine OFF, verify DTC U0400-U05FF is not set.
    - **If DTC U0400-U05FF is set along with other DTCs set**

      Diagnose all other DTCs first. Refer to **Diagnostic Trouble Code (DTC) List - Vehicle** .

    - **If DTC U0400-U05FF is set without other DTCs set**
    1. Program the device specified by the DTC descriptor.
    2. Verify the DTC does not set.
        - If the DTC sets, replace the appropriate device.
        - If the DTC does not set
    3. All OK.
    - **If DTC U0400-U05FF is not set**
3. All OK

Repair Instructions

Perform the **Diagnostic Repair Verification** after completing the repair.

Control Module References for device replacement, programming and setup

DTC U1500-U15FF

Diagnostic Instructions

- Perform the **Diagnostic System Check - Vehicle** prior to using this diagnostic procedure.
- Review **Strategy Based Diagnosis** for an overview of the diagnostic approach.
- **Diagnostic Procedure Instructions** provides an overview of each diagnostic category.

DTC Descriptor

For device DTC descriptors, refer to **Control Module U Code List**.

Diagnostic Fault Information

Circuit	Short to Ground	Open/High Resistance	Short to Voltage	Signal Performance
B+	U1500-U15BF	U1500-U15BF	-	-
Ignition	U1500-U15BF	U1500-U15BF	-	-
LIN Serial Data	U1500-U15BF	U1500-U15BF	U1500-U15BF	-
Ground	-	U1500-U15BF	-	-

Circuit/System Description

The serial data is transmitted over a Local Interconnect Network (LIN) single wire network circuit bus between a master control module and other LIN devices within a particular subsystem. If serial data communication is lost between any of the LIN devices on the LIN bus network, a no communication code against the non-communicating LIN device will be set. A master control module is the one that reports the non communication code.

Conditions for Running the DTC

The system voltage is between 9-16 V.

Conditions for Setting the DTC

A supervised periodic message that includes the transmitter device availability has not been received.

Action Taken When the DTC Sets

Specific subsystems will not function.

Conditions for Clearing the DTC

- A current DTC clears when the malfunction is no longer present.
- A history DTC clears when the device ignition cycle counter reaches the reset threshold of 50, without a repeat of the malfunction.

Diagnostic Aids

- Sometimes, while diagnosing a specific customer concern or after a repair, you may notice a history U-code present. However, there is no associated "current" or "active" status. Loss-of- communication U-codes such as these can set for a variety of reasons. Many times, they are transparent to the vehicle operator and technician, and/or have no associated symptoms. Eventually, they will erase themselves automatically after a number of fault-free ignition cycles. This condition would most likely be attributed to one of these scenarios:
    - A device on the data communication circuit was disconnected while the communication circuit is awake.
    - Power to one or more devices was interrupted during diagnosis.
    - A low battery condition was present, so some devices stop communicating when battery voltage

drops below a certain threshold.
    - Battery power was restored to the vehicle and devices on the communication circuit did not all re-initialize at the same time.
    - If a loss-of-communication U-code appears in history for no apparent reason, it is most likely associated with one of the scenarios above. These are all temporary conditions and should never be interpreted as an intermittent fault, causing you to replace a part.
- A device may have a U-code stored in history that does not require any repairs. Issues with late or corrupted messages between devices can be temporary with no apparent symptom or complaint; this does not mean the device is faulty. Do not replace a device based only on a history U-code.
- Do not replace a device reporting a U-code. The U-code identifies which device needs to be diagnosed for a communication issue.
- Communication will be available between the master control module and the scan tool if there is a loss of communications with any of the other LIN devices on the LIN bus network.
- Some devices may not have internal protection for specific control circuits and may open a B+ or ignition fuse. If a fuse is open and the B+ or ignition circuit is not shorted to ground, ensure none of the control circuits are shorted to ground before replacing the device.
- Some intermittent communication concerns may be caused by fretting corrosion on the serial data circuit terminals. Inspect all connectors at the device that set the communication DTC, the device that the communication DTC was set against, and any inline harness connectors between the two devices. Do not replace a device based only on fretting corrosion. Refer to bulletin 09-06-03-004 for assistance with the diagnosis and repair of this condition, if applicable.
- An open in the LIN bus serial data circuit between the splice pack and a LIN device will only affect that specific LIN device. This type of failure will set a loss of communication DTC for each LIN device affected and the other LIN devices will still communicate.

Reference Information

Schematic Reference

- **Data Communication Schematics**
- **Control Module References**

Connector End View Reference

COMPONENT CONNECTOR END VIEWS - INDEX

Description and Operation

Data Link Communications Description and Operation

Electrical Information Reference

- **Circuit Testing**
- **Connector Repairs**
- **Testing for Intermittent Conditions and Poor Connections**

- **Wiring Repairs**

Scan Tool Reference

Control Module References for scan tool information

Circuit/System Verification

1. Determine the LIN device that is not communicating. Refer to **Control Module U Code List**.
2. Verify that DTC B1325, B1330, B1370, B1380, B1424, B1440, B1441, B1517, C0800, C0899, C12E1, P0560, or P0562 is not set.
   - **If any of the DTCs are set**

     Refer to **Diagnostic Trouble Code (DTC) List - Vehicle** .

   - **If none of the DTCs are set**
3. Refer to Circuit/System Testing below.

Circuit/System Testing

NOTE: Use the schematic to identify the following:

- **The master control module and the LIN devices on the same LIN serial data circuit**
- **The master control module's LIN serial data circuit terminal and the LIN device's B+, ignition, ground, and LIN serial data circuit terminals**

1. Ignition OFF, all access doors closed, all vehicle systems OFF, and all keys at least 3 m (9.8 ft) away from vehicle. Disconnect the harness connector at a LIN device that is not communicating. It may take up to 2 minutes for all vehicle systems to power down.
2. Test for less than 10 ohms between each ground circuit terminal and ground.
   - **If 10 ohms or greater**
   1. Ignition OFF.
   2. Test for less than 2 ohms in the ground circuit end to end.
      - If 2 ohms or greater, repair the open/high resistance in the circuit.
      - If less than 2 ohms, repair the open/high resistance in the ground connection.
   - **If less than 10 ohms**
3. Ignition ON.
4. Verify a test lamp illuminates between each B+ circuit terminal and ground, if equipped.
   - **If the test lamp does not illuminate and the circuit fuse is good**
   1. Ignition OFF.
   2. Test for less than 2 ohms in the B+ circuit end to end.
      - If 2 ohms or greater, repair the open/high resistance in the circuit.

- If less than 2 ohms, verify the fuse is not open and there is voltage at the fuse.

- **If the test lamp does not illuminate and the circuit fuse is open**

1. Ignition OFF.
2. Test for infinite resistance between the B+ circuit and ground.
   - If less than infinite resistance, repair the short to ground on the circuit.
   - If infinite resistance, replace the disconnected LIN device.

- **If the test lamp illuminates**

5. Ignition ON.
6. Verify a test lamp illuminates between each ignition circuit terminal and ground, if equipped.

- **If the test lamp does not illuminate and the circuit fuse is good**

1. Ignition OFF.
2. Test for less than 2 ohms in the ignition circuit end to end.
   - If 2 ohms or greater, repair the open/high resistance in the circuit.
   - If less than 2 ohms, verify the fuse is OK and there is voltage at the fuse.

- **If the test lamp does not illuminate and the circuit fuse is open**

1. Ignition OFF.
2. Test for infinite resistance between the ignition circuit and ground.
   - If less than infinite resistance, repair the short to ground on the circuit.
   - If infinite resistance, replace the disconnected LIN device.

- **If the test lamp illuminates**

7. Ignition ON.
8. Verify a test lamp illuminates between each ignition circuit terminal, which is controlled by a control module, and ground, if equipped.

- **If the test lamp does not illuminate**

1. Ignition OFF, disconnect the harness connectors at the control module that controls the ignition circuit.
2. Test for infinite resistance between the ignition circuit and ground.
   - If less than infinite resistance, repair the short to ground on the circuit.
   - If infinite resistance
3. Test for less than 2 ohms in the ignition circuit end to end.
   - If 2 ohms or greater, repair the open/high resistance in the circuit.
   - If less than 2 ohms, replace the control module that controls the ignition circuit.

- **If the test lamp illuminates**

9. Ignition ON.

NOTE: For accurate voltage reading, disconnect the battery charger prior to performing the following test step.

10. Test for 2-13 V between the LIN serial data circuit terminal and ground.

- **If less than 2 V**

1. Ignition OFF, disconnect the harness connector at the control module setting the DTC and all LIN devices that share the same LIN serial data circuit.
2. Test for infinite resistance between the serial data circuit and ground.
   - If less than infinite resistance, repair the short to ground on the circuit.
   - If infinite resistance
3. Test for less than 2 ohms in the serial data circuit end to end.
   - If 2 ohms or greater, repair the open/high resistance in the circuit.
   - If less than 2 ohms
4. Reconnect the control module that set the DTC, ignition ON.
5. Test for 2-13 V between the LIN serial data circuit terminal and ground.
   - If less than 2 V, replace the control module setting the DTC.
   - If greater than 2 V, replace the LIN device that causes a current DTC to set when connected.

- **If greater than 13 V**

1. Ignition OFF, disconnect the harness connector at the control module setting the DTC and all LIN devices that share the same LIN serial data circuit.
2. Ignition ON.
3. Test for less than 1 V between the serial data circuit and ground.
   - If 1 V or greater, repair the short to voltage on the circuit.
   - If less than 1 V
4. Ignition OFF, reconnect the control module that set the DTC, ignition ON.
5. Test for 2-13 V between the LIN serial data circuit terminal and ground.
   - If greater than 13 V, replace the control module setting the DTC.
   - If less than 13 V, replace the LIN device that causes a current DTC to set when connected.

- **If between 2-13 V**

11. Replace the disconnected LIN device.

Repair Instructions

Perform the **Diagnostic Repair Verification** after completing the repair.

- **GMLAN and Media Oriented Systems Transport (MOST) Wiring Repairs**
- **Control Module References** for device replacement, programming and setup

DTC U1814

Diagnostic Instructions

- Perform the **Diagnostic System Check - Vehicle** prior to using this diagnostic procedure.
- Review **Strategy Based Diagnosis** for an overview of the diagnostic approach.
- **Diagnostic Procedure Instructions** provides an overview of each diagnostic category.

DTC Descriptor

DTC U1814

Powertrain Wake-Up Communication Circuit

For symptom byte information, refer to **Symptom Byte List** .

Diagnostic Fault Information

Circuit	Short to Ground	Open/High Resistance	Short to Voltage	Signal Performance
Ignition	U1814 02*	U0100-U02FF	-	-
* Vehicle may not start.				

Circuit/System Description

The body control module (BCM) activates the ignition circuit, when the ignition key is in ACC, ON or START. The ignition circuit wakes up the devices for serial data bus communication.

Conditions for Running the DTC

- The system voltage is between 9-16 V.
- The vehicle power mode master requires serial data communication to occur.

Conditions for Setting the DTC

The BCM senses a short to ground on the ignition circuit.

Action Taken When the DTC Sets

- The output command is turned off while the malfunction is present.
- The devices use a default value for the missing parameters until the next ignition cycle.
- The device(s) is never signaled. Therefore, the specific subsystem(s) will not function.
- The vehicle will not start while the circuit is shorted to ground.

Conditions for Clearing the DTC

- A current DTC clears when the malfunction is no longer present.
- A history DTC clears when the device ignition cycle counter reaches the reset threshold of 50, without a repeat of the malfunction.

Reference Information

Schematic Reference

- **Data Communication Schematics**
- **Control Module References**

Connector End View Reference

COMPONENT CONNECTOR END VIEWS - INDEX

Description and Operation

Data Link Communications Description and Operation

Electrical Information Reference

- **Circuit Testing**
- **Connector Repairs**
- **Testing for Intermittent Conditions and Poor Connections**
- **Wiring Repairs**

Scan Tool Reference

Control Module References for scan tool information

Circuit/System Testing

NOTE: Use the schematic to determine which devices are on the K9 Body Control Module's ignition circuit terminal 22 X4. Use the connector end view to identify the ignition circuit terminal for each of those devices.

1. Ignition OFF, disconnect the harness connectors at an easily accessible device that shares the K9 Body Control Module's ignition circuit terminal 22 X4. Ignition ON.
2. Verify that the DTC U1814 remains current.
   - **If the DTC becomes history**

     Replace the device that was just disconnected.

   - **If the DTC remains current**
3. With the prior devices disconnected, repeat steps 1 and 2 for each device on the ignition circuit except the K9 Body Control Module.
4. Ignition OFF, disconnect the X4 harness connector at the K9 Body Control Module.
5. Test for infinite resistance between the ignition circuit terminal 22 X4 at the K9 Body Control Module and ground.
   - **If less than infinite resistance**

     Repair the short to ground on the circuit.

- **If infinite resistance**

6. Replace the K9 Body Control Module.

Repair Instructions

Perform the **Diagnostic Repair Verification** after completing the repair.

- **GMLAN and Media Oriented Systems Transport (MOST) Wiring Repairs**
- **Control Module References** for device replacement, programming and setup

DTC U18B9-U18BF

Diagnostic Instructions

- Perform the **Diagnostic System Check - Vehicle** prior to using this diagnostic procedure.
- Review **Strategy Based Diagnosis** for an overview of the diagnostic approach.
- **Diagnostic Procedure Instructions** provides an overview of each diagnostic category.

DTC Descriptor

DTC U18B9

Primary High Speed CAN Bus Subnet Configuration List

DTC U18BF

Secondary High Speed CAN Bus Subnet Configuration List

For symptom byte information, refer to **Symptom Byte List** .

Circuit/System Description

Devices on the high speed GMLAN serial data bus and the chassis high speed GMLAN serial data bus must be programmed with software that specifically identifies the correct type and quantity of devices on the bus based on RPO configuration. If a device was not properly configured after installation, the appropriate U Code may be set for that device. No external circuit diagnosis is involved.

Conditions for Running the DTC

- Voltage supplied to the device is in the normal operating voltage range.
- The vehicle power mode requires serial data communication to occur.

Conditions for Setting the DTC

- The device is not configured properly.
- Control unit recognises a programming error.

- CAN-Bus configuration is invalid

Conditions for Clearing the DTC

- A current DTC clears when the malfunction is no longer present.
- A history DTC clears when the device ignition cycle counter reaches the reset threshold, without a repeat of the malfunction.

Reference Information

Schematic Reference

- **Data Communication Schematics**
- **Control Module References**

Connector End View Reference

COMPONENT CONNECTOR END VIEWS - INDEX

Description and Operation

Data Link Communications Description and Operation

Electrical Information Reference

- **Circuit Testing**
- **Connector Repairs**
- **Testing for Intermittent Conditions and Poor Connections**
- **Wiring Repairs**

Scan Tool Reference

Control Module References for scan tool information

Circuit/System Verification

1. Ignition ON.
2. Verify DTC U18B9-U18BF is not set.
    - **If DTC U18B9-U18BF is set along with other DTCs set**

      Diagnose all other DTCs first. Refer to **Diagnostic Trouble Code (DTC) List - Vehicle** .

    - **If DTC U18B9-U18BF is set without other DTCs set**

    1. Program the device that set the DTC.
    2. Ignition OFF, remove the scan tool, open and close the driver door. Wait 60 s.

3. Verify the DTC does not set.
    - If the DTC sets, replace the appropriate device.
    - If the DTC does not set
4. All OK.
    - **If DTC U18B9-U18BF is not set**
3. All OK

Repair Instructions

Perform the **Diagnostic Repair Verification** after completing the repair.

Control Module References for device replacement, programming and setup

DTC U2099

Diagnostic Instructions

- Perform the **Diagnostic System Check - Vehicle** prior to using this diagnostic procedure.
- Review **Strategy Based Diagnosis** for an overview of the diagnostic approach.
- **Diagnostic Procedure Instructions** provides an overview of each diagnostic category.

DTC Descriptor

DTC U2099

High Speed Communication Enable Circuit

For symptom byte information, refer to **Symptom Byte List** .

Diagnostic Fault Information

Circuit	Short to Ground	Open/High Resistance	Short to Voltage	Signal Performance
Ignition	U2099*	U0100-U02FF	U0100-U02FF	-
* Vehicle may not start.				

Circuit/System Description

The body control module (BCM) activates the ignition circuit, when the ignition key is in ACC, ON or START. The ignition circuit wakes up the devices for serial data bus communication.

Conditions for Running the DTC

- The system voltage is between 9-16 V.
- The vehicle power mode master requires serial data communication to occur.

Conditions for Setting the DTC

The BCM senses a short to ground on the ignition circuit.

Action Taken When the DTC Sets

- The output command is turned off while the malfunction is present.
- The devices use a default value for the missing parameters until the next ignition cycle.
- The device(s) is never signaled. Therefore, the specific subsystem(s) will not function.
- The vehicle will not start while the circuit is shorted to ground.

Conditions for Clearing the DTC

- A current DTC clears when the malfunction is no longer present.
- A history DTC clears when the device ignition cycle counter reaches the reset threshold of 50, without a repeat of the malfunction.

Reference Information

Schematic Reference

- **Data Communication Schematics**
- **Control Module References**

Connector End View Reference

COMPONENT CONNECTOR END VIEWS - INDEX

Description and Operation

Data Link Communications Description and Operation

Electrical Information Reference

- **Circuit Testing**
- **Connector Repairs**
- **Testing for Intermittent Conditions and Poor Connections**
- **Wiring Repairs**

Scan Tool Reference

Control Module References for scan tool information

Circuit/System Testing

NOTE: Use the schematic to determine which devices are on the K9 Body Control Module's ignition circuit terminal 23 X4. Use the connector end view to identify the ignition circuit terminal for each of those devices.

1. Ignition OFF, disconnect the harness connectors at an easily accessible device that shares the K9 Body Control Module's ignition circuit terminal 23 X4. Ignition ON.
2. Verify that the DTC U2099 remains current.
   - **If the DTC becomes history**

     Replace the device that was just disconnected.

   - **If the DTC remains current**
3. With the prior devices disconnected, repeat steps 1 and 2 for each device on the ignition circuit except the K9 Body Control Module.
4. Ignition OFF, disconnect the X4 harness connector at the K9 Body Control Module.
5. Test for infinite resistance between the ignition circuit terminal 23 X4 at the K9 Body Control Module and ground.
   - **If less than infinite resistance**

     Repair the short to ground on the circuit.

   - **If infinite resistance**
6. Replace the K9 Body Control Module.

Repair Instructions

Perform the **Diagnostic Repair Verification** after completing the repair.

- **GMLAN and Media Oriented Systems Transport (MOST) Wiring Repairs**
- **Control Module References** for device replacement, programming and setup

SYMPTOMS - DATA COMMUNICATIONS

NOTE: The following steps must be completed before using the symptom tables.

1. Perform the **Diagnostic System Check - Vehicle** before using the symptom tables in order to verify that all of the following are true:
   - There are no Diagnostic Trouble Codes (DTC) set.
   - The devices can communicate via the serial data links.
2. Review the system operation in order to familiarize yourself with the system functions. Refer to **Data Link Communications Description and Operation**.

Visual/Physical Inspection

- Inspect for aftermarket devices which could affect the operation of the systems. Refer to **Checking Aftermarket Accessories** .
- Inspect the easily accessible or visible system components for obvious damage or conditions which could cause the symptom.

Intermittent

Faulty electrical connections or wiring may be the cause of intermittent conditions. Refer to **Testing for Intermittent Conditions and Poor Connections** .

Symptom List

Refer to a symptom diagnostic procedure from the following list in order to diagnose the symptom:

- **Scan Tool Does Not Power Up**
- **Scan Tool Does Not Communicate with High Speed GMLAN Device**
- **Scan Tool Does Not Communicate with Low Speed GMLAN Device**
- **Scan Tool Does Not Communicate with Chassis High Speed GMLAN Device**

SCAN TOOL DOES NOT POWER UP

Diagnostic Instructions

- Perform the **Diagnostic System Check - Vehicle** prior to using this diagnostic procedure.
- Review **Strategy Based Diagnosis** for an overview of the diagnostic approach.
- **Diagnostic Procedure Instructions** provides an overview of each diagnostic category.

Diagnostic Fault Information

Circuit	Short to Ground	Open/High Resistance	Short to Voltage	Signal Performance
Data Link Connector B+	1	1	-	-
Data Link Connector Ground	-	1	-	-
1. Scan Tool Does Not Power Up				

Circuit/System Description

The data link connector (DLC) is a standardized 16 cavity connector. Connector design and location is dictated by an industry wide standard, and is required to provide the following:

- Scan tool B+ voltage at terminal 16
- Scan tool ground at terminal 4
- Common ground at terminal 5

Diagnostic Aids

- The scan tool will power up with the ignition OFF. Some devices however, will not communicate unless the ignition is ON and the power mode master device sends the appropriate power mode message.
- If the B+ circuit, ground circuits, and connections of the data link connector are functioning properly, the malfunction must be due to the scan tool.

Reference Information

Schematic Reference

- **Data Communication Schematics**
- **Control Module References**

Connector End View Reference

COMPONENT CONNECTOR END VIEWS - INDEX

Description and Operation

Data Link Communications Description and Operation

Electrical Information Reference

- **Circuit Testing**
- **Connector Repairs**
- **Testing for Intermittent Conditions and Poor Connections**
- **Wiring Repairs**

Scan Tool Reference

Control Module References for scan tool information

Circuit/System Testing

1. Ignition OFF, all access doors closed, all vehicle systems OFF, and all keys at least 3 m (9.8 ft) away from vehicle. It may take up to 2 minutes for all vehicle systems to power down.
2. Test for less than 2 ohms between each of the X84 Data Link Connector ground circuit terminals listed below and ground.
    - Ground circuit terminal 4
    - Ground circuit terminal 5
    - **If 2 ohms or greater**
    1. Ignition OFF.
    2. Test for less than 2 ohms in the ground circuit end to end.
        - If 2 ohms or greater, repair the open/high resistance in the circuit.

- If less than 2 ohms, repair the open/high resistance in the ground connection.
- **If less than 2 ohms**

3. Ignition ON.
4. Verify a test lamp illuminates between the B+ circuit terminal 16 at the X84 Data Link Connector and ground.
   - **If the test lamp does not illuminate and the circuit fuse is good**
   1. Ignition OFF.
   2. Test for less than 2 ohms in the B+ circuit end to end.
      - If 2 ohms or greater, repair the open/high resistance in the circuit.
      - If less than 2 ohms, verify the fuse is not open and there is voltage at the fuse.
   - **If the test lamp does not illuminate and the circuit fuse is open**
   1. Ignition OFF.
   2. Test for infinite resistance between the B+ circuit and ground.
      - If less than infinite resistance, repair the short to ground on the circuit.
   - **If the test lamp illuminates**
5. Refer to the scan tool user guide.

SCAN TOOL DOES NOT COMMUNICATE WITH CHASSIS HIGH SPEED GMLAN DEVICE

Diagnostic Instructions

- Perform the **Diagnostic System Check - Vehicle** prior to using this diagnostic procedure.
- Review **Strategy Based Diagnosis** for an overview of the diagnostic approach.
- **Diagnostic Procedure Instructions** provides an overview of each diagnostic category.

Diagnostic Fault Information

Circuit	Short to Ground	Open/High Resistance	Short to Voltage	Signal Performance
Chassis High Speed GMLAN Serial Data (+)	1	U0100-U02FF*	1	-
Chassis High Speed GMLAN Serial Data (-)	1	U0100-U02FF*	1	-
Ground (DLC, terminal 5)	-	1	-	-

* No communications with one or more chassis high speed GMLAN devices. An open in only one chassis high speed GMLAN serial data circuit may allow degraded communication between the devices. An open between the data link connector (DLC) and the first splice/device will only affect the communication with the scan tool. The devices will still communicate.
1. No communication with any chassis high speed GMLAN device.

Circuit/System Description

The chassis high speed GMLAN bus functions the same as the primary high speed GMLAN bus, and the two buses operate in parallel. The chassis high speed GMLAN bus is added to reduce message congestion on the primary high speed bus. Since the chassis high speed GMLAN bus and primary high speed GMLAN bus operate in the same manner, the diagnostics for each are the same.

The serial data is transmitted on two twisted wires that allow speeds up to 500 kbit/s. The twisted pair is terminated with two 120 ohms resistors, one is internal to the electronic brake control module and the other can be a separate resistor in a connector assembly or in another device. The resistors are used as the load for the chassis high speed GMLAN bus during normal vehicle operation. The chassis high speed GMLAN is a differential bus. The chassis high speed GMLAN serial data bus (+) and chassis high speed GMLAN serial data (-) are driven to opposite extremes from a rest or idle level of approximately 2.5 V. Driving the lines to their extremes, adds 1 V to the chassis high speed GMLAN serial data bus (+) circuit and subtracts 1 V from the chassis high speed GMLAN serial data bus (-) circuit. If serial data is lost, devices will set a no communication code against the non-communicating device. Note that a loss of serial data DTC does not represent a failure of the device that set it.

Diagnostic Aids

- Sometimes, while diagnosing a specific customer concern or after a repair, you may notice a history U-code present. However, there is no associated "current" or "active" status. Loss-of-communication U-codes such as these can set for a variety of reasons. Many times, they are transparent to the vehicle operator and technician, and/or have no associated symptoms. Eventually, they will erase themselves automatically after a number of fault-free ignition cycles. This condition would most likely be attributed to one of these scenarios:
    - A device on the data communication circuit was disconnected while the communication circuit is awake.
    - Power to one or more devices was interrupted during diagnosis.
    - A low battery condition was present, so some devices stop communicating when battery voltage drops below a certain threshold.
    - Battery power was restored to the vehicle and devices on the communication circuit did not all re-initialize at the same time.
    - If a loss-of-communication U code appears in history for no apparent reason, it is most likely associated with one of the scenarios above. These are all temporary conditions and should never be interpreted as an intermittent fault, causing you to replace a part.
- Do not replace a device reporting a U code. The U code identifies which device needs to be diagnosed for a communication issue.
- Communication may be available between some devices and the scan tool with one or more GMLAN serial data systems inoperative. This condition is due to those devices using multiple serial data communication systems.
- An open in the DLC ground circuit terminal 5 will allow the scan tool to operate but not communicate with the vehicle.
- Technicians may find various Local Area Network (LAN) communication Diagnostic Trouble Codes (DTC).

Reference Information

Schematic Reference

- **Data Communication Schematics**
- **Control Module References**

Connector End View Reference

COMPONENT CONNECTOR END VIEWS - INDEX

Description and Operation

Data Link Communications Description and Operation

Electrical Information Reference

- **Circuit Testing**
- **Connector Repairs**
- **Testing for Intermittent Conditions and Poor Connections**
- **Wiring Repairs**

Scan Tool Reference

Control Module References for scan tool information

Circuit/System Verification

1. Ignition ON.
2. Verify two or more devices are not communicating on the chassis high speed GMLAN serial data circuit. Refer to **Data Link References** to determine how many devices should be communicating on the bus.
    - **If only one device is not communicating**

      Refer to Circuit/System Testing below- Testing the Device Circuits.

    - **If two or more devices are not communicating**
3. Ignition OFF, all access doors closed, all vehicle systems OFF, and all keys at least 3 m (9.8 ft) away from vehicle. Disconnect the scan tool from the X84 Data Link Connector. The following tests will be done at the X84 Data Link Connector. It may take up to 2 minutes for all vehicle systems to power down.
4. Test for less than 10 ohms between the ground circuit terminal 5 and ground.
    - **If 10 ohms or greater**
    1. Ignition OFF.
    2. Test for less than 2 ohms in the ground circuit end to end.
        - If 2 ohms or greater, repair the open/high resistance in the circuit.
        - If less than 2 ohms, repair the open/high resistance in the ground connection.
    - **If less than 10 ohms**

5. Ignition ON.
6. Test for less than 4.5 V between the serial data circuits listed below and ground.
    - Terminal 12
    - Terminal 13
    - **If 4.5 V or greater**

      Refer to Circuit/System Testing below- Testing the Serial Data Circuits for a Short to Voltage.

    - **If less than 4.5 V**
7. Ignition OFF, all access doors closed, all vehicle systems OFF, and all keys at least 3 m (9.8 ft) away from vehicle. It may take up to 2 minutes for all vehicle systems to power down.
8. Test for greater than 100 ohms between the serial data circuits listed below and ground.
    - Terminal 12
    - Terminal 13
    - **If 100 ohms or less**

      Refer to Circuit/System Testing below- Testing the Serial Data Circuits for a Short to Ground.

    - **If greater than 100 ohms**
9. Test for 50-70 ohms between the serial data circuit terminals 12 and 13.
    - **If less than 35 ohms**

      Refer to Circuit/System Testing below- Testing the Serial Data Circuits for a Short between the Circuits.

    - **If between 35-50 ohms**

      There may be a third terminating resistor between the serial data circuits. This can happen if the incorrect device is installed. Some devices are available with and without the terminating resistors installed to reduce the need of terminating resistors in the wiring harness. Refer to Circuit/System Testing below- Testing the Serial Data Circuits for a Short between the Circuits.

    - **If greater than 70 ohms but less than infinite**

      Refer to Circuit/System Testing below- Testing the Serial Data Circuits for an Open/High Resistance.

    - **If infinite resistance**

      Repair the open/high resistance in the circuit between the X84 Data Link Connector and the first splice/device in the serial data circuit.

    - **If between 50-70 ohms**
10. Refer to Circuit/System Testing below- Testing the Device Circuits.

Circuit/System Testing

NOTE: **Each device may need to be disconnected to isolate a circuit fault.**

Use the schematic to identify the following:

- **Chassis high speed GMLAN devices the vehicle is equipped with**
- **Chassis high speed GMLAN serial data circuit terminating resistors**
- **Device locations on the chassis high speed GMLAN serial data circuits**
- **Each device's ground, B+, ignition, and chassis high speed GMLAN serial data circuit terminals**

Some devices with an internal terminating resistor have a loop in the harness that connects the internal terminating resistor to the serial data circuit. When wired this way, test these loop circuits for the appropriate failure mode short to voltage, short to ground, or open/high resistance prior to replacing the device for each of the following tests.

Testing the Serial Data Circuits for a Short to Voltage

1. Ignition OFF, disconnect the harness connectors with the chassis high speed GMLAN serial data circuits at an easily accessible device, ignition ON.
2. Test for greater than 4.5 V between each serial data circuit at the device connector that was just disconnected and ground.
   - **If each serial data circuit is 4.5 V or less**
     1. Ignition OFF.
     2. Test for less than 10 ohms between each of the device's ground circuit terminals and ground.
        - If 10 ohms or greater, repair the open/high resistance in the circuit.
        - If less than 10 ohms, replace the device that was disconnected.
   - **If any serial data circuit is greater than 4.5 V**
3. Ignition OFF, disconnect the harness connectors with the chassis high speed GMLAN serial data circuits at another device, in the direction of the circuit shorted to voltage, ignition ON.
4. Test for greater than 4.5 V between each serial data circuit at the device connector that was just disconnected and ground.
   - **If each serial data circuit is 4.5 V or less**
     1. Ignition OFF.
     2. Test for less than 10 ohms between each of the device's ground circuit terminals and ground.
        - If 10 ohms or greater, repair the open/high resistance in the circuit.
        - If less than 10 ohms, replace the device that was disconnected.
   - **If any serial data circuit is greater than 4.5 V**
5. Repeat step 3 until one of the following conditions are isolated:
   - A short to voltage on the serial data circuit between two devices or splice packs, if equipped.

- A short to voltage on the serial data circuit between a device and a terminating resistor.

Testing the Serial Data Circuits for a Short to Ground

1. Ignition OFF, all access doors closed, all vehicle systems OFF, and all keys at least 3 m (9.8 ft) away from vehicle. It may take up to 2 minutes for all vehicle systems to power down.
2. Disconnect the harness connectors with the chassis high speed GMLAN serial data circuits at an easily accessible device.
3. Test for greater than 100 ohms between each serial data circuit at the device connector that was just disconnected and ground.
   - **If each serial data circuit is 100 ohms or greater**

     Replace the device that was disconnected.

   - **If any serial data circuit is less than 100 ohms**
4. Disconnect the harness connectors with the chassis high speed GMLAN serial data circuits at another device, in the direction of the circuit shorted to ground.
5. Test for greater than 100 ohms between each serial data circuit at the device connector that was just disconnected and ground.
   - **If both serial data circuits are 100 ohms or greater**

     Replace the device that was disconnected.

   - **If any serial data circuit is less than 100 ohms**
6. Repeat step 4 until one of the following conditions are isolated:
   - A short to ground on the serial data circuit between two devices or splice packs, if equipped.
   - A short to ground on the serial data circuit between a device and a terminating resistor.
   - A short to ground on the serial data circuit between the X84 Data Link Connector and the first device or splice pack.

Testing the Serial Data Circuits for a Short between the Circuits

1. Ignition OFF, all access doors closed, all vehicle systems OFF, and all keys at least 3 m (9.8 ft) away from vehicle. It may take up to 2 minutes for all vehicle systems to power down.
2. Disconnect the harness connectors with the chassis high speed GMLAN serial data circuits at an easily accessible device that is not communicating.
3. Test for greater than 110 ohms between each pair of serial data circuits at the device connector that was just disconnected.
   - **If each pair of serial data circuits is 110 ohms or greater**

     Replace the device that was disconnected.

   - **If any pair of serial data circuits is less than 110 ohms**

4. Connect the harness connectors at the device that was disconnected.
5. Disconnect the harness connectors with the chassis high speed GMLAN serial data circuits at another device, in the direction of the circuit shorted together.
6. Test for greater than 110 ohms between each pair of serial data circuits at the device connector that was just disconnected.
    - **If each pair of serial data circuits is 110 ohms or greater**

      Replace the device that was disconnected.

    - **If any pair of serial data circuits is less than 110 ohms**
7. Repeat step 4 until one of the following conditions are isolated:
    - Serial data circuits shorted together between two devices or splice packs, if equipped.
    - Serial data circuits shorted together between a device and a terminating resistor.
    - Serial data circuits shorted together between the X84 Data Link Connector and the first device or splice pack.
    - A shorted terminating resistor.

Testing the Serial Data Circuits for an Open/High Resistance

1. Ignition OFF, all access doors closed, all vehicle systems OFF, and all keys at least 3 m (9.8 ft) away from vehicle. It may take up to 2 minutes for all vehicle systems to power down.
2. Disconnect the harness connectors with the chassis high speed GMLAN serial data circuits at an easily accessible device that is not communicating.
3. Test for less than 130 ohms between each pair of serial data circuits at the device connector that was just disconnected.
    - **If each pair of serial data circuit is 130 ohms or less**

      Replace the device that was disconnected.

    - **If any pair of serial data circuits is greater than 130 ohms**
4. Connect the harness connectors at the device that was disconnected.
5. Disconnect the harness connectors with the chassis high speed GMLAN serial data circuits at another device, in the direction of the circuit with the open/high resistance.
6. Test for less than 130 ohms between each pair of serial data circuits at the device connector that was just disconnected.
    - **If each pair of serial data circuits is 130 ohms or less**

      Replace the device that was disconnected.

    - **If any pair of serial data circuits is greater than 130 ohms**
7. Repeat step 4 until one of the following conditions are isolated:
    - An open/high resistance on the serial data circuit between two devices or splice packs, if equipped.

- An open/high resistance on the serial data circuit between a device and a terminating resistor.
- An open/high resistance terminating resistor.

Testing the Device Circuits

1. Ignition OFF, all access doors closed, all vehicle systems OFF, and all keys at least 3 m (9.8 ft) away from vehicle. It may take up to 2 minutes for all vehicle systems to power down.
2. Disconnect the harness connectors at an easily accessible device that is not communicating.
3. Test for less than 10 ohms between each ground circuit terminal and ground.
   - **If 10 ohms or greater**
   1. Ignition OFF.
   2. Test for less than 2 ohms in the ground circuit end to end.
      - If 2 ohms or greater, repair the open/high resistance in the circuit.
      - If less than 2 ohms, repair the open/high resistance in the ground connection.
   - **If less than 10 ohms**
4. If equipped, verify a test lamp illuminates between each B+ circuit terminal and ground.
   - **If the test lamp does not illuminate and the circuit fuse is good**
   1. Ignition OFF.
   2. Test for less than 2 ohms in the B+ circuit end to end.
      - If 2 ohms or greater, repair the open/high resistance in the circuit.
      - If less than 2 ohms, verify the fuse is not open and there is voltage at the fuse.
   - **If the test lamp does not illuminate and the circuit fuse is open**
   1. Ignition OFF.
   2. Test for infinite resistance between the B+ circuit and ground.
      - If less than infinite resistance, repair the short to ground on the circuit.
      - If infinite resistance, replace the disconnected device.
   - **If the test lamp illuminates**
5. Ignition ON.
6. If equipped, verify a test lamp illuminates between each ignition circuit terminal, which has a fuse in the circuit, and ground.
   - **If the test lamp does not illuminate and the circuit fuse is good**
   1. Ignition OFF.
   2. Test for less than 2 ohms in the ignition circuit end to end.
      - If 2 ohms or greater, repair the open/high resistance in the circuit.
      - If less than 2 ohms, verify the fuse is OK and there is voltage at the fuse.
   - **If the test lamp does not illuminate and the circuit fuse is open**
   1. Ignition OFF.
   2. Test for infinite resistance between the ignition circuit and ground.
      - If less than infinite resistance, repair the short to ground on the circuit.

- If infinite resistance, replace the disconnected device.
- **If the test lamp illuminates**

7. If equipped, verify a test lamp illuminates between each ignition circuit terminal, which is controlled by a control module, and ground.
   - **If the test lamp does not illuminate**
   1. Ignition OFF, disconnect the harness connectors at the control module that controls the ignition circuit.
   2. Test for infinite resistance between the ignition circuit and ground.
      - If less than infinite resistance, repair the short to ground on the circuit.
      - If infinite resistance
   3. Test for less than 2 ohms in the ignition circuit end to end.
      - If 2 ohms or greater, repair the open/high resistance in the circuit.
      - If less than 2 ohms, replace the control module that controls the ignition circuit.
   - **If the test lamp illuminates**
8. Ignition OFF, all access doors closed, all vehicle systems OFF, and all keys at least 3 m (9.8 ft) away from vehicle. It may take up to 2 minutes for all vehicle systems to power down.
9. Test for less than 130 ohms between each pair of chassis high speed GMLAN serial data circuits at the device connector that was just disconnected.
   - **If any pair of serial data circuits is greater than 130 ohms**

     Repair the open/high resistance in the serial data circuits between the disconnected device and the circuit splice in the serial data circuits.

   - **If each pair of serial data circuits is 130 ohms or less**
10. Replace the device that was disconnected.

Repair Instructions

Perform the **Diagnostic Repair Verification** after completing the repair.

- **GMLAN and Media Oriented Systems Transport (MOST) Wiring Repairs**
- **Control Module References** for device replacement, programming and setup

SCAN TOOL DOES NOT COMMUNICATE WITH HIGH SPEED GMLAN DEVICE

Diagnostic Instructions

- Perform the **Diagnostic System Check - Vehicle** prior to using this diagnostic procedure.
- Review **Strategy Based Diagnosis** for an overview of the diagnostic approach.
- **Diagnostic Procedure Instructions** provides an overview of each diagnostic category.

Diagnostic Fault Information

Circuit	Short to Ground	Open/High Resistance	Short to Voltage	Signal Performance
High Speed GMLAN Serial Data (+)	1	U0100-U02FF*	1	-
High Speed GMLAN Serial Data (-)	1	U0100-U02FF*	1	-
Ground (DLC, terminal 5)	-	1	-	-
* No communications with one or more high speed GMLAN devices. An open in only one high speed GMLAN serial data circuit may allow degraded communication between the devices. An open between the data link connector (DLC) and the first splice/device will only affect the communication with the scan tool. The devices will still communicate. 1. No communication with any high speed GMLAN device				

Circuit/System Description

The serial data is transmitted on two twisted wires that allow speeds up to 500 Kb/s. The twisted pair is terminated with two 120 ohms resistors, one is internal to the engine control module (ECM) and the other can be a separate resistor in a connector assembly or in another device. The resistors are used as the load for the High Speed GMLAN bus during normal vehicle operation. The high speed GMLAN is a differential bus. The high speed GMLAN serial data bus (+) and high speed GMLAN serial data (-) are driven to opposite extremes from a rest or idle level of approximately 2.5 V. Driving the lines to their extremes, adds 1 V to the high speed GMLAN serial data bus (+) circuit and subtracts 1 V from the high speed GMLAN serial data bus (-) circuit. If serial data is lost, devices will set a no communication code against the non-communicating device. Note that a loss of serial data DTC does not represent a failure of the device that set it.

Diagnostic Aids

- Sometimes, while diagnosing a specific customer concern or after a repair, you may notice a history U-code present. However, there is no associated "current" or "active" status. Loss-of-communication U-codes such as these can set for a variety of reasons. Many times, they are transparent to the vehicle operator and technician, and/or have no associated symptoms. Eventually, they will erase themselves automatically after a number of fault-free ignition cycles. This condition would most likely be attributed to one of these scenarios:
  - A device on the data communication circuit was disconnected while the communication circuit is awake.
  - Power to one or more devices was interrupted during diagnosis.
  - A low battery condition was present, so some devices stop communicating when battery voltage drops below a certain threshold.
  - Battery power was restored to the vehicle and devices on the communication circuit did not all re-initialize at the same time.
  - If a loss-of-communication U-code appears in history for no apparent reason, it is most likely associated with one of the scenarios above. These are all temporary conditions and should never be interpreted as an intermittent fault, causing you to replace a part.
- Do not replace a device reporting a U code. The U code identifies which device needs to be diagnosed for a communication issue.

- Communication may be available between some devices and the scan tool with the high speed GMLAN serial data system inoperative. This condition is due to those devices using multiple serial data communication systems.
- An open in the DLC ground circuit terminal 5 will allow the scan tool to operate but not communicate with the vehicle.
- The engine will not start when there is a total malfunction of the high speed GMLAN serial data bus.
- Technicians may find various Local Area Network (LAN) communication Diagnostic Trouble Codes (DTC) and no low speed GMLAN communications with the scan tool.
- These conditions may be caused by the installation of an aftermarket navigation radio module (see bulletins). Some customers may comment of one or more of the following concerns:
  - Vehicle will not crank
  - Vehicle cranks but will not start
  - Vehicle stability enhancement system warning lights and messages
  - PRNDL gear indicator position errors

Reference Information

Schematic Reference

- **Data Communication Schematics**
- **Control Module References**

Connector End View Reference

COMPONENT CONNECTOR END VIEWS - INDEX

Description and Operation

Data Link Communications Description and Operation

Electrical Information Reference

- **Circuit Testing**
- **Connector Repairs**
- **Testing for Intermittent Conditions and Poor Connections**
- **Wiring Repairs**

Scan Tool Reference

Control Module References for scan tool information

Circuit/System Verification

1. Ignition ON.

2. Verify two or more devices are not communicating on the high speed GMLAN serial data circuit. Refer to **Data Link References** to determine how many devices should be communicating on the bus.
    - **If only one device is not communicating**

      Refer to Circuit/System Testing below- Testing the Device Circuits.

    - **If two or more devices are not communicating**
3. Ignition OFF, all access doors closed, all vehicle systems OFF, and all keys at least 3 meters (9.8 feet) away from vehicle. Disconnect the scan tool from the X84 data link connector. The following tests will be done at the X84 data link connector. It may take up to 2 minutes for all vehicle systems to power down.
4. Test for less than 10 ohms between the ground circuit terminal 5 and ground.
    - **If 10 ohms or greater**
    1. Ignition OFF.
    2. Test for less than 2 ohms in the ground circuit end to end.
        - If 2 ohms or greater, repair the open/high resistance in the circuit.
        - If less than 2 ohms, repair the open/high resistance in the ground connection.
    - **If less than 10 ohms**
5. Ignition ON.
6. Test for less than 4.5 V between the serial data circuits listed below and ground.
    - Terminal 6
    - Terminal 14
    - **If 4.5 V or greater**

      Refer to Circuit/System Testing below- Testing the Serial Data Circuits for a Short to Voltage.

    - **If less than 4.5 V**
7. Ignition OFF, all access doors closed, all vehicle systems OFF, and all keys at least 3 meters (9.8 feet) away from vehicle. It may take up to 2 minutes for all vehicle systems to power down.
8. Test for greater than 100 ohms between the serial data circuits listed below and ground.
    - Terminal 6
    - Terminal 14
    - **If 100 ohms or less**

      Refer to Circuit/System Testing below- Testing the Serial Data Circuits for a Short to Ground.

    - **If greater than 100 ohms**
9. Test for 50-70 ohms between the serial data circuit terminals 6 and 14.
    - **If less than 35 ohms**

      Refer to Circuit/System Testing below- Testing the Serial Data Circuits for a Short between the Circuits.

- **If between 35-50 ohms**

  There may be a third terminating resistor between the serial data circuits. This can happen if the incorrect device is installed. Some devices are available with and without the terminating resistors installed to reduce the need of terminating resistors in the wiring harness. Refer to Circuit/System Testing below- Testing the Serial Data Circuits for a Short between the Circuits.

- **If greater than 70 ohms but less than infinite**

  Refer to Circuit/System Testing below- Testing the Serial Data Circuits for an Open/High Resistance.

- **If infinite resistance**

  Repair the open/high resistance in the circuit between the X84 data link connector and the first splice/device in the serial data circuit.

- **If between 50-70 ohms**

10. Refer to Circuit/System Testing below- Testing the Device Circuits.

Circuit/System Testing

NOTE: Each device may need to be disconnected to isolate a circuit fault.

Use the schematic to identify the following:

- **High speed GMLAN devices the vehicle is equipped with**
- **High speed GMLAN serial data circuit terminating resistors**
- **Device locations on the high speed GMLAN serial data circuits**
- **Each device's ground, B+, ignition, and high speed GMLAN serial data circuit terminals**

Some devices with an internal terminating resistor have a loop in the harness that connects the internal terminating resistor to the serial data circuit. When wired this way, test these loop circuits for the appropriate failure mode short to voltage, short to ground, or open/high resistance prior to replacing the device for each of the following tests.

Testing the Serial Data Circuits for a Short to Voltage

1. Ignition OFF, disconnect the harness connectors with the high speed GMLAN serial data circuits at an easily accessible device, ignition ON.
2. Test for greater than 4.5 V between each serial data circuit at the device connector that was just disconnected and ground.
   - **If each serial data circuit is 4.5 V or less**

1. Ignition OFF.
2. Test for less than 10 ohms between each of the device's ground circuit terminals and ground.
    - If 10 ohms or greater, repair the open/high resistance in the circuit.
    - If less than 10 ohms, replace the device that was disconnected.

- **If any serial data circuit is greater than 4.5 V**

3. Ignition OFF, disconnect the harness connectors with the high speed GMLAN serial data circuits at another device, in the direction of the circuit shorted to voltage, ignition ON.
4. Test for greater than 4.5 V between each serial data circuit at the device connector that was just disconnected and ground.
    - **If each serial data circuit is 4.5 V or less**

    1. Ignition OFF.
    2. Test for less than 10 ohms between each of the device's ground circuit terminals and ground.
        - If 10 ohms or greater, repair the open/high resistance in the circuit.
        - If less than 10 ohms, replace the device that was disconnected.

    - **If any serial data circuit is greater than 4.5 V**

5. Repeat step 3 until one of the following conditions are isolated:
    - A short to voltage on the serial data circuit between two devices or splice packs, if equipped.
    - A short to voltage on the serial data circuit between a device and a terminating resistor.

Testing the Serial Data Circuits for a Short to Ground

1. Ignition OFF, all access doors closed, all vehicle systems OFF, and all keys at least 3 meters (9.8 feet) away from vehicle. It may take up to 2 minutes for all vehicle systems to power down.
2. Disconnect the harness connectors with the high speed GMLAN serial data circuits at an easily accessible device.
3. Test for greater than 100 ohms between each serial data circuit at the device connector that was just disconnected and ground.
    - **If each serial data circuit is 100 ohms or greater**

      Replace the device that was disconnected.

    - **If any serial data circuit is less than 100 ohms**

4. Disconnect the harness connectors with the high speed GMLAN serial data circuits at another device, in the direction of the circuit shorted to ground.
5. Test for greater than 100 ohms between each serial data circuit at the device connector that was just disconnected and ground.
    - **If both serial data circuits are 100 ohms or greater**

      Replace the device that was disconnected.

    - **If any serial data circuit is less than 100 ohms**

6. Repeat step 4 until one of the following conditions are isolated:
    - A short to ground on the serial data circuit between two devices or splice packs, if equipped.
    - A short to ground on the serial data circuit between a device and a terminating resistor.
    - A short to ground on the serial data circuit between the X84 data link connector and the first device or splice pack.

Testing the Serial Data Circuits for a Short between the Circuits

1. Ignition OFF, all access doors closed, all vehicle systems OFF, and all keys at least 3 meters (9.8 feet) away from vehicle. It may take up to 2 minutes for all vehicle systems to power down.
2. Disconnect the harness connectors with the high speed GMLAN serial data circuits at an easily accessible device that is not communicating.
3. Test for greater than 110 ohms between each pair of serial data circuits at the device connector that was just disconnected.
    - **If each pair of serial data circuits is 110 ohms or greater**

      Replace the device that was disconnected.

    - **If any pair of serial data circuits is less than 110 ohms**
4. Connect the harness connectors at the device that was disconnected.
5. Disconnect the harness connectors with the high speed GMLAN serial data circuits at another device, in the direction of the circuit shorted together.
6. Test for greater than 110 ohms between each pair of serial data circuits at the device connector that was just disconnected.
    - **If each pair of serial data circuits is 110 ohms or greater**

      Replace the device that was disconnected.

    - **If any pair of serial data circuits is less than 110 ohms**
7. Repeat step 4 until one of the following conditions are isolated:
    - Serial data circuits shorted together between two devices or splice packs, if equipped.
    - Serial data circuits shorted together between a device and a terminating resistor.
    - Serial data circuits shorted together between the X84 data link connector and the first device or splice pack.
    - A shorted terminating resistor.

Testing the Serial Data Circuits for an Open/High Resistance

1. Ignition OFF, all access doors closed, all vehicle systems OFF, and all keys at least 3 meters (9.8 feet) away from vehicle. It may take up to 2 minutes for all vehicle systems to power down.
2. Disconnect the harness connectors with the high speed GMLAN serial data circuits at an easily accessible device that is not communicating.
3. Test for less than 130 ohms between each pair of serial data circuits at the device connector that was just

disconnected.

- **If each pair of serial data circuits is 130 ohms or less**

  Replace the device that was disconnected.

- **If any pair of serial data circuits is greater than 130 ohms**

4. Connect the harness connectors at the device that was disconnected.
5. Disconnect the harness connectors with the high speed GMLAN serial data circuits at another device, in the direction of the circuit with the open/high resistance.
6. Test for less than 130 ohms between each pair of serial data circuits at the device connector that was just disconnected.
   - **If each pair of serial data circuits is 130 ohms or less**

     Replace the device that was disconnected.

   - **If any pair of serial data circuits is greater than 130 ohms**
7. Repeat step 4 until one of the following conditions are isolated:
   - An open/high resistance on the serial data circuit between two devices or splice packs, if equipped.
   - An open/high resistance on the serial data circuit between a device and a terminating resistor.
   - An open/high resistance terminating resistor.

Testing the Device Circuits

1. Ignition OFF, all access doors closed, all vehicle systems OFF, and all keys at least 3 meters (9.8 feet) away from vehicle. It may take up to 2 minutes for all vehicle systems to power down.
2. Disconnect the harness connectors at an easily accessible device that is not communicating.
3. Test for less than 10 ohms between each ground circuit terminal and ground.
   - **If 10 ohms or greater**
   1. Ignition OFF.
   2. Test for less than 2 ohms in the ground circuit end to end.
      - If 2 ohms or greater, repair the open/high resistance in the circuit.
      - If less than 2 ohms, repair the open/high resistance in the ground connection.
   - **If less than 10 ohms**
4. If equipped, verify a test lamp illuminates between each B+ circuit terminal and ground.
   - **If the test lamp does not illuminate and the circuit fuse is good**
   1. Ignition OFF.
   2. Test for less than 2 ohms in the B+ circuit end to end.
      - If 2 ohms or greater, repair the open/high resistance in the circuit.
      - If less than 2 ohms, verify the fuse is not open and there is voltage at the fuse.
   - **If the test lamp does not illuminate and the circuit fuse is open**
   1. Ignition OFF.

2. Test for infinite resistance between the B+ circuit and ground.
    - If less than infinite resistance, repair the short to ground on the circuit.
    - If infinite resistance, replace the disconnected device.

- **If the test lamp illuminates**

5. Ignition ON.
6. If equipped, verify a test lamp illuminates between each ignition circuit terminal, which has a fuse in the circuit, and ground.
    - **If the test lamp does not illuminate and the circuit fuse is good**

    1. Ignition OFF.
    2. Test for less than 2 ohms in the ignition circuit end to end.
        - If 2 ohms or greater, repair the open/high resistance in the circuit.
        - If less than 2 ohms, verify the fuse is OK and there is voltage at the fuse.

    - **If the test lamp does not illuminate and the circuit fuse is open**

    1. Ignition OFF.
    2. Test for infinite resistance between the ignition circuit and ground.
        - If less than infinite resistance, repair the short to ground on the circuit.
        - If infinite resistance, replace the disconnected device.

    - **If the test lamp illuminates**

7. If equipped, verify a test lamp illuminates between each ignition circuit terminal, which is controlled by a control module, and ground.
    - **If the test lamp does not illuminate**

    1. Ignition OFF, disconnect the harness connectors at the control module that controls the ignition circuit.
    2. Test for infinite resistance between the ignition circuit and ground.
        - If less than infinite resistance, repair the short to ground on the circuit.
        - If infinite resistance
    3. Test for less than 2 ohms in the ignition circuit end to end.
        - If 2 ohms or greater, repair the open/high resistance in the circuit.
        - If less than 2 ohms, replace the control module that controls the ignition circuit.

    - **If the test lamp illuminates**

8. Ignition OFF, all access doors closed, all vehicle systems OFF, and all keys at least 3 meters (9.8 feet) away from vehicle. It may take up to 2 minutes for all vehicle systems to power down.
9. Test for less than 130 ohms between each pair of high speed GMLAN serial data circuits at the device connector that was just disconnected.
    - **If any pair of serial data circuits is greater than 130 ohms**

      Repair the open/high resistance in the serial data circuits between the disconnected device and the circuit splice in the serial data circuits.

    - **If each pair of serial data circuits is 130 ohms or less**

10. Replace the device that was disconnected.

Repair Instructions

Perform the **Diagnostic Repair Verification** after completing the repair.

- **GMLAN and Media Oriented Systems Transport (MOST) Wiring Repairs**
- **Control Module References** for device replacement, programming and setup

SCAN TOOL DOES NOT COMMUNICATE WITH LOW SPEED GMLAN DEVICE

Diagnostic Instructions

- Perform the **Diagnostic System Check - Vehicle** prior to using this diagnostic procedure.
- Review **Strategy Based Diagnosis** for an overview of the diagnostic approach.
- **Diagnostic Procedure Instructions** provides an overview of each diagnostic category.

Diagnostic Fault Information

Circuit	Short to Ground	Open/High Resistance	Short to Voltage	Signal Performance
Low Speed GMLAN Serial Data	1	U0100-U02FF*	1	-
Ground (DLC, terminal 5)	-	1*	-	-
* An open between the data link connector (DLC) and the first splice pack/device will only affect the communication with the scan tool. 1. No communication with any low speed GMLAN device				

Circuit/System Description

The serial data is transmitted over a single wire to the appropriate devices. The transmission speed for GMLAN low speed is up to 83.33 kbit/s. Under normal vehicle operating conditions, the speed of the bus is 33.33 kbit/s. The devices toggle the serial data circuit between 0-5 V during normal communications. To wake the devices connected to the low speed GMLAN serial data circuit, a voltage wake up pulse of 10 V is sent out. If serial data is lost, devices will set a no communication code against the non-communicating device. A loss of serial data communications DTC does not represent a failure of the device that set it.

Diagnostic Aids

- Sometimes, while diagnosing a specific customer concern or after a repair, you may notice a history U-code present. However, there is no associated "current" or "active" status. Loss-of- communication U-codes such as these can set for a variety of reasons. Many times, they are transparent to the vehicle operator and technician, and/or have no associated symptoms. Eventually, they will erase themselves automatically after a number of fault-free ignition cycles. This condition would most likely be attributed to one of these scenarios:
  - A device on the data communication circuit was disconnected while the communication circuit is awake.

  - Power to one or more devices was interrupted during diagnosis
  - A low battery condition was present, so some devices stop communicating when battery voltage drops below a certain threshold.
  - Battery power was restored to the vehicle and devices on the communication circuit did not all re-initialize at the same time.
  - If a loss-of-communication U-code appears in history for no apparent reason, it is most likely associated with one of the scenarios above. These are all temporary conditions and should never be interpreted as an intermittent fault, causing you to replace a part.
- Do not replace a device reporting a U-code. The U-code identifies which device needs to be diagnosed for a communication issue.
- Communication may be available between the device and the scan tool with the low speed GMLAN serial data system inoperative. This condition is due to the device using both the high and low speed GMLAN systems.
- An open in the low speed GMLAN serial data circuit between the splice pack and a device will only affect that specific device. This type of failure will set a loss of communication DTC for each device affected, and the other devices will still communicate.
- An open in the data link connector (DLC) ground circuit terminal 5 will allow the scan tool to operate but not communicate with the vehicle.
- The engine may not start when there is a total malfunction of the low speed GMLAN serial data circuit.
- Technicians may find various Local Area Network (LAN) communication Diagnostic Trouble Codes (DTC) and no low speed LAN communications with the scan tool.
- These conditions may be caused by the installation of an aftermarket navigation radio device (see bulletins). Some customers may comment of one or more of the following concerns:
  - Vehicle will not crank
  - Vehicle cranks but will not start
  - Vehicle stability enhancement system warning lights and messages
  - PRNDL gear indicator position errors

Reference Information

Schematic Reference

- **Data Communication Schematics**
- **Control Module References**

Connector End View Reference

COMPONENT CONNECTOR END VIEWS - INDEX

Description and Operation

Data Link Communications Description and Operation

Electrical Information Reference

- **Circuit Testing**
- **Connector Repairs**
- **Testing for Intermittent Conditions and Poor Connections**
- **Wiring Repairs**

Scan Tool Reference

Control Module References for scan tool information

Circuit/System Verification

NOTE: Use the schematic to identify the following:

- **Devices the vehicle is equipped with**
- **Device and splice pack locations on the low speed GMLAN serial data circuit**
- **The low speed GMLAN serial data circuit terminals for each device or splice pack**

1. Attempt to communicate with all devices on the low speed GMLAN serial data circuit. Refer to **Data Link References**.
2. Verify which devices are communicating on the low speed GMLAN serial data circuit.
   - **If only one device is not communicating**

     Diagnose that device only. Refer to **DTC U0100-U02FF**.

   - **If one or more devices are communicating but not all**

     Refer to Circuit/System Testing below- Testing the Serial Data Circuit for an Open/High Resistance.

   - **If none of the devices are communicating**
3. Ignition OFF, all access doors closed, all vehicle systems OFF, all keys at least 3 m (9.8 ft) away from vehicle. Disconnect the scan tool from the X84 Data Link Connector. The following tests will be done at the X84 Data Link Connector. It may take up to 2 minutes for all vehicle systems to power down.
4. Test for less than 10 ohms between the ground circuit terminal 5 and ground.
   - **If 10 ohms or greater**
   1. Ignition OFF.
   2. Test for less than 2 ohms in the ground circuit end to end.
      - If 2 ohms or greater, repair the open/high resistance in the circuit.
      - If less than 2 ohms, repair the open/high resistance in the ground connection.

- **If less than 10 ohms**

5. Ignition ON.
6. Test for less than 4.5 V between the serial data circuit terminal 1 and ground.
   - **If 4.5 V or greater**

     Refer to Circuit/System Testing below- Testing the Serial Data Circuits for a Short to Voltage.

   - **If less than 4.5 V**
7. Ignition OFF, all access doors closed, all vehicle systems OFF, all keys at least 3 m (9.8 ft) away from vehicle. It may take up to 2 minutes for all vehicle systems to power down.
8. Test for greater than 100 ohms between the serial data circuit terminal 1 and ground.
   - **If 100 ohms or less**

     Refer to Circuit/System Testing below- Testing the Serial Data Circuits for a Short to Ground.

   - **If greater than 100 ohms**
9. Disconnect the appropriate harness connector at the first splice pack closest in the circuit to the X84 Data Link Connector.
10. Test for less than 2 ohms between the X84 Data Link Connector's serial data circuit terminal 1 and the splice pack harness connector's serial data input terminal.
    - **If 2 ohms or greater**

      Repair the open/high resistance in the serial data circuit.

    - **If less than 2 ohms**
11. Replace the splice pack.

Circuit/System Testing

Testing the Serial Data Circuits for a Short to Voltage

1. Ignition OFF, disconnect the appropriate harness connectors at all low speed GMLAN serial data splice packs, ignition ON.
2. Test for less than 4.5 V between the serial data circuit terminal 1 at the X84 Data Link Connector and ground.
   - **If 4.5 V or greater**

     Repair the short to voltage on the serial data circuit.

   - **If less than 4.5 V**
3. Test for less than 4.5 V between each low speed GMLAN serial data circuit at a splice pack and ground.
   - **If any serial data circuit is greater than 4.5 V**
   1. Ignition OFF, disconnect all devices on the failed serial data circuit, ignition ON.

2. Test for less than 1 V between each section of the failed serial data circuit and ground.
    - If 1 V or greater, repair the short to voltage in the circuit.
    - If less than 1 V
3. Connect the splice pack and connect the first device on the failed serial data circuit, ignition ON.
4. Verify the scan tool communicates or not with the low speed GMLAN serial data circuit.
    - If the scan tool does not communicate, replace the device that was just connected.
    - If the scan tool communicates and there are more devices to connect, connect the next device and repeat step 3.4.
    - If the scan tool communicates and there are no more devices to connect
5. All OK.

- **If all serial data circuits are less than 4.5 V**

4. All OK.

Testing the Serial Data Circuits for a Short to Ground

1. Ignition OFF, all access doors closed, all vehicle systems OFF, and all keys at least 3 m (9.8 ft) away from vehicle. Disconnect the appropriate harness connectors at all low speed GMLAN serial data splice packs.
2. Test for infinite resistance between the serial data circuit terminal 1 at the X84 Data Link Connector and ground.
    - **If less than infinite resistance**

      Repair the short to ground on the serial data circuit.

    - **If infinite resistance**
3. Test for greater than 100 ohms between each low speed GMLAN serial data circuit at a splice pack and ground.
    - **If any serial data circuit is 100 ohms or less**
    1. Disconnect all devices on the failed serial data circuit.
    2. Test for greater than 2 ohms between each section of the failed serial data circuit and ground.
        - If 2 ohms or less, repair the short to ground in the circuit.
        - If greater than 2 ohms
    3. Connect the splice pack and connect the first device on the failed serial data circuit, ignition ON.
    4. Verify the scan tool communicates or not with the low speed GMLAN serial data circuit.
        - If the scan tool does not communicate, replace the device that was just connected.
        - If the scan tool communicates and there are more devices to connect, connect the next device and repeat step 3.4.
        - If the scan tool communicates and there are no more devices to connect
    5. All OK.
    - **If all serial data circuits are greater than 100 ohms**

4. All OK.

Testing the Serial Data Circuit for an Open/High Resistance

1. Ignition OFF and all vehicle systems OFF, disconnect the splice pack containing the devices that are not communicating on the low speed GMLAN serial data circuit.
2. Test for less than 2 ohms between the X84 Data Link Connector terminal 1 and the disconnected splice pack.
   - **If 2 ohms or greater**

     Repair the open/high resistance in the serial data circuit.

   - **If less than 2 ohms**
3. Disconnect all devices on the failed serial data circuit.
4. Test for less than 2 ohms between each section of the failed serial data circuit end to end.
   - **If 2 ohms or greater**

     Repair the open/high resistance in the serial data circuit.

   - **If less than 2 ohms**
5. Connect the splice pack and connect the first device on the failed serial data circuit.
6. Verify if the device communicates or not with the scan tool.
   - **If the device does not communicates**

     Replace the device.

   - **If the device communicates and there are more devices to connect**

     Connect the next device on the failed serial data circuit and repeat step 6.

   - **If all devices are connected and communicating**
7. All OK.

Repair Instructions

Perform the **Diagnostic Repair Verification** after completing the repair.

- **GMLAN and Media Oriented Systems Transport (MOST) Wiring Repairs**
- **Control Module References** for device replacement, programming and setup

DATA LINK REFERENCES

This table identifies which serial data link that a particular device uses for in-vehicle data transmission. Some devices may use more than one data link to communicate. Some devices may have multiple communication

circuits passing through them without actively communicating on that data link. This table is used to assist in correcting a communication malfunction. Not all devices listed will be applicable to all vehicles. Refer to the schematics to determine which devices apply. For the description and operation of these serial data communication circuits, refer to **Data Link Communications Description and Operation**.

Data Link References

Code	Device	Data Link Type	Diagnostic Procedure
Schematic Reference: Data Communication Schematics			
A11	Radio	Low Speed GMLAN	**Scan Tool Does Not Communicate with Low Speed GMLAN Device**
A22	Radio Controls	Local Interconnect Network (LIN)	**DTC U1500-U15FF**
B99	Steering Wheel Angle Sensor	Chassis High Speed GMLAN	**Scan Tool Does Not Communicate with Chassis High Speed GMLAN Device**
B119	Multi-axis Acceleration Sensor	Chassis High Speed GMLAN	**Scan Tool Does Not Communicate with Chassis High Speed GMLAN Device**
K9	Body Control Module	• High Speed GMLAN • Low Speed GMLAN • Local Interconnect Network (LIN)	• **Scan Tool Does Not Communicate with High Speed GMLAN Device** • **Scan Tool Does Not Communicate with Low Speed GMLAN Device** • **DTC U1500-U15FF**
K17	Electronic Brake Control Module	• High Speed GMLAN • Chassis High Speed GMLAN	• **Scan Tool Does Not Communicate with High Speed GMLAN Device** • **Scan Tool Does Not Communicate with Chassis High Speed GMLAN Device**
K20	Engine Control Module	High Speed GMLAN	**Scan Tool Does Not Communicate with High Speed GMLAN Device**
K27	Fuel Pump Control Module	High Speed GMALN	**Scan Tool Does Not Communicate with High Speed GMLAN Device**
K29	Seat Heating Control Module	Low Speed GMLAN	**Scan Tool Does Not Communicate with Low Speed GMLAN Device**
K33	HVAC Control Module	• Low Speed GMLAN • Local Interconnect	• **Scan Tool Does Not Communicate with Low**

		Network (LIN)	**Speed GMLAN Device** • **DTC U1500-U15FF**
K36	Inflatable Restraint Sensing and Diagnostic Module	Low Speed GMLAN	**Scan Tool Does Not Communicate with Low Speed GMLAN Device**
K41R	Rear Parking Assist Control Module	Low Speed GMLAN	**Scan Tool Does Not Communicate with Low Speed GMLAN Device**
K43	Power Steering Control Module	High Speed GMALN	**Scan Tool Does Not Communicate with High Speed GMLAN Device**
K60	Steering Column Lock Module	Low Speed GMLAN	**Scan Tool Does Not Communicate with Low Speed GMLAN Device**
K61	Sunroof Control Module	Local Interconnect Network (LIN)	**DTC U1500-U15FF**
K71	Transmission Control Module	High Speed GMLAN	**Scan Tool Does Not Communicate with High Speed GMLAN Device**
K73	Telematics Communication Interface Control Module	• High Speed GMLAN • Low Speed GMLAN	• **Scan Tool Does Not Communicate with High Speed GMLAN Device** • **Scan Tool Does Not Communicate with Low Speed GMLAN Device**
K84	Keyless Entry Control Module	Low Speed GMLAN	**Scan Tool Does Not Communicate with Low Speed GMLAN Device**
K85	Passenger Presence Detection Module	Low Speed GMLAN	**Scan Tool Does Not Communicate with Low Speed GMLAN Device**
M74D	Window Motor - Driver	Local Interconnect Network (LIN)	**DTC U1500-U15FF**
P16	Instrument Cluster	Low Speed GMLAN	**Scan Tool Does Not Communicate with Low Speed GMLAN Device**
P17	Info Display Module	Local Interconnect Network (LIN)	**DTC U1500-U15FF**
S34	HVAC Controls Switch Assembly	Local Interconnect Network (LIN)	**DTC U1500-U15FF**
S79D	Window Switch - Driver	Local Interconnect Network (LIN)	**DTC U1500-U15FF**
S79LR	Window Switch - Left Rear	Local Interconnect Network (LIN)	**DTC U1500-U15FF**

S79P	Window Switch - Passenger	Local Interconnect Network (LIN)	**DTC U1500-U15FF**
S79RR	Window Switch - Right Rear	Local Interconnect Network (LIN)	**DTC U1500-U15FF**
T11	Multimedia Player Interface Module	Low Speed GMLAN	**Scan Tool Does Not Communicate with Low Speed GMLAN Device**

REPAIR INSTRUCTIONS

BODY CONTROL MODULE REPLACEMENT

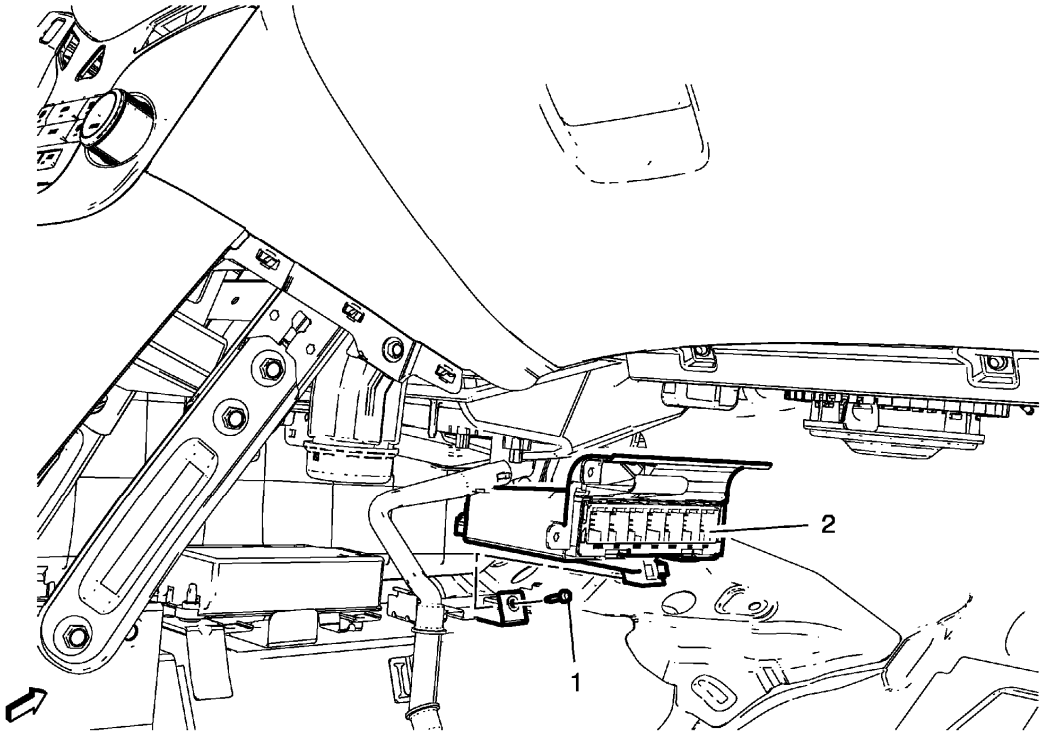

Fig. 10: Body Control Module
Courtesy of GENERAL MOTORS COMPANY

Body Control Module Replacement

Callout	Component Name
Preliminary Procedures 1. Prepare body control module for replacement. Refer to **Control Module References** . 2. Disconnect the negative battery cable. Refer to **Battery Negative Cable Disconnection and Connection** . 3. Remove instrument panel lower trim panel - right side. Refer to **Instrument Panel Lower Trim Panel Replacement - Right Side** .	

1	Body Control Module Fastener **CAUTION:** **Refer to Fastener Caution .**
2	Body Control Module **Procedure** 1. Disconnect electrical connector. 2. Unclip body control module from body control module bracket. 3. After replacement, refer to **Control Module References** for programming and set up procedures.

BODY CONTROL MODULE BRACKET REPLACEMENT

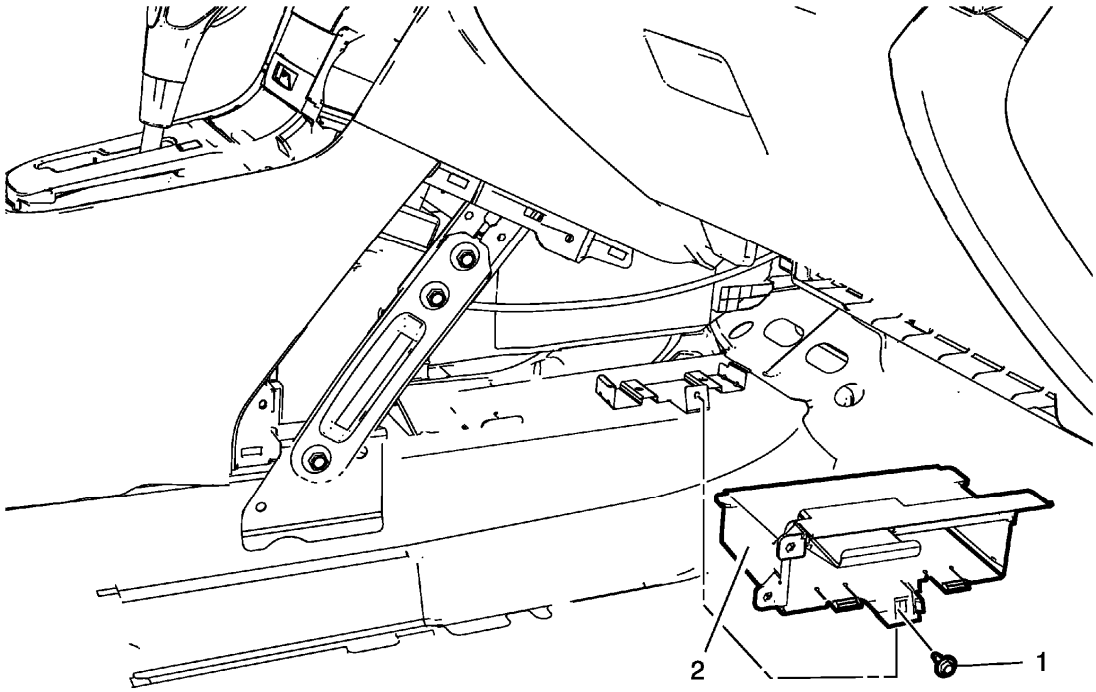

Fig. 11: Body Control Module Bracket
Courtesy of GENERAL MOTORS COMPANY

Body Control Module Bracket Replacement

Callout	Component Name
Preliminary Procedures 1. Disconnect the negative battery cable. Refer to **Battery Negative Cable Disconnection and Connection** .	

2. Remove instrument panel lower trim panel - right side. Refer to **Instrument Panel Lower Trim Panel Replacement - Right Side** .
3. Remove the body control module.

1	Body Control Module Bracket Bolt **CAUTION:** **Refer to Fastener Caution .**
2	Body Control Module Bracket

DESCRIPTION AND OPERATION

BODY CONTROL SYSTEM DESCRIPTION AND OPERATION

The body control system consists of the body control module (BCM), communications, and various input and outputs. Some inputs, outputs and messages require other modules to interact with the BCM. The BCM also has discrete input and output terminals to control the vehicle's body functions. The BCM is wired to the high speed GMLAN serial data bus, low speed GMLAN serial data bus and Multiple LIN buses and acts as a gateway between them.

Power Mode Master

This vehicle body control module (BCM) functions as the power mode master (PMM). The ignition switch is a low current switch with multiple discrete ignition switch signals to the PMM for determining the power mode that will be sent over the serial data circuits to the other modules that need this information; the PMM will activate relays and other direct outputs of the PMM as needed. Refer to **Power Mode Description and Operation** for a complete description of power mode functions.

Gateway

The body control module (BCM) in this vehicle functions as a gateway or translator. The purpose of the gateway is to translate serial data messages between the GMLAN high speed bus and the GMLAN low speed bus for communication between the various modules. The gateway will interact with each network according to that network's transmission protocol.

All communication between the BCM and a scan tool is on the high speed GMLAN serial data circuits. A lost communication DTC typically is set in modules other than the module with a communication failure.

Body Control

The various body control module (BCM) input and output circuits are illustrated in the corresponding functional areas on the BCM electrical schematics. Refer to the **Body Control System Schematics** for more detailed information.

DATA LINK COMMUNICATIONS DESCRIPTION AND OPERATION

NOTE: This is an overview of different serial data buses used by GM devices to

communicate with each others. Use Data Communication Schematics to find out which serial data buses are configured for a specific vehicle.

Circuit Description

There are many components in a vehicle that rely on information from other sources, transmit information to other sources, or both. Serial data communication networks provide a reliable, cost effective, way for various components of the vehicle to "talk" to one another and share information.

GM uses a number of different communication buses to insure the timely and efficient exchange of information between devices. When compared to each other, some of these buses are different in nature as far as speed, signal characteristics, and behavior. An example of this is the High Speed GMLAN and Low Speed GMLAN buses.

On the other hand, when other buses are compared to each other they have similar characteristics and simply operate in parallel. In this case they are used to group together components which have high interaction. Examples are the High Speed GMLAN, Powertrain Expansion, and Chassis Expansion buses. This allows them to communicate with each other on a bus with reduced message congestion insuring faster and the more timely exchange of information than if all vehicle devices were on a single bus.

The majority of information that exists within a given network generally stays local; however some information will have to be shared on other networks. Control modules designated as Gateway's perform the function of transferring information between the various buses. A Gateway module is connected to at least 2 buses and will interact with each network according to its message strategy and transmission models.

GMLAN provides the capability for a receiving device to monitor message transmissions from other devices in order to determine if messages of interest are not being received. The primary purpose is to allow reasonable default values to be substituted for the information no longer being received. Additionally, a device may set a Diagnostic Trouble Code to indicate that the device it is expecting information from is no longer communicating.

High Speed GMLAN Circuit Description

High Speed GMLAN Block Diagram

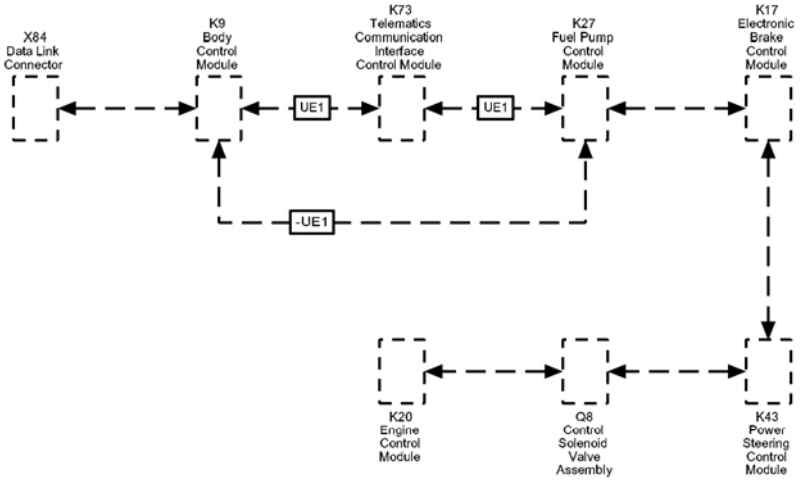

Fig. 12: High Speed GMLAN Block Diagram
Courtesy of GENERAL MOTORS COMPANY

Callout	Component Name
DA	Serial Data
DA	Serial Data
DA	Serial Data
DA	Serial Data
DA	Serial Data
DA	Serial Data
DA	Serial Data
UE1	OnStar
UE1	OnStar
DA	Serial Data
UE1	OnStar
X84	
K9	
K73	
K27	
K17	
K43	
Q8	

K20	

A High Speed GMLAN Bus is used where data needs to be exchanged at a high enough rate to minimize the delay between the occurrence of a change in sensor value and the reception of this information by a control device using the information to adjust vehicle system performance.

The High Speed GMLAN serial data network consists of two twisted wires. One signal circuit is identified as GMLAN-High and the other signal circuit is identified as GMLAN-Low. At each end of the data bus there is a 120 ohms termination resistor between the GMLAN-High and GMLAN-Low circuits.

Data symbols (1's and 0's) are transmitted sequentially at a rate of 500 Kbit/s. The data to be transmitted over the bus is represented by the voltage difference between the GMLAN-High signal voltage and the GMLAN-Low signal voltage.

When the two wire bus is at rest the GMLAN-High and GMLAN-Low signal circuits are not being driven and this represents a logic "1". In this state both signal circuits are at the same voltage of 2.5 V. The differential voltage is approximately 0 V.

When a logic "0" is to be transmitted, the GMLAN-High signal circuit is driven higher to about 3.5 V and the GMLAN-Low circuit is driven lower to about 1.5 V. The differential voltage becomes approximately 2.0 (+/- 0.5) V.

Devices on High Speed GMLAN Bus enable or disable communication based on the voltage level of the communication enable circuit. When the circuit voltage is high (around 12 V), communications are enabled. When the circuit is low, communications are disabled.

Chassis High Speed GMLAN Circuit Description

Chassis Expansion Bus Block Diagram

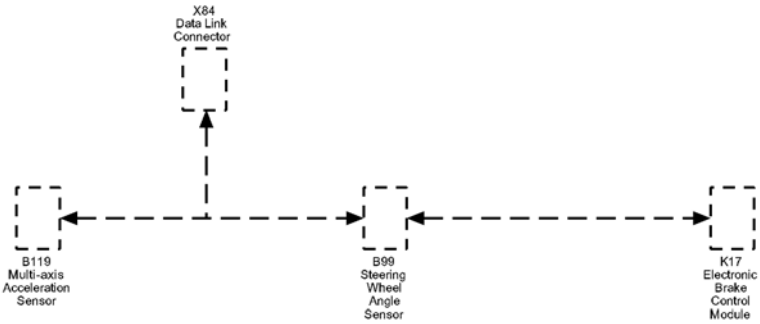

Fig. 13: Chassis Expansion Bus Block Diagram
Courtesy of GENERAL MOTORS COMPANY

Callout	Component Name
DA	Serial Data
DA	Serial Data
X84	
B119	
B99	
K17	

The GMLAN Chassis Expansion Bus is basically a copy of the High Speed GMLAN Bus except that its use is reserved for chassis components. This implementation splits message congestion between two parallel buses helping to insure timely message transmission and reception. Sometimes communication is required between the Chassis Expansion Bus and the primary High Speed GMLAN Bus. This is accomplished by using the K17 Electronic Brake Control Module (EBCM) as the Gateway module. Since the High Speed GMLAN Chassis Expansion Bus and primary High Speed GMLAN Bus operate in the same manner, the diagnostics for each are similar.

Low Speed GMLAN Circuit Description

Low Speed GMLAN Block Diagram

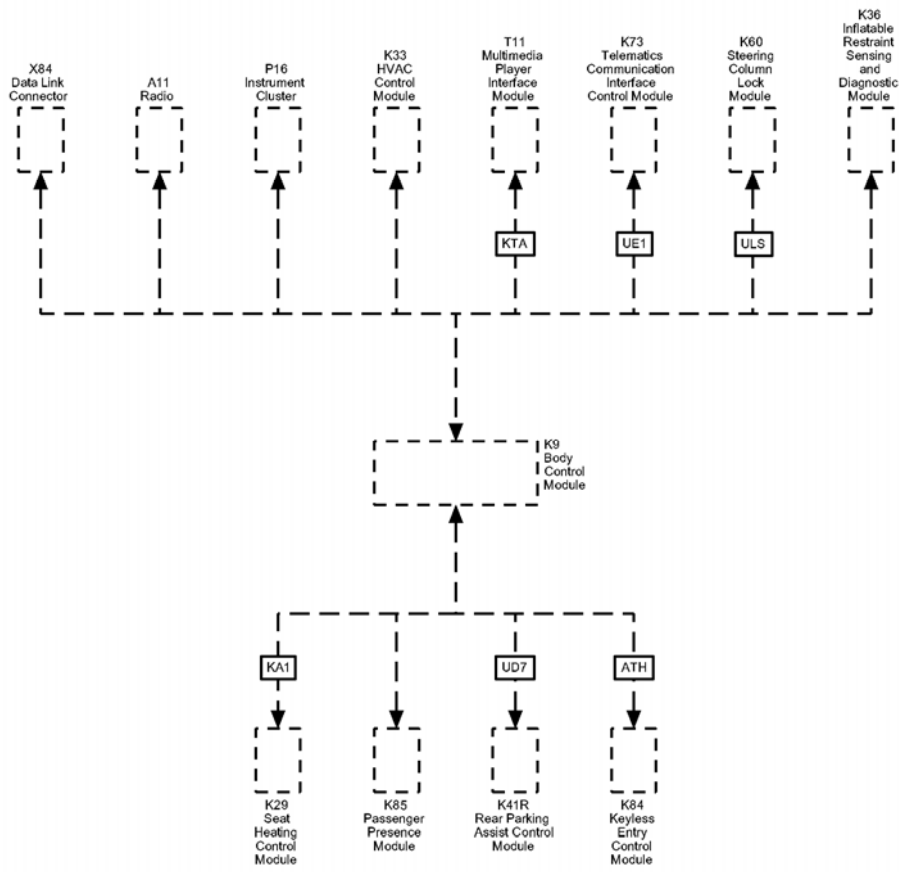

Fig. 14: Low Speed GMLAN Block Diagram
Courtesy of GENERAL MOTORS COMPANY

Callout	Component Name
DA	Serial Data
DA	Serial Data
ULS	Steering Column Lock
KTA	Audio Interface
UE1	OnStar
KA1	Driver and Passenger Heated Seats
ATH	Extended Range Remote Control
UD7	Rear Parking Assist
X84	
A11	
P16	
K33	

T11	
K73	
K60	
K36	
K9	
K29	
K85	Passenger Presence Module
K41R	
K84	

Low Speed GMLAN Bus is used in applications where a high data rate is not required which allows for the use of less complex components. It is typically used for operator controlled functions where the response time requirements are slower than those required for dynamic vehicle control.

The Low Speed GMLAN Serial Data Network consists of a single wire, ground referenced bus with high side voltage drive. During on road vehicle operation data symbols (1's and 0's) are transmitted sequentially at the normal rate of 33.3 Kbit/s. For component programming only, a special high speed data mode of 83.3 Kbit/s may be used.

Unlike the high speed dual wire networks, the single wire low speed network does not use terminating resistors at either end of the network.

The data symbols to be transmitted over the bus are represented by different voltage signals on the bus. When the Low Speed GMLAN Bus is at rest and is not being driven, there is a low signal voltage of approximately 0.2 V. This represents a logic "1". When a logic "0" is to be transmitted, the signal voltage is driven higher to around 4.0 V or higher.

Local Interconnect Network (LIN) Circuit Description

The Local Interconnect Network (LIN) Bus consists of a single wire with a transmission rate of 10.417 Kbit/s. This bus is used to exchange information between a master control module and other smart devices which provide supporting functionality. This type of configuration does not require the capacity or speed of either a High Speed GMLAN Bus or Low Speed GMLAN Bus and is thus relatively simpler.

The data symbols (1's and 0's) to be transmitted are represented by different voltage levels on the communication bus. When the LIN Bus is at rest and is not being driven, the signal is in a high voltage state of approximately Vbatt. This represents a logic "1". When a logic "0" is to be transmitted, the signal voltage is driven low to about ground (0.0 V).

Data Link Connector (DLC)

The X84 Data Link Connector (DLC) is a standardized 16-cavity connector. Connector design and location is dictated by an industry wide standard, and is required to provide the following:

- Pin 1 Low speed GMLAN communications terminal
- Pin 2 Class 2 communications terminal

- Pin 3 Mid speed GMLAN serial bus (+) terminal or Object high speed GMLAN serial bus (+) terminal
- Pin 4 Scan tool power ground terminal
- Pin 5 Common signal ground terminal
- Pin 6 High speed GMLAN serial data bus (+) terminal
- Pin 7 Keyword communications terminal
- Pin 11 Mid speed GMLAN serial bus (-) terminal or Object high speed GMLAN serial bus (-) terminal
- Pin 12 Chassis high speed GMLAN serial bus (+) terminal
- Pin 13 Chassis high speed GMLAN serial bus (-) terminal
- Pin 14 High speed GMLAN serial data bus (-) terminal
- Pin 16 Scan tool power, battery positive voltage terminal

Serial Data Reference

The scan tool communicates over the various buses on the vehicle. When a scan tool is installed on a vehicle, the scan tool will try to communicate with every device that could be optioned into the vehicle. If an option is not installed on the vehicle, the scan tool will display No Comm (or Not Connected) for that optional device. In order to avert misdiagnoses of No Communication with a specific device, refer to **Data Link References** for a list of devices, the buses they communicate with, and the RPO codes for a specific device.

2013 ACCESSORIES & EQUIPMENT

Displays and Gauges - Cruze

SPECIFICATIONS

FASTENER TIGHTENING SPECIFICATIONS

Fastener Tightening Specifications

Application	Specification	
	Metric	English
Instrument Cluster Bolt	2.5 N.m	22 lb in

AMBIENT AIR TEMPERATURE SENSOR RESISTANCE

Ambient Air Temperature Sensor Resistance

Temperature		Ambient Air Temp Sensor	Ambient Air Temp Sensor (Min)	Ambient Air Temp Sensor (Max)
°C	°F	(kohms)	(kohms)	(kohms)
-40	-40	169.4	158.46	181.19
-30	-22	88.74	83.39	94.47
-20	-4	48.58	47.19	50.02
-10	14	27.67	26.93	28.44
0	32	16.33	15.92	16.75
10	50	9.95	9.71	10.19
20	68	6.24	6.1	6.38
30	86	4.02	3.94	4.11
40	104	2.66	2.61	2.71
50	122	1.8	1.73	1.87
60	140	1.24	1.2	1.29

SCHEMATIC WIRING DIAGRAMS

INSTRUMENT CLUSTER WIRING SCHEMATICS

Power, Ground, Gauges, and Serial Data Wiring Schematics

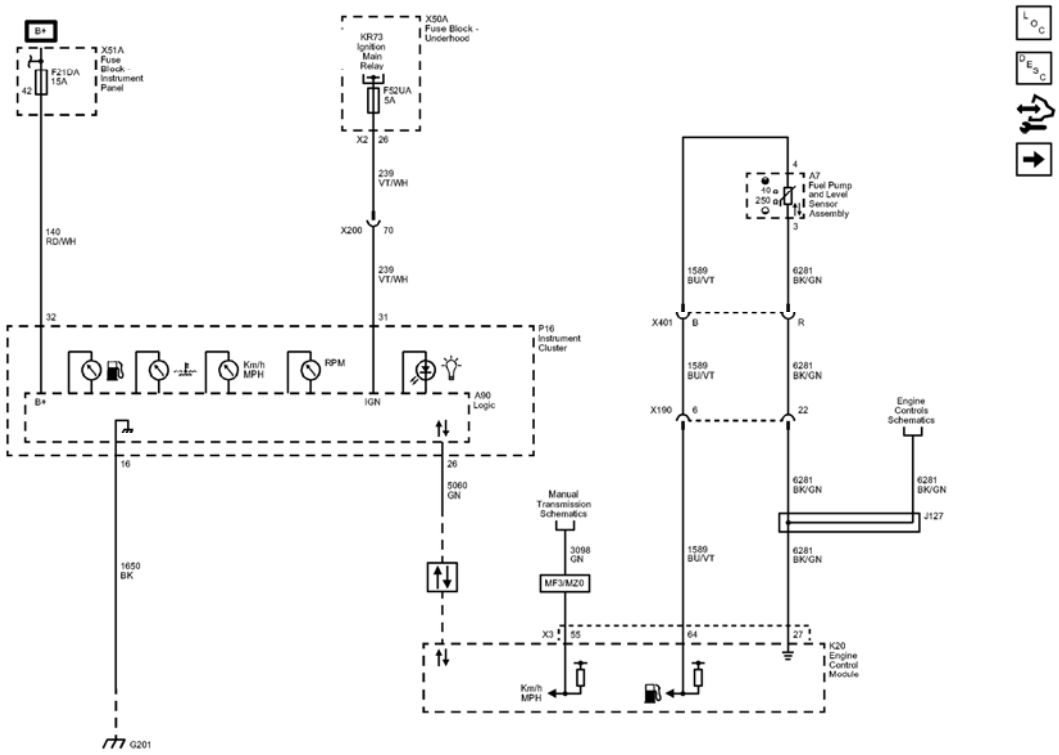

Fig. 1: Power, Ground, Gauges, and Serial Data Wiring Schematics
Courtesy of GENERAL MOTORS COMPANY

Callout	Component Name
CAV_42	42
140	Battery Positive Voltage
140_RD/WH	140 RD/WH
CAV_32	32
239	Run/Crank Ignition 1 Voltage
239_VT/WH	239 VT/WH
CAV_31	31
CAV_26	26
CONN_X2	X2
239_VT/WH	239 VT/WH
CAV_70	70
1650	Ground
1650_BK	1650 BK
CAV_16	16
5060	Low Speed GMLAN Serial Data
5060_GN	5060 GN
CAV_26	26

Data_Communication_Schematics_REF	Data Communication Schematics
3098	Output Speed (Digital) Signal
3098_GN	3098 GN
CAV_55	55
CONN_X3	X3
MF3	TRANSMISSION-MAN 6 SPD, OPEL, 76.5 MM, 4.273 1ST, 2.158 2ND, 1.302 3RD, 0.959 4TH, 0.744 5TH, 0.614 6TH, M32-6 WR
MZ0	TRANSMISSION-MAN 6 SPD, OPEL, 76.5 MM, 3.82 1ST, 0.74 6TH, (M32 WR)
1589	Primary Fuel Level Sensor Signal
1589_BU/VT	1589 BU/VT
CAV_64	64
CAV_4	4
6281	Fuel Level Sensor Low Reference
6281 BK/GN	6281 BK/GN
CAV_27	27
CAV 3	3
6281_BK/GN	6281 BK/GN
6281_BK/GN	6281 BK/GN
6281_BK/GN	6281 BK/GN
6281_BK/GN	6281 BK/GN
1589_BU/VT	1589 BU/VT
1589_BU/VT	1589 BU/VT
X190	X190
CAV_6	6
CAV_22	22
X401	X401
CAV_B	B
CAV_R	R
G201	G201
F21DA	F21DA 15A
F52UA	F52UA 5A
X200	X200
J127	J127
X190	X190
X401	X401
A90	Logic

K20	
KR73	
X50A	
P16	
X51A	
Manual_Transmission_Schematics_REF	Manual Transmission Schematics
A7	
Engine_Controls_Schematics_REF	Engine Controls Schematics

Indicators Wiring Schematics

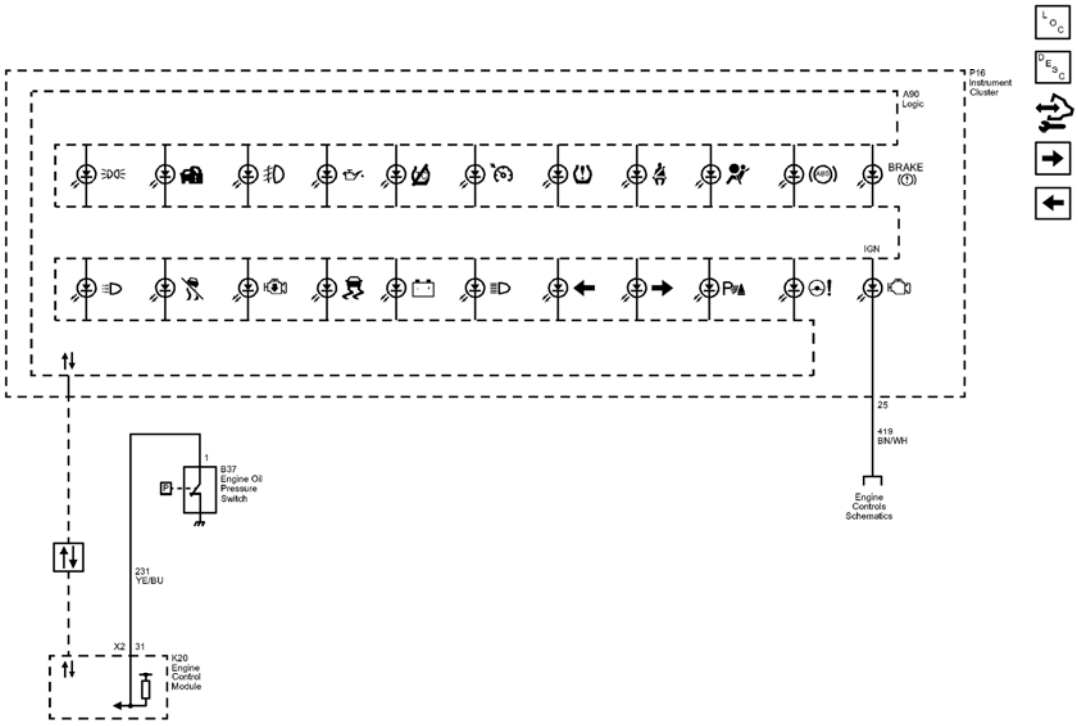

Fig. 2: Indicators Wiring Schematics
Courtesy of GENERAL MOTORS COMPANY

Callout	Component Name
419	Check Engine Indicator Control
419_BN/WH	419 BN/WH
CAV_25	25
SD	Serial Data
Data_Communication_Schematics_REF	Data Communication

	Schematics
231	Oil Pressure Switch Signal
231_YE/BU	231 YE/BU
CAV_31	31
CONN_X2	X2
CAV_1	1
A90	Logic
B37	
Engine_Controls_Schematics_REF	Engine Controls Schematics
K20	
P16	

Air Temperature and Driver Information Center Wiring Schematics

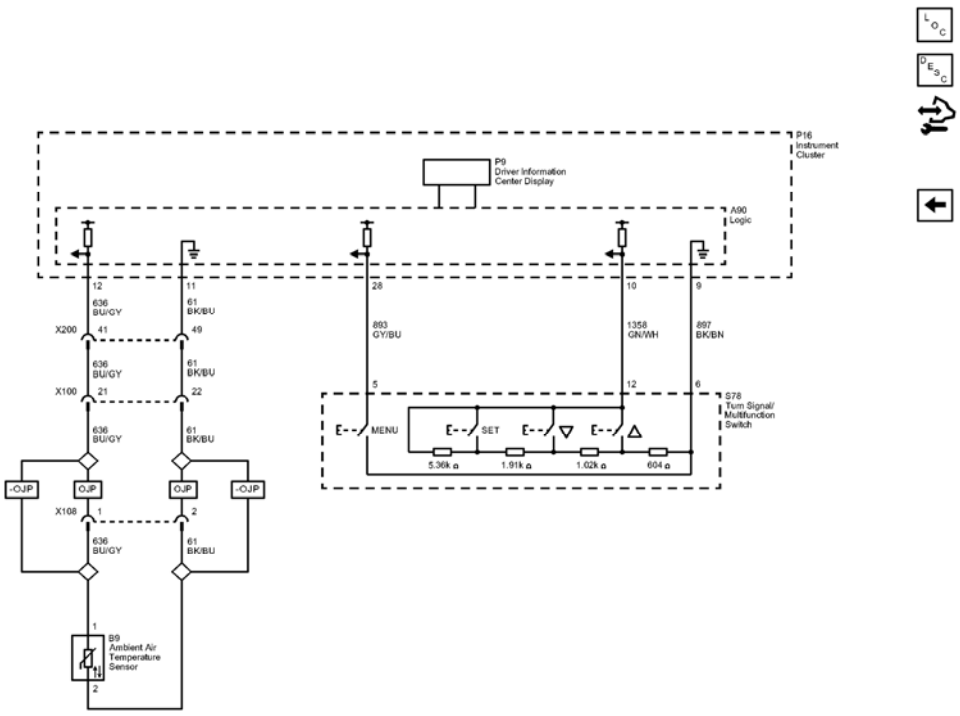

Fig. 3: Air Temperature and Driver Information Center Wiring Schematics
Courtesy of GENERAL MOTORS COMPANY

Callout	Component Name
636	Outside Ambient Air Temperature Sensor Signal
CAV_1	1
CAV_12	12

61	Outside Ambient Temperature Sensor Low Reference
CAV_2	2
CAV_11	11
636_BU/GY	636 BU/GY
61_BK/BU	61 BK/BU
61_BK/BU	61 BK/BU
61_BK/BU	61 BK/BU
61_BK/BU	61 BK/BU
636_BU/GY	636 BU/GY
636_BU/GY	636 BU/GY
636_BU/GY	636 BU/GY
OJP	
OJP	
OJP	
OJP	
CAV_5	5
893	Driver Information Center Select Menu Switch Signal
893_GY/BU	893 GY/BU
CAV_5	5
CAV_28	28
1358	Driver Information Center Switch Signal
1358_GN/WH	1358 GN/WH
CAV_12	12
CAV_10	10
897	Driver Information Center Switch Low Reference
897_BK/BN	897 BK/BN
CAV_6	6
CAV 9	9
X200	X200
CAV 41	41
CAV_49	49
X100	X100
CAV_21	21
CAV_22	22
X108	X108
CAV_1	1
CAV_2	2
X200	X200
X100	X100
X108	X108
A90	Logic

P16	
S78	
P9	

AUDIBLE WARNINGS WIRING SCHEMATICS

Audible Warning Wiring Schematics

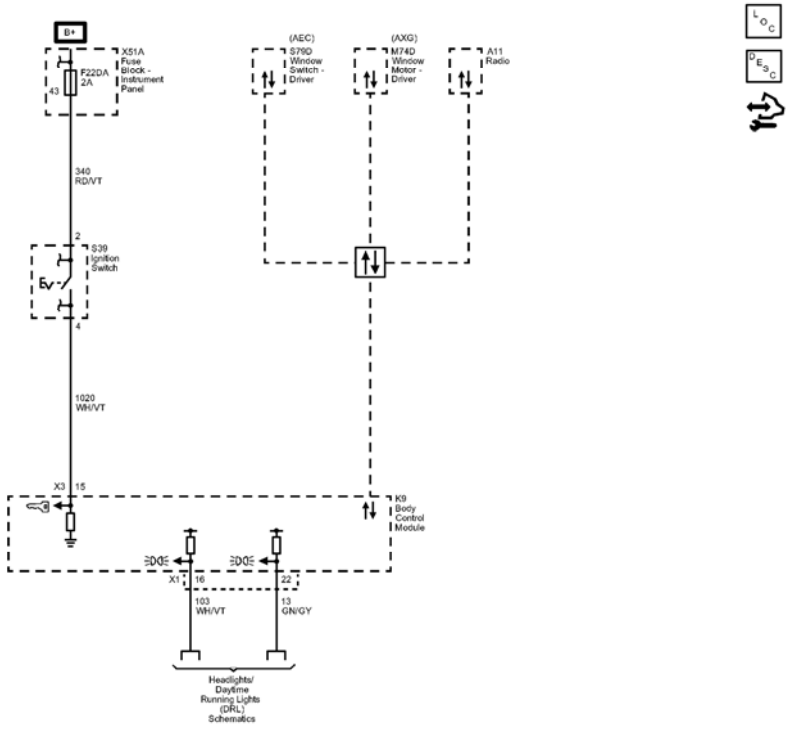

Fig. 4: Audible Warning Wiring Schematics
Courtesy of GENERAL MOTORS COMPANY

Callout	Component Name
CAV_43	43
340	Battery Positive Voltage
340_RD/VT	340 RD/VT
CAV_2	2
1020	Off/Run/Crank Voltage
1020_WH/VT	1020 WH/VT
CAV_15	15
CONN_X3	X3

CAV_4	4
103	Headlamp Switch On Signal
103_WH/VT	103 WH/VT
CAV_16	16
CONN_X1	X1
13	Headlamp Switch Park Lamp Signal
13_GN/GY	13 GN/GY
CAV_22	22
SD	Serial Data
Data_Communication_Schematics_REF	Data Communication Schematics
AEC	WINDOW-POWER OPERATED, DRIVER EXPRESS DOWN
AXG	WINDOW-POWER OPERATED-EXPRESS DRIVER UP/DOWN
F22DA	F22DA 2A
A11	
S79D	
S39	(without BTM)
X51A	
Headlights/Daytime_Running_Lights_(DRL)_Schematics_REF	Headlights/Daytime Running Lights (DRL) Schematics
K9	
M74D	

DIAGNOSTIC INFORMATION AND PROCEDURES

DIAGNOSTIC CODE INDEX

DIAGNOSTIC CODE INDEX

DTC	Description
DTC B0158	DTC B0158 02 Ambient Air Temperature Sensor Circuit Short to Ground DTC B0158 05 Ambient Air Temperature Sensor Circuit High Voltage/Open
DTC B0550	DTC B0550 32 Odometer Circuit General Memory Malfunction
DTC B1370	DTC B1370 01 Control Module Ignition On and Start Circuit Short to Battery DTC B1370 06 Control Module Ignition On and Start Circuit Open
	DTC B3567 01 Info Display Select Switch Circuit Short to Battery

DTC B3567	DTC B3567 02 Info Display Select Switch Circuit Short to Ground DTC B3567 04 Info Display Select Switch Circuit Open DTC B3567 59 Info Display Select Switch Circuit Protection Time-Out
DTC P0461-P0464	DTC P0461 Fuel Level Sensor Performance DTC P0462 Fuel Level Sensor Circuit Low Voltage DTC P0463 Fuel Level Sensor Circuit High Voltage DTC P0464 Fuel Level Sensor Circuit Intermittent
DTC P0520	DTC P0520 Engine Oil Pressure Switch Circuit
DTC P0521	DTC P0521 Engine Oil Pressure Sensor Performance

DTC B0158

Diagnostic Instructions

- Perform the **Diagnostic System Check - Vehicle** prior to using this diagnostic procedure.
- Review **Strategy Based Diagnosis** for an overview of the diagnostic approach.
- **Diagnostic Procedure Instructions** provides an overview of each diagnostic category.

DTC Descriptors

DTC B0158 02

Ambient Air Temperature Sensor Circuit Short to Ground

DTC B0158 05

Ambient Air Temperature Sensor Circuit High Voltage/Open

Diagnostic Fault Information

Circuit	Short to Ground	Open/High Resistance	Short to Voltage	Signal Performance
Ambient Air Temperature Sensor Signal	B0158 02	B0158 05	B0158 05	-
Low Reference	-	B0158 05	B0158 05	-

Circuit/System Description

The instrument cluster monitors the ambient air temperature sensor with a low reference circuit and 5 V signal circuit. The instrument cluster monitors the voltage drop across the sensor, which is proportional to temperature. When the ambient air temperatures are cold, the resistance of the sensor is high and the voltage signals are high. When the ambient air temperatures are hot, the resistance of the sensors is low and the voltage signals are low.

The instrument cluster converts the voltage value to a temperature value of Celsius or Fahrenheit that will be displayed by the driver information center.

Conditions for Running the DTC

The system voltage is between 9-16 V.

Conditions for Setting the DTC

B0158 02

The instrument cluster detects the sensor signal circuit is more than 88°C (190°F).

B0158 05

The instrument cluster detects the sensor signal circuit is less than -40°C (-40°F).

Action Taken When the DTC Sets

The instrument cluster uses a default air temperature value for further calculations. The driver information center displays no ambient air temperature information.

Conditions for Clearing the DTC

The DTC will become history if the instrument cluster no longer detects a malfunction.

Reference Information

Schematic Reference

Instrument Cluster Schematics

Connector End View Reference

COMPONENT CONNECTOR END VIEWS - INDEX

Description and Operation

- **Instrument Cluster Description and Operation**
- **Driver Information Center (DIC) Description and Operation**

Electrical Information Reference

- **Circuit Testing**
- **Connector Repairs**
- **Testing for Intermittent Conditions and Poor Connections**
- **Wiring Repairs**

Scan Tool Reference

Control Module References for scan tool information

Circuit/System Verification

1. Ignition ON.
2. Verify the scan tool Ambient Air Temperature parameter between -40°C (-40°F) to +88°C (+190°F) and changes with air temperature changes.
   - **If parameter is not between -40°C (-40°F) to +88°C (+190°F) or changes with air temperature changes**

     Refer to Circuit/System Testing below.

   - **If parameter is between -40°C (-40°F) to +88°C (+190°F) and changes with air temperature changes**
3. All OK.

Circuit/System Testing

1. Ignition OFF and all vehicle systems OFF, disconnect the harness connector at the B9 ambient air temperature sensor. It may take up to 2 minutes for all vehicle systems to power down.
2. Test for less than 1 V between the low reference circuit terminal 2 and ground.
   - **If 1 V or greater**

     repair the short to voltage on the circuit.

   - **If less than 1 V**
3. Test for less than 10 ohms between the low reference circuit terminal 2 and ground.
   - **If 10 ohms or greater**
     1. Ignition OFF, disconnect the harness connector at the P16 instrument cluster.
     2. Test for less than 2 ohms in the low reference circuit end to end.
        - If 2 ohms or greater, repair the open/high resistance in the circuit.
        - If less than 2 ohms, replace the P16 instrument cluster.
   - **If less than 10 ohms**
4. Ignition ON.
5. Verify the scan tool Ambient Air Temperature parameter is greater than 98%.
   - **If 98% or less**
     1. Ignition OFF, disconnect the harness connector at the P16 instrument cluster.
     2. Test for infinite resistance between the signal circuit and ground.
        - If less than infinite resistance, repair the short to ground on the circuit.
        - If infinite resistance, replace the P16 instrument cluster.

- **If greater than 98%**

6. Install a 3 A fused jumper wire between the signal circuit terminal 1 and the low reference circuit terminal B.
7. Verify the scan tool Ambient Air Temperature parameter is less than 8%.
   - **If 8% or greater**
     1. Ignition OFF, disconnect the harness connector at the P16 instrument cluster, ignition ON.
     2. Test for less than 1 V between the signal circuit and ground.
        - If 1 V or greater, repair the short to voltage on the circuit.
        - If less than 1 V
     3. Ignition OFF
     4. Test for less than 2 ohms in the signal circuit end to end.
        - If 2 ohms or greater, repair the open/high resistance in the circuit.
        - If less than 2 ohms, replace the P16 instrument cluster.
   - **If less than 8%**
8. Test or replace the B9 Ambient Air Temperature Sensor.

Component Testing

Static Test

1. Test the B9 Ambient Air Temperature Sensor by varying the sensor temperature while monitoring the sensor resistance.
2. Compare the readings with the **Ambient Air Temperature Sensor Resistance**
   - **If not within the specified range**

     Replace the B9 Ambient Air Temperature Sensor.

   - **If within specified range**
3. All OK.

Repair Instructions

Perform the **Diagnostic Repair Verification** after completing the repair.

- **Ambient Air Temperature Gauge Sensor Replacement**
- **Control Module References** for module replacement, programming, and setup

DTC B0550

Diagnostic Instructions

- Perform the **Diagnostic System Check - Vehicle** prior to using this diagnostic procedure.
- Review **Strategy Based Diagnosis** for an overview of the diagnostic approach.

- **Diagnostic Procedure Instructions** provides an overview of each diagnostic category.

DTC Descriptor

DTC B0550 32

Odometer Circuit General Memory Malfunction

Circuit/System Description

The Instrument Cluster is equipped with odometers that indicate the distance traveled by the vehicle. One type of odometer is the season odometer where the traveled distance can not be reset by the driver. This information is also stored in the Body Control Module (BCM). In addition to storing the season odometer value for the vehicle, the Instrument Cluster and the BCM store the VIN. Software checks are performed to ensure these modules, and their stored season odometer information, can not be moved or transferred between different vehicles.

Conditions for Running the DTC

The ignition is ON.

Conditions for Setting the DTC

The BCM has detected an internal memory malfunction.

Action Taken When the DTC Sets

DTC B0550 32 is stored in the BCM memory.

Conditions for Clearing the DTC

The BCM no longer detects a malfunction.

Reference Information

Schematic Reference

Instrument Cluster Schematics

Connector End View Reference

COMPONENT CONNECTOR END VIEWS - INDEX

Description and Operation

Driver Information Center (DIC) Description and Operation

Electrical Information Reference

- **Circuit Testing**
- **Connector Repairs**
- **Testing for Intermittent Conditions and Poor Connections**
- **Wiring Repairs**

Scan Tool Reference

Control Module References for scan tool information

Circuit/System Verification

1. Ignition ON.
2. Verify DTC B0550 32 is not set.
    - **If DTC B0550 32 is set**
    1. Program the K9 Body Control Module.
    2. Verify the DTC does not set.
        - If the DTC sets, replace the K9 Body Control Module.
        - If the DTC does not set
    3. All OK.
    - **If DTC B0550 32 is not set**
3. All OK

Repair Instructions

Perform the **Diagnostic Repair Verification** after completing the repair.

Control Module References for BCM replacement, programming and setup

DTC B1370

Diagnostic Instructions

- Perform the **Diagnostic System Check - Vehicle** prior to using this diagnostic procedure.
- Review **Strategy Based Diagnosis** for an overview of the diagnostic approach.
- **Diagnostic Procedure Instructions** provides an overview of each diagnostic category.

DTC Descriptors

DTC B1370 01

Control Module Ignition On and Start Circuit Short to Battery

DTC B1370 06

Control Module Ignition On and Start Circuit Open

Diagnostic Fault Information

Circuit	Short to Ground	Open/High Resistance	Short to Voltage	Signal Performance
Ignition Main Relay Control Terminal 2	B1370 06	B1370 06	B1370 01	-
Ignition Main Relay Ignition terminal 5/ Instrument Cluster ignition voltage terminal 31	B1370 06	B1370 06	B1370 01	-
Ignition Main Relay Ground terminal 1	-	B1370 06	-	-
Ignition Main Relay B+ terminal 3	-	B1370 06	-	-

Circuit/System Description

The vehicle power mode master is the body control module (BCM). The ignition switch is a low current switch with multiple discrete circuits to the BCM.

The power mode master will activate relays and other direct outputs of the power mode master as needed according to the calculated power mode. Some relays controlled by the BCM are switched ignition voltage outputs that are pass through circuits within the BCM directly from the ignition switch. If these circuits short to ground, the B+ circuit fuse to the ignition switch will open.

Conditions for Running the DTC

B1370 01

Ignition switch is in the Accessory position.

B1370 06

Ignition switch is in the Accessory, Run, or Crank positions.

Conditions for Setting the DTC

B1370 01

Ignition circuit is shorted to voltage.

B1370 06

- Ignition circuit is open.
- Ignition or run/crank relay circuit is shorted to ground.
- B+ circuit of the ignition run/crank relay is open or shorted to ground.

- Ignition run/crank relay control circuit open, including relay coil and ground.

Action Taken When the DTC Sets

The Instrument Cluster still functions except check engine light is always off.

Conditions for Clearing the DTC

- The condition responsible for setting the DTC no longer exists.
- A history DTC will clear once 50 consecutive malfunction-free ignition cycles have occurred.

Reference Information

Schematic Reference

- **Instrument Cluster Schematics**
- **Power Distribution Schematics**
- **Power Moding Schematics**

Connector End View Reference

COMPONENT CONNECTOR END VIEWS - INDEX

Description and Operation

- **Instrument Cluster Description and Operation**
- **Power Mode Description and Operation**

Electrical Information Reference

- **Circuit Testing**
- **Connector Repairs**
- **Testing for Intermittent Conditions and Poor Connections**
- **Wiring Repairs**

Scan Tool Reference

Control Module References for scan tool information

Circuit/System Verification

1. Verify that DTC B144B or B1380 is not set.
    - **If DTC B144B or B1380 is set**

      Refer to **Diagnostic Trouble Code (DTC) List - Vehicle** .

- **If DTC B144B or B1380 is not set**

  Refer to Circuit/System Testing below.

Circuit/System Testing

1. Ignition OFF, disconnect the KR73 Ignition Main Relay.
2. Test for less than 10 ohms between the ground circuit terminal 1 and ground.
   - **If 10 ohms or greater**

     Test the ground circuit for an open/high resistance.

   - **If less than 10 ohms**
3. Verify that a test lamp illuminates between the B+ circuit terminal 3 and ground.
   - **If the test lamp does not illuminate**

     Repair the open/high resistance in the circuit.

   - **If the test lamp illuminates**
4. Verify that a test lamp does not illuminate between the control circuit terminal 2 and ground.
   - **If the test lamp illuminates**
   1. Disconnect the harness connector at the K9 Body Control Module.
   2. Test for less than 1 V between the control circuit and ground.
      - If 1 V or greater, repair the short to voltage on the circuit.
      - If less than 1 V, replace the K9 Body Control Module.
      - **If the test lamp does not illuminate**
5. Ignition ON, verify that a test lamp illuminates between the control circuit terminal 2 and ground.
   - **If the test lamp does not illuminate**
   1. Test for less than 2 ohms in the control circuit end to end.
      - If less than 2 ohms, replace the K9 Body Control Module.
      - If 2 ohms or greater, repair the open/high resistance in the circuit.
      - **If the test lamp illuminates**
6. Ignition OFF, reconnect the KR73 Ignition Main Relay.
7. Disconnect the harness connector at the P16 Instrument Cluster.
8. Verify that a test lamp does not illuminate between the ignition circuit terminal 31 and ground.
   - **If the test lamp illuminates**
   1. Test for less than 1 V between the ignition circuit and ground.
      - If 1 V or greater, repair the short to voltage on the circuit.
      - If less than 1 V, replace the KR73 Ignition Main Relay.
   - **If the test lamp does not illuminate**

9. Ignition ON, verify that a test lamp illuminates between the ignition terminal 31 and ground.
    - **If the test lamp does not illuminate and the Ignition fuse is good**
    1. Test for less than 2 ohms in the ignition circuit end to end
        - If 2 ohms or greater, repair the open/high resistance in the circuit.
        - If less than 2 ohms, replace the KR73 Ignition Main Relay.
    - **If the test lamp does not illuminate and the Ignition fuse is open**
    1. Test for infinite resistance between the ignition circuit and ground.
        - If less than infinite resistance, repair the short to ground on the circuit.
        - If infinite resistance, replace the P16 instrument cluster.
    - **If the test lamp illuminates**
10. Replace the P16 instrument cluster.

Repair Instructions

Perform the **Diagnostic Repair Verification** after completing the repair.

- **Instrument Cluster Replacement**
- **Relay Replacement (Within an Electrical Center)** , **Relay Replacement (Attached to Wire Harness)**
- **Control Module References** for BCM replacement, programming and setup

DTC B3567

Diagnostic Instructions

- Perform the **Diagnostic System Check - Vehicle** prior to using this diagnostic procedure.
- Review **Strategy Based Diagnosis** for an overview of the diagnostic approach.
- **Diagnostic Procedure Instructions** provides an overview of each diagnostic category.

DTC Descriptors

DTC B3567 01

Info Display Select Switch Circuit Short to Battery

DTC B3567 02

Info Display Select Switch Circuit Short to Ground

DTC B3567 04

Info Display Select Switch Circuit Open

DTC B3567 59

Info Display Select Switch Circuit Protection Time-Out

Circuit/System Description

The driver information center switch is a multiplexed switch. Battery power is provided to the driver information center switch via the instrument cluster. The driver information center switch signal circuit is pulled up to battery voltage in the instrument cluster. The instrument cluster also provides the driver information center switch with a low reference. The switch input to the instrument cluster is pulled low when a switch is activated. The driver information center switch is a momentary contact switch that connects a series of resistors in a resistor ladder format. The instrument cluster monitors the driver information center switch signal circuit to determine the driver information center switch inputs. Each switch state Menu, Up, Down, Clear corresponds to a certain resistance value. The instrument cluster determines the switch pressed by the voltage drop across the resistors.

Conditions for Running the DTC

- The ignition is in OFF, ACCESSORY or RUN position.
- The system voltage is between 9-16 V.

Conditions for Setting the DTC

B3567 01

The instrument cluster detects that the driver information center switch signal circuit is shorted to battery.

B3567 02

The instrument cluster detects that the driver information center switch signal circuit is shorted to ground.

B3567 04

The instrument cluster detects that the driver information center switch signal circuit is open.

B3567 59

The instrument cluster detects that the driver information center switch is stuck.

Action Taken When the DTC Sets

The instrument cluster ignores the driver information center switch inputs.

Conditions for Clearing the DTC

The DTC will become history if the instrument cluster no longer detects a malfunction.

Reference Information

Schematic Reference

Instrument Cluster Schematics

Connector End View Reference

COMPONENT CONNECTOR END VIEWS - INDEX

Description and Operation

Driver Information Center (DIC) Description and Operation

Electrical Information Reference

- **Circuit Testing**
- **Connector Repairs**
- **Testing for Intermittent Conditions and Poor Connections**
- **Wiring Repairs**

Scan Tool Reference

Control Module References for scan tool information

Circuit/System Verification

1. Ignition ON.
2. Verify the driver information center set, up and down function changes when pressing the set, up or down switch.
    - **If the driver information center does not change**

      Refer to Set, Up and Down Switch Malfunction below

    - **If the driver information center changes**
3. Verify the driver information center menu function changes when pressing the menu switch.
    - **If the driver information center does not change**

      Refer to Menu Switch Malfunction below

    - **If the driver information center changes**
4. All OK.

Circuit/System Testing

Menu Switch Malfunction

1. Ignition ON.
2. Test for 4.8-5.2 V between the signal circuit terminal 5 and ground.

- **If less than 4.8 V**

1. Ignition OFF, disconnect the harness connector at the P16 Instrument Cluster.
2. Test for infinite resistance between the signal circuit and ground.
    - If less than infinite resistance, repair the short to ground on the circuit.
    - If infinite resistance
3. Test for less than 2 ohms in the signal circuit end to end.
    - If 2 ohms or greater, repair the open/high resistance in the circuit.
    - If less than 2 ohms, replace the P16 Instrument Cluster.

- **If greater than 5.2 V**

1. Ignition OFF, disconnect the harness connector at the P16 Instrument Cluster, ignition ON.
2. Test for less than 1 V between the signal circuit and ground.
    - If 1 V or greater, repair the short to voltage on the circuit.
    - If less than 1 V, replace the P16 Instrument Cluster.

- **If between 4.8-5.2 V**

3. Test for less than 10 ohms between the ground circuit terminal 3 and ground.
    - **If 10 ohms or greater**

      Repair the open/high resistance in the circuit

    - **If less than 10 ohms**
4. Test or replace the S78 Turn Signal/Multifunction Switch.

Set, Up and Down Switch Malfunction

1. Ignition OFF and all vehicle systems OFF, disconnect the X1 harness connector at the S78 Turn Signal/Multifunction Switch, ignition ON.
2. Test for less than 10 ohms between the low reference circuit terminal 6 and ground.
    - **If 10 ohms or greater**
    1. Ignition OFF, disconnect the harness connector at the P16 Instrument Cluster.
    2. Test for less than 2 ohms in the low reference circuit end to end.
        - If 2 ohms or greater, repair the open/high resistance in the circuit.
        - If less than 2 ohms, replace the P16 Instrument Cluster.
    - **If less than 10 ohms**
3. Test for 11.8-12.2 V between the signal circuit terminal 12 and ground.
    - **If less than 11.8 V**
    1. Ignition OFF, disconnect the harness connector at the P16 Instrument Cluster.
    2. Test for infinite resistance between the signal circuit and ground.
        - If less than infinite resistance, repair the short to ground on the circuit.
        - If infinite resistance

3. Test for less than 2 ohms in the signal circuit end to end.
    - If 2 ohms or greater, repair the open/high resistance in the circuit.
    - If less than 2 ohms, replace the P16 Instrument Cluster.
- **If greater than 12.2 V**

1. Ignition OFF, disconnect the harness connector at the P16 Instrument Cluster, ignition ON.
2. Test for less than 1 V between the signal circuit and ground.
    - If 1 V or greater, repair the short to voltage on the circuit.
    - If less than 1 V, replace the P16 Instrument Cluster.
- **If between 11.8-12.2 V**

4. Test or replace the S78 Turn Signal/Multifunction Switch.

Repair Instructions

Perform the **Diagnostic Repair Verification** after completing the repair.

- **Turn Signal Switch Replacement**
- **Control Module References** for instrument cluster replacement, programming and setup

DTC P0461-P0464

Diagnostic Instructions

- Perform the **Diagnostic System Check - Vehicle** prior to using this diagnostic procedure.
- Review **Strategy Based Diagnosis** for an overview of the diagnostic approach.
- **Diagnostic Procedure Instructions** provides an overview of each diagnostic category.

DTC Descriptors

DTC P0461

Fuel Level Sensor Performance

DTC P0462

Fuel Level Sensor Circuit Low Voltage

DTC P0463

Fuel Level Sensor Circuit High Voltage

DTC P0464

Fuel Level Sensor Circuit Intermittent

Diagnostic Fault Information

Circuit	Short to Ground	Open/High Resistance	Short to Voltage	Signal Performance
Fuel Level Sensor 1 Signal	P0462	P0463	P0463	P0461
Low Reference	-	1	P0463, P0464	P0461
1. Fuel Gauge Malfunction				

Circuit/System Description

The fuel level sensor changes resistance based on fuel level. The engine control module (ECM) monitors the signal circuit of the fuel level sensor in order to determine the fuel level. When the fuel tank is full, the resistances of the fuel level sensor is low and the ECM senses a low signal voltage on the signal circuit of the fuel level sensor. When the fuel tank is empty, the resistance of the fuel level sensor is high and the ECM senses a high signal voltage. The ECM uses the signal circuit of the fuel level sensor in order to calculate the percentage of remaining fuel in the tank. The ECM sends the fuel level percentage via High Speed CAN-Bus to the body control module (BCM). The BCM then sends the fuel level percentage via Low Speed CAN-Bus to the instrument cluster in order to control the fuel gauge.

Conditions for Running the DTC

- The engine is running
- The system voltage is between 11-16 V

Conditions for Setting the DTC

P0461 00

The ECM detects a change in fuel level of less than a specified amount (typically 3-10 L or 0.8-2.6 gal) over a specified driving distance (typically 240-320 km or 150-200 miles).

P0462

- The signal voltage is less than 0.25 V.
- The above conditions must be met for 5 seconds.

P0463

- The signal voltage is greater than 4.7 V.
- The above conditions must be met for 5 seconds.

P0464

- The fuel level change is greater than 10%.
- The above conditions must be met for 30 seconds.
- DTC P0464 runs and fails 2 out of 3 test cycles.

Action Taken When the DTC Sets

- P0461, P0462, P0463, and P0464 are Type B DTCs
- The fuel gauge defaults to empty
- The low fuel indicator illuminates

Conditions for Clearing the DTC

- P0461, P0462, P0463, and P0464 are Type B DTCs
- The DTC becomes history when the conditions for setting the DTC are no longer present.
- The history DTC clears after 40 malfunction-free warm-up cycles.

Reference Information

Schematic Reference

Instrument Cluster Schematics

Connector End View Reference

COMPONENT CONNECTOR END VIEWS - INDEX

Description and Operation

Instrument Cluster Description and Operation

Electrical Information Reference

- **Circuit Testing**
- **Connector Repairs**
- **Testing for Intermittent Conditions and Poor Connections**
- **Wiring Repairs**

DTC Type Reference

Powertrain Diagnostic Trouble Code (DTC) Type Definitions

Scan Tool Reference

Control Module References for scan tool information

Circuit/System Verification

1. Ignition ON.
2. Verify the scan tool Fuel Level Sensor parameter is between 0.5-3.5 V and varies with fuel level.

- **If not between 0.5-3.5 V or does not vary with fuel level**

  Refer to Circuit/System Testing below

- **If between 0.5-3.5 V and varies with fuel level**

3. Verify the all fuel level gauge segments illuminate when performing the scan tool Driver Information Center Segments control function.
   - **If any fuel level gauge segments do not illuminate**

     Replace the P16 instrument cluster

   - **If all fuel level gauge segments illuminate**
4. All OK.

Circuit/System Testing

1. Ignition OFF and all vehicle systems OFF, disconnect the X1 harness connector at the A7 Fuel Pump and Level Sender Assembly. It may take up to 2 minutes for all vehicle systems to power down.
2. Test for less than 10 ohms between the low reference circuit terminal 3 and ground.
   - **If 10 ohms or greater**
   1. Ignition OFF, disconnect the harness connector at the K20 Engine Control Module.
   2. Test for less than 2 ohms in the low reference circuit end to end.
      - If 2 ohms or greater, repair the open/high resistance in the circuit.
      - If less than 2 ohms, replace the K20 Engine Control Module.
   - **If less than 10 ohms**
3. Ignition ON.
4. Verify the scan tool Remaining Fuel In Tank parameter is less than 5%.
   - **If 5% or greater**
   1. Ignition OFF, disconnect the harness connector at the K20 Engine Control Module.
   2. Test for infinite resistance between the signal circuit terminal 4 and ground.
      - If less than infinite resistance, repair the short to ground on the circuit.
      - If infinite resistance, replace the K20 Engine Control Module.
   - **If less than 5%**
5. Install a 3 A fused jumper wire between the signal circuit terminal 4 and the low reference circuit terminal 3.
6. Verify the scan tool Remaining Fuel In Tank is greater than 90%.
   - **If 90% or less**
   1. Ignition OFF, disconnect the harness connector at the K20 Engine Control Module, ignition ON.
   2. Test for less than 1 V between the signal circuit and ground.
      - If 1 V or greater, repair the short to voltage on the circuit.
      - If less than 1 V

3. Ignition OFF
4. Test for less than 2 ohms in the signal circuit end to end.
    - If 2 ohms or greater, repair the open/high resistance in the circuit.
    - If less than 2 ohms, replace the K20 Engine Control Module.
- **If greater than 90%**

7. Test or replace the B46 Fuel Level Sensor.

Component Testing

1. Ignition OFF, remove the A7 Fuel Pump and Level Sender Assembly.
2. Sweep the fuel Level Sensor through its full range of motion while measuring resistance between the signal terminal 4 and the low reference terminal 3.
3. Test for a minimum resistance value of 37-43 ohms and a maximum value of 245-255 ohms without any spikes or dropouts.
    - **If minimum resistance is not 37-43 ohms, maximum resistance is not 245-255 ohms, or if there are any spikes or dropouts**

      Replace the B46 Fuel Level Sensor.

    - **If minimum resistance is 37-43 ohms, maximum resistance is 245-255 ohms, and if there are no spikes or dropouts**
4. All OK.

Repair Instructions

Perform the **Diagnostic Repair Verification** after completing the repair.

- **Fuel Tank Fuel Pump Module Replacement** for the 1.4L engine
- **Fuel Level Sensor Replacement** for the 1.8L engine
- **Control Module References** for the ECM replacement, programming and setup

DTC P0520

Diagnostic Instructions

- Perform the **Diagnostic System Check - Vehicle** prior to using this diagnostic procedure.
- Review **Strategy Based Diagnosis** for an overview of the diagnostic approach.
- **Diagnostic Procedure Instructions** provides an overview of each diagnostic category.

DTC Descriptor

DTC P0520

Engine Oil Pressure Switch Circuit

Diagnostic Fault Information

Circuit	Short to Ground	Open/High Resistance	Short to Voltage	Signal Performance
Signal	1	P0520	1	P0521
1. Engine Oil Pressure Indicator Malfunction				

Typical Scan Tool Data

ECM - Engine Oil Pressure Switch

Circuit	Short to Ground	Open	Short to Voltage
Operating Conditions: Engine Running **Parameter Normal Range:** OK			
Signal	Low	OK	OK

Circuit/System Description

The engine oil pressure switch is a normally closed switch that opens with the proper oil pressure. With the ignition switch turned ON and the engine not running, the engine control module (ECM) should detect a low signal voltage input. With the engine running, the engine oil pressure switch opens and the ECM should detect a high signal voltage input. When the oil pressure is low, the ECM sends a message via High Speed CAN-Bus to the body control module (BCM). The BCM then sends a message via Low Speed CAN-Bus to the instrument cluster requesting the engine oil pressure indicator turned ON.

Conditions for Running the DTC

The engine is running.

Conditions for Setting the DTC

- The ECM detects that the engine oil pressure switch signal circuit is pulled low.
- The above condition is present for greater than 10 seconds.

Action Taken When the DTC Sets

The instrument cluster illuminates the service vehicle soon indicator and the oil pressure low indicator.

Conditions for Clearing the DTC

The DTC becomes history when the conditions for setting the DTC are no longer present.

Reference Information

Schematic Reference

Instrument Cluster Schematics

Connector End View Reference

COMPONENT CONNECTOR END VIEWS - INDEX

Description and Operation

- **Instrument Cluster Description and Operation**
- **Indicator/Warning Message Description and Operation**
- **Driver Information Center (DIC) Description and Operation**

Electrical Information Reference

- **Circuit Testing**
- **Connector Repairs**
- **Testing for Intermittent Conditions and Poor Connections**
- **Wiring Repairs**

DTC Type Reference

Powertrain Diagnostic Trouble Code (DTC) Type Definitions

Scan Tool Reference

Control Module References for scan tool information

Circuit/System Verification

1. Ignition ON.
2. Verify the scan tool Engine Oil Pressure parameter is Low.
    - **If not Low**

      Refer to Circuit/System Testing below.

    - **If Low**
3. Engine running.
4. Verify the scan tool Engine Oil Pressure parameter is OK.
    - **If not OK**

      Refer to Circuit/System Testing below.

    - **If OK**
5. All OK.

Circuit/System Testing

1. Ignition OFF, disconnect the harness connector at the B37 Engine Oil Pressure Switch, ignition ON.
2. Verify the scan tool Engine Oil Pressure Switch parameter is OK.
    - **If not OK**
    1. Ignition OFF, disconnect the harness connector at the K20 Engine Control Module.
    2. Test for infinite resistance between the signal circuit terminal 1 and ground.
        - If less than infinite resistance, repair the short to ground on the circuit.
        - If infinite resistance, replace the K20 Engine Control Module.
    - **If OK**
3. Install a 3 A fused jumper wire between the signal circuit terminal 1 and ground.
4. Verify the scan tool Engine Oil Pressure Switch parameter is Low.
    - **If not Low**
    1. Ignition OFF, disconnect the harness connector at the K20 Engine Control Module, ignition ON.
    2. Test for less than 1 V between the signal circuit and ground.
        - If 1 V or greater, repair the short to voltage on the circuit.
        - If less than 1 V
    3. Test for less than 2 ohms in the signal circuit end to end.
        - If 2 ohms or greater, repair the open/high resistance in the circuit.
        - If less than 2 ohms, replace the K20 Engine Control Module.
    - **If Low**
5. Test or replace the B37 Engine Oil Pressure Switch.

Repair Instructions

Perform the **Diagnostic Repair Verification** after completing the repair.

- **Engine Oil Pressure Indicator Switch Replacement** for the 1.4L engine
- **Engine Oil Pressure Indicator Switch Replacement** for the 1.8L engine
- **Control Module References** for ECM replacement, programming and setup

DTC P0521

Diagnostic Instructions

- Perform the **Diagnostic System Check - Vehicle** prior to using this diagnostic procedure.
- Review **Strategy Based Diagnosis** for an overview of the diagnostic approach.
- **Diagnostic Procedure Instructions** provides an overview of each diagnostic category.

DTC Descriptor

DTC P0521

Engine Oil Pressure Sensor Performance

Diagnostic Fault Information

Circuit	Short to Ground	Open/High Resistance	Short to Voltage	Signal Performance
Signal	1	P0521	1	P0521
1. Engine Oil Pressure Indicator Malfunction				

Typical Scan Tool Data

ECM - Engine Oil Pressure Switch

Circuit	Short to Ground	Open	Short to Voltage
Operating Conditions: Engine Running **Parameter Normal Range:** OK			
Signal	Low	OK	OK

Circuit/System Description

The engine oil pressure switch is a normally closed switch that opens with the proper oil pressure. With the ignition switch turned ON and the engine not running, the engine control module (ECM) should detect a low signal voltage input. With the engine running, the engine oil pressure switch opens and the ECM should detect a high signal voltage input. When the oil pressure is low, the ECM sends a message via High Speed CAN-Bus to the body control module (BCM). The BCM then sends a message via Low Speed CAN-Bus to the instrument cluster requesting the engine oil pressure indicator turned ON.

Conditions for Running the DTC

The engine is running.

Conditions for Setting the DTC

- The ECM detects that the engine oil pressure switch signal circuit is pulled low.
- The above condition is present for greater than 10 seconds.

Action Taken When the DTC Sets

The instrument cluster illuminates the service vehicle soon indicator and the oil pressure low indicator.

Conditions for Clearing the DTC

The DTC becomes history when the conditions for setting the DTC are no longer present.

Reference Information

Schematic Reference

Instrument Cluster Schematics

Connector End View Reference

COMPONENT CONNECTOR END VIEWS - INDEX

Description and Operation

- **Instrument Cluster Description and Operation**
- **Indicator/Warning Message Description and Operation**
- **Driver Information Center (DIC) Description and Operation**

Electrical Information Reference

- **Circuit Testing**
- **Connector Repairs**
- **Testing for Intermittent Conditions and Poor Connections**
- **Wiring Repairs**

DTC Type Reference

Powertrain Diagnostic Trouble Code (DTC) Type Definitions

Scan Tool Reference

Control Module References for scan tool information

Circuit/System Verification

1. Ignition ON.
2. Verify the scan tool Engine Oil Pressure parameter is Low.
    - **If not Low**

      Refer to Circuit/System Testing below.

    - **If Low**
3. Engine running.
4. Verify the scan tool Engine Oil Pressure parameter is OK.
    - **If not OK**

      Refer to Circuit/System Testing below.

    - **If OK**
5. All OK.

Circuit/System Testing

1. Ignition OFF, disconnect the harness connector at the B37 engine oil pressure switch, ignition ON.
2. Verify the scan tool Engine Oil Pressure Switch parameter is OK.
    - **If not OK**
    1. Ignition OFF, disconnect the harness connector at the K20 engine control module.
    2. Test for infinite resistance between the signal circuit terminal 1 and ground.
        - If less than infinite resistance, repair the short to ground on the circuit.
        - If infinite resistance, replace the K20 engine control module.
    - **If OK**
3. Install a 3 A fused jumper wire between the signal circuit terminal 1 and ground.
4. Verify the scan tool Engine Oil Pressure Switch parameter is Low.
    - **If not Low**
    1. Ignition OFF, disconnect the harness connector at the K20 engine control module, ignition ON.
    2. Test for less than 1 V between the signal circuit and ground.
        - If 1 V or greater, repair the short to voltage on the circuit.
        - If less than 1 V
    3. Test for less than 2 ohms in the signal circuit end to end.
        - If 2 ohms or greater, repair the open/high resistance in the circuit.
        - If less than 2 ohms, replace the K20 engine control module.
    - **If Low**
5. Test or replace the B37 engine oil pressure switch.

Repair Instructions

Perform the **Diagnostic Repair Verification** after completing the repair.

- **Engine Oil Pressure Indicator Switch Replacement** for the 1.4L engine
- **Engine Oil Pressure Indicator Switch Replacement** for the 1.8L engine
- **Control Module References** for ECM replacement, programming and setup

SYMPTOMS - DISPLAYS AND GAUGES

NOTE: The following steps must be completed before using the symptom diagnostic tables.

1. Before using the symptom diagnostic tables, perform the **Diagnostic System Check - Vehicle**
2. Review the system operation in order to understand the system functions. Refer to the following description and operations:
    - **Instrument Cluster Description and Operation**
    - **Indicator/Warning Message Description and Operation**

- **Driver Information Center (DIC) Description and Operation**
- **Audible Warnings Description and Operation**

Visual/Physical Inspection

- Inspect for aftermarket devices which can affect the operation of the instrument panel cluster or the audible warning systems. Refer to **Checking Aftermarket Accessories**
- Inspect the accessible system components or the visible system components for obvious damage or for obvious conditions which can cause the symptom.
- Inspect for the proper fluid levels.

Intermittent

Faulty electrical connections or wiring may be the cause of intermittent conditions. Refer to **Testing for Intermittent Conditions and Poor Connections**

Symptom List

Refer to a symptom diagnostic procedure from the following list in order to diagnose the symptom:

Gauges and Odometer

- **Instrument Cluster Gauges Malfunction**
- **Fuel Gauge Malfunction**
- **Speedometer and/or Odometer Malfunction**

Indicators

- **ABS Indicator Malfunction**
- **Air Bag Indicator Circuit Malfunction (Driver)** , **Air Bag Indicator Circuit Malfunction (Passenger)**
- **Brake Warning Indicator Malfunction**
- **Charge Indicator Malfunction**
- **Cruise Control Indicator Malfunction**
- **Door Ajar Indicator Malfunction**
- **Engine Oil Pressure Indicator Malfunction**
- **Front Fog Lamps Malfunction**
- **Headlamps Malfunction**
- **Interior Backlighting Malfunction**
- **Malfunction Indicator Lamp (MIL) Diagnosis**
- **Seat Belt Indicator Malfunction - Driver**
- **Seat Belt Indicator Malfunction - Passenger**
- **Security Indicator Malfunction (with C67)** , **Security Indicator Malfunction (with C68)**

- **Traction Control/Stability Control Indicator Malfunction**
- **Trunk Ajar Indicator Malfunction**
- **Turn Signal Lamps and/or Indicators Malfunction**
- **Washer Malfunction**

Driver Information Center

- **Driver Information Center Switch Malfunction**
- **Outside Air Temperature Display Malfunction**

Audible Warnings

Chime Malfunction

CHARGE INDICATOR MALFUNCTION

Diagnostic Instructions

- Perform the **Diagnostic System Check - Vehicle** prior to using this diagnostic procedure.
- Review **Strategy Based Diagnosis** for an overview of the diagnostic approach.
- **Diagnostic Procedure Instructions** provides an overview of each diagnostic category.

Circuit/System Description

The engine Control Module (ECM) uses the generator turn ON signal circuit to control the load of the generator on the engine. A high side driver in the ECM applies voltage to the voltage regulator. This signals the voltage regulator to turn the field circuit ON and OFF. The ECM monitors the state of the generator turn ON signal circuit. The ECM should detect low voltage on the generator turn on signal circuit when the ignition is ON and the engine is OFF, or when the charging system malfunctions. With the engine running, the ECM should detect high voltage on the generator turn on signal circuit. The ECM performs key ON and RUN tests to determine the status of the generator turn on signal circuit. If a malfunction is detected the ECM will illuminate the charge indicator in the instrument cluster.

Reference Information

Schematic Reference

Instrument Cluster Schematics

Connector End View Reference

COMPONENT CONNECTOR END VIEWS - INDEX

Description and Operation

Indicator/Warning Message Description and Operation

Electrical Information Reference

- **Circuit Testing**
- **Connector Repairs**
- **Testing for Intermittent Conditions and Poor Connections**
- **Wiring Repairs**

Scan Tool Reference

Control Module References for scan tool information

Circuit/System Verification

1. Ignition ON, engine running.
2. Verify the scan tool Battery Voltage parameter is between 12.5-15.5 V.
   - **If not 12.5-15.5 V**

     Refer to **Charging System Test** .

   - **If 12.5-15.5 V**
3. Verify the charge indicator turns on and off when commanding the All Indicators test ON and OFF with the scan tool.
   - **If the charge indicator always stays on or always stays off**

     Replace the P16 Instrument Cluster.

   - **If the charge indicator turns on and off as commanded**
4. All OK.

Repair Instructions

Perform the **Diagnostic Repair Verification** after completing the repair.

Control Module References for Instrument Cluster replacement, programming, and setup

CHIME MALFUNCTION

Diagnostic Instructions

- Perform the **Diagnostic System Check - Vehicle** prior to using this diagnostic procedure.
- Review **Strategy Based Diagnosis** for an overview of the diagnostic approach.
- **Diagnostic Procedure Instructions** provides an overview of each diagnostic category.

Circuit/System Description

The radio generates the audible warnings. The instrument cluster, the body control module (BCM), the inflatable restraint sensing and diagnostic module (SDM) or the object alarm module request audible warnings via serial data.

Reference Information

Schematic Reference

Audible Warnings Schematics

Connector End View Reference

COMPONENT CONNECTOR END VIEWS - INDEX

Description and Operation

Audible Warnings Description and Operation

Electrical Information Reference

- **Circuit Testing**
- **Connector Repairs**
- **Testing for Intermittent Conditions and Poor Connections**
- **Wiring Repairs**

Scan Tool Reference

Control Module References for scan tool information

Circuit/System Verification

NOTE: Before performing this diagnostics, make sure no indicators are illuminated after the instrument cluster performs a lamp test. If any indicators are illuminated after the bulb test, perform the indicator diagnostics before this diagnostics.

1. Ignition ON.
2. Verify all the radio speakers operate by adjust the radio balance and fade to each speaker.
    - **If any speaker does not operate properly**

      Refer to **Speaker Malfunction** .

    - **If the speakers operate properly**
3. Verify the scan tool Driver Seat Belt Status and Passenger Seat Belt Status parameters are Buckled when both front seat belts are buckled.

- **If not Buckled**

  Refer to **Seat Belt Indicator Malfunction - Driver** .

- **If buckled**

4. Verify the scan tool Headlamp On Switch parameter is Inactive when the headlamps are OFF.
   - **If not Inactive**

     Refer to **Headlamps Malfunction** .

   - **If Inactive**
5. Verify the scan tool Park Lamps Switch parameter is Inactive when the park lamp switch is OFF.
   - **If not Inactive**

     Refer to **Park, License, and/or Tail Lamps Malfunction** .

   - **If Inactive**
6. Verify the scan tool Left Turn Signal Switch and Right Turn Signal Switch parameters are Inactive while the turn signal switch is OFF.
   - **If not Inactive**

     Refer to **Turn Signal Lamps and/or Indicators Malfunction** .

   - **If Inactive**
7. Verify the scan tool Park Brake Switch parameter is Inactive when the park brake is OFF.
   - **If not Inactive**

     Refer to **Park Brake System Diagnosis (Drum Brakes)** , **Park Brake System Diagnosis (Disc Brakes)** .

   - **If Inactive**
8. Verify that all scan tool parameters listed below are Inactive when all the doors are closed.
   - Driver Door Ajar Switch
   - Passenger Door Ajar Switch
   - Left Rear Door Ajar Switch
   - Right Rear Door Ajar Switch
   - **If not Inactive**

     Refer to **Door Ajar Indicator Malfunction** .

   - **If Inactive**
9. Verify the scan tool Key in Ignition Status parameter is Inactive when the key is out of the ignition.
   - **If not Inactive**

Refer to Circuit/System Testing below.

- **If Active**

10. All OK

Circuit/System Testing

1. Ignition ON, disconnect the harness connector at the S39 Ignition Switch while the ignition is ON.
2. Verify a test lamp illuminates between the B+ circuit terminal 2 and ground.
   - **If the test lamp does not illuminate and the circuit fuse is good**

     Test for less than 2 ohms in the B+ circuit end to end.

   - If 2 ohms or greater, repair the open/high resistance in the circuit.
   - If less than 2 ohms, verify the fuse is not open and there is voltage at the fuse.
   - **If the test lamp does not illuminate and the circuit fuse is open**
     1. Test for infinite resistance between the B+ circuit and ground.
        - If less than infinite resistance, repair the short to ground on the circuit.
        - If infinite resistance
     2. Test for infinite resistance between the signal circuit and ground.
        - If less than infinite resistance, repair the short to ground on the circuit.
        - If infinite resistance, replace the K9 Body Control Module.
   - **If the test lamp illuminates**
3. Verify the scan tool Key in Ignition Status parameter is Inactive.
   - **If not Inactive**
     1. Disconnect the X3 harness connector at the K9 Body Control Module.
     2. Test for less than 1 V between the signal circuit terminal 4 and ground.
        - If 1 V or greater, repair the short to voltage on the circuit.
        - If less than 1 V, replace the K9 Body Control Module.
   - **If Inactive**
4. Install a 3 A fused jumper wire between the signal circuit terminal 4 and the B+ circuit terminal 2.
5. Verify the scan tool Key in Ignition Status parameter is Active.
   - **If not Active**
     1. Ignition OFF, disconnect the X3 harness connector at the K9 Body Control Module.
     2. Test for less than 2 ohms in the signal circuit end to end.
        - If 2 ohms or greater, repair the open/high resistance in the circuit.
        - If less than 2 ohms, replace the K9 Body Control Module.
   - **If Active**
6. Test or replace the S39 Ignition Switch.

Repair Instructions

Perform the **Diagnostic Repair Verification** after completing the repair.

Control Module References for BCM or Radio replacement, programming and setup

DRIVER INFORMATION CENTER SWITCH MALFUNCTION

Diagnostic Instructions

- Perform the **Diagnostic System Check - Vehicle** prior to using this diagnostic procedure.
- Review **Strategy Based Diagnosis** for an overview of the diagnostic approach.
- **Diagnostic Procedure Instructions** provides an overview of each diagnostic category.

Circuit/System Description

The driver information center switches are multiplexed switches that are part of the Turn Signal/Multifunction Switch.

The Instrument Cluster provides 5 volts to the MENU switch. The MENU switch is a momentary contact switch that is provided ground through the Turn Signal/Multifunction Switch ground circuit.

The Instrument Cluster provides battery voltage to the UP, DOWN, SET switches. The UP, DOWN, SET switch signal circuits are pulled up to battery voltage in the Instrument Cluster. The Instrument Cluster also provides the UP, DOWN, SET switches with a low reference circuit. The UP, DOWN, SET switch signal circuit is pulled low when a switch is activated. The driver information center UP, DOWN, SET switches are momentary contact switches that connect a series of resistors in a resistor ladder format. The instrument cluster monitors the driver information center UP, DOWN, SET switch signal circuit to determine the switch position. Each switch state - UP, DOWN, SET- corresponds to a certain resistance value. The instrument cluster determines the switch pressed by the voltage drop across the resistors.

Reference Information

Schematic Reference

Instrument Cluster Schematics

Connector End View Reference

COMPONENT CONNECTOR END VIEWS - INDEX

Description and Operation

Driver Information Center (DIC) Description and Operation

Electrical Information Reference

- **Circuit Testing**
- **Connector Repairs**
- **Testing for Intermittent Conditions and Poor Connections**
- **Wiring Repairs**

Scan Tool Reference

Control Module References for scan tool information

Circuit/System Verification

1. Ignition ON.
2. Verify the driver information center set, up and down function changes when pressing the set, up or down switch.
   - **If the driver information center does not change**

     Refer to Set, Up and Down Switch Malfunction below

   - **If the driver information center changes**
3. Verify the driver information center menu function changes when pressing the menu switch.
   - **If the driver information center does not change**

     Refer to Menu Switch Malfunction below

   - **If the driver information center changes**
4. All OK.

Circuit/System Testing

Menu Switch Malfunction

1. Ignition ON.
2. Test for 4.8-5.2 V between the signal circuit terminal 5 and ground.
   - **If less than 4.8 V**
     1. Ignition OFF, disconnect the harness connector at the P16 instrument cluster.
     2. Test for infinite resistance between the signal circuit and ground.
        - If less than infinite resistance, repair the short to ground on the circuit.
        - If infinite resistance
     3. Test for less than 2 ohms in the signal circuit end to end.
        - If 2 ohms or greater, repair the open/high resistance in the circuit.
        - If less than 2 ohms, replace the P16 instrument cluster.
   - **If greater than 5.2 V**

1. Ignition OFF, disconnect the harness connector at the P16 instrument cluster, ignition ON.
2. Test for less than 1 V between the signal circuit and ground.
    - If 1 V or greater, repair the short to voltage on the circuit.
    - If less than 1 V, replace the P16 instrument cluster.
- **If between 4.8-5.2 V**

3. Test for less than 10 ohms between the ground circuit terminal 3 and ground.
- **If 10 ohms or greater**

  Repair the open/high resistance in the circuit

- **If less than 10 ohms**

4. Test or replace the S78 Turn Signal/ Multifunction Switch.

Set, Up and Down Switch Malfunction

1. Ignition OFF and all vehicle systems OFF, disconnect the X1 harness connector at the S78 Turn Signal/ Multifunction Switch, ignition ON.
2. Test for less than 10 ohms between the low reference circuit terminal 6 and ground.
- **If 10 ohms or greater**

1. Ignition OFF, disconnect the harness connector at the P16 instrument cluster.
2. Test for less than 2 ohms in the low reference circuit end to end.
    - If 2 ohms or greater, repair the open/high resistance in the circuit.
    - If less than 2 ohms, replace the P16 instrument cluster.
- **If less than 10 ohms**

3. Test for 11.8-12.2 V between the signal circuit terminal 12 and ground.
- **If less than 11.8 V**

1. Ignition OFF, disconnect the harness connector at the P16 instrument cluster.
2. Test for infinite resistance between the signal circuit and ground.
    - If less than infinite resistance, repair the short to ground on the circuit.
    - If infinite resistance
3. Test for less than 2 ohms in the signal circuit end to end.
    - If 2 ohms or greater, repair the open/high resistance in the circuit.
    - If less than 2 ohms, replace the P16 instrument cluster.
- **If greater than 12.2 V**

1. Ignition OFF, disconnect the harness connector at the P16 instrument cluster, ignition ON.
2. Test for less than 1 V between the signal circuit and ground.
    - If 1 V or greater, repair the short to voltage on the circuit.
    - If less than 1 V, replace the P16 instrument cluster.
- **If between 11.8-12.2 V**

4. Test or replace the S78 Turn Signal/ Multifunction Switch.

Repair Instructions

Perform the **Diagnostic Repair Verification** after completing the repair.

- **Turn Signal Switch Replacement**
- **Control Module References** for the instrument cluster replacement, programming and setup

ENGINE OIL PRESSURE INDICATOR MALFUNCTION

Diagnostic Instructions

- Perform the **Diagnostic System Check - Vehicle** prior to using this diagnostic procedure.
- Review **Strategy Based Diagnosis** for an overview of the diagnostic approach.
- **Diagnostic Procedure Instructions** provides an overview of each diagnostic category.

Diagnostic Fault Information

Circuit	Short to Ground	Open/High Resistance	Short to Voltage	Signal Performance
Signal	1	P0520, P0521	1	P0521
Ground	-	P0520, P0521	-	P0521
1. Engine Oil Pressure Indicator Malfunction				

Circuit/System Description

The Engine Oil Pressure Switch is a normally closed switch that opens with the proper oil pressure. With the ignition switch turned ON and the engine not running, the Engine Control Module (ECM) should detect a low signal voltage input. With the engine running, the engine oil pressure switch opens and the ECM should detect a high signal voltage input. When the oil pressure is low, the ECM sends a message via High Speed CAN-Bus to the body control module (BCM). The BCM then sends a message via Low Speed CAN-Bus to the instrument cluster requesting the engine oil pressure indicator turned ON.

Reference Information

Schematic Reference

Instrument Cluster Schematics

Connector End View Reference

COMPONENT CONNECTOR END VIEWS - INDEX

Description and Operation

Indicator/Warning Message Description and Operation

Electrical Information Reference

- **Circuit Testing**
- **Connector Repairs**
- **Testing for Intermittent Conditions and Poor Connections**
- **Wiring Repairs**

Scan Tool Reference

Control Module References for scan tool information

Circuit/System Verification

1. Ignition ON.
2. Verify the scan tool Engine Oil Pressure parameter is Low.
    - **If not Low**

      Refer to Circuit/System Testing below.

    - **If Low**
3. Engine running.
4. Verify the scan tool Engine Oil Pressure parameter is OK.
    - **If not OK**

      Refer to Circuit/System Testing below.

    - **If OK**
5. All OK.

Circuit/System Testing

1. Ignition OFF, disconnect the harness connector at the B37 Engine Oil Pressure Switch, ignition ON.
2. Verify the scan tool Engine Oil Pressure Switch parameter is OK.
    - **If not OK**
        1. Ignition OFF, disconnect the harness connector at the K20 Engine Control Module.
        2. Test for infinite resistance between the signal circuit terminal 1 and ground.
            - If less than infinite resistance, repair the short to ground on the circuit.
            - If infinite resistance, replace the K20 Engine Control Module.
    - **If OK**
3. Install a 3 A fused jumper wire between the signal circuit terminal 1 and ground.
4. Verify the scan tool Engine Oil Pressure Switch parameter is Low.

- **If not Low**

1. Ignition OFF, disconnect the harness connector at the K20 Engine Control Module, ignition ON.
2. Test for less than 1 V between the signal circuit and ground.
   - If 1 V or greater, repair the short to voltage on the circuit.
   - If less than 1 V
3. Test for less than 2 ohms in the signal circuit end to end.
   - If 2 ohms or greater, repair the open/high resistance in the circuit.
   - If less than 2 ohms, replace the K20 Engine Control Module.

- **If Low**

5. Test or replace the B37 Engine Oil Pressure Switch.

Repair Instructions

Perform the **Diagnostic Repair Verification** after completing the repair.

- **Engine Oil Pressure Indicator Switch Replacement** for the 1.4L engine
- **Engine Oil Pressure Indicator Switch Replacement** for the 1.8L engine
- **Control Module References** for instrument cluster or ECM replacement, programming and setup

FUEL GAUGE MALFUNCTION

Diagnostic Instructions

- Perform the **Diagnostic System Check - Vehicle** prior to using this diagnostic procedure.
- Review **Strategy Based Diagnosis** for an overview of the diagnostic approach.
- **Diagnostic Procedure Instructions** provides an overview of each diagnostic category.

Circuit/System Description

The instrument cluster displays the fuel level based on the information from the engine control module (ECM). The ECM converts the data from the fuel level sensors to a fuel level signal. The ECM sends the fuel level signal via a High Speed CAN-Bus signal to the body control module (BCM). The BCM then sends the information via a Low Speed CAN-Bus signal to the instrument cluster to display the fuel level. When the fuel level falls below 11% the instrument cluster illuminates the low fuel level indicator.

Reference Information

Schematic Reference

Instrument Cluster Schematics

Connector End View Reference

COMPONENT CONNECTOR END VIEWS - INDEX

Description and Operation

Instrument Cluster Description and Operation

Electrical Information Reference

- **Circuit Testing**
- **Connector Repairs**
- **Testing for Intermittent Conditions and Poor Connections**
- **Wiring Repairs**

Scan Tool Reference

Control Module References for scan tool information

Circuit/System Verification

1. Ignition ON, perform the Instrument Cluster Gauge Sweep test with the scan tool, verify that the fuel level gauge sweeps from its low to high position.
    - **If the fuel level gauge does not sweep**

      Replace the P16 Instrument Cluster.

    - **If the fuel level gauge sweeps**
2. Command the All Indicators test ON and OFF with the scan tool, verify that the low fuel level indicator turns ON and OFF.
    - **If the low fuel level indicator does not turn ON or OFF as commanded**

      Replace the P16 Instrument Cluster.

    - **If the low fuel level indicator turns ON and OFF as commanded**
3. Observe the scan tool ECM Fuel Level Sensor parameter. The reading should be 0.5-3.5 V and vary with fuel level.
    - **If the reading does not vary with fuel level**

      Refer to **DTC P0461-P0464**.

    - **If the reading varies with fuel level**
4. All OK.

Repair Instructions

Perform the **Diagnostic Repair Verification** after completing the repair.

Control Module References for instrument cluster or ECM replacement, programming and setup.

INSTRUMENT CLUSTER GAUGES MALFUNCTION

Diagnostic Instructions

- Perform the **Diagnostic System Check - Vehicle** prior to using this diagnostic procedure.
- Review **Strategy Based Diagnosis** for an overview of the diagnostic approach.
- **Diagnostic Procedure Instructions** provides an overview of each diagnostic category.

Circuit/System Description

The instrument cluster displays the engine coolant temperature, fuel level, vehicle speed and the engine speed based on the information from the engine control module (ECM). The ECM sends information via a serial data to the body control module (BCM). The BCM then sends the information via serial data to the instrument cluster to display the engine coolant temperature, fuel level, the engine speed, the vehicle speed and the distance travelled, either in kilometers or miles, based on the vehicle requirements.

Reference Information

Schematic Reference

Instrument Cluster Schematics

Connector End View Reference

COMPONENT CONNECTOR END VIEWS - INDEX

Description and Operation

Instrument Cluster Description and Operation

Electrical Information Reference

- **Circuit Testing**
- **Connector Repairs**
- **Testing for Intermittent Conditions and Poor Connections**
- **Wiring Repairs**

Scan Tool Reference

Control Module References for scan tool information

Circuit/System Verification

1. Verify no DTC is set.
    - **If any DTC is set**

Refer to **Diagnostic Trouble Code (DTC) List - Vehicle** .

- **If no DTCs are set**

2. Ignition ON, perform the Instrument Cluster Gauge Sweep test with the scan tool, verify that all gauges sweep from their low to high position.
   - **If any gauge does not sweep**

     Replace the P16 Instrument Cluster.

   - **If all gauges sweep**
3. Drive the vehicle, verify the gauge values matches the values on the scan tool.
   - **If the values do not match**

     Replace the P16 Instrument Cluster.

   - **If the values match the scan tool**
4. All OK.

Repair Instructions

Perform the **Diagnostic Repair Verification** after completing the repair.

Control Module References for Instrument Cluster or ECM replacement, programming, and setup.

OUTSIDE AIR TEMPERATURE DISPLAY MALFUNCTION

Diagnostic Instructions

- Perform the **Diagnostic System Check - Vehicle** prior to using this diagnostic procedure.
- Review **Strategy Based Diagnosis** for an overview of the diagnostic approach.
- **Diagnostic Procedure Instructions** provides an overview of each diagnostic category.

Diagnostic Fault Information

Circuit	Short to Ground	Open/High Resistance	Short to Voltage	Signal Performance
Ambient Air Temperature Sensor Signal	B0158 02	B0158 05	B0158 05	-
Low Reference	-	B0158 05	B0158 05	-

Circuit/System Description

The instrument cluster monitors the ambient air temperature sensor with a low reference circuit and 5 V signal circuit. The instrument cluster monitors the voltage drop across the sensor, which is proportional to temperature. When the ambient air temperatures are cold, the resistance of the sensor is high and the voltage signals are high.

When the ambient air temperatures are hot, the resistance of the sensors is low and the voltage signals are low. The instrument cluster converts the voltage value to a temperature value of Celsius or Fahrenheit that will be displayed by the display.

Reference Information

Schematic Reference

Instrument Cluster Schematics

Connector End View Reference

COMPONENT CONNECTOR END VIEWS - INDEX

Description and Operation

Driver Information Center (DIC) Description and Operation

Electrical Information Reference

- **Circuit Testing**
- **Connector Repairs**
- **Testing for Intermittent Conditions and Poor Connections**
- **Wiring Repairs**

Scan Tool Reference

Control Module References for scan tool information

Circuit/System Verification

Ignition ON, observe the scan tool Ambient Air Temperature parameter. The reading should be between -40°C (-40°F) to +88°C (+190°F) and change with air temperature changes.

Circuit/System Testing

1. Ignition OFF and all vehicle systems OFF, disconnect the harness connector at the B9 ambient air temperature sensor. It may take up to 2 minutes for all vehicle systems to power down.
2. Test for less than 1 V between the low reference circuit terminal B and ground.
   - **If 1 V or greater**

     repair the short to voltage on the circuit.

   - **If less than 1 V**
3. Test for less than 10 ohms between the low reference circuit terminal B and ground.
   - **If 10 ohms or greater**

1. Ignition OFF, disconnect the harness connector at the P16 instrument cluster.
2. Test for less than 2 ohms in the low reference circuit end to end.
    - If 2 ohms or greater, repair the open/high resistance in the circuit.
    - If less than 2 ohms, replace the P16 instrument cluster.

- **If less than 10 ohms**

4. Ignition ON.
5. Verify the scan tool Ambient Air Temperature parameter is greater than 98%.
    - **If 98% or less**
    1. Ignition OFF, disconnect the harness connector at the P16 instrument cluster.
    2. Test for infinite resistance between the signal circuit and ground.
        - If less than infinite resistance, repair the short to ground on the circuit.
        - If infinite resistance, replace the P16 instrument cluster.

    - **If greater than 98%**
6. Install a 3 A fused jumper wire between the signal circuit terminal A and the low reference circuit terminal B.
7. Verify the scan tool Ambient Air Temperature parameter is less than 8%.
    - **If 8% or greater**
    1. Ignition OFF, disconnect the harness connector at the P16 instrument cluster, ignition ON.
    2. Test for less than 1 V between the signal circuit and ground.
        - If 1 V or greater, repair the short to voltage on the circuit.
        - If less than 1 V
    3. Ignition OFF
    4. Test for less than 2 ohms in the signal circuit end to end.
        - If 2 ohms or greater, repair the open/high resistance in the circuit.
        - If less than 2 ohms, replace the P16 instrument cluster.

    - **If less than 8%**
8. Test or replace the B9 Ambient Air Temperature Sensor.

Repair Instructions

Perform the **Diagnostic Repair Verification** after completing the repair.

- **Ambient Air Temperature Gauge Sensor Replacement**
- **Control Module References** for instrument cluster or display replacement, programming, and setup

SPEEDOMETER AND/OR ODOMETER MALFUNCTION

Diagnostic Instructions

- Perform the **Diagnostic System Check - Vehicle** prior to using this diagnostic procedure.

- Review **Strategy Based Diagnosis** for an overview of the diagnostic approach.
- **Diagnostic Procedure Instructions** provides an overview of each diagnostic category.

Circuit/System Description

The instrument cluster displays the engine coolant temperature, fuel level, vehicle speed and the engine speed based on the information from the engine control module (ECM). The ECM sends information via a High Speed CAN-Bus signal to the body control module (BCM). The BCM then sends the information via a Low Speed CAN-Bus signal to the instrument cluster to display the engine coolant temperature, fuel level, the engine speed, the vehicle speed and the distance travelled, either in kilometers or miles, based on the vehicle requirements. The instrument cluster will display dashes when its VIN does not match the VIN received from the BCM.

Diagnostic Aids

If the VIN mismatch is corrected the odometer will once again be displayed in the instrument cluster. If the vehicle is driven for a calibrated distance with a VIN mismatch, it will cause the instrument cluster odometer to enter into an error mode and lock itself. When this occurs the dashes will remain on the display even after correcting the VIN mismatch. The vehicle odometer status data display on the scan tool can be used to identify a locked odometer. The only way to unlock the instrument cluster (clear the dashes from the display) is to perform an SPS programming event. Failure to follow the diagnostic and programming procedures may result in either an improper odometer value or a module replacement.

Reference Information

Schematic Reference

Instrument Cluster Schematics

Connector End View Reference

COMPONENT CONNECTOR END VIEWS - INDEX

Description and Operation

Instrument Cluster Description and Operation

Electrical Information Reference

- **Circuit Testing**
- **Connector Repairs**
- **Testing for Intermittent Conditions and Poor Connections**
- **Wiring Repairs**

Scan Tool Reference

Control Module References for scan tool information

Circuit/System Verification

1. Verify no DTC is set.
   - **If any DTC is set**

     Diagnose DTCs first. Refer to **Diagnostic Trouble Code (DTC) List - Vehicle** .

   - **If no DTCs are set**
2. Ignition ON, perform the Speedometer Sweep Test with the scan tool, verify the speedometer sweeps from low to high position.
   - **If speedometer does not sweep**

     Replace the P16 Instrument Cluster.

   - **If speedometer sweeps properly**
3. Drive the vehicle, verify the speedometer gauge value matches the Vehicle Speed parameter on the scan tool.
   - **If the values do not match**

     Replace the P16 Instrument Cluster.

   - **If the speedometer value matches the scan tool parameter**
4. Drive the vehicle, verify the odometer display and the displayed distance counts up while driving.
   - **If the odometer displays only "----" (dashes)**

     Refer to Circuit/System Testing below.

   - **If the odometer display does not count up**

     Replace the P16 Instrument Cluster.

   - **If speedometer sweeps and displays the correct value, and the odometer display counts up**
5. All OK.

Circuit/System Testing

NOTE: If there are multiple modules not original to the vehicle and are not new correctly configured service parts, SPS may not be able to proper read or recover the vehicle odometer value. Follow government rules and documentation (including vehicle identification) regarding inaccurate/unknown odometer values.

Perform circuit/system verification first.

Instrument Cluster is Showing "----" (Dashes)

Correcting VIN mismatch - odometer is still Inactive.

1. Verify the vehicle odometer status with a scan tool. The reading should be Inactive.
    - **If the reading is Active**

      Refer to correcting VIN mismatch - odometer Active below.

    - **If the reading is Inactive**
2. Using the scan tool, verify the BCM VIN matches the vehicle VIN placard.
    - **If the VIN does not match**

      Reprogram the BCM, then proceed to Step 3.

    - **If the VIN matches**
3. Using the scan tool, verify the instrument cluster VIN matches the vehicle VIN placard.
    - **If the VIN does not match**

      Reprogram the instrument cluster. Then proceed with step 4.

    - **If the VIN matches**
4. Ignition ON, verify the instrument cluster is displaying the correct value.
    - **If the instrument cluster is still displaying "----" (dashes)**

      Replace the P16 Instrument Cluster.

Instrument Cluster is Showing "----" (Dashes)

Correcting VIN mismatch - odometer is Active.

1. Verify the vehicle odometer status with a scan tool. The reading should be Inactive.
    - **If the reading is Inactive**

      Refer to Correcting VIN mismatch - odometer Inactive below.

    - **If the reading is Active**
2. Using the scan tool, verify the instrument cluster VIN matches the vehicle's VIN placard.
    - **If the VIN does not match**

      Reprogram the Instrument Cluster. Then proceed with step 3.

    - **If the VIN matches**
3. Perform the BCM setup procedure in SPS.

4. Ignition ON, verify the instrument cluster is displaying the correct value.
   - **If the instrument cluster is still displaying "----" (dashes)**

     Replace the P16 Instrument Cluster.

   - **If instrument cluster is displaying the correct value**
5. All OK.

Repair Instructions

Perform the **Diagnostic Repair Verification** after completing the repair.

Control Module References for instrument cluster, BCM or ECM replacement, programming, and setup

REPAIR INSTRUCTIONS

AMBIENT AIR TEMPERATURE GAUGE SENSOR REPLACEMENT

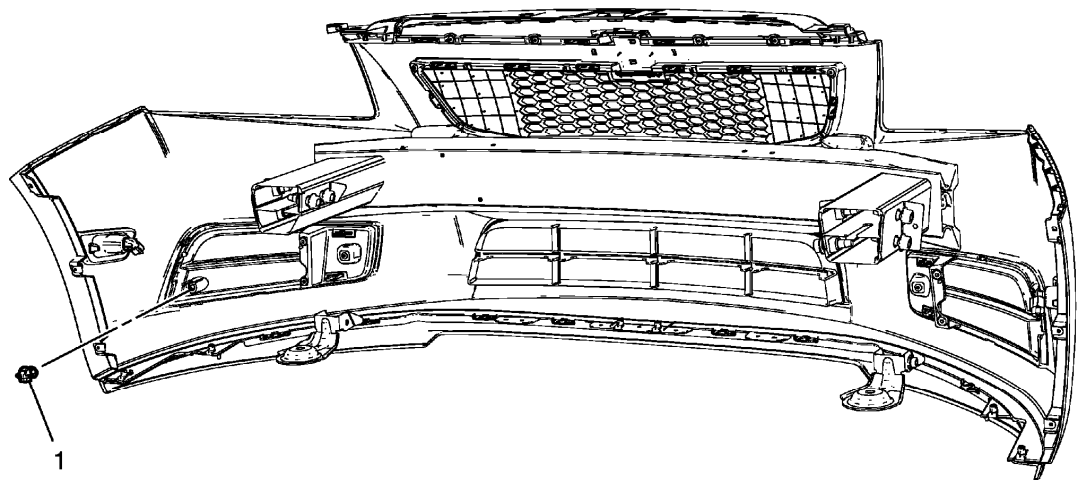

Fig. 5: Ambient Air Temperature Gauge Sensor
Courtesy of GENERAL MOTORS COMPANY

Ambient Air Temperature Gauge Sensor Replacement

Callout	Component Name
Preliminary Procedure	

Remove the front compartment insulator. Refer to **Front Compartment Insulator Replacement** .	
1	Ambient Air Temperature Gauge Sensor **Procedure** Disconnect the electrical connector.

DRIVER INFORMATION DISPLAY REPLACEMENT

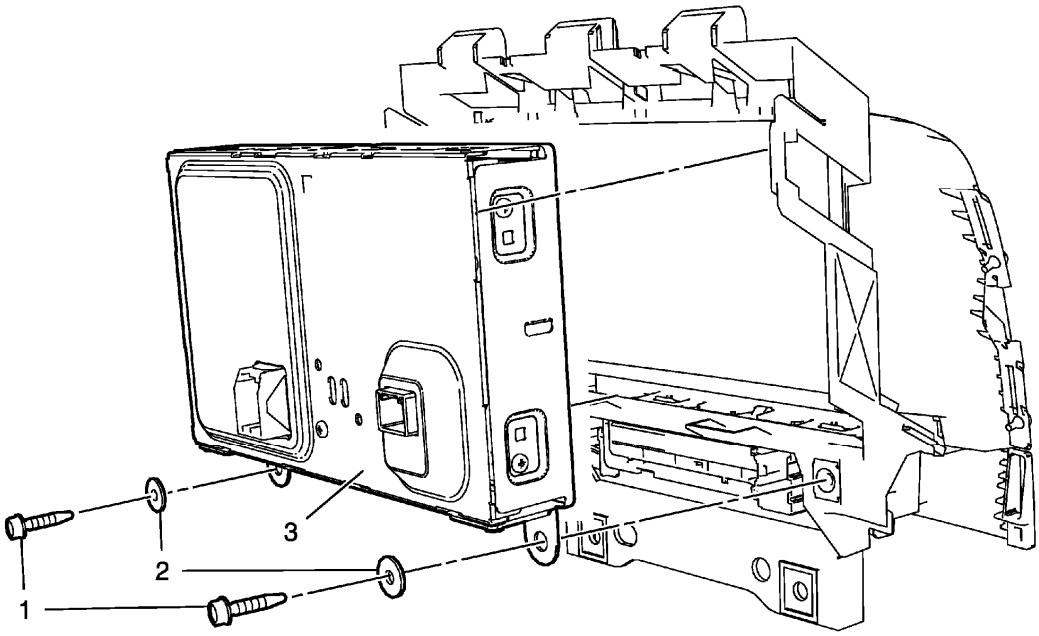

Fig. 6: Driver Information Display (UDY)
Courtesy of GENERAL MOTORS COMPANY

Driver Information Display Replacement

Callout	Component Name
Preliminary Procedure Remove driver information display bezel. Refer to **Driver Information Display Bezel Replacement** .	
1	Driver Information Display Screw (Qty: 2) **CAUTION:** **Refer to Fastener Caution .**
2	Driver Information Display Washer (Qty: 2)
3	Driver Information Display **Procedure** Slide the driver information display bezel from driver information display.

INSTRUMENT CLUSTER REPLACEMENT

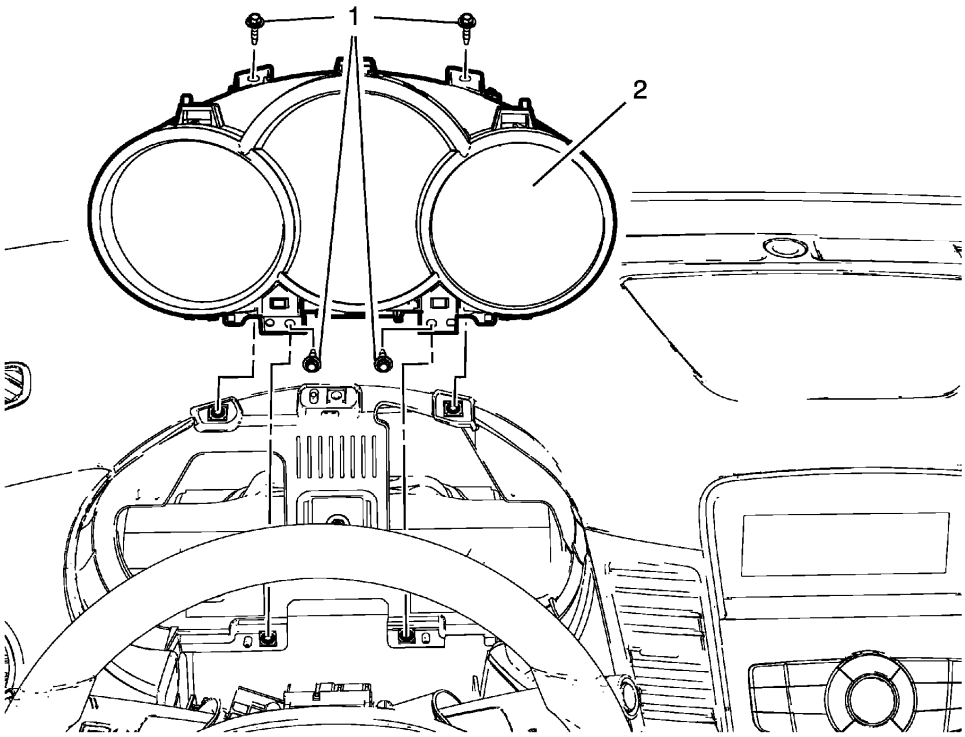

Fig. 7: Instrument Cluster
Courtesy of GENERAL MOTORS COMPANY

Instrument Cluster Replacement

Callout	Component Name
Preliminary Procedures 1. Disconnect the negative battery cable. Refer to **Battery Negative Cable Disconnection and Connection** . 2. Remove the lower instrument panel cluster trim plate. Refer to **Instrument Panel Cluster Lower Trim Plate Replacement** . 3. Remove the steering column upper trim cover. Refer to **Steering Column Upper Trim Cover Replacement** .	
1	Instrument Cluster Screw (Qty: 4) **CAUTION:** **Refer to Fastener Caution .** **Tighten** 2.5 (22 lb in)
	Instrument Cluster

2	**Procedure** 1. Disconnect electrical connector. 2. After replacement, refer to **Control Module References** , for programming and set up procedures.

DESCRIPTION AND OPERATION

AUDIBLE WARNINGS DESCRIPTION AND OPERATION

The audible warnings alert the driver of a system concern or a critical vehicle condition. The radio generates the audible warnings through the speakers. The radio receives audible warning requests via the serial data circuit. If the radio receives multiple audible warning requests, the warning with the highest priority sounds first. The radio is the chime producer. The following lists the audible warning sounds:

1. Single pulse gong
2. Multiple pulse gong
3. Single pulse beep
4. Multiple pulse beep
5. Click
6. Clack

Fasten Safety Belt Warning

The chime producer activates the fasten safety belt audible warning as requested by the body control module (BCM). The BCM sends a serial data message to the chime producer indicating the chime as a multiple gong. The fasten safety belt warning sounds and the fasten safety belt indicator illuminates when the following occurs:

- The ignition switch transitions to ON.
- The inflatable restraint sensing and diagnostic module (SDM) detects that the drivers seat belt is not buckled and the signal is low. The SDM sends a serial data message to the BCM indicating the seat belt status. The instrument cluster receives a serial data message from the BCM indicating the driver seat belt status.

If the seat belt is buckled when the ignition is turned ON, the chime does not sound. If the seat belt is buckled while the chime is sounding, the chime stops. If the seat belt is unbuckled after the initial transition to ON, the chime does not sound.

Lights On Warning

The chime producer activates the lights on warning as requested by the BCM. The BCM sends a serial data message to the chime producer indicating the chime as a multiple gong. The lights on warning sounds when the following occurs:

- The ignition is OFF.

- The BCM determines that the driver door is open and the signal circuit is low.
- The BCM determines that the headlamp switch is in the park or head position.

Brake Warning

The chime producer activates the brake audible warning as requested by multiple control modules. The BCM, electronic brake control module or the parking brake control module sends a serial data message to the chime producer indicating the chime as a multiple gong. The brake warning sounds and the BRAKE indicator illuminates when the following occurs:

- The ignition is ON.
- The vehicle speed is greater than 8 km/h (4.9 MPH). The instrument cluster receives a serial data message from the engine control module (ECM) indicating the vehicle speed.
- The BCM determines that the parking brake is engaged and the signal circuit is low.
- The brake fluid is low.

Key-In-Ignition Warning

The chime producer activates the key-in-ignition audible warning as requested by the BCM. The BCM sends a serial data message to the chime producer indicating the chime as a multiple gong. The key-in-ignition warning sounds when the following occurs:

- The ignition switch is OFF.
- The BCM determines that the driver door is open and the signal circuit is low.

Door Ajar Warning

The chime producer activates the door ajar audible warning as requested by the BCM. The BCM sends a serial data message to the chime producer indicating the chime frequency of a medium rate and continuous duration. The door ajar warning sounds and the appropriate door ajar indicator illuminates in the driver information center when the BCM determines that a door (driver door, passenger door, left rear door, right rear door) is open and the signal circuit is low. The instrument cluster also receives a serial data message from the BCM indicating the door ajar status.

Object Detection

The chime producer activates the object detection audible warning as requested by the object alarm module. When an object is within the measuring range of the sensor, the ultrasonic pulse is reflected and is received by the sending or a neighboring sensor. The sensor converts this signal into a voltage signal and sends this signal to the object alarm module. The object alarm module evaluates the received sensor signals. As soon as an object is within the measuring range, the object alarm module sends a message via CAN-Bus to the chime producer in order to give out the acoustic distance signal. The measuring range is between 30-120 cm (11.81-47.24 in). From a distance of 120 cm (47.24 in), the acoustic signal is active. The frequency of the beep sound increases with decreasing distance. From a distance less than 30 cm (11.81 in), the sound becomes continuous.

Additional Warnings

The following warnings have an associated instrument cluster indicator or driver information center message:

- Turn Signal Indicators-The chime producer activates the audible warning as requested by the BCM. The chime produces two different chimes, one when the turn signal turns off and another when the turn signal turns on.
- Vehicle Overspeed Message-The chime producer activates the audible warning as requested by the BCM. The BCM sends a serial data message to the chime producer.
- Fuel Level Low Message-The chime producer activates the audible warning as requested by the BCM. The BCM sends a serial data message to the chime producer.
- Oil Pressure Indicator-The chime producer activates the audible warning as requested by the BCM. The BCM sends a serial data message to the chime producer.
- Park Assist Fault Clean Rear Bumper Message-The chime producer activates the audible warning as requested by the BCM. The BCM sends a serial data message to the chime producer.
- Tire Pressure Low Indicator-The chime producer activates the audible warning as requested by the BCM. The BCM sends a serial data message to the chime producer.

Refer to **Indicator/Warning Message Description and Operation**.

COMPASS CALIBRATION AND MAGNETIC VARIANCE (DRIVER INFORMATION CENTER (DIC))

Compass Calibration

The compass direction will show CAL if it needs to be calibrated. Before calibrating the compass, drive the vehicle to an area that is magnetically clean (free of large metallic objects).

1. Turn ON the ignition.
2. Before calibrating the compass, make sure the compass is set to the variance zone in which the vehicle is travelling. See Compass Magnetic Variation Adjustment below.
3. Press the vehicle information button until the PRESS TO CALIBRATE COMPASS screen is displayed.
4. Press the set/reset button to start the compass calibration.
5. The DIC will display CALIBRATING: DRIVE IN CIRCLES. Drive the vehicle in circles at less than 8 km/h (5 mph) to complete the calibration. The DIC will display CALIBRATION COMPLETE when the calibration is complete.

Compass Magnetic Variation Adjustment

Compass variance is the difference between the earth's magnetic north and true geographic north. If not adjusted to account for compass variance, the compass in the vehicle could give false readings. Under certain circumstances, such as during a long distance cross-country trip, it will be necessary to compensate for compass variance and reset the zone through the DIC.

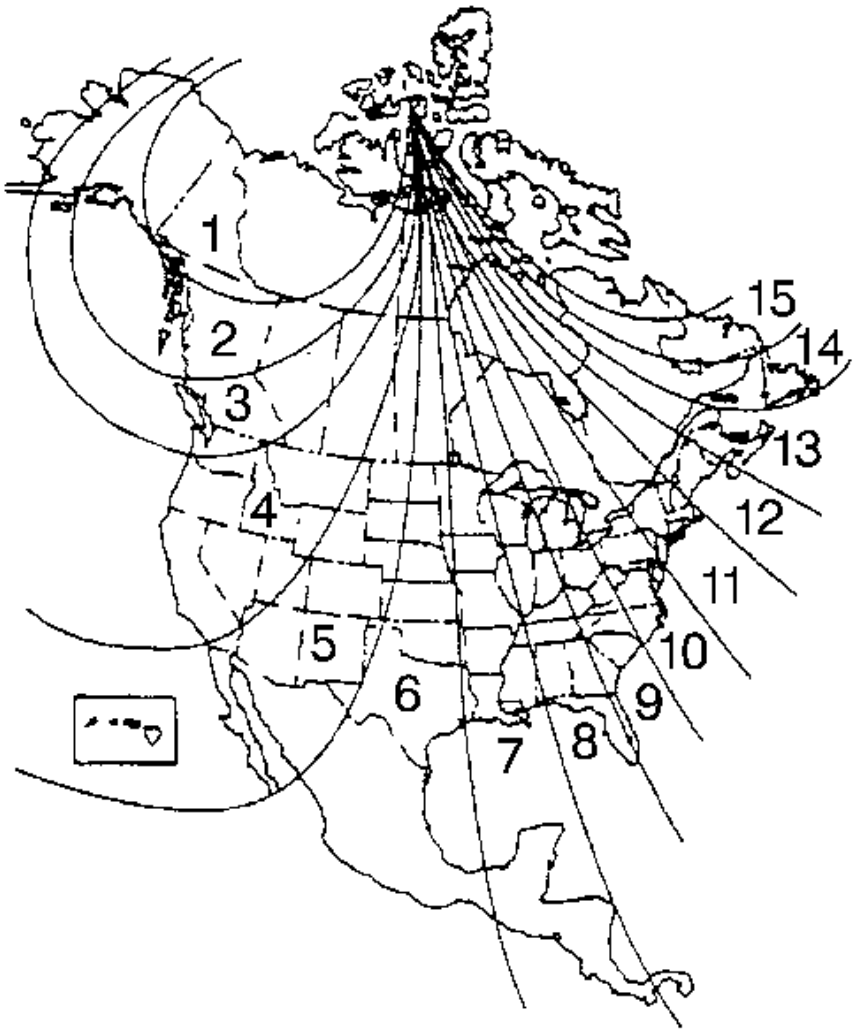

Fig. 8: Illustrating Magnetic Variation Zones
Courtesy of GENERAL MOTORS COMPANY

1. Locate your geographic location. Refer to the variation zone map.
2. Turn ON the ignition with the engine OFF.
3. Press the vehicle information button until PRESS TO CHANGE COMPASS ZONE displays on the DIC.
4. Press the set/reset button to scroll through and select the appropriate variance zone.
5. Navigate to one of the trip/fuel menu screens to view the direction the vehicle is moving. This will be shown in the top right corner of the DIC display.

If the compass needs to be calibrated, use the compass calibration procedure above.

DRIVER INFORMATION CENTER (DIC) DESCRIPTION AND OPERATION

In the lower middle of the instrument cluster, an additional display is installed. Its task is to give additional

information, such as an odometer or error codes/warning messages. Refer to **Indicator/Warning Message Description and Operation**.

There are 4 switch functions for the driver information center:

- Menu
- Set/Clear
- Up
- Down

Menu

The Menu switch is used to navigate between the Vehicle Information Menu and the Trip/Fuel Information Menu. Cycle through the following vehicle parameters by successive pressing of the Menu switch.

Up and Down

The Up and the Down switches are used to navigate within the menus. Cycle through the following menu parameters by successive pressing of the Down switch.

Vehicle Information Menu

- Units Menu
- Speed Warning

Trip/Fuel Information Menu

- Trip A
- Fuel Range
- Average Fuel Economy
- Instantaneous Fuel Economy
- Average Vehicle Speed

Trip A

The trip odometer can be accessed through the driver information center switch Up/Down function.

Trip Display

Driver Information Center Trip Display	Range		
	Europe-SI	USA	GB
TRIP A	####.#km	####.# miles	####.# miles

Fuel Range

This message indicates the estimated distance that the vehicle can travel under the current fuel economy and

fuel level conditions since the last battery connection to the instrument cluster. Fuel Range is calculated using the equation: Fuel Range = Range Distance/Range Fuel Used.

- Range Distance = The accumulated distance travelled since the last reset of this value.
- Fuel Used = The accumulated fuel delivered since the last reset of this value

The engine control module (ECM) sends the fuel range value to the instrument cluster. The instrument cluster receives a serial data message with fuel information. The fuel range value is retained during ignition OFF and can be changed between Europe-SI, USA and GB units by accessing the driver information center Units menu. The Fuel Range display cannot be reset. LOW is displayed when fuel range is below a predetermined value.

Average Fuel Economy

Average fuel economy is calculated using the equation: Average Fuel Economy = Distance/Fuel

- Distance = The accumulated distance travelled since the last reset of this value
- Fuel = The accumulated fuel consumption since the last reset of this value

The ECM sends the average fuel economy serial data message to the instrument cluster. The value of this mode is retained during ignition OFF and can be changed between English units and metric units by selecting from the driver information center options menu.

Instantaneous Fuel Economy

The ECM sends the instantaneous fuel economy serial data message to the instrument cluster. The value of this mode can be changed between English units and metric units by selecting from the driver information center options menu.

Average Vehicle Speed

Average speed is calculated using the equation: Average Speed = Average Speed Distance/Average Speed Time

- Distance = The accumulated distance travelled since the last reset of this value
- Ignition ON = The accumulated ignition on time since the last reset of this value

Outside Air Temperature

On vehicles with radio delete, the outside air temperature is displayed on the driver information center. On vehicles with a radio, the outside air temperature is displayed on the center stack display screen. The outside air temperature sensor is wired directly to the instrument cluster. The sensor is varies it's resistance with temperature. The instrument cluster reads the resistance value to determine temperature. The time of and rate of the temperature update is based on an algorithm in the cluster software. Factors such as, last reading, current reading, length of time vehicle is been off/on, power mode, vehicle speed, driven distance, and sensor location are all considered by the cluster to know when to update the displayed temperature. For example, if the sensor is located near the engine compartment, and the vehicle has been turned off for only 10 minutes then restarted, the cluster will wait until the vehicle is driven to get more accurate air flow across the sensor before it updates the display.

Units Menu

The unit mode is used to toggle between Europe-SI, USA and GB units and can be accessed through the driver information center Menu switch and the driver information center Set/Reset switch.

Compass

The vehicle may have a compass display on the Driver Information Center. The compass receives its heading and other information from the Global Positioning System (GPS) antenna. If applicable, the GPS antenna is located with the telematics communication interface control module. For GPS diagnostic information refer to **No Global Positioning System (GPS) Reception** .

Odometer

The instrument cluster displays the vehicle odometer in the driver information center. The ECM send a distance rolling count message on GMLAN to the body control module (BCM). The BCM uses this information to calculate the vehicle odometer. This odometer value is then sent to the instrument cluster on GMLAN. The instrument cluster does not calculate the odometer. The odometer displays miles or kilometers as selected in the Units menu.

The odometer value is stored in multiple modules. The instrument cluster is a secondary storage module for the odometer, while the BCM is the primary storage and accumulator.

In addition to storing the odometer value for the vehicle, the instrument cluster and the BCM store the VIN. Software checks are performed to ensure these modules, and their stored odometer information, can not be move or transferred between different vehicles.

If the VINs do not match, the instrument cluster will go into an error mode and display "----" (dashes). If the VIN mismatch exists over a calibrated distance, the instrument cluster will "lock" the odometer display and only show dashes, even if the VIN mismatch is subsequently correct. The only way to clear or "unlock" the instrument cluster is to perform a BCM programming event using SPS.

Language

The driver information center is capable of displaying in different languages, corresponding to the radio language settings. The instrument cluster receives a serial data message with language information from the radio. This message is only sent one time, after a new language is selected. To set the language, see the owners manual.

INDICATOR/WARNING MESSAGE DESCRIPTION AND OPERATION

INDICATOR LIGHT ON

Refer to the OWNER'S MANUAL for the descriptions and explanations of all indicator lights.

For diagnosis and repair information related to an indicator light refer to the System Diagnosis and the Description of Operation that the message relates to.

MESSAGE DISPLAYED

Refer to the OWNER'S MANUAL for descriptions and explanations of all messages displayed.

For diagnosis and repair information related to a displayed message refer to the System Diagnosis and the Description of Operation that the message relates to.

CHANGE TIMING BELT MESSAGE

The Instrument Cluster monitors the odometer mileage to determine when timing belt (if equipped) replacement may be necessary. After the vehicle has accumulated approximately 100, 000 miles (160, 000 kilometers), the Instrument Cluster may display the CHANGE TIMING BELT message. After the engine timing belt has been replaced, reset the CHANGE TIMING BELT message by locating and removing the fuses that supply power to the Instrument Cluster for two minutes.

INSTRUMENT CLUSTER DESCRIPTION AND OPERATION

Displays Test

Certain instrument cluster features are tested when the ignition is turned on in order to verify the features are working properly. The following occurs when the ignition is turned on:

- The ABS indicator illuminates briefly.
- The airbag indicator illuminates briefly.
- The battery indicator illuminates briefly.
- The brake indicator illuminates briefly.
- The door ajar indicator illuminates briefly.
- The fuel level low indicator illuminates briefly.
- The oil pressure low indicator illuminates briefly.
- The park assist service indicator illuminates briefly.
- The press clutch indicator illuminates briefly.
- The security indicator illuminates briefly.
- The service vehicle soon indicator illuminates briefly.
- The vehicle dynamic caution service indicator illuminates briefly.
- The vehicle dynamics caution off indicator illuminates briefly.

Indicators and Warning Messages

Refer to **Indicator/Warning Message Description and Operation**

Engine Coolant Temperature Gauge (if equipped)

The instrument cluster displays the engine coolant temperature as determined by the engine control module (ECM). The ECM sends the engine coolant temperature information via a High Speed CAN-Bus signal to the body control module (BCM). The BCM then sends the information via a Low Speed CAN-Bus signal to the

instrument cluster to display the engine coolant temperature. The engine coolant temperature gauge defaults to 40°C (104°F) or below if:

- The ECM detects a malfunction in the engine coolant temperature sensor circuit.
- The BCM detects a loss of serial data communications with the ECM.
- The instrument cluster detects a loss of serial data communications with the BCM.

Fuel Level Gauge

The instrument cluster displays the fuel level based on the information from the ECM. The ECM converts the data from the fuel level sensors to a fuel level signal. The ECM sends the fuel level signal via a High Speed CAN-Bus signal to the BCM. The BCM then sends the information via a Low Speed CAN-Bus signal to the instrument cluster to display the fuel level. If the fuel level falls under 11% the instrument cluster switches on the low fuel level indicator. The fuel gauge defaults to empty if:

- The ECM detects a malfunction in the fuel level sensor circuit.
- The BCM detects a loss of serial data communications with the ECM.
- The instrument cluster detects a loss of serial data communications with the BCM.

Speedometer

The instrument cluster displays the vehicle speed based on the information from the ECM. The ECM sends the vehicle speed information via a High Speed CAN-Bus signal to the BCM. The BCM then sends the vehicle speed information via a Low Speed CAN-Bus signal to the instrument cluster in order to display the vehicle speed, either in kilometers or miles, based on the vehicle requirements. The speedometer defaults to 0 km/h (0 MPH) if:

- The BCM detects a loss of serial data communications with the ECM.
- The instrument cluster detects a loss of serial data communications with the BCM.

Tachometer (if equipped)

The instrument cluster displays the engine speed based on the information from the ECM. The ECM converts the data from the engine speed sensor to an engine revolution signal. The ECM sends the engine speed information via a High Speed CAN-Bus signal to the BCM. The BCM then sends the information via a Low Speed CAN-Bus signal to the instrument cluster to display the engine speed. The tachometer defaults to 0 RPM if:

- The ECM detects a malfunction in the engine speed sensor circuit.
- The BCM detects a loss of serial data communications with the ECM.
- The instrument cluster detects a loss of serial data communications with the BCM.

Driver Information Center Display

In the lower middle of the instrument cluster, an additional display is installed. Its task is to give additional information, such as an odometer or error codes. This part of the instrument cluster is available in 4 different

variants, mostly depending on the assembled engine. For further information refer to **Driver Information Center (DIC) Description and Operation**.

2013 ACCESSORIES & EQUIPMENT

Fixed and Moveable Windows - Cruze

SPECIFICATIONS

FASTENER TIGHTENING SPECIFICATIONS

Fastener Tightening Specifications

Application	Specification	
	Metric	English
Front Side Door Window Regulator Bolt	9 N.m	80 lb in
Front Side Door Window Regulator Motor Bolt	6 N.m	53 lb in
Front Side Door Window Regulator Sash Nut	9 N.m	80 lb in
Rear Side Door Stationary Window Divider Channel Belt Support Bolt	8 N.m	71 lb in
Rear Side Door Window Regulator Bolt	9 N.m	80 lb in
Rear Side Door Window Regulator Motor Bolt	6 N.m	53 lb in
Rear Side Door Window Regulator Sash Nut	9 N.m	80 lb in
Rear Side Door Stationary Window Bolt	8 N.m	71 lb in

SCHEMATIC WIRING DIAGRAMS

MOVEABLE WINDOW WIRING SCHEMATICS

Driver Door (AXG) Wiring Schematics

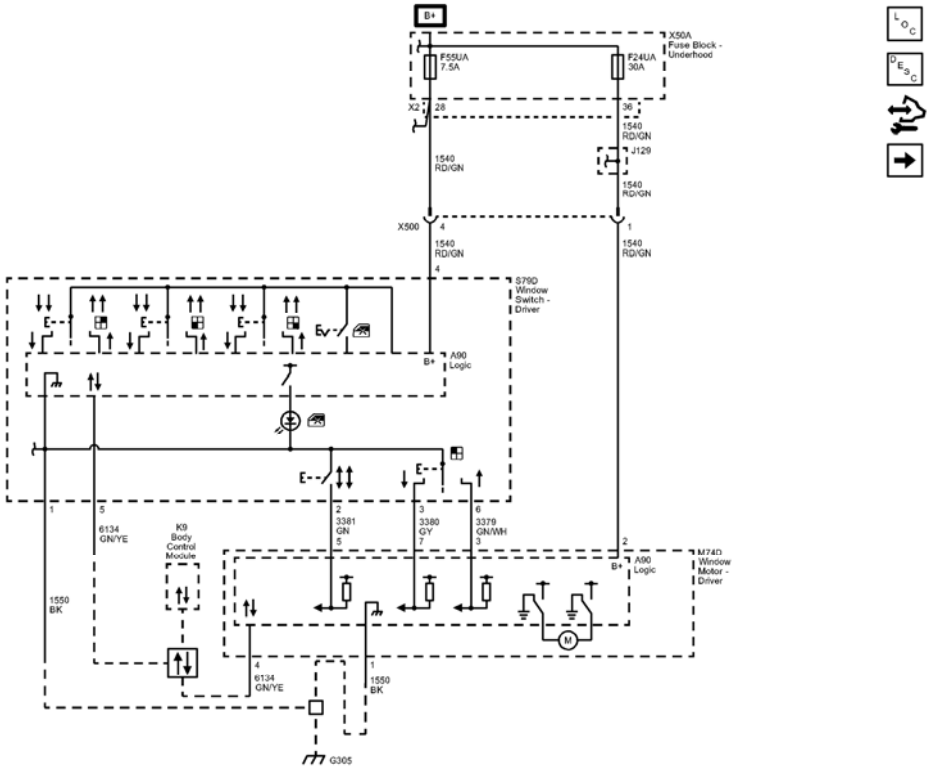

Fig. 1: Driver Door (AXG) Wiring Schematics
Courtesy of GENERAL MOTORS COMPANY

Callout	Component Name
1540	Battery Positive Voltage
1540 RD/GN	1540 RD/GN
CAV_4	4
CAV_28	28
CONN_X2	X2
1540_RD/GN	1540 RD/GN
1540_RD/GN	1540 RD/GN
CAV_2	2
CAV_36	36
1540_RD/GN	1540 RD/GN
1540_RD/GN	1540 RD/GN
1550	Ground
1550_BK	1550 BK
CAV_1	1
1550_BK	1550 BK
CAV_1	1
	Linear Interconnect Network

6134	Bus 3
6134_GN/YE	6134 GN/YE
CAV_4	4
6134_GN/YE	6134 GN/YE
CAV_5	5
Data_Communication_Schematics_REF	Data Communication Schematics
3381	Power Window Switch Driver Express Signal
3381_GN	3381 GN
CAV_5	5
CAV_2	2
3380	Power Window Switch Driver Down Signal
3380_GY	3380 GY
CAV_7	7
CAV_3	3
3379	Power Window Switch Driver Up Signal
3379_GN/WH	3379 GN/WH
CAV_3	3
CAV_6	6
X500	X500
CAV_4	4
CAV_1	1
F24UA	F24UA 30A
G305	G305
F55UA	F55UA 7.5A
X500	X500
A90	Logic
S79D	
M74D	
A90	Logic
X50A	
K9	

Driver Door (AEC) Wiring Schematics

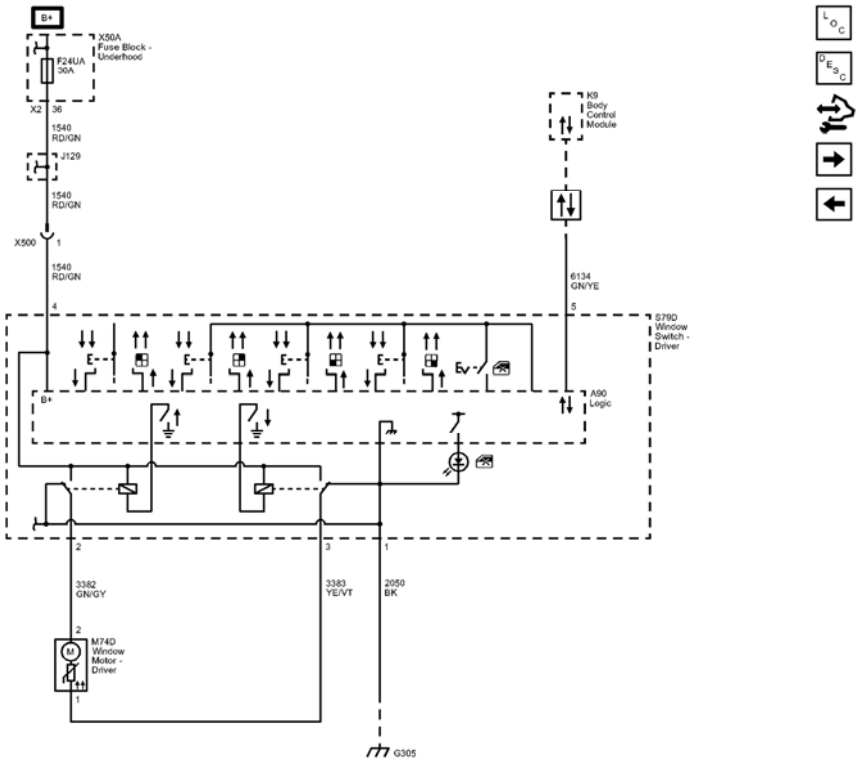

Fig. 2: Driver Door (AEC) Wiring Schematics
Courtesy of GENERAL MOTORS COMPANY

Callout	Component Name
1540	Battery Positive Voltage
CAV 4	4
CAV_36	36
CONN_X2	X2
1540_RD/GN	1540 RD/GN
1540_RD/GN	1540 RD/GN
1540_RD/GN	1540 RD/GN
CAV_1	1
6134	Linear Interconnect Network Bus 3
6134_GN/YE	6134 GN/YE
CAV 5	5
Data_Communication_Schematics_REF	Data Communication Schematics
3382	Power Window Motor Driver Up Control
3382_GN/GY	3382 GN/GY

CAV_2	2
CAV_2	2
3383	Power Window Motor Driver Down Control
3383_YE/VT	3383 YE/VT
CAV_3	3
CAV_1	1
2050	Ground
2050_BK	2050 BK
CAV_1	1
G305	G305
F24UA	F24UA 30A
X500	X500
A90	Logic
S79D	
X50A	
K9	
M74D	

Passenger Door Wiring Schematics

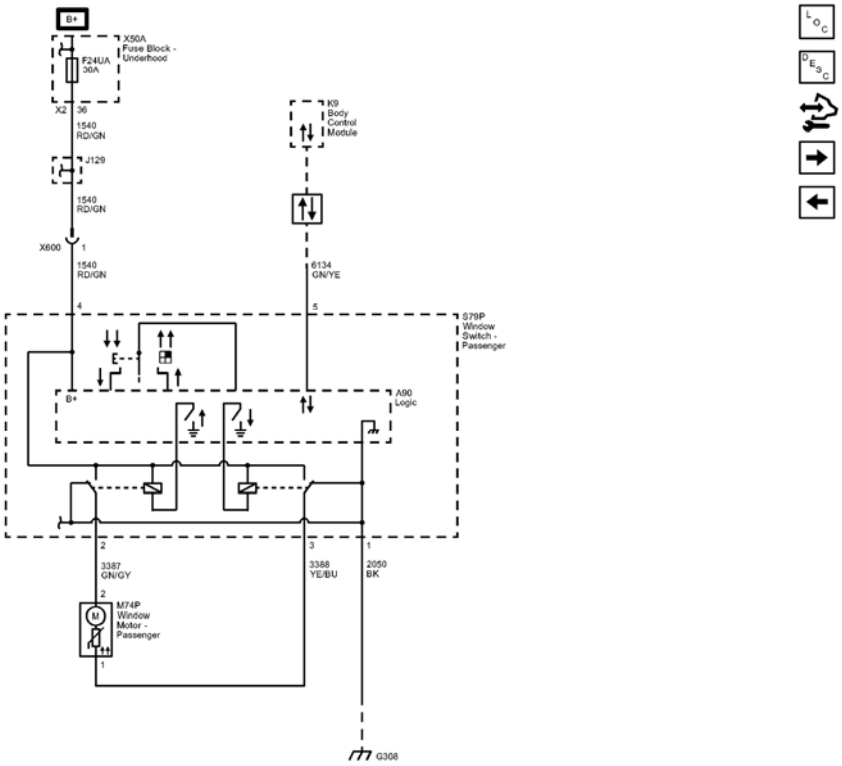

Fig. 3: Passenger Door Wiring Schematics
Courtesy of GENERAL MOTORS COMPANY

Callout	Component Name
1540	Battery Positive Voltage
1540_RD/GN	1540 RD/GN
CAV_4	4
CAV_36	36
CONN_X2	X2
CAV_5	5
1540_RD/GN	1540 RD/GN
1540_RD/GN	1540 RD/GN
CAV_1	1
3387	Power Window Motor Co-Driver Up Control
3387_GN/GY	3387 GN/GY
CAV_2	2
CAV_2	2
3388	Power Window Motor Co-Driver Down Control
3388_YE/BU	3388 YE/BU
CAV_3	3
CAV_1	1
2050	Ground
2050_BK	2050 BK
CAV_1	1
6134	Linear Interconnect Network Bus 3
Data_Communication_Schematics_REF	Data Communication Schematics
6134_GN/YE	6134 GN/YE
G308	G308
F24UA	F24UA 30A
X600	X600
A90	Logic
X50A	
K9	
S79P	
M74P	

Rear Doors Wiring Schematics

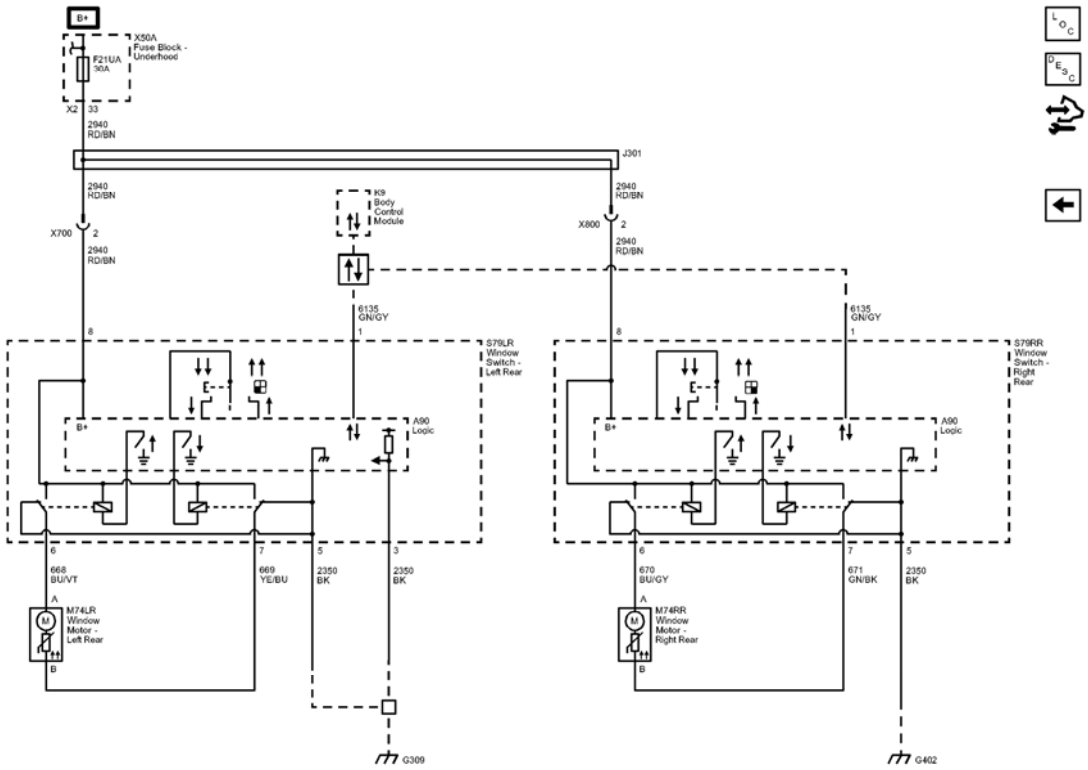

Fig. 4: Rear Doors Wiring Schematics
Courtesy of GENERAL MOTORS COMPANY

Callout	Component Name
2940	Battery Positive Voltage
2940 RD/BN	2940 RD/BN
CAV_8	8
CAV_33	33
CONN_X2	X2
2940_RD/BN	2940 RD/BN
2940_RD/BN	2940 RD/BN
2940_RD/BN	2940 RD/BN
CAV_8	8
2940_RD/BN	2940 RD/BN
CAV_2	2
CAV_2	2
6135	Linear Interconnect Network Bus 4
6135_GN/GY	6135 GN/GY
CAV_1	1
6135_GN/GY	6135 GN/GY

CAV_1	1
Data_Communication_Schematics_REF	Data Communication Schematics
668	Power Window Motor Left Rear Up Control
668_BU/VT	668 BU/VT
CAV_A	A
CAV_6	6
669	Power Window Motor Left Rear Down Control
669_YE/BU	669 YE/BU
CAV_7	7
CAV_B	B
2350	Ground
2350_BK	2350 BK
CAV_3	3
2350_BK	2350 BK
CAV_5	5
670	Power Window Motor Right Rear Up Control
670_BU/GY	670 BU/GY
CAV_A	A
CAV_6	6
671	Power Window Motor Right Rear Down Control
671_GN/BK	671 GN/BK
CAV_7	7
CAV_B	B
2350_BK	2350 BK
CAV_5	5
G309	G309
G402	G402
F21UA	F21UA 30A
X700	X700
X800	X800
J301	J301
A90	Logic
X50A	
K9	
S79LR	
M74LR	
A90	Logic

S79RR	
M74RR	

DEFOGGER WIRING SCHEMATICS

Defogger Wiring Schematics

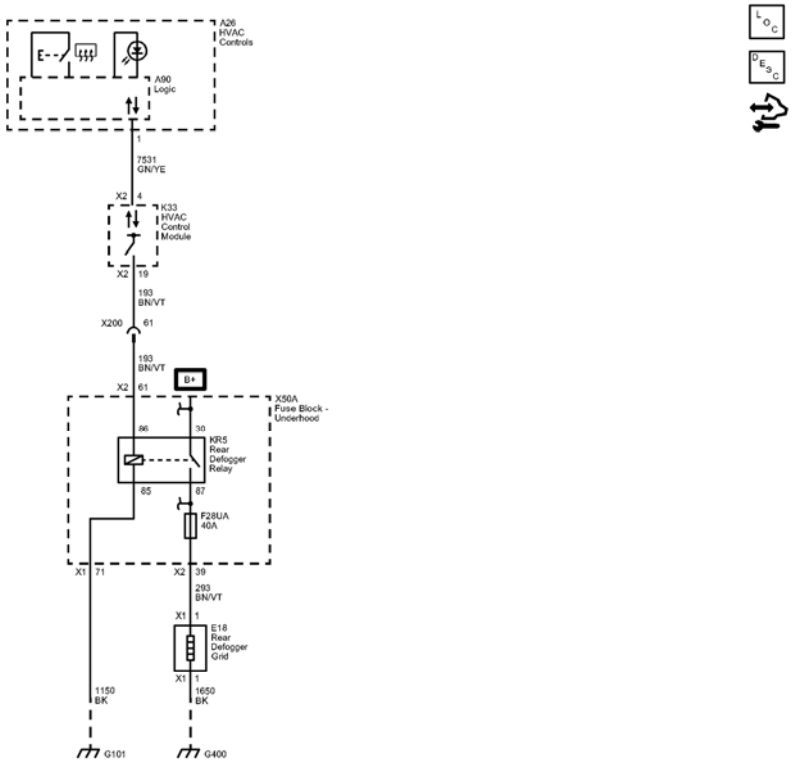

Fig. 5: Defogger Wiring Schematics
Courtesy of GENERAL MOTORS COMPANY

Callout	Component Name
7531	Linear Interconnect Network Bus 9
7531_GN/YE	7531 GN/YE
CAV_4	4
CONN_X2	X2
CAV_1	1
193	Rear Defog Relay Control
CAV_61	61
CONN_X2	X2
CAV_19	19
CONN_X2	X2

193_BN/VT	193 BN/VT
193_BN/VT	193 BN/VT
CAV_61	61
CAV_86	86
CAV_30	30
CAV_85	85
CAV_87	87
1150	Ground
1150_BK	1150 BK
CAV_71	71
CONN_X1	X1
293	Rear Defog Element Supply Voltage
293 BN/VT	293 BN/VT
CAV_1	1
CONN_X1	X1
CAV_39	39
CONN_X2	X2
1650	Ground
1650_BK	1650 BK
CAV_1	1
CONN_X1	X1
G400	G400
G101	G101
X200	X200
F28UA	F28UA 40A
E18	
A90	Logic
KR5	
X50A	
K33	
A26	

COMPONENT LOCATOR

WINDOW SYSTEMS COMPONENT VIEWS

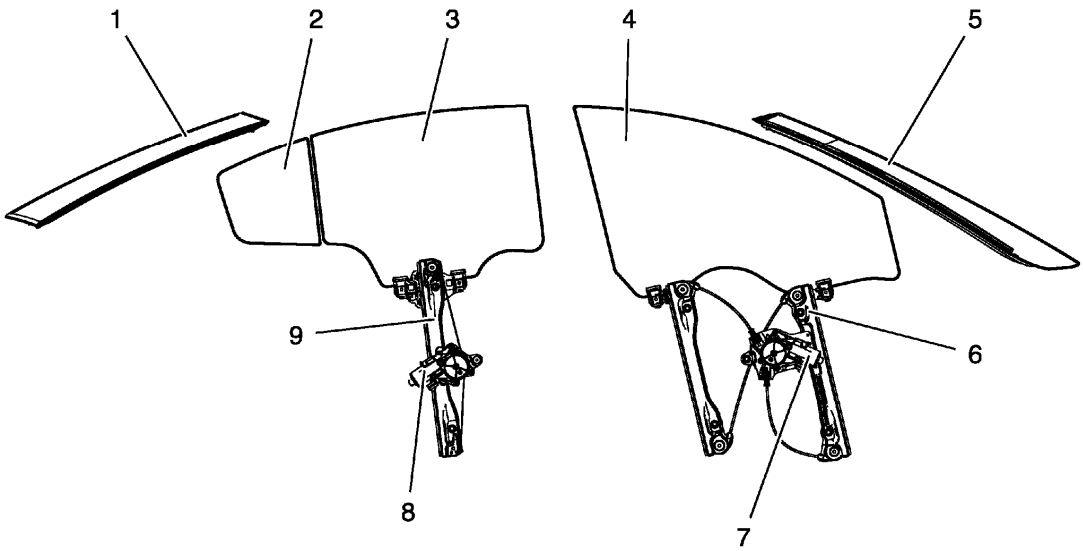

Fig. 6: Window Systems Components (4-Door Notchback 69)
Courtesy of GENERAL MOTORS COMPANY

Window Systems Component Views

Number	Description	Procedure
1	Rear Window	**Rear Window Replacement**
2	Rear Side Door Stationary Window	**Rear Side Door Stationary Window Replacement**
3	Rear Side Door Window	**Rear Side Door Window Replacement**
4	Front Side Door Window	**Front Side Door Window Replacement**
5	Windshield	**Windshield Replacement**
6	Front Side Door Window Regulator	**Front Side Door Window Regulator Replacement**
7	Front Side Door Window Regulator Motor	**Front Side Door Window Regulator Motor Replacement**
8	Rear Side Door Window Regulator Motor	**Rear Side Door Window Regulator Motor Replacement**
9	Rear Side Door Window Regulator	**Rear Side Door Window Regulator Replacement**

DIAGNOSTIC INFORMATION AND PROCEDURES

DIAGNOSTIC CODE INDEX

DIAGNOSTIC CODE INDEX

DTC	Description
DTC B0283	DTC B0283 02 Rear Defrost Circuit Short To Ground DTC B0283 05 Rear Defrost Circuit Short To Battery or Open
DTC B316B, B317A, B318A, or B319A (AEC)	DTC B316B Driver Window Switch DTC B317A Passenger Window Switch DTC B318A Left Rear Window Switch DTC B319A Right Rear Window Switch
DTC B316B, B317A, B318A, or B319A (AXG)	DTC B316B Driver Window Switch DTC B317A Passenger Window Switch DTC B318A Left Rear Window Switch DTC B319A Right Rear Window Switch
DTC B3205	DTC B3205 Driver Window Motor

DTC B0283

Diagnostic Instructions

- Perform the **Diagnostic System Check - Vehicle** prior to using this diagnostic procedure.
- Review **Strategy Based Diagnosis** for an overview of the diagnostic approach.
- **Diagnostic Procedure Instructions** provides an overview of each diagnostic category.

DTC Descriptors

DTC B0283 02

Rear Defrost Circuit Short To Ground

DTC B0283 05

Rear Defrost Circuit Short To Battery or Open

Diagnostic Fault Information

Circuit	Short to Ground	Open/High Resistance	Short to Voltage	Signal Performance
Control	B0283 02	B0283 05	B0283 05	-
Ground	-	B0283 05	-	-

Circuit/System Description

When the HVAC control module receives a rear window defog request from the HVAC control faceplate, the HVAC control module will supply voltage to the relay coil. Battery positive voltage is supplied at all times to the relay switched input and the relay coil is always grounded. This allows battery positive voltage from the

relay switched input to flow through the switch contacts and out the relay switched output to the rear window defogger grid.

Conditions for Running the DTC

Battery voltage must be between 9-16 V.

Conditions for Setting the DTC

B0283 02

The HVAC control module detects a short to ground in the relay coil control circuit.

B0283 05

The HVAC control module detects a short to voltage or an open/high resistance in the relay coil control circuit or an open/high resistance in the relay coil ground circuit

Action Taken When the DTC Sets

B0283 02

The rear window defogger will be inoperative.

B0283 05

The rear window defogger will be inoperative or continuously active depending upon the fault.

Conditions for Clearing the DTC

- The DTC will be current for as long as the fault is present.
- When the fault is no longer present, the DTC will be a history DTC.
- A history DTC will clear after 50 ignition cycles.

Reference Information

Schematic Reference

Defogger Schematics

Connector End View Reference

COMPONENT CONNECTOR END VIEWS - INDEX

Description and Operation

Rear Window Defogger Description and Operation

Electrical Information Reference

- **Circuit Testing**
- **Connector Repairs**
- **Testing for Intermittent Conditions and Poor Connections**
- **Wiring Repairs**

Scan Tool Reference

Control Module References for scan tool information

Circuit/System Verification

1. Engine running.
2. Verify the rear window defogger turns ON and OFF when commanding the Rear Defogger On and Off with a scan tool.
    - **If the rear window defogger does not turn ON or OFF**

      Refer to Circuit/System Testing below

    - **If the rear window defogger turns ON and OFF**
3. All OK.

Circuit/System Testing

1. Ignition OFF and all vehicle systems OFF, disconnect the KR5 rear defogger relay. It may take up to 2 minutes for all vehicle systems to power down.
2. Test for less than 10 ohms between the ground circuit terminal 2 and ground.
    - **If 10 ohms or greater**
    1. Ignition OFF.
    2. Test for less than 2 ohms in the ground circuit end to end.
        - If 2 ohms or greater, repair the open/high resistance in the circuit.
        - If less than 2 ohms, repair the open/high resistance in the ground connection.
    - **If less than 10 ohms**
3. Connect a test lamp between the control circuit terminal 1 and the ground circuit terminal 2, engine running.
4. Verify the test lamp turns ON and OFF when commanding the Rear Defogger On and Off with a scan tool.
    - **If the test lamp is always OFF**
    1. Ignition OFF, disconnect the harness connector at the K33 HVAC control module.
    2. Test for infinite resistance between the control circuit and ground.
        - If less than infinite resistance, repair the short to ground on the circuit.

- If infinite resistance

3. Test for less than 2 ohms in the control circuit end to end.
   - If 2 ohms or greater, repair the open/high resistance in the circuit.
   - If less than 2 ohms, replace the K33 HVAC control module.

- **If the test lamp is always ON**

1. Ignition OFF, disconnect the harness connector at the K33 HVAC control module, engine running.
2. Test for less than 1 V between the control circuit and ground.
   - If 1 V or greater, repair the short to voltage on the circuit.
   - If less than 1 V, replace the K33 HVAC control module.

- **If the test lamp turns ON and OFF**

5. Test or replace the KR5 rear defogger relay.

Component Testing

Relay Test

1. Ignition OFF, disconnect the KR5 rear defogger relay.
2. Test for 60-180 ohms between terminals 2 and 1.
   - **If less than 60 ohms or greater than 180 ohms**

     Replace the KR5 rear defogger relay.

   - **If between 60-180 ohms**
3. Test for infinite resistance between the terminals listed below:
   - 3 and 1
   - 3 and 5
   - 3 and 2
   - 2 and 5
   - **If less than infinite resistance**

     Replace the KR5 rear defogger relay.

   - **If infinite resistance**
4. Install a 3 A fused jumper wire between relay terminal 2 and 12 V. Install a jumper wire between relay terminal 1 and ground.
5. Test for less than 2 ohms between terminals 3 and 5.
   - **If 2 ohms or greater**

     Replace the KR5 rear defogger relay.

   - **If less than 2 ohms**

6. All OK

Repair Instructions

Perform the **Diagnostic Repair Verification** after completing the repair.

- **Relay Replacement (Within an Electrical Center)** , **Relay Replacement (Attached to Wire Harness)**
- **Control Module References** for HVAC control module replacement, programming and setup

DTC B316B, B317A, B318A, OR B319A (AEC)

Diagnostic Instructions

- Perform the **Diagnostic System Check - Vehicle** prior to using this diagnostic procedure.
- Review **Strategy Based Diagnosis** for an overview of the diagnostic approach.
- **Diagnostic Procedure Instructions** provides an overview of each diagnostic category.

DTC Descriptors

DTC B316B

Driver Window Switch

DTC B317A

Passenger Window Switch

DTC B318A

Left Rear Window Switch

DTC B319A

Right Rear Window Switch

For symptom byte information refer to: **Symptom Byte List**

Circuit/System Description

The body control module (BCM) monitors, receives and transmits serial data messages to each of the door window switches. The driver master control contains switches to control the passenger and rear windows. When a switch is used on the driver master control, a serial data message is sent to the BCM which sends a serial data message to the appropriate passenger or rear window switch to move in the window in the direction commanded.

Conditions for Running the DTC

Ignition ON.

Conditions for Setting the DTC

B316B 00

The BCM has detected the right front or left rear or right rear switch on the driver master control is active for greater than 60 seconds.

B316B 02

The BCM has detected the driver left front window switch is active for greater than 60 seconds.

B316B 39

The BCM has received simultaneous conflicting commands from the driver window switch

B317A 02

The BCM has detected the passenger window switch is active for greater than 60 seconds.

B318A 02

The BCM has detected the left rear window switch is active for greater than 60 seconds

B319A 02

The BCM has detected the right rear window switch is active for greater than 60 seconds

Action Taken When the DTC Sets

The affected power window will malfunction.

Conditions for Clearing the DTC

B316B 00, B316B 02, B317A 02, B318A 02, B319A 02

- The DTC will be current for as long as the fault is present.
- The DTC will change from current to history when the fault is no longer present.
- A history DTC will clear after 100 consecutive ignition cycles if the condition for the malfunction is no longer present.

B316B 39

If the DTC is current, the driver window switch must be replaced before the DTC can be cleared.

Reference Information

Schematic Reference

Moveable Window Schematics

Connector End View Reference

COMPONENT CONNECTOR END VIEWS - INDEX

Description and Operation

Power Windows Description and Operation

Electrical Information Reference

- **Circuit Testing**
- **Connector Repairs**
- **Testing for Intermittent Conditions and Poor Connections**
- **Wiring Repairs**

Scan Tool Reference

Control Module References for scan tool information

Circuit/System Verification

1. Ignition ON.
2. Verify the driver window moves while commanding the window UP and DOWN with the driver window master control
    - If the driver window does not move, refer to Circuit/System Testing below.
    - If the driver window moves
3. Verify the passenger, left rear and right rear windows move while commanding each window UP and DOWN with the switches on the driver window master control.
    - If a window does not move, refer to Circuit/System Testing below.
    - If the passenger, left rear and right rear windows move
4. Verify the passenger window moves while commanding the window UP and DOWN with the S79P Window Switch - Passenger.
    - If the passenger window does not move, refer to Circuit/System Testing below.
    - If the passenger window moves
5. Verify the left rear window moves while commanding the window UP and DOWN with the S79LR Window Switch - Left Rear.
    - If the left rear window does not move, refer to Circuit/System Testing below.
    - If the left rear window moves
6. Verify the right rear window moves while commanding the window UP and DOWN with the S79RR

Window Switch - Right Rear.

- If the right rear window does not move, refer to Circuit/System Testing below.
- If the right rear window moves

7. All OK.

Circuit/System Testing

1. Ignition ON.
2. Verify the scan tool Left Rear Window Main Control Down Switch, Left Rear Window Main Control Express Switch, Left Rear Window Main Control Up Switch, Right Rear Window Main Control Down Switch, Right Rear Window Main Control Express Switch, Right Rear Window Main Control Up Switch, Front Passenger Window Main Control Down Switch, Front Passenger Window Main Control Express Switch, and the Front Passenger Window Main Control Up Switch parameter changes between Inactive and Active when pressing and pulling the right front, right rear and left rear switches on the S79D Window Switch - Driver.
   - **If the parameters do not change**

     Replace the S79D Window Switch - Driver.

   - **If the parameters changes**
3. Verify the scan tool Left Rear Window Switch at Door parameter changes between Inactive and Active when pressing and pulling the S79LR Window Switch - Left Rear.
   - **If the parameters do not change**

     Replace the S79LR Window Switch - Left Rear.

   - **If the parameters changes**
4. Verify the scan tool Passenger Window Switch at Door parameter changes between Inactive and Active when pressing and pulling the S79P Window Switch - Passenger.
   - **If the parameters do not change**

     Replace the S79P Window Switch - Passenger.

   - **If the parameters changes**
5. Verify the scan tool Right Rear Window Switch at Door parameter changes between Inactive and Active when pressing and pulling the S79RR Window Switch - Right Rear.
   - **If the parameters do not change**

     Replace the S79RR Window Switch - Right Rear.

   - **If the parameters changes**
6. All OK.

Repair Instructions

Perform the **Diagnostic Repair Verification** after completing the repair.

- **Front Side Door Window Switch Replacement - Right Side**
- **Front Side Door Window Switch Replacement - Left Side**
- **Rear Side Door Window Switch Replacement**

DTC B316B, B317A, B318A, OR B319A (AXG)

Diagnostic Instructions

- Perform the **Diagnostic System Check - Vehicle** prior to using this diagnostic procedure.
- Review **Strategy Based Diagnosis** for an overview of the diagnostic approach.
- **Diagnostic Procedure Instructions** provides an overview of each diagnostic category.

DTC Descriptors

DTC B316B

Driver Window Switch

DTC B317A

Passenger Window Switch

DTC B318A

Left Rear Window Switch

DTC B319A

Right Rear Window Switch

For symptom byte information refer to: **Symptom Byte List**

Diagnostic Fault Information

Circuit	Short to Ground	Open/High Resistance	Short to Voltage	Signal Performance
Driver Window Motor Down Control	B316B 02	1	1	-
Driver Window Motor Express Control	B316B 02	1	1	-
Driver Window Motor Up Control	B316B 02	1	1	-
1. Driver Window Malfunction				

Circuit/System Description

The driver window motor supplies 12V signal circuits to the driver window switch, when a window switch has been activated, a switch closes providing a ground to the appropriate signal circuit causing the voltage to drop to 0V. The driver window motor will detect the voltage drop in the signal circuit and will command the window to move in the desired direction.

The driver window master control switch also contains control switches for the passenger, left rear and right rear window functions. When a window switch is pressed, a serial data message is sent to the body control module (BCM). The BCM examines the request and checks for messages from other power window motors that may prohibit window movement. If no prohibitive messages have been received, the BCM will send a serial data message to the appropriate passenger or rear window switch which will perform the command as requested.

Conditions for Running the DTC

Battery voltage must be between 9-16 V.

Conditions for Setting the DTC

B316B 00

The BCM has detected a control switch on the driver window master switch has been active for greater than 60 seconds.

B316B 02

The driver window motor has detected the driver window master switch is active for greater than 60 seconds.

B316B 39

The driver window motor has detected an internal failure within the driver window switch

B317A 02

The BCM has detected the passenger window switch is active for greater than 60 seconds.

B317A 39

The BCM has detected an internal failure within the passenger window switch

B318A 02

The BCM has detected the left rear window switch is active for greater than 60 seconds

B318A 39

The BCM has detected an internal failure within the left rear window switch

B319A 02

The BCM has detected the right rear window switch is active for greater than 60 seconds

B319A 39

The BCM has detected an internal failure within the right rear window switch

Action Taken When the DTC Sets

The affected power window will malfunction.

Conditions for Clearing the DTC

B316B 00, B316B 02, B317A 02, B318A 02, B319A 02

- The DTC will be current for as long as the fault is present.
- The DTC will change from current to history when the fault is no longer present.
- A history DTC will clear after 100 consecutive ignition cycles if the condition for the malfunction is no longer present.

B316B 39, B317A 39, B318A 39, B319A 39

If the DTC is current, the affected window switch must be replaced before the DTC can be cleared.

Reference Information

Schematic Reference

Moveable Window Schematics

Connector End View Reference

COMPONENT CONNECTOR END VIEWS - INDEX

Description and Operation

Power Windows Description and Operation

Electrical Information Reference

- **Circuit Testing**
- **Connector Repairs**
- **Testing for Intermittent Conditions and Poor Connections**
- **Wiring Repairs**

Scan Tool Reference

Control Module References for scan tool information

Circuit/System Verification

1. Ignition ON.
2. Verify the scan tool parameters listed below change when pressing and pulling the switches for the passenger, left rear and right rear window on the driver window master control;
   - Left Rear Main Control Down Switch - Inactive and Active
   - Left Rear Main Control Express Switch - Inactive and Active
   - Left Rear Main Control Up Switch - Inactive and Active
   - Right Rear Main Control Down Switch - Inactive and Active
   - Right Rear Main Control Express Switch - Inactive and Active
   - Right Rear Main Control Up Switch - Inactive and Active
   - Front Passenger Main Control Down Switch - Inactive and Active
   - Front Passenger Main Control Express Switch - Inactive and Active
   - Front Passenger Main Control Up Switch - Inactive and Active
   - **If any parameter does not change**

     Replace the S79D Window Switch-Driver.

   - **If the parameters change**
3. Verify the scan tool parameters listed below change when pressing and pulling the S79P Window Switch-Passenger, the S79LR Window Switch-Left Rear and the S79RR Window Switch-Right Rear.
   - Passenger Window Switch at Door - Inactive, Up, Down, Express Down
   - Left Rear Window Switch at Door - Inactive, Up, Down, Express Down
   - Right Rear Window Switch at Door - Inactive, Up, Down, Express Down
   - **If any parameter does not change**

     Test or replace the appropriate passenger or rear S79 Window Switch

   - **If all the parameters change**
4. Verify the scan tool parameters listed below change when pressing and pulling the driver window control switch on the driver window master control:
   - Driver Window Main Control Down Switch - Inactive and Active
   - Driver Window Main Control Up Switch - Inactive and Active
   - Driver Window Main Control Express Switch - Inactive and Active
   - **If any parameter does not change**

     Refer to Circuit/System Testing below.

- **If all the parameters change**

5. All OK.

Circuit/System Testing

1. Ignition OFF and all vehicle systems OFF, disconnect the harness connector at the S79D Window Switch-Driver. It may take up to 2 minutes for all vehicle systems to power down.
2. Test for less than 10 ohms between the ground circuit terminal 1 and ground.
   - **If 10 ohms or greater**
   1. Ignition OFF.
   2. Test for less than 2 ohms in the ground circuit end to end.
      - If 2 ohms or greater, repair the open/high resistance in the circuit.
      - If less than 2 ohms, repair the open/high resistance in the ground connection.
   - **If less than 10 ohms**
3. Ignition ON.
4. Verify a test lamp illuminates between the B+ circuit terminal 4 and ground.
   - **If the test lamp does not illuminate and the circuit fuse is good**
   1. Ignition OFF.
   2. Test for less than 2 ohms in the B+ circuit end to end.
      - If 2 ohms or greater, repair the open/high resistance in the circuit.
      - If less than 2 ohms, verify the fuse is not open and there is voltage at the fuse.
   - **If the test lamp does not illuminate and the circuit fuse is open**
   1. Ignition OFF.
   2. Test for infinite resistance between the B+ circuit and ground.
      - If less than infinite resistance, repair the short to ground on the circuit.
      - If infinite resistance, replace the S79D Window Switch-Driver.
   - **If the test lamp illuminates**
5. Verify the scan tool Driver Window Main Control Down Switch parameter is Inactive.
   - **If not Inactive**
   1. Ignition OFF, disconnect the harness connector at the M74D Window Motor-Driver.
   2. Test for infinite resistance between the S79D Window Switch-Driver signal circuit terminal 3 and ground.
      - If less than infinite resistance, repair the short to ground on the circuit.
      - If infinite resistance, replace the M74D Window Motor-Driver.
   - **If Inactive**
6. Install a 3 A fused jumper wire between the signal circuit terminal 3 and the ground circuit terminal 1.
7. Verify the scan tool Driver Window Main Control Down Switch parameter is Active
   - **If not Active**
   1. Ignition OFF, remove the 3 A fused jumper wire, disconnect the harness connector at the M74D

Window Motor-Driver, ignition ON.

2. Test for less than 1 V between the S79D Window Switch-Driver signal circuit terminal 3 and ground.
    - If 1 V or greater, repair the short to voltage on the circuit.
    - If less than 1 V
3. Test for less than 2 ohms in the signal circuit end to end.
    - If 2 ohms or greater, repair the open/high resistance in the circuit.
    - If less than 2 ohms, replace the M74D Window Motor-Driver.

- **If Active**

8. Verify the scan tool Driver Window Main Control Up Switch parameter is Inactive.
    - **If not Inactive**
    1. Ignition OFF, disconnect the harness connector at the M74D Window Motor-Driver.
    2. Test for infinite resistance between the S79D Window Switch-Driver signal circuit terminal 6 and ground.
        - If less than infinite resistance, repair the short to ground on the circuit.
        - If infinite resistance, replace the M74D Window Motor-Driver.
    - **If Inactive**
9. Install a 3 A fused jumper wire between the signal circuit terminal 6 and the ground circuit terminal 1.
10. Verify the scan tool Driver Window Main Control Up Switch parameter is Active
    - **If not Active**
    1. Ignition OFF, remove the 3 A fused jumper wire, disconnect the harness connector at the M74D Window Motor-Driver, ignition ON.
    2. Test for less than 1 V between the S79D Window Switch-Driver signal circuit 6 and ground.
        - If 1 V or greater, repair the short to voltage on the circuit.
        - If less than 1 V
    3. Test for less than 2 ohms in the signal circuit end to end.
        - If 2 ohms or greater, repair the open/high resistance in the circuit.
        - If less than 2 ohms, replace the M74D Window Motor-Driver.
    - **If Active**
11. Verify the scan tool Driver Window Main Control Express Switch parameter is Inactive.
    - **If not Inactive**
    1. Ignition OFF, disconnect the harness connector at the M74D Window Motor-Driver.
    2. Test for infinite resistance between the S79D Window Switch-Driver signal circuit terminal 2 and ground.
        - If less than infinite resistance, repair the short to ground on the circuit.
        - If infinite resistance, replace the M74D Window Motor-Driver.
    - **If Inactive**
12. Install a 3 A fused jumper wire between the signal circuit terminal 2 and the ground circuit terminal 1.
13. Verify the scan tool Driver Window Main Control Express Switch parameter is Active

- **If not Active**

1. Ignition OFF, remove the 3 A fused jumper wire, disconnect the harness connector at the M74D Window Motor-Driver, ignition ON.
2. Test for less than 1 V between the S79D Window Switch-Driver signal circuit 2 and ground.
   - If 1 V or greater, repair the short to voltage on the circuit.
   - If less than 1 V
3. Test for less than 2 ohms in the signal circuit end to end.
   - If 2 ohms or greater, repair the open/high resistance in the circuit.
   - If less than 2 ohms, replace the M74D Window Motor-Driver.

- **If Active**

14. Test or replace the S79D Window Switch-Driver.

Repair Instructions

Perform the **Diagnostic Repair Verification** after completing the repair.

- **Front Side Door Window Switch Replacement - Right Side**
- **Front Side Door Window Switch Replacement - Left Side**
- **Rear Side Door Window Regulator Motor Replacement**
- **Front Side Door Window Regulator Motor Replacement**

DTC B3205

Diagnostic Instructions

- Perform the **Diagnostic System Check - Vehicle** prior to using this diagnostic procedure.
- Review **Strategy Based Diagnosis** for an overview of the diagnostic approach.
- **Diagnostic Procedure Instructions** provides an overview of each diagnostic category.

DTC Descriptors

DTC B3205

Driver Window Motor

For symptom byte information refer to: **Symptom Byte List**

Circuit/System Description

The body control module (BCM) monitors, receives and transmits serial data to each of the doors switches and window motors. When a window switch has been activated on the driver window switch, a signal is sent to the BCM which sends a signal to the appropriate window motor and the window motor will move in the direction commanded.

Conditions for Running the DTC

- The ignition switch is in the ON position.
- Battery voltage must be between 9-16 V.

Conditions for Setting the DTC

B3205 00

The BCM has detected that the compatibility code stored in the driver window motor does not match the compatibility code stored in the BCM.

B3205 39

An internal malfunction has been detected by the BCM in the driver window motor while commanding the window UP or DOWN.

B3205 42

The BCM will automatically attempt to download the calibration program into the driver window motor (As will occur when the window motor has been replaced), if the first calibration program fails to load, the BCM will attempt to download the calibration program a second time. If this download fails, the BCM will set appropriate DTC.

B3205 4B

The BCM has detected that the driver window is not "normalized" and can set for the following reasons:

- When the battery has been disconnected
- When the battery has been replaced
- When the door wiring harness has been disconnected
- When the window motor has been disconnected.

Action Taken When the DTC Sets

The driver power window will malfunction.

Conditions for Clearing the DTC

B3205 00

Installing a compatible window motor for that specific make and model vehicle.

B3205 39

The driver window motor must be replaced before the DTC can be cleared.

B3205 42

The driver window motor must be replaced before the DTC can be cleared.

B3205 4B

The driver window motor must be normalized before the DTC can be cleared.

Reference Information

Schematic Reference

Moveable Window Schematics

Connector End View Reference

COMPONENT CONNECTOR END VIEWS - INDEX

Description and Operation

Power Windows Description and Operation

Electrical Information Reference

- **Circuit Testing**
- **Connector Repairs**
- **Testing for Intermittent Conditions and Poor Connections**
- **Wiring Repairs**

Scan Tool Reference

Control Module References for scan tool information

Circuit/System Verification

1. Ignition ON
2. Verify the driver window functions while commanding the Driver Window Motor Up and Down with a scan tool.
    - **If the Up and Down does not work**

      Replace the M74D Window Motor - Driver.

    - **If the UP and DOWN works**
3. Verify the driver window performs the Express Up and Express Down functions with the driver window switch.
    - **If the driver window does not Express Up and Express Down**

Normalize the driver window motor, refer to **Window Motor Programming - Express Function**.

- **If the driver window performs the Express Up and Express Down functions**

4. All OK.

Repair Instructions

Perform the **Diagnostic Repair Verification** after completing the repair.

Front Side Door Window Regulator Motor Replacement

SYMPTOMS - FIXED AND MOVEABLE WINDOWS

Important Preliminary Checks Before Starting:

1. Perform the **Diagnostic System Check - Vehicle** before using the symptom tables in order to verify that all of the following are true:
   - There are no DTCs set.
   - The control modules can communicate via the serial data link.
2. Review the power window system operation or rear window defogger system operation in order to familiarize yourself with the system functions. Refer to the following:
   - **Rear Window Defogger Description and Operation**
   - **Power Windows Description and Operation**

Visual/Physical Inspection

- Inspect for aftermarket devices which could affect the operation of the rear window defogger. Refer to **Checking Aftermarket Accessories** .
- Inspect the easily accessible or visible system components for obvious damage or conditions which could cause the symptom.

Intermittent

NOTE:

- **Inspect for proper installation of electrical components if an intermittent condition exists. Inspect for aftermarket theft deterrent devices, lights, and cellular phones. Ensure that no aftermarket equipment is connected to the class 2 circuit. If you can not locate an intermittent condition, a cellular phone signal may cause the condition. Faulty electrical connections or wiring may be the cause of intermittent conditions. Refer to Testing for Intermittent Conditions and Poor Connections .**
- **The problem may or may not turn ON the SERVICE VEHICLE SOON indicator or store a DTC. Do not use the symptom tables to diagnose intermittent conditions. The malfunction must be present in order to locate the problem.**

Poor electrical connections or wiring cause most intermittent conditions. Perform a careful visual/physical check for the following conditions:

- Poor mating of the connector halves or a terminal not fully seated in the connector body
- An improperly formed or damaged terminal
- Reform or replace connector terminals in the problem circuit in order to ensure proper contact tension.
- Poor terminal to wire connection requires removing the terminal from the connector body in order to perform the check.

Use a scan tool in order to help detect intermittent conditions. The scan tool has several features that can be used to locate an intermittent condition. The snapshot feature can capture and store data parameters within the scan tool when the malfunction occurs. This information can then be reviewed in order to see what caused the malfunction.

Symptom List

Refer to a symptom diagnostic procedure from the following list in order to diagnose the symptom:

- **Rear Window Defogger Malfunction**
- **Power Windows Malfunction (AEC)**, **Power Windows Malfunction (AXG)**

REAR WINDOW DEFOGGER MALFUNCTION

Diagnostic Instructions

- Perform the **Diagnostic System Check - Vehicle** prior to using this diagnostic procedure.
- Review **Strategy Based Diagnosis** for an overview of the diagnostic approach.
- **Diagnostic Procedure Instructions** provides an overview of each diagnostic category.

Diagnostic Fault Information

Circuit	Short to Ground	Open/High Resistance	Short to Voltage	Signal Performance
Rear Defog Relay Switch B+	1	1	-	-
Rear Defog Relay Control	B0283 02	B0283 05	B0283 05	-
Rear Defogger Grid Control	1	1	2	-
Rear Defog Relay Coil Ground	-	B0283 05	-	-
Rear Defogger Grid Ground	-	1	-	-
1. Rear Defogger Inoperative 2. Rear Defogger Always ON				

Circuit/System Description

When the HVAC Control Module receives a rear window defog request from the HVAC control faceplate, the HVAC Control Module will supply voltage to the relay coil. Battery positive voltage is supplied at all times to the relay switched input and the relay coil is always grounded. This allows battery positive voltage from the relay switched input to flow through the switch contacts and out the relay switched output to the rear window defogger grid.

Diagnostic Aids

The rear window defogger indicator will still function when the rear defogger switch is pressed, but if the Remote Start Enable ambient temperature is greater than 5°C (40°F) may cause the rear window defogger grid not to function:

Reference Information

Schematic Reference

Defogger Schematics

Connector End View Reference

COMPONENT CONNECTOR END VIEWS - INDEX

Description and Operation

Rear Window Defogger Description and Operation

Electrical Information Reference

- **Circuit Testing**
- **Connector Repairs**
- **Testing for Intermittent Conditions and Poor Connections**
- **Wiring Repairs**

Circuit/System Verification

1. Engine running.
2. Verify the scan tool Rear Defogger Switch parameter changes between On and Off when pressing the rear window defogger switch.
    - **If the parameter does not change between On and Off**

      Replace the A26 HVAC controls.

    - **If the parameter changes between On and Off**
3. Verify the E18 Rear Defogger Grid turns ON and OFF when commanding the Rear Defogger On and Off

with a scan tool.

- **If the E18 Rear Defogger Grid does not turn ON and OFF**

  Refer to Circuit/System Testing

- **If the E18 Rear Defogger Grid turns ON and OFF**

4. Verify the rear defogger indicator turns ON and OFF when pressing the rear window defogger switch.
   - **If the rear defogger indicator does not turn ON and OFF**

     Replace the A26 HVAC controls.

   - **If the rear defogger indicator turns ON and OFF**
5. All OK.

Circuit/System Testing

1. Ignition OFF and all vehicle systems OFF, disconnect the KR5 Rear Defogger Relay. It may take up to 2 minutes for all vehicle systems to power down.
2. Test for less than 10 ohms between the ground circuit terminal 2 and ground.
   - **If 10 ohms or greater**
   1. Ignition OFF.
   2. Test for less than 2 ohms in the ground circuit end to end.
      - If 2 ohms or greater, repair the open/high resistance in the circuit.
      - If less than 2 ohms, repair the open/high resistance in the ground connection.
   - **If less than 10 ohms**
3. Connect a test lamp between the control circuit terminal 1 and the ground circuit terminal 2, engine running.
4. Verify the test lamp turns ON and OFF when commanding the Rear Defogger On and Off with a scan tool.
   - **If the test lamp is always OFF**
   1. Ignition OFF, disconnect the harness connector at the K33 HVAC Control Module.
   2. Test for infinite resistance between the control circuit and ground.
      - If less than infinite resistance, repair the short to ground on the circuit.
      - If infinite resistance
   3. Test for less than 2 ohms in the control circuit end to end.
      - If 2 ohms or greater, repair the open/high resistance in the circuit.
      - If less than 2 ohms, replace the K33 HVAC Control Module.
   - **If the test lamp is always ON**
   1. Ignition OFF, disconnect the harness connector at the K33 HVAC Control Module, ignition ON.
   2. Test for less than 1 V between the control circuit and ground.
      - If 1 V or greater, repair the short to voltage on the circuit.

- If less than 1 V, replace the K33 HVAC Control Module.
- **If the test lamp turns ON and OFF**

5. Verify that a test lamp does not illuminate between the control circuit terminal 5 and ground.
   - **If the test lamp illuminates**

     Repair the short to voltage on the control circuit

   - **If the test lamp does not illuminate**
6. Ignition OFF and all vehicle systems OFF, disconnect the X2 harness connector at the E18 Rear Defogger Grid. It may take up to 2 minutes for all vehicle systems to power down.
7. Test for less than 10 ohms between the ground circuit terminal 1 and ground.
   - **If 10 ohms or greater**
   1. Ignition OFF.
   2. Test for less than 2 ohms in the ground circuit end to end.
      - If 2 ohms or greater, repair the open/high resistance in the circuit.
      - If less than 2 ohms, repair the open/high resistance in the ground connection.
   - **If less than 10 ohms**
8. Connect the X2 harness connector at the E18 Rear Defogger Grid.
9. Ignition ON, connect a 40 A fused jumper wire between the B+ circuit terminal 3 and the control circuit terminal 5.
10. Verify the E18 Rear Defogger Grid is activated.
    - **If the E18 Rear Defogger Grid does not activate**
    1. Ignition OFF, disconnect the X1 harness connector at the E18 Rear Defogger Grid.
    2. Test for infinite resistance between the control circuit and ground.
       - If less than infinite resistance, repair the short to ground on the circuit.
       - If infinite resistance
    3. Test for less than 2 ohms in the control circuit end to end.
       - If 2 ohms or greater, repair the open/high resistance in the circuit.
       - If less than 2 ohms, replace the E18 Rear Defogger Grid.
    - **If the E18 Rear Defogger Grid activates**
11. Test or replace the KR5 Rear Defogger Relay.

Component Testing

Relay Test

1. Ignition OFF, disconnect the KR5 Rear Defogger Relay.
2. Test for 60-180 ohms between terminals 1 and 2.
   - **If less than 60 ohms or greater than 180 ohms**

Replace the KR5 Rear Defogger Relay.

- **If between 60-180 ohms**

3. Test for infinite resistance between the terminals listed below:
   - 3 and 1
   - 3 and 5
   - 3 and 2
   - 2 and 5
   - **If less than infinite resistance**

     Replace the KR5 Rear Defogger Relay.

   - **If infinite resistance**
4. Install a 3 A fused jumper wire between relay terminal 1 and 12 V. Install a jumper wire between relay terminal 2 and ground.
5. Test for less than 2 ohms between terminals 3 and 5.
   - **If 2 ohms or greater**

     Replace the KR5 Rear Defogger Relay.

   - **If less than 2 ohms**
6. All OK

Rear Defogger Grid Test

NOTE: Lightly touch the grid lines when testing with the test lamp. If the test lamp point is scraped through the grid line it can cause an open in the circuit

1. Engine running, command the Rear Defogger ON with a scan tool.
2. Verify that a test lamp illuminates between each rear window defogger grid line and ground. The test lamp should be off when testing at the ground side of the grid and get brighter as the test lamp moves closer to the voltage supply side of the grid. The test lamp should be dim when testing each grid line in the middle
   - **If the test lamp remains bright at the middle of the grid line.**

     The grid line is open between the test point and the ground side of the grid.

     Replace the rear window

   - **If the test lamp remains off at the middle of the grid line.**

     The grid line is open between the test point and the voltage supply side of the grid.

     Replace the rear window

- **If the test lamp remains dim at the middle of each grid line.**

3. All OK

Repair Instructions

Perform the **Diagnostic Repair Verification** after completing the repair.

- **Rear Window Replacement**
- **Relay Replacement (Within an Electrical Center)** , **Relay Replacement (Attached to Wire Harness)**
- **Control Module References** for HVAC Control Module and HVAC controls replacement, programming and setup

POWER WINDOWS MALFUNCTION (AEC)

Diagnostic Instructions

- Perform the **Diagnostic System Check - Vehicle** prior to using this diagnostic procedure.
- Review **Strategy Based Diagnosis** for an overview of the diagnostic approach.
- **Diagnostic Procedure Instructions** provides an overview of each diagnostic category.

Diagnostic Fault Information

Circuit	Short to Ground	Open/High Resistance	Short to Voltage	Signal Performance
Driver Window Switch B+	U1538 00	U1538 00	-	-
Driver Window Switch Serial Data	U1534 00, U1538 00, U153A 00	U1538 00	U1538 00	-
Driver Window Switch Ground	-	U1538 00	-	-
Driver Window Motor Control	1	1	1	-
Passenger Window Switch B+	U153A 00	U153A 00	-	-
Passenger Window Switch Serial Data	U1534 00, U1538 00, U153A 00	U153A 00	U153A 00	-
Passenger Window Switch Ground	-	U153A 00	-	-
Passenger Window Motor Control	2	2	2	-
Left Rear Window Switch B+	U1534 00	U1534 00	-	-
Left Rear Window Switch	U1534 00,	U1534 00	U1534 00	-

Serial Data	U154A 00			
Left Rear Window Switch Ground	-	U1534 00	-	-
Left Rear Window Motor Control	3	3	3	-
Right Rear Window Switch B+	U154A 00	U154A 00	-	-
Right Rear Window Switch Serial Data	U154A 00, U1548 00	U154A 00	U154A 00	-
Right Rear Window Switch Ground	-	U154A 00	-	-
Right Rear Window Motor Control	4	4	4	-
1. Driver Window Motor Inoperative 2. Passenger Window Motor Inoperative 3. Left Rear Window Motor Inoperative 4. Right Rear Window Motor Inoperative				

Circuit/System Description

When the ignition switch is in the RUN or ACCY position, or retained accessory power is enabled and the driver or passenger window switch or rear window switch is pressed in the down position, voltage is applied to the appropriate window motor causing that window to open. When the driver or passenger window switch is pulled in the up position, voltage is applied to the appropriate window motor in the opposite direction causing that window to close.

When the driver wishes to command a passenger or rear window, a window switch is pressed on the driver window switch. A serial data message is then sent to the body control module (BCM) from the driver window switch. The BCM will examine the request and check for messages from other power window switches that may prohibit the window movement. If no prohibitive messages have been received, the BCM will send a serial data message to the passenger or rear window switch which will command the window motor to perform as requested.

Reference Information

Schematic Reference

Moveable Window Schematics

Connector End View Reference

COMPONENT CONNECTOR END VIEWS - INDEX

Description and Operation

Power Windows Description and Operation

Electrical Information Reference

- **Circuit Testing**
- **Connector Repairs**
- **Testing for Intermittent Conditions and Poor Connections**
- **Wiring Repairs**

Scan Tool Reference

Control Module References for scan tool information

Circuit/System Verification

1. Ignition ON.
2. Verify the driver, passenger, left rear and right rear window move while commanding the window UP and DOWN with a scan tool.
   - **If the window does not move UP and DOWN as commanded**

     Refer to Circuit/System Testing below.

   - **If the window moves UP and DOWN as commanded**
3. Verify the scan tool Left Rear Main Control Down Switch, Left Rear Main Control Express Switch, Left Rear Main Control Up Switch, Right Rear Main Control Down Switch, Right Rear Main Control Express Switch, Right Rear Main Control Up Switch, Front Passenger Main Control Down Switch, Front Passenger Main Control Express Switch, and the Front Passenger Main Control Up Switch parameter changes between Inactive and Active when pressing and pulling each switch on the driver window switch.
   - **If the parameters do not change**

     Replace the S79D window switch-driver.

   - **If the parameters change**
4. Verify the scan tool Child Security Lockout Switch parameter changes between Inactive and Active when pressing the window lockout switch.
   - **If the parameter does not change**

     Refer to **Power Door Child Lock Malfunction** .

   - **If the parameter changes**
5. Verify the lockout indicator turns ON and OFF when commanding the Child Security Lock Indicator ON and OFF with a scan tool.
   - **If the indicator does not turn ON and OFF**

     Replace the S79D window switch-driver.

- **If the indicator turns ON and OFF**

6. Command the rear window lockout by pressing the window lockout switch on the driver window switch.
7. Verify the left rear and right rear window does not move while commanding the window UP and DOWN with the left rear window switch and right rear window switch.
   - **If a rear window moves UP and DOWN as commanded**

     Refer to **Power Door Child Lock Malfunction** .

   - **If the rear windows do not move UP and DOWN**
8. All OK.

Circuit/System Testing

1. Ignition OFF and all vehicle systems OFF, disconnect the harness connector at the appropriate S79 window switch. It may take up to 2 minutes for all vehicle systems to power down.
2. Test for less than 10 ohms between the ground circuit terminal listed below and ground:
   - S79D window switch-driver - ground circuit terminal 1
   - S79P window switch-passenger - ground circuit terminal 1
   - S79LR window switch-left rear - ground circuit terminal 5
   - S79RR window switch-right rear - ground circuit terminal 5
   - **If 10 ohms or greater**
   1. Ignition OFF.
   2. Test for less than 2 ohms in the ground circuit end to end.
      - If 2 ohms or greater, repair the open/high resistance in the circuit.
      - If less than 2 ohms, repair the open/high resistance in the ground connection.
   - **If less than 10 ohms**
3. Ignition ON.
4. Verify a test lamp illuminates between the B+ circuit terminal listed below and ground:
   - S79D window switch-driver - B+ circuit terminal 4
   - S79P window switch-passenger - B+ circuit terminal 4
   - S79LR window switch-left rear - B+ circuit terminal 8
   - S79RR window switch-right rear - B+ circuit terminal 8
   - **If the test lamp does not illuminate and the circuit fuse is good**
   1. Ignition OFF.
   2. Test for less than 2 ohms in the B+ circuit end to end.
      - If 2 ohms or greater, repair the open/high resistance in the circuit.
      - If less than 2 ohms, verify the fuse is not open and there is voltage at the fuse.
   - **If the test lamp does not illuminate and the circuit fuse is open**
   1. Ignition OFF.
   2. Test for infinite resistance between the B+ circuit and ground.

- If less than infinite resistance, repair the short to ground on the circuit.
- If infinite resistance

3. Test for infinite resistance between the signal circuit and ground.
    - If less than infinite resistance, repair the short to ground on the circuit.
    - If infinite resistance, replace the S79 window switch

- **If the test lamp illuminates**

5. Test for 5-10 V between the serial data circuit terminal listed below and ground
    - S79D window switch-driver - serial data circuit terminal 5
    - S79P window switch-passenger - serial data circuit terminal 5
    - S79LR window switch-left rear - serial data circuit terminal 1
    - S79RR window switch-right rear - serial data circuit terminal 1
    - **If less than 5 V**
    1. Ignition OFF, disconnect the harness connector at the K9 body control module.
    2. Test for infinite resistance between the serial data and ground.
        - If less than infinite resistance, repair the short to ground on the circuit.
        - If infinite resistance
    3. Test for less than 2 ohms in the serial data circuit end to end.
        - If 2 ohms or greater, repair the open/high resistance on the circuit.
        - If less than 2 ohms, replace the K9 body control module.
    - **If greater than 10 V**
    1. Ignition OFF, disconnect the harness connector at the K9 body control module, ignition ON.
    2. Test for less than 1 V between the serial data circuit and ground.
        - If 1 V or greater, repair the short to voltage on the circuit.
        - If less than 1 V, replace the K9 body control module
    - **If between 5-10 V**
6. Ignition OFF connect the harness connector at the S79 window switch and disconnect the harness connector at the M74 window motor.
7. Test for less than 5 ohms between the control circuit terminal 1 and ground.
    - **If 5 ohms or greater**
    1. Ignition OFF, disconnect the harness connector at the S79 window switch.
    2. Test for less than 2 ohms in the control circuit end to end.
        - If 2 ohms or greater, repair the open/high resistance in the circuit.
        - If less than 2 ohms, replace the S79 window switch.
    - **If less than 5 ohms**
8. Test for less than 5 ohms between the control circuit terminal 2 and ground.
    - **If 5 ohms or greater**
    1. Ignition OFF, disconnect the harness connector at the S79 window switch.
    2. Test for less than 2 ohms in the control circuit end to end.

- If 2 ohms or greater, repair the open/high resistance in the circuit.
- If less than 2 ohms, replace the S79 window switch.

- **If less than 5 ohms**

9. Connect a test lamp between the control circuit terminal 1 and control circuit terminal 2, ignition ON.
10. Verify the test lamp illuminates when commanding the UP and DOWN states with the S79 window switch.
    - **If the test lamp does not illuminate during either of the commands**
    1. Ignition OFF, disconnect the harness connector at the S79 window switch.
    2. Test for infinite resistance between each control circuit and ground.
        - If less than infinite resistance, repair the short to ground on the circuit.
        - If infinite resistance, replace the S79 window switch.
    - **If the test lamp illuminates during each of the commands**
11. Test or replace the M74 window motor.

Component Testing

Window Motor

1. Ignition OFF, disconnect the harness connector at the appropriate M74 window motor.
2. Install a 25 A fused jumper wire between one of the control terminals and 12 V. Momentarily install a jumper wire between the other control terminal and ground. Reverse the jumper wires at least two times, the M74 window motor should perform the UP and DOWN functions.
    - **If the function does not perform the UP and DOWN functions**

      Replace the M74 window motor.

    - **If the function performs the UP and DOWN functions**
3. All OK

Repair Instructions

Perform the **Diagnostic Repair Verification** after completing the diagnostic procedure.

- **Front Side Door Window Regulator Motor Replacement**
- **Rear Side Door Window Regulator Motor Replacement**
- **Rear Side Door Window Switch Replacement**
- **Front Side Door Window Switch Replacement - Right Side**
- **Front Side Door Window Switch Replacement - Left Side**

POWER WINDOWS MALFUNCTION (AXG)

Diagnostic Instructions

- Perform the **Diagnostic System Check - Vehicle** prior to using this diagnostic procedure.
- Review **Strategy Based Diagnosis** for an overview of the diagnostic approach.
- **Diagnostic Procedure Instructions** provides an overview of each diagnostic category.

Diagnostic Fault Information

Circuit	Short to Ground	Open/High Resistance	Short to Voltage	Signal Performance
Driver Window Switch B+	U1538 00	U1538 00	-	-
Driver Window Switch Serial Data	U1534 00, U1538 00, U153A 00	U1538 00	U1538 00	-
Driver Window Switch Ground	-	U1538 00	-	-
Driver Window Motor B+	U1534 00	U1534 00	-	-
Driver Window Motor Serial Data	U1534 00, U1538 00, U153A 00	U1534 00	U1534 00	-
Driver Window Motor Down Control	B316B 02	1	1	-
Driver Window Motor Express Control	B316B 02	1	1	-
Driver Window Motor Up Control	B316B 02	1	1	-
Driver Window Motor Ground	-	U1534 00	-	-
Passenger Window Switch B+	U153A 00	U153A 00	-	-
Passenger Window Switch Serial Data	U1534 00, U1538 00, U153A 00	U153A 00	U153A 00	-
Passenger Window Switch Ground	-	U153A 00	-	-
Passenger Window Motor Control	2	2	2	-
Left Rear Window Switch B+	U1534 00	U1534 00	-	-
Left Rear Window Switch Serial Data	U1534 00, U154A 00	U1534 00	U1534 00	-
Left Rear Window Switch Ground	-	U1534 00	-	-
Left Rear Window Motor Control	3	3	3	-
Right Rear Window Switch	U154A 00	U154A 00	-	-

B+				
Right Rear Window Switch Serial Data	U154A 00, U1548 00	U154A 00	U154A 00	-
Right Rear Window Switch Ground	-	U154A 00	-	-
Right Rear Window Motor Control	4	4	4	-
1. Driver Window Malfunction 2. Passenger Window Inoperative 3. Left Rear Window Inoperative 4. Right Rear Window Inoperative				

Circuit/System Description

The driver window motor supplies 12 V signal circuits to the driver window switch, when a window switch has been activated, a switch closes providing a ground to the appropriate signal circuit causing the voltage to drop to 0 V. The driver window motor will detect the voltage drop in the signal circuit and will command the window to move in the desired direction.

The driver window master control switch also contains control switches for the passenger, left rear and right rear window functions. When a window switch is pressed, a serial data message is sent to the body control module (BCM). The BCM examines the request and checks for messages from other power window motors that may prohibit window movement. If no prohibitive messages have been received, the BCM will send a serial data message to the appropriate passenger or rear window switch which will perform the command as requested.

Diagnostic Aids

The loss of the express up and express down functions for the driver window may have occurred for the following reasons:

- The battery was disconnected
- The battery was replaced
- The door wiring harness was disconnected
- The window motor was disconnected

The driver window motor will need to be normalized in order to restore the express functions, refer to **Window Motor Programming - Express Function** for the proper procedure.

Reference Information

Schematic Reference

Moveable Window Schematics

Connector End View Reference

COMPONENT CONNECTOR END VIEWS - INDEX

Description and Operation

Power Windows Description and Operation

Electrical Information Reference

- **Circuit Testing**
- **Connector Repairs**
- **Testing for Intermittent Conditions and Poor Connections**
- **Wiring Repairs**

Scan Tool Reference

Control Module References for scan tool information

Circuit/System Verification

1. Ignition ON.
2. Verify the driver window functions while commanding the Driver Window Motor Up and Down with a scan tool.
    - **If the window does not move UP and DOWN as commanded**

      Refer to Circuit/System Testing below- Driver Window Motor Malfunction.

    - **If the window moves UP and DOWN as commanded**
3. Verify the driver window functions while commanding the window UP, express UP, DOWN and express DOWN with the S79D Window Switch-Driver.
    - **If the driver window does not move UP or DOWN as commanded**

      Refer to Circuit/System Testing below- Driver Window Switch Malfunction.

    - **If the driver window does not express UP or express DOWN**

      Normalize the M74D Window Motor-Driver, refer to **Window Motor Programming - Express Function**.

    - **If after normalization, the driver window does not express UP or express DOWN**

      Refer to Circuit/System Testing below- Driver Window Switch Malfunction.

    - **If the driver window moves UP, express UP, DOWN and express DOWN as commanded**
4. Verify the scan tool parameters listed below change when pressing and pulling the switches for the passenger, left rear and right rear window on the driver window master control;

- Left Rear Main Control Down Switch - Inactive and Active
- Left Rear Main Control Express Switch - Inactive and Active
- Left Rear Main Control Up Switch - Inactive and Active
- Right Rear Main Control Down Switch - Inactive and Active
- Right Rear Main Control Express Switch - Inactive and Active
- Right Rear Main Control Up Switch - Inactive and Active
- Front Passenger Main Control Down Switch - Inactive and Active
- Front Passenger Main Control Express Switch - Inactive and Active
- Front Passenger Main Control Up Switch - Inactive and Active
- **If the parameters do not change**

  Refer to Circuit/System Testing below- Driver Window Switch Malfunction.

- **If the parameters changes**

5. Verify the scan tool Child Security Lockout Switch parameter changes between Inactive and Active when pressing the window lockout switch.
   - **If the parameters do not change**

     Refer to **Power Door Child Lock Malfunction**

   - **If the parameters changes**
6. Verify the lockout indicator turns ON and OFF when commanding the Child Security Lock Indicator On and Off with a scan tool.
   - **If the indicator does not turn ON and OFF**

     Replace the S79D Window Switch-Driver.

   - **If the indicator turns ON and OFF**
7. Verify the passenger, left rear and right rear window functions while commanding the Passenger Window Motor, Left Rear Window Motor and Right Rear Window Motor Up and Down with a scan tool.
   - **If the window does not move Up and Down as commanded**

     Refer to Circuit/System Testing below- Passenger Power Window Inoperative.

   - **If the window moves Up and Down as commanded**
8. Command the rear window lockout by pressing the window lockout switch on the S79D Window Switch-Driver.
9. Verify the left rear and right rear window does not move while commanding the window UP and DOWN with the S79LR Window Switch-Left Rear and S79RR Window Switch-Right Rear
   - **If a rear window moves UP and DOWN as commanded**

     Refer to **Power Door Child Lock Malfunction** .

- **If the rear windows do not move UP and DOWN**

10. All OK.

Circuit/System Testing

Driver Window Motor Malfunction

1. Ignition OFF and all vehicle systems OFF, disconnect the harness connector at the M74D Window Motor-Driver. It may take up to 2 minutes for all vehicle systems to power down.
2. Test for less than 10 ohms between the ground circuit terminal 1 and ground.
   - **If 10 ohms or greater**
   1. Ignition OFF.
   2. Test for less than 2 ohms in the ground circuit end to end.
      - If 2 ohms or greater, repair the open/high resistance in the circuit.
      - If less than 2 ohms, repair the open/high resistance in the ground connection.
   - **If less than 10 ohms**
3. Ignition ON.
4. Verify a test lamp illuminates between the B+ circuit terminal 2 and ground.
   - **If the test lamp does not illuminate and the circuit fuse is good**
   1. Ignition OFF.
   2. Test for less than 2 ohms in the B+ circuit end to end.
      - If 2 ohms or greater, repair the open/high resistance in the circuit.
      - If less than 2 ohms, verify the fuse is not open and there is voltage at the fuse.
   - **If the test lamp does not illuminate and the circuit fuse is open**
   1. Ignition OFF.
   2. Test for infinite resistance between the B+ circuit and ground.
      - If less than infinite resistance, repair the short to ground on the circuit.
      - If infinite resistance, replace the M74D Window Motor-Driver.
   - **If the test lamp illuminates**
5. Test or replace the M74D Window Motor-Driver.

Driver Window Switch Malfunction

1. Ignition OFF and all vehicle systems OFF, disconnect the harness connector at the S79D Window Switch-Driver. It may take up to 2 minutes for all vehicle systems to power down.
2. Test for less than 10 ohms between the ground circuit terminal 1 and ground.
   - **If 10 ohms or greater**
   1. Ignition OFF.
   2. Test for less than 2 ohms in the ground circuit end to end.
      - If 2 ohms or greater, repair the open/high resistance in the circuit.

- If less than 2 ohms, repair the open/high resistance in the ground connection.
- **If less than 10 ohms**

3. Ignition ON.
4. Verify a test lamp illuminates between the B+ circuit terminal 4 and ground.
   - **If the test lamp does not illuminate and the circuit fuse is good**
   1. Ignition OFF.
   2. Test for less than 2 ohms in the B+ circuit end to end.
      - If 2 ohms or greater, repair the open/high resistance in the circuit.
      - If less than 2 ohms, verify the fuse is not open and there is voltage at the fuse.
   - **If the test lamp does not illuminate and the circuit fuse is open**
   1. Ignition OFF.
   2. Test for infinite resistance between the B+ circuit and ground.
      - If less than infinite resistance, repair the short to ground on the circuit.
      - If infinite resistance, replace the S79D Window Switch-Driver.
   - **If the test lamp illuminates**
5. Verify the scan tool Driver Window Main Control Down Switch parameter is Inactive.
   - **If not Inactive**
   1. Ignition OFF, disconnect the harness connector at the M74D Window Motor-Driver.
   2. Test for infinite resistance between the S79D Window Switch-Driver signal circuit terminal 3 and ground.
      - If less than infinite resistance, repair the short to ground on the circuit.
      - If infinite resistance, replace the M74D Window Motor-Driver.
   - **If Inactive**
6. Install a 3 A fused jumper wire between the signal circuit terminal 3 and the ground circuit terminal 1.
7. Verify the scan tool Driver Window Main Control Down Switch parameter is Active
   - **If not Active**
   1. Ignition OFF, remove the 3 A fused jumper wire, disconnect the harness connector at the M74D Window Motor-Driver, Ignition ON.
   2. Test for less than 1 V between the S79D Window Switch-Driver signal circuit terminal 3 and ground.
      - If 1 V or greater, repair the short to voltage on the circuit.
      - If less than 1 V
   3. Test for less than 2 ohms in the signal circuit end to end.
      - If 2 ohms or greater, repair the open/high resistance in the circuit.
      - If less than 2 ohms, replace the M74D Window Motor-Driver.
   - **If Active**
8. Verify the scan tool Driver Window Main Control Up Switch parameter is Inactive.
   - **If not Inactive**

1. Ignition OFF, disconnect the harness connector at the M74D Window Motor-Driver.
2. Test for infinite resistance between the S79D Window Switch-Driver signal circuit terminal 6 and ground.
    - If less than infinite resistance, repair the short to ground on the circuit.
    - If infinite resistance, replace the M74D Window Motor-Driver.

- **If Inactive**

9. Install a 3 A fused jumper wire between the signal circuit terminal 6 and the ground circuit terminal 1.
10. Verify the scan tool Driver Window Main Control Up Switch parameter is Active
    - **If not Active**

    1. Ignition OFF, remove the 3 A fused jumper wire, disconnect the harness connector at the M74D Window Motor-Driver, Ignition ON.
    2. Test for less than 1 V between the S79D Window Switch-Driver signal circuit 6 and ground.
        - If 1 V or greater, repair the short to voltage on the circuit.
        - If less than 1 V
    3. Test for less than 2 ohms in the signal circuit end to end.
        - If 2 ohms or greater, repair the open/high resistance in the circuit.
        - If less than 2 ohms, replace the M74D Window Motor-Driver.

    - **If Active**

11. Verify the scan tool Driver Window Main Control Express Switch parameter is Inactive.
    - **If not Inactive**

    1. Ignition OFF, disconnect the harness connector at the M74D Window Motor-Driver.
    2. Test for infinite resistance between the S79D Window Switch-Driver signal circuit terminal 2 and ground.
        - If less than infinite resistance, repair the short to ground on the circuit.
        - If infinite resistance, replace the M74D Window Motor-Driver.

    - **If Inactive**

12. Install a 3 A fused jumper wire between the signal circuit terminal 2 and the ground circuit terminal 1.
13. Verify the scan tool Driver Window Main Control Express Switch parameter is Active
    - **If not Active**

    1. Ignition OFF, remove the 3 A fused jumper wire, disconnect the harness connector at the M74D Window Motor-Driver, Ignition ON.
    2. Test for less than 1 V between the S79D Window Switch-Driver signal circuit 2 and ground.
        - If 1 V or greater, repair the short to voltage on the circuit.
        - If less than 1 V
    3. Test for less than 2 ohms in the signal circuit end to end.
        - If 2 ohms or greater, repair the open/high resistance in the circuit.
        - If less than 2 ohms, replace the M74D Window Motor-Driver.

    - **If Active**

14. Test or replace the S79D Window Switch-Driver.

Passenger Power Window Inoperative

1. Ignition OFF and all vehicle systems OFF, disconnect the harness connector at the appropriate passenger or rear S79 Window Switch. It may take up to 2 minutes for all vehicle systems to power down.
2. Test for less than 10 ohms between the ground circuit terminal listed below and ground:
    - S79P Window Switch-Passenger - ground circuit terminal 1
    - S79LR Window Switch-Left Rear - ground circuit terminal 5
    - S79RR Window Switch-Right Rear - ground circuit terminal 5
    - **If 10 ohms or greater**
    1. Ignition OFF.
    2. Test for less than 2 ohms in the ground circuit end to end.
        - If 2 ohms or greater, repair the open/high resistance in the circuit.
        - If less than 2 ohms, repair the open/high resistance in the ground connection.
    - **If less than 10 ohms**
3. Ignition ON.
4. Verify a test lamp illuminates between the B+ circuit terminal listed below and ground:
    - S79P Window Switch-Passenger - B+ circuit terminal 4
    - S79LR Window Switch-Left Rear - B+ circuit terminal 8
    - S79RR Window Switch-Right Rear - B+ circuit terminal 8
    - **If the test lamp does not illuminate and the circuit fuse is good**
    1. Ignition OFF.
    2. Test for less than 2 ohms in the B+ circuit end to end.
        - If 2 ohms or greater, repair the open/high resistance in the circuit.
        - If less than 2 ohms, verify the fuse is not open and there is voltage at the fuse.
    - **If the test lamp does not illuminate and the circuit fuse is open**
    1. Ignition OFF.
    2. Test for infinite resistance between the B+ circuit and ground.
        - If less than infinite resistance, repair the short to ground on the circuit.
        - If infinite resistance, replace the S79 Window Switch
    - **If the test lamp illuminates**
5. Ignition OFF, connect the harness connector at the S79 Window Switch and disconnect the harness connector at the M74 Window Motor.
6. Test for less than 5 ohms between the control circuit terminal 1 and ground.
    - **If 5 ohms or greater**
    1. Ignition OFF, disconnect the harness connector at the S79 Window Switch.
    2. Test for less than 2 ohms in the control circuit end to end.
        - If 2 ohms or greater, repair the open/high resistance in the circuit.

    - If less than 2 ohms, replace the S79 Window Switch.
  - **If less than 5 ohms**
7. Test for less than 5 ohms between the control circuit terminal 2 and ground.
  - **If 5 ohms or greater**
  1. Ignition OFF, disconnect the harness connector at the S79 Window Switch.
  2. Test for less than 2 ohms in the control circuit end to end.
    - If 2 ohms or greater, repair the open/high resistance in the circuit.
    - If less than 2 ohms, replace the S79 Window Switch.
  - **If less than 5 ohms**
8. Connect a test lamp between the control circuit terminal 1 and control circuit terminal 2, ignition ON.
9. Verify the test lamp turns ON when commanding the UP and DOWN states with the S79 Window Switch.
  - **If the test lamp remains OFF during either of the commands**
  1. Ignition OFF, remove the test lamp, disconnect the harness connector at the S79 Window Switch.
  2. Test for infinite resistance between each control circuit and ground.
    - If less than infinite resistance, repair the short to ground on the circuit.
    - If infinite resistance, replace the S79 Window Switch.
  - **If the test lamp turns ON during each of the commands**
10. Test or replace the M74 Window Motor.

Component Testing

1. Ignition OFF, disconnect the harness connector at the appropriate passenger or rear M74 Window Motor.
2. Install a 25 A fused jumper wire between one of the control terminals and 12 V. Momentarily install a jumper wire between the other control terminal and ground. Reverse the jumper wires at least two times, the M74 Window Motor should perform the UP and DOWN functions.
  - **If the function does not perform the UP and DOWN functions**

    Replace the passenger or rear M74 Window Motor.

  - **If the function performs the UP and DOWN functions**
3. All OK

Repair Instructions

Perform the **Diagnostic Repair Verification** after completing the repair.

- **Front Side Door Window Regulator Motor Replacement**
- **Front Side Door Window Switch Replacement - Left Side**
- **Rear Side Door Window Regulator Motor Replacement**
- **Rear Side Door Window Switch Replacement**

- **Front Side Door Window Switch Replacement - Right Side**

REPAIR INSTRUCTIONS

WINDSHIELD REPLACEMENT

Special Tools

- **BO-24402-A** Glass Sealant Remover (Cold Knife)
- **BO-39032** Stationary Glass Removal Tool
- Use an adhesive that is approved by GM

For equivalent regional tools, refer to **Special Tools**.

Removal Procedure

WARNING: Refer to Cracked Window Warning .

NOTE: Before cutting out a stationary window, apply a double layer of masking tape around the perimeter of the painted surfaces and the interior trim.

1. Disconnect the battery. Refer to **Battery Negative Cable Disconnection and Connection** .
2. Remove the air inlet grille. Refer to **Air Inlet Grille Panel Replacement** .
3. Remove the windshield garnish molding. Refer to **Windshield Garnish Molding Replacement** .
4. Remove the inside rearview mirror. Refer to **Inside Rearview Mirror Replacement** .

WARNING: Refer to Defroster Outlet Warning .

5. Cover the following parts to protect from broken glass:
   - Upper dash pad
   - Defroster outlets and A/C outlets
   - Seats and carpeting

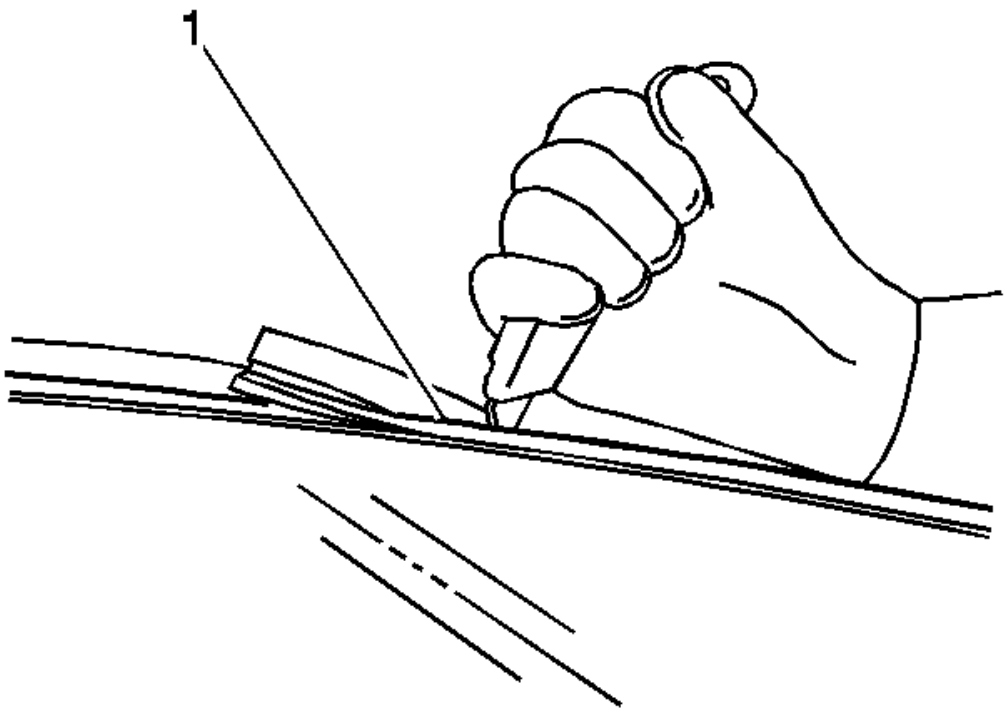

Fig. 7: Using Utility Knife To Remove Reveal Molding
Courtesy of GENERAL MOTORS COMPANY

WARNING: Refer to Glass and Sheet Metal Handling Warning .

NOTE: If the original window is being reused the window lace is not serviceable.

6. Using the appropriate tool, carefully cut around the lace (1), start in the center working from side to side of the windshield to access the urethane adhesive bead.

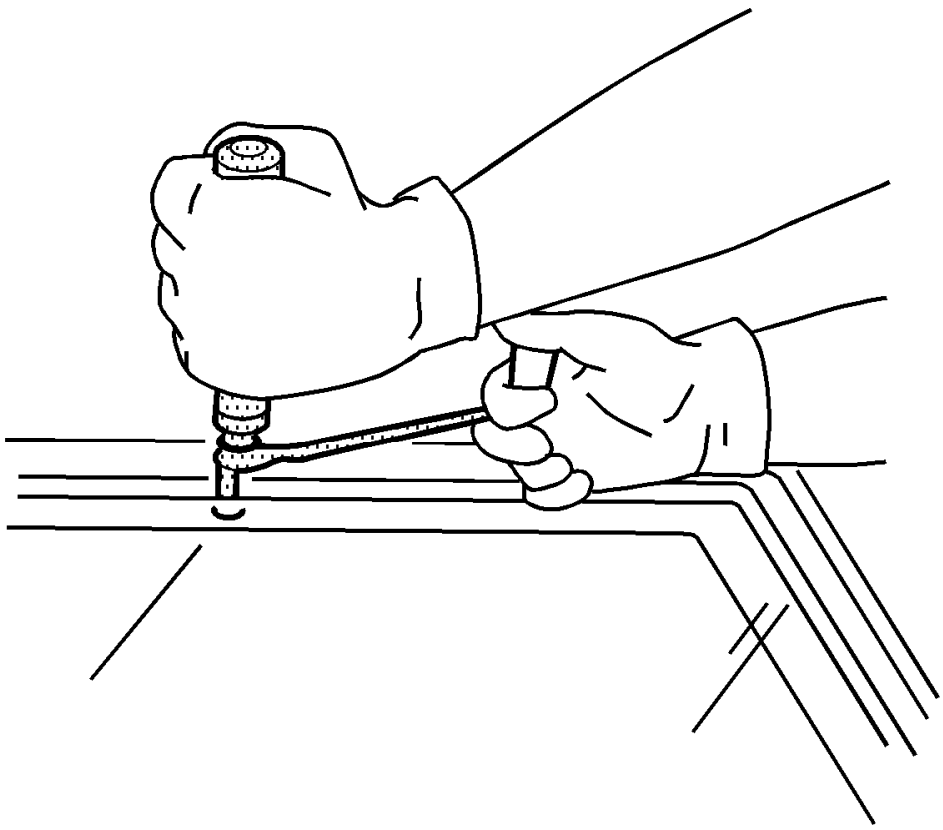

Fig. 8: Separating Urethane Adhesive From Window
Courtesy of GENERAL MOTORS COMPANY

NOTE: Use care when removing the window not to cut off the locator pins on the left and right sides. If the locating pins are cut off it will be necessary to use masking tape to tape the window in place until the auto-adhesive cures.

NOTE: Keep the cutting edge of the tool against the window.

7. Remove the window from the urethane adhesive.
   - Leave a base of urethane approximately 2 mm (0.078 in) on the pinch-weld flange.
   - The only suitable lubrication is clear water.
   - **BO-24402-A** Glass Sealant Remover (Cold Knife).
   - **BO-39032** Stationary Glass Removal Tool, or equivalent in order to remove the window.

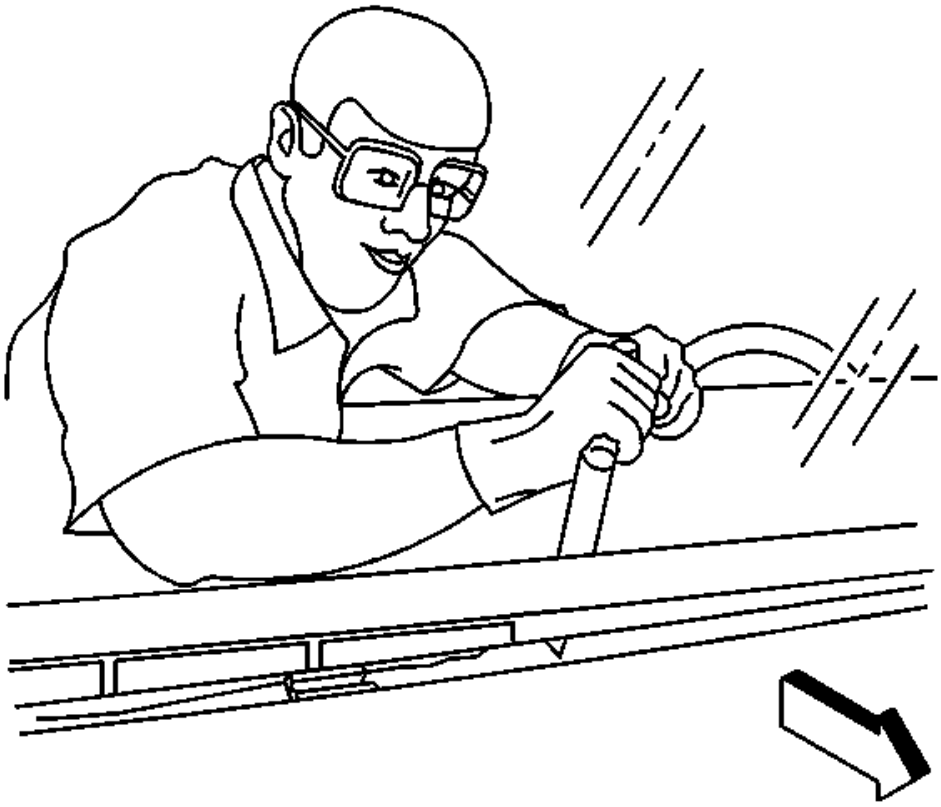

Fig. 9: Separating Bottom Of Window
Courtesy of GENERAL MOTORS COMPANY

NOTE: Keep the cutting edge of the appropriate tool against the window. Do this from inside the vehicle.

8. If necessary, use the appropriate tool to remove the bottom corners of the windshield from the urethane adhesive.

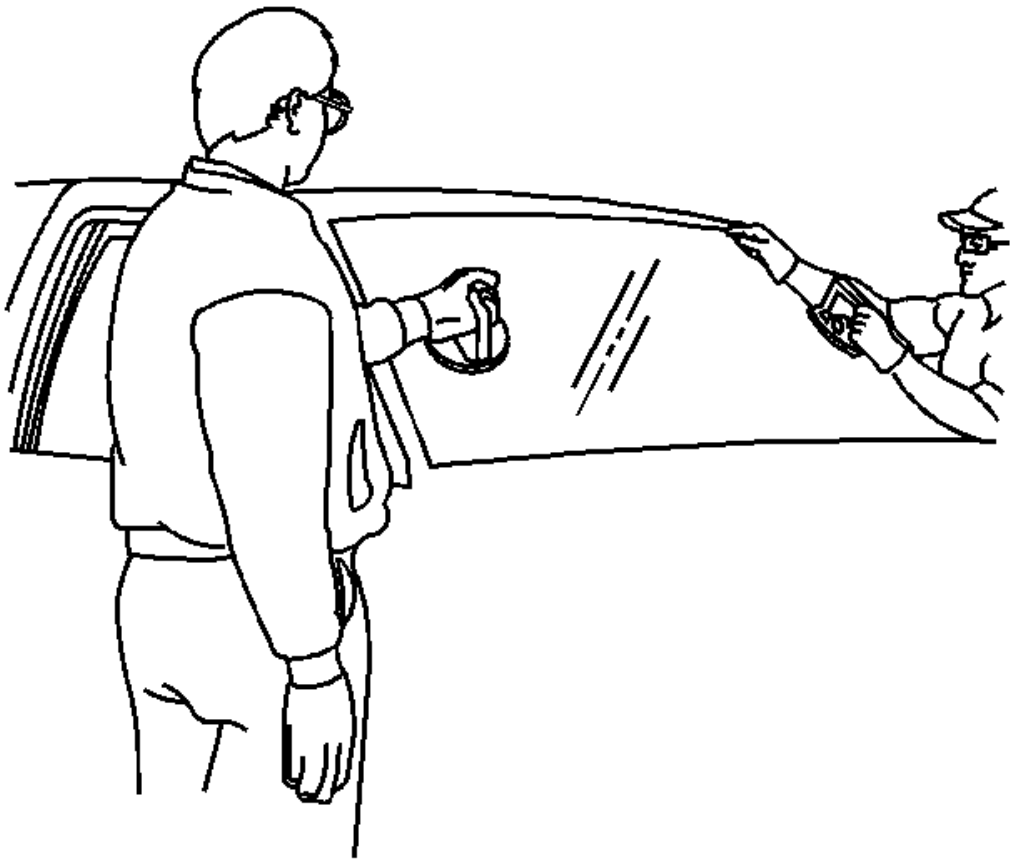

Fig. 10: Removing Windshield With Aid Of An Assistant
Courtesy of GENERAL MOTORS COMPANY

9. Remove the windshield from the vehicle with an assistant.

Installation Procedure

1. Install the windshield into the opening with an assistant. Refer to **Adhesive Installation of Stationary Windows (Rear Window)**, **Adhesive Installation of Stationary Windows (Windshield)**.
2. Install the inside rearview mirror. Refer to **Inside Rearview Mirror Replacement** .
3. Install the windshield garnish molding. Refer to **Windshield Garnish Molding Replacement** .
4. Install the air inlet grille. Refer to **Air Inlet Grille Panel Replacement** .
5. Remove the double layer of masking tape around the perimeter of the painted surfaces and the interior trim.
6. Connect the battery. Refer to **Battery Negative Cable Disconnection and Connection** ..

FRONT SIDE DOOR WINDOW ADJUSTMENT

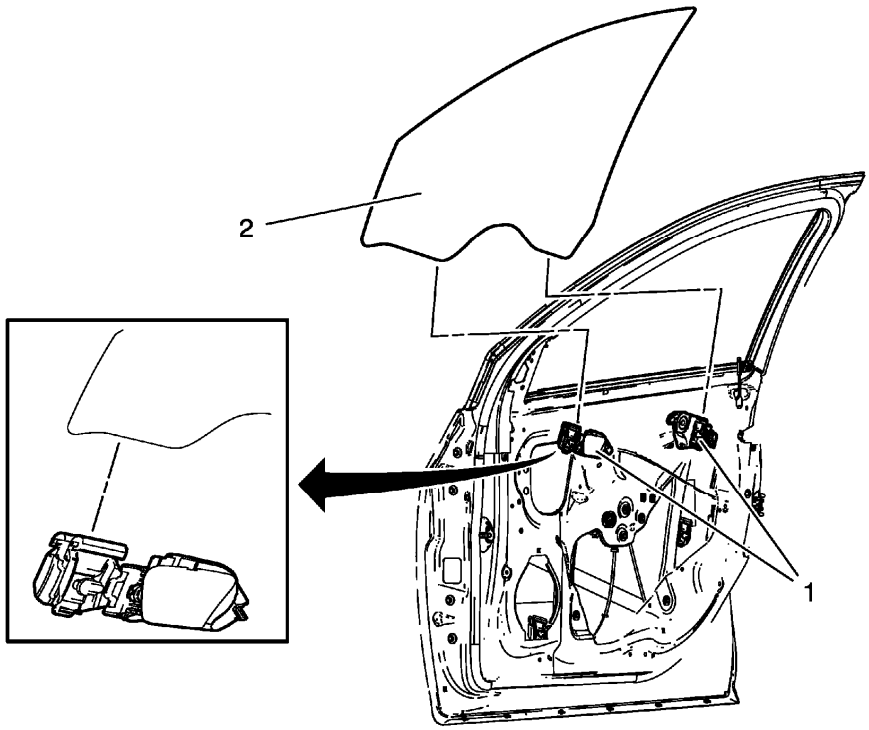

Fig. 11: Front Side Door Window And Regulator Sash Nuts
Courtesy of GENERAL MOTORS COMPANY

Front Side Door Window Adjustment

Callout	Component Name
WARNING: **Refer to Glass and Sheet Metal Handling Warning .** **WARNING:** **Refer to Express Window Down Warning .** **Preliminary Procedures** 1. Remove the front side door trim. Refer to **Front Side Door Trim Replacement** . 2. Remove the front side door water deflector. Refer to **Front Side Door Water Deflector Replacement** .	
1	Front Side Door Window Regulator Sash Nut (Qty: 2) **CAUTION:** **Refer to Fastener Caution .** **Tighten** 10 N.m (89 lb in)

2	Front Side Door Window **Procedure** 1. Loosen the window regulator sash nuts. 2. Connect the door trim panel wire connector. 3. Start the vehicle to ensure maximum power to the window motor. This is required in order to fully seat the window for adjustment. 4. Using the power window switch, raise the window to the full up position. 5. Tighten the front side door window regulator sash nuts. 6. Inspect for proper window operation and a tight seal. 7. Shut off the vehicle.

FRONT SIDE DOOR WINDOW REPLACEMENT

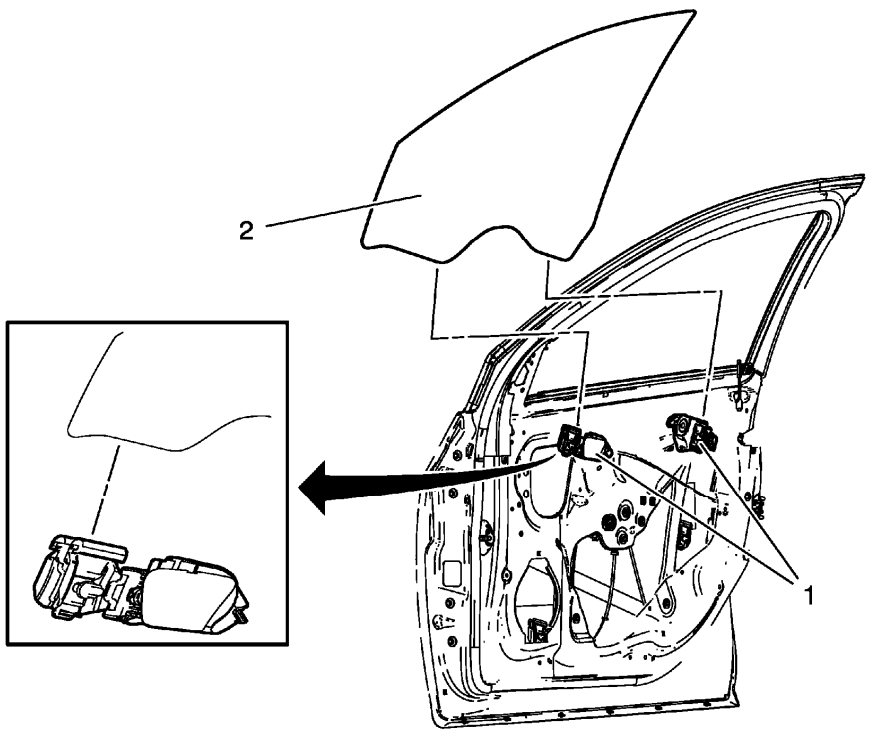

Fig. 12: Front Side Door Window And Regulator Sash Nuts
Courtesy of GENERAL MOTORS COMPANY

Front Side Door Window Replacement

Callout	Component Name
Preliminary Procedure	

	1. Position the window approximately half way down in the door. 2. Remove the front side door water deflector. Refer to **Front Side Door Water Deflector Replacement** . 3. Remove the front side door window outer sealing strip. Refer to **Front Side Door Window Outer Sealing Strip Replacement**.
1	Front Side Door Window Regulator Sash Nut (Qty: 2) **CAUTION:** **Refer to Fastener Caution .** **Tighten** 9 N.m (80 lb in)
2	Front Side Door Window **Procedure** 1. Loosen the window regulator sash nuts, pull upward to release the window from the sash. 2. Rotate the front door window as necessary to remove it from the door.

REAR SIDE DOOR WINDOW ADJUSTMENT

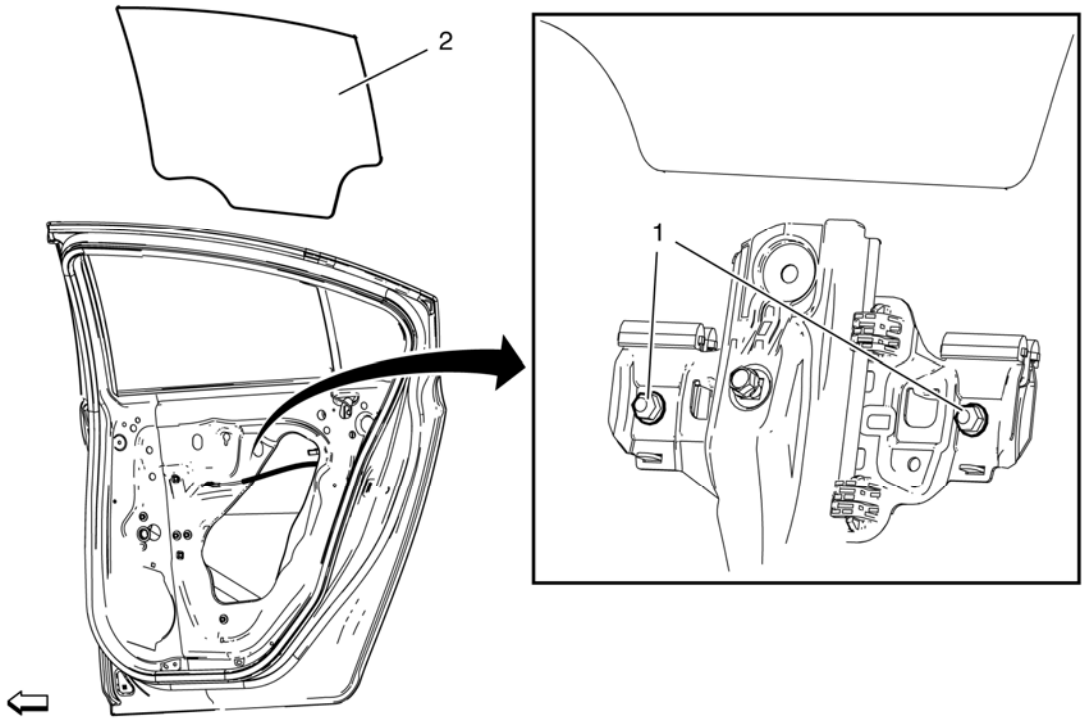

Fig. 13: Rear Side Door Window And Regulator Sash Nuts
Courtesy of GENERAL MOTORS COMPANY

Rear Side Door Window Adjustment

Callout	Component Name
WARNING: **Refer to Glass and Sheet Metal Handling Warning .** **WARNING:** **Refer to Express Window Down Warning .** **Preliminary Procedures** 1. Remove the rear side door trim. Refer to **Rear Side Door Trim Replacement** . 2. Remove the rear side door water deflector. Refer to **Rear Side Door Water Deflector Replacement** .	
1	Rear Side Door Window Regulator Sash Nut (Qty: 2) **CAUTION:** **Refer to Fastener Caution .** **Tighten** 10 N.m (89 lb in)
2	Rear Side Door Window **Procedure** 1. Loosen the window regulator sash nuts. 2. Connect the door trim panel wire connector. 3. Start the vehicle to ensure maximum power to the window motor. This is required in order to fully seat the window for adjustment. Using the power window switch, raise the window to the full up position. 4. Tighten the rear side door window regulator sash nuts. 5. Inspect for proper window operation and a tight seal. 6. Shut off the vehicle.

REAR SIDE DOOR WINDOW REPLACEMENT

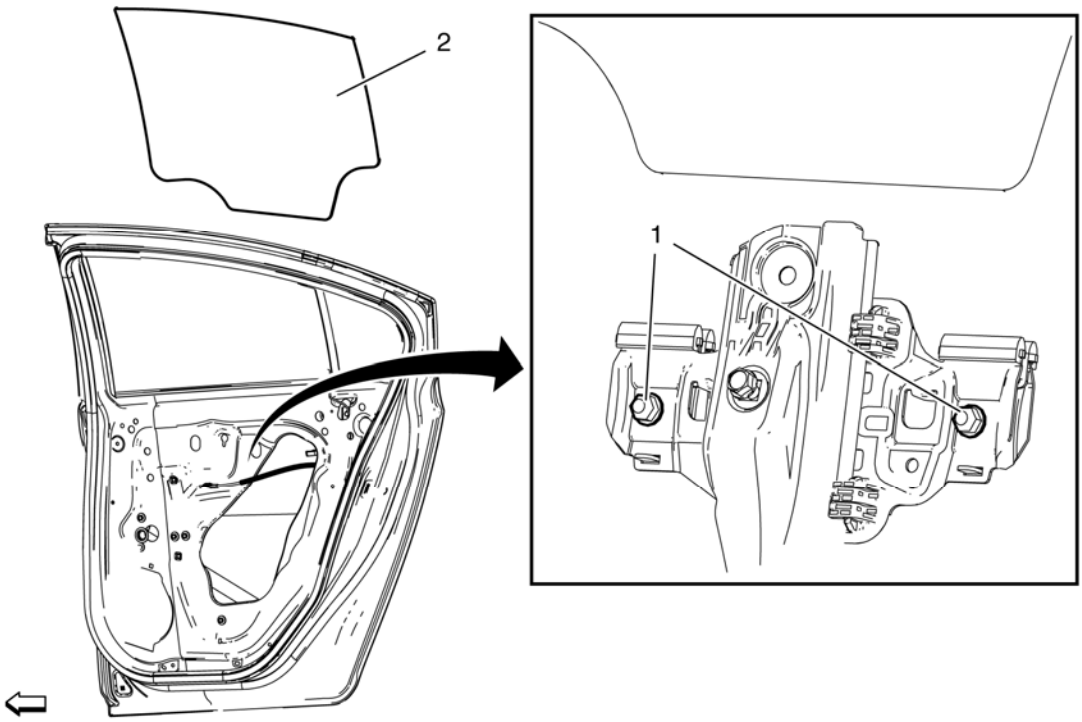

Fig. 14: Rear Side Door Window And Regulator Sash Nuts
Courtesy of GENERAL MOTORS COMPANY

Rear Side Door Window Replacement

Callout	Component Name
Preliminary Procedures 1. Position the window approximately half way down in the door. 2. Remove the rear side door water deflector. Refer to **Rear Side Door Water Deflector Replacement** . 3. Remove the rear side door window outer sealing strip. Refer to **Rear Side Door Window Outer Sealing Strip Replacement**.	
1	Rear Side Door Window Regulator Sash Nut (Qty: 2) **CAUTION:** **Refer to Fastener Caution .** **Tighten** 9 N.m (80 lb in)
2	Rear Side Door Window **Procedure**

	1. Loosen the window regulator sash nuts, pull upward to release the window from the sash. 2. Rotate the rear door window as necessary to remove it from the door.

REAR SIDE DOOR STATIONARY WINDOW REPLACEMENT

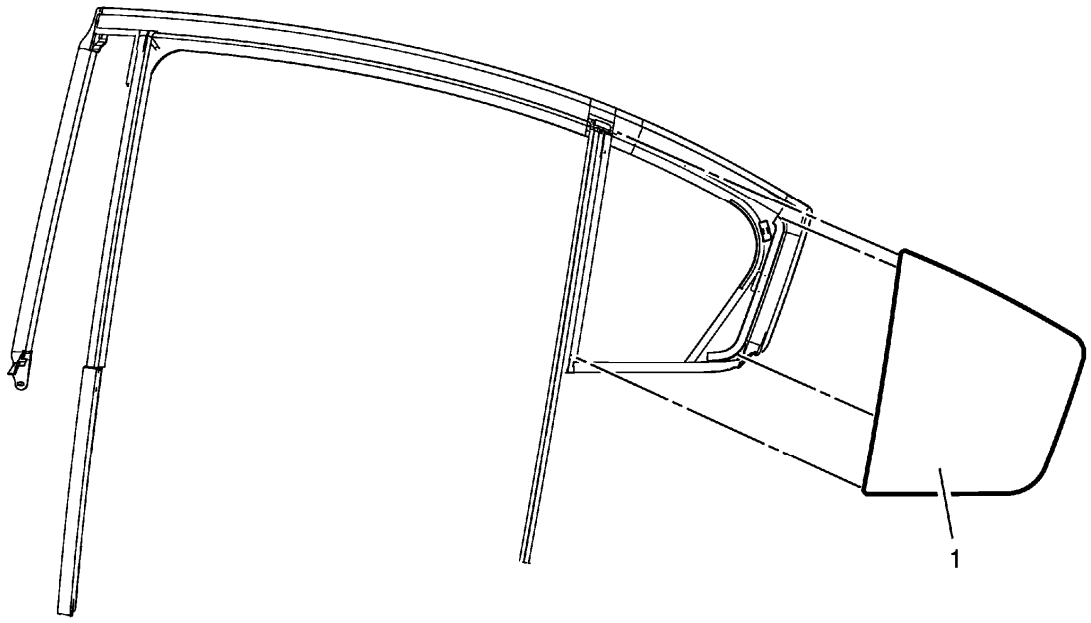

Fig. 15: Rear Side Door Stationary Window
Courtesy of GENERAL MOTORS COMPANY

Rear Side Door Stationary Window Replacement

Callout	Component Name
Preliminary Procedure Remove the rear side door window weatherstrip with the rear side door stationary window. Refer to **Rear Side Door Window Weatherstrip Replacement**.	
1	Rear Door Stationary Window **Procedure** Remove the rear side door stationary window from the weatherstrip.

REAR SIDE DOOR STATIONARY WINDOW DIVIDER CHANNEL REPLACEMENT

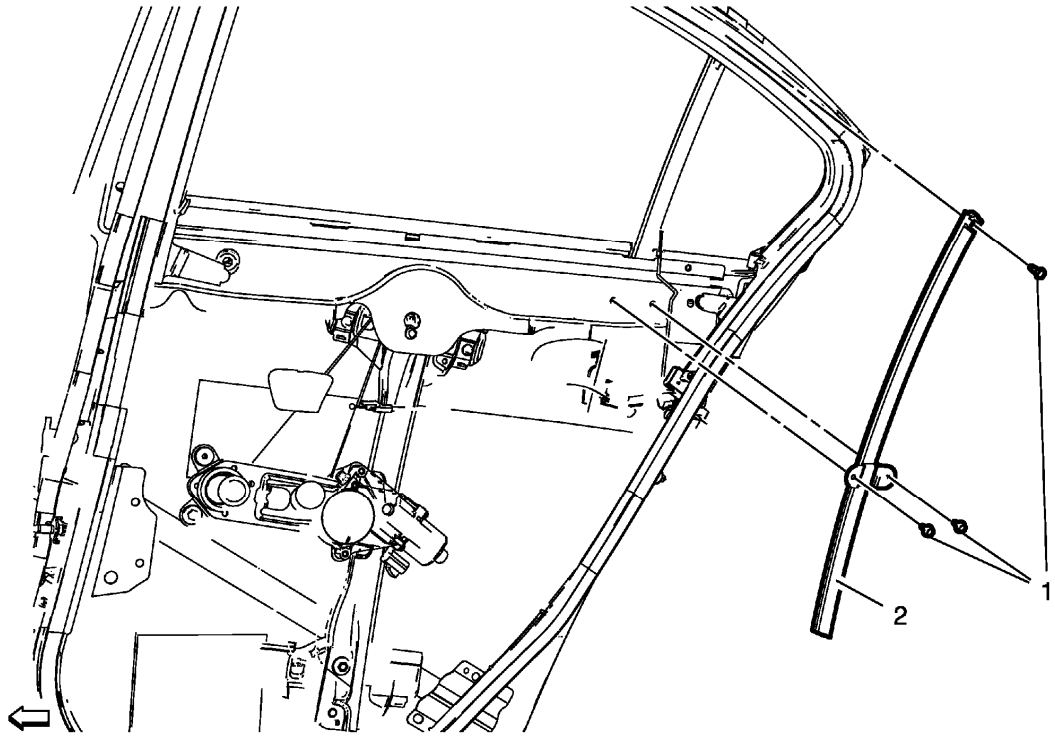

Fig. 16: Rear Side Door Stationary Window Divider Channel And Bolts
Courtesy of GENERAL MOTORS COMPANY

Rear Side Door Stationary Window Divider Channel Replacement

callout	Component Name
Preliminary Procedure Remove the rear side door window. Refer to **Rear Side Door Window Replacement**	
1	Rear Side Door Stationary Window Divider Channel Bolt (Qty: 3) **CAUTION:** **Refer to Fastener Caution .** **Tighten** 9 N.m(80 lb in)
2	Rear Side Door Stationary Window Divider Channel

REAR WINDOW REPLACEMENT

Special Tools

- **BO-24402-A** Glass Sealant Remover (Cold Knife)
- **BO-39032** Stationary Glass Removal Tool
- Use an adhesive that is approved by GM

For equivalent regional tools, refer to **Special Tools**

Removal Procedure

WARNING: Refer to Cracked Window Warning .

NOTE: Before cutting out a stationary window, apply a double layer of masking tape around the perimeter of the painted surfaces and the interior trim.

1. Disconnect the battery. Refer to **Battery Negative Cable Disconnection and Connection** .
2. Remove the quarter window garnish molding. Refer to **Quarter Window Garnish Molding Replacement** .
3. Disconnect the rear window radio antenna connector.
4. Disconnect the electrical connectors from the rear window defogger bus bars.
5. Protect the following parts from broken glass:
   - Seats
   - Carpeting

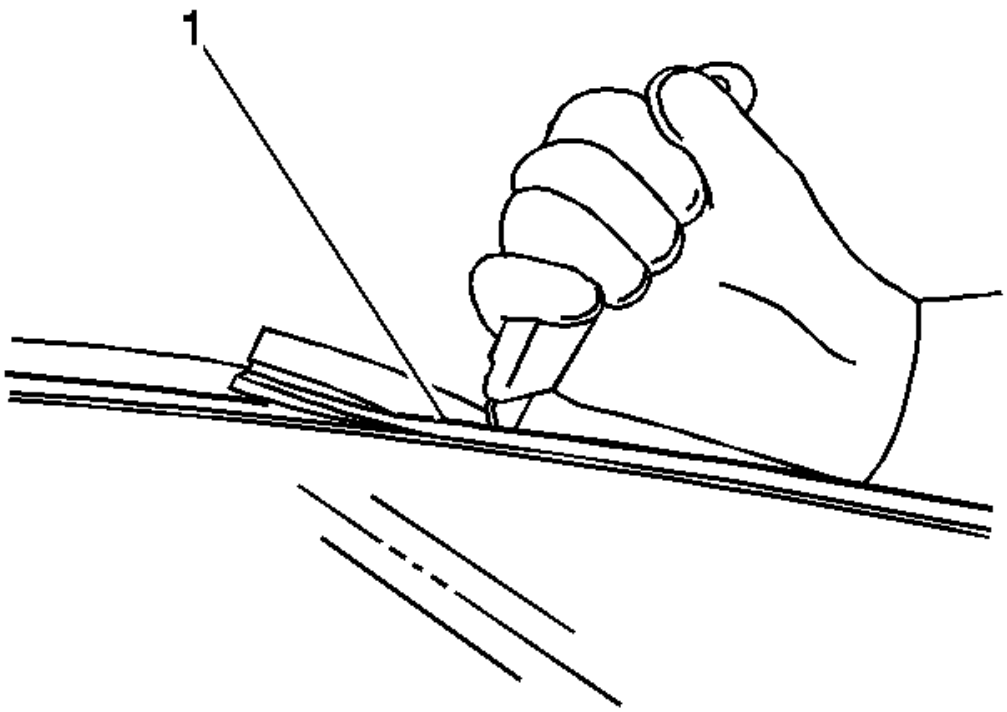

Fig. 17: Using Utility Knife To Remove Reveal Molding
Courtesy of GENERAL MOTORS COMPANY

WARNING: Refer to Glass and Sheet Metal Handling Warning .

NOTE: If the original window is being reused the window lace is not serviceable.

6. Using the appropriate tool, carefully cut around the lace (1), start in the center working from side to side of the windshield to access the urethane adhesive bead.

WARNING: Refer to Defroster Outlet Warning .

7. Cover the following parts to protect from the broken glass:
   - Upper dash pad
   - Defroster outlets and A/C outlets

- Seats and carpeting

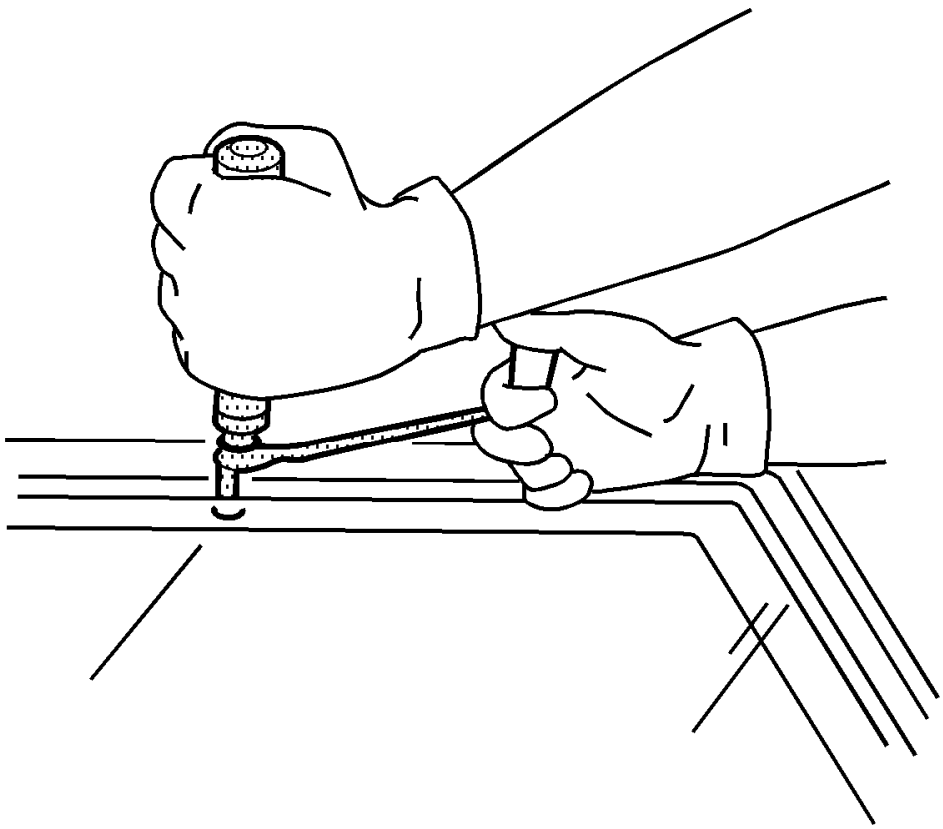

Fig. 18: Separating Urethane Adhesive From Window
Courtesy of GENERAL MOTORS COMPANY

NOTE: Use care when removing the rear window not to cut off the locator pins on the left and right sides. If the locating pins are cut off it will be necessary to use masking tape to tape the window in place until the auto-adhesive cures.

NOTE: Keep the cutting edge of the tool against the window.

8. Remove the window from the urethane adhesive.
   - Leave a base of urethane approximately 2 mm (0.078 in) on the pinch-weld flange.
   - The only suitable lubrication is clear water.
   - **BO-24402-A** Glass Sealant Remover (Cold Knife).
   - **BO-39032** Stationary Glass Removal Tool, or equivalent in order to remove the window.

.

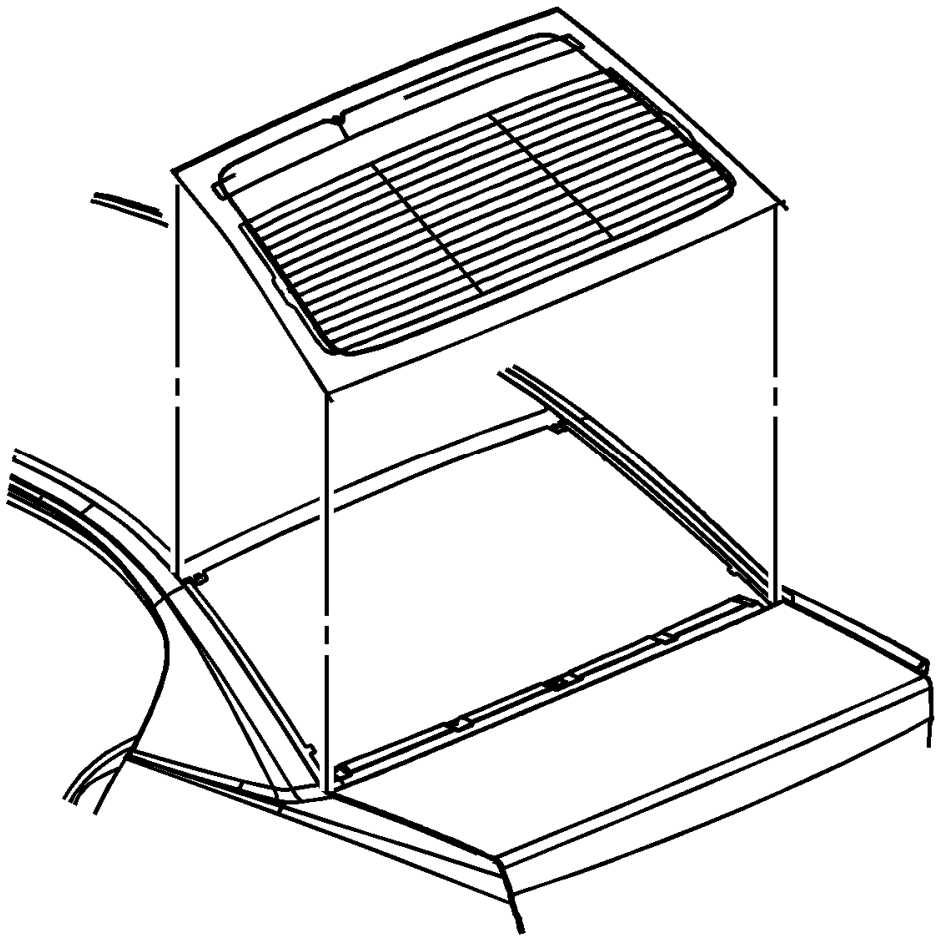

Fig. 19: View Of Rear Window
Courtesy of GENERAL MOTORS COMPANY

9. With the an assistant, remove the window from the vehicle.

Installation Procedure

1. Install the rear window into the opening with an assistant. Refer to **Adhesive Installation of Stationary Windows (Rear Window)**, **Adhesive Installation of Stationary Windows (Windshield)**.
2. Connect the rear window defogger electrical connectors to the bus bars.
3. Connect the rear window radio antenna connector.
4. Install the quarter window garnish molding. Refer to **Quarter Window Garnish Molding Replacement** .
5. Remove the double layer of masking tape around the perimeter of the painted surfaces and the interior trim.
6. Connect the battery. Refer to **Battery Negative Cable Disconnection and Connection** .

REAR SIDE DOOR WINDOW CHANNEL INSULATOR REPLACEMENT

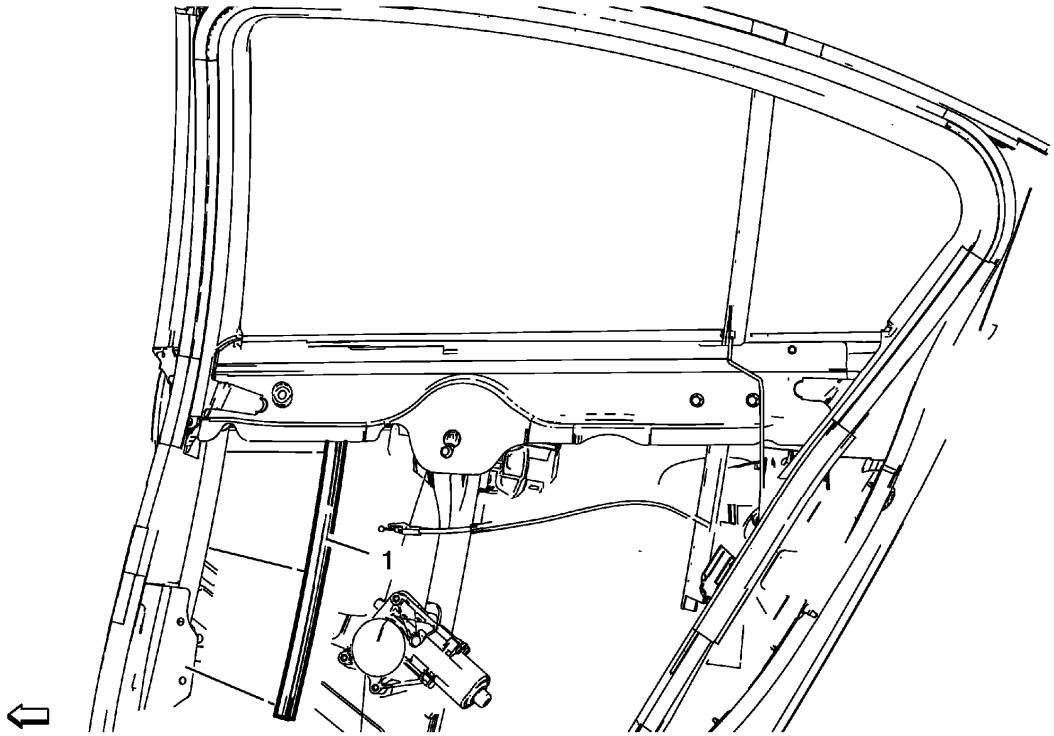

Fig. 20: Rear Side Door Window Channel Insulator
Courtesy of GENERAL MOTORS COMPANY

Rear Side Door Window Channel Insulator Replacement

Callout	Component Name
Preliminary Procedures Remove the rear side door water deflector. Refer to **Rear Side Door Water Deflector Replacement** .	
1	Rear Side Door Window Channel Insulator

FRONT SIDE DOOR WINDOW SWITCH REPLACEMENT - RIGHT SIDE

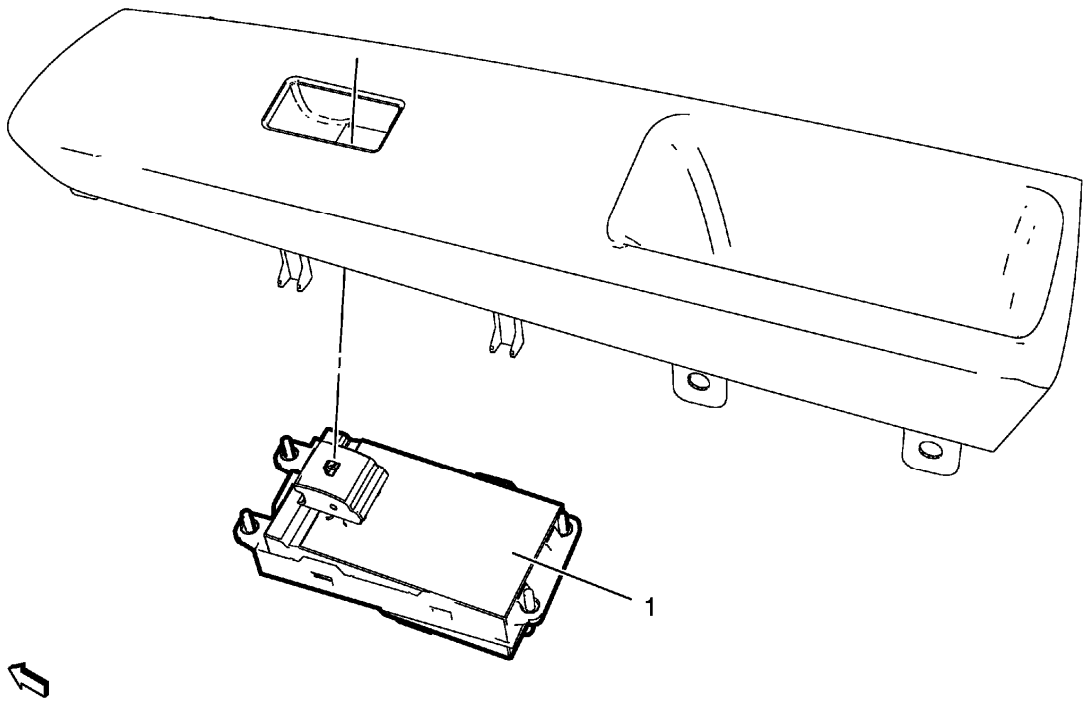

Fig. 21: Right Front Side Door Window Switch
Courtesy of GENERAL MOTORS COMPANY

Front Side Door Window Switch Replacement - Right Side

Callout	Component Name
Preliminary Procedures Remove the front side door window switch bezel. Refer to **Front Side Door Window Switch Bezel Replacement** .	
1	Front Side Door Window Switch Assembly

FRONT SIDE DOOR WINDOW SWITCH REPLACEMENT - LEFT SIDE

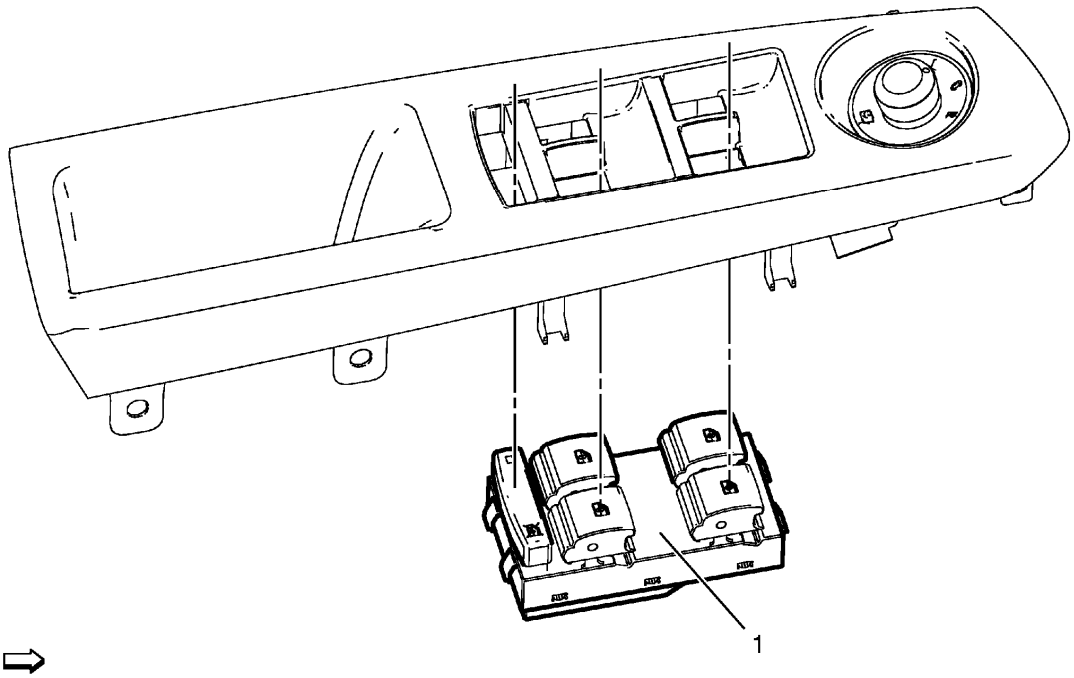

Fig. 22: Left Front Side Door Window Switch
Courtesy of GENERAL MOTORS COMPANY

Front Side Door Window Switch Replacement - Left Side

Callout	Component Name
Preliminary Procedures Remove the front side door window switch bezel. Refer to **Front Side Door Window Switch Bezel Replacement** .	
1	Front Side Door Window Switch Assembly

FRONT SIDE DOOR WINDOW AND MULTIFUNCTION SWITCH REPLACEMENT

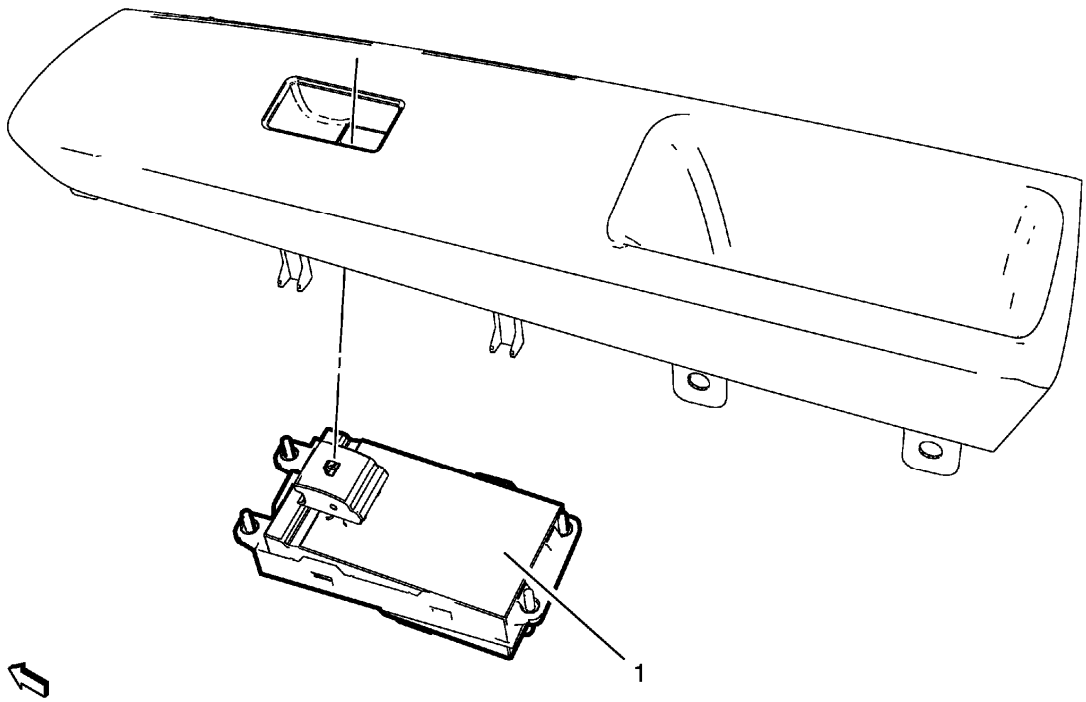

Fig. 23: Front Side Door Window and Multifunction Switch
Courtesy of GENERAL MOTORS COMPANY

Front Side Door Window and Multifunction Switch Replacement

Callout	Component Name
Preliminary Procedures Remove the front side door window switch bezel. Refer to **Front Side Door Window Switch Bezel Replacement** .	
1	Front Side Door Window and Multifunction Switch **Procedure** Disconnect electrical connector.

REAR SIDE DOOR WINDOW SWITCH REPLACEMENT

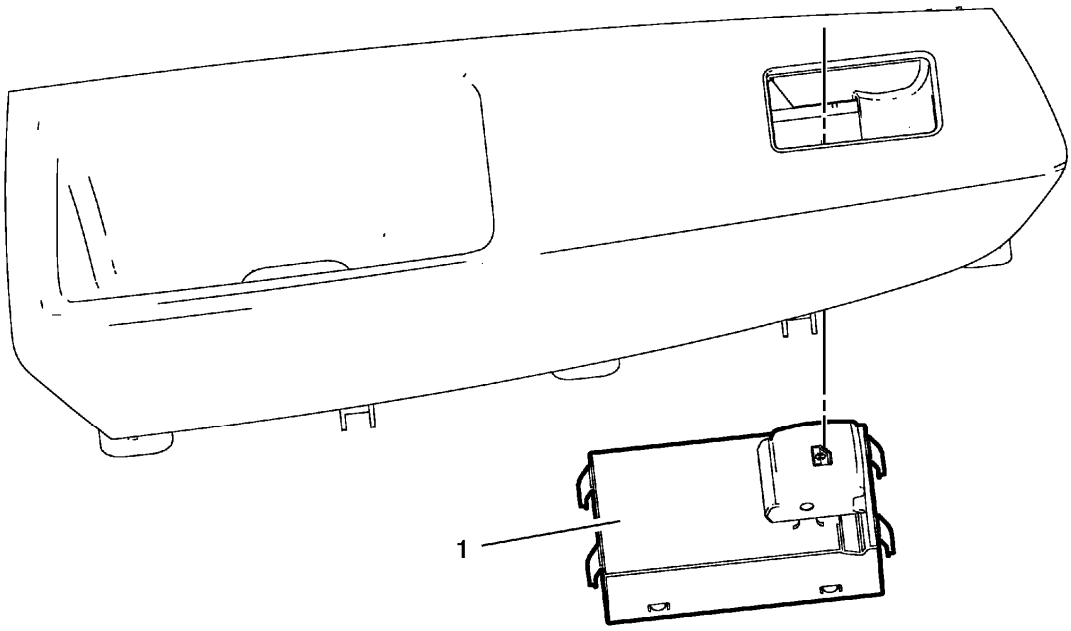

Fig. 24: Rear Side Door Window Switch Assembly
Courtesy of GENERAL MOTORS COMPANY

Rear Side Door Window Switch Replacement

Callout	Component Name
Preliminary Procedures **Remove the rear side door window switch bezel. Refer to Rear Side Door Window Switch Bezel Replacement .**	
1	Rear Side Door Window Switch Assembly

FRONT SIDE DOOR WINDOW REGULATOR REPLACEMENT

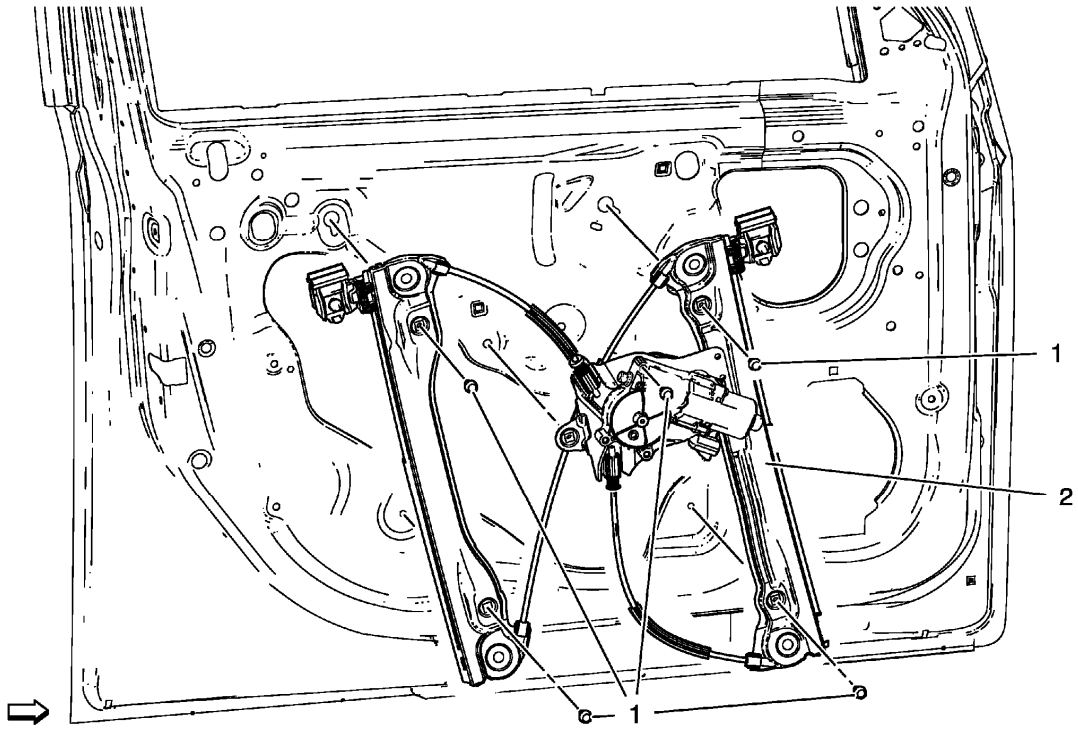

Fig. 25: Front Side Door Window Regulator Assembly And Screws
Courtesy of GENERAL MOTORS COMPANY

Front Side Door Window Regulator Replacement

Callout	Component Name
Preliminary Procedure Remove the front side door water deflector. Refer to **Front Side Door Water Deflector Replacement** .	
1	Front Side Door Window Regulator Screw (Qty: 5) **CAUTION:** **Refer to Fastener Caution .** **Procedure** After detaching window from regulator, manually move window to it's full up position and securely tape to window frame. **Tighten** 9 N.m (80 lb in)
2	Front Side Door Window Regulator Assembly **Procedure** Remove all components as needed.

WINDOW MOTOR PROGRAMMING - EXPRESS FUNCTION

Window Motor Normalized Procedure

A window motor that has not been normalized will no longer perform the express up and express down functions, this may occur during the following conditions:

- When a window motor has been disconnected or replaced
- When a door harness has been disconnected
- When the battery has been disconnected or replaced

NOTE: When DTC B3205 4B & 3210 4B are set, the following warnings will be displayed on the driver information center:

Open, then Close Driver Window

Open, then Close Passenger Window

These warnings will clear once the windows have been "Normalized" and the respective DTC will clear.

To normalize the window motor, follow these steps:

NOTE: The doors must be completely closed prior to normalizing the windows, a door that is open or ajar may cause the power window to function abnormally or to become inoperative while performing the normalizing procedure. If this occurs, verify that the door is completely closed then repeat the normalizing procedure.

NOTE: For vehicles equipped with a folding convertible top, the top must be closed and firmly latched prior to normalizing the windows.

1. Ignition ON.
2. Starting with the window completely UP, press and hold the power window switch until the window is fully open and continue holding the switch down for approximately 5 seconds after the window is completely open.
3. Pull the power window switch up until the window is fully closed and continue holding the switch up for approximately 5 seconds after the window is completely closed.

The window should now be normalized and the window should perform the express up and express down functions.

Window Motor Relearn Procedure

A relearn procedure may need to be performed for any Local Interconnect Network (LIN) window motor for the following conditions:

- When the window glass is out of alignment
- When the window glass has been replaced

- When the door has been replaced
- When the window regulator has been replaced

NOTE: **Prior to performing the relearn procedure the vehicle must have all 4 wheels properly inflated and mounted, the vehicle must be sitting on a level surface and all doors must be completely closed and for vehicles equipped with a folding convertible top, the top must be closed and firmly latched..**

To relearn the window motor, follow these steps:

1. Ignition ON.
2. With a scan tool, select Module Diagnosis, Body Control Module, Configuration/Reset Functions and then select the appropriate Clear Window Learn Values for the window motor requiring the relearn procedure.
3. After the learn procedure, exit the scan tool learn procedure completely, the power window cannot be normalized and will not function until you exit the program.
4. Starting with the window completely UP, press and hold the power window switch until the window is fully open and continue holding the switch down for approximately 5 seconds after the window is completely open.
5. Pull the power window switch up until the window is fully closed and continue holding the switch up for approximately 5 seconds after the window is completely closed.

The window is now reprogrammed.

FRONT SIDE DOOR WINDOW REGULATOR MOTOR REPLACEMENT

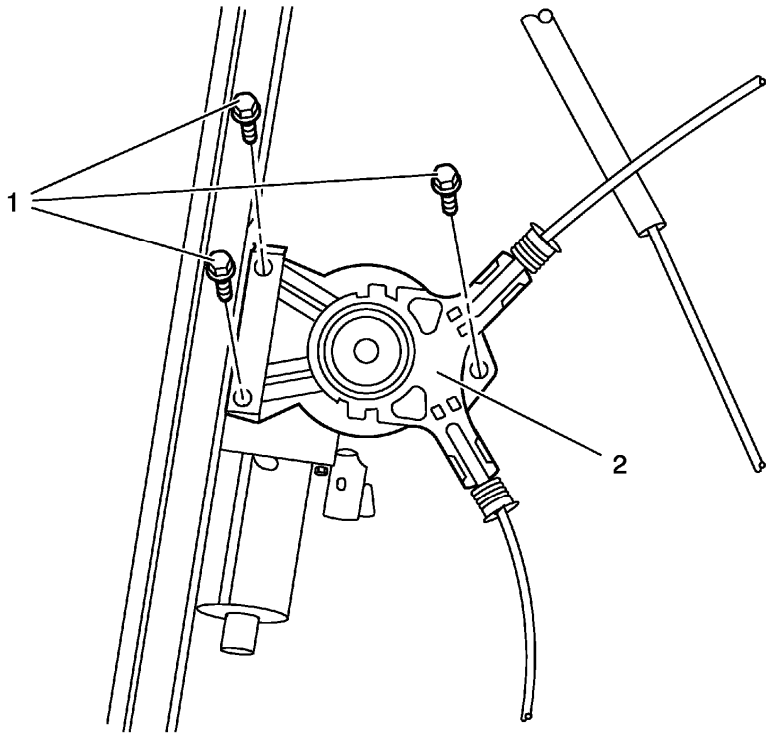

Fig. 26: Front Side Door Window Regulator Motor Assembly And Screws
Courtesy of GENERAL MOTORS COMPANY

Front Side Door Window Regulator Motor Replacement

Callout	Component Name
Preliminary Procedure Remove the front side door window regulator. Refer to **Front Side Door Window Regulator Replacement**.	
1	Front Side Door Window Regulator Motor Screw (Qty: 3) **CAUTION:** **Refer to Fastener Caution .** **Tighten** 9 N.m (80 lb in)
2	Front Side Door Window Regulator Motor Assembly

REAR SIDE DOOR WINDOW REGULATOR REPLACEMENT

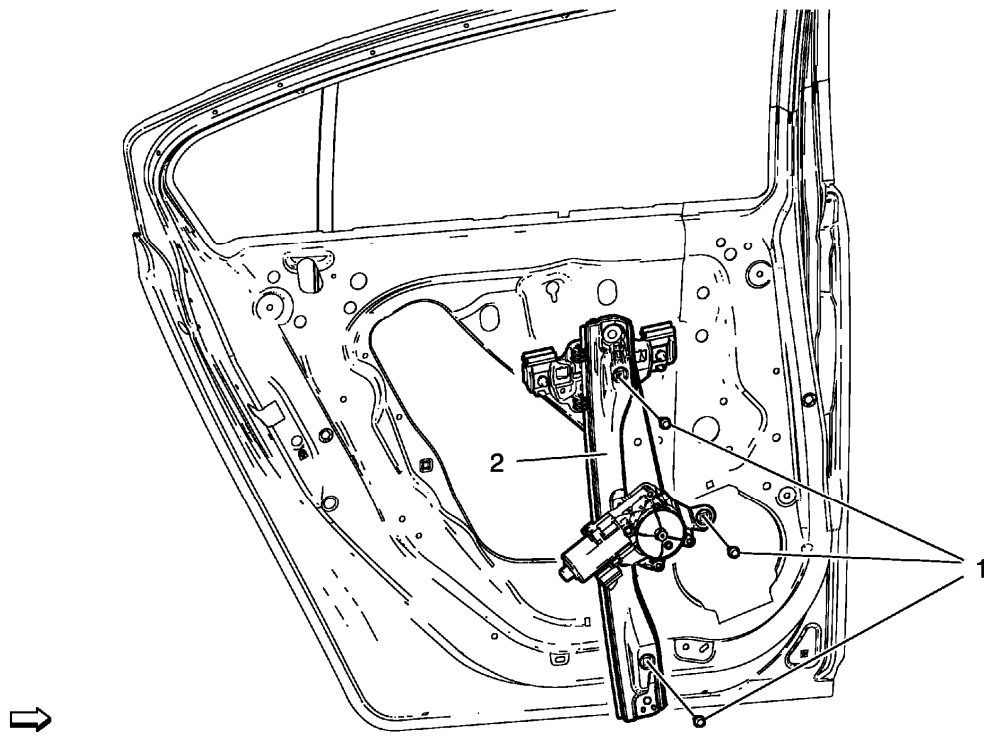

Fig. 27: Rear Side Door Window Regulator Assembly And Screws
Courtesy of GENERAL MOTORS COMPANY

Rear Side Door Window Regulator Replacement

Callout	Component Name
Preliminary Procedure Remove the rear side door water deflector. Refer to **Rear Side Door Water Deflector Replacement** .	
1	Rear Side Door Window Regulator Screw (Qty: 3) **CAUTION:** **Refer to Fastener Caution .** **Procedure** After detaching window from regulator, manually move window to it's full up position and securely tape to window frame. **Tighten** 9 N.m (80 lb in)
2	Rear Side Door Window Regulator Assembly **Procedure** Remove all components as needed.

REAR SIDE DOOR WINDOW REGULATOR MOTOR REPLACEMENT

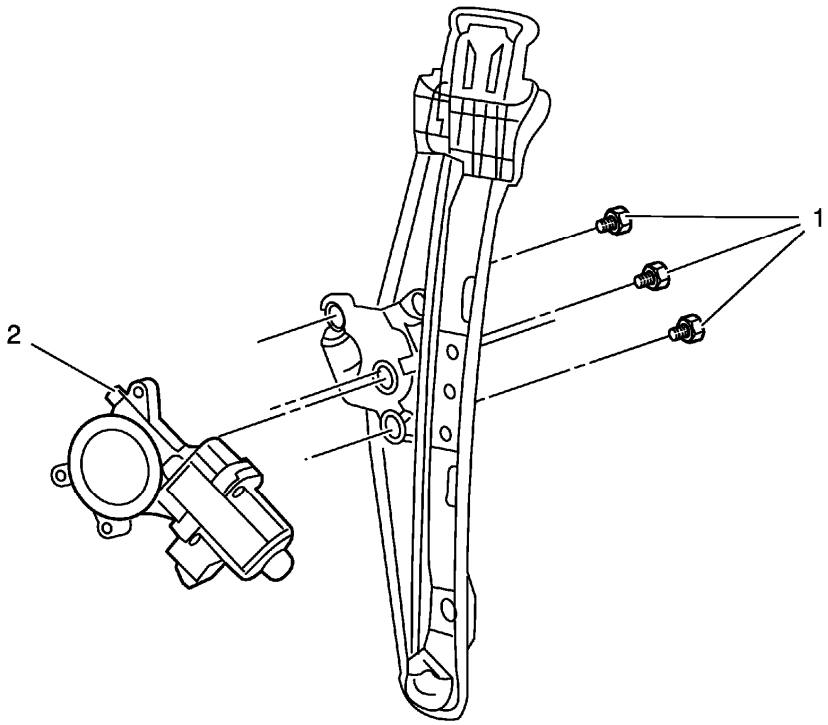

Fig. 28: Rear Side Door Window Regulator Motor Assembly And Screws
Courtesy of GENERAL MOTORS COMPANY

Rear Side Door Window Regulator Motor Replacement

Callout	Component Name
Preliminary Procedure Remove the rear side door window regulator. Refer to **Rear Side Door Window Regulator Replacement**.	
1	Rear Side Door Window Regulator Motor Screw (Qty: 3) **CAUTION:** **Refer to Fastener Caution .** **Tighten** 9 N.m (80 lb in)
2	Rear Side Door Window Regulator Motor Assembly

FRONT SIDE DOOR WINDOW OUTER SEALING STRIP REPLACEMENT

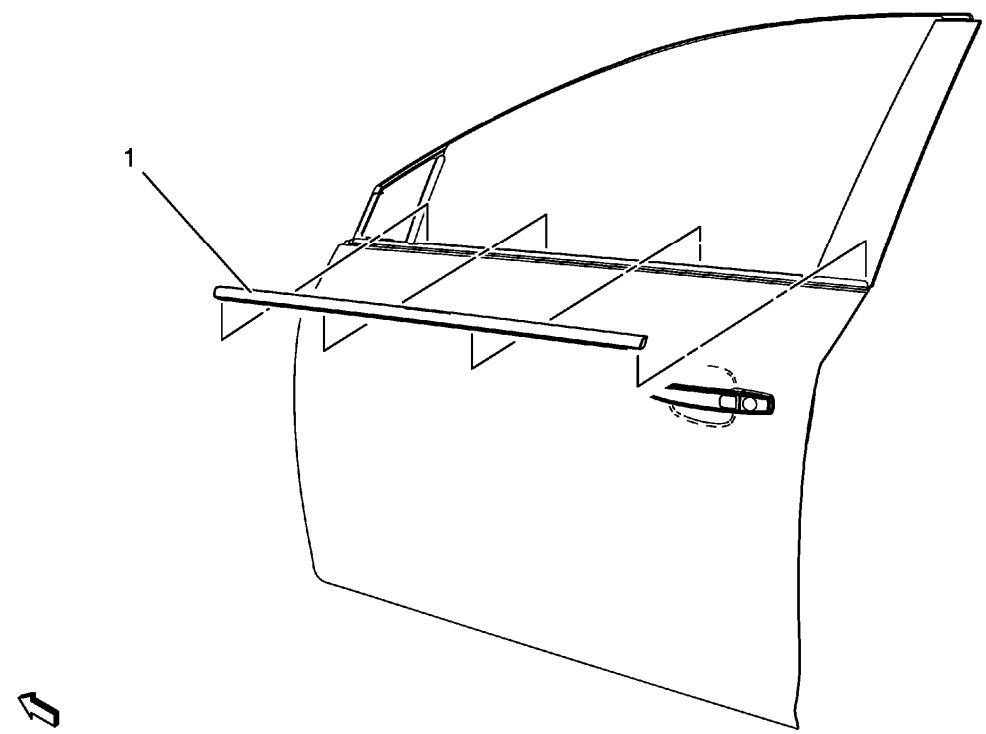

Fig. 29: Front Side Door Window Outer Sealing Strip
Courtesy of GENERAL MOTORS COMPANY

Front Side Door Window Outer Sealing Strip Replacement

Callout	Component Name
1	Front Side Door Window Outer Sealing Strip Assembly **Procedure** Pull up and away from the door flange to remove.

FRONT SIDE DOOR WINDOW INNER SEALING STRIP REPLACEMENT

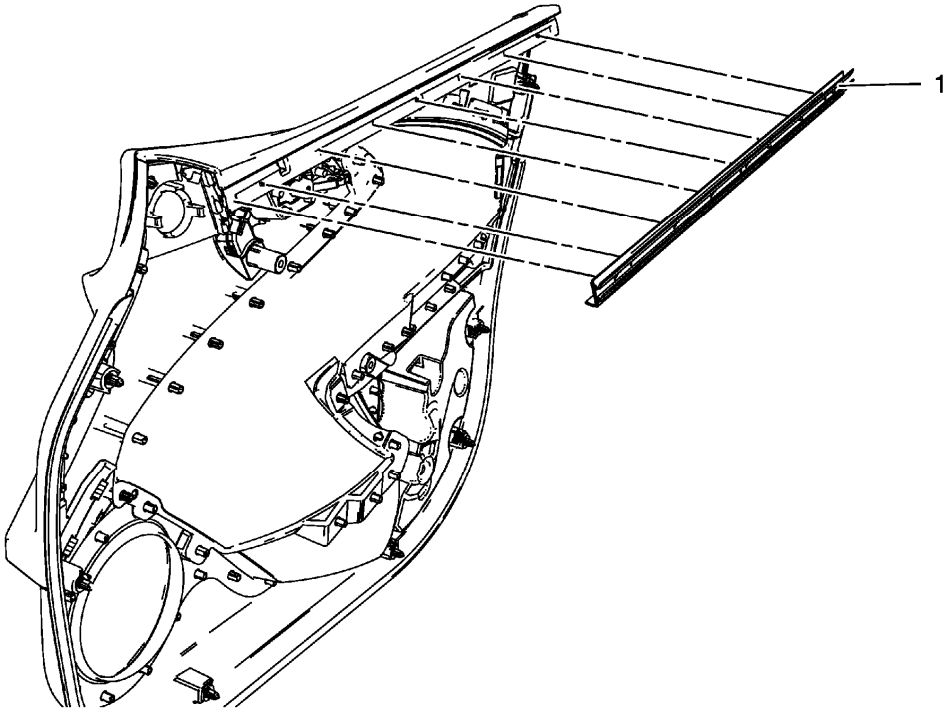

Fig. 30: Front Side Door Window Inner Sealing Strip
Courtesy of GENERAL MOTORS COMPANY

Front Side Door Window Inner Sealing Strip Replacement

Callout	Component Name
Preliminary Procedures Remove the front side door trim. Refer to **Front Side Door Trim Replacement**	
1	Front Side Door Window Inner Sealing Strip

REAR SIDE DOOR WINDOW INNER SEALING STRIP REPLACEMENT

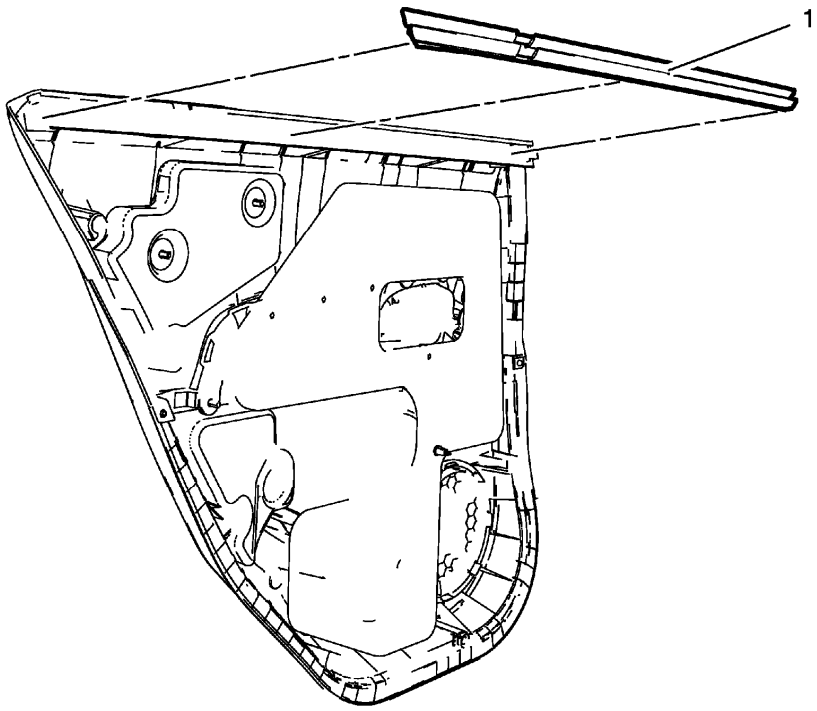

Fig. 31: Rear Side Door Window Inner Sealing Strip
Courtesy of GENERAL MOTORS COMPANY

Rear Side Door Window Inner Sealing Strip Replacement

callout	Component Name
Preliminary Procedure Remove the rear side door trim. Refer to **Rear Side Door Trim Replacement** .	
1	Rear Side Door Window Inner Sealing Strip

REAR SIDE DOOR WINDOW OUTER SEALING STRIP REPLACEMENT

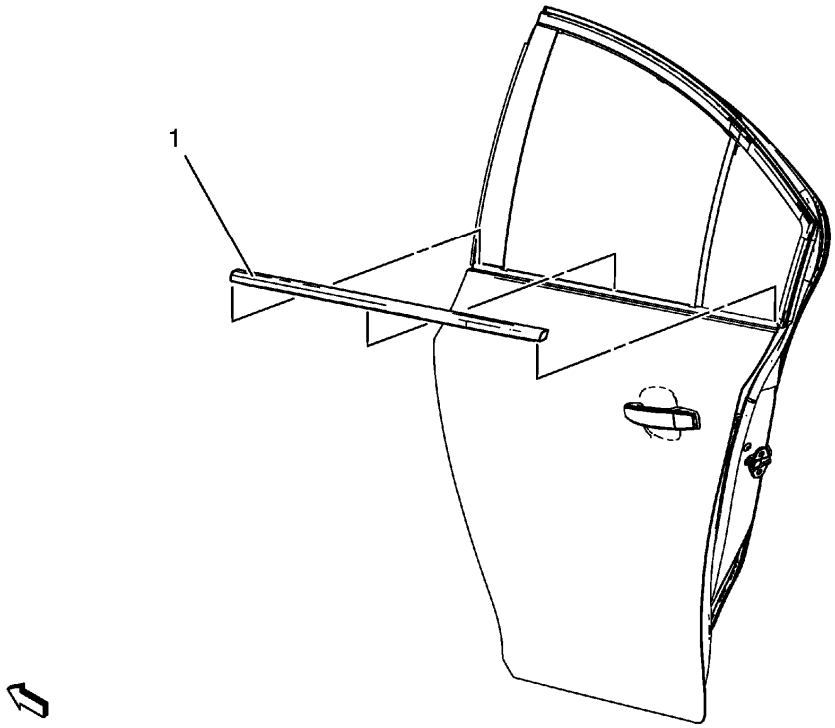

Fig. 32: Rear Side Door Window Outer Sealing Strip Assembly
Courtesy of GENERAL MOTORS COMPANY

Rear Side Door Window Outer Sealing Strip Replacement

Callout	Component Name
1	Rear Side Door Window Outer Sealing Strip Assembly

FRONT SIDE DOOR WINDOW WEATHERSTRIP REPLACEMENT

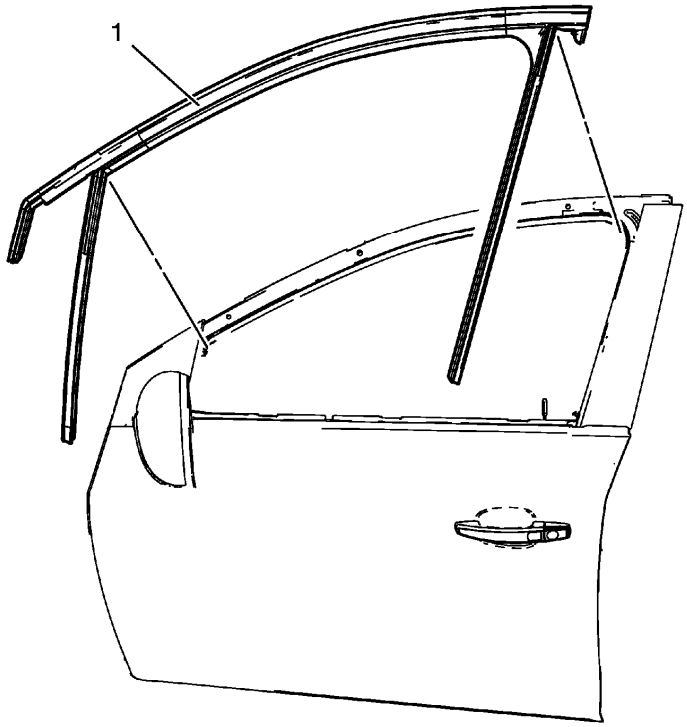

Fig. 33: Front Side Door Window Weatherstrip
Courtesy of GENERAL MOTORS COMPANY

Front Side Door Window Weatherstrip Replacement

Callout	Component Name
Preliminary Procedures 1. Remove the outside rearview mirror. Refer to **Outside Rearview Mirror Replacement** . 2. Remove the front side door window rear cover. Refer to **Front Side Door Window Frame Rear Cover Replacement** . 3. Remove the front side door window. Refer to **Front Side Door Window Replacement**.	
1	Front Side Door Window Weatherstrip **Procedure** Pull the front side door window weatherstrip away from the outer window flange to remove.

REAR SIDE DOOR WINDOW WEATHERSTRIP REPLACEMENT

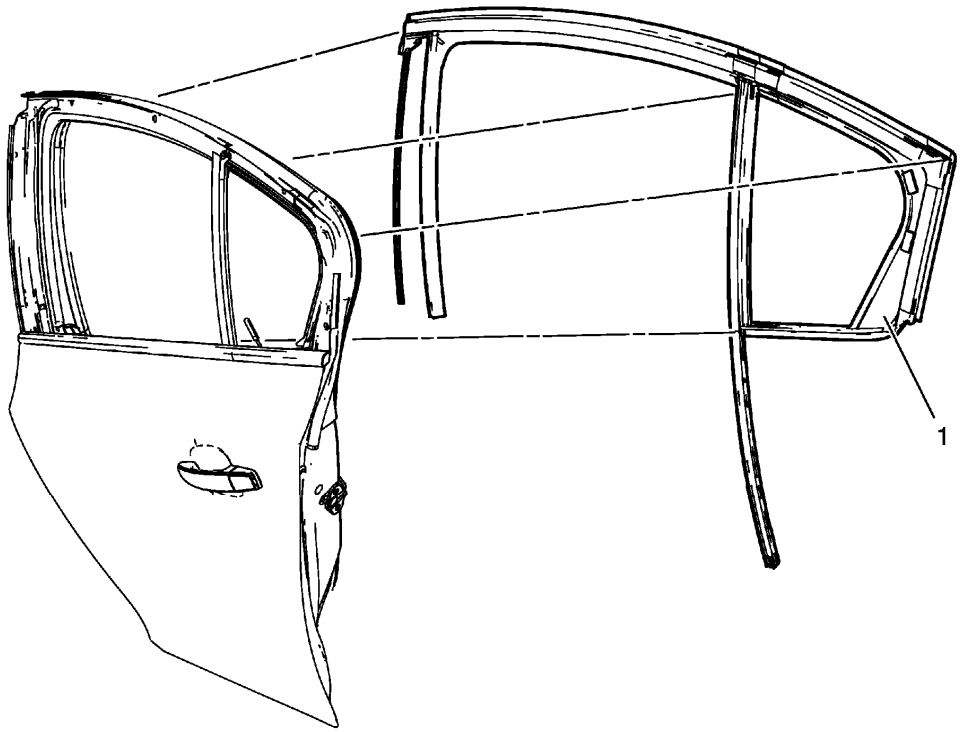

Fig. 34: Rear Side Door Window Weatherstrip
Courtesy of GENERAL MOTORS COMPANY

Rear Side Door Window Weatherstrip Replacement

Callout	Component Name
Preliminary Procedures 1. Remove the rear side door window frame front cover. Refer to **Rear Side Door Window Frame Front Cover Replacement** . 2. Remove the rear side door window. Refer to **Rear Side Door Window Replacement**.	
1	Rear Side Door Window Weatherstrip **Procedure** 1. Pull the rear side door window weatherstrip away from the outer window flange to remove. 2. Remove the rear side door stationary window from the rear side door window weatherstrip.

ADHESIVE INSTALLATION OF STATIONARY WINDOWS (WINDSHIELD)

WARNING: Refer to Glass and Sheet Metal Handling Warning .

1. Use a urethane adhesive systems which meet GM Specification GM 3651G.
2. Remove all mounds or loose pieces of urethane adhesive from the pinch-weld area.
3. If the original window is being reused, remove all but approximately 2 mm (3/64 in) of the existing bead of urethane adhesive from the pinch-weld flange surface and window by using a clean utility knife or razor blade scraper.
4. Inspect for any of the following problems in order to help prevent future breakage of the window:
   - High weld
   - Solder spots
   - Hardened sealer
   - Any other obstruction or irregularity in the pinch-weld flange

   NOTE: If corrosion of the pinch-weld flange is present or if sheet metal repairs or replacements are required, the pinch-weld flange must be refinished in order to restore the bonding area strength. If paint repairs are required, mask the flange bonding area prior to applying the color coat in order to provide a clean primer only surface. Materials such as BASF DE15®, DuPont 2610®, Sherwin-Williams PSE 4600 and NP70® and Martin-Semour 5120 and 5130® PPG DP90LF SPIES/HECKER 3688/8590 - 3688/5150 - 4070/5090 STANDOX 11158/13320 - 14653/14980 products are approved for this application.

5. After repairing the opening as indicated, perform the following steps:
   1. Remove all traces of broken glass from the outer cowl panel, seats, floor, and defroster ducts.
   2. Clean around the edge of the inside surface of the window with a 50/50 mixture of isopropyl alcohol and water by volume on a dampened lint free cloth.

      WARNING: Refer to Window Retention Warning .

6. Verify all primers and urethane adhesive are within expiration dates.

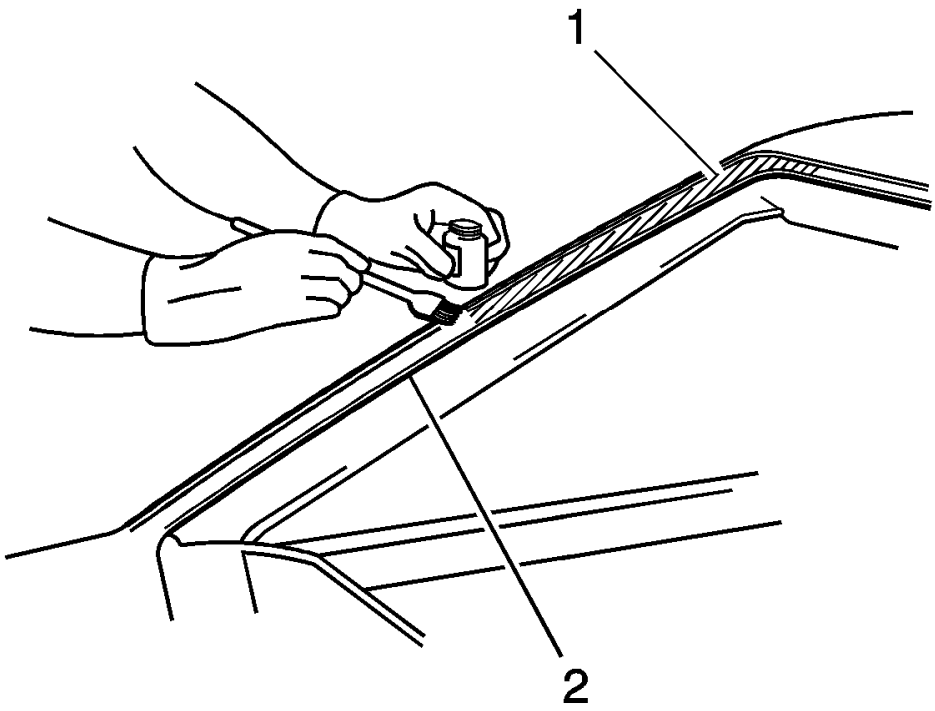

Fig. 35: Applying Pinch-Weld Primer
Courtesy of GENERAL MOTORS COMPANY

WARNING: Failure to prep the area prior to the application of primer may cause insufficient bonding of urethane adhesive. Insufficient bonding of urethane adhesive may allow unrestrained occupants to be ejected from the vehicle resulting in personal injury.

NOTE: Do not apply the black #3 primer to the existing bead (1) of the urethane adhesive on the pinch-weld flange. Apply the primer only to nicks, scratches, or the primed surfaces.

7. Shake the pinch-weld primer black #3 for at least 1 minute.
8. Use a new dauber in order to apply the primer to the surface of the pinch-weld flange (1).
9. Allow the pinch-weld primer to dry for approximately 10 minutes.

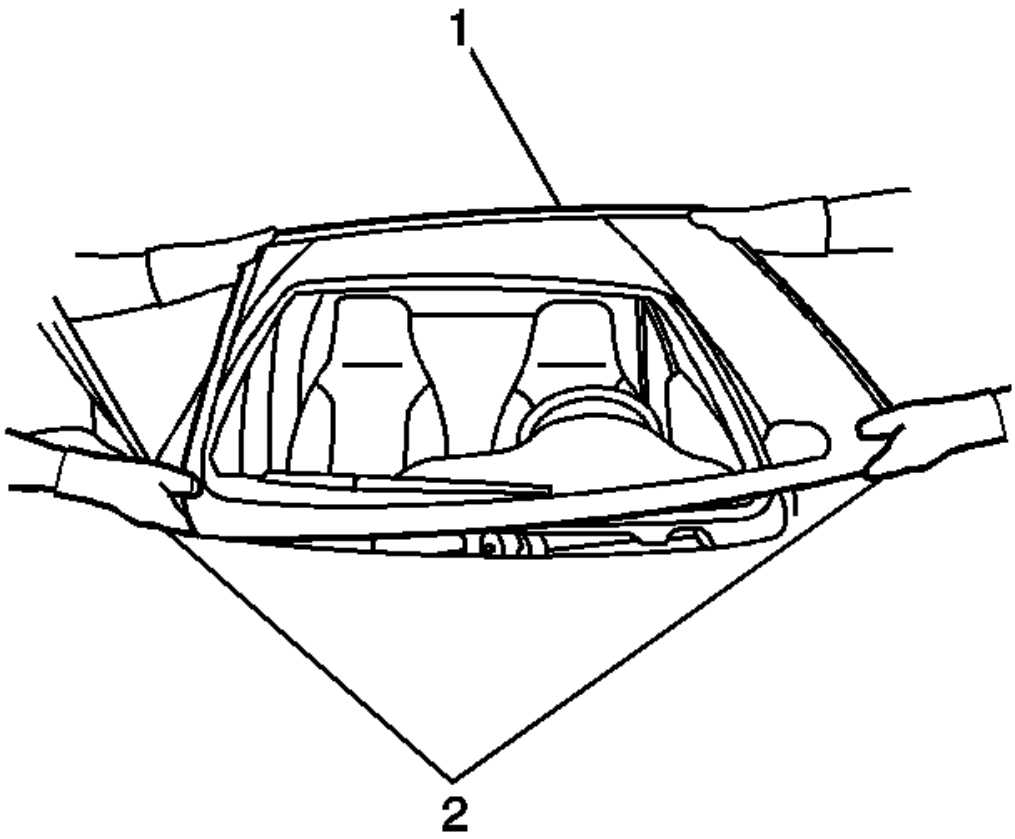

Fig. 36: Removing/Installing Windshield
Courtesy of GENERAL MOTORS COMPANY

10. With the aid of an assistant, dry fit the window (1) to the opening in order to determine the correct position.

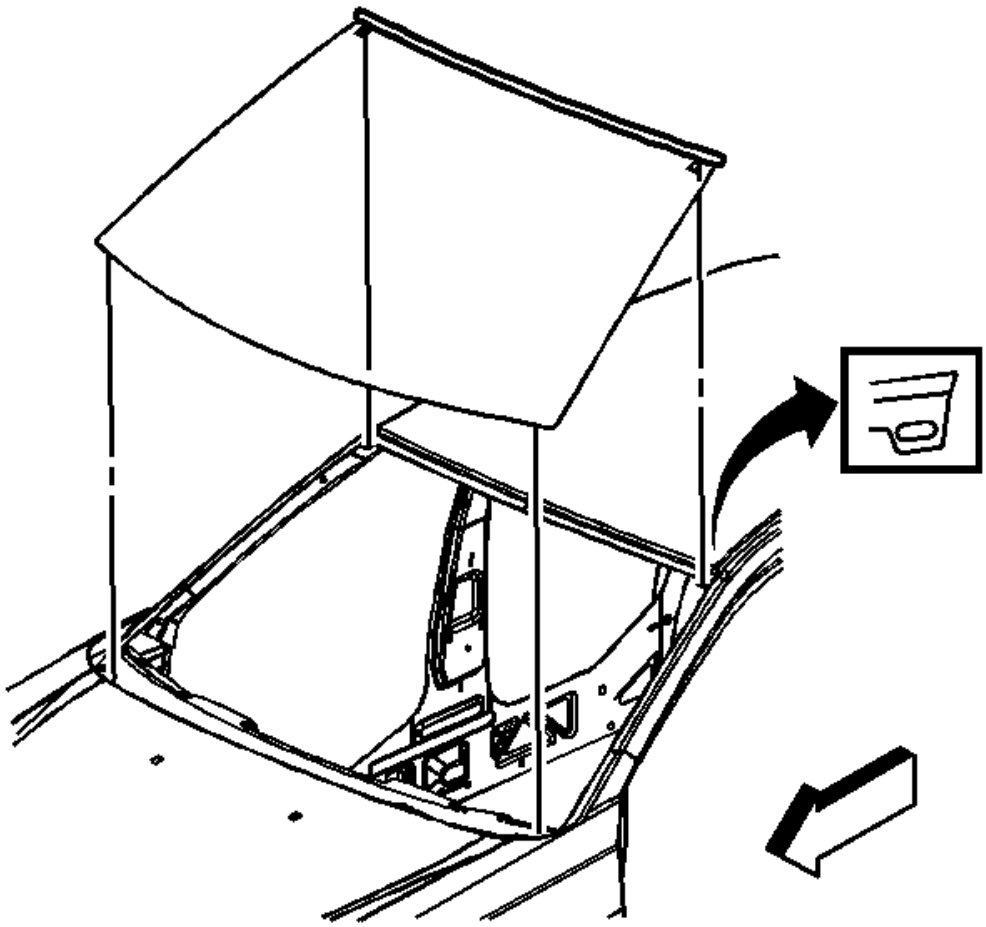

Fig. 37: Identifying Locator Slots On Upper Pinch-Weld Flange
Courtesy of GENERAL MOTORS COMPANY

11. If equipped, ensure that the windshield locator pins are positioned into the locator slots on the upper pinch-weld flange.

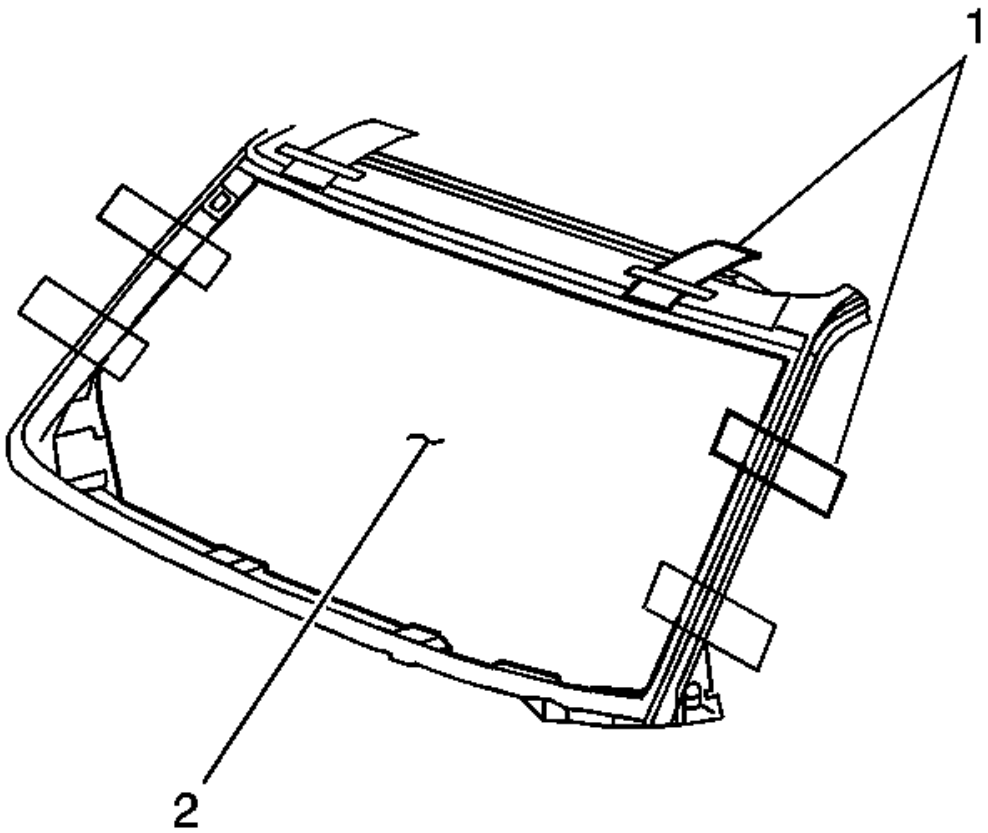

Fig. 38: Aligning Tape Lines On Window To Body
Courtesy of GENERAL MOTORS COMPANY

12. Use masking tape in order to mark the locations (1) of the window (2) in the opening.
13. Cut the masking tape in the center and remove the window from the opening.

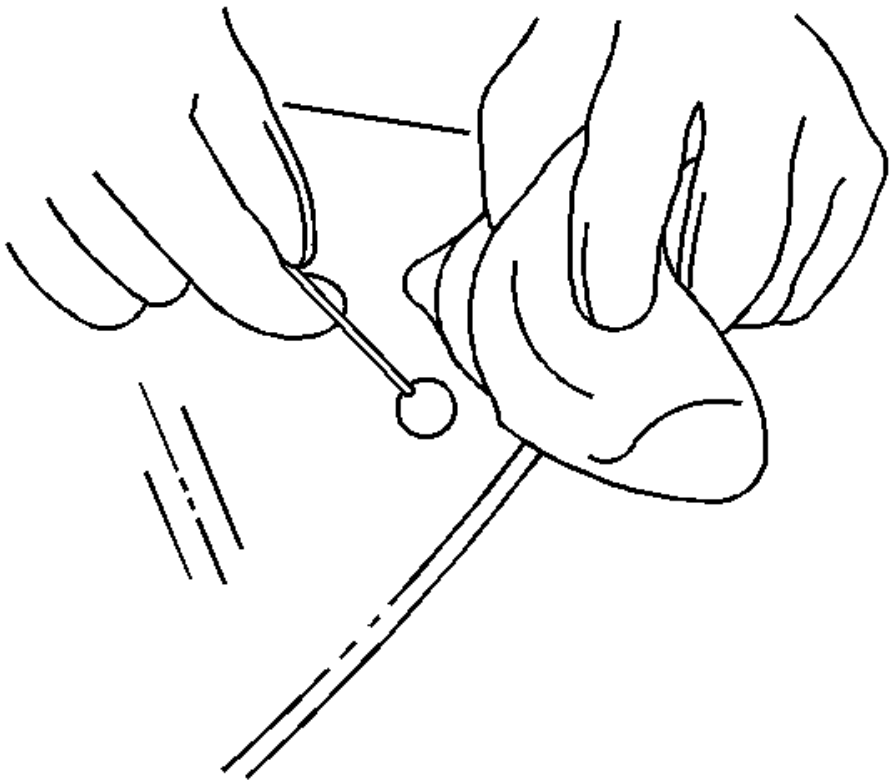

Fig. 39: Applying Glass Prep
Courtesy of GENERAL MOTORS COMPANY

NOTE: Use care when applying glass prep clear #1 on the window. This primer dries almost instantly, and may stain the viewing area of the window if not applied evenly.

14. Use a new dauber in order to apply glass prep clear #1 to the area approximately 18 mm (0.71 in) around the entire perimeter of the window inner surface.

    Immediately wipe the glass primed area using a clean, lint-free cloth.

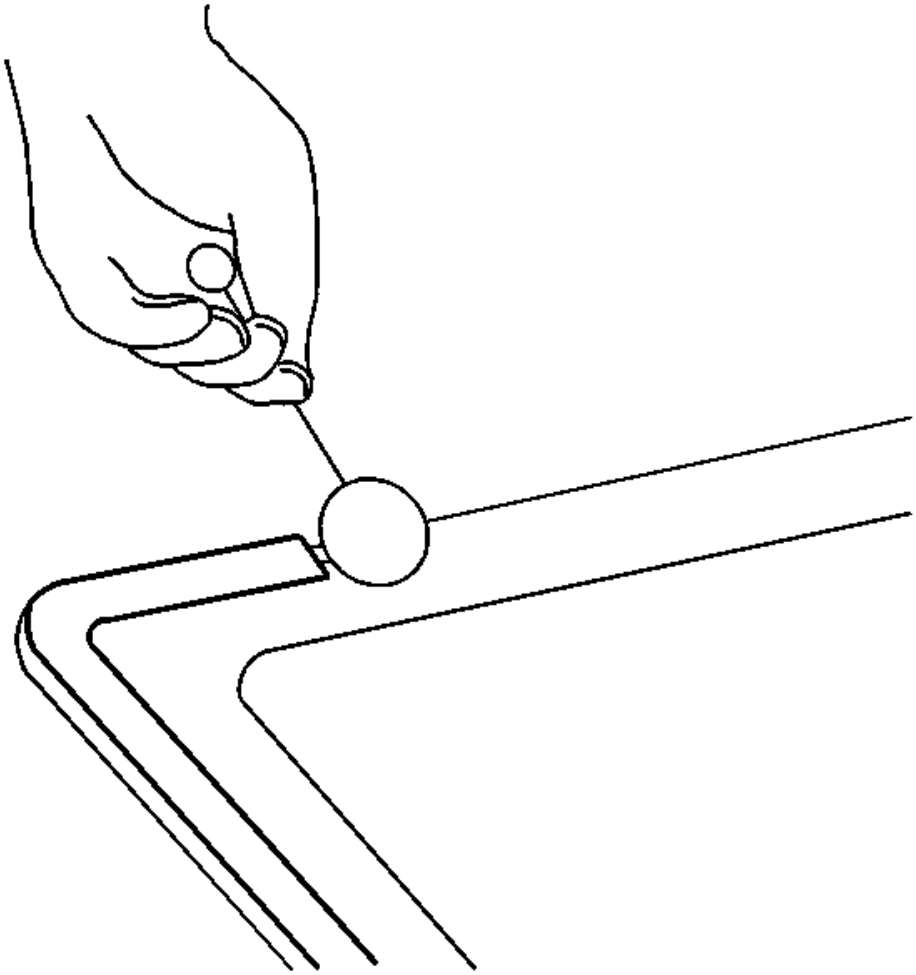

Fig. 40: Applying Glass Prep
Courtesy of GENERAL MOTORS COMPANY

15. Apply a second coat of the glass prep clear #1 to the same area of the glass.

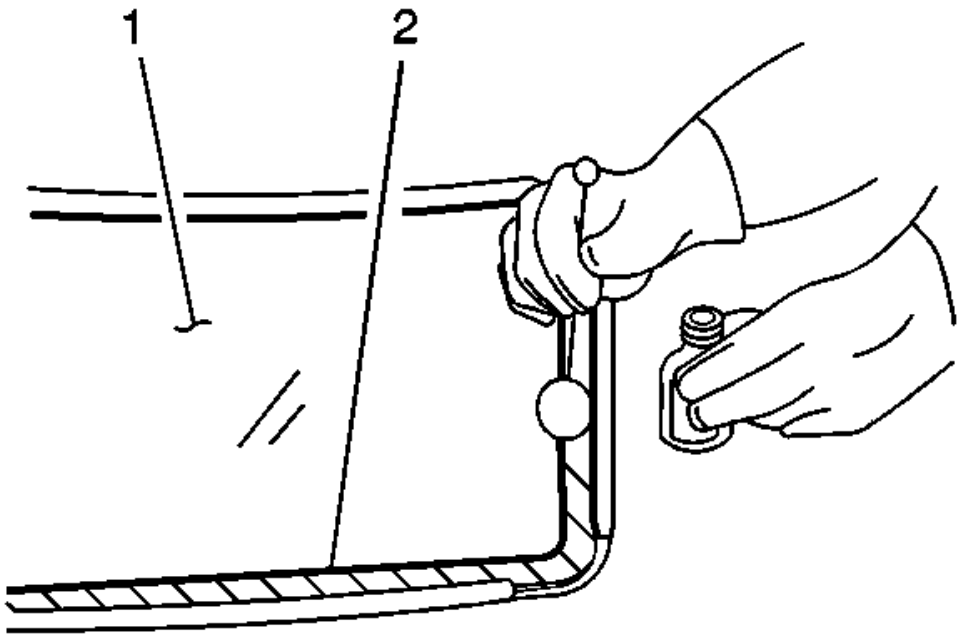

Fig. 41: Applying Glass Primer
Courtesy of GENERAL MOTORS COMPANY

NOTE: The glass primer black #2 is effective up to 8 hours after applying it to the glass. The primed surface of the glass must be kept clean.

16. Shake the glass primer black #2 for at least 1 minute.
17. Use a new dauber in order to apply the glass primer black #2 to the same areas (2) that glass prep clear #1 was applied.
18. Allow the glass primer to dry for approximately 10 minutes.

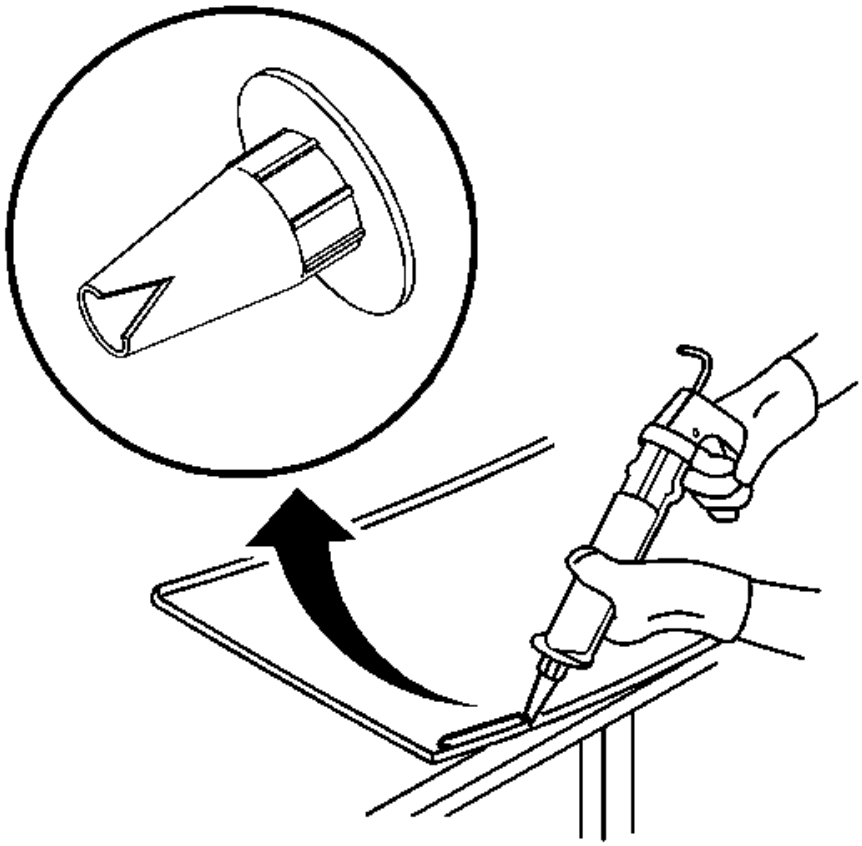

Fig. 42: View Of Modified Applicator Nozzle
Courtesy of GENERAL MOTORS COMPANY

19. Cut the applicator nozzle in order to provide a minimum urethane bead of 8 mm (0.31 in) wide and 16 mm (0.63 in) high.

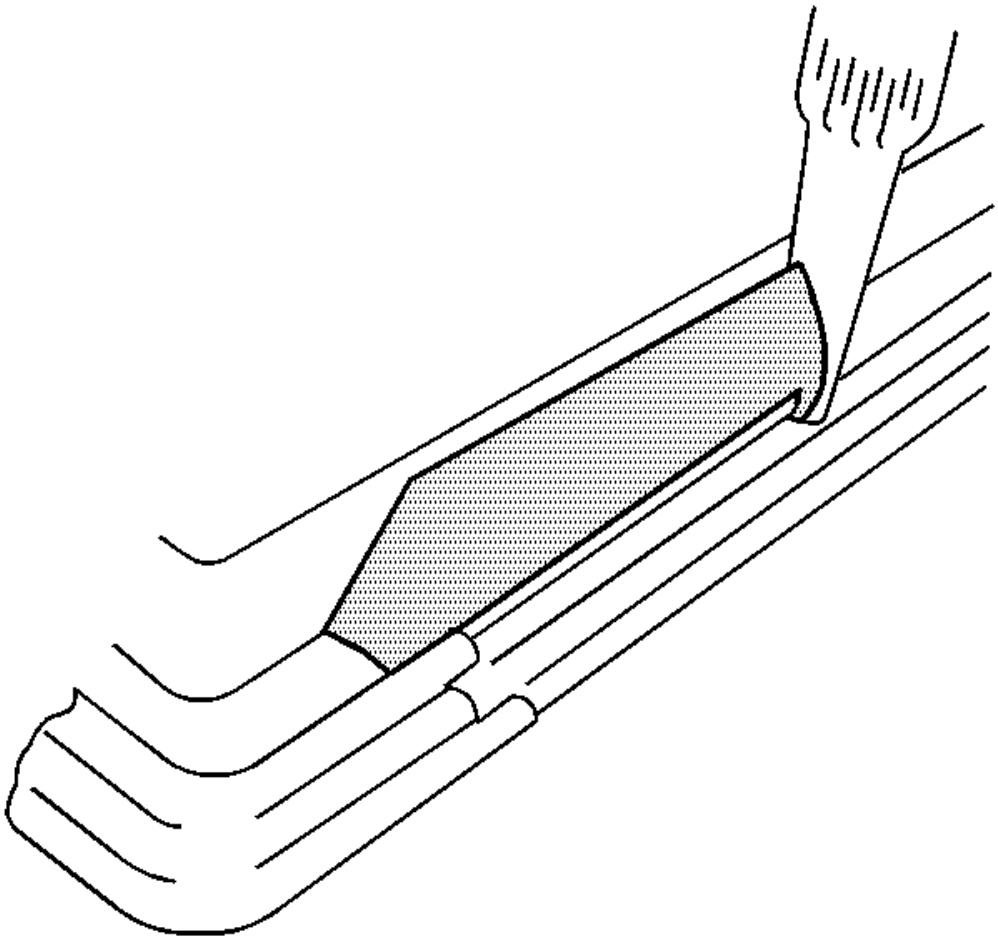

Fig. 43: Applying Continuous Bead Of Urethane Adhesive
Courtesy of GENERAL MOTORS COMPANY

20. Use a cartridge-type caulking gun in order to apply a smooth, continuous bead of urethane adhesive.

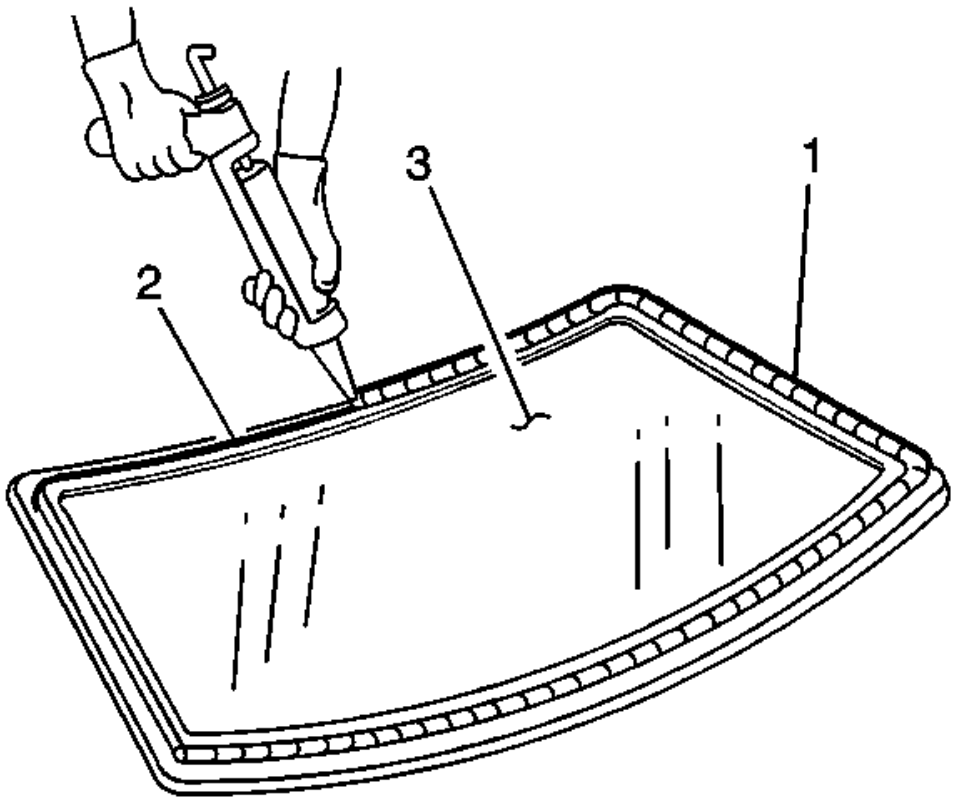

Fig. 44: Applying Urethane Adhesive To Inner Surface Of Window
Courtesy of GENERAL MOTORS COMPANY

21. Use the edge of the window as a guide for the nozzle in order to apply the urethane adhesive (1) to the inner surface of the window (3).

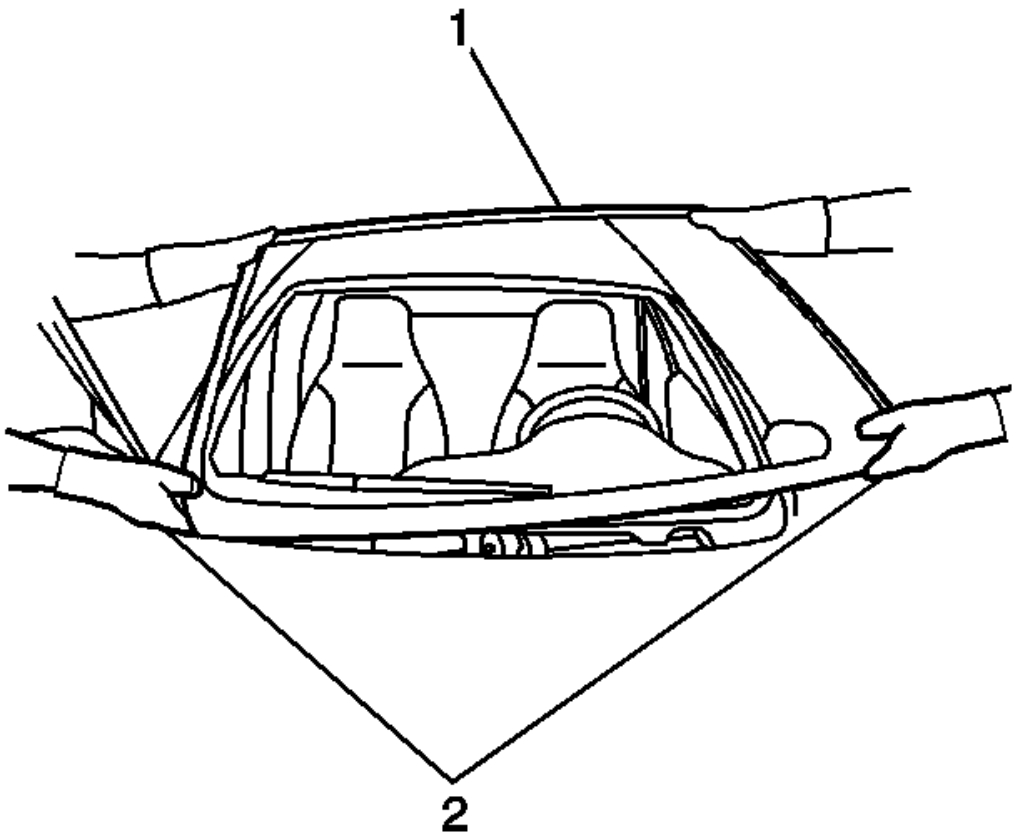

Fig. 45: Removing/Installing Windshield
Courtesy of GENERAL MOTORS COMPANY

22. With the aid of an assistant, place the window (1) in the opening.

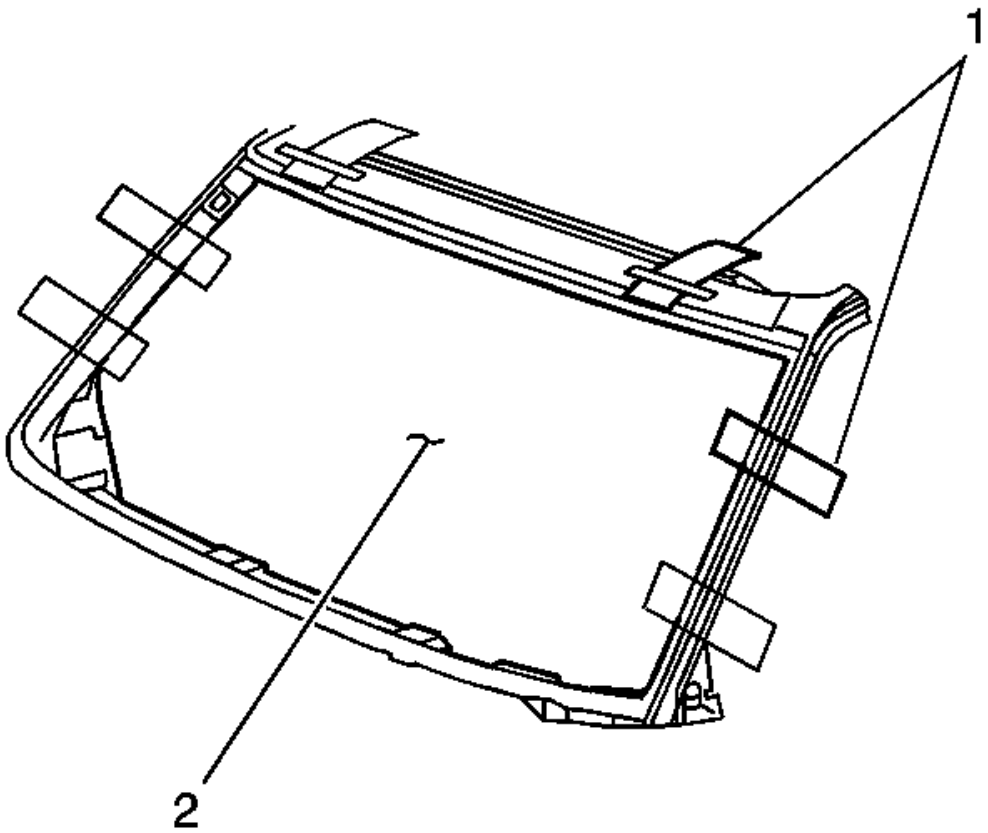

Fig. 46: Aligning Tape Lines On Window To Body
Courtesy of GENERAL MOTORS COMPANY

23. Align the masking tape (1) lines on the window (2) and the body.

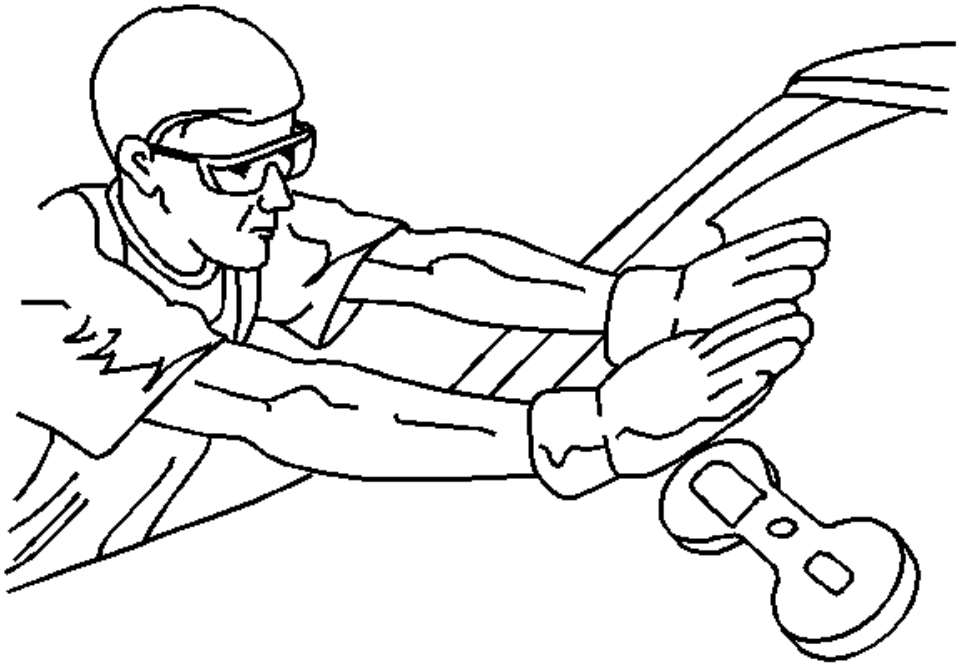

Fig. 47: Pressing Window Into Place
Courtesy of GENERAL MOTORS COMPANY

NOTE: To prevent damage to the window due to objects impacting an exposed edge, upon installation, the window must rest 1 mm (0.04 in) below the surface of the sheet metal.

24. Press firmly around the entire periphery of the windshield in order to wet-out the urethane bead.
25. Tape the window to the body in order to minimize movement until the urethane adhesive cures.

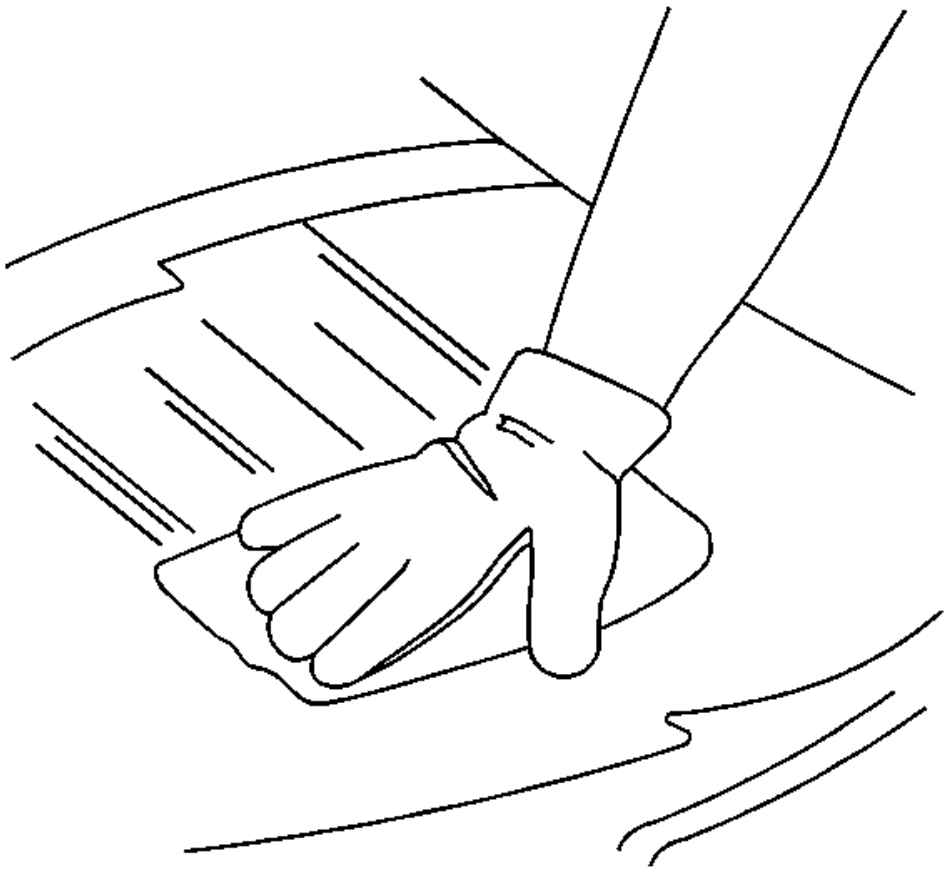

Fig. 48: Cleaning Excess Urethane Adhesive From Body
Courtesy of GENERAL MOTORS COMPANY

26. Clean any excess urethane adhesive from the body.

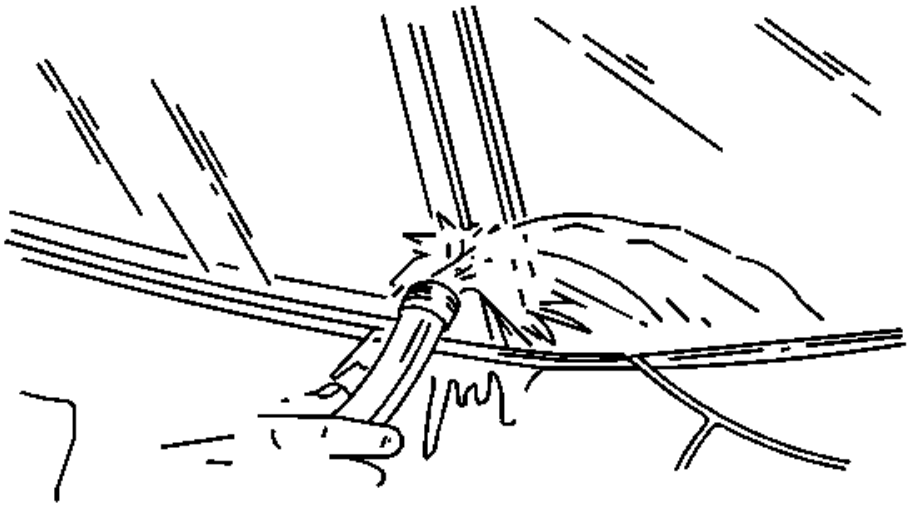

Fig. 49: Performing Water Hose Test
Courtesy of GENERAL MOTORS COMPANY

NOTE: Do not direct a hard stream of high pressure water to the freshly applied urethane adhesive.

27. Use a soft spray of warm water in order to immediately water test the window.
28. Inspect the window for leaks.
29. If any leaks are found, use a plastic paddle in order to apply extra urethane adhesive at the leak point.
30. Retest the window for leaks.

WARNING: Insufficient curing of urethane adhesive may allow unrestrained occupants to be ejected from the vehicle resulting in personal injury.

- **For the moisture-curing type of urethane adhesive, allow a minimum of 6 hours at 21°C (70°F) or greater and with at least**

30 percent relative humidity. Allow at least 24 hours for the complete curing of the urethane adhesive.

- **For the chemical-curing type of urethane adhesive, allow a minimum of 1 hour.**

Do NOT physically disturb the repair area until after these minimum times have elapsed.

31. Maintain the following conditions in order to properly cure the urethane adhesive:
    - Partially lower a door window in order to prevent pressure buildups when closing doors before the urethane adhesive cures.
    - Do not drive the vehicle until the urethane adhesive is cured. Refer to the above curing times.
    - Do not use compressed air in order to dry the urethane adhesive.
32. Complete the window installation.

ADHESIVE INSTALLATION OF STATIONARY WINDOWS (REAR WINDOW)

WARNING: Refer to Glass and Sheet Metal Handling Warning .

1. Use a urethane adhesive systems which meet GM Specification GM 3651G.
2. Remove all mounds or loose pieces of urethane adhesive from the pinch-weld area.
3. If the original window is being reused, remove all but approximately 2 mm (3/64 in) of the existing bead of urethane adhesive from the pinch-weld flange and window by using a clean utility knife or razor blade scraper.
4. Inspect for any of the following problems in order to help prevent future breakage of the window:
    - High weld
    - Solder spots
    - Hardened sealer
    - Any other obstruction or irregularity in the pinch-weld flange

NOTE: If corrosion of the pinch-weld flange is present or if sheet metal repairs or replacements are required, the pinch-weld flange must be refinished in order to restore the bonding area strength. If paint repairs are required, mask the flange bonding area prior to applying the color coat in order to provide a clean primer only surface. Materials such as BASF DE15®, DuPont 2610®, Sherwin-Williams PSE 4600 and NP70® and Martin-Semour 5120 and 5130® PPG DP90LF SPIES/HECKER 3688/8590 - 3688/5150 - 4070/5090 STANDOX 11158/13320 - 14653/14980 products are approved for this application.

5. After repairing the opening as indicated, perform the following steps:
    1. Remove all traces of broken glass from the outer cowl panel, seats, floor and defroster ducts.

2. Clean around the edge of the inside surface of the window with a 50/50 mixture of isopropyl alcohol and water by volume on a dampened lint free cloth.

WARNING: Refer to Window Retention Warning .

6. Verify all primers and urethane adhesive are within expiration dates.

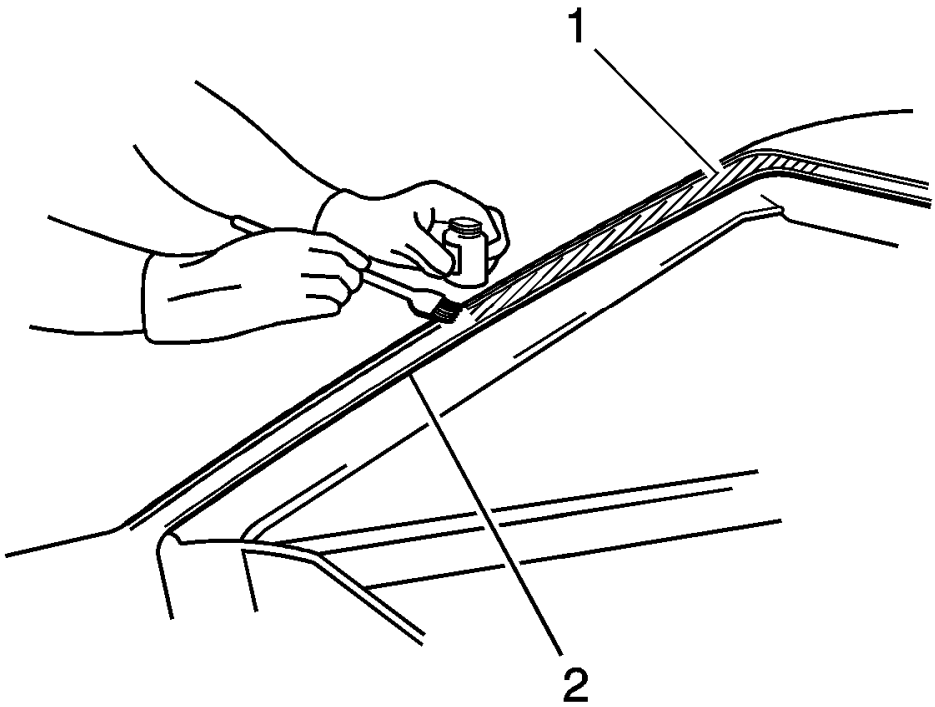

Fig. 50: Applying Pinch-Weld Primer
Courtesy of GENERAL MOTORS COMPANY

WARNING: Failure to prep the area prior to the application of primer may cause insufficient bonding of urethane adhesive. Insufficient bonding of urethane adhesive may allow unrestrained occupants to be ejected from the vehicle resulting in personal injury.

NOTE: Do not apply the black #3 primer to the existing bead (1) of the urethane

adhesive on the pinch-weld flange. Apply the primer only to nicks, scratches or the primed surfaces.

7. Shake the pinch-weld primer black #3 for at least 1 minute.
8. Use a new dauber in order to apply the primer to the surface of the pinch-weld flange (2).
9. Allow the pinch-weld primer to dry for approximately 10 minutes.

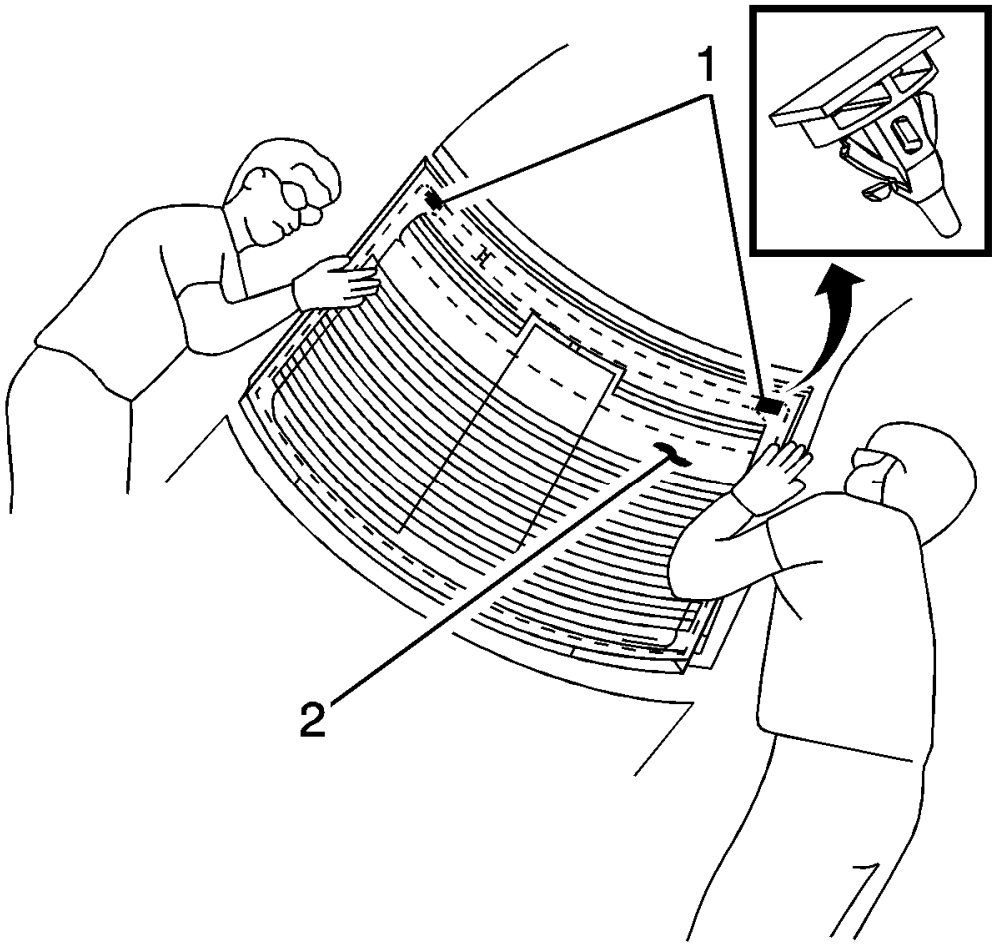

Fig. 51: Installing Rear Window
Courtesy of GENERAL MOTORS COMPANY

10. With the aid of an assistant, dry fit the window (2) to the opening in order to determine the correct position.
11. Ensure that the locator pins (1) are positioned into the locator slots on the upper pinch-weld flange.

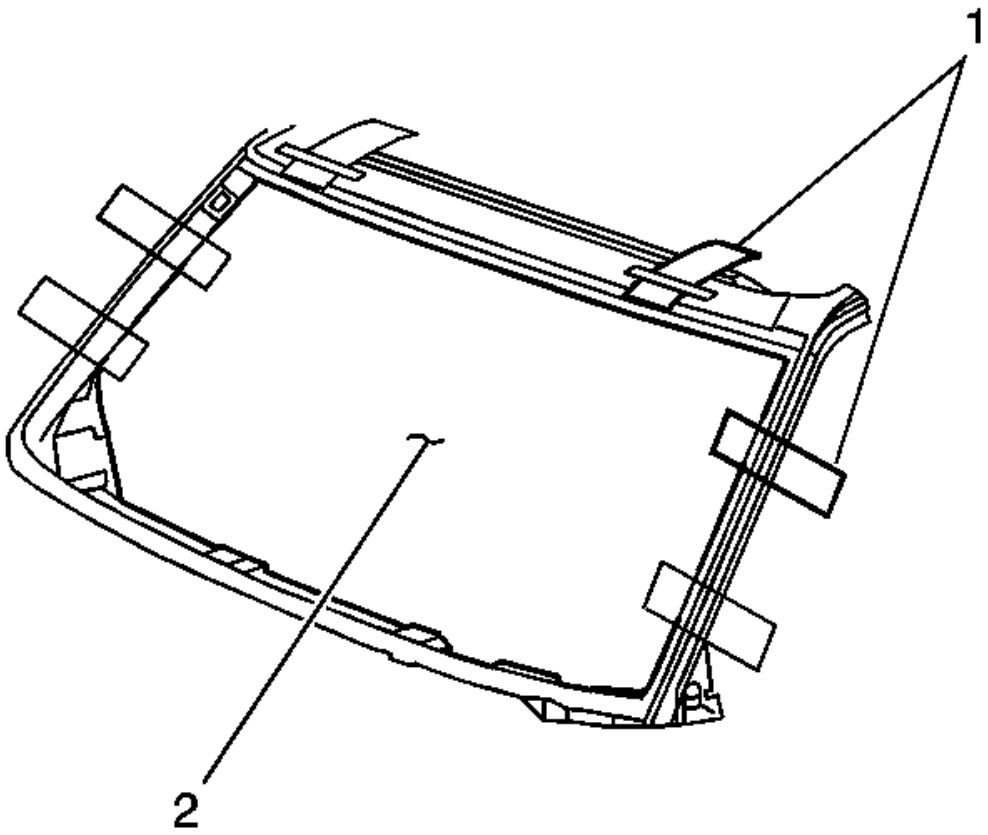

Fig. 52: Aligning Tape Lines On Window To Body
Courtesy of GENERAL MOTORS COMPANY

12. Use masking tape 91) to mark the locations of the window (2) in the opening.
13. Cut the masking in the center and remove the window from the opening.

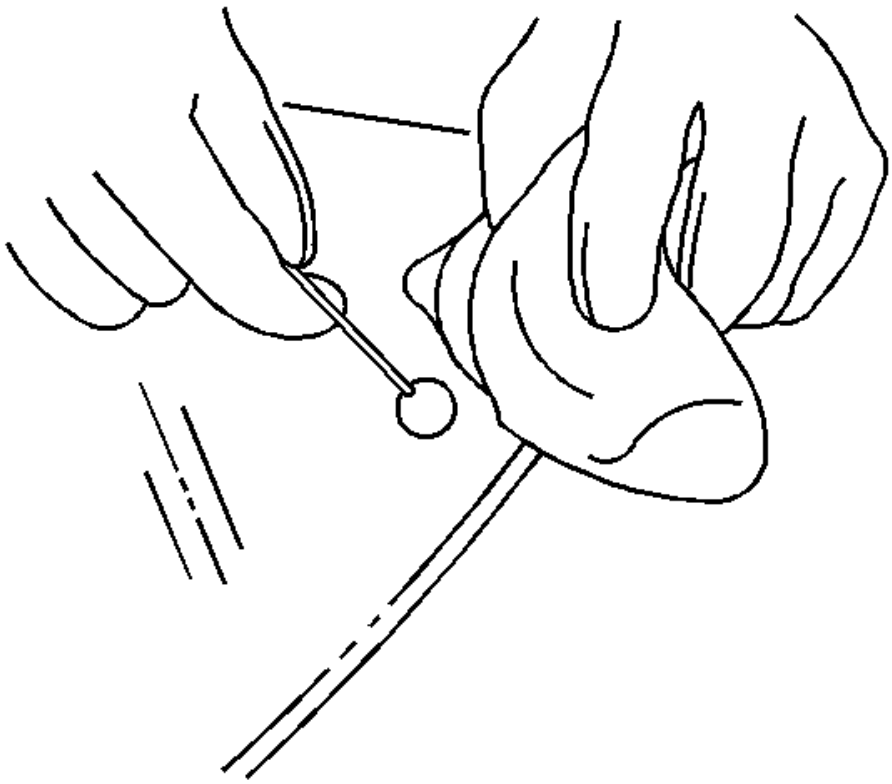

Fig. 53: Applying Glass Prep
Courtesy of GENERAL MOTORS COMPANY

NOTE: Use care when applying glass prep clear #1 on the window. This primer dries almost instantly, and may stain the viewing area of the window if not applied evenly.

14. Use a new dauber in order to apply glass prep clear #1 to the area approximately 18 mm (0.71 in) around the entire perimeter of the window inner surface.

    Immediately wipe the glass primed area using a clean, lint-free cloth.

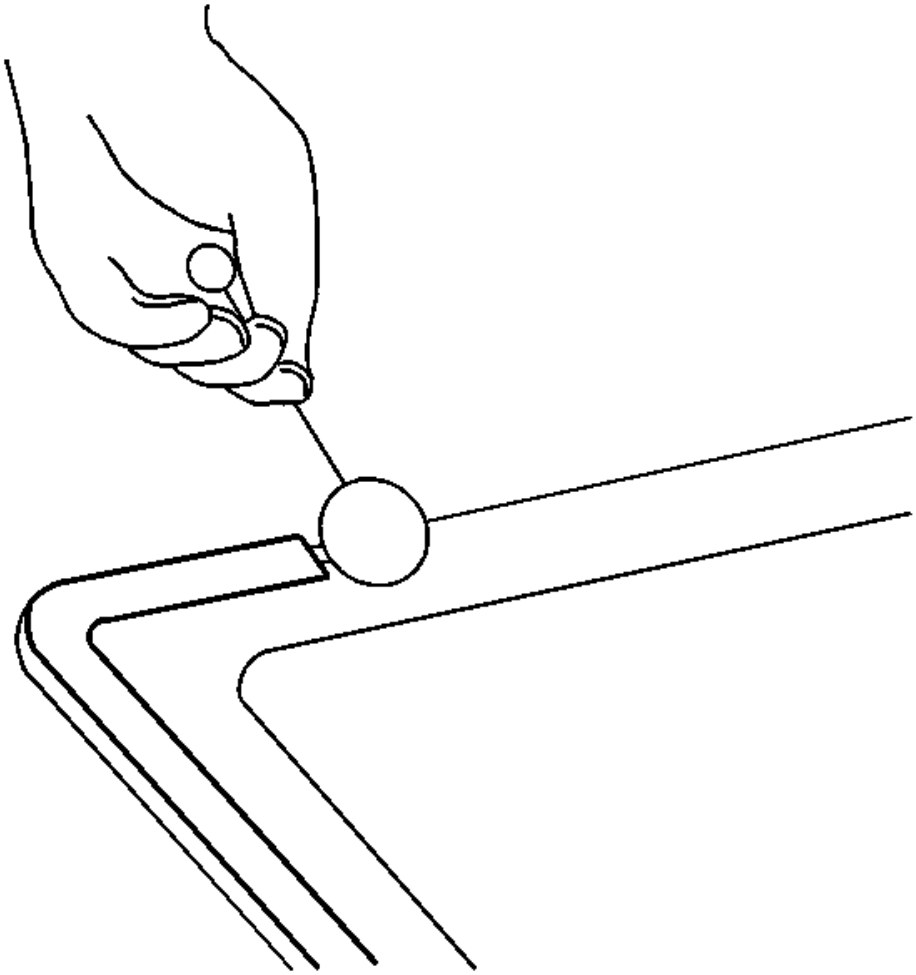

Fig. 54: Applying Glass Prep
Courtesy of GENERAL MOTORS COMPANY

15. Apply a second coat of the glass prep clear #1 to the same area of the glass.

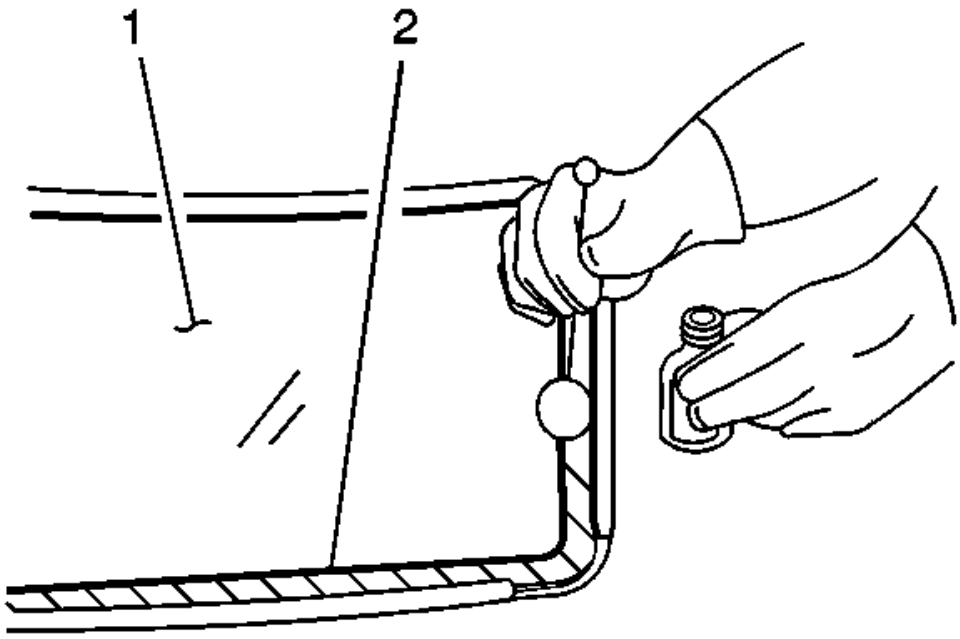

Fig. 55: Applying Glass Primer
Courtesy of GENERAL MOTORS COMPANY

NOTE: The glass primer black #2 is effective up to 8 hours after applying it to the glass. The primed surface of the glass must be kept clean.

16. Shake the glass primer black #2 for at least 1 minute.
17. Use a new dauber in order to apply the glass primer black #2 to the same areas (2) that glass prep clear #1 was applied.
18. Allow the glass primer to dry for approximately 10 minutes.

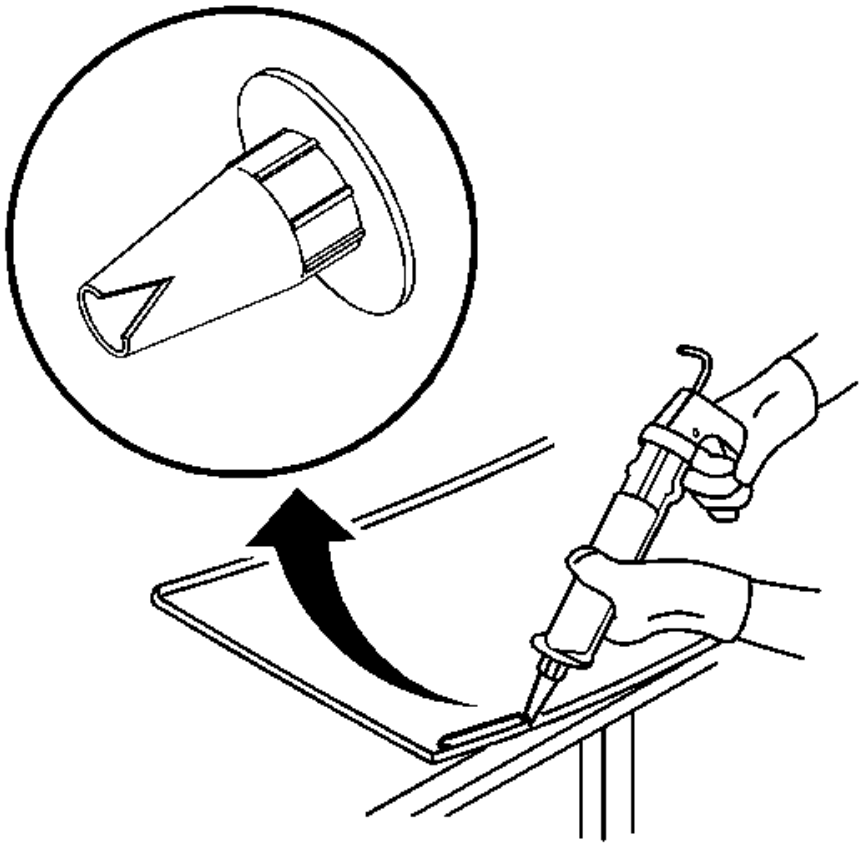

Fig. 56: View Of Modified Applicator Nozzle
Courtesy of GENERAL MOTORS COMPANY

19. Cut the applicator nozzle in order to provide a minimum urethane bead of 8 mm (0.31 in) wide and 16 mm (0.63 in) high.

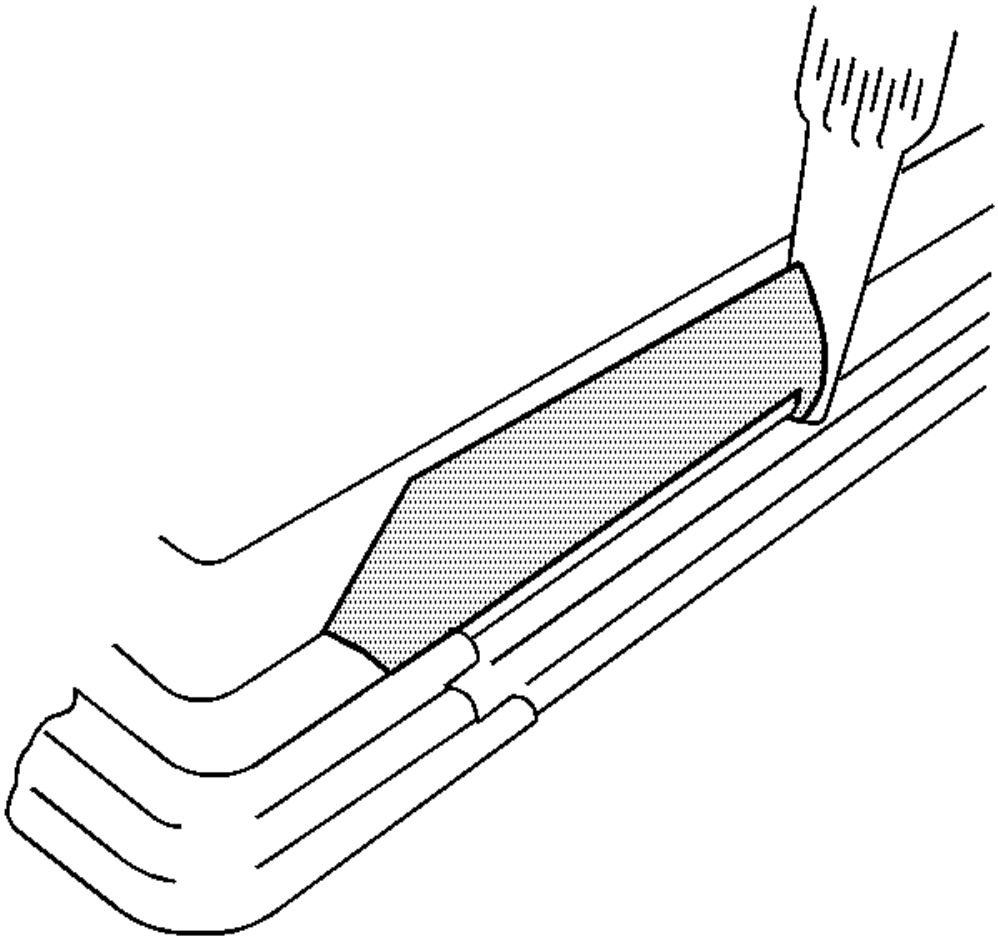

Fig. 57: Applying Continuous Bead Of Urethane Adhesive
Courtesy of GENERAL MOTORS COMPANY

20. Use a cartridge-type caulking gun in order to apply a smooth, continuous bead of urethane adhesive.

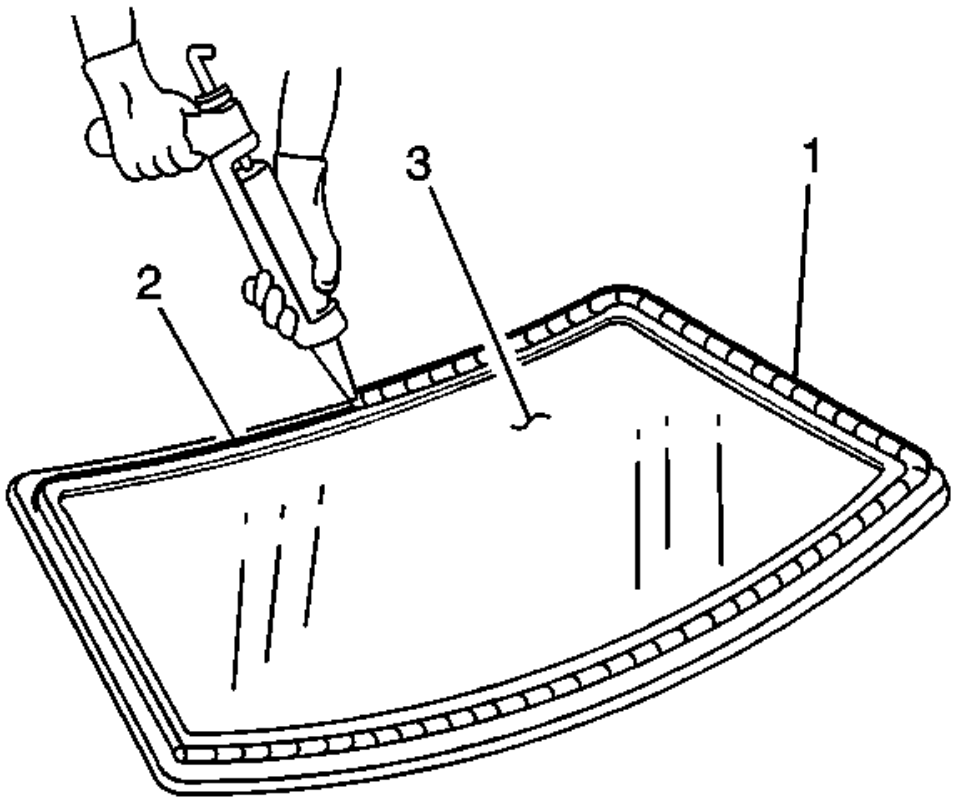

Fig. 58: Applying Urethane Adhesive To Inner Surface Of Window
Courtesy of GENERAL MOTORS COMPANY

21. Use the edge of the window as a guide for the nozzle in order to apply the urethane adhesive (1) to the inner surface of the window (3).

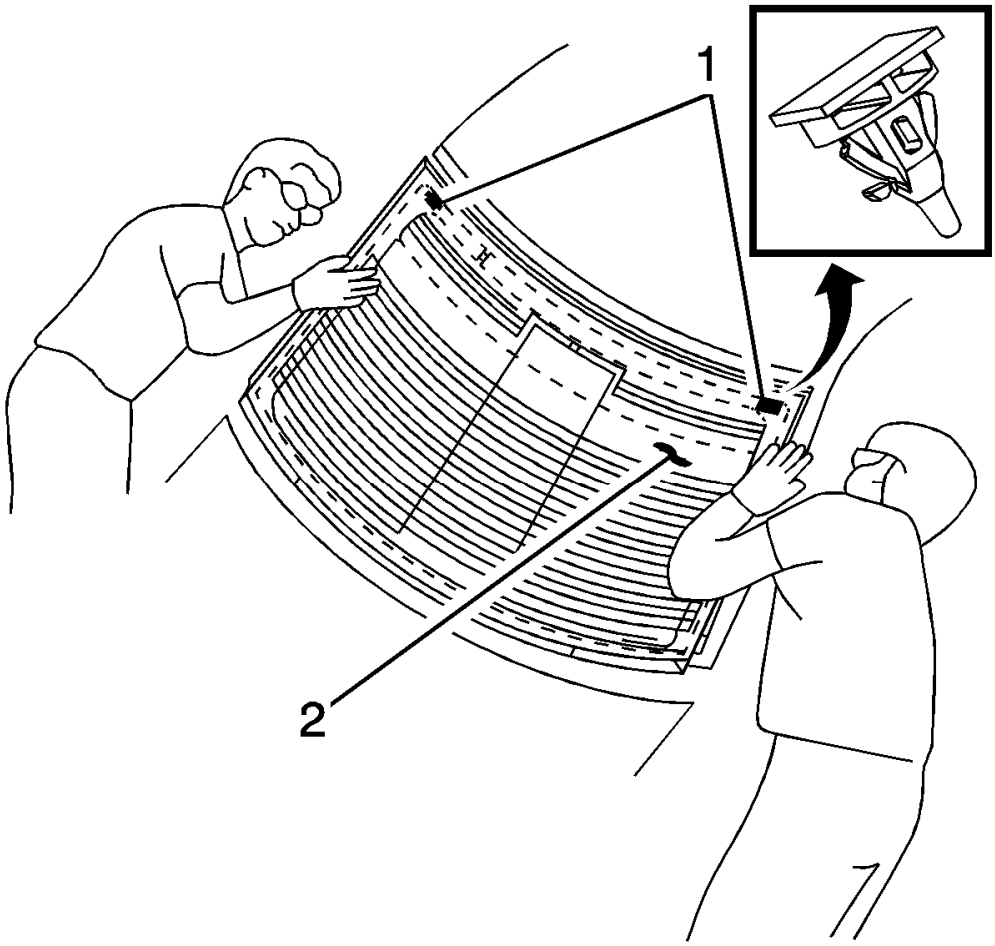

Fig. 59: Installing Rear Window
Courtesy of GENERAL MOTORS COMPANY

22. With the aid of an assistant, place the window (2) and locator (1) in the opening.

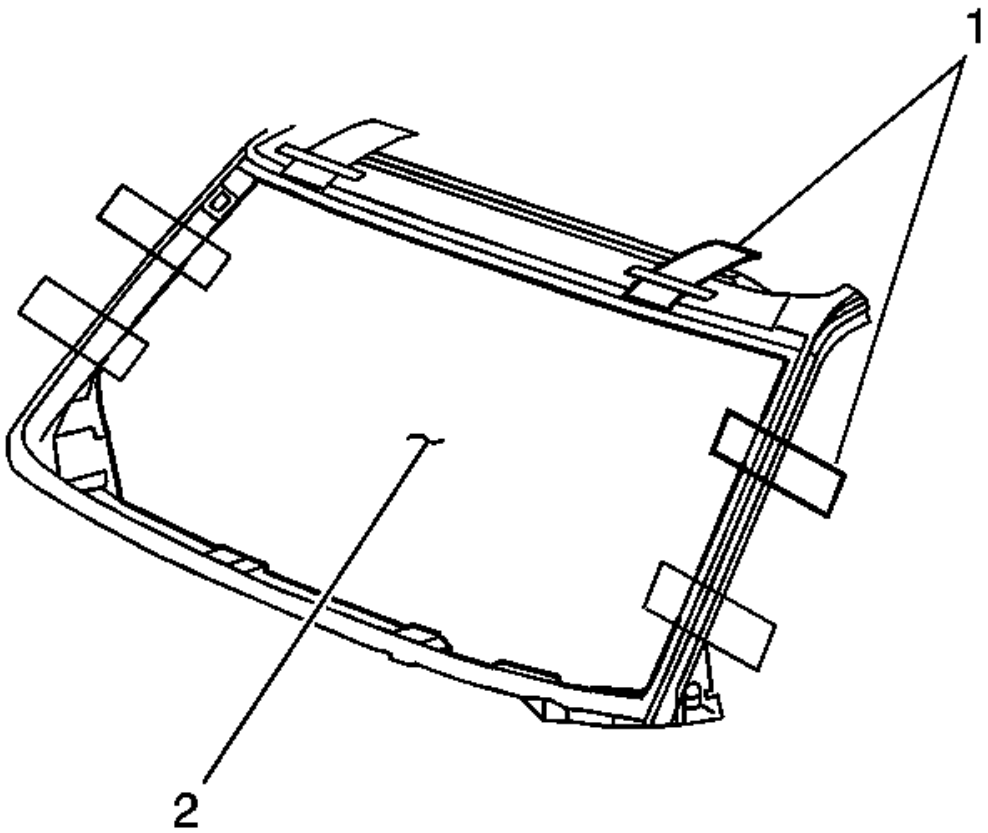

Fig. 60: Aligning Tape Lines On Window To Body
Courtesy of GENERAL MOTORS COMPANY

23. Align the masking tape (1) lines on the window (2) and the body.

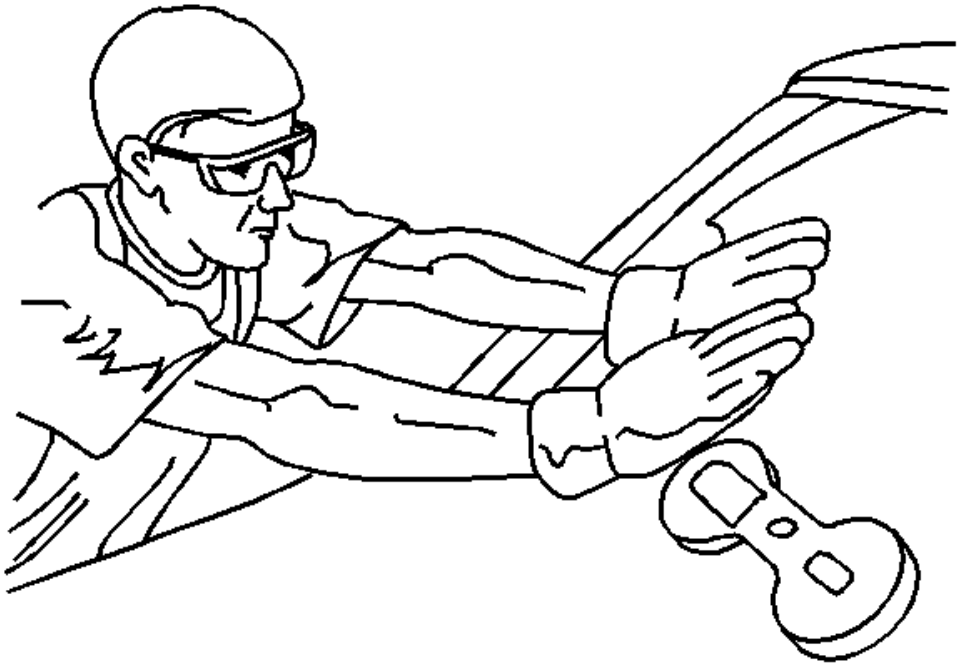

Fig. 61: Pressing Window Into Place
Courtesy of GENERAL MOTORS COMPANY

NOTE: To prevent damage to the window due to objects impacting an exposed edge, upon installation, the window must rest 1 mm (0.040 in) below the surface of the sheet metal.

24. Press firmly around the entire periphery of the window in order to wet-out the urethane bead.
25. Tape the window to the body in order to minimize movement until the urethane adhesive cures.

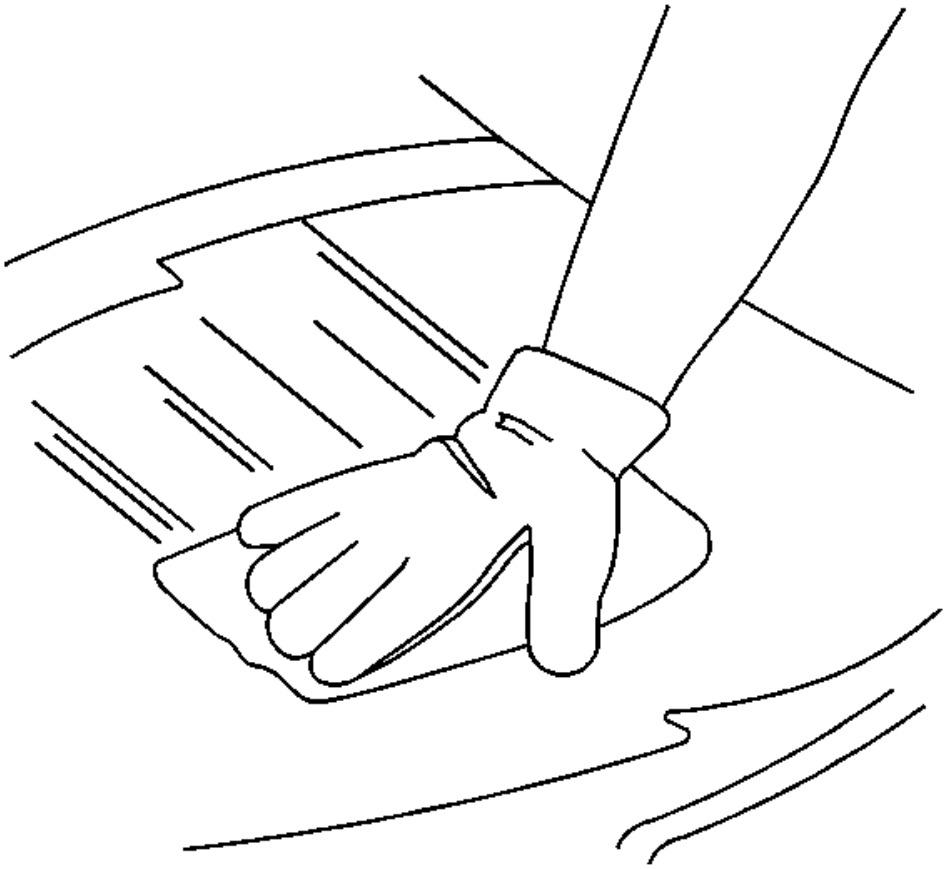

Fig. 62: Cleaning Excess Urethane Adhesive From Body
Courtesy of GENERAL MOTORS COMPANY

26. Clean any excess urethane adhesive from the body.

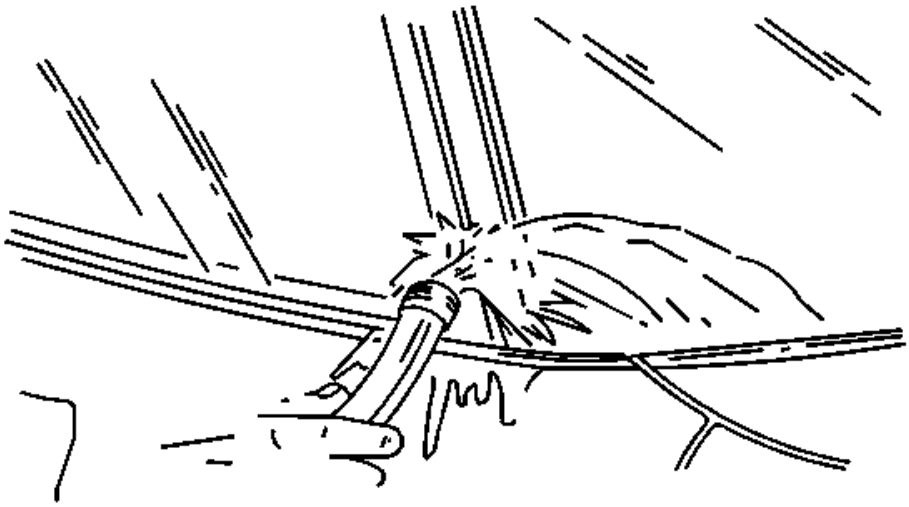

Fig. 63: Performing Water Hose Test
Courtesy of GENERAL MOTORS COMPANY

NOTE: Do not direct a hard stream of high pressure water to the freshly applied urethane adhesive.

27. Use a soft spray of warm water in order to immediately water test the window.
28. Inspect the window for leaks.
29. If any leaks are found, use a plastic paddle in order to apply extra urethane adhesive at the leak point.
30. Retest the window for leaks.

WARNING: Insufficient curing of urethane adhesive may allow unrestrained occupants to be ejected from the vehicle resulting in personal injury.

- **For the moisture-curing type of urethane adhesive, allow a minimum of 6 hours at 21°C (70°F) or greater and with at least**

30 percent relative humidity. Allow at least 24 hours for the complete curing of the urethane adhesive.

- **For the chemical-curing type of urethane adhesive, allow a minimum of 1 hour.**

Do NOT physically disturb the repair area until after these minimum times have elapsed.

31. Maintain the following conditions in order to properly cure the urethane adhesive:
    - Partially lower a door window in order to prevent pressure buildups when closing doors before the urethane adhesive cures.
    - Do not drive the vehicle until the urethane adhesive is cured. Refer to the above curing times.
    - Do not use compressed air in order to dry the urethane adhesive.
32. Complete the window installation.

DESCRIPTION AND OPERATION

ADHESIVE SERVICE KIT DESCRIPTION

Use the urethane adhesive for replacement of any urethane adhesive-installed windows.

Use these materials based on specific manufacturer.

Do NOT intermix primers or adhesives from one manufacturer to another.

Always follow the system manufacturer's instructions for application, handling, and curing.

POWER WINDOWS DESCRIPTION AND OPERATION

Power Windows System Components

The power window system consists of the following components:

- Driver window switch
- Passenger window switch
- Left rear window switch
- Right rear window switch
- Window motors in each of the doors
- 30A Fuse
- Body control module (BCM)

Power Window System

This vehicle can be configured as follows:

- Driver express up and express down power window motor (Optional)
- Driver, passenger, left rear and right rear express down only window motors

Driver Express Up and Express Down Window Motor

The driver door contains a window motor is smart motor that will detect excessive resistance while performing the express up function and automatically reverse direction to prevent injury to any occupants that may become trapped between the closing window and the door frame. The automatic reverse safety feature can be overridden by pulling and holding the window switch.

The logic circuit within the window motor monitors the up, down and express signal circuits which are normally equal to B+ voltage. When a switch is used on the driver window switch, the contacts close causing a voltage drop within the appropriate signal circuit. The driver window motor will detect the voltage drop and will command the window to move in the direction requested.

All Doors with Express Down Only Window Motors

For the driver, passenger, right rear and left rear doors, when their window switch is pressed in the down position, battery positive voltage is applied to their respective window motor control circuit and ground to the other window motor control circuit causing that window to open. When the individual window switch is pulled in the up position, voltage and ground is applied to the window motor in the opposite direction causing that window to close. The return path to ground is supplied through the inactive control circuit being normally grounded through the window switch.

Each window switch communicates to the BCM by a serial data circuit. When the driver wishes to control the passenger, left rear or right rear window, the driver will use the appropriate switch on the driver window switch. When this switch is used, a serial data message is sent to the BCM requesting a window motor command, the BCM will then send a serial data message to the appropriate door window switch which will then command that window to move in the direction requested.

Lockout Switch Feature

The child door lockout switch is on the driver door lock/window switch and controls the child locks on the rear doors as well as the rear window switches. When the BCM receives a command from the window lockout switch, it will apply voltage to the door lock security relay coil, this will energize the relay and the contact within the relay will then direct the voltage to lock the left rear and right rear child locks and then isolate them from the normal door lock system to prevent the rear doors from being opened by using the interior rear door handles.

The BCM monitors the voltage level of the rear lock status signal circuits to determine if the rear door latches have been locked out. A switch within the rear door latch will be open or closed depending upon the lockout status of the rear latch. If the rear latches are locked out, the switch will be open and the BCM will disable the functions of the rear window switches. If the latches have not been lockout, the switch will be closed, pulling the voltage within the signal circuit to 0 volts and the BCM will permit normal rear window switch functions.

REAR WINDOW DEFOGGER DESCRIPTION AND OPERATION

Rear Window Defogger System Components

The rear window defogger system consists of the following components:

- HVAC Control Module
- HVAC Control Head
- Rear Window Defogger Relay
- Rear Defogger Grid
- F28UA 40A Fuse

Rear Window Defogger Operation

The rear defog control system utilizes a single zone backlight design, driven with a single relay configuration. Additionally, up to two outside rear view mirrors can be heated if required. A switch for the customer to control the system is provided within the HVAC control head. Also included in the HVAC control head is an indicator to inform the customer with the current state of the system. The system is only operational when engine is running or during remote start.

Pressing the heated rear window switch on the HVAC control face plate causes the HVAC control head to send a serial data message to the HVAC control module requesting rear window defog operation. The HVAC control module upon receipt of the serial data message will provide voltage to the coil side of the rear window defogger relay, this will energize the relay causing the relay switch contacts to close allowing B+ voltage to flow through the rear defogger grid control circuit to the rear defogger grid.

When the rear heated window switch is pressed and the engine is running, the rear defog control system will remain active for 10 minutes. After the initial cycle has lapsed, pressing the switch again will continue rear window defogger operation, but the cycle will only last 5 minutes. The rear defog control system will function continuously if the vehicle speed is greater than 70 kilometers per hour (45 mph).

STATIONARY WINDOW DESCRIPTION

Most stationary windows, specifically windshields, are retained to the body with urethane adhesive which adheres the window to the body. This increases structural integrity. The reinstallation of windows with urethane adhesive requires complete replacement of the urethane adhesive bead:

The extended method (also known as long method, full strip or full cut) is the only recommended procedure for General Motors Vehicle.

SPECIAL TOOLS AND EQUIPMENT

SPECIAL TOOLS

Illustration	Tool Number / Description
	BO-569-A KM-569-A M-680156 Plug Lifter

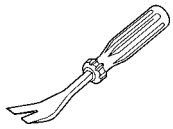	
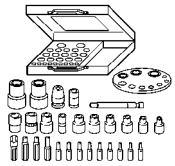	GE-604-D MKM-604-D Torx Bit and Socket Set
	BO-641 MKM-641 Suction Holder
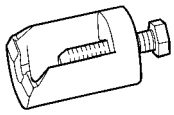	BO-6626 KM-6626 Wiper Arm Puller
	DT-6459-B MKM-J-6459-B Torque Wrench
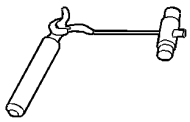	BO-24402-A J-24402-A Glass Sealant Cold Knife Remover
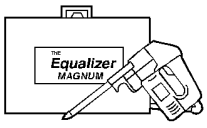	BO-39032 J-39032 Stationary Glass Removal Tool
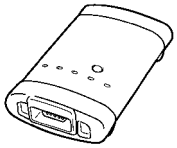	EL-47955 J-2534 Multi Diagnostic Interface MDI

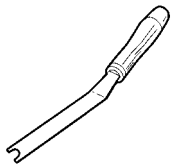	BO-50169 KM-317-B Remover, Window Crank

2013 ACCESSORIES & EQUIPMENT

Horns - Cruze

SPECIFICATIONS

FASTENER TIGHTENING SPECIFICATIONS

Fastener Tightening Specifications

Application	Specification	
	Metric	English
Horn Nut	17 N.m	13 lb ft
Steering Wheel Horn Contact Bolt	5.5 N.m	49 lb in

SCHEMATIC WIRING DIAGRAMS

HORN WIRING SCHEMATICS

Horn Wiring Schematics

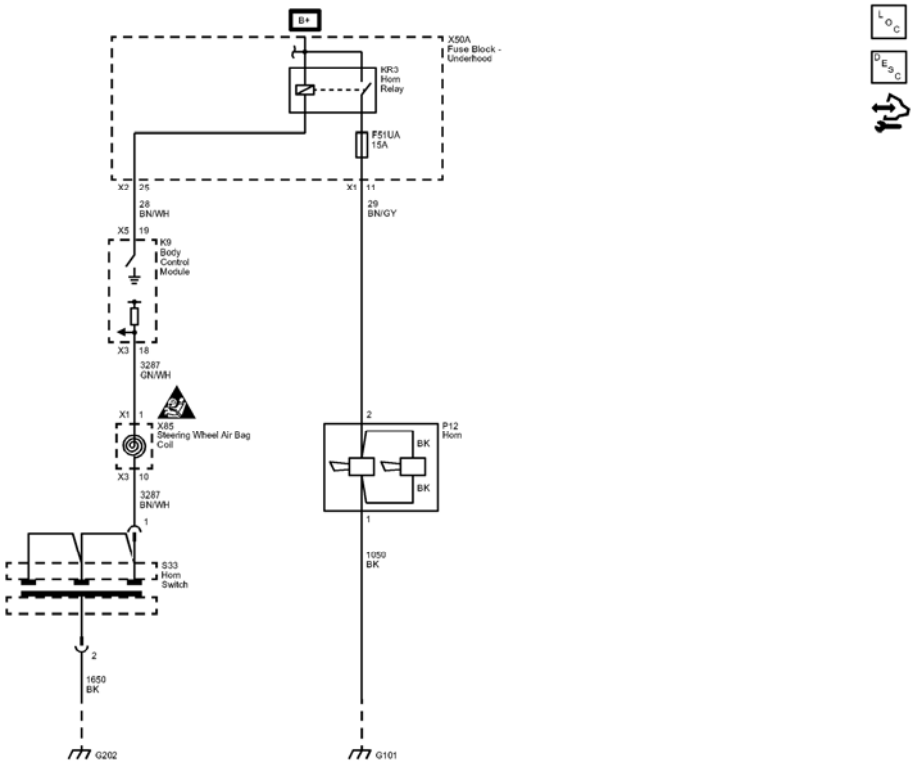

Fig. 1: Horn Wiring Schematics
Courtesy of GENERAL MOTORS COMPANY

Callout	Component Name
28	Horn Relay Control
28_BN/WH	28 BN/WH
CAV_19	19
CONN_X5	X5
CAV_25	25
CONN_X2	X2
29	Horn Control
29_BN/GY	29 BN/GY
CAV_2	2
CAV_11	11
CONN_X1	X1
3287	Horn Switch Signal
3287_GN/WH	3287 GN/WH
CAV_1	1
CONN_X1	X1
CAV_18	18
CONN_X3	X3
3287_BN/WH	3287 BN/WH
CAV_10	10
CONN_X3	X3
CAV_1	1
1650	Ground
1650_BK	1650 BK
CAV_2	2
1050	Ground
1050_BK	1050 BK
CAV 1	1
_BK	BK
BK	BK
F51UA	F51UA 15A
G101	G101
G202	G202
X50A	
K9	
S33	
KR3	
P12	
X85	

DIAGNOSTIC INFORMATION AND PROCEDURES

DIAGNOSTIC CODE INDEX

DIAGNOSTIC CODE INDEX

DTC	Description
DTC B2750	DTC B2750 Horn Relay Secondary Circuit

DTC B2750

Diagnostic Instructions

- Perform the **Diagnostic System Check - Vehicle** prior to using this diagnostic procedure.
- Review **Strategy Based Diagnosis** for an overview of the diagnostic approach.
- **Diagnostic Procedure Instructions** provides an overview of each diagnostic category.

DTC Descriptors

DTC B2750

Horn Relay Secondary Circuit

For symptom byte information refer to: **Symptom Byte List**

Diagnostic Fault Information

Circuit	Short to Ground	Open/High Resistance	Short to Voltage	Signal Performance
Control	B2750 02	B2750 04	B2750 01	-

Circuit/System Description

The Body Control Module provides a ground for the Horn printed circuit board relay within the underhood fuse block. The underhood fuse block will then provide B+ voltage to the horn control circuit, sounding the horn.

Conditions for Running the DTC

When the horn output is actively being requested by the Body Control Module.

Conditions for Setting the DTC

B2750 01

The Body Control Module detects a short to voltage in the horn relay control circuit.

B2750 02

The Body Control Module detects a short to ground in the horn relay control circuit.

B2750 04

The Body Control Module detects an open/high resistance in the horn relay control circuit.

Action Taken When the DTC Sets

The Body Control Module will command the horn when requested but the horn will be inoperative.

Conditions for Clearing the DTC

- The DTC clears when the fault is no longer detected.
- The current DTC will become history when the request for the output is removed.
- The history DTC will clear after 50 consecutive fault-free ignition cycles have occurred.

Reference Information

Schematic Reference

Horn Schematics

Connector End View Reference

COMPONENT CONNECTOR END VIEWS - INDEX

Description and Operation

Horns System Description and Operation

Electrical Information Reference

- **Circuit Testing**
- **Connector Repairs**
- **Testing for Intermittent Conditions and Poor Connections**
- **Wiring Repairs**

Scan Tool Reference

Control Module References for scan tool information

Circuit/System Verification

1. Ignition ON.
2. Verify the operation of the P12 Horn when commanding the Horn Relay On and Off with a scan tool.
    - **If the P12 Horn is always ON or always OFF**

      Refer to Circuit/System Testing below.

- **If the P12 Horn turns ON and OFF**

3. All OK.

Circuit/System Testing

1. Ignition OFF, disconnect the X1 harness connector at the X50A Fuse Block-Underhood, ignition ON.
2. Verify the P12 Horn is not activated.
   - **If the P12 Horn is activated**
   1. Ignition OFF, disconnect the harness connector at the P12 Horn, ignition ON.
   2. Test for less than 1 V between the control circuit terminal 2 and ground.
      - If 1 V or greater, repair the short to voltage on the circuit.
      - If less than 1 V, test or replace the P12 Horn.
   - **If the P12 Horn is not activated**
3. Connect a 15A fused jumper wire between the control circuit terminal 9 and B+.
4. Verify the P12 Horn activates.
   - **If the P12 Horn does not activate**
   1. Ignition OFF, remove the jumper wire, disconnect the harness connector at the P12 Horn, ignition ON.
   2. Test for infinite resistance between the control circuit and ground.
      - If less than Infinite resistance, repair the short to ground on the circuit.
      - If infinite resistance
   3. Test for less than 2 ohms in the control circuit end to end.
      - If 2 ohms or greater, repair the open/high resistance in the circuit.
      - If less than 2 ohms, test or replace the P12 Horn.
   - **If the P12 Horn activates**
5. Ignition OFF, connect the X1 harness connector at the X50A Fuse Block-Underhood. Disconnect the X5 harness connector at the K9 Body Control Module, ignition ON.
6. Verify the P12 Horn is not activated.
   - **If the P12 Horn is activated**
   1. Ignition OFF, disconnect the X2 harness connector at the X50A Fuse Block-Underhood.
   2. Test for infinite resistance between the control circuit terminal 19 X5 at the K9 Body Control Module and ground.
      - If less than Infinite resistance, repair the short to ground on the circuit.
      - If infinite resistance, test or replace the X50A Fuse Block-Underhood.
   - **If the P12 Horn is not activated**
7. Connect a 3 A fused jumper wire between the control circuit terminal 19 and ground.
8. Verify the P12 Horn activates.
   - **If the P12 Horn does not activate**
   1. Ignition OFF, remove the jumper wire, disconnect the X2 harness connector at the X50A Fuse

Block-Underhood, ignition ON.

2. Test for less than 1 V between the control circuit terminal 19 X5 at the K9 Body Control Module and ground.
    - If 1 V or greater, repair the short to voltage on the circuit.
    - If less than 1 V
3. Test for less than 2 ohms in the control circuit end to end.
    - If 2 ohms or greater, repair the open/high resistance in the circuit.
    - If less than 2 ohms, test or replace the X50A Fuse Block-Underhood.

- **If the P12 Horn activates**

9. Replace the K9 Body Control Module.

Repair Instructions

Perform the **Diagnostic Repair Verification** after completing the repair.

- **Fuse Block Replacement**
- **Control Module References** for Body Control Module replacement, programming and setup

SYMPTOMS - HORNS

IMPORTANT: The following steps must be completed before using the symptom tables:

1. **Perform Diagnostic System Check - Vehicle , before using the symptom tables in order to verify that all of the following are true:**
    - **There are no DTCs set**
    - **The control modules can communicate via the serial data link**
2. **Review the system operation in order to familiarize yourself with the system functions. Refer to Horns System Description and Operation.**

Visual/Physical Inspection

- Inspect for aftermarket devices which could affect the operation of the horn system. Refer to **Checking Aftermarket Accessories** .
- Inspect the easily accessible or visible system components for obvious damage or conditions which could cause the symptom.
- Perform the following if a horn buzzes or has a harsh tone.
    - Inspect for debris in the joint where the horn fastens to the vehicle.
    - Test the torque of the horn mounting hardware. The horn mounting hardware should be tightened to a torque of 10 N.m (7 lb ft).

Intermittent

Faulty electrical connections or wiring may be the cause of intermittent conditions. Refer to **Testing for**

Intermittent Conditions and Poor Connections .

Symptom List

Refer to a symptom diagnostic procedure **Horns Malfunction** in order to diagnose the symptom.

HORNS MALFUNCTION

Diagnostic Instructions

- Perform the **Diagnostic System Check - Vehicle** prior to using this diagnostic procedure.
- Review **Strategy Based Diagnosis** for an overview of the diagnostic approach.
- **Diagnostic Procedure Instructions** provides an overview of each diagnostic category.

Diagnostic Fault Information

Circuit	Short to Ground	Open/High Resistance	Short to Voltage	Signal Performance
Horn Switch Signal	1	3	3	-
Horn Relay Control	B2750 02	B2750 04	B2750 01	-
Horn Control	2	2	1	-
Horn Ground	-	2	-	-
Horn Switch Ground	-	3	-	-
1. Horns Always On 2. Horns Inoperative 3. Horns Inoperative From Horn Pad				

Circuit/System Description

The body control module (BCM) monitors the Horn Switch signal circuit, when the horn pad is pressed, the BCM detects the drop in the Horn Switch signal circuit and provides a ground for the Horn printed circuit board relay within the underhood fuse block. The underhood fuse block will then provide B+ voltage to the horn control circuit, sounding the horn.

Diagnostic Aids

OnStar® RemoteLink™ applications or "apps" downloads are available to owners of certain mobile devices. Unwanted or inadvertent horn activations have been associated with these applications to which the customer may be unaware. Contact the GM Technical Assistance Center regarding information on a remedy for this situation.

A short to ground in the horn relay control circuit or a short to voltage in the horn control circuit will cause the horns to sound continuously until the horns overheat and become inoperative.

Rotate the steering wheel while pressing the horn pad to identify intermittent and poor connections within the steering column.

If diagnosing a Horn- Poor Tone condition, inspect the following:

- Debris or water in the horn assembly
- Proper horn mounting hardware torque-Refer to **Fastener Tightening Specifications**.
- Debris in the joint where the horns attach to the vehicle
- Debris in direct contact with the horn
- Vehicle components vibrating while the horn is sounding

Reference Information

Schematic Reference

Horn Schematics

Connector End View Reference

COMPONENT CONNECTOR END VIEWS - INDEX

Description and Operation

Horns System Description and Operation

Electrical Information Reference

- **Circuit Testing**
- **Connector Repairs**
- **Testing for Intermittent Conditions and Poor Connections**
- **Wiring Repairs**

Scan Tool Reference

Control Module References for scan tool information

Circuit/System Verification

1. Ignition ON.
2. Verify the scan tool Horn Switch parameter changes between Active and Inactive when pressing and releasing the horn pad.
    - **If the parameter does not change**

      Refer to Circuit/System Testing below - Horn Switch Malfunction.

    - **If the parameter changes**
3. Verify the P12 Horn turns ON and OFF and emit a clear and even tone when commanding the Horn Relay On and Off with a scan tool.

- **If the P12 Horn does not turn ON and OFF**

  Refer to Circuit/System Testing below - Horns or Horn Command Malfunction.

- **If the sound emitted is not clear and even**

  Refer to Circuit/System Testing below - Horn - Poor Tone.

- **If the P12 Horn turns ON and OFF and emit a even and clear tone**

4. All OK.

Circuit/System Testing

Horn Switch Malfunction

1. Ignition OFF and all vehicle systems OFF, disconnect the harness connector at the S33 Horn Switch. It may take up to 2 minutes for all vehicle systems to power down.
2. Test for less than 10 ohms between the ground circuit terminal 2 and ground.
   - **If 10 ohms or greater**
   1. Ignition OFF.
   2. Test for less than 2 ohms in the ground circuit end to end.
      - If 2 ohms or greater, repair the open/high resistance in the circuit.
      - If less than 2 ohms, repair the open/high resistance in the ground connection.
   - **If less than 10 ohms**
3. Ignition ON.
4. Verify the scan tool Horn Switch parameter is Inactive.
   - **If not Inactive**
   1. Ignition OFF, disconnect the harness connector at the K9 Body Control Module.
   2. Test for infinite resistance between the signal circuit terminal 1 and ground.
      - If less than infinite resistance, repair the short to ground on the circuit.
      - If infinite resistance, replace the K9 Body Control Module.
   - **If Inactive**
5. Install a 3 A fused jumper wire between the signal circuit terminal 1 and the ground circuit terminal 2.
6. Verify the scan tool Horn Switch parameter is Active.
   - **If not Active**
   1. Ignition OFF, remove the jumper wire, disconnect the harness connector at the K9 Body Control Module, ignition ON.
   2. Test for less than 1 V between the signal circuit and ground.
      - If 1 V or greater, repair the short to voltage on the circuit.
      - If less than 1 V
   3. Test for less than 2 ohms in the signal circuit end to end.

- If 2 ohms or greater, repair the open/high resistance in the circuit.
- If less than 2 ohms, replace the K9 Body Control Module.

- **If Active**

7. Test or replace the S33 Horn Switch.

Horns or Horn Command Malfunction

1. Ignition OFF, and all vehicle systems OFF. Disconnect the harness connector at the P12 Horn. It may take up to 2 minutes for all vehicle systems to power down.
2. Test for less than 1 ohms between the ground circuit terminal 1 and ground.
   - **If 1 ohms or greater**
   1. Ignition OFF.
   2. Test for less than 2 ohms in the ground circuit end to end.
      - If 2 ohms or greater, repair the open/high resistance in the circuit.
      - If less than 2 ohms, repair the open/high resistance in the ground connection.
   - **If less than 1 ohms**
3. Connect a test lamp between the control circuit terminal 2 and ground, ignition ON.
4. Verify the test lamp does not turn ON and OFF when commanding the Horn Relay On and Off with a scan tool.
   - **If the test lamp turns ON and OFF**

     Test or replace the P12 Horn.

   - **If the test lamp does not turn ON and OFF**
5. Ignition OFF, connect the harness connector at the P12 Horn. Disconnect the X1 harness connector at the X50A Fuse Block-Underhood, ignition ON.
6. Verify the P12 Horn is not activated.
   - **If the P12 Horn is activated**
   1. Ignition OFF, disconnect the harness connector at the P12 Horn, ignition ON.
   2. Test for less than 1 V between the control circuit terminal 2 and ground.
      - If 1 V or greater, repair the short to voltage on the circuit.
      - If less than 1 V, test or replace the P12 Horn.
   - **If the P12 Horn is not activated**
7. Connect a 15 A fused jumper wire between the control circuit terminal 11 and B+.
8. Verify the P12 Horn activates.
   - **If the P12 Horn does not activate**
   1. Ignition OFF, remove the jumper wire, disconnect the harness connector at the P12 Horn, ignition ON.
   2. Test for infinite resistance between the control circuit and ground.
      - If less than Infinite resistance, repair the short to ground on the circuit.

- If infinite resistance

3. Test for less than 2 ohms in the control circuit end to end.
    - If 2 ohms or greater, repair the open/high resistance in the circuit.
    - If less than 2 ohms, test or replace the P12 Horn.
- **If the P12 Horn activates**

9. Ignition OFF, connect the X1 harness connector at the X50A Fuse Block-Underhood. Disconnect the X5 harness connector at the K9 Body Control Module, ignition ON.
10. Verify the P12 Horn is not activated.
    - **If the P12 Horn is activated**

    1. Ignition OFF, disconnect the X2 harness connector at the X50A Fuse Block-Underhood.
    2. Test for infinite resistance between the K9 Body Control Module control circuit terminal 19 X5 and ground.
        - If less than Infinite resistance, repair the short to ground on the circuit.
        - If infinite resistance, replace the X50A Fuse Block-Underhood.
    - **If the P12 Horn is not activated**
11. Connect a 3 A fused jumper wire between the control circuit terminal 19 and ground.
12. Verify the P12 Horn activates.
    - **If the P12 Horn does not activate**

    1. Ignition OFF, remove the jumper wire, disconnect the X2 harness connector at the X50A Fuse Block-Underhood, ignition ON.
    2. Test for less than 1 V between the K9 Body Control Module control circuit terminal 19 X5 and ground.
        - If 1 V or greater, repair the short to voltage on the circuit.
        - If less than 1 V
    3. Test for less than 2 ohms in the control circuit end to end.
        - If 2 ohms or greater, repair the open/high resistance in the circuit.
        - If less than 2 ohms, replace the X50A Fuse Block-Underhood.
    - **If the P12 Horn activates**
13. Replace the K9 Body Control Module.

Horn - Poor Tone

1. Ignition OFF and all vehicle systems OFF, disconnect the harness connector at the P12 Horn. It may take up to 2 minutes for all vehicle systems to power down.
2. Test for less than 1 ohms between the ground circuit terminal 1 and ground.
    - **If 1 ohms or greater**

    1. Ignition OFF.
    2. Test for less than 2 ohms in the ground circuit end to end.
        - If 2 ohms or greater, repair the high resistance in the circuit.

- If less than 2 ohms, repair high resistance in the ground connection.
- **If less than 1 ohms**

3. Ignition OFF, disconnect the X1 harness connector at the X50A Fuse Block-Underhood.
4. Test for less than 2 ohms between the P12 Horn control circuit terminal 2 and the X50A Fuse Block-Underhood control circuit terminal 11 X1.
   - **If 2 ohms or greater**

     Repair the high resistance in the control circuit.

   - **If less than 2 ohms**
5. Test or replace the P12 Horn.

Component Testing

Horn Test

1. Ignition OFF, disconnect the harness connector at the P12 Horn.
2. Install a 15 A fused jumper wire between the control terminal 2 and 12 V. Install a jumper wire between the ground terminal 1 and ground.
3. Verify the P12 Horn turns ON and OFF
   - **If the P12 Horn does not turn ON and OFF**

     Replace the P12 Horn.

   - **If the P12 Horn turns ON and OFF**
4. All OK

Horn Switch

1. Ignition OFF, disconnect the harness connector at the S33 Horn Switch.
2. Test for infinite resistance between the signal terminal 1 and the ground terminal 2 with the switch in the open position.
   - **If less than infinite resistance**

     Replace the S33 Horn Switch.

   - **If infinite resistance**
3. Test for less than 3 ohms between the signal terminal 1 and the ground terminal 2 with the switch in the closed position.
   - **If 3 ohms or greater**

     Replace the S33 Horn Switch.

   - **If less than 3 ohms**

4. All OK

Repair Instructions

Perform the **Diagnostic Repair Verification** after completing the repair.

- **Fuse Block Replacement**
- **Horn Replacement**
- **Steering Wheel Horn Contact Replacement**
- **Control Module References** for body control module replacement, programming and setup

REPAIR INSTRUCTIONS

HORN REPLACEMENT

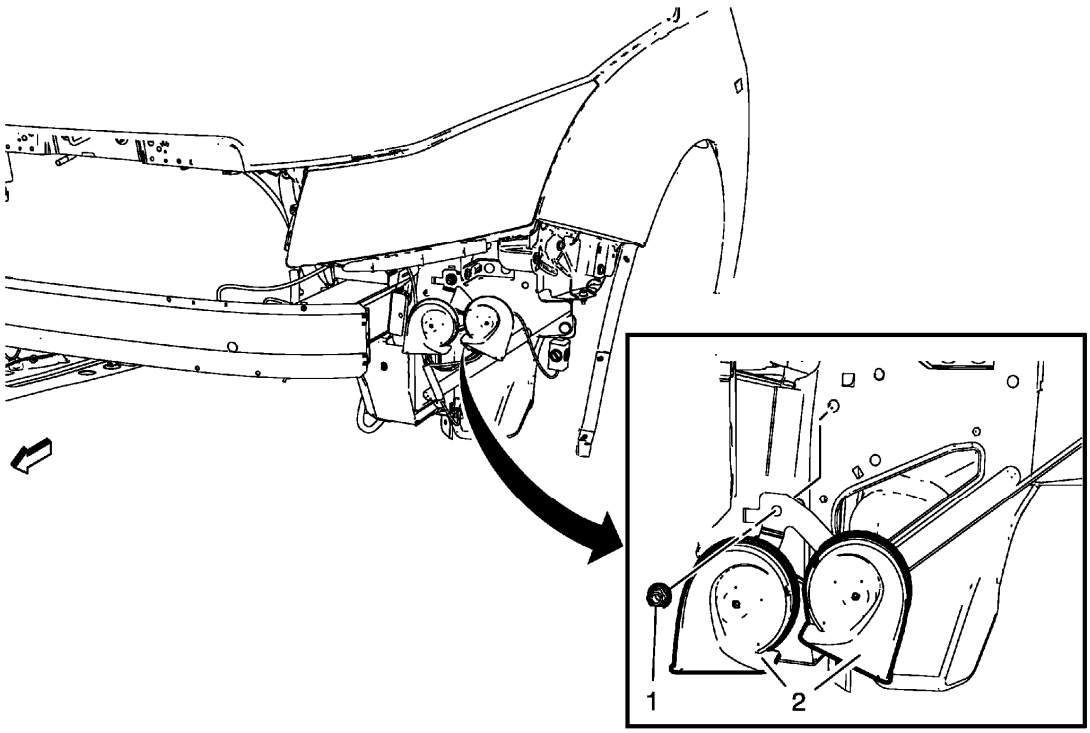

Fig. 2: Identifying Horn Components
Courtesy of GENERAL MOTORS COMPANY

Horn Replacement

Callout	Component Name
Preliminary Procedures Remove the front bumper fascia. Refer to **Front Bumper Fascia Replacement** .	
	Horn Nut

1	**CAUTION:** **Refer to Fastener Caution .** **Tighten** 17 N.m (13 lb ft)
2	Horn **Procedure** Disconnect electrical connectors.

STEERING WHEEL HORN CONTACT REPLACEMENT

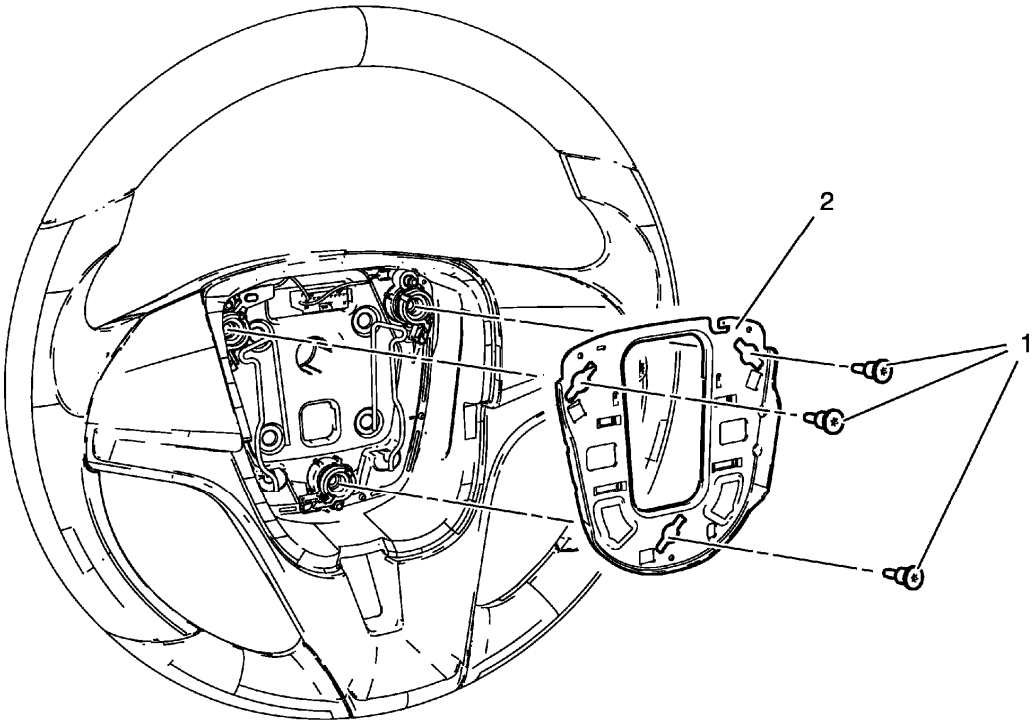

Fig. 3: Steering Wheel Horn Contact Components
Courtesy of GENERAL MOTORS COMPANY

Steering Wheel Horn Contact Replacement

Callout	Component Name
Preliminary Procedures Remove inflatable restraint steering wheel module. Refer to **Airbag Steering Wheel Module Replacement** .	
1	Steering Wheel Horn Contact Bolt (Qty: 3) **CAUTION:** **Refer to Fastener Caution .**

	Tighten 5.5 N.m (49 lb in)
2	Steering Wheel Horn Contact **Procedure** Disconnect the electrical connector.

DESCRIPTION AND OPERATION

HORNS SYSTEM DESCRIPTION AND OPERATION

System Description

The horn system consists of the following components:

- HORN fuse
- Horn relay
- Horn switch
- Horn assembly
- Body control module (BCM)

System Operation

The vehicle horn system is activated under the following conditions:

- When the horn switch is depressed
- The BCM commands the horns ON under any of the following conditions:
  - When the content theft deterrent system detects a vehicle intrusion-For further information refer to **Theft Systems Description and Operation** .
  - When the panic button is depressed on the remote control door lock transmitter-For further information refer to **Keyless Entry System Description and Operation (without BTM)** , **Keyless Entry System Description and Operation (with BTM)** .
  - When the keyless entry system is used to lock the vehicle, a horn chirp may sound to notify the driver that the vehicle has been locked. The notification feature may be enabled or disabled through personalization. For further information refer to **Keyless Entry System Description and Operation (without BTM)** , **Keyless Entry System Description and Operation (with BTM)** .
  - When the OnStar® system is used to sound the horns if equipped-For further information, refer to **OnStar Description and Operation** .

Circuit Operation

Battery positive voltage is applied at all times to the horn relay coil and the horn relay switch. Pressing either of the horn switches applies ground to the horn relay control circuit. The BCM may also apply ground to the horn relay control circuit as described above. When the horn relay control circuit is grounded, the horn relay is energized and battery positive voltage is applied to the horns through the horn control circuit. The horns sound

as long as ground is applied to the horn relay control circuit.

2013 ACCESSORIES & EQUIPMENT

Immobilizer - Cruze

SCHEMATIC WIRING DIAGRAMS

IMMOBILIZER WIRING SCHEMATICS

Immobilizer Wiring Schematics

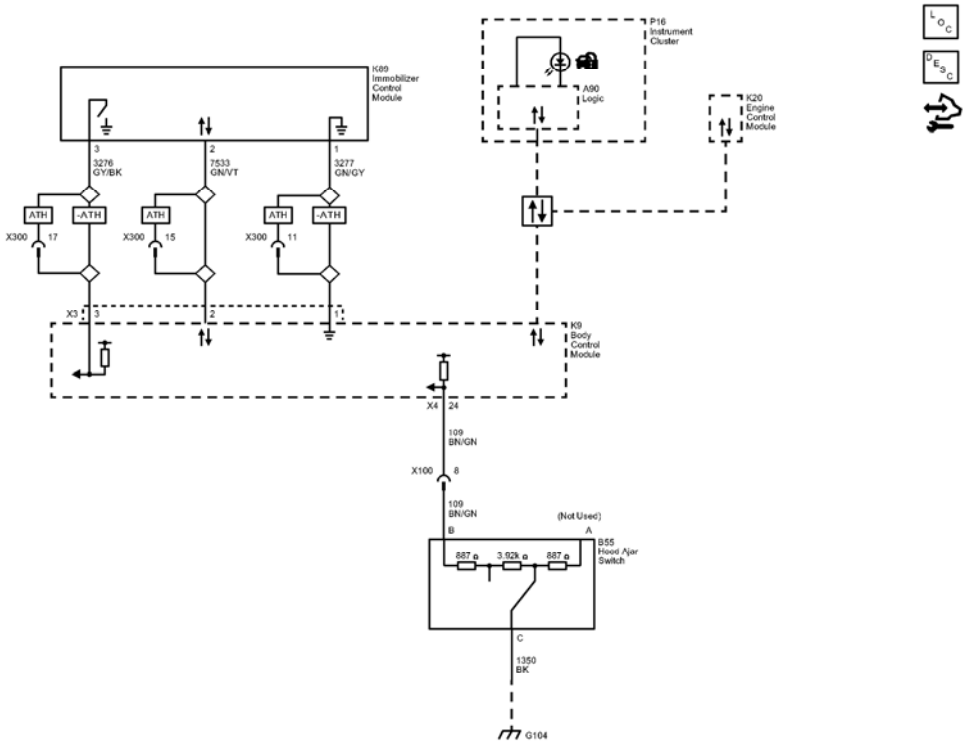

Fig. 1: Immobilizer Wiring Schematics
Courtesy of GENERAL MOTORS COMPANY

Callout	Component Name
3276	Vehicle Anti-Theft System Immobilizer Supply Voltage
CAV_3	3
CONN_X3	X3
CAV_3	3
3276_GY/BK	3276 GY/BK
7533	Linear Interconnect Network Bus 11

7533_GN/VT	7533 GN/VT
CAV_2	2
CAV_2	2
3277	Vehicle Anti-Theft System Immobilizer Return
3277_GN/GY	3277 GN/GY
CAV_1	1
CAV_1	1
109	Hood Ajar Switch Signal
CAV_B	B
CAV_24	24
CONN_X4	X4
CAV_A	A
109_BN/GN	109 BN/GN
109_BN/GN	109 BN/GN
1350	Ground
1350_BK	1350 BK
CAV_C	C
SD	Serial Data
Data_Communication_Schematics_REF	Data Communication Schematics
CAV_17	17
CAV_15	15
CAV_11	11
CAV_8	8
ATH	LOCK CONTROL, ENTRY-REMOTE ENTRY, EXTENDED RANGE, PASSIVE ENTRY, ALL DOORS
ATH	LOCK CONTROL, ENTRY-REMOTE ENTRY, EXTENDED RANGE, PASSIVE ENTRY, ALL DOORS
ATH	LOCK CONTROL, ENTRY-REMOTE ENTRY, EXTENDED RANGE, PASSIVE ENTRY, ALL DOORS
ATH	LOCK CONTROL, ENTRY-REMOTE ENTRY, EXTENDED RANGE, PASSIVE ENTRY, ALL

	DOORS
ATH	LOCK CONTROL, ENTRY-REMOTE ENTRY, EXTENDED RANGE, PASSIVE ENTRY, ALL DOORS
G104	G104
X300	X300
X300	X300
X300	X300
X100	X100
K89	
A90	Logic
K20	
K9	
P16	
B55	

DIAGNOSTIC INFORMATION AND PROCEDURES

DIAGNOSTIC CODE INDEX

DIAGNOSTIC CODE INDEX

DTC	Description
DTC B2955 (with BTM)	DTC B2955 Security Sensor Data Circuit
DTC B2955 (without BTM)	DTC B2955 Security Sensor Data Circuit
DTC B302A	DTC B302A Mobile Telephone Communications Interface Requested Immobilization
DTC B3031	DTC B3031 Security Controller In Learn Mode
DTC B3055	DTC B3055 No Transponder Modulation or No Transponder
DTC B305C	DTC B305C Immobilizer Transponder of Wrong Type Programmed
DTC B3060	DTC B3060 Unprogrammed Transponder Identification Code Received
DTC B389A	DTC B389A Environment Identification
DTC B3902	DTC B3902 Incorrect Immobilizer Identifier Received
DTC B3935	DTC B3935 Transponder Authentication
DTC B3976	DTC B3976 Unconfigured Transponder
DTC B3984	DTC B3984 Device 1 Environment Identifier Not Programmable
DTC P0513	DTC P0513 Immobilizer Key Incorrect
DTC P0633	DTC P0633 Immobilizer Key Not Programmed

DTC P162B	DTC P162B Remote Vehicle Speed Limiting Signal Message Counter Incorrect
DTC P1630	DTC P1630 Immobilizer Learn Mode Active
DTC P1631	DTC P1631 Immobilizer Fuel Enable Signal Not Correct
DTC P1649	DTC P1649 Immobilizer Security Code Not Programmed

DTC B2955 (WITH BTM)

Diagnostic Instructions

- Perform the **Diagnostic System Check - Vehicle** prior to using this diagnostic procedure.
- Review **Strategy Based Diagnosis** for an overview of the diagnostic approach.
- **Diagnostic Procedure Instructions** provides an overview of each diagnostic category.

DTC Descriptor

DTC B2955

Security Sensor Data Circuit

For symptom byte information, refer to **Symptom Byte List** .

Diagnostic Fault Information

Circuit	Short to Ground	Open/High Resistance	Short to Voltage	Signal Performance
Ignition	B2955 00	B2955 00	-	-
Serial Data	B2955 00	B2955 00	B2955 00	B2955 00
Low Reference	-	B2955 00	-	-

Circuit/System Description

When a keyless entry transmitter is inserted into the transmitter pocket/slot and the ignition mode switch is pressed, the transponder embedded in the transmitter is energized by the immobilizer antenna exciter coil. The transponder transmits a signal to the body control module (BCM). The BCM then compares this value to a value stored in memory. If the value is correct, the BCM will send the prerelease password via the serial data circuit to the engine control module (ECM). If the learned key code does not match or a transponder value is not received, the BCM will send the start disable password to the ECM.

Conditions for Running the DTC

Ignition is in the Accessory or Run position.

Conditions for Setting the DTC

The BCM detects a circuit fault on the immobilizer antenna circuits.

Action Taken When the DTC Sets

- Vehicle starting will be disabled.
- The security indicator in the instrument cluster will be illuminated. A service message will be displayed in the driver information center.

Conditions for Clearing the DTC

- A current DTC will be cleared when the condition for setting the DTC are no longer present.
- A history DTC will be cleared after 100 malfunction-free ignition cycles.

Reference Information

Schematic Reference

Immobilizer Schematics

Connector End View Reference

COMPONENT CONNECTOR END VIEWS - INDEX

Description and Operation

Immobilizer Description and Operation

Electrical Information Reference

- **Circuit Testing**
- **Connector Repairs**
- **Testing for Intermittent Conditions and Poor Connections**
- **Wiring Repairs**

Scan Tool Reference

Control Module References for scan tool information

Circuit/System Testing

1. Ignition OFF and all vehicle systems OFF, disconnect the harness connector at the K89 Immobilizer Control Module. It may take up to 2 min for all vehicle systems to power down.
2. Verify a test lamp illuminates between the low reference circuit terminal 1 and B+.
    - **If the test lamp does not illuminate**
    1. Ignition OFF, disconnect the harness connector at the K9 Body Control Module.

2. Test for less than 2 ohms in the low reference circuit end to end.
    - If 2 ohms or greater, repair the open/high resistance in the circuit.
    - If less than 2 ohms, replace the K9 Body Control Module.
- **If the test lamp illuminates**

3. Ignition ON.

NOTE: In some instances, the K9 Body Control Module may only apply voltage for 3 s immediately after the ignition is turned ON. It may be necessary to monitor the DMM while turning the ignition ON to observe the voltage.

4. Test for greater than 9 V between the ignition circuit terminal 3 and ground.
    - **If 9 V or less**
    1. Ignition OFF, disconnect the harness connector at the K9 Body Control Module.
    2. Test for infinite resistance between the ignition circuit and ground.
        - If less than infinite resistance, repair the short to ground on the circuit.
        - If infinite resistance
    3. Test for less than 2 ohms in the ignition circuit end to end.
        - If 2 ohms or greater, repair the open/high resistance in the circuit.
        - If less than 2 ohms, replace the K9 Body Control Module.
    - **If greater than 9 V**
5. Ignition ON.
6. Test for 10-13 V between the serial data circuit terminal 2 and ground.
    - **If less than 10 V**
    1. Ignition OFF, disconnect the harness connector at the K9 Body Control Module.
    2. Test for infinite resistance between the serial data circuit and ground.
        - If less than infinite resistance, repair the short to ground on the circuit.
        - If infinite resistance
    3. Test for less than 2 ohms in the serial data circuit end to end.
        - If 2 ohms or greater, repair the open/high resistance in the circuit.
        - If less than 2 ohms, replace the K9 Body Control Module.
    - **If greater than 13 V**
    1. Ignition OFF, disconnect the harness connector at the K9 Body Control Module, ignition ON.
    2. Test for less than 1 V between the signal circuit and ground.
        - If 1 V or greater, repair the short to voltage on the circuit.
        - If less than 1 V, replace the K9 Body Control Module.
    - **If between 10-13 V**
7. Replace the K89 Immobilizer Control Module.
8. Verify DTC B2955 does not set while operating the vehicle under the conditions for running the DTC.

- **If DTC B2955 is set**

  Replace the K9 Body Control Module.

- **If DTC B2955 is not set**

9. All OK.

Repair Instructions

Perform the **Diagnostic Repair Verification** after completing the repair.

Control Module References for body control module or immobilizer control module replacement, programming, and setup

DTC B2955 (WITHOUT BTM)

Diagnostic Instructions

- Perform the **Diagnostic System Check - Vehicle** prior to using this diagnostic procedure.
- Review **Strategy Based Diagnosis** for an overview of the diagnostic approach.
- **Diagnostic Procedure Instructions** provides an overview of each diagnostic category.

DTC Descriptor

DTC B2955

Security Sensor Data Circuit

For symptom byte information, refer to **Symptom Byte List** .

Diagnostic Fault Information

Circuit	Short to Ground	Open/High Resistance	Short to Voltage	Signal Performance
B+	B2955 00	B2955 00	-	-
Serial Data	B2955 00	B2955 00	B2955 00	B2955 00
Low Reference	-	B2955 00	-	-

Circuit/System Description

When an ignition key is inserted into the ignition lock cylinder and the ignition is switched ON, the transponder embedded in the key is energized by the exciter coil surrounding the ignition lock cylinder. The transponder transmits a signal to the body control module (BCM). The BCM then compares this value to a value stored in memory. If the value is correct, the BCM will send the prerelease password via the serial data circuit to the engine control module (ECM). If the learned key code does not match or a transponder value is not received, the BCM will send the start disable password to the ECM.

Conditions for Running the DTC

Ignition is in the Accessory or Run position.

Conditions for Setting the DTC

The BCM detects a circuit fault on the immobilizer antenna circuits.

Action Taken When the DTC Sets

- Vehicle starting will be disabled.
- The security indicator in the instrument cluster will be illuminated. A service message will be displayed in the driver information center.

Conditions for Clearing the DTC

- A current DTC will be cleared when the condition for setting the DTC are no longer present.
- A history DTC will be cleared after 100 malfunction-free ignition cycles.

Reference Information

Schematic Reference

Immobilizer Schematics

Connector End View Reference

COMPONENT CONNECTOR END VIEWS - INDEX

Description and Operation

Immobilizer Description and Operation

Electrical Information Reference

- **Circuit Testing**
- **Connector Repairs**
- **Testing for Intermittent Conditions and Poor Connections**
- **Wiring Repairs**

Scan Tool Reference

Control Module References for scan tool information

Circuit/System Testing

1. Ignition OFF and all vehicle systems OFF, disconnect the harness connector at the K89 Immobilizer

Control Module. It may take up to 2 min for all vehicle systems to power down.

2. Verify a test lamp illuminates between the low reference circuit terminal 1 and B+.
    - **If the test lamp does not illuminate**
    1. Ignition OFF, disconnect the harness connector at the K9 Body Control Module.
    2. Test for less than 2 ohms in the low reference circuit end to end.
        - If 2 ohms or greater, repair the open/high resistance in the circuit.
        - If less than 2 ohms, replace the K9 Body Control Module.
    - **If the test lamp illuminates**
3. Ignition ON.

NOTE: In some instances, the K9 Body Control Module may only apply voltage for 3 s immediately after the ignition is turned ON. It may be necessary to monitor the DMM while turning the ignition ON to observe the voltage.

4. Test for greater than 9 V between the B+ circuit terminal 3 and ground.
    - **If 9 V or less**
    1. Ignition OFF, disconnect the harness connector at the K9 Body Control Module.
    2. Test for infinite resistance between the B+ circuit and ground.
        - If less than infinite resistance, repair the short to ground on the circuit.
        - If infinite resistance
    3. Test for less than 2 ohms in the B+ circuit end to end.
        - If 2 ohms or greater, repair the open/high resistance in the circuit.
        - If less than 2 ohms, replace the K9 Body Control Module.
    - **If greater than 9 V**
5. Test for greater than 4 V between the serial data circuit terminal 2 and ground.
    - **If 4 V or less**
    1. Ignition OFF, disconnect the harness connector at the K9 Body Control Module.
    2. Test for infinite resistance between the serial data circuit and ground.
        - If less than infinite resistance, repair the short to ground on the circuit.
        - If infinite resistance
    3. Test for less than 2 ohms in the serial data circuit end to end.
        - If 2 ohms or greater, repair the open/high resistance in the circuit.
        - If less than 2 ohms, replace the K9 Body Control Module.
    - **If greater than 4 V**
6. Ignition OFF, disconnect the X3 harness connector at the K9 Body Control Module, ignition ON.
7. Test for less than 1 V between the K89 Immobilizer Control Module serial data circuit terminal 2 and ground.
    - **If 1 V or greater**

Repair the short to voltage on the circuit.

- **If less than 1 V**

8. Replace the K89 Immobilizer Control Module.
9. Verify DTC B2955 does not set while operating the vehicle under the conditions for running the DTC.
   - **If DTC B2955 is set**

     Replace the K9 Body Control Module.

   - **If DTC B2955 is not set**
10. All OK.

Repair Instructions

Perform the **Diagnostic Repair Verification** after completing the repair.

Control Module References for body control module or immobilizer control module replacement, programming, and setup.

DTC B302A

Diagnostic Instructions

- Perform the **Diagnostic System Check - Vehicle** prior to using this diagnostic procedure.
- Review **Strategy Based Diagnosis** for an overview of the diagnostic approach.
- **Diagnostic Procedure Instructions** provides an overview of each diagnostic category.

DTC Descriptor

DTC B302A

Mobile Telephone Communications Interface Requested Immobilization

For symptom byte information, refer to **Symptom Byte List** .

Circuit/System Description

As part of the vehicle telematics enhanced services, a request may be sent to the body control module (BCM) to disable vehicle starting. If a valid message is received by the BCM requesting that starting be disabled, the start enable message will not be sent to the engine control module (ECM).

Conditions for Running the DTC

The BCM continuously monitors for this DTC.

Conditions for Setting the DTC

A start disable message has been received from the telematics module.

Action Taken When the DTC Sets

Vehicle starting will be suspended and the security indicator will be illuminated.

Conditions for Clearing the DTC

- A current DTC will clear when the telematics start disable request is no longer received.
- A history DTC will clear after 100 ignition cycles in which the telematic start disable request is not seen.

Diagnostic Aids

- DTC B302A is only an indicator that a start disable request has been received from the vehicle telematics system and does not indicate a fault in the immobilizer or telematics system.
- To remove the start disable request, the vehicle account must be updated with the OnStar stolen vehicle team. This will require that a law enforcement agency or the customer contact OnStar to indicate that the vehicle has been successfully and safely recovered.
- If the OnStar system has been disabled or damage during a theft attempt, the system will not be able to communicate and the start disable request will not be removed. OnStar must be functioning properly for the start disable request to be removed.

Reference Information

Schematic Reference

Immobilizer Schematics

Connector End View Reference

COMPONENT CONNECTOR END VIEWS - INDEX

Description and Operation

Immobilizer Description and Operation

Electrical Information Reference

- **Circuit Testing**
- **Connector Repairs**
- **Testing for Intermittent Conditions and Poor Connections**
- **Wiring Repairs**

Scan Tool Reference

Control Module References for scan tool information

Circuit/System Verification

1. Verify the OnStar system is not damaged and is operating properly, with no DTCs set.
    - **If the OnStar system is damaged, inoperative, or any OnStar DTCs are set**

      These concerns must be corrected before the start disable can be removed.

    - **If the OnStar system is not damaged and is operating properly**
2. Press the blue OnStar button and ask the advisor to be transferred to the stolen vehicle team to verify the vehicle account has been updated.
3. Verify that OnStar is aware the vehicle has been recovered and that the vehicle account has been updated.
    - **If OnStar has not been notified that the vehicle has been recovered**

      Contact the customer and advise them that for security purposes, they must contact OnStar and the law enforcement agency to update the vehicle account.

    - **If the account has been properly updated**
4. Once the vehicle account has been updated and the start disable request has been removed, DTC B302A will transition to a history DTC. Clear the history DTC.

DTC B3031

Diagnostic Instructions

- Perform the **Diagnostic System Check - Vehicle** prior to using this diagnostic procedure.
- Review **Strategy Based Diagnosis** for an overview of the diagnostic approach.
- **Diagnostic Procedure Instructions** provides an overview of each diagnostic category.

DTC Descriptor

DTC B3031

Security Controller In Learn Mode

For symptom byte information, refer to **Symptom Byte List** .

Circuit/System Description

When learning a coded key, the body control module (BCM) is placed in learn mode. DTC B3031 will set automatically as an indicator that the system is in learn mode and not as a fault indicator. Once the coded key is learned, learn mode will be exited and the DTC cleared. If the BCM does not exit learn mode, DTC B3031 will remain current and indicate a fault. The instrument cluster security indicator will illuminate and the driver information center will display a message.

Conditions for Running the DTC

The immobilizer system is the learn coded keys state.

Conditions for Setting the DTC

The DTC will set any time the BCM enters the learn coded keys state.

Action Taken When the DTC Sets

The security indicator will illuminate. The driver information center will display a message.

Conditions for Clearing the DTC

- A current DTC B3031 will be cleared upon the successful exit of learn mode.
- A history DTC will be cleared after 100 malfunction-free ignition cycles.

Reference Information

Schematic Reference

Immobilizer Schematics

Connector End View Reference

COMPONENT CONNECTOR END VIEWS - INDEX

Description and Operation

Immobilizer Description and Operation

Electrical Information Reference

- **Circuit Testing**
- **Connector Repairs**
- **Testing for Intermittent Conditions and Poor Connections**
- **Wiring Repairs**

Scan Tool Reference

Control Module References for scan tool information

Circuit/System Verification

1. Verify all available keys are correct for the vehicle. This can be accomplished by comparing the part number that is laser etched on the key to the part number listed in the parts catalog.
    - **If a key is not correct**

Replace the key

- **If all keys are correct**

2. Perform the Replacing Keys procedure. Refer to **Key with Integrated Transmitter Programming (with BTM)**, **Key with Integrated Transmitter Programming (without BTM)**.
3. Verify the K9 Body Control Module learns the vehicle key and exits the learn coded key state. The scan tool Master Keys Learned parameter should increment to 1.
   - **If the K9 Body Control Module does not exit the learn coded key state after the programming attempt**

     Replace the K9 Body Control Module

   - **If the K9 Body Control Module exits the learn coded key state after the programming attempt**
4. All OK.

Repair Instructions

Perform the **Diagnostic Repair Verification** after completing the repair.

Control Module References for body control module replacement, programming, and setup.

DTC B3055

Diagnostic Instructions

- Perform the **Diagnostic System Check - Vehicle** prior to using this diagnostic procedure.
- Review **Strategy Based Diagnosis** for an overview of the diagnostic approach.
- **Diagnostic Procedure Instructions** provides an overview of each diagnostic category.

DTC Descriptor

DTC B3055

No Transponder Modulation or No Transponder

For symptom byte information, refer to **Symptom Byte List** .

Circuit/System Description

Without BTM and/or ATH/ATS

When an ignition key is inserted into the ignition lock cylinder and the ignition is switched ON, the transponder embedded in the key is energized by the exciter coil surrounding the ignition lock cylinder. The transponder transmits a signal to the body control module (BCM). The BCM then compares this value to a value stored in memory. If the value is correct, the BCM will send the prerelease password via the serial data circuit to the

engine control module (ECM). If the learned key code does not match or a transponder value is not received, the BCM will send the start disable password to the ECM.

With BTM and/or ATH/ATS

When a ignition key is inserted into the key pocket/slot and the ignition mode switch is pressed, the transponder embedded in the key is energized by the immobilizer antenna exciter coil. The transponder transmits a signal to the body control module (BCM). The BCM then compares this value to a value stored in memory. If the value is correct, the BCM will send the prerelease password via the serial data circuit to the engine control module (ECM). If the learned key code does not match or a transponder value is not received, the BCM will send the start disable password to the ECM.

Conditions for Running the DTC

Ignition is in the Accessory or Run position.

Conditions for Setting the DTC

The BCM is unable to measure the ignition key transponder value.

Action Taken When the DTC Sets

- Vehicle starting will be disabled.
- The security indicator will illuminate. A service message will be displayed in the driver information center.

Conditions for Clearing the DTC

- A current DTC will be cleared when the BCM detects a valid transponder value from the ignition key.
- A history DTC will be cleared after 100 malfunction-free ignition cycles.

Diagnostic Aids

- Because DTC B3055 may be caused by a malfunctioning vehicle key, it is necessary to have all available vehicle keys at the time of diagnosis. A possible scenario would be a customer leaving the vehicle with a spare key during the service visit, but the key which they use everyday, not the spare key, is the cause of the DTC. Not having all available keys in this instance would result in the customer concern not being duplicate or a misdiagnosis.
- Ensure that the immobilizer control module is properly installed and fully seated. An audible and/or tactile click will indicate that the immobilizer control module is fully seated. To ensure proper transponder communication, the key must be in a specific location in relation to the immobilizer control module. If the immobilizer control module is not fully seated, transponder communication may not occur and DTC B3055 will set.
- For vehicle without BTM and/or ATH/ATS, verify the customer is not attempting to turn the ignition with the vehicle key partially folded. To ensure proper transponder communication, the key must be in a specific location in relation to the immobilizer control module. Attempting to start the vehicle with the key in the ignition and partially folded will result in no transponder communication and DTC B3055 will

set.

Reference Information

Schematic Reference

Immobilizer Schematics

Connector End View Reference

COMPONENT CONNECTOR END VIEWS - INDEX

Description and Operation

Immobilizer Description and Operation

Electrical Information Reference

- **Circuit Testing**
- **Connector Repairs**
- **Testing for Intermittent Conditions and Poor Connections**
- **Wiring Repairs**

Scan Tool Reference

Control Module References for scan tool information

Circuit/System Verification

Without BTM and/or ATH/ATS

1. Ignition ON.
2. Verify that DTC B1370, B1380, or B1441 is not set.
   - **If any of the DTCs are set**

     Refer to **Diagnostic Trouble Code (DTC) List - Vehicle** .

   - **If none of the DTCs are set**
3. Verify the scan tool body control module Accessory parameter changes between Active and Inactive when turning the ignition ON and OFF.
   - **If the parameter does not change**

     Refer to **Vehicle Will Not Change Power Mode** .

   - **If the parameter changes**

4. Verify all available keys are correct for the vehicle. This can be accomplished by comparing the part number that is laser etched on the key to the part number listed in the parts catalog.
    - **If a key is not correct**

      Replace the appropriate key.

    - **If all keys are correct**
5. Verify that DTC B3055 does not set while attempting to start the vehicle which each available key.
    - **If DTC B3055 sets when attempting to start the vehicle with only one of the available keys**

      Replace the appropriate key.

    - **If DTC B3055 sets when attempting to start the vehicle with all of the available keys**

      Replace the K89 Immobilizer Control Module.

    - **If DTC B3055 does not set**
6. All OK.

With BTM and/or ATH/ATS

1. Ignition ON.
2. Verify that DTC B1370, B1380, or B1441 is not set.
    - **If any of the DTCs are set**

      Refer to **Diagnostic Trouble Code (DTC) List - Vehicle** .

    - **If none of the DTCs are set**
3. Verify the scan tool body control module Accessory parameter changes between Active and Inactive when turning the ignition ON and OFF.
    - **If the parameter does not change**

      Refer to **Power Mode Mismatch** .

    - **If the parameter changes**
4. Verify all available keys are correct for the vehicle. This can be accomplished by comparing the part number that is laser etched on the key to the part number listed in the parts catalog.
    - **If a key is not correct**

      Replace the appropriate key.

    - **If all keys are correct**
5. Remove the battery from each of the available vehicle keys.
6. Verify that DTC B3055 does not set while attempting to start the vehicle which each available key. To

start the vehicle with the key battery removed, the key must be placed in the key pocket/slot.

- **If DTC B3055 sets when attempting to start the vehicle with only one of the available keys**

  Replace the appropriate key.

- **If DTC B3055 sets when attempting to start the vehicle with all of the available keys**

  Replace the K89 Immobilizer Control Module.

- **If DTC B3055 does not set**

7. All OK.

Repair Instructions

Perform the **Diagnostic Repair Verification** after completing the repair.

Control Module References for immobilizer control module replacement, programming, and setup.

DTC B305C

Diagnostic Instructions

- Perform the **Diagnostic System Check - Vehicle** prior to using this diagnostic procedure.
- Review **Strategy Based Diagnosis** for an overview of the diagnostic approach.
- **Diagnostic Procedure Instructions** provides an overview of each diagnostic category.

DTC Descriptor

DTC B305C

Immobilizer Transponder of Wrong Type Programmed

For symptom byte information, refer to **Symptom Byte List** .

Circuit/System Description

Without BTM and/or ATH/ATS

When an ignition key is inserted into the ignition lock cylinder and the ignition is switched ON, the transponder embedded in the key is energized by the exciter coil surrounding the ignition lock cylinder. The transponder transmits a signal to the body control module (BCM). The BCM then compares this value to a value stored in memory. If the value is correct, the BCM will send the prerelease password via the serial data circuit to the engine control module (ECM). If the learned key code does not match or a transponder value is not received, the BCM will send the start disable password to the ECM.

With BTM and/or ATH/ATS

When a keyless entry transmitter is inserted into the transmitter pocket/slot and the ignition mode switch is pressed, the transponder embedded in the transmitter is energized by the immobilizer antenna exciter coil. The transponder transmits a signal to the body control module (BCM). The BCM then compares this value to a value stored in memory. If the value is correct, the BCM will send the prerelease password via the serial data circuit to the engine control module (ECM). If the learned key code does not match or a transponder value is not received, the BCM will send the start disable password to the ECM.

Conditions for Running the DTC

- Ignition is in the Accessory or Run position
- Battery voltage is greater than 9 volts
- Transponder authentication has occurred

Conditions for Setting the DTC

- The programed transponder type does not match the equipped system on the vehicle.
- A transponder used for vehicles without BTM and/or ATH/ATS has been programmed to a vehicle with BTM and/or ATH/ATS.
- A transponder used for vehicles with BTM and/or ATH/ATS has been programmed to a vehicle without BTM and/or ATH/ATS.

Action Taken When the DTC Sets

No action is taken.

Conditions for Clearing the DTC

- A current DTC will be cleared when the BCM detects a programed transponder type that matches the equipped system on the vehicle.
- A history DTC will be cleared after 100 malfunction-free ignition cycles.

Reference Information

Schematic Reference

Immobilizer Schematics

Connector End View Reference

COMPONENT CONNECTOR END VIEWS - INDEX

Description and Operation

Immobilizer Description and Operation

Electrical Information Reference

- **Circuit Testing**
- **Connector Repairs**
- **Testing for Intermittent Conditions and Poor Connections**
- **Wiring Repairs**

Scan Tool Reference

Control Module References for scan tool information

Circuit/System Verification

1. Ignition ON.
2. Verify all available keys/transmitters are correct for the vehicle. This can be accomplished by comparing the part number that is laser etched on the key to the part number listed in the parts catalog.
   - **If a key is not correct**

     Replace the appropriate key.

   - **If all keys are correct**
3. Verify the scan tool Key Part Number parameter displays a Key Part Number when turning the ignition ON with each key.
   - **If a Key Part Number is not read**

     Replace the appropriate key.

   - **If a Key Part Number is read for each key**
4. All OK.

DTC B3060

Diagnostic Instructions

- Perform the **Diagnostic System Check - Vehicle** prior to using this diagnostic procedure.
- Review **Strategy Based Diagnosis** for an overview of the diagnostic approach.
- **Diagnostic Procedure Instructions** provides an overview of each diagnostic category.

DTC Descriptor

DTC B3060

Unprogrammed Transponder Identification Code Received

For symptom byte information, refer to **Symptom Byte List** .

Circuit/System Description

Without BTM and/or ATH/ATS

When an ignition key is inserted into the ignition lock cylinder and the ignition is switched ON, the transponder embedded in the key is energized by the exciter coil surrounding the ignition lock cylinder. The transponder transmits a signal to the body control module (BCM). The BCM then compares this value to a value stored in memory. If the value is correct, the BCM will send the prerelease password via the serial data circuit to the engine control module (ECM). If the learned key code does not match or a transponder value is not received, the BCM will send the start disable password to the ECM.

With BTM and/or ATH/ATS

When a keyless entry transmitter is inserted into the transmitter pocket/slot and the ignition mode switch is pressed, the transponder embedded in the transmitter is energized by the immobilizer antenna exciter coil. The transponder transmits a signal to the body control module (BCM). The BCM then compares this value to a value stored in memory. If the value is correct, the BCM will send the prerelease password via the serial data circuit to the engine control module (ECM). If the learned key code does not match or a transponder value is not received, the BCM will send the start disable password to the ECM.

Conditions for Running the DTC

Ignition is in the Accessory or Run position.

Conditions for Setting the DTC

The transponder value measured by the BCM is incorrect or not learned to the vehicle.

Action Taken When the DTC Sets

- Vehicle starting will be disabled.
- The security indicator in the instrument cluster will be illuminated. The driver information center will display a service message.

Conditions for Clearing the DTC

- A current DTC will be cleared when the BCM detects a valid transponder value from the ignition key.
- A history DTC will be cleared after 100 malfunction-free ignition cycles.

Reference Information

Schematic Reference

Immobilizer Schematics

Connector End View Reference

COMPONENT CONNECTOR END VIEWS - INDEX

Description and Operation

Immobilizer Description and Operation

Electrical Information Reference

- **Circuit Testing**
- **Connector Repairs**
- **Testing for Intermittent Conditions and Poor Connections**
- **Wiring Repairs**

Scan Tool Reference

Control Module References for scan tool information

Circuit/System Verification

1. Perform the Replacing Keys procedure. Refer to **Key with Integrated Transmitter Programming (with BTM)**, **Key with Integrated Transmitter Programming (without BTM)**.
2. Verify the K9 Body Control Module learns the vehicle key. The scan tool Master Keys Learned parameter should increment to indicate another key has been learned.
   - **If the BCM does not learn the key**

     Replace the key.

   - **If the BCM learns the key**
3. All OK.

DTC B389A

Diagnostic Instructions

- Perform the **Diagnostic System Check - Vehicle** prior to using this diagnostic procedure.
- Review **Strategy Based Diagnosis** for an overview of the diagnostic approach.
- **Diagnostic Procedure Instructions** provides an overview of each diagnostic category.

DTC Descriptor

DTC B389A

Environment Identification

For symptom byte information, refer to **Symptom Byte List** .

Circuit/System Description

When certain modules are programmed and configured during installation, the module learns a specific environment identifier which is unique to the vehicle. The environment identifier is used to prevent the swapping modules between vehicles. The body control module (BCM) is the keeper of the environment identifier. The Instrument Cluster, Electronic Brake Control Module, HVAC Control Module, Inflatable Restraint Sensing and Diagnostic Module, engine control module (ECM), and Steering Column Lock Module (if equipped) each learn the environment identifier during their configuration process. During vehicle operation, the BCM sends the immobilizer identifier as a challenge and each module responds to the challenge by sending the environment identifier back to the BCM. If the BCM sends an incorrect immobilizer identifier or a specific number of incorrect environment identifiers are received, vehicle starting is disabled.

Conditions for Running the DTC

Ignition is in the ACCESSORY or RUN position.

Conditions for Setting the DTC

An incorrect immobilizer identifier was broadcast by the BCM.

Action Taken When the DTC Sets

- The security indicator in the instrument cluster will illuminate.
- Vehicle starting will be disabled.

Conditions for Clearing the DTC

A current DTC will be cleared when the BCM broadcasts a correct immobilizer identifier.

Diagnostic Aids

If BCM programming is not completed after BCM replacement, the immobilizer identifier will not be learned. If DTC B389A sets immediately after the replacement and programming of a BCM, perform the programming procedure again.

Reference Information

Schematic Reference

Immobilizer Schematics

Connector End View Reference

COMPONENT CONNECTOR END VIEWS - INDEX

Description and Operation

Immobilizer Description and Operation

Electrical Information Reference

- **Circuit Testing**
- **Connector Repairs**
- **Testing for Intermittent Conditions and Poor Connections**
- **Wiring Repairs**

Scan Tool Reference

Control Module References for scan tool information

Circuit/System Verification

1. Verify DTC B389A did not set immediately following the replacement and programming of the K9 Body Control Module.
    - **If the DTC set immediately after the replacement and programming of the K9 Body Control Module**

      The immobilizer learn procedure was not properly completed. Perform the BCM immobilizer learn using the body control module IMMO Function with Existing Transponder or Remote Key in SPS. Refer to **Immobilizer System Component Programming (with BTM)**, **Immobilizer System Component Programming (without BTM)**.

    - **If the DTC did not set immediately after the replacement and programming of the K9 Body Control Module**
2. Verify DTC B3902 is not set in any of the control modules listed below:
    - K20 Engine Control Module
    - K36 Inflatable Restraint Sensing and Diagnostic Module
    - K17 Electronic Brake Control Module
    - K33 HVAC Control Module
    - P16 Instrument Cluster
    - K60 Steering Column Lock Module (if equipped)
    - **If DTC B3902 is set in any of the modules**

      Refer to **DTC B3902**.

    - **If DTC B3902 is not set in any of the modules**
3. Perform the K9 Body Control Module immobilizer learn using body control module IMMO Function with Existing Transponder or Remote Key in SPS. Refer to **Immobilizer System Component Programming (with BTM)**, **Immobilizer System Component Programming (without BTM)**.
4. Verify DTC B389A does not set after programming.
    - **If the DTC sets after programming**

      Replace the K9 Body Control Module.

- **If the DTC does not set after programming**

5. All OK.

Repair Instructions

Perform the **Diagnostic Repair Verification** after completing the repair.

Control Module References for body control module replacement, programming, and setup.

DTC B3902

Diagnostic Instructions

- Perform the **Diagnostic System Check - Vehicle** prior to using this diagnostic procedure.
- Review **Strategy Based Diagnosis** for an overview of the diagnostic approach.
- **Diagnostic Procedure Instructions** provides an overview of each diagnostic category.

DTC Descriptor

DTC B3902

Incorrect Immobilizer Identifier Received

For symptom byte information, refer to **Symptom Byte List** .

Circuit/System Description

When certain modules are programmed and configured during installation, the module learns a specific environment identifier which is unique to the vehicle. The environment identifier is used to prevent the swapping modules between vehicles. The body control module (BCM) is the keeper of the environment identifier. The Instrument Cluster, Electronic Brake Control Module, HVAC Control Module, Inflatable Restraint Sensing and Diagnostic Module, engine control module (ECM), and Steering Column Lock Module (if equipped) each learn the environment identifier during their configuration process. During vehicle operation, the BCM sends the immobilizer identifier as a challenge and each module responds to the challenge by sending the environment identifier back to the BCM. If the BCM sends an incorrect immobilizer identifier or a specific number of incorrect environment identifiers are received, vehicle starting is disabled.

Conditions for Running the DTC

Ignition is in the ACCESSORY or RUN position.

Conditions for Setting the DTC

The control module's environment identifier does not match the environment identifier stored by the BCM.

Action Taken When the DTC Sets

- The security indicator in the instrument cluster will illuminate.
- Vehicle starting will be disabled.

Conditions for Clearing the DTC

A current DTC will be cleared when the module learns a correct environment identifier.

Reference Information

Schematic Reference

Immobilizer Schematics

Connector End View Reference

COMPONENT CONNECTOR END VIEWS - INDEX

Description and Operation

Immobilizer Description and Operation

Electrical Information Reference

- **Circuit Testing**
- **Connector Repairs**
- **Testing for Intermittent Conditions and Poor Connections**
- **Wiring Repairs**

Scan Tool Reference

Control Module References for scan tool information

Circuit/System Verification

1. Perform the Programming and Setup procedure for the control module that set DTC B3902.
2. Verify DTC B3902 does not set after programming.
    - **If the DTC sets after programming**

      Replace the control module that set the DTC.

    - **If the DTC does not set after programming**
3. All OK.

Repair Instructions

Perform the **Diagnostic Repair Verification** after completing the repair.

Control Module References for Instrument Cluster, Electronic Brake Control Module, HVAC Control Module, Inflatable Restraint Sensing and Diagnostic Module, engine control module, or Steering Column Lock Module replacement, programming, and setup.

DTC B3935

Diagnostic Instructions

- Perform the **Diagnostic System Check - Vehicle** prior to using this diagnostic procedure.
- Review **Strategy Based Diagnosis** for an overview of the diagnostic approach.
- **Diagnostic Procedure Instructions** provides an overview of each diagnostic category.

DTC Descriptor

DTC B3935

Transponder Authentication

For symptom byte information, refer to **Symptom Byte List** .

Circuit/System Description

Without BTM and/or ATH/ATS

When an ignition key is inserted into the ignition lock cylinder and the ignition is switched ON, the transponder embedded in the key is energized by the exciter coil surrounding the ignition lock cylinder. The transponder transmits a signal to the body control module (BCM). The BCM then compares this value to a value stored in memory. If the value is correct, the BCM will send the prerelease password via the serial data circuit to the engine control module (ECM). If the learned key code does not match, the BCM will send the start disable password to the ECM.

With BTM and/or ATH/ATS

When a keyless entry transmitter is inserted into the transmitter pocket/slot and the ignition mode switch is pressed, the transponder embedded in the transmitter is energized by the immobilizer antenna exciter coil. The transponder transmits a signal to the body control module (BCM). The BCM then compares this value to a value stored in memory. If the value is correct, the BCM will send the prerelease password via the serial data circuit to the engine control module (ECM). If the learned key code does not match, the BCM will send the start disable password to the ECM.

Conditions for Running the DTC

- Ignition is in the Accessory or Run position.
- A valid transponder value has been read.

Conditions for Setting the DTC

The transponder calculation of the challenge from the BCM does not match the BCM calculation.

Action Taken When the DTC Sets

- Vehicle starting will be disabled.
- The security indicator will illuminate. The driver information center will display a service message.

Conditions for Clearing the DTC

- A current DTC will be cleared when a valid transponder value has been read and authenticated.
- A history DTC will be cleared after 100 malfunction-free ignition cycles.

Reference Information

Schematic Reference

Immobilizer Schematics

Connector End View Reference

COMPONENT CONNECTOR END VIEWS - INDEX

Description and Operation

Immobilizer Description and Operation

Electrical Information Reference

- **Circuit Testing**
- **Connector Repairs**
- **Testing for Intermittent Conditions and Poor Connections**
- **Wiring Repairs**

Scan Tool Reference

Control Module References for scan tool information

Circuit/System Verification

1. Replace the suspected inoperative or malfunctioning key.
2. Verify DTC B3935 does not set while operating the vehicle under the conditions for running the DTC.
    - **If the DTC is set**

      Replace the K9 Body Control Module.

- **If the DTC is not set**

3. All OK.

Repair Instructions

Perform the **Diagnostic Repair Verification** after completing the repair.

Control Module References for body control module replacement, programming, and setup.

DTC B3976

Diagnostic Instructions

- Perform the **Diagnostic System Check - Vehicle** prior to using this diagnostic procedure.
- Review **Strategy Based Diagnosis** for an overview of the diagnostic approach.
- **Diagnostic Procedure Instructions** provides an overview of each diagnostic category.

DTC Descriptor

DTC B3976

Unconfigured Transponder

For symptom byte information, refer to **Symptom Byte List** .

Circuit/System Description

Without BTM and/or ATH/ATS

When an ignition key is inserted into the ignition lock cylinder and the ignition is switched ON, the transponder embedded in the key is energized by the exciter coil surrounding the ignition lock cylinder. The transponder transmits a signal to the body control module (BCM). The BCM then compares this value to a value stored in memory. If the value is correct, the BCM will send the prerelease password via the serial data circuit to the engine control module (ECM). If the learned key code does not match or a transponder value is not received, the BCM will send the start disable password to the ECM.

With BTM and/or ATH/ATS

When a keyless entry transmitter is inserted into the transmitter pocket/slot and the ignition mode switch is pressed, the transponder embedded in the transmitter is energized by the immobilizer antenna exciter coil. The transponder transmits a signal to the body control module (BCM). The BCM then compares this value to a value stored in memory. If the value is correct, the BCM will send the prerelease password via the serial data circuit to the engine control module (ECM). If the learned key code does not match or a transponder value is not received, the BCM will send the start disable password to the ECM.

Conditions for Running the DTC

- Ignition is in the Accessory or Run position.
- The BCM is in the learn coded key state.

Conditions for Setting the DTC

The BCM has determined the current key is not configured as a proper vehicle key.

Action Taken When the DTC Sets

- Vehicle starting will be disabled.
- The security indicator in the instrument cluster will be illuminated. A service message will be displayed in the driver information center.

Conditions for Clearing the DTC

- A current DTC will be cleared when the BCM detects a properly configured vehicle key.
- A history DTC will be cleared after 100 malfunction-free ignition cycles.

Reference Information

Schematic Reference

Immobilizer Schematics

Connector End View Reference

COMPONENT CONNECTOR END VIEWS - INDEX

Description and Operation

Immobilizer Description and Operation

Electrical Information Reference

- **Circuit Testing**
- **Connector Repairs**
- **Testing for Intermittent Conditions and Poor Connections**
- **Wiring Repairs**

Scan Tool Reference

Control Module References for scan tool information

Circuit/System Verification

1. Verify the engine starts with each available key.

- **If the engine does not start with a key**

  Replace the key.

- **If the engine starts with all keys**

2. All OK.

DTC B3984

Diagnostic Instructions

- Perform the **Diagnostic System Check - Vehicle** prior to using this diagnostic procedure.
- Review **Strategy Based Diagnosis** for an overview of the diagnostic approach.
- **Diagnostic Procedure Instructions** provides an overview of each diagnostic category.

DTC Descriptor

DTC B3984

Device 1 Environment Identifier Not Programmable

For symptom byte information, refer to **Symptom Byte List** .

Circuit/System Description

When certain modules are programmed and configured during installation, the module learns a specific environment identifier which is unique to the vehicle. The environment identifier is used to prevent the swapping modules between vehicles. The body control module (BCM) is the keeper of the environment identifier. The instrument cluster, electronic brake control module, HVAC control module, inflatable restraint sensing and diagnostic module, engine control module (ECM), and steering column lock module (if equipped) each learn the environment identifier during their configuration process. During vehicle operation, the BCM sends the immobilizer identifier as a challenge and each module responds to the challenge by sending the environment identifier back to the BCM. If the BCM sends an incorrect immobilizer identifier or a specific number of incorrect environment identifiers are received, vehicle starting is disabled.

Conditions for Running the DTC

Ignition is in the ACCESSORY or RUN position.

Conditions for Setting the DTC

An incorrect environment identifier is programmed or no environment identifier is programmed.

Action Taken When the DTC Sets

- The security indicator in the instrument cluster will illuminate.
- Vehicle starting will be disabled.

Conditions for Clearing the DTC

A current DTC will be cleared when the module learns a correct environment identifier.

Reference Information

Schematic Reference

Immobilizer Schematics

Connector End View Reference

COMPONENT CONNECTOR END VIEWS - INDEX

Description and Operation

Immobilizer Description and Operation

Electrical Information Reference

- **Circuit Testing**
- **Connector Repairs**
- **Testing for Intermittent Conditions and Poor Connections**
- **Wiring Repairs**

Scan Tool Reference

Control Module References for scan tool information

Circuit/System Verification

1. Perform the Programming and Setup procedure for the control module that set DTC B3984.
2. Verify DTC B3984 does not set after programming.
    - **If the DTC sets after programming**

      Replace the control module that set the DTC.

    - **If the DTC does not set after programming**
3. All OK.

Repair Instructions

Perform the **Diagnostic Repair Verification** after completing the repair.

Control Module References for instrument cluster, electronic brake control module, HVAC control module, inflatable restraint sensing and diagnostic module, engine control module, and steering column lock module

replacement, programming, and setup.

DTC P0513

Diagnostic Instructions

- Perform the **Diagnostic System Check - Vehicle** prior to using this diagnostic procedure.
- Review **Strategy Based Diagnosis** for an overview of the diagnostic approach.
- **Diagnostic Procedure Instructions** provides an overview of each diagnostic category.

DTC Descriptor

DTC P0513

Immobilizer Key Incorrect

Circuit/System Description

The body control module (BCM) sends the pre-release information to the engine control module (ECM) via the serial data circuit. The ECM then sends a challenge to the BCM. Both the ECM and BCM perform a calculation on this challenge. If the calculated response from the BCM equals the calculation performed by the ECM, the ECM will allow vehicle starting.

Conditions for Running the DTC

Ignition is in the ACCESSORY or RUN position.

Conditions for Setting the DTC

The calculated response from the BCM does not equal the calculation performed by the ECM.

Action Taken When the DTC Sets

- The security indicator in the instrument cluster will illuminate.
- Vehicle starting will be disabled.

Conditions for Clearing the DTC

- A current DTCwill be cleared when a valid calculation is received.
- A history DTC will be cleared after 40 malfunction-free ignition cycles.

Reference Information

Schematic Reference

Immobilizer Schematics

Connector End View Reference

COMPONENT CONNECTOR END VIEWS - INDEX

Description and Operation

Immobilizer Description and Operation

Electrical Information Reference

- **Circuit Testing**
- **Connector Repairs**
- **Testing for Intermittent Conditions and Poor Connections**
- **Wiring Repairs**

Scan Tool Reference

Control Module References for scan tool information

Circuit/System Verification

1. Verify there are no immobilizer DTCs set in the K9 Body Control Module.
    - **If any immobilizer DTCs are set in the K9 Body Control Module**

      Refer to **Diagnostic Trouble Code (DTC) List - Vehicle** .

    - **If no immobilizer DTCs are set in the K9 Body Control Module**
2. Perform the K9 Body Control Module immobilizer learn using the body control module IMMO Function with Existing Transponder or Remote Key in SPS. Refer to **Immobilizer System Component Programming (with BTM)**, **Immobilizer System Component Programming (without BTM)**.
3. Verify the engine starts after the K9 Body Control Module completes the learn procedure.
    - **If the engine does not start**

      Perform the K20 Engine Control Module immobilizer learn using the engine control module IMMO Learn in SPS. Refer to **Immobilizer System Component Programming (with BTM)**, **Immobilizer System Component Programming (without BTM)**.

    - **If the engine starts**
4. All OK.

DTC P0633

Diagnostic Instructions

- Perform the **Diagnostic System Check - Vehicle** prior to using this diagnostic procedure.

- Review **Strategy Based Diagnosis** for an overview of the diagnostic approach.
- **Diagnostic Procedure Instructions** provides an overview of each diagnostic category.

DTC Descriptor

DTC P0633

Immobilizer Key Not Programmed

Circuit/System Description

When learning the immobilizer data, as well as the challenge and response sequence, the engine control module (ECM) is placed in learn mode. DTC P0633 will set automatically as an indicator that the system is in learn mode and not as a fault indicator. Once the immobilizer data and challenge/response are learned, learn mode will be exited when the engine is successfully started. If the ECM does not exit learn mode, DTC P0633 will remain current and indicate a fault.

Conditions for Running the DTC

The ECM is in learn mode.

Conditions for Setting the DTC

DTC P0633 will set any time the ECM enters learn mode.

Action Taken When the DTC Sets

The security indicator in the instrument cluster will illuminate.

Conditions for Clearing the DTC

- A current DTC will be cleared upon a successful engine start after exit of learn mode.
- A history DTC will be cleared after 100 malfunction-free ignition cycles.

Reference Information

Schematic Reference

Immobilizer Schematics

Connector End View Reference

COMPONENT CONNECTOR END VIEWS - INDEX

Description and Operation

Immobilizer Description and Operation

Electrical Information Reference

- **Circuit Testing**
- **Connector Repairs**
- **Testing for Intermittent Conditions and Poor Connections**
- **Wiring Repairs**

Scan Tool Reference

Control Module References for scan tool information

Circuit/System Verification

NOTE: DTC P0633 will clear upon a successful engine start. Any malfunction that will cause a no-start condition will prevent DTC P0633 from clearing. Prior to diagnosing DTC P0633, ensure that all power moding and engine control systems are operating properly and all conditions that may cause a no-start have been corrected. Do not replace the K20 Engine Control Module. Replacing the K20 Engine Control Module will not correct the no-start condition.

1. Verify there are no immobilizer DTCs set in the K9 Body Control Module.
   - **If any immobilizer DTCs are set in the K9 Body Control Module**

     Refer to **Diagnostic Trouble Code (DTC) List - Vehicle** .

   - **If no immobilizer DTCs are set in the K9 Body Control Module**
2. Perform the K20 Engine Control Module immobilizer learn using the engine control module IMMO Learn in SPS. Refer to **Immobilizer System Component Programming (with BTM)**, **Immobilizer System Component Programming (without BTM)**.
3. Verify the engine starts after the K20 Engine Control Module completes the learn procedure.
   - **If the engine does not start**

     An undiagnosed no-start condition exists. Refer to the appropriate subsection and diagnostic to correct the no-start condition.

   - **If the engine starts**
4. All OK.

DTC P162B

Diagnostic Instructions

- Perform the **Diagnostic System Check - Vehicle** prior to using this diagnostic procedure.
- Review **Strategy Based Diagnosis** for an overview of the diagnostic approach.
- **Diagnostic Procedure Instructions** provides an overview of each diagnostic category.

DTC Descriptor

DTC P162B

Remote Vehicle Speed Limiting Signal Message Counter Incorrect

Circuit/System Description

When a remote slow-down request is sent from OnStar, the vehicle communication interface module sends a serial data message to the engine control module (ECM) indicating that reduced vehicle speed has been requested. Once the request is active, the ECM begins reducing engine torque to match requested vehicle speed and the REDUCED ENGINE POWER message is displayed.

Conditions for Running the DTC

- The engine run time is greater than 5 s
- A remote slow-down request is sent from OnStar

Conditions for Setting the DTC

- The VIN embedded in the slow-down request does not match the VIN stored in the ECM.
- The rolling code counter embedded in the slow-down request does not increment for ten consecutive messages.

Action Taken When the DTC Sets

- ECM ignores all reduced vehicle speed request messages from the vehicle communication interface module.
- The ECM stores DTC P162B in history.

Conditions for Clearing the DTC

- The condition responsible for setting the DTC no longer exists.
- A history DTC will clear after 40 malfunction-free ignition cycles have occurred.

Reference Information

Schematic Reference

OnStar Schematics

Connector End View Reference

COMPONENT CONNECTOR END VIEWS - INDEX

Description and Operation

Remote Vehicle Speed Limiting Description and Operation

Electrical Information Reference

- **Circuit Testing**
- **Connector Repairs**
- **Testing for Intermittent Conditions and Poor Connections**
- **Wiring Repairs**

Scan Tool Reference

Control Module References for scan tool information

Circuit/System Verification

1. Perform the Stolen Vehicle Slow-Down Clear procedure with the scan tool.
2. Verify DTC P162B is not set.
   - **If DTC P162B is set**

     Replace the K73 Telematics Communication Interface Control Module.

   - **If DTC P162B is not set**
3. All OK.

Repair Instructions

Perform the **Diagnostic Repair Verification** after completing the repair.

Control Module References for Telematics Communication Interface Control Module replacement, programming, and setup

DTC P1630

Diagnostic Instructions

- Perform the **Diagnostic System Check - Vehicle** prior to using this diagnostic procedure.
- Review **Strategy Based Diagnosis** for an overview of the diagnostic approach.
- **Diagnostic Procedure Instructions** provides an overview of each diagnostic category.

DTC Descriptor

DTC P1630

Immobilizer Learn Mode Active

Circuit/System Description

When learning the security code, as well as the challenge and response sequence, the engine control module is placed in learn mode. Once the security code and challenge/response are learned, learn mode will be exited when the engine is successfully started.

Conditions for Running the DTC

The engine control module is in learn mode.

Conditions for Setting the DTC

The engine control module has not learned a security code.

Action Taken When the DTC Sets

The security indicator in the Instrument Cluster will illuminate.

Conditions for Clearing the DTC

- A current DTC P1649 will be cleared upon a successful engine start after exit of learn mode.
- A history DTC will be cleared after 100 malfunction-free ignition cycles.

Reference Information

Schematic Reference

Immobilizer Schematics

Connector End View Reference

COMPONENT CONNECTOR END VIEWS - INDEX

Description and Operation

Immobilizer Description and Operation

Electrical Information Reference

- **Circuit Testing**
- **Connector Repairs**
- **Testing for Intermittent Conditions and Poor Connections**
- **Wiring Repairs**

Scan Tool Reference

Control Module References

Circuit/System Verification

1. Verify there are no immobilizer DTCs set in the K9 Body Control Module.
   - **If any immobilizer DTCs are set in the K9 Body Control Module**

     Refer to **Diagnostic Trouble Code (DTC) List - Vehicle** .

   - **If no immobilizer DTCs are set in the K9 Body Control Module**
2. Perform the K20 Engine Control Module immobilizer learn using the engine control module IMMO Learn in SPS. Refer to **Immobilizer System Component Programming (with BTM)**, **Immobilizer System Component Programming (without BTM)**.
3. Verify the engine starts after the K20 Engine Control Module completes the learn procedure.
   - **If the engine does not start**

     Replace the K20 Engine Control Module.

   - **If the engine starts**
4. All OK

Repair Instructions

Perform the **Diagnostic Repair Verification** after completing the repair.

Control Module References for engine control module replacement, programming, and setup

DTC P1631

Diagnostic Instructions

- Perform the **Diagnostic System Check - Vehicle** prior to using this diagnostic procedure.
- Review **Strategy Based Diagnosis** for an overview of the diagnostic approach.
- **Diagnostic Procedure Instructions** provides an overview of each diagnostic category.

DTC Descriptor

DTC P1631

Immobilizer Fuel Enable Signal Not Correct

Circuit/System Description

The body control module (BCM) sends the pre-release information to the engine control module (ECM) via the serial data circuit. The ECM then sends a challenge to the BCM. Both the ECM and BCM perform a calculation on this challenge. If the calculated response from the BCM equals the calculation performed by the ECM, the ECM will allow vehicle starting. The BCM follows this action by sending the remaining immobilizer data to the ECM. If the immobilizer data sent by the BCM matches that stored by the ECM, the ECM will allow the engine to remain running.

Conditions for Running the DTC

Ignition is in the ACCESSORY or RUN position.

Conditions for Setting the DTC

The ECM receives incorrect immobilizer data from the BCM.

Action Taken When the DTC Sets

- The security indicator in the instrument cluster will illuminate.
- Vehicle starting will be disabled.

Conditions for Clearing the DTC

- A current DTC will be cleared when correct immobilizer data is received.
- A history DTC will be cleared after 40 malfunction-free ignition cycles.

Reference Information

Schematic Reference

Immobilizer Schematics

Connector End View Reference

COMPONENT CONNECTOR END VIEWS - INDEX

Description and Operation

Immobilizer Description and Operation

Electrical Information Reference

- **Circuit Testing**
- **Connector Repairs**
- **Testing for Intermittent Conditions and Poor Connections**
- **Wiring Repairs**

Scan Tool Reference

Control Module References for scan tool information

Circuit/System Verification

1. Verify there are no immobilizer DTCs set in the K9 Body Control Module.

- **If any immobilizer DTCs are set in the K9 Body Control Module**

  Refer to **Diagnostic Trouble Code (DTC) List - Vehicle** .

- **If no immobilizer DTCs are set in the K9 Body Control Module**

2. Perform the K9 Body Control Module immobilizer learn using the body control module IMMO Function with Existing Transponder or Remote Key in SPS. Refer to **Immobilizer System Component Programming (with BTM)**, **Immobilizer System Component Programming (without BTM)**.
3. Verify the engine starts after the K9 Body Control Module completes the learn procedure.
   - **If the engine does not start**

     Perform the K20 Engine Control Module immobilizer learn using the engine control module IMMO Learn in SPS. Refer to **Immobilizer System Component Programming (with BTM)**, **Immobilizer System Component Programming (without BTM)**.

   - **If the engine starts**
4. All OK.

DTC P1649

Diagnostic Instructions

- Perform the **Diagnostic System Check - Vehicle** prior to using this diagnostic procedure.
- Review **Strategy Based Diagnosis** for an overview of the diagnostic approach.
- **Diagnostic Procedure Instructions** provides an overview of each diagnostic category.

DTC Descriptor

DTC P1649

Immobilizer Security Code Not Programmed

Circuit/System Description

When learning the security code, as well as the challenge and response sequence, the engine control module (ECM) is placed in learn mode. Once the security code and challenge/response are learned, learn mode will be exited when the engine is successfully started.

Conditions for Running the DTC

The ECM is in learn mode.

Conditions for Setting the DTC

The ECM has not learned a security code.

Action Taken When the DTC Sets

The security indicator in the instrument cluster will illuminate.

Conditions for Clearing the DTC

- A current DTC will be cleared upon a successful engine start after exit of learn mode.
- A history DTC will be cleared after 100 malfunction-free ignition cycles.

Reference Information

Schematic Reference

Immobilizer Schematics

Connector End View Reference

COMPONENT CONNECTOR END VIEWS - INDEX

Description and Operation

Immobilizer Description and Operation

Electrical Information Reference

- **Circuit Testing**
- **Connector Repairs**
- **Testing for Intermittent Conditions and Poor Connections**
- **Wiring Repairs**

Scan Tool Reference

Control Module References

Circuit/System Verification

1. Verify there are no immobilizer DTCs set in the K9 Body Control Module.
    - **If any immobilizer DTCs are set in the K9 Body Control Module**

      Refer to **Diagnostic Trouble Code (DTC) List - Vehicle** .

    - **If no immobilizer DTCs are set in the K9 Body Control Module**
2. Perform the K20 Engine Control Module immobilizer learn using the engine control module IMMO Learn in SPS. Refer to **Immobilizer System Component Programming (with BTM)**, **Immobilizer System Component Programming (without BTM)**.
3. Verify the engine starts after the K20 Engine Control Module completes the learn procedure.

- **If the engine does not start**

  Replace the K20 Engine Control Module.

- **If the engine starts**

4. All OK.

Repair Instructions

Perform the **Diagnostic Repair Verification** after completing the repair.

Control Module References for engine control module replacement, programming, and setup.

SYMPTOMS - IMMOBILIZER

IMPORTANT: The following steps must be completed before using the symptom tables.

1. Perform the **Diagnostic System Check - Vehicle** before using the symptom tables in order to verify that all of the following are true:
   - There are no DTCs set.
   - The control modules can communicate via the serial data links.
2. Review the system operation in order to familiarize yourself with the system functions. Refer to **Immobilizer Description and Operation**.

Visual/Physical Inspection

- Inspect for aftermarket devices which could affect the operation of the systems. Refer to **Checking Aftermarket Accessories** .
- Inspect the easily accessible or visible system components for obvious damage or conditions which could cause the symptom.

Intermittent

Faulty electrical connections or wiring may be the cause of intermittent conditions. Refer to **Testing for Intermittent Conditions and Poor Connections** .

Symptom List

Refer to **OnStar Stolen Vehicle Slowdown Active** to diagnose the symptom.

ONSTAR STOLEN VEHICLE SLOWDOWN ACTIVE

Diagnostic Instructions

NOTE: This procedure is not used in Brazil.

- Perform the **Diagnostic System Check - Vehicle** prior to using this diagnostic procedure.
- Review **Strategy Based Diagnosis** for an overview of the diagnostic approach.
- **Diagnostic Procedure Instructions** provides an overview of each diagnostic category.

Circuit/System Description

When a remote slow-down request is sent from OnStar, the Telematics Communication Interface Control Module sends a serial data message to the engine control module (ECM) indicating that reduced vehicle speed has been requested. Once the request is active, the ECM begins reducing engine torque to match requested vehicle speed and the REDUCED ENGINE POWER message is displayed.

Reference Information

Schematic Reference

OnStar Schematics

Connector End View Reference

COMPONENT CONNECTOR END VIEWS - INDEX

Description and Operation

Remote Vehicle Speed Limiting Description and Operation

Electrical Information Reference

- **Circuit Testing**
- **Connector Repairs**
- **Testing for Intermittent Conditions and Poor Connections**
- **Wiring Repairs**

Scan Tool Reference

Control Module References for scan tool information

Circuit/System Verification

1. Verify the vehicle is not in the OnStar initiated Stolen Vehicle Slowdown mode. This can be accomplished by verifying the scan tool Telematics Enhanced Service Immobilization parameter is No.
    - **If the scan tool Telematics Enhanced Service Immobilization parameter is Yes**
    1. Perform the Remote Vehicle Speed Limiting Reset procedure with the scan tool.
    2. Press the blue OnStar button and inform the advisor that you need to be transferred to the stolen vehicle team to update the vehicle account.
    - **If the scan tool BCM Telematics Enhanced Service Immobilization parameter is No**

2. All OK.

REPAIR INSTRUCTIONS

THEFT DETERRENT MODULE REPLACEMENT (WITHOUT BTM)

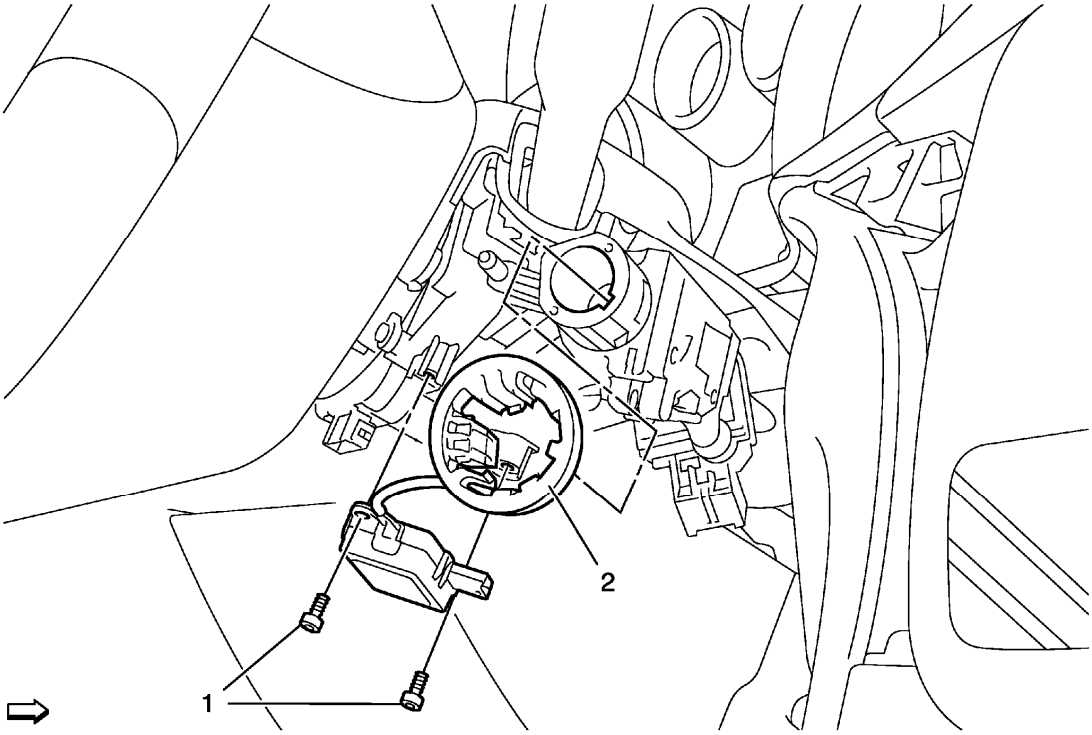

Fig. 2: Theft Deterrent Module & Fasteners
Courtesy of GENERAL MOTORS COMPANY

Theft Deterrent Module Replacement (without BTM)

Callout	Component Name
Preliminary Procedures Remove the steering column lower trim cover. Refer to **Steering Column Lower Trim Cover Replacement** .	
1	Theft Deterrent Module Fastener (Qty: 2) **CAUTION:** **Refer to Fastener Caution**
2	Theft Deterrent Module **Procedure** Disconnect the electrical connector. After repairs, refer to **Control Module References** for programming and set up information.

THEFT DETERRENT MODULE REPLACEMENT (WITH BTM)

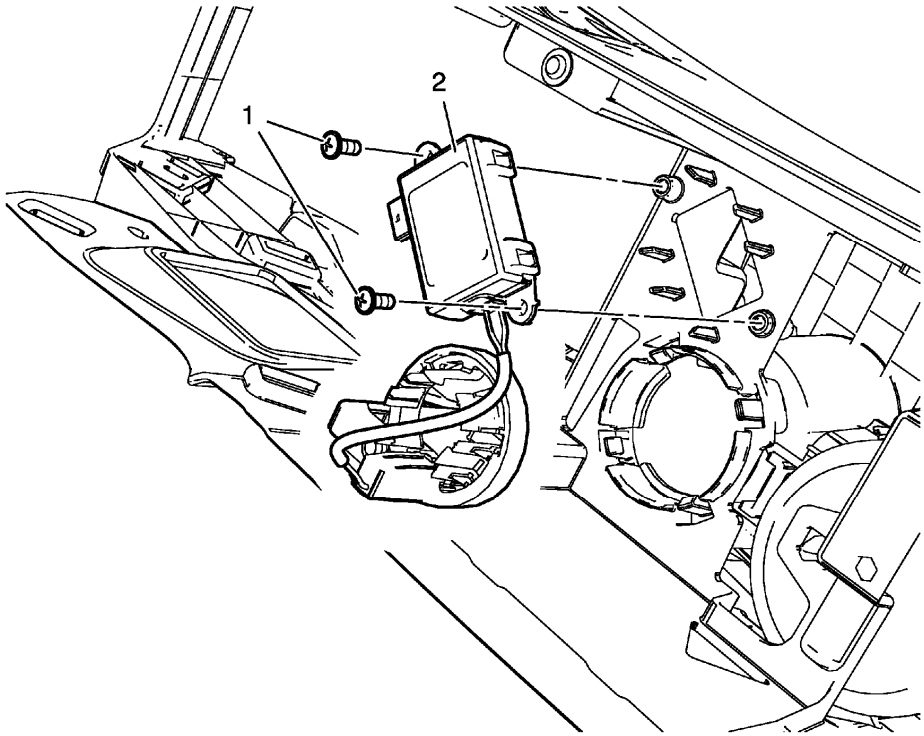

Fig. 3: Theft Deterrent Module
Courtesy of GENERAL MOTORS COMPANY

Theft Deterrent Module Replacement (with BTM)

Callout	Component Name
Preliminary Procedure Remove the front floor console. Refer to **Front Floor Console Replacement** .	
1	Theft Deterrent Module Fastener (Qty: 2) **CAUTION:** **Refer to Fastener Caution .**
2	Theft Deterrent Module **Procedure** 1. Disconnect the electrical connector. 2. After repairs, refer to **Control Module References** .

IMMOBILIZER SYSTEM COMPONENT PROGRAMMING (WITH BTM)

This procedure will learn the immobilizer function and require greater than 15 minutes to complete. If the battery voltage is low, charge the battery before proceeding with the learn. If the body control module (BCM) or engine control module (ECM) have been replaced, they must be programmed before performing this learn procedure.

Depending on the immobilizer function being learned or the component replaced, different learn functions are required to be performed. These learn functions are as follows:

Immobilizer System Component Programming (with BTM)

Function name on SPS tool:	Function description:	When the function should be used:	Notes:
Body Control Module IMMO Function with Existing Transponder or Remote Key	The BCM will relearn the immobilizer passwords and data while reusing the existing vehicle keys	The BCM has been replaced and the existing vehicle keys are being reused or a diagnostic has instructed to perform the learn	-
Body Control Module IMMO Function with New Transponder or Remote Key	The BCM will relearn the immobilizer passwords and data while using new vehicle keys	The BCM has been replaced and new vehicle keys are being reused	-
Engine Control Module IMMO Learn	The ECM will relearn the immobilizer passwords and data	The ECM has been replaced or a diagnostic has instructed to perform the learn	-
Engine Control Module and Body Control Module IMMO Learn	The ECM and BCM will learn new immobilizer passwords and data	Both the ECM and BCM have been replaced (this selection will REQUIRE new vehicle keys be used)	Because both the ECM and BCM have been replaced and are learning new immobilizer passwords and data, all vehicle keys must also be replaced
Program Transponder or Remote Key (Add)	A new vehicle key will learn the immobilizer passwords and data	A new vehicle key is being added (does not affect other vehicle keys)	This function may not be available in all sales regions
Program Transponder or Remote Key (Delete)	All existing vehicle keys will be invalidated and any desired keys are relearned	All vehicle keys are desired to be invalidated and certain keys relearned or a diagnostic has instructed to perform the learn	This procedure may be used if a customer has had their keys lost or stolen and wishes to invalidate the keys, making them unable to start the vehicle

1. Connect a scan tool to the vehicle and access SPS.
2. Turn ON the ignition, with the engine OFF.
3. Ensure that all power consuming devices are turned OFF on the vehicle.
4. Select SPS application and follow the on-screen instructions.
5. Select Reprogram ECU.
6. Select IMMO Immobilizer Learn - Setup.
7. Select the appropriate programming function based on the component that was replaced or is being

programmed. Refer to the table at the top of this document for assistance in choosing the correct programming function.

NOTE:

- **At multiple times during the learn procedure, SPS will instruct you to turn the ignition to the run position. Make sure the vehicle is actually in the run mode before continuing on the SPS terminal. If the ignition is not in the run mode, the learn procedure will fail. To verify the vehicle is in Run mode, verify the green LED is illuminated on the ignition mode switch.**
- **The key slot is located inside the center console storage area. To access the slot, use a pick tool to remove the triangular cover at the bottom of the storage area located just forward of the cup holders. Insert the key into the exposed key slot.**

8. Follow the on-screen instructions.

   NOTE: If the programming does not complete or hangs during the programming operation, refer to Unable to Complete Programming below.

9. After programming all keys "Programming Complete" is displayed.
10. Press and hold the ignition mode switch for 15 seconds.
11. Press the lock and unlock button on each transmitter that was programmed. This will awaken each transmitter and allow passive and active keyless entry functions to be established.
12. With a scan tool, clear any DTCs.
13. Verify each key is operating properly. Operate each of the keyless entry functions using the buttons on the transmitter and then start the vehicle. When verifying operation, make sure that no other keys are near the vehicle.

Unable to Complete Programming

When attempting to program immobilizer conponents, various conditions may prevent the programming operation from completing. These conditions may be caused by normal system operation, a system malfunction, or an external influence. Common symptoms of a incomplete programming is receiving an error message during the attempt or having the SPS application become unresponsive.

- DTCs are set in the body control module (BCM)

  The immobilizer system is a function of the BCM software. If immobilizer DTCs are set in the BCM, such as DTC B2955, a fault has been identified in the immobilizer system. If this is not corrected before attempting to program components, the programming may not complete. Correct all immobilizer DTCs before attempting to program any immobilizer components.

- The key has been programmed to another vehicle or is not the correct type for the vehicle

  A key can only be programmed to a single vehicle. Once a key is programming to a vehicle, it is paired

for the life of the key. The key can be learned to the same vehicle again and again, but it is not able to be programmed to a different vehicle.

Many vehicle are available with both a base keyless entry system and an optional passive entry system. These keys typically look identical but cannot be substituted for one another. To verify the key is correct, compare the part number that is etched on the key to the part number identified in the parts catalog. The key should be correct for the system installed in the vehicle.

- The theft deterrent module is not properly secured or the key is not properly positioned in the pocket/slot.

  A theft deterrent module that is not fully seated or is otherwise not properly secured may prevent a coupling between the transponder located in the key and the theft deterrent module. Being out of place by as little as 1 mm may prevent programming from completing. Make sure the theft deterrent module is properly installed and fully seated in it's clip.

  The key shank must be fully extended so that the entire key shank fits into the programming slot.

  To determine if the theft deterrent module is properly secured, remove the battery from the key and place the key into the pocket/slot. Attempt to change the vehicle mode by pressing the vehicle ON/OFF switch. The vehicle should change modes. If the NO REMOTE DETECTED message is displayed on the DIC, the theft deterrent module may not be properly secured.

- External interference is interrupting the programming operation

  External RF interference and EMI may interrupt the low frequency coupling between the key and theft deterrent module. This interference may come from many different locations. Devices plugged into the vehicle power outlets such as cell phone chargers, laptop computers, GPS devices, etc. may cause interference. Vehicle location may also cause interference. Locations near airports and military installations may causer interference. Remove all customer installed devices and, if necessary, move the vehicle if interference is suspected.

IMMOBILIZER SYSTEM COMPONENT PROGRAMMING (WITHOUT BTM)

This procedure will learn the immobilizer function and require greater than 15 minutes to complete. If the battery voltage is low, charge the battery before proceeding with the learn. If the body control module (BCM) or engine control module (ECM) have been replaced, they must be programmed before performing this learn procedure.

Depending on the immobilizer function being learned or the component replaced, different learn functions are required to be performed. These learn functions are as follows:

Immobilizer System Component Programming (without BTM)

Function name on SPS tool:	Function description:	When the function should be used:	Notes:
Body Control Module IMMO Function with	The BCM will relearn the immobilizer passwords	The BCM has been replaced and the existing vehicle keys are being	-

Existing Transponder or Remote Key	and data while reusing the existing vehicle keys	reused or a diagnostic has instructed to perform the learn	
Body Control Module IMMO Function with New Transponder or Remote Key	The BCM will relearn the immobilizer passwords and data while using new vehicle keys	The BCM has been replaced and new vehicle keys are being reused	-
Engine Control Module IMMO Learn	The ECM will relearn the immobilizer passwords and data	The ECM has been replaced or a diagnostic has instructed to perform the learn	-
Engine Control Module and Body Control Module IMMO Learn	The ECM and BCM will learn new immobilizer passwords and data	Both the ECM and BCM have been replaced (this selection will REQUIRE new vehicle keys be used)	Because both the ECM and BCM have been replaced and are learning new immobilizer passwords and data, all vehicle keys must also be replaced
Program Transponder or Remote Key (Add)	A new vehicle key will learn the immobilizer passwords and data	A new vehicle key is being added (does not affect other vehicle keys)	This function may not be available in all sales regions. Refer to the SPS application to determine if a particular vehicle is able to add keys using this method.
Program Transponder or Remote Key (Delete)	All existing vehicle keys will be invalidated and any desired keys are relearned	All vehicle keys are desired to be invalidated and certain keys relearned or a diagnostic has instructed to perform the learn	This procedure may be used if a customer has had their keys lost or stolen and wishes to invalidate the keys, making them unable to start the vehicle

1. Connect a scan tool to the vehicle and access SPS.
2. Turn ON the ignition, with the engine OFF.
3. Ensure that all power consuming devices are turned OFF on the vehicle.
4. Select SPS application and follow the on-screen instructions.
5. Select Reprogram ECU.
6. Select IMMO Immobilizer Learn - Setup.
7. Select the appropriate programming function based on the component that was replaced or is being programmed. Refer to the table at the top of this document for assistance in choosing the correct programming function.
8. Follow the on-screen instructions.
9. After programming all keys "Programming Complete" is displayed.

10. Press the lock and unlock button on each transmitter that was programmed. This will awaken each transmitter and allow keyless entry functions to be established.
11. With a scan tool, clear any DTCs.
12. Verify each key is operating properly. Operate each of the keyless entry functions using the buttons on the transmitter and then start the vehicle. When verifying operation, make sure that no other keys are near the vehicle.

KEY WITH INTEGRATED TRANSMITTER PROGRAMMING (WITH BTM)

Keys can be programming in various ways using the procedures outlined below. Using the Replacing Keys procedure will first erase all the known keys from the vehicle. Any existing keys and any new keys will then be programmed. This procedure should be used any time a key is required to be unlearned or erased from a vehicle. If a new key is being learned to a vehicle to replace a damaged, inoperative, missing, or stolen key, the Replacing Keys procedure must be used. This ensures that the old key cannot be used to access or start the vehicle after programming.

The Adding Keys procedure does not erase any keys prior to programming. The procedure will simply program the key into the next available slot. The Adding Keys procedure should only be used when adding an additional keys to the vehicle. The Adding Keys procedure should never be used to program a key to a vehicle that is having a key replaced, regardless of the cause for the replacement.

Replacing Keys (Without SPS)

NOTE:

- **This procedure will unlearn all previously learned keys. All keys that are to be programmed must be with the vehicle.**
- **This procedure will take approximately 30 minutes to complete.**
- **A total of eight keys maybe be learned to a single vehicle.**
- **This procedure will only learn the vehicle key information. This procedure will not learn any immobilizer information between the body control module (BCM) and engine control module (ECM).**
- **This procedure may be used with or without existing learned keys being present. If existing keys are present, keep the keys away from the vicinity of the vehicle. Failure to keep learned keys away from the vehicle will result in the learn changing to the Adding Keys procedure.**
- **The keys to be learned must duplicate the mechanical cut of the current key.**

1. Insert the mechanical key of the new key into the key lock cylinder located on the outside of the driver door and turn the key to the unlock position five times within ten seconds. The Driver Information Center (DIC) will display Remote Learn Pending, Please Wait.
2. After ten minutes, the DIC will display Press Engine Start Button To Learn. Press the ignition mode switch. The DIC will again display Remote Learn Pending, Please Wait.
3. Repeat Step 2 two additional times, for a total of thirty minutes. All previously known keys have now been unlearned. Remaining keys can be learned during the next steps. The DIC display will now display Ready For Remote # 1.

NOTE: **The key slot is located inside the center console storage area. To access the slot, use a pick tool to remove the triangular cover at the bottom of the storage area located just forward of the cup holders. Insert the key into the exposed key slot.**

4. Place the new key into the key slot.

NOTE: **If the programming does not complete or hangs during the programming operation, refer to Unable to Complete Programming below.**

5. Press the ignition mode switch. When the key is learned the DIC will indicate that it is ready to program the next key.
6. Remove the key from the key slot and press the unlock button. To program additional keys, repeat Steps 4 through 6.
7. When all additional keys are programmed, press and hold the ignition mode switch for 5 seconds to exit programming mode.

Replacing Keys (With SPS)

NOTE:

- **This procedure will unlearn all previously learned keys. All keys that are to be programmed must be with the vehicle.**
- **This procedure may be used with or without existing learned keys being present. If no existing keys are available, this procedure must be used.**
- **This procedure will take more than 15 minutes to complete.**
- **A total of eight keys maybe be learned to a single vehicle.**
- **This procedure will only learn the vehicle key information. This procedure will not learn any immobilizer information between the body control module (BCM) and engine control module (ECM).**
- **If the battery voltage is low, charge the battery before continuing with the procedure.**

1. Connect a scan tool to the vehicle and access SPS.
2. Ensure that all power consuming devices are turned OFF on the vehicle.
3. Select the SPS application and follow the on-screen instructions.
4. Select Reprogram ECU.
5. Select IMMO Immobilizer Learn - Setup.
6. Select the Program Transponder or Remote Key (Delete) function.

NOTE:

- **At multiple times during the learn procedure, SPS will instruct you to turn the ignition to the run position. Make sure the vehicle is actually in the run mode before continuing on the SPS terminal. If the ignition is not in the run mode, the learn procedure will fail.**

- **The key slot is located inside the center console storage area. To access the slot, use a pick tool to remove the triangular cover at the bottom of the storage area located just forward of the cup holders. Insert the key into the exposed key slot.**

7. Follow the on-screen instructions.

NOTE: **If the programming does not complete or hangs during the programming operation, refer to Unable to Complete Programming below.**

8. After programming all keys, Programming Complete, is displayed.
9. Press and hold the ignition mode switch for 15 seconds.
10. Press the lock and unlock button on each key that was programmed. This will awaken each key and allow passive and active keyless entry functions to be established.
11. With a scan tool, clear any DTCs.
12. Verify each key is operating properly. Operate each of the keyless entry functions using the buttons on the key and then start the vehicle. When verifying operation, make sure that no other keys are near the vehicle.

Adding Keys (Without SPS)

NOTE:

- **To initiate, this procedure requires that 1 learned key be available.**
- **A total of eight keys maybe be learned to a single vehicle.**
- **This procedure adds keys only. The procedure does not erase previously learned keys.**
- **The keys to be learned must duplicate the mechanical cut of the current key.**

1. Place the recognized key(s) in the vehicle cupholder.
2. Insert the mechanical key of the new key into the key lock cylinder located on the outside of the driver door and turn the key to the unlock position five times within ten seconds. The Driver Information Center (DIC) will display Ready For Remote #2, 3, 4 or 5.

NOTE: **The key slot is located inside the center console storage area. To access the slot, use a pick tool to remove the triangular cover at the bottom of the storage area located just forward of the cup holders. Insert the key into the exposed key slot.**

3. Place the new key into the key slot.

NOTE: **If the programming does not complete or hangs during the programming operation, refer to Unable to Complete Programming below.**

4. Press the ignition mode switch. When the key is learned the DIC will indicate that it is ready to program the next key.
5. Remove the key from the key slot and press the unlock button. To program additional keys, repeat Steps 3 through 5.
6. When all additional keys are programmed, press and hold the ignition mode switch for 5 seconds to exit programming mode.

Adding Keys (With SPS)

NOTE:

- **This procedure may be used with or without existing learned keys being present. If no existing keys are available, this procedure must be used.**
- **This procedure will take more than 15 minutes to complete.**
- **A total of eight keys maybe be learned to a single vehicle.**
- **This procedure will only learn the vehicle key information.**
- **If the battery voltage is low, charge the battery before continuing with the procedure.**

1. Connect a scan tool to the vehicle and access SPS.
2. Ensure that all power consuming devices are turned OFF on the vehicle.
3. Select the SPS application and follow the on-screen instructions.
4. Select Reprogram ECU.
5. Select IMMO Immobilizer Learn - Setup.
6. Select the Program Transponder or Remote Key (Add) function.

NOTE:

- **At multiple times during the learn procedure, SPS will instruct you to turn the ignition to the run position. Make sure the vehicle is actually in the run mode before continuing on the SPS terminal. If the ignition is not in the run mode, the learn procedure will fail.**
- **The key slot is located inside the center console storage area. To access the slot, use a pick tool to remove the triangular cover at the bottom of the storage area located just forward of the cup holders. Insert the key into the exposed key slot.**

7. Follow the on-screen instructions.

NOTE: **If the programming does not complete or hangs during the programming operation, refer to Unable to Complete Programming below.**

8. After programming all keys, Programming Complete, is displayed.
9. Press and hold the ignition mode switch for 15 seconds.
10. Press the lock and unlock button on each key that was programmed. This will awaken each key and allow passive and active keyless entry functions to be established.

11. With a scan tool, clear any DTCs.
12. Verify each key is operating properly. Operate each of the keyless entry functions using the buttons on the key and then start the vehicle. When verifying operation, make sure that no other keys are near the vehicle.

Unable to Complete Programming

When attempting to program immobilizer components, various conditions may prevent the programming operation from completing. These conditions may be caused by normal system operation, a system malfunction, or an external influence. Common symptoms of a incomplete programming is receiving an error message during the attempt or having the SPS application become unresponsive.

- DTCs are set in the body control module (BCM)

  The immobilizer system is a function of the BCM software. If immobilizer DTCs are set in the BCM, such as DTC B2955, a fault has been identified in the immobilizer system. If this is not corrected before attempting to program components, the programming may not complete. Correct all immobilizer DTCs before attempting to program any immobilizer components.

- The key has been programmed to another vehicle or is not the correct type for the vehicle

  A key can only be programmed to a single vehicle. Once a key is programming to a vehicle, it is paired for the life of the key. The key can be learned to the same vehicle again and again, but it is not able to be programmed to a different vehicle.

  Many vehicle are available with both a base keyless entry system and an optional passive entry system. These keys typically look identical but cannot be substituted for one another. To verify the key is correct, compare the part number that is etched on the key to the part number identified in the parts catalog. The key should be correct for the system installed in the vehicle.

- The theft deterrent module is not properly secured or the key is not properly positioned in the pocket/slot.

  A theft deterrent module that is not fully seated or is otherwise not properly secured may prevent a coupling between the transponder located in the key and the theft deterrent module. Being out of place by as little as 1 mm may prevent programming from completing. Make sure the theft deterrent module is properly installed and fully seated in it's clip.

  The key shank must be fully extended so that the entire key shank fits into the programming slot.

  To determine if the theft deterrent module is properly secured, remove the battery from the key and place the key into the pocket/slot. Attempt to change the vehicle mode by pressing the vehicle ON/OFF switch. The vehicle should change modes. If the NO REMOTE DETECTED message is displayed on the DIC, the theft deterrent module may not be properly secured.

- External interference is interrupting the programming operation

  External RF interference and EMI may interrupt the low frequency coupling between the key and theft

deterrent module. This interference may come from many different locations. Devices plugged into the vehicle power outlets such as cell phone chargers, laptop computers, GPS devices, etc. may cause interference. Vehicle location may also cause interference. Locations near airports and military installations may causer interference. Remove all customer installed devices and, if necessary, move the vehicle if interference is suspected.

KEY WITH INTEGRATED TRANSMITTER PROGRAMMING (WITHOUT BTM)

Keys can be programming in various ways using the procedures outlined below. Using the Replacing Keys procedures will first erase all the known keys from the vehicle. Any existing keys and any new keys will then be programmed. This procedure should be used any time a key is required to be unlearned or erased from a vehicle. If a new key is being learned to a vehicle to replace a damaged, inoperative, or stolen key, the Replacing Keys procedure must be used. This ensures that the old key cannot be used to access or start the vehicle after programming.

The Adding Keys procedure does not erase any keys prior to programming. The procedure will simply program the key into the next available slot. The Adding Keys procedure should only be used when adding an additional key to the vehicle. The Adding Keys procedure should never be used to program a key to a vehicle that is having a key replaced, regardless of the cause for the replacement.

Replacing Keys (With SPS)

NOTE:

- **This procedure may be used with or without existing learned keys being present.**
- **This procedure will take more than 15 minutes to complete.**
- **A total of eight keys maybe be learned to a single vehicle.**
- **This procedure will only learn the vehicle key information. This procedure will not learn any immobilizer information between the body control module (BCM) and engine control module (ECM).**
- **If the battery voltage is low, charge the battery before continuing with the procedure.**

1. Connect a scan tool to the vehicle and access SPS.
2. Ensure that all power consuming devices are turned OFF on the vehicle.
3. Select the SPS application and follow the on-screen instructions.
4. Select Reprogram ECU.
5. Select IMMO Immobilizer Learn - Setup.
6. Select the Program Transponder or Remote Key (Delete) function.
7. Follow the on-screen instructions.
8. After programming all keys, "Programming Complete" is displayed.
9. Press the lock and unlock button on each key that was programmed. This will awaken each key and allow keyless entry functions to be established.
10. With a scan tool, clear any DTCs.

11. Verify each key is operating properly. Operate each of the keyless entry functions using the buttons on the key and then start the vehicle. When verifying operation, make sure that no other keys are near the vehicle.

Replacing Keys (Without SPS) - United States only

NOTE:

- **This procedure should be used without existing learned keys being present.**
- **This procedure will take more than 30 minutes to complete.**
- **A total of eight keys maybe be learned to a single vehicle.**
- **This procedure will only learn the vehicle key information. This procedure will not learn any immobilizer information between the body control module (BCM) and engine control module (ECM).**
- **If the battery voltage is low, charge the battery before continuing with the procedure.**

1. With an unlearned master vehicle key, turn ON the ignition, with the engine OFF.
2. Observe the security indicator, after approximately 10 min the indicator will turn off.
3. Turn OFF the ignition and wait 5 s.
4. Repeat steps 1 - 3 two more times for a total of 3 cycles or 30 min.

NOTE: **The body control module learns the key transponder information upon the ignition transition from OFF to ON. You must turn the ignition OFF before attempting to start the vehicle.**

5. Start the vehicle. The vehicle has now learned the key transponder information.
6. Additional keys may be learned using the Adding Keys procedure.
7. Clear all DTCs.

Adding Keys (Without SPS) - North America, except Canada

NOTE:

- **To initiate, this procedure requires that 1 learned key be available.**
- **A total of eight keys maybe be learned to a single vehicle.**
- **This procedure adds keys only. The procedure does not erase previously learned keys.**
- **The keys to be learned must duplicate the mechanical cut of the current key.**

1. With a previously learned key, turn the ignition ON.
2. Turn the ignition OFF and remove the key.
3. Within 10 seconds of turning OFF the ignition, insert the key to be learned and turn ON the ignition. The vehicle has now learned the new key and key.

Adding Keys (Without SPS) - Canada, Europe, South America, Asia, and Middle East

NOTE:

- **To initiate, this procedure requires that 2 learned key be available.**
- **A total of eight keys maybe be learned to a single vehicle.**
- **This procedure adds keys only. The procedure does not erase previously learned keys.**
- **The keys to be learned must duplicate the mechanical cut of the current key.**

1. With a previously learned key, turn the ignition ON.
2. Turn the ignition OFF and remove the key.
3. With a second previously learned key, turn the ignition ON.
4. Turn the ignition OFF and remove the key.
5. Within 10 seconds of turning OFF the ignition, insert the key to be learned and turn ON the ignition. The vehicle has now learned the new key and key.

Adding Keys (With SPS) - North America

NOTE:

- **This procedure may be used with or without existing learned keys being present.**
- **This procedure will take more than 15 minutes to complete.**
- **A total of eight keys maybe be learned to a single vehicle.**
- **This procedure will only learn the vehicle key information. This procedure will not learn any immobilizer information between the body control module (BCM) and engine control module (ECM).**
- **If the battery voltage is low, charge the battery before continuing with the procedure.**

1. Connect a scan tool to the vehicle and access SPS.
2. Ensure that all power consuming devices are turned OFF on the vehicle.
3. Select the SPS application and follow the on-screen instructions.
4. Select Reprogram ECU.
5. Select IMMO Immobilizer Learn - Setup.
6. Select the Program Transponder or Remote Key (Add) function.
7. Follow the on-screen instructions.
8. After programming all keys, "Programming Complete" is displayed.
9. Press the lock and unlock button on each key that was programmed. This will awaken each key and allow keyless entry functions to be established.
10. With a scan tool, clear any DTCs.
11. Verify each key is operating properly. Operate each of the keyless entry functions using the buttons on the key and then start the vehicle. When verifying operation, make sure that no other keys are near the

vehicle.

DESCRIPTION AND OPERATION

IMMOBILIZER DESCRIPTION AND OPERATION

Without BTM

The immobilizer system functions are provided by the Immobilizer Control Module, the Body Control Module (BCM) and the Engine Control Module (ECM), as well as any modules which store and report the environment identifier.

When an ignition key is inserted into the ignition lock cylinder and the ignition is turned ON, the transponder in the key is energized by the immobilizer coil surrounding the ignition lock cylinder. This immobilizer coil is part of the Immobilizer Control Module. The transponder transmits a signal that contains its unique value, which is received by the BCM through the Immobilizer Control Module. The BCM then compares this value to a value stored in memory. The BCM also monitors various control modules to determine if the stored environment identifiers match.

If both the environment identifier and the value received from the transponder match, the BCM will send the prerelease password via serial data to the ECM. If the encrypted code's unique value is incorrect or the environment identifier does not match, the BCM will send the fuel disable message to the ECM.

When the ECM receives the BCM prerelease password, the ECM will challenge the password. The ECM sends this challenge to the BCM via serial data. Both the ECM and BCM perform a calculation on this challenge. If the BCM calculated response to the challenge equals the calculation performed by the ECM, the ECM will allow vehicle starting.

The components of the immobilizer system are as follows:

- BCM
- ECM
- Immobilizer Control Module
- Ignition key
- Security indicator
- Various control modules which store and report the environment identifier

With BTM

The immobilizer system functions are provided by the Keyless Entry Control Module, the Remote Control Door Lock Receiver, the Immobilizer Control Module, the Body Control Module (BCM) and the Engine Control Module (ECM), as well as any control modules which store and report the environment identifier. The Keyless Entry Control Module uses low frequency antennas in three different locations on the vehicle to determine the location of the transmitter. Multiple antenna are used to ensure complete coverage of the vehicle interior and rear compartment.

When the vehicle ON/OFF switch is pressed, the low frequency antennas emit a challenge to the keyless entry transmitter. The transmitter receives this challenge and emits it's response as an RF message. The transmitter transmits a signal that contains its unique value, which is received by the BCM through the Remote Control Door Lock Receiver. The BCM then compares this value to a value stored in memory. The BCM also monitors various control modules to determine if the stored environment identifiers match.

If both the environment identifier and the value received from the transponder match, the BCM will send the prerelease password via serial data to the ECM. If the encrypted code's unique value is incorrect or the environment identifier does not match, the BCM will send the fuel disable message to the ECM.

When the ECM receives the BCM prerelease password, the ECM will challenge the password. The ECM sends this challenge to the BCM via serial data. Both the ECM and BCM perform a calculation on this challenge. If the BCM calculated response to the challenge equals the calculation performed by the ECM, the ECM will allow vehicle starting.

If RF communication is interrupted, a "No Remote Detected" message will be displayed on the DIC. In these cases, the transmitter can be placed in the transmitter slot/slot. The Immobilizer Control Module is located in the immediate vicinity of the transmitter pocket/slot. Placing the transmitter in the pocket/slot will create a low powered coupling between the transmitter and Immobilizer Control Module, allowing communications to occur and enabling vehicle starting.

The components of the immobilizer system are as follows:

- BCM
- ECM
- Remote Control Door Lock Receiver
- Immobilizer Control Module
- Low frequency antenna
- Ignition key/Keyless entry transmitter
- Security indicator
- Various control modules which store and report the environment identifier

Body Control Module (BCM)

The immobilizer system is an integral part of the BCM and is controlled internally within the BCM. The BCM can learn up to 8 keys (transponder values).

The BCM uses the following inputs:

- Environment identifier exchange with various modules
- Encrypted code from the vehicle key, received by the Immobilizer Control Module
- Encrypted code from the vehicle key, received by the Remote Control Door Lock Receiver (with BTM)

The BCM uses the following outputs:

- Prerelease password communication with ECM
- Challenge/response with ECM

When a transponder value is received by the BCM, the BCM will compare this value to the learned key code stored in memory. The BCM then performs one of the following functions:

- If the encrypted code value matches the values stored in the BCM memory, the BCM will send the prerelease password to the ECM via serial data.
- If the encrypted code unique value does not match the value stored in the BCM, the BCM will send the start disable message to the ECM via serial data.
- If the BCM is unable to measure the ignition key encrypted code value, the BCM will not send any messages to the ECM.

Engine Control Module (ECM)

When the ECM receives the BCM prerelease password, the ECM will challenge the password. The ECM sends this challenge to the BCM via the serial data circuit. Both the ECM and BCM perform a calculation on this challenge. If the calculated response from the BCM equals the calculation performed by the ECM, the ECM will allow vehicle starting.

The ECM will disable vehicle starting if any of the following immobilization conditions occur:

- The prerelease password is invalid.
- The start disable password is sent by the BCM.
- No passwords are received. There is no communication with the BCM.
- The BCM calculated response to the challenge does not equal the calculation performed by the ECM.

Immobilizer Control Module

The Immobilizer Control Module contains an immobilizer coil which surrounds the ignition cylinder (without BTM) or is located near the transmitter pocket/slot (with BTM). The coil passively powers the transponder located in the ignition key. When powered, the key transmits its unique value to the Immobilizer Control Module, which is then relayed to the BCM via a LIN serial data circuit. The Immobilizer Control Module also receives B+ and ground from the BCM.

The Immobilizer Control Module is used to:

1. Learn keys
2. To start vehicle with or without RF interference
3. To start vehicle when key battery is dead

Keyless Entry Control Module (with BTM)

The Keyless Entry Control Module uses low frequency antennas in three different locations on the vehicle to determine the location of the transmitter. Multiple antenna are used to ensure complete coverage of the vehicle

interior and rear compartment. The Keyless Entry Control Module monitors the ignition mode switch. When the ignition mode is changed, the Keyless Entry Control Module will command, or "ping", the low frequency antenna.

Low Frequency Antenna (with BTM)

When commanded, or "pinged", the low frequency antenna broadcast a challenge to the keyless entry transmitter. Because of the low power of the antenna, this challenge is only broadcast in an approximate three meter range of the antenna. Multiple antenna are used to ensure complete coverage of the vehicle interior and rear compartment.

Remote Control Door Lock Receiver (with BTM)

When the keyless entry transmitter is challenged by a low frequency antenna, is responds by emitting a response as an RF message. The transmitter transmits a signal that contains its unique value, which is received by the Remote Control Door Lock Receiver. The Remote Control Door Lock Receiver relays this information to the BCM via a discreet serial data circuit.

Ignition Key or Keyless Entry Transmitter

Each ignition key or keyless entry transmitter contains a transponder with a unique encrypted value. The transponder's encrypted value is fixed and unable to be changed. The immobilizer system uses the ignition key transponder value to determine if a valid ignition key is being used to start the vehicle.

Environment Identifier

Various modules throughout the vehicle learn a specific environment identifier during the module programming process. The environment identifier is learned by each individual module and matches the environment identifier stored in the BCM. Prior to starting after a battery disconnect, each of the modules which store a environment identifier will compare their identifier to that of the identifier stored in the BCM. If all the identifiers match, the engine starting process will continue. If the environment identifiers do not match, engine starting will be disabled.

Security Indicator

The BCM will command the Instrument Cluster to illuminate the security indicator when the ignition key is in the ON position to indicate a fault has occurred within the immobilizer system and when the engine starting is disabled.

REMOTE VEHICLE SPEED LIMITING DESCRIPTION AND OPERATION

Certain vehicles equipped with OnStar® now have an additional feature that allows for remote limiting of the vehicle's speed. This OnStar® feature is called Stolen Vehicle Slow-Down and is now part of the OnStar® Stolen Vehicle Assistance service. This feature, when used in conjunction with local law enforcement and strict guidelines at the OnStar® Call Center, will slow the vehicle by interacting with the engine control system.

When the engine control system receives a valid request from the OnStar® telematics communications interface module, it will enter into a reduced engine power/vehicle speed limiting mode, which will decelerate the

vehicle. Once the request is active the engine control module begins reducing engine torque to match requested vehicle speed and a REDUCED ENGINE POWER indication is displayed. No DTCs will be set during this process.

2013 ACCESSORIES & EQUIPMENT

Mirrors - Cruze

SPECIFICATIONS

FASTENER TIGHTENING SPECIFICATIONS

Fastener Tightening Specifications

Application	Specification	
	Metric	English
Inside Rearview Mirror	2 N.m	18 lb in
Outside Rearview Mirror	9 N.m	80 lb in
Outside Rearview Mirror Housing Screw	2.5 N.m	22 lb in
Outside Rearview Mirror Motor (Actuator) Bolt	2.5 N.m	22 lb in

SCHEMATIC WIRING DIAGRAMS

INSIDE REARVIEW MIRROR WIRING SCHEMATICS

DD8 Wiring Schematics

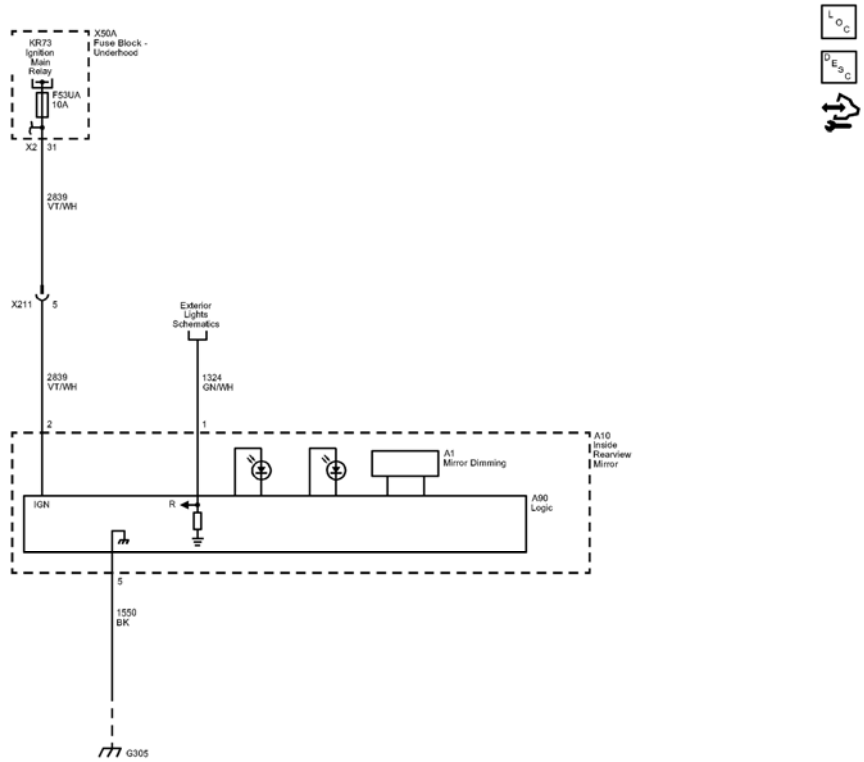

Fig. 1: Inside Rearview Mirror (DD8) Wiring Schematics
Courtesy of GENERAL MOTORS COMPANY

Callout	Component Name
2839	Run/Crank Ignition 1 Voltage
2839_VT/WH	2839 VT/WH
CAV_2	2
CAV_31	31
CONN_X2	X2
CAV_5	5
2839_VT/WH	2839 VT/WH
1324	Backup Lamp Supply Voltage
1324 GN/WH	1324 GN/WH
CAV_1	1
1550	Ground
1550_BK	1550 BK
CAV_5	5
G305	G305
F53UA	F53UA 10A
X211	X211
A90	Logic
Exterior_Lights_Schematics_REF	Exterior Lights Schematics
A10	(DD8)
KR73	
X50A	
A1	

OUTSIDE REARVIEW MIRROR WIRING SCHEMATICS

Outside Rearview Mirror Wiring Schematics

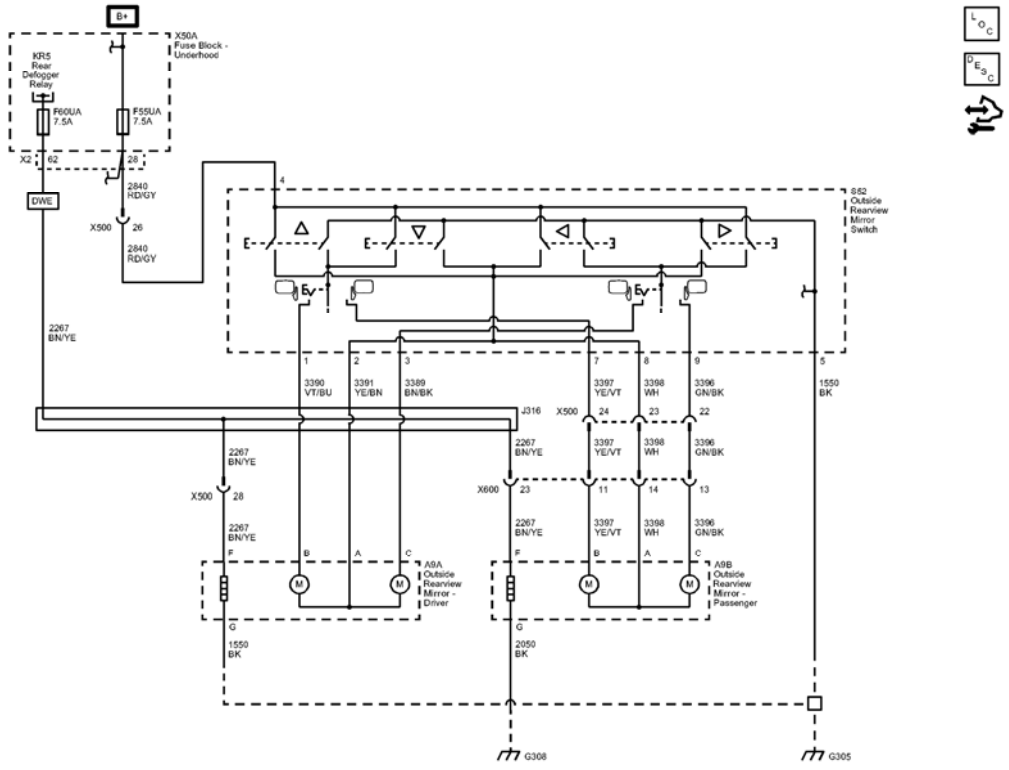

Fig. 2: Outside Rearview Mirror Wiring Schematics
Courtesy of GENERAL MOTORS COMPANY

Callout	Component Name
2267	Mirror Heating Element Supply Voltage
2267 BN/YE	2267 BN/YE
CAV_62	62
CONN_X2	X2
2840	Battery Positive Voltage
2840_RD/GY	2840 RD/GY
CAV_4	4
CAV_28	28
DWE	MIRROR O/S-LH and RH, RC, ELEC, HEAT, AUX WFOV/DRVR, MANFOLD, CNVX/PASS
2840_RD/GY	2840 RD/GY
CAV 26	26
1550	Ground
1550_BK	1550 BK
CAV_5	5
3396	Co-Driver Mirror Motor Right (+) Left (-) Control
3396_GN/BK	3396 GN/BK

CAV_C	C
CAV_9	9
3398	Co-Driver Mirror Motor Common Control
3398_WH	3398 WH
CAV_A	A
CAV_8	8
3397	Co-Driver Mirror Motor Up (+) Down (-) Control
3397_YE/VT	3397 YE/VT
CAV_B	B
CAV_7	7
2267_BN/YE	2267 BN/YE
CAV_F	F
3390	Driver Mirror Motor Up (+) Down (-) Control
3390_VT/BU	3390 VT/BU
CAV_B	B
CAV_1	1
3391	Driver Mirror Motor Common Control
3391_YE/BN	3391 YE/BN
CAV_A	A
CAV_2	2
3389	Driver Mirror Motor Right (+) Left (-) Control
3389_BN/BK	3389 BN/BK
CAV_C	C
CAV_3	3
2267_BN/YE	2267 BN/YE
CAV_F	F
2050	Ground
2050 BK	2050 BK
CAV_G	G
1550 BK	1550 BK
CAV_G	G
CAV_28	28
2267_BN/YE	2267 BN/YE
2267_BN/YE	2267 BN/YE
3396_GN/BK	3396 GN/BK
3398_WH	3398 WH
3397_YE/VT	3397 YE/VT
3396_GN/BK	3396 GN/BK
3398_WH	3398 WH
3397_YE/VT	3397 YE/VT
X600	X600

	23
CAV_11	11
CAV_14	14
CAV_13	13
X500	X500
CAV_24	24
CAV_23	23
CAV_22	22
G308	G308
G305	G305
F60UA	F60UA 7.5A
F55UA	F55UA 7.5A
X500	X500
J316	J316
X500	X500
X600	X600
X500	X500
S52	
A9A	
A9B	
X50A	
KR5	

DIAGNOSTIC INFORMATION AND PROCEDURES

SYMPTOMS - MIRRORS

NOTE: The following steps must be completed before using the symptom tables.

1. Perform the **Diagnostic System Check - Vehicle** before using the Symptom Tables in order to verify that all of the following are true:
   - There are no DTCs set.
   - The control modules can communicate via the serial data link.
2. Review the system operation in order to familiarize yourself with the system functions. Refer to the following system descriptions:
   - **Automatic Day-Night Mirror Description and Operation**
   - **OnStar Description and Operation**
   - **Outside Mirror Description and Operation**

Visual/Physical Inspection

- Inspect for aftermarket devices which could affect the operation of the system. Refer to **Checking**

Aftermarket Accessories .

- Inspect the easily accessible or visible system components for obvious damage or conditions which could cause the symptom.

Intermittent

Faulty electrical connections or wiring may be the cause of intermittent conditions. Refer to **Testing for Intermittent Conditions and Poor Connections** .

Symptom List

Refer to a symptom diagnostic procedure from the following list in order to diagnose the symptom:

- **Automatic Day-Night Mirrors Malfunction**
- **Heated Mirrors Malfunction**
- **OnStar Button LED Malfunction**
- **OnStar Button Malfunction**
- **Power Mirror Malfunction**

HEATED MIRRORS MALFUNCTION

Diagnostic Instructions

- Perform the **Diagnostic System Check - Vehicle** prior to using this diagnostic procedure.
- Review **Strategy Based Diagnosis** for an overview of the diagnostic approach.
- **Diagnostic Procedure Instructions** provides an overview of each diagnostic category.

Diagnostic Fault Information

Circuit	Short to Ground	Open/High Resistance	Short to Voltage	Signal Performance
Left Heated Mirror Element Control	2	1	3	-
Driver Outside Rearview Mirror Ground	-	1	-	-
Right Heated Mirror Element Control	2	1	3	-
Passenger Outside Rearview Mirror Ground	-	1	-	-
1. Single Heated Mirror Inoperative 2. Both Heated Mirrors Inoperative 3. Heated Mirrors Always On				

Circuit/System Description

The rear defogger relay supplies voltage to the outside rearview mirror heater elements based on the current state of the rear window defogger. The relay supplies B+ through the driver/passenger mirror heating element control circuit when a request is seen.

Reference Information

Schematic Reference

Outside Rearview Mirror Schematics

Connector End View Reference

COMPONENT CONNECTOR END VIEWS - INDEX

Description and Operation

Outside Mirror Description and Operation

Electrical Information Reference

- **Circuit Testing**
- **Connector Repairs**
- **Testing for Intermittent Conditions and Poor Connections**
- **Wiring Repairs**

Scan Tool Reference

Control Module References for scan tool information.

Circuit/System Verification

1. Engine running.
2. Verify the E18 Rear Defogger Grid turns ON and OFF when commanding the Rear Defogger On and Off with a scan tool.
    - **If the E18 Rear Defogger Grid does not turn ON or OFF**

      Refer to **Rear Window Defogger Malfunction** .

    - **If the E18 Rear Defogger Grid turns ON and OFF**
3. Verify the mirror glass of the A9A Outside Rearview Mirror-Driver and the A9B Outside Rearview Mirror-Passenger become warm when commanding the Rear Defogger On with a scan tool.
    - **If the mirror glass of the A9A Outside Rearview Mirror-Driver and the A9B Outside Rearview Mirror-Passenger do not become warm**

      Refer to Circuit/System Testing below.

- **If the mirror glass of the A9A Outside Rearview Mirror-Driver and the A9B Outside Rearview Mirror-Passenger become warm**

4. All OK.

Circuit/System Testing

1. Ignition OFF and all vehicle systems OFF, disconnect the harness connector at the appropriate A9 Outside Rearview Mirror. It may take up to 2 minutes for all vehicle systems to power down.
2. Test for less than 10 ohms between the ground circuit terminal G and ground.
   - **If 10 ohms or greater**
   1. Ignition OFF.
   2. Test for less than 2 ohms in the ground circuit end to end.
      - If 2 ohms or greater, repair the open/high resistance in the circuit.
      - If less than 2 ohms, repair the open/high resistance in the ground connection.
   - **If less than 10 ohms**
3. Engine Running, connect a test lamp between the control circuit terminal F and the ground circuit terminal G.
4. Verify the test lamp turns ON and OFF when commanding the Rear Defogger On and Off with a scan tool.
   - **If the test lamp is always OFF**
   1. Ignition OFF, remove the test lamp, disconnect the harness connector at the X50A Fuse Block-Underhood.
   2. Test for infinite resistance between the control circuit and ground.
      - If less than infinite resistance, repair the short to ground on the circuit.
      - If infinite resistance
   3. Test for less than 2 ohms in the control circuit end to end.
      - If 2 ohms or greater, repair the open/high resistance in the circuit.
      - If less than 2 ohms, replace the A9 Outside Rearview Mirror.
   - **If the test lamp is always ON**
   1. Ignition OFF, remove the test lamp, disconnect the harness connector at the X50A Fuse Block-Underhood, ignition ON.
   2. Test for less than 1 V between the control circuit and ground.
      - If 1 V or greater, repair the short to voltage on the circuit.
      - If less than 1 V, replace the X50A Fuse Block-Underhood
   - **If the test lamp turns ON and OFF**
5. Test or replace the A9 Outside Rearview Mirror.

Repair Instructions

Perform the **Diagnostic Repair Verification** after completing the repair.

Outside Rearview Mirror Glass Replacement

Front Compartment Fuse Block Replacement

AUTOMATIC DAY-NIGHT MIRRORS MALFUNCTION

Diagnostic Instructions

- Perform the **Diagnostic System Check - Vehicle** prior to using this diagnostic procedure.
- Review **Strategy Based Diagnosis** for an overview of the diagnostic approach
- **Diagnostic Procedure Instructions** provides an overview of each diagnostic category

Diagnostic Fault Information

Circuit	Short to Ground	Open/High Resistance	Short to Voltage	Signal Performance
Ignition	1	1	-	-
Backup Lamp Control	B2545 02	2	2	-
Ground	-	1	-	-
1. Automatic Mirror Dimming Inoperative 2. Mirror Automatic Day-Night Disable Feature Malfunction				

Circuit/System Description

The inside rearview mirror uses 2 photocell sensors. One sensor is the rear light sensor, located on the face side of the mirror, facing the rear of the vehicle. The rear light sensor is used to determine light conditions present at the mirror face. The other sensor is the front light sensor, located on the backside of the mirror, facing the front of the vehicle. The front light sensor is used to determine the exterior light conditions at the front of the vehicle. With a low exterior light condition detected by the front light sensor and a high light condition from the rear light sensor, the inside rearview mirror will automatically darken the face of the inside rearview mirror.

With the gear selector lever in the REVERSE position and the engine running, backup lamp control voltage is supplied as an input to the inside rearview mirror. The mirror monitors this input to disable the automatic day-night feature. This allows the driver to see objects in the mirror clearly when backing up, regardless of the rear light sensor status.

Reference Information

Schematic Reference

Inside Rearview Mirror Schematics

Connector End View Reference

COMPONENT CONNECTOR END VIEWS - INDEX

Description and Operation

Automatic Day-Night Mirror Description and Operation

Electrical Information Reference

- **Circuit Testing**
- **Connector Repairs**
- **Testing for Intermittent Conditions and Poor Connections**
- **Wiring Repairs**

Circuit/System Verification

1. Ignition ON.
2. Cover the windshield with a blanket or other suitable item.
3. Verify the A10 Inside Rearview Mirror face dims when shining a bright light into the rear light sensor
   - **If the A10 Inside Rearview Mirror does not dim**

     Refer to Circuit/System Testing below - Inside Review Mirror Dimming Inoperative

   - **If the A10 Inside Rearview Mirror dims**
4. Verify the A10 Inside Rearview Mirror face transitions from dim to bright while commanding the Backup Lamps Active and Inactive with a scan tool.
   - **If the A10 Inside Rearview Mirror does not transition between dim and bright.**

     Refer to Circuit/System Testing below- Day-Night Disable Malfunction

   - **If the A10 Inside Rearview Mirror transitions between bright and dim states**
5. All OK.

Circuit/System Testing

Inside Review Mirror Dimming Inoperative

1. Ignition OFF and all vehicle systems OFF, disconnect the harness connector at the A10 Inside Rearview Mirror. It may take up to 2 minutes for all vehicle systems to power down.
2. Test for less than 10 ohms between the ground circuit terminal 5 and ground.
   - **If 10 ohms or greater**
   1. Ignition OFF.
   2. Test for less than 2 ohms in the ground circuit end to end.
   - If 2 ohms or greater, repair the open/high resistance in the circuit.
   - If less than 2 ohms, repair the open/high resistance in the ground connection.
   - **If less than 10 ohms**

3. Ignition ON.
4. Verify a test lamp illuminates between the ignition circuit terminal 2 and ground.
    - **If the test lamp does not illuminate and the circuit fuse is good**
    1. Ignition OFF.
    2. Test for less than 2 ohms in the ignition circuit end to end.
        - If 2 ohms or greater, repair the open/high resistance in the circuit.
        - If less than 2 ohms, refer to **Retained Accessory Power Malfunction** .
    - **If the test lamp does not illuminate and the circuit fuse is open**
    1. Ignition OFF.
    2. Test for infinite resistance between the ignition circuit and ground.
        - If less than infinite resistance, repair the short to ground on the circuit.
        - If infinite resistance, replace the A10 Inside Rearview Mirror.
    - **If the test lamp illuminates**
5. Replace the A10 Inside Rearview Mirror.

Day-Night Disable Malfunction

1. Ignition OFF, disconnect the harness connector at the A10 Inside Rearview Mirror.
2. Connect a test lamp between the control circuit terminal 1 and ground
3. Ignition ON, verify the test lamp turns ON and OFF while commanding the Backup Lamps Active and Inactive with a scan tool.
    - **If the test lamp is always OFF**
    1. Ignition OFF, remove the test lamp, disconnect the harness connector at the K9 Body Control Module.
    2. Test for infinite resistance between the control circuit terminal 1 and ground.
        - If less than infinite resistance, repair the short to ground on the circuit.
        - If infinite resistance
    3. Test for less than 2 ohms in the control circuit end to end.
        - If 2 ohms or greater, repair the open/high resistance in the circuit.
        - If less than 2 ohms, refer to **Backup Lamps Malfunction (Manual Transmission)** , **Backup Lamps Malfunction (Automatic Transmission)** .
    - **If the test lamp is always ON**
    1. Ignition OFF, remove the test lamp, disconnect the harness connector at the K9 Body Control Module, ignition ON.
    2. Test for less than 1 V between the control circuit and ground.
        - If 1 V or greater, repair the short to voltage on the circuit.
        - If less than 1 V, refer to **Backup Lamps Malfunction (Manual Transmission)** , **Backup Lamps Malfunction (Automatic Transmission)**
    - **If the test lamp turns ON and OFF**

4. Replace the A10 Inside Rearview Mirror.

Repair Instructions

Perform the **Diagnostic Repair Verification** after completing the repair

Inside Rearview Mirror Replacement

POWER MIRROR MALFUNCTION

Diagnostic Instructions

- Perform the **Diagnostic System Check - Vehicle** prior to using this diagnostic procedure.
- Review **Strategy Based Diagnosis** for an overview of the diagnostic approach.
- **Diagnostic Procedure Instructions** provides an overview of each diagnostic category.

Diagnostic Fault Information

Circuit	Short to Ground	Open/High Resistance	Short to Voltage	Signal Performance
Outside Rearview Mirror Switch B+	1	1	-	-
Driver Mirror Motor Horizontal Control	1	2	2	-
Driver Mirror Motor Vertical Control	1	2	2	-
Passenger Mirror Motor Horizontal Control	1	3	3	-
Passenger Mirror Motor Vertical Control	1	3	3	-
Outside Rearview Mirror Switch Ground	-	1	-	-
1. Both Outside Power Mirrors Inoperative 2. Driver Outside Power Mirror Malfunction 3. Passenger Outside Power Mirror Malfunction				

Circuit/System Description

The outside rearview mirror switch controls the outside rearview mirrors based on the position of the mirror selector switch and which movement position is selected. The outside rearview mirror switch has four positions: up, down, left, and right. B+ is applied to the switch from the power mirror fuse and when a movement position switch is selected, voltage is sent to the commanded mirror via a mirror control circuit. The opposite mirror control circuit acts as a ground circuit for the bi-directional mirror motor. Ground is the applied through the switch.

Reference Information

Schematic Reference

Outside Rearview Mirror Schematics

Connector End View Reference

COMPONENT CONNECTOR END VIEWS - INDEX

Description and Operation

Outside Mirror Description and Operation

Electrical Information Reference

- **Circuit Testing**
- **Connector Repairs**
- **Testing for Intermittent Conditions and Poor Connections**
- **Wiring Repairs**

Circuit/System Verification

1. Verify the mirror glass of the A9A Outside Rearview Mirror-Driver and the A9B Outside Rearview Mirror-Passenger move UP, DOWN, LEFT and RIGHT with the S52 Outside Rearview Mirror Switch.
   - **If both outside mirror glasses do not move**

     Refer to Circuit/System Testing below - Both Outside Rearview Mirrors Inoperative.

   - **If the driver outside mirror glass does not move UP, DOWN, LEFT or RIGHT**

     Refer to Circuit/System Testing below - Driver Outside Mirror Movement Malfunction.

   - **If the passenger outside mirror glass does not move UP, DOWN, LEFT or RIGHT**

     Refer to Circuit/System Testing below- Passenger Outside Mirror Movement Malfunction.

   - **If the mirror glass of the A9A Outside Rearview Mirror-Driver and the A9B Outside Rearview Mirror-Passenger move UP, DOWN, LEFT and RIGHT**
2. All OK.

Circuit/System Testing

Both Outside Rearview Mirrors Inoperative

1. Ignition OFF and all vehicle systems OFF, disconnect the harness connector at the S52 Outside Rearview Mirror Switch. It may take up to 2 minutes for all vehicle systems to power down.
2. Test for less than 10 ohms between the ground circuit terminal 5 and ground.

- **If 10 ohms or greater**

1. Ignition OFF.
2. Test for less than 2 ohms in the ground circuit end to end.
   - If 2 ohms or greater, repair the open/high resistance in the circuit.
   - If less than 2 ohms, repair the open/high resistance in the ground connection.

- **If less than 10 ohms**

3. Verify a test lamp illuminates between the B+ circuit terminal 4 and ground.
   - **If the test lamp does not illuminate and the circuit fuse is good**

   1. Ignition OFF.
   2. Test for less than 2 ohms in the B+ circuit end to end.
      - If 2 ohms or greater, repair the open/high resistance in the circuit.
      - If less than 2 ohms, verify the fuse is not open and there is voltage at the fuse.

   - **If the test lamp does not illuminate and the circuit fuse is open**

   1. Ignition OFF.
   2. Test for infinite resistance between the B+ circuit and ground.
      - If less than infinite resistance, repair the short to ground on the circuit.
      - If infinite resistance
   3. Test for infinite resistance between each of the control circuit terminals listed below and ground:
      - Control circuit terminal 1
      - Control circuit terminal 2
      - Control circuit terminal 3
      - Control circuit terminal 7
      - Control circuit terminal 8
      - Control circuit terminal 9
      - If less than infinite resistance, repair the short to ground on the circuit.
      - If infinite resistance, replace the appropriate M77 Outside Rearview Mirror Motor.

   - **If the test lamp illuminates**

4. Test or replace the S52 Outside Rearview Mirror Switch.

Driver Outside Mirror Movement Malfunction

1. Ignition OFF, disconnect the harness connector at the A9A Outside Rearview Mirror-Driver. Ignition ON
2. Connect a test lamp between the control circuit terminal A and control circuit terminal B.
3. Verify the test lamp turns ON when commanding the UP and DOWN states with the S52 Outside Rearview Mirror Switch.
   - **If the test lamp remains OFF during either of the commands**

   1. Ignition OFF, remove the test lamp, disconnect the harness connector at the S52 Outside Rearview Mirror Switch.
   2. Test for infinite resistance between each control circuit and ground.

- If less than infinite resistance, repair the short to ground on the circuit.
- If infinite resistance

3. Test for less than 2 ohms in each control circuit end to end.
   - If 2 ohms or greater, repair the open/high resistance in the circuit.
   - If less than 2 ohms, test or replace the S52 Outside Rearview Mirror Switch.

- **If the test lamp is always ON**

1. Ignition OFF, remove the test lamp, disconnect the harness connector at the S52 Outside Rearview Mirror Switch, ignition ON.
2. Test for less than 1 V between each control circuit and ground.
   - If 1 V or greater, repair the short to voltage on the circuit.
   - If less than 1 V, test or replace the S52 Outside Rearview Mirror Switch

- **If the test lamp turns ON during each of the commands**

4. Connect a test lamp between the control circuit terminal A and control circuit terminal C.
5. Verify the test lamp turns ON when commanding the LEFT and RIGHT states with the S52 Outside Rearview Mirror Switch.

- **If the test lamp remains OFF during either of the commands**

1. Ignition OFF, remove the test lamp, disconnect the harness connector at the S52 Outside Rearview Mirror Switch.
2. Test for infinite resistance between each control circuit and ground.
   - If less than infinite resistance, repair the short to ground on the circuit.
   - If infinite resistance
3. Test for less than 2 ohms in each control circuit end to end.
   - If 2 ohms or greater, repair the open/high resistance in the circuit.
   - If less than 2 ohms, test or replace the S52 Outside Rearview Mirror Switch.

- **If the test lamp is always ON**

1. Ignition OFF, remove the test lamp, disconnect the harness connector at the S52 Outside Rearview Mirror Switch, ignition ON.
2. Test for less than 1 V between each control circuit and ground.
   - If 1 V or greater, repair the short to voltage on the circuit.
   - If less than 1 V, test or replace the S52 Outside Rearview Mirror Switch

- **If the test lamp turns ON during each of the commands**

6. Test or replace the M77D Outside Rearview Mirror Motor-Driver.

Passenger Outside Mirror Movement Malfunction

1. Ignition OFF, disconnect the harness connector at the A9B Outside Rearview Mirror-Passenger. Ignition ON
2. Connect a test lamp between the control circuit terminal A and control circuit terminal B.
3. Verify the test lamp turns ON when commanding the UP and DOWN states with the S52 Outside Rearview Mirror Switch.

- **If the test lamp remains OFF during either of the commands**

1. Ignition OFF, remove the test lamp, disconnect the harness connector at the S52 Outside Rearview Mirror Switch.
2. Test for infinite resistance between each control circuit and ground.
   - If less than infinite resistance, repair the short to ground on the circuit.
   - If infinite resistance
3. Test for less than 2 ohms in each control circuit end to end.
   - If 2 ohms or greater, repair the open/high resistance in the circuit.
   - If less than 2 ohms, test or replace the S52 Outside Rearview Mirror Switch.

- **If the test lamp is always ON**

1. Ignition OFF, remove the test lamp, disconnect the harness connector at the S52 Outside Rearview Mirror Switch, ignition ON.
2. Test for less than 1 V between each control circuit and ground.
   - If 1 V or greater, repair the short to voltage on the circuit.
   - If less than 1 V, test or replace the S52 Outside Rearview Mirror Switch

- **If the test lamp turns ON during each of the commands**

4. Connect a test lamp between the control circuit terminal A and control circuit terminal C.
5. Verify the test lamp turns ON when commanding the LEFT and RIGHT states with the S52 Outside Rearview Mirror Switch.
   - **If the test lamp remains OFF during either of the commands**

   1. Ignition OFF, remove the test lamp, disconnect the harness connector at the S52 Outside Rearview Mirror Switch.
   2. Test for infinite resistance between each control circuit and ground.
      - If less than infinite resistance, repair the short to ground on the circuit.
      - If infinite resistance
   3. Test for less than 2 ohms in each control circuit end to end.
      - If 2 ohms or greater, repair the open/high resistance in the circuit.
      - If less than 2 ohms, test or replace the S52 Outside Rearview Mirror Switch.

   - **If the test lamp is always ON**

   1. Ignition OFF, remove the test lamp, disconnect the harness connector at the S52 Outside Rearview Mirror Switch, ignition ON.
   2. Test for less than 1 V between each control circuit and ground.
      - If 1 V or greater, repair the short to voltage on the circuit.
      - If less than 1 V, test or replace the S52 Outside Rearview Mirror Switch

   - **If the test lamp turns ON during each of the commands**

6. Test or replace the M77P Outside Rearview Mirror Motor-Passenger.

Repair Instructions

Perform the **Diagnostic Repair Verification** after completing the repair.

- **Outside Rearview Mirror Remote Control Switch Replacement**
- **Outside Rearview Mirror Inner Actuator Replacement**

REPAIR INSTRUCTIONS

OUTSIDE REARVIEW MIRROR REPLACEMENT

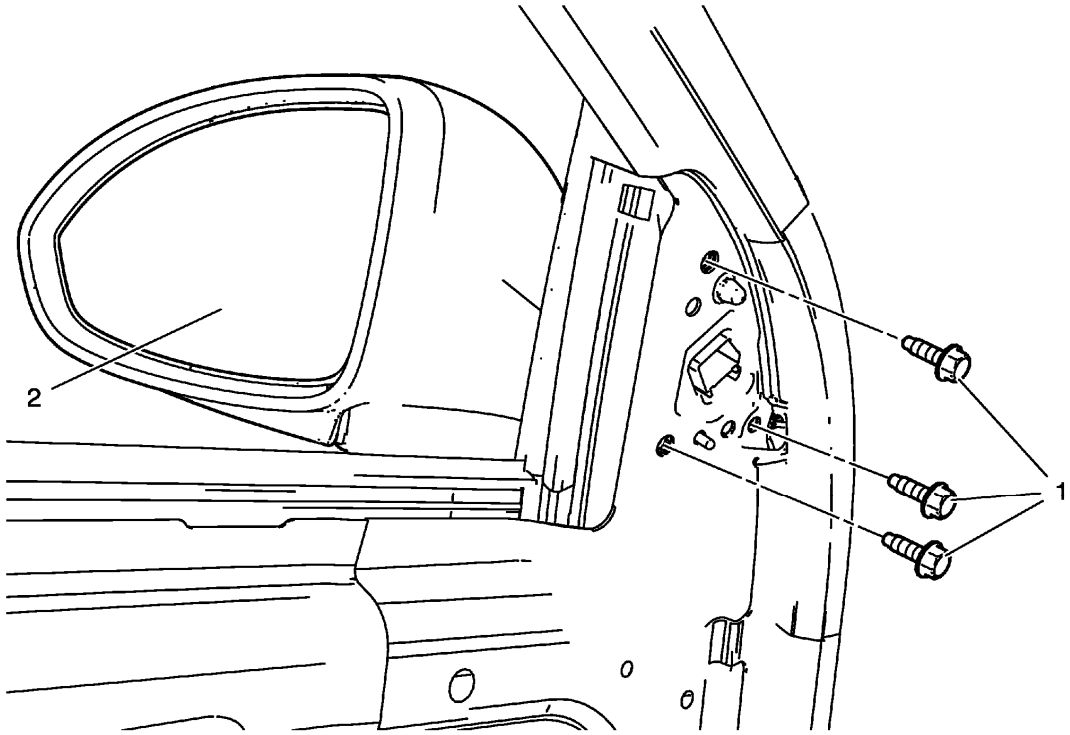

Fig. 3: View Of Outside Rearview Mirror And Mount Plate Bolts
Courtesy of GENERAL MOTORS COMPANY

Outside Rearview Mirror Replacement

Callout	Component Name
Preliminary Procedures Remove the front side door upper trim cover. Refer to **Front Side Door Upper Trim Cover Replacement** .	
1	Outside Rearview Mirror Mount Plate Bolt (Qty: 3) **CAUTION:** **Refer to Fastener Caution .** **Tighten** 9 N.m (80 lb in)
	Outside Rearview Mirror

2	**Procedure** Disconnect electrical connector.

OUTSIDE REARVIEW MIRROR HOUSING COVER REPLACEMENT

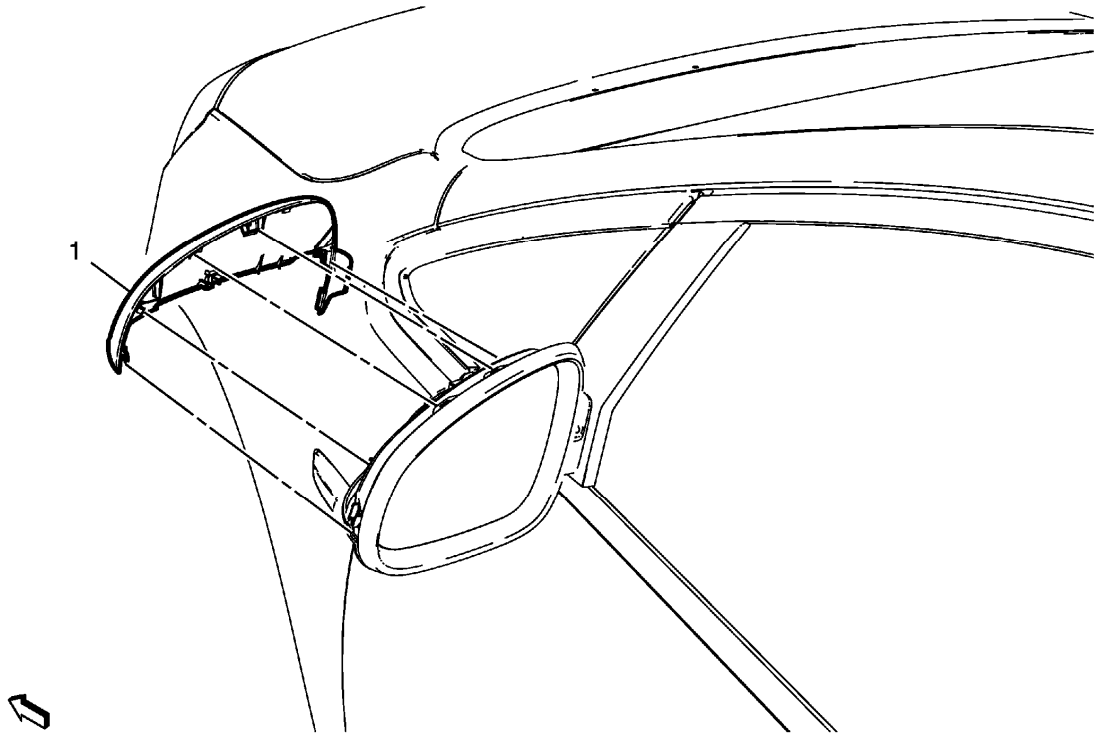

Fig. 4: Outside Rearview Mirror Housing Cover
Courtesy of GENERAL MOTORS COMPANY

Outside Rearview Mirror Housing Cover Replacement

Callout	Component Name
1	Outside Rearview Mirror Housing Cover **Procedure** 1. Using plastic pry tools, insert tools on top and bottom between the housing cover and mirror body. 2. Pry carefully and equally on top and bottom to release housing toward the front of vehicle. 3. Install housing cover to mirror body by applying pressure on housing cover toward the rear of vehicle until retainers are engaged.

OUTSIDE REARVIEW MIRROR REMOTE CONTROL SWITCH REPLACEMENT

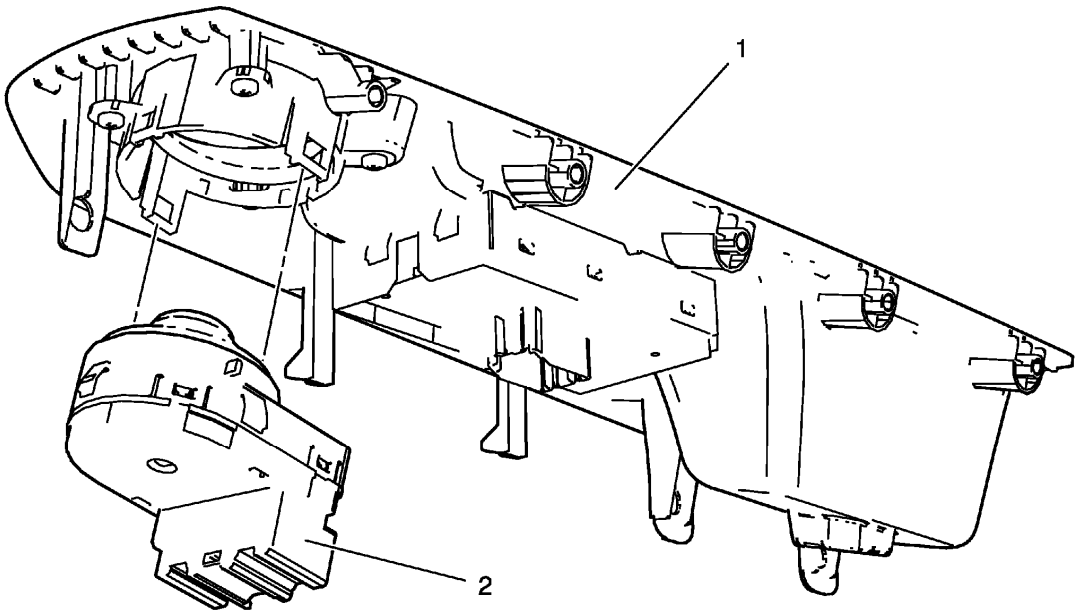

Fig. 5: View Of Outside Remote Control Rearview Mirror Switch And Bezel
Courtesy of GENERAL MOTORS COMPANY

Outside Rearview Mirror Remote Control Switch Replacement

Callout	Component Name
Preliminary Procedures Remove front side door window switch bezel. Refer to **Front Side Door Window Switch Bezel Replacement** .	
1	Side Window Switch Bezel
2	Outside Remote Control Rearview Mirror Switch **Procedure** Using a plastic pry tool, gently pry on the sides to release the switch.

OUTSIDE REARVIEW MIRROR INNER ACTUATOR REPLACEMENT

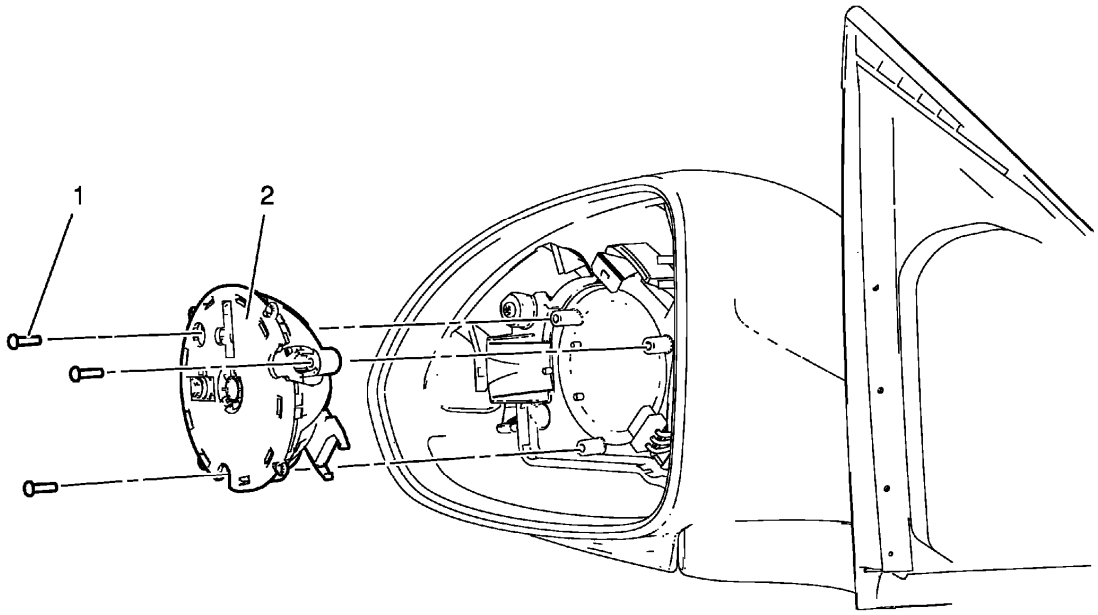

Fig. 6: Outside Rearview Mirror Inner Actuator
Courtesy of GENERAL MOTORS COMPANY

Outside Rearview Mirror Inner Actuator Replacement

Callout	Component Name
Preliminary Procedures Remove the outside rearview mirror glass. Refer to **Outside Rearview Mirror Glass Replacement**.	
1	Outside Rearview Mirror Inner Actuator Bolt (Qty: 3) **CAUTION:** **Refer to Fastener Caution .**
2	Outside Rearview Mirror Inner Actuator **Procedure** Disconnect the electrical connector.

OUTSIDE REARVIEW MIRROR GLASS REPLACEMENT

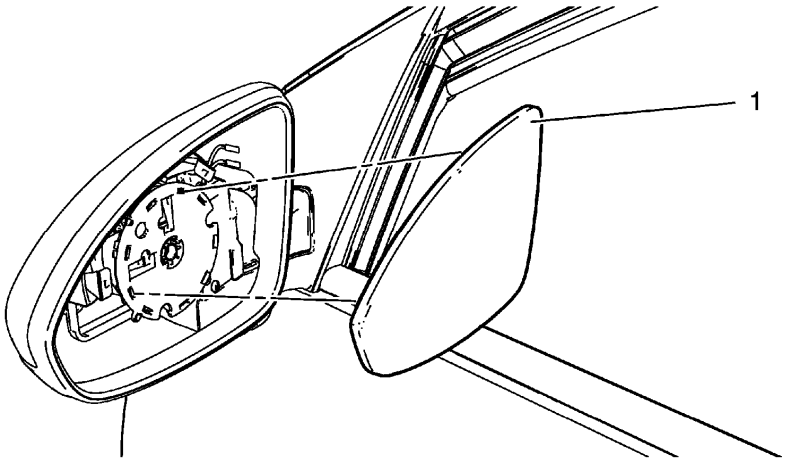

Fig. 7: View Of Outside Rearview Mirror Glass
Courtesy of GENERAL MOTORS COMPANY

Outside Rearview Mirror Glass Replacement

Callout	Component Name
1	Outside Rearview Mirror Glass **WARNING:** **Refer to Glass and Sheet Metal Handling Warning .** **Procedure** 1. Release the mirror glass backing from the mirror housing by pulling outward. 2. Disconnect electrical connector if equipped.

OUTSIDE REARVIEW MIRROR HOUSING REPLACEMENT

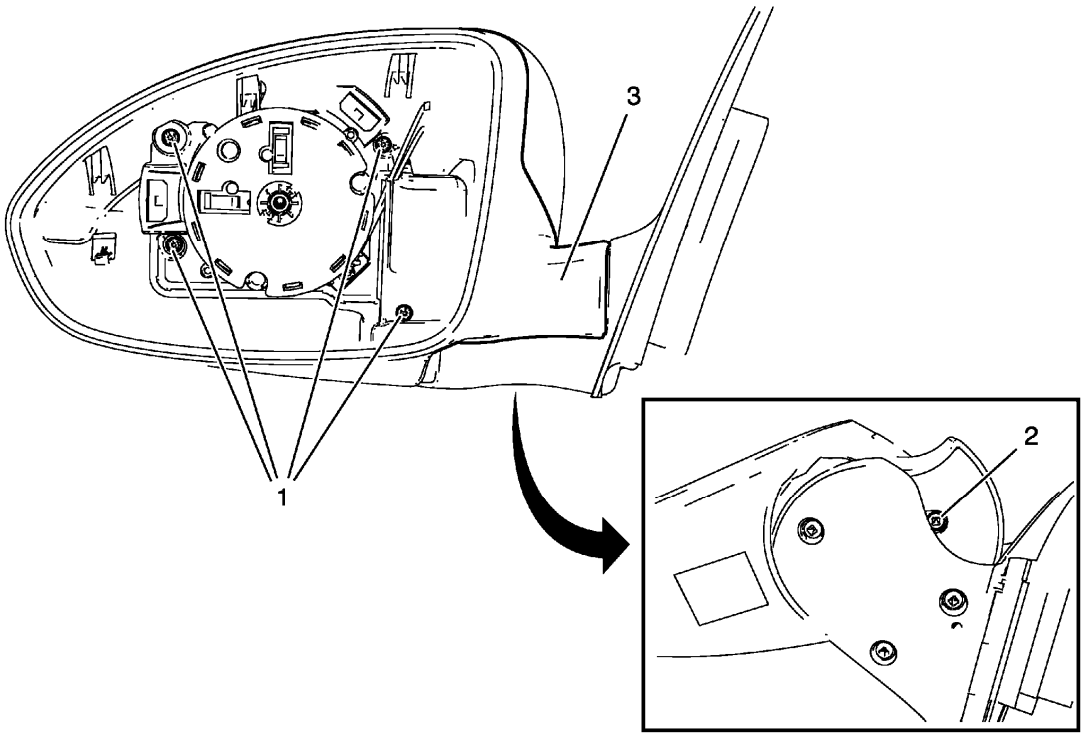

Fig. 8: Outside Rearview Mirror Housing
Courtesy of GENERAL MOTORS COMPANY

Outside Rearview Mirror Housing Replacement

Callout	Component Name
Preliminary Procedures Remove outside rearview mirror glass. Refer to **Outside Rearview Mirror Glass Replacement**.	
1	Outside Rearview Mirror Housing Screw (Qty: 4) **CAUTION:** **Refer to Fastener Caution .** **Tighten** 2.5 N.m (22 lb in)
2	Lower Outside Rearview Mirror Housing Screw **Tighten** 2.5 N.m (22 lb in)
3	Outside Rearview Mirror Housing

INSIDE REARVIEW MIRROR REPLACEMENT

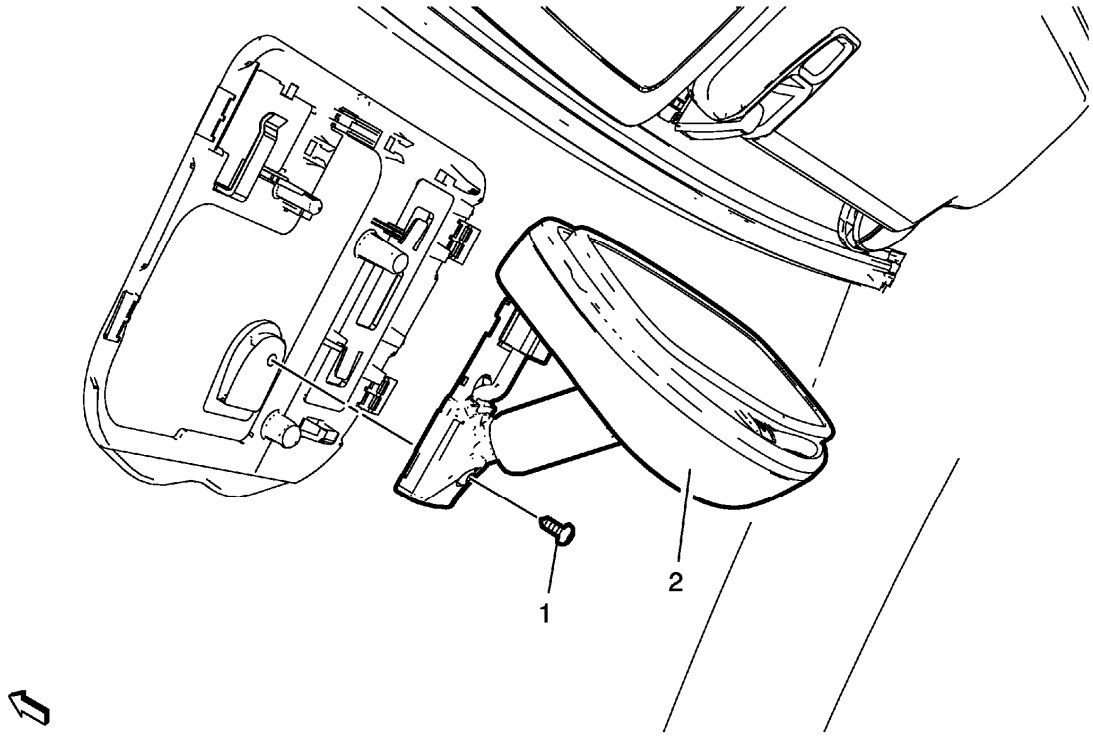

Fig. 9: Inside Rearview Mirror
Courtesy of GENERAL MOTORS COMPANY

Inside Rearview Mirror Replacement

Callout	Component Name
Preliminary Procedure Remove the inside rearview mirror mount plate cover. Refer to **Inside Rearview Mirror Mount Plate Cover Replacement** .	
1	Inside Rearview Mirror Bolt **CAUTION:** **Refer to Fastener Caution .**
2	Inside Rearview Mirror **Procedure** 1. Disconnect the electrical connector. 2. Slide the mirror in an upward motion in order to remove.

DESCRIPTION AND OPERATION

AUTOMATIC DAY-NIGHT MIRROR DESCRIPTION AND OPERATION

Inside Rearview Mirror with the Automatic Day-Night Feature System Operation

The inside rearview mirror uses 2 photocell sensors. One sensor is the headlight sensor, located on the face side of the mirror. The headlight sensor is used to determine light conditions present at the mirror face. The other sensor is the ambient light sensor, located on the rear of the mirror or windshield side. The ambient light sensor is used to determine the exterior light conditions. With a low exterior light condition detected, and a high light condition from behind of the car, at the headlight sensor, the inside rearview mirror will automatically darken the face of the mirror.

In the daytime, the mirror is in a normal state because of the high exterior light condition that is indicated by the ambient light sensor. With the gear selector lever in the REVERSE position, backup lamp supply voltage is supplied as an input to the inside rearview mirror. The mirror monitors this input to disable the automatic day-night feature. This allows the driver to see objects in the mirror clearly when backing up, even during the night.

OUTSIDE MIRROR DESCRIPTION AND OPERATION

Power Mirror System Components

The power mirror system consists of the following components:

- Outside rearview mirror switch
- Mirror selector switch
- Driver outside rearview mirror
- Passenger outside rearview mirror

Each of the outside rearview mirror contains two motors. The vertical motor operates the mirror in the up and down directions, and the horizontal motor operates the mirror in the left and right directions.

Power Mirror System Controls

The outside rearview mirror switch is a four position directional switch: Up, Down, Left and Right.

The mirror select switch is a three position switch: left, neutral/fold, and right.

Power Mirror System Operation

The outside rearview mirror switch receives battery voltage from the underhood fuse block The power mirror switch also receives a constant ground.

The four positions of the direction switch have dual switch contacts. Each of the contacts are connected to opposing sides of the appropriate power mirror motors through the selector switch. The selector switch completes these circuits depending on the position of the selector switch, L or R.

If the selector switch is placed in the L position and the up switch is pressed, battery voltage will be supplied to the left outside rearview mirror vertical motor through the left mirror motor vertical control circuit and ground through the left mirror motor common control circuit. If the down switch is pressed, battery voltage will be supplied to the left outside rearview mirror vertical motor through the left mirror motor common control circuit and ground through the left mirror motor vertical control circuit.

The remainder of the mirror functions operate in the same manner as described above. Placing the power mirror switch in opposing positions, left/right or up/down, will reverse the polarity to the mirror motor, reversing the direction of movement.

Heated Mirrors (If Equipped)

The heated mirrors are controlled through the rear defog relay. Whenever the rear window defogger is turned on battery voltage is supplied to the mirror heater elements through the left and right mirror heater element control circuits.

2013 ACCESSORIES & EQUIPMENT

Object Detection - Cruze

SCHEMATIC WIRING DIAGRAMS

OBJECT DETECTION WIRING SCHEMATICS

UD7 Wiring Schematics

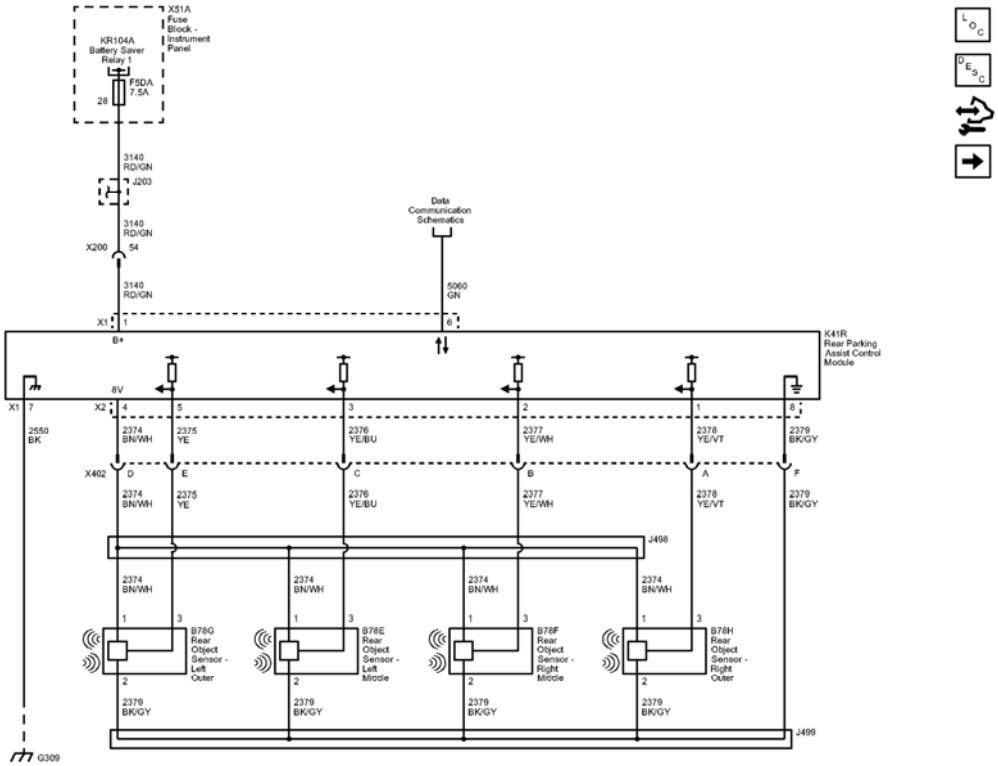

Fig. 1: Object Detection (UD7) Wiring Schematics
Courtesy of GENERAL MOTORS COMPANY

Callout	Component Name
CAV_28	28
3140	Battery Positive Voltage
3140 RD/GN	3140 RD/GN
CAV_1	1
CONN_X1	X1
3140_RD/GN	3140 RD/GN
3140_RD/GN	3140 RD/GN
CAV_54	54

5060	Low Speed GMLAN Serial Data
5060_GN	5060 GN
CAV 6	6
2550	Ground
2550_BK	2550 BK
CAV_7	7
CONN_X1	X1
2374	Object Sensor Supply Voltage
2374_BN/WH	2374 BN/WH
CAV 1	1
CAV_4	4
CONN X2	X2
2374_BN/WH	2374 BN/WH
2374_BN/WH	2374 BN/WH
2375	Left Rear Corner Object Sensor Signal
2375_YE	2375 YE
CAV 3	3
CAV_5	5
2375 YE	2375 YE
2376	Left Rear Middle Object Sensor Signal
2376_YE/BU	2376 YE/BU
CAV 3	3
2376_YE/BU	2376 YE/BU
2374 BN/WH	2374 BN/WH
CAV_1	1
2379	Object Sensor Low Reference
2379_BK/GY	2379 BK/GY
CAV_2	2
2379_BK/GY	2379 BK/GY
CAV_2	2
2379_BK/GY	2379 BK/GY
CAV_2	2
2379_BK/GY	2379 BK/GY
CAV_2	2
2374_BN/WH	2374 BN/WH
CAV_1	1
2374_BN/WH	2374 BN/WH
CAV_1	1

2377	Right Rear Middle Object Sensor Signal
2377_YE/WH	2377 YE/WH
CAV 3	3
CAV_2	2
2377_YE/WH	2377 YE/WH
2378	Right Rear Corner Object Sensor Signal
2378_YE/VT	2378 YE/VT
2378_YE/VT	2378 YE/VT
CAV_3	3
CAV 1	1
2379_BK/GY	2379 BK/GY
CAV 8	8
2379_BK/GY	2379 BK/GY
CAV_3	3
X402	X402
CAV_D	D
CAV_E	E
CAV_C	C
CAV_B	B
CAV_A	A
CAV_F	F
F5DA	F5DA 7.5A
X200	X200
J499	J499
X402	X402
B78G	(UD7)
B78H	(UD7)
B78E	(UD7)
B78F	(UD7)
Data_Communication_Schematics_REF	Data Communication Schematics
X51A	
K41R	(UD7)
KR104A	

Rear View Camera (UVC) Wiring Schematics

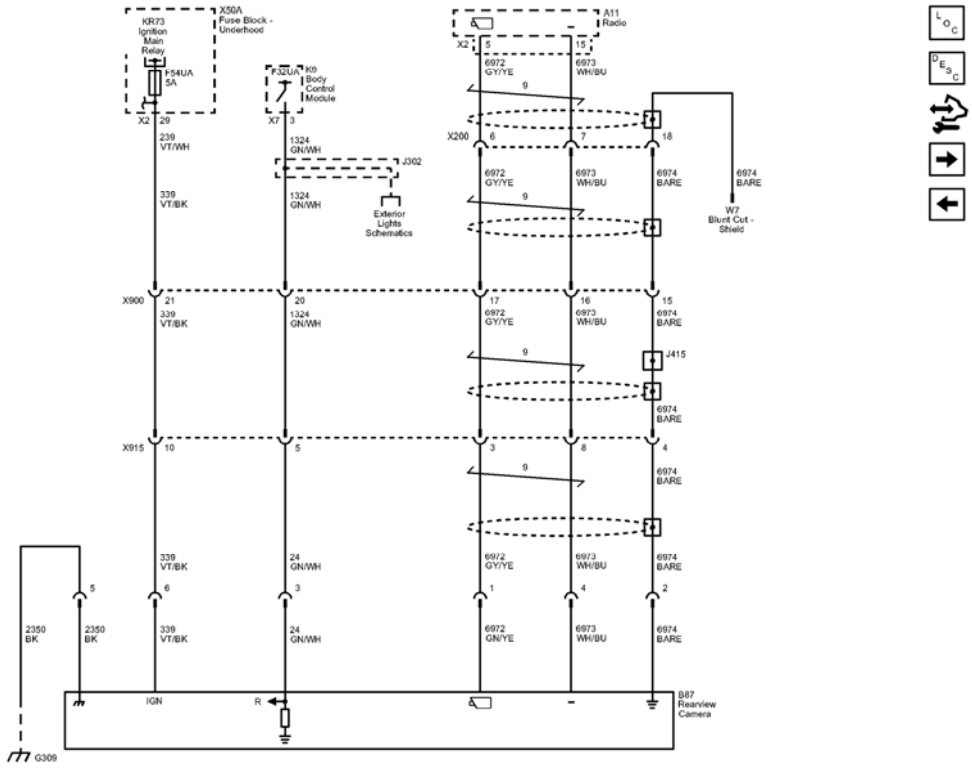

Fig. 2: Rear View Camera (UVC) Wiring Schematics
Courtesy of GENERAL MOTORS COMPANY

Callout	Component Name
239	Run/Crank Ignition 1 Voltage
239 VT/WH	239 VT/WH
CAV_29	29
CONN_X2	X2
339	Run/Crank Ignition 1 Voltage
339_VT/BK	339 VT/BK
1324	Backup Lamp Supply Voltage
1324_GN/WH	1324 GN/WH
CAV_3	3
CONN_X7	X7
24	Backup Lamp Supply Voltage
24_GN/WH	24 GN/WH
339_VT/BK	339 VT/BK
1324_GN/WH	1324 GN/WH
339_VT/BK	339 VT/BK
339_VT/BK	339 VT/BK
24_GN/WH	24 GN/WH

6972	Camera Signal #2 +
6972_GN/YE	6972 GN/YE
6972_GY/YE	6972 GY/YE
CAV_5	5
CONN_X2	X2
1324_GN/WH	1324 GN/WH
6973	Camera Signal #2
6973_WH/BU	6973 WH/BU
CAV_15	15
6972_GY/YE	6972 GY/YE
6973_WH/BU	6973 WH/BU
6973_WH/BU	6973 WH/BU
6974	Camera Drain Wire
6974_BARE	6974 BARE
6974_BARE	6974 BARE
6974_BARE	6974 BARE
2350	Ground
2350_BK	2350 BK
2350_BK	2350 BK
CAV_5	5
CAV_6	6
CAV_3	3
CAV_1	1
CAV_4	4
CAV_2	2
6972_GY/YE	6972 GY/YE
6973_WH/BU	6973 WH/BU
6974 BARE	6974 BARE
6974_BARE	6974 BARE
6972 GY/YE	6972 GY/YE
6973_WH/BU	6973 WH/BU
6974_BARE	6974 BARE
6974_BARE	6974 BARE
X900	X900
CAV_21	21
CAV_20	20
CAV_17	17
CAV_16	16
CAV_15	15
X915	X915
CAV_10	10
CAV_5	

	5
CAV_3	3
CAV_8	8
CAV_4	4
X200	X200
CAV_6	6
CAV_7	7
CAV_18	18
G309	G309
F54UA	F54UA 5A
F32UA	F32UA
J302	J302
TWIST 9	9
TWIST_9	9
TWIST_9	9
TWIST_9	9
X900	X900
X915	X915
X200	X200
K9	
B87	(UVC)
Exterior_Lights_Schematics_REF	Exterior Lights Schematics
X50A	
W7	
KR73	
A11	

Side Blind Zone Alert (UFT) Wiring Schematics

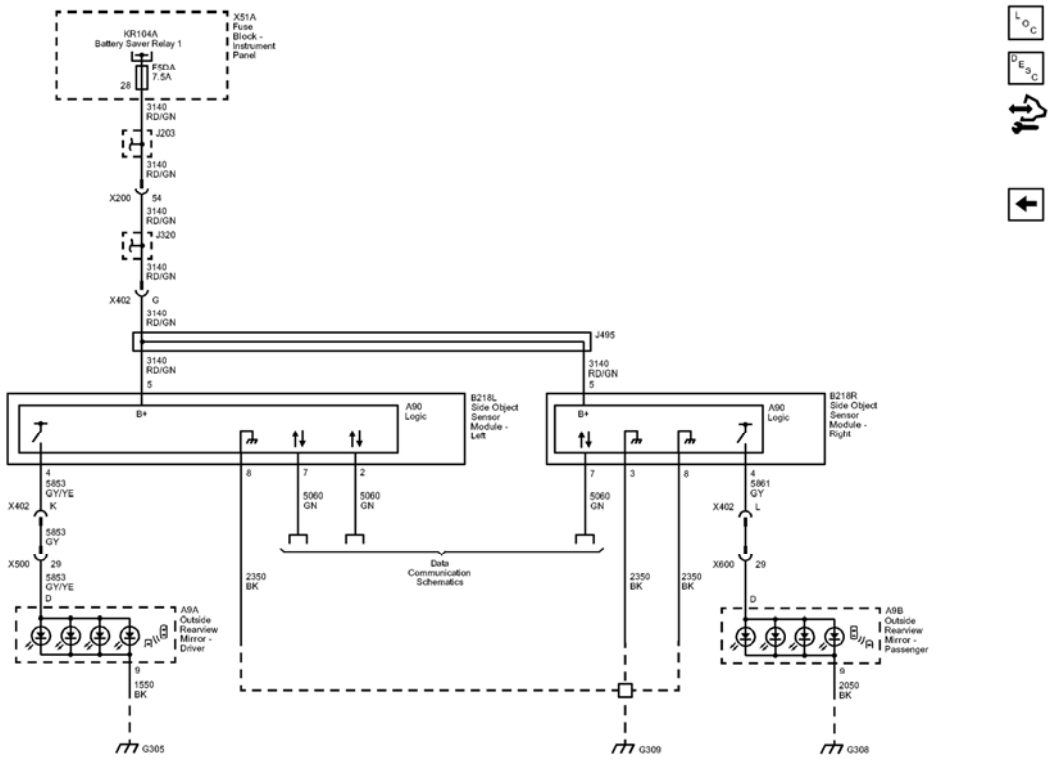

Fig. 3: Side Blind Zone Alert (UFT) Wiring Schematics
Courtesy of GENERAL MOTORS COMPANY

Callout	Component Name
3140	Battery Positive Voltage
3140 RD/GN	3140 RD/GN
CAV_5	5
3140_RD/GN	3140 RD/GN
3140_RD/GN	3140 RD/GN
3140_RD/GN	3140 RD/GN
3140_RD/GN	3140 RD/GN
3140_RD/GN	3140 RD/GN
CAV_28	28
CAV_54	54
CAV_G	G
3140_RD/GN	3140 RD/GN
CAV_5	5
5853	Driver Side Object Detection LED Signal (1)
5853_GY/YE	5853 GY/YE
CAV_4	4

5853_GY	5853 GY
5853_GY/YE	5853 GY/YE
CAV_D	D
CAV_K	K
CAV_29	29
1550	Ground
1550_BK	1550 BK
CAV_9	9
2350	Ground
2350_BK	2350 BK
CAV_8	8
CAV_8	8
2350_BK	2350 BK
CAV_3	3
2350_BK	2350 BK
2050	Ground
2050_BK	2050 BK
CAV_9	9
5060	Low Speed GMLAN Serial Data
5060_GN	5060 GN
CAV_7	7
5060_GN	5060 GN
CAV_2	2
5060_GN	5060 GN
CAV_7	7
5861	Passenger Side Object Detection LED Signal (1)
5861_GY	5861 GY
CAV_D	D
CAV_4	4
CAV_L	L
CAV_29	29
G309	G309
F5DA	F5DA 7.5A
X200	X200
X402	X402
J495	J495
X402	X402
X500	X500
X402	X402

X600	X600
A9A	
A9B	
A90	Logic
A90	Logic
B218L	
B218R	
Data_Communication_Schematics_REF	Data Communication Schematics
X51A	
KR104A	

DIAGNOSTIC INFORMATION AND PROCEDURES

DIAGNOSTIC CODE INDEX

DIAGNOSTIC CODE INDEX

DTC	Description
DTC B094B or B094C	DTC B094B 00 Left Side Object Detection Control Module - Malfunction DTC B094B 08 Left Side Object Detection Control Module - Performance - Signal Invalid DTC B094B 45 Left Side Object Detection Control Module - Variant Not Programmed DTC B094B 54 Left Side Object Detection Control Module - High Temperature DTC B094B 58 Left Side Object Detection Control Module - Performance DTC B094C 00 Right Side Object Detection Control Module - Malfunction DTC B094C 08 Right Side Object Detection Control Module - Performance - Signal Invalid DTC B094C 45 Right Side Object Detection Control Module - Variant Not Programmed DTC B094C 54 Right Side Object Detection Control Module - High Temperature DTC B094C 58 Right Side Object Detection Control Module - Performance
DTC B094D or B094E	DTC B094D 01 Left Side Object Detection Indicator Circuit Short to Battery DTC B094D 02 Left Side Object Detection Indicator Circuit Short to Ground DTC B094E 01 Right Side Object Detection Indicator Circuit Short to Battery DTC B094E 02 Right Side Object Detection

	Indicator Circuit Short to Ground
DTC B0958, B0959, B0960, or B0961	DTC B0958 01 Parking Assist Rear Sensor Left Corner Circuit Short to Battery DTC B0958 06 Parking Assist Rear Sensor Left Corner Circuit Low Voltage/Open DTC B0958 08 Parking Assist Rear Sensor Left Corner Circuit Performance - Signal Invalid DTC B0958 21 Parking Assist Rear Sensor Left Corner Circuit Incorrect Period DTC B0958 3A Parking Assist Rear Sensor Left Corner Circuit Incorrect Component Installed DTC B0959 01 Parking Assist Rear Sensor Left Middle Circuit Short to Battery DTC B0959 06 Parking Assist Rear Sensor Left Middle Circuit Low Voltage/Open DTC B0959 08 Parking Assist Rear Sensor Left Middle Circuit Performance - Signal Invalid DTC B0959 21 Parking Assist Rear Sensor Left Middle Circuit Incorrect Period DTC B0959 3A Parking Assist Rear Sensor Left Middle Circuit Incorrect Component Installed DTC B0960 01 Parking Assist Rear Sensor Right Middle Circuit Short to Battery DTC B0960 06 Parking Assist Rear Sensor Right Middle Circuit Low Voltage/Open DTC B0960 08 Parking Assist Rear Sensor Right Middle Circuit Performance - Signal Invalid DTC B0960 21 Parking Assist Rear Sensor Right Middle Circuit Incorrect Period DTC B0960 3A Parking Assist Rear Sensor Right Middle Circuit Incorrect Component Installed DTC B0961 01 Parking Assist Rear Sensor Right Corner Circuit Short to Battery DTC B0961 06 Parking Assist Rear Sensor Right Corner Circuit Low Voltage/Open DTC B0961 08 Parking Assist Rear Sensor Right Corner Circuit Performance - Signal Invalid DTC B0961 21 Parking Assist Rear Sensor Right Corner Circuit Incorrect Period DTC B0961 3A Parking Assist Rear Sensor Right Corner Circuit Incorrect Component Installed
DTC B0967 or B0968	DTC B0967 02 Parking Assist On/Off Switch Circuit Short to Ground DTC B0968 01 Parking Assist On/Off Switch Indicator Circuit Short to Battery DTC B0968 06 Parking Assist On/Off Switch Indicator Circuit Low Voltage/Open

DTC B1015	DTC B1015 00 Vehicle Identification Number Information Malfunction
DTC B1405	DTC B1405 02 Control Module Voltage Reference Output 2 Circuit Short to Ground DTC B1405 03 Control Module Voltage Reference Output 2 Circuit Low Voltage DTC B1405 07 Control Module Voltage Reference Output 2 Circuit High Voltage

DTC B094B OR B094C

Diagnostic Instructions

- Perform the **Diagnostic System Check - Vehicle** prior to using this diagnostic procedure.
- Review **Strategy Based Diagnosis** for an overview of the diagnostic approach.
- **Diagnostic Procedure Instructions** provides an overview of each diagnostic category.

DTC Descriptor

DTC B094B 00

Left Side Object Detection Control Module - Malfunction

DTC B094B 08

Left Side Object Detection Control Module - Performance - Signal Invalid

DTC B094B 45

Left Side Object Detection Control Module - Variant Not Programmed

DTC B094B 54

Left Side Object Detection Control Module - High Temperature

DTC B094B 58

Left Side Object Detection Control Module - Performance

DTC B094C 00

Right Side Object Detection Control Module - Malfunction

DTC B094C 08

Right Side Object Detection Control Module - Performance - Signal Invalid

DTC B094C 45

Right Side Object Detection Control Module - Variant Not Programmed

DTC B094C 54

Right Side Object Detection Control Module - High Temperature

DTC B094C 58

Right Side Object Detection Control Module - Performance

Circuit/System Description

The B218L Side Object Sensor Module - Left or B218R Side Object Sensor Module - Right can set this code if the module determines there is a fault due to the reason listed in the symptom byte.

Conditions for Running the DTC

Ignition ON.

Conditions for Setting the DTC

The control module has detected a malfunction.

Action Taken When the DTC Sets

- The Side Blind Zone and Rear Cross Traffic Alert Systems will not function.
- The DIC will display "Service Side Detection System".

Conditions for Clearing the DTC

- A current DTC clears when the malfunction is no longer present.
- A history DTC clears when the control module ignition cycle counter reaches the reset threshold of 50, without a repeat of the malfunction.

Diagnostic Aids

If DTC B094B 58 or B094C 58 is set, check for anything that can interfere with the radar signal. Verify area in front of radar is clean of mud, ice, snow, etc. Also verify the fascia panels in front of the radar are damage-free and not obstructed by any add-on accessories such as emblems, etc.

Reference Information

Schematic Reference

Object Detection Schematics

Connector End View Reference

COMPONENT CONNECTOR END VIEWS - INDEX

Description and Operation

Object Detection Description and Operation (with Side Blind Spot Alert (UFT)), **Object Detection Description and Operation (with Parking Assist (UD7))**, **Object Detection Description and Operation (with Rearview Camera (UCV))**

Electrical Information Reference

- **Circuit Testing**
- **Connector Repairs**
- **Testing for Intermittent Conditions and Poor Connections**
- **Wiring Repairs**

Scan Tool Reference

Control Module References for scan tool information

Circuit/System Verification

1. Ignition ON.
2. Verify that B094B 45 or B094C 45 is not set.
    - **If DTC is set**
    1. Program the appropriate B218 Side Object Sensor Module.
    2. Verify the DTC does not set.
        - If the DTC sets, replace the appropriate B218 Side Object Sensor Module.
        - If the DTC does not set
    3. All OK.
    - **If DTC is not set**
3. Verify that B094B 00, B094C 00, B094B 08, B094C 08, B094B 54 or B094C 54 is not set.
    - **If DTC is set**

      Replace the appropriate B218 Side Object Sensor Module.

    - **If the DTC is not set**
4. Verify that B094B 58 or B094C 58 is not set.
    - **If DTC is set**

      Verify the area in front of the sensor is clean, unobstructed, and damage-free.

- If not clean, unobstructed, and damage-free, clean or repair as necessary.
- If clean, unobstructed, and damage-free, replace the appropriate B218 Side Object Sensor Module.
- **If DTC is not set**

5. All OK.

Repair Instructions

Perform the **Diagnostic Repair Verification** after completing the repair.

Control Module References for side object sensor module replacement, programming and setup

DTC B094D OR B094E

Diagnostic Instructions

- Perform the **Diagnostic System Check - Vehicle** prior to using this diagnostic procedure.
- Review **Strategy Based Diagnosis** for an overview of the diagnostic approach.
- **Diagnostic Procedure Instructions** provides an overview of each diagnostic category.

DTC Descriptors

DTC B094D 01

Left Side Object Detection Indicator Circuit Short to Battery

DTC B094D 02

Left Side Object Detection Indicator Circuit Short to Ground

DTC B094E 01

Right Side Object Detection Indicator Circuit Short to Battery

DTC B094E 02

Right Side Object Detection Indicator Circuit Short to Ground

Diagnostic Fault Information

Circuit	Short to Ground	Open/High Resistance	Short to Voltage	Signal Performance
Left Side Object Detection Indicator Control Circuit	B094D 02	-	B094D 01	-
Right Side Object Detection Indicator Control	B094E 02	-	B094E 01	-

Circuit				

Circuit/System Description

Two Side Object Sensor Modules are located on each side of the vehicle near the corners of the rear fascia. The modules are provided with B+ and ground. The Side Object Sensor Module - Right has an additional ground to distinguish it from the Side Object Sensor Module - Left. The Side Object Sensor Module - Left is connected to the serial data line. The serial data line is passed through the module to the Side Object Sensor Module - Right.

When vehicle speed is greater than 10 km/h (6.2 MPH) and either Side Object Sensor Module detects an object in the detection area, the module provides a signal to the appropriate Outside Rearview Mirror to illuminate the amber telltale LED.

Conditions for Running the DTC

- Engine running.
- The Side blind zone alert is active from speeds of 10 km/h (6.2 MPH) up to 140 km/h (87 MPH).

Conditions for Setting the DTC

B094D 02

The module has detected a short to ground in the outside rearview mirror - driver circuit.

B094D 01

The module has detected a short to voltage in the outside rearview mirror - driver circuit.

B094E 02

The module has detected a short to ground in the outside rearview mirror - passenger circuit.

B094E 01

The module has detected a short to voltage in the outside rearview mirror - passenger circuit.

Action Taken When the DTC Sets

The side blind zone alert system is inoperative and Service Blind Zone Alert System is displayed on the Driver Information Center.

Conditions for Clearing the DTC

The condition for setting the DTC is no longer present.

Reference Information

Schematic Reference

Object Detection Schematics

Connector End View Reference

COMPONENT CONNECTOR END VIEWS - INDEX

Description and Operation

Object Detection Description and Operation (with Side Blind Spot Alert (UFT)), **Object Detection Description and Operation (with Parking Assist (UD7))**, **Object Detection Description and Operation (with Rearview Camera (UCV))**

Electrical Information Reference

- **Circuit Testing**
- **Connector Repairs**
- **Testing for Intermittent Conditions and Poor Connections**
- **Wiring Repairs**

Scan Tool Reference

Control Module References for scan tool information

Circuit/System Verification

1. Ignition ON.
2. Verify the scan tool can communicate with the right side object sensor.
    - **If the scan tool can not communicate with the right side object sensor**

      Refer to Circuit/System Testing below - Right Side Object Sensor Malfunction.

    - **If the scan tool can communicate with the right side object sensor**
3. Verify the scan tool can communicate with the left side object sensor.
    - **If the scan tool can not communicate with the left side object sensor**

      Refer to Circuit/System Testing below - Left Side Object Sensor Malfunction.

    - **If the scan tool can communicate with the left side object sensor**
4. Ignition OFF, ignition ON.
5. Verify that both side blind zone alert system indicators located in the outside rearview mirrors briefly turn ON and then turn OFF during the system self test when ignition is initially turned ON.
    - **If both side blind zone alert indicators do not briefly turn ON and OFF**

The system may have been disabled, refer to Diagnostic Aids. If system has not been disabled refer to Circuit/System Testing below - Side Object Indicator Malfunction.

- **If only one indicator does not briefly illuminate during the self test**

  Refer to Circuit/System Testing below- Side Object Indicator Malfunction.

- **If both side blind zone alert indicators briefly turn ON and OFF**

6. All OK.

Circuit/System Testing

Right Side Object Sensor Malfunction

1. Ignition OFF and all vehicle systems OFF. It may take up to 2 minutes for all vehicle systems to power down. Disconnect the harness connector at the B218R Side Object Sensor Module - Right.
2. Test for less than 10 ohms between the following ground circuit terminals and ground.
   - Terminal 3
   - Terminal 8
   - **If 10 ohms or greater**
   1. Ignition OFF.
   2. Test for less than 2 ohms in the ground circuit end to end.
      - If 2 ohms or greater, repair the open/high resistance in the circuit.
      - If less than 2 ohms, repair the open/high resistance in the ground connection.
   - **If less than 10 ohms**
3. Verify a test lamp illuminates between the B+ circuit terminal 5 and ground.
   - **If the test lamp does not illuminate and the circuit fuse is good**
   1. Ignition Off.
   2. Test for less than 2 ohms in the B+ circuit end to end.
      - If 2 ohms or greater, repair the open/high resistance in the circuit.
      - If less than 2 ohms, verify the fuse is not open and there is voltage at the fuse.
   - **If the test lamp does not illuminate and the circuit fuse is open**
   1. Ignition OFF.
   2. Test for infinite resistance between the B+ circuit and ground.
      - If less than infinite resistance, repair the short to ground on the circuit.
      - If infinite resistance, replace the B218R Side Object Sensor Module - Right.
   - **If the test lamp illuminates**
4. Ignition OFF and all vehicle systems OFF. It may take up to 2 minutes for all vehicle systems to power down.
5. Test for less than 2 ohms in each of the serial data circuits end to end between the control module harness connector terminal 7 and the DLC terminal 1.

- **If 2 ohms or greater**

  Repair the open/high resistance in the circuit.

- **If less than 2 ohms**

6. Replace B218R Side Object Sensor Module - Right.

Left Side Object Sensor Malfunction

1. Ignition OFF and all vehicle systems OFF. It may take up to 2 minutes for all vehicle systems to power down. Disconnect the harness connector at the B218L Side Object Sensor Module - Left.
2. Test for less than 10 ohms between ground circuit terminal 8 and ground.
   - **If 10 ohms or greater**
   1. Ignition OFF.
   2. Test for less than 2 ohms in the ground circuit end to end.
      - If 2 ohms or greater, repair the open/high resistance in the circuit.
      - If less than 2 ohms, repair the open/high resistance in the ground connection.
   - **If less than 10 ohms**
3. Verify a test lamp illuminates between the B+ circuit terminal 5 and ground.
   - **If the test lamp does not illuminate and the circuit fuse is good**
   1. Ignition Off.
   2. Test for less than 2 ohms in the B+ circuit end to end.
      - If 2 ohms or greater, repair the open/high resistance in the circuit.
      - If less than 2 ohms, verify the fuse is not open and there is voltage at the fuse.
   - **If the test lamp does not illuminate and the circuit fuse is open**
   1. Ignition OFF.
   2. Test for infinite resistance between the B+ circuit and ground.
      - If less than infinite resistance, repair the short to ground on the circuit.
      - If infinite resistance, replace the B218L Side Object Sensor Module - Left.
   - **If the test lamp illuminates**
4. Ignition OFF and all vehicle systems OFF. It may take up to 2 minutes for all vehicle systems to power down.
5. Test for less than 2 ohms in each of the serial data circuits end to end between the control module harness connector terminal 2 and the DLC terminal 1.
   - **If 2 ohms or greater**

     Repair the open/high resistance in the circuit.

   - **If less than 2 ohms**
6. Replace B218L Side Object Sensor Module - Left.

Side Object Indicator Malfunction

1. Ignition OFF and all vehicle systems OFF, disconnect the harness connector at the appropriate A9 Outside Rearview Mirror. It may take up to 2 minutes for all vehicle systems to power down.
2. Test for less than 10 ohms between the ground circuit terminal 9 and ground.
    - **If 10 ohms or greater**
    1. Ignition OFF.
    2. Test for less than 2 ohms in the ground circuit end to end.
        - If 2 ohms or greater, repair the open/high resistance in the circuit.
        - If less than 2 ohms, repair the open/high resistance in the ground connection.
    - **If less than 10 ohms**
3. Ignition ON, connect a test lamp between the control circuit terminal D and the ground circuit terminal 9.
4. Verify the test lamp turns ON and OFF when commanding the Object Detection Alert Indicators ON and OFF with a scan tool.
    - **If the test lamp is always OFF**
    1. Ignition OFF, disconnect the harness connector at the appropriate B218 Side Object Sensor Module.
    2. Test for infinite resistance between the control circuit and ground.
        - If less than infinite resistance, repair the short to ground on the circuit.
        - If infinite resistance
    3. Test for less than 2 ohms in the control circuit end to end.
        - If 2 ohms or greater, repair the open/high resistance in the circuit.
        - If less than 2 ohms, replace the B218 Side Object Sensor Module.
    - **If the test lamp is always ON**
    1. Ignition OFF, disconnect the harness connector at the B218 Side Object Sensor Module, ignition ON.
    2. Test for less than 1 V between the control circuit and ground.
        - If 1 V or greater, repair the short to voltage on the circuit.
        - If less than 1 V, replace the B218 Side Object Sensor Module.
    - **If the test lamp turns ON and OFF**
5. Test or replace the A9 Outside Rearview Mirror Glass.

Repair Instructions

Perform the **Diagnostic Repair Verification** after completing the repair.

- **Outside Rearview Mirror Glass Replacement**
- **Control Module References** for Side Object Sensor Module replacement, programming and setup.

DTC B0958, B0959, B0960, OR B0961

Diagnostic Instructions

- Perform the **Diagnostic System Check - Vehicle** prior to using this diagnostic procedure.
- Review **Strategy Based Diagnosis** for an overview of the diagnostic approach.
- **Diagnostic Procedure Instructions** provides an overview of each diagnostic category.

DTC Descriptors

DTC B0958 01

Parking Assist Rear Sensor Left Corner Circuit Short to Battery

DTC B0958 06

Parking Assist Rear Sensor Left Corner Circuit Low Voltage/Open

DTC B0958 08

Parking Assist Rear Sensor Left Corner Circuit Performance - Signal Invalid

DTC B0958 21

Parking Assist Rear Sensor Left Corner Circuit Incorrect Period

DTC B0958 3A

Parking Assist Rear Sensor Left Corner Circuit Incorrect Component Installed

DTC B0959 01

Parking Assist Rear Sensor Left Middle Circuit Short to Battery

DTC B0959 06

Parking Assist Rear Sensor Left Middle Circuit Low Voltage/Open

DTC B0959 08

Parking Assist Rear Sensor Left Middle Circuit Performance - Signal Invalid

DTC B0959 21

Parking Assist Rear Sensor Left Middle Circuit Incorrect Period

DTC B0959 3A

Parking Assist Rear Sensor Left Middle Circuit Incorrect Component Installed

DTC B0960 01

Parking Assist Rear Sensor Right Middle Circuit Short to Battery

DTC B0960 06

Parking Assist Rear Sensor Right Middle Circuit Low Voltage/Open

DTC B0960 08

Parking Assist Rear Sensor Right Middle Circuit Performance - Signal Invalid

DTC B0960 21

Parking Assist Rear Sensor Right Middle Circuit Incorrect Period

DTC B0960 3A

Parking Assist Rear Sensor Right Middle Circuit Incorrect Component Installed

DTC B0961 01

Parking Assist Rear Sensor Right Corner Circuit Short to Battery

DTC B0961 06

Parking Assist Rear Sensor Right Corner Circuit Low Voltage/Open

DTC B0961 08

Parking Assist Rear Sensor Right Corner Circuit Performance - Signal Invalid

DTC B0961 21

Parking Assist Rear Sensor Right Corner Circuit Incorrect Period

DTC B0961 3A

Parking Assist Rear Sensor Right Corner Circuit Incorrect Component Installed

Circuit/System Description

The object sensors are 3-wire sensors that are used to determine the distance between the vehicle and an object of interest. The rear parking assist control module supplies 8 V to the object sensors via the 8 V reference circuit and provides ground via the low reference circuit. The rear parking assist control module triggers the sensors in a sequential loop. After each sensor transmits, the rear parking assist control module uses the sensor echo received through the signal circuit to calculate the distance and position of an object.

Conditions for Running the DTC

- Ignition ON
- The parking assist is activated. The activation takes place through putting in the reverse gear or through operating the park assist switch.

Conditions for Setting the DTC

B0958 01, B0959 01, B0960 01, or B0961 01

The rear parking assist control module has detected the voltage at the sensor circuit is greater than 11.5 V or the object sensor is not grounded.

B0958 06, B0959 06, B0960 06, or B0961 06

The rear parking assist control module has detected the voltage at the sensor circuit less than 0.5 V.

B0958 08, B0959 08, B0960 08, or B0961 08

The rear parking assist control module has received an invalid signal.

B0958 21, B0959 21, B0960 21, or B0961 21

The object sensor determines no change in the position of an object while the vehicle is in motion.

B0958 3A, B0959 3A, B0960 3A, or B0961 3A

The rear parking assist control module determines the wrong sensor type is installed.

Action Taken When the DTC Sets

- The parking assist is disabled.
- The driver information center displays SERVICE PARK ASSIST.

Conditions for Clearing the DTC

The condition for setting the DTC is no longer present.

Reference Information

Schematic Reference

Object Detection Schematics

Connector End View Reference

COMPONENT CONNECTOR END VIEWS - INDEX

Description and Operation

Object Detection Description and Operation (with Side Blind Spot Alert (UFT)), **Object Detection Description and Operation (with Parking Assist (UD7))**, **Object Detection Description and Operation (with Rearview Camera (UCV))**

Electrical Information Reference

- **Circuit Testing**
- **Connector Repairs**
- **Testing for Intermittent Conditions and Poor Connections**
- **Wiring Repairs**

Scan Tool Reference

Control Module References for scan tool information

Circuit/System Verification

1. Ignition ON.
2. Verify that DTC B1405 is not set.
   - **If the DTC is set**

     Refer to **DTC B1405**

   - **If the DTC is not set**
3. Verify that DTC B0958 01, B0959 01, B0960 01 or B0961 01 is not set.
   - **If the DTC is set**

     Check the appropriate sensor for contamination with mud. If no contamination is diagnosed, refer to Circuit/System Testing below.

   - **If the DTC is not set**
4. Verify that DTC B0958 21, B0959 21, B0960 21 or B0961 21 is not set.
   - **If the DTC is set**

     Check the appropriate sensor for contamination with mud, ice or snow. If no contamination is diagnosed, replace the sensor.

   - **If the DTC is not set**
5. Verify that DTC B0958 3A, B0959 3A, B0960 3A or B0961 3A is not set.
   - **If the DTC is set**

     Replace the appropriate sensor with a sensor of correct sensor type.

- **If the DTC is not set**

6. Ignition ON, transmission in REVERSE, verify the scan tool Parking Assist System Status parameter displays Enabled.
   - **If the Parking Assist System displays Disabled**

     Refer to Circuit/System Testing below.

   - **If the Parking Assist System displays Enabled**
7. All OK.

Circuit/System Testing

1. Ignition OFF for 1 min, scan tool must be disconnected for steps 1 and 2 to allow module to power down. Disconnect the harness connector at the appropriate B78 Rear Object Sensor.
2. Test for less than 10 ohms between the low reference circuit terminal 2 and ground.
   - **If 10 ohms or greater**
   1. Ignition OFF, disconnect the harness connector X2 at the K41R Rear Parking Assist Control Module.
   2. Test for less than 2 ohms in the low reference circuit end to end.
      - If 2 ohms or greater, repair the open/high resistance in the circuit.
      - If less than 2 ohms replace the K41R Rear Parking Assist Control Module.
   - **If less than 10 ohms**
3. Ignition ON.
4. Test for 7.5-9.5 V between the 8 V reference circuit terminal 1 and ground.
   - **If less than 7.5 V**
   1. Ignition OFF, disconnect the harness connector at the K41R Rear Parking Assist Control Module.
   2. Test for infinite resistance between the 8 V reference circuit and ground.
      - If less than infinite resistance, repair the short to ground on the circuit.
      - If infinite resistance
   3. Test for less than 2 ohms in the 8 V reference circuit end to end.
      - If 2 ohms or greater, repair the open/high resistance in the circuit.
      - If less than 2 ohms, replace the K41R Rear Parking Assist Control Module.
   - **If greater than 9.5 V**
   1. Ignition OFF, disconnect the harness connector at the K41R Rear Parking Assist Control Module, ignition ON.
   2. Test for less than 1 V between the 8 V reference circuit and ground.
      - If 1 V or greater, repair the short to voltage on the circuit.
      - If less than 1 V, replace the K41R Rear Parking Assist Control Module.
   - **If between 7.5-9.5 V**
5. Ignition ON.

6. Test for 4.8-5.2 V between the signal circuit terminal 3 and ground.
    - **If less than 4.8 V**
    1. Ignition OFF, disconnect the harness connector at the K41R Rear Parking Assist Control Module.
    2. Test for infinite resistance between the signal circuit and ground.
        - If less than infinite resistance, repair the short to ground on the circuit.
        - If infinite resistance
    3. Test for less than 2 ohms in the signal circuit end to end.
        - If 2 ohms or greater, repair the open/high resistance in the circuit.
        - If less than 2 ohms, replace the K41R Rear Parking Assist Control Module.
    - **If greater than 5.2 V**
    1. Ignition OFF, disconnect the harness connector at the K41R Rear Parking Assist Control Module, ignition ON.
    2. Test for less than 1 V between the signal circuit and ground.
        - If 1 V or greater, repair the short to voltage on the circuit.
        - If less than 1 V, replace the K41R Rear Parking Assist Control Module.
    - **If between 4.8-5.2 V**
7. Test or replace the appropriate B78 rear object sensor.

Repair Instructions

Perform the **Diagnostic Repair Verification** after completing the repair

- **Rear Parking Assist Alarm Sensor Replacement**
- **Control Module References** for rear parking assist control module replacement, programming and setup.

DTC B0967 OR B0968

Diagnostic Instructions

- Perform the **Diagnostic System Check - Vehicle** prior to using this diagnostic procedure.
- Review **Strategy Based Diagnosis** for an overview of the diagnostic approach.
- **Diagnostic Procedure Instructions** provides an overview of each diagnostic category.

DTC Descriptor

DTC B0967 02

Parking Assist On/Off Switch Circuit Short to Ground

DTC B0968 01

Parking Assist On/Off Switch Indicator Circuit Short to Battery

DTC B0968 06

Parking Assist On/Off Switch Indicator Circuit Low Voltage/Open

Circuit/System Description

The parking assist can be activated/deactivated by pressing the parking assist switch. By engaging the reverse gear the parking assist can also be activated. By subsequently pressing the parking assist switch the parking assist can be disabled again.

The indicator in the parking assist switch shows the status of the parking assist. If the lamp is ON, the parking assist is activated.

Conditions for Running the DTC

- Ignition ON
- The parking assist is activated. The activation takes place by putting in the reverse gear or by pressing the parking assist switch.

Conditions for Setting the DTC

B0967 02

The parking assist control module has detected a short to ground.

B0968 01

The parking assist control module has detected a short to battery.

B0968 06

The parking assist control module has detected a short to ground or open.

Action Taken When the DTC Sets

- The parking assist is disabled.
- The driver information center displays SERVICE PARK ASSIST.

Conditions for Clearing the DTC

The condition for setting the DTC is no longer present.

Reference Information

Schematic Reference

Object Detection Schematics

Connector End View Reference

COMPONENT CONNECTOR END VIEWS - INDEX

Description and Operation

Object Detection Description and Operation (with Side Blind Spot Alert (UFT)), **Object Detection Description and Operation (with Parking Assist (UD7))**, **Object Detection Description and Operation (with Rearview Camera (UCV))**

Electrical Information Reference

- **Circuit Testing**
- **Connector Repairs**
- **Testing for Intermittent Conditions and Poor Connections**
- **Wiring Repairs**

Scan Tool Reference

Control Module References for scan tool information

Circuit/System Verification

1. Ignition ON.
2. Verify that DTC B0967 02 is not set.
   - **If the DTC is set**

     Refer to Parking Assist Switch Malfunction below.

   - **If the DTC is not set**
3. Verify that B0968 01 or B0968 06 is not set.
   - **If the DTC is set**

     Refer to Parking Assist Switch Indicator Malfunction below.

   - **If the DTC is not set**
4. Activate and deactivate the parking assist switch and verify the scan tool Park Assist Switch parameter changes between Active and Inactive.
   - **If the Parking Assist Switch parameter does not change between Active and Inactive**

     Refer to Circuit/System Testing below.

   - **If the Parking Assist Switch parameter changes between Active and Inactive**
5. All OK.

Circuit/System Testing

Parking Assist Switch Malfunction

1. Ignition OFF, disconnect the harness connector at the S48D Multifunction Switch 2 - Instrument Panel.
2. Test for less than 10 ohms between the S48D Multifunction Switch 2 - Instrument Panel terminal 1 and ground.
    - **If 10 ohms or greater**
    1. Ignition OFF.
    2. Test for less than 2 ohms in the ground circuit end to end.
        - If 2 ohms or greater, repair the open/high resistance in the ground circuit.
        - If less than 2 ohms, repair the open/high resistance in the ground connection.
    - **If less than 10 ohms**
3. Connect a test lamp between the control circuit terminal 5 and ground circuit terminal 1.
4. Verify the test lamp turns On and Off when commanding the Parking Assist Switch On and Off with a scan tool.
    - **If the test lamp is always OFF**
    1. Ignition OFF, disconnect the harness connector at the K41R Rear Parking Assist Control Module.
    2. Test for infinite resistance between the control circuit and ground.
        - If less than infinite resistance, repair the short to ground in the circuit.
        - If infinite resistance
    3. Test for less than 2 ohms in the control circuit end to end.
        - If 2 ohms or greater, repair the open/high resistance in the circuit.
        - If less than 2 ohms, replace the K41R Rear Parking Assist Control Module.
    - **If the test lamp is always ON**
    1. Ignition OFF, disconnect the harness connector at the K41R Rear Parking Assist Control Module, ignition ON.
    2. Test for less than 1 V between the control circuit and ground.
        - If 1 V or greater, repair the short to voltage on the circuit
        - If less than 1 V, replace the K41R Rear Parking Assist Control Module.
    - **If the test lamp turns ON and OFF**
5. All OK.

Parking Assist Switch Indicator Malfunction

1. Ignition OFF, disconnect the harness connector at the S48D Multifunction Switch 2 - Instrument Panel.
2. Test for less than 10 ohms between the S48D Multifunction Switch 2 - Instrument Panel terminal 1 and ground.
    - **If 10 ohms or greater**
    1. Ignition OFF.

2. Test for less than 2 ohms in the ground circuit end to end.
    - If 2 ohms or greater, repair the open/high resistance in the circuit.
    - If less than 2 ohms, repair the open/high resistance in the ground connection.
- **If less than 10 ohms**

3. Connect a test lamp between the voltage circuit terminal 6 and ground circuit terminal 1.
4. Verify the test lamp turns ON and OFF when Commanding the Parking Assist Switch On and Off with a scan tool.
    - **If the test lamp is always OFF**
    1. Ignition OFF, disconnect the harness connector at the K41R Rear Parking Assist Control Module.
    2. Test for infinite resistance between the voltage circuit and ground.
        - If less than infinite resistance, repair the short to ground in the circuit.
        - If infinite resistance
    3. Test for less than 2 ohms in the control circuit end to end.
        - If 2 ohms or greater, repair the open/high resistance in the circuit.
        - If less than 2 ohms, replace the K41R Rear Parking Assist Control Module.
    - **If the test lamp is always ON**
    1. Ignition OFF, disconnect the harness connector at the K41R Rear Parking Assist Control Module, ignition ON.
    2. Test for less than 1 V between the voltage circuit and ground.
        - If 1 V or greater, repair the short to voltage on the circuit.
        - If less than 1 V, replace the K41R Rear Parking Assist Control Module.
    - **If the test lamp turns ON and OFF**
5. All OK.

Repair Instructions

Perform the **Diagnostic Repair Verification** after completing the repair

- **Rear Object Alarm Control Module Replacement**
- **Control Module References** for parking assist control module replacement, programming and setup.

DTC B1015

Diagnostic Instructions

- Perform the **Diagnostic System Check - Vehicle** prior to using this diagnostic procedure.
- Review **Strategy Based Diagnosis** for an overview of the diagnostic approach.
- **Diagnostic Procedure Instructions** provides an overview of each diagnostic category.

DTC Descriptor

DTC B1015 00

Vehicle Identification Number Information Malfunction

Circuit/System Description

When the ignition is turned ON, the advanced rear parking assist control module and the vehicle direction camera control module receives the vehicle identification number (VIN) from the body control module. The advanced control module will compare the VIN received to the VIN stored in memory.

Conditions for Running the DTC

Ignition voltage is between 9-16 V.

Conditions for Setting the DTC

The stored VIN does not match the received VIN.

Action Taken When the DTC Sets

- The parking assist system or the lane departure warning system is disabled.
- The driver information center displays SERVICE PARK ASSIST or SERVICE LANE DEPARTURE SYSTEM.

Conditions for Clearing the DTC

The stored VIN matches the VIN stored in the body control module.

Reference Information

Schematic Reference

Object Detection Schematics

Connector End View Reference

COMPONENT CONNECTOR END VIEWS - INDEX

Description and Operation

Object Detection Description and Operation (with Side Blind Spot Alert (UFT)), **Object Detection Description and Operation (with Parking Assist (UD7))**, **Object Detection Description and Operation (with Rearview Camera (UCV))**

Electrical Information Reference

- **Circuit Testing**

- **Connector Repairs**
- **Testing for Intermittent Conditions and Poor Connections**
- **Wiring Repairs**

Scan Tool Reference

Control Module References for scan tool information

Circuit/System Verification

1. Ignition ON.
2. Verify the DTC B1015 is not.
    - **If the DTC B1015 is set**
    1. Program the control module the DTC originally set in.
    2. Verify the DTC does not set.
        - If the DTC is sets, replace the control module the DTC set in.
        - If the DTC does not set
    3. All OK
    - **If the DTC B1015 is not set**
3. All OK

Repair Instructions

Perform the **Diagnostic Repair Verification** after completing the repair

Control Module References for the rear parking assist control module, vehicle direction camera control module replacement, programming and setup.

DTC B1405

Diagnostic Instructions

- Perform the **Diagnostic System Check - Vehicle** prior to using this diagnostic procedure.
- Review **Strategy Based Diagnosis** for an overview of the diagnostic approach.
- **Diagnostic Procedure Instructions** provides an overview of each diagnostic category.

DTC Descriptors

DTC B1405 02

Control Module Voltage Reference Output 2 Circuit Short to Ground

DTC B1405 03

Control Module Voltage Reference Output 2 Circuit Low Voltage

DTC B1405 07

Control Module Voltage Reference Output 2 Circuit High Voltage

Circuit/System Description

The object sensors are 3-wire sensors that are used to determine the distance between the vehicle and an object of interest. The parking assist control module supplies 8 V to the object sensors via the object sensor supply voltage circuit and provides ground via the object sensor low reference circuit. The parking assist control module triggers the sensors in a sequential loop. After each sensor transmits, the parking assist control module uses the sensor echo received through the object sensor signal circuit to calculate the distance and position of an object.

Conditions for Running the DTC

- Ignition ON
- Transmission in REVERSE

Conditions for Setting the DTC

B1405 02

The parking assist control module has detected the object sensor supply voltage circuit is shorted to ground.

B1405 03

The parking assist control module has detected the object sensor supply voltage circuit is less than 7.2 V.

B1405 07

The parking assist control module has detected the object sensor supply voltage circuit is greater than 9.2 V.

Action Taken When the DTC Sets

- The parking assist is disabled.
- The driver information center displays SERVICE PARK ASSIST.

Conditions for Clearing the DTC

The condition for setting the DTC is no longer present.

Reference Information

Schematic Reference

Object Detection Schematics

Connector End View Reference

COMPONENT CONNECTOR END VIEWS - INDEX

Description and Operation

Object Detection Description and Operation (with Side Blind Spot Alert (UFT)), **Object Detection Description and Operation (with Parking Assist (UD7))**, **Object Detection Description and Operation (with Rearview Camera (UCV))**

Electrical Information Reference

- **Circuit Testing**
- **Connector Repairs**
- **Testing for Intermittent Conditions and Poor Connections**
- **Wiring Repairs**

Scan Tool Reference

Control Module References for scan tool information

Circuit/System Verification

Ignition ON, transmission in REVERSE, observe the scan tool Park Assist Sensor Reference Voltage parameter. The reading should be between 7.2-9.2 V.

Circuit/System Testing

1. Ignition OFF, disconnect the harness connector at each of the object sensors, ignition On, transmission in REVERSE
2. Test for 7.2-9.2 V between the object sensor reference circuit terminal 1 at all B78 Rear Object Sensor harness connectors and ground.
    - **If less than 7.2 V**
    1. Ignition OFF, disconnect the harness connector at the K41 Parking Assist Control Module.
    2. Test for infinite resistance between the 8 V reference circuit and ground.
        - If less than infinite resistance, repair the short to ground on the circuit.
        - If infinite resistance
    3. Test for less than 2 ohms in the 8 V reference circuit end to end.
        - If 2 ohms or greater, repair the open/high resistance in the circuit.
        - If less than 2 ohms, replace the K41 Parking Assist Control Module.
    - **If greater than 9.2 V**
    1. Disconnect the harness connector X 2 at the K41 Parking Assist Control Module, igniton ON.

2. Test for less than 1 V between the 8 V supply voltage circuit and ground.
    - If 1 V or greater, repair the short to voltage in the circuit.
    - If less than 1 V, replace the K41 Parking Assist Control Module.
- **If between 7.2-9.2 V**

3. All OK.

Repair Instructions

Perform the **Diagnostic Repair Verification** after completing the repair.

- **Rear Object Alarm Control Module Replacement**
- **Control Module References** for parking assist control module replacement, programming and setup

SYMPTOMS - OBJECT DETECTION

NOTE: The following steps must be completed before using the symptom tables:

1. Perform the **Diagnostic System Check - Vehicle** before using the Symptom Tables in order to verify that all of the following are true: before using the Symptom Tables in order to verify that all of the following are true:
    - There are no DTCs set.
    - The control modules can communicate via the serial data link.
2. Review the system operation in order to familiarize yourself with the system functions. Refer to **Object Detection Description and Operation (with Side Blind Spot Alert (UFT))**, **Object Detection Description and Operation (with Parking Assist (UD7))**, **Object Detection Description and Operation (with Rearview Camera (UCV))**.

Visual/Physical Inspection

- Inspect for aftermarket devices which may affect the operation of the system. Refer to **Checking Aftermarket Accessories** .
- Inspect the easily accessible or visible system components for obvious damage or conditions which may cause the symptom.
- Make sure the parking assist sensors located on the vehicle front and rear bumper are clear. Remove any snow, mud or ice that is blocking the sensors.

Intermittent

Faulty electrical connections or wiring may be the cause of intermittent conditions. Refer to **Testing for Intermittent Conditions and Poor Connections** .

Symptom List

- **Side Blind Spot Alert System Malfunction**

- **Parking Assist System Malfunction**
- **Rear Vision Camera System Malfunction**

PARKING ASSIST SYSTEM MALFUNCTION

Diagnostic Instructions

- Perform the **Diagnostic System Check - Vehicle** prior to using this diagnostic procedure.
- Review **Strategy Based Diagnosis** for an overview of the diagnostic approach.
- **Diagnostic Procedure Instructions** provides an overview of each diagnostic category.

Circuit/System Description

The ultrasonic parking assist system is designed to identify and notify the driver of an object in the vehicle's path when moving revers at speeds of less than 8 km/h (5 MPH). The distance and location of the object is determined by four object sensors, located in the rear bumper. The parking assist system will notify the driver using an audible signal through the radio.

Diagnostic Aids

For Symptom Byte 21 the module only run diagnostic when the vehicle is driven greater than 40 km/h (25 MPH). Therefore, even with clean sensor with no obstruction (i.e. snow or ice melted off) drive the vehicle greater than 40 km/h (25 MPH).

The following is a list of reasons this failure type byte 21 might have set:

- One or more of the sensors may be blocked by snow, mud, ice, or other debris. This might happen after going through a car wash in cold weather.
- Silicone insulator surrounding sensor maybe missing, cut, or twisted.
- Improperly installed sensor, sensor maybe be crooked due to a tight wire harness.
- One or more of the sensors may be scratched or the paint maybe chipped.
- Excessive paint thickness on a sensor may cause an excessive sensor ring time. When replacing or refinishing a sensor, do not apply an excessive amount of paint or clear coat.

Reference Information

Schematic Reference

Object Detection Schematics

Connector End View Reference

COMPONENT CONNECTOR END VIEWS - INDEX

Description and Operation

Object Detection Description and Operation (with Side Blind Spot Alert (UFT)), **Object Detection Description and Operation (with Parking Assist (UD7))**, **Object Detection Description and Operation (with Rearview Camera (UCV))**

Electrical Information Reference

- **Circuit Testing**
- **Connector Repairs**
- **Testing for Intermittent Conditions and Poor Connections**
- **Wiring Repairs**

Scan Tool Reference

Control Module References for scan tool information

Circuit/System Verification

1. Ignition ON.
2. Verify the park assist system is enabled through the parking assist switch.
   - **If the park assist system is manually disabled, enable the system.**

     Refer to the vehicle owners manual for instructions on enabling the system.

   - **If the park assist system does not manually change**
3. Verify the scan tool Park Assist Switch parameter while pressing and releasing the parking assist switch. The parameter should change between Active and Inactive.
   - **If the parameter does not change between Active and Inactive** Refer to Parking Assist Switch Circuit Malfunction.
   - **If the parameter changes between Active and Inactive**
4. Command the Park Assist Switch LED output control On and Off with the scan tool. The parking assist switch indicator should turn On and Off when changing between the commanded states.
   - **If the indicator does not turn ON and OFF**

     Refer to Parking Assist Switch Indicator Circuit Malfunction below.

   - **If the indicator does turn ON and OFF**
5. Transmission in reverse, verify the Engine Control Module (ECM) scan tool Reverse Position Switch parameter is Active.
   - **If the parameter is not Active**

     Refer to **Backup Lamps Malfunction (Manual Transmission)** , **Backup Lamps Malfunction (Automatic Transmission)** .

   - **If the parameter is Active**

6. Transmission in REVERSE, verify the scan tool Park Assist System Status parameter displays Enable.
    - **If the parameter is not Enabled**

      Refer to Diagnostic Aids to determine the cause of the inhibit.

    - **If the parameter is Enabled**
7. All OK.

Circuit/System Testing

Parking Assist Switch Circuit Malfunction

1. Ignition OFF, disconnect the harness connector at the S48D Multifunction Switch 2 - Instrument Panel.
2. Test for less than 10 ohms between the ground circuit terminal 1 and ground.
    - **If 10 ohms or greater**
    1. Ignition OFF.
    2. Test for less than 2 ohms in the ground circuit end to end.
        - If 2 ohms or greater, repair the open/high resistance in the circuit.
        - If less than 2 ohms, repair the open/high resistance in the ground connection.
    - **If less than 10 ohms**
3. Ignition ON.
4. Verify the scan tool Parking Assist Switch Status parameter is inactive.
    - **If not Inactive**
    1. Ignition OFF, disconnect the harness connector at the K41 Parking Assist Control Module.
    2. Test for infinite resistance between the control circuit terminal 5 and ground.
    - If less than infinite resistance, repair the short to ground on the circuit.
    - If infinite resistance, replace the K41 Parking Assist Control Module.
    - **If Inactive**
5. Test for less than 1 V between the control circuit terminal 5 and ground.
    - **If 1 V or greater**

      Repair the short to voltage on the circuit.

    - **If less than 1 V**
6. Connect a test lamp between the control circuit terminal 5 and the ground circuit terminal 1.
7. Verify that a test lamp turns On and Off when Commanding the Parking Assist Switch On and Off with a scan tool.
    - **If the test lamp is always OFF**
    1. Ignition OFF, disconnect the harness connector at the K41 Parking Assist Control Module
    2. Test for infinite resistance between the control circuit and ground.
        - If less than infinite resistance, repair the short to ground in the circuit.

- If infinite resistance

3. Test for less than 2 ohms in the control circuit end to end.
   - If 2 ohms or greater, repair the open/high resistance in the circuit.
   - If less than 2 ohms, replace the K41 Parking Assist Control Module.

- **If the test lamp is always ON**

1. Ignition OFF, disconnect the harness connector at the K41 Parking Assist Control Module, ignition ON.
2. Test for less than 1 V between the control circuit and ground.

- If 1 V or greater, repair the short to voltage on the circuit.
- If less than 1 V, replace the K41 Parking Assist Control Module
- **If the test lamp turns ON and OFF**

8. All OK.

Parking Assist Switch Indicator Circuit Malfunction

1. Ignition OFF, disconnect the harness connector at the S48D Multifunction Switch 2 - Instrument Panel, Ignition ON.
2. Test for greater than 11 V between the terminal 3 and ground.
   - **If less than 11 V**

     Test the voltage circuit for a short to ground or an open/high resistance.

   - **If greater than 11 V**
3. Command the Park Assist Switch LED output control ON with the scan tool. Test for greater than 11 V between the ignition circuit terminal 3 and the signal circuit terminal 5.
   - **If less than 11 V**

     Test the signal circuit for an open/high resistance.

   - **If greater than 11 V**
4. Command the Park Assist Switch Indicator Off with the scan tool.
5. Test for less than 1 V between the terminal 6 and ground.
   - **If 1 V or greater**

     Test the signal circuit for a short to voltage.

6. If all circuits test normal, replace the S48D Multifunction Switch 2 - Instrument Panel.

Repair Instructions

Perform the **Diagnostic Repair Verification** after completing the repair.

- **Rear Object Alarm Control Module Replacement**

- **Control Module References** for Parking Assist Control Module replacement, programming and setup

REAR VISION CAMERA SYSTEM MALFUNCTION

Diagnostic Instructions

- Perform the **Diagnostic System Check - Vehicle** prior to using this diagnostic procedure.
- Review **Strategy Based Diagnosis** for an overview of the diagnostic approach.
- **Diagnostic Procedure Instructions** provides an overview of each diagnostic category.

Circuit/System Description

When the transmission is placed into REVERSE, a 12 V signal is sent to the rearview camera indicating that camera operation is requested. Ignition voltage and ground are supplied to the rearview camera. The rearview camera sends video information to the radio through a video signal + and a video signal - circuit. A grounded shielding also wraps the video signal circuits to reduce electronic interference which may degrade the video signal and cause a distorted or otherwise degraded image.

Diagnostic Aids

A poor video image can be caused by ice, snow, and mud buildup on the lens of the rearview camera. Also, extreme lighting conditions can affect performance, such as operating in the dark or with bright sunlight shining on the camera. Extreme high or low temperatures can also affect the image quality. An open in the shield of the video signal circuit can also cause a distorted screen.

Reference Information

Schematic Reference

Object Detection Schematics

Connector End View Reference

COMPONENT CONNECTOR END VIEWS - INDEX

Description and Operation

Object Detection Description and Operation (with Side Blind Spot Alert (UFT)), **Object Detection Description and Operation (with Parking Assist (UD7))**, **Object Detection Description and Operation (with Rearview Camera (UCV))**

Electrical Information Reference

- **Circuit Testing**
- **Connector Repairs**
- **Testing for Intermittent Conditions and Poor Connections**

- **Wiring Repairs**

Scan Tool Reference

Control Module References for scan tool information

Circuit/System Verification

1. Ignition ON.
2. Verify that DTC B2545 is not set.
   - **If the DTC is set**

     Refer to **DTC B2545** .

   - **If the DTC is not set**
3. Verify the rearview camera there is no debris on the lens and that the bezel or bezel seal is not damaged.
   - **If debris are found on the lens**

     Clean the lens. If the lens, bezel, or bezel seal are damaged, replace as necessary.

   - **If no debris on the lens**
4. Ignition ON, transmission in REVERSE.
5. Verify the backup lamps are On.
   - **If the backup lamps are not ON**

     Refer to **Backup Lamps Malfunction (Manual Transmission)** , **Backup Lamps Malfunction (Automatic Transmission)** .

   - **If the backup lamps are ON**
6. Engine running, transmission in REVERSE.
7. Verify a clear rear vision image is displayed on the radio.
   - **If a clear image is not displayed**

     Refer to Circuit/System Testing below.

   - **If a clear image is displayed**
8. All OK.

Circuit/System Testing

NOTE: Circuit/System Verification must be performed before Circuit/System Testing.

1. Ignition OFF, disconnect the harness connector at the B87 Rearview Camera.
2. Test for less than 10 ohms between the ground circuit terminal 5 and ground.

- **If 10 ohms or greater**

  Test for less than 2 ohms in the ground circuit end to end.

- If 2 ohms or greater, repair the open/high resistance in the circuit.
- If less than 2 ohms, repair the open/high resistance in the ground connection.
- **If less than 10 ohms**

3. Ignition ON.
4. Verify a test lamp illuminates between the ignition circuit terminal 6 and ground.
   - **If the test lamp does not illuminate**
   1. Ignition OFF.
   2. Test for less than 2 ohms in the ignition circuit end to end.
      - If 2 ohms or greater, repair the open/high resistance in the circuit.
      - If less than 2 ohms, verify the fuse is OK and there is voltage at the fuse.
   3. If the circuit tests normal, test or replace the KR74 Ignition Run Relay.
   - **If the test lamp illuminates**
5. Engine running, park brake applied, transmission in REVERSE.
6. Test for greater than 11 V between the control circuit terminal 3 and ground.
   - **If less than 11 V**
   1. Ignition OFF, disconnect the X7 harness connector at the K9 Body Control Module.
   2. Test for infinite resistance between the control circuit and ground.
      - If less than infinite resistance, repair the short to ground on the circuit.
      - If infinite resistance
   3. Test for less than 2 ohms in the control circuit end to end.
      - If 2 ohms or greater, repair the open/high resistance in the circuit.
      - If less than 2 ohms, replace the K9 Body Control Module.
   - **If greater than 11 V**
7. Ignition OFF, disconnect the X4 harness connector at the A11 Radio, ignition ON.
8. Test for less than 1 V between the signal circuit terminal listed below and ground:
   - Signal (+) circuit terminal 1 at the B87 Rearview Camera.
   - Signal (-) circuit terminal 4 at the B87 Rearview Camera.
   - **If 1 V or greater**

     Repair the short to voltage on the circuit.

   - **If less than 1 V**
9. Test for infinite resistance between the signal circuit terminal listed below and ground:
   - Signal (+) circuit terminal 1 at the B87 Rearview Camera.
   - Signal (-) circuit terminal 4 at the B87 Rearview Camera.

- **If less than infinite resistance**

  Repair the short to ground on the circuit.

- **If infinite resistance**

10. Test for less than 2 ohms in the signal (+) circuit end to end.
    - **If 2 ohms or greater**

      Repair the open/high resistance in the circuit.

    - **If less than 2 ohms**
11. Test for less than 2 ohms in the signal (-) circuit end to end.
    - **If 2 ohms or greater**

      Test the signal circuit for an open/high resistance.

    - **If less than 2 ohms**
12. Replace the B87 Rearview Camera.
13. Engine running, transmission in REVERSE, verify a clear rear vision image is displayed on the A11 Radio.
    - **If a clear rear vision image is not displayed on the A11 Radio**

      Replace the A11 Radio.

    - **If a clear rear vision image displayed on the A11 Radio**
14. All Ok.

Repair Instructions

Perform the **Diagnostic Repair Verification** after completing the repair.

- **Rearview Camera Image Display Module Replacement**
- **Control Module References** for body control module or radio replacement, programming and setup

SIDE BLIND SPOT ALERT SYSTEM MALFUNCTION

Diagnostic Instructions

- Perform the **Diagnostic System Check - Vehicle** prior to using this diagnostic procedure.
- Review **Strategy Based Diagnosis** for an overview of the diagnostic approach.
- **Diagnostic Procedure Instructions** provides an overview of each diagnostic category.

Circuit/System Description

Two Side Object Sensor Modules are located on each side of the vehicle near the corners of the rear fascia. The modules are provided with B+ and ground. The Side Object Sensor Module - Right has an additional ground to distinguish it from the Side Object Sensor Module - Left. The Side Object Sensor Module - Left is connected to the serial data line. The serial data line is passed through the module to the Side Object Sensor Module - Right.

When vehicle speed is greater than 10 km/h (6.2 MPH) and either Side Object Sensor Module detects an object in the detection area, the module provides a signal to the appropriate Outside Rearview Mirror to illuminate the amber telltale LED.

Diagnostic Aids

- The conditions for disabling the side blind zone alert system are captured by DTCs and/or a history buffer that stores the last 16 events, including changes made by the driver and messages displayed in the drivers information center. The history buffer for each side object sensor can be accessed using the scan tool.
- The side blind zone system can be disabled if any off the following occur:
  - The driver has selected the Off mode through vehicle personalization menus. The selected mode is retained over ignition cycles. A driver information center message stating that the side blind zone system is off shall be displayed and the outside mirror indicators will be OFF.
  - Vehicle Speed Average Validity signal is set Invalid
  - Transmission Shift Lever Position Validity signal set to Invalid
  - Transmission Virtual Device Availability signal is set to Unavailable or has not been received in the last LOSS OF TRANSMISSION VDA PERIODIC UPDATE calibration
  - Engine Virtual Device Availability signal is set to Unavailable or has not been received in the last LOSS OF ENGINE VDA PERIODIC UPDATE calibration
  - There is a loss of serial data communication or a side blind zone system DTC is set.
  - A blockage condition exists (i.e. mud/snow buildup in front of the sensor). A driver information message stating that the side blind zone system is temporarily unavailable will be displayed. The side blind zone system transitions back to the normal operating state when the blockage is removed. Bumper sticks, labels, and heavy rain storms may also cause this condition. The blockage determination is performed with the vehicle in a drive gear.
  - The side blind zone system shall read the GPS latitude and longitude on the serial data bus and calculate if the vehicle is within a Radio Astronomy zone. These zones are located in Europe and require the sensors to be turned off. The "Side Blind Zone Alert System Temporarily Unavailable" message shall be displayed to the driver when this occurs.
- Because the sensors are identical, they may be swapped from one side of the vehicle to the other in an attempt to isolate a concern. Sensors should NOT be swapped from one vehicle to another.
- The side blind zone system is designed to ignore stationary objects; however, the system may occasionally detect guard rails, signs, trees, shrubs, or other stationary objects as an object in the blind zone. This is normal system operation and does not require service.
- The side blind zone system may indicate an object in the blind zone if a trailer is attached to the vehicle, or a bicycle or object is extending out to either side of the vehicle.

Reference Information

Schematic Reference

Object Detection Schematics

Connector End View Reference

COMPONENT CONNECTOR END VIEWS - INDEX

Description and Operation

Object Detection Description and Operation (with Side Blind Spot Alert (UFT)), **Object Detection Description and Operation (with Parking Assist (UD7))**, **Object Detection Description and Operation (with Rearview Camera (UCV))**

Electrical Information Reference

- **Circuit Testing**
- **Connector Repairs**
- **Testing for Intermittent Conditions and Poor Connections**
- **Wiring Repairs**

Scan Tool Reference

Control Module References for scan tool information

Circuit/System Verification

1. Ignition ON.
2. Verify the scan tool can communicate with the right side object sensor.
    - **If the scan tool can not communicate with the right side object sensor**

      Refer to Circuit/System Testing below - Right Side Object Sensor Malfunction.

    - **If the scan tool can communicate with the right side object sensor**
3. Verify the scan tool can communicate with the left side object sensor.
    - **If the scan tool can not communicate with the left side object sensor**

      Refer to Circuit/System Testing below - Left Side Object Sensor Malfunction.

    - **If the scan tool can communicate with the left side object sensor**
4. Ignition OFF, ignition ON.
5. Verify that both side blind zone alert system indicators located in the outside rearview mirrors briefly turn ON and then turn OFF during the system self test when ignition is initially turned ON.
    - **If both side blind zone alert indicators do not briefly turn ON and OFF**

      The system may have been disabled, refer to Diagnostic Aids. If system has not been disabled refer to Circuit/System Testing below - Side Object Indicator Malfunction.

- **If only one indicator does not briefly illuminate during the self test**

  Refer to Circuit/System Testing below - Side Object Indicator Malfunction.

- **If both side blind zone alert indicators briefly turn ON and OFF**

6. All OK.

Circuit/System Testing

Right Side Object Sensor Malfunction

1. Ignition OFF and all vehicle systems OFF. It may take up to 2 minutes for all vehicle systems to power down. Disconnect the harness connector at the B218R Side Object Sensor Module - Right.
2. Test for less than 10 ohms between the following ground circuit terminals and ground.
   - Terminal 3
   - Terminal 8
   - **If 10 ohms or greater**
   1. Ignition OFF.
   2. Test for less than 2 ohms in the ground circuit end to end.
      - If 2 ohms or greater, repair the open/high resistance in the circuit.
      - If less than 2 ohms, repair the open/high resistance in the ground connection.
   - **If less than 10 ohms**
3. Verify a test lamp illuminates between the B+ circuit terminal 5 and ground.
   - **If the test lamp does not illuminate and the circuit fuse is good**
   1. Ignition Off.
   2. Test for less than 2 ohms in the B+ circuit end to end.
      - If 2 ohms or greater, repair the open/high resistance in the circuit.
      - If less than 2 ohms, verify the fuse is not open and there is voltage at the fuse.
   - **If the test lamp does not illuminate and the circuit fuse is open**
   1. Ignition OFF.
   2. Test for infinite resistance between the B+ circuit and ground.
      - If less than infinite resistance, repair the short to ground on the circuit.
      - If infinite resistance, replace the B218R Side Object Sensor Module - Right.
   - **If the test lamp illuminates**
4. Ignition OFF and all vehicle systems OFF. It may take up to 2 minutes for all vehicle systems to power down.
5. Test for less than 2 ohms in each of the serial data circuits end to end between the control module harness connector terminal 7 and the DLC terminal 1.
   - **If 2 ohms or greater**

     Repair the open/high resistance in the circuit.

- **If less than 2 ohms**

6. Replace B218R Side Object Sensor Module - Right.

Left Side Object Sensor Malfunction

1. Ignition OFF and all vehicle systems OFF. It may take up to 2 minutes for all vehicle systems to power down. Disconnect the harness connector at the B218L Side Object Sensor Module - Left.
2. Test for less than 10 ohms between ground circuit terminal 8 and ground.
   - **If 10 ohms or greater**
   1. Ignition OFF.
   2. Test for less than 2 ohms in the ground circuit end to end.
      - If 2 ohms or greater, repair the open/high resistance in the circuit.
      - If less than 2 ohms, repair the open/high resistance in the ground connection.
   - **If less than 10 ohms**
3. Verify a test lamp illuminates between the B+ circuit terminal 5 and ground.
   - **If the test lamp does not illuminate and the circuit fuse is good**
   1. Ignition Off.
   2. Test for less than 2 ohms in the B+ circuit end to end.
      - If 2 ohms or greater, repair the open/high resistance in the circuit.
      - If less than 2 ohms, verify the fuse is not open and there is voltage at the fuse.
   - **If the test lamp does not illuminate and the circuit fuse is open**
   1. Ignition OFF.
   2. Test for infinite resistance between the B+ circuit and ground.
      - If less than infinite resistance, repair the short to ground on the circuit.
      - If infinite resistance, replace the B218L Side Object Sensor Module - Left.
   - **If the test lamp illuminates**
4. Ignition OFF and all vehicle systems OFF. It may take up to 2 minutes for all vehicle systems to power down.
5. Test for less than 2 ohms in each of the serial data circuits end to end between the control module harness connector terminal 2 and the DLC terminal 1.
   - **If 2 ohms or greater**

     Repair the open/high resistance in the circuit.

   - **If less than 2 ohms**
6. Replace B218L Side Object Sensor Module - Left.

Side Object Indicator Malfunction

1. Ignition OFF and all vehicle systems OFF, disconnect the harness connector at the appropriate A9 Outside Rearview Mirror. It may take up to 2 minutes for all vehicle systems to power down.

2. Test for less than 10 ohms between the ground circuit terminal 9 and ground.
    - **If 10 ohms or greater**
    1. Ignition OFF.
    2. Test for less than 2 ohms in the ground circuit end to end.
        - If 2 ohms or greater, repair the open/high resistance in the circuit.
        - If less than 2 ohms, repair the open/high resistance in the ground connection.
    - **If less than 10 ohms**
3. Ignition ON, connect a test lamp between the control circuit terminal D and the ground circuit terminal 9.
4. Verify the test lamp turns ON and OFF when commanding the Object Detection Alert Indicators ON and OFF with a scan tool.
    - **If the test lamp is always OFF**
    1. Ignition OFF, disconnect the harness connector at the appropriate B218 Side Object Sensor Module.
    2. Test for infinite resistance between the control circuit and ground.
        - If less than infinite resistance, repair the short to ground on the circuit.
        - If infinite resistance
    3. Test for less than 2 ohms in the control circuit end to end.
        - If 2 ohms or greater, repair the open/high resistance in the circuit.
        - If less than 2 ohms, replace the B218 Side Object Sensor Module.
    - **If the test lamp is always ON**
    1. Ignition OFF, disconnect the harness connector at the B218 Side Object Sensor Module, ignition ON.
    2. Test for less than 1 V between the control circuit and ground.
        - If 1 V or greater, repair the short to voltage on the circuit.
        - If less than 1 V, replace the B218 Side Object Sensor Module.
    - **If the test lamp turns ON and OFF**
5. Test or replace the A9 Outside Rearview Mirror Glass.

Repair Instructions

Perform the **Diagnostic Repair Verification** after completing the diagnostic procedure.

- **Outside Rearview Mirror Glass Replacement**
- **Control Module References** for Side Object Sensor Module replacement, programming and setup.

REPAIR INSTRUCTIONS

REAR OBJECT ALARM CONTROL MODULE REPLACEMENT

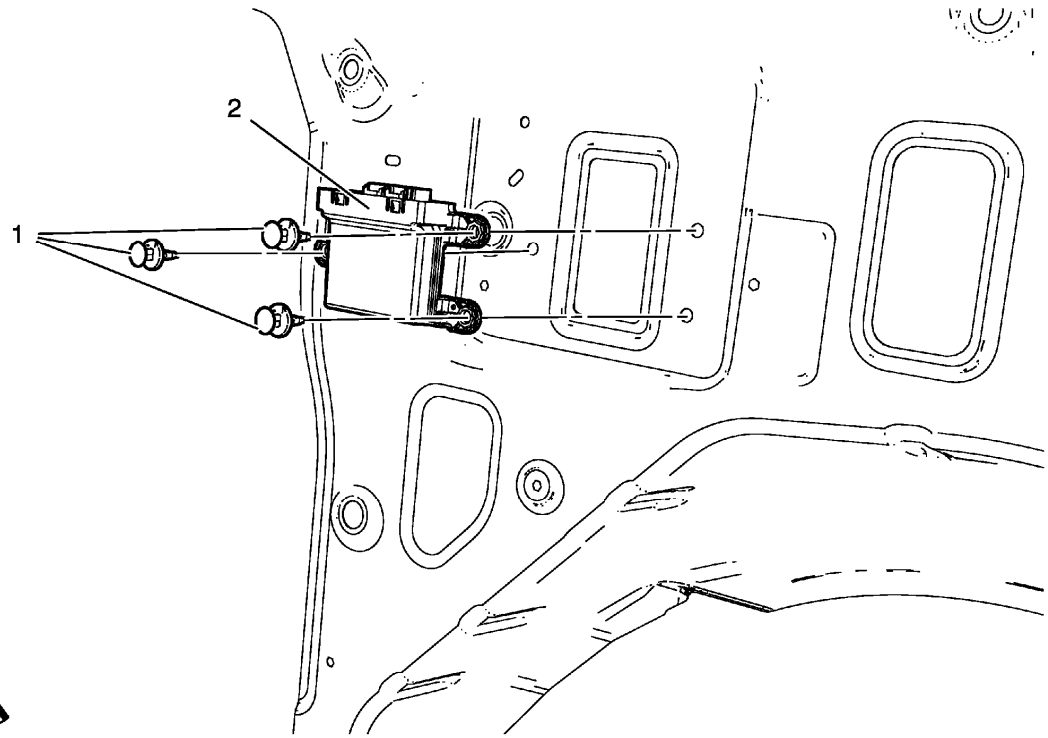

Fig. 4: Rear Object Alarm Module And Clips
Courtesy of GENERAL MOTORS COMPANY

Rear Object Alarm Control Module Replacement

Callout	Component Name
Preliminary Procedures Remove the rear compartment side trim. Refer to **Rear Compartment Side Trim Replacement - Left Side** .	
1	Rear Object Alarm Module Clip (Qty: 3)
2	Rear Object Alarm Module

REAR PARKING ASSIST ALARM SENSOR REPLACEMENT

Removal Procedure

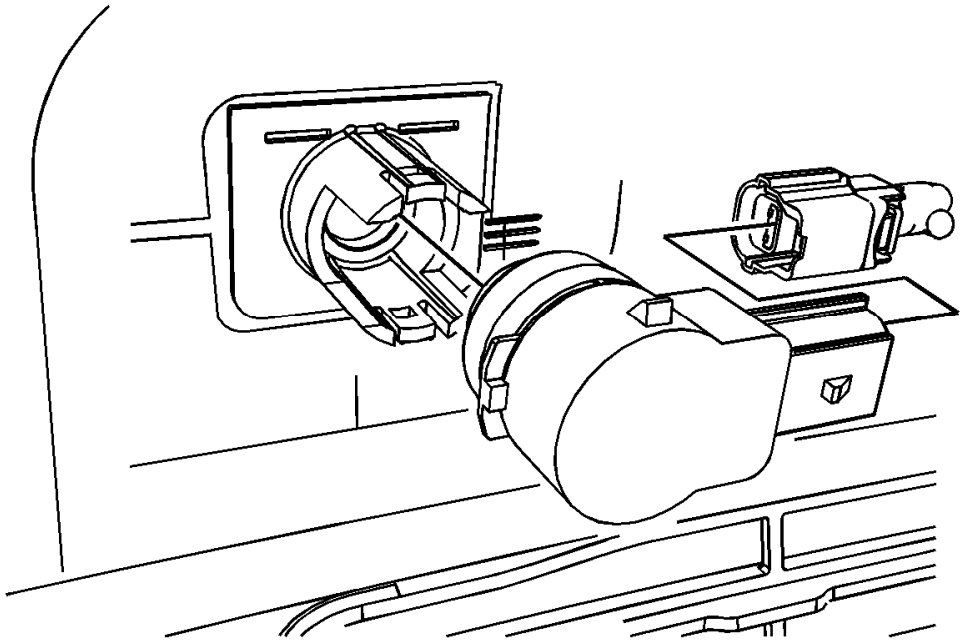

Fig. 5: Identifying Rear Object Sensor Housing
Courtesy of GENERAL MOTORS COMPANY

1. Remove the rear bumper fascia. Refer to **Rear Bumper Fascia Replacement**
2. Disconnect electrical from the rear object sensor.
3. Lift the locking tabs on the housing and remove the rear object sensor.

Installation Procedure

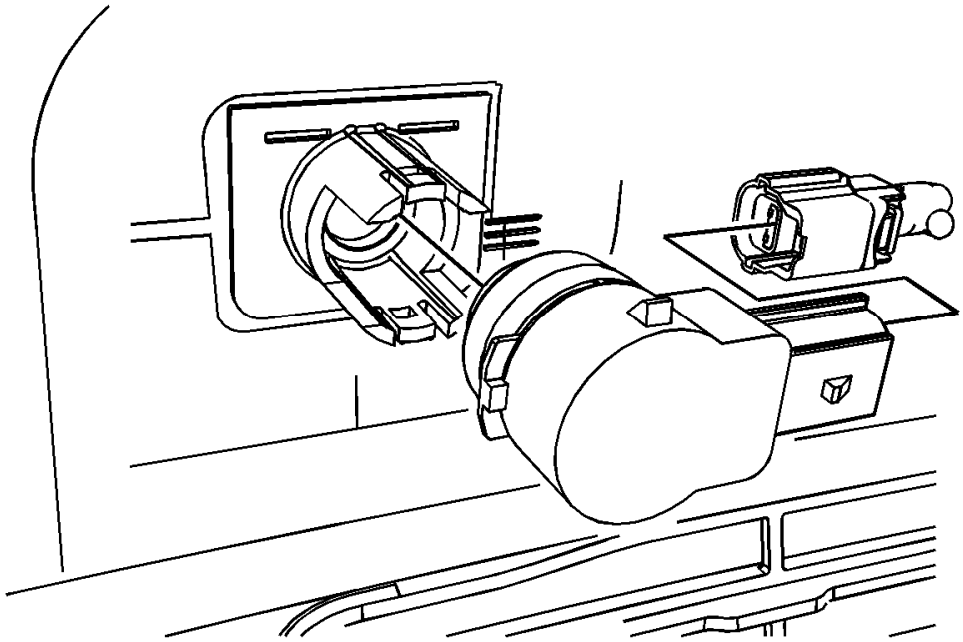

Fig. 6: Identifying Rear Object Sensor Housing
Courtesy of GENERAL MOTORS COMPANY

1. Insert the sensor into the housing.
2. Connect the electrical connector to the rear object sensor.
3. Install the rear bumper fascia. Refer to **Rear Bumper Fascia Replacement** .

REAR OBJECT SENSOR HOUSING REPLACEMENT

1. Remove the rear fascia. Refer to **Rear Bumper Fascia Replacement** .

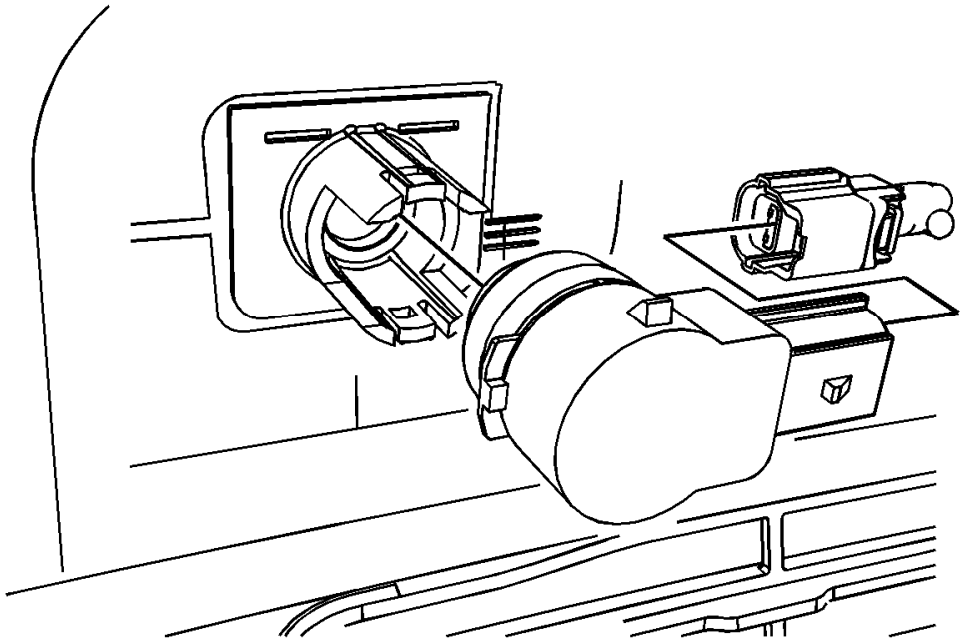

Fig. 7: Identifying Rear Object Sensor Housing
Courtesy of GENERAL MOTORS COMPANY

2. Disconnect the sensor harness.
3. Remove the sensor from the sensor housing.

The sensor housing must be painted if replaced. If reinstalled, painting will not be necessary.

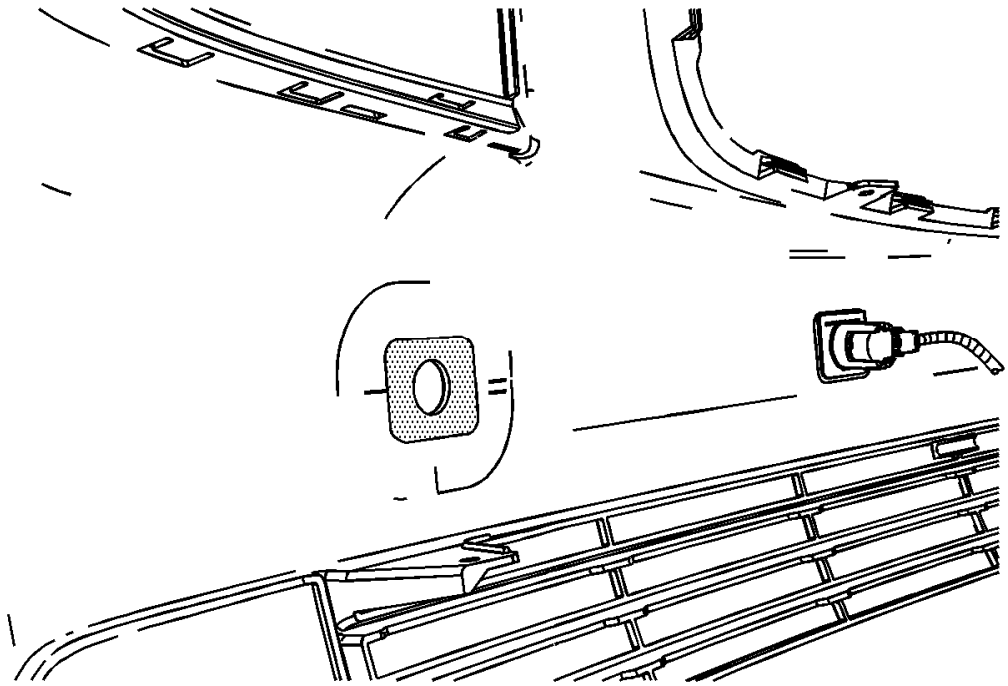

Fig. 8: Sanding/Grinding Sonic Weld Plastic Residue From Fascia
Courtesy of GENERAL MOTORS COMPANY

IMPORTANT: Do Not grind off alignment tabs.

4. Sand/grind sonic weld plastic residue from the fascia.

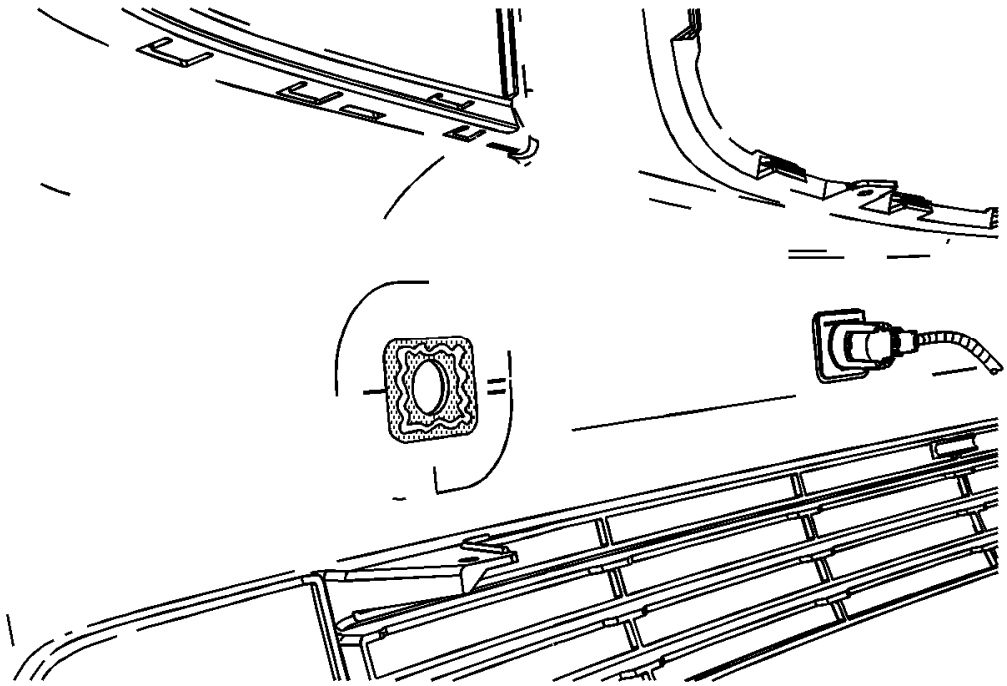

Fig. 9: View Of Structural Adhesive Epoxy On Fascia
Courtesy of GENERAL MOTORS COMPANY

5. Apply structural adhesive epoxy, Lord Fusor™ 127EZ or equivalent, to fascia at mating surface.

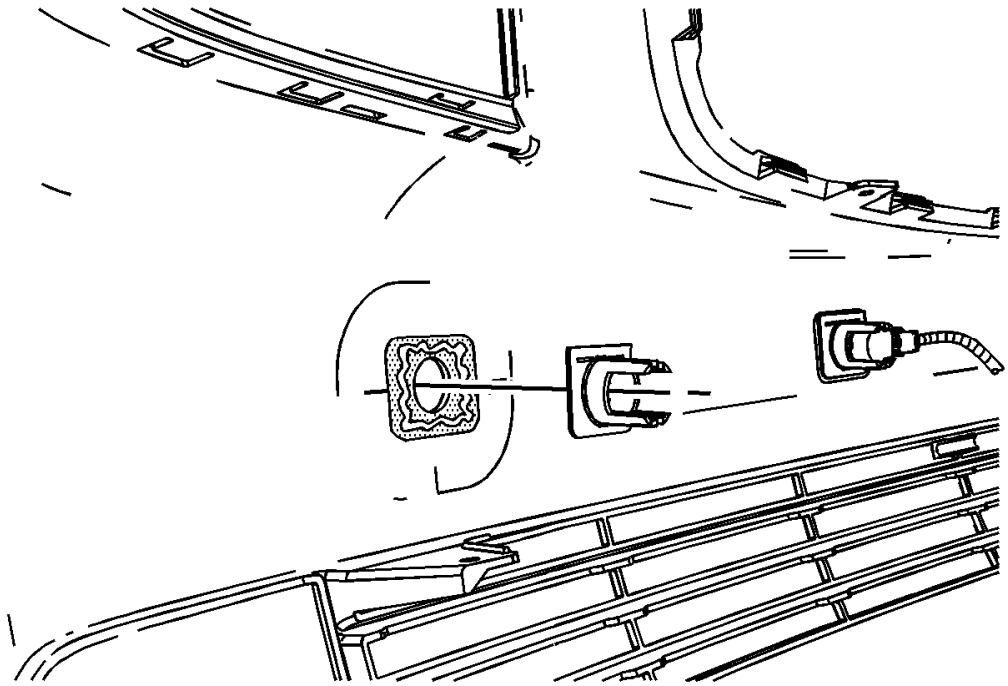

Fig. 10: Identifying Sensor Housing & Tabs
Courtesy of GENERAL MOTORS COMPANY

6. Using the alignment tabs, install the sensor housing to the fascia.
7. Allow adhesive to cure according to manufacturer's directions.

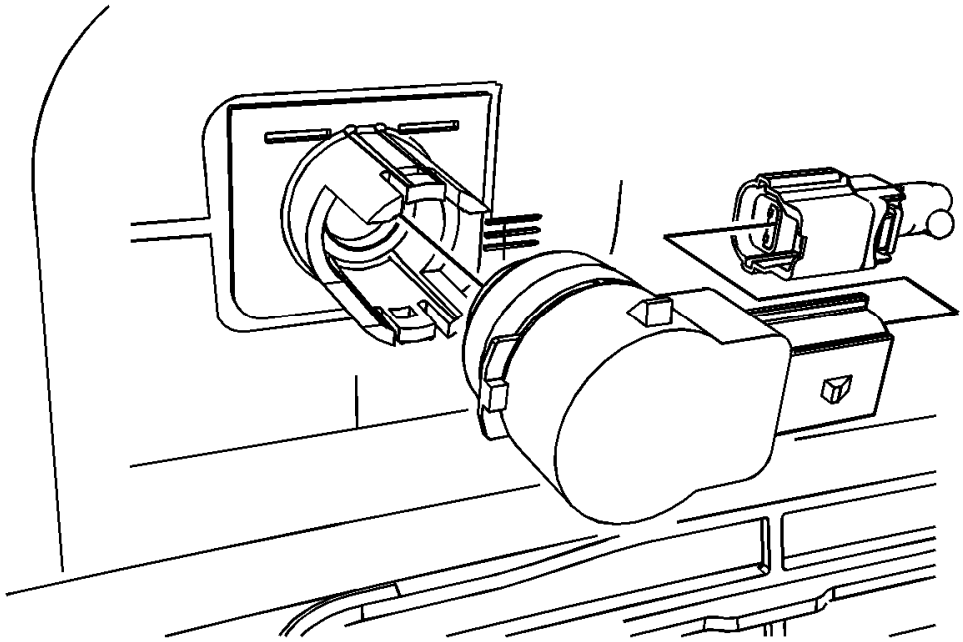

Fig. 11: Identifying Rear Object Sensor Housing
Courtesy of GENERAL MOTORS COMPANY

8. Install the sensor to the sensor housing.
9. Connect the electrical harness.
10. Install the rear fascia. Refer to **Rear Bumper Fascia Replacement** .

REARVIEW CAMERA IMAGE DISPLAY MODULE REPLACEMENT

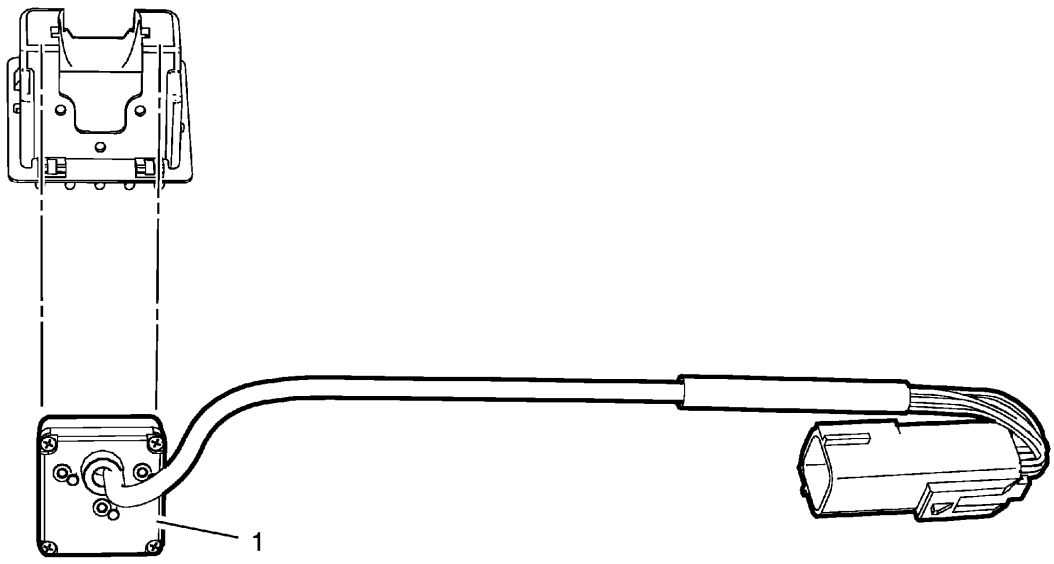

Fig. 12: Rearview Camera Image Display Module
Courtesy of GENERAL MOTORS COMPANY

Rearview Camera Image Display Module Replacement

Callout	Component Name
Preliminary Procedure Remove the rearview camera image display module bracket. Refer to **Rearview Camera Image Display Module Bracket Replacement**.	
1	Rearview Camera Image Display Module **Procedure** Use a suitable tool to remove.

REARVIEW CAMERA IMAGE DISPLAY MODULE BRACKET REPLACEMENT

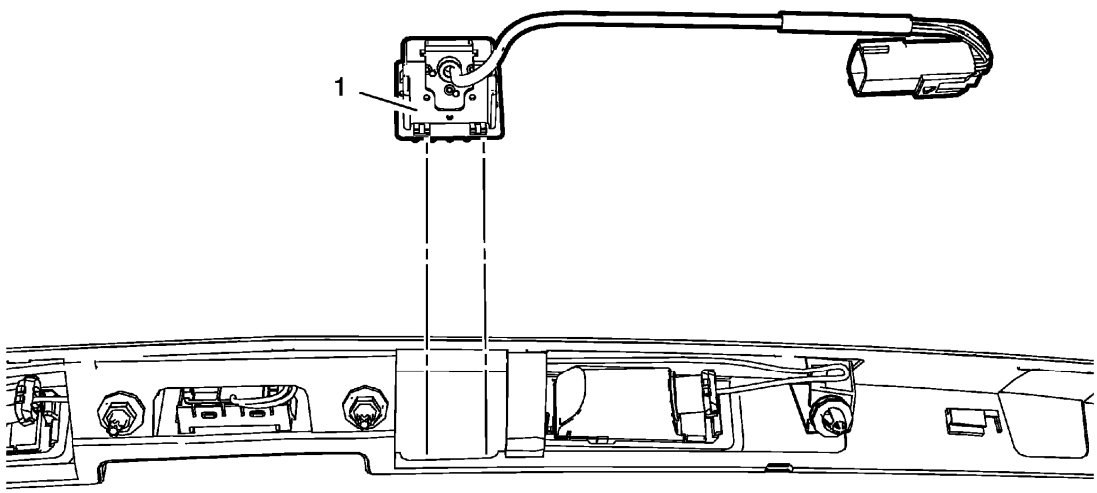

Fig. 13: Rearview Camera Image Display Module Bracket
Courtesy of GENERAL MOTORS COMPANY

Rearview Camera Image Display Module Bracket Replacement

Callout	Component Name
Preliminary Procedure Remove the rear compartment lid applique. Refer to **Rear Compartment Lid Applique Replacement** .	
1	Rearview Camera Image Display Module Bracket **Procedure** 1. Use a suitable tool to remove. 2. Remove the rearview camera image display module. Refer to **Rearview Camera Image Display Module Replacement**.

DESCRIPTION AND OPERATION

OBJECT DETECTION DESCRIPTION AND OPERATION (WITH SIDE BLIND SPOT ALERT (UFT))

The side blind zone alert system shall detect and report "objects of interest" on either side of the vehicle, within a specified "blind spot" zone. The system is designed to alert the driver, with a visual display placed on the side view mirror, to the presence of objects of interest that may not be visible in the inside rearview mirror and outside rear view mirrors. Although this system is intended to help drivers avoid lane change crashes, it does not replace driver vision and therefore should be considered a lane change aid. Even with the side blind zone

alert system, the driver must check carefully for objects outside of the reporting zone (e.g., a fast approaching vehicle) before changing lanes. In the event that the system senses a malfunction through its diagnostic routines, the system will be disabled and the driver will be visually notified.

When the system detects a vehicle in the side blind zone while driving forward, an amber warning symbol will light up in the appropriate outside mirror. This indicates that it may be unsafe to change lanes. If the driver then activates the turn signal, the amber warning symbol starts flashing as an extra warning not to change lanes.

Side blind zone alert is active when the vehicle is out of park or the parking brake is off on manual transmission vehicles and from speeds of 10 km/h (6.2 MPH) up to 140 km/h (87 MPH). Driving faster deactivates the system, indicated by dimly lighting the warning symbols in the mirrors. Driving under this speed again will turn off the warning symbols. If then a vehicle is detected in the blind zone, the warning symbols will lit normal on the appropriate side. When the vehicle is started, both outside mirror displays will briefly come on to indicate that the system is operating.

Side Blind Zone Alert System Components

The side blind zone alert system is made up of the following components:

- Left side object sensor module (also used for rear cross traffic alert)
- Right side object sensor module (also used for rear cross traffic alert)
- Driver outside rearview mirror
- Passenger outside rearview mirror

Side Object Sensor Modules

The side object sensor modules are located on each side of the vehicle behind the rear fascia and are not directly visible from outside the vehicle. The sensors use radar to determine the presence of objects nearby. When an object is detected in the side blind zone, the side object sensor module supplies voltage to illuminate the visual indicator on the appropriate side rear view mirror. Each sensor is supplied B+ and ground. The right sensor receives an additional ground. Both sensors communicate independently on the serial data line. The serial data enters the left sensor in a pass-thru configuration, that connects to the right sensor. The scan tool is able to individually communicate with each sensor.

Outside Rearview Mirrors

The outside rearview mirrors contain an icon that is backlit with high intensity, amber-colored LED's located on the mirror surface. The display brightness adapts to day/night conditions. The side blind zone alert indicator icon in the left or right outside rearview mirror is illuminated if the left or right side object sensor module detects a vehicle in the side blind zone to inform the driver that there is a vehicle driving in the blind spot zone.

Side Blind Zone Alert Operation

When the vehicle is started, both outside mirror displays will briefly come on to indicate that the system is operating. The system is designed to detect objects of interest as small as a 125cc motorcycle with rider. The detection zone starts at the outside rearview mirror and extends out to 3.5 m (11 ft) at the back corner of the vehicle and 3 m (10 ft) behind the vehicle at a height of 0.5 m (1.5 ft) to 2.0 m (6 ft) above the ground. The side

blind zone system does not detect stationary objects such as guardrails, posts, curbs, walls, berms, bridges, or parked vehicles.

When the system detects a vehicle in the side blind zone while driving forward, independent if passing a vehicle or being passed, an amber warning symbol will light up in the appropriate outside mirror. This indicates that it may be unsafe to change lanes. If the driver then activates the turn signal, the amber warning symbol starts flashing as an extra warning not to change lanes.

Foul weather may affect the operation of the side blind zone system. Occasional missed alerts can occur under normal circumstances and will increase in wet conditions. The number of missed alerts will increase with increased rainfall or road spray. Heavy rainfall, as well as mud, dirt, snow, ice, or slush build-up on the rear fascia, can completely disable the system.

If the vehicle is towing a trailer or has an object, such as a bicycle rack, attached to the rear of the vehicle, the side blind zone system may not function properly and the indicators may remain illuminated at all time.

Side Blind Zone Alert Driver Information Center Messages

SIDE BLIND ZONE ALERT OFF

This message indicates that the system has been disabled through the driver information center. Refer to the vehicle owners manual for instructions on how to set personalization options on the driver information center.

SERVICE SIDE DETECTION SYSTEM

This message indicates that the system requires service. When the message is displayed, the indicators will remain illuminated at all times, notifying the driver that the side blind zone system should not be relied upon when changing lanes. Since the sensors are also used for rear cross traffic alert, this feature will also be inoperative.

SIDE DETECTION SYSTEM UNAVAILABLE

This message indicates that the system has been temporarily disabled because the sensor is blocked or can otherwise not accurately detect vehicles or objects. Such instances may be mud, dirt, snow, ice, or slush build-up on the rear fascia, heavy rainfall, excessive road spray, fascia damage or stickers.

The rear cross traffic alert system will read the GPS latitude and longitude on the serial data bus and calculate if the vehicle is within a Radio Astronomy zone. These zones are located in Europe and Japan and require the sensors to be turned off. The "Side Detection System Unavailable" message will be displayed to the driver when this occurs.

OBJECT DETECTION DESCRIPTION AND OPERATION (WITH PARKING ASSIST (UD7))

The ultrasonic parking assist system is designed to identify and notify the driver of an object in the vehicles path when reversing at speeds of less than 8 km/h (5 MPH). The distance and location of the object is determined by 4 object sensors located in the rear bumper. The parking assist system will notify the driver using an audible beep signal through the radio rear speakers.

The parking assist system is made up of the following components:

- Parking assist control module
- Rear object alarm sensors

Parking Assist Control Module

The parking assist control module provides an 8 V reference and a low reference to the four object alarm sensors. The parking assist control module receives individual signals from each of the four sensors and determines the location and distance of an object based on these inputs. When an object is detected, the parking assist control module will send a data message via CAN-Bus to the radio requesting an audible alert.

Rear Object Alarm Sensors

The object alarm sensors are located in the rear bumper of the vehicle. The sensors are used to determine the distance between an object and the bumper. Each sensor emits an ultrasonic frequency which is reflected off any object located behind the vehicle. These reflections are received by the sensors. The time difference between the emission of the frequency and when the reflection is received is known as sensor echo time, it is used to determine the distance to the object. The sensors report this information to the parking assist control module.

Rear Parking Assist Operation

When the vehicle is first placed into reverse there will be one audible beep through the rear speakers, to indicate that the system is working. If rear speakers are inoperable no audible signals will occur.

When backing up at speed of less than 8 km/h (5 MPH), the system is constantly monitoring for object of interest located behind the vehicle. The rear parking assist system can detect objects greater than 7.6 cm (3 in) wide and 25.4 cm (10 in) tall. The system cannot detect objects below the bumper, underneath the vehicle. If an object is detected within 2.5 m (8 ft) there will be a audible beep notification out of both rear speakers based upon the distance to the object. As the vehicle gets closer to an object, the time between the beeps become shorter.

If the vehicle stops in a range zone the beeping will stop after 5 s. When the distance between the object and the vehicle changes, beeping will start again.

If the rear parking assist system detects a malfunction the single audible beep will not chime when put into reverse along with a DTC being stored. The object alarm module will send a serial data message to the instrument panel cluster to display the SERVICE PARK ASSIST message on the driver information center.

Parking Assist System Driver Information Center Messages

SERVICE PARK ASSIST

The driver information center displays SERVICE PARK ASSIST when the parking assist control module detects a malfunction in the rear parking assist system and the system is disabled. The driver information center also displays SERVICE PARK ASSIST when a loss of communication occurs with the parking assist control module.

PARK ASSIST OFF

The PARK ASSIST OFF message is displayed in the driver information center when the parking assist system is disabled due to conditions that disable or inhibit the system. The parking assist control module requests the driver information center display PARK ASSIST OFF when it detects that one of the following conditions:

- The rear parking assist system is manually disabled by the vehicle operator through the audio system personalization menu.
- The park brake is applied or not fully released.
- An object is attached to the rear of the vehicle, such as a trailer, bicycle rack, trailer hitch receiver, or tow bar. Also, an object extending beyond a lowered endgate will disable the system.
- The parking assist sensors are covered by snow, mud, dirt or ice.
- The vehicle bumper is damaged.
- Excessive paint thickness on a replacement parking assist sensor.
- The parking assist sensors are disrupted by vibrations, like those caused by a large nearby vehicle or from heavy equipment such as a jackhammer.

OBJECT DETECTION DESCRIPTION AND OPERATION (WITH REARVIEW CAMERA (UCV))

Rear Vision Camera System Operation

The rear vision camera system consists of a video camera/module located at the rear of the vehicle and the infotainment display.

When the transmission is placed into REVERSE, a 12 volt signal is sent to the rear vision camera by the body control module (BCM). This signal indicates to the camera that the vehicle is in reverse and image display is requested. The rear vision camera receives ignition voltage and a constant ground to power the camera. Video signal + and video signal - circuits carry the video image from the rear vision camera to the infotainment display. Additionally, the video signal circuits are shielded to prevent any interference which may lead to a loss of video signal resolution and a degraded video image. The shield is provided a ground path by the rear vision camera.

The following conditions may cause a degraded rear vision camera image:

- Ice, snow, or mud has built up on the rear vision camera
- Dark conditions
- Extreme light conditions, such as glare from the sun or the headlights of another vehicle
- Damage to the rear of the vehicle
- Extreme high temperatures or extreme temperature changes

If a malfunction is detected in the system, Service Rear Vision Camera may be displayed on the infotainment display as an indicator to the customer that a problem exists that requires service.

2013 ACCESSORIES & EQUIPMENT

Power Seats - Cruze

SCHEMATIC WIRING DIAGRAMS

DRIVER SEAT WIRING SCHEMATICS

ADS Wiring Schematics

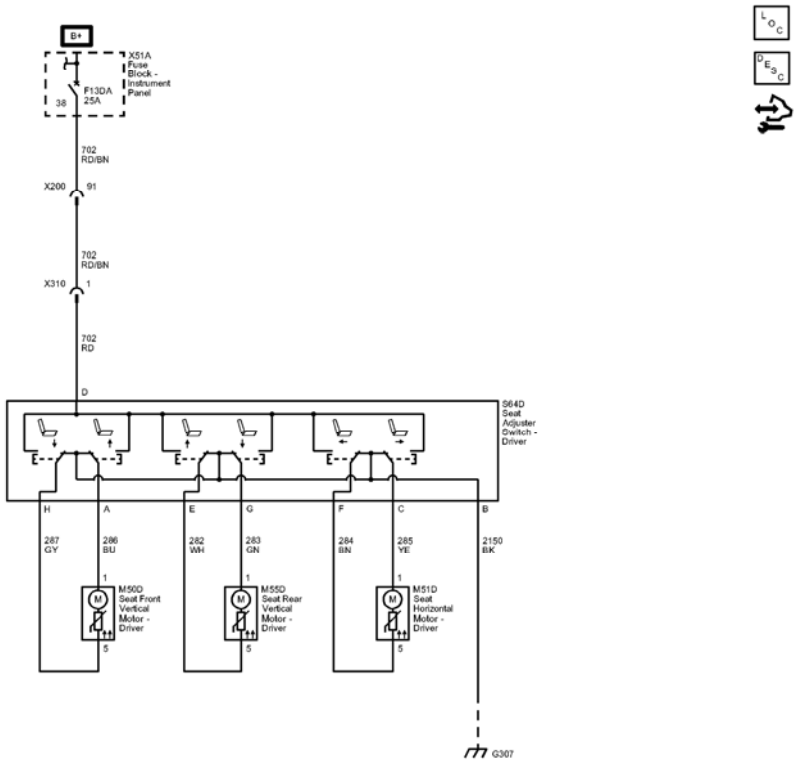

Fig. 1: Driver Seat (ADS) Wiring Schematics
Courtesy of GENERAL MOTORS COMPANY

Callout	Component Name
702	Battery Positive Voltage
702_RD/BN	702 RD/BN
CAV_D	D
702_RD/BN	702 RD/BN
702_RD	702 RD
CAV_91	91
CAV_1	1
CAV_38	38

287	Driver Power Seat Front Vertical Motor Down Control
287_GY	287 GY
CAV_5	5
CAV_H	H
286	Driver Power Seat Front Vertical Motor Up Control
286_BU	286 BU
CAV_1	1
CAV_A	A
282	Driver Power Seat Rear Vertical Motor Up Control
282_WH	282 WH
CAV_5	5
CAV_E	E
283	Driver Power Seat Rear Vertical Motor Down Control
283_GN	283 GN
CAV_1	1
CAV_G	G
284	Driver Power Seat Horizontal Motor Rearward Control
284_BN	284 BN
CAV_5	5
CAV_F	F
285	Driver Power Seat Horizontal Motor Forward Control
285_YE	285 YE
CAV_1	1
CAV_C	C
2150	Ground
2150_BK	2150 BK
CAV_B	B
F13DA	F13DA 25A
X200	X200
X310	X310
M50D	(ADS)
S64D	(ADS)
X51A	
M55D	(ADS)
M51D	(ADS)

DIAGNOSTIC INFORMATION AND PROCEDURES

SYMPTOMS - POWER SEATS

NOTE: Review the system description in order to familiarize yourself with the system

functions. Refer to Power Seats System Description and Operation.

Visual/Physical Inspection

- Inspect for aftermarket devices which could affect the operation of the seat systems. Refer to **Checking Aftermarket Accessories** .
- Inspect the easily accessible or visible system components for obvious damage or conditions which could cause the symptom.

Intermittent

Faulty electrical connections or wiring may be the cause of intermittent conditions. Refer to **Testing for Intermittent Conditions and Poor Connections** .

Symptom List

Refer to **Power Seat Malfunction** diagnostic procedure in order to diagnose the symptom.

POWER SEAT MALFUNCTION

Diagnostic Instructions

- Perform the **Diagnostic System Check - Vehicle** prior to using this diagnostic procedure.
- Review **Strategy Based Diagnosis** for an overview of the diagnostic approach.
- **Diagnostic Procedure Instructions** provides an overview of each diagnostic category.

Diagnostic Fault Information

Circuit	Short to Ground	Open/High Resistance	Short to Voltage	Signal Performance
B+	1	1	-	-
Front Vertical Motor Down Control	1	1	-	-
Front Vertical Motor Up Control	1	1	-	-
Horizontal Motor Forward Control	1	1	-	-
Horizontal Motor Rearward Control	1	1	-	-
Rear Vertical Motor Down Control	1	1	-	-
Rear Vertical Motor Up Control	1	1	-	-
Ground	-	1	-	-
1. Power seat inoperative				

Circuit/System Description

Power seat is completely controlled through the seat adjuster switch. Battery voltage is supplied at all times to the seat switch through a 20 A fuse located in the instrument panel fuse block. When the seat switches are in an inactive state, the switch contacts are closed to the switch ground circuit.

All seat motors are reversible. For example, when the seat horizontal forward switch is pressed to move the entire seat forward, battery voltage is applied through the switch contacts and the seat horizontal motor rearward control circuit to the motor. With the horizontal motor rearward switch contacts closed to the switch ground circuit, the motor runs in order to drive the entire seat forward until the switch is released. Moving the entire seat rearward works similarly to moving the entire seat forward, except that battery positive voltage and ground are applied on opposite circuits causing the motor to run in the opposite direction. All seat motors are powered this way.

Reference Information

Schematic Reference

Driver Seat Schematics

Connector End View Reference

COMPONENT CONNECTOR END VIEWS - INDEX

Description and Operation

Power Seats System Description and Operation

Electrical Information Reference

- **Circuit Testing**
- **Connector Repairs**
- **Testing for Intermittent Conditions and Poor Connections**
- **Wiring Repairs**

Circuit/System Verification

1. Verify the driver seat directional motors listed below operate while operating the seat switches in both directions.
    - M51D Seat Horizontal Motor - Driver
    - M50D Seat Front Vertical Motor - Driver
    - M55D Seat Rear Vertical Motor - Driver
    - **If all seat motors do not operate**

      Refer to Circuit/System Testing below - Seat Adjuster Switch Circuit Test.

- **If 1 or more seat motors operate**

  Refer to Circuit/System Testing below - Seat Motor Circuit Test.

- **If all seat motors operate**

2. All OK.

Circuit/System Testing

Seat Adjuster Switch Circuit Test

1. Ignition OFF, disconnect the harness connector at the S64D Seat Adjuster Switch - Driver.
2. Test for less than 10 ohms between the ground circuit terminal B and ground.
   - **If 10 ohms or greater**
     1. Ignition OFF.
     2. Test for less than 2 ohms in the ground circuit end to end.
        - If 2 ohms or greater, repair the open/high resistance in the circuit.
        - If less than 2 ohms, repair the open/high resistance in the ground connection.
   - **If less than 10 ohms**
3. Ignition ON.
4. Verify a test lamp illuminates between the B+ circuit terminal D and ground.
   - **If the test lamp does not illuminate**
     1. Ignition OFF
     2. Test for infinite resistance between the B+ circuit and ground.
        - If less than infinite resistance, repair the short to ground on the circuit.
        - If infinite resistance
     3. Test for less than 2 ohms in the B+ circuit end to end.
        - If 2 ohms or greater, repair the open/high resistance in the circuit.
        - If less than 2 ohms, verify the circuit breaker is not open and there is voltage at the circuit breaker.
   - **If the test lamp illuminates**
5. Test or replace the S64D Seat Adjuster Switch - Driver.

Seat Motor Circuit Test

1. Ignition OFF, disconnect the harness connector at the appropriate seat motor listed below:
   - M51D Seat Horizontal Motor - Driver
   - M50D Seat Front Vertical Motor - Driver
   - M55D Seat Rear Vertical Motor - Driver
2. Connect a test lamp between control circuit terminal 1 and control circuit terminal 5, ignition ON.
3. Verify the test lamp illuminates when commanding the seat motor Up and Down or Forward and

Rearward using the seat adjuster switch.

- **If the test lamp does not illuminate during either of the commands**

1. Ignition OFF, disconnect the harness connector at the S64D Seat Adjuster Switch - Driver.
2. Test for infinite resistance between each control circuit and ground.
   - If less than infinite resistance, repair the short to ground on the circuit.
   - If infinite resistance
3. Test for less than 2 ohms in each control circuit end to end.
   - If 2 ohms or greater, repair the open/high resistance in the circuit.
   - If less than 2 ohms, test or replace the S64D Seat Adjuster Switch - Driver.

- **If the test lamp illuminates during each of the commands**

4. Test or replace the seat motor.

Component Testing

Seat Adjuster Switch Test

1. Ignition OFF, disconnect the harness connector at the S64D Seat Adjuster Switch - Driver.
2. Test for infinite resistance between the B+ terminal D and each control terminal with the switch in the open position.
   - **If less than infinite resistance**

     Replace the S64D Seat Adjuster Switch - Driver.

   - **If infinite resistance**
3. Test for less than 2 ohms between the B+ terminal D and each control terminal with the appropriate switch in the closed position.
   - **If 2 ohms or greater**

     Replace the S64D Seat Adjuster Switch - Driver.

   - **If less than 2 ohms**
4. Test for less than 2 ohms between the ground terminal B and each control terminal with the switch in the open position.
   - **If 2 ohms or greater**

     Replace the S64D Seat Adjuster Switch - Driver.

   - **If less than 2 ohms**
5. All OK.

Seat Motor

1. Ignition OFF, disconnect the harness connector at the appropriate seat motor listed below:

- M51D Seat Horizontal Motor - Driver
- M50D Seat Front Vertical Motor - Driver
- M55D Seat Rear Vertical Motor - Driver

NOTE: When performing the following tests, make sure that the seat is not already in the position the test is attempting to produce.

2. Install a 30 A fused jumper wire between control terminal 1 and 12 V.
3. Momentarily install a jumper wire between control terminal 5 and ground. The seat motor should momentarily perform the appropriate FORWARD/ REARWARD/ UP/ DOWN function.
   - **If the motor does not perform the FORWARD/ REARWARD/ UP/ DOWN function**

     Replace the motor.

   - **If the motor performs the FORWARD/ REARWARD/ UP/ DOWN function**
4. Reverse the jumper wires; the motor should perform FORWARD/ REARWARD/ UP/ DOWN function.
   - **If the motor does not perform the FORWARD/ REARWARD/ UP/ DOWN function**

     Replace the motor.

   - **If the motor performs the FORWARD/ REARWARD/ UP/ DOWN function**
5. All OK.

Repair Instructions

Perform the **Diagnostic Repair Verification** after completing the diagnostic procedure.

- **Driver Seat Adjuster Switch Replacement**
- **Front Seat Tilt Adjuster Actuator Replacement**
- **Front Seat Adjuster Actuator Replacement**
- **Driver Seat Outer Adjuster Rear Vertical Actuator Replacement**

REPAIR INSTRUCTIONS

DRIVER SEAT ADJUSTER SWITCH REPLACEMENT

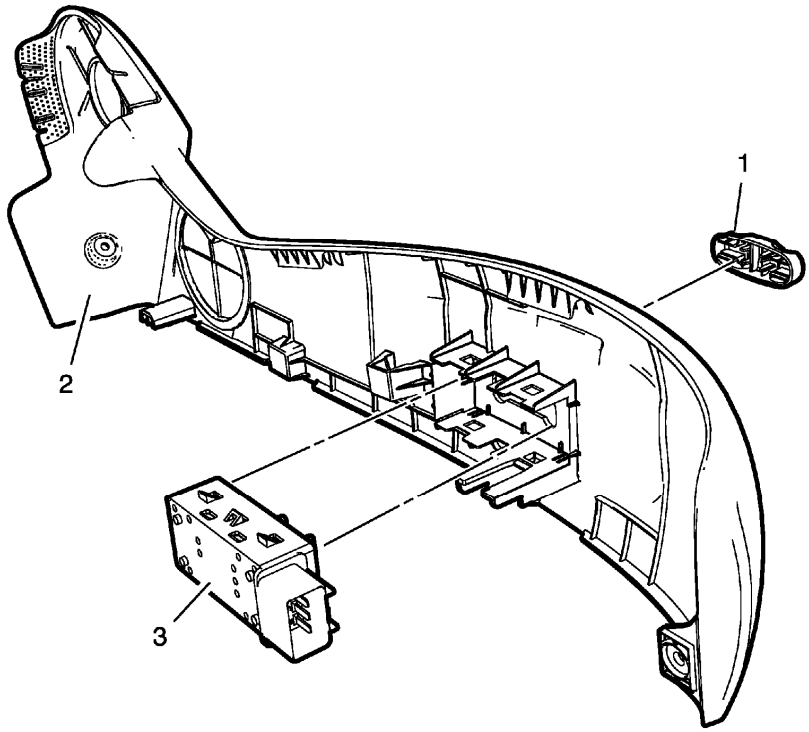

Fig. 2: Driver Seat Adjuster Switch
Courtesy of GENERAL MOTORS COMPANY

Driver Seat Adjuster Switch Replacement

Callout	Component Name
1	Seat Adjuster Switch Knob
2	Seat Cushion Outer Trim Panel Refer to **Front Seat Cushion Outer Trim Panel Replacement** .
3	Front Seat Adjuster Switch **Procedure** Disconnect electrical connector.

FRONT SEAT TILT ADJUSTER ACTUATOR REPLACEMENT

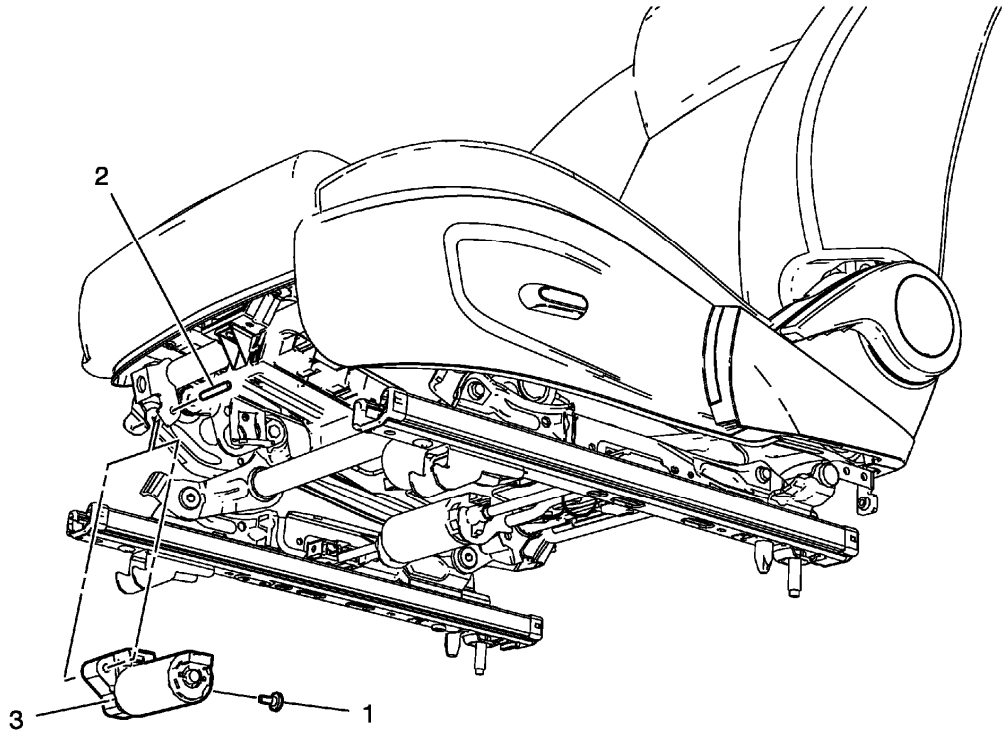

Fig. 3: Identifying Front Seat Tilt Adjuster Actuator, Screw And Roll Pin
Courtesy of GENERAL MOTORS COMPANY

Front Seat Tilt Adjuster Actuator Replacement

Callout	Component Name
Preliminary Procedures Remove the front seat. Refer to **Driver or Passenger Seat Removal and Installation** .	
1	Front Seat Tilt Actuator Screw **CAUTION:** **Refer to Fastener Caution .** **Tighten** 10 N.m (89 lb in)
2	Roll Pin **Procedure** Use a hammer and small round tool to tap the roll pin out.
3	Front Seat Tilt Adjuster Actuator **Procedure** Disconnect electrical connector.

FRONT SEAT ADJUSTER ACTUATOR REPLACEMENT

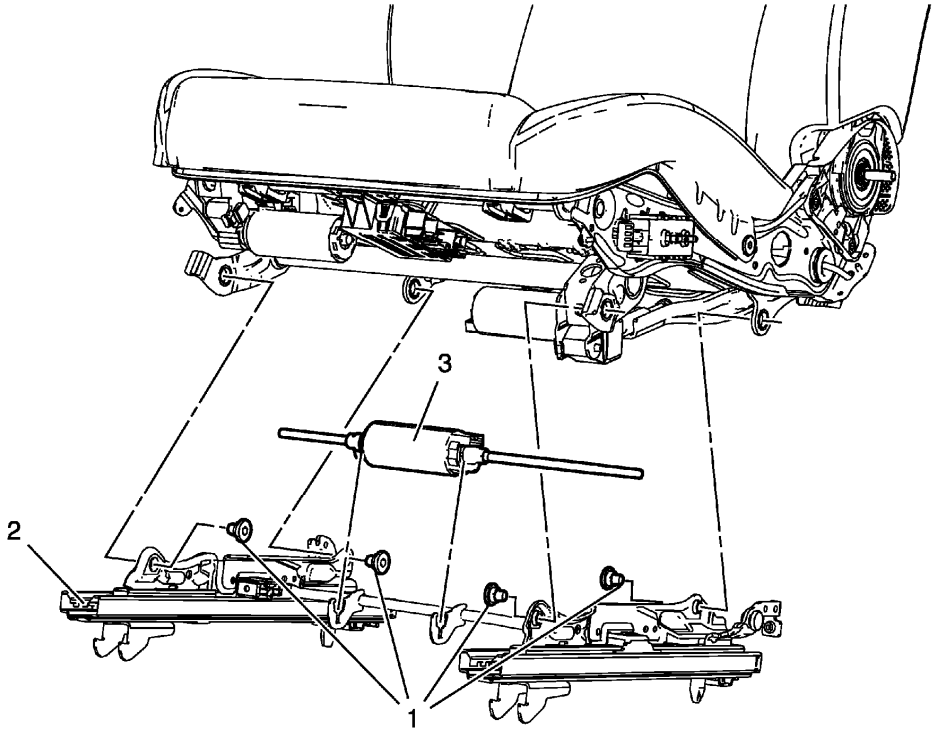

Fig. 4: Identifying Front Seat Adjuster Actuator, Adjuster Track And Screw
Courtesy of GENERAL MOTORS COMPANY

Front Seat Adjuster Actuator Replacement

Callout	Component Name
Preliminary Procedures Remove the front seat. Refer to **Driver or Passenger Seat Removal and Installation** .	
1	Front Seat Adjuster Track Screw **CAUTION:** **Refer to Fastener Caution .** **Tighten** 42 N.m (31 lb ft)
2	Front Seat Adjuster Track
3	Front Seat Adjuster Actuator **Procedure** Disconnect electrical connector.

DRIVER SEAT OUTER ADJUSTER REAR VERTICAL ACTUATOR REPLACEMENT

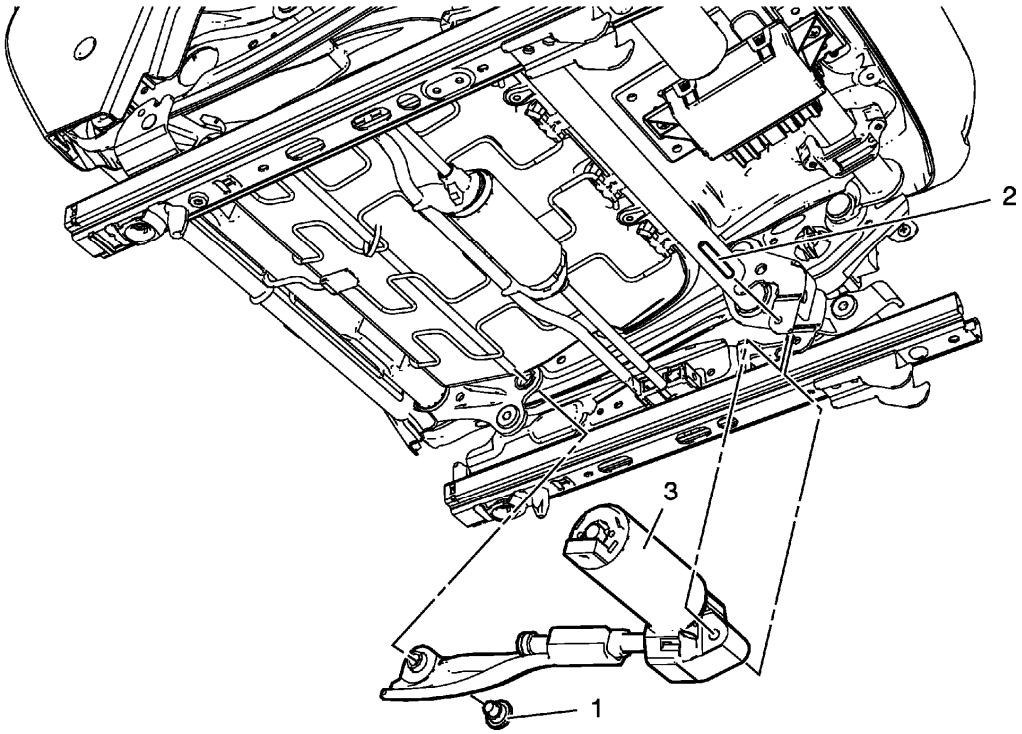

Fig. 5: View Of Driver Seat Outer Adjuster Rear Vertical Actuator, Screw And Roll Pin
Courtesy of GENERAL MOTORS COMPANY

Driver Seat Outer Adjuster Rear Vertical Actuator Replacement

Callout	Component Name
Preliminary Procedure Remove the front seat. Refer to **Driver or Passenger Seat Removal and Installation** .	
1	Front Seat Outer Adjuster Rear Vertical Actuator Screw **CAUTION:** **Refer to Fastener Caution .** **Tighten** 42 N.m (31 lb ft)
2	Roll Pin **Procedure** Use a hammer and small round tool to tap the roll pin out.
3	Front Seat Outer Adjuster Rear Vertical Actuator **Procedure** Disconnect electrical connector.

DESCRIPTION AND OPERATION

POWER SEATS SYSTEM DESCRIPTION AND OPERATION

The power seat system consists of the following components:

- Seat adjuster switch
- Seat horizontal motor
- Seat front vertical motor
- Seat rear vertical motor

Seat Adjuster Switch

The seat switches provide both power and ground to the selected seat motors. Battery positive voltage is supplied at all times to the driver seat switches through a 25 A circuit breaker located in the instrument panel fuse block.

Motors

All of the seat motors operate independently of each other. Each motor contains an electronic circuit breaker (PTC) that opens in the event of a circuit overload and will reset only after voltage has been removed from the circuit. There are three seat position motors. These are the horizontal motor, front vertical motor, and the rear vertical motor. The horizontal motor moves the entire seat forward and rearward. The seat vertical motors may operate independently to tilt the front or rear of the seat cushion up or down. Both motors can also run simultaneously to move the entire seat up or down.

Seat Operation

All seat motors are reversible. For example, when the seat horizontal forward switch is pressed to move the entire seat forward, ground is applied through the switch contacts and the seat horizontal motor forward control circuit to the motor. With the horizontal motor rearward switch contacts closed to the switch B+ circuit, the motor runs in order to drive the entire seat forward until the switch is released. Moving the entire seat rearward works similarly to moving the entire seat forward, except that battery voltage and ground are applied on opposite circuits causing the motor to run in the opposite direction. All seat motors are powered this way.

2013 ACCESSORIES & EQUIPMENT

Programming and Setup - Cruze

DIAGNOSTIC INFORMATION AND PROCEDURES

CONTROL MODULE REFERENCES

Reference Information

- **Data Link References**
- **Diagnostic System Check - Vehicle**
- **Diagnostic Trouble Code (DTC) List - Vehicle**
- **Symptoms - Vehicle**

Control Module References

Code	Control Module/Scan Tool Information	Schematic	Repair Instruction	Programming and Setup
A11	**Radio Scan Tool Information**	**Radio/Navigation System Schematics**	**Radio Replacement**	**Radio Programming and Setup**
A22	Radio Controls	**Radio/Navigation System Schematics**	**Radio Control Module Replacement**	**Radio Control Programming and Setup**
B60	Inflatable Restraint Front Passenger Mass Sensor **Inflatable Restraint Passenger Presence System Scan Tool Information** (Passenger Presence Sensor)	**SIR Schematics**	**Airbag Front Passenger Presence Sensor Replacement**	**Passenger Presence System Programming and Setup**
K9	**Body Control Module Scan Tool Information**	**Body Control System Schematics**	**Body Control Module Replacement**	**Body Control Module Programming and Setup**
K17	**Electronic Brake Control Module Scan Tool Information**	**Antilock Brake System Schematics**	**Brake Pressure Modulator Valve Replacement**	**Electronic Brake Control Module Programming and Setup**
		• **Engine Controls Schematics** for the 1.2L	• **Engine Control Module Replacement** for the 1.2L	

K20	**K20 Engine Control Module: Scan Tool Information**	(L2Q, LDC LWD) or 1.4L (L2I L2N LDD LUH LUJ LUV) engine • **Engine Controls Schematics** for the 1.6L (LDE LED LFJ LGE LLU LXV) or 1.8L (2H0 LFH LUW LWE) engine	(L2Q, LDC LWD) or 1.4L (L2I L2N LDD LUH LUJ LUV) engine • **Engine Control Module Replacement** for the 1.6L (LDE LED LFJ LGE LLU LXV) or 1.8L (2H0 LFH LUW LWE) engine	**K20 Engine Control Module: Programming and Setup**
K27	**Fuel Pump Flow Control Module Scan Tool Information**	**Engine Controls Schematics** for the 1.2L (L2Q, LDC LWD) or 1.4L (L2I L2N LDD LUH LUJ LUV) engine or **Engine Controls Schematics** for the 1.6L (LDE LED LFJ LGE LLU LXV) or 1.8L (2H0 LFH LUW LWE) engine	**Fuel Pump Flow Control Module Replacement** for the 1.2L (L2Q, LDC LWD) or 1.4L (L2I L2N LDD LUH LUJ LUV) engine or **Fuel Pump Flow Control Module Replacement** for the 1.6L (LDE LED LFJ LGE LLU LXV) or 1.8L (2H0 LFH LUW LWE) engine	**Fuel Pump Control Module Programming and Setup**
K29	**Driver Seat and Passenger Seat Heater Control Module Scan Tool Information**	**Heated/Cooled Seat Schematics**	**Front Seat Heater Control Module Replacement**	**Heated Seat Control Module Programming and Setup**
K33	**Heating, Ventilation and Air Conditioning Control Module Scan Tool Information**	**HVAC Schematics** with C68 or **HVAC Schematics** with C67	**Heater and Blower and Air Conditioning Control Module Replacement** with C68 or **Heater and Blower and Air Conditioning Control Module**	**HVAC System Control Module Programming and Setup**

			Replacement with C67	
K36	**Inflatable Restraint Sensing and Diagnostic Module Scan Tool Information** (Supplemental Inflatable Restraint)	**SIR Schematics**	**Airbag Sensing and Diagnostic Module Replacement**	**Inflatable Restraint Sensing and Diagnostic Module Programming and Setup**
K41R	**Object Alarm Module Scan Tool Information**	**Object Detection Schematics**	**Rear Object Alarm Control Module Replacement**	**Object Alarm Module Programming and Setup**
K43	**Power Steering Control Module Scan Tool Information**	**Power Steering Schematics**	**Power Steering Assist Motor Replacement**	**Power Steering Control Module Programming and Setup**
K60	**Steering Column Lock Control Module Scan Tool Information**	**Column Lock Schematics**	**Steering Column Replacement**	**Steering Column Lock Control Module Programming and Setup**
K61	Sunroof Control Module	**Sunroof Schematics**	**Sunroof Module Assembly Replacement**	**Sunroof Control Module Programming and Setup (New Motor)**, **Sunroof Control Module Programming and Setup (Existing Motor)**
K71	Control Solenoid Valve and Transmission Control Module Assembly **Transmission Control Module Scan Tool Information**	**Automatic Transmission Controls Schematics**	**Control Solenoid Valve and Transmission Control Module Assembly Replacement**	**Control Solenoid Valve and Transmission Control Module Assembly Programming and Setup (6T30/6T40/6T45/6T50)**
K73	**Communication Interface Module Scan Tool Information**	**OnStar Schematics**	**Communication Interface Module Replacement**	**Communication Interface Module Programming and Setup**
K77	Remote Control Door Lock Receiver	**Remote Function Schematics**	**Remote Control Door Lock Receiver Replacement**	**Remote Control Door Lock Receiver Programming and Setup**
K84	**Keyless Entry Control Module Scan Tool**	**Remote Function Schematics**	**Keyless Entry Control Module Replacement**	**Keyless Entry Control Module Programming and Setup**

	Information			
K85	**Inflatable Restraint Passenger Presence System Scan Tool Information**	**SIR Schematics**	**Inflatable Restraint Front Passenger Presence Module Replacement**	**Passenger Presence System Programming and Setup**
K89	Immobilizer Control Module	**Immobilizer Schematics**	**Theft Deterrent Module Replacement (without BTM)** , **Theft Deterrent Module Replacement (with BTM)**	**Theft Deterrent Module Programming and Setup**
P16	**Instrument Cluster Scan Tool Information**	**Instrument Cluster Schematics**	**Instrument Cluster Replacement**	**Instrument Cluster Programming and Setup**
T3	Audio Amplifier	**Radio/Navigation System Schematics**	**Radio Speaker Amplifier Replacement**	**Audio Amplifier Programming and Setup**
T11	**Multimedia Player Interface Module Scan Tool Information**	**Radio/Navigation System Schematics**	**Multimedia Player Interface Module Replacement**	**Multimedia Player Interface Module Programming and Setup**

REPAIR INSTRUCTIONS

AUDIO AMPLIFIER PROGRAMMING AND SETUP

Replace and Program ECU or Reprogram ECU

This ECU does not require SPS programming or any setup procedures.

BODY CONTROL MODULE PROGRAMMING AND SETUP

Special Tools

- **EL-49642** SPS Programming Support Tool
- **EL-46079** Tire Pressure Monitor Diagnostic Tool

For equivalent regional tools, refer to **Special Tools**.

NOTE:

- **DO NOT program a control module unless directed to by a service procedure or a service bulletin. If the control module is not properly configured with the correct calibration software, the control module will not control all of the vehicle features properly.**

- **Ensure the programming tool is equipped with the latest software and is securely connected to the data link connector. If there is an interruption during programming, programming failure or control module damage may occur.**
- **Stable battery voltage is critical during programming. Any fluctuation, spiking, over voltage or loss of voltage will interrupt programming. When required install the EL-49642 SPS Programming Support Tool to maintain system voltage. If not available, connect a fully charged 12 V jumper or booster pack disconnected from the AC voltage supply. DO NOT connect a battery charger.**
- **Turn OFF or disable systems that may put a load on the vehicles battery such as; interior lights, exterior lights (including daytime running lights), HVAC, radio, etc.**
- **During the programming procedure, follow the SPS prompts for the correct ignition switch position.**
- **Clear DTCs after programming is complete. Clearing powertrain DTCs will set the Inspection/Maintenance (I/M) system status indicators to NO.**

Replace and Program Control Module

To program a replacement Body Control Module (BCM), perform the following procedure:

1. Install **EL-49642** SPS programming support tool.

   NOTE: Make sure the vehicle ignition switch state is in appropriate position for the following step.

   - **For Key Ignition System, begin with the ignition in the RUN position.**
   - **For Push Button Start System, begin with the vehicle in vehicle OFF power mode. The Service Programming System will power mode the vehicle.**

2. Access the Service Programming System (SPS) and follow the on-screen instructions.

   NOTE: The BCM Configuration is only required if this option is available on the SPS Supported Controllers screen.

3. On the SPS Supported Controllers screen, select BCM Body Control Module - Configuration and follow the on-screen instructions (if applicable).
4. On the SPS Supported Controllers screen, select BCM Body Control Module - Programming and follow the on-screen instructions.
5. Perform the following for the appropriate ignition type prior to proceeding with the next step:
   - Key Ignition System: Key in the ignition and any additional keys must be away from the vehicle at least 3 meters.

- Push Button Start System: Keyless entry transmitter must be in the programming pocket. Refer to the owner manual for the exact pocket location. All additional transmitters must be away from the vehicle at least 3 meters.

NOTE: The following programming step may take between 10-12 min. and progress will appear to have stopped during this process. This is a normal security timer response and a restart should not be performed. If the DTC B389A set immediately after programming a replacement BCM, the Immobilizer Learn procedure was not properly completed. The Immobilizer Learn procedure needs to be performed again.

6. On the SPS Supported Controllers screen, select IMMO Immobilizer Learn - Setup. On the next screen, select Body Control Module IMMO Learn with Existing Transponder or Remote Key and follow the on-screen instructions. When Immobilizer Learn is complete, press the Unlock button on the keyless entry transmitter to allow the keyless entry transmitter to exit the Immobilizer Learn mode.

NOTE: When performing the Tire Pressure Monitor Sensor Learn during BCM setup, the EL-46079 tire pressure monitor diagnostic tool must be used to activate each tire pressure sensor for vehicles with UJM.

- **For Key Ignition System, begin with the ignition in the RUN position.**
- **For Push Button Start System, begin with the vehicle in vehicle ON power mode.**

7. On the SPS Supported Controllers screen, select BCM Body Control Module - Setup and follow the on-screen instructions.
8. Check the driver information center display for additional messages regarding further calibration instructions. If there are no additional driver information center instructions present, programming is complete.
9. At the end of programming, choose the "Clear DTCs" function on the SPS screen.
10. If ABS, Traction Control and/or Stabilitrak indicators are ON and DTC C0161 is set in the electronic brake control module after performing BCM programming and setup, do the following:
    1. Disconnect the scan tool from the data link connector.
    2. Ignition OFF, all access doors closed, all vehicle systems OFF, and all keys at least 3 meters away from the vehicle. It may take up to 2 minutes to power down.
    3. Ignition ON, verify DTC C0161 is in history. If not, repeat the above step to make sure the vehicle is in sleep mode.
    4. Use the scan tool to clear the DTCs.

Reprogram Control Module

To program an existing BCM, perform the following procedure:

1. Install **EL-49642** SPS programming support tool.

NOTE: Make sure the vehicle ignition switch state is in appropriate position for the following step.

- **For Key Ignition System, begin with the ignition in the RUN position.**
- **For Push Button Start System, begin with the vehicle in vehicle ON power mode.**

2. Access the Service Programming System (SPS) and follow the on-screen instructions.
3. On the SPS Supported Controllers screen, select BCM Body Control Module - Programming and follow the on-screen instructions.

NOTE: When performing the Tire Pressure Monitor Sensor Learn during BCM setup, the EL-46079 tire pressure monitor diagnostic tool must be used to activate each tire pressure sensor for vehicles with UJM.

4. On the SPS Supported Controllers screen, select BCM Body Control Module - Setup and follow the on-screen instructions.
5. Check the driver information center display for additional messages regarding further calibration instructions. If there are no additional driver information center instructions present, programming is complete.
6. At the end of programming, choose the "Clear All DTCs" function on the SPS screen.
7. If ABS, Traction Control and/or Stabilitrak indicators are ON and DTC C0161 is set in the electronic brake control module after performing BCM programming and setup, do the following:
    1. Disconnect the scan tool from the data link connector.
    2. Ignition OFF, all access doors closed, all vehicle systems OFF, and all keys at least 3 meters away from the vehicle. It may take up to 2 minutes to power down.
    3. Ignition ON, verify DTC C0161 is in history. If not, repeat the above step to make sure the vehicle is in sleep mode.
    4. Use the scan tool to clear the DTCs.

Unsuccessful Programming Recovery

In the event of an interrupted or unsuccessful programming event, perform the following steps:

1. Ignition ON. Ensure the control module, DLC and programming tool connections are secure and the SPS software is up to date.
2. Verify the control module can be reprogrammed.
    - **If the control module cannot be reprogrammed**
    1. Ignition OFF for one minute, ignition ON.
    2. Verify the control module can be reprogrammed.
        - If the control module cannot be reprogrammed, replace the control module.
        - If the control module can be reprogrammed.
    3. All OK.

- **If the control module can be reprogrammed**

3. All OK.

Repair Instructions

Perform the **Diagnostic Repair Verification** after completing the repair.

Control Module References for Control Module replacement, programming and setup

COMMUNICATION INTERFACE MODULE PROGRAMMING AND SETUP

Special Tools

EL-49642 SPS Programming Support Tool

For equivalent regional tools, refer to **Special Tools**.

Each of the following service procedures require programming or setup procedures to be performed on the communication interface module.

Communication Interface Module Replacement

NOTE:

- **It is critical to use the service replacement Communication Interface Module only in the vehicle for which it was ordered.**
- **Failure to perform the following procedures will result in a red LED, DTC(s) being set, and limited or incomplete OnStar® services.**
- **An OnStar® button press to the OnStar® call center is not required to complete the procedure.**
- **It may take up to 24 hours for OnStar® service to become fully activated after performing the procedures.**
- **Perform the following procedure only once. Repeat attempts of the procedure may result in a delay of the activation process.**
- **To fully activate an OnStar® module, both the setup and activation request procedures must be completed on all vehicles with and without an active OnStar® subscription to insure the unit has been setup properly for the vehicle it has been installed into and also to update the OnStar® with the correct unit information.**
- **To initialize the Turn-by-Turn feature, the vehicle must first be driven In open sky condition at speeds greater than 10 mph (16 kph) or more for a minimum of 5 miles (8 km), and perform at least 2 left and 2 right 90 degree turns coming to complete stops prior to each turn.**
- **On vehicles up fitted with TTY capabilities, it is necessary to perform a power cycle of the OnStar® Interface Module (OTIM), and toggle the TTY mode after completing the Communication Interface Module installation and setup procedures.**

1. Install **EL-49642** SPS programming support tool.
2. Access the Service Programming System (SPS) and follow the on-screen instructions.
3. On the SPS Supported Controllers screen, select ONSU Onstar® Module Setup and Service Activation and follow the on-screen instructions.
4. At the end of programming, choose the "Clear All DTCs" function on the SPS screen.
5. The default language for the new Communication Interface Module is English. To change to an alternate language, access the scan tool.
6. Inform the customer that it may take up to 24 hours for the OnStar® service to become fully activated.

CONTROL SOLENOID VALVE AND TRANSMISSION CONTROL MODULE ASSEMBLY PROGRAMMING AND SETUP (6T30/6T40/6T45/6T50)

The following service procedures require either a programming or a setup event be performed for a complete repair. The transmission control module (TCM) is part of the control solenoid valve assembly, and is not serviced separately.

Transmission Control Module (TCM) Replacement

If the TCM is replaced, the following procedures must be performed:

1. TCM Reprogramming
2. The Transmission Adaptive Values Learn. Refer to **Transmission Adaptive Values Learn** .

TCM Reprogramming

NOTE:

- **Use a scan tool to view and record the Transmission Control Module - End Model Part Number in the original TCM prior to starting the TCM reprogramming procedure.**
- **In some cases, the TCM and ECM may have to be reprogrammed. When a selection for TCM Transmission Control Module - Programming is not available, select SEQ Programming Sequence ECM/TCM (Automatic Transmission Only).**

1. If the TCM needs to be reprogrammed. Refer to **Service Programming System (SPS)**.
2. Perform the Transmission Adaptive Values Learn. Refer to **Transmission Adaptive Values Learn** .

NOTE: After programming, perform the following to avoid future misdiagnosis:

1. Turn the ignition OFF for 30 seconds.
2. Turn the ignition ON with the engine OFF.
3. Use the scan tool in order to retrieve history DTCs from all modules.
4. Clear all history DTCs.

Setup for Component Replacement

The replacement of some components will require a setup procedure for complete repair.

If any of the following components are replaced, the **Transmission Adaptive Values Learn** procedure must be performed:

- Transmission replacement
- Any internal transmission repair
- Any speed sensor

Refer to **Transmission Adaptive Values Learn** .

ELECTRONIC BRAKE CONTROL MODULE PROGRAMMING AND SETUP

NOTE:

- **DO NOT program a control module unless directed to by a service procedure or a service bulletin. If the control module is not properly configured with the correct calibration software, the control module will not control all of the vehicle features properly.**
- **Ensure the programming tool is equipped with the latest software and is securely connected to the data link connector. If there is an interruption during programming, programming failure or control module damage may occur.**
- **Stable battery voltage is critical during programming. Any fluctuation, spiking, over voltage or loss of voltage will interrupt programming. When required install the EL-49642 SPS Programming Support Tool to maintain system voltage. If not available, connect a fully charged 12 V jumper or booster pack disconnected from the AC voltage supply. DO NOT connect a battery charger.**
- **Turn OFF or disable systems that may put a load on the vehicles battery such as; interior lights, exterior lights (including daytime running lights), HVAC, radio, etc.**
- **During the programming procedure, follow the SPS prompts for the correct ignition switch position.**
- **Clear DTCs after programming is complete. Clearing powertrain DTCs will set the Inspection/Maintenance (I/M) system status indicators to NO.**

Replace and Program Control Module or Reprogram Control Module

To program a replacement or an existing control module, perform the following procedure:

1. Access the Service Programming System (SPS) and follow the on-screen instructions.
2. On the SPS Supported Controllers screen, select K17 Electronic Brake Control Module - Programming and follow the on-screen instructions.
3. On the SPS Supported Controllers screen, select K17 Electronic Brake Control Module - Setup and follow the on-screen instructions.

4. On the SPS Supported Controllers screen, select K17 Electronic Brake Control Module - Configuration and follow the on-screen instructions.
5. At the end of programming, choose the "Clear All DTCs" function on the SPS screen.
6. With a scan tool, perform the Brake Pressure Sensor Calibration. Refer to **Brake Pressure Modulator Valve Pressure Sensor Calibration** .
7. With a scan tool, perform the Steering Wheel Angle Sensor Learn. Refer to **Steering Angle Sensor Centering** .

Unsuccessful Programming Recovery

In the event of an interrupted or unsuccessful programming event, perform the following steps:

1. Ignition ON. Ensure the control module, DLC and programming tool connections are secure and the SPS software is up to date.
2. Verify the control module can be reprogrammed.
   - **If the control module cannot be reprogrammed**
   1. Ignition OFF for one minute, ignition ON.
   2. Verify the control module can be reprogrammed.
      - If the control module cannot be reprogrammed, replace the control module.
      - If the control module can be reprogrammed.
   3. All OK.
   - **If the control module can be reprogrammed**
3. All OK.

Repair Instructions

Perform the **Diagnostic Repair Verification** after completing the repair.

Control Module References for Control Module replacement, programming and setup

K20 ENGINE CONTROL MODULE: PROGRAMMING AND SETUP

The following service procedures require either a programming or a setup event performed for a complete repair.

Before Programming The Engine Control Module

NOTE: DO NOT program a control module unless you are directed by a service procedure or you are directed by a service bulletin. Programming a control module at any other time will not permanently correct a customers concern.

The following criteria must be met before performing the programming or learning procedure:

- There are no charging system concerns. All charging system concerns must be repaired before

programming a control module.

- Battery voltage is between 12-16 V. The battery must be charged before programming the control module if the battery voltage is low.
- A battery charger is NOT connected to the vehicle battery. Incorrect system voltage or voltage fluctuations from a battery charger may affect programming or control module damage.
- Note the engine oil Life remaining percentage.
- Turn OFF or disable any of the following systems that may put a load on the vehicle battery:
  - Twilight sentinel
  - Interior lights
  - Daytime running lights
  - HVAC systems
  - Radio
  - Engine cooling fans, etc
- The ignition switch is in the proper position. The scan tool prompts you to turn ON the ignition, with the engine OFF. DO NOT change the position of the ignition switch during the programming procedure, unless instructed to do so.
- All of the following tool connections are secure:
  - The connection at the data link connector (DLC)
  - The voltage supply circuits

DO NOT disturb the tool harnesses while programming. If an interruption occurs during the programming procedure, the control module programming may be affected or control module damage may occur.

Replace and Program Control Module

If the engine control module (ECM) is replaced, the following procedures must be performed:

1. Connect a scan tool to the vehicle and access SPS. Refer to **Service Programming System (SPS)**.
2. Before removing the old control module, perform the SPS function Prepare Control Module for Removal, if available.

NOTE: The Prepare Control Module for Removal function can only be performed when communication with the old control module is still possible.

3. Replace the ECM.
4. Perform the SPS function Engine Control Module - Programming and follow the on-screen instructions.
5. Clear the DTCs after completing the Programming procedure.
6. Perform the SPS function Immobilizer Learn and follow the on-screen instructions. Refer to **Immobilizer System Component Programming (with BTM)** , **Immobilizer System Component Programming (without BTM)** .
7. Perform the SPS function Engine Control Module - Configuration & Setup and follow the on-screen instructions.

8. Clear DTCs after completing the Configuration & Setup procedure.

Reprogram Control Module

To reprogram an existing ECM, perform the following procedure:

1. Connect a scan tool to the vehicle and access SPS. Refer to **Service Programming System (SPS)**.
2. Perform the SPS function Engine Control Module - Programming and follow the on-screen instructions.
3. Clear DTCs after completing the Programming procedure.
4. Perform the SPS Function Immobilizer Learn and follow the on-screen instructions. Refer to **Immobilizer System Component Programming (with BTM)** , **Immobilizer System Component Programming (without BTM)** .
5. Perform the SPS function Engine Control Module - Configuration & Setup and follow the on-screen instructions, if available.
6. Clear DTCs after completing the Configuration & Setup procedure.

Unsuccessful Programming Recovery

In the event of an interrupted or unsuccessful programming event, perform the following:

1. Ignition ON. Ensure the control module, DLC, and programming tool connections are secure and the SPS software is up to date.
2. Verify the control module can be reprogrammed.
    - If the control module cannot be reprogrammed
    1. Ignition OFF for one minute, ignition ON.
    2. Verify the control module can be reprogrammed.
        - If the control module cannot be reprogrammed, replace the K20 Engine Control Module.
        - If the control module can be reprogrammed
    3. All OK.
    - If the control module can be reprogrammed
3. All OK.

Repair Instructions

Perform the **Diagnostic Repair Verification** after completing the repair.

Control Module References for ECM replacement, programming and setup.

FUEL PUMP CONTROL MODULE PROGRAMMING AND SETUP

The fuel pump control module must be programmed with the proper calibration software. The module stores and utilizes this information however if it is not properly configured with the correct calibration software, the fuel pump control module will not control all of the vehicle features properly.

Ensure that the following conditions exist in order to prepare for fuel pump control module programming:

1. The battery is fully charged.
2. The MDI data link connectors are secure.
3. The scan tool is loaded with the most current software version.
4. All disconnected modules and devices are reconnected securely.
5. This entire procedure has been reviewed before proceeding.

Do not reprogram the fuel pump control module unless directed by a service procedure or a service bulletin.

Fuel Pump Control Module Programming

To program and setup an existing or new replacement fuel pump control module, perform the following procedure:

1. Access the Service Programming System (SPS) and follow the on-screen instructions. Refer to **Service Programming System (SPS)**.
2. On the SPS Supported Controllers screen, select K27 Fuel Pump Control Module - Programming and follow the on-screen instructions.

If the fuel pump control module fails to accept the program, verify all scan tool and fuel pump control module connections are secure.

NOTE: After programming is completed, perform the following to avoid future misdiagnosis:

1. **Turn the ignition OFF for 10 seconds.**
2. **Open and close the door.**
3. **Connect the scan tool to the data link connector.**
4. **Ignition ON, engine OFF.**
5. **Clear all DTC's from all modules.**

HEATED SEAT CONTROL MODULE PROGRAMMING AND SETUP

The seat heating control module must be programmed with the proper calibration software. The module stores and utilizes this information however if it is not properly configured with the correct calibration software, the seat heating control module will not control all of the vehicle features properly.

Ensure that the following conditions exist in order to prepare for seat heating control module programming:

1. The battery is fully charged.
2. The MDI data link connectors are secure.
3. The scan tool is loaded with the most current software version.
4. All disconnected modules and devices are reconnected securely.

5. This entire procedure has been reviewed before proceeding.

Do not reprogram the seat heating control module unless directed by a service procedure or a service bulletin.

Seat Heating Control Module Programming

To program and setup an existing or new replacement seat heating control module, perform the following procedure:

1. Access the Service Programming System (SPS) and follow the on-screen instructions. Refer to **Service Programming System (SPS)**.
2. On the SPS Supported Controllers screen, select HVSMF Front Seat Heating Control Module - Programming and follow the on-screen instructions.

If the HVSMF Front Seat Heating Control Module fails to accept the program, verify all scan tool and seat heating control module connections are secure.

NOTE: After programming is completed, perform the following to avoid future misdiagnosis:

1. **Turn the ignition OFF for 10 seconds.**
2. **Open and close the door.**
3. **Connect the scan tool to the data link connector.**
4. **Ignition ON, engine OFF.**
5. **Clear all DTCs from all modules.**

HVAC SYSTEM CONTROL MODULE PROGRAMMING AND SETUP

The following service procedures require either a programming or a setup event performed for a complete repair.

HVAC Control Module Replacement

If the HVAC control module needs to be replaced, the following procedures must be performed:

1. Connect a scan tool to the vehicle and access SPS. Refer to **Service Programming System (SPS)**.
2. Perform the SPS function Remote Heater and Air Conditioning Control Module - Programming and follow the on-screen instructions.
3. Perform the SPS function Remote Heater and Air Conditioning Control Module - Setup and follow the on-screen instructions.
4. Clear DTCs after completing the programming procedure.

HVAC Control Module Reprogramming

Do not reprogram the HVAC control module unless directed by a service procedure or a service bulletin.

1. Connect a scan tool to the vehicle and access SPS.
2. Perform the SPS function Remote Heater and Air Conditioning Control Module - Programming and follow the on-screen instructions.
3. Clear DTCs after completing the programming procedure.

Setup for Component Replacement

If an actuator is replaced, the following procedure must be performed:

Recalibrating actuators for the HVAC system. Refer to **Actuator Recalibration** .

INFLATABLE RESTRAINT SENSING AND DIAGNOSTIC MODULE PROGRAMMING AND SETUP

The inflatable restraint sensing and diagnostic module (SDM) must be programmed with the proper calibration software. The module stores and utilizes this information however if it is not properly configured with the correct calibration software, the SDM will not control all of the vehicle features properly.

Ensure that the following conditions exist in order to prepare for SDM programming:

1. The battery is fully charged.
2. The MDI data link connectors are secure.
3. The scan tool is loaded with the most current software version.
4. All disconnected modules and devices are reconnected securely.
5. This entire procedure has been reviewed before proceeding.

Do not reprogram the SDM unless directed by a service procedure or a service bulletin.

NOTE:

- **The air bag indicator light may remain ON after the body control module (BCM), or SDM is replaced, and during the programming procedure for the BCM until after the procedure is completed. When installing a new SDM, there may be several DTCs set prior to programming. Once programmed, these DTCs should be in history and can be cleared.**
- **Failure to complete the following Setup procedure may cause DTC B1001 to be set in the SDM.**

The following service procedures require either a programming or a setup event performed for a complete repair:

Sensing and Diagnostic Module Replacement and/or Programming

If the inflatable restraint sensing and diagnostic module needs to be replaced and/or reprogrammed, the following procedures must be performed:

1. Access SPS. Refer to **Service Programming System (SPS)**.

2. Perform the SPS function Inflatable Restraint Sensing and Diagnostic Module Programming and follow the on-screen instructions.
3. Perform the SPS function Inflatable Restraint Sensing and Diagnostic Module Setup and follow the on-screen instructions.
4. Clear DTCs after completing the programming procedure.

If the control module fails to program, proceed as follows:

1. Ensure the DLC and Accessory Power Module connections are good.
2. Inspect the Techline equipment for the latest software version.
3. Attempt to program the SDM. If the SDM still cannot be programmed properly, replace the SDM.

INSTRUMENT CLUSTER PROGRAMMING AND SETUP

Special Tools

EL-49642 SPS Programming Support Tool

For equivalent regional tools, refer to **Special Tools**.

NOTE:

- **DO NOT program a control module unless directed to by a service procedure or a service bulletin. If the ECU is not properly configured with the correct calibration software, the ECU will not control all of the vehicle features properly.**
- **Ensure the programming tool is equipped with the latest software and is securely connected to the data link connector. If there is an interruption during programming, programming failure or ECU damage may occur.**
- **Stable battery voltage is critical during programming. Any fluctuation, spiking, over voltage or loss of voltage will interrupt programming. Install the EL-49642 SPS programming support tool to maintain system voltage. If not available, connect a fully charged 12 V jumper or booster pack disconnected from the AC voltage supply. DO NOT connect a battery charger.**
- **Turn OFF or disable systems that may put a load on the vehicles battery such as; interior lights, exterior lights (including daytime running lights), HVAC, radio, etc.**
- **During the programming procedure, follow the SPS prompts for the correct ignition switch position.**
- **Clear DTCs after programming is complete. Clearing powertrain DTCs will set the Inspection/Maintenance (I/M) system status indicators to NO.**

Replace and Program ECU or Reprogram ECU

To program a replacement or an existing ECU, perform the following procedure:

1. Install **EL-49642** SPS programming support tool.
2. Access the Service Programming System (SPS) and follow the on-screen instructions.
3. On the SPS Supported Controllers screen, select Instrument Cluster - Programming and follow the on-screen instructions.
4. On the SPS Supported Controllers screen, select Instrument Cluster - Configuration and follow the on-screen instructions.
5. On the SPS Supported Controllers screen, select Instrument Cluster - Setup and follow the on-screen instructions.
6. At the end of programming, choose the "Clear All DTCs" function on the SPS screen.

Unsuccessful Programming Recovery

In the event of an interrupted or unsuccessful programming event, perform the following steps:

1. DO NOT turn the ignition OFF. Ensure that all ECU, DLC and programming tool connections are secure and the TIS terminal operating software is up to date.
2. Attempt to reprogram the ECU.
3. If the ECU can still not be programmed, turn the ignition OFF for at least one minute.
4. Turn the ignition ON and attempt to reprogram the ECU. The ECU should program.
    - If the ECU still cannot be programmed, replace the ECU.

KEYLESS ENTRY CONTROL MODULE PROGRAMMING AND SETUP

Special Tools

EL-49642 SPS Programming Support Tool

For equivalent regional tools, refer to **Special Tools**.

NOTE:

- **DO NOT program a control module unless directed to by a service procedure or a service bulletin. If the ECU is not properly configured with the correct calibration software, the ECU will not control all of the vehicle features properly.**
- **Ensure the programming tool is equipped with the latest software and is securely connected to the data link connector. If there is an interruption during programming, programming failure or ECU damage may occur.**
- **Stable battery voltage is critical during programming. Any fluctuation, spiking, over voltage or loss of voltage will interrupt programming. Install the EL-49642 SPS programming support tool to maintain system voltage. If not available, connect a fully charged 12 V jumper or booster pack disconnected from the AC voltage supply. DO NOT connect a battery charger.**
- **Turn OFF or disable systems that may put a load on the vehicles battery such as; interior lights, exterior lights (including daytime running lights),**

HVAC, radio, etc.

- **During the programming procedure, follow the SPS prompts for the correct ignition switch position.**
- **Clear DTCs after programming is complete. Clearing powertrain DTCs will set the Inspection/Maintenance (I/M) system status indicators to NO.**

Replace and Program ECU or Reprogram ECU

To program a replacement or an existing ECU, perform the following procedure:

1. Install **EL-49642** SPS programming support tool.
2. Access the Service Programming System (SPS) and follow the on-screen instructions.
3. On the SPS Supported Controllers screen, select Keyless Entry Control Module - Programming and follow the on-screen instructions.
4. At the end of programming, choose the "Clear All DTCs" function on the SPS screen.

Unsuccessful Programming Recovery

In the event of an interrupted or unsuccessful programming event, perform the following steps:

1. DO NOT turn the ignition OFF. Ensure that all ECU, DLC and programming tool connections are secure and the TIS terminal operating software is up to date.
2. Attempt to reprogram the ECU.
3. If the ECU can still not be programmed, turn the ignition OFF for at least one minute.
4. Turn the ignition ON and attempt to reprogram the ECU. The ECU should program.
    - If the ECU still cannot be programmed, replace the ECU.

MULTIMEDIA PLAYER INTERFACE MODULE PROGRAMMING AND SETUP

Special Tools

EL-49642 SPS Programming Support Tool

NOTE:

- **DO NOT program a control module unless directed to by a service procedure or a service bulletin. If the ECU is not properly configured with the correct calibration software, the ECU will not control all of the vehicle features properly.**
- **Ensure the programming tool is equipped with the latest software and is securely connected to the data link connector. If there is an interruption during programming, programming failure or ECU damage may occur.**
- **Stable battery voltage is critical during programming. Any fluctuation, spiking, over voltage or loss of voltage will interrupt programming. Install the EL-49642 SPS Programming Support Tool to maintain system voltage. If not available, connect a fully charged 12 V jumper or booster pack**

disconnected from the AC voltage supply. DO NOT connect a battery charger.

- **Turn OFF or disable systems that may put a load on the vehicles battery such as; interior lights, exterior lights (including daytime running lights), HVAC, radio, etc.**
- **During the programming procedure, follow the SPS prompts for the correct ignition switch position.**
- **Clear DTCs after programming is complete. Clearing powertrain DTCs will set the Inspection/Maintenance (I/M) system status indicators to NO.**

Diagnostic Aids

The Multimedia Player Interface Module is programmed with operational software during manufacturing. If it is verified during the following procedure that the latest calibrations are already programmed in the module, no further action is required. Do not attempt to program the module with the same calibration.

Replace and Program ECU or Reprogram ECU

To program a replacement or an existing ECU, perform the following procedure:

1. Install **EL-49642** SPS Programming Support Tool.
2. Access the Service Programming System (SPS) and follow the on-screen instructions.
3. On the SPS Supported Controllers screen, select Multimedia Player Interface Module - Programming and follow the on-screen instructions.
4. At the end of programming, choose the "Clear All DTCs" function on the SPS screen.

Unsuccessful Programming Recovery

In the event of an interrupted or unsuccessful programming event, perform the following steps:

1. DO NOT turn the ignition OFF. Ensure that all ECU, DLC and programming tool connections are secure and the TIS terminal operating software is up to date.
2. Attempt to reprogram the ECU.
3. If the ECU can still not be programmed, turn the ignition OFF for at least one minute.
4. Turn the ignition ON and attempt to reprogram the ECU. The ECU should program.
    - If the ECU still cannot be programmed, replace the ECU.

OBJECT ALARM MODULE PROGRAMMING AND SETUP

The following service procedures require either a programming or a setup event performed for a complete repair.

Parking Assist Control Module Replacement

If the parking assist control module needs to be replaced, the following procedures must be performed:

1. Connect a scan tool to the vehicle and access SPS. Refer to **Service Programming System (SPS)**
2. Perform the SPS function Parking Assist Control Module Programming and follow the on-screen instructions.
3. Perform the SPS function Parking Assist Control Module Configuration & Setup and follow the on-screen instructions.
4. Clear DTCs after completing the programming procedure.

Parking Assist Control Module Reprogramming

Do not reprogram the parking assist control module, unless directed by a service procedure, or a service bulletin.

1. Connect a scan tool to the vehicle and access SPS. Refer to **Service Programming System (SPS)**
2. Perform the SPS function Parking Assist Control Module Programming and follow the on-screen instructions.
3. Clear DTCs after completing the programming procedure.

PASSENGER PRESENCE SYSTEM PROGRAMMING AND SETUP

When the passenger presence system is replaced or serviced, perform the rezeroing procedure for the passenger presence system. Refer to **Passenger Presence System Rezeroing** for the rezeroing procedure.

POWER STEERING CONTROL MODULE PROGRAMMING AND SETUP

NOTE:

- **DO NOT program a control module unless directed to by a service procedure or a service bulletin. If the ECU is not properly configured with the correct calibration software, the ECU will not control all of the vehicle features properly.**
- **Ensure the programming tool is equipped with the latest software and is securely connected to the data link connector. If there is an interruption during programming, programming failure or ECU damage may occur.**
- **Stable battery voltage is critical during programming. Any fluctuation, spiking, over voltage or loss of voltage will interrupt programming. Install the EL-49642 SPS programming support tool to maintain system voltage. If not available, connect a fully charged 12 V jumper or booster pack disconnected from the AC voltage supply. DO NOT connect a battery charger.**
- **Turn OFF or disable systems that may put a load on the vehicles battery such as; interior lights, exterior lights (including daytime running lights), HVAC, radio, etc.**
- **During the programming procedure, follow the SPS prompts for the correct ignition switch position.**
- **Clear DTCs after programming is complete. Clearing powertrain DTCs will set the Inspection/Maintenance (I/M) system status indicators to NO.**

Diagnostic Aids

The electronic power steering control module is part of the power steering assist motor assembly and is electronically paired with the steering gear's sensors. The programming procedure for replacing the electronic power steering control module ONLY, is different from the replacing the steering gear assembly programming procedure.

Replace and Program Control Module

Replace Control Module ONLY

To program a replacement control module ONLY, perform the following procedure;

NOTE: During the procedures listed below, critical data is retrieved from vehicle components and stored in the scan tool computer's hard drive. This data is needed during the programming and setup sequences.

Ensure the same scan tool is used and capable of reading, storing, and writing the vehicle's system data.

1. On the SPS Supported Controllers screen, select Electronic Power Steering Control Module - Prepare Control Module for Removal and follow the on-screen instructions.

   NOTE: Step 1 copies the worm gear wear counter data from the power steering control module PRIOR to the module's removal and stores it on the scan tool computer's hard drive.

   AFTER completing step 1, the power steering control module can now be removed and replaced.

2. Replace the Power Steering Assist Motor containing the Power Steering Control Module. Refer to **Power Steering Assist Motor Replacement** .

   NOTE: The next two steps will transfer the vehicle's critical data, including the worm gear wear counter data saved in step 1, back to the vehicle components.

3. On the SPS Supported Controllers screen, select Electronic Power Steering Control Module - Programming and follow the on-screen instructions.
4. On the SPS Supported Controllers screen, select Electronic Power Steering Control Module - Configuration and follow the on-screen instructions.
5. Ignition OFF and all vehicle systems OFF. It may take up to 2 minutes for all vehicle systems to power down.
6. Ignition ON.
7. On the SPS Supported Controllers screen, select Electronic Power Steering Control Module - Setup and follow the on-screen instructions.

8. Perform the Steering Angle Sensor Centering and Software Endstop Learning procedure. Refer to **Power Steering Control Module Calibration** .
9. Clear all DTCs after completing the programming and setup procedures.

Replace Steering Gear Assembly

To program a new steering gear assembly, perform the following procedure;

1. Install **EL-49642** SPS programming support tool.
2. Access the Service Programming System (SPS) and follow the on-screen instructions.
3. On the SPS Supported Controllers screen, select Electronic Power Steering Control Module - Programming and follow the on-screen instructions.
4. On the SPS Supported Controllers screen, select Electronic Power Steering Control Module - Configuration and follow the on-screen instructions.
5. Ignition OFF and all vehicle systems OFF. It may take up to 2 minutes for all vehicle systems to power down.
6. Ignition ON.
7. On the SPS Supported Controllers screen, select Electronic Power Steering Control Module - Setup and follow the on-screen instructions.
8. Perform the Steering Angle Sensor Centering and Software Endstop Learning procedure. Refer to **Power Steering Control Module Calibration** .
9. Clear all DTCs after completing the programming and setup procedures.

Reprogram Control Module

To reprogram an existing Electric Power Steering Control Module WITHOUT replacement, perform the following procedure;

1. Install **EL-49642** SPS programming support tool.
2. Access the Service Programming System (SPS) and follow the on-screen instructions.
3. On the SPS Supported Controllers screen, select Electronic Power Steering Control Module - Programming and follow the on-screen instructions.
4. On the SPS Supported Controllers screen, select Electronic Power Steering Control Module - Configuration and follow the on-screen instructions.
5. Ignition OFF and all vehicle systems OFF. It may take up to 2 minutes for all vehicle systems to power down.
6. Ignition ON.
7. On the SPS Supported Controllers screen, select Electronic Power Steering Control Module - Setup and follow the on-screen instructions.
8. Perform the Steering Angle Sensor Centering and Software Endstop Learning procedure. Refer to **Power Steering Control Module Calibration** .
9. Clear all DTCs after completing the programming and setup procedures.

Unsuccessful Programming Recovery

In the event of an interrupted or unsuccessful programming event, perform the following steps:

1. DO NOT turn the ignition OFF. Ensure that all ECU, DLC and programming tool connections are secure and the TIS terminal operating software is up to date.
2. Attempt to reprogram the ECU.
3. If the ECU can still not be programmed, turn the ignition OFF for at least one minute.
4. Turn the ignition ON and attempt to reprogram the ECU. The ECU should program.
    - If the ECU still cannot be programmed, replace the ECU.

Repair Instructions

Perform the **Diagnostic Repair Verification** after completing the repair.

Control Module References for Control Module replacement, programming and setup

RADIO CONTROL PROGRAMMING AND SETUP

Replace and Program ECU or Reprogram ECU

This ECU does not require SPS programming or any setup procedures.

RADIO PROGRAMMING AND SETUP

Special Tools

EL-49642 SPS Programming Support Tool

NOTE:

- **DO NOT program a control module unless directed to by a service procedure or a service bulletin. If the ECU is not properly configured with the correct calibration software, the ECU will not control all of the vehicle features properly.**
- **Ensure the programming tool is equipped with the latest software and is securely connected to the data link connector. If there is an interruption during programming, programming failure or ECU damage may occur.**
- **Stable battery voltage is critical during programming. Any fluctuation, spiking, over voltage or loss of voltage will interrupt programming. Install the EL-49642 SPS Programming Support Tool to maintain system voltage. If not available, connect a fully charged 12 V jumper or booster pack disconnected from the AC voltage supply. DO NOT connect a battery charger.**
- **Turn OFF or disable systems that may put a load on the vehicles battery such as; interior lights, exterior lights (including daytime running lights), HVAC, radio, etc.**

- **During the programming procedure, follow the SPS prompts for the correct ignition switch position.**
- **Clear DTCs after programming is complete. Clearing powertrain DTCs will set the Inspection/Maintenance (I/M) system status indicators to NO.**

Diagnostic Aids

- During radio programming you may be required to select multiple calibrations dependant upon vehicle equipment. Have the vehicle build/RPO information available during the following procedure to ensure the correct calibrations are selected.
- The XM satellite radio (if equipped) is integrated into the radio. If XM was activated in the previous radio, the replacement radio will require no additional activation steps. Customer subscription information is transferred to the replacement radio when a replacement radio is ordered.

Replace and Program ECU or Reprogram ECU

To program a replacement or an existing ECU, perform the following procedure:

1. Install **EL-49642** SPS Programming Support Tool.
2. Access the Service Programming System (SPS) and follow the on-screen instructions.
3. On the SPS Supported Controllers screen, select Radio - Programming and follow the on-screen instructions.
4. At the end of programming, choose the "Clear All DTCs" function on the SPS screen.

Unsuccessful Programming Recovery

In the event of an interrupted or unsuccessful programming event, perform the following steps:

1. DO NOT turn the ignition OFF. Ensure that all ECU, DLC and programming tool connections are secure and the TIS terminal operating software is up to date.
2. Attempt to reprogram the ECU.
3. If the ECU can still not be programmed, turn the ignition OFF for at least one minute.
4. Turn the ignition ON and attempt to reprogram the ECU. The ECU should program.
    - If the ECU still cannot be programmed, replace the ECU.

REMOTE CONTROL DOOR LOCK RECEIVER PROGRAMMING AND SETUP

Diagnostic Aids

The remote control door lock receiver only functions as an antenna, receiving the signals sent by the keyless entry transmitter and forwarding them to the body control module (BCM). The keyless entry software is contained wholly within the BCM.

Replace and Program ECU or Reprogram ECU

This ECU does not require SPS programming or any setup procedures.

SERVICE PROGRAMMING SYSTEM (SPS)

Special Tools

EL-49642 SPS Programming Support Tool

For equivalent regional tools, refer to **Special Tools**.

For step-by-step control module programming instructions, please refer to the techline information system (TIS) terminal.

Review the information below to ensure proper programming protocol.

NOTE:

- **DO NOT program a control module unless you are directed by a service procedure or you are directed by a General Motors service bulletin. Programming a control module at any other time will not permanently correct a customers concern.**
- **It is essential that the TIS terminal, MDI, and/or Scan Tool, is equipped with the latest software before performing service programming.**
- **Due to the time requirements of programming a controller, install EL-49642 SPS Programming Support Tool to maintain system voltage. Stable battery voltage is critical during programming. Any fluctuation, spiking, over voltage or loss of voltage will interrupt programming. If the above tool is not available, DO NOT connect a battery charger, connect a fully charged 12V jumper or booster pack disconnected from the AC voltage supply.**
- **Some modules will require additional programming/setup events to be performed before or after programming.**
- **Some vehicles may require the use of a CANDi or MDI module for programming.**
- **Review the appropriate service information for these procedures.**
- **DTCs may set during programming. Clear DTCs after programming is complete.**
- **Clearing powertrain DTCs will set the Inspection/Maintenance (I/M) system status indicators to NO.**

Ensure the following conditions are met before programming a control module:

- Vehicle system voltage:
  - There is not a charging system concern. All charging system concerns must be repaired before programming a control module.
  - Battery voltage is greater than 12 volts but less than 16 volts. The battery must be fully charged before programming the control module.

  - Turn OFF or disable any system that may put a load on the vehicles battery, such as the following components:
    - Interior lights
    - Exterior lights including daytime running lights (DRL)-Applying the parking brake, on most vehicles, disables the DRL system
    - Heating, ventilation, and air conditioning (HVAC) systems
    - Engine cooling fans
    - Radio, etc.
- The ignition switch must be in the proper position. SPS prompts you to turn ON the ignition, with the engine OFF. DO NOT change the position of the ignition switch during the programming procedure, unless instructed to do so.
- Make certain all tool connections are secure, including the following components and circuits:
  - Scan Tool
    - The RS-232 communication cable port
    - The connection at the data link connector (DLC)
    - The voltage supply circuits
  - MDI
    - The USB, Ethernet or Wireless communication port
    - The connection at the data link connector (DLC)
- DO NOT disturb the tool harnesses while programming. If an interruption occurs during the programming procedure, programming failure or control module damage may occur.

In the event of an interrupted or unsuccessful programming event, perform the following steps:

1. DO NOT turn the ignition OFF. Ensure that all control module and DLC connections are secure and the TIS terminal operating software is up to date.
2. Attempt to reprogram the control module.
3. If the control module can still not be programmed, turn the ignition OFF for at least one minute.
4. Turn the ignition ON and attempt to reprogram the control module. The control module should program.
   - If the control module still cannot be programmed, replace the control module.

After successfully programming the control module, ensure that all post programming procedures are performed; refer to **Control Module References** for the appropriate control module Programming and Setup document for any required procedures.

SIDE OBJECT SENSOR PROGRAMMING AND SETUP

NOTE:

- **DO NOT program a control module unless directed to by a service procedure or a service bulletin. If the ECU is not properly configured with the correct calibration software, the ECU will not control all of the vehicle features properly.**

- **Ensure the programming tool is equipped with the latest software and is securely connected to the data link connector. If there is an interruption during programming, programming failure or ECU damage may occur.**
- **Stable battery voltage is critical during programming. Any fluctuation, spiking, over voltage or loss of voltage will interrupt programming. Install the EL-49642 SPS Programming Support Tool to maintain system voltage. If not available, connect a fully charged 12 V jumper or booster pack disconnected from the AC voltage supply. DO NOT connect a battery charger.**
- **Turn OFF or disable systems that may put a load on the vehicles battery such as; interior lights, exterior lights (including daytime running lights), HVAC, radio, etc.**
- **During the programming procedure, follow the SPS prompts for the correct ignition switch position.**
- **Clear DTCs after programming is complete. Clearing powertrain DTCs will set the Inspection/Maintenance (I/M) system status indicators to NO.**

Replace and Program ECU or Reprogram ECU

To program a replacement or an existing ECU, perform the following procedure:

1. Access the Service Programming System (SPS) and follow the on-screen instructions.
2. On the SPS Supported Controllers screen, select B218 Side Object Sensor Module - Programming and follow the on-screen instructions.
3. At the end of programming, choose the "Clear DTCs" function on the SPS screen.

Unsuccessful Programming Recovery

In the event of an interrupted or unsuccessful programming event, perform the following steps:

1. DO NOT turn the ignition OFF. Ensure that all ECU, DLC and programming tool connections are secure and the TIS terminal operating software is up to date.
2. Attempt to reprogram the ECU.
3. If the ECU can still not be programmed, turn the ignition OFF for at least one minute.
4. Turn the ignition ON and attempt to reprogram the ECU. The ECU should program.
    - If the ECU still cannot be programmed, replace the ECU.

STEERING COLUMN LOCK CONTROL MODULE PROGRAMMING AND SETUP

NOTE:

- **DO NOT program a control module unless directed to by a service procedure or a service bulletin. If the ECU is not properly configured with the correct calibration software, the ECU will not control all of the vehicle features properly.**
- **Ensure the programming tool is equipped with the latest software and is**

securely connected to the data link connector. If there is an interruption during programming, programming failure or ECU damage may occur.

- **Stable battery voltage is critical during programming. Any fluctuation, spiking, over voltage or loss of voltage will interrupt programming. Install the EL-49642 SPS Programming Support Tool to maintain system voltage. If not available, connect a fully charged 12 V jumper or booster pack disconnected from the AC voltage supply. DO NOT connect a battery charger.**
- **Turn OFF or disable systems that may put a load on the vehicles battery such as; interior lights, exterior lights (including daytime running lights), HVAC, radio, etc.**
- **During the programming procedure, follow the SPS prompts for the correct ignition switch position.**
- **Clear DTCs after programming is complete. Clearing powertrain DTCs will set the Inspection/Maintenance (I/M) system status indicators to NO.**

Replace and Program Steering Column Lock Control Module

To program a replacement steering column lock control module, perform the following procedure:

1. Install **EL-49642** SPS programming support tool.
2. Access the Service Programming System (SPS) and follow the on-screen instructions.
3. On the SPS Supported Controllers screen, select Steering Column Lock Control Module - Programming and follow the on-screen instructions.
4. At the end of programming, choose the "Clear All DTCs" function on the SPS screen.

Reprogram Steering Column Lock Control Module

To reprogram an existing steering column lock control module, perform the following procedure:

1. Install **EL-49642** SPS programming support tool.
2. Access the Service Programming System (SPS) and follow the on-screen instructions.
3. On the SPS Supported Controllers screen, select Steering Column Lock Control Module - Programming and follow the on-screen instructions.
4. At the end of programming, choose the "Clear All DTCs" function on the SPS screen.

Unsuccessful Programming Recovery

In the event of an interrupted or unsuccessful programming event, perform the following steps:

1. DO NOT turn the Vehicle OFF. Ensure that all ECU, DLC and programming tool connections are secure and the TIS terminal operating software is up to date.
2. Attempt to reprogram the ECU.
3. If the ECU can still not be programmed, turn the ignition OFF for at least one minute.

4. Turn the Vehicle in Service Mode and attempt to reprogram the ECU. The ECU should program.
    - If the ECU still cannot be programmed, replace the ECU.

SUNROOF CONTROL MODULE PROGRAMMING AND SETUP (NEW MOTOR)

"Manual" indicates the first switch detent.

"Express" indicates the second switch detent.

1. Ensure that the electrical harness on the headliner is connected to the sunroof window motor.
2. Put the ignition in the RUN position. (CAL file will be automatically downloaded by Body Control housing, BCM).

NOTE: "Manual close" is allowed and limited "manual open" is allowed.

3. Initialization (Normalization) - Press "manual close switch" until window finds the hard stop and moves sightly back, after initialization "express open" is allowed but not "express close".
4. Learn Process:
    1. Open the sunroof window with the express or manual open switch to the full open position and release the switch.
    2. Press "Manual Open Switch and hold for more then 10 seconds, Do Not release the switch, at this time the sunroof window will automatically begin to move to the fully Close position.
5. During this time it is necessary to keep the switch active until the process completes.
6. Verify the operation of the sunroof window.
7. The Initialization/Teach Process is not complete if any of the following actions take place before the initialization cycle is done.
    1. The sunroof window switch is not held in the close position.
    2. The ignition and/or battery power has been removed.
    3. The window panel has not reached the closed position.

The Programming and Setup Process must be restarted if the procedure is not carried out completely.

SUNROOF CONTROL MODULE PROGRAMMING AND SETUP (EXISTING MOTOR)

NOTE: The Programming and Setup Process is not complete if any of the following actions take place before the initialization cycle is done:

- **The sunroof window switch is not held in the close position.**
- **The ignition and/or battery power has been removed.**
- **The window panel has not reached the closed position.**

The Programming and Setup Process must be restarted if the procedure is not carried out completely.

Perform the Programming and Setup Process for the sunroof window any time a new sunroof window motor actuator is installed in the vehicle.

"Manual" indicates the first switch detent.

"Express" indicates the second switch detent.

1. Ensure that the electrical harness on the headliner is connected to the sunroof motor.
2. Put the ignition in the RUN position. (CAL file will be automatically downloaded by Body Control housing, BCM).

   "Manual close" is allowed and limited "manual open" is allowed.

3. Re-initialization (Normalization), ensure that the sunroof window is in the fully closed position.
4. Press "Manual Close Switch and hold for more then 10 seconds, do Not release the switch, at this time the sunroof window will automatically begin to move to the fully Close position.
5. Do Not release the switch until the window finds the hard stop and move sightly back.
6. Learn:
   1. Open the sunroof window with the express or manual open the switch to the full open position the release the switch.
   2. Press "Manual Open Switch and hold for more then 10 seconds, do Not release the switch, at this time the sunroof window will automatically begin to move to the fully Close position.

      During this time it is necessary to keep the switch active until the process completes.

7. Verify the operation of the sunroof window.

THEFT DETERRENT MODULE PROGRAMMING AND SETUP

Replace and Program ECU or Reprogram ECU

This ECU does not require SPS programming or any setup procedures.

SPECIAL TOOLS AND EQUIPMENT

SPECIAL TOOLS

Illustration	Tool Number/ Description
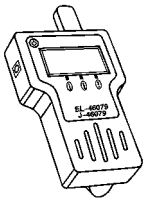	EL 46079 J 46079 Tire Pressure Monitor Diagnostic Tool
	EL 49642

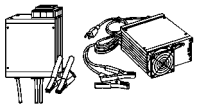	EL 50113 Europe- Use recommended equivalent workshop equipment SPS Programming Support Tool

2013 ACCESSORIES & EQUIPMENT

Remote Functions - Cruze

SCHEMATIC WIRING DIAGRAMS

REMOTE FUNCTION WIRING SCHEMATICS

Keyless Entry (without ATH) Wiring Schematics

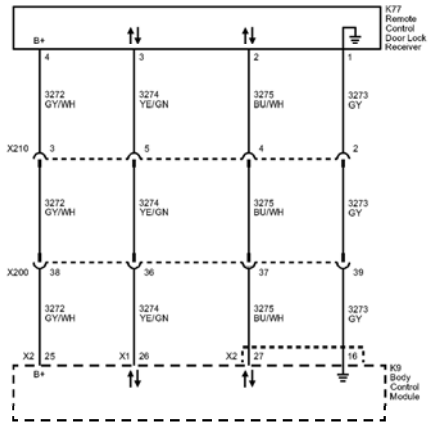

Fig. 1: Keyless Entry (without ATH) Wiring Schematics
Courtesy of GENERAL MOTORS COMPANY

Callout	Component Name
3272	Remote Function Actuator Supply Voltage
3272_GY/WH	3272 GY/WH
CAV 25	25
CONN_X2	X2
CAV_4	4
3272_GY/WH	3272 GY/WH
3272_GY/WH	3272 GY/WH
3274	Remote Function Actuator Transmit Signal

3274_YE/GN	3274 YE/GN
CAV_26	26
CONN_X1	X1
CAV_3	3
3274_YE/GN	3274 YE/GN
3274_YE/GN	3274 YE/GN
3275	Remote Function Actuator Receive Signal
3275_BU/WH	3275 BU/WH
CAV_27	27
CONN_X2	X2
CAV_2	2
3275_BU/WH	3275 BU/WH
3275 BU/WH	3275 BU/WH
3273	Remote Function Actuator Return
3273_GY	3273 GY
3273_GY	3273 GY
3273_GY	3273 GY
CAV_16	16
CAV_1	1
X210	X210
CAV_3	3
CAV_5	5
CAV_4	4
CAV_2	2
X200	X200
CAV_38	38
CAV_36	36
CAV 37	37
CAV_39	39
X210	X210
X200	X200
K9	
K77	

Keyless and Passive Entry (ATH) Wiring Schematics

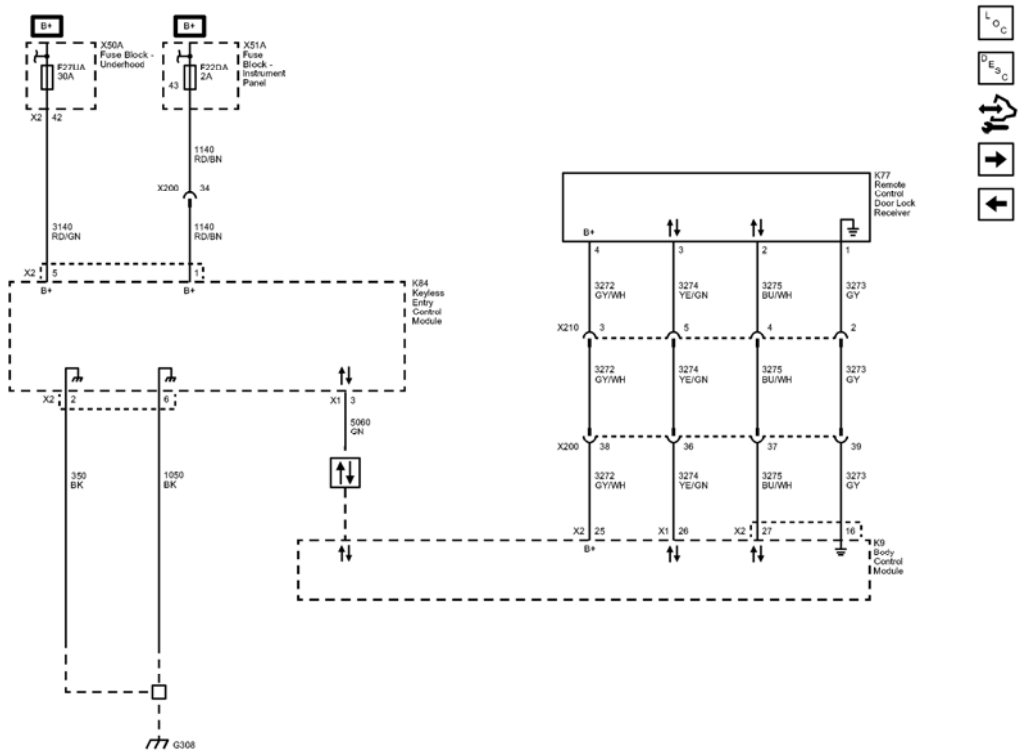

Fig. 2: Keyless and Passive Entry (ATH) Wiring Schematics
Courtesy of GENERAL MOTORS COMPANY

Callout	Component Name
3140	Battery Positive Voltage
3140 RD/GN	3140 RD/GN
CAV_5	5
CONN_X2	X2
CAV_42	42
CONN_X2	X2
1140	Battery Positive Voltage
1140_RD/BN	1140 RD/BN
CAV_1	1
3272	Remote Function Actuator Supply Voltage
3272 GY/WH	3272 GY/WH
CAV_25	25
CONN_X2	X2
CAV_4	4
3274	Remote Function Actuator Transmit Signal

3274_YE/GN	3274 YE/GN
CAV_26	26
CONN_X1	X1
CAV_3	3
3275	Remote Function Actuator Receive Signal
3275_BU/WH	3275 BU/WH
CAV_27	27
CAV_2	2
CONN_X2	X2
3273	Remote Function Actuator Return
3273_GY	3273 GY
CAV_16	16
CAV_1	1
5060	Low Speed GMLAN Serial Data
5060_GN	5060 GN
CAV_3	3
CONN_X1	X1
1050	Ground
1050_BK	1050 BK
CAV_6	6
350	Ground
350_BK	350 BK
CAV_2	2
CONN_X2	X2
Data_Communication_Schematics_REF	Data Communication Schematics
3272_GY/WH	3272 GY/WH
3274_YE/GN	3274 YE/GN
3275_BU/WH	3275 BU/WH
3273_GY	3273 GY
3272_GY/WH	3272 GY/WH
3274_YE/GN	3274 YE/GN
3275_BU/WH	3275 BU/WH
3273_GY	3273 GY
1140_RD/BN	1140 RD/BN
CAV_34	34
CAV_43	43
X200	X200
CAV_38	38

CAV_36	36
CAV_37	37
CAV_39	39
X210	X210
CAV_3	3
CAV_5	5
CAV_4	4
CAV_2	2
F27UA	F27UA 30A
F22DA	F22DA 2A
X200	X200
X200	X200
X210	X210
K9	
K77	
X50A	
X51A	
K84	(ATH)

Passive Entry and Passive Start Antennas (ATH) Wiring Schematics

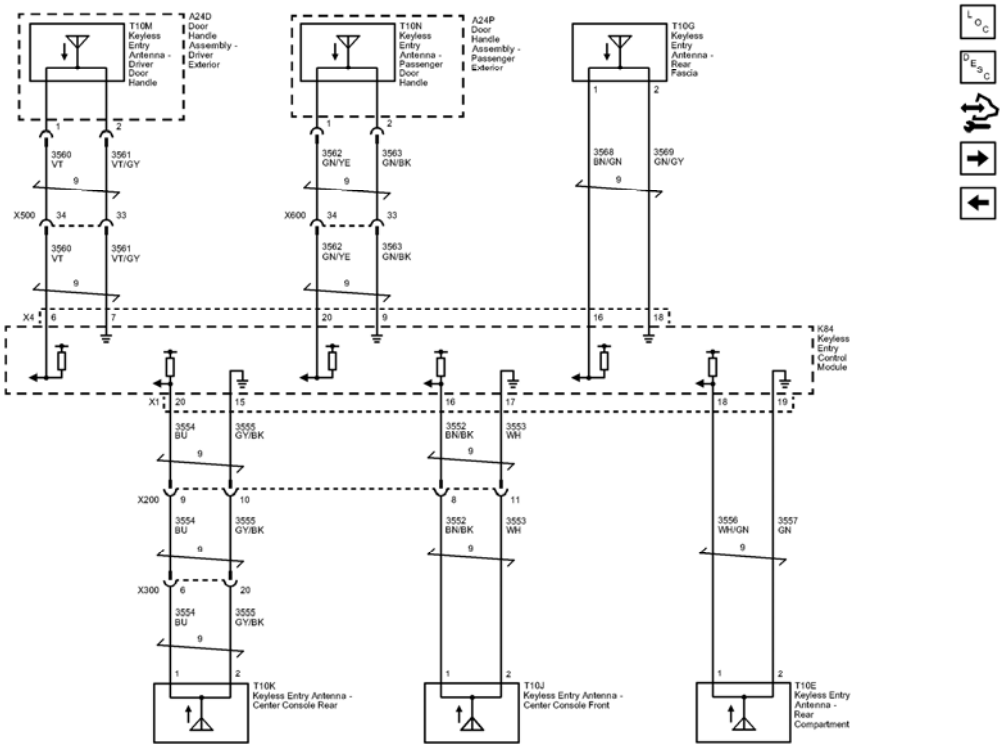

Fig. 3: Passive Entry and Passive Start Antennas (ATH) Wiring Schematics
Courtesy of GENERAL MOTORS COMPANY

Callout	Component Name
3560	Passive Entry Driver Door Antenna Signal Hi
3560_VT	3560 VT
CAV_6	6
CONN_X4	X4
3561	Passive Entry Driver Door Antenna Signal Lo
3561_VT/GY	3561 VT/GY
CAV_7	7
3562	Passive Entry Co_Driver Door Antenna Signal Hi
3562 GN/YE	3562 GN/YE
CAV_20	20
3563	Passive Entry Co Driver Door Antenna Signal Lo
3563_GN/BK	3563 GN/BK
CAV_9	9
3568	Passive Entry Rear Closure Antenna Signal Hi
3568_BN/GN	3568 BN/GN
CAV_16	16
CAV_1	1
3569	Passive Entry Rear Closure Antenna Signal Lo
3569_GN/GY	3569 GN/GY
CAV_18	18
CAV_2	2
3554	Passive Start Interior Antenna 2 Signal Hi
3554_BU	3554 BU
CAV_1	1
CAV_20	20
CONN X1	X1
3555	Passive Start Interior Antenna 2 Signal Lo
3555_GY/BK	3555 GY/BK
CAV_2	2
CAV_15	15
3552	Passive Start Interior Antenna 1 Signal Hi
3552_BN/BK	3552 BN/BK
CAV_1	1
CAV_16	16
3553	Passive Start Interior Antenna 1 Signal Lo
3553_WH	3553 WH
CAV_2	2

CAV_17	17
3556	Passive Start Interior Antenna 3 Signal Hi
3556_WH/GN	3556 WH/GN
CAV_1	1
CAV_18	18
3557	Passive Start Interior Antenna 3 Signal Lo
3557_GN	3557 GN
CAV_2	2
CAV_19	19
3552_BN/BK	3552 BN/BK
3553_WH	3553 WH
3554_BU	3554 BU
3555 GY/BK	3555 GY/BK
3554_BU	3554 BU
3555_GY/BK	3555 GY/BK
3560_VT	3560 VT
3561_VT/GY	3561 VT/GY
3562_GN/YE	3562 GN/YE
3563_GN/BK	3563 GN/BK
CAV_1	1
CAV_2	2
CAV_1	1
CAV_2	2
X200	X200
CAV_9	9
CAV_10	10
CAV_8	8
CAV 11	11
X300	X300
CAV 6	6
CAV_20	20
X600	X600
CAV_33	33
CAV_34	34
X500	X500
CAV_33	33
CAV_34	34
TWIST_9	9
TWIST_9	9
TWIST_9	9
TWIST_9	9

	9
TWIST_9	9
TWIST_9	9
TWIST_9	9
TWIST_9	9
TWIST_9	9
TWIST_9	9
X200	X200
X300	X300
X600	X600
X500	X500
K84	(ATH)
T10E	(ATH)
T10G	(ATH)
T10N	(ATH)
A24P	
T10M	(ATH)
A24D	
T10K	(ATH)
T10J	(ATH)

Door Handle Switches and References (ATH) Wiring Schematics

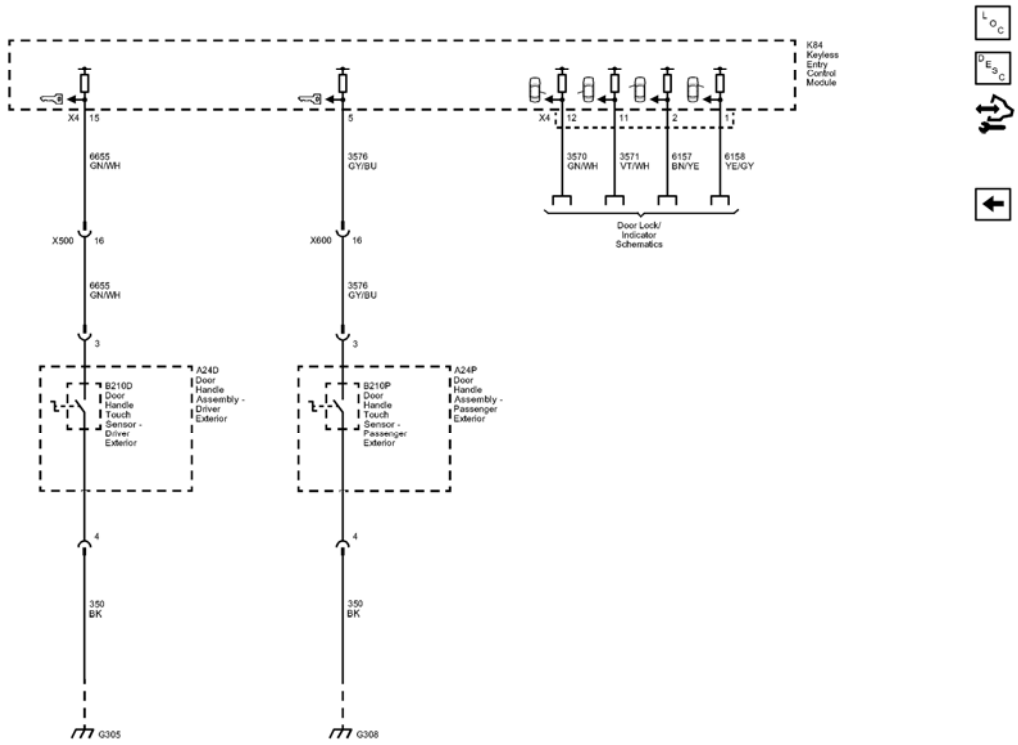

Fig. 4: Door Handle Switches and References (ATH) Wiring Schematics
Courtesy of GENERAL MOTORS COMPANY

Callout	Component Name
6655	Driver Door Unlatch Switch Signal
6655_GN/WH	6655 GN/WH
CAV_15	15
CONN_X4	X4
3576	Co-Driver Door Exterior Switch Lock Signal
3576_GY/BU	3576 GY/BU
CAV_5	5
3570	Driver Door Handle Switch Signal
3570_GN/WH	3570 GN/WH
CAV_12	12
CONN_X4	X4
3571	Co_Driver Door Handle Switch Signal
3571 VT/WH	3571 VT/WH

CAV_11	11
6157	Left Rear Door Handle Switch Signal
6157 BN/YE	6157 BN/YE
CAV_2	2
6158	Right Rear Door Handle Switch Signal
6158_YE/GY	6158 YE/GY
CAV_1	1
350	Ground
350_BK	350 BK
350 BK	350 BK
CAV_4	4
CAV 4	4
3576_GY/BU	3576 GY/BU
CAV_3	3
CAV_16	16
6655_GN/WH	6655 GN/WH
CAV_3	3
CAV_16	16
G305	G305
G308	G308
X600	X600
X500	X500
Door_Lock/Indicator_Schematics_REF	Door Lock/Indicator Schematics
K84	(ATH)
A24P	
A24D	
B210P	
B210D	

DIAGNOSTIC INFORMATION AND PROCEDURES

DIAGNOSTIC CODE INDEX

DIAGNOSTIC CODE INDEX

DTC	Description
DTC B3101	DTC B3101 Keyless Entry Data Link Circuit
DTC B3105	DTC B3105 Keyless Entry Transmitters
DTC B3106	DTC B3106 Keyless Entry Data Link
	DTC B3109 Keyless Entry Transmitter 1 Battery

DTC B3109-B3113	DTC B3110 Keyless Entry Transmitter 2 Battery DTC B3111 Keyless Entry Transmitter 3 Battery DTC B3112 Keyless Entry Transmitter 4 Battery DTC B3113 Keyless Entry Transmitter 5 Battery
DTC B310D-B310F	DTC B310D Keyless Entry Transmitter 6 Battery DTC B310E Keyless Entry Transmitter 7 Battery DTC B310F Keyless Entry Transmitter 8 Battery
DTC B3119	DTC B3119 Keyless Entry Antenna 1
DTC B3120	DTC B3120 Keyless Entry Antenna 2 Short to Ground DTC B3120 Keyless Entry Antenna 2 High Voltage/Open
DTC B3121	DTC B3121 Keyless Entry Antenna 3 Short to Ground DTC B3121 Keyless Entry Antenna 3 High Voltage/Open
DTC B3122	DTC B3122 Keyless Entry Antenna 4 Short to Ground DTC B3122 Keyless Entry Antenna 4 High Voltage/Open
DTC B3123	DTC B3123 Keyless Entry Antenna 5 Short to Ground DTC B3123 Keyless Entry Antenna 5 High Voltage/Open
DTC B3124	DTC B3124 Keyless Entry Antenna 6 Short to Ground DTC B3124 Keyless Entry Antenna 6 High Voltage/Open

DTC B3101

Diagnostic Instructions

- Perform the **Diagnostic System Check - Vehicle** prior to using this diagnostic procedure.
- Review **Strategy Based Diagnosis** for an overview of the diagnostic approach.
- **Diagnostic Procedure Instructions** provides an overview of each diagnostic category.

DTC Descriptor

DTC B3101

Keyless Entry Data Link Circuit

For symptom byte information, refer to **Symptom Byte List** .

Diagnostic Fault Information

Circuit	Short to Ground	Open/High Resistance	Short to Voltage	Signal Performance
B+	B3101 00	B3101 00	-	-
Serial Data - Enable Line	B3101 00	B3101 00	B3101 00	B3101 00
Serial Data - Receive	B3101 00	B3101 00	B3101 00	B3101 00
Low Reference	-	B3101 00	-	-

Circuit/System Description

The body control module communicates with the remote control door lock receiver through the keyless entry serial data circuits. When any button on the keyless entry transmitter is pressed, the transmitter sends a signal to the remote control door lock receiver. The remote control door lock receiver sends a function request to the body control module, depending on which button is pressed on the transmitter. The body control module receives the message and performs the appropriate function.

Conditions for Running the DTC

The body control module monitors for this DTC at all times.

Conditions for Setting the DTC

No response is received from the remote control door lock receiver after the body control module requests information from or sends configuration commands to the remote control door lock receiver.

Action Taken When the DTC Sets

In the case of power loss, the remote control door lock receiver is disabled for 65 s. Otherwise no action is taken.

Conditions for Clearing the DTC

- A current DTC will clear when the fault is no longer present.
- A history DTC will clear after 40 consecutive ignition cycles without a fault present.

Reference Information

Schematic Reference

Remote Function Schematics

Component Connector End Views

COMPONENT CONNECTOR END VIEWS - INDEX

Description and Operation

Keyless Entry System Description and Operation (without BTM), **Keyless Entry System Description and**

Operation (with BTM)

Electrical Information Reference

- **Circuit Testing**
- **Connector Repairs**
- **Testing for Intermittent Conditions and Poor Connections**
- **Wiring Repairs**

Scan Tool Reference

Control Module References for scan tool information

Circuit/System Testing

1. Ignition OFF and all vehicle systems OFF, scan tool disconnected, disconnect the harness connector at the K77 Remote Control Door Lock Receiver. It may take up to 2 min for all vehicle systems to power down.
2. Test for less than 30 ohms between the low reference circuit terminal 1 and ground.
    - **If 30 ohms or greater**
    1. Ignition OFF, disconnect the harness connector at the K9 Body Control Module.
    2. Test for less than 2 ohms in the low reference circuit end to end.
        - If 2 ohms or greater, repair the open/high resistance in the circuit.
        - If less than 2 ohms, replace the K9 Body Control Module.
    - **If less than 30 ohms**
3. Ignition ON.
4. Test for greater than 11.5 V between the B+ circuit terminal 4 and ground.
    - **If 11.5 V or less**
    1. Ignition OFF, disconnect the harness connector at the K9 Body Control Module.
    2. Test for infinite resistance between the B+ circuit and ground.
        - If less than infinite resistance, repair the short to ground on the circuit.
        - If Infinite resistance.
    3. Test for less than 2 ohms in the B+ circuit end to end.
        - If 2 ohms or greater, repair the open/high resistance in the circuit.
        - If less than 2 ohms, replace the K9 Body Control Module.
    - **If greater than 11.5 V**
5. Test for 1-6 V between the serial data circuit terminal 2 and ground.
    - **If less than 1 V**
    1. Ignition OFF, disconnect the harness connector at the K9 Body Control Module.
    2. Test for infinite resistance between the serial data circuit and ground.
        - If less than infinite resistance, repair the short to ground on the circuit.

- If infinite resistance

3. Test for less than 2 ohms in the serial data circuit end to end.
   - If 2 ohms or greater, repair the open/high resistance in the circuit.
   - If less than 2 ohms, replace the K9 Body Control Module.

- **If greater than 6 V**

1. Ignition OFF, disconnect the harness connector at the K9 Body Control Module, ignition ON.
2. Test for less than 1 V between the serial data circuit and ground.
   - If 1 V or greater, repair the short to voltage on the circuit.
   - If less than 1 V, replace the K9 Body Control Module.

- **If between 3-6 V**

6. Ignition OFF, disconnect the X1 and X2 harness connectors at the K9 Body Control Module, ignition ON.
7. Test for less than 1 V between the K9 Body Control Module serial data circuit terminal 26 X1 and ground.
   - **If 1 V or greater**

     Repair the short to voltage on the circuit.

   - **If less than 1 V**
8. Ignition OFF.
9. Test for infinite resistance between the K9 Body Control Module serial data circuit terminal 26 X1 and ground.
   - **If less than infinite resistance**

     Repair the short to ground on the circuit.

   - **If infinite resistance**
10. Test for less than 2 ohms between the K9 Body Control Module serial data circuit terminal 26 X1 and the K77 Remote Control Door Lock Receiver serial data circuit terminal 3.
    - **If 2 ohms or greater**

      Repair the open/high resistance in the circuit.

    - **If less than 2 ohms**
11. Replace the K77 Remote Control Door Lock Receiver.
12. Verify DTC B3101 does not set while operating the vehicle under the conditions for running the DTC.
    - **If the DTC sets**

      Replace the K9 Body Control Module

    - **If the DTC does not set**
13. All OK.

Repair Instructions

Perform the **Diagnostic Repair Verification** after completing the repair.

Control Module References for body control module or remote control door lock receiver replacement, programming, and setup.

DTC B3105

Diagnostic Instructions

- Perform the **Diagnostic System Check - Vehicle** prior to using this diagnostic procedure.
- Review **Strategy Based Diagnosis** for an overview of the diagnostic approach.
- **Diagnostic Procedure Instructions** provides an overview of each diagnostic category.

DTC Descriptor

DTC B3105

Keyless Entry Transmitters

For symptom byte information, refer to **Symptom Byte List** .

Circuit/System Description

The body control module monitors the number of keyless entry transmitters programmed. Until at least one transmitter is programmed, the body control module determines a malfunction condition exists.

Conditions for Running the DTC

The body control module has been set up without transmitters being programmed.

Conditions for Setting the DTC

No keyless entry transmitter programmed to the body control module.

Action Taken When the DTC Sets

The keyless entry system is inoperative.

Conditions for Clearing the DTC

A current DTC is cleared when at least one transmitter has been programmed to the body control module.

Reference Information

Schematic Reference

Remote Function Schematics

Connector End View Reference

COMPONENT CONNECTOR END VIEWS - INDEX

Description and Operation

Keyless Entry System Description and Operation (without BTM), **Keyless Entry System Description and Operation (with BTM)**

Electrical Information Reference

- **Circuit Testing**
- **Connector Repairs**
- **Testing for Intermittent Conditions and Poor Connections**
- **Wiring Repairs**

Scan Tool Reference

Control Module References for scan tool information

Circuit/System Verification

1. Verify that the transmitter is a correct transmitter for the vehicle. This can be accomplished by comparing the part number printed on the transmitter to the appropriate part number in the parts catalog.
    - **If the transmitter is incorrect**

      Replace the transmitter.

    - **If the transmitter is correct**
2. Program the transmitter. Refer to **Key with Integrated Transmitter Programming (with BTM)** , **Key with Integrated Transmitter Programming (without BTM)** .
3. Verify the transmitter has successfully completed the programming procedure.
    - **If the transmitter does not program successfully**

      Replace the transmitter.

    - **If the transmitter programs successfully**
4. All OK.

Repair Instructions

Perform the **Diagnostic Repair Verification** after completing the repair.

Key with Integrated Transmitter Programming (with BTM) , Key with Integrated Transmitter Programming (without BTM)

DTC B3106

Diagnostic Instructions

- Perform the **Diagnostic System Check - Vehicle** prior to using this diagnostic procedure.
- Review **Strategy Based Diagnosis** for an overview of the diagnostic approach.
- **Diagnostic Procedure Instructions** provides an overview of each diagnostic category.

DTC Descriptor

DTC B3106

Keyless Entry Data Link

For symptom byte information, refer to **Symptom Byte List** .

Circuit/System Description

The body control module communicates with the remote control door lock receiver through the keyless entry serial data circuits. When any button on the keyless entry transmitter is pressed, the transmitter sends a signal to the remote control door lock receiver. The remote control door lock receiver sends a function request to the body control module, depending on which button is pressed on the transmitter. The body control module receives the message and performs the appropriate function.

Conditions for Running the DTC

A keyless transmitter button is pressed.

Conditions for Setting the DTC

The transmitter that is sending a signal to the remote control door lock receiver is different from those transmitters stored in the body control module.

Action Taken When the DTC Sets

No action is taken.

Conditions for Clearing the DTC

- A current DTC will clear when the fault is no longer present and the ignition switch is cycled.
- A history DTC will clear after 40 consecutive ignition cycles without a fault present.

Reference Information

Schematic Reference

Remote Function Schematics

Component Connector End Views

COMPONENT CONNECTOR END VIEWS - INDEX

Description and Operation

Keyless Entry System Description and Operation (without BTM), **Keyless Entry System Description and Operation (with BTM)**

Electrical Information Reference

- **Circuit Testing**
- **Connector Repairs**
- **Testing for Intermittent Conditions and Poor Connections**
- **Wiring Repairs**

Scan Tool Reference

Control Module References for scan tool information

Circuit/System Verification

1. With a valid and learned transmitter, press and release a button on the transmitter.
2. Verify that DTC B3106 is not set.
   - **If DTC B3106 is set**

     Replace the K77 Remote Control Door Lock Receiver.

   - **If DTC B3106 is not set**
3. All OK.

Repair Instructions

Perform the **Diagnostic Repair Verification** after completing the repair.

Control Module References for remote control door lock receiver replacement, programming, and setup.

DTC B3109-B3113

Diagnostic Instructions

- Perform the **Diagnostic System Check - Vehicle** prior to using this diagnostic procedure.

- Review **Strategy Based Diagnosis** for an overview of the diagnostic approach.
- **Diagnostic Procedure Instructions** provides an overview of each diagnostic category.

DTC Descriptors

DTC B3109

Keyless Entry Transmitter 1 Battery

DTC B3110

Keyless Entry Transmitter 2 Battery

DTC B3111

Keyless Entry Transmitter 3 Battery

DTC B3112

Keyless Entry Transmitter 4 Battery

DTC B3113

Keyless Entry Transmitter 5 Battery

For symptom byte information, refer to **Symptom Byte List** .

Circuit/System Description

With each press of a keyless entry transmitter button, a message containing the current battery state of the transmitter is sent to the remote control door lock receiver, along with the commanded keyless entry function. The remote control door lock receiver sends this to the body control module to perform the requested function.

Conditions for Running the DTC

A keyless transmitter button is pressed.

Conditions for Setting the DTC

Three consecutive low battery signals are received from the same transmitter.

Action Taken When the DTC Sets

The keyless entry system is inoperative.

Conditions for Clearing the DTC

The DTC is cleared when a normal transmitter voltage signal is received from the transmitter that set the DTC.

Reference Information

Schematic Reference

Remote Function Schematics

Connector End View Reference

COMPONENT CONNECTOR END VIEWS - INDEX

Description and Operation

Keyless Entry System Description and Operation (without BTM), **Keyless Entry System Description and Operation (with BTM)**

Electrical Information Reference

- **Circuit Testing**
- **Connector Repairs**
- **Testing for Intermittent Conditions and Poor Connections**
- **Wiring Repairs**

Scan Tool Reference

Control Module References for scan tool information

Circuit/System Verification

1. Verify none of the DTCs listed below are set:
   - DTC B3109
   - DTC B3110
   - DTC B3111
   - DTC B3112
   - DTC B3113
   - **If any of the DTCs are set**
   1. Replace the battery in the appropriate keyless entry transmitter and operate the transmitter three consecutive times.
   2. Verify the DTC does not set.
      - If the DTC sets, replace the keyless entry transmitter.
      - If the DTC does not set
   3. All OK.
   - **If none of the DTCs are set**

2. All OK.

DTC B310D-B310F

Diagnostic Instructions

- Perform the **Diagnostic System Check - Vehicle** prior to using this diagnostic procedure.
- Review **Strategy Based Diagnosis** for an overview of the diagnostic approach.
- **Diagnostic Procedure Instructions** provides an overview of each diagnostic category.

DTC Descriptors

DTC B310D

Keyless Entry Transmitter 6 Battery

DTC B310E

Keyless Entry Transmitter 7 Battery

DTC B310F

Keyless Entry Transmitter 8 Battery

For symptom byte information, refer to **Symptom Byte List** .

Circuit/System Description

With each press of a keyless entry transmitter button, a message containing the current battery state of the transmitter is sent to the remote control door lock receiver, along with the commanded keyless entry function. The remote control door lock receiver sends this to the body control module to perform the requested function.

Conditions for Running the DTC

A keyless transmitter button is pressed.

Conditions for Setting the DTC

Three consecutive low battery signals are received from the same transmitter.

Action Taken When the DTC Sets

The keyless entry system is inoperative.

Conditions for Clearing the DTC

The DTC is cleared when a normal transmitter voltage signal is received from the transmitter that set the DTC.

Reference Information

Schematic Reference

Remote Function Schematics

Connector End View Reference

COMPONENT CONNECTOR END VIEWS - INDEX

Description and Operation

Keyless Entry System Description and Operation (without BTM), **Keyless Entry System Description and Operation (with BTM)**

Electrical Information Reference

- **Circuit Testing**
- **Connector Repairs**
- **Testing for Intermittent Conditions and Poor Connections**
- **Wiring Repairs**

Scan Tool Reference

Control Module References for scan tool information

Circuit/System Verification

1. Verify none of the DTCs listed below are set:
    - DTC B310D
    - DTC B310E
    - DTC B310F
    - **If any of the DTCs are set**
    1. Replace the battery in the appropriate keyless entry transmitter and operate the transmitter three consecutive times.
    2. Verify the DTC does not set.
        - If the DTC sets, replace the keyless entry transmitter.
        - If the DTC does not set
    3. All OK.
    - **If none of the DTCs are set**
2. All OK.

DTC B3119

Diagnostic Instructions

- Perform the **Diagnostic System Check - Vehicle** prior to using this diagnostic procedure.
- Review **Strategy Based Diagnosis** for an overview of the diagnostic approach.
- **Diagnostic Procedure Instructions** provides an overview of each diagnostic category.

DTC Descriptors

DTC B3119

Keyless Entry Antenna 1

For symptom byte information, refer to **Symptom Byte List** .

Diagnostic Fault Information

Circuit	Short to Ground	Open/High Resistance	Short to Voltage	Signal Performance
Keyless Entry Antenna Signal - Driver Door	B3119 02	B3119 05	B3119 05	-
Keyless Entry Antenna Low Reference - Driver Door	B3119 02	B3119 05	B3119 05	-

Circuit/System Description

The driver door handle antenna is located in the driver door handle assembly and is used to establish low frequency communications with the keyless entry transmitter. As a vehicle with locked doors is approached with a keyless entry transmitter and the exterior door handle button is pressed, the keyless entry control module communicates with the driver door handle keyless entry antenna.

Conditions for Running the DTC

The exterior driver door handle button is pressed within 15 min of last door closing.

Conditions for Setting the DTC

B3119 02

The keyless entry control module detects a short to ground on the driver door keyless entry antenna signal circuit.

B3119 05

The keyless entry control module detects a short to voltage or an open on the driver door keyless entry antenna signal circuit.

Action Taken When the DTC Sets

Doors will not unlock/lock when the driver exterior door handle button is pressed.

Conditions for Clearing the DTC

- A current DTC will clear when the conditions for setting the DTC are no longer present.
- A history DTC will clear after 40 malfunction-free ignition cycles.

Reference Information

Schematic Reference

Remote Function Schematics

Connector End View Reference

COMPONENT CONNECTOR END VIEWS - INDEX

Description and Operation

Keyless Entry System Description and Operation (without BTM), **Keyless Entry System Description and Operation (with BTM)**

Electrical Information Reference

- **Circuit Testing**
- **Connector Repairs**
- **Testing for Intermittent Conditions and Poor Connections**
- **Wiring Repairs**

Scan Tool Reference

Control Module References for scan tool information

Circuit/System Verification

1. Ignition ON.
2. Verify DTC B3122, B3123, or B3124 is not set.
    - **If any of the DTCs are set**

      Refer to **Diagnostic Trouble Code (DTC) List - Vehicle** .

    - **If none of the DTCs are set**
3. Refer to Circuit/System Testing.

Circuit/System Testing

1. Ignition OFF, disconnect the harness connector at the T10M Keyless Entry Antenna - Driver Door Handle, ignition ON.
2. Test for less than 1 V between the signal circuit terminal 1 and ground.
    - **If 1 V or greater**
    1. Ignition OFF, disconnect the harness connector at the K84 Keyless Entry Control Module, ignition ON.
    2. Test for less than 1 V between the signal circuit and ground.
        - If 1 V or greater, repair the short to voltage on the circuit.
        - If less than 1 V, replace the K84 Keyless Entry Control Module.
    - **If less than 1 V**

NOTE: When using the MIN MAX function, autorange on the DMM may not function properly. To ensure accurate test results, turn off autorange and manually set the DMM range to 000.0 V.

3. Ignition OFF, install a DMM between the signal circuit terminal 1 and ground. Set the DMM to capture DC voltage using the MIN MAX function. Turn off autorange and manually set the DMM range to 000.0 V.
4. Lock the vehicle doors using the keyless entry transmitter. Activate the antenna by pressing the exterior door handle button.
5. Verify the MAX voltage captured by the DMM is greater than 1 V.
    - **If 1 V or less**
    1. Ignition OFF, disconnect the harness connector at the K84 Keyless Entry Control Module.
    2. Test for infinite resistance between the signal circuit and ground.
        - If less than infinite resistance, repair the short to ground on the circuit.
        - If infinite resistance
    3. Test for less than 2 ohms in the signal circuit end to end.
        - If 2 ohms or greater, repair the open/high resistance in the circuit.
        - If less than 2 ohms, replace the K84 Keyless Entry Control Module.
    - **If greater than 1 V**
6. Test for less than 1 V between the low reference circuit terminal 2 and ground.
    - **If 1 V or greater**
    1. Ignition OFF, disconnect the harness connector at the K84 Keyless Entry Control Module, ignition ON.
    2. Test for less than 1 V between the low reference circuit and ground.
        - If 1 V or greater, repair the short to voltage on the circuit.
        - If less than 1 V, replace the K84 Keyless Entry Control Module.
    - **If less than 1 V**

NOTE: When using the MIN MAX function, autorange on the DMM may not function properly. To ensure accurate test results, turn off autorange and manually set the DMM range to 000.0 V.

7. Install a DMM between the signal circuit terminal 1 and the low reference circuit terminal 2. Set the DMM to capture DC voltage using the MIN MAX function. Turn off autorange and manually set the DMM range to 000.0 V.
8. Lock the vehicle doors using the keyless entry transmitter. Activate the antenna by pressing the exterior door handle button.
9. Verify the MAX voltage captured by the DMM is greater than 1 V.
    - **If 1 V or less**
    1. Ignition OFF, disconnect the harness connector at the K84 Keyless Entry Control Module.
    2. Test for infinite resistance between the low reference circuit and ground.
        - If less than infinite resistance, repair the short to ground on the circuit.
        - If infinite resistance
    3. Test for less than 2 ohms in the low reference circuit end to end.
        - If 2 ohms or greater, repair the open/high resistance in the circuit.
        - If less than 2 ohms, replace the K84 Keyless Entry Control Module.
    - **If greater than 1 V**
10. Replace the T10M Keyless Entry Antenna - Driver Door Handle.
11. Lock the vehicle doors using the keyless entry transmitter. Activate the antenna by pressing the exterior door handle button.
12. Verify DTC B3119 is not set.
    - **If DTC B3119 is set**

      Replace the K84 Keyless Entry Control Module.

    - **If DTC B3119 is not set**
13. All OK.

Repair Instructions

Perform the **Diagnostic Repair Verification** after completing the repair.

- **Front Side Door Outside Handle Bracket Replacement**
- **Control Module References** for keyless entry control module replacement, programming, and setup

DTC B3120

Diagnostic Instructions

- Perform the **Diagnostic System Check - Vehicle** prior to using this diagnostic procedure.
- Review **Strategy Based Diagnosis** for an overview of the diagnostic approach.

- **Diagnostic Procedure Instructions** provides an overview of each diagnostic category.

DTC Descriptors

DTC B3120

Keyless Entry Antenna 2 Short to Ground

DTC B3120

Keyless Entry Antenna 2 High Voltage/Open

For symptom byte information, refer to **Symptom Byte List** .

Diagnostic Fault Information

Circuit	Short to Ground	Open/High Resistance	Short to Voltage	Signal Performance
Keyless Entry Antenna Signal - Passenger Door	B3120 02	B3120 05	B3120 05	-
Keyless Entry Antenna Low Reference - Passenger Door	B3120 02	B3120 05	B3120 05	-

Circuit/System Description

The passenger front door handle antenna is located in the passenger front door handle assembly and is used to establish low frequency communications with the keyless entry transmitter. As a vehicle with locked doors is approached with a keyless entry transmitter and the exterior door handle button is pressed, the keyless entry control module communicates with the passenger front door handle keyless entry antenna.

Conditions for Running the DTC

The exterior door handle button in the passenger front door handle is pressed within 15 min of the last change of door ajar status for any door.

Conditions for Setting the DTC

B3120 02

The keyless entry control module detects a short to ground on the passenger front door keyless entry antenna signal circuit.

B3120 05

The keyless entry control module detects a short to B+ or an open on the passenger front door keyless entry antenna signal circuit.

Action Taken When the DTC Sets

Doors will not unlock/unlock when the passenger exterior door handle button is pressed.

Conditions for Clearing the DTC

- A current DTC will clear when the conditions for setting the DTC are no longer present.
- A history DTC will clear after 40 malfunction-free ignition cycles.

Reference Information

Schematic Reference

Remote Function Schematics

Connector End View Reference

COMPONENT CONNECTOR END VIEWS - INDEX

Description and Operation

Keyless Entry System Description and Operation (without BTM), **Keyless Entry System Description and Operation (with BTM)**

Electrical Information Reference

- **Circuit Testing**
- **Connector Repairs**
- **Testing for Intermittent Conditions and Poor Connections**
- **Wiring Repairs**

Scan Tool Reference

Control Module References for scan tool information

Circuit/System Verification

1. Ignition ON.
2. Verify that DTC B3122, B3123, or B3124 is not set.
    - **If any of the DTCs are set**

      Refer to **Diagnostic Trouble Code (DTC) List - Vehicle** .

    - **If none of the DTCs are set**
3. Refer to Circuit/System Testing below.

Circuit/System Testing

1. Ignition OFF, disconnect the harness connector at the T10N Keyless Entry Antenna - Passenger Door Handle, ignition ON.
2. Test for less than 1 V between the signal circuit terminal 1 and ground.
   - **If 1 V or greater**
   1. Ignition OFF, disconnect the harness connector at the K84 Keyless Entry Control Module, ignition ON.
   2. Test for less than 1 V between the signal circuit and ground.
      - If 1 V or greater, repair the short to voltage on the circuit.
      - If less than 1 V, replace the K84 Keyless Entry Control Module.
   - **If less than 1 V**

NOTE: When using the MIN MAX function, autorange on the DMM may not function properly. To ensure accurate test results, turn off autorange and manually set the DMM range to 000.0 V.

3. Ignition OFF, install a DMM between the signal circuit terminal 1 and ground. Set the DMM to capture DC voltage using the MIN MAX function. Turn off autorange and manually set the DMM range to 000.0 V.
4. Lock the vehicle doors using the keyless entry transmitter. Activate the antenna by pressing the exterior door handle button.
5. Verify the MAX voltage captured by the DMM is greater than 1 V.
   - **If 1 V or less**
   1. Ignition OFF, disconnect the harness connector at the K84 Keyless Entry Control Module.
   2. Test for infinite resistance between the signal circuit and ground.
      - If less than infinite resistance, repair the short to ground on the circuit.
      - If infinite resistance
   3. Test for less than 2 ohms in the signal circuit end to end.
      - If 2 ohms or greater, repair the open/high resistance in the circuit.
      - If less than 2 ohms, replace the K84 Keyless Entry Control Module.
   - **If greater than 1 V**
6. Test for less than 1 V between the low reference circuit terminal 2 and ground.
   - **If 1 V or greater**
   1. Ignition OFF, disconnect the harness connector at the K84 Keyless Entry Control Module, ignition ON.
   2. Test for less than 1 V between the low reference circuit and ground.
      - If 1 V or greater, repair the short to voltage on the circuit.
      - If less than 1 V, replace the K84 Keyless Entry Control Module.
   - **If less than 1 V**

NOTE: When using the MIN MAX function, autorange on the DMM may not function properly. To ensure accurate test results, turn off autorange and manually set the DMM range to 000.0 V.

7. Install a DMM between the signal circuit terminal 1 and the low reference circuit terminal 2. Set the DMM to capture DC voltage using the MIN MAX function. Turn off autorange and manually set the DMM range to 000.0 V.
8. Lock the vehicle doors using the keyless entry transmitter. Activate the antenna by pressing the exterior door handle button.
9. Verify the MAX voltage captured by the DMM is greater than 1 V.
    - **If 1 V or less**
    1. Ignition OFF, disconnect the harness connector at the K84 Keyless Entry Control Module.
    2. Test for infinite resistance between the low reference circuit and ground.
        - If less than infinite resistance, repair the short to ground on the circuit.
        - If infinite resistance
    3. Test for less than 2 ohms in the low reference circuit end to end.
        - If 2 ohms or greater, repair the open/high resistance in the circuit.
        - If less than 2 ohms, replace the K84 Keyless Entry Control Module.
    - **If greater than 1 V**
10. Replace the T10N Keyless Entry Antenna - Passenger Door Handle.
11. Lock the vehicle doors using the keyless entry transmitter. Activate the antenna by pressing the exterior door handle button.
12. Verify DTC B3120 is not set.
    - **If DTC B3120 is set**

      Replace the K84 Keyless Entry Control Module.

    - **If DTC B3120 is not set**
13. All OK.

Repair Instructions

Perform the **Diagnostic Repair Verification** after completing the repair.

- **Front Side Door Outside Handle Bracket Replacement**
- **Control Module References** for keyless entry control module replacement, programming, and setup

DTC B3121

Diagnostic Instructions

- Perform the **Diagnostic System Check - Vehicle** prior to using this diagnostic procedure.
- Review **Strategy Based Diagnosis** for an overview of the diagnostic approach.

- **Diagnostic Procedure Instructions** provides an overview of each diagnostic category.

DTC Descriptors

DTC B3121

Keyless Entry Antenna 3 Short to Ground

DTC B3121

Keyless Entry Antenna 3 High Voltage/Open

For symptom byte information, refer to **Symptom Byte List** .

Diagnostic Fault Information

Circuit	Short to Ground	Open/High Resistance	Short to Voltage	Signal Performance
Keyless Entry Antenna Signal - Rear Fascia	B3121 02	B3121 05	B3121 05	-
Keyless Entry Antenna Low Reference - Rear Fascia	B3121 02	B3121 05	B3121 05	-

Circuit/System Description

The rear fascia antenna is located in the rear fascia assembly and is used to establish low frequency communications with the keyless entry transmitter. As a vehicle with locked doors is approached with a keyless entry transmitter and the exterior rear closure touch pad is pressed, the keyless entry control module communicates with the rear fascia keyless entry antenna.

Conditions for Running the DTC

- The rear closure touch pad is pressed.
- The scan tool activates a device control function to simulate the above action.

Conditions for Setting the DTC

B3121 02

The keyless entry control module detects a short to ground on the rear fascia keyless entry antenna signal circuit.

B3121 05

The keyless entry control module detects a short to B+ or an open on the rear fascia keyless entry antenna signal circuit.

Action Taken When the DTC Sets

Rear closure will not open when rear closure touch pad is pressed.

Conditions for Clearing the DTC

- A current DTC will clear when the conditions for setting the DTC are no longer present.
- A history DTC will clear after 40 malfunction-free ignition cycles.

Reference Information

Schematic Reference

Remote Function Schematics

Connector End View Reference

COMPONENT CONNECTOR END VIEWS - INDEX

Description and Operation

Keyless Entry System Description and Operation (without BTM), **Keyless Entry System Description and Operation (with BTM)**

Electrical Information Reference

- **Circuit Testing**
- **Connector Repairs**
- **Testing for Intermittent Conditions and Poor Connections**
- **Wiring Repairs**

Scan Tool Reference

Control Module References for scan tool information

Circuit/System Verification

1. Ignition ON.
2. Verify that DTC B3122, B3123, or B3124 is not set.
    - **If any of the DTCs are set**

      Refer to **Diagnostic Trouble Code (DTC) List - Vehicle** .

    - **If none of the DTCs are set**
3. Refer to Circuit/System Testing below.

Circuit/System Testing

1. Ignition OFF, disconnect the harness connector at the T10G Keyless Entry Antenna - Rear Fascia, ignition ON.
2. Test for less than 1 V between the signal circuit terminal 1 and ground.
   - **If 1 V or greater**
   1. Ignition OFF, disconnect the harness connector at the K84 Keyless Entry Control Module, ignition ON.
   2. Test for less than 1 V between the signal circuit and ground.
      - If 1 V or greater, repair the short to voltage on the circuit.
      - If less than 1 V, replace the K84 Keyless Entry Control Module.
   - **If less than 1 V**

NOTE: When using the MIN MAX function, autorange on the DMM may not function properly. To ensure accurate test results, turn off autorange and manually set the DMM range to 000.0 V.

3. Ignition OFF, install a DMM between the signal circuit terminal 1 and ground. Set the DMM to capture DC voltage using the MIN MAX function. Turn off autorange and manually set the DMM range to 000.0 V.
4. Lock the vehicle doors using the keyless entry transmitter. Activate the antenna by pressing the rear closure touch pad.
5. Verify the MAX voltage captured by the DMM is greater than 1 V.
   - **If 1 V or less**
   1. Ignition OFF, disconnect the harness connector at the K84 Keyless Entry Control Module.
   2. Test for infinite resistance between the signal circuit and ground.
      - If less than infinite resistance, repair the short to ground on the circuit.
      - If infinite resistance
   3. Test for less than 2 ohms in the signal circuit end to end.
      - If 2 ohms or greater, repair the open/high resistance in the circuit.
      - If less than 2 ohms, replace the K84 Keyless Entry Control Module.
   - **If greater than 1 V**
6. Test for less than 1 V between the low reference circuit terminal 2 and ground.
   - **If 1 V or greater**
   1. Ignition OFF, disconnect the harness connector at the K84 Keyless Entry Control Module, ignition ON.
   2. Test for less than 1 V between the low reference circuit and ground.
      - If 1 V or greater, repair the short to voltage on the circuit.
      - If less than 1 V, replace the K84 Keyless Entry Control Module.
   - **If less than 1 V**

NOTE: When using the MIN MAX function, autorange on the DMM may not function properly. To ensure accurate test results, turn off autorange and manually set the DMM range to 000.0 V.

7. Install a DMM between the signal circuit terminal 1 and the low reference circuit terminal 2. Set the DMM to capture DC voltage using the MIN MAX function. Turn off autorange and manually set the DMM range to 000.0 V.
8. Lock the vehicle doors using the keyless entry transmitter. Activate the antenna by pressing the rear closure touch pad.
9. Verify the MAX voltage captured by the DMM is greater than 1 V.
    - **If 1 V or less**
    1. Ignition OFF, disconnect the harness connector at the K84 Keyless Entry Control Module.
    2. Test for infinite resistance between the low reference circuit and ground.
        - If less than infinite resistance, repair the short to ground on the circuit.
        - If infinite resistance
    3. Test for less than 2 ohms in the low reference circuit end to end.
        - If 2 ohms or greater, repair the open/high resistance in the circuit.
        - If less than 2 ohms, replace the K84 Keyless Entry Control Module.
    - **If greater than 1 V**
10. Replace the T10G Keyless Entry Antenna - Rear Fascia.
11. Lock the vehicle doors using the keyless entry transmitter. Activate the antenna by pressing the rear closure touch pad.
12. Verify DTC B3121 is not set.
    - **If DTC B3121 is set**

      Replace the K84 Keyless Entry Control Module.

    - **If DTC B3121 is not set**
13. All OK.

Repair Instructions

Perform the **Diagnostic Repair Verification** after completing the repair.

- **Ignition Lock Key Transmitter Antenna Replacement - Rear Bumper Fascia**
- **Control Module References** for keyless entry control module replacement, programming, and setup

DTC B3122

Diagnostic Instructions

- Perform the **Diagnostic System Check - Vehicle** prior to using this diagnostic procedure.
- Review **Strategy Based Diagnosis** for an overview of the diagnostic approach.

- **Diagnostic Procedure Instructions** provides an overview of each diagnostic category.

DTC Descriptors

DTC B3122

Keyless Entry Antenna 4 Short to Ground

DTC B3122

Keyless Entry Antenna 4 High Voltage/Open

For symptom byte information, refer to **Symptom Byte List** .

Diagnostic Fault Information

Circuit	Short to Ground	Open/High Resistance	Short to Voltage	Signal Performance
Keyless Entry Antenna Signal - Center Console Front	B3122 02	B3122 05	B3122 05	-
Keyless Entry Antenna Low Reference - Center Console Front	B3122 02	B3122 05	B3122 05	-

Circuit/System Description

The front center console antenna is located in front of the center console assembly and is used to establish low frequency communications with the keyless entry transmitter. When the driver attempts to change the ignition status of the vehicle, the keyless entry control module communicates with the front center console antenna.

Conditions for Running the DTC

Pressing the ignition mode switch.

Conditions for Setting the DTC

B3122 02

The keyless entry control module detects a short to ground on the front center console keyless entry antenna signal circuit.

B3122 05

The keyless entry control module detects a short to B+ or an open on the front center console keyless entry antenna signal circuit.

Action Taken When the DTC Sets

Vehicle will not detect the transmitter in some locations inside the vehicle. If the transmitter is not detected then vehicle will not change ignition modes when ignition mode switch is pressed.

Conditions for Clearing the DTC

- A current DTC will clear when the conditions for setting the DTC are no longer present.
- A history DTC will clear after 40 malfunction-free ignition cycles.

Reference Information

Schematic Reference

Remote Function Schematics

Connector End View Reference

COMPONENT CONNECTOR END VIEWS - INDEX

Description and Operation

Keyless Entry System Description and Operation (without BTM), **Keyless Entry System Description and Operation (with BTM)**

Electrical Information Reference

- **Circuit Testing**
- **Connector Repairs**
- **Testing for Intermittent Conditions and Poor Connections**
- **Wiring Repairs**

Scan Tool Reference

Control Module References for scan tool information

Circuit/System Testing

1. Ignition OFF, disconnect the harness connector at the T10J Keyless Entry Antenna - Center Console Front, ignition ON.
2. Test for less than 1 V between the signal circuit terminal 1 and ground.
    - **If 1 V or greater**
    1. Ignition OFF, disconnect the harness connector at the K84 Keyless Entry Control Module, ignition ON.
    2. Test for less than 1 V between the signal circuit and ground.

- If 1 V or greater, repair the short to voltage on the circuit.
- If less than 1 V, replace the K84 Keyless Entry Control Module.

- **If less than 1 V**

NOTE: When using the MIN MAX function, autorange on the DMM may not function properly. To ensure accurate test results, turn off autorange and manually set the DMM range to 000.0 V.

3. Ignition OFF, install a DMM between the signal circuit terminal 1 and ground. Set the DMM to capture DC voltage using the MIN MAX function. Turn off autorange and manually set the DMM range to 000.0 V.
4. Activate the antenna by pressing the ignition mode switch.
5. Verify the MAX voltage captured by the DMM is greater than 1 V.
   - **If 1 V or less**
   1. Ignition OFF, disconnect the harness connector at the K84 Keyless Entry Control Module.
   2. Test for infinite resistance between the signal circuit and ground.
      - If less than infinite resistance, repair the short to ground on the circuit.
      - If infinite resistance
   3. Test for less than 2 ohms in the signal circuit end to end.
      - If 2 ohms or greater, repair the open/high resistance in the circuit.
      - If less than 2 ohms, replace the K84 Keyless Entry Control Module.
   - **If greater than 1 V**
6. Test for less than 1 V between the low reference circuit terminal 2 and ground.
   - **If 1 V or greater**
   1. Ignition OFF, disconnect the harness connector at the K84 Keyless Entry Control Module, ignition ON.
   2. Test for less than 1 V between the low reference circuit and ground.
      - If 1 V or greater, repair the short to voltage on the circuit.
      - If less than 1 V, replace the K84 Keyless Entry Control Module.
   - **If less than 1 V**

NOTE: When using the MIN MAX function, autorange on the DMM may not function properly. To ensure accurate test results, turn off autorange and manually set the DMM range to 000.0 V.

7. Install a DMM between the signal circuit terminal 1 and the low reference circuit terminal 2. Set the DMM to capture DC voltage using the MIN MAX function. Turn off autorange and manually set the DMM range to 000.0 V.
8. Activate the antenna by pressing the ignition mode switch.
9. Verify the MAX voltage captured by the DMM is greater than 1 V.
   - **If 1 V or less**

1. Ignition OFF, disconnect the harness connector at the K84 Keyless Entry Control Module.
2. Test for infinite resistance between the low reference circuit and ground.
    - If less than infinite resistance, repair the short to ground on the circuit.
    - If infinite resistance
3. Test for less than 2 ohms in the low reference circuit end to end.
    - If 2 ohms or greater, repair the open/high resistance in the circuit.
    - If less than 2 ohms, replace the K84 Keyless Entry Control Module.

- **If greater than 1 V**

10. Replace the T10J Keyless Entry Antenna - Center Console Front.
11. Activate the antenna by pressing the ignition mode switch.
12. Verify DTC B3122 is not set.
    - **If DTC B3122 is set**

      Replace the K84 Keyless Entry Control Module.

    - **If DTC B3122 is not set**
13. All OK.

Repair Instructions

Perform the **Diagnostic Repair Verification** after completing the repair.

- **Ignition Lock Key Transmitter Antenna Replacement - Instrument Panel**
- **Control Module References** for keyless entry control module replacement, programming, and setup

DTC B3123

Diagnostic Instructions

- Perform the **Diagnostic System Check - Vehicle** prior to using this diagnostic procedure.
- Review **Strategy Based Diagnosis** for an overview of the diagnostic approach.
- **Diagnostic Procedure Instructions** provides an overview of each diagnostic category.

DTC Descriptors

DTC B3123

Keyless Entry Antenna 5 Short to Ground

DTC B3123

Keyless Entry Antenna 5 High Voltage/Open

For symptom byte information, refer to **Symptom Byte List** .

Diagnostic Fault Information

Circuit	Short to Ground	Open/High Resistance	Short to Voltage	Signal Performance
Keyless Entry Antenna Signal - Center Console Rear	B3123 02	B3123 05	B3123 05	-
Keyless Entry Antenna Low Reference - Center Console Rear	B3123 02	B3123 05	B3123 05	-

Circuit/System Description

The rear center console antenna is located in rear of the center console assembly and is used to establish low frequency communications with the keyless entry transmitter. When the driver attempts to change the ignition status of the vehicle, the keyless entry control module communicates with the rear center console antenna.

Conditions for Running the DTC

Pressing the ignition mode switch.

Conditions for Setting the DTC

B3123 02

The keyless entry control module detects a short to ground on the rear center console keyless entry antenna signal circuit.

B3123 05

The keyless entry control module detects a short to B+ or an open on the rear center console keyless entry antenna signal circuit.

Action Taken When the DTC Sets

Vehicle will not detect the transmitter in some locations inside the vehicle. If the transmitter is not detected then vehicle will not change ignition modes when ignition mode switch is pressed.

Conditions for Clearing the DTC

- A current DTC will clear when the conditions for setting the DTC are no longer present.
- A history DTC will clear after 40 malfunction-free ignition cycles.

Reference Information

Schematic Reference

Remote Function Schematics

Connector End View Reference

COMPONENT CONNECTOR END VIEWS - INDEX

Description and Operation

Keyless Entry System Description and Operation (without BTM), **Keyless Entry System Description and Operation (with BTM)**

Electrical Information Reference

- **Circuit Testing**
- **Connector Repairs**
- **Testing for Intermittent Conditions and Poor Connections**
- **Wiring Repairs**

Scan Tool Reference

Control Module References for scan tool information

Circuit/System Testing

1. Ignition OFF, disconnect the harness connector at the T10K Keyless Entry Antenna - Center Console Rear, ignition ON.
2. Test for less than 1 V between the signal circuit terminal 1 and ground.
   - **If 1 V or greater**
     1. Ignition OFF, disconnect the harness connector at the K84 Keyless Entry Control Module, ignition ON.
     2. Test for less than 1 V between the signal circuit and ground.
        - If 1 V or greater, repair the short to voltage on the circuit.
        - If less than 1 V, replace the K84 Keyless Entry Control Module.
   - **If less than 1 V**

NOTE: When using the MIN MAX function, autorange on the DMM may not function properly. To ensure accurate test results, turn off autorange and manually set the DMM range to 000.0 V.

3. Ignition OFF, install a DMM between the signal circuit terminal 1 and ground. Set the DMM to capture DC voltage using the MIN MAX function. Turn off autorange and manually set the DMM range to 000.0 V.

4. Activate the antenna by pressing the ignition mode switch.
5. Verify the MAX voltage captured by the DMM is greater than 1 V.
    - **If 1 V or less**
    1. Ignition OFF, disconnect the harness connector at the K84 Keyless Entry Control Module.
    2. Test for infinite resistance between the signal circuit and ground.
        - If less than infinite resistance, repair the short to ground on the circuit.
        - If infinite resistance
    3. Test for less than 2 ohms in the signal circuit end to end.
        - If 2 ohms or greater, repair the open/high resistance in the circuit.
        - If less than 2 ohms, replace the K84 Keyless Entry Control Module.
    - **If greater than 1 V**
6. Test for less than 1 V between the low reference circuit terminal 2 and ground.
    - **If 1 V or greater**
    1. Ignition OFF, disconnect the harness connector at the K84 Keyless Entry Control Module, ignition ON.
    2. Test for less than 1 V between the low reference circuit and ground.
        - If 1 V or greater, repair the short to voltage on the circuit.
        - If less than 1 V, replace the K84 Keyless Entry Control Module.
    - **If less than 1 V**

NOTE: When using the MIN MAX function, autorange on the DMM may not function properly. To ensure accurate test results, turn off autorange and manually set the DMM range to 000.0 V.

7. Install a DMM between the signal circuit terminal 1 and the low reference circuit terminal 2. Set the DMM to capture DC voltage using the MIN MAX function. Turn off autorange and manually set the DMM range to 000.0 V.
8. Activate the antenna by pressing the ignition mode switch.
9. Verify the MAX voltage captured by the DMM is greater than 1 V.
    - **If 1 V or less**
    1. Ignition OFF, disconnect the harness connector at the K84 Keyless Entry Control Module.
    2. Test for infinite resistance between the low reference circuit and ground.
        - If less than infinite resistance, repair the short to ground on the circuit.
        - If infinite resistance
    3. Test for less than 2 ohms in the low reference circuit end to end.
        - If 2 ohms or greater, repair the open/high resistance in the circuit.
        - If less than 2 ohms, replace the K84 Keyless Entry Control Module.
    - **If greater than 1 V**
10. Replace the T10K Keyless Entry Antenna - Center Console Rear.

11. Activate the antenna by pressing the ignition mode switch.
12. Verify DTC B3123 is not set.
    - **If DTC B3123 is set**

      Replace the K84 Keyless Entry Control Module.

    - **If DTC B3123 is not set**
13. All OK.

Repair Instructions

Perform the **Diagnostic Repair Verification** after completing the repair.

- **Ignition Lock Key Transmitter Antenna Replacement - Floor Console**
- **Control Module References** for keyless entry control module replacement, programming, and setup

DTC B3124

Diagnostic Instructions

- Perform the **Diagnostic System Check - Vehicle** prior to using this diagnostic procedure.
- Review **Strategy Based Diagnosis** for an overview of the diagnostic approach.
- **Diagnostic Procedure Instructions** provides an overview of each diagnostic category.

DTC Descriptors

DTC B3124

Keyless Entry Antenna 6 Short to Ground

DTC B3124

Keyless Entry Antenna 6 High Voltage/Open

For symptom byte information, refer to **Symptom Byte List** .

Diagnostic Fault Information

Circuit	Short to Ground	Open/High Resistance	Short to Voltage	Signal Performance
Keyless Entry Antenna Signal - Rear Compartment	B3124 02	B3124 05	B3124 05	-
Keyless Entry Antenna Low Reference - Rear Compartment	B3124 02	B3124 05	B3124 05	-

Circuit/System Description

The rear compartment antenna is located on the rear compartment floor near the seat back, centered, and is used to establish low frequency communications with the keyless entry transmitter. When the driver attempts to change the ignition status of the vehicle, the keyless entry control module communicates with the rear compartment antenna.

Conditions for Running the DTC

Pressing the ignition mode switch.

Conditions for Setting the DTC

B3124 02

The keyless entry control module detects a short to ground on the rear compartment keyless entry antenna signal circuit.

B3124 05

The keyless entry control module detects a short to B+ or an open on the rear compartment keyless entry antenna signal circuit.

Action Taken When the DTC Sets

Vehicle will not detect the transmitter in some locations inside the vehicle. If the transmitter is not detected then vehicle will not change ignition modes when ignition mode switch is pressed.

Conditions for Clearing the DTC

- A current DTC will clear when the conditions for setting the DTC are no longer present.
- A history DTC will clear after 40 malfunction-free ignition cycles.

Reference Information

Schematic Reference

Remote Function Schematics

Connector End View Reference

COMPONENT CONNECTOR END VIEWS - INDEX

Description and Operation

Keyless Entry System Description and Operation (without BTM), **Keyless Entry System Description and Operation (with BTM)**

Electrical Information Reference

- **Circuit Testing**
- **Connector Repairs**
- **Testing for Intermittent Conditions and Poor Connections**
- **Wiring Repairs**

Scan Tool Reference

Control Module References for scan tool information

Circuit/System Testing

1. Ignition OFF, disconnect the harness connector at the T10E Keyless Entry Antenna - Rear Compartment, ignition ON.
2. Test for less than 1 V between the signal circuit terminal 1 and ground.
   - **If 1 V or greater**
   1. Ignition OFF, disconnect the harness connector at the K84 Keyless Entry Control Module, ignition ON.
   2. Test for less than 1 V between the signal circuit and ground.
      - If 1 V or greater, repair the short to voltage on the circuit.
      - If less than 1 V, replace the K84 Keyless Entry Control Module.
   - **If less than 1 V**

NOTE: When using the MIN MAX function, autorange on the DMM may not function properly. To ensure accurate test results, turn off autorange and manually set the DMM range to 000.0 V.

3. Ignition OFF, install a DMM between the signal circuit terminal 1 and ground. Set the DMM to capture DC voltage using the MIN MAX function. Turn off autorange and manually set the DMM range to 000.0 V.
4. Activate the antenna by pressing the ignition mode switch.
5. Verify the MAX voltage captured by the DMM is greater than 1 V.
   - **If 1 V or less**
   1. Ignition OFF, disconnect the harness connector at the K84 Keyless Entry Control Module.
   2. Test for infinite resistance between the signal circuit and ground.
      - If less than infinite resistance, repair the short to ground on the circuit.
      - If infinite resistance
   3. Test for less than 2 ohms in the signal circuit end to end.
      - If 2 ohms or greater, repair the open/high resistance in the circuit.
      - If less than 2 ohms, replace the K84 Keyless Entry Control Module.
   - **If greater than 1 V**

6. Test for less than 1 V between the low reference circuit terminal 2 and ground.
   - **If 1 V or greater**
   1. Ignition OFF, disconnect the harness connector at the K84 Keyless Entry Control Module, ignition ON.
   2. Test for less than 1 V between the low reference circuit and ground.
      - If 1 V or greater, repair the short to voltage on the circuit.
      - If less than 1 V, replace the K84 Keyless Entry Control Module.
   - **If less than 1 V**

NOTE: When using the MIN MAX function, autorange on the DMM may not function properly. To ensure accurate test results, turn off autorange and manually set the DMM range to 000.0 V.

7. Install a DMM between the signal circuit terminal 1 and the low reference circuit terminal 2. Set the DMM to capture DC voltage using the MIN MAX function. Turn off autorange and manually set the DMM range to 000.0 V.
8. Activate the antenna by pressing the ignition mode switch.
9. Verify the MAX voltage captured by the DMM is greater than 1 V.
   - **If 1 V or less**
   1. Ignition OFF, disconnect the harness connector at the K84 Keyless Entry Control Module.
   2. Test for infinite resistance between the low reference circuit and ground.
      - If less than infinite resistance, repair the short to ground on the circuit.
      - If infinite resistance
   3. Test for less than 2 ohms in the low reference circuit end to end.
      - If 2 ohms or greater, repair the open/high resistance in the circuit.
      - If less than 2 ohms, replace the K84 Keyless Entry Control Module.
   - **If greater than 1 V**
10. Replace the T10E Keyless Entry Antenna - Rear Compartment.
11. Activate the antenna by pressing the ignition mode switch.
12. Verify DTC B3124 is not set.
    - **If DTC B3124 is set**

      Replace the K84 Keyless Entry Control Module.

    - **If DTC B3124 is not set**
13. All OK.

Repair Instructions

Perform the **Diagnostic Repair Verification** after completing the repair.

- **Ignition Lock Key Transmitter Antenna Replacement - Rear Compartment**
- **Control Module References** for keyless entry control module replacement, programming, and setup

SYMPTOMS - REMOTE FUNCTIONS

NOTE: The following steps must be completed before using the symptom tables.

1. Perform **Diagnostic System Check - Vehicle** before using the Symptom Tables in order to verify that all of the following are true:
   - There are no DTCs set.
   - The control modules can communicate via the serial data link.
2. Review the system operation in order to familiarize yourself with the system functions. Refer to **Keyless Entry System Description and Operation (without BTM)**, **Keyless Entry System Description and Operation (with BTM)**.

Visual/Physical Inspection

- Inspect for aftermarket devices which could affect the operation of the Keyless Entry System. Refer to **Checking Aftermarket Accessories** .
- Inspect the easily accessible or visible system components for obvious damage or conditions which could cause the symptom.

Intermittent

Faulty electrical connections or wiring may be the cause of intermittent conditions. Refer to **Testing for Intermittent Conditions and Poor Connections** .

Symptom List

Refer to a symptom diagnostic procedure from the following list in order to diagnose the symptom:

- **No Remote Detected**
- **Keyless Entry System Malfunction (Active)**, **Keyless Entry System Malfunction (Passive)**
- **Remote Vehicle Start Malfunction**

NO REMOTE DETECTED

Diagnostic Instructions

- Perform the **Diagnostic System Check - Vehicle** prior to using this diagnostic procedure.
- Review **Strategy Based Diagnosis** for an overview of the diagnostic approach.
- **Diagnostic Procedure Instructions** provides an overview of each diagnostic category.

Diagnostic Fault Information

Circuit	Short to Ground	Open/High Resistance	Short to Voltage	Signal Performance
Keyless Entry Antenna Signal - Center Console Front	B3122 02	B3122 05	B3122 05	-
Keyless Entry Antenna Low Reference - Center Console Front	B3122 02	B3122 05	B3122 05	-
Keyless Entry Antenna Signal - Center Console Rear	B3123 02	B3123 05	B3123 05	-
Keyless Entry Antenna Low Reference - Center Console Rear	B3123 02	B3123 05	B3123 05	-
Keyless Entry Antenna Signal - Rear Compartment	B3124 02	B3124 05	B3124 05	-
Keyless Entry Antenna Low Reference - Rear Compartment	B3124 02	B3124 05	B3124 05	-

Circuit/System Description

When a transmitter authentication is requested, the front console, rear console, and rear compartment antennas simultaneously broadcast a challenge within the passenger compartment to the transmitter. If the response from the transmitter via radio frequency (RF) is a valid response, the body control module (BCM) determines there is a transmitter within the vehicle. If no response is received, the BCM determines that no transmitter is in the vehicle, and NO REMOTE DETECTED will be displayed on the DIC.

Diagnostic Aids

A low transmitter battery or radio frequency (RF) interference from aftermarket devices such as 2-way radios, power inverters, cellular phone chargers, computers, etc. may cause a system malfunction. High RF traffic areas, such as gas stations which use pay-at-the-pump RF transponders, may also cause interference that could lead to a malfunction.

Conditions caused by external influences such are these are considered to be normal. Following this diagnostic will not diagnose an RF interference condition. If RF interference is suspected, question the customer about the conditions or location where the NO REMOTE DETECTED condition occurs.

Reference Information

Schematic Reference

Remote Function Schematics

Connector End View Reference

COMPONENT CONNECTOR END VIEWS - INDEX

Description and Operation

Keyless Entry System Description and Operation (without BTM), **Keyless Entry System Description and**

Operation (with BTM)

Electrical Information Reference

- **Circuit Testing**
- **Connector Repairs**
- **Testing for Intermittent Conditions and Poor Connections**
- **Wiring Repairs**

Scan Tool Reference

Control Module References for scan tool information

Circuit/System Verification

NOTE: This condition may be caused by low vehicle battery voltage. If the battery is not sufficiently charged (above 10 volts), the system will have difficulties detecting the transmitter and the NO REMOTE DETECTED message will be displayed. Correct the low battery voltage condition to eliminate this condition.

1. Verify that DTC B3119, B3120, B3121, B3122, B3123, or B3124 is not set.
   - **If any of the DTCs are set**

     Refer to **Diagnostic Trouble Code (DTC) List - Vehicle** .

   - **If none of the DTCs are set**
2. Lock the vehicle using the keyless entry transmitter.
3. Verify that each door unlocks and opens by approaching the vehicle with a valid transmitter and operating their respective exterior door handle button.
   - **If both doors do not unlock/unlatch and open**

     Refer to **Keyless Entry System Malfunction (Active)**, **Keyless Entry System Malfunction (Passive)**.

   - **If both doors unlock/unlatch and open**
4. Verify the vehicle starts with the transmitter located in the key pocket/slot.
   - **If the vehicle does not start**

     Perform the **Key with Integrated Transmitter Programming (with BTM)** , **Key with Integrated Transmitter Programming (without BTM)** procedure.

   - **If the vehicle starts**
5. Verify the NO REMOTE DETECTED message is not displayed on the DIC while attempting to start the vehicle, placing the keyless entry transmitter in various locations within the vehicle interior at each start attempt. The vehicle should start.

- **If the NO REMOTE DETECTED message is displayed at any time**

  Refer to Circuit/System Testing.

- **If the NO REMOTE DETECTED message is not displayed and the vehicle starts**

6. Inspect for any sources of RF interference such as cell phone chargers, power supplies, etc. that would interrupt transmitter and antenna communication. If inspection does not reveal any items causing RF interference, discuss with the customer the conditions or location where the NO REMOTE DETECTED condition occurs. Discuss any devices that are normally kept in the vehicle, such as a laptop or cell phone charger, which may have been removed when the vehicle was brought in for service. It may be necessary to explain to the customer how RF interference degrades the performance of the system.

Circuit/System Testing

NOTE: To determine the appropriate T10 Keyless Entry Antenna to disconnect and diagnose, place the transmitter in various location within the vehicle's interior and attempt to start. The location of the transmitter when the NO REMOTE DETECTED message occurs will correspond with the T10 Keyless Entry Antenna that requires diagnosis.

1. Ignition OFF, disconnect the harness connector at the appropriate T10 Keyless Entry Antenna, ignition ON.
2. Test for less than 1 V between the signal circuit terminal 1 and ground.
   - **If 1 V or greater**
   1. Ignition OFF, disconnect the harness connector at the K84 Keyless Entry Control Module, ignition ON.
   2. Test for less than 1 V between the signal circuit and ground.
      - If 1 V or greater, repair the short to voltage on the circuit.
      - If less than 1 V, replace the K84 Keyless Entry Control Module.
   - **If less than 1 V**

NOTE: When using the MIN MAX function, autorange on the DMM may not function properly. To ensure accurate test results, turn off autorange and manually set the DMM range to 000.0 V.

3. Ignition OFF, install a DMM between the signal circuit terminal 1 and ground. Set the DMM to capture DC voltage using the MIN MAX function.
4. Activate the antenna by pressing the ignition mode switch.
5. Verify the MAX voltage captured by the DMM is greater than 1 V.
   - **If 1 V or less**
   1. Ignition OFF, disconnect the harness connector at the K84 Keyless Entry Control Module.
   2. Test for infinite resistance between the signal circuit and ground.
      - If less than infinite resistance, repair the short to ground on the circuit.

- If infinite resistance

3. Test for less than 2 ohms in the signal circuit end to end.
   - If 2 ohms or greater, repair the open/high resistance in the circuit.
   - If less than 2 ohms, replace the K84 Keyless Entry Control Module.

- **If greater than 1 V**

6. Test for less than 1 V between the low reference circuit terminal 2 and ground.
   - **If 1 V or greater**
   1. Ignition OFF, disconnect the harness connector at the K84 Keyless Entry Control Module, ignition ON.
   2. Test for less than 1 V between the low reference circuit and ground.
      - If 1 V or greater, repair the short to voltage on the circuit.
      - If less than 1 V, replace the K84 Keyless Entry Control Module.
   - **If less than 1 V**

NOTE: When using the MIN MAX function, autorange on the DMM may not function properly. To ensure accurate test results, turn off autorange and manually set the DMM range to 000.0 V.

7. Install a DMM between the signal circuit terminal 1 and the low reference circuit terminal 2. Set the DMM to capture DC voltage using the MIN MAX function.
8. Activate the antenna by pressing the ignition mode switch.
9. Verify the MAX voltage captured by the DMM is greater than 1 V.
   - **If 1 V or less**
   1. Ignition OFF, disconnect the harness connector at the K84 Keyless Entry Control Module.
   2. Test for infinite resistance between the low reference circuit and ground.
      - If less than infinite resistance, repair the short to ground on the circuit.
      - If infinite resistance
   3. Test for less than 2 ohms in the low reference circuit end to end.
      - If 2 ohms or greater, repair the open/high resistance in the circuit.
      - If less than 2 ohms, replace the K84 Keyless Entry Control Module.
   - **If greater than 1 V**
10. Replace the appropriate T10 Keyless Entry Antenna.
11. Activate the antenna by pressing the ignition mode switch.
12. Verify the NO REMOTE DETECTED message is not displayed and the vehicle starts.
    - **If the NO REMOTE DETECTED message is displayed and the vehicle does not start**

      Replace the K84 Keyless Entry Control Module.

    - **If the NO REMOTE DETECTED message is not displayed and the vehicle starts**
13. All OK.

Repair Instructions

Perform the **Diagnostic Repair Verification** after completing the repair.

- **Ignition Lock Key Transmitter Antenna Replacement - Instrument Panel**
- **Ignition Lock Key Transmitter Antenna Replacement - Floor Console**
- **Ignition Lock Key Transmitter Antenna Replacement - Rear Compartment**
- **Control Module References** for keyless entry control module replacement, programming, and setup

KEYLESS ENTRY SYSTEM MALFUNCTION (ACTIVE)

Diagnostic Instructions

- Perform the **Diagnostic System Check - Vehicle** prior to using this diagnostic procedure.
- Review **Strategy Based Diagnosis** for an overview of the diagnostic approach.
- **Diagnostic Procedure Instructions** provides an overview of each diagnostic category.

Circuit/System Description

The keyless entry transmitter is part of the vehicle key. The keyless entry system will unlock the vehicle doors or open/unlock the rear compartment when a corresponding button on the keyless entry transmitter is pressed. This is accomplished by the keyless entry transmitter sending a radio frequency to the remote control door lock receiver, which then sends the signal to the body control module (BCM). The BCM interprets the signal and activates the requested function. A low transmitter battery or radio frequency (RF) interference from aftermarket devices such as 2-way radios, power inverters, cellular phone chargers, computers, etc. may cause a system malfunction. High RF traffic areas, such as gas stations which use pay-at-the-pump RF transponders, may also cause interference that could lead to a malfunction.

Diagnostic Aids

- Unwanted or inadvertent door lock/unlock activation may be requested by the OnStar® Remote Link app. It is possible that a customer may be unaware of account usage, result in an unwanted or phantom door lock/unlock. If normal system diagnosis does results in an inability to verify the customer's concern, contact Technical Assistance Center (TAC).
- If available, the EL 43241 Keyless Entry Tester may be used to diagnose a low transmitter battery or a malfunctioning transmitter. To test, place the transmitter on the test pad of the EL 43241 and press each transmitter button one at a time, holding each button for three seconds. If the green light on the tester does not illuminate and a tone does not sound, first replace the transmitter battery and retest. If the malfunction continues after replacing the transmitter battery, replace the transmitter.
- When using the EL 43241 Keyless Entry Tester, first inspect the keyless entry transmitter part number to determine that it is the correct model for the vehicle. An incorrect part number transmitter may pass the test, but it will not activate the keyless entry system.
- When the vehicle key is in the ignition, the keyless entry functions are disabled from all keyless entry transmitters.

Reference Information

Schematic Reference

Remote Function Schematics

Connector End View Reference

COMPONENT CONNECTOR END VIEWS - INDEX

Description and Operation

Keyless Entry System Description and Operation (without BTM), **Keyless Entry System Description and Operation (with BTM)**

Electrical Information Reference

- **Circuit Testing**
- **Connector Repairs**
- **Testing for Intermittent Conditions and Poor Connections**
- **Wiring Repairs**

Scan Tool Reference

Control Module References for scan tool information

Special Tools

EL 43241 Keyless Entry Tester

Circuit/System Verification

1. Verify that the vehicle key is correct for the vehicle. This can be accomplished by comparing the part number printed on the key to the appropriate part number in the parts catalog.
    - **If the vehicle key is incorrect**

      Replace the vehicle key.

    - **If the vehicle key is correct**
2. Operate the transmitter while observing the scan tool Key Fob Function parameter for the appropriate transmitter.
3. Verify the scan tool Key Fob Function parameter corresponds with the function selected on the transmitter.
    - **If the Key Fob Function parameter does not correspond with the transmitter selection**

      NOTE: Before replacing the transmitter, inspect the transmitter battery contacts for any corrosion or damage. If no corrosion or damage is

found, replace the transmitter battery and retest before replacing the transmitter.

1. Replace the vehicle key.
2. Operate the new transmitter while observing the scan tool Key Fob Function parameter for the transmitter.
3. Verify the scan tool Key Fob Function parameter correspond with the function selected on the transmitter.
   - If the Key Fob Function parameter does not correspond with the transmitter selection, replace the K9 Body Control Module
   - If the Key Fob Function parameter corresponds with the transmitter selection
4. All OK.

- **If the Key Fob Function parameter corresponds with the transmitter selection**

4. All OK.

Repair Instructions

Perform the **Diagnostic Repair Verification** after completing the repair.

- **Key with Integrated Transmitter Programming (with BTM)** , **Key with Integrated Transmitter Programming (without BTM)**
- **Control Module References** for body control module replacement, programming, and setup

KEYLESS ENTRY SYSTEM MALFUNCTION (PASSIVE)

Diagnostic Instructions

- Perform the **Diagnostic System Check - Vehicle** prior to using this diagnostic procedure.
- Review **Strategy Based Diagnosis** for an overview of the diagnostic approach.
- **Diagnostic Procedure Instructions** provides an overview of each diagnostic category.

Diagnostic Fault Information

Circuit	Short to Ground	Open/High Resistance	Short to Voltage	Signal Performance
Keyless Entry Antenna Signal - Driver Door	B3119 02	B3119 05	B3119 05	-
Keyless Entry Antenna Low Reference - Driver Door	B3119 02	B3119 05	B3119 05	-
Keyless Entry Antenna Signal - Passenger Door	B3120 02	B3120 05	B3120 05	-
Keyless Entry Antenna Low Reference - Passenger	B3120 02	B3120 05	B3120 05	-

Door				
Keyless Entry Antenna Signal - Rear Fascia	B3121 02	B3121 05	B3121 05	-
Keyless Entry Antenna Low Reference - Rear Fascia	B3121 02	B3121 05	B3121 05	-

Circuit/System Description

The keyless entry antennas are used as short range low frequency transmitters. As a vehicle with locked doors is approached with a keyless entry transmitter and the exterior door handle button/rear closure touch pad is pressed, the keyless entry antenna broadcasts a challenge to the transmitter in an approximate one meter range. If the response from the transmitter via radio frequency (RF) is valid, the locked door will be passively unlocked/unlatched and allow the door to be opened. A low transmitter battery or radio frequency (RF) interference from aftermarket devices such as 2-way radios, power inverters, cellular phone chargers, computers, etc. may cause a system malfunction. High RF traffic areas, such as gas stations which use pay-at-the-pump RF transponders, may also cause interference that could lead to a malfunction.

Diagnostic Aids

Unwanted or inadvertent door lock/unlock activation may be requested by the OnStar® Remote Link app. It is possible that a customer may be unaware of account usage, result in an unwanted or phantom door lock/unlock. If normal system diagnosis does results in an inability to verify the customer's concern, contact Technical Assistance Center (TAC).

Reference Information

Schematic Reference

Remote Function Schematics

Connector End View Reference

COMPONENT CONNECTOR END VIEWS - INDEX

Description and Operation

Keyless Entry System Description and Operation (without BTM), **Keyless Entry System Description and Operation (with BTM)**

Electrical Information Reference

- **Circuit Testing**
- **Connector Repairs**
- **Testing for Intermittent Conditions and Poor Connections**
- **Wiring Repairs**

Scan Tool Reference

Control Module References for scan tool information

Circuit/System Verification

1. Ignition ON.
2. Verify that DTC B3119, B3120, or B3121 is not set.
   - **If any of the DTCs are set**

     Refer to **Diagnostic Trouble Code (DTC) List - Vehicle** .

   - **If none of the DTCs are set**
3. Verify that the vehicle key is correct for the vehicle. This can be accomplished by comparing the part number printed on the key to the appropriate part number in the parts catalog.
   - **If the vehicle key is incorrect**

     Replace the vehicle key.

   - **If the vehicle key is correct**
4. Verify the scan tool Exterior Driver Door Handle Switch, Exterior Passenger Door Handle Switch, and Trunk Lid Exterior Unlatch Switch parameters change between Active and Inactive while operating their respective exterior door handle button/rear closure touch pad.
   - **If any of the parameters does not change**

     Refer to **Exterior Door Handle Switch Malfunction** .

   - **If all of the parameters change**
5. Lock the vehicle using the keyless entry transmitter.
6. Verify that each door and the rear compartment unlocks and opens by approaching the vehicle with a valid transmitter and operating their respective exterior door handle button/rear closure touch pad.
   - **If both doors and the rear compartment do not unlock/unlatch and open**

     Refer to Passive Transmitter Malfunction in Circuit/System Testing below.

   - **If only one door or the rear compartment does not unlock/unlatch and open**

     Refer to Antenna Circuit Malfunction in Circuit/System Testing below.

   - **If both doors and the rear compartment unlocks/unlatches and opens**
7. All OK.

Circuit/System Testing

Passive Transmitter Malfunction

1. Lock the vehicle using the keyless entry transmitter.
2. Verify that each door and rear compartment unlocks and opens by approaching the vehicle with a valid transmitter and operating their exterior door handle button/rear closure touch pad.
    - **If both doors and the rear compartment do not unlock/unlatch and open**
    1. Replace the transmitter battery.
    2. Lock the vehicle using the keyless entry transmitter.
    3. Verify that each door and rear compartment unlocks and opens by approaching the vehicle with a valid transmitter and operating their respective release handle/touch pad.
        - If both doors and the rear compartment do not unlock/unlatch and open, replace the vehicle key.
        - If both doors and the rear compartment unlock/unlatch and open
    4. All OK.
    - **If both doors and the rear compartment unlock/unlatch and open**
3. The concern may be caused by temporary RF interference. Discuss the conditions in which the concern occurs with the customer. RF interference from aftermarket devices such as 2-way radios, power inverters, cellular phone chargers, computers, etc. may cause a system malfunction. High RF traffic areas, such as gas stations which use pay-at-the-pump RF transponders, may also cause interference that could lead to a malfunction.

Antenna Circuit Malfunction

1. Ignition OFF, disconnect the harness connector at the inoperative T10 Keyless Entry Antenna, ignition ON.
2. Test for less than 1 V between the signal circuit terminal 1 and ground.
    - **If 1 V or greater**
    1. Ignition OFF, disconnect the harness connector at the K84 Keyless Entry Control Module, ignition ON.
    2. Test for less than 1 V between the signal circuit and ground.
        - If 1 V or greater, repair the short to voltage on the circuit.
        - If less than 1 V, replace the K84 Keyless Entry Control Module.
    - **If less than 1 V**

NOTE: When using the MIN MAX function, autorange on the DMM may not function properly. To ensure accurate test results, turn off autorange and manually set the DMM range to 000.0 V.

3. Ignition OFF, install a DMM between the signal circuit terminal 1 and ground. Set the DMM to capture DC voltage using the MIN MAX function. Turn off autorange and manually set the DMM range to 000.0 V.
4. Lock the vehicle doors using the keyless entry transmitter. Activate the antenna by operating the appropriate exterior door handle button/rear closure touch pad.
5. Verify the MAX voltage captured by the DMM is greater than 1 V.

- **If 1 V or less**

1. Ignition OFF, disconnect the harness connector at the K84 Keyless Entry Control Module.
2. Test for infinite resistance between the signal circuit and ground.
   - If less than infinite resistance, repair the short to ground on the circuit.
   - If infinite resistance
3. Test for less than 2 ohms in the signal circuit end to end.
   - If 2 ohms or greater, repair the open/high resistance in the circuit.
   - If less than 2 ohms, replace the K84 Keyless Entry Control Module.

- **If greater than 1 V**

6. Test for less than 1 V between the low reference circuit terminal 2 and ground.
   - **If 1 V or greater**

1. Ignition OFF, disconnect the harness connector at the K84 Keyless Entry Control Module, ignition ON.
2. Test for less than 1 V between the low reference circuit and ground.
   - If 1 V or greater, repair the short to voltage on the circuit.
   - If less than 1 V, replace the K84 Keyless Entry Control Module.

- **If less than 1 V**

NOTE: When using the MIN MAX function, autorange on the DMM may not function properly. To ensure accurate test results, turn off autorange and manually set the DMM range to 000.0 V.

7. Install a DMM between the signal circuit terminal 1 and the low reference circuit terminal 2. Set the DMM to capture DC voltage using the MIN MAX function. Turn off autorange and manually set the DMM range to 000.0 V.
8. Lock the vehicle doors using the keyless entry transmitter. Activate the antenna by operating the appropriate exterior door handle button/rear closure touch pad.
9. Verify the MAX voltage captured by the DMM is greater than 1 V.
   - **If 1 V or less**

1. Ignition OFF, disconnect the harness connector at the K84 Keyless Entry Control Module.
2. Test for infinite resistance between the low reference circuit and ground.
   - If less than infinite resistance, repair the short to ground on the circuit.
   - If infinite resistance
3. Test for less than 2 ohms in the low reference circuit end to end.
   - If 2 ohms or greater, repair the open/high resistance in the circuit.
   - If less than 2 ohms, replace the K84 Keyless Entry Control Module.

   - **If greater than 1V**

10. Replace the appropriate T10 Keyless Entry Antenna.
11. Lock the vehicle doors using the keyless entry transmitter. Activate the antenna by operating the appropriate exterior door handle button/rear closure touch pad.

12. Verify that the door/rear compartment unlocks and opens when the exterior door handle button/rear closure touch pad is operated.
    - **If the door/rear compartment does not unlock and open**

      Replace the K84 Keyless Entry Control Module.

    - **If the door/rear compartment unlocks and opens**
13. All OK.

Repair Instructions

Perform the **Diagnostic Repair Verification** after completing the repair.

- **Key with Integrated Transmitter Programming (with BTM)** , **Key with Integrated Transmitter Programming (without BTM)**
- **Front Side Door Outside Handle Bracket Replacement**
- **Ignition Lock Key Transmitter Antenna Replacement - Rear Bumper Fascia**
- **Control Module References** for keyless entry control module replacement, programming, and setup

REMOTE VEHICLE START MALFUNCTION

Diagnostic Instructions

- Perform the **Diagnostic System Check - Vehicle** prior to using this diagnostic procedure.
- Review **Strategy Based Diagnosis** for an overview of each diagnostic approach.
- **Diagnostic Procedure Instructions** provides an overview of each diagnostic category.

Circuit/System Description

Remote vehicle start begins as an radio frequency message received by the body control module (BCM) from a keyless entry transmitter. The BCM monitors system conditions such as content theft deterrent, hood ajar status, and body DTCs to determine if a remote vehicle start event will occur. If conditions are determined to be acceptable, the remote vehicle start message is sent to the Engine Control Module (ECM). The ECM monitors system conditions such as engine control parameters and vehicle theft deterrent to determine if engine starting will be allowed. If conditions are acceptable, the ECM will initiate engine starting. During the engine run time in a remote vehicle start attempt, before the operator enters the vehicle, the ECM may discontinue engine operation if system conditions require it or a message is received from the BCM requesting the engine be turned OFF.

Diagnostic Aids

- Unwanted or inadvertent door lock/unlock activation may be requested by the OnStar® Remote Link app. It is possible that a customer may be unaware of account usage, result in an unwanted or phantom door lock/unlock. If normal system diagnosis does results in an inability to verify the customer's concern, contact Technical Assistance Center (TAC).
- If the vehicle has a current DTC that illuminates the malfunction indicator lamp (MIL), the cause of the

DTC must be diagnosed before proceeding with the Remote Vehicle Start Inoperative diagnostic.

- The remote vehicle start system will not operate if any of the following conditions are present:
  - A current vehicle DTC that illuminates the malfunction indicator lamp (MIL)
  - The vehicle is in valet mode.
  - More than 2 remote starts have been attempted.
  - The hazard switch is in the ON position.
  - A current hazard switch DTC is set.
  - The vehicle hood is ajar.
  - A current hood ajar DTC is set.
  - Incorrect BCM software is installed and vehicle start is not enabled.
  - The content theft deterrent system detects an alarm trigger.
  - Excessive engine RPM
  - Excessive coolant temperature
  - Accelerator pedal position greater than 0 percent
  - Vehicle not in park
  - Vehicle theft deterrent malfunction
  - A current automatic transmission shift lock control system DTC is set.
  - A vehicle speed sensor signal is detected by the ECM.

Reference Information

Schematic Reference

Remote Function Schematics

Connector End View Reference

COMPONENT CONNECTOR END VIEWS - INDEX

Description and Operation

Keyless Entry System Description and Operation (without BTM), **Keyless Entry System Description and Operation (with BTM)**

Electrical Information Reference

- **Circuit Testing**
- **Connector Repairs**
- **Testing for Intermittent Conditions and Poor Connections**
- **Wiring Repairs**

Scan Tool Reference

Control Module References for scan tool information

Circuit/System Verification

1. Verify that the keyless entry functions operate with all available keyless entry transmitters.
   - **If any keyless entry functions do not operate properly**

     Refer to **Keyless Entry System Malfunction (Active)**, **Keyless Entry System Malfunction (Passive)**.

   - **If all keyless entry functions operate properly**
2. Verify that no Diagnostic Status History or Start Disable items are present in the scan tool BCM Remote Start Diagnostic Status History and the ECM Remote Vehicle Start Disable History parameters.
   - **If remote vehicle start disable history items are present**

     Refer to the appropriate subsection in which the malfunction occurred.

   - **If remote vehicle start disable history items are not present**
3. Verify all scan tool BCM Content Theft Trigger History parameters display None.
   - **If any BCM Content Theft Trigger History parameter does not display None**

     Refer to **Content Theft Deterrent Malfunction** .

   - **If all BCM Content Theft Trigger History parameters display None**
4. All OK.

REPAIR INSTRUCTIONS

IGNITION LOCK KEY TRANSMITTER ANTENNA REPLACEMENT - INSTRUMENT PANEL

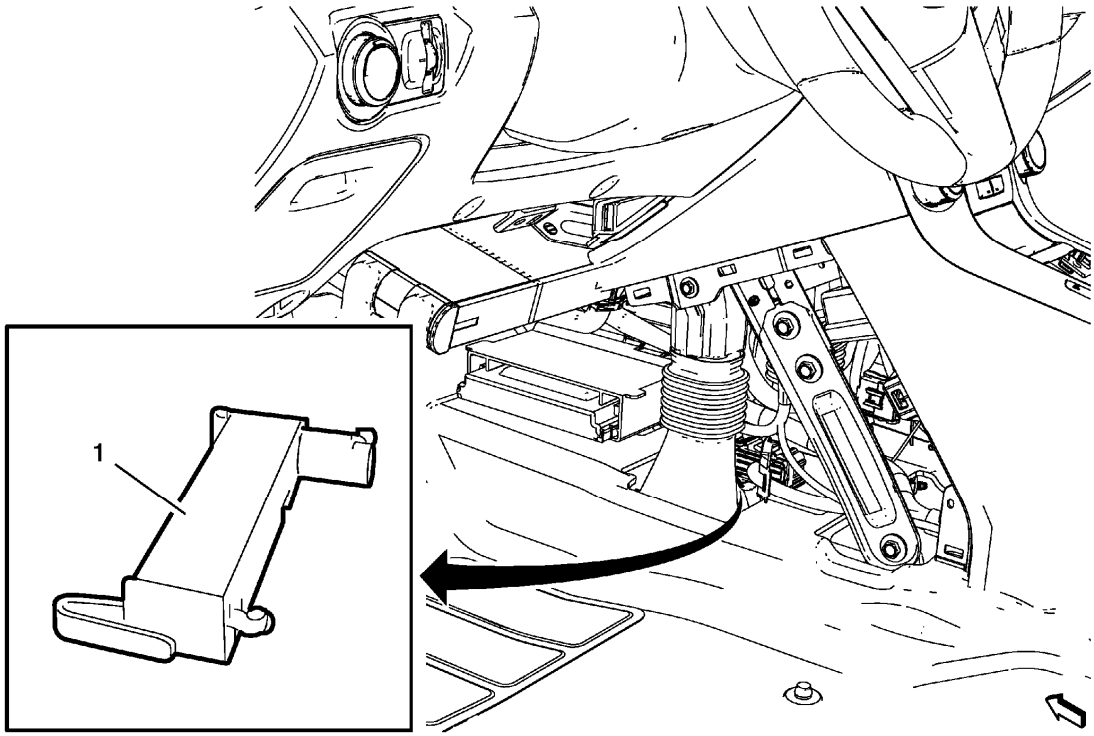

Fig. 5: Ignition Lock Key Transmitter Antenna - Instrument Panel
Courtesy of GENERAL MOTORS COMPANY

Ignition Lock Key Transmitter Antenna Replacement - Instrument Panel

Callout	Component Name
Preliminary Procedures Remove the instrument panel lower trim panel. Refer to **Instrument Panel Lower Trim Panel Replacement - Left Side** .	
1	Ignition Lock Key Transmitter Antenna - Instrument Panel **Procedure** 1. To access the antenna remove the air duct. 2. Disconnect the electrical connector.

IGNITION LOCK KEY TRANSMITTER ANTENNA REPLACEMENT - FLOOR CONSOLE

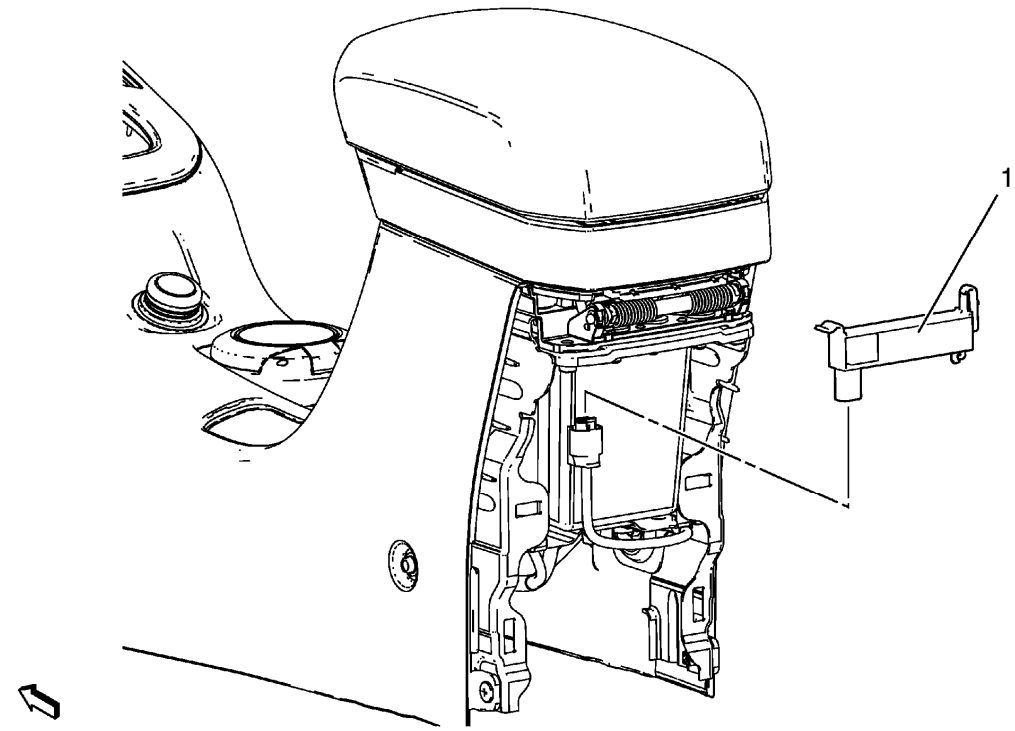

Fig. 6: Ignition Lock Key Transmitter Antenna
Courtesy of GENERAL MOTORS COMPANY

Ignition Lock Key Transmitter Antenna Replacement - Floor Console

Callout	Component Name
Preliminary Procedures Remove the Front Floor Console Rear Cover. Refer to **Front Floor Console Rear Cover Replacement** .	
1	Ignition Lock Key Transmitter Antenna **Procedure** Disconnect the electrical connection.

IGNITION LOCK KEY TRANSMITTER ANTENNA REPLACEMENT - REAR COMPARTMENT

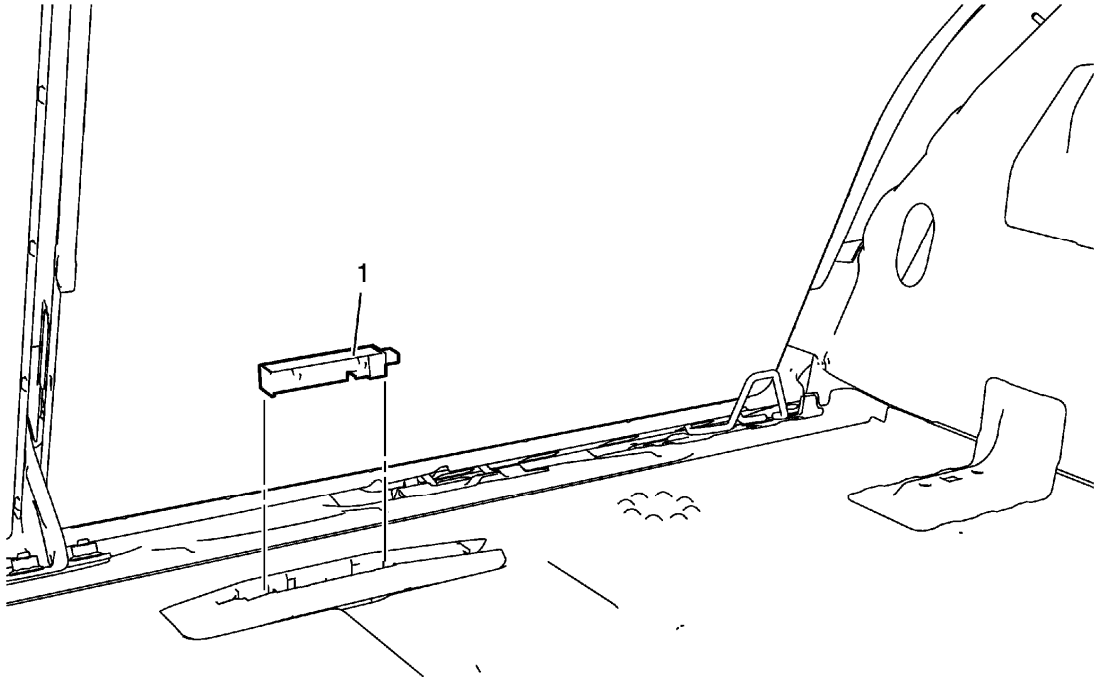

Fig. 7: Ignition Lock Key Transmitter Antenna - Rear Compartment
Courtesy of GENERAL MOTORS COMPANY

Ignition Lock Key Transmitter Antenna Replacement - Rear Compartment

Callout	Component Name
1	Ignition Lock Key Transmitter Antenna - Rear Compartment **Procedure** 1. Remove the rear compartment floor panel carpet. 2. Disconnect the electrical connector.

IGNITION LOCK KEY TRANSMITTER ANTENNA REPLACEMENT - REAR BUMPER FASCIA

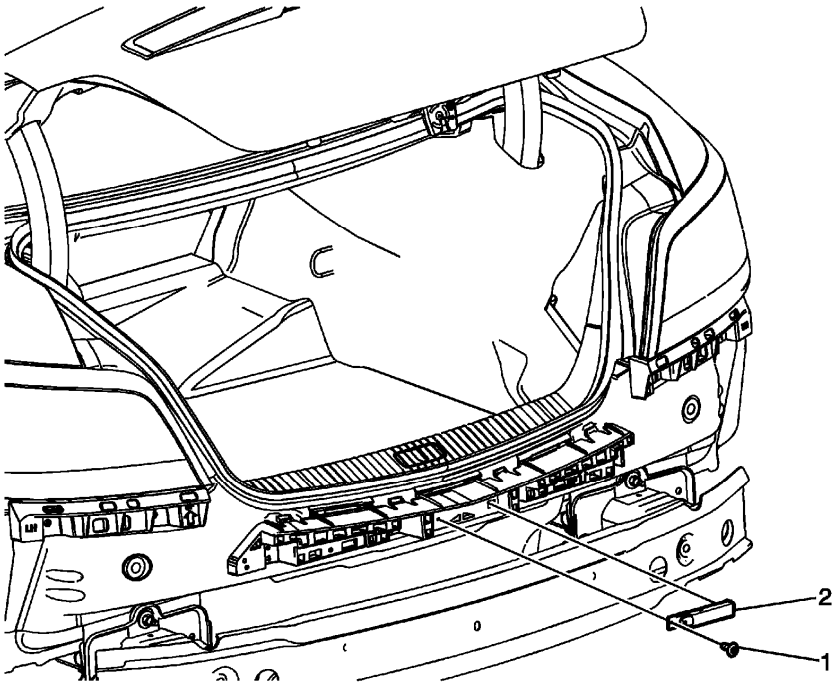

Fig. 8: Ignition Lock Key Transmitter Antenna - Rear Bumper Fascia
Courtesy of GENERAL MOTORS COMPANY

Ignition Lock Key Transmitter Antenna Replacement - Rear Bumper Fascia

Callout	Component Name
Preliminary Procedures Remove the rear bumper fascia. Refer to **Rear Bumper Fascia Replacement** .	
1	Ignition Lock Key Transmitter Antenna Fastener **CAUTION:** **Refer to Fastener Caution .**
2	Ignition Lock Key Transmitter Antenna - Rear Bumper Fascia **Procedure** Disconnect the electrical connector.

IGNITION LOCK KEY TRANSMITTER ANTENNA BRACKET REPLACEMENT

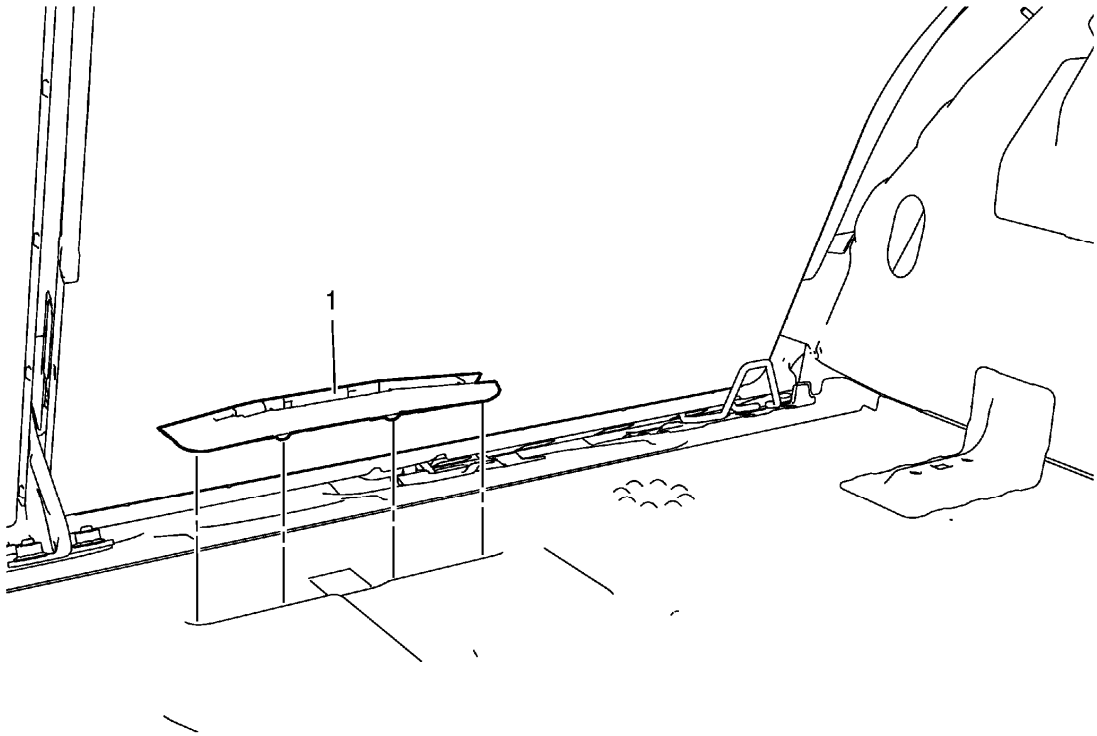

Fig. 9: Ignition Lock Key Transmitter Antenna Bracket
Courtesy of GENERAL MOTORS COMPANY

Ignition Lock Key Transmitter Antenna Bracket Replacement

Callout	Component Name
Preliminary Procedures Remove the ignition lock key transmitter antenna - rear compartment. Refer to **Ignition Lock Key Transmitter Antenna Replacement - Rear Compartment**.	
1	Ignition Lock Key Transmitter Antenna Bracket **Procedure** 1. Use a suitable tool to release the bracket. 2. Remove double sided tape and clean surfaces using a appropriate solvent. When installing the bracket, apply new double sided tape. Press in place until secure.

KEYLESS ENTRY CONTROL MODULE REPLACEMENT

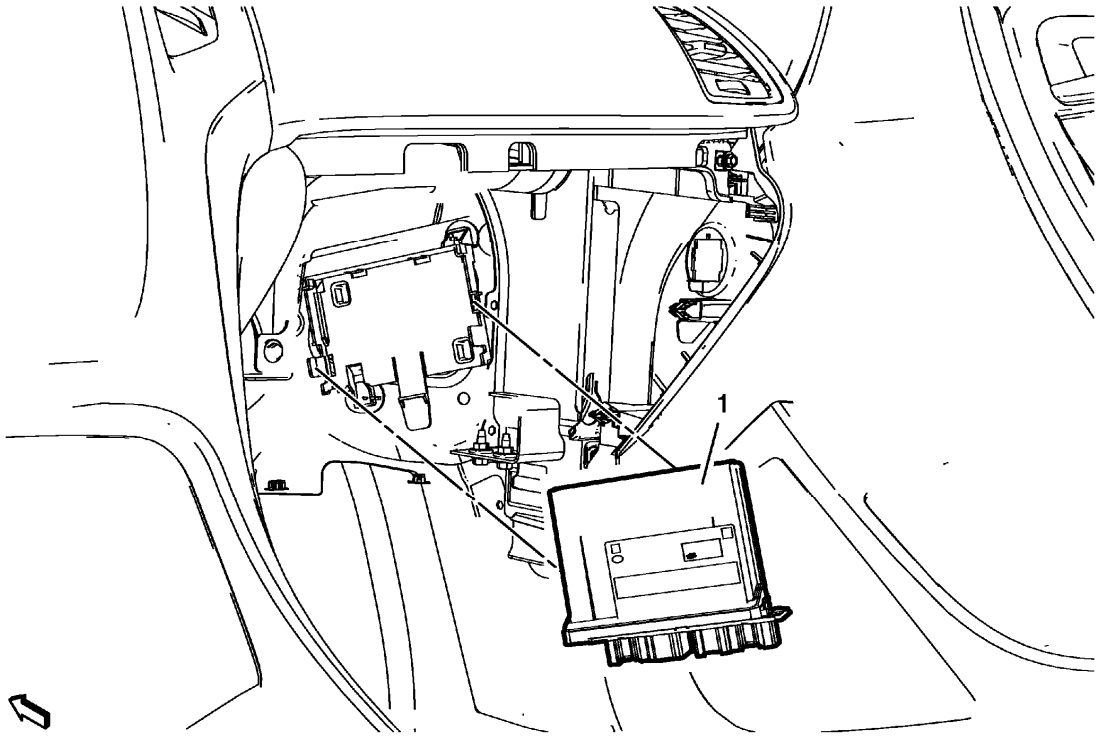

Fig. 10: Keyless Entry Control Module
Courtesy of GENERAL MOTORS COMPANY

Keyless Entry Control Module Replacement

Callout	Component Name
Preliminary Procedures 1. Remove the right instrument panel insulator panel. Refer to **Instrument Panel Insulator Panel Replacement - Right Side** . 2. Remove the front side door sill trim plate. Refer **Front Side Door Sill Trim Plate Replacement** .	
1	Keyless Entry Control Module **Procedure** 1. Disconnect the electrical connector. 2. For programming and setup information refer to **Control Module References** .

KEYLESS ENTRY CONTROL MODULE BRACKET REPLACEMENT

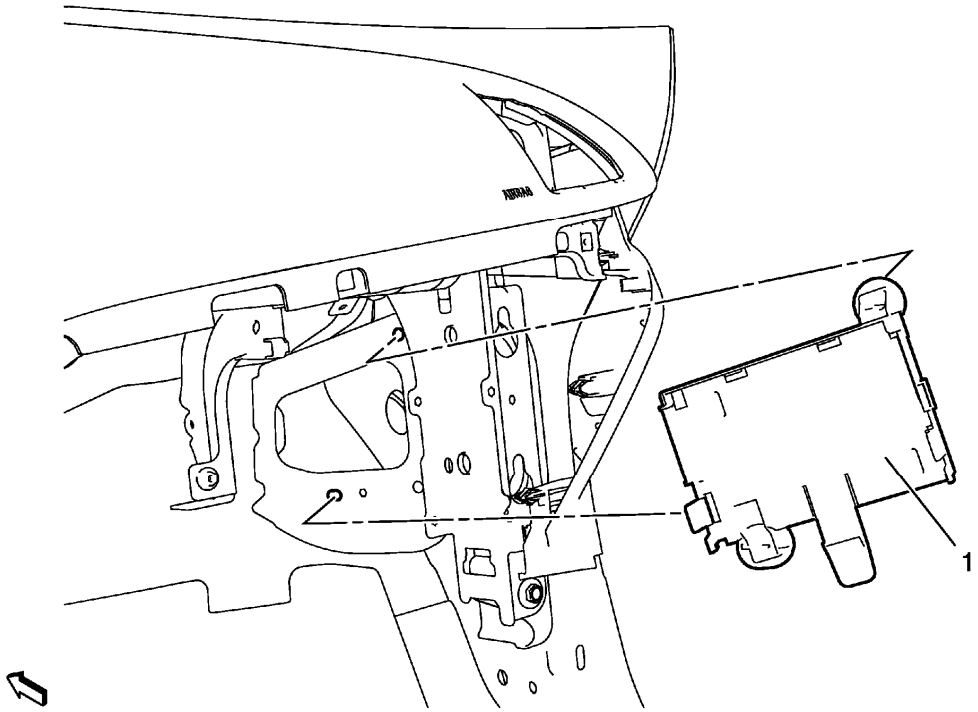

Fig. 11: Keyless Entry Control Module Bracket
Courtesy of GENERAL MOTORS COMPANY

Keyless Entry Control Module Bracket Replacement

Callout	Component Name
Preliminary Procedures Remove the keyless entry control module. Refer to **Keyless Entry Control Module Replacement**.	
1	Keyless Entry Control Module Bracket **Procedure** Use a suitable tool to release the bracket.

REMOTE CONTROL DOOR LOCK RECEIVER REPLACEMENT

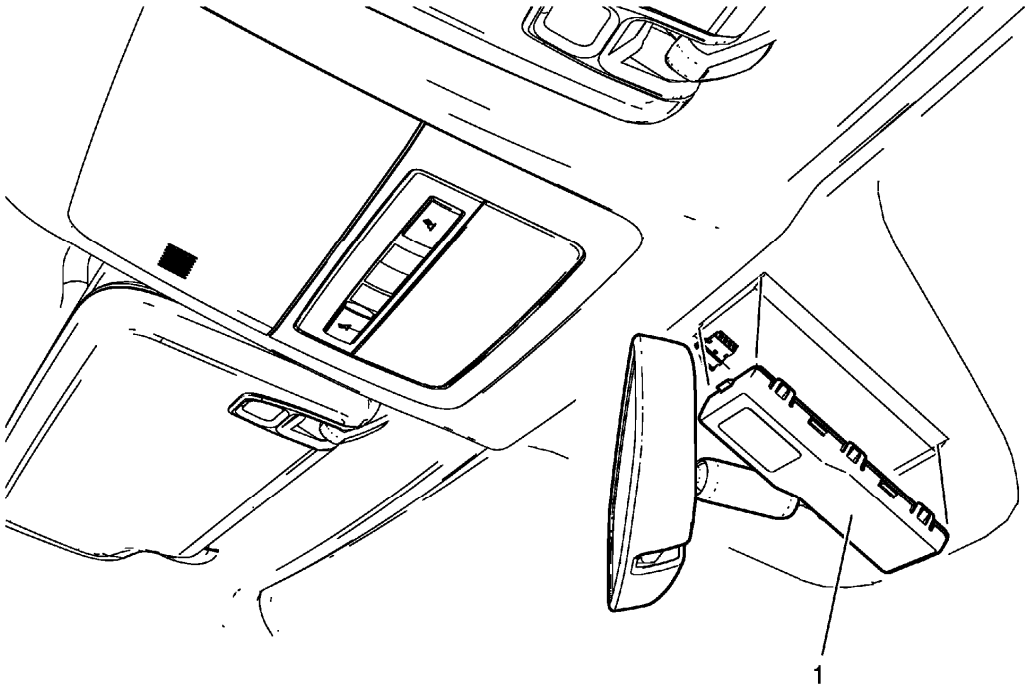

Fig. 12: Remote Control Door Lock Receiver
Courtesy of GENERAL MOTORS COMPANY

Remote Control Door Lock Receiver Replacement

Callout	Component Name
Preliminary Procedures Remove the inside rearview mirror mount plate cover. Refer to **Inside Rearview Mirror Mount Plate Cover Replacement** .	
1	Remote Control Door Lock Receiver **Procedure** 1. Disconnect wiring connector. 2. Remove from bracket.

DESCRIPTION AND OPERATION

KEYLESS ENTRY SYSTEM DESCRIPTION AND OPERATION (WITHOUT BTM)

The keyless entry system is a vehicle entry device. The keyless entry system is used in conjunction with the door locks to unlock the vehicle. Keyless entry will lock/unlock the vehicle doors or open the rear compartment lid when a corresponding button on the keyless entry transmitter is pressed. This is accomplished by the transmitter sending a radio frequency to the Remote Control Door Lock Receiver antenna that has a direct link to the Body Control Module (BCM). The BCM interprets the signal and activates the requested function or request the appropriate control module to activate the function via a serial data message. A low transmitter

battery or radio frequency interference from aftermarket devices, such as 2-way radios, power inverters, computers, etc., may cause a system malfunction. High radio frequency traffic areas, such as gas stations that use pay-at-the-pump radio frequency transponders, may also cause interference that could lead to a malfunction. Keyless entry allows you to operate the following features:

- Door lock/unlock
- Liftgate lock/unlock, if equipped
- Trunk release, if equipped
- Power liftgate, if equipped
- Vehicle locator/Panic alarm
- Remote vehicle starting, if equipped

The keyless entry system has the following components:

- Keyless entry transmitters
- Body Control Module
- Remote Control Door Lock Receiver

Keyless Entry Transmitters

NOTE: When the vehicle key is in the ignition, keyless entry functions from all keyless entry transmitter are disabled.

The keyless entry transmitters are used to perform various entry functions while away from the immediate are of the vehicle. Keyless entry functions may work at up to 20 m (65 ft) away from the vehicle. Ambient conditions may affect the performance of the keyless entry transmitter and reduce the range at which keyless entry functions operate. Up to eight transmitters may be programmed to a single vehicle. The keyless entry transmitter is an integral part of the vehicle key.

OnStar® Remote Link (if equipped)

A vehicle operator may have the ability to perform some of the keyless entry functions using applications on personal devices such as a smart phone. Unwanted or inadvertent door lock/unlock activation may be requested by the OnStar® Remote Link app. It is possible that a customer may be unaware of account usage, result in an unwanted or phantom door lock/unlock. If normal system diagnosis does results in an inability to verify the customer's concern, contact Technical Assistance Center (TAC).

Body Control Module (BCM)

The BCM is a multifunction module that operates the keyless entry system. When an radio frequency message is received from a keyless entry transmitter, the BCM interprets this signal and performs the specific function, i.e. door lock, door unlock, or vehicle locate.

Remote Control Door Lock Receiver

The Remote Control Door Lock Receiver acts as an antenna for the keyless entry system and communicates

with the BCM through a dedicated serial data link. When a button is pressed on a keyless entry transmitter, the Remote Control Door Lock Receiver receives this signal and sends the request to the BCM. The BCM interprets the signal and performs the specific function, i.e. door lock, door unlock, or vehicle locate.

Unlock Doors

Momentarily press the transmitter UNLOCK button in order to perform the following functions:

- Unlock only the driver door or all doors and liftgate (if equipped); this is customized through the DIC.
- Illuminate the interior lamps for a determined length of time or until the ignition is turned ON.
- Flash the exterior lights; this is customized through the DIC.
- Disarm the content theft deterrent system, if equipped.
- Deactivate the content theft deterrent system when in the alarm mode.

Lock All Doors

Press the transmitter LOCK button to perform the following functions:

- Lock all vehicle doors.
- Immediately turn OFF the interior lamps.
- Flash the exterior lights and/or sound the horn; this is customized through the DIC.
- Arm the content theft deterrent system.

Trunk Release, if equipped

Press the trunk release button on the transmitter to open the trunk.

Power Liftgate, if equipped

Press and hold the power liftgate button to perform the following functions:

- Open or close the liftgate using the power liftgate function.
- Flash the tail lamps.
- Sound the interior power liftgate chime.

Vehicle Locator/Panic Alarm

A single press of the panic button performs the following functions. Some functions may be dependent on personalization settings:

- Pulse the horn three times.
- Flash the exterior lamps three times.

A press and hold of the panic button performs the following functions:

- Illuminate the interior lamps.
- Pulse the horn and flash the exterior lamps for 30 seconds or until the following conditions occur:
  - The panic button is pressed.
  - The ignition switch is turned to the RUN position with a valid key.

Remote Vehicle Start, if equipped

The remote vehicle start function allows engine starting while not in the vehicle. It also allows the vehicle HVAC system and other vehicle systems to enable, providing a comfortable vehicle upon entry. The remote vehicle start sequence begins by pressing and releasing the lock button and then pressing and holding the remote vehicle start buttons on the keyless entry transmitter. The turn signal lamps will illuminate to indicate the vehicle has received the remote start request. Each time an remote vehicle start is performed, the vehicle doors are locked, however they may then be unlocked/locked with the transmitter or vehicle key at any time. Once activated, the engine is allowed to run for 10 minutes. The remote vehicle start time may be extended by an additional 10 minutes by again pressing and releasing the lock button and then pressing and holding the remote vehicle start buttons on the transmitter. This feature is called a remote vehicle start continue and allows a maximum of 20 minutes of engine running. If the remote vehicle start continue is performed at seven minutes into the initial 10 minute time-out, a total of 17 minutes of engine running would occur. The remote vehicle start event may be suspended at any time by pressing only the remote vehicle start button on the transmitter or by entering the vehicle and pressing the hazard lamp switch.

In between ignition cycles, only two remote vehicle start events may occur or be attempted. Once two events or attempts have been made, future remote vehicle start events will be suspended until the vehicle is started using the ignition.

Enable/Disable Remote Vehicle Start

Using the driver information center, remote vehicle start may be enabled or disabled as a part of vehicle personalization. Refer to the vehicle owners manual for more information.

Hood Ajar Switch

The hood switch provides status of the hood to the BCM for remote vehicle start purposes. The switch is integrated into the hood latch assembly.

Remote Vehicle Start Circuit Description

The BCM receives a signal from the keyless entry transmitter indicating a remote vehicle start request. A message is then sent to the BCM which determines if a crank request message will be sent to the ECM to allow engine starting. To determine if conditions are correct for an remote vehicle start event, the BCM will ensure the following conditions are met:

- A valid hood ajar switch closed signal is present.
- The doors are locked.
- The hazard switch is OFF.
- The vehicle power mode is correct.

- No content theft deterrent alarm triggers are present.

When the BCM determines all conditions meet those required for an remote vehicle start event, a message is sent via serial data to the ECM. The ECM relies on the remote vehicle start message from BCM to enable remote vehicle start when the crank request signal is received. If the ECM does not receive a valid remote vehicle start message, it will not attempt to start the engine. While the ECM is in remote vehicle start mode it will suspend engine operation if any of the following additional conditions occur:

- Vehicle speed is greater than 0.
- Transmission is not in PARK.
- Excessive engine coolant temperature
- Low oil pressure
- The malfunction indicator lamp (MIL) is commanded ON.
- Engine crank time is greater than 30 seconds.
- Excessive engine speed
- Accelerator pedal position too high
- Remote start timer equals 0.
- Immobilizer system indicates tamper

Keyless Entry Personalization

Vehicle lock/unlock functions and remote vehicle start remote vehicle start settings may be personalized. For functional descriptions and personalization instructions, refer to the vehicle owners manual.

KEYLESS ENTRY SYSTEM DESCRIPTION AND OPERATION (WITH BTM)

NO TITLE

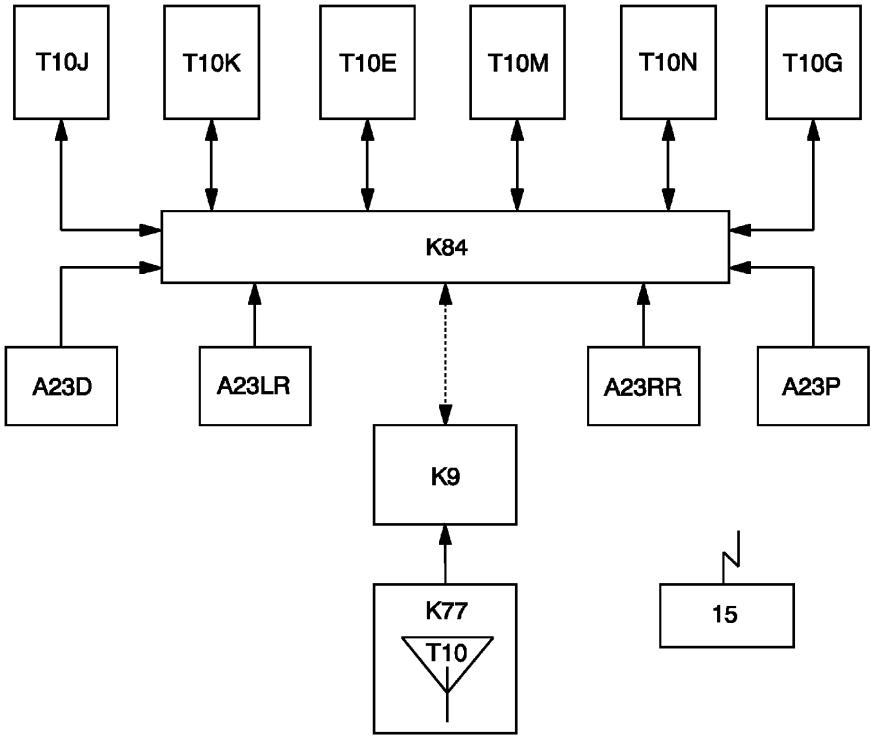

Fig. 13: Keyless Entry System Description And Operation Diagram (With BTM)
Courtesy of GENERAL MOTORS COMPANY

Solid line - Hard Wire I/O	
Dash line - Serial Data	
K9	Body Control Module (BCM)
K77	Remote Control Door Lock Receiver
T10	Keyless Entry Antenna
15	Keyless Entry Transmitter
With RPO ATH	
A23D	Door Latch - Driver
A23LR	Door Latch - Left Rear
A23P	Door Latch - Passenger
A23RR	Door Latch - Right Rear
K84	Keyless Entry Control Module
T10G	Keyless Entry Antenna - Rear Fascia
T10M	Keyless Entry Antenna - Driver Door Handle
T10N	Keyless Entry Antenna - Passenger Door Handle
With RPO BTM	
T10E	Keyless Entry Antenna - Rear Compartment
T10J	Keyless Entry Antenna - Center Console Front
T10K	Keyless Entry Antenna - Center Console Rear

Keyless Entry System Description and Operation - Active

The keyless entry system is a vehicle entry device. The keyless entry system is used in conjunction with the door locks to unlock the vehicle. Keyless entry will lock/unlock a door or open the rear compartment lid when a corresponding button on the keyless entry transmitter is pressed. This is accomplished by the transmitter sending a radio frequency to the remote control door lock receiver antenna that has a direct link to the body control module (BCM). The BCM interprets the signal and activates the requested function or request the appropriate ECU to activate the function via a serial data message. A low transmitter battery or radio frequency interference from aftermarket devices, such as 2-way radios, power inverters, computers, etc., may cause a system malfunction. High radio frequency traffic areas, such as gas stations that use pay-at-the-pump radio frequency transponders, may also cause interference that could lead to a malfunction. Keyless entry allows you to operate the following features:

- Door lock/unlock
- Rear compartment lid release
- Illuminated entry lamps
- Panic alarm/Vehicle locator
- Remote vehicle start
- Automatic window express down, if equipped. Automatic window express up, if equipped

Keyless Entry System Description and Operation - Passive

Passive keyless entry allows entry to a locked vehicle without pressing any buttons on the keyless entry transmitter. You must only have the transmitter with you. The passive entry system use low frequency antennas in several different areas on the vehicle to determine the location of the transmitter. When passively opening a locked door or the rear compartment, you must have a programmed transmitter with you in your pocket, purse, or briefcase within a one meter range.

When an exterior door handle button is pressed or the rear compartment touch pad is pressed, the low frequency antenna sends out a challenge to the keyless entry transmitter. Because of the low frequency, communication range is limited. The antenna will emit the challenge in a one meter range. The transmitter must be within this range to receive the challenge. The transmitter receives this challenge and emits it's response as an RF message, which is received by the remote control door lock receiver. If the response is correct, entry into the vehicle will be allowed.

As a customer convenience feature, the keyless entry system will notify the driver if the transmitter has been left in the vehicle after exiting by chirping the vehicle horn three times. This may be turned off using vehicle personalization. Also, if the transmitter is left in the vehicle after the central door lock switch has been used to lock the vehicle, the driver door will remain unlock after exiting the vehicle. This is intended to prevent locking the transmitter in the vehicle and being unable to access it.

Keyless Entry System Description and Operation - Keyless Start

The keyless start portion of the keyless entry system allows vehicle starting, having only the transmitter as your key. The keyless start system use low frequency antennas in three different locations on the vehicle to determine the location of the transmitter. Multiple antenna are used to ensure complete coverage of the vehicle interior and rear compartment. When using the keyless start system, a programmed transmitter must be in the vehicle's interior, in the driver's pocket, purse, or briefcase.

When the ignition mode switch is pressed, the low frequency antennas emit a challenge to the keyless entry transmitter. The transmitter receives this challenge and emits it's response as an RF message, which is received by the remote control door lock receiver. If the response is correct, vehicle starting will be allowed. If RF communication is interrupted, a "No Remote Detected" message will be displayed on the DIC. In these cases, the transmitter can be placed in the transmitter pocket located in the center console, under the cupholder. The immobilizer antenna coil is located directly beneath the transmitter pocket. Placing the transmitter in the pocket will create a low powered coupling between the transmitter and immobilizer antenna, allowing communications to occur and enabling vehicle starting.

The keyless entry system has the following components:

- Keyless entry integrated key/transmitter
- Driver and front passenger door antennas (part of the door handle assembly)
- Driver and front passenger door handle switches (part of the door handle assembly)
- Rear fascia antenna
- Front console antenna
- Rear console antenna
- Trunk antenna (rear compartment)
- Body control module (BCM)
- Keyless entry control module
- Immobilizer antenna coil assembly
- Remote control door lock receiver

Keyless Entry Transmitters

By operating any of the exterior door handle buttons, a nearby transmitter is challenged by a keyless entry antenna. The transmitter will send an RF response to the remote control door lock receive, which communicates with the BCM. The BCM will interpret this communication and either allow entry into the vehicle or deny it.

Door Antennas

The keyless entry door antennas are used to transmit low frequency communications to the keyless entry transmitters.

The keyless entry door antennas are located in the left front and right front exterior door handle bracket. The antennas are serviced as part of the door handle assembly. The antennas are controlled by the keyless entry control module. When the exterior door handle button is pressed, the respective antenna will send out a challenge to the keyless entry transmitter, which begins the passive entry communications.

Rear Fascia Antenna

The rear fascia antenna is used to transmit low frequency communication to the keyless entry transmitters for entry to rear compartment.

The rear fascia antenna is located behind the rear fascia. The antenna is controlled by the keyless entry control

module. When the rear compartment touch pad is pressed, the antenna sends out a challenge to the keyless entry transmitter, which begins the passive entry communications.

Front Console Passive (Instrument Panel) Antenna

This antenna is located in the lower instrument panel near the front of the center console.

The front console antenna is used for vehicle starting functions. When the ignition mode switch is pressed, the antenna is energized or "pinged". This emits a low frequency challenge signal that is received by the keyless entry transmitter. The transmitter will then reply to this challenge with a response and, if correct, vehicle starting will occur.

Rear Console Antenna

This antenna is located in the rear of the center console.

The rear console antenna is used for vehicle starting functions. When the ignition mode switch is pressed, the antenna is energized or "pinged". This emits a low frequency challenge signal that is received by the keyless entry transmitter. The transmitter will then reply to this challenge with a response and, if correct, vehicle starting will occur.

Rear Compartment Antenna

This antenna is located in the center of the rear compartment metal floor pan, near the seatback.

The rear compartment antenna is used for vehicle starting functions. When the ignition mode switch is pressed, the antenna is energized or "pinged". This emits a low frequency challenge signal that is received by the keyless entry transmitter. The transmitter will then reply to this challenge with a response and, if correct, vehicle starting will occur.

Immobilizer Antenna Coil Assembly

The immobilizer coil assembly is located in the center console, directly beneath the transmitter pocket. If the transmitter battery is dead, weak, or the RF signal is being interrupted, the transmitter may be placed in the pocket to create a low powered coupling between the transmitter and immobilizer antenna, allowing communications to occur and enabling vehicle starting.

The immobilizer antenna coil is controlled by the BCM. The immobilizer control module is also active when learning vehicle keys.

Keyless Entry Control Module

The keyless entry control module is a multi-function module which performs the following keyless entry system functions:

- Activating vehicle antennas for passive keyless entry functions
- Activating vehicle antennas for keyless start functions
- Backup control for the ECM accessory wakeup and the run/crank relay

- If equipped, controls the electronic steering column lock
- Receiver of the exterior door handle switch inputs and door open switch (not the door ajar switch)
- Ignition mode switch monitoring

OnStar® Remote Link (if equipped)

A vehicle operator may have the ability to perform some of the keyless entry functions using applications on personal devices such as but not limited to smart phones. A condition may appear as if there is a malfunction in the vehicle. If it is suspected that this may be the case contact Technical Assistance if a condition cannot be determined through normal vehicle diagnostics.

Body Control Module (BCM)

The BCM is a multi-function module that performs the following functions:

- Receive and authenticate active transmitter and keyless start signals from the remote control door lock receiver
- Determines the functionality requested by the transmitter signal
- Performs the function requested by the transmitter signal

Unlock Driver Door Only - Active

Momentarily press the transmitter UNLOCK button in order to perform the following functions:

- Unlock only the driver door
- Illuminate the interior lamps for a determined length of time, or until the ignition is turned ON
- Flash the exterior lights, if enable through personalization
- Disarm the Content Theft Deterrent (CTD) system
- Deactivate the CTD system when in the alarm mode

Unlock All Doors - Second Operation - Active

Momentarily press the transmitter UNLOCK button a second time, within 5 seconds of the first press, to perform the following function:

Unlock the remaining doors

Unlock Driver Door Only - Passive

If enabled through personalization, approach the driver door with a valid keyless entry transmitter and press the door handle button to perform the following functions:

- Unlock and open only the driver door
- Disarm the CTD system, if equipped
- Deactivate the CTD system when in the alarm mode

Unlock All Doors - Passive

Approach any non driver door (front or rear) or, if enabled through personalization, the driver door with a valid keyless entry transmitter and press the door handle button to perform the following functions:

- Unlock all vehicle doors
- Disarm the CTD system, if equipped
- Deactivate the CTD system when in the alarm mode

Lock All Doors - Active

Press the transmitter LOCK button to perform the following functions:

- Lock all vehicle doors
- Immediately turn off the interior lamps
- Flash the exterior lights, if enabled through personalization
- Chirp the horn, if enabled through personalization
- Arm the CTD system

Lock All Doors - Passive

Exit the vehicle (with ignition off) with the keyless entry transmitter to automatically perform the following functions, if equipped.

- Lock all vehicle doors after a delay
- Flash the exterior lights, if enabled through personalization
- Chirp horn, if enabled through personalization
- Arm the CTD system

When all doors are closed, they can also be locked from the exterior by pressing a front door handle button while having a valid transmitter within range.

If more than one keyless entry transmitter is within a vehicle and the Keyless Entry System detects that one or more transmitters have been left in the vehicle after vehicle is locked, any transmitter left within the vehicle will be temporarily deactivated until:

- A button on the deactivated key fob is pressed (will only activate the fob whose button is pressed)
- A passive unlock of vehicle occurs
- Change in power mode occurs

Rear Compartment Lid Release - Active

If the vehicle transaxle is in PARK or NEUTRAL and the ignition is in the OFF position, a single press of the transmitter rear compartment release button will open the rear compartment lid.

Rear Compartment Lid Release - Passive

Approach the rear of the vehicle with a valid keyless entry transmitter. Press the rear compartment lid release touch pad. The rear compartment lid will open.

If vehicle is not equipped with trunk antenna, a keyless entry transmitter left inside the truck will allow the trunk to be reopened at any time. This feature will not allow a customer to lock the transmitter in the trunk.

If vehicle has a trunk antenna and one or more transmitters are left in the trunk or interior of the vehicle, those transmitter(s) will be deactivated when the vehicle becomes locked.

Vehicle Locator/Panic Alarm/Active

A single press of the panic button performs the following functions. Some functions may be dependent on personalization settings:

- Pulses the horn three times
- Flashes the exterior lamps three times

A press and hold of the panic button performs the following functions:

- A press and hold of the panic button performs the following functions:
- Pulses the horn and flashes the parking lamps for 30 second or until the following conditions occur:
    - The panic button is pressed
    - The ignition switch is turned to the RUN position with a valid key

Remote Vehicle Start/Active

The remote vehicle start function allows engine starting while not in the vehicle. It also allows the vehicle HVAC system and other vehicle systems to enable, providing a comfortable vehicle upon entry. Remote vehicle start functions have an operating range of up to 195 feet, depending on conditions. The remote vehicle start sequence begins by pressing and releasing the lock button and then pressing and holding the remote vehicle start buttons on the keyless entry transmitter. The turn signal lamps will illuminate to indicate the vehicle has received the remote start request. Each time a remote vehicle start is performed, the vehicle doors are locked, however they may then be unlocked/locked with the transmitter or vehicle key at any time. Once activated, the engine is allowed to run for 10 minutes. The remote vehicle start time may be extended by an additional 10 minute by again pressing and releasing the lock button and then pressing and holding the remote vehicle start buttons on the transmitter. This feature is called a remote vehicle start continue and allows a maximum of 20 minutes of engine running. If the remote vehicle start continue is performed at 7 minutes into the initial 10 minute time-out, a total of 17 minutes of engine running would occur. The remote vehicle start event may be suspended at any time by pressing only the remote vehicle start button on the transmitter or by entering the vehicle and turning ON the hazard lamps.

In between ignition cycles, only two remote vehicle start events may occur or be attempted. Once two events or attempts have been made, future remote vehicle start events will be suspended until the vehicle is started using the ignition.

Enable/Disable Remote Vehicle Start/Active

Using the driver information center, remote vehicle start may be enabled or disabled as a part of vehicle personalization. Refer to the vehicle owners manual for more information.

Hood Ajar Switch/Active

The hood switch provides status of the hood to the BCM for remote vehicle start purposes. The switch is integrated into the hood latch assembly. The hood ajar switch provides 2 separate inputs to the BCM. These separate inputs allow the BCM to actively monitor for a hood ajar switch fault.

Remote Vehicle Start Circuit Description/Active

The BCM receives a signal from the keyless entry transmitter indicating a remote vehicle start request. The BCM uses the following inputs to verify the system is ready for a remote vehicle start event:

- Vehicle is not in valet mode
- All vehicle doors are closed
- Rear compartment lid is not ajar
- The hood is closed
- The doors are locked
- The hazard switch is OFF
- Battery reconnect has not occurred
- Vehicle power mode is correct.

When the BCM determines all conditions meet those required for an remote vehicle start event, a message is sent via serial data to the ECM. The ECM relies on the remote vehicle start message from the BCM to enable remote vehicle start when the crank request signal is received. If the ECM does not receive a valid remote vehicle start message, it will not ground the control circuit of the crank relay and start the engine. While the ECM is in remote vehicle start mode it will cut fuel to the engine if any of the following additional conditions occur:

- Vehicle speed is greater than 0.
- Transmission is not in P.
- Excessive engine coolant temperature
- Low oil pressure
- The malfunction indicator lamp (MIL) is commanded ON.
- Engine crank time is greater than 30 seconds.
- Excessive engine speed.
- Accelerator pedal position too high.
- Remote start timer equals 0.
- Immobilizer system indicates a theft attempt

Keyless Entry Personalization

Vehicle lock/unlock functions and remote vehicle start settings may be personalized for the vehicle. For functional descriptions and programming instructions, refer to the vehicle owners manual.

SPECIAL TOOLS AND EQUIPMENT

SPECIAL TOOLS

Illustration	Tool Number/ Description
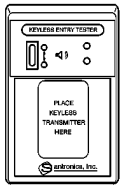	EL 43241 Keyless Entry Tester

2013 ACCESSORIES & EQUIPMENT

Seat Heating and Cooling - Cruze

SPECIFICATIONS

FASTENER TIGHTENING SPECIFICATIONS

Fastener Tightening Specifications

Application	Specification	
	Metric	English
Front Seat Heater Control Module	2.5 N.m	22 lb in

SCHEMATIC WIRING DIAGRAMS

HEATED/COOLED SEAT WIRING SCHEMATICS

KA1 Wiring Schematics

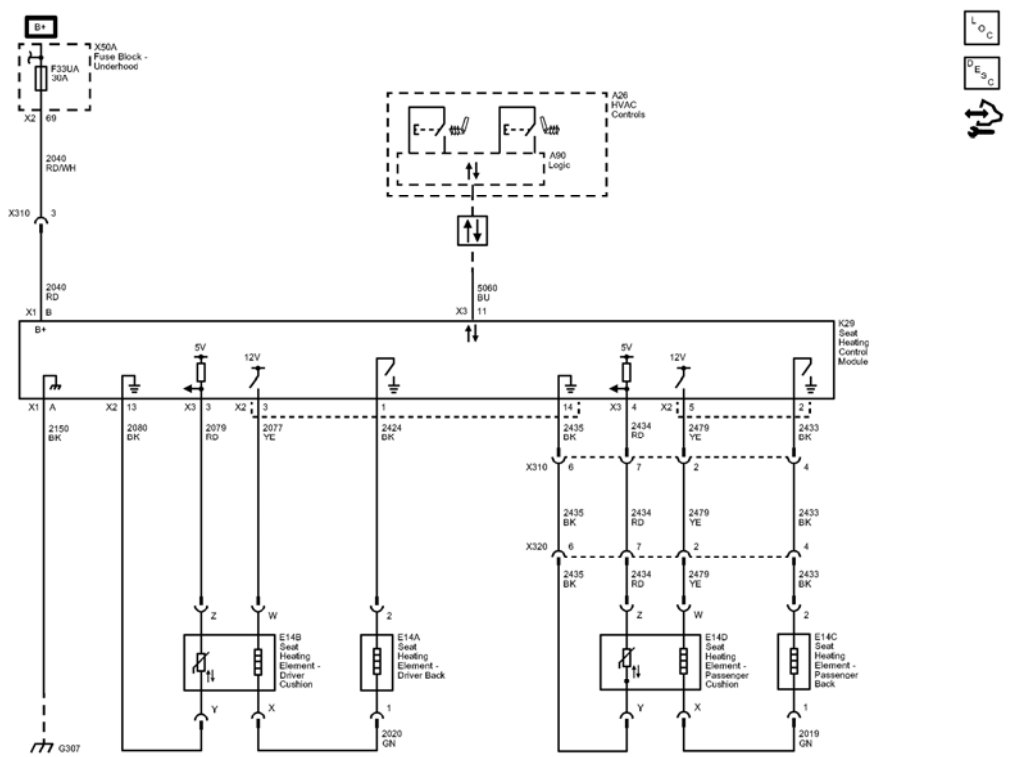

Fig. 1: Heated/Cooled Seat (KA1) Wiring Schematics
Courtesy of GENERAL MOTORS COMPANY

Callout	Component Name
2040	Battery Positive Voltage
CAV_B	B
CONN_X1	X1
CAV_69	69
CONN_X2	X2
2040_RD/WH	2040 RD/WH
2040_RD	2040 RD
CAV_3	3
2150	Ground
2150_BK	2150 BK
CAV_A	A
CONN X1	X1
2080	Driver Heated Seat NTC Low Reference
2080_BK	2080 BK
CAV_13	13
CONN_X2	X2
CAV Y	Y
2079	Driver Heated Seat NTC Signal
2079_RD	2079 RD
CAV_3	3
CONN_X3	X3
CAV_Z	Z
2077	Driver Heated Seat Element Supply Voltage
2077_YE	2077 YE
CAV_3	3
CONN_X2	X2
CAV_W	W
2424	Driver Heated Back Element Return
2424_BK	2424 BK
CAV_1	1
CAV_2	2
2078	Driver Heated Seat Element Return
2020_GN	2020 GN
CAV_X	X
CAV_1	1
	Passenger Heated Seat NTC

2435	Low Reference
2435_BK	2435 BK
CAV_14	14
2435_BK	2435 BK
2435_BK	2435 BK
CAV_Y	Y
2434	Passenger Heated Seat NTC Signal
2434_RD	2434 RD
CAV_4	4
CONN_X3	X3
CAV_Z	Z
2434_RD	2434 RD
2434_RD	2434 RD
2479	Passenger Heated Seat Element Supply Voltage
2479_YE	2479 YE
CAV_5	5
CONN_X2	X2
2479_YE	2479 YE
2479_YE	2479 YE
CAV_W	W
2433	Passenger Heated Back Element Return
2433_BK	2433 BK
CAV_2	2
2433_BK	2433 BK
2433_BK	2433 BK
CAV_2	2
2480	Passenger Heated Seat Element Return
2019_GN	2019 GN
CAV_X	X
CAV_1	1
5060	Low Speed GMLAN Serial Data
5060_BU	5060 BU
CAV_11	11
CONN_X3	X3
Data_Communication_Schematics_REF	Data Communication Schematics
X310	X310

CAV_6	6
CAV_7	7
CAV_2	2
CAV_4	4
X320	X320
CAV_6	6
CAV_7	7
CAV_2	2
CAV_4	4
F33UA	F33UA 30A
X310	X310
X310	X310
X320	X320
A90	Logic
X50A	
K29	(KA1)
E14C	(KA1)
E14D	(KA1)
E14A	(KA1)
E14B	(KA1)
A26	

DIAGNOSTIC INFORMATION AND PROCEDURES

DIAGNOSTIC CODE INDEX

DIAGNOSTIC CODE INDEX

DTC	Description
DTC B1925 or B2170	DTC B1925 02 Driver Seat Cushion Heater Sensor Circuit Short to Ground DTC B1925 05 Driver Seat Cushion Heater Sensor Circuit High Voltage/Open DTC B2170 02 Passenger Seat Cushion Heater Sensor Circuit Short to Ground DTC B2170 05 Passenger Seat Cushion Heater Sensor Circuit High Voltage/Open
DTC B2345	DTC B2345 13 Seat Heater Disable Circuit Low Voltage High/Temperature
	DTC B2425 0B Driver Seat Cushion Heater Circuit High Current DTC B2425 0D Driver Seat Cushion Heater Circuit High Resistance DTC B2425 0E Driver Seat Cushion Heater Circuit Low

DTC B2425 or B2430	Resistance DTC B2430 0B Passenger Seat Cushion Heater Circuit High Current DTC B2430 0D Passenger Seat Cushion Heater Circuit High Resistance DTC B2430 0E Passenger Seat Cushion Heater Circuit Low Resistance
DTC B242A	DTC B242A 01 Seat Heaters Common Circuit Short to Battery DTC B242A 02 Seat Heaters Common Circuit Short to Ground

DTC B1925 OR B2170

Diagnostic Instructions

- Perform the **Diagnostic System Check - Vehicle** prior to using this diagnostic procedure.
- Review **Strategy Based Diagnosis** for an overview of the diagnostic approach.
- **Diagnostic Procedure Instructions** provides an overview of each diagnostic category.

DTC Descriptors

DTC B1925 02

Driver Seat Cushion Heater Sensor Circuit Short to Ground

DTC B1925 05

Driver Seat Cushion Heater Sensor Circuit High Voltage/Open

DTC B2170 02

Passenger Seat Cushion Heater Sensor Circuit Short to Ground

DTC B2170 05

Passenger Seat Cushion Heater Sensor Circuit High Voltage/Open

Diagnostic Fault Information

Circuit	Short to Ground	Open/High Resistance	Short to Voltage	Signal Performance
Driver Heated Seat Element Control Terminal 3 X2	B242A 02	B2425 0D	B242A 01	B2425 0B, B2425 0E
Driver Heated Seat				

Element Control Terminal 1 X2	B242A 02	B2425 0D	B242A 01	B2425 0B, B2425 0E
Driver Heated Seat Cushion Temperature Sensor Signal	B1925 02	B1925 05	B1925 05	B2345 13
Driver Heated Seat Cushion Temperature Sensor Low Reference	-	B1925 05	-	B2345 13
Passenger Heated Seat Element Control Terminal 5 X2	B242A 02	B2430 0D	B242A 01	B2430 0B, B2430 0E
Passenger Heated Seat Element Control Terminal 2 X2	B242A 02	B2430 0D	B242A 01	B2430 0B, B2430 0E
Passenger Heated Seat Cushion Temperature Sensor Signal	B2170 02	B2170 05	B2170 05	B2345 13
Passenger Heated Seat Cushion Temperature Sensor Low Reference	-	B2170 05	-	B2345 13

Circuit/System Description

The heated seat temperature sensor is located in the seat cushion just under the seat cover with the seat heating element. The seat heating control module supplies a 5 V reference voltage through the temperature sensor signal circuit and a ground through the low reference circuit to the sensor. The module monitors the voltage of the sensor signal circuit to determine the temperature of the seat. The temperature sensor varies in resistance based on the temperature of the heating element causing the signal voltage to change. Once the seat reaches the set temperature, the module will then cycle the control circuit of the heating elements ON and OFF in order to maintain the desired seat temperature based on the feedback voltage from the sensor.

Conditions for Running the DTC

- DTC B1325 must not be present.
- The seat heating control module must be powered.

Conditions for Setting the DTC

B1925 02 or B2170 02

The temperature sensor voltage drops below 0.6 V for more than 1 second.

B1925 05 or B2170 05

The temperature sensor voltage is greater than 5 V for more than 1 second.

Action Taken When the DTC Sets

The heated seat function for the affected seat will be disabled.

Conditions for Clearing the DTC

- The current DTC will clear and set the code to history 3 seconds after the reference voltage returns to normal operating range and the ignition is cycled OFF then back to ACC or RUN.
- The history DTC will clear after 40 consecutive fault-free ignition cycles have occurred.

Reference Information

Schematic Reference

Heated/Cooled Seat Schematics

Connector End View Reference

COMPONENT CONNECTOR END VIEWS - INDEX

Description and Operation

Heated Seats Description and Operation

Electrical Information Reference

- **Circuit Testing**
- **Connector Repairs**
- **Testing for Intermittent Conditions and Poor Connections**
- **Wiring Repairs**

Scan Tool Reference

Control Module References for scan tool information

Circuit/System Testing

1. Ignition OFF and all vehicle systems OFF, disconnect the harness connector at the appropriate E14B or E14D Seat Heating Element - Cushion. It may take up to 2 min for all vehicle systems to power down.
2. Test for less than 10 ohms between the low reference circuit terminal 3 and ground.
    - **If 10 ohms or greater**
    1. Ignition OFF, disconnect the X2 harness connector at the K29 Seat Heating Control Module.
    2. Test for less than 2 ohms in the low reference circuit end to end.
        - If 2 ohms or greater, repair the open/high resistance in the circuit.
        - I less than 2 ohms, replace the K29 Seat Heating Control Module.
    - **If less than 10 ohms**

3. Ignition ON.
4. Test for 4.8-5.2 V between the signal circuit terminal 2 and ground.
    - **If less than 4.8 V**
    1. Ignition OFF, disconnect the X3 harness connector at the K29 Seat Heating Control Module.
    2. Test for infinite resistance between the signal circuit and ground.
        - If less than infinite resistance, repair the short to ground on the circuit.
        - If infinite resistance
    3. Test for less than 2 ohms in the signal circuit end to end.
        - If 2 ohms or greater, repair the open/high resistance in the circuit.
        - If less than 2 ohms, replace the K29 Seat Heating Control Module.
    - **If greater than 5.2 V**
    1. Ignition OFF, disconnect the X3 harness connector at the K29 Seat Heating Control Module, ignition ON.
    2. Test for less than 1 V between the signal circuit and ground.
        - If 1 V or greater, repair the short to voltage on the circuit.
        - If less than 1 V, replace the K29 Seat Heating Control Module.
    - **If between 4.8-5.2 V**
5. Test or replace the E14 Seat Heating Element - Cushion.

Component Testing

Seat Cushion Heating Element

1. Ignition OFF, disconnect the harness connector at the appropriate E14B or E14D Seat Heating Element - Cushion.
2. Test for 500 ohms-300 kohms between the signal circuit terminal 2 and the low reference circuit terminal 3.
    - **If not between 500 ohms-300 kohms**

      Replace the E14 Seat Heating Element - Cushion.

    - **If between 500 ohms-300 kohms**
3. All OK.

Repair Instructions

Perform the **Diagnostic Repair Verification** after completing the repair.

- **Driver Seat Cushion Heater Replacement**
- **Passenger Seat Cushion Heater Replacement**
- **Control Module References** for K29 Seat Heating Control Module replacement, programming and setup

DTC B2345

Diagnostic Instructions

- Perform the **Diagnostic System Check - Vehicle** prior to using this diagnostic procedure.
- Review **Strategy Based Diagnosis** for an overview of the diagnostic approach.
- **Diagnostic Procedure Instructions** provides an overview of each diagnostic category.

DTC Descriptors

DTC B2345 13

Seat Heater Disable Circuit Low Voltage High/Temperature

Diagnostic Fault Information

Circuit	Short to Ground	Open/High Resistance	Short to Voltage	Signal Performance
Driver Heated Seat Element Control Terminal 3 X2	B242A 02	B2425 0D	B242A 01	B2425 0B, B2425 0E
Driver Heated Seat Element Control Terminal 1 X2	B242A 02	B2425 0D	B242A 01	B2425 0B, B2425 0E
Driver Heated Seat Cushion Temperature Sensor Signal	B1925 02	B1925 05	B1925 05	B2345 13
Driver Heated Seat Cushion Temperature Sensor Low Reference	-	B1925 05	-	B2345 13
Passenger Heated Seat Element Control Terminal 5 X2	B242A 02	B2430 0D	B242A 01	B2430 0B, B2430 0E
Passenger Heated Seat Element Control Terminal 2 X2	B242A 02	B2430 0D	B242A 01	B2430 0B, B2430 0E
Passenger Heated Seat Cushion Temperature Sensor Signal	B2170 02	B2170 05	B2170 05	B2345 13
Passenger Heated Seat Cushion Temperature Sensor Low Reference	-	B2170 05	-	B2345 13

Circuit/System Description

The seat heating control module controls seat heating operation for both the driver and front passenger seats.

The heating elements are controlled through individual high side and low side control circuits. The low side control circuits for both seats are connected to a common reference point internal to the module. This reference point is biased to approximately 2.5 V. Before the seat heating control module will allow heated seat operation, it checks to see if this biased voltage is shorted to ground or voltage. Once the module verifies that it is not closing to a shorted heating element, it allows for heated seat operation. The module will then continue to monitor the heating elements for a shorted circuit.

Conditions for Running the DTC

The seat heating control module must be powered.

Conditions for Setting the DTC

B2345 13

Any temperature sensor input that remains below 1.5 V for more than 1 second.

Action Taken When the DTC Sets

The heated seat function for both seats will be disabled.

Conditions for Clearing the DTC

- The current DTC will clear and set the code to history 3 seconds after the reference voltage returns to the normal operating range and the ignition is cycled OFF then back to ACC or RUN.
- The history DTC will clear after 40 consecutive fault-free ignition cycles have occurred.

Reference Information

Schematic Reference

Heated/Cooled Seat Schematics

Connector End View Reference

COMPONENT CONNECTOR END VIEWS - INDEX

Description and Operation

Heated Seats Description and Operation

Electrical Information Reference

- **Circuit Testing**
- **Connector Repairs**
- **Testing for Intermittent Conditions and Poor Connections**
- **Wiring Repairs**

Scan Tool Reference

Control Module References for scan tool information

Circuit/System Testing

1. Ignition OFF, disconnect the X2 and X3 harness connectors at the K29 Seat Heating Control Module.
2. Test for greater than 3.0 kohms between the signal and the low reference circuit terminals listed below:
   - Driver seat cushion terminal 3 X3 and terminal 13 X2
   - Passenger seat cushion terminal 4 X3 and terminal 14 X2
   - **If less than 3.0 kohms**
     1. Ignition OFF, disconnect the harness connector at the appropriate E14B or E14D Seat Heating Element - Cushion.
     2. Test for Infinite resistance between the signal and low reference circuits.
        - If less than infinite resistance, repair the short between the circuits.
        - If infinite resistance, test or replace the E14 Seat Heating Element - Cushion.
   - **If greater than 3.0 kohms**
3. Replace the K29 Seat Heating Control Module.

Repair Instructions

Perform the **Diagnostic Repair Verification** after completing the repair.

- **Driver Seat Cushion Heater Replacement**
- **Passenger Seat Cushion Heater Replacement**
- **Control Module References** for K29 Seat Heating Control Module replacement, programming and setup

DTC B2425 OR B2430

Diagnostic Instructions

- Perform the **Diagnostic System Check - Vehicle** prior to using this diagnostic procedure.
- Review **Strategy Based Diagnosis** for an overview of the diagnostic approach.
- **Diagnostic Procedure Instructions** provides an overview of each diagnostic category.

DTC Descriptors

DTC B2425 0B

Driver Seat Cushion Heater Circuit High Current

DTC B2425 0D

Driver Seat Cushion Heater Circuit High Resistance

DTC B2425 0E

Driver Seat Cushion Heater Circuit Low Resistance

DTC B2430 0B

Passenger Seat Cushion Heater Circuit High Current

DTC B2430 0D

Passenger Seat Cushion Heater Circuit High Resistance

DTC B2430 0E

Passenger Seat Cushion Heater Circuit Low Resistance

Diagnostic Fault Information

Circuit	Short to Ground	Open/High Resistance	Short to Voltage	Signal Performance
Driver Heated Seat Element Control Terminal 3 X2	B242A 02	B2425 0D	B242A 01	B2425 0B, B2425 0E
Driver Heated Seat Element Control Terminal 1 X2	B242A 02	B2425 0D	B242A 01	B2425 0B, B2425 0E
Driver Heated Seat Cushion Temperature Sensor Signal	B1925 02	B1925 05	B1925 05	B2345 13
Driver Heated Seat Cushion Temperature Sensor Low Reference	-	B1925 05	-	B2345 13
Passenger Heated Seat Element Control Terminal 5 X2	B242A 02	B2430 0D	B242A 01	B2430 0B, B2430 0E
Passenger Heated Seat Element Control Terminal 2 X2	B242A 02	B2430 0D	B242A 01	B2430 0B, B2430 0E
Passenger Heated Seat Cushion Temperature Sensor Signal	B2170 02	B2170 05	B2170 05	B2345 13
Passenger Heated Seat Cushion Temperature Sensor Low Reference	-	B2170 05	-	B2345 13

Circuit/System Description

The driver and front passenger heated seats are controlled by the seat heating control module that is located under the driver seat cushion. When the heated seat is active, the module applies power through a common voltage supply circuit to the seat heater elements. The module controls the seat temperature by providing a pulse width modulation (PWM) ground through the seat heater element control circuit to the heater elements. The module then monitors the current flow through the heating elements and the rate of change of the temperature sensor to verify correct heated seat operation.

Conditions for Running the DTC

- DTC B1325 must not be present.
- Engine must be ON.
- The seat heating control module must be powered and the heated seat must be enabled.

Conditions for Setting the DTC

B2425 0D or B2430 0D

By measuring current and voltage output to the seat heating elements every 10 seconds, the seat heating control module calculates that the heating element resistance is above the maximum resistance.

B2425 0B, B2425 0E, B2430 0B, or B2430 0E

By measuring current and voltage output to the seat heating elements every 10 seconds, the seat heating control module calculates that the heating element resistance is below the minimum resistance.

Action Taken When the DTC Sets

The heated seat function for the affected seat will be disabled.

Conditions for Clearing the DTC

- The current DTC clears when the malfunction is no longer present, and the power mode changes to OFF then back to ACC or RUN.
- The history DTC will clear after 40 consecutive fault-free ignition cycles have occurred.

Reference Information

Schematic Reference

Heated/Cooled Seat Schematics

Connector End View Reference

COMPONENT CONNECTOR END VIEWS - INDEX

Description and Operation

Heated Seats Description and Operation

Electrical Information Reference

- **Circuit Testing**
- **Connector Repairs**
- **Testing for Intermittent Conditions and Poor Connections**
- **Wiring Repairs**

Scan Tool Reference

Control Module References for scan tool information

Circuit/System Testing

B2425 0B, B2425 0D, or B2425 0E

1. Ignition OFF, disconnect the harness connector at the E14A Seat Heating Element - Driver Back.

   NOTE: Element resistance must be measured twice to ensure that all failure conditions are simulated. First with the seat unoccupied, then with the seat occupied.

2. Test for 0.5-2 ohms between control circuit terminal 1 and control circuit terminal 2.
   - **If not between 0.5-2 ohms**

     Replace the E14A Seat Heating Element - Driver Back.

   - **If between 0.5-2 ohms**
3. Connect the harness connector at the E14A Seat Heating Element - Driver Back and disconnect the X2 harness connector at the K29 Seat Heating Control Module.

   NOTE: Element resistance must be measured twice to ensure that all failure conditions are simulated. First with the seat unoccupied, then with the seat occupied.

4. Test for 1-5 ohms between control circuit terminal 3 and control circuit terminal 1.
   - **If less than 1 ohms**
   1. Ignition OFF, disconnect the harness connector at the E14B Seat Heating Element - Driver Cushion.
   2. Test for infinite resistance between the control circuits.
      - If less than infinite resistance, repair the short between the circuits.
      - If infinite resistance, test or replace the E14B Seat Heating Element - Driver Cushion.
   - **If greater than 5 ohms**

1. Ignition OFF, disconnect the harness connector at the E14B Seat Heating Element - Driver Cushion.
2. Test for less than 2 ohms between the control circuits end to end.
   - If 2 ohms or greater, repair the open/high resistance in the circuit.
   - If less than 2 ohms, test or replace the E14B Seat Heating Element - Driver Cushion.

- **If between 1-5 ohms**

5. Replace the K29 Seat Heating Control Module.

B2430 0B, B2430 0D, or B2430 0E

1. Ignition OFF, disconnect the harness connector at the E14C Seat Heating Element - Passenger Back.

NOTE: Element resistance must be measured twice to ensure that all failure conditions are simulated. First with the seat unoccupied, then with the seat occupied.

2. Test for 0.5-2 ohms between control circuit terminal 1 and control circuit terminal 2.
   - **If not between 0.5-2 ohms**

     Replace the E14C Seat Heating Element - Passenger Back.

   - **If between 0.5-2 ohms**
3. Connect the harness connector at the E14C Seat Heating Element - Passenger Back and disconnect the X2 harness connector at the K29 Seat Heating Control Module.

NOTE: Element resistance must be measured twice to ensure that all failure conditions are simulated. First with the seat unoccupied, then with the seat occupied.

4. Test for 1-5 ohms between control circuit terminal 5 and control circuit terminal 2.
   - **If less than 1 ohms**
   1. Ignition OFF, disconnect the harness connector at the E14D Seat Heating Element - Passenger Cushion.
   2. Test for infinite resistance between the control circuits.
      - If less than infinite resistance, repair the short between the circuits.
      - If infinite resistance, test or replace the E14D Seat Heating Element - Passenger Cushion.

   - **If greater than 5 ohms**
   1. Ignition OFF, disconnect the harness connector at the E14D Seat Heating Element - Passenger Cushion.
   2. Test for less than 2 ohms between the control circuits end to end.
      - If 2 ohms or greater, repair the open/high resistance in the circuit.
      - If less than 2 ohms, test or replace the E14D Seat Heating Element - Passenger Cushion.

- **If between 1-5 ohms**

5. Replace the K29 Seat Heating Control Module.

Repair Instructions

Perform the **Diagnostic Repair Verification** after completing the repair.

- **Driver Seat Cushion Heater Replacement**
- **Passenger Seat Cushion Heater Replacement**
- **Control Module References** for K29 Seat Heating Control Module replacement, programming and setup

DTC B242A

Diagnostic Instructions

- Perform the **Diagnostic System Check - Vehicle** prior to using this diagnostic procedure.
- Review **Strategy Based Diagnosis** for an overview of the diagnostic approach.
- **Diagnostic Procedure Instructions** provides an overview of each diagnostic category.

DTC Descriptors

DTC B242A 01

Seat Heaters Common Circuit Short to Battery

DTC B242A 02

Seat Heaters Common Circuit Short to Ground

Diagnostic Fault Information

Circuit	Short to Ground	Open/High Resistance	Short to Voltage	Signal Performance
Driver Heated Seat Element Control Terminal 3 X2	B242A 02	B2425 0D	B242A 01	B2425 0B, B2425 0E
Driver Heated Seat Element Control Terminal 1 X2	B242A 02	B2425 0D	B242A 01	B2425 0B, B2425 0E
Driver Heated Seat Cushion Temperature Sensor Signal	B1925 02	B1925 05	B1925 05	B2345 13
Driver Heated Seat Cushion Temperature Sensor Low Reference	-	B1925 05	-	B2345 13

Passenger Heated Seat Element Control Terminal 5 X2	B242A 02	B2430 0D	B242A 01	B2430 0B, B2430 0E
Passenger Heated Seat Element Control Terminal 2 X2	B242A 02	B2430 0D	B242A 01	B2430 0B, B2430 0E
Passenger Heated Seat Cushion Temperature Sensor Signal	B2170 02	B2170 05	B2170 05	B2345 13
Passenger Heated Seat Cushion Temperature Sensor Low Reference	-	B2170 05	-	B2345 13

Circuit/System Description

The seat heating control module controls the seat heating operation for both the driver and front passenger seats. The module controls the heating elements through individual high side and low side control circuits. The low side control circuits for both seats are connected to a common reference point internal to the module. This reference point is biased to approximately 2.5 V. Before the seat heating control module will allow heated seat operation, it checks to see if this biased voltage is shorted to ground or voltage. Once the module verifies that it is not closing to a shorted heating element, it allows for heated seat operation. The module then continues to monitor the heating elements for a shorted circuit.

Conditions for Running the DTC

- DTC B1325 must not be present.
- The seat heating control module must be powered.

Conditions for Setting the DTC

B242A 01

The seat heating control module detects a short to voltage on the heater element control circuits.

B242A 02

The seat heating control module detects a short to ground on the heater element control circuits.

Action Taken When the DTC Sets

The heated seat function for both seats will be disabled.

Conditions for Clearing the DTC

- The current DTC will clear and set a history code 3 seconds after the reference voltage returns to normal operating range and the ignition is cycled OFF then back to ACC or RUN.
- The history DTC will clear after 40 consecutive fault-free ignition cycles have occurred.

Reference Information

Schematic Reference

Heated/Cooled Seat Schematics

Connector End View Reference

COMPONENT CONNECTOR END VIEWS - INDEX

Description and Operation

Heated Seats Description and Operation

Electrical Information Reference

- **Circuit Testing**
- **Connector Repairs**
- **Testing for Intermittent Conditions and Poor Connections**
- **Wiring Repairs**

Scan Tool Reference

Control Module References for scan tool information

Circuit/System Testing

1. Ignition OFF, disconnect the X2 harness connector at the K29 seat heating control module.
2. Test for infinite resistance between the control circuit terminals listed below and ground:
    - Terminal 3
    - Terminal 5
    - **If less than infinite resistance**

      Repair the short to ground on the circuit.

    - **If infinite resistance**
3. Ignition ON.
4. Test for less than 1 V between the control circuit terminals listed below and ground:
    - Terminal 3
    - Terminal 5
    - **If 1 V or greater**

      Repair the short to voltage on the circuit.

- **If less than 1 V**

5. Replace the K29 seat heating control module.

Repair Instructions

Perform the **Diagnostic Repair Verification** after completing the repair.

Control Module References for seat heating control module replacement, programming and setup

SYMPTOMS - SEAT HEATING AND COOLING

NOTE: The following steps must be completed before using the symptom tables.

1. When diagnosing a heated seat system condition perform the **Diagnostic System Check - Vehicle** , before using the symptom tables in order to verify that all of the following are true:
   - There are no DTCs set.
   - The control module(s) can communicate via the serial data link.
2. Review the system operation in order to familiarize yourself with the system functions. Refer to **Heated Seats Description and Operation**.

Visual/Physical Inspection

- Inspect for aftermarket devices which could affect the operation of the power seats. Refer to **Checking Aftermarket Accessories** .
- Inspect the easily accessible or visible system components for obvious damage or conditions which could cause the symptom.
- Inspect the seat adjuster track for conditions which may cause binding or objects within the seat adjustment range which obstruct movement or interfere with wiring.

Intermittent

Faulty electrical connections or wiring may be the cause of intermittent conditions. Refer to **Testing for Intermittent Conditions and Poor Connections** .

Symptom List

Refer to the **Front Heated Seat Malfunction** diagnostic procedure in order to diagnose the symptom.

FRONT HEATED SEAT MALFUNCTION

Diagnostic Instructions

- Perform the **Diagnostic System Check - Vehicle** prior to using this diagnostic procedure.
- Review **Strategy Based Diagnosis** for an overview of the diagnostic approach.
- **Diagnostic Procedure Instructions** provides an overview of each diagnostic category.

Diagnostic Fault Information

Circuit	Short to Ground	Open/High Resistance	Short to Voltage	Signal Performance
Driver Heated Seat Element Control Terminal 3 X2	B242A 02	B2425 0D	B242A 01	B2425 0B, B2425 0E
Driver Heated Seat Element Control Terminal 1 X2	B242A 02	B2425 0D	B242A 01	B2425 0B, B2425 0E
Driver Heated Seat Cushion Temperature Sensor Signal	B1925 02	B1925 05	B1925 05	B2345 13
Driver Heated Seat Cushion Temperature Sensor Low Reference	-	B1925 05	-	B2345 13
Passenger Heated Seat Element Control Terminal 5 X2	B242A 02	B2430 0D	B242A 01	B2430 0B, B2430 0E
Passenger Heated Seat Element Control Terminal 2 X2	B242A 02	B2430 0D	B242A 01	B2430 0B, B2430 0E
Passenger Heated Seat Cushion Temperature Sensor Signal	B2170 02	B2170 05	B2170 05	B2345 13
Passenger Heated Seat Cushion Temperature Sensor Low Reference	-	B2170 05	-	B2345 13

Circuit/System Description

The driver and passenger heated seats are controlled by separate heated seat switches that are located in the HVAC controls. When a heated seat switch is pressed, a serial data message is sent from the HVAC controls to the HVAC control module indicating the heated seat command. The HVAC control module then serves as a gateway to transmit the message to the seat heating control module via the serial data line. In response to this message, the seat heating control module applies battery positive voltage through the element supply voltage circuit to the appropriate seat heating elements. The seat heating control module then sends a serial data message back to the HVAC control module to gateway the information to the HVAC controls to either illuminate or turn off the appropriate temperature indicator.

Reference Information

Schematic Reference

Heated/Cooled Seat Schematics

Connector End View Reference

COMPONENT CONNECTOR END VIEWS - INDEX

Description and Operation

Heated Seats Description and Operation

Electrical Information Reference

- **Circuit Testing**
- **Connector Repairs**
- **Testing for Intermittent Conditions and Poor Connections**
- **Wiring Repairs**

Scan Tool Reference

Control Module References for scan tool information

Circuit/System Verification

1. Engine ON.
2. Verify that no heated seat DTCs are set.
   - **If any heated seat DTC is set**

     Refer to **Diagnostic Trouble Code (DTC) List - Vehicle**

   - **If no heated seat DTCs are set**
3. Verify the scan tool Front Seat Heating Control Module Driver Seat Heating/Venting/Cooling Mode parameter changes between Off and Back & Cushion Heat after pressing the driver heated seat switch.
   - **If the parameter does not change**

     Replace the A26 HVAC Controls.

   - **If the parameter changes**
4. Verify the scan tool Passenger Front Seat Heating/Venting/Cooling Mode Switch parameter changes between Off and Back & Cushion Heat after pressing the passenger heated seat switch.
   - **If the parameter does not change**

     Replace the A26 HVAC Controls.

   - **If the parameter changes**
5. Replace the K29 Seat Heating Control Module.

Repair Instructions

Perform the **Diagnostic Repair Verification** after completing the repair.

- **Heater and Air Conditioning Control Replacement**
- **Control Module References** for K29 Seat Heating Control Module replacement, programming and setup

REPAIR INSTRUCTIONS

FRONT SEAT HEATER CONTROL MODULE REPLACEMENT

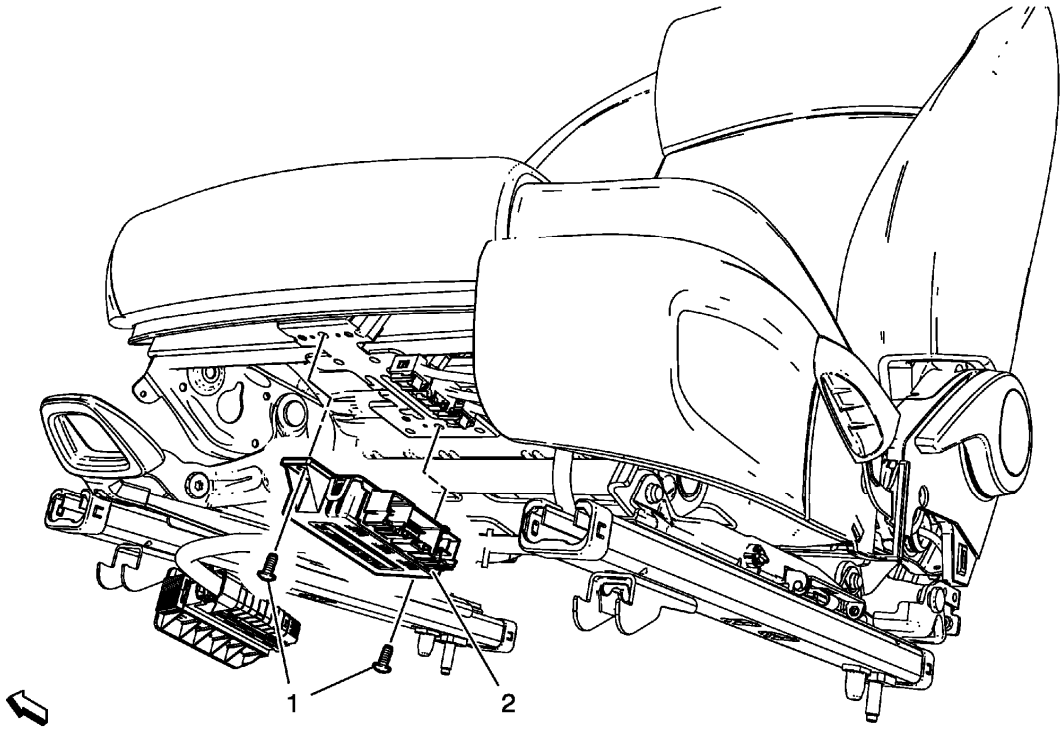

Fig. 2: Front Seat Heater Control Module
Courtesy of GENERAL MOTORS COMPANY

Front Seat Heater Control Module Replacement

Callout	Component Name
Preliminary Procedures Remove the front seat. Refer to **Driver or Passenger Seat Removal and Installation** .	
1	Front Seat Heater Control Module Bolt (Qty: 2) **CAUTION:** **Refer to Fastener Caution .** **Tighten** 2.5 N.m (22 lb in)
2	Front Seat Heater Control Module **Procedure**

	Disconnect the electrical connector.

DRIVER OR PASSENGER SEAT BACK CUSHION HEATER REPLACEMENT

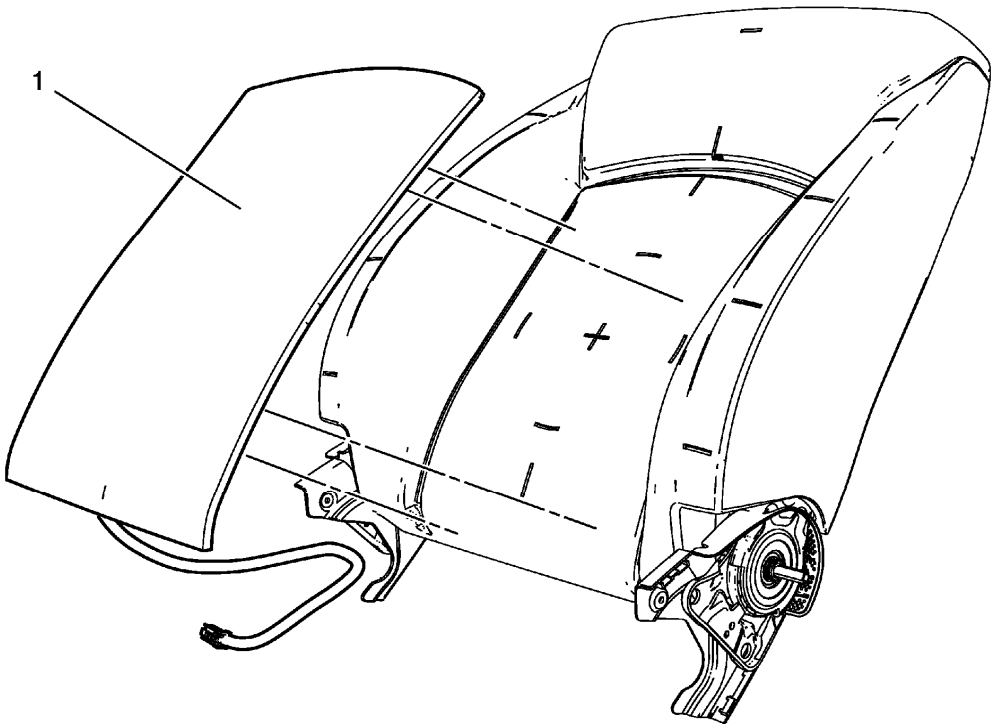

Fig. 3: Driver Or Passenger Seat Back Cushion Heater
Courtesy of GENERAL MOTORS COMPANY

Driver or Passenger Seat Back Cushion Heater Replacement

Callout	Component Name
Preliminary Procedures Remove the front seat back cushion cover and cushion pad. Refer to **Driver or Passenger Seat Back Cover and Pad Replacement** .	
1	Driver or Passenger Seat Back Cushion Heater

DRIVER SEAT CUSHION HEATER REPLACEMENT

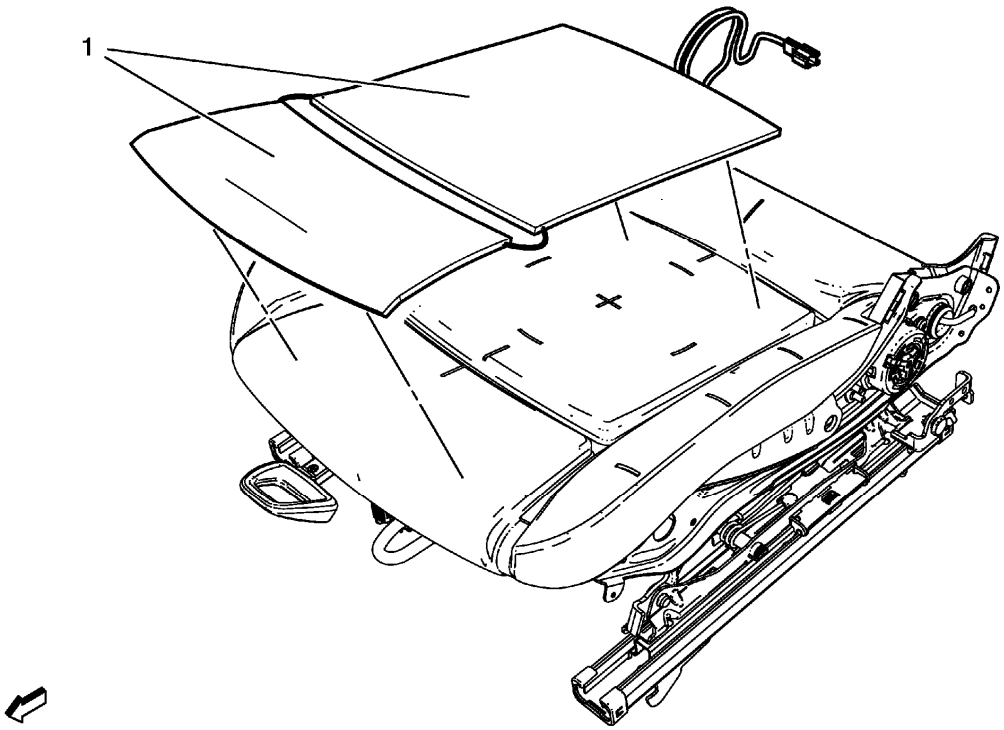

Fig. 4: Driver Seat Cushion Heater
Courtesy of GENERAL MOTORS COMPANY

Driver Seat Cushion Heater Replacement

Callout	Component Name
Preliminary Procedures Remove the front seat cushion cover and pad. Refer to **Front Seat Cushion Cover and Pad Replacement** .	
1	Driver Seat Cushion Heater **Procedure** 1. Carefully remove the cushion heater from cushion. 2. When installing the heater, glue on the heater starting on the rear side of the cushion and fix it bit by bit moving forward.

PASSENGER SEAT CUSHION HEATER REPLACEMENT

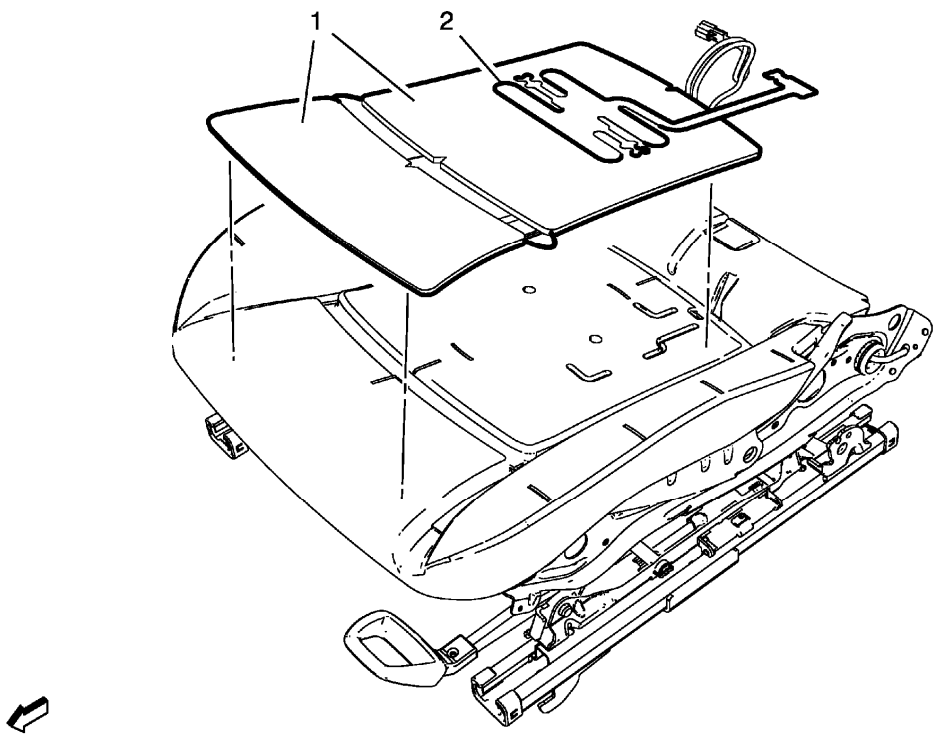

Fig. 5: Passenger Seat Cushion Heater
Courtesy of GENERAL MOTORS COMPANY

Passenger Seat Cushion Heater Replacement

Callout	Component Name
WARNING: **Refer to SIR Warning .** **WARNING:** **Replace the passenger presence system as a complete assembly to prevent possible injury to the occupant. All the components in the service kit are assembled and calibrated as a unit. Using only some of the components in the service kit will cause the passenger presence system to operate improperly.** **WARNING:** **To avoid personal injury, perform a preload test on the passenger presence system whenever you remove or replace the seat cushion trim. Failure to do so may cause the system to malfunction.** **Preliminary Procedures** 1. Disable the SIR system. Refer to **SIR Disabling and Enabling** . 2. Remove the front seat. Refer to **Driver or Passenger Seat Removal and Installation** . 3. Remove the front seat cushion cover and pad. Refer to **Front Seat Cushion Cover and Pad Replacement** .	

1	Inflatable Restraint Front Passenger Presence Sensor
2	Passenger Seat Cushion Heater **Procedure** 1. When replacing the front passenger seat cushion, you must also replace the inflatable restraint passenger presence sensor. Refer to **Airbag Front Passenger Presence Sensor Replacement** . 2. Program the inflatable restraint passenger presence system after replacement. Refer to **Control Module References** .

DESCRIPTION AND OPERATION

HEATED SEATS DESCRIPTION AND OPERATION

Heated Seat Components

The driver and passenger heated seats consist of the following components:

- Left heated seat switch
- Right heated seat switch
- HVAC controls switch assembly
- Seat heating control module
- Driver seat cushion heating element
- Driver seat back heating element
- Driver seat cushion temperature sensor
- Passenger seat cushion heating element
- Passenger seat back heating element
- Passenger seat cushion temperature sensor

Power and Ground

Battery positive voltage is supplied at all times to the seat heating control module through a fuse located in the underhood fuse block. This voltage is used by the module to supply power to the seat heating elements. Ground is provided through the vehicle and seat wiring harnesses to the module.

Heated Seat Operation

The driver and passenger heated seats are controlled by a single seat heating control module that is located under the driver seat cushion. Both heated seats are controlled by separate heated seat switches that are located in the HVAC controls switch assembly. When a heated seat switch is pressed, a serial data message is sent from the HVAC controls switch assembly to the seat heating control module indicating the heated seat command. In response to this message, the seat heating control module applies battery positive voltage through the element supply voltage circuit to the appropriate seat heating elements. The seat heating control module then sends a

serial data message back to the HVAC controls switch assembly to either illuminate or turn off the appropriate temperature indicator.

Temperature Regulation

When the engine ON, the heated seats will initialize in the OFF state. With each activation of the heated seat switch, the seat heating control module will cycle the temperature setting in the following manner: HIGH, MEDIUM, LOW, and OFF.

The seat heating control module monitors the seat temperature through the temperature sensor signal circuit and the temperature sensor (thermistor) that is located in the seat cushion. The temperature sensor is a variable resistor, it's resistance changes as the temperature of the seat changes. When the temperature sensor resistance indicates to the seat heating control module that the seat has reached the desired temperature, the module opens the ground path of the seat heating elements through the heated seat element control circuit. The module will then cycle the element control circuit open and closed in order to maintain the desired temperature.

Load Management

The electrical power management function is designed to monitor the vehicle electrical load and determine when the battery is potentially in a high discharge condition. The heated seat system is one of the vehicle loads that is subject to reduction during a battery discharge condition. For more information on load management refer to **Electrical Power Management Description and Operation** .

2013 ACCESSORIES & EQUIPMENT

Secondary and Configurable Customer Controls - Cruze

SCHEMATIC WIRING DIAGRAMS

STEERING WHEEL SECONDARY/CONFIGURABLE CONTROL WIRING SCHEMATICS

W1Y Wiring Schematics

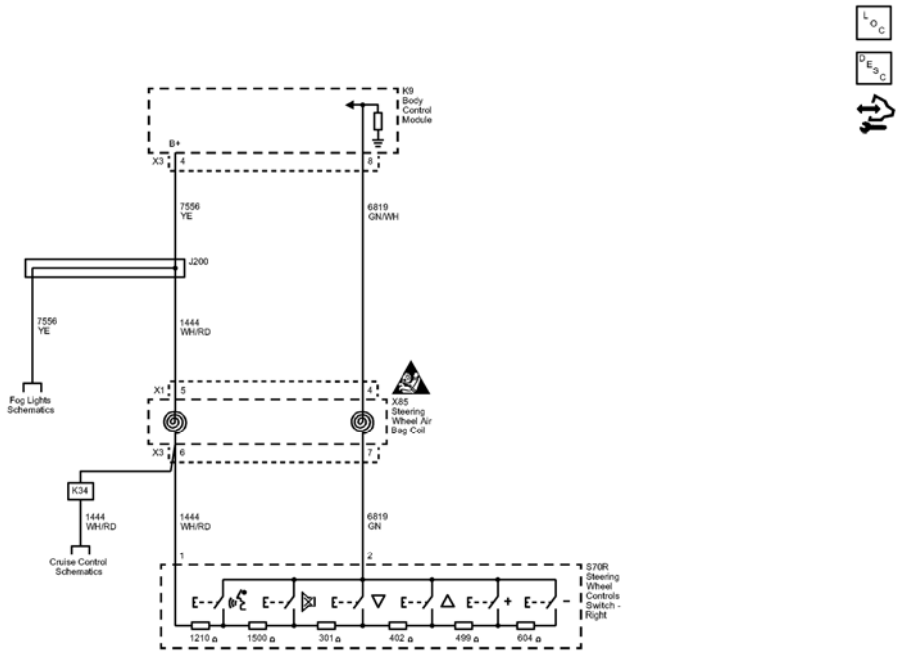

Fig. 1: Steering Wheel Secondary/Configurable Control (W1Y)Wiring Schematics
Courtesy of GENERAL MOTORS COMPANY

Callout	Component Name
7556	Lighting Control Switch Reference
7556_YE	7556 YE
CAV_4	4
CONN_X3	X3
1444	12 Volt Reference
1444_WH/RD	1444 WH/RD
CAV_5	5

CONN_X1	X1
7556_YE	7556 YE
6819	Steering Wheel Resistor Ladder Signal #2
6819_GN/WH	6819 GN/WH
CAV_4	4
CAV_8	8
1444_WH/RD	1444 WH/RD
CAV_1	1
CAV_6	6
CONN_X3	X3
K34	CRUISE CONTROL-AUTOMATIC, ELECTRONIC
6819 GN	6819 GN
CAV_2	2
CAV_7	7
1444_WH/RD	1444 WH/RD
J200	J200
X85	
S70R	(W1Y)
K9	
Cruise_Control_Schematics_REF	Cruise Control Schematics
Fog_Lights_Schematics_REF	Fog Lights Schematics

DIAGNOSTIC INFORMATION AND PROCEDURES

DIAGNOSTIC CODE INDEX

DIAGNOSTIC CODE INDEX

DTC	Description
DTC B1405	DTC B1405 03 Control Module Voltage Reference Output 2 Circuit Low Voltage DTC B1405 07 Control Module Voltage Reference Output 2 Circuit High Voltage
DTC B1529	DTC B1529 03 Control Module Voltage Reference Output 5 Circuit Low Voltage DTC B1529 07 Control Module Voltage Reference Output 5 Circuit High Voltage
DTC B3622	DTC B3622 07 Steering Wheel Controls Signal Circuit High Voltage

DTC B1405

Diagnostic Instructions

- Perform the **Diagnostic System Check - Vehicle** prior to using this diagnostic procedure.
- Review **Strategy Based Diagnosis** for an overview of the diagnostic approach.
- **Diagnostic Procedure Instructions** provides an overview of each diagnostic category.

DTC Descriptors

DTC B1405 03

Control Module Voltage Reference Output 2 Circuit Low Voltage

DTC B1405 07

Control Module Voltage Reference Output 2 Circuit High Voltage

Diagnostic Fault Information

Electrical DTCs

Circuit	Short to Ground	Open/High Resistance	Short to Voltage	Signal Performance
12 V Reference	B1529 03, B1405 03	1	B1529 07	B1529 07
Signal	1	1	B3622 07	-
1. Steering Wheel Controls Inoperative				

Circuit/System Description

The body control module (BCM) monitors the system voltage to make sure that the voltage stays within the proper range. Damage to components and/or incorrect operation can occur when the voltage is out of range.

Conditions for Running the DTC

- Battery voltage is between 9-16 V.
- The ignition is ON.

Conditions for Setting the DTC

The BCM detects a low/high voltage on the control circuit.

Conditions for Clearing the DTC

- The condition responsible for setting the DTC no longer exists.
- A history DTC will clear once 100 consecutive malfunction free ignition cycles have occurred.

Reference Information

Schematic Reference

Steering Wheel Secondary/Configurable Control Schematics

Connector End View Reference

COMPONENT CONNECTOR END VIEWS - INDEX

Description and Operation

Steering Wheel Controls Description and Operation

Electrical Information Reference

- **Circuit Testing**
- **Connector Repairs**
- **Testing for Intermittent Conditions and Poor Connections**
- **Wiring Repairs**

Scan Tool Reference

Control Module References for scan tool information

Circuit/System Verification

1. Engine running, accessories OFF, measure and record the battery voltage at the battery terminals.
2. Verify the voltage measured at the battery terminals is between 12.6-15.0 V.
    - **If not between 12.6-15.0 V**

      Refer to **Charging System Test** .

    - **If between 12.6-15.0 V**
3. Refer to Circuit/System Testing below.

Circuit/System Testing

1. Ignition OFF and all vehicle systems OFF, disconnect the harness connector at the S70R Steering Wheel Controls Switch - Right, ignition ON.
2. Test for 11.8-12.2 V between the reference voltage circuit terminal 1 and ground.
    - **If less than 11.8 V**
    1. Ignition OFF, disconnect the harness connector at the K9 Body Control Module.
    2. Test for infinite resistance between the reference voltage circuit and ground.
        - If less than infinite resistance, repair the short to ground on the circuit.
        - If infinite resistance

3. Test for less than 2 ohms in the reference voltage circuit end to end.
    - If 2 ohms or greater, repair the open/high resistance in the circuit.
    - If less than 2 ohms, replace the K9 Body Control Module.
- **If greater than 12.2 V**

1. Ignition OFF, disconnect the harness connector at the K9 Body Control Module, ignition ON.
2. Test for less than 1 V between the reference voltage circuit and ground.
    - If 1 V or greater, repair the short to voltage on the circuit.
    - If less than 1 V, replace the K9 Body Control Module.

- **If between 11.8-12.2 V**

3. Test for 11.8-12.2 V between the reference voltage circuit terminal 1 and signal circuit terminal 2.
    - **If not between 11.8-12.2 V**

    1. Ignition OFF, disconnect the harness connector at the K9 Body Control Module.
    2. Test for less than 1 V between the signal circuit and ground.
        - If 1 V or greater, repair the short to voltage on the circuit.
        - If less than 1 V
    3. Test for less than 2 ohms in the signal circuit end to end.
        - If 2 ohms or greater, repair the open/high resistance in the circuit.
        - If less than 2 ohms replace the K9 Body Control Module.

    - **If between 11.8-12.2 V**
4. Test or replace the S70R Steering Wheel Controls Switch - Right.

Component Testing

1. Ignition OFF, disconnect the harness connector at the S70R Steering Wheel Controls Switch - Right.
2. Test the resistance between the signal terminal 2 and the reference voltage terminal 1 while pressing the appropriate steering wheel controls switch button listed below:
    - **If not the specified value**

      Replace the S70R Steering Wheel Controls Switch - Right.

    - **If the specified value**
3. All OK

Function Switch	Minimum Resistance Value	Maximum Resistance Value
Hang Up-Mute	5.0 kohms	5.5 kohms
Telephone Switch	3.6 kohms	4 kohms
Source Switch	2.8 kohms	3.1 kohms
Arrow Down	2.2 kohms	2.6 kohms
Arrow Up	1.7 kohms	2 kohms
Volume Down	1.4 kohms	1.6 kohms

Volume Up	1.1 kohms	1.3 kohms
No Switch Pressed	Infinite	Infinite

Repair Instructions

Perform the **Diagnostic Repair Verification** after completing the repair.

Control Module References for BCM replacement, programming and setup.

DTC B1529

Diagnostic Instructions

- Perform the **Diagnostic System Check - Vehicle** prior to using this diagnostic procedure.
- Review **Strategy Based Diagnosis** for an overview of the diagnostic approach.
- **Diagnostic Procedure Instructions** provides an overview of each diagnostic category.

DTC Descriptors

DTC B1529 03

Control Module Voltage Reference Output 5 Circuit Low Voltage

DTC B1529 07

Control Module Voltage Reference Output 5 Circuit High Voltage

Diagnostic Fault Information

Electrical DTCs

Circuit	Short to Ground	Open/High Resistance	Short to Voltage	Signal Performance
12 V Reference	B1529 03, B1405 03	1	B1529 07	B1529 07
Signal	1	1	B3622 07	-
1. Steering Wheel Controls Inoperative				

Circuit/System Description

The body control module (BCM) supplies voltage to the steering wheel control switches and monitors the return signal. Each switch state is associated to a set resistance value and when pressed a specific voltage drop occurs across the resistor unique to the switch. The BCM identifies the switch selection and activates the feature.

Conditions for Running the DTC

- The system voltage is between 9-16 V.

- The ignition is ON.

Conditions for Setting the DTC

B1529 03

- The BCM detects a short to ground in the 12 V reference circuit.
- The above condition is present for greater than 30 seconds.

B1529 07

- The BCM detects a short to voltage in the 12 V reference circuit.
- The above condition is present for greater than 30 seconds.

Action Taken When the DTC Sets

The BCM will ignore switch inputs.

Conditions for Clearing the DTC

- The condition responsible for setting the DTC no longer exists.
- A history DTC will clear once 100 consecutive malfunction free ignition cycles have occurred.

Reference Information

Schematic Reference

Steering Wheel Secondary/Configurable Control Schematics

Connector End View Reference

COMPONENT CONNECTOR END VIEWS - INDEX

Description and Operation

Steering Wheel Controls Description and Operation

Electrical Information Reference

- **Circuit Testing**
- **Connector Repairs**
- **Testing for Intermittent Conditions and Poor Connections**
- **Wiring Repairs**

Scan Tool Reference

Control Module References for scan tool information

Circuit/System Testing

1. Ignition OFF and all vehicle systems OFF, disconnect the harness connector at the S70R Steering Wheel Controls Switch - Right, ignition ON.
2. Test for 11.8-12.2 V between the reference voltage circuit terminal 1 and ground.
    - **If less than 11.8 V**
    1. Ignition OFF, disconnect the harness connector at the K9 Body Control Module.
    2. Test for infinite resistance between the reference voltage circuit and ground.
        - If less than infinite resistance, repair the short to ground on the circuit.
        - If infinite resistance
    3. Test for less than 2 ohms in the reference voltage circuit end to end.
        - If 2 ohms or greater, repair the open/high resistance in the circuit.
        - If less than 2 ohms, replace the K9 Body Control Module.
    - **If greater than 12.2 V**
    1. Ignition OFF, disconnect the harness connector at the K9 Body Control Module, ignition ON.
    2. Test for less than 1 V between the reference voltage circuit and ground.
        - If 1 V or greater, repair the short to voltage on the circuit.
        - If less than 1 V, replace the K9 Body Control Module.
    - **If between 11.8-12.2 V**
3. Test for 11.8-12.2 V between the reference voltage circuit terminal 1 and signal circuit terminal 2.
    - **If not between 11.8-12.2 V**
    1. Ignition OFF, disconnect the harness connector at the K9 Body Control Module.
    2. Test for less than 1 V between the signal circuit and ground.
        - If 1 V or greater, repair the short to voltage on the circuit.
        - If less than 1 V
    3. Test for less than 2 ohms in the signal circuit end to end.
        - If 2 ohms or greater, repair the open/high resistance in the circuit.
        - If less than 2 ohms replace the K9 Body Control Module.
    - **If between 11.8-12.2 V**
4. Test or replace the S70R Steering Wheel Controls Switch - Right.

Component Testing

1. Ignition OFF, disconnect the harness connector at the S70R Steering Wheel Controls Switch - Right.
2. Test the resistance between the signal terminal 2 and the reference voltage terminal 1 while pressing the appropriate steering wheel controls switch button listed below:
    - **If not the specified value**

Replace the S70R Steering Wheel Controls Switch - Right.

- **If the specified value**

3. All OK

Function Switch	Minimum Resistance Value	Maximum Resistance Value
Hang Up-Mute	5.0 kohms	5.5 kohms
Telephone Switch	3.6 kohms	4 kohms
Source Switch	2.8 kohms	3.1 kohms
Arrow Down	2.2 kohms	2.6 kohms
Arrow Up	1.7 kohms	2 kohms
Volume Down	1.4 kohms	1.6 kohms
Volume Up	1.1 kohms	1.3 kohms
No Switch Pressed	Infinite	Infinite

Repair Instructions

Perform the **Diagnostic Repair Verification** after completing the repair.

Control Module References for BCM replacement, programming and setup.

DTC B3622

Diagnostic Instructions

- Perform the **Diagnostic System Check - Vehicle** prior to using this diagnostic procedure.
- Review **Strategy Based Diagnosis** for an overview of the diagnostic approach.
- **Diagnostic Procedure Instructions** provides an overview of each diagnostic category.

DTC Descriptor

DTC B3622 07

Steering Wheel Controls Signal Circuit High Voltage

Diagnostic Fault Information

Circuit	Short to Ground	Open/High Resistance	Short to Voltage	Signal Performance
12 V Reference	B1529 03, B1405 03	1	B1529 07	B1529 07
Signal	1	1	B3622 07	-
1. Steering Wheel Controls Inoperative				

Circuit/System Description

The body control module (BCM) monitors the steering wheel control signal circuit voltage. If the voltage level is too high, damage may result in the system. When a high voltage condition is detected, the BCM will ignore the switch command.

Conditions for Running the DTC

- Battery voltage is between 9-16 V.
- The ignition is ON.

Conditions for Setting the DTC

The BCM detects a short to voltage in the steering wheel control switch signal circuit.

Action Taken When the DTC Sets

The BCM will ignore switch inputs.

Conditions for Clearing the DTC

- The condition responsible for setting the DTC no longer exists.
- A history DTC will clear once 100 consecutive malfunction free ignition cycles have occurred.

Reference Information

Schematic Reference

Steering Wheel Secondary/Configurable Control Schematics

Connector End View Reference

COMPONENT CONNECTOR END VIEWS - INDEX

Description and Operation

Steering Wheel Controls Description and Operation

Electrical Information Reference

- **Circuit Testing**
- **Connector Repairs**
- **Testing for Intermittent Conditions and Poor Connections**
- **Wiring Repairs**

Scan Tool Reference

Control Module References for scan tool information

Circuit/System Testing

1. Ignition OFF and all vehicle systems OFF, disconnect the harness connector at the S70R Steering Wheel Controls Switch - Right, ignition ON.
2. Test for 11.8-12.2 V between the reference voltage circuit terminal 1 and ground.
    - **If less than 11.8 V**
    1. Ignition OFF, disconnect the harness connector at the K9 Body Control Module.
    2. Test for infinite resistance between the reference voltage circuit and ground.
        - If less than infinite resistance, repair the short to ground on the circuit.
        - If infinite resistance
    3. Test for less than 2 ohms in the reference voltage circuit end to end.
        - If 2 ohms or greater, repair the open/high resistance in the circuit.
        - If less than 2 ohms, replace the K9 Body Control Module.
    - **If greater than 12.2 V**
    1. Ignition OFF, disconnect the harness connector at the K9 Body Control Module, ignition ON.
    2. Test for less than 1 V between the reference voltage circuit and ground.
        - If 1 V or greater, repair the short to voltage on the circuit.
        - If less than 1 V, replace the K9 Body Control Module.
    - **If between 11.8-12.2 V**
3. Test for 11.8-12.2 V between the reference voltage circuit terminal 1 and signal circuit terminal 2.
    - **If not between 11.8-12.2 V**
    1. Ignition OFF, disconnect the harness connector at the K9 Body Control Module.
    2. Test for less than 1 V between the signal circuit and ground.
        - If 1 V or greater, repair the short to voltage on the circuit.
        - If less than 1 V
    3. Test for less than 2 ohms in the signal circuit end to end.
        - If 2 ohms or greater, repair the open/high resistance in the circuit.
        - If less than 2 ohms replace the K9 Body Control Module.
    - **If between 11.8-12.2 V**
4. Test or replace the S70R Steering Wheel Controls Switch - Right.

Component Testing

1. Ignition OFF, disconnect the harness connector at the S70R Steering Wheel Controls Switch - Right.
2. Test the resistance between the signal terminal 2 and the reference voltage terminal 1 while pressing the appropriate steering wheel controls switch button listed below:
    - **If not the specified value**

      Replace the S70R Steering Wheel Controls Switch - Right.

- **If the specified value**

3. All OK

Function Switch	Minimum Resistance Value	Maximum Resistance Value
Hang Up-Mute	5.0 kohms	5.5 kohms
Telephone Switch	3.6 kohms	4 kohms
Source Switch	2.8 kohms	3.1 kohms
Arrow Down	2.2 kohms	2.6 kohms
Arrow Up	1.7 kohms	2 kohms
Volume Down	1.4 kohms	1.6 kohms
Volume Up	1.1 kohms	1.3 kohms
No Switch Pressed	Infinite	Infinite

Repair Instructions

Perform the **Diagnostic Repair Verification** after completing the repair.

Control Module References for BCM replacement, programming and setup.

SYMPTOMS - SECONDARY AND CONFIGURABLE CUSTOMER CONTROLS

NOTE: The following steps must be completed before using the symptom tables.

1. Perform the **Diagnostic System Check - Vehicle** before using the symptom tables in order to verify that all of the following are true:
   - There are no DTCs set.
   - The control modules can communicate via the serial data link.
2. Review the system description and operation in order to familiarize yourself with the system functions. Refer to **Steering Wheel Controls Description and Operation**.

Visual/Physical Inspection

- Inspect for aftermarket devices which could affect the operation of the steering wheel controls. Refer to **Checking Aftermarket Accessories** .
- Inspect the easily accessible or visible system components, for obvious damage or conditions, which could cause the symptom.

Intermittent

Faulty electrical connections or wiring may be the cause of intermittent conditions. Refer to **Testing for Intermittent Conditions and Poor Connections** .

Symptom List

Refer to a symptom diagnostic procedure from the following list in order to diagnose the symptom:

Refer to **Steering Wheel Controls Malfunction** in order to diagnose the symptom.

STEERING WHEEL CONTROLS MALFUNCTION

Diagnostic Instructions

- Perform the **Diagnostic System Check - Vehicle** prior to using this diagnostic procedure.
- Review **Strategy Based Diagnosis** for an overview of the diagnostic approach.
- **Diagnostic Procedure Instructions** provides an overview of each diagnostic category.

Diagnostic Fault Information

Circuit	Short to Ground	Open/High Resistance	Short to Voltage	Signal Performance
12 V Reference	B1529 03, B1405 03	1	B1529 07	B1529 07
Signal	1	1	B3622 07	-
1. Steering Wheel Controls Inoperative				

Circuit/System Description

The body control module (BCM) supplies voltage to the audio steering wheel control switches and monitors the return signal. Each switch state is associated to a set resistance value and when pressed a specific voltage drop occurs across the resistor unique to the switch. The BCM identifies the switch selection and activates the feature.

Reference Information

Schematic Reference

Steering Wheel Secondary/Configurable Control Schematics

Connector End View Reference

COMPONENT CONNECTOR END VIEWS - INDEX

Description and Operation

Steering Wheel Controls Description and Operation

Electrical Information Reference

- **Circuit Testing**
- **Connector Repairs**

- **Testing for Intermittent Conditions and Poor Connections**
- **Wiring Repairs**

Scan Tool Reference

Control Module References for scan tool information

Circuit/System Verification

1. Ignition ON.
2. Verify the primary controls of the associated component are functioning properly.
   - **If any of the primary controls do not function properly**

     Refer to **Symptoms - Entertainment**

   - **If all of the primary controls function properly**
3. Refer to Circuit/System Testing below.

Circuit/System Testing

1. Ignition OFF and all vehicle systems OFF, disconnect the harness connector at the S70R Steering Wheel Controls Switch - Right, ignition ON.
2. Test for 11.8-12.2 V between the reference voltage circuit terminal 1 and ground.
   - **If less than 11.8 V**
   1. Ignition OFF, disconnect the harness connector at the K9 Body Control Module.
   2. Test for infinite resistance between the reference voltage circuit and ground.
      - If less than infinite resistance, repair the short to ground on the circuit.
      - If infinite resistance
   3. Test for less than 2 ohms in the reference voltage circuit end to end.
      - If 2 ohms or greater, repair the open/high resistance in the circuit.
      - If less than 2 ohms, replace the K9 Body Control Module.
   - **If greater than 12.2 V**
   1. Ignition OFF, disconnect the harness connector at the K9 Body Control Module, ignition ON.
   2. Test for less than 1 V between the reference voltage circuit and ground.
      - If 1 V or greater, repair the short to voltage on the circuit.
      - If less than 1 V, replace the K9 Body Control Module.
   - **If between 11.8-12.2 V**
3. Test for 11.8-12.2 V between the reference voltage circuit terminal 1 and signal circuit terminal 2.
   - **If not between 11.8-12.2 V**
   1. Ignition OFF, disconnect the harness connector at the K9 Body Control Module.
   2. Test for less than 1 V between the signal circuit and ground.

- If 1 V or greater, repair the short to voltage on the circuit.
- If less than 1 V

3. Test for less than 2 ohms in the signal circuit end to end.
   - If 2 ohms or greater, repair the open/high resistance in the circuit.
   - If less than 2 ohms replace the K9 Body Control Module.
- **If between 11.8-12.2 V**

4. Test or replace the S70R Steering Wheel Controls Switch - Right.

Component Testing

1. Ignition OFF, disconnect the harness connector at the S70R Steering Wheel Controls Switch - Right.
2. Test the resistance between the signal terminal 2 and the reference voltage terminal 1 while pressing the appropriate steering wheel controls switch button listed below:
   - **If not the specified value**

     Replace the S70R Steering Wheel Controls Switch - Right.

   - **If the specified value**
3. All OK

Function Switch	Minimum Resistance Value	Maximum Resistance Value
Hang Up-Mute	5.0 kohms	5.5 kohms
Telephone Switch	3.6 kohms	4 kohms
Source Switch	2.8 kohms	3.1 kohms
Arrow Down	2.2 kohms	2.6 kohms
Arrow Up	1.7 kohms	2 kohms
Volume Down	1.4 kohms	1.6 kohms
Volume Up	1.1 kohms	1.3 kohms
No Switch Pressed	Infinite	Infinite

Repair Instructions

Perform the **Diagnostic Repair Verification** after completing the repair.

Control Module References for BCM replacement, programming and setup.

DESCRIPTION AND OPERATION

STEERING WHEEL CONTROLS DESCRIPTION AND OPERATION

The steering wheel control switches duplicate the function of the primary controls of the associated component, through a network of momentary contact switches and a series of resistors. The body control module (BCM) supplies voltage to the switches and monitors the return signal. When a switch is pressed, a specific voltage

drops across the resistor unique to that switch. The BCM identifies the switch selected and sends a serial data message to the component controlled by the switch, activating the feature.

This section is intended to diagnose the circuits between the BCM and the steering wheel control switches. If the primary control for the device is inoperative, refer to the appropriate section for the component the steering wheel control switch is used for.

2013 ACCESSORIES & EQUIPMENT

Theft Deterrent - Cruze

SPECIFICATIONS

FASTENER TIGHTENING SPECIFICATIONS

Fastener Tightening Specifications

Application	Specification	
	Metric	English
Theft Deterrent Alarm Nut	9 N.m	80 lb in

SCHEMATIC WIRING DIAGRAMS

THEFT DETERRENT SYSTEM WIRING SCHEMATICS

Theft Deterrent Wiring Schematics

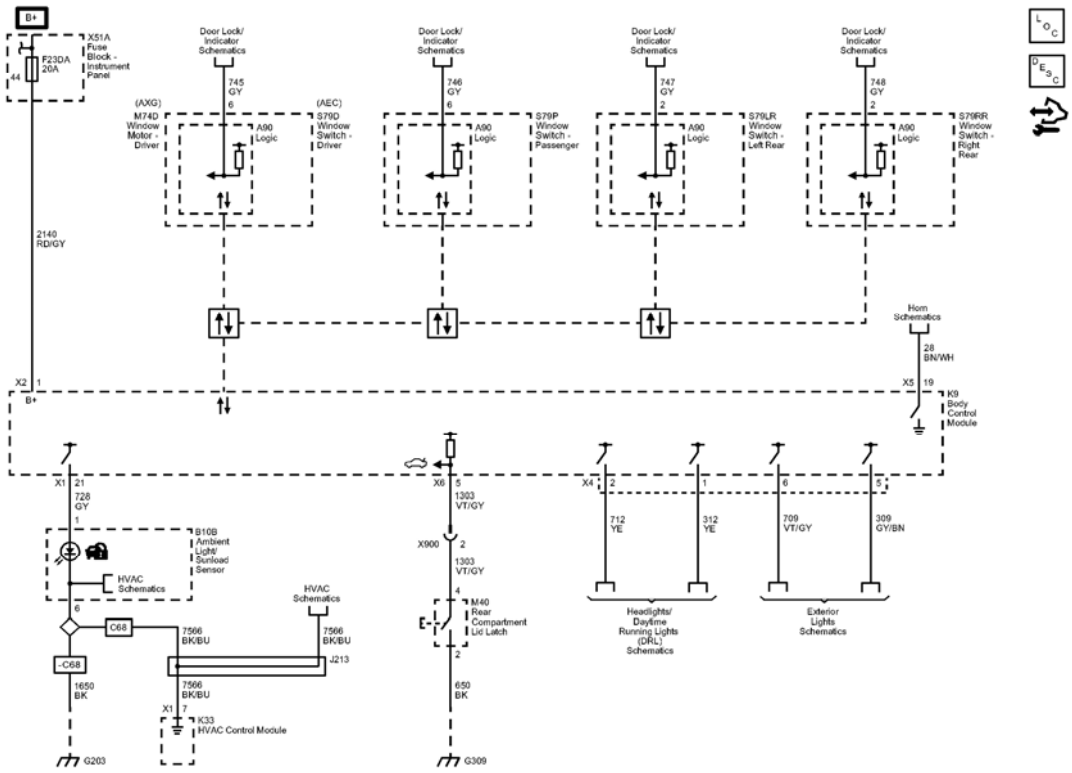

Fig. 1: Theft Deterrent Wiring Schematics
Courtesy of GENERAL MOTORS COMPANY

Callout	Component Name
2140	Battery Positive Voltage
2140_RD/GY	2140 RD/GY
CAV_1	1
CONN_X2	X2
CAV_44	44
745	Left Front Door Ajar Switch Signal
745_GY	745 GY
CAV_6	6
AXG	WINDOW-POWER OPERATED-EXPRESS DRIVER UP/DOWN
AEC	WINDOW-POWER OPERATED, DRIVER EXPRESS DOWN
746	Right Front Door Ajar Switch Signal
746_GY	746 GY
CAV_6	6
747	Left Rear Door Ajar Switch Signal
747_GY	747 GY
CAV_2	2
748	Right Rear Door Ajar Switch Signal
748_GY	748 GY
CAV_2	2
SD	Serial Data
Data_Communication_Schematics_REF	Data Communication Schematics
Data_Communication_Schematics_REF	Data Communication Schematics
Data_Communication_Schematics_REF	Data Communication Schematics
28	Horn Relay Control
28_BN/WH	28 BN/WH
CAV 19	19
CONN_X5	X5
309	Right Park Lamp Supply Voltage
309_GY/BN	309 GY/BN
CAV_5	5
709	Left Park Lamp Supply Voltage
709_VT/GY	709 VT/GY
CAV_6	6
312	Right Headlamp Low Beam Supply Voltage
312_YE	312 YE
CAV_1	1
712	Left Headlamp Low Beam Supply Voltage

712_YE	712 YE
CAV_2	2
CONN_X4	X4
1303	Lift Gate Ajar Switch Signal (1)
1303_VT/GY	1303 VT/GY
CAV_4	4
CAV_5	5
CONN_X6	X6
1303_VT/GY	1303 VT/GY
CAV_2	2
7566	Humidity/Windscreen Temp Sensor Low Reference
7566_BK/BU	7566 BK/BU
CAV_7	7
CONN_X1	X1
7566_BK/BU	7566 BK/BU
CAV_6	6
1650	Ground
1650 BK	1650 BK
728	Security Indicator Control
728 GY	728 GY
CAV_1	1
CAV_21	21
CONN_X1	X1
650	Ground
650_BK	650 BK
CAV_2	2
C68	HVAC SYSTEM-AIR CONDITIONER FRT, AUTO, ELECTRONIC CONTROLS
7566_BK/BU	7566 BK/BU
C68	HVAC SYSTEM-AIR CONDITIONER FRT, AUTO, ELECTRONIC CONTROLS
F23DA	F23DA 20A
X900	X900
J213	J213
Door Lock/Indicator Schematics REF	Door Lock/Indicator Schematics
Horn_Schematics_REF	Horn Schematics
B10B	
X51A	
K9	

M40	
HVAC_Schematics_REF	HVAC Schematics
A90	Logic
S79D	
A90	Logic
Door_Lock/Indicator_Schematics_REF	Door Lock/Indicator Schematics
S79P	
A90	Logic
Door_Lock/Indicator_Schematics_REF	Door Lock/Indicator Schematics
S79LR	
A90	Logic
Door_Lock/Indicator_Schematics_REF	Door Lock/Indicator Schematics
S79RR	
Headlights/Daytime_Running_Lights_(DRL)_Schematics_REF	Headlights/Daytime Running Lights (DRL) Schematics
Exterior_Lights_Schematics_REF	Exterior Lights Schematics
HVAC_Schematics_REF	HVAC Schematics
M74D	
K33	

DIAGNOSTIC INFORMATION AND PROCEDURES

SYMPTOMS - THEFT DETERRENT

NOTE: The following steps must be completed before using the symptom tables.

1. Perform **Diagnostic System Check - Vehicle** in order to verify that all of the following are true:
   - There are no DTCs set.
   - The control modules can communicate via the serial data link.
2. Review the system operation in order to familiarize yourself with the system functions. Refer to the following **Theft Systems Description and Operation**.

Visual/Physical Inspection

- Inspect for aftermarket devices which could affect the operation of the Theft Deterrent System. Refer to **Checking Aftermarket Accessories** .
- Inspect the easily accessible or visible system components for obvious damage or conditions which could cause the symptom.

Intermittent

Faulty electrical connections or wiring may be the cause of intermittent conditions. Refer to **Testing for Intermittent Conditions and Poor Connections** .

Symptom List

Refer to a symptom diagnostic procedure from the following list in order to diagnose the symptom:

- **Content Theft Deterrent Malfunction**
- **Security Indicator Malfunction (with C67)**, **Security Indicator Malfunction (with C68)**

CONTENT THEFT DETERRENT MALFUNCTION

Diagnostic Instructions

- Perform the **Diagnostic System Check - Vehicle** prior to using this diagnostic procedure.
- Review **Strategy Based Diagnosis** for an overview of the diagnostic approach.
- **Diagnostic Procedure Instructions** provides an overview of each diagnostic category.

Circuit/System Description

The content theft deterrent system is a software based system in which the body control module (BCM) actively monitors certain inputs to determine if unauthorized vehicle access is being attempted. Based on inputs such as the door ajar switches, the rear compartment ajar switch, and the hood ajar switch, the BCM determines whether a content theft deterrent alarm is warranted. If unauthorized access is being detected, the BCM will pulse the vehicle horn and flash the exterior lamps as a means of theft deterrence. If equipped, the BCM will also activate a siren as an additional theft deterrence.

Diagnostic Aids

The scan tool Content Theft Deterrent Trigger History 1, 2, and 3 parameters can be used to help isolate an intermittent unwanted content theft deterrent alarm. These parameters are a rolling history of the previous three causes of a theft deterrent alarm. If all three parameters are indicating the same alarm trigger, the indicated input should be the starting point when diagnosing an intermittent concern.

Reference Information

Schematic Reference

Theft Deterrent System Schematics

Connector End View Reference

COMPONENT CONNECTOR END VIEWS - INDEX

Description and Operation

Theft Systems Description and Operation

Electrical Information Reference

- **Circuit Testing**
- **Connector Repairs**
- **Testing for Intermittent Conditions and Poor Connections**
- **Wiring Repairs**

Scan Tool Reference

Control Module References for scan tool information

Circuit/System Verification

1. Ignition ON.
2. Verify each indicator/message transitions between the ajar and closed state while opening and closing each vehicle door, hood, and rear compartment.
   - **If any indicator/message does not change**

     Refer to **Hood Ajar Indicator/Message Malfunction** ,, **Door Ajar Indicator Malfunction** ,, or **Trunk Ajar Indicator Malfunction** .

   - **If each indicator/message changes**
3. Completely lower the driver door window and close all vehicle doors, ignition OFF.
4. Arm the content theft deterrent system by locking the doors with the keyless entry transmitter.
5. Verify the scan tool Content Theft Deterrent Alarm Status parameter is Armed.
   - **If not Armed**

     Refer to **Keyless Entry System Malfunction (Active)** , **Keyless Entry System Malfunction (Passive)** .

   - **If Armed**
6. Without disarming the system, reach in through the open driver window and open the driver door.
7. Verify the scan tool Content Theft Deterrent Alarm Status parameter is Alarm.
   - **If not Alarm**

     Replace the K9 Body Control Module.

   - **If Alarm**
8. All OK.

Repair Instructions

Perform the **Diagnostic Repair Verification** after completing the repair.

Control Module References for body control module replacement, programming, and setup.

SECURITY INDICATOR MALFUNCTION (WITH C67)

Diagnostic Instructions

- Perform the **Diagnostic System Check - Vehicle** prior to using this diagnostic procedure.
- Review **Strategy Based Diagnosis** for an overview of the diagnostic approach.
- **Diagnostic Procedure Instructions** provides an overview of each diagnostic category.

Diagnostic Fault Information

Circuit	Short to Ground	Open/High Resistance	Short to Voltage	Signal Performance
Control	2	2	1	-
Ground	-	2	-	-
1. Security LED always ON 2. Security LED inoperative				

Circuit/System Description

The security LED is controlled by the Body Control Module (BCM) based on commands from the content theft deterrent system. The security LED is located in the instrument panel as part of the ambient light sensor and is supplied ground at all times. When the content theft deterrent system requests the LED be illuminated, the BCM applies voltage to the control circuit, illuminating the LED.

Reference Information

Schematic Reference

Theft Deterrent System Schematics

Connector End View Reference

COMPONENT CONNECTOR END VIEWS - INDEX

Description and Operation

Theft Systems Description and Operation

Electrical Information Reference

- **Circuit Testing**
- **Connector Repairs**
- **Testing for Intermittent Conditions and Poor Connections**
- **Wiring Repairs**

Scan Tool Reference

Control Module References for scan tool information

Circuit/System Verification

1. Arm the content theft deterrent system.
2. Verify the security LED illuminates or flashes during the arming sequence.
   - **If the security LED does not illuminate or flash**

     Refer to Circuit/System Testing below.

   - **If the security LED illuminates or flashes**
3. All OK.

Circuit/System Testing

1. Ignition OFF and all vehicle systems OFF, disconnect the harness connector at the B10B Ambient Light/Sunload Sensor. It may take up to 2 minutes for all vehicle systems to power down.
2. Test for less than 30 ohms between the ground circuit terminal 6 and ground.
   - **If 30 ohms or greater**
   1. Ignition OFF.
   2. Test for less than 2 ohms in the ground circuit end to end.
      - If 2 ohms or greater, repair the open/high resistance in the circuit.
      - If less than 2 ohms, repair the open/high resistance in the ground connection.
   - **If less than 30 ohms**
3. Ignition ON, connect a test lamp between the control circuit terminal 1 and the ground circuit terminal 6.
4. Verify the test lamp turns ON and OFF when commanding the Security Indicator On and Off with a scan tool.
   - **If the test lamp is always OFF**
   1. Ignition OFF, disconnect the harness connector at the K9 Body Control Module.
   2. Test for infinite resistance between the control circuit and ground.
      - If less than infinite resistance, repair the short to ground on the circuit.
      - If infinite resistance
   3. Test for less than 2 ohms in the control circuit end to end.
      - If 2 ohms or greater, repair the open/high resistance in the circuit.
      - If less than 2 ohms, replace the K9 Body Control Module.
   - **If the test lamp is always ON**
   1. Ignition OFF, disconnect the harness connector at the K9 Body Control Module, ignition ON.
   2. Test for less than 1 V between the control circuit and ground.
      - If 1 V or greater, repair the short to voltage on the circuit.
      - If less than 1 V, replace the K9 Body Control Module.
   - **If the test lamp turns ON and OFF**

5. Test or replace the B10B Ambient Light/Sunload Sensor.

Repair Instructions

Perform the **Diagnostic Repair Verification** after completing the repair.

- **Headlamp Automatic Control Ambient Light Sensor Replacement**
- **Control Module References** for Body Control Module replacement, programming, and setup

SECURITY INDICATOR MALFUNCTION (WITH C68)

Diagnostic Instructions

- Perform the **Diagnostic System Check - Vehicle** prior to using this diagnostic procedure.
- Review **Strategy Based Diagnosis** for an overview of the diagnostic approach.
- **Diagnostic Procedure Instructions** provides an overview of each diagnostic category.

Diagnostic Fault Information

Circuit	Short to Ground	Open/High Resistance	Short to Voltage	Signal Performance
Control	2	2	1	-
Low Reference	-	2	-	-
1. Security LED always ON 2. Security LED inoperative				

Circuit/System Description

The security LED is controlled by the Body Control Module (BCM) based on commands from the content theft deterrent system. The security LED is located in the instrument panel as part of the ambient light sensor and is supplied ground at all times. When the content theft deterrent system requests the LED be illluminated, the BCM applies voltage to the control circuit, illuminating the LED.

Reference Information

Schematic Reference

Theft Deterrent System Schematics

Connector End View Reference

COMPONENT CONNECTOR END VIEWS - INDEX

Description and Operation

Theft Systems Description and Operation

Electrical Information Reference

- **Circuit Testing**
- **Connector Repairs**
- **Testing for Intermittent Conditions and Poor Connections**
- **Wiring Repairs**

Scan Tool Reference

Control Module References for scan tool information

Circuit/System Verification

1. Arm the content theft deterrent system.
2. Verify the security LED illuminates or flashes during the arming sequence.
    - **If the security LED does not illuminate or flash**

      Refer to Circuit/System Testing below.

    - **If the security LED illuminates or flashes**
3. All OK.

Circuit/System Testing

1. Ignition OFF and all vehicle systems OFF, disconnect the harness connector at the B10B Ambient Light/Sunload Sensor. It may take up to 2 minutes for all vehicle systems to power down.
2. Test for less than 30 ohms between the low reference circuit terminal 6 and ground.
    - **If 30 ohms or greater**
    1. Ignition OFF, disconnect the harness connector at the K33 HVAC Control Module.
    2. Test for less than 2 ohms in the low reference circuit end to end.
        - If 2 ohms or greater, repair the open/high resistance in the circuit.
        - If less than 2 ohms, replace the K33 HVAC Control Module.
    - **If less than 10 ohms**
3. Ignition ON, connect a test lamp between the control circuit terminal 1 and the low reference circuit terminal 6.
4. Verify the test lamp turns ON and OFF when commanding the Security Indicator On and Off with a scan tool.
    - **If the test lamp is always OFF**
    1. Ignition OFF, disconnect the harness connector at the K9 Body Control Module.
    2. Test for infinite resistance between the control circuit and ground.
        - If less than infinite resistance, repair the short to ground on the circuit.
        - If infinite resistance

3. Test for less than 2 ohms in the control circuit end to end.
    - If 2 ohms or greater, repair the open/high resistance in the circuit.
    - If less than 2 ohms, replace the K9 Body Control Module.
- **If the test lamp is always ON**

1. Ignition OFF, disconnect the harness connector at the K9 Body Control Module, ignition ON.
2. Test for less than 1 V between the control circuit and ground.
    - If 1 V or greater, repair the short to voltage on the circuit.
    - If less than 1 V, replace the K9 Body Control Module.

- **If the test lamp turns ON and OFF**

5. Test or replace the B10B Ambient Light/Sunload Sensor.

Repair Instructions

Perform the **Diagnostic Repair Verification** after completing the repair.

- **Headlamp Automatic Control Ambient Light Sensor Replacement**
- **Control Module References** for Body Control Module or HVAC Control Module replacement, programming, and setup

REPAIR INSTRUCTIONS

THEFT DETERRENT ALARM REPLACEMENT

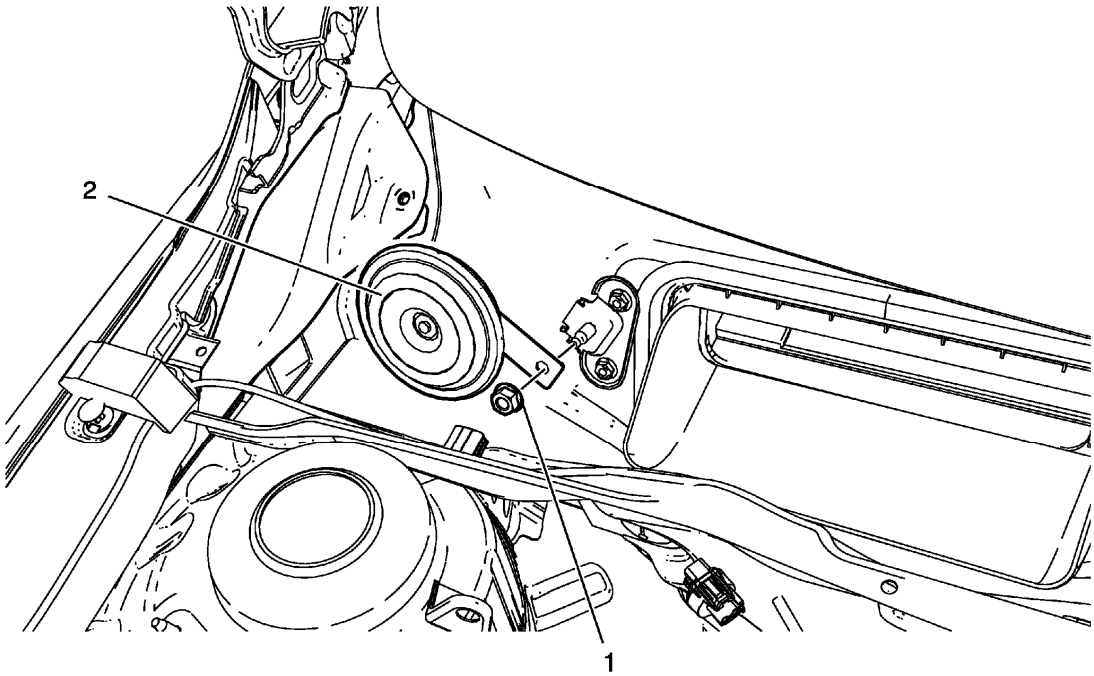

Fig. 2: Theft Deterrent Alarm And Theft Deterrent Alarm Nut
Courtesy of GENERAL MOTORS COMPANY

Theft Deterrent Alarm Replacement

Callout	Component Name
Preliminary Procedures Remove the air inlet grille panel. Refer to **Air Inlet Grille Panel Replacement** .	
1	Theft Deterrent Alarm Nut **CAUTION:** **Refer to Fastener Caution .** **Tighten** 9 N.m (80 lb in)
2	Theft Deterrent Alarm **Procedure** Disconnect wiring connector.

DESCRIPTION AND OPERATION

THEFT SYSTEMS DESCRIPTION AND OPERATION

When armed, the content theft deterrent system is designed to deter vehicle content theft by pulsing the horns and exterior lamps for approximately 30 seconds when an unauthorized vehicle entry is detected. If equipped, a siren will also be activated. However, the content theft deterrent system does not affect engine starting.

An unauthorized entry can be any of the following with the content theft deterrent system armed:

- Unauthorized entry into the underhood area
- Unauthorized entry into the rear compartment
- When any door is opened without receiving a valid unlock command
- After a battery reconnect, if the battery was disconnected with the content theft deterrent system armed

The components of the content theft deterrent system are:

- Body Control Module (BCM)
- Keyless Entry Control Module (RPO ATH)
- Remote Control Door Lock Receiver
- Security LED
- Door ajar switches
- Rear compartment ajar switch
- Hood ajar switch

- External siren, if equipped

Arming the Content Theft Deterrent System

Use the following procedure in order to arm the system:

1. Place the shift lever in P (park).
2. Turn OFF the ignition.
3. Open any door.
4. Lock the doors with the power door lock switch, locking the door manually using the door lock rod, or by pressing the LOCK button on the transmitter.
5. The system will begin the arm sequence immediately after the last door is closed. If the keyless entry transmitter is used to arm the system after the vehicle doors are closed, the arm sequence will begin as soon as the LOCK command is received from the transmitter.
6. Pressing the LOCK button on the keyless entry transmitter a second time will bypass the delayed arming function and force the system to arm.

Locking the Vehicle Without Arming the Content Theft Deterrent System

Locking the vehicle may be accomplished without arming the content theft deterrent system. Use of the exterior door lock cylinder will lock the vehicle, but will not arm the content theft deterrent system.

Disarming an Armed System/Silencing an Alarm

If system arming has been requested, it must be disarmed before the vehicle is opened again.

NOTE: Disconnecting the battery or removing fuses does not disable the arm or alarm modes, since the BCM stores the content theft deterrent mode status in memory.

- To disarm the content theft deterrent system in standby mode, perform one of the following:
  - Press the UNLOCK button on the keyless entry transmitter.
  - Approach the vehicle with a valid keyless entry transmitter and press the exterior door handle button (RPO ATH).
  - Insert a valid key into the ignition and switch to the ON position.
- To disarm the content theft deterrent system in the armed mode (non-event) or when activated (during an alarm event):
  - Press the UNLOCK button on the keyless entry transmitter.
  - Insert a valid key into the ignition and switch to the ON position

Content Theft Deterrent Circuit Description

The following is a description of each component used in the content theft deterrent system:

Body Control Module

The content theft deterrent system is an internal function of the BCM which utilizes serial data and various switch inputs information to perform content theft deterrent functions. When the BCM detects an unauthorized entry, it activates the horns and exterior lamps. If equipped, a siren will also be activated. The BCM has 4 basic modes (disarmed, standby, armed, and alarm) for operating the content theft deterrent system. The different modes are described below.

1. The BCM has the content theft deterrent system in a disarmed mode until the following conditions are detected:
    - Ignition key turned to the OFF position.
    - Doors locked using the power door lock switch, the door lock rod, or the LOCK button on the transmitter.
2. The BCM enters the standby mode when the above conditions are detected. If a door was already opened when the arm mode was requested, the standby mode does not start the timer until the last door is closed.
3. When the last door is closed, a 15 second timer is activated. Once the timer has expired, the BCM enters the armed mode. After this delay, any unauthorized entry will activate the alarm mode.
4. When the BCM detects an unauthorized entry, the BCM enters the alarm mode. The BCM activates the horns and exterior lamps for 30 seconds. If equipped, a siren will also be activated. This is followed by a three minute time-out with the horn no longer active. If no new intrusions are detected after the time-out, the horn is not active. The system must be disarmed or the intrusion condition removed after the time-out for the system to exit alarm mode.

Keyless Entry Control Module (RPO ATH)

The passive keyless entry system can arm and disarm the content theft deterrent system. When a valid keyless entry transmitter is detected while attempting to passively access the vehicle, the keyless entry module will send a message via serial data to disarm the content theft deterrent system.

Remote Control Door Lock Receiver

The keyless entry system can arm and disarm the content theft deterrent system. When the remote control door lock receiver receives a door lock or unlock signal from the transmitter, the remote control door lock receiver sends a message to the BCM via serial data to perform the appropriate arm/disarm functions.

Security LED

The security LED is illuminated on the instrument panel by the BCM. The content theft deterrent system uses the security LED to inform the driver of system status prior to arming.

Door Ajar Switches

The content theft deterrent system uses the door ajar switches as a status indicator to activate the alarm. The door ajar switches are monitored by the body control module via a discrete input from each door ajar switch. If the BCM receives a signal indicating a door is opened when the content theft deterrent system is armed, the BCM activates the alarm.

Hood Ajar Switch

The content theft deterrent system uses the hood ajar switch as a status indicator to activate the alarm. The BCM monitors the hood ajar switch via a discrete input from the switch. If the BCM receives a signal indicating the hood has been opened when the content theft deterrent system is armed, the BCM activates the alarm.

Rear Compartment Ajar Switch

The content theft deterrent system uses the rear compartment ajar switch as a status indicator to activate the alarm. The BCM monitors the rear compartment ajar switch via a discrete input from the switch. If the BCM receives a signal indicating the rear compartment has been opened when content theft deterrent system is armed, the BCM activates the alarm.

Inputs

The BCM monitors the following inputs for content theft deterrent:

- The door ajar switches
- The keyless entry transmitter LOCK/UNLOCK buttons; a message from the remote control door lock receiver
- The immobilizer status - The BCM uses the immobilizer status for disarming the system or silencing an alarm when the correct vehicle key is used to start the vehicle
- The rear compartment ajar switch
- The hood ajar switch

Outputs

The BCM controls the following for content theft deterrent:

- The horn relay
- The exterior lamps
- If equipped, an external siren.

2013 ACCESSORIES & EQUIPMENT

Vehicle Access - Cruze

SPECIFICATIONS

FASTENER TIGHTENING SPECIFICATIONS

Fastener Tightening Specifications

Application	Specification	
	Metric	English
Door Lock Switch	1.5 N.m	13 lb in
Front Side Door Handle Bracket Bolt	2.5 N.m	22 lb in
Front Side Door Latch Bolt	10 N.m	89 lb in
Front Side Door Lock Striker Bolt	25 N.m	18 lb ft
Front Side Door Outside Handle Bolt	9 N.m	80 lb in
Rear Compartment Lid Latch Bolt	9 N.m	80 lb in
Rear Compartment Lid Latch Striker Bolt	9 N.m	80 lb in
Rear Side Door Handle Bracket Bolt	2.5 N.m	22 lb in
Rear Side Door Outside Handle Bolt	9 N.m	80 lb in
Rear Side Door Latch Bolt	10 N.m	89 lb in
Rear Side Door Lock Striker Bolt	25 N.m	18 lb ft

SCHEMATIC WIRING DIAGRAMS

DOOR LOCK/INDICATOR WIRING SCHEMATICS

Switches Wiring Schematics

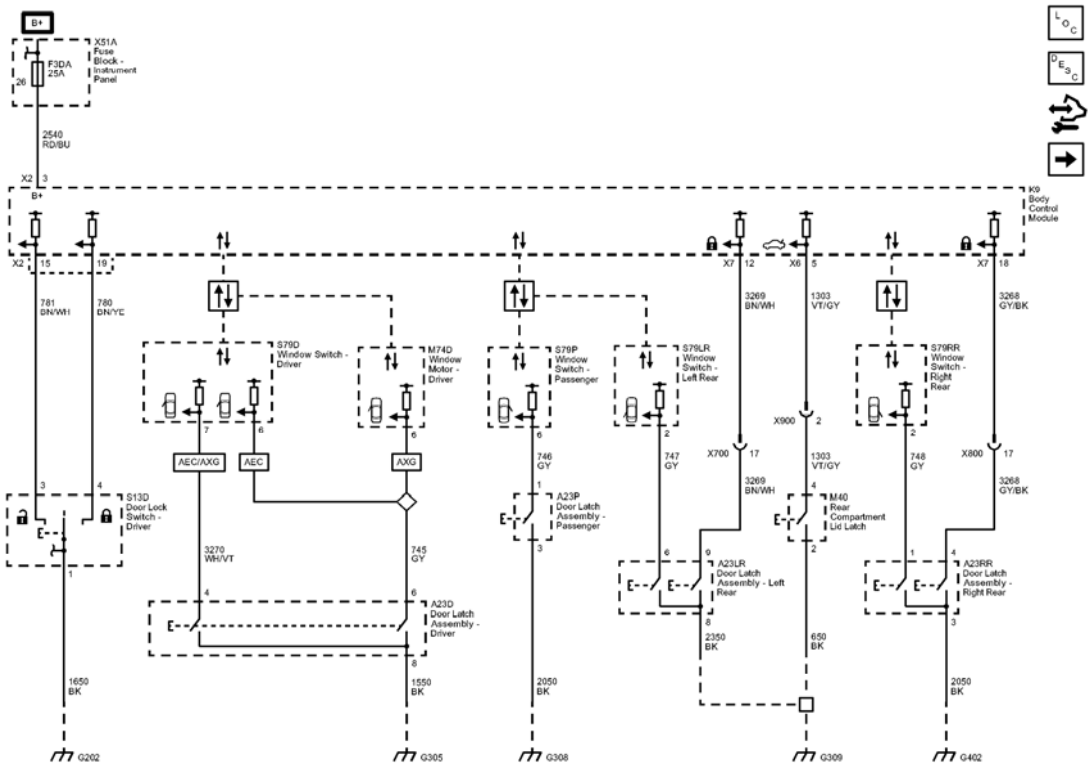

Fig. 1: Switches Wiring Schematics
Courtesy of GENERAL MOTORS COMPANY

Callout	Component Name
CAV_26	26
2540	Battery Positive Voltage
2540_RD/BU	2540 RD/BU
CAV_3	3
CONN_X2	X2
781	Driver Door Lock Switch Unlock Signal
781_BN/WH	781 BN/WH
CAV_3	3
CAV_15	15
CONN_X2	X2
780	Driver Door Lock Switch Lock Signal
780_BN/YE	780 BN/YE
CAV_4	4
CAV_19	19
SD	Serial Data

Data_Communication_Schematics_REF	Data Communication Schematics
3269	Child Security Lock Motor Status Signal Left Rear
3269_BN/WH	3269 BN/WH
CAV_9	9
CAV_12	12
CONN_X7	X7
3269_BN/WH	3269 BN/WH
CAV_17	17
1303	Lift Gate Ajar Switch Signal (1)
1303_VT/GY	1303 VT/GY
CAV_4	4
CAV_5	5
CONN_X6	X6
1303_VT/GY	1303 VT/GY
CAV_2	2
3268	Child Security Lock Motor Status Signal Right Rear
3268_GY/BK	3268 GY/BK
CAV_4	4
CAV_18	18
CONN_X7	X7
CAV_17	17
3268 GY/BK	3268 GY/BK
748	Right Rear Door Ajar Switch Signal
748_GY	748 GY
CAV_1	1
CAV_2	2
2350	Ground
2350_BK	2350 BK
CAV_8	8
650	Ground
650 BK	650 BK
CAV_2	2
2050	Ground
2050_BK	2050 BK
CAV_3	3
3270	Driver Door Lock Motor Status

3270_WH/VT	3270 WH/VT
CAV_4	4
CAV_7	7
745	Left Front Door Ajar Switch Signal
CAV_6	6
745_GY	745 GY
CAV_6	6
CAV_6	6
2050_BK	2050 BK
CAV_3	3
1550	Ground
1550_BK	1550 BK
CAV_8	8
1650	Ground
1650_BK	1650 BK
CAV_1	1
AEC	WINDOW-POWER OPERATED, DRIVER EXPRESS DOWN
AEC	WINDOW-POWER OPERATED, DRIVER EXPRESS DOWN
AXG	WINDOW-POWER OPERATED-EXPRESS DRIVER UP/DOWN
AXG	WINDOW-POWER OPERATED-EXPRESS DRIVER UP/DOWN
746	Right Front Door Ajar Switch Signal
746_GY	746 GY
CAV_1	1
CAV_6	6
747	Left Rear Door Ajar Switch Signal
747_GY	747 GY
CAV_6	6
CAV_2	2
Data_Communication_Schematics_REF	Data Communication Schematics
Data_Communication_Schematics_REF	Data Communication Schematics

G305	G305
G202	G202
G309	G309
G308	G308
G402	G402
F3DA	F3DA 25A
X700	X700
X900	X900
X800	X800
S13D	
M74D	
S79P	
M40	
S79RR	
X51A	
S79LR	
A23P	
S79D	
A23D	
K9	
A23RR	
A23LR	

Actuators Wiring Schematics

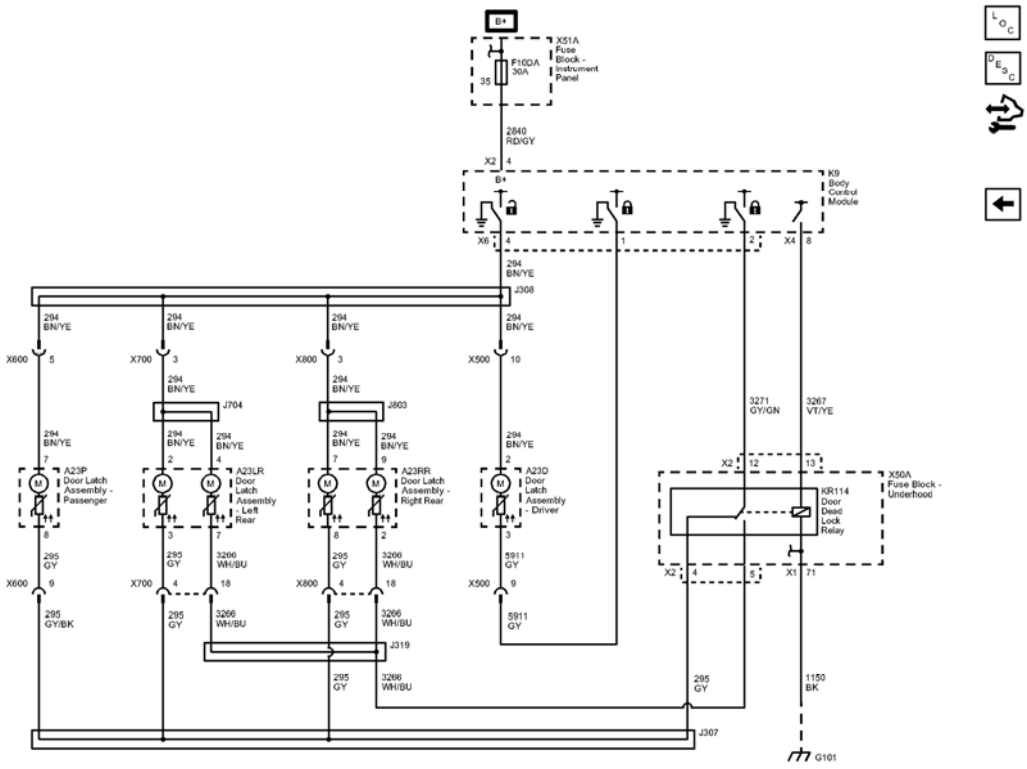

Fig. 2: Actuators Wiring Schematics
Courtesy of GENERAL MOTORS COMPANY

Callout	Component Name
CAV_35	35
2840	Battery Positive Voltage
2840_RD/GY	2840 RD/GY
CAV_4	4
CONN_X2	X2
294	Door Lock Actuator Unlock Control
294_BN/YE	294 BN/YE
CAV_2	2
CAV_4	4
CONN_X6	X6
294_BN/YE	294 BN/YE
CAV_7	7
294_BN/YE	294 BN/YE
CAV_2	2
294_BN/YE	294 BN/YE
CAV_7	7
294_BN/YE	294 BN/YE

CAV_4	4
294_BN/YE	294 BN/YE
CAV_9	9
294_BN/YE	294 BN/YE
294_BN/YE	294 BN/YE
294_BN/YE	294 BN/YE
294_BN/YE	294 BN/YE
294_BN/YE	294 BN/YE
294_BN/YE	294 BN/YE
294_BN/YE	294 BN/YE
CAV_5	5
CAV_3	3
CAV_3	3
CAV_10	10
295	Door Lock Actuator Lock Control
295_GY	295 GY
CAV_8	8
295_GY	295 GY
CAV_3	3
3266	Child Security Lock Motor Unlock Control
3266_WH/BU	3266 WH/BU
CAV_7	7
295_GY	295 GY
CAV_8	8
3266_WH/BU	3266 WH/BU
CAV_5	5
CAV_2	2
5911	Door Lock Actuator Lock Control 2
5911_GY	5911 GY
CAV_1	1
CAV_3	3
3271	Door Lock Control (2)
3271_GY/GN	3271 GY/GN
CAV_12	12
CONN_X2	X2
CAV_2	2
3267	Child Security Lock Relay Control
3267_VT/YE	3267 VT/YE
CAV_13	13
CAV_8	8
CONN_X4	X4

	295 GY
CAV_4	4
CONN_X2	X2
1150	Ground
1150_BK	1150 BK
CAV_71	71
CONN_X1	X1
295_GY	295 GY
3266_WH/BU	3266 WH/BU
295_GY	295 GY
295_GY	295 GY
3266_WH/BU	3266 WH/BU
3266 WH/BU	3266 WH/BU
295_GY/BK	295 GY/BK
5911_GY	5911 GY
CAV_9	9
CAV_9	9
X700	X700
CAV_4	4
CAV_18	18
X800	X800
CAV_4	4
CAV_18	18
F10DA	F10DA 30A
J308	J308
J704	J704
J803	J803
X600	X600
X700	X700
X800	X800
X500	X500
G101	G101
J307	J307
X600	X600
X500	X500
X700	X700
X800	X800
A23LR	
A23P	
K9	
A23RR	

X50A	
X51A	
KR114	

Passive Entry - Module Power, Ground, and Latches (ATH) Wiring Schematics

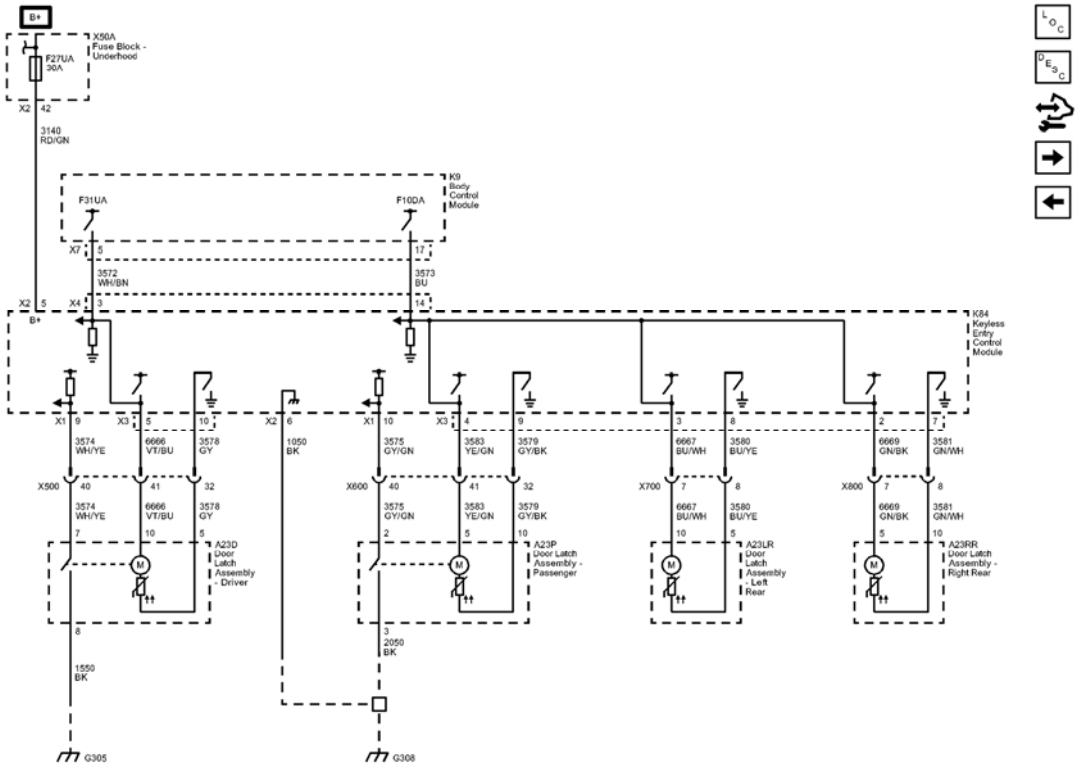

Fig. 3: Passive Entry - Module Power, Ground, and Latches (ATH) Wiring Schematics
Courtesy of GENERAL MOTORS COMPANY

Callout	Component Name
3140	Battery Positive Voltage
3140 RD/GN	3140 RD/GN
CAV_5	5
CONN X2	X2
CAV_42	42
CONN_X2	X2
3572	Driver Door Unlatch Enable Signal
3572_WH/BN	3572 WH/BN
CAV_3	3
CONN_X4	X4

CAV_5	5
CONN_X7	X7
3573	Non Driver Door Unlatch Enable Signal
3573_BU	3573 BU
CAV_14	14
CAV_17	17
3574	Driver Door Open Switch Signal
3574_WH/YE	3574 WH/YE
CAV_7	7
CAV_9	9
CONN_X1	X1
6666	Driver Door Unlatch Motor Unlatch Control
6666 VT/BU	6666 VT/BU
CAV_10	10
CAV_5	5
CONN_X3	X3
3578	Driver Door Unlatch Motor Unlatch Return
3578_GY	3578 GY
CAV_5	5
CAV_10	10
3574_WH/YE	3574 WH/YE
6666_VT/BU	6666 VT/BU
3578_GY	3578 GY
1050	Ground
1050_BK	1050 BK
CAV_6	6
CONN_X2	X2
2050	Ground
2050_BK	2050 BK
CAV 3	3
1550	Ground
1550_BK	1550 BK
CAV_8	8
3575	Co_Driver Door Open Switch Signal
3575_GY/GN	3575 GY/GN
CAV_2	2
CAV_10	10
CONN_X1	X1
3583	Co Driver Door Unlatch Motor Unlatch Control
3583_YE/GN	3583 YE/GN
CAV_5	5

	4
CONN_X3	X3
3579	Co Driver Door Unlatch Motor Unlatch Return
3579_GY/BK	3579 GY/BK
CAV_10	10
CAV_9	9
3575_GY/GN	3575 GY/GN
3583_YE/GN	3583 YE/GN
3579_GY/BK	3579 GY/BK
6667	Left Rear Door Unlatch Motor Unlatch Control
6667_BU/WH	6667 BU/WH
CAV_10	10
CAV_3	3
3580	Left Rear Door Unlatch Motor Unlatch Return
3580_BU/YE	3580 BU/YE
CAV_5	5
CAV_8	8
6669	Right Rear Door Unlatch Motor Unlatch Control
6669_GN/BK	6669 GN/BK
CAV_5	5
CAV_2	2
3581	Right Rear Door Unlatch Motor Unlatch Return
3581_GN/WH	3581 GN/WH
CAV_10	10
CAV_7	7
6667_BU/WH	6667 BU/WH
3580_BU/YE	3580 BU/YE
6669_GN/BK	6669 GN/BK
3581_GN/WH	3581 GN/WH
X500	X500
CAV_40	40
CAV_41	41
CAV_32	32
X600	X600
CAV_40	40
CAV_41	41
CAV_32	32
X800	X800
CAV_7	7
CAV_8	8
X700	X700
CAV_7	

	7
CAV_8	8
G305	G305
G308	G308
F27UA	F27UA 30A
F31UA	F31UA
F10DA	F10DA
X500	X500
X600	X600
X800	X800
X700	X700
X50A	
A23D	
A23P	
A23LR	
A23RR	
K9	
K84	(ATH)

Passive Entry - Antennas and Switches (ATH) Wiring Schematics

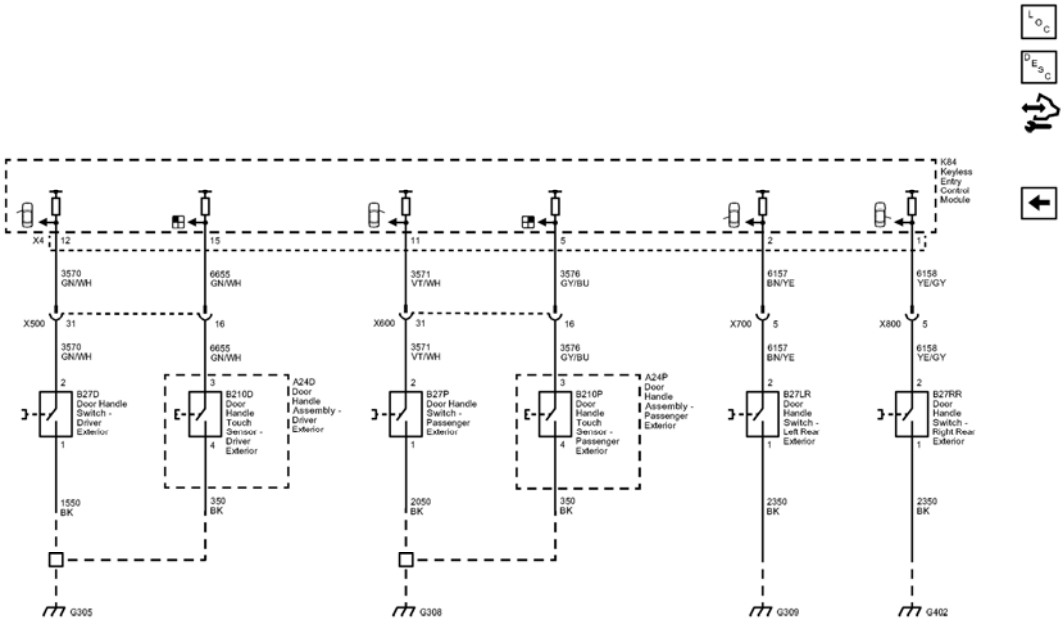

Fig. 4: Passive Entry - Antennas and Switches (ATH) Wiring Schematics
Courtesy of GENERAL MOTORS COMPANY

Callout	Component Name
3570	Driver Door Handle Switch Signal
CAV_2	2
CAV_12	12
CONN_X4	X4
3570_GN/WH	3570 GN/WH
3570_GN/WH	3570 GN/WH
6655	Driver Door Unlatch Switch Signal
CAV_3	3
CAV 15	15
6655_GN/WH	6655 GN/WH
6655 GN/WH	6655 GN/WH
3571	Co_Driver Door Handle Switch Signal
CAV_2	2
CAV_11	11
3571_VT/WH	3571 VT/WH
3571_VT/WH	3571 VT/WH
3576	Co-Driver Door Exterior Switch Lock Signal
CAV_3	3
CAV_5	5
3576_GY/BU	3576 GY/BU
3576_GY/BU	3576 GY/BU
6157	Left Rear Door Handle Switch Signal
CAV_2	2
CAV_2	2
6157_BN/YE	6157 BN/YE
6157 BN/YE	6157 BN/YE
6158	Right Rear Door Handle Switch Signal
CAV_2	2
CAV_1	1
6158_YE/GY	6158 YE/GY
6158_YE/GY	6158 YE/GY
CAV_5	5
CAV_5	5
1550	Ground
1550_BK	1550 BK
CAV_1	1
350	Ground

350_BK	350 BK
CAV_4	4
2050	Ground
2050_BK	2050 BK
CAV_1	1
350_BK	350 BK
CAV_4	4
2350	Ground
2350_BK	2350 BK
CAV_1	1
2350_BK	2350 BK
CAV_1	1
X500	X500
CAV_31	31
CAV_16	16
X600	X600
CAV_31	31
CAV_16	16
G308	G308
G305	G305
G309	G309
G402	G402
X700	X700
X800	X800
X500	X500
X600	X600
B27LR	
B27RR	
K84	(ATH)
B27D	
B27P	
B210D	
A24D	
B210P	
A24P	

RELEASE SYSTEMS WIRING SCHEMATICS

Trunk Release Wiring Schematics

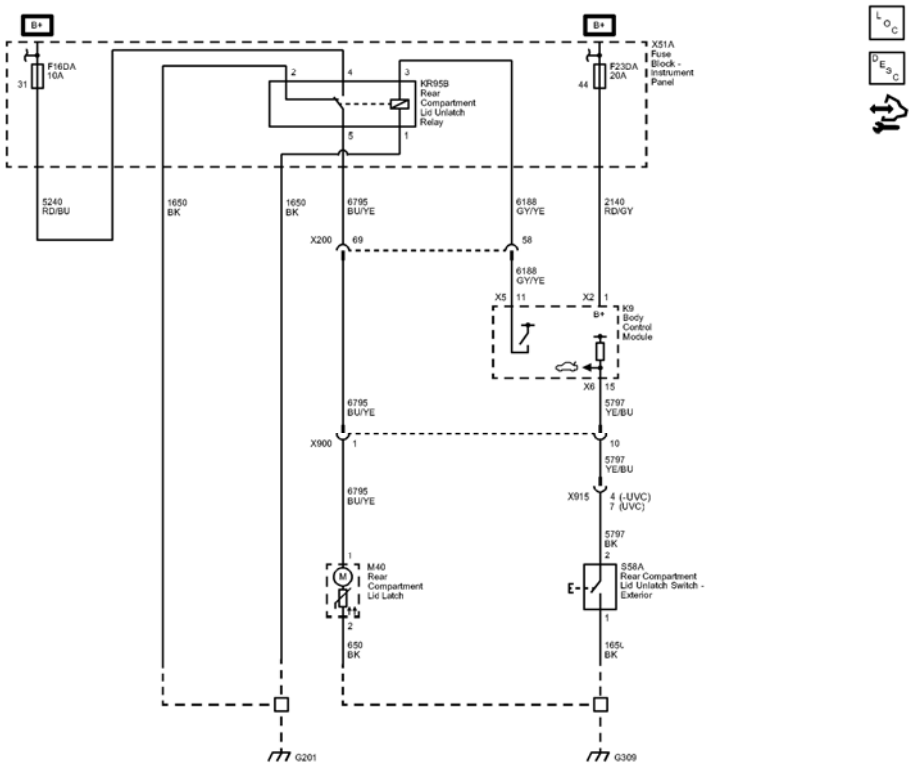

Fig. 5: Trunk Release Wiring Schematics
Courtesy of GENERAL MOTORS COMPANY

Callout	Component Name
CAV_31	31
CAV_44	44
CAV_2	2
CAV_4	4
CAV_3	3
CAV_5	5
CAV_1	1
5240	Battery Positive Voltage
5240_RD/BU	5240 RD/BU
1650	Ground
1650_BK	1650 BK
1650_BK	1650 BK
6795	Lift Glass/Trunk Motor Release Control 2
6795_BU/YE	6795 BU/YE
CAV_1	1
6188	Lift Glass/Trunk Motor Release Control
6188_GY/YE	6188 GY/YE

CAV_11	11
CONN_X5	X5
2140	Battery Positive Voltage
2140_RD/GY	2140 RD/GY
CAV_1	1
CONN_X2	X2
5797	Rear Closure Handle Switch Open Signal
5797_YE/BU	5797 YE/BU
CAV_2	2
CAV_15	15
CONN_X6	X6
5797_YE/BU	5797 YE/BU
5797_BK	5797 BK
6795_BU/YE	6795 BU/YE
6795_BU/YE	6795 BU/YE
6188_GY/YE	6188 GY/YE
1650_BK	1650 BK
CAV_1	1
650	Ground
650_BK	650 BK
CAV_2	2
CAV_4	4
CAV_7	7
UVC	VISION-REAR VIEW, MONO
UVC	VISION-REAR VIEW, MONO
X200	X200
CAV_69	69
CAV_58	58
X900	X900
CAV_1	1
CAV_10	10
G309	G309
G201	G201
F16DA	F16DA 10A
F23DA	F23DA 20A
X915	X915
X200	X200
X900	X900
M40	
X51A	
K9	

KR95B	

DIAGNOSTIC INFORMATION AND PROCEDURES

DIAGNOSTIC CODE INDEX

DIAGNOSTIC CODE INDEX

DTC	Description
DTC B1474 or B3849	DTC B1474 02 Passenger Exterior Door Handle Switch Circuit Short to Ground DTC B3849 02 Driver Exterior Door Handle Switch Circuit Short to Ground
DTC B1534 or B1535	DTC B1534 02 Left Rear Door Handle Switch Circuit Short to Ground DTC B1535 02 Right Rear Door Handle Switch Circuit Short to Ground
DTC B2494	DTC B2494 00 Liftgate Handle Switch Circuit Malfunction
DTC B297B or B297C	DTC B297B 5A Driver Door Open Switch Circuit Not Plausible DTC B297C 5A Passenger Door Open Switch Circuit Not Plausible
DTC B3125, B3130, or B3135	DTC B3125 Driver Door Only Unlock Circuit DTC B3130 All Doors Unlock Circuit DTC B3135 All Doors Lock Circuit
DTC B3140 or B3150	DTC B3140 00 Driver Door Unlock Switch Circuit DTC B3150 00 Driver Front Door Lock Switch Circuit
DTC B3265	DTC B3265 Trunk Lid Unlatch Output Circuit
DTC B3618	DTC B3618 00 Exterior Liftgate Unlatch Switch Circuit Malfunction
DTC B3930	DTC B3930 02 Child Security Lock Motors Circuit Short to Ground

DTC B1474 OR B3849

Diagnostic Instructions

- Perform the **Diagnostic System Check - Vehicle** prior to using this diagnostic procedure.
- Review **Strategy Based Diagnosis** for an overview of the diagnostic approach.
- **Diagnostic Procedure Instructions** provides an overview of each diagnostic category.

DTC Descriptors

DTC B1474 02

Passenger Exterior Door Handle Switch Circuit Short to Ground

DTC B3849 02

Driver Exterior Door Handle Switch Circuit Short to Ground

Diagnostic Fault Information

Circuit	Short to Ground	Open/High Resistance	Short to Voltage	Signal Performance
Driver Door Handle Switch Signal	B3849 02	1	1	-
Driver Door Handle Switch Ground	-	1	-	-
Passenger Door Handle Switch Signal	B1474 02	2	2	-
Passenger Door Handle Switch Ground	-	2	-	-
1. Driver Door Handle Switch Malfunction 2. Passenger Door Handle Switch Malfunction				

Circuit/System Description

The exterior door handle switch signal circuits provide inputs to the keyless entry control module when the exterior door handle switches are activated. These inputs allow the keyless entry control module to detect a door lock or a door unlock request. The keyless entry control module provides a 12 V signal to each exterior door handle switch via the door handle switch signal circuits. When a door handle switch is pressed, the switch closes and the voltage signals from the keyless entry control module are pulled to ground.

Conditions for Running the DTC

Battery voltage is between 9-16 V.

Conditions for Setting the DTC

B1474 02

The keyless entry control module detects the passenger exterior door handle switch signal circuit is shorted to ground or closed for greater than 180 seconds.

B3849 02

The keyless entry control module detects the driver exterior door handle switch signal circuit is shorted to ground or closed for more than 180 seconds.

Action Taken When the DTC Sets

The keyless entry control module will ignore input from the affected door switch and the doors will not lock or unlock when the affected door handle switch is pressed.

Conditions for Clearing the DTC

- The DTC will be current for as long as the fault is present.
- When the fault is no longer present, the DTC will be a history DTC.
- A history DTC will clear after 40 ignition cycles.

Reference Information

Schematic Reference

Door Lock/Indicator Schematics

Connector End View Reference

COMPONENT CONNECTOR END VIEWS - INDEX

Description and Operation

Power Door Locks Description and Operation

Electrical Information Reference

- **Circuit Testing**
- **Connector Repairs**
- **Testing for Intermittent Conditions and Poor Connections**
- **Wiring Repairs**

Scan Tool Reference

Control Module References for scan tool information

Circuit/System Verification

1. Ignition ON.
2. Verify the scan tool Exterior Driver Door Handle Switch or the Exterior Passenger Door Handle Switch parameters changes between Active and Inactive when pressing and releasing the B27D Door Handle Switch-Driver Exterior or the B27P Door Handle Switch-Passenger Exterior.
    - **If the parameter does not change**

      Refer to Circuit/System Testing below.

- **If the parameter changes**

3. All OK.

Circuit/System Testing

1. Ignition OFF and all vehicle systems OFF, disconnect the harness connector at the appropriate B27 Door Handle Switch-Exterior. It may take up to 2 minutes for all vehicle systems to power down.
2. Test for less than 10 ohms between the ground circuit terminal 4 and ground.
   - **If 10 ohms or greater**
   1. Ignition OFF.
   2. Test for less than 2 ohms in the ground circuit end to end.
      - If 2 ohms or greater, repair the open/high resistance in the circuit.
      - If less than 2 ohms, repair the open/high resistance in the ground connection.
   - **If less than 10 ohms**
3. Ignition ON.
4. Verify the scan tool Exterior Door Handle Switch parameter is Inactive.
   - **If not Inactive**
   1. Ignition OFF, disconnect the harness connector at the K84 Keyless Entry Control Module.
   2. Test for infinite resistance between the signal circuit terminal 3 and ground.
      - If less than infinite resistance, repair the short to ground on the circuit.
      - If infinite resistance, replace the K84 Keyless Entry Control Module.
   - **If Inactive**
5. Install a 3 A fused jumper wire between the signal circuit terminal 3 and the ground circuit terminal 4.
6. Verify the scan tool Exterior Door Handle Switch parameter is Active.
   - **If not Active**
   1. Ignition OFF, remove the jumper wire, disconnect the harness connector at the K84 Keyless Entry Control Module, ignition ON.
   2. Test for less than 1 V between the signal circuit and ground.
      - If 1 V or greater, repair the short to voltage on the circuit.
      - If less than 1 V
   3. Test for less than 2 ohms in the signal circuit end to end.
      - If 2 ohms or greater, repair the open/high resistance in the circuit.
      - If less than 2 ohms, replace the K84 Keyless Entry Control Module.
   - **If Active**
7. Test or replace the B27 Door Handle Switch-Exterior.

Component Testing

1. Ignition OFF, disconnect the harness connector at the appropriate B27 Door Handle Switch-Exterior.
2. Test for infinite resistance between the signal terminal 3 and the ground terminal 4 with the switch in the

open position.

- **If less than infinite resistance**

  Replace the B27 Door Handle Switch-Exterior.

- **If infinite resistance**

3. Test for less than 5 ohms between the signal terminal 3 and the ground terminal 4 with the switch in the closed position.
   - **If 5 ohms or greater**

     Replace the B27 Door Handle Switch-Exterior.

   - **If less than 5 ohms**
4. All OK

Repair Instructions

Perform the **Diagnostic Repair Verification** after completing the repair.

- **Front Side Door Outside Handle Replacement**
- **Control Module References** for keyless entry control module replacement, programming and setup

DTC B1534 OR B1535

Diagnostic Instructions

- Perform the **Diagnostic System Check - Vehicle** prior to using this diagnostic procedure.
- Review **Strategy Based Diagnosis** for an overview of the diagnostic approach.
- **Diagnostic Procedure Instructions** provides an overview of each diagnostic category.

DTC Descriptors

DTC B1534 02

Left Rear Door Handle Switch Circuit Short to Ground

DTC B1535 02

Right Rear Door Handle Switch Circuit Short to Ground

Diagnostic Fault Information

Circuit	Short to Ground	Open/High Resistance	Short to Voltage	Signal Performance
Left Rear Door Handle	B1534 02	1	1	-

Switch Signal				
Left Rear Door Handle Switch Ground	-	1	-	-
Right Rear Door Handle Switch Signal	B1535 02	2	2	-
Right Rear Door Handle Switch Ground	-	2	-	-
1. Left Rear Door Handle Switch Malfunction 2. Right Rear Door Handle Switch Malfunction				

Circuit/System Description

The exterior door handle switch signal circuits provide inputs to the keyless entry control module when the exterior door handle switches are activated. These inputs allow the keyless entry control module to detect a door lock or a door unlock request. The keyless entry control module provides a 12 V signal to each exterior door handle switch via the door handle switch signal circuits. When a door handle switch is pressed, the switch closes and the voltage signals from the keyless entry control module are pulled to ground.

Conditions for Running the DTC

Battery voltage is between 9-16 V.

Conditions for Setting the DTC

B1534 02

The keyless entry control module detects the left rear exterior door handle switch signal circuit is shorted to ground or closed for greater than 180 seconds.

B1535 02

The keyless entry control module detects the right rear exterior door handle switch signal circuit is shorted to ground or closed for greater than 180 seconds.

Action Taken When the DTC Sets

The keyless entry control module will ignore input from the affected door switch and the doors will not lock or unlock when the affected door handle switch is pressed.

Conditions for Clearing the DTC

- The DTC will be current for as long as the fault is present.
- When the fault is no longer present, the DTC will be a history DTC.
- A history DTC will clear after 40 ignition cycles.

Reference Information

Schematic Reference

Door Lock/Indicator Schematics

Connector End View Reference

COMPONENT CONNECTOR END VIEWS - INDEX

Description and Operation

Power Door Locks Description and Operation

Electrical Information Reference

- **Circuit Testing**
- **Connector Repairs**
- **Testing for Intermittent Conditions and Poor Connections**
- **Wiring Repairs**

Scan Tool Reference

Control Module References for scan tool information

Circuit/System Verification

1. Ignition ON.
2. Verify the scan tool Exterior Left Rear Door Handle Switch or the Exterior Right Rear Door Handle Switch parameters changes between Active and Inactive when pressing and releasing B27LR Door Handle Switch-Left Rear Exterior or the B27RR Door Handle Switch-Right Rear Exterior.
    - **If the parameter does not change**

      Refer to Circuit/System Testing below.

    - **If the parameter changes**
3. All OK.

Circuit/System Testing

1. Ignition OFF and all vehicle systems OFF, disconnect the harness connector at the appropriate B27 Door Handle Switch-Rear Exterior. It may take up to 2 minutes for all vehicle systems to power down.
2. Test for less than 10 ohms between the ground circuit terminal 4 and ground.
    - **If 10 ohms or greater**
    1. Ignition OFF.
    2. Test for less than 2 ohms in the ground circuit end to end.
        - If 2 ohms or greater, repair the open/high resistance in the circuit.

- If less than 2 ohms, repair the open/high resistance in the ground connection.
- **If less than 10 ohms**

3. Ignition ON.
4. Verify the scan tool Exterior Door Handle Switch parameter is Inactive.
   - **If not Inactive**
   1. Ignition OFF, disconnect the harness connector at the K84 Keyless Entry Control Module.
   2. Test for infinite resistance between the signal circuit terminal 3 and ground.
      - If less than infinite resistance, repair the short to ground on the circuit.
      - If infinite resistance, replace the K84 Keyless Entry Control Module.
   - **If Inactive**
5. Install a 3 A fused jumper wire between the signal circuit terminal 3 and the ground circuit terminal 4.
6. Verify the scan tool Exterior Door Handle Switch parameter is Active.
   - **If not Active**
   1. Ignition OFF, remove the jumper wire, disconnect the harness connector at the K84 Keyless Entry Control Module, ignition ON.
   2. Test for less than 1 V between the signal circuit and ground.
      - If 1 V or greater, repair the short to voltage on the circuit.
      - If less than 1 V
   3. Test for less than 2 ohms in the signal circuit end to end.
      - If 2 ohms or greater, repair the open/high resistance in the circuit.
      - If less than 2 ohms, replace the K84 Keyless Entry Control Module.
   - **If Active**
7. Test or replace the B27 Door Handle Switch-Rear Exterior.

Component Testing

1. Ignition OFF, disconnect the harness connector at the appropriate B27 Door Handle Switch-Rear Exterior.
2. Test for infinite resistance between the signal terminal 3 and the ground terminal 4 with the switch in the open position.
   - **If less than infinite resistance**

     Replace the B27 Door Handle Switch-Rear Exterior.

   - **If infinite resistance**
3. Test for less than 5 ohms between the signal terminal 3 and the ground terminal 4 with the switch in the closed position.
   - **If 5 ohms or greater**

     Replace the B27 Door Handle Switch-Rear Exterior.

- **If less than 5 ohms**

4. All OK

Repair Instructions

Perform the **Diagnostic Repair Verification** after completing the repair.

- **Rear Side Door Outside Handle Replacement**
- **Control Module References** for keyless entry control module replacement, programming and setup

DTC B2494

Diagnostic Instructions

- Perform the **Diagnostic System Check - Vehicle** prior to using this diagnostic procedure.
- Review **Strategy Based Diagnosis** for an overview of the diagnostic approach.
- **Diagnostic Procedure Instructions** provides an overview of each diagnostic category.

DTC Descriptor

DTC B2494 00

Liftgate Handle Switch Circuit Malfunction

Diagnostic Fault Information

Circuit	Short to Ground	Open/High Resistance	Short to Voltage	Signal Performance
Signal	B2494 00	1	1	-
Ground	-	1	-	-
1. Exterior Rear Compartment Lid Release Switch Malfunction				

Circuit/System Description

When the ignition is ON, the body control module (BCM) supplies a signal to the liftgate unlatch switch through the liftgate release switch signal circuit. When the liftgate unlatch switch is pressed, the voltage within the signal circuit is pulled low and in response, the BCM will energize the liftgate unlatch relay.

Conditions for Running the DTC

The system voltage is 9-16 V.

Conditions for Setting the DTC

The BCM detects a short to ground in the liftgate release switch signal circuit for greater than 60 seconds

Action Taken When the DTC Sets

The BCM ignores the input from the liftgate unlatch switch.

Conditions for Clearing the DTC

- This DTC will be current for as long as the fault is present.
- When the fault is no longer present, the DTC will be a history DTC.
- A history DTC will clear after 50 ignition cycles.

Reference Information

Schematic Reference

Release Systems Schematics

Connector End View Reference

COMPONENT CONNECTOR END VIEWS - INDEX

Description and Operation

Luggage Compartment Description and Operation

Electrical Information Reference

- **Circuit Testing**
- **Connector Repairs**
- **Testing for Intermittent Conditions and Poor Connections**
- **Wiring Repairs**

Scan Tool Reference

Control Module References for scan tool information

Circuit/System Verification

1. Ignition ON.
2. Verify the scan tool Trunk Lid/Liftgate Window Exterior Unlatch Switch parameter changes between Active and Inactive when pressing and releasing the liftgate unlatch switch.
    - **If the parameter does not change**

      Refer to Circuit/System Testing below.

    - **If the parameter changes**
3. All OK.

Circuit/System Testing

1. Ignition OFF and all vehicle systems OFF, disconnect the harness connector at the S46B liftgate unlatch switch. It may take up to 2 minutes for all vehicle systems to power down.
2. Test for less than 10 ohms between the ground circuit terminal 2 and ground.
    - **If 10 ohms or greater**
    1. Ignition OFF.
    2. Test for less than 2 ohms in the ground circuit end to end.
        - If 2 ohms or greater, repair the open/high resistance in the circuit.
        - If less than 2 ohms, repair the open/high resistance in the ground connection.
    - **If less than 10 ohms**
3. Ignition ON.
4. Verify the scan tool Trunk Lid/Liftgate Window Exterior Unlatch Switch parameter is Inactive.
    - **If not Inactive**
    1. Ignition OFF, disconnect the harness connector at the K9 body control module.
    2. Test for infinite resistance between the signal circuit terminal 1 and ground.
        - If less than infinite resistance, repair the short to ground on the circuit.
        - If infinite resistance, replace the K9 body control module.
    - **If Inactive**
5. Install a 3 A fused jumper wire between the signal circuit terminal 1 and the ground circuit terminal 2.
6. Verify the scan tool Trunk Lid/Liftgate Window Exterior Unlatch Switch parameter is Active.
    - **If not Active**
    1. Ignition OFF, disconnect the harness connector at the K9 body control module, ignition ON.
    2. Test for less than 1 V between the signal circuit and ground.
        - If 1 V or greater, repair the short to voltage on the circuit.
        - If less than 1 V
    3. Test for less than 2 ohms in the signal circuit end to end.
        - If 2 ohms or greater, repair the open/high resistance in the circuit.
        - If less than 2 ohms, replace the K9 body control module.
    - **If Active**
7. Test or replace the S46B liftgate unlatch switch.

Component Testing

1. Ignition OFF, disconnect the harness connector at the S46B liftgate unlatch switch.
2. Test for infinite resistance between the signal terminal 1 and the ground terminal 2 with the switch in the open position.
    - **If less than infinite resistance**

      Replace the S46B liftgate unlatch switch.

- **If infinite resistance**

3. Test for less than 3 ohms between the signal terminal 1 and the ground terminal 2 with the switch in the closed position.
   - **If 3 ohms or greater**

     Replace the S46B liftgate unlatch switch.

   - **If less than 3 ohms**
4. All OK

Repair Instructions

Perform the **Diagnostic Repair Verification** after completing the diagnostic procedure.

-
- **Control Module References** for BCM replacement, programming and setup

DTC B297B OR B297C

Diagnostic Instructions

- Perform the **Diagnostic System Check - Vehicle** prior to using this diagnostic procedure.
- Review **Strategy Based Diagnosis** for an overview of the diagnostic approach.
- **Diagnostic Procedure Instructions** provides an overview of each diagnostic category.

DTC Descriptors

DTC B297B 5A

Driver Door Open Switch Circuit Not Plausible

DTC B297C 5A

Passenger Door Open Switch Circuit Not Plausible

Diagnostic Fault Information

Circuit	Short to Ground	Open/High Resistance	Short to Voltage	Signal Performance
Driver Door Open Switch Signal	B297B 5A	B297B 5A	B297B 5A	-
Passenger Door Open Switch Signal	B297C 5A	B297C 5A	B297C 5A	-
Driver Door Latch Ground	-	1	-	-
Passenger Door Latch				

Ground	-	1	-	-
1. Ajar Indicator Malfunction				

Circuit/System Description

The Keyless Entry Control Module provides a 12V signal to the driver and passenger door open switch signal circuits. The driver window motor provides a 12V signal to the driver door ajar switch signal circuit. The passenger window switch provides a 12V signal to the passenger door ajar switch signal circuit. The door open switches and the door ajar switches are integral to each Door Latch Assembly.

The door open switch and the door ajar switch contacts will be open with the door is fully closed, the door switches within the door latch are designed so that the when the door is ajar, the contact in the door ajar switch closes, the voltage is pulled low and the window motor will then send a serial data message to the BCM indicating that the door is ajar. When the door is opened further, the contact in the door open switch will then close providing a ground for the door open signal circuit, the Keyless Entry Control Module will then detect that the door is open.

Conditions for Running the DTC

Battery voltage is between 9-16 V.

Conditions for Setting the DTC

B297B 5A

- The keyless entry control module detects the driver door open switch is Active while receiving a serial data message from the BCM that the driver door ajar switch is Inactive.
- The condition must be present for greater than 30 seconds

B297C 5A

- The keyless entry control module detects the passenger door open switch is Active while receiving a serial data message from the BCM that the passenger door ajar switch is Inactive.
- The condition must be present for greater than 30 seconds.

Action Taken When the DTC Sets

B297B 5A or B297C 5A

The driver information center will display the message: Service Steering Column Lock.

Conditions for Clearing the DTC

- The DTC will be current for as long as the fault is present.
- When the keyless entry control module receives a serial data message from the BCM that the door is ajar before the keyless entry control module detects the door open switch is active, then the DTC will be a history DTC.

- A history DTC will clear after 50 ignition cycles.

Reference Information

Schematic Reference

Door Lock/Indicator Schematics

Connector End View Reference

COMPONENT CONNECTOR END VIEWS - INDEX

Description and Operation

Steering Wheel and Column Description and Operation

Electrical Information Reference

- **Circuit Testing**
- **Connector Repairs**
- **Testing for Intermittent Conditions and Poor Connections**
- **Wiring Repairs**

Scan Tool Reference

Control Module References for scan tool information

Circuit/System Verification

1. Ignition ON.
2. Verify the scan tool Body Control Module Driver Door Ajar Switch parameter changes between Inactive and Active when opening and closing the driver door.
    - **If the parameter does not change**

      Refer to **Door Ajar Indicator Malfunction**

    - **If the parameter changes**
3. Verify the scan tool Keyless Entry Control Module Driver Door Ajar Switch parameter changes between Inactive and Active when opening and closing the driver door.
    - **If the parameter does not change**

      Refer to Circuit/System Testing below.

    - **If the parameter changes**
4. Verify the scan tool Body Control Module Passenger Door Ajar Switch parameter changes between

Inactive and Active when opening and closing the passenger door.

- **If the parameter does not change**

  Refer to **Door Ajar Indicator Malfunction**

- **If the parameter changes**

5. Verify the scan tool Keyless Entry Control Module Passenger Door Ajar Switch parameter changes between Inactive and Active when opening and closing the passenger door.
   - **If the parameter does not change**

     Refer to Circuit/System Testing below.

   - **If the parameter changes**
6. All OK.

Circuit/System Testing

1. Ignition OFF and all vehicle systems OFF, disconnect the harness connector at the appropriate A23 Door Latch Assembly. It may take up to 2 minutes for all vehicle systems to power down.
2. Test for less than 10 ohms between the ground circuit terminal listed below and ground:
   - A23D Door Latch Assembly-Driver - ground circuit terminal 8
   - A23P Door Latch Assembly-Passenger - ground circuit terminal 3
   - **If 10 ohms or greater**
   1. Ignition OFF.
   2. Test for less than 2 ohms in the ground circuit end to end.
      - If 2 ohms or greater, repair the open/high resistance in the circuit.
      - If less than 2 ohms, repair the open/high resistance in the ground connection.
   - **If less than 10 ohms**
3. Ignition ON.
4. Verify the scan tool Door Ajar Switch parameter is Inactive.
   - **If not Inactive**
   1. Ignition OFF, disconnect the harness connector at the K84 Keyless Entry Control Module.
   2. Test for infinite resistance between the signal circuit terminal listed below and ground.
      - A23D Door Latch Assembly-Driver - signal circuit terminal 7
      - A23P Door Latch Assembly-Passenger - signal circuit terminal 2
      - If less than infinite resistance, repair the short to ground on the circuit.
      - If infinite resistance, replace the K84 Keyless Entry Control Module.
   - **If Inactive**
5. Install a 3 A fused jumper wire between the circuit terminals listed below and ground.
   - A23D Door Latch Assembly-Driver - signal circuit terminal 7
   - A23P Door Latch Assembly-Passenger - signal circuit terminal 2

6. Verify the scan tool Door Ajar Switch parameter is Active.
    - **If not Active**
    1. Ignition OFF, remove the fused jumper wire, disconnect the harness connector at the K84 Keyless Entry Control Module, ignition ON.
    2. Test for less than 1 V between the signal circuit and ground.
        - If 1 V or greater, repair the short to voltage on the circuit.
        - If less than 1 V
    3. Test for less than 2 ohms in the signal circuit end to end.
        - If 2 ohms or greater, repair the open/high resistance in the circuit.
        - If less than 2 ohms, replace the K84 Keyless Entry Control Module.
    - **If Active**
7. Test or replace the A23 Door Latch Assembly.

Component Testing

Static Test

1. Ignition OFF, disconnect the harness connector at the appropriate A23 Door Latch Assembly.
2. With the door in the closed position, test for infinite resistance between the signal and the ground terminals listed below:
    - A23D Door Latch Assembly-Driver - signal terminal 7 and ground terminal 8
    - A23P Door Latch Assembly-Passenger - signal terminal 2 and ground terminal 3
    - If not the specified value, replace the A23 Door Latch Assembly.
3. With the door in the open position, test for less than 5 ohms between the signal and the ground terminals listed below:
    - A23D Door Latch Assembly-Driver - signal terminal 7 and ground terminal 8
    - A23P Door Latch Assembly-Passenger - signal terminal 2 and ground terminal 3
    - If greater than the specified range, replace the A23 Door Latch Assembly.

Repair Instructions

Perform the **Diagnostic Repair Verification** after completing the repair

- **Front Side Door Latch Replacement**
- **Control Module References** for keyless entry control module replacement, programming and setup

DTC B3125, B3130, OR B3135

Diagnostic Instructions

- Perform the **Diagnostic System Check - Vehicle** prior to using this diagnostic procedure.
- Review **Strategy Based Diagnosis** for an overview of the diagnostic approach.

- **Diagnostic Procedure Instructions** provides an overview of each diagnostic category.

DTC Descriptors

DTC B3125

Driver Door Only Unlock Circuit

DTC B3130

All Doors Unlock Circuit

DTC B3135

All Doors Lock Circuit

For symptom byte information refer to: **Symptom Byte List**

Diagnostic Fault Information

Circuit	Short to Ground	Open/High Resistance	Short to Voltage	Signal Performance
BCM B+	B3125 02, B3130 02, B3135 02	B3125 02, B3130 02, B3135 02	-	-
Door Latch Control	B3125 02, B3130 02, B3135 02	B3125 04, B3130 04, B3135 04	B3125 01, B3130 01, B3135 01	-
Driver Door Lock Motor Lock Control	B3125 02, B3130 02, B3135 02	B3125 04, B3130 04, B3135 04	B3125 01, B3130 01, B3135 01	-
Door Lock Actuator Unlock Control	B3125 02, B3130 02, B3135 02	B3125 04, B3130 04, B3135 04	B3125 01, B3130 01, B3135 01	-

Circuit/System Description

The body control module (BCM) powers the reversible door latch assemblies by providing battery positive voltage and ground to the appropriate lock and unlock control circuits of the door latch assemblies. The lock and unlock control circuits of the rear doors and passenger door latch assemblies are all connected together. When the door latch assemblies are not active, all actuator lock and unlock control circuits are supplied a floating voltage door driver by the BCM. Transitioning of the lock actuators to the lock or unlocked position depends upon which control circuits receive voltage and which control circuits receive ground.

Conditions for Running the DTC

Ignition ON

Conditions for Setting the DTC

B3125 01, B3130 01, B3135 01

The BCM detects a short to battery on a door latch control circuit

B3125 02, B3130 02 and B3135 02

- A short to ground or an open/high resistance in the BCM B+ circuit.
- The BCM detects a short to ground on a door latch control circuit.

B3125 04, B3130 04, B3135 04

The BCM detects an open/high resistance on a door latch control circuit

Action Taken When the DTC Sets

All the power door locks will be inoperative.

Conditions for Clearing the DTC

- This DTC will be current for as long as the fault is present.
- When the fault is no longer present, the DTC will be a history DTC.
- A history DTC will clear after 50 ignition cycles.

Reference Information

Schematic Reference

- **Door Lock/Indicator Schematics**
- **Body Control System Schematics**

Connector End View Reference

COMPONENT CONNECTOR END VIEWS - INDEX

Description and Operation

Power Door Locks Description and Operation

Electrical Information Reference

- **Circuit Testing**
- **Connector Repairs**
- **Testing for Intermittent Conditions and Poor Connections**
- **Wiring Repairs**

Scan Tool Reference

Control Module References for scan tool information

Circuit/System Verification

1. Ignition ON.
2. Verify the scan tool BCM Central Door Lock Switch on Console parameter changes from Inactive to Lock and Unlock when cycling the door lock switch between LOCK and UNLOCK.
   - **If the parameter does not change**

     Refer to **Power Door Locks Malfunction**

   - **If the parameter changes**
3. Verify all vehicle doors Lock and Unlock when commanding the All Doors Lock/Unlock with a scan tool.
   - **If only the driver door LOCK or UNLOCK functions do not work**

     Refer to Circuit/System Testing below - Driver Door Lock Malfunction.

   - **If one or more, but not all, passenger door LOCK or UNLOCK functions do not work**

     Refer to Circuit/System Testing below - Passenger Door Lock Malfunction.

   - **If all door LOCK and UNLOCK functions do not work**

     Refer to Circuit/System Testing below- All Door Lock Inoperative.

   - **If the LOCK and UNLOCK function for all doors works**
4. All OK.

Circuit/System Testing

Driver Door Lock Malfunction

1. Ignition OFF, disconnect the harness connector at the A23D Door Latch Assembly-Driver. Ignition ON.

   NOTE: Leaving the DMM connected between a control circuit and ground for greater than 20 seconds will cause the K9 Body Control Module to interpret the test as a system fault and will cause the voltage on the control circuit to drop to 0 V. If the voltage drops to 0 V, operate the door locks using the central door lock switch to restore the voltage for testing.

2. Test for greater than 7 V between the control circuit terminal 3 and ground.
   - **If 7 V or less**

1. Ignition OFF, disconnect the X6 harness connector at the K9 Body Control Module.
2. Test for infinite resistance between the control circuit and ground.
    - If less than infinite resistance, repair the short to ground on the circuit.
    - If infinite resistance
3. Test for less than 2 ohms in the control circuit end to end.
    - If 2 ohms or greater, repair the open/high resistance on the circuit.
    - If less than 2 ohms, replace the K9 Body Control Module.

- **If greater than 7 V**

NOTE: Leaving the DMM connected between a control circuit and ground for greater than 20 seconds will cause the K9 Body Control Module to interpret the test as a system fault and will cause the voltage on the control circuit to drop to 0 V. If the voltage drops to 0 V, operate the door locks using the central door lock switch to restore the voltage for testing.

3. Test for greater than 7 V between the control circuit terminal 2 and ground.
    - **If 7 V or less**
    1. Ignition OFF, disconnect the X6 harness connector at the K9 Body Control Module.
    2. Test for infinite resistance between the control circuit and ground.
        - If less than infinite resistance, repair the short to ground on the circuit.
        - If infinite resistance
    3. Test for less than 2 ohms in the control circuit end to end.
        - If 2 ohms or greater, repair the open/high resistance on the circuit.
        - If less than 2 ohms, replace the K9 Body Control Module.
    - **If greater than 7 V**
4. Test or replace the A23D Door Latch Assembly-Driver.

Passenger Door Lock Malfunction

1. Ignition OFF, verify the harness connector is firmly seated and secure for the appropriate passenger or rear A23 Door Latch Assembly.
    - **If the harness connector not seated or secure**

      Firmly seat and secure the harness connector at the passenger or rear A23 Door Latch Assembly.

    - **If the harness connector is firmly seated and secure**
2. Disconnect the harness connector at the appropriate passenger or rear A23 Door Latch Assembly. Ignition ON.

NOTE: Leaving the DMM connected between a control circuit and ground for greater than 20 seconds will cause the K9 Body Control Module to interpret the test as a system fault and will cause the voltage on the

control circuit to drop to 0 V. If the voltage drops to 0 V, operate the door locks using the door lock switch to restore the voltage for testing.

3. Test for greater than 7 V between the control circuit terminal listed below and ground:
   - A23P Door Latch Assembly-Passenger - control circuit terminal 7
   - A23RR Door Latch Assembly-Right Rear - control circuit terminal 7
   - A23LR Door Latch Assembly-Left Rear - control circuit terminal 2
   - **If 7 V or less**
   1. Ignition OFF, disconnect the X6 harness connector at the K9 Body Control Module.
   2. Test for infinite resistance between the control circuit and ground.
      - If less than infinite resistance, repair the short to ground on the circuit.
      - If infinite resistance
   3. Test for less than 2 ohms in the control circuit end to end.
      - If 2 ohms or greater, repair the open/high resistance on the circuit.
      - If less than 2 ohms, replace the K9 Body Control Module.
   - **If greater than 7 V**

NOTE: Leaving the DMM connected between a control circuit and ground for greater than 20 seconds will cause the K9 Body Control Module to interpret the test as a system fault and will cause the voltage on the control circuit to drop to 0 V. If the voltage drops to 0 V, operate the door locks using the door lock switch to restore the voltage for testing.

4. Test for greater than 7 V between the control circuit terminal listed below and ground:
   - A23P Door Latch Assembly-Passenger - control circuit terminal 8
   - A23RR Door Latch Assembly-Right Rear - control circuit terminal 8
   - A23LR Door Latch Assembly-Left Rear - control circuit terminal 3
   - **If 7 V or less**
   1. Ignition OFF, disconnect the X2 harness connector at the X50A Fuse Block-Underhood.
   2. Disconnect the X6 harness connector at the K9 Body Control Module.
   3. Test for less than 2 ohms between the control circuit terminals listed below:
      - X50A Fuse Block-Underhood control circuit terminal 4 X2 and A23P Door Latch Assembly-Passenger control circuit terminal 8
      - X50A Fuse Block-Underhood control circuit terminal 12 X2 and K9 Body Control Module control circuit terminal 2 X6
      - If greater than 2 ohms, repair the open/high resistance on the circuit.
   4. Connect the X2 harness connector at the X50A Fuse Block-Underhood
   5. Test for less than 2 ohms between the A23P Door Latch Assembly-Passenger control circuit terminal 8 and the K9 Body Control Module control circuit terminal 2 X6
      - If greater than 2 ohms, replace the X50A Fuse Block-Underhood.

6. Connect the X6 harness connector at the K9 Body Control Module
7. Ignition ON, test for greater than 7 V between the A23P Door Latch Assembly-Passenger control circuit terminal 8 and ground
   - **If 7 V or less, replace the K9 Body Control Module**
   - **If greater than 7 V**

5. Test or replace the A23 Door Latch Assembly.

All Door Locks Inoperative

1. Ignition OFF, disconnect the X2 harness connector at the K9 Body Control Module, ignition ON.
2. Verify a test lamp illuminates between the B+ circuit terminal 4 and ground.
   - **If the test lamp does not illuminate and the circuit fuse is good**
   1. Ignition OFF.
   2. Test for less than 2 ohms in the B+ circuit end to end.
      - If 2 ohms or greater, repair the open/high resistance in the circuit.
      - If less than 2 ohms, verify the fuse is not open and there is voltage at the fuse.
      - **If the test lamp does not illuminate and the circuit fuse is open**
   3. Ignition OFF.
   4. Test for infinite resistance between the B+ circuit and ground.
      - If less than infinite resistance, repair the short to ground on the circuit.
      - If infinite resistance
   5. Disconnect the harness connector at each of the A23 Door Latch Assemblies.
   6. Test for infinite resistance between each control circuit and ground.
      - If less than infinite resistance, repair the short to ground on the circuit.
      - If infinite resistance, replace the appropriate A23 Door Latch Assembly.
   - **If the test lamp illuminates**
3. Ignition OFF, connect the X2 harness connector at the K9 Body Control Module. Disconnect the harness connector at the A23D Door Latch Assembly-Driver, ignition ON.

NOTE: **Leaving the DMM connected between a control circuit and ground for greater than 20 seconds will cause the K9 Body Control Module to interpret the test as a system fault and will cause the voltage on the control circuit to drop to 0 V. If the voltage drops to 0 V, operate the door locks using the door lock switch to restore the voltage for testing.**

4. Test for greater than 7 V between the control circuit terminal 2 and ground.
   - **If 7 V or less**
   1. Ignition OFF, disconnect the X6 harness connector at the K9 Body Control Module.
   2. Test for infinite resistance between the control circuit terminal listed below and ground:
      - Control circuit terminal 1 X6

- Control circuit terminal 2 X6
- Control circuit terminal 4 X6
  - If less than infinite resistance, repair the short to ground on the circuit.
  - If infinite resistance, replace the K9 Body Control Module.
  - **If greater than 7 V**

5. Replace the K9 Body Control Module.

Component Testing

1. Ignition OFF, disconnect the harness connector at the appropriate A23 Door Latch Assembly.
2. Install a 25 A fused jumper wire between one of the control terminals and 12 V. Momentarily install a jumper wire between the other control terminal and ground. Reverse the jumper wires at least two times, the A23 Door Latch Assembly should perform the LOCK and UNLOCK function.
   - **If the actuator does not perform the LOCK and UNLOCK function**

     Replace the A23 Door Latch Assembly.

   - **If the actuator performs the LOCK and UNLOCK function**
3. All OK

Repair Instructions

Perform the **Diagnostic Repair Verification** after completing the repair.

- **Front Side Door Latch Replacement**
- **Rear Side Door Latch Replacement**
- **Control Module References** for BCM replacement, programming and setup

DTC B3140 OR B3150

Diagnostic Instructions

- Perform the **Diagnostic System Check - Vehicle** prior to using this diagnostic procedure.
- Review **Strategy Based Diagnosis** for an overview of the diagnostic approach.
- **Diagnostic Procedure Instructions** provides an overview of each diagnostic category.

DTC Descriptors

DTC B3140 00

Driver Door Unlock Switch Circuit

DTC B3150 00

Driver Front Door Lock Switch Circuit

Diagnostic Fault Information

Circuit	Short to Ground	Open/High Resistance	Short to Voltage	Signal Performance
Lock Signal	B3150 00	1	1	-
Unlock Signal	B3140 00	2	2	-
Ground	-	3	-	-
1. Door Lock Switch Lock Function Inoperative 2. Door Lock Switch Unlock Function Inoperative 3. Door Lock Switch Lock and Unlock Functions Inoperative				

Circuit/System Description

The body control module (BCM) monitors the voltage level of the door lock and door unlock signal circuits. When the driver door lock switch is in the open position, the voltage level in the signal circuit will be near 0 V. When the driver door lock switch is pressed to the lock or unlock position, a signal will be sent to the BCM requesting a lock or unlock command.

Conditions for Running the DTC

The system voltage is 9-16 V.

Conditions for Setting the DTC

B3140 00

The BCM detects short to ground in the unlock signal circuit for greater than 60 seconds.

B3150 00

The BCM detects a short to ground in the lock signal circuit for greater than 60 seconds.

Action Taken When the DTC Sets

B3140 00

The BCM will ignore the unlock signal and the doors will not unlock when using the driver door lock switch.

B3150 00

The BCM will ignore the lock signal and the doors will not lock when using the driver door lock switch.

Conditions for Clearing the DTC

- The DTC will be current for as long as the fault is present.

- When the fault is no longer present, the DTC will be a history DTC.
- A history DTC will clear after 50 ignition cycles.

Reference Information

Schematic Reference

Door Lock/Indicator Schematics

Connector End View Reference

COMPONENT CONNECTOR END VIEWS - INDEX

Description and Operation

Power Door Locks Description and Operation

Electrical Information Reference

- **Circuit Testing**
- **Connector Repairs**
- **Testing for Intermittent Conditions and Poor Connections**
- **Wiring Repairs**

Scan Tool Reference

Control Module References for scan tool information

Circuit/System Verification

1. Ignition ON.
2. Verify the scan tool Central Door Lock Switch on Console parameter changes from Inactive to Lock and Unlock when pushing the appropriate switch on the S13D Door Lock Switch-Driver.
    - **If the parameter does not change**

      Refer to Circuit/System Testing below.

    - **If the parameter changes**
3. All OK.

Circuit/System Testing

1. Ignition OFF and all vehicle systems OFF, disconnect the harness connector at the S13D Door Lock Switch-Driver. It may take up to 2 minutes for all vehicle systems to power down.
2. Test for less than 10 ohms between the ground circuit terminal 1 and ground.

- **If 10 ohms or greater**

1. Ignition OFF.
2. Test for less than 2 ohms in the ground circuit end to end.
   - If 2 ohms or greater, repair the open/high resistance in the circuit.
   - If less than 2 ohms, repair the open/high resistance in the ground connection.

- **If less than 10 ohms**

3. Ignition ON.
4. Verify the scan tool Central Door Lock Switch on Console parameter is Inactive.
   - **If not Inactive**

   1. Ignition OFF, disconnect the harness connector at the K9 Body Control Module.
   2. Test for infinite resistance between the S13D Door Lock Switch-Driver signal circuit terminal 3 and ground.
      - If less than infinite resistance, repair the short to ground on the circuit.
   3. Test for infinite resistance between the S13D Door Lock Switch-Driver signal circuit terminal 4 and ground.
      - If less than infinite resistance, repair the short to ground on the circuit.
      - If infinite resistance, replace the K9 Body Control Module.

   - **If Inactive**

5. Install a 3 A fused jumper wire between the signal circuit terminal 3 and the ground circuit terminal 1.
6. Verify the scan tool Central Door Lock Switch on Console parameter is Unlock.
   - **If not Unlock**

   1. Ignition OFF, remove the 3 A fused jumper wire, disconnect the X2 harness connector at the K9 Body Control Module, ignition ON.
   2. Test for less than 1 V between the signal circuit terminal 3 and ground.
      - If 1 V or greater, repair the short to voltage on the circuit.
      - If less than 1 V
   3. Test for less than 2 ohms in the signal circuit end to end.
      - If 2 ohms or greater, repair the open/high resistance in the circuit.
      - If less than 2 ohms, replace the K9 Body Control Module.

   - **If Unlock**

7. Install a 3 A fused jumper wire between the signal circuit terminal 4 and the ground circuit terminal 1.
8. Verify the scan tool Central Door Lock Switch on Console parameter is Lock.
   - **If not Lock**

   1. Ignition OFF, remove the 3 A fused jumper wire, disconnect the X2 harness connector at the K9 Body Control Module, ignition ON.
   2. Test for less than 1 V between the signal circuit terminal 4 and ground.
      - If 1 V or greater, repair the short to voltage on the circuit.
      - If less than 1 V

3. Test for less than 2 ohms in the signal circuit end to end.
    - If 2 ohms or greater, repair the open/high resistance in the circuit.
    - If less than 2 ohms, replace the K9 Body Control Module.
- **If Lock**

9. Test or replace the S13D Door Lock Switch-Driver.

Component Testing

1. Ignition OFF, disconnect the harness connector at the S13D Door Lock Switch-Driver.
2. Test for infinite resistance between the signal terminal 4 and the ground terminal 1 with the switch in the open position.
    - **If less than infinite resistance**

      Replace the S13D Door Lock Switch-Driver.

    - **If infinite resistance**
3. Test for infinite resistance between the signal terminal 3 and the ground terminal 1 with the switch in the open position.
    - **If less than infinite resistance**

      Replace the S13D Door Lock Switch-Driver.

    - **If infinite resistance**
4. Test for less than 2 ohms between the signal terminal 4 and the ground terminal 1 with the switch in the Lock position.
    - **If 2 ohms or greater**

      Replace theS13D Door Lock Switch-Driver.

    - **If less than 2 ohms**
5. Test for less than 2 ohms between the signal terminal 3 and the ground terminal 1 with the switch in the Unlock position.
    - **If 2 ohms or greater**

      Replace the S13D Door Lock Switch-Driver.

    - **If less than 2 ohms**
6. All OK

Repair Instructions

Perform the **Diagnostic Repair Verification** after completing the repair.

- **Door Lock Switch Replacement**

- **Control Module References** for BCM replacement, programming and setup

DTC B3265

Diagnostic Instructions

- Perform the **Diagnostic System Check - Vehicle** prior to using this diagnostic procedure.
- Review **Strategy Based Diagnosis** for an overview of the diagnostic approach.
- **Diagnostic Procedure Instructions** provides an overview of each diagnostic category.

DTC Descriptor

DTC B3265

Trunk Lid Unlatch Output Circuit

For symptom byte information refer to: **Symptom Byte List**

Diagnostic Fault Information

Circuit	Short to Ground	Open/High Resistance	Short to Voltage	Signal Performance
Control	B3265 02	B3265 04	B3265 01	-
Ground	-	B3265 04	-	-

Circuit/System Description

The body control module (BCM) applies battery positive voltage to the rear compartment lid unlatch relay control circuit, which energizes the coil side of the rear compartment lid unlatch relay. The switch side of the rear compartment lid unlatch relay then closes, supplying battery positive voltage through the relay and the latch motor voltage control circuit to the rear compartment lid latch. The rear compartment lid latch then releases the rear compartment lid so that it may be manually raised to an open position.

Conditions for Running the DTC

When the relay is being actively commanded by the BCM

Conditions for Setting the DTC

B3265 01

The BCM detects a short to voltage on the rear compartment lid unlatch relay control circuit.

B3265 02

The BCM detects a short to ground on the rear compartment lid unlatch relay control circuit.

B3265 04

The BCM detects an open/high resistance on the rear compartment lid unlatch relay control circuit or an open/high resistance on the relay ground circuit.

Action Taken When the DTC Sets

The rear compartment lid latch will malfunction.

Conditions for Clearing the DTC

- This DTC will be current for as long as the fault is present.
- When the fault is no longer present, the DTC will be a history DTC.
- A history DTC will clear after 50 ignition cycles.

Reference Information

Schematic Reference

Release Systems Schematics

Connector End View Reference

COMPONENT CONNECTOR END VIEWS - INDEX

Description and Operation

Luggage Compartment Description and Operation

Electrical Information Reference

- **Circuit Testing**
- **Connector Repairs**
- **Testing for Intermittent Conditions and Poor Connections**
- **Wiring Repairs**

Scan Tool Reference

Control Module References for scan tool information

Circuit/System Verification

1. Ignition ON.
2. Verify the M40 Rear Compartment Lid Latch releases when commanding the Trunk Lid Unlatch with a scan tool.
    - **If the M40 Rear Compartment Lid Latch does not UNLATCH**

Refer to Circuit/System Testing below.

- **If the M40 Rear Compartment Lid Latch does UNLATCH**

3. All OK.

Circuit/System Testing

1. Ignition OFF and all vehicle systems OFF, disconnect the KR95B Rear Compartment Lid Unlatch Relay. It may take up to 2 minutes for all vehicle systems to power down.
2. Test for less than 10 ohms between the ground circuit terminal 1 and ground.
   - **If 10 ohms or greater**
   1. Ignition OFF.
   2. Test for less than 2 ohms in the ground circuit end to end.
      - If 2 ohms or greater, repair the open/high resistance in the circuit.
      - If less than 2 ohms, repair the open/high resistance in the ground connection.
   - **If less than 10 ohms**
3. Connect a test lamp between the control circuit terminal 1 and the ground circuit terminal 3.
4. Verify the test lamp briefly turns ON and OFF when commanding the Trunk Lid Unlatch with a scan tool.
   - **If the test lamp is always OFF**
   1. Ignition OFF, disconnect the harness connector at the K9 Body Control Module.
   2. Test for infinite resistance between the control circuit and ground.
      - If less than infinite resistance, repair the short to ground on the circuit.
      - If infinite resistance
   3. Test for less than 2 ohms in the control circuit end to end.
      - If 2 ohms or greater, repair the open/high resistance in the circuit.
      - If less than 2 ohms, replace the K9 Body Control Module.
   - **If the test lamp is always ON**
   1. Ignition OFF, disconnect the harness connector at the K9 Body Control Module, ignition ON.
   2. Test for less than 1 V between the control circuit and ground.
      - If 1 V or greater, repair the short to voltage on the circuit.
      - If less than 1 V, replace the K9 Body Control Module.
   - **If the test lamp turns ON and OFF**
5. Test or replace the KR95B Rear Compartment Lid Unlatch Relay.

Component Testing

Relay Test

1. Ignition OFF, disconnect the KR95B Rear Compartment Lid Unlatch Relay.
2. Test for 60-200 ohms between terminals 1 and 3.

- **If less than 60 ohms or greater than 200 ohms**

  Replace the KR95B Rear Compartment Lid Unlatch Relay.

- **If between 60-200 ohms**

3. Test for infinite resistance between the terminals listed below:
   - 4 and 3
   - 4 and 5
   - 4 and 1
   - 5 and 1
   - **If less than infinite resistance**

     Replace the KR95B Rear Compartment Lid Unlatch Relay.

   - **If infinite resistance**
4. Install a 3 A fused jumper wire between relay terminal 3 and 12 V. Install a jumper wire between relay terminal 1 and ground.
5. Test for less than 2 ohms between terminals 4 and 5.
   - **If 2 ohms or greater**

     Replace the KR95B Rear Compartment Lid Unlatch Relay.

   - **If less than 2 ohms**
6. All OK

Repair Instructions

Perform the **Diagnostic Repair Verification** after completing the repair.

- **Relay Replacement (Within an Electrical Center)** , **Relay Replacement (Attached to Wire Harness)**
- **Control Module References** for BCM replacement, programming and setup

DTC B3618

Diagnostic Instructions

- Perform the **Diagnostic System Check - Vehicle** prior to using this diagnostic procedure.
- Review **Strategy Based Diagnosis** for an overview of the diagnostic approach.
- **Diagnostic Procedure Instructions** provides an overview of each diagnostic category.

DTC Descriptor

DTC B3618 00

Exterior Liftgate Unlatch Switch Circuit Malfunction

Diagnostic Fault Information

Circuit	Short to Ground	Open/High Resistance	Short to Voltage	Signal Performance
Signal	B3618 00	1	1	-
Ground	-	1	-	-
1. Exterior Rear Compartment Lid Release Switch Malfunction				

Circuit/System Description

When the ignition is ON, the body control module (BCM) supplies a signal to the rear compartment lid unlatch switch through the trunk release switch signal circuit. When the exterior rear compartment lid release switch is pressed, the voltage within the signal circuit is pulled low and in response, the BCM will energize the rear compartment lid unlatch relay.

Conditions for Running the DTC

The system voltage is 9-16 V.

Conditions for Setting the DTC

The BCM detects a short to ground in the rear compartment lid unlatch switch signal circuit for greater than 60 seconds

Action Taken When the DTC Sets

The BCM ignores the input from the rear compartment lid unlatch switch.

Conditions for Clearing the DTC

- This DTC will be current for as long as the fault is present.
- When the fault is no longer present, the DTC will be a history DTC.
- A history DTC will clear after 50 ignition cycles.

Reference Information

Schematic Reference

Release Systems Schematics

Connector End View Reference

COMPONENT CONNECTOR END VIEWS - INDEX

Description and Operation

Luggage Compartment Description and Operation

Electrical Information Reference

- **Circuit Testing**
- **Connector Repairs**
- **Testing for Intermittent Conditions and Poor Connections**
- **Wiring Repairs**

Scan Tool Reference

Control Module References for scan tool information

Circuit/System Verification

1. Ignition ON.
2. Verify the scan tool Trunk Lid/Liftgate Window Exterior Unlatch Switch parameter changes between Active and Inactive when pressing and releasing the S58A Rear Compartment Lid Unlatch Switch-Exterior.
   - **If the parameter does not change**

     Refer to Circuit/System Testing below.

   - **If the parameter changes**
3. All OK.

Circuit/System Testing

1. Ignition OFF and all vehicle systems OFF, disconnect the X915 inline harness connector at the S58A Rear Compartment Lid Unlatch Switch-Exterior. It may take up to 2 minutes for all vehicle systems to power down.
2. Test for less than 10 ohms between the ground circuit terminal 3 and ground.
   - **If 10 ohms or greater**
     1. Ignition OFF.
     2. Test for less than 2 ohms in the ground circuit end to end.
        - If 2 ohms or greater, repair the open/high resistance in the circuit.
        - If less than 2 ohms, repair the open/high resistance in the ground connection.
   - **If less than 10 ohms**
3. Ignition ON.
4. Verify the scan tool Trunk Lid/Liftgate Window Exterior Unlatch Switch parameter is Inactive.
   - **If not Inactive**
     1. Ignition OFF, disconnect the harness connector at the K9 Body Control Module.
     2. Test for infinite resistance between the signal circuit terminal 4 and ground.

- If less than infinite resistance, repair the short to ground on the circuit.
- If infinite resistance, replace the K9 Body Control Module.

- **If Inactive**

5. Install a 3 A fused jumper wire between the signal circuit terminal 4 and the ground circuit terminal 3.
6. Verify the scan tool Trunk Lid/Liftgate Window Exterior Unlatch Switch parameter is Active.
   - **If not Active**
   1. Ignition OFF, remove the 3 A fused jumper wire, disconnect the harness connector at the K9 Body Control Module, ignition ON.
   2. Test for less than 1 V between the signal circuit and ground.
      - If 1 V or greater, repair the short to voltage on the circuit.
      - If less than 1 V
   3. Test for less than 2 ohms in the signal circuit end to end.
      - If 2 ohms or greater, repair the open/high resistance in the circuit.
      - If less than 2 ohms, replace the K9 Body Control Module.
   - **If Active**
7. Test or replace the S58A Rear Compartment Lid Unlatch Switch-Exterior.

Component Testing

Trunk Release Switch

1. Ignition OFF, disconnect the X915 inline harness connector at the S58A Rear Compartment Lid Unlatch Switch-Exterior.
2. Test for infinite resistance between the signal circuit terminal 4 and the ground circuit terminal 3 with the switch in the open position.
   - **If less than infinite resistance**

     Replace the S58A Rear Compartment Lid Unlatch Switch-Exterior.

   - **If infinite resistance**
3. Test for less than 3 ohms between the signal circuit terminal 4 and the ground circuit terminal 3 with the switch in the closed position.
   - **If 3 ohms or greater**

     Replace the S58A Rear Compartment Lid Unlatch Switch-Exterior.

   - **If less than 3 ohms**
4. All OK

Repair Instructions

Perform the **Diagnostic Repair Verification** after completing the repair.

- **Rear License Plate Lamp Wiring Harness Replacement**
-
- **Control Module References** for BCM replacement, setup, and programming

DTC B3930

Diagnostic Instructions

- Perform the **Diagnostic System Check - Vehicle** prior to using this diagnostic procedure.
- Review **Strategy Based Diagnosis** for an overview of the diagnostic approach.
- **Diagnostic Procedure Instructions** provides an overview of each diagnostic category.

DTC Descriptor

DTC B3930 02

Child Security Lock Motors Circuit Short to Ground

Diagnostic Fault Information

Circuit	Short to Ground	Open/High Resistance	Short to Voltage	Signal Performance
Control	B3930 02	1	1	-
Ground	-	1	-	-
1. Child Security Door Lock Malfunction				

Circuit/System Description

The child door lockout switch is on the driver door lock/window switch and controls the function of the rear interior door handles as well as the function of the rear window switches. When the body control module receives a command from the window lockout switch, it will apply voltage to the door lock security relay coil, this will energize the relay and the contact within the relay will then direct the voltage to lock the left rear and right rear child locks and then isolate them from the normal door lock system to prevent the rear doors from being opened by using the interior rear door handles.

Conditions for Running the DTC

When the relay is being actively commanded by the body control module.

Conditions for Setting the DTC

The body control module detects a short to ground in the child security lock relay circuit.

Action Taken When the DTC Sets

- The interior rear door handles will always function or will always be disabled depending upon the state of

the rear door latch when the fault occurred.

- The body control module will command the lockout indicator to flash ON and OFF when the lockout switch is pressed.

Conditions for Clearing the DTC

- This DTC will be current for as long as the fault is present.
- When the fault is no longer present, the DTC will be a history DTC.
- A history DTC will clear after 50 ignition cycles.

Reference Information

Schematic Reference

Door Lock/Indicator Schematics

Connector End View Reference

COMPONENT CONNECTOR END VIEWS - INDEX

Description and Operation

Power Door Locks Description and Operation

Electrical Information Reference

- **Circuit Testing**
- **Connector Repairs**
- **Testing for Intermittent Conditions and Poor Connections**
- **Wiring Repairs**

Scan Tool Reference

Control Module References for scan tool information

Circuit/System Verification

1. Ignition ON.
2. Verify both interior rear door handles do not open the rear doors when commanding the Child Security Lock Motors ON with a scan tool.
    - **If both interior door handles open the rear doors**

      Refer to Circuit/System Testing below.

    - **If both interior door handles do not open the rear doors**

3. Verify both interior rear door handles will open the rear doors when commanding the Child Security Lock Motors OFF with a scan tool.
    - **If both interior door handles do not open the rear doors**

      Refer to Circuit/System Testing below.

    - **If both interior door handles open the rear doors**
4. All OK.

Circuit/System Testing

1. Ignition OFF and all vehicle systems OFF, disconnect the X1 harness connector at the X50A Fuse Block-Underhood. It may take up to 2 minutes for all vehicle systems to power down.
2. Test for less than 10 ohms between the ground circuit terminal 71 and ground.
    - **If 10 ohms or greater**
    1. Ignition OFF.
    2. Test for less than 2 ohms in the ground circuit end to end.
        - If 2 ohms or greater, repair the open/high resistance in the circuit.
        - If less than 2 ohms, repair the open/high resistance in the ground connection.
    - **If less than 10 ohms**
3. Ignition OFF, connect the X1 harness connector at the X50A Fuse Block-Underhood. Disconnect the X4 harness connector at the K9 Body Control Module, ignition ON.
4. Verify that a test lamp does not illuminate between the control circuit terminal 8 and ground.
    - **If the test lamp illuminates**
    1. Ignition OFF, disconnect the X2 harness connector at the X50A Fuse Block-Underhood.
    2. Test for less than 1 V between the K9 Body Control Module control circuit terminal 8 X4 and ground.
        - If 1 V or greater, repair the short to voltage on the circuit.
        - If less than 1 V, replace the X50A Fuse Block-Underhood.
    - **If the test lamp is not illuminated**
5. Connect a 3A fused jumper wire between the control circuit terminal 8 and B+.
6. Listen as the KR113 Child Security Lock Disable Relay activates.
    - **If the KR113 Child Security Lock Disable Relay does not activate**
    1. Ignition OFF, remove the jumper wire, disconnect the X2 harness connector at the X50A Fuse Block-Underhood.
    2. Test for infinite resistance between the K9 Body Control Module control circuit terminal 8 X4 and ground.
        - If less than Infinite resistance, repair the short to ground on the circuit.
        - If infinite resistance
    3. Test for less than 2 ohms in the control circuit end to end.
        - If 2 ohms or greater, repair the open/high resistance in the circuit.

- If less than 2 ohms, replace the X50A Fuse Block-Underhood.
- **If the KR113 Child Security Lock Disable Relay activates**

7. Replace the K9 Body Control Module.

Repair Instructions

Perform the **Diagnostic Repair Verification** after completing the repair.

- **Fuse Block Replacement**
- **Control Module References** for body control module replacement, setup and programming

SYMPTOMS - VEHICLE ACCESS

NOTE: The following steps must be completed before using the symptom tables.

1. Perform the **Diagnostic System Check - Vehicle** , before using the Symptom Tables in order to verify that all of the following are true:
   - There are no DTCs set
   - The control modules can communicate via the serial data link
2. Review the system operation in order to familiarize yourself with the system functions. Refer to the following systems description:
   - **Door Ajar Indicator Description and Operation**
   - **Luggage Compartment Description and Operation**
   - **Power Door Locks Description and Operation**

Visual/Physical Inspection

- Inspect for aftermarket devices which may affect the operation of the system. Refer to **Checking Aftermarket Accessories** .
- Inspect the easily accessible or visible system components for obvious damage or conditions which may cause the symptom.

Intermittent

Faulty electrical connections or wiring may be the cause of intermittent conditions. Refer to **Testing for Intermittent Conditions and Poor Connections** .

Symptom List

Refer to a symptom diagnostic procedure from the following list in order to diagnose the symptom:

- **Exterior Door Handle Switch Malfunction**
- **Power Door Child Lock Malfunction**
- **Door Ajar Indicator Malfunction**

- **Power Door Locks Malfunction**
- **Trunk Release Malfunction**
- **Trunk Ajar Indicator Malfunction**

EXTERIOR DOOR HANDLE SWITCH MALFUNCTION

Diagnostic Instructions

- Perform the **Diagnostic System Check - Vehicle** prior to using this diagnostic procedure.
- Review **Strategy Based Diagnosis** for an overview of the diagnostic approach.
- **Diagnostic Procedure Instructions** provides an overview of each diagnostic category.

DTC Descriptors

DTC B1474 02

Passenger Exterior Door Handle Switch Circuit Short to Ground

DTC B1534 02

Left Rear Door Handle Switch Circuit Short to Ground

DTC B1535 02

Right Rear Door Handle Switch Circuit Short to Ground

DTC B3849 02

Driver Exterior Door Handle Switch Circuit Short to Ground

Diagnostic Fault Information

Circuit	Short to Ground	Open/High Resistance	Short to Voltage	Signal Performance
Driver Door Handle Switch Signal	B3849 02	1	1	-
Driver Door Handle Switch Ground	-	1	-	-
Passenger Door Handle Switch Signal	B1474 02	2	2	-
Passenger Door Handle Switch Ground	-	2	-	-
Left Rear Door Handle Switch Signal	B1534 02	3	3	-
Left Rear Door Handle	-	3	-	-

Switch Ground				
Right Rear Door Handle Switch Signal	B1535 02	4	4	-
Right Rear Door Handle Switch Ground	-	4	-	-
1. Driver Door Handle Switch Malfunction 2. Passenger Door Handle Switch Malfunction 3. Left Rear Door Handle Switch Malfunction 4. Right Rear Door Handle Switch Malfunction				

Circuit/System Description

The exterior door handle switch signal circuits provide inputs to the keyless entry control module when the exterior door handle switches are activated. These inputs allow the keyless entry control module to detect a door lock or a door unlock request. The keyless entry control module provides a 12 V signal to each exterior door handle switch via the door handle switch signal circuits. When a door handle switch is pressed, the switch closes and the voltage signals from the keyless entry control module are pulled to ground.

Conditions for Running the DTC

Battery voltage is between 9-16 V.

Conditions for Setting the DTC

B1474 02

The keyless entry control module detects the passenger exterior door handle switch signal circuit is shorted to ground or closed for greater than 180 seconds.

B1534 02

The keyless entry control module detects the left rear exterior door handle switch signal circuit is shorted to ground or closed for more than 180 seconds.

B1535 02

The keyless entry control module detects the right rear exterior door handle switch signal circuit is shorted to ground or closed for more than 180 seconds.

B3849 02

The keyless entry control module detects the driver exterior door handle switch signal circuit is shorted to ground or closed for more than 180 seconds.

Action Taken When the DTC Sets

The keyless entry control module will ignore input from the affected door switch and the doors will not lock or

unlock when the affected door handle switch is pressed.

Conditions for Clearing the DTC

- The DTC will be current for as long as the fault is present.
- When the fault is no longer present, the DTC will be a history DTC.
- A history DTC will clear after 40 ignition cycles.

Reference Information

Schematic Reference

Door Lock/Indicator Schematics

Connector End View Reference

COMPONENT CONNECTOR END VIEWS - INDEX

Description and Operation

Power Door Locks Description and Operation

Electrical Information Reference

- **Circuit Testing**
- **Connector Repairs**
- **Testing for Intermittent Conditions and Poor Connections**
- **Wiring Repairs**

Scan Tool Reference

Control Module References for scan tool information

Circuit/System Verification

1. Ignition ON.
2. Verify the scan tool Exterior Driver Door Handle Switch, Exterior Passenger Door Handle Switch, Exterior Left Rear Door Handle Switch and Exterior Right Rear Door Handle Switch parameters changes between Active and Inactive when pressing and releasing each B27 Door Handle Switch-Exterior.
   - **If the parameter does not change**

     Refer to Circuit/System Testing below.

   - **If the parameter changes**
3. All OK.

Circuit/System Testing

1. Ignition OFF and all vehicle systems OFF, disconnect the harness connector at the appropriate B27 Door Handle Switch-Exterior. It may take up to 2 minutes for all vehicle systems to power down.
2. Test for less than 10 ohms between the ground circuit terminal 4 and ground.
    - **If 10 ohms or greater**
    1. Ignition OFF.
    2. Test for less than 2 ohms in the ground circuit end to end.
        - If 2 ohms or greater, repair the open/high resistance in the circuit.
        - If less than 2 ohms, repair the open/high resistance in the ground connection.
    - **If less than 10 ohms**
3. Ignition ON.
4. Verify the scan tool Exterior Door Handle Switch parameter is Inactive.
    - **If not Inactive**
    1. Ignition OFF, disconnect the harness connector at the K84 Keyless Entry Control Module.
    2. Test for infinite resistance between the signal circuit terminal 3 and ground.
        - If less than infinite resistance, repair the short to ground on the circuit.
        - If infinite resistance, replace the K84 Keyless Entry Control Module.
    - **If Inactive**
5. Install a 3 A fused jumper wire between the signal circuit terminal 3 and the ground circuit terminal 4.
6. Verify the scan tool Exterior Door Handle Switch parameter is Active.
    - **If not Active**
    1. Ignition OFF, remove the jumper wire, disconnect the harness connector at the K84 Keyless Entry Control Module, ignition ON.
    2. Test for less than 1 V between the signal circuit and ground.
        - If 1 V or greater, repair the short to voltage on the circuit.
        - If less than 1 V
    3. Test for less than 2 ohms in the signal circuit end to end.
        - If 2 ohms or greater, repair the open/high resistance in the circuit.
        - If less than 2 ohms, replace the K84 Keyless Entry Control Module.
    - **If Active**
7. Test or replace the B27 Door Handle Switch-Exterior.

Component Testing

1. Ignition OFF, disconnect the harness connector at the appropriate B27 Door Handle Switch-Exterior.
2. Test for infinite resistance between the signal terminal 3 and the ground terminal 4 with the switch in the open position.
    - **If less than infinite resistance**

Replace the B27 Door Handle Switch-Exterior.

- **If infinite resistance**

3. Test for less than 5 ohms between the signal terminal 3 and the ground terminal 4 with the switch in the closed position.
   - **If 5 ohms or greater**

     Replace the B27 Door Handle Switch-Exterior.

   - **If less than 5 ohms**
4. All OK

Repair Instructions

Perform the **Diagnostic Repair Verification** after completing the repair.

- **Front Side Door Outside Handle Replacement**
- **Rear Side Door Outside Handle Replacement**
- **Control Module References** for keyless entry control module replacement, programming and setup

DOOR AJAR INDICATOR MALFUNCTION

Diagnostic Instructions

- Perform the **Diagnostic System Check - Vehicle** prior to using this diagnostic procedure.
- Review **Strategy Based Diagnosis** for an overview of the diagnostic approach.
- **Diagnostic Procedure Instructions** provides an overview of each diagnostic category

Diagnostic Fault Information

Circuit	Short to Ground	Open/High Resistance	Short to Voltage	Signal Performance
Left Front Door Ajar Switch Signal	1	2	1	-
Left Rear Door Ajar Switch Signal	1	2	1	-
Right Front Door Ajar Switch Signal	1	2	1	-
Right Rear Door Ajar Switch Signal	1	2	1	-
Driver Door Latch Ground	-	2	-	-
Passenger Door Latch Ground	-	2	-	-
Left Rear Door Latch Ground	-	2	-	-

Right Rear Door Latch Ground	-	2	-	-
1. Ajar indicator always illuminated 2. Ajar indicator inoperative				

Circuit/System Description

If the vehicle is equipped with power windows, the window motors or the window switches each provide a 12 V signal to their respective door ajar switch signal circuits. The door ajar switches are integral to each door latch assembly. When a door is opened, the normally open door ajar switch closes. With the door ajar switch closed, ground is provided to the door ajar switch signal circuit and the voltage within the signal circuit drops. The window motor or the window switches will detect the voltage drop and will send a serial data message to the body control module which will then send a message to the instrument panel cluster to command the door ajar message.

Reference Information

Schematic Reference

Door Lock/Indicator Schematics

Connector End View Reference

COMPONENT CONNECTOR END VIEWS - INDEX

Description and Operation

Door Ajar Indicator Description and Operation

Electrical Information Reference

- **Circuit Testing**
- **Connector Repairs**
- **Testing for Intermittent Conditions and Poor Connections**
- **Wiring Repairs**

Scan Tool Reference

Control Module References for scan tool information

Circuit/System Verification

1. Ignition ON.
2. Verify the appropriate scan tool Door Ajar Switch parameter changes between Inactive and Active when opening and closing the driver door, the passenger door, the left rear door and right rear door.
    - **If any parameter does not change**

Refer to Circuit/System Testing below

- **If all the parameters change**

3. All OK.

Circuit/System Testing

1. Ignition OFF and all vehicle systems OFF, disconnect the harness connector at the appropriate A23 door latch assembly. It may take up to 2 minutes for all vehicle systems to power down.
2. Test for less than 10 ohms between the ground circuit terminal listed below and ground.
   - A23D door latch assembly-driver - ground circuit terminal 8
   - A23P door latch assembly-passenger - ground circuit terminal 3
   - A23LR door latch assembly-left rear - ground circuit terminal 8
   - A23RR door latch assembly-right rear - ground circuit terminal 3
   - **If 10 ohms or greater**
   1. Ignition OFF.
   2. Test for less than 2 ohms in the ground circuit end to end.
      - If 2 ohms or greater, repair the open/high resistance in the circuit.
      - If less than 2 ohms, repair the open/high resistance in the ground connection.
   - **If less than 10 ohms**
3. Ignition ON.
4. Verify the appropriate scan tool Door Ajar Switch parameter is Inactive.
   - **If not Inactive**
   1. Ignition OFF, disconnect the harness connector at the appropriate component listed below:
      - M74D window motor - driver (AXG)
      - S79D window switch - driver (AEC)
      - S79P window switch - passenger
      - S79LR window switch - left rear
      - S79RR window switch - right rear
   2. Test for infinite resistance between the signal circuit terminal listed below and ground.
      - A23D door latch assembly-driver - signal circuit terminal 6
      - A23P door latch assembly-passenger - signal circuit terminal 1
      - A23LR door latch assembly-left rear - signal circuit terminal 6
      - A23RR door latch assembly-right rear - signal circuit terminal 1
      - If less than infinite resistance, repair the short to ground on the circuit.
      - If infinite resistance, replace the appropriate component.
   - **If Inactive**
5. Install a 3 A fused jumper wire between the signal circuit terminal listed below and ground.
   - A23D door latch assembly-driver - signal circuit terminal 6

- A23P door latch assembly-passenger - signal circuit terminal 1
- A23LR door latch assembly-left rear - signal circuit terminal 6
- A23RR door latch assembly-right rear - signal circuit terminal 1

6. Verify the scan tool Door Ajar Switch parameter is Active.
   - **If not Active**
   1. Ignition OFF, disconnect the harness connector at the appropriate component listed below, ignition ON.
      - M74D window motor - driver (AXG)
      - S79D window switch - driver (AEC)
      - S79P window switch - passenger
      - S79LR window switch - left rear
      - S79RR window switch - right rear
   2. Test for less than 1 V between the signal circuit and ground.
      - If 1 V or greater, repair the short to voltage on the circuit.
      - If less than 1 V
   3. Test for less than 2 ohms in the signal circuit end to end.
      - If 2 ohms or greater, repair the open/high resistance in the circuit.
      - If less than 2 ohms, replace the appropriate component.
   - **If Active**
7. Test or replace the A23 door latch assembly.

Component Testing

1. Ignition OFF, disconnect the harness connector at the appropriate A23 door latch assembly.
2. Test for infinite resistance between the terminals listed below with the switch in the open position.
   - Driver door latch signal terminal 6 and ground terminal 8
   - Left rear door latch signal terminal 6 and ground terminal 8
   - Right rear door latch signal terminal 1 and ground terminal 3
   - Passenger door latch signal terminal 1 and ground terminal 3
   - **If less than infinite resistance**

     Replace the A23 door latch assembly.

   - **If infinite resistance**
3. Test for less than 5 ohms between the terminals listed below with the switch in the closed position.
   - Driver door latch signal terminal 6 and ground terminal 8
   - Left rear door latch signal terminal 6 and ground terminal 8
   - Right rear door latch signal terminal 1 and ground terminal 3
   - Passenger door latch signal terminal 1 and ground terminal 3

- **If 5 ohms or greater**

  Replace the A23 door latch assembly.

- **If less than 5 ohms**

4. All OK

Repair Instructions

Perform the **Diagnostic Repair Verification** after completing the repair.

- **Front Side Door Latch Replacement**
- **Rear Side Door Latch Replacement**
- **Front Side Door Window Regulator Motor Replacement**
- **Control Module References** for BCM replacement, programming and setup

POWER DOOR CHILD LOCK MALFUNCTION

Diagnostic Instructions

- Perform the **Diagnostic System Check - Vehicle** prior to using this diagnostic procedure.
- Review **Strategy Based Diagnosis** for an overview of the diagnostic approach.
- **Diagnostic Procedure Instructions** provides an overview of each diagnostic category.

Diagnostic Fault Information

Circuit	Short to Ground	Open/High Resistance	Short to Voltage	Signal Performance
Left Rear Door Latch Lock Status Signal	-	4	4	-
Left Rear Door Latch Child Lock Control	B3125 02, B3130 02, B3135 02	2	2	-
Left Rear Door Latch Ground	-	4	-	-
Right Rear Door Latch Lock Status Signal	-	4	4	-
Right Rear Door Latch Child Lock Control	B3125 02, B3130 02, B3135 02	3	3	-
Right Rear Door Latch Ground	-	4	-	-
Door Lock Security Relay Control	B3930 02	1	1	-

Underhood Fuse Block Ground	-	1	-	-
1. Both Child Door Lockouts Inoperative 2. Left Rear Child Door Lockout Inoperative 3. Right Rear Child Door Lockout Inoperative 4. Rear Windows Always Function From Local Rear Window Switches				

Circuit/System Description

The child door lockout switch is on the driver door lock/window switch and controls the child locks on the rear doors as well as the rear window switches. When the body control module receives a command from the window lockout switch, it will apply voltage to the door lock security relay coil, this will energize the relay and the contact within the relay will then direct the voltage to lock the left rear and right rear child locks and then isolate them from the normal door lock system to prevent the rear doors from being opened by using the interior rear door handles.

The body control module monitors the voltage level of the rear lock status signal circuits to determine if the rear door latches have been locked out. A switch within the rear door latch will be open or closed depending upon the lockout status of the rear latch. If the rear latches are not locked out, the switch will be open and the body control module will allow normal functions of the rear window switches. If the latches have been lockout, the switch will be closed, pulling the voltage within the signal circuit to 0 volts and the body control module will send a serial data message to the rear window switches which will disable the functions of the rear windows from the local rear window switches

Reference Information

Schematic Reference

Door Lock/Indicator Schematics

Connector End View Reference

COMPONENT CONNECTOR END VIEWS - INDEX

Description and Operation

Power Door Locks Description and Operation

Electrical Information Reference

- **Circuit Testing**
- **Connector Repairs**
- **Testing for Intermittent Conditions and Poor Connections**
- **Wiring Repairs**

Scan Tool Reference

Control Module References for scan tool information

Circuit/System Verification

1. Ignition ON.
2. Verify both interior rear door handles do not open the rear doors when commanding the Child Security Lock Motors ON with a scan tool.
   - **If both interior rear door handles open the rear doors**

     Refer to Circuit/System Testing below- Security Lockout Inoperative.

   - **If a single interior rear door handle opens the rear door**

     Refer to Circuit/System Testing below- Single Door Security Lockout Malfunction.

   - **If both interior door handles do not open the rear doors**
3. Verify both interior rear door handles will open the rear doors when commanding the Child Security Lock Motors OFF with a scan tool.
   - **If both interior rear door handles do not open the rear doors**

     Refer to Circuit/System Testing - Security Lockout Inoperative.

   - **If a single interior rear door handle does not open the rear door**

     Refer to Circuit/System Testing below- Single Door Security Lockout Malfunction.

   - **If both interior door handles open the rear doors**
4. Verify both rear window switches do not open the rear windows when commanding the Child Security Lock Motors ON with a scan tool.
   - **If a rear window switch continues to function**

     Refer to Circuit/System Testing below- Rear Window Lockout Inoperative.

   - **If the rear window switches areinoperative**
5. Verify the scan tool Window Lockout Switch parameter changes between On and Off when pressing the lockout switch on the S79D Window Switch-Driver.
   - **If the parameter does not change**

     Replace the S79D Window Switch-Driver.

   - **If the parameter changes**
6. All OK.

Circuit/System Testing

Security Lockout Inoperative

1. Ignition OFF and all vehicle systems OFF, disconnect the X1 harness connector at the X50A Fuse Block-Underhood. It may take up to 2 minutes for all vehicle systems to power down.
2. Test for less than 10 ohms between the ground circuit terminal 71 and ground.
    - **If 10 ohms or greater**
    1. Ignition OFF.
    2. Test for less than 2 ohms in the ground circuit end to end.
        - If 2 ohms or greater, repair the open/high resistance in the circuit.
        - If less than 2 ohms, repair the open/high resistance in the ground connection.
    - **If less than 10 ohms**
3. Ignition OFF, connect the X1 harness connector at the X50A Fuse Block-Underhood. Disconnect the X4 harness connector at the K9 Body Control Module, ignition ON.
4. Verify that a test lamp does not illuminate between the control circuit terminal 8 and ground.
    - **If the test lamp illuminates**
    1. Ignition OFF, disconnect the X2 harness connector at the X50A Fuse Block-Underhood.
    2. Test for less than 1 V between the K9 Body Control Module control circuit terminal 8 X4 and ground.
        - If 1 V or greater, repair the short to voltage on the circuit.
        - If less than 1 V, replace the X50A Fuse Block-Underhood.
    - **If the test lamp is not illuminated**
5. Connect a 3A fused jumper wire between the control circuit terminal 8 and B+.
6. Listen as the KR113 Child Security Lock Disable Relay activates.
    - **If the KR113 Child Security Lock Disable Relay does not activate**
    1. Ignition OFF, remove the jumper wire, disconnect the X2 harness connector at the X50A Fuse Block-Underhood.
    2. Test for infinite resistance between the K9 Body Control Module control circuit terminal 8 X4 and ground.
        - If less than Infinite resistance, repair the short to ground on the circuit.
        - If infinite resistance
    3. Test for less than 2 ohms in the control circuit end to end.
        - If 2 ohms or greater, repair the open/high resistance in the circuit.
        - If less than 2 ohms, replace the X50A Fuse Block-Underhood.
    - **If the KR113 Child Security Lock Disable Relay activates**
7. Replace the K9 Body Control Module.

Single Door Security Lockout Malfunction

1. Ignition OFF, disconnect the harness connector at the appropriate A23 Door Latch Assembly-Rear. Ignition ON

2. Connect a test lamp between control circuit terminals listed below:
    - A23LR Door Latch Assembly-Left Rear - control circuit terminal 4 and control circuit terminal 7
    - A23RR Door Latch Assembly-Right Rear - control circuit terminal 2 and control circuit terminal 9
3. Verify the test lamp turns ON and OFF when commanding the Child Security Lock Motors ON and OFF with a scan tool.
    - **If the test lamp remains OFF during either of the commands**
    1. Ignition OFF, remove the tests lamp, disconnect the harness connector at the K9 Body Control Module.
    2. Test for infinite resistance between each control circuit and ground.
        - If less than infinite resistance, repair the short to ground on the circuit.
        - If infinite resistance, replace the K9 Body Control Module.
    - **If the test lamp turns ON during each of the commands**
4. Test or replace the A23 Door Latch Assembly-Rear.

Rear Window Lockout Inoperative

1. Ignition OFF and all vehicle systems OFF, disconnect the harness connector at the appropriate A23 Door Latch Assembly-Rear. It may take up to 2 minutes for all vehicle systems to power down.
2. Test for less than 10 ohms between the ground circuit terminal listed below and ground.
    - A23LR Door Latch Assembly-Left Rear - ground circuit terminal 8
    - A23RR Door Latch Assembly-Right Rear - ground circuit terminal 3
    - **If 10 ohms or greater**
    1. Ignition OFF.
    2. Test for less than 2 ohms in the ground circuit end to end.
        - If 2 ohms or greater, repair the open/high resistance in the circuit.
        - If less than 2 ohms, repair the open/high resistance in the ground connection.
    - **If less than 10 ohms**
3. Ignition ON.
4. Verify the scan tool Rear Child Security Lock Switch parameter is Inactive.
    - **If not Inactive**
    1. Ignition OFF, disconnect the harness connector at the K9 Body Control Module.
    2. Test for infinite resistance between the signal circuit terminal listed below and ground.
        - A23LR Door Latch Assembly-Left Rear - signal circuit terminal 9
        - A23RR Door Latch Assembly-Right Rear - signal circuit terminal 4
        - If less than infinite resistance, repair the short to ground on the circuit.
        - If infinite resistance, replace the K9 Body Control Module.
    - **If Inactive**
5. Install a 3 A fused jumper wire between the signal and the ground circuit terminals listed below:
    - A23LR Door Latch Assembly-Left Rear - signal circuit terminal 9 and ground circuit terminal 8

- A23RR Door Latch Assembly-Right Rear - signal circuit terminal 4 and ground circuit terminal 3

6. Verify the scan tool Rear Child Security Lock Switch parameter is Active.
   - **If not Active**
   1. Ignition OFF, remove the 3A fused jumper wire, disconnect the harness connector at the K9 Body Control Module, ignition ON.
   2. Test for less than 1 V between the signal circuit and ground.
      - If 1 V or greater, repair the short to voltage on the circuit.
      - If less than 1 V
   3. Test for less than 2 ohms in the signal circuit end to end.
      - If 2 ohms or greater, repair the open/high resistance in the circuit.
      - If less than 2 ohms, replace the K9 Body Control Module.
   - **If Active**
7. Test or replace the A23 Door Latch Assembly-Rear.

Component Testing

Door Latch Test

1. Ignition OFF, disconnect the harness connector at the appropriate A23 Door Latch Assembly-Rear.
2. Install a 30 A fused jumper wire between one of the control terminals and 12 V. Momentarily install a jumper wire between the other control terminal and ground. Reverse the jumper wires at least two times, the A23 Door Latch Assembly-Rear should perform the LOCK and UNLOCK functions.
   - **If the function does not perform the LOCK and UNLOCK function**

     Replace the A23 Door Latch Assembly-Rear.

   - **If the function performs the LOCK and UNLOCK function**
3. All OK

Repair Instructions

Perform the **Diagnostic Repair Verification** after completing the repair.

- **Front Side Door Window Switch Replacement - Left Side**
- **Fuse Block Replacement**
- **Rear Side Door Latch Replacement**
- **Control Module References** for body control module replacement, programming and setup

POWER DOOR LOCKS MALFUNCTION

Diagnostic Instructions

- Perform the **Diagnostic System Check - Vehicle** prior to using this diagnostic procedure.

- Review **Strategy Based Diagnosis** for an overview of the diagnostic approach.
- **Diagnostic Procedure Instructions** provides an overview of each diagnostic category.

Diagnostic Fault Information

Circuit	Short to Ground	Open/High Resistance	Short to Voltage	Signal Performance
BCM B+	B3125 02, B3130 02, B3135 02	B3125 02, B3130 02, B3135 02	-	-
Driver Door Unlock Control	B3125 02, B3130 02, B3135 02	B3125 04, B3130 04, B3135 04	B3125 01, B3130 01, B3135 01	-
Doors Lock Control	B3125 02, B3130 02, B3135 02	B3125 04, B3130 04, B3135 04	B3125 01, B3130 01, B3135 01	-
Passenger Doors Unlock Control	B3125 02, B3130 02, B3135 02	B3125 04, B3130 04, B3135 04	B3125 01, B3130 01, B3135 01	-
Door Lock Switch Signal	B3150 00	1	1	-
Door Unlock Switch Signal	B3140 00	2	2	-
Central Door Lock Switch Ground	-	3	-	-
1. Door Lock Switch Lock Function Inoperative 2. Door Lock Switch Unlock Function Inoperative 3. Door Lock Switch Lock and Unlock Functions Inoperative				

Circuit/System Description

The body control module (BCM) powers the reversible door latch assemblies by providing battery positive voltage and ground to the appropriate lock and unlock control circuits of the door latch assemblies. The lock and unlock control circuits of the rear doors and passenger door latch assemblies are all connected together. When the door latch assemblies are not active, all actuator lock and unlock control circuits are supplied a floating voltage door driver by the BCM. Transitioning of the lock actuators to the lock or unlocked position depends upon which control circuits receive voltage and which control circuits receive ground.

The BCM supplies a 12 V signal to each of the door lock and door unlock signal circuits. When the door lock switches are in the open position, the voltage level in the signal circuit will be near 12 V. When any door lock switch is pressed to the lock or unlock position, the voltage level in the appropriate signal circuit will drop to 0 V and the BCM will detect the voltage drop and command the door latches to perform the requested lock or unlock command.

The underhood fuse block contains a PCB relay which controls the functions of the electronic child locks which is part of the rear door latch assemblies. When the relay is in it's inactive state and the BCM commands the latches to LOCK and UNLOCK, voltage will pass through the relay contacts for normal LOCK and UNLOCK functions of the passenger, left rear and right rear door latch assemblies

Reference Information

Schematic Reference

- **Door Lock/Indicator Schematics**
- **Body Control System Schematics**

Connector End View Reference

COMPONENT CONNECTOR END VIEWS - INDEX

Description and Operation

Power Door Locks Description and Operation

Electrical Information Reference

- **Circuit Testing**
- **Connector Repairs**
- **Testing for Intermittent Conditions and Poor Connections**
- **Wiring Repairs**

Scan Tool Reference

Control Module References for scan tool information

Circuit/System Verification

1. Ignition ON.
2. Verify the scan tool Central Door Lock Switch on Console parameter changes from Inactive to Lock and Unlock when cycling the S13D Door Lock Switch-Driver between LOCK and UNLOCK.
    - **If the parameter does not change**

      Refer to Circuit/System Testing below- Driver Door Lock Switch Malfunction.

    - **If the parameter changes**
3. Verify all vehicle doors LOCK and UNLOCK when commanding the All Door Lock/Unlock with a scan tool.
    - **If only the driver door LOCK or UNLOCK functions do not work**

      Refer to Circuit/System Testing below- Driver Door Lock Malfunction.

    - **If one or more, but not all, passenger door LOCK or UNLOCK functions do not work**

      Refer to Circuit/System Testing below- Passenger Door Lock Malfunction.

- **If all door LOCK and UNLOCK functions do not work**

  Refer to Circuit/System Testing below- All Door Lock Inoperative.

- **If the LOCK and UNLOCK function for all doors works**

4. All OK.

Circuit/System Testing

Driver Door Lock Switch Malfunction

1. Ignition OFF and all vehicle systems OFF, disconnect the harness connector at the S13D Door Lock Switch-Driver. It may take up to 2 minutes for all vehicle systems to power down.
2. Test for less than 10 ohms between the ground circuit terminal 1 and ground.
   - **If 10 ohms or greater**
   1. Ignition OFF.
   2. Test for less than 2 ohms in the ground circuit end to end.
      - If 2 ohms or greater, repair the open/high resistance in the circuit.
      - If less than 2 ohms, repair the open/high resistance in the ground connection.
   - **If less than 10 ohms**
3. Ignition ON.
4. Verify the scan tool Central Door Lock Switch on Console parameter is Inactive.
   - **If not Inactive**
   1. Ignition OFF, disconnect the X2 harness connector at the K9 Body Control Module.
   2. Test for infinite resistance between the K9 Body Control Module signal circuit terminal 15 X2 and ground.
      - If less than infinite resistance, repair the short to ground on the circuit.
   3. Test for infinite resistance between the K9 Body Control Module signal circuit terminal 19 X2 and ground.
      - If less than infinite resistance, repair the short to ground on the circuit.
      - If infinite resistance, replace the K9 Body Control Module.
   - **If Inactive**
5. Install a 3 A fused jumper wire between the signal circuit terminal 3 and the ground circuit terminal 1.
6. Verify the scan tool Central Door Lock Switch on Console parameter is Unlock.
   - **If not Unlock**
   1. Ignition OFF, remove the fused jumper wire, disconnect the harness connector at the K9 Body Control Module, ignition ON.
   2. Test for less than 1 V between the signal circuit terminal and ground.
      - If 1 V or greater, repair the short to voltage on the circuit.
      - If less than 1 V
   3. Test for less than 2 ohms in the signal circuit end to end.

- If 2 ohms or greater, repair the open/high resistance in the circuit.
- If less than 2 ohms, replace the K9 Body Control Module.

- **If Unlock**

7. Install a 3 A fused jumper wire between the signal circuit terminal 4 and the ground circuit terminal 1.
8. Verify the scan tool Central Door Lock Switch on Console parameter is Lock.
   - **If not Lock**
   1. Ignition OFF, remove the fused jumper wire, disconnect the harness connector at the K9 Body Control Module, ignition ON.
   2. Test for less than 1 V between the signal circuit terminal and ground.
      - If 1 V or greater, repair the short to voltage on the circuit.
      - If less than 1 V
   3. Test for less than 2 ohms in the signal circuit end to end.
      - If 2 ohms or greater, repair the open/high resistance in the circuit.
      - If less than 2 ohms, replace the K9 Body Control Module.
   - **If Lock**
9. Test or replace the S13D Door Lock Switch-Driver.

Driver Door Lock Malfunction

1. Ignition OFF, verify the harness connector is firmly seated and secure for the A23D Door Latch Assembly-Driver.
   - **If the harness connector not seated or secure**

     Firmly seat and secure the harness connector at the A23D Door Latch Assembly-Driver.

   - **If the harness connector is firmly seated and secure**
2. Disconnect the harness connector at the A23D Door Latch Assembly-Driver. Ignition ON.

NOTE: Leaving the DMM connected between a control circuit and ground for greater than 20 seconds will cause the K9 Body Control Module to interpret the test as a system fault and will cause the voltage on the control circuit to drop to 0 V. If the voltage drops to 0 V, operate the door locks using the door lock switch to restore the voltage for testing.

3. Test for greater than 7 V between the control circuit terminal 3 and ground.
   - **If 7 V or less**
   1. Ignition OFF, disconnect the X6 harness connector at the K9 Body Control Module.
   2. Test for infinite resistance between the control circuit and ground.
      - If less than infinite resistance, repair the short to ground on the circuit.
      - If infinite resistance
   3. Test for less than 2 ohms in the control circuit end to end.

- If 2 ohms or greater, repair the open/high resistance on the circuit.
- If less than 2 ohms, replace the K9 Body Control Module.

- **If greater than 7 V**

NOTE: Leaving the DMM connected between a control circuit and ground for greater than 20 seconds will cause the K9 Body Control Module to interpret the test as a system fault and will cause the voltage on the control circuit to drop to 0 V. If the voltage drops to 0 V, operate the door locks using the door lock switch to restore the voltage for testing.

4. Test for greater than 7 V between the control circuit terminal 2 and ground.
   - **If 7 V or less**
   1. Ignition OFF, disconnect the X6 harness connector at the K9 Body Control Module.
   2. Test for infinite resistance between the control circuit and ground.
      - If less than infinite resistance, repair the short to ground on the circuit.
      - If infinite resistance
   3. Test for less than 2 ohms in the control circuit end to end.
      - If 2 ohms or greater, repair the open/high resistance on the circuit.
      - If less than 2 ohms, replace the K9 Body Control Module.
   - **If greater than 7 V**
5. Test or replace the A23D Door Latch Assembly-Driver.

Passenger Door Lock Malfunction

1. Ignition OFF, verify the harness connector is firmly seated and secure for the appropriate passenger or rear A23 Door Latch Assembly.
   - **If the harness connector not seated or secure**

     Firmly seat and secure the harness connector at the passenger or rear A23 Door Latch Assembly.

   - **If the harness connector is firmly seated and secure**
2. Disconnect the harness connector at the appropriate passenger or rear A23 Door Latch Assembly. Ignition ON.

NOTE: Leaving the DMM connected between a control circuit and ground for greater than 20 seconds will cause the K9 Body Control Module to interpret the test as a system fault and will cause the voltage on the control circuit to drop to 0 V. If the voltage drops to 0 V, operate the door locks using the door lock switch to restore the voltage for testing.

3. Test for greater than 7 V between the control circuit terminal listed below and ground:
   - A23P Door Latch Assembly-Passenger - control circuit terminal 7

- A23RR Door Latch Assembly-Right Rear - control circuit terminal 7
- A23LR Door Latch Assembly-Left Rear - control circuit terminal 2

- **If 7 V or less**

1. Ignition OFF, disconnect the X6 harness connector at the K9 Body Control Module.
2. Test for infinite resistance between the control circuit and ground.
   - If less than infinite resistance, repair the short to ground on the circuit.
   - If infinite resistance
3. Test for less than 2 ohms in the control circuit end to end.
   - If 2 ohms or greater, repair the open/high resistance on the circuit.
   - If less than 2 ohms, replace the K9 Body Control Module.

- **If greater than 7 V**

NOTE: Leaving the DMM connected between a control circuit and ground for greater than 20 seconds will cause the K9 Body Control Module to interpret the test as a system fault and will cause the voltage on the control circuit to drop to 0 V. If the voltage drops to 0 V, operate the door locks using the door lock switch to restore the voltage for testing.

4. Test for greater than 7 V between the control circuit terminal listed below and ground:
   - A23P Door Latch Assembly-Passenger - control circuit terminal 8
   - A23RR Door Latch Assembly-Right Rear - control circuit terminal 8
   - A23LR Door Latch Assembly-Left Rear - control circuit terminal 3

   - **If 7 V or less**

   1. Ignition OFF, disconnect the X2 harness connector at the X50A Fuse Block-Underhood.
   2. Disconnect the X6 harness connector at the K9 Body Control Module.
   3. Test for less than 2 ohms between the control circuit terminals listed below:
      - X50A Fuse Block-Underhood control circuit terminal 4 X2 and A23P Door Latch Assembly-Passenger control circuit terminal 8
      - X50A Fuse Block-Underhood control circuit terminal 12 X2 and K9 Body Control Module control circuit terminal 2 X6
      - If greater than 2 ohms, repair the open/high resistance on the circuit.
   4. Connect the X2 harness connector at the X50A Fuse Block-Underhood
   5. Test for less than 2 ohms between the A23P Door Latch Assembly-Passenger control circuit terminal 8 and the K9 Body Control Module control circuit terminal 2 X6
      - If greater than 2 ohms, replace the X50A Fuse Block-Underhood.
   6. Connect the X6 harness connector at the K9 Body Control Module
   7. Ignition ON, test for greater than 7 V between the A23P Door Latch Assembly-Passenger control circuit terminal 8 and ground

   - **If 7 V or less, replace the K9 Body Control Module**
   - **If greater than 7 V**

5. Test or replace the A23 Door Latch Assembly.

All Door Locks Inoperative

1. Ignition OFF, disconnect the X2 harness connector at the K9 Body Control Module, ignition ON.
2. Verify a test lamp illuminates between the B+ circuit terminal 4 and ground.
   - **If the test lamp does not illuminate and the circuit fuse is good**
   1. Ignition OFF.
   2. Test for less than 2 ohms in the B+ circuit end to end.
      - If 2 ohms or greater, repair the open/high resistance in the circuit.
      - If less than 2 ohms, verify the fuse is not open and there is voltage at the fuse.
      - **If the test lamp does not illuminate and the circuit fuse is open**
   3. Ignition OFF.
   4. Test for infinite resistance between the B+ circuit and ground.
      - If less than infinite resistance, repair the short to ground on the circuit.
      - If infinite resistance
   5. Disconnect the harness connector at each of the A23 Door Latch Assemblies.
   6. Test for infinite resistance between each control circuit and ground.
      - If less than infinite resistance, repair the short to ground on the circuit.
      - If infinite resistance, replace the appropriate A23 Door Latch Assembly.
   - **If the test lamp illuminates**
3. Ignition OFF, connect the X2 harness connector at the K9 Body Control Module. Disconnect the harness connector at the A23D Door Latch Assembly-Driver, ignition ON.

NOTE: **Leaving the DMM connected between a control circuit and ground for greater than 20 seconds will cause the K9 Body Control Module to interpret the test as a system fault and will cause the voltage on the control circuit to drop to 0 V. If the voltage drops to 0 V, operate the door locks using the door lock switch to restore the voltage for testing.**

4. Test for greater than 7 V between the control circuit terminal 2 and ground.
   - **If 7 V or less**
   1. Ignition OFF, disconnect the X6 harness connector at the K9 Body Control Module.
   2. Test for infinite resistance between the control circuit terminal listed below and ground:
      - Control circuit terminal 1 X6
      - Control circuit terminal 2 X6
      - Control circuit terminal 4 X6
      - If less than infinite resistance, repair the short to ground on the circuit.
      - If infinite resistance, replace the K9 Body Control Module.
      - **If greater than 7 V**

5. Replace the K9 Body Control Module.

Component Testing

Driver Door Lock Switch

1. Ignition OFF, disconnect the harness connector at the S13D Door Lock Switch-Driver.
2. Test for infinite resistance between the signal terminal 4 and the ground terminal 1 with the switch in the open position.
   - **If less than infinite resistance**

     Replace the S13D Door Lock Switch-Driver.

   - **If infinite resistance**
3. Test for infinite resistance between the signal terminal 3 and the ground terminal 1 with the switch in the open position.
   - **If less than infinite resistance**

     Replace the S13D Door Lock Switch-Driver.

   - **If infinite resistance**
4. Test for less than 2 ohms between the signal terminal 4 and the ground terminal 1 with the switch in the Lock position.
   - **If 2 ohms or greater**

     Replace the S13D Door Lock Switch-Driver.

   - **If less than 2 ohms**
5. Test for less than 2 ohms between the signal terminal 3 and the ground terminal 1 with the switch in the Unlock position.
   - **If 2 ohms or greater**

     Replace the S13D Door Lock Switch-Driver.

   - **If less than 2 ohms**
6. All OK

Door Latch Assembly

1. Ignition OFF, disconnect the harness connector at the appropriate A23 Door Latch Assembly.
2. Install a 25 A fused jumper wire between one of the control terminals and 12 V. Momentarily install a jumper wire between the other control terminal and ground. Reverse the jumper wires at least two times, the A23 Door Latch Assembly should perform the LOCK and UNLOCK function.
   - **If the actuator does not perform the LOCK and UNLOCK function**

Replace the A23 Door Latch Assembly.

- **If the actuator performs the LOCK and UNLOCK function**

3. All OK

Repair Instructions

Perform the **Diagnostic Repair Verification** after completing the repair.

- **Door Lock Switch Replacement**
- **Front Side Door Latch Replacement**
- **Rear Side Door Latch Replacement**
- **Front Compartment Fuse Block Replacement**
- **Control Module References** for BCM replacement, programming and setup

TRUNK RELEASE MALFUNCTION

Diagnostic Instructions

- Perform the **Diagnostic System Check - Vehicle** prior to using this diagnostic procedure.
- Review **Strategy Based Diagnosis** for an overview of the diagnostic approach.
- **Diagnostic Procedure Instructions** provides an overview of each diagnostic category.

Diagnostic Fault Information

Circuit	Short to Ground	Open/High Resistance	Short to Voltage	Signal Performance
Rear Compartment Lid Unlatch Relay B+	1	1	-	-
Rear Compartment Lid Unlatch Switch Signal	B3618 00	2	2	-
Rear Compartment Lid Latch Control	1	1	1	-
Rear Compartment Lid Unlatch Relay Control	B3265 02	B3265 04	B3265 01	-
Rear Compartment Lid Latch Ground	-	1	-	-
Rear Compartment Lid Unlatch Switch Ground	-	2	-	-
Rear Compartment Lid Unlatch Relay Ground	-	B3265 04	-	-
1. Trunk Release Malfunction 2. Trunk Release Exterior Switch Malfunction				

Circuit/System Description

The body control module (BCM) supplies a reference voltage to the rear compartment lid unlatch switch through the release switch signal circuit. When the rear compartment lid unlatch switch is pressed, the release switch signal circuit is grounded through the rear compartment lid unlatch switch ground circuit and the reference voltage is pulled low within the BCM. In response, the BCM applies battery positive voltage to the rear compartment lid unlatch relay control circuit, which energizes the coil side of the relay. The switch side of the rear compartment lid unlatch relay then closes, supplying battery positive voltage through the relay and the rear compartment lid latch control circuit activating the latch so that the trunk lid may be manually raised to an open position.

Reference Information

Schematic Reference

Release Systems Schematics

Connector End View Reference

COMPONENT CONNECTOR END VIEWS - INDEX

Description and Operation

Luggage Compartment Description and Operation

Electrical Information Reference

- **Circuit Testing**
- **Connector Repairs**
- **Testing for Intermittent Conditions and Poor Connections**
- **Wiring Repairs**

Scan Tool Reference

Control Module References for scan tool information

Circuit/System Verification

1. Ignition ON.
2. Verify the scan tool Trunk Lid/Liftgate Window Exterior Unlatch Switch parameter changes between Active and Inactive when pressing and releasing the S58A Rear Compartment Lid Unlatch Switch-Exterior.
    - **If the parameter does not change**

      Refer to Circuit/System Testing below- Trunk Release Switch Inoperative

    - **If the parameter changes**
3. Verify the M40 Rear Compartment Lid Latch activates when commanding the Trunk Lid Unlatch with a

scan tool.

- **If the M40 Rear Compartment Lid Latch does not UNLATCH**

  Refer to Circuit/System Testing below- Release Actuator Inoperative

- **If the M40 Rear Compartment Lid Latch does UNLATCH**

4. All OK.

Circuit/System Testing

Trunk Release Switch Inoperative

1. Ignition OFF and all vehicle systems OFF, disconnect the X920 inline harness connector at the S58A Rear Compartment Lid Unlatch Switch-Exterior. It may take up to 2 minutes for all vehicle systems to power down.
2. Test for less than 10 ohms between the ground circuit terminal 3 and ground.
   - **If 10 ohms or greater**
   1. Ignition OFF.
   2. Test for less than 2 ohms in the ground circuit end to end.
      - If 2 ohms or greater, repair the open/high resistance in the circuit.
      - If less than 2 ohms, repair the open/high resistance in the ground connection.
   - **If less than 10 ohms**
3. Ignition ON.
4. Verify the scan tool Trunk Lid/Liftgate Window Exterior Unlatch Switch parameter is Inactive.
   - **If not Inactive**
   1. Ignition OFF, disconnect the harness connector at the K9 Body Control Module.
   2. Test for infinite resistance between the signal circuit terminal 4 and ground.
      - If less than infinite resistance, repair the short to ground on the circuit.
      - If infinite resistance, replace the K9 Body Control Module.
   - **If Inactive**
5. Install a 3 A fused jumper wire between the signal circuit terminal 4 and the ground circuit terminal 3.
6. Verify the scan tool Trunk Lid/Liftgate Window Exterior Unlatch Switch parameter is Active.
   - **If not Active**
   1. Ignition OFF, remove the 3 A fused jumper wire, disconnect the harness connector at the K9 Body Control Module, ignition ON.
   2. Test for less than 1 V between the signal circuit and ground.
      - If 1 V or greater, repair the short to voltage on the circuit.
      - If less than 1 V
   3. Test for less than 2 ohms in the signal circuit end to end.
      - If 2 ohms or greater, repair the open/high resistance in the circuit.
      - If less than 2 ohms, replace the K9 Body Control Module.

- **If Active**

7. Test or replace the S58A Rear Compartment Lid Unlatch Switch-Exterior.

Release Actuator Inoperative

1. Ignition OFF and all vehicle systems OFF, disconnect the KR95B Rear Compartment Lid Unlatch Relay. It may take up to 2 minutes for all vehicle systems to power down.
2. Test for less than 10 ohms between the ground circuit terminal 1 and ground.
   - **If 10 ohms or greater**
   1. Ignition OFF.
   2. Test for less than 2 ohms in the ground circuit end to end.
      - If 2 ohms or greater, repair the open/high resistance in the circuit.
      - If less than 2 ohms, repair the open/high resistance in the ground connection.
   - **If less than 10 ohms**
3. Ignition ON.
4. Verify a test lamp illuminates between the B+ circuit terminal 4 and ground.
   - **If the test lamp does not illuminate and the circuit fuse is good**
   1. Ignition OFF.
   2. Test for less than 2 ohms in the B+ circuit end to end.
      - If 2 ohms or greater, repair the open/high resistance in the circuit.
      - If less than 2 ohms, verify the fuse is not open and there is voltage at the fuse.
   - **If the test lamp does not illuminate and the circuit fuse is open**
   1. Ignition OFF.
   2. Test for infinite resistance between the B+ circuit and ground.
      - If less than infinite resistance, repair the short to ground on the circuit.
      - If infinite resistance,
   3. Disconnect the harness connector at the M40 Rear Compartment Lid Latch.
   4. Test for infinite resistance between the control circuit terminal 1 and ground.
      - If less than infinite resistance, repair the short to ground on the circuit.
      - If infinite resistance, replace the KR95B Rear Compartment Lid Unlatch Relay
   - **If the test lamp illuminates**
5. Connect a test lamp between the control circuit terminal 3 and the ground circuit terminal 1.
6. Verify the test lamp briefly turns ON when commanding the Trunk Lid Unlatch with a scan tool.
   - **If the test lamp is always OFF**
   1. Ignition OFF, remove the test lamp, disconnect the harness connector at the K9 Body Control Module.
   2. Test for infinite resistance between the control circuit and ground.
      - If less than infinite resistance, repair the short to ground on the circuit.
      - If infinite resistance

3. Test for less than 2 ohms in the control circuit end to end.
    - If 2 ohms or greater, repair the open/high resistance in the circuit.
    - If less than 2 ohms, replace the K9 Body Control Module.

- **If the test lamp is always ON**

1. Ignition OFF, remove the test lamp, disconnect the harness connector at the K9 Body Control Module, ignition ON.
2. Test for less than 1 V between the control circuit and ground.
    - If 1 V or greater, repair the short to voltage on the circuit.
    - If less than 1 V, replace the K9 Body Control Module.

- **If the test lamp turns ON and OFF**

7. Verify that a test lamp does not illuminate between the control circuit terminal 4 and ground.
    - **If the test lamp illuminates**

      Repair the short to voltage on the control circuit

    - **If the test lamp does not illuminate**
8. Ignition OFF and all vehicle systems OFF, disconnect the harness connector at the M40 Rear Compartment Lid Latch. It may take up to 2 minutes for all vehicle systems to power down.
9. Test for less than 10 ohms between the ground circuit terminal 2 and ground.
    - **If 10 ohms or greater**

    1. Ignition OFF.
    2. Test for less than 2 ohms in the ground circuit end to end.
        - If 2 ohms or greater, repair the open/high resistance in the circuit.
        - If less than 2 ohms, repair the open/high resistance in the ground connection.

    - **If less than 10 ohms**
10. Connect the harness connector at the M40 Rear Compartment Lid Latch
11. Ignition ON, connect a 10 A fused jumper wire between the B+ circuit terminal 4 and the control circuit terminal 5.
12. Verify the M40 Rear Compartment Lid Latch is activated.
    - **If the M40 Rear Compartment Lid Latch does not activate**

    1. Ignition OFF, remove the 10 A fused jumper wire, disconnect the harness connector at the M40 Rear Compartment Lid Latch.
    2. Test for less than 2 ohms in the control circuit end to end.
        - If 2 ohms or greater, repair the open/high resistance in the circuit.
        - If less than 2 ohms, replace the M40 Rear Compartment Lid Latch.

    - **If the M40 Rear Compartment Lid Latch activates**
13. Test or replace the KR95B Rear Compartment Lid Unlatch Relay.

Component Testing

Rear Compartment Lid Latch

1. Ignition OFF, disconnect the harness connector at the M40 Rear Compartment Lid Latch.
2. Install a 10 A fused jumper wire between the B+ terminal 1 and 12 V. Install a jumper wire between the ground terminal 2 and ground.
3. Verify the M40 Rear Compartment Lid Latch activates
   - **If the M40 Rear Compartment Lid Latch does not activate.**

     Replace the M40 Rear Compartment Lid Latch.

   - **If the M40 Rear Compartment Lid Latch does activate.**
4. All OK

Trunk Release Switch

1. Ignition OFF, disconnect the X920 inline harness connector at the S58A Rear Compartment Lid Unlatch Switch-Exterior.
2. Test for infinite resistance between the signal circuit terminal 4 and the ground circuit terminal 3 with the switch in the open position.
   - **If less than infinite resistance**

     Replace the S58A Rear Compartment Lid Unlatch Switch-Exterior.

   - **If infinite resistance**
3. Test for less than 3 ohms between the signal circuit terminal 4 and the ground circuit terminal 3 with the switch in the closed position.
   - **If 3 ohms or greater**

     Replace the S58A Rear Compartment Lid Unlatch Switch-Exterior.

   - **If less than 3 ohms**
4. All OK

Relay Test

1. Ignition OFF, disconnect the KR95B Rear Compartment Lid Unlatch Relay.
2. Test for 60-200 ohms between terminals 1 and 3.
   - **If less than 60 ohms or greater than 200 ohms**

     Replace the KR95B Rear Compartment Lid Unlatch Relay.

   - **If between 60-200 ohms**
3. Test for infinite resistance between the terminals listed below:
   - 4 and 3

- 4 and 5
- 4 and 1
- 5 and 1
- **If less than infinite resistance**

  Replace the KR95B Rear Compartment Lid Unlatch Relay.

- **If infinite resistance**

4. Install a 3 A fused jumper wire between relay terminal 3 and 12 V. Install a jumper wire between relay terminal 1 and ground.
5. Test for less than 2 ohms between terminals 4 and 5.
   - **If 2 ohms or greater**

     Replace the KR95B Rear Compartment Lid Unlatch Relay.

   - **If less than 2 ohms**
6. All OK

Repair Instructions

Perform the **Diagnostic Repair Verification** after completing the repair.

- **Relay Replacement (Within an Electrical Center)** , **Relay Replacement (Attached to Wire Harness)**
- **Rear License Plate Lamp Wiring Harness Replacement**
- **Rear Compartment Lid Latch Replacement**
- **Control Module References** for BCM replacement, programming and setup

TRUNK AJAR INDICATOR MALFUNCTION

Diagnostic Instructions

- Perform the **Diagnostic System Check - Vehicle** prior to using this diagnostic procedure.
- Review **Strategy Based Diagnosis** for an overview of the diagnostic approach.
- **Diagnostic Procedure Instructions** provides an overview of each diagnostic category.

Diagnostic Fault Information

Circuit	Short to Ground	Open/High Resistance	Short to Voltage	Signal Performance
Signal	1	2	2	-
Ground	-	3	-	-

1. Trunk Ajar Message Always Illuminated
2. Trunk Ajar Message Inoperative

3. Trunk Release Inoperative

Circuit/System Description

The body control module (BCM) provides a 12 V signal to the rear compartment lid ajar switch signal circuit. When the rear compartment lid latch releases the rear compartment lid, the rear compartment lid ajar switch, which is internal to the rear compartment lid latch, is supplied with ground which causes the trunk ajar switch signal circuit to be pulled low. The BCM interprets this and communicates via serial data to the driver information center which will display the Trunk Open message.

Reference Information

Schematic Reference

Door Lock/Indicator Schematics

Connector End View Reference

COMPONENT CONNECTOR END VIEWS - INDEX

Description and Operation

Door Ajar Indicator Description and Operation

Electrical Information Reference

- **Circuit Testing**
- **Connector Repairs**
- **Testing for Intermittent Conditions and Poor Connections**
- **Wiring Repairs**

Scan Tool Reference

Control Module References for scan tool information

Circuit/System Verification

1. Ignition ON.
2. Verify the scan tool Rear Closure Ajar Switch parameter changes between Inactive and Active when opening and closing the trunk.
    - **If the parameter does not change**

      Refer to Circuit/System Testing below.

    - **If the parameter changes**
3. All OK.

Circuit/System Testing

1. Ignition OFF and all vehicle systems OFF, disconnect the harness connector at the M40 rear compartment lid latch. It may take up to 2 minutes for all vehicle systems to power down.
2. Test for less than 10 ohms between the ground circuit terminal 2 and ground.
    - **If 10 ohms or greater**
    1. Ignition OFF.
    2. Test for less than 2 ohms in the ground circuit end to end.
        - If 2 ohms or greater, repair the open/high resistance in the circuit.
        - If less than 2 ohms, repair the open/high resistance in the ground connection.
    - **If less than 10 ohms**
3. Ignition ON.
4. Verify the scan tool Rear Closure Ajar Switch parameter is Inactive.
    - **If not Inactive**
    1. Ignition OFF, disconnect the harness connector at the K9 body control module.
    2. Test for infinite resistance between the signal circuit terminal 4 and ground.
        - If less than infinite resistance, repair the short to ground on the circuit.
        - If infinite resistance, replace the K9 body control module.
    - **If Inactive**
5. Install a 3 A fused jumper wire between the signal circuit terminal 4 and the ground circuit terminal 2.
6. Verify the scan tool Rear Closure Ajar Switch parameter is Active.
    - **If not Active**
    1. Ignition OFF, disconnect the harness connector at the K9 body control module, ignition ON.
    2. Test for less than 1 V between the signal circuit and ground.
        - If 1 V or greater, repair the short to voltage on the circuit.
        - If less than 1 V
    3. Test for less than 2 ohms in the signal circuit end to end.
        - If 2 ohms or greater, repair the open/high resistance in the circuit.
        - If less than 2 ohms, replace the K9 body control module.
    - **If Active**
7. Test or replace the M40 rear compartment lid latch.

Component Testing

1. Ignition OFF, disconnect the harness connector at the M40 rear compartment lid latch.
2. Test for infinite resistance between the signal terminal 4 and the ground terminal 2 with the switch in the open position.
    - **If less than infinite resistance**

      Replace the M40 rear compartment lid latch.

- **If infinite resistance**

3. Test for less than 3 ohms between the signal terminal 4 and the ground terminal 2 with the switch in the closed position.
   - **If 3 ohms or greater**

     Replace the M40 rear compartment lid latch.

   - **If less than 3 ohms**
4. All OK

Repair Instructions

Perform the **Diagnostic Repair Verification** after completing the repair.

- **Rear Compartment Lid Latch Replacement**
- **Control Module References** for BCM replacement, programming and setup

REPAIR INSTRUCTIONS

FRONT SIDE DOOR INSIDE HANDLE CABLE REPLACEMENT

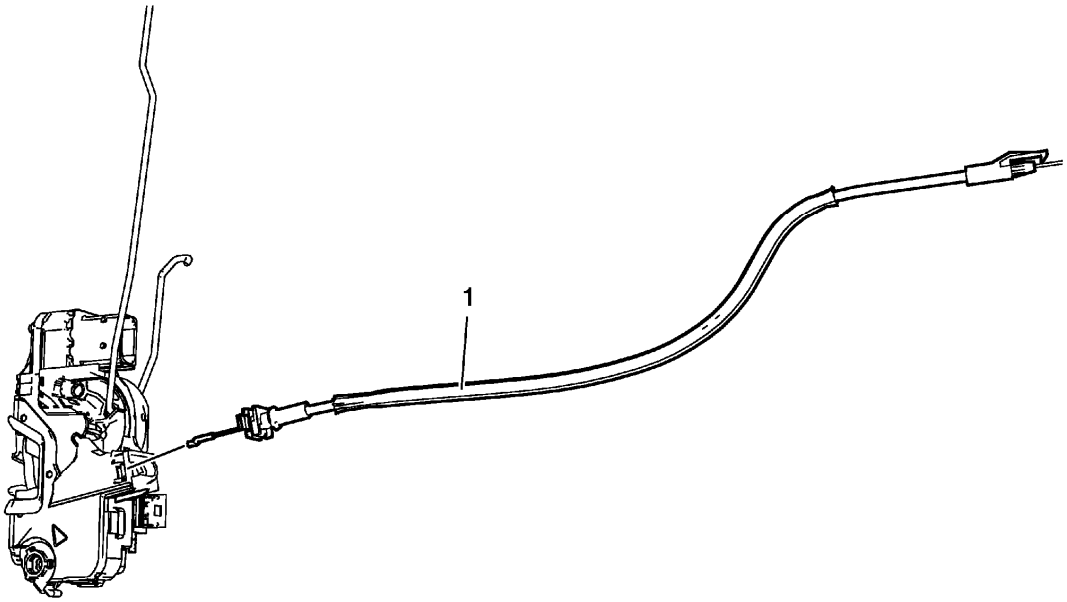

Fig. 6: Rear Side Door Inside Handle Cable
Courtesy of GENERAL MOTORS COMPANY

Front Side Door Inside Handle Cable Replacement

Callout	Component Name
Preliminary Procedure Remove the front side door latch. Refer to **Front Side Door Latch Replacement**.	
1	Front Side Door Inside Handle Cable

REAR SIDE DOOR INSIDE HANDLE CABLE REPLACEMENT

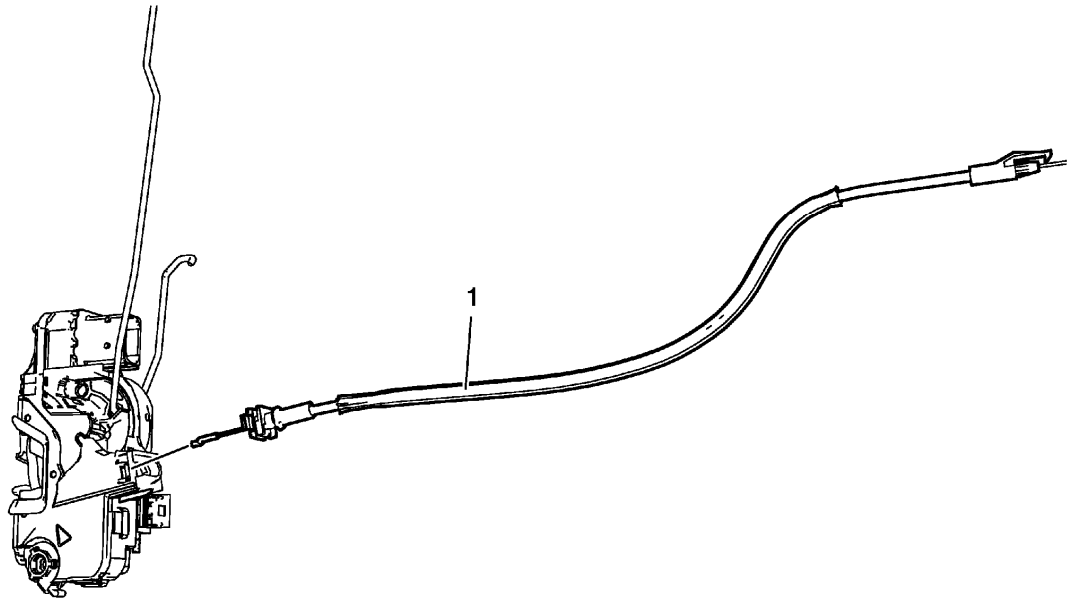

Fig. 7: Rear Side Door Inside Handle Cable
Courtesy of GENERAL MOTORS COMPANY

Rear Side Door Inside Handle Cable Replacement

Callout	Component Name
Preliminary Procedure Remove the rear side door latch. Refer to **Rear Side Door Latch Replacement**.	
1	Rear Side Door Inside Handle Cable

FRONT SIDE DOOR LOCK CYLINDER REPLACEMENT

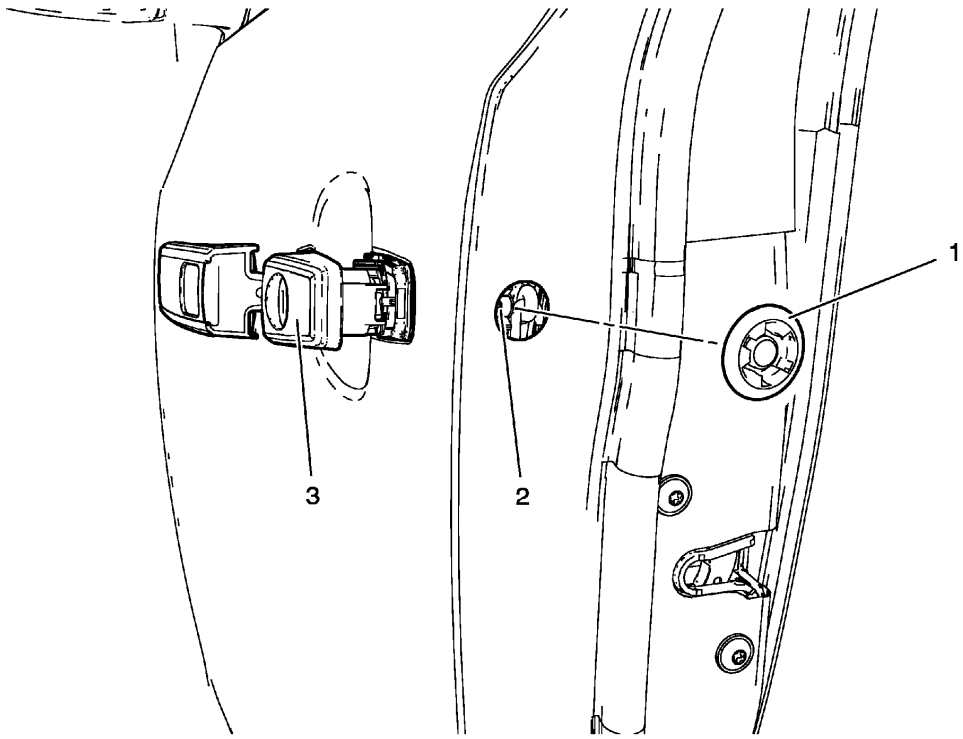

Fig. 8: Front Side Door Lock Cylinder, Bolt & Access Plug
Courtesy of GENERAL MOTORS COMPANY

Front Side Door Lock Cylinder Replacement

Callout	Component Name
1	Bolt Access Plug **Procedure** Use a plastic flat-bladed tool to remove.
2	Front Side Door Outside Handle Bolt **CAUTION:** **Refer to Fastener Caution .** **Tighten** 9 N.m (80 lb in)
3	Front Side Door Lock Cylinder **Procedure** 1. Pull the lock cylinder from the housing to remove. 2. Inspect the lock, lock cylinder and handle adjustments. Refer to **Front Side Door Outside Handle Rod Adjustment**.

	TIP: Pull the front side door outside handle to unlock the door lock cylinder.

FRONT SIDE DOOR INSIDE HANDLE REPLACEMENT

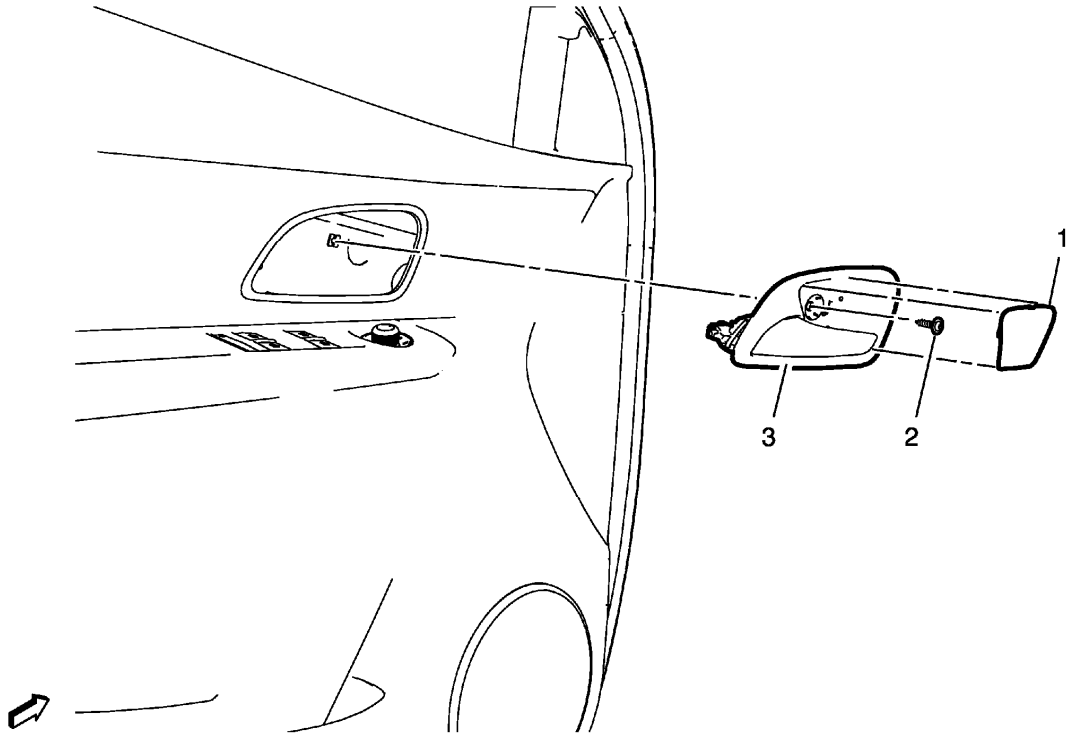

Fig. 9: Front Side Door Inside Handle
Courtesy of GENERAL MOTORS COMPANY

Front Side Door Inside Handle Replacement

Callout	Component Name
1	Front Side Door Inside Handle Bracket Cap **Procedure** Use a flat-bladed tool to remove.
2	Front Side Door Inside Handle Bracket Bolt **CAUTION:** **Refer to Fastener Caution .**
3	Front Side Door Inside Handle **Procedure** 1. Use a flat bladed plastic tool to remove. 2. Unlock the 4 retaining tabs. 3. Unlock the front side door inside handle cable.

FRONT SIDE DOOR OUTSIDE HANDLE REPLACEMENT

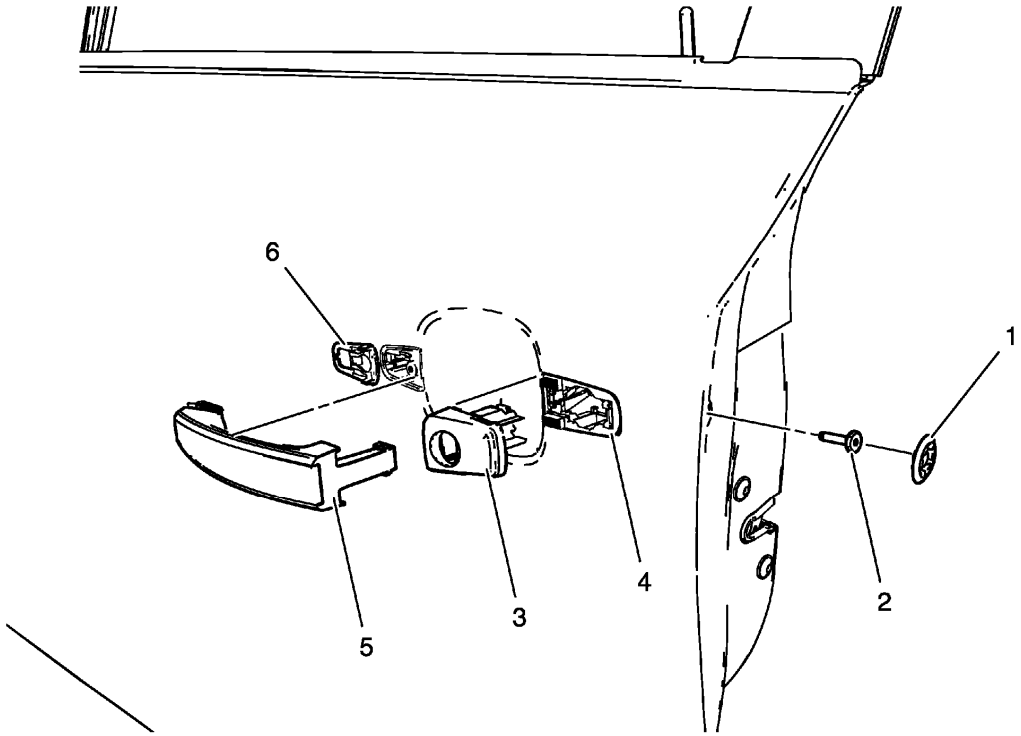

Fig. 10: Front Side Door Outside Handle Components
Courtesy of GENERAL MOTORS COMPANY

Front Side Door Outside Handle Replacement

Callout	Component Name
1	Bolt Access Plug **Procedure** Use a plastic flat-bladed tool to remove.
2	Front Side Door Outside Handle Bolt **CAUTION:** **Refer to Fastener Caution .** **Procedure** Loosen the front side door outside handle bolt until the front side door outside handle cap could be removed. **Tighten** 9 (80 lb in)
3	Front Door Outside Handle Cap
4	Front Door Outside Handle Cap Gasket **Procedure** Use a plastic flat-bladed tool to remove.

5	Front Door Outside Handle **Procedure** 1. Pull the outside handle rearward to release it from the inside handle housing. 2. Disconnect the Passive Entry Passive Start connector, if equipped.
6	Front Door Outside Handle Gasket **Procedure** Inspect the lock, lock cylinder and handle adjustments. Refer to **Front Side Door Outside Handle Rod Adjustment**.

FRONT AND REAR SIDE DOOR OUTSIDE HANDLE ROD CLIP REPLACEMENT

Removal Procedure

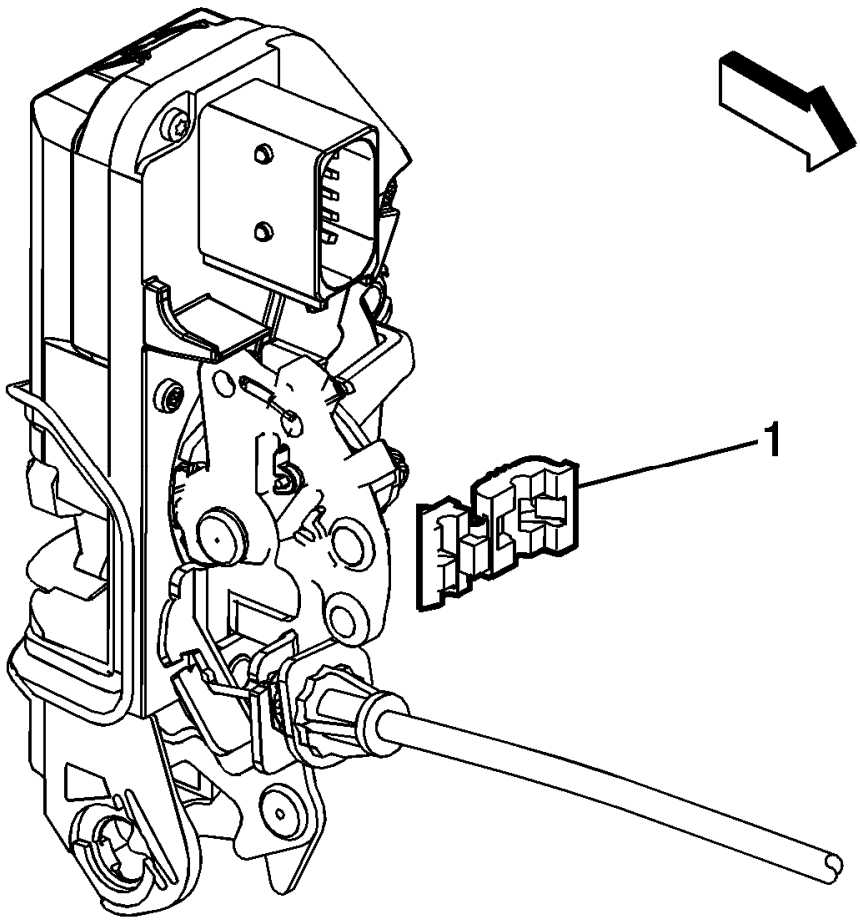

Fig. 11: Outside Door Handle Rod Clip

Courtesy of GENERAL MOTORS COMPANY

NOTE: It maybe necessary to remove the front or rear side door latch from some of the vehicles to access the rod clip, refer to the appropriate procedure in this sub-section.

1. Using the appropriate tool, open the outside door handle rod clip (1) on the latch.

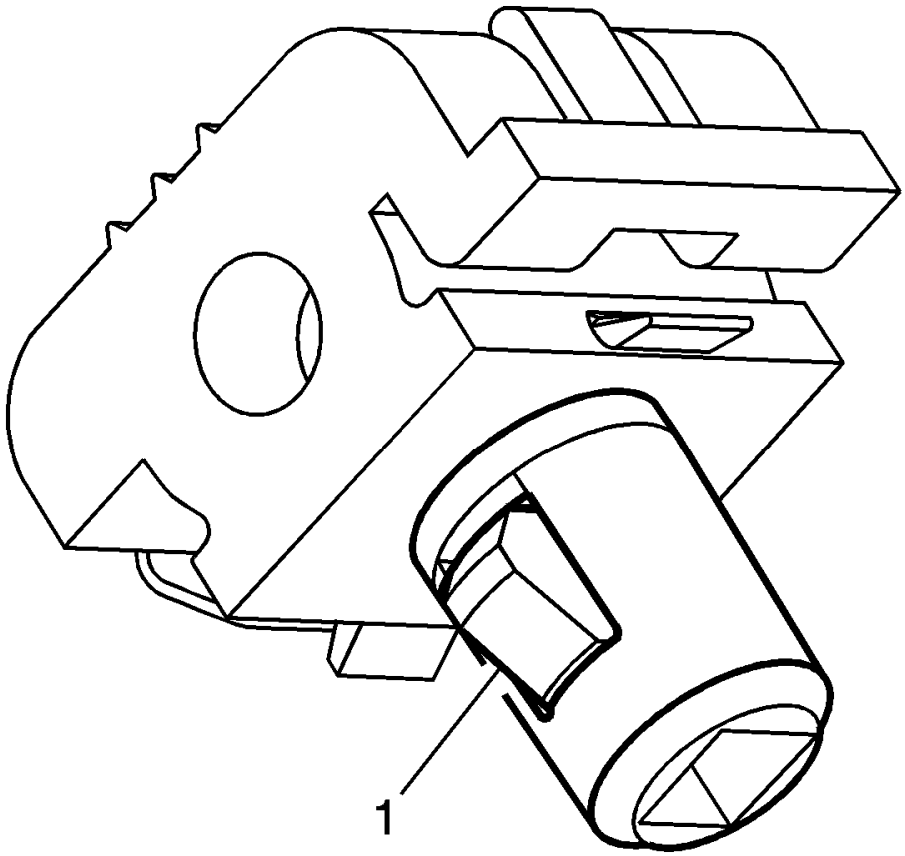

Fig. 12: Retaining Tabs
Courtesy of GENERAL MOTORS COMPANY

NOTE: The clip for the outside door handle rod is designed for one use only, a new clip Must be installed to the door latch to retain the outside handle rod.

NOTE: Use the appropriate tool to push in on the retaining tabs (1) located on each side of the old clip to remove.

2. Remove the old outside door handle rod clip (1) from the door latch.

Installation Procedure

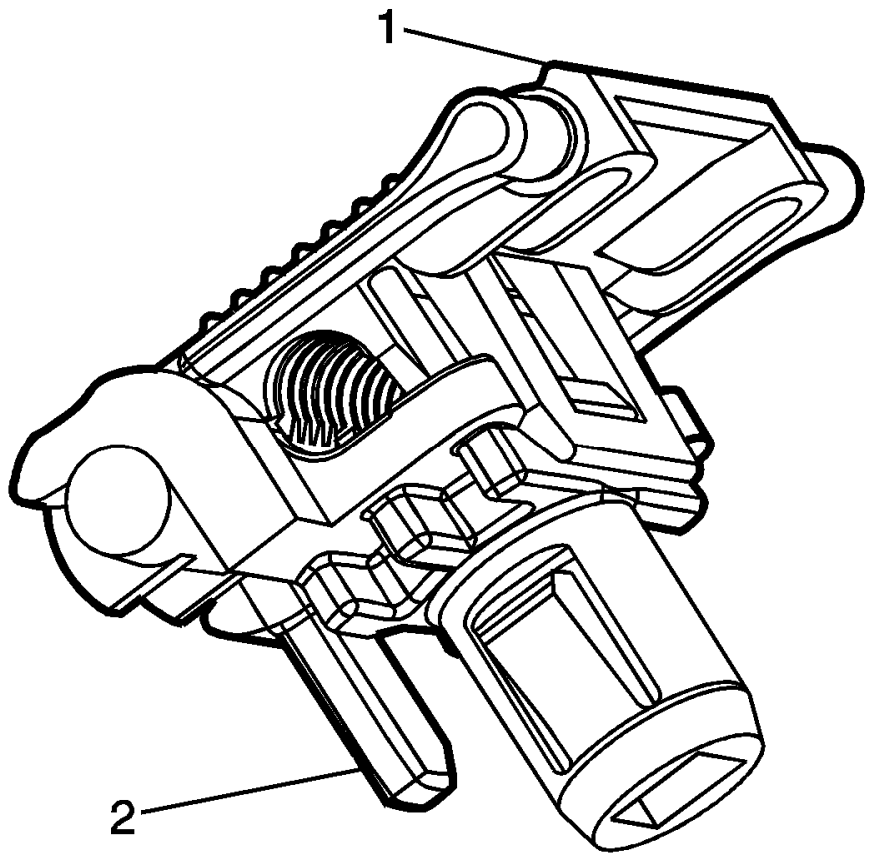

Fig. 13: Outside Door Handle Rod Clip
Courtesy of GENERAL MOTORS COMPANY

NOTE: **When replacing the old designed outside door handle rod clip with the new designed clip (1) the anti rotation tab (2) will need to be removed.**

NOTE: **When installing the outside door handle rod to latch in order to prevent outside handle lever pre-load, the outside handle shall be fully secured to the door prior to securing integral latch clip to outside handle release rod. Push upward at the bottom the rod clip.**

1. Install the new outside door handle rod clip (1) to the latch.
2. Verify the outside door handle will release the door latch.

FRONT SIDE DOOR OUTSIDE HANDLE BRACKET REPLACEMENT

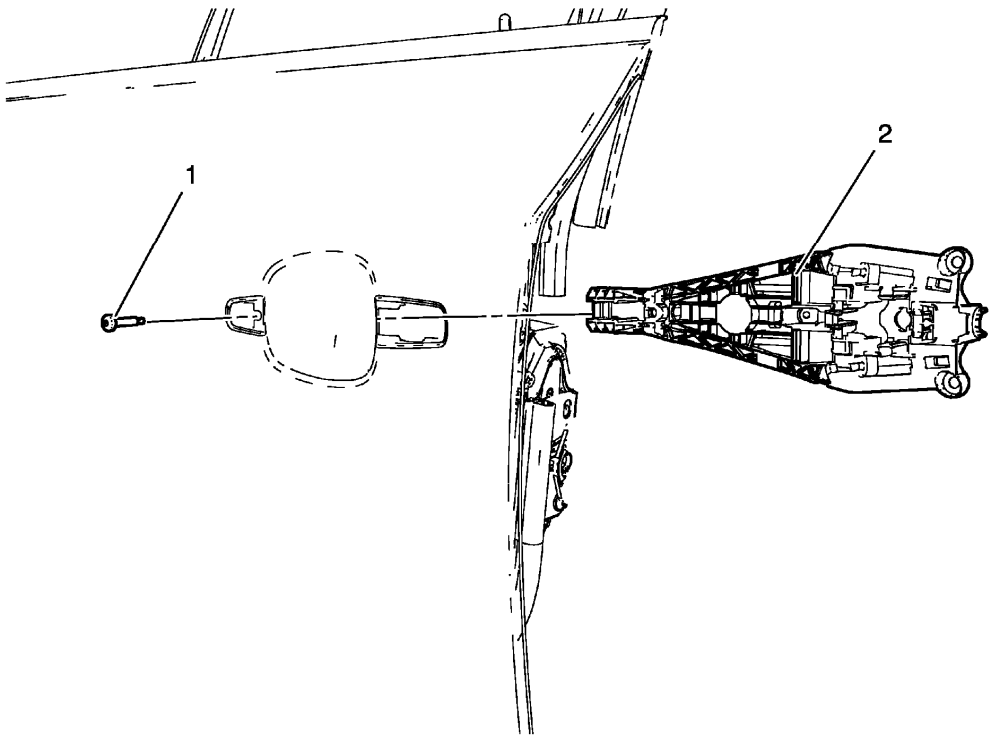

Fig. 14: Front Side Door Outside Handle Bracket And Bolt
Courtesy of GENERAL MOTORS COMPANY

Front Side Door Outside Handle Bracket Replacement

Callout	Component Name
Preliminary Procedures 1. Remove the front side door trim. Refer to **Front Side Door Trim Replacement** . 2. Remove the front side door water deflector. Refer to **Front Side Door Water Deflector Replacement** . 3. Remove the front side door outside handle. Refer to **Front Side Door Outside Handle Replacement**.	
1	Front Side Door Outside Handle Bracket Bolt **CAUTION:** **Refer to Fastener Caution .**
2	Front Side Door Outside Handle Bracket **Procedure** 1. Disconnect the front side door latch (lock) and handle rods to remove the housing.

	2. Unclip the Passive Entry Passive Start wiring harness. 3. Inspect the latch, lock cylinder and handle adjustments. Refer to **Front Side Door Outside Handle Rod Adjustment**.

REAR SIDE DOOR OUTSIDE HANDLE BRACKET REPLACEMENT

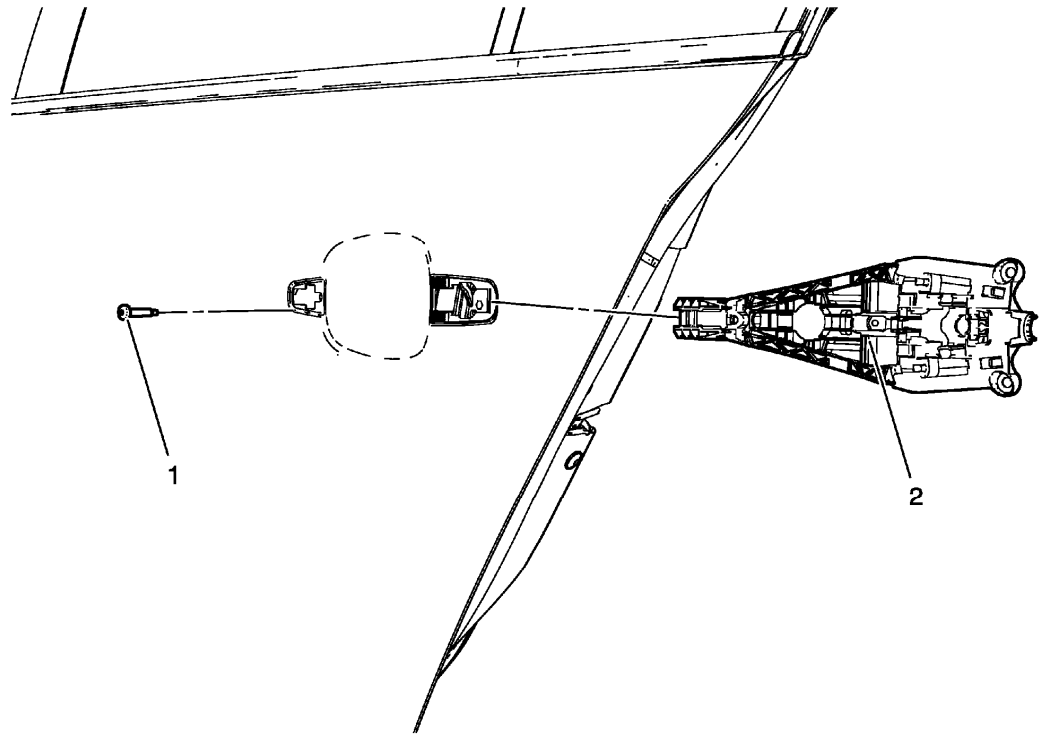

Fig. 15: Rear Side Door Outside Handle Bracket And Bolt
Courtesy of GENERAL MOTORS COMPANY

Rear Side Door Outside Handle Bracket Replacement

Callout	Component Name
Preliminary Procedures 1. Remove the rear side door trim. Refer to **Rear Side Door Trim Replacement** . 2. Remove the rear side door water deflector. Refer to **Rear Side Door Water Deflector Replacement** . 3. Remove the rear side door outside handle. Refer to **Rear Side Door Outside Handle Replacement**.	
1	Rear Side Door Handle Bracket Bolt **CAUTION:** **Refer to Fastener Caution .**
	Rear Side Door Outside Handle Bracket

2	**Procedure** 1. Transfer the handle and lock rods to the new outside door handle housing. 2. Unclip the passive entry passive start wiring harness. 3. Inspect the lock, lock cylinder and handle adjustments. Refer to **Rear Side Door Outside Handle Rod Adjustment**.

REAR COMPARTMENT LID INSIDE HANDLE REPLACEMENT

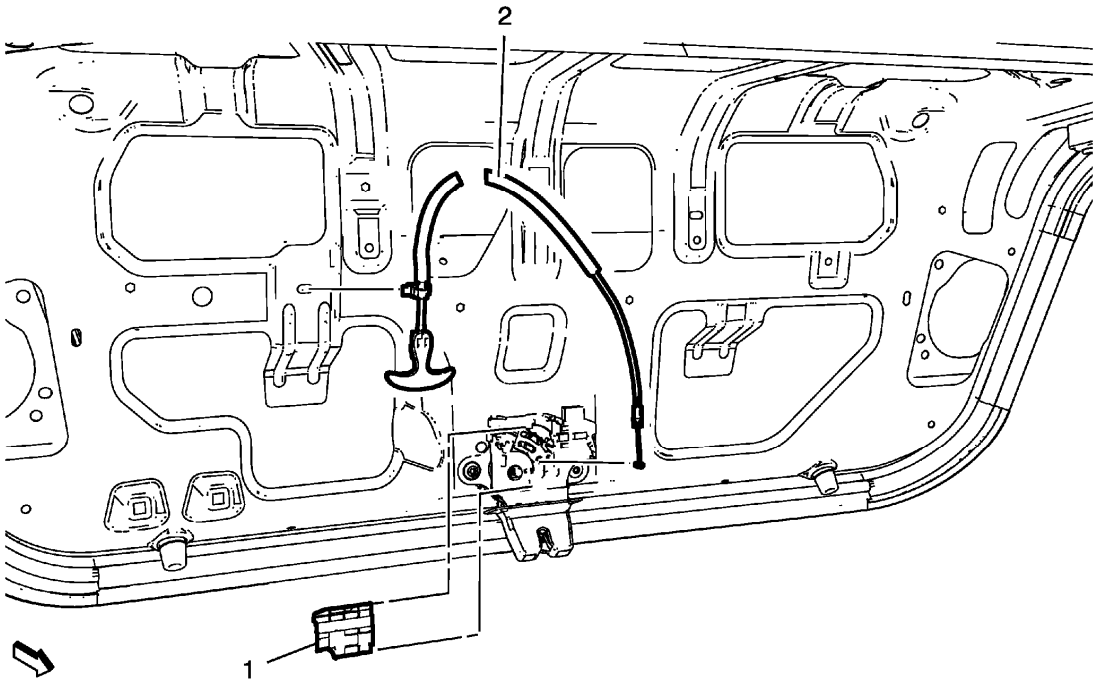

Fig. 16: Rear Compartment Lid Inside Handle And Cover
Courtesy of GENERAL MOTORS COMPANY

Rear Compartment Lid Inside Handle Replacement

Callout	Component Name
Preliminary Procedure Remove the rear compartment lid inner panel trim. Refer to **Rear Compartment Lid Inner Panel Trim Replacement**	
1	Rear Compartment Lid Latch Cover
2	Rear Compartment Lid Inside Handle

REAR SIDE DOOR INSIDE HANDLE REPLACEMENT

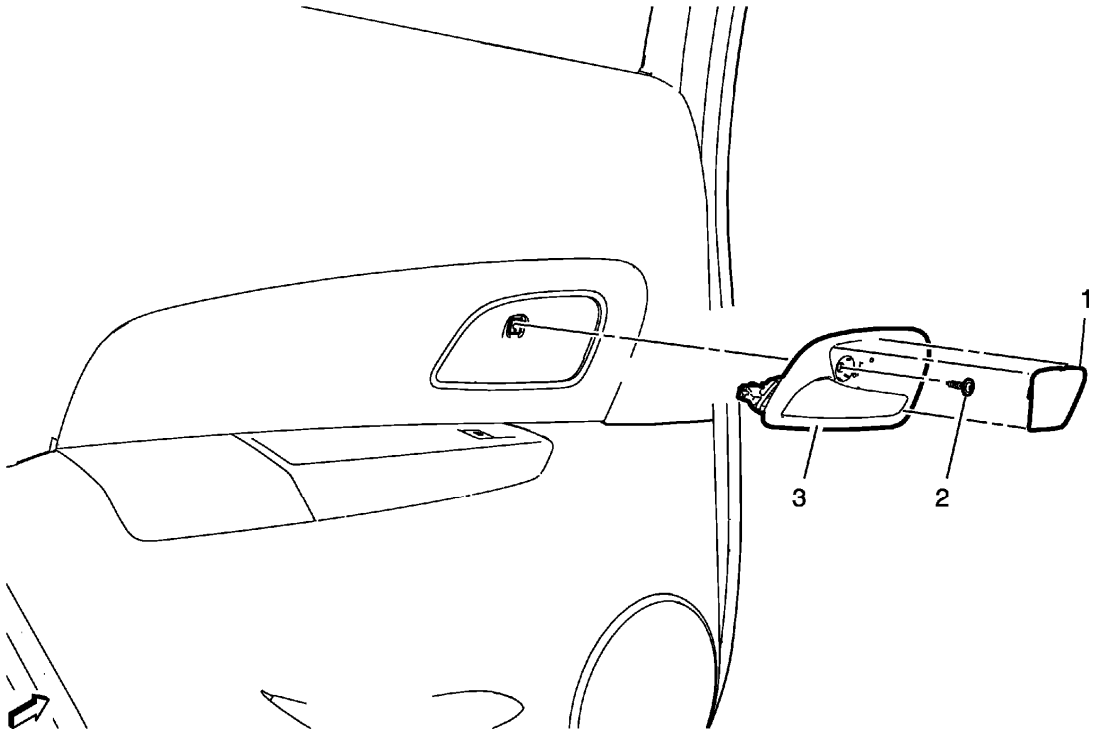

Fig. 17: Rear Side Door Inside Handle
Courtesy of GENERAL MOTORS COMPANY

Rear Side Door Inside Handle Replacement

Callout	Component Name
1	Rear Side Door Inside Handle Bracket Cap **Procedure** Use flat-bladed tool to remove.
2	Rear Side Door Inside Handle Bracket Bolt **CAUTION:** **Refer to Fastener Caution .**
3	Rear Side Door Inside Handle **Procedure** 1. Use a flat bladed tool to remove. 2. Unlock the 4 retaining tabs. 3. Unlock the rear side door inside handle cable.

REAR SIDE DOOR OUTSIDE HANDLE REPLACEMENT

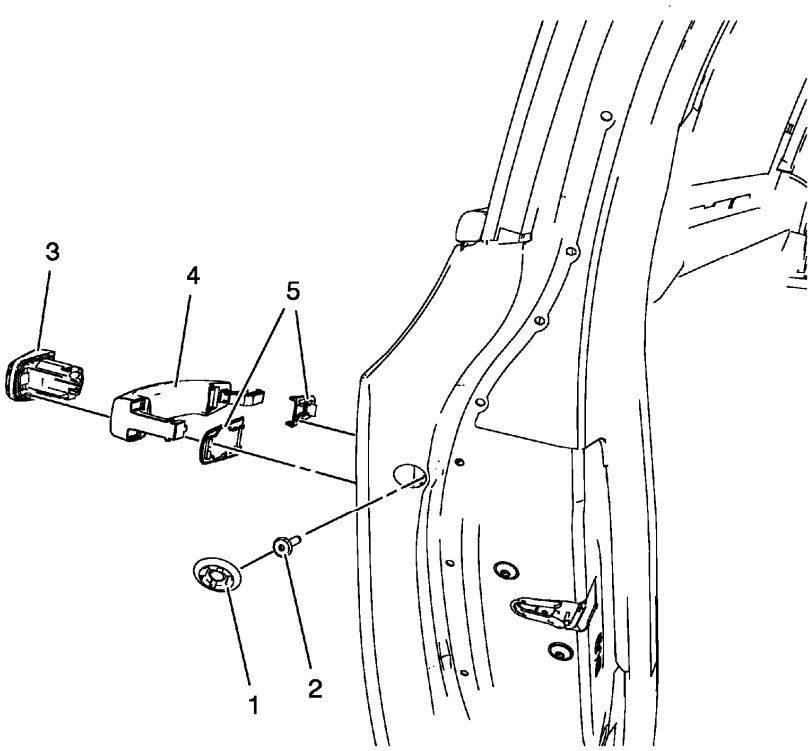

Fig. 18: Rear Side Door Outside Handle Components
Courtesy of GENERAL MOTORS COMPANY

Rear Side Door Outside Handle Replacement

Callout	Component Name
1	Bolt Access Plug **Procedure** Use a plastic flat-bladed tool to remove.
2	Rear Side Door Outside Handle Cap Bolt **CAUTION:** **Refer to Fastener Caution .** **Tighten** 9 (80 lb in) **Procedure** Pull the outside handle rearward to release it from the handle housing.
3	Rear Door Outside Handle Cap
4	Rear Door Outside Handle **Procedure** Disconnect the passive entry passive start wiring harness.
	Rear Door Outside Handle Gasket **Procedure**

5	1. Use a plastic flat-bladed tool to remove. 2. Inspect the lock and handle adjustments. Refer to **Rear Side Door Outside Handle Rod Adjustment**.

FRONT SIDE DOOR LATCH REPLACEMENT

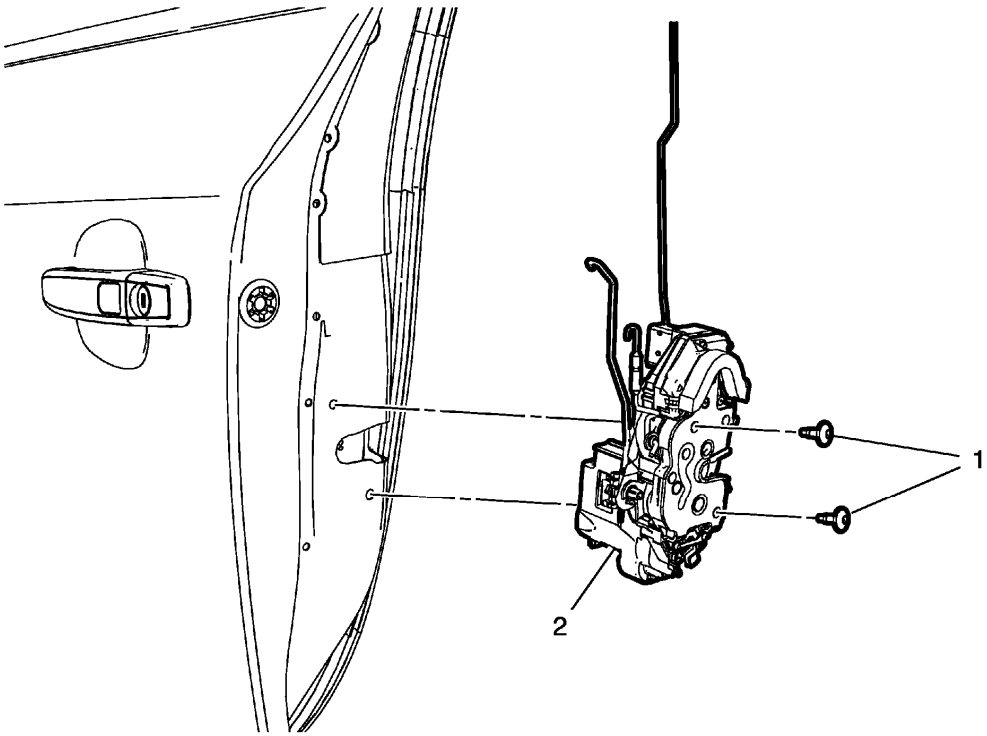

Fig. 19: Front Side Door Latch
Courtesy of GENERAL MOTORS COMPANY

Front Side Door Latch Replacement

Callout	Component Name
Preliminary Procedures 1. Remove the front side door trim. Refer to **Front Side Door Trim Replacement** . 2. Remove the front side door water deflector. Refer to **Front Side Door Water Deflector Replacement** . 3. Remove the front side door lock cover. Refer to **Front Side Door Lock Cover Replacement**.	
	Front Side Door Latch Screw (Qty: 2) **CAUTION:** **Refer to Fastener Caution .** **Procedure**

1	1. Remove and DISCARD the screw. 2. Cut the thread. **NOTE:** **Service may offer bolts that are not microencapsulated. If this is the case apply thread lock agent to the bolt.** **Tighten** 10 N.m (89 lb in)
2	Front Side Door Latch **Procedure** 1. Release the door lock cable retainers from the door. 2. Disconnect the door lock electrical connector. 3. Remove the door lock with the handle housing. 4. Remove the handle and lock rods from the lock. 5. Inspect the lock, lock cylinder and handle adjustments. Refer to **Front Side Door Outside Handle Rod Adjustment**

REAR COMPARTMENT LID LATCH REPLACEMENT

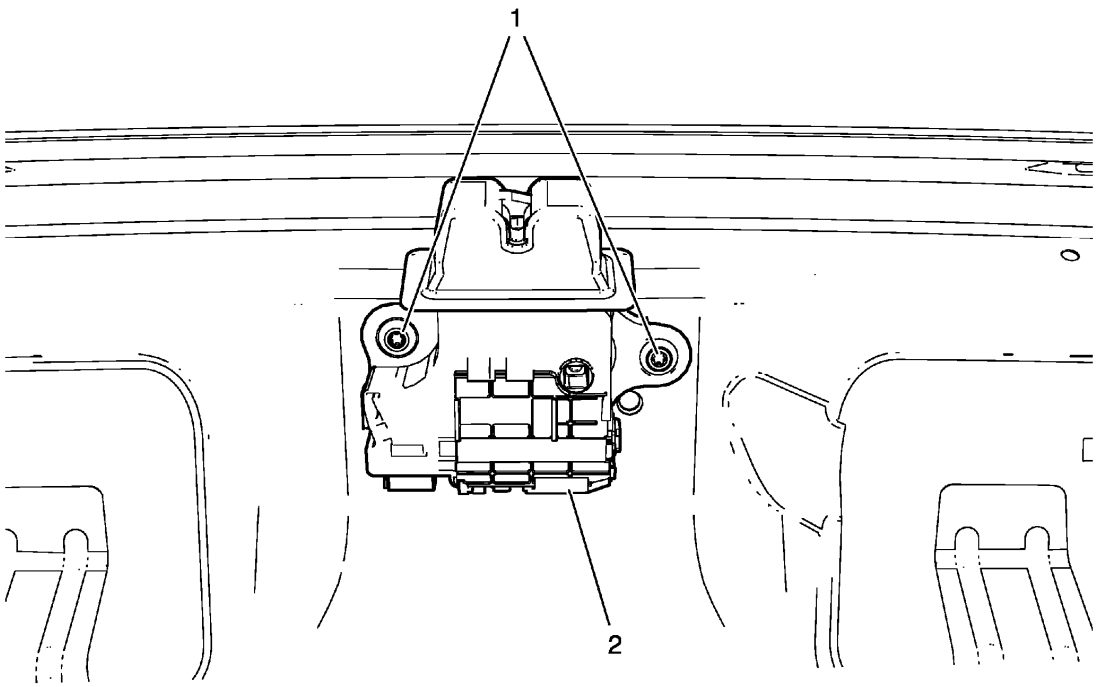

Fig. 20: Rear Compartment Lid Latch And Bolt

Courtesy of GENERAL MOTORS COMPANY

Rear Compartment Lid Latch Replacement

Callout	Component Name
Preliminary Procedure Remove the rear compartment lid inner panel trim. Refer to **Rear Compartment Lid Inner Panel Trim Replacement** .	
1	Rear Compartment Lid Latch Bolt (Qty: 2) **CAUTION:** **Refer to Fastener Caution .** **Tighten** 9 N.m (80 lb in)
2	Rear Compartment Lid Latch

REAR SIDE DOOR LATCH REPLACEMENT

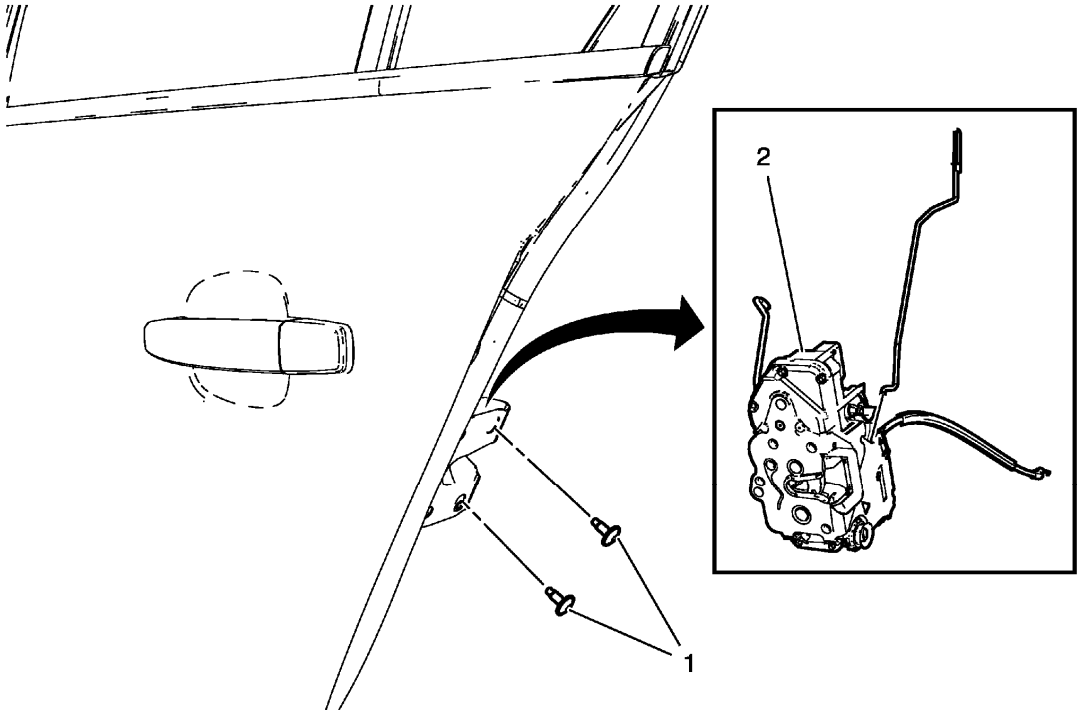

Fig. 21: Rear Side Door Latch And Bolts
Courtesy of GENERAL MOTORS COMPANY

Rear Side Door Latch Replacement

Callout	Component Name

Preliminary Procedures

1. Remove the rear side door trim panel. Refer to **Rear Side Door Trim Replacement** .
2. Remove the rear side door water deflector. Refer to **Rear Side Door Water Deflector Replacement** .
3. Remove the rear side door outside handle bracket. Refer to **Rear Side Door Outside Handle Bracket Replacement**.

1	Rear Side Door Latch Bolt (Qty: 2) **CAUTION:** **Refer to Fastener Caution .** **Procedure** 1. Remove and DISCARD the screw. 2. Cut the thread. **NOTE:** **Service may offer bolts that are not microencapsulated. If this is the case apply thread lock agent to the bolt.** **Tighten** 10 N.m (89 lb in)
2	Rear Side Door Latch **Procedure** 1. Release the inside handle cable retainers before removing the door latch. 2. Disconnect the door latch electrical connector. 3. Remove the door latch with the handle bracket. 4. Transfer the handle and lock rods to the new door latch. 5. Inspect the latch, lock cylinder and handle adjustments. Refer to **Rear Side Door Outside Handle Rod Adjustment**.

FRONT SIDE DOOR LOCK COVER REPLACEMENT

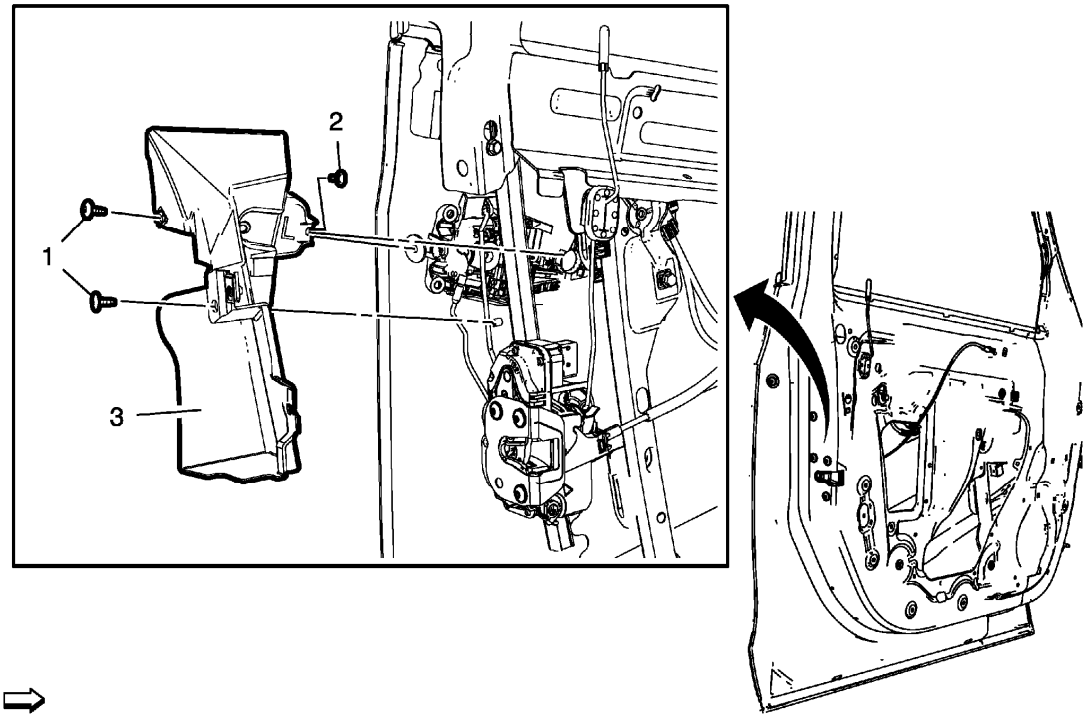

Fig. 22: Front Side Door Lock Cover
Courtesy of GENERAL MOTORS COMPANY

Front Side Door Lock Cover Replacement

Callout	Component Name
Preliminary Procedure Remove the front side door water deflector. Refer to **Front Side Door Water Deflector Replacement** .	
1	Front Side Door Lock Cover Bolt (Qty: 2) **CAUTION:** **Refer to Fastener Caution .** **Tighten** 6 (53 lb in)
2	Front Side Door Lock Cover Bolt **Tighten** 2, 5 (22 lb in)
3	Front Side Door Lock Cover

FRONT SIDE DOOR LOCKING ROD REPLACEMENT

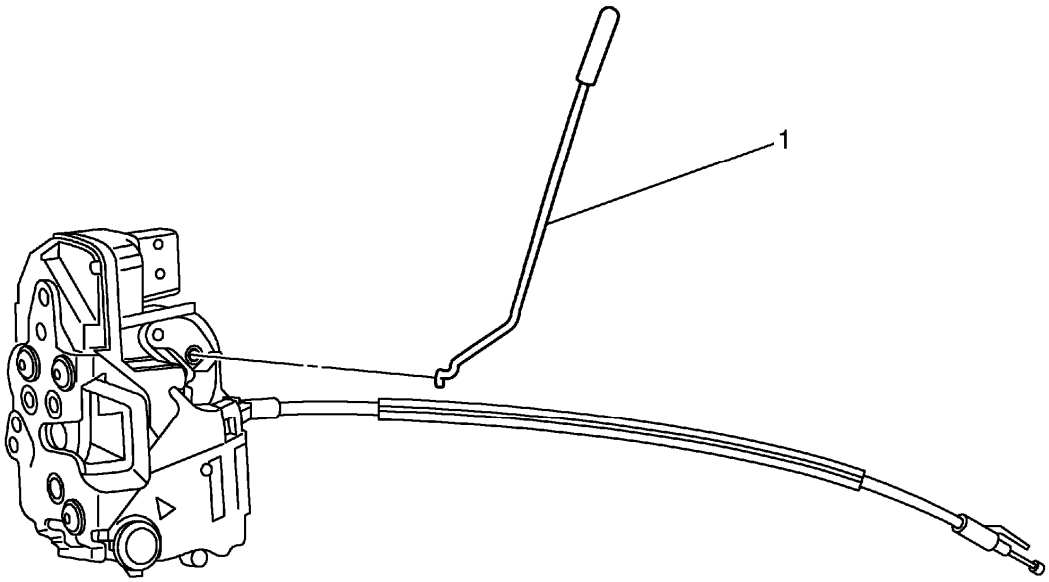

Fig. 23: Rear Side Door Locking Rod
Courtesy of GENERAL MOTORS COMPANY

Front Side Door Locking Rod Replacement

Callout	Component Name
Preliminary Procedure Remove the front side door latch. Refer to **Front Side Door Latch Replacement**.	
1	Front Side Door Locking Rod **Procedure** Inspect the lock, lock cylinder and handle adjustments. Refer to **Front Side Door Outside Handle Rod Adjustment**.

FRONT SIDE DOOR LOCK CYLINDER ROD REPLACEMENT

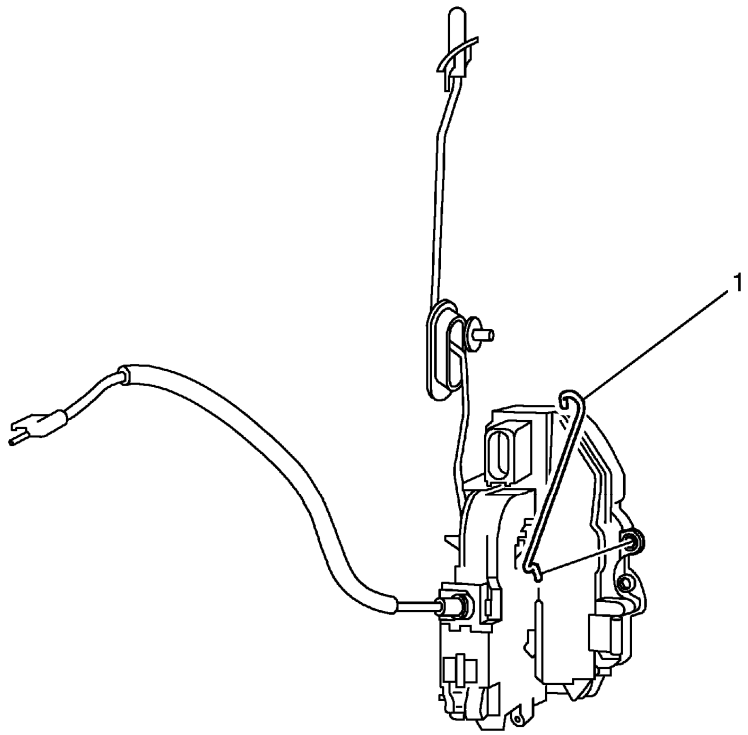

Fig. 24: Rear Side Door Outside Handle Rod
Courtesy of GENERAL MOTORS COMPANY

Front Side Door Lock Cylinder Rod Replacement

Callout	Component Name
Preliminary Procedure Remove the front side door latch. Refer to **Front Side Door Latch Replacement**.	
1	Front Side Door Lock Cylinder Rod

FRONT SIDE DOOR OUTSIDE HANDLE ROD ADJUSTMENT

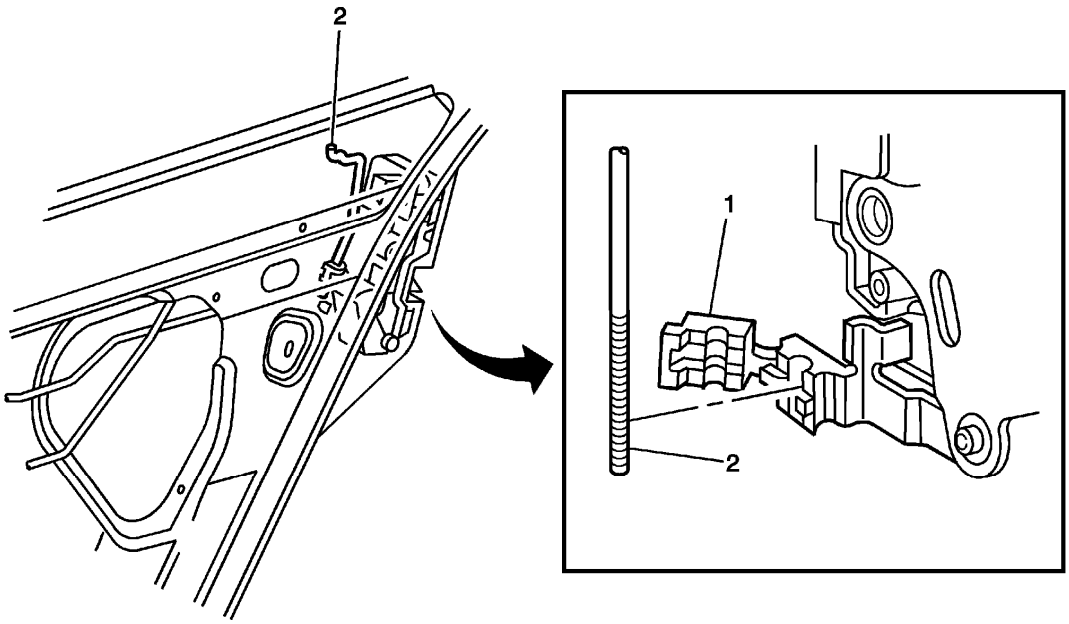

Fig. 25: Front Side Door Outside Handle Rod And Clip
Courtesy of GENERAL MOTORS COMPANY

Front Side Door Outside Handle Rod Adjustment

Callout	Component Name
Preliminary Procedures Remove the water deflector. Refer to **Front Side Door Water Deflector Replacement** .	
1	Outside Door Handle Rod Clip **Procedure** Using a flat-bladed tool, open the clip on the threaded rod connecting the lock to the outside handle.
2	Outside Door Handle Rod **Procedure** 1. Position the outside door handle rod in the outside door handle rod clip to eliminate any free play in the outside door handle. 2. Adjust the travel of the handle by moving the threaded rod in the clip. 3. Close the clip cover on the threaded outside door handle rod. 4. Inspect the door lock system for proper operation.

FRONT SIDE DOOR OUTSIDE HANDLE ROD REPLACEMENT

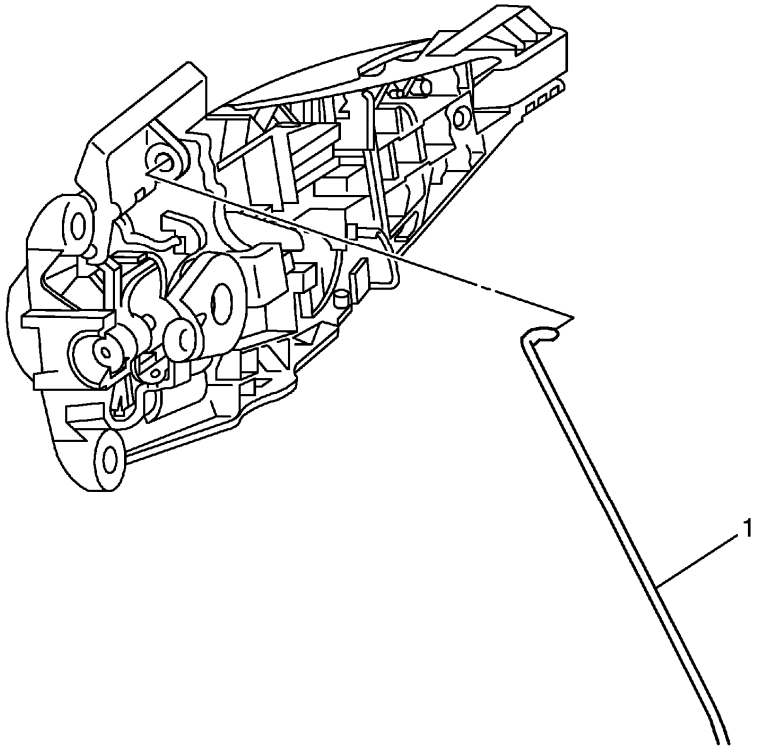

Fig. 26: Front Side Door Outside Handle Rod
Courtesy of GENERAL MOTORS COMPANY

Front Side Door Outside Handle Rod Replacement

Callout	Component Name
Preliminary Procedures Remove the front side door outside handle bracket. Refer to **Front Side Door Outside Handle Bracket Replacement**.	
1	Front Side Door Outside Handle Rod **Procedure** 1. Open the mechanism by releasing the clip at the shift linkage lever. 2. Adjust front side door outside handle rod. Refer to **Front Side Door Outside Handle Rod Adjustment**.

REAR SIDE DOOR LOCKING ROD REPLACEMENT

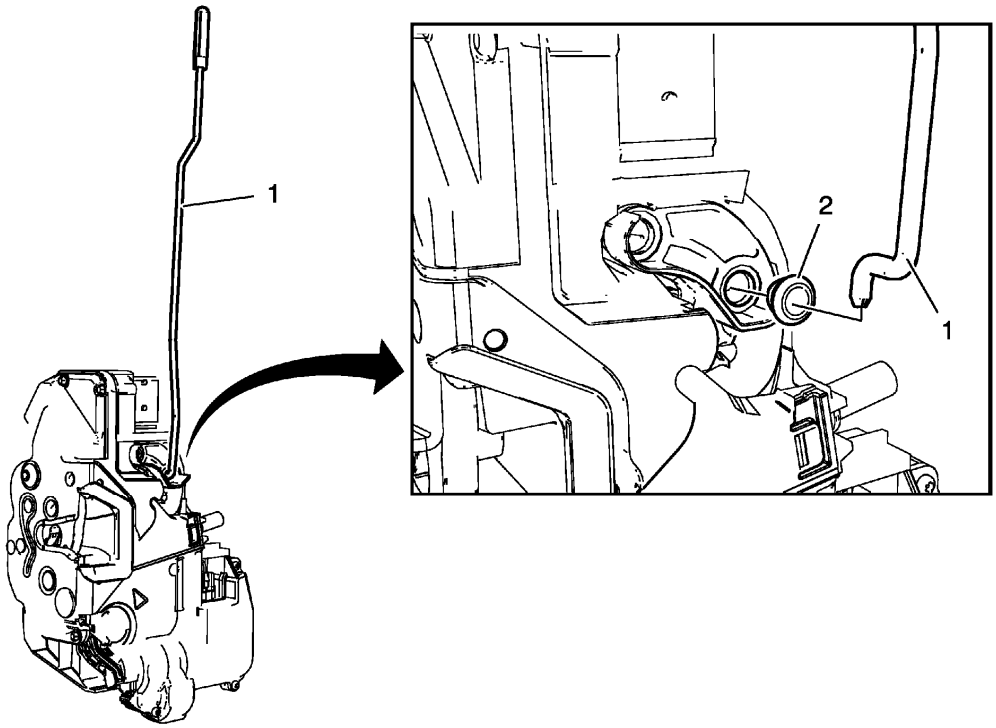

Fig. 27: Rear Side Door Locking Rod And Clip
Courtesy of GENERAL MOTORS COMPANY

Rear Side Door Locking Rod Replacement

Callout	Component Name
Preliminary Procedures 1. Remove the rear side door trim. Refer to **Rear Side Door Trim Replacement** . 2. Remove the water deflector. Refer to **Rear Side Door Water Deflector Replacement** . 3. Remove the rear side door latch. Refer to **Rear Side Door Latch Replacement**.	
1	Rear Side Door Locking Rod
2	Rear Side Door Locking Rod Clip

REAR SIDE DOOR OUTSIDE HANDLE ROD ADJUSTMENT

Removal Procedure

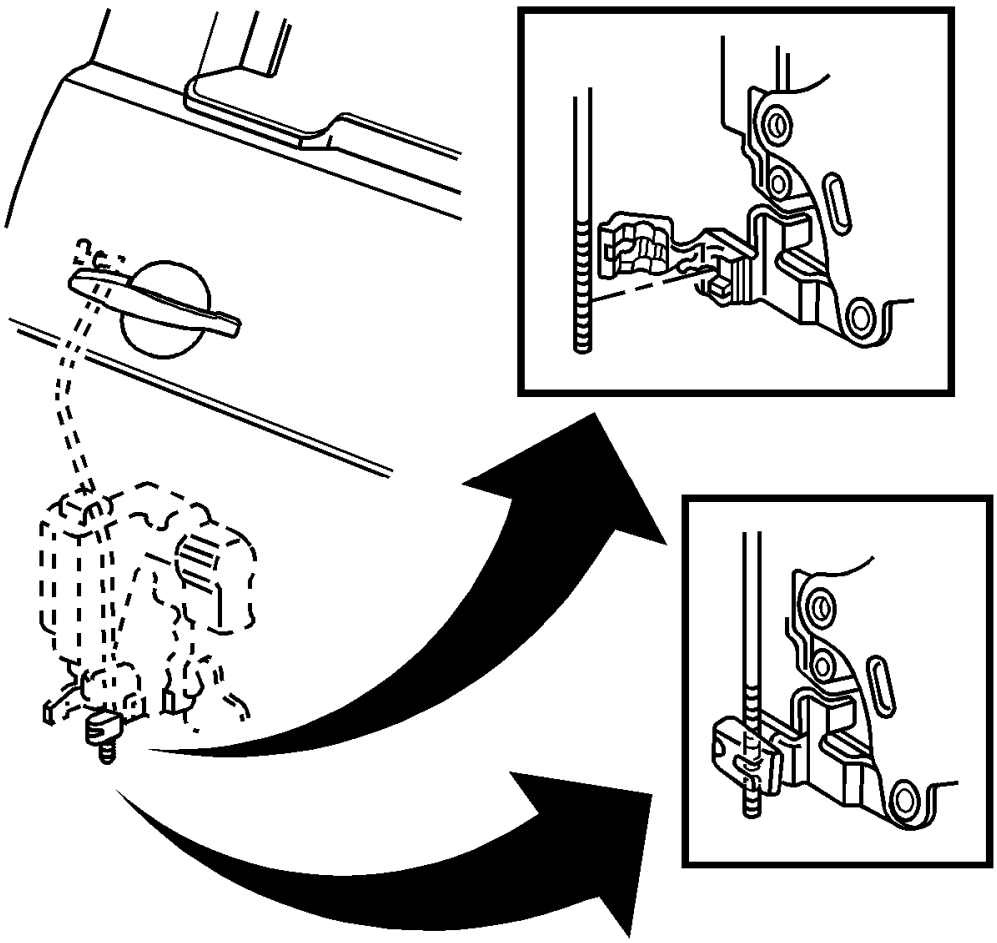

Fig. 28: View Of Handle Rod To Lock Clip
Courtesy of GENERAL MOTORS COMPANY

1. Remove the rear door water deflector as needed. Refer to **Rear Side Door Water Deflector Replacement** .
2. Use a flat-bladed tool to open the clip on the threaded rod connecting the lock to the outside handle.
3. Adjust the travel of the handle by removing the threaded rod from the clip.

Installation Procedure

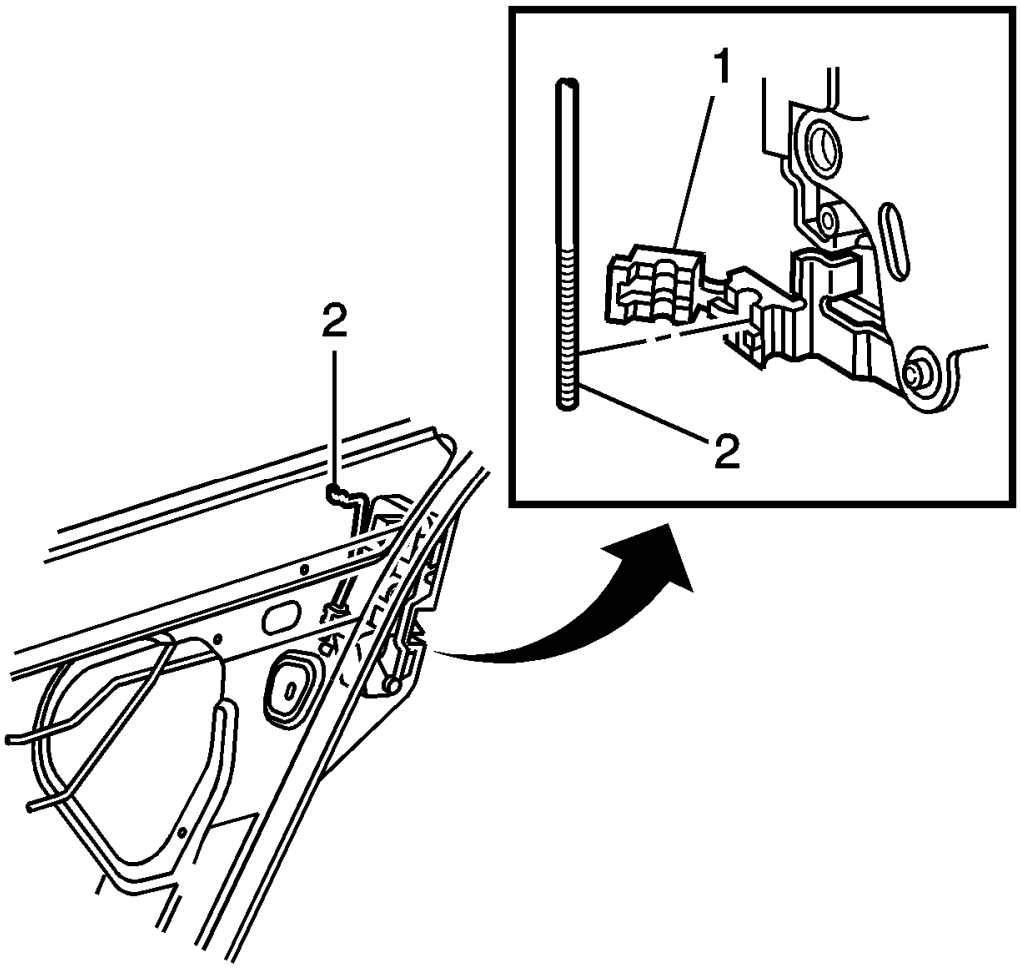

Fig. 29: Positioning Outside Door Handle Rod In Clip
Courtesy of GENERAL MOTORS COMPANY

1. Position the outside door handle rod (2) in the clip (1) to eliminate any free play in the outside door handle.
2. Close the clip cover over the threaded outside door handle rod.
3. Inspect the door lock system for proper operation.
4. Install the rear door water deflector. Refer to **Rear Side Door Water Deflector Replacement** .

REAR SIDE DOOR OUTSIDE HANDLE ROD REPLACEMENT

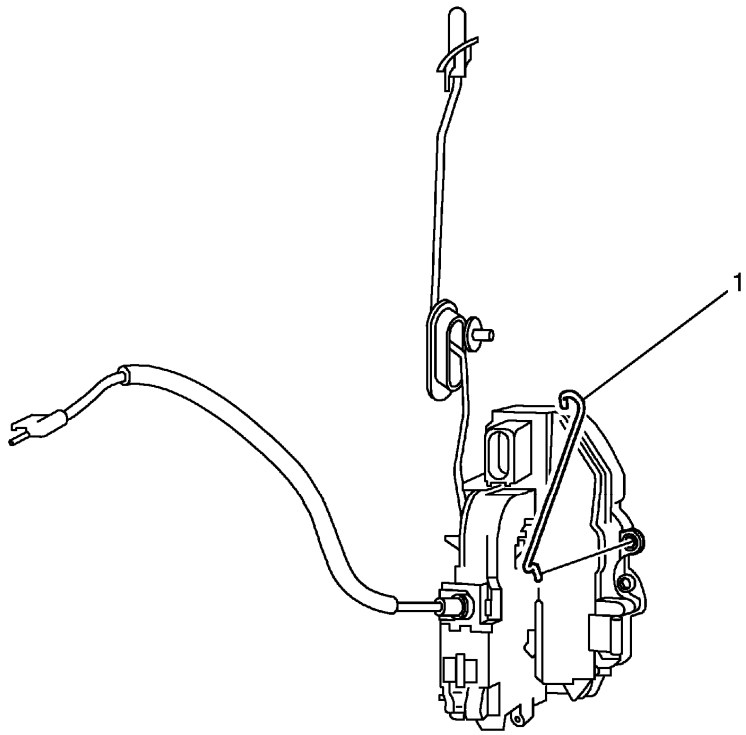

Fig. 30: Rear Side Door Outside Handle Rod
Courtesy of GENERAL MOTORS COMPANY

Rear Side Door Outside Handle Rod Replacement

Callout	Component Name
Preliminary Procedure Remove the rear side door latch. Refer to **Rear Side Door Latch Replacement**.	
1	Rear Side Door Outside Handle Rod

FRONT SIDE DOOR LOCK STRIKER REPLACEMENT

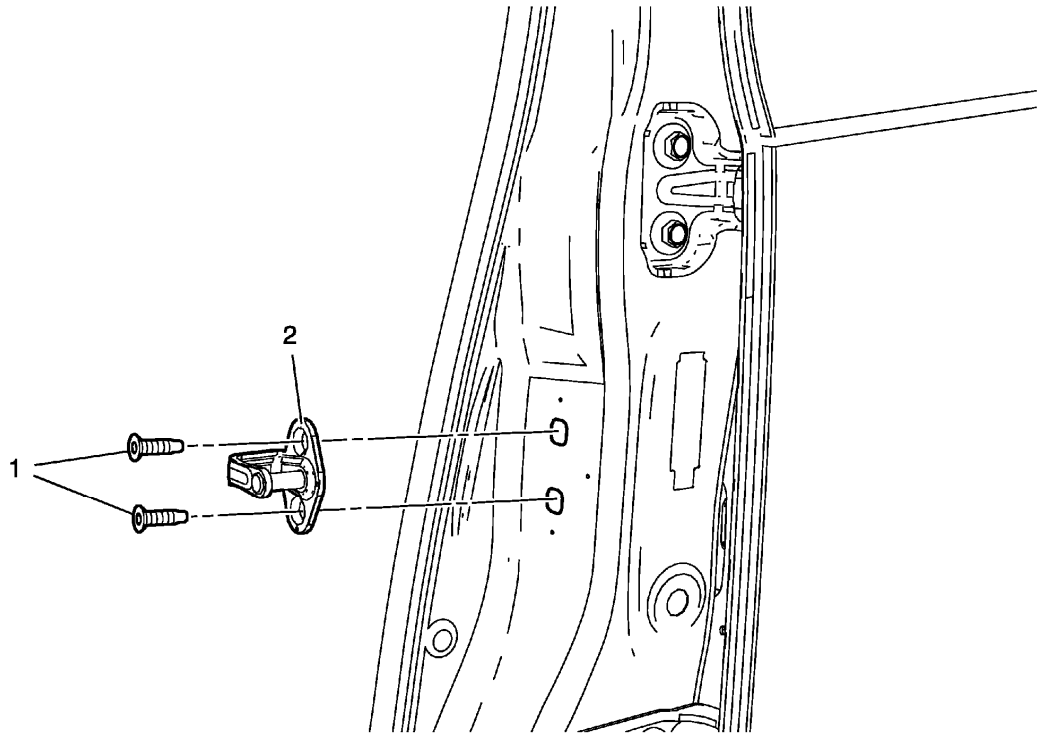

Fig. 31: Front Side Door Lock Striker And Bolts
Courtesy of GENERAL MOTORS COMPANY

Front Side Door Lock Striker Replacement

Callout	Component Name
1	Front Side Door Lock Striker Bolt (Qty: 2) **CAUTION:** **Refer to Fastener Caution .** **Tighten** 25 N.m (18 lb ft)
2	Front Side Door Lock Striker

REAR COMPARTMENT LID LATCH STRIKER REPLACEMENT

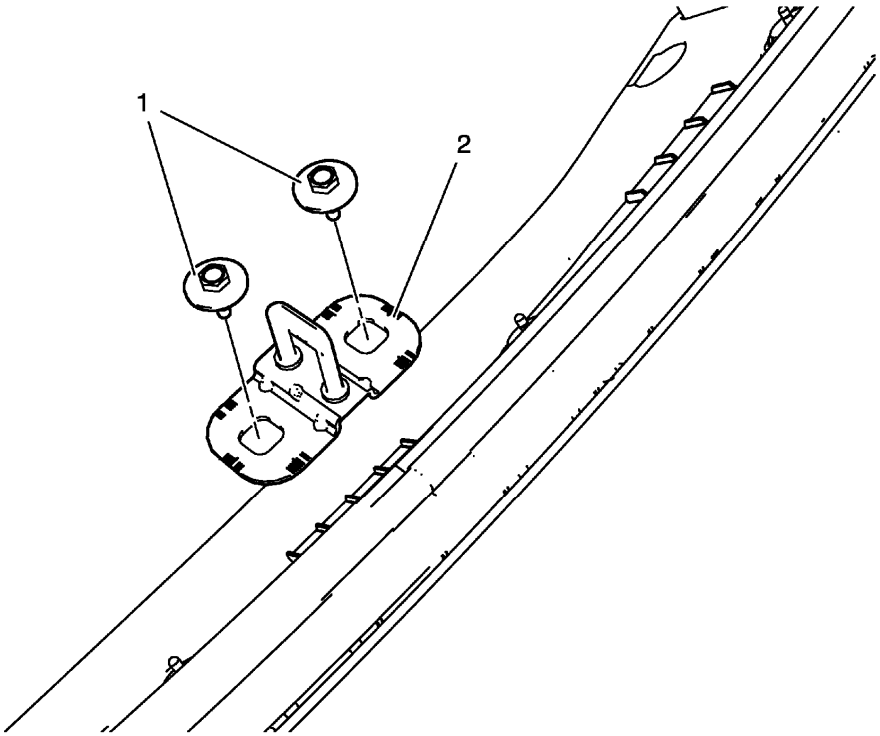

Fig. 32: Rear Compartment Lid Latch Striker And Bolts
Courtesy of GENERAL MOTORS COMPANY

Rear Compartment Lid Latch Striker Replacement

Callout	Component Name
Preliminary Procedures Remove the rear compartment sill trim plate. Refer to **Rear Compartment Sill Trim Plate Replacement** .	
1	Rear Compartment Lid Latch Striker Bolt (Qty: 2) **CAUTION:** **Refer to Fastener Caution .** **Procedure** Use a grease pencil to outline the striker before removing the bolts. **Tighten** 9 N.m (80 lb in)
2	Rear Compartment Lid Latch Striker **Procedure** Adjust the rear compartment lid latch striker after replacing, if needed.

REAR SIDE DOOR LOCK STRIKER REPLACEMENT

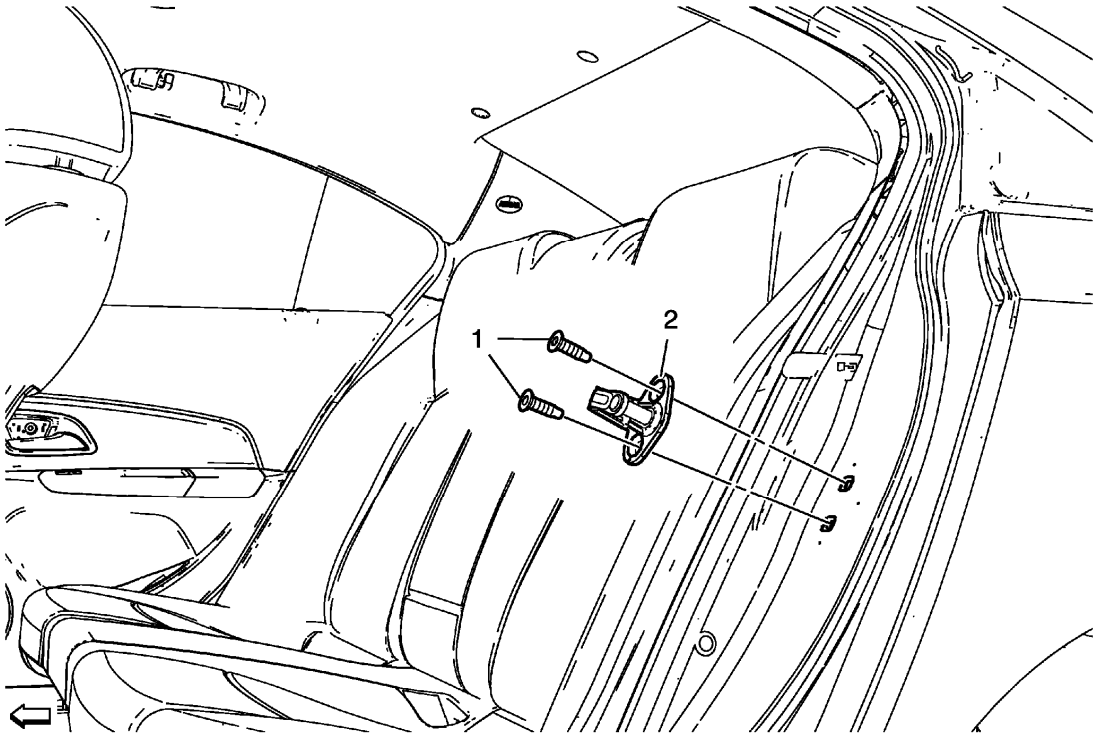

Fig. 33: Rear Side Door Lock Striker And Bolts
Courtesy of GENERAL MOTORS COMPANY

Rear Side Door Lock Striker Replacement

Callout	Component Name
1	Rear Side Door Lock Striker Bolt (Qty: 2) **CAUTION:** **Refer to Fastener Caution .** **Tighten** 25 N.m (18 lb ft)
2	Rear Side Door Lock Striker

DOOR LOCK SWITCH REPLACEMENT

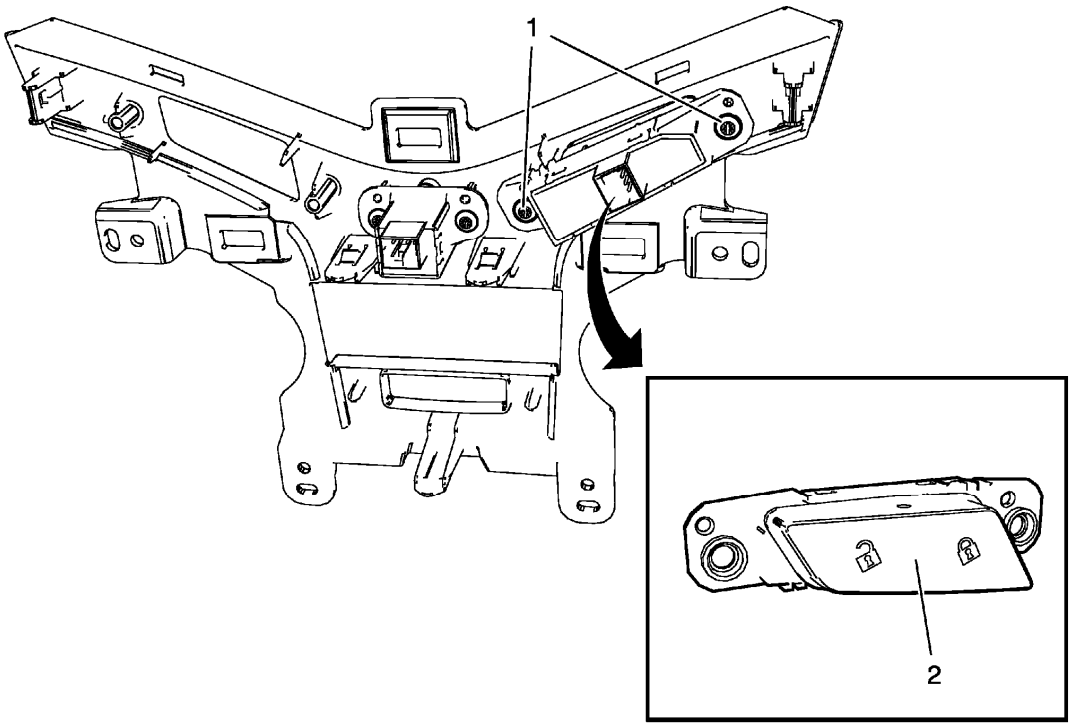

Fig. 34: Door Lock Switch And Screws
Courtesy of GENERAL MOTORS COMPANY

Door Lock Switch Replacement

Callout	Component Name
Preliminary Procedures Remove instrument panel accessory bezel. Refer to **Instrument Panel Accessory Bezel Replacement** .	
1	Door Lock Switch Screw (Qty: 2) **CAUTION:** **Refer to Fastener Caution .** **Tighten** 1.5 N.m (13 lb in)
2	Door Lock Switch **Procedure** Disconnect electrical connector.

DESCRIPTION AND OPERATION

DOOR AJAR INDICATOR DESCRIPTION AND OPERATION

Door Ajar Indicator System Components

The door ajar indicator system consists of the following components:

- Body control module
- Instrument cluster
- Driver door latch
- Passenger door latch
- Left rear door latch
- Right rear door latch
- Driver window motor (AXG)
- Driver window switch (AEC)
- Passenger window switch (AED)
- Left rear window switch (AEQ)
- Right rear window switch (AEQ)

Door Ajar System

Depending upon if the vehicle is equipped with express up/down power windows, express down only power windows affects how the driver and passenger door ajar signal circuits are configured and monitored.

Driver Door Ajar (AXG)

The driver window motor will provide a 12V signal to the driver door ajar switch within the door latch to indicate the status of the door. When the driver door is open, the contract within the ajar switch closes providing a ground part for the signal circuit. The driver window motor will detect the voltage drop in the ajar signal circuit and will send a serial data message to the body control module. The body control module will then send a message to the instrument cluster which will illuminate the door ajar icon.

Driver, Passenger and Rear Doors Ajar (AEC, AED and AEQ)

The driver, passenger and rear window switches provide a 12V signal to the respective door ajar switch within the door latch to indicate the status of the door. When the door is open, the contract within the ajar switch closes providing a ground part for the signal circuit. The window switch will detect the voltage drop in the ajar signal circuit and will send a serial data message to the body control module. The body control module will then send a message to the instrument cluster which will illuminate the door ajar icon.

LUGGAGE COMPARTMENT DESCRIPTION AND OPERATION

Rear Compartment Lid Release System Components

- Body control module (BCM)
- Exterior rear compartment lid release switch
- Rear compartment lid latch
- Rear compartment lid release relay

Rear Compartment Lid Release Operation

Rear Compartment Lid Release Switch

The BCM monitors a voltage signal to the exterior rear compartment lid release switch so that when the switch is pressed, the voltage within the signal circuit is pulled low and in response, the BCM will detect the voltage drop and check the status of the door lock system. If the vehicle doors are locked, the BCM will ignore the exterior rear compartment lid release switch, if the vehicle doors have been unlocked, the BCM will recognize the request and will provide voltage to the rear compartment lid relay.

Rear Compartment Lid Latch

When BCM receives a rear compartment lid release command from the exterior rear compartment lid release switch, the BCM applies brief pulse of voltage to the compartment lid release relay control circuit, which energizes the coil side of the relay. The switch side of the compartment lid release relay then momentarily closes, supplying a brief pulse of battery positive voltage to the rear compartment lid latch. The rear compartment lid latch is continuously grounded and when it receives the voltage pulse, it will become energized and the latch will activate releasing the trunk lid so that the trunk lid may be manually raised to an open position.

Keyless Entry Transmitter

The BCM may also get a rear compartment lid release command from the remote keyless entry module. When the trunk button is pressed on the keyless entry transmitter, a rear compartment lid release request is sent to the remote keyless entry module, the remote keyless entry module will then send a serial data message to the BCM to command the release of the rear compartment lid.

Trunk Open Message

The body control module (BCM) monitors the voltage level of the trunk ajar signal circuit which is normally at the system voltage when the trunk lid is closed. When the trunk lid is ajar or open, a switch within the latch assembly closes providing a path to ground for the trunk ajar signal circuit. The voltage within the signal circuit will then drop to 0 volts, the BCM will then detect the voltage drop and will send a serial data message to the instrument panel cluster (IPC). The IPC will then display the Trunk Open message.

POWER DOOR LOCKS DESCRIPTION AND OPERATION

Door Lock System Components

The power door lock system consists of the following components:

- Central door lock switch
- Rear window/door lockout switch, located on the driver window switch
- Body control module (BCM)
- Driver door latch
- Passenger door latch
- Left rear door latch
- Right rear door latch

- Door lock security PCB relay
- Exterior door handle switches
- Keyless entry control module

Door Lock and Unlock Operation

When the central door lock switch is activated in the lock or unlock position, the BCM will receive a ground signal on either the door lock switch lock or unlock signal circuits.

The BCM, upon receipt of a lock switch lock or unlock signal, will supply battery voltage to the door lock actuator lock or unlock control circuits. Since the opposite side of the lock actuator is connected to ground through the other lock actuator control circuit, the doors will then lock or unlock as commanded.

The following three circuits are used to operate the lock:

- Driver door unlock
- Passenger door unlock
- All door lock

The driver door lock actuator is isolated so it can be unlocked by itself using the keyless entry transmitter.

Passive Door Lock/Unlock Operation

The exterior door handle switch signal circuits provide inputs to the keyless entry control module when the exterior door handle switches are activated. These inputs allow the keyless entry control module to detect a door lock or a door unlock request. The keyless entry control module provides a 12 V signal to each exterior door handle switch via the door handle switch signal circuits. When a door handle switch is pressed, the switch closes and the voltage signal within the signal circuit is pulled to ground. The keyless entry control module will detect the voltage drop and a low frequency antenna will transmit a challenge to the keyless entry transmitter. If the challenge is met, the keyless entry transmitter will respond, and the keyless entry control module will send a serial data message to the body control module to command the door(s) to be locked or unlocked

Rear Window and Rear Door Lockout Operation

The operator has the option to disable the interior rear door handles to prevent the unauthorized opening of the rear door doors while still retaining normal driver and passenger door handle functions. The driver door window switch has a lockout switch that will disable the interior rear door handles and the local rear window switches. When the lockout switch is pressed, the BCM will command the child lockout latches and will also send a disable command to the local rear window switches. The driver and passenger doors will still function normally by pressing a door lock switch which will unlock the doors but the child lockout latches will continue to disable the interior rear door handles.

Pressing the lockout switch again will signal a command to the BCM to unlatch the rear doors, restore normal interior rear door handle functions and restore normal function of the rear window switches

If the lockout indicator flashes while commanding the lockout system, indicates that the BCM has detected a fault in the system and that one or both interior rear door handles are not locked out and/or the local rear

window switches are not locked out.

2013 ACCESSORIES & EQUIPMENT

Wipers and Washers - Cruze

SPECIFICATIONS

FASTENER TIGHTENING SPECIFICATIONS

Fastener Tightening Specifications

Application	Specification	
	Metric	English
Windshield Washer Solvent Container Bolt	15 N.m	11 lb ft
Windshield Washer Solvent Container Nut	5 N.m	44 lb in
Windshield Wiper Arm Nut	24.5 N.m	18 lb ft
Windshield Wiper Motor Bolt	10 N.m	89 lb in
Windshield Wiper Motor Nut	10 N.m	89 lb in
Windshield Wiper and Windshield Washer Meter Bolt	10 N.m	89 lb in

SCHEMATIC WIRING DIAGRAMS

WIPER/WASHER WIRING SCHEMATICS

Wiper Wiring Schematics

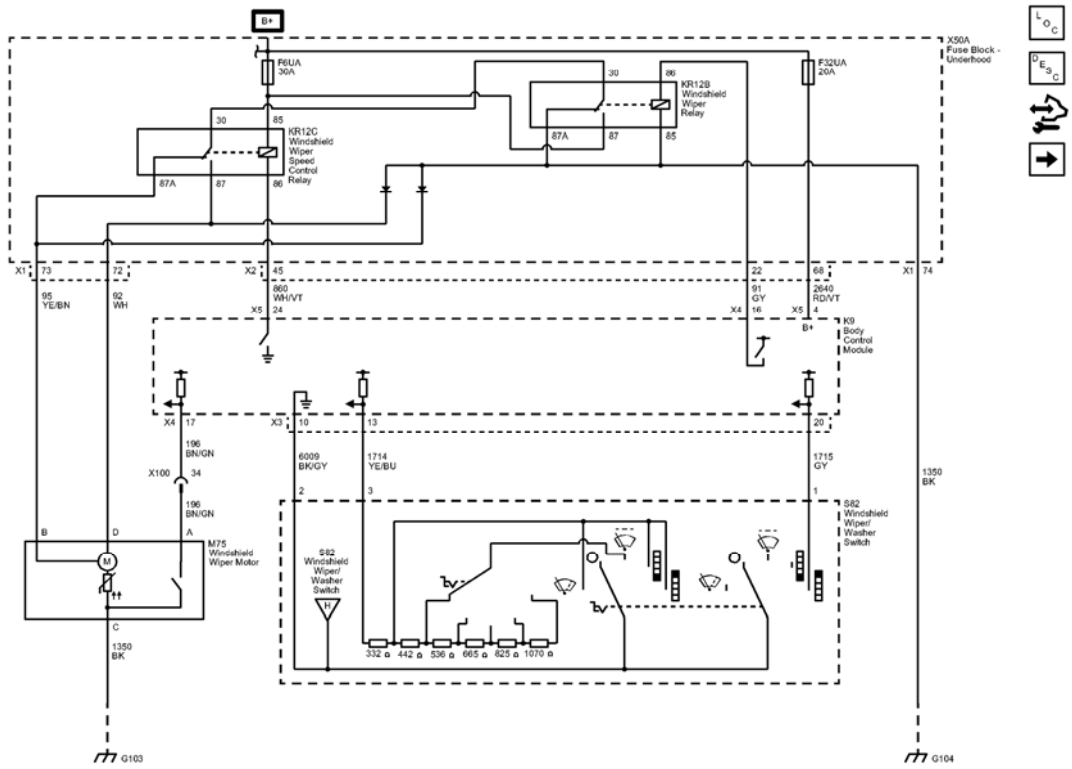

Fig. 1: Wiper Wiring Schematics
Courtesy of GENERAL MOTORS COMPANY

Callout	Component Name
95	Windshield Wiper Motor Low Speed Control
95 YE/BN	95 YE/BN
CAV_B	B
CAV_73	73
CONN_X1	X1
92	Windshield Wiper Motor High Speed Control
92_WH	92 WH
CAV_D	D
CAV_72	72
196	Windshield Wiper Motor Park Switch Signal
196_BN/GN	196 BN/GN
CAV_A	A
CAV_17	17
CONN_X4	X4
196_BN/GN	196 BN/GN
CAV_34	34
860	Front Windshield Wiper Switch High Signal

860_WH/VT	860 WH/VT
CAV_24	24
CONN_X5	X5
CAV_45	45
CONN_X2	X2
91	Windshield Wiper Motor Relay Coil Supply Voltage
91_GY	91 GY
CAV_16	16
CONN_X4	X4
CAV_22	22
2640	Battery Positive Voltage
2640_RD/VT	2640 RD/VT
CAV 4	4
CONN_X5	X5
CAV_68	68
1350	Ground
1350_BK	1350 BK
CAV_74	74
CONN_X1	X1
6009	Windshield Wiper Switch Low Reference
6009_BK/GY	6009 BK/GY
CAV_2	2
CAV_10	10
CONN_X3	X3
1714	Windshield Wiper Switch Low Signal
1714_YE/BU	1714 YE/BU
CAV_3	3
CAV 13	13
1715	Windshield Wiper Switch High Signal
1715 GY	1715 GY
CAV_1	1
CAV_20	20
1350_BK	1350 BK
CAV_C	C
CAV_30	30
CAV_85	85
CAV_86	86
CAV_87	87
CAV_87A	87A
CAV_30	30
CAV_86	86

	85
CAV_87	87
CAV_87A	87A
F6UA	F6UA 30A
G104	G104
G103	G103
F32UA	F32UA 20A
X100	X100
S82	
M75	
KR12C	
KR12B	
X50A	
K9	
S82	

Washer Wiring Schematics

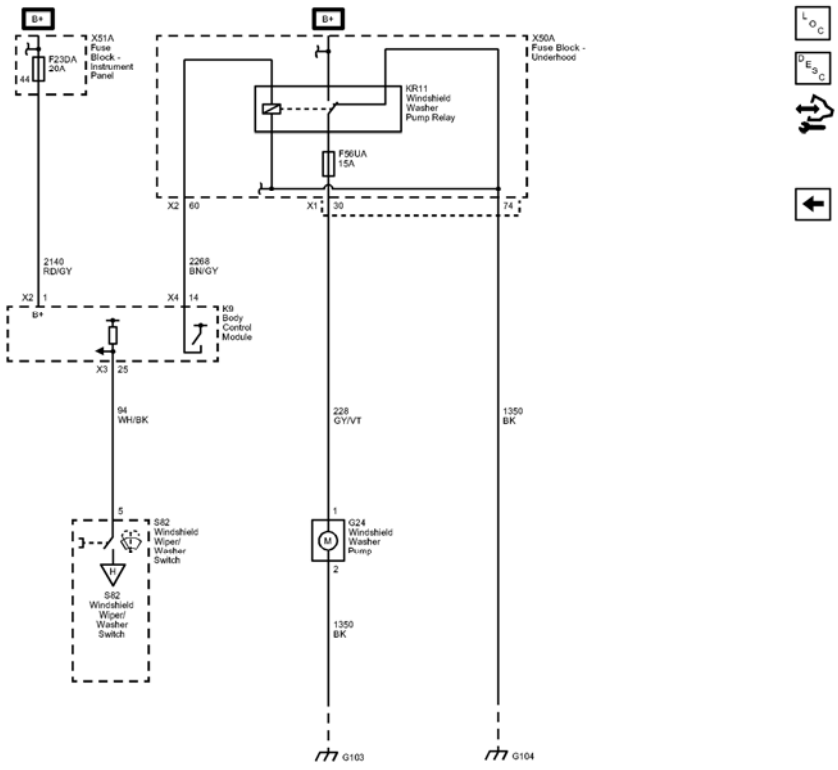

Fig. 2: Washer Wiring Schematics
Courtesy of GENERAL MOTORS COMPANY

Callout	Component Name
CAV_44	44
2140	Battery Positive Voltage
2140_RD/GY	2140 RD/GY
CAV_1	1
CONN_X2	X2
2268	Windshield Washer Relay Control
2268_BN/GY	2268 BN/GY
CAV_14	14
CONN_X4	X4
CAV_60	60
CONN_X2	X2
94	Windshield Washer Switch Signal
94_WH/BK	94 WH/BK
CAV_5	5
CAV_25	25
CONN_X3	X3
228	Windshield Washer Pump Control
228_GY/VT	228 GY/VT
CAV_1	1
CAV_30	30
CONN_X1	X1
1350	Ground
1350_BK	1350 BK
CAV_2	2
1350_BK	1350 BK
CAV_74	74
G104	G104
G103	G103
F23DA	F23DA 20A
F56UA	F56UA 15A
S82	
G24	
K9	
S82	
KR11	
X50A	
X51A	

DIAGNOSTIC INFORMATION AND PROCEDURES

DIAGNOSTIC CODE INDEX

DIAGNOSTIC CODE INDEX

DTC	Description
DTC B3715 or B3875	DTC B3715 01 Windshield Wiper Relay Circuit Short to Battery DTC B3715 02 Windshield Wiper Relay Circuit Short to Ground DTC B3715 04 Windshield Wiper Relay Circuit Open DTC B3875 01 Windshield Wiper High Speed Relay Circuit Short to Battery DTC B3875 02 Windshield Wiper High Speed Relay Circuit Short to Ground DTC B3875 04 Windshield Wiper High Speed Relay Circuit Open
DTC B3873	DTC B3873 01 Front Washer Relay Circuit Short to Battery DTC B3873 02 Front Washer Relay Circuit Short to Ground DTC B3873 04 Front Washer Relay Circuit Open Circuit

DTC B3715 OR B3875

Diagnostic Instructions

- Perform the **Diagnostic System Check - Vehicle** prior to using this diagnostic procedure.
- Review **Strategy Based Diagnosis** for an overview of the diagnostic approach.
- **Diagnostic Procedure Instructions** provides an overview of each diagnostic category.

DTC Descriptors

DTC B3715 01

Windshield Wiper Relay Circuit Short to Battery

DTC B3715 02

Windshield Wiper Relay Circuit Short to Ground

DTC B3715 04

Windshield Wiper Relay Circuit Open

DTC B3875 01

Windshield Wiper High Speed Relay Circuit Short to Battery

DTC B3875 02

Windshield Wiper High Speed Relay Circuit Short to Ground

DTC B3875 04

Windshield Wiper High Speed Relay Circuit Open

Diagnostic Fault Information

Circuit	Short to Ground	Open/High Resistance	Short to Voltage	Signal Performance
Windshield Wiper Switch Low Signal terminal 3	1	1	1	-
Windshield Wiper Switch High Signal terminal 1	4	2	2	-
Windshield Wiper Motor Park Switch Signal terminal A	3	3	-	-
Front Wiper Relay Control terminal 86	B3715 02	B3715 04	B3715 01	-
Windshield Wiper High Speed Relay Control terminal 86	B3875 02	B3875 04	B3875 01	-
Front Wiper Motor Low Speed Control terminal B	1	1	4	-
Windshield Wiper Switch Low Reference terminal 2	-	1, 2	1, 2	-
Windshield Wiper Motor Ground terminal C	-	1, 2, 3	-	-
Windshield Wiper Relay Ground terminal 85	-	1	-	-
1. Delay or Low Speed Wipers Inoperative 2. High Speed Wipers Inoperative 3. Wipers Do Not Park 4. Wipers Always ON				

Circuit/System Description

The body control module (BCM) controls the wiper motor based on input from the windshield wiper/washer switch. The BCM monitors the wiper/washer switch through two separate signal circuits and a low reference circuit. The windshield wiper switch high signal circuit is used to determine high speed wiper operation, the windshield wiper switch low signal is used to determine low speed, intermittent, and mist operation through the use of a resistor ladder, and the windshield washer switch signal circuit is used to determine washer operation.

The BCM controls the windshield wiper motor through two output controls, controlling two relays which determine the desired wiper speed, high or low.

Conditions for Running the DTC

- The DTC runs only when a wiper output is actively being requested by the BCM.
- The system voltage is between 9-16 V.

Conditions for Setting the DTC

- A short to ground is detected in the Front Wiper Relay control circuit or in the High Speed Relay control circuit.
- A short to voltage or an open/high resistance is detected in the Front Wiper Relay control circuit or in the High Speed Relay control circuit.

Action Taken When the DTC Sets

The BCM will not activate the wiper output.

Conditions for Clearing the DTC

- A current DTC will clear when the condition for setting the fault is no longer present.
- A history DTC will clear after 50 consecutive ignition cycles without a fault present.

Reference Information

Schematic Reference

Wiper/Washer Schematics

Connector End View Reference

COMPONENT CONNECTOR END VIEWS - INDEX

Description and Operation

Wiper/Washer System Description and Operation

Electrical Information Reference

- **Circuit Testing**
- **Connector Repairs**
- **Testing for Intermittent Conditions and Poor Connections**
- **Wiring Repairs**

Scan Tool Reference

Control Module References for scan tool information

Circuit/System Verification

1. Ignition ON.
2. Verify the scan tool Windshield Wiper High Speed Switch parameter changes between Active and Inactive when activating the high speed windshield wipers.
   - **If the parameter does not change**

     Refer to Circuit/System Testing below - Windshield Wiper/Washer Switch Malfunction.

   - **If the parameter changes**
3. Verify the scan tool Windshield Wiper Switch parameter changes between Off and Low when activating the low speed windshield wipers.
   - **If the parameter does not change**

     Refer to Circuit/System Testing below- Windshield Wiper/Washer Switch Malfunction.

   - **If the parameter changes**
4. Verify the scan tool Windshield Wiper Switch parameter changes between Delay 1 and Delay 5 when cycling the intermittent speed windshield wipers.
   - **If the parameter does not change**

     Test or replace the S82 Windsheild Wiper/Washer Switch.

   - **If the parameter changes**
5. Verify the M75 Windshield Wiper Motor changes between Off, Low, and High when cycling the S82 Windshield Wiper/Washer Switch between Off, Low, and High.
   - **If the Windshield Wiper Motor does not cycle between Off, Low, and High**

     Refer to Circuit/System Testing below- Windshield Wiper Motor Malfunction

   - **If the Windshield Wiper Motor cycles between Off, Low, and High**
6. Ignition OFF.
7. Verify the scan tool Windshield Wiper Park Switch parameter is Active.
   - **If the parameter does not change**

     Refer to Circuit/System Testing below- Windshield Wiper Motor Malfunction.

   - **If the parameter changes**
8. All OK.

Circuit/System Testing

Windshield Wiper/Washer Switch Malfunction

1. Ignition OFF and all vehicle systems OFF, disconnect the harness connector at the S82 Windshield Wiper/Washer Switch. It may take up to 11 min for all vehicle systems to power down.
2. Test for less than 10 ohms between the low reference circuit terminal 2 and ground.
    - **If 10 ohms or greater**
    1. Ignition OFF, disconnect the harness connector at the K9 Body Control Module.
    2. Test for less than 2 ohms in the low reference circuit end to end.
        - If 2 ohms or greater, repair the open/high resistance in the circuit.
        - If less than 2 ohms, replace the K9 Body Control Module.
    - **If less than 10 ohms**
3. Ignition ON.
4. Verify the scan tool Windshield Wiper High Speed Switch parameter is Inactive.
    - **If not Inactive**
    1. Ignition OFF, disconnect the harness connector at the K9 Body Control Module.
    2. Test for infinite resistance between the signal circuit terminal 1 and ground.
        - If less than infinite resistance, repair the short to ground on the circuit.
        - If infinite resistance, replace the K9 Body Control Module.
    - **If Inactive**
5. Install a 3 A fused jumper wire between the signal circuit terminal 1 and the low reference circuit terminal 2.
6. Verify the scan tool Windshield Wiper High Speed Switch parameter is Active.
    - **If not Active**
    1. Ignition OFF, remove the jumper wire, disconnect the harness connector at the K9 Body Control Module, ignition ON.
    2. Test for less than 1 V between the signal circuit and ground.
        - If 1 V or greater, repair the short to voltage on the circuit.
        - If less than 1 V
    3. Test for less than 2 ohms in the signal circuit end to end.
        - If 2 ohms or greater, repair the open/high resistance in the circuit.
        - If less than 2 ohms, replace the K9 Body Control Module.
    - **If Active**
7. Test for greater than 8 V between the signal circuit terminal 3 and ground.
    - **If less than 8 V**
    1. Ignition OFF, disconnect the harness connector at the K9 Body Control Module.
    2. Test for infinite resistance between the signal circuit and ground
        - If less than infinite resistance, repair the short to ground on the circuit.
        - If infinite resistance
    3. Test for less than 2 ohms in the signal circuit end to end.

- If 2 ohms or greater, repair the open/high resistance in the circuit.
- If less than 2 ohms, replace the K9 Body Control Module.

- **If 8 V or greater**

8. Ignition OFF, disconnect the X3 harness connector at the K9 Body Control Module, ignition ON.
9. Test for less than 1 V between the S82 Windshield Wiper/Washer Switch signal circuit terminal 3 and ground.
   - **If 1 V or greater**

     Repair the short to voltage on the circuit.

   - **If less than 1 V**
10. Test or replace the S82 Windshield Wiper/Washer Switch.

Windshield Wiper Motor Malfunction

1. Ignition OFF and all vehicle systems OFF, disconnect the harness connector at the M75 Windshield Wiper Motor. It may take up to 2 min for all vehicle systems to power down.
2. Test for less than 10 ohms between the ground circuit terminal C and ground.
   - **If 10 ohms or greater**
   1. Ignition OFF.
   2. Test for less than 2 ohms in the ground circuit end to end.
      - If 2 ohms or greater, repair the open/high resistance in the circuit.
      - If less than 2 ohms, repair the open/high resistance in the ground connection.
   - **If less than 10 ohms**
3. Ignition ON.
4. Verify the scan tool Windshield Wiper Park Switch parameter is Inactive.
   - **If not Inactive**
   1. Ignition OFF, disconnect the harness connector at the K9 Body Control Module.
   2. Test for infinite resistance between the signal circuit terminal A and ground.
      - If less than infinite resistance, repair the short to ground on the circuit.
      - If infinite resistance, replace the K9 Body Control Module.
   - **If Inactive**
5. Install a 3 A fused jumper wire between the signal circuit terminal A and the ground circuit terminal C.
6. Verify the scan tool Windshield Wiper Park Switch parameter is Active.
   - **If not Active**
   1. Ignition OFF, remove the jumper wire, disconnect the harness connector at the K9 Body Control Module, ignition ON.
   2. Test for less than 1 V between the signal circuit and ground.
      - If 1 V or greater, repair the short to voltage on the circuit.
      - If less than 1 V

3. Test for less than 2 ohms in the signal circuit end to end.
    - If 2 ohms or greater, repair the open/high resistance in the circuit.
    - If less than 2 ohms, replace the K9 Body Control Module.
- **If Active**

7. Ignition OFF and all vehicle systems OFF, disconnect the KR12B Windshield Wiper Relay. It may take up to 2 min for all vehicle systems to power down.
8. Test for less than 10 ohms between each ground circuit terminal listed below and ground:
    - Terminal 85
    - Terminal 87A
    - **If 10 ohms or greater**
    1. Ignition OFF.
    2. Test for less than 2 ohms in the ground circuit end to end.
        - If 2 ohms or greater, repair the open/high resistance in the circuit.
        - If less than 2 ohms, repair the open/high resistance in the ground connection.
    - **If less than 10 ohms**
9. Ignition ON.
10. Verify a test lamp illuminates between the B+ circuit terminal 87 and the ground circuit terminal 87A.
    - **If the test lamp does not illuminate and the circuit fuse is good**

      Replace the X50A Fuse Block - Underhood.

    - **If the test lamp does not illuminate and the circuit fuse is open**
    1. Ignition OFF, remove the test lamp. Disconnect the KR12C Windshield Wiper Speed Control Relay.
    2. Test for infinite resistance between each control circuit listed below and ground:
        - Terminal 87A
        - Terminal 87
        - If less than infinite resistance, repair the short to ground on the circuit.
        - If infinite resistance, replace the M75 Windshield Wiper Motor
    - **If the test lamp illuminates**
11. Connect a test lamp between the control circuit terminal 86 and the ground circuit terminal 85.
12. Verify the test lamp turns ON and OFF when commanding the Windshield Wiper Motor Relay Low and Off with a scan tool.
    - **If the test lamp is always OFF**
    1. Ignition OFF, remove the test lamp, disconnect the harness connector at the K9 Body Control Module.
    2. Test for infinite resistance between the control circuit and ground.
        - If less than infinite resistance, repair the short to ground on the circuit.
        - If infinite resistance

3. Test for less than 2 ohms in the control circuit end to end.
    - If 2 ohms or greater, repair the open/high resistance in the circuit.
    - If less than 2 ohms, replace the K9 Body Control Module.

- **If the test lamp is always ON**

1. Ignition OFF, remove the test lamp, disconnect the harness connector at the K9 Body Control Module, ignition ON.
2. Test for less than 1 V between the control circuit and ground.
    - If 1 V or greater, repair the short to voltage on the circuit.
    - If less than 1 V, replace the K9 Body Control Module.

- **If the test lamp turns ON and OFF**

13. Ignition OFF, connect the KR12B Windshield Wiper Relay and disconnect the KR12C Windshield Wiper Speed Control Relay, ignition ON.
14. Test for less than 10 ohms between the control circuit terminal 30 and ground.
    - **If 10 ohms or greater**

      Test or replace the KR12B Windshield Wiper Relay.

    - **If less than 10 ohms**
15. Connect a test lamp between the control circuit terminal 30 and ground.
16. Verify the test lamp turns ON and OFF when commanding the Windshield Wiper Motor Relay Low and Off with a scan tool.
    - **If the test lamp does not turn ON and OFF**

      Test or replace the KR12B Windshield Wiper Relay.

    - **If the test lamp turns ON and OFF**
17. Verify a test lamp illuminates between the B+ circuit terminal 85 and ground.
    - **If the test lamp does not illuminate**

      Replace the X50A Fuse Block - Underhood.

    - **If the test lamp illuminates**
18. Connect a test lamp between the B+ circuit terminal 85 and the control circuit terminal 86.
19. Verify the test lamp turns ON and OFF when commanding the Windshield Wiper High Speed Relay High and Off with a scan tool.
    - **If the test lamp is always OFF**

1. Ignition OFF, remove the test lamp, disconnect the harness connector at the K9 Body Control Module, ignition ON.
2. Test for less than 1 V between the control circuit and ground.
    - If 1 V or greater, repair the short to voltage on the circuit.
    - If less than 1 V

3. Ignition OFF.
4. Test for less than 2 ohms in the control circuit end to end.
    - If 2 ohms or greater, repair the open/high resistance in the circuit.
    - If less than 2 ohms, replace the K9 Body Control Module.

- **If the test lamp is always ON**

1. Ignition OFF, remove the test lamp, disconnect the harness connector at the K9 Body Control Module.
2. Test for infinite resistance between the control circuit and ground.
    - If less than infinite resistance, repair the short to ground on the circuit.
    - If infinite resistance, replace the K9 Body Control Module.

- **If the test lamp turns ON and OFF**

20. Ignition OFF, connect the KR12C Windshield Wiper Speed Control Relay.
21. Connect a test lamp between the M75 Windshield Wiper Motor control circuit terminal B and ground circuit terminal C, ignition ON.
22. Verify the test lamp turns ON and OFF when commanding the Windshield Wiper Motor Relay Low and Off with a scan tool.

- **If the test lamp is always OFF**

1. Ignition OFF, remove the test lamp, disconnect the KR12C Windshield Wiper Speed Control Relay.
2. Test for infinite resistance between the control circuit and ground.
    - If less than infinite resistance, repair the short to ground on the circuit.
    - If infinite resistance
3. Test for less than 2 ohms in the control circuit end to end.
    - If 2 ohms or greater, repair the open/high resistance in the circuit.
    - If less than 2 ohms, test or replace the KR12C Windshield Wiper Speed Control Relay.

- **If the test lamp is always ON**

1. Ignition OFF, remove the test lamp, disconnect the KR12C Windshield Wiper Speed Control Relay, ignition ON.
2. Test for less than 1 V between the control circuit and ground.
    - If 1 V or greater, repair the short to voltage on the circuit.
    - If less than 1 V, test or replace the KR12C Windshield Wiper Speed Control Relay.

- **If the test lamp turns ON and OFF**

23. Connect a test lamp between the M75 Windshield Wiper Motor control circuit terminal D and ground circuit terminal C, ignition ON.
24. Verify the test lamp turns ON and OFF when commanding the Windshield Wiper High Speed Relay High and Off with a scan tool.

- **If the test lamp is always OFF**

1. Ignition OFF, remove the test lamp, disconnect the KR12C Windshield Wiper Speed Control Relay.

2. Test for infinite resistance between the control circuit and ground.
    - If less than infinite resistance, repair the short to ground on the circuit.
    - If infinite resistance
3. Test for less than 2 ohms in the control circuit end to end.
    - If 2 ohms or greater, repair the open/high resistance in the circuit.
    - If less than 2 ohms, test or replace the KR12C Windshield Wiper Speed Control Relay.

- **If the test lamp is always ON**

1. Ignition OFF, remove the test lamp, disconnect the KR12C Windshield Wiper Speed Control Relay, ignition ON.
2. Test for less than 1 V between the control circuit and ground.
    - If 1 V or greater, repair the short to voltage on the circuit.
    - If less than 1 V, test or replace the KR12C Windshield Wiper Speed Control Relay.

- **If the test lamp turns ON and OFF**

25. Test or replace the M75 Windshield Wiper Motor.

Component Testing

Windshield Wiper/Washer Switch

1. Ignition OFF, disconnect the harness connector at the S82 Windshield Wiper/Washer Switch.
2. Test for infinite resistance between the signal terminal 1 and the low reference terminal 2 with the high speed switch in the open position.
    - **If less than infinite resistance**

      Replace the S82 Windshield Wiper/Washer Switch.

    - **If infinite resistance**
3. Test for less than 2 ohms between the signal circuit terminal 1 and the low reference circuit terminal 2 with the high speed switch in the closed position.
    - **If 2 ohms or greater**

      Replace the S82 Windshield Wiper/Washer Switch.

    - **If less than 2 ohms**
4. Test for infinite resistance between the signal terminal 3 and the low reference terminal 2 with the low speed switch in the open position.
    - **If less than infinite resistance**

      Replace the S82 Windshield Wiper/Washer Switch.

    - **If infinite resistance**
5. Verify the resistance readings are within the specified range listed below between the signal circuit

terminal 3 and the low reference circuit terminal 1 by pushing the switch in the listed positions below:

- Delay 1 : 3.75-3.85kohms
- Delay 2 : 2.75-2.85kohms
- Delay 3 : 1.95-2.05kohms
- Delay 4 : 1.25-1.35kohms
- Delay 5 : 765-775ohms
  - **If not within the specified range**

    Replace the S82 Windshield Wiper/Washer Switch.

  - **If within the specified range**

6. All OK

Relay Test

1. Ignition OFF, disconnect the appropriate relay.
2. Test for 60-200 ohms between terminals 85 and 86.
   - **If less than 60 or greater than 200**

     Replace the relay.

   - **If between 60-200 ohms**
3. Test for infinite resistance between the terminals listed below:
   - 30 and 86
   - 30 and 87
   - 30 and 85
   - 85 and 87
   - **If less than infinite resistance**

     Replace the relay.

   - **If infinite resistance**
4. Test for less than 5 ohms between terminals 30 and 87A.
   - **If 5 ohms or greater**

     Replace the relay.

   - **If less than 5 ohms**
5. Install a 10 A fused jumper wire between relay terminal 85 and 12 V. Install a jumper wire between relay terminal 86 and ground.
6. Test for less than 5 ohms between terminals 30 and 87.
   - **If 5 ohms or greater**

Replace the relay.

- **If less than 5 ohms**

7. All OK

Repair Instructions

Perform the **Diagnostic Repair Verification** after completing the repair.

- **Windshield Wiper Motor Replacement**
- **Relay Replacement (Within an Electrical Center)** , **Relay Replacement (Attached to Wire Harness)**
- **Windshield Wiper and Washer Switch Replacement**
- **Control Module References** for BCM replacement, programming and setup

DTC B3873

Diagnostic Instructions

- Perform the **Diagnostic System Check - Vehicle** prior to using this diagnostic procedure.
- Review **Strategy Based Diagnosis** for an overview of the diagnostic approach.
- **Diagnostic Procedure Instructions** provides an overview of each diagnostic category.

DTC Descriptors

DTC B3873 01

Front Washer Relay Circuit Short to Battery

DTC B3873 02

Front Washer Relay Circuit Short to Ground

DTC B3873 04

Front Washer Relay Circuit Open Circuit

Diagnostic Fault Information

Circuit	Short to Ground	Open/High Resistance	Short to Voltage	Signal Performance
Windshield Washer Switch Signal	2	1	1	-
Windshield Washer Pump Control	1	1	2	-
Windshield Washer Relay	B3873 02	B3873 04	B3873 01	-

Control				
Windshield Washer Pump Ground	-	1	-	-
1. Washer Inoperative 2. Washer Always ON				

Circuit/System Description

The body control module (BCM) controls the windshield washer pump based on an input from the windshield wiper/washer switch. The BCM monitors the washer switch through the windshield washer switch signal circuit. When the washer switch is closed, low reference is supplied to the windshield washer switch signal circuit. When this is the case, the BCM will command the windshield washer pump and the low speed wipers on.

Conditions for Running the DTC

- Ignition ON.
- The system voltage is between 9-16 V.

Conditions for Setting the DTC

- A short to ground or an open/high resistance is detected in the windshield washer relay control circuit.
- A short to voltage is detected in the windshield washer relay control circuit.

Action Taken When the DTC Sets

Washer operation is suspended.

Conditions for Clearing the DTC

A current DTC clears when the diagnostic runs and passes.

Reference Information

Schematic Reference

Wiper/Washer Schematics

Connector End View Reference

COMPONENT CONNECTOR END VIEWS - INDEX

Description and Operation

Wiper/Washer System Description and Operation

Electrical Information Reference

- **Circuit Testing**
- **Connector Repairs**
- **Testing for Intermittent Conditions and Poor Connections**
- **Wiring Repairs**

Scan Tool Reference

Control Module References for scan tool information

Circuit/System Verification

1. Ignition ON.
2. Verify the scan tool Windshield Washer Switch parameter changes between Active and Inactive when pressing and releasing the windshield washer switch.
   - **If the parameter does not change**

     Refer to Circuit/System Testing below- Windshield Wiper/Washer Switch Malfunction.

   - **If the parameter changes**
3. Verify the windshield washers turn ON when commanding the Windshield Washer Relay Active with a scan tool.
   - **If the Windshield Washers do not turn ON**

     Refer to Circuit/System Testing below- Windshield Washer Pump Malfunction

   - **If the Windshield Washers turn ON**
4. All OK.

Circuit/System Testing

Windshield Wiper/Washer Switch Malfunction

1. Ignition OFF and all vehicle systems OFF, disconnect the harness connector at the S82 Windshield Wiper/Washer Switch. It may take up to 11 min for all vehicle systems to power down.
2. Test for less than 10 ohms between the low reference circuit terminal 2 and ground.
   - **If 10 ohms or greater**
   1. Ignition OFF.
   2. Test for less than 2 ohms in the low reference circuit end to end.
      - If 2 ohms or greater, repair the open/high resistance in the circuit.
      - If less than 2 ohms, replace the K9 Body Control Module.
   - **If less than 10 ohms**
3. Ignition ON.
4. Verify the scan tool Windshield Washer Switch parameter is Inactive.

- **If not Inactive**

1. Ignition OFF, disconnect the harness connector at the K9 Body Control Module.
2. Test for infinite resistance between the signal circuit terminal 5 and ground.
   - If less than infinite resistance, repair the short to ground on the circuit.
   - If infinite resistance, replace the K9 Body Control Module.

- **If Inactive**

5. Install a 3 A fused jumper wire between the signal circuit terminal 5 and the low reference circuit terminal 2.
6. Verify the scan tool Windshield Washer Switch parameter is Active.
   - **If not Active**

   1. Ignition OFF, remove the jumper wire, disconnect the harness connector at the K9 Body Control Module, ignition ON.
   2. Test for less than 1 V between the signal circuit and ground.
      - If 1 V or greater, repair the short to voltage on the circuit.
      - If less than 1 V
   3. Test for less than 2 ohms in the signal circuit end to end.
      - If 2 ohms or greater, repair the open/high resistance in the circuit.
      - If less than 2 ohms, replace the K9 Body Control Module.

   - **If Active**

7. Test or replace the S82 Windshield Wiper/Washer Switch.

Windshield Washer Pump Malfunction

1. Ignition OFF, and all vehicle systems OFF. Disconnect the harness connector at the G24 Windshield Washer Pump. It may take up to 2 minutes for all vehicle systems to power down.
2. Test for less than 10 ohms between the ground circuit terminal 2 and ground.
   - **If 10 ohms or greater**

   1. Test for less than 2 ohms in the ground circuit end to end.
      - If 2 ohms or greater, repair the open/high resistance in the circuit.
      - If less than 2 ohms, repair the open/high resistance in the ground connection.

   - **If less than 10 ohms**

3. Connect a test lamp between the control circuit terminal 1 and the ground circuit terminal 2, ignition ON.
4. Verify the test lamp does NOT turn ON and OFF when commanding the Windshield Washer Relay Active and Inactive with a scan tool.
   - **If the test lamp turns ON and OFF**

     Test or replace the G24 Windshield Washer Pump.

   - **If the test lamp does not turn ON and OFF**

5. Ignition OFF, connect the harness connector at the G24 Windshield Washer Pump. Disconnect the X1

harness connector at the X50A Fuse Block - Underhood, It may take up to 2 minutes for all vehicle systems to power down.

6. Test for less than 10 ohms between the ground circuit terminal 74 and ground.
   - **If 10 ohms or greater**
   1. Test for less than 2 ohms in the ground circuit end to end.
      - If 2 ohms or greater, repair the open/high resistance in the circuit.
      - If less than 2 ohms, repair the open/high resistance in the ground connection.
   - **If less than 10 ohms**
7. Ignition ON.
8. Verify the G24 Windshield Washer Pump is not activated.
   - **If the G24 Windshield Washer Pump is activated**
   1. Ignition OFF, disconnect the harness connector at the G24 Windshield Washer Pump, ignition ON.
   2. Test for less than 1 V between the control circuit terminal 1 and ground.
      - If 1 V or greater, repair the short to voltage on the circuit.
      - If less than 1 V, replace the G24 Windshield Washer Pump.
   - **If the G24 Windshield Washer Pump is not activated**
9. Connect a 20 A fused jumper wire between the control circuit terminal 30 and B+.
10. Verify the G24 Windshield Washer Pump activates.
    - **If the G24 Windshield Washer Pump does not activate**
    1. Ignition OFF, remove the jumper wire, disconnect the harness connector at the G24 Windshield Washer Pump.
    2. Test for infinite resistance between the control circuit and ground.
       - If less than Infinite resistance, repair the short to ground on the circuit.
       - If infinite resistance
    3. Test for less than 2 ohms in the control circuit end to end.
       - If 2 ohms or greater, repair the open/high resistance in the circuit.
       - If less than 2 ohms, replace the G24 Windshield Washer Pump.
    - **If the G24 Windshield Washer Pump activates**
11. Ignition OFF, connect the X1 harness connector at the X50A Fuse Block - Underhood. Disconnect the X4 harness connector at the K9 Body Control Module, ignition ON.
12. Verify the G24 Windshield Washer Pump is not activated.
    - **If the G24 Windshield Washer Pump is activated**
    1. Ignition OFF, disconnect the X2 harness connector at the X50A Fuse Block - Underhood, ignition ON.
    2. Test for less than 1 V between the control circuit terminal 60 and ground.
       - If 1 V or greater, repair the short to voltage on the circuit.
       - If less than 1 V, replace the X50A Fuse Block - Underhood.
    - **If the G24 Windshield Washer Pump is not activated**
13. Connect a 10 A fused jumper wire between the control circuit terminal 14 and B+.

14. Verify the G24 Windshield Washer Pump activates.
    - **If the G24 Windshield Washer Pump does not activate**
    1. Ignition OFF, remove the jumper wire, disconnect the X2 harness connector at the X50A Fuse Block - Underhood.
    2. Test for infinite resistance between the control circuit terminal 60 and ground.
        - If less than infinite resistance, repair the short to ground on the circuit.
        - If less than infinite resistance
    3. Test for less than 2 ohms in the control circuit end to end.
        - If 2 ohms or greater, repair the open/high resistance in the circuit.
        - If less than 2 ohms, test or replace the X50A Fuse Block - Underhood.
    - **If the G24 Windshield Washer Pump activates**
15. Replace the K9 Body Control Module.

Component Testing

Windshield Wiper/Washer Switch

1. Ignition OFF, disconnect the harness connector at the S82 Windshield Wiper/Washer Switch.
2. Test for infinite resistance between the signal terminal 5 and the low reference terminal 2 with the switch in the open position.
    - **If less than infinite resistance**

      Replace the S82 Windshield Wiper/Washer Switch.

    - **If infinite resistance**
3. Test for less than 2 ohms between the signal circuit terminal 5 and the low reference circuit terminal 2 with the switch in the closed position.
    - **If 2 ohms or greater**

      Replace the S82 Windshield Wiper/Washer Switch.

    - **If less than 2 ohms**
4. All OK

Repair Instructions

Perform the **Diagnostic Repair Verification** after completing the repair.

- **Front Compartment Fuse Block Replacement**
- **Windshield Washer Pump Replacement**
- **Windshield Wiper and Washer Switch Replacement**
- **Control Module References** for BCM and instrument cluster replacement and programming and setup

SYMPTOMS - WIPER/WASHER SYSTEMS

NOTE: The following steps must be completed before using the symptom tables:

1. Perform **Diagnostic System Check - Vehicle** , in order to verify that all of the following conditions are true:
   - No DTCs are set.
   - The control modules can communicate via the serial data link.
2. Refer to **Wiper/Washer System Description and Operation** in order to familiarize yourself with the system functions.

Visual/Physical Inspection

- Inspect for aftermarket devices which may affect the operation of the windshield wiper/washer system. Refer to **Checking Aftermarket Accessories** .
- Inspect the easily accessible or visible system components for obvious damage or conditions which may cause the symptom.
- Inspect the washer fluid reservoir for the proper fluid level.

Intermittent

Faulty electrical connections or wiring may be the cause of intermittent conditions. Refer to **Testing for Intermittent Conditions and Poor Connections** .

Symptom List

Refer to a symptom diagnostic procedure from the following list in order to diagnose the symptom:

- **Windshield Wiper System Malfunction**
- **Washer Malfunction**

WINDSHIELD WIPER SYSTEM MALFUNCTION

Diagnostic Instructions

- Perform the **Diagnostic System Check - Vehicle** prior to using this diagnostic procedure.
- Review **Strategy Based Diagnosis** for an overview of the diagnostic approach.
- **Diagnostic Procedure Instructions** provides an overview of each diagnostic category.

DTC Descriptors

DTC B3715 01

Windshield Wiper Relay Circuit Short to Battery

DTC B3715 02

Windshield Wiper Relay Circuit Short to Ground

DTC B3715 04

Windshield Wiper Relay Circuit Open

DTC B3875 01

Windshield Wiper High Speed Relay Circuit Short to Battery

DTC B3875 02

Windshield Wiper High Speed Relay Circuit Short to Ground

DTC B3875 04

Windshield Wiper High Speed Relay Circuit Open

Diagnostic Fault Information

Circuit	Short to Ground	Open/High Resistance	Short to Voltage	Signal Performance
Windshield Wiper Switch Low Signal terminal 3	1	1	1	-
Windshield Wiper Switch High Signal terminal 1	4	2	2	-
Windshield Wiper Motor Park Switch Signal terminal A	3	3	-	-
Front Wiper Relay Control terminal 86	B3715 02	B3715 04	B3715 01	-
Windshield Wiper High Speed Relay Control terminal 86	B3875 02	B3875 04	B3875 01	-
Front Wiper Motor Low Speed Control terminal B	1	1	4	-
Windshield Wiper Switch Low Reference terminal 2	-	1, 2	1, 2	-
Windshield Wiper Motor Ground terminal C	-	1, 2, 3	-	-
Windshield Wiper Relay Ground terminal 85	-	1	-	-
1. Delay or Low Speed Wipers Inoperative 2. High Speed Wipers Inoperative				

3. Wipers Do Not Park
4. Wipers Always ON

Circuit/System Description

The body control module (BCM) controls the wiper motor based on input from the windshield wiper/washer switch. The BCM monitors the wiper/washer switch through two separate signal circuits and a low reference circuit. The windshield wiper switch high signal circuit is used to determine high speed wiper operation, the windshield wiper switch low signal is used to determine low speed, intermittent, and mist operation through the use of a resistor ladder, and the windshield washer switch signal circuit is used to determine washer operation.

The BCM controls the windshield wiper motor through two output controls, controlling two relays which determine the desired wiper speed, high or low.

Conditions for Running the DTC

- The DTC runs only when a wiper output is actively being requested by the BCM.
- The system voltage is between 9-16 V.

Conditions for Setting the DTC

- A short to ground is detected in the Front Wiper Relay control circuit or in the High Speed Relay control circuit.
- A short to voltage or an open/high resistance is detected in the Front Wiper Relay control circuit or in the High Speed Relay control circuit.

Action Taken When the DTC Sets

The BCM will not activate the wiper output.

Conditions for Clearing the DTC

- A current DTC will clear when the condition for setting the fault is no longer present.
- A history DTC will clear after 50 consecutive ignition cycles without a fault present.

Reference Information

Schematic Reference

Wiper/Washer Schematics

Connector End View Reference

COMPONENT CONNECTOR END VIEWS - INDEX

Description and Operation

Wiper/Washer System Description and Operation

Electrical Information Reference

- **Circuit Testing**
- **Connector Repairs**
- **Testing for Intermittent Conditions and Poor Connections**
- **Wiring Repairs**

Scan Tool Reference

Control Module References for scan tool information

Circuit/System Verification

1. Ignition ON.
2. Verify the scan tool Windshield Wiper High Speed Switch parameter changes between Active and Inactive when activating the high speed windshield wipers.
   - **If the parameter does not change**

     Refer to Circuit/System Testing below- Windshield Wiper/Washer Switch Malfunction.

   - **If the parameter changes**
3. Verify the scan tool Windshield Wiper Switch parameter changes between Off and Low when activating the low speed windshield wipers.
   - **If the parameter does not change**

     Refer to Circuit/System Testing below- Windshield Wiper/Washer Switch Malfunction.

   - **If the parameter changes**
4. Verify the scan tool Windshield Wiper Switch parameter changes between Delay 1 and Delay 5 when cycling the intermittent speed windshield wipers.
   - **If the parameter does not change**

     Test or replace the S82 Windsheild Wiper/Washer Switch.

   - **If the parameter changes**
5. Verify the M75 Windshield Wiper Motor changes between Off, Low, and High when cycling the S82 Windshield Wiper/Washer Switch between Off, Low, and High.
   - **If the Windshield Wiper Motor does not cycle between Off, Low, and High**

     Refer to Circuit/System Testing below- Windshield Wiper Motor Malfunction

   - **If the Windshield Wiper Motor cycles between Off, Low, and High**

6. Ignition OFF.
7. Verify the scan tool Windshield Wiper Park Switch parameter is Active.
    - **If the parameter does not change**

      Refer to Circuit/System Testing below- Windshield Wiper Motor Malfunction.

    - **If the parameter changes**
8. All OK.

Circuit/System Testing

Windshield Wiper/Washer Switch Malfunction

1. Ignition OFF and all vehicle systems OFF, disconnect the harness connector at the S82 Windshield Wiper/Washer Switch. It may take up to 11 min for all vehicle systems to power down.
2. Test for less than 10 ohms between the low reference circuit terminal 2 and ground.
    - **If 10 ohms or greater**
    1. Ignition OFF, disconnect the harness connector at the K9 Body Control Module.
    2. Test for less than 2 ohms in the low reference circuit end to end.
        - If 2 ohms or greater, repair the open/high resistance in the circuit.
        - If less than 2 ohms, replace the K9 Body Control Module.
    - **If less than 10 ohms**
3. Ignition ON.
4. Verify the scan tool Windshield Wiper High Speed Switch parameter is Inactive.
    - **If not Inactive**
    1. Ignition OFF, disconnect the harness connector at the K9 Body Control Module.
    2. Test for infinite resistance between the signal circuit terminal 1 and ground.
        - If less than infinite resistance, repair the short to ground on the circuit.
        - If infinite resistance, replace the K9 Body Control Module.
    - **If Inactive**
5. Install a 3 A fused jumper wire between the signal circuit terminal 1 and the low reference circuit terminal 2.
6. Verify the scan tool Windshield Wiper High Speed Switch parameter is Active.
    - **If not Active**
    1. Ignition OFF, remove the jumper wire, disconnect the harness connector at the K9 Body Control Module, ignition ON.
    2. Test for less than 1 V between the signal circuit and ground.
        - If 1 V or greater, repair the short to voltage on the circuit.
        - If less than 1 V
    3. Test for less than 2 ohms in the signal circuit end to end.

- If 2 ohms or greater, repair the open/high resistance in the circuit.
- If less than 2 ohms, replace the K9 Body Control Module.

- **If Active**

7. Test for greater than 8 V between the signal circuit terminal 3 and ground.
   - **If less than 8 V**
   1. Ignition OFF, disconnect the harness connector at the K9 Body Control Module.
   2. Test for infinite resistance between the signal circuit and ground
      - If less than infinite resistance, repair the short to ground on the circuit.
      - If infinite resistance
   3. Test for less than 2 ohms in the signal circuit end to end.
      - If 2 ohms or greater, repair the open/high resistance in the circuit.
      - If less than 2 ohms, replace the K9 Body Control Module.
   - **If 8 V or greater**
8. Ignition OFF, disconnect the X3 harness connector at the K9 Body Control Module, ignition ON.
9. Test for less than 1 V between the S82 Windshield Wiper/Washer Switch signal circuit terminal 3 and ground.
   - **If 1 V or greater**

     Repair the short to voltage on the circuit.

   - **If less than 1 V**
10. Test or replace the S82 Windshield Wiper/Washer Switch.

Windshield Wiper Motor Malfunction

1. Ignition OFF and all vehicle systems OFF, disconnect the harness connector at the M75 Windshield Wiper Motor. It may take up to 2 min for all vehicle systems to power down.
2. Test for less than 10 ohms between the ground circuit terminal C and ground.
   - **If 10 ohms or greater**
   1. Ignition OFF.
   2. Test for less than 2 ohms in the ground circuit end to end.
      - If 2 ohms or greater, repair the open/high resistance in the circuit.
      - If less than 2 ohms, repair the open/high resistance in the ground connection.
   - **If less than 10 ohms**
3. Ignition ON.
4. Verify the scan tool Windshield Wiper Park Switch parameter is Inactive.
   - **If not Inactive**
   1. Ignition OFF, disconnect the harness connector at the K9 Body Control Module.
   2. Test for infinite resistance between the signal circuit terminal A and ground.
      - If less than infinite resistance, repair the short to ground on the circuit.

- If infinite resistance, replace the K9 Body Control Module.

- **If Inactive**

5. Install a 3 A fused jumper wire between the signal circuit terminal A and the ground circuit terminal C.
6. Verify the scan tool Windshield Wiper Park Switch parameter is Active.
   - **If not Active**
   1. Ignition OFF, remove the jumper wire, disconnect the harness connector at the K9 Body Control Module, ignition ON.
   2. Test for less than 1 V between the signal circuit and ground.
      - If 1 V or greater, repair the short to voltage on the circuit.
      - If less than 1 V
   3. Test for less than 2 ohms in the signal circuit end to end.
      - If 2 ohms or greater, repair the open/high resistance in the circuit.
      - If less than 2 ohms, replace the K9 Body Control Module.
   - **If Active**
7. Ignition OFF and all vehicle systems OFF, disconnect the KR12B Windshield Wiper Relay. It may take up to 2 min for all vehicle systems to power down.
8. Test for less than 10 ohms between each ground circuit terminal listed below and ground:
   - Terminal 85
   - Terminal 87A
   - **If 10 ohms or greater**
   1. Ignition OFF.
   2. Test for less than 2 ohms in the ground circuit end to end.
      - If 2 ohms or greater, repair the open/high resistance in the circuit.
      - If less than 2 ohms, repair the open/high resistance in the ground connection.
   - **If less than 10 ohms**
9. Ignition ON.
10. Verify a test lamp illuminates between the B+ circuit terminal 87 and the ground circuit terminal 87A.
    - **If the test lamp does not illuminate and the circuit fuse is good**

      Replace the X50A Fuse Block - Underhood.

    - **If the test lamp does not illuminate and the circuit fuse is open**
    1. Ignition OFF, remove the test lamp. Disconnect the KR12C Windshield Wiper Speed Control Relay.
    2. Test for infinite resistance between each control circuit listed below and ground:
       - Terminal 87A
       - Terminal 87
       - If less than infinite resistance, repair the short to ground on the circuit.
       - If infinite resistance, replace the M75 Windshield Wiper Motor

- **If the test lamp illuminates**

11. Connect a test lamp between the control circuit terminal 86 and the ground circuit terminal 85.
12. Verify the test lamp turns ON and OFF when commanding the Windshield Wiper Motor Relay Low and Off with a scan tool.
    - **If the test lamp is always OFF**
    1. Ignition OFF, remove the test lamp, disconnect the harness connector at the K9 Body Control Module.
    2. Test for infinite resistance between the control circuit and ground.
        - If less than infinite resistance, repair the short to ground on the circuit.
        - If infinite resistance
    3. Test for less than 2 ohms in the control circuit end to end.
        - If 2 ohms or greater, repair the open/high resistance in the circuit.
        - If less than 2 ohms, replace the K9 Body Control Module.
    - **If the test lamp is always ON**
    1. Ignition OFF, remove the test lamp, disconnect the harness connector at the K9 Body Control Module, ignition ON.
    2. Test for less than 1 V between the control circuit and ground.
        - If 1 V or greater, repair the short to voltage on the circuit.
        - If less than 1 V, replace the K9 Body Control Module.
    - **If the test lamp turns ON and OFF**
13. Ignition OFF, connect the KR12B Windshield Wiper Relay and disconnect the KR12C Windshield Wiper Speed Control Relay, ignition ON.
14. Test for less than 10 ohms between the control circuit terminal 30 and ground.
    - **If 10 ohms or greater**

      Test or replace the KR12B Windshield Wiper Relay.

    - **If less than 10 ohms**
15. Connect a test lamp between the control circuit terminal 30 and ground.
16. Verify the test lamp turns ON and OFF when commanding the Windshield Wiper Motor Relay Low and Off with a scan tool.
    - **If the test lamp does not turn ON and OFF**

      Test or replace the KR12B Windshield Wiper Relay.

    - **If the test lamp turns ON and OFF**
17. Verify a test lamp illuminates between the B+ circuit terminal 85 and ground.
    - **If the test lamp does not illuminate**

      Replace the X50A Fuse Block - Underhood.

- **If the test lamp illuminates**

18. Connect a test lamp between the B+ circuit terminal 85 and the control circuit terminal 86.
19. Verify the test lamp turns ON and OFF when commanding the Windshield Wiper High Speed Relay High and Off with a scan tool.
    - **If the test lamp is always OFF**
    1. Ignition OFF, remove the test lamp, disconnect the harness connector at the K9 Body Control Module, ignition ON.
    2. Test for less than 1 V between the control circuit and ground.
        - If 1 V or greater, repair the short to voltage on the circuit.
        - If less than 1 V
    3. Ignition OFF.
    4. Test for less than 2 ohms in the control circuit end to end.
        - If 2 ohms or greater, repair the open/high resistance in the circuit.
        - If less than 2 ohms, replace the K9 Body Control Module.
    - **If the test lamp is always ON**
    1. Ignition OFF, remove the test lamp, disconnect the harness connector at the K9 Body Control Module.
    2. Test for infinite resistance between the control circuit and ground.
        - If less than infinite resistance, repair the short to ground on the circuit.
        - If infinite resistance, replace the K9 Body Control Module.
    - **If the test lamp turns ON and OFF**
20. Ignition OFF, connect the KR12C Windshield Wiper Speed Control Relay.
21. Connect a test lamp between the M75 Windshield Wiper Motor control circuit terminal B and ground circuit terminal C, ignition ON.
22. Verify the test lamp turns ON and OFF when commanding the Windshield Wiper Motor Relay Low and Off with a scan tool.
    - **If the test lamp is always OFF**
    1. Ignition OFF, remove the test lamp, disconnect the KR12C Windshield Wiper Speed Control Relay.
    2. Test for infinite resistance between the control circuit and ground.
        - If less than infinite resistance, repair the short to ground on the circuit.
        - If infinite resistance
    3. Test for less than 2 ohms in the control circuit end to end.
        - If 2 ohms or greater, repair the open/high resistance in the circuit.
        - If less than 2 ohms, test or replace the KR12C Windshield Wiper Speed Control Relay.
    - **If the test lamp is always ON**
    1. Ignition OFF, remove the test lamp, disconnect the KR12C Windshield Wiper Speed Control Relay, ignition ON.
    2. Test for less than 1 V between the control circuit and ground.

- If 1 V or greater, repair the short to voltage on the circuit.
- If less than 1 V, test or replace the KR12C Windshield Wiper Speed Control Relay.

- **If the test lamp turns ON and OFF**

23. Connect a test lamp between the M75 Windshield Wiper Motor control circuit terminal D and ground circuit terminal C, ignition ON.
24. Verify the test lamp turns ON and OFF when commanding the Windshield Wiper High Speed Relay High and Off with a scan tool.
    - **If the test lamp is always OFF**
    1. Ignition OFF, remove the test lamp, disconnect the KR12C Windshield Wiper Speed Control Relay.
    2. Test for infinite resistance between the control circuit and ground.
        - If less than infinite resistance, repair the short to ground on the circuit.
        - If infinite resistance
    3. Test for less than 2 ohms in the control circuit end to end.
        - If 2 ohms or greater, repair the open/high resistance in the circuit.
        - If less than 2 ohms, test or replace the KR12C Windshield Wiper Speed Control Relay.
    - **If the test lamp is always ON**
    1. Ignition OFF, remove the test lamp, disconnect the KR12C Windshield Wiper Speed Control Relay, ignition ON.
    2. Test for less than 1 V between the control circuit and ground.
        - If 1 V or greater, repair the short to voltage on the circuit.
        - If less than 1 V, test or replace the KR12C Windshield Wiper Speed Control Relay.
    - **If the test lamp turns ON and OFF**
25. Test or replace the M75 Windshield Wiper Motor.

Component Testing

Windshield Wiper/Washer Switch

1. Ignition OFF, disconnect the harness connector at the S82 Windshield Wiper/Washer Switch.
2. Test for infinite resistance between the signal terminal 1 and the low reference terminal 2 with the high speed switch in the open position.
    - **If less than infinite resistance**

      Replace the S82 Windshield Wiper/Washer Switch.

    - **If infinite resistance**
3. Test for less than 2 ohms between the signal circuit terminal 1 and the low reference circuit terminal 2 with the high speed switch in the closed position.
    - **If 2 ohms or greater**

Replace the S82 Windshield Wiper/Washer Switch.

- **If less than 2 ohms**

4. Test for infinite resistance between the signal terminal 3 and the low reference terminal 2 with the low speed switch in the open position.
   - **If less than infinite resistance**

     Replace the S82 Windshield Wiper/Washer Switch.

   - **If infinite resistance**
5. Verify the resistance readings are within the specified range listed below between the signal circuit terminal 3 and the low reference circuit terminal 1 by pushing the switch in the listed positions below:
   - Delay 1 : 3.75-3.85kohms
   - Delay 2 : 2.75-2.85kohms
   - Delay 3 : 1.95-2.05kohms
   - Delay 4 : 1.25-1.35kohms
   - Delay 5 : 765-775ohms
   - **If not within the specified range**

     Replace the S82 Windshield Wiper/Washer Switch.

   - **If within the specified range**
6. All OK

Relay Test

1. Ignition OFF, disconnect the appropriate relay.
2. Test for 60-200 ohms between terminals 85 and 86.
   - **If less than 60 or greater than 200**

     Replace the relay.

   - **If between 60-200 ohms**
3. Test for infinite resistance between the terminals listed below:
   - 30 and 86
   - 30 and 87
   - 30 and 85
   - 85 and 87
   - **If less than infinite resistance**

     Replace the relay.

   - **If infinite resistance**

4. Test for less than 5 ohms between terminals 30 and 87A.
   - **If 5 ohms or greater**

     Replace the relay.

   - **If less than 5 ohms**
5. Install a 10 A fused jumper wire between relay terminal 85 and 12 V. Install a jumper wire between relay terminal 86 and ground.
6. Test for less than 5 ohms between terminals 30 and 87.
   - **If 5 ohms or greater**

     Replace the relay.

   - **If less than 5 ohms**
7. All OK

Repair Instructions

Perform the **Diagnostic Repair Verification** after completing the repair.

- **Windshield Wiper Motor Replacement**
- **Relay Replacement (Within an Electrical Center)** , **Relay Replacement (Attached to Wire Harness)**
- **Windshield Wiper and Washer Switch Replacement**
- **Control Module References** for BCM replacement, programming and setup

WASHER MALFUNCTION

Diagnostic Instructions

- Perform the **Diagnostic System Check - Vehicle** prior to using this diagnostic procedure.
- Review **Strategy Based Diagnosis** for an overview of the diagnostic approach.
- **Diagnostic Procedure Instructions** provides an overview of each diagnostic category.

DTC Descriptors

DTC B3873 01

Front Washer Relay Circuit Short to Battery

DTC B3873 02

Front Washer Relay Circuit Short to Ground

DTC B3873 04

Front Washer Relay Circuit Open Circuit

Diagnostic Fault Information

Circuit	Short to Ground	Open/High Resistance	Short to Voltage	Signal Performance
Windshield Washer Switch Signal	2	1	1	-
Windshield Washer Pump Control	1	1	2	-
Windshield Washer Relay Control	B3873 02	B3873 04	B3873 01	-
Windshield Washer Pump Ground	-	1	-	-
1. Washer Inoperative 2. Washer Always ON				

Circuit/System Description

The body control module (BCM) controls the windshield washer pump based on an input from the windshield wiper/washer switch. The BCM monitors the washer switch through the windshield washer switch signal circuit. When the washer switch is closed, low reference is supplied to the windshield washer switch signal circuit. When this is the case, the BCM will command the windshield washer pump and the low speed wipers on.

Conditions for Running the DTC

- Ignition ON.
- The system voltage is between 9-16 V.

Conditions for Setting the DTC

- A short to ground or an open/high resistance is detected in the windshield washer relay control circuit.
- A short to voltage is detected in the windshield washer relay control circuit.

Action Taken When the DTC Sets

Washer operation is suspended.

Conditions for Clearing the DTC

A current DTC clears when the diagnostic runs and passes.

Reference Information

Schematic Reference

Wiper/Washer Schematics

Connector End View Reference

COMPONENT CONNECTOR END VIEWS - INDEX

Description and Operation

Wiper/Washer System Description and Operation

Electrical Information Reference

- **Circuit Testing**
- **Connector Repairs**
- **Testing for Intermittent Conditions and Poor Connections**
- **Wiring Repairs**

Scan Tool Reference

Control Module References for scan tool information

Circuit/System Verification

1. Ignition ON.
2. Verify the scan tool Windshield Washer Switch parameter changes between Active and Inactive when pressing and releasing the windshield washer switch.
    - **If the parameter does not change**

      Refer to Circuit/System Testing below- Windshield Wiper/Washer Switch Malfunction.

    - **If the parameter changes**
3. Verify the windshield washers turn ON when commanding the Windshield Washer Relay Active with a scan tool.
    - **If the Windshield Washers do not turn ON**

      Refer to Circuit/System Testing below- Windshield Washer Pump Malfunction

    - **If the Windshield Washers turn ON**
4. All OK.

Circuit/System Testing

Windshield Wiper/Washer Switch Malfunction

1. Ignition OFF and all vehicle systems OFF, disconnect the harness connector at the S82 Windshield

Wiper/Washer Switch. It may take up to 11 min for all vehicle systems to power down.

2. Test for less than 10 ohms between the low reference circuit terminal 2 and ground.
    - **If 10 ohms or greater**
    1. Ignition OFF.
    2. Test for less than 2 ohms in the low reference circuit end to end.
        - If 2 ohms or greater, repair the open/high resistance in the circuit.
        - If less than 2 ohms, replace the K9 Body Control Module.
    - **If less than 10 ohms**
3. Ignition ON.
4. Verify the scan tool Windshield Washer Switch parameter is Inactive.
    - **If not Inactive**
    1. Ignition OFF, disconnect the harness connector at the K9 Body Control Module.
    2. Test for infinite resistance between the signal circuit terminal 5 and ground.
        - If less than infinite resistance, repair the short to ground on the circuit.
        - If infinite resistance, replace the K9 Body Control Module.
    - **If Inactive**
5. Install a 3 A fused jumper wire between the signal circuit terminal 5 and the low reference circuit terminal 2.
6. Verify the scan tool Windshield Washer Switch parameter is Active.
    - **If not Active**
    1. Ignition OFF, remove the jumper wire, disconnect the harness connector at the K9 Body Control Module, ignition ON.
    2. Test for less than 1 V between the signal circuit and ground.
        - If 1 V or greater, repair the short to voltage on the circuit.
        - If less than 1 V
    3. Test for less than 2 ohms in the signal circuit end to end.
        - If 2 ohms or greater, repair the open/high resistance in the circuit.
        - If less than 2 ohms, replace the K9 Body Control Module.
    - **If Active**
7. Test or replace the S82 Windshield Wiper/Washer Switch.

Windshield Washer Pump Malfunction

1. Ignition OFF, and all vehicle systems OFF. Disconnect the harness connector at the G24 Windshield Washer Pump. It may take up to 2 minutes for all vehicle systems to power down.
2. Test for less than 10 ohms between the ground circuit terminal 2 and ground.
    - **If 10 ohms or greater**
    1. Test for less than 2 ohms in the ground circuit end to end.
        - If 2 ohms or greater, repair the open/high resistance in the circuit.

- If less than 2 ohms, repair the open/high resistance in the ground connection.
- **If less than 10 ohms**

3. Connect a test lamp between the control circuit terminal 1 and the ground circuit terminal 2, ignition ON.
4. Verify the test lamp does NOT turn ON and OFF when commanding the Windshield Washer Relay Active and Inactive with a scan tool.
   - **If the test lamp turns ON and OFF**

     Test or replace the G24 Windshield Washer Pump.

   - **If the test lamp does not turn ON and OFF**
5. Ignition OFF, connect the harness connector at the G24 Windshield Washer Pump. Disconnect the X1 harness connector at the X50A Fuse Block - Underhood, It may take up to 2 minutes for all vehicle systems to power down.
6. Test for less than 10 ohms between the ground circuit terminal 74 and ground.
   - **If 10 ohms or greater**
   1. Test for less than 2 ohms in the ground circuit end to end.
      - If 2 ohms or greater, repair the open/high resistance in the circuit.
      - If less than 2 ohms, repair the open/high resistance in the ground connection.
   - **If less than 10 ohms**
7. Ignition ON.
8. Verify the G24 Windshield Washer Pump is not activated.
   - **If the G24 Windshield Washer Pump is activated**
   1. Ignition OFF, disconnect the harness connector at the G24 Windshield Washer Pump, ignition ON.
   2. Test for less than 1 V between the control circuit terminal 1 and ground.
      - If 1 V or greater, repair the short to voltage on the circuit.
      - If less than 1 V, replace the G24 Windshield Washer Pump.
   - **If the G24 Windshield Washer Pump is not activated**
9. Connect a 20 A fused jumper wire between the control circuit terminal 30 and B+.
10. Verify the G24 Windshield Washer Pump activates.
    - **If the G24 Windshield Washer Pump does not activate**
    1. Ignition OFF, remove the jumper wire, disconnect the harness connector at the G24 Windshield Washer Pump.
    2. Test for infinite resistance between the control circuit and ground.
       - If less than Infinite resistance, repair the short to ground on the circuit.
       - If infinite resistance
    3. Test for less than 2 ohms in the control circuit end to end.
       - If 2 ohms or greater, repair the open/high resistance in the circuit.
       - If less than 2 ohms, replace the G24 Windshield Washer Pump.
    - **If the G24 Windshield Washer Pump activates**

11. Ignition OFF, connect the X1 harness connector at the X50A Fuse Block - Underhood. Disconnect the X4 harness connector at the K9 Body Control Module, ignition ON.
12. Verify the G24 Windshield Washer Pump is not activated.
    - **If the G24 Windshield Washer Pump is activated**
    1. Ignition OFF, disconnect the X2 harness connector at the X50A Fuse Block - Underhood, ignition ON.
    2. Test for less than 1 V between the control circuit terminal 60 and ground.
        - If 1 V or greater, repair the short to voltage on the circuit.
        - If less than 1 V, replace the X50A Fuse Block - Underhood.
    - **If the G24 Windshield Washer Pump is not activated**
13. Connect a 10 A fused jumper wire between the control circuit terminal 14 and B+.
14. Verify the G24 Windshield Washer Pump activates.
    - **If the G24 Windshield Washer Pump does not activate**
    1. Ignition OFF, remove the jumper wire, disconnect the X2 harness connector at the X50A Fuse Block - Underhood.
    2. Test for infinite resistance between the control circuit terminal 60 and ground.
        - If less than infinite resistance, repair the short to ground on the circuit.
        - If less than infinite resistance
    3. Test for less than 2 ohms in the control circuit end to end.
        - If 2 ohms or greater, repair the open/high resistance in the circuit.
        - If less than 2 ohms, test or replace the X50A Fuse Block - Underhood.
    - **If the G24 Windshield Washer Pump activates**
15. Replace the K9 Body Control Module.

Component Testing

Windshield Wiper/Washer Switch

1. Ignition OFF, disconnect the harness connector at the S82 Windshield Wiper/Washer Switch.
2. Test for infinite resistance between the signal terminal 5 and the low reference terminal 2 with the switch in the open position.
    - **If less than infinite resistance**

      Replace the S82 Windshield Wiper/Washer Switch.

    - **If infinite resistance**
3. Test for less than 2 ohms between the signal circuit terminal 5 and the low reference circuit terminal 2 with the switch in the closed position.
    - **If 2 ohms or greater**

      Replace the S82 Windshield Wiper/Washer Switch.

- **If less than 2 ohms**

4. All OK

Repair Instructions

Perform the **Diagnostic Repair Verification** after completing the repair.

- **Front Compartment Fuse Block Replacement**
- **Windshield Washer Pump Replacement**
- **Windshield Wiper and Washer Switch Replacement**
- **Control Module References** for BCM and instrument cluster replacement and programming and setup

REPAIR INSTRUCTIONS

WINDSHIELD WIPER AND WASHER SWITCH REPLACEMENT

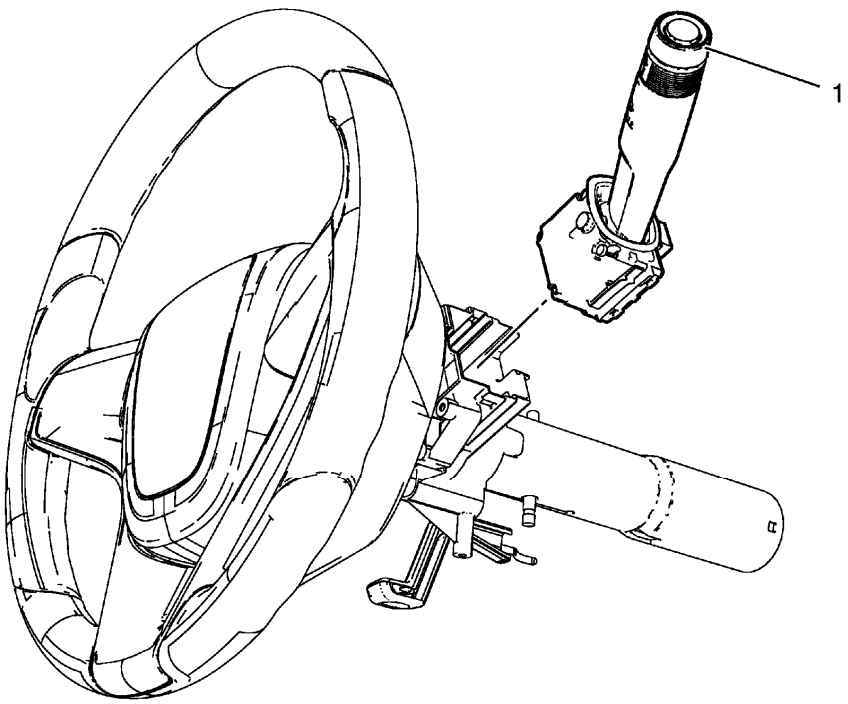

Fig. 3: Windshield Wiper And Washer Switch
Courtesy of GENERAL MOTORS COMPANY

Windshield Wiper and Washer Switch Replacement

Callout	Component Name
Preliminary Procedure Remove the steering column trim covers. Refer to **Steering Column Lower Trim Cover Replacement** .	
	Windshield Wiper and Washer Switch

1	**Procedure** 1. Disconnect any electrical connectors as needed. 2. Release the plastic retaining tabs to remove the windshield wiper and washer switch.

WINDSHIELD WASHER NOZZLE HOSE REPLACEMENT

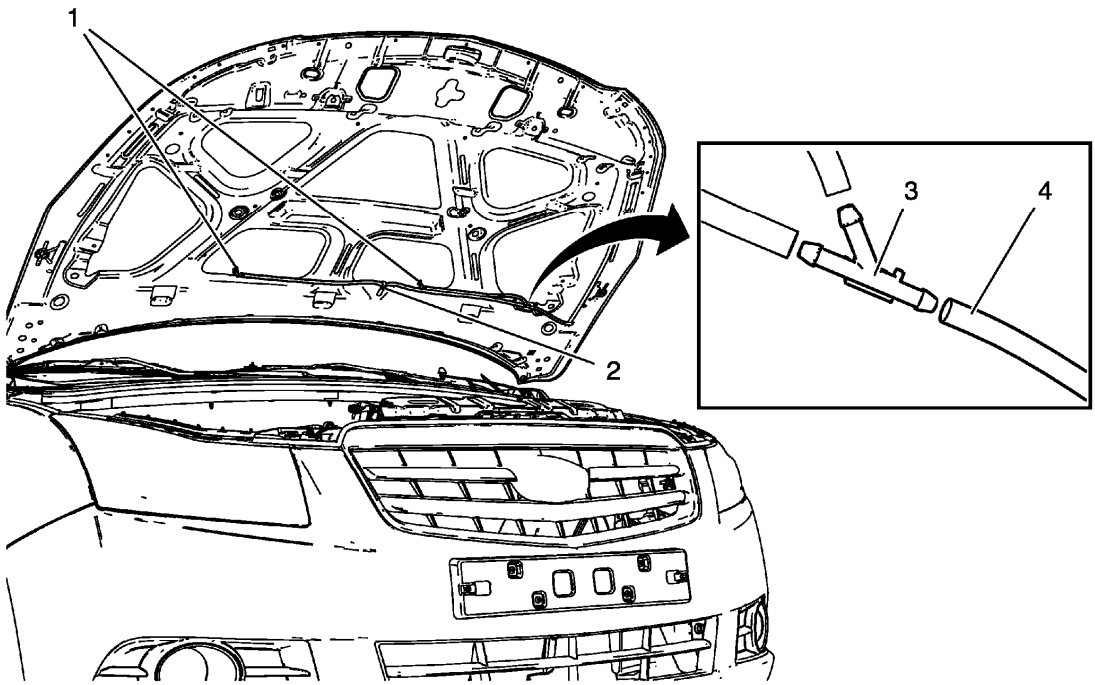

Fig. 4: Windshield Washer Nozzle Hose, Pump Hose, Hose Connector And Hose Retainer
Courtesy of GENERAL MOTORS COMPANY

Windshield Washer Nozzle Hose Replacement

Callout	Component Name
Preliminary Procedure 1. Remove the hood insulator. Refer to **Hood Insulator Replacement** . 2. Place a clean container under the front driver side near where the windshield washer nozzle and windshield washer pump hose will be disconnected. 3. Recover all lost windshield washer solvent.	
1	Windshield Washer Nozzle Hose **Procedure** Disconnect the washer hose from both hood mounted washer nozzles.

2	Windshield Washer Hose Retainer to Hood Hinge
3	Windshield Washer Nozzle Hose Integral Connector **Procedure** Disconnect the hoses in order to remove the windshield washer nozzle hose.
4	Windshield Washer Pump Hose

WINDSHIELD WASHER NOZZLE REPLACEMENT

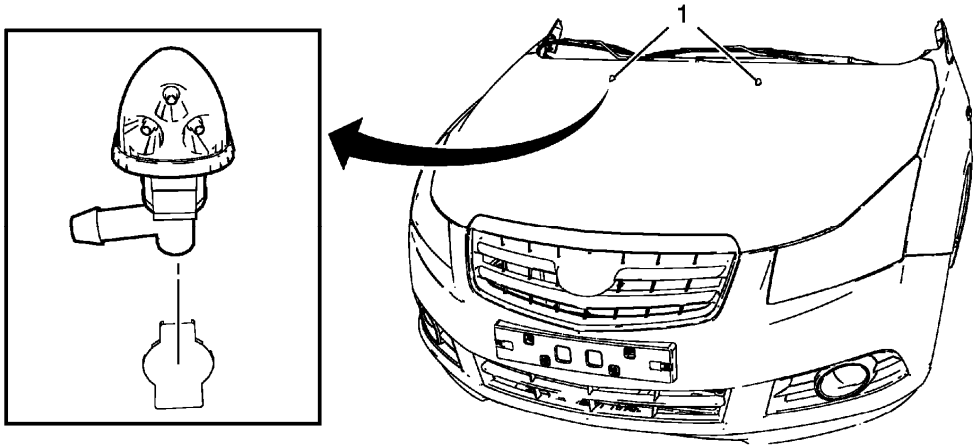

Fig. 5: Windshield Washer Nozzle
Courtesy of GENERAL MOTORS COMPANY

Windshield Washer Nozzle Replacement

Callout	Component Name
Preliminary Procedures 1. Disconnect the washer hose from the washer nozzles. 2. Remove the hood insulator. Refer to **Hood Insulator Replacement** .	
1	Windshield Washer Nozzle Assembly **Procedure** Pinch the washer nozzle from the bottom side in order to release the nozzle and push the nozzle outboard from the hood to remove.

WINDSHIELD WASHER SOLVENT CONTAINER FILLER TUBE REPLACEMENT

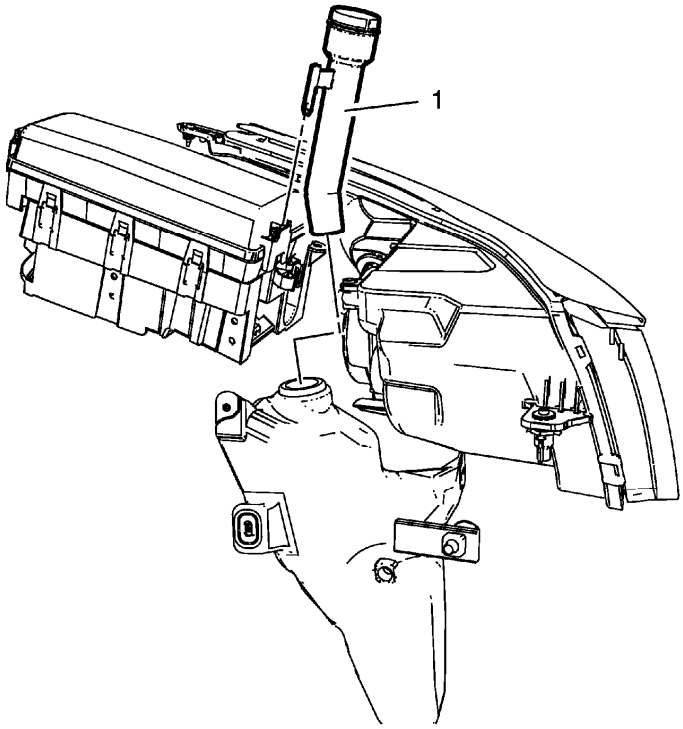

Fig. 6: Windshield Washer Solvent Container Filler Tube
Courtesy of GENERAL MOTORS COMPANY

Windshield Washer Solvent Container Filler Tube Replacement

Callout	Component Name
1	Windshield Washer Solvent Container Filler Tube Assembly **Procedure** 1. Pull the upper tube assembly from the lower washer container and inspect the grommet, replace if damaged. 2. Insert the tube rib flush to the top seal at the lower container.

WINDSHIELD WASHER SOLVENT CONTAINER GROMMET REPLACEMENT

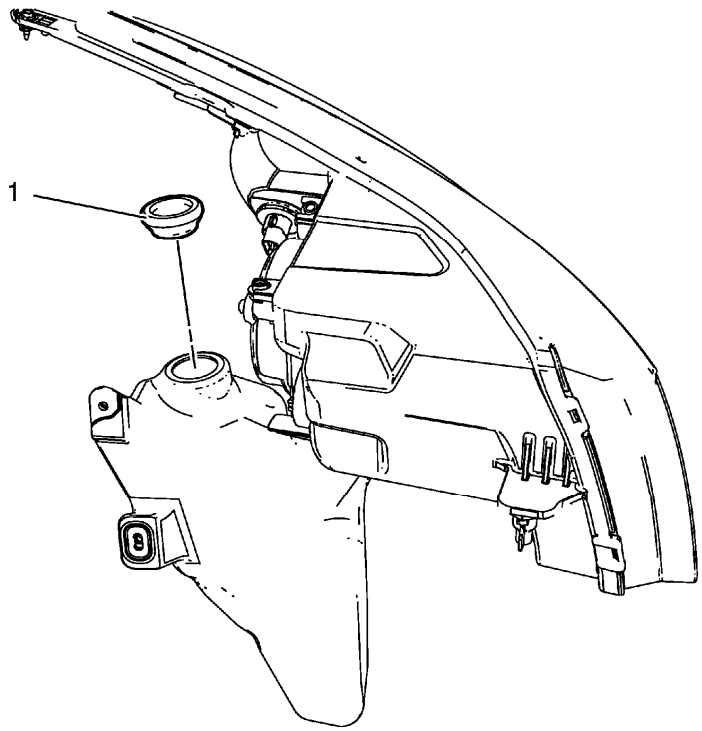

Fig. 7: Windshield Washer Solvent Container Grommet
Courtesy of GENERAL MOTORS COMPANY

Windshield Washer Solvent Container Grommet Replacement

Callout	Component Name
Preliminary Procedure Remove the windshield washer solvent container filler tube assembly. Refer to **Windshield Washer Solvent Container Filler Tube Replacement**.	
1	Windshield Washer Solvent Container Grommet

WINDSHIELD WASHER SOLVENT CONTAINER REPLACEMENT

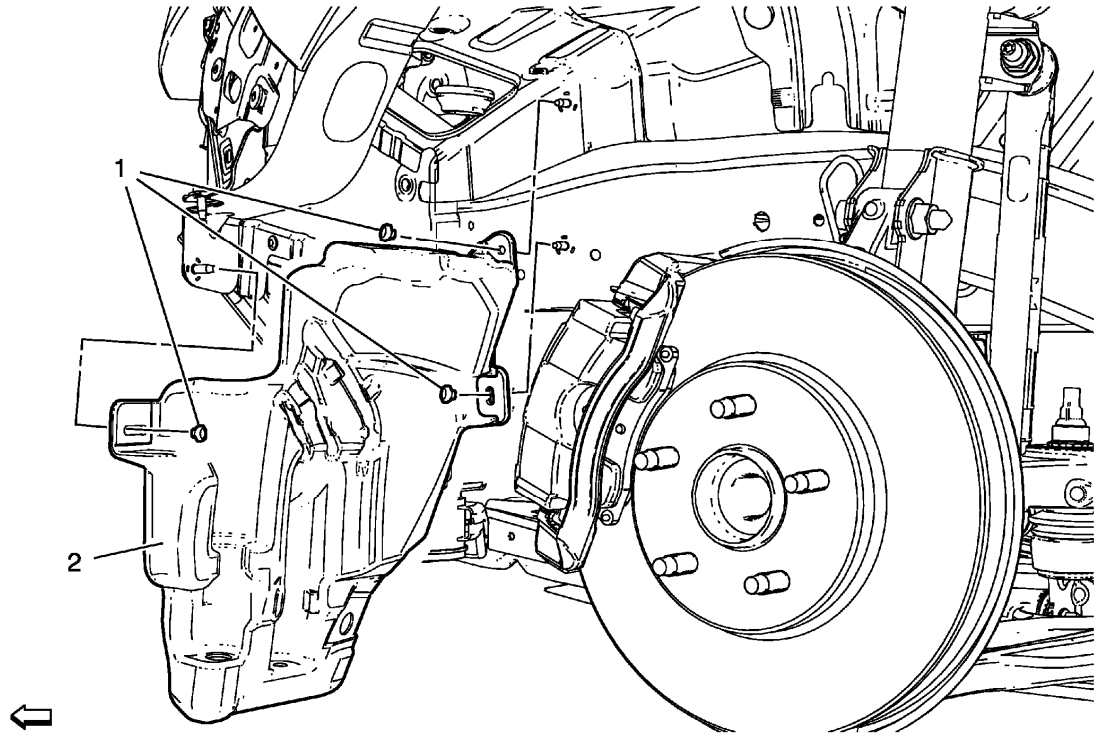

Fig. 8: Windshield Washer Solvent Container And Nuts
Courtesy of GENERAL MOTORS COMPANY

Windshield Washer Solvent Container Replacement

Callout	Component Name
Preliminary Procedure 1. Remove the windshield washer solvent container filler tube. Refer to **Windshield Washer Solvent Container Filler Tube Replacement** 2. Remove the front wheelhouse liner. Refer to **Front Wheelhouse Liner Replacement** . 3. Remove the windshield washer pump. Refer to **Windshield Washer Pump Replacement**.	
1	Windshield Washer Solvent Container Nut (Qty: 3) **CAUTION:** **Refer to Fastener Caution .**
2	Windshield Washer Solvent Container

WINDSHIELD WASHER PUMP REPLACEMENT

Removal Procedure

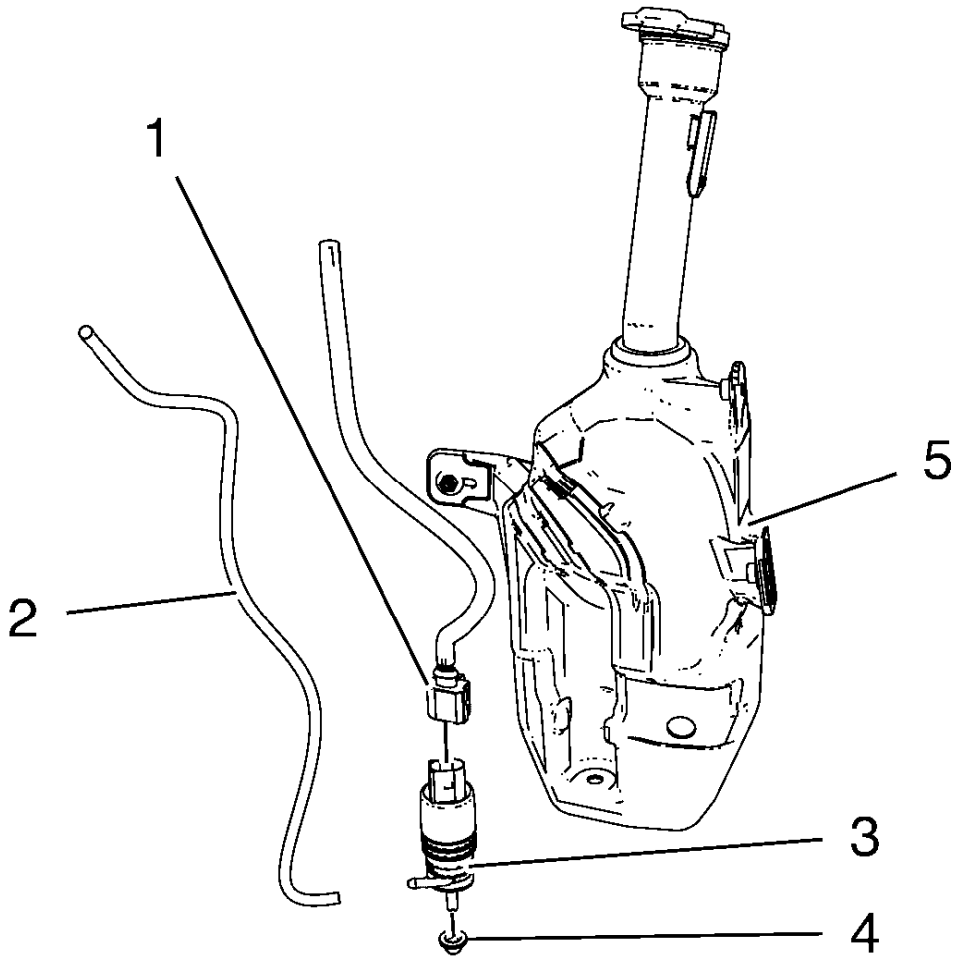

Fig. 9: Windshield Washer Pump Components
Courtesy of GENERAL MOTORS COMPANY

1. Remove the front wheelhouse liner. Refer to **Front Wheelhouse Liner Replacement** .
2. Disconnect the washer pump electrical connector (1).
3. Disconnect the washer pump hose (2) from the washer pump (3).
4. Using a small flat-bladed tool, remove the washer pump from the washer solvent container (5).
5. Drain the windshield washer solvent into a clean suitable container.
6. Using a small flat-bladed tool, remove the washer pump terminal seal (4) from the washer solvent container (1).

Installation Procedure

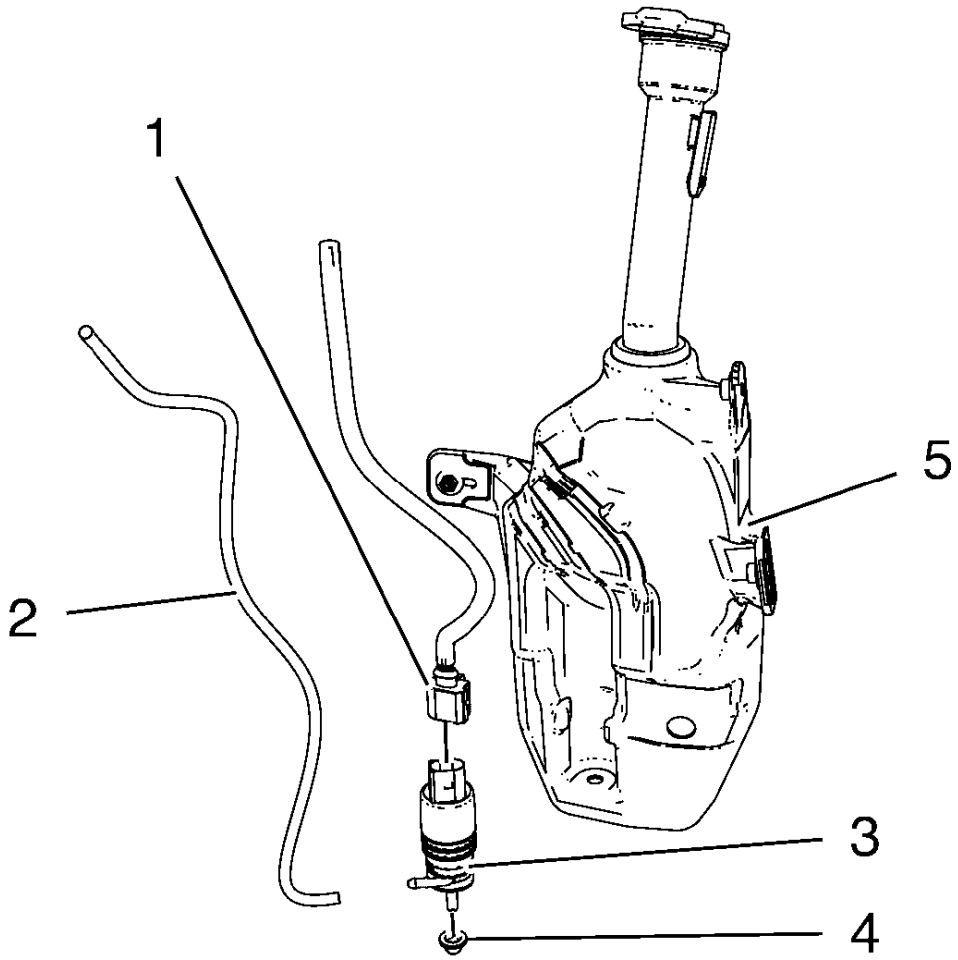

Fig. 10: Windshield Washer Pump Components
Courtesy of GENERAL MOTORS COMPANY

1. Position the washer pump terminal seal (4) to the washer solvent container (5), pressing in until fully seated.
2. Using full strength windshield washer solvent as a lubricant on the terminal seal, position the washer pump (3) to the washer solvent container (5) pressing in until fully seated.
3. Connect the washer pump electrical connector (1).
4. Connect the washer pump hose (2) to the washer pump (5).
5. Install the front wheelhouse liner. Refer to **Front Wheelhouse Liner Replacement** .
6. Fill the washer solvent container with washer solvent.
7. Inspect the washer system for proper operation.

WINDSHIELD WASHER PUMP SEAL REPLACEMENT

Removal Procedure

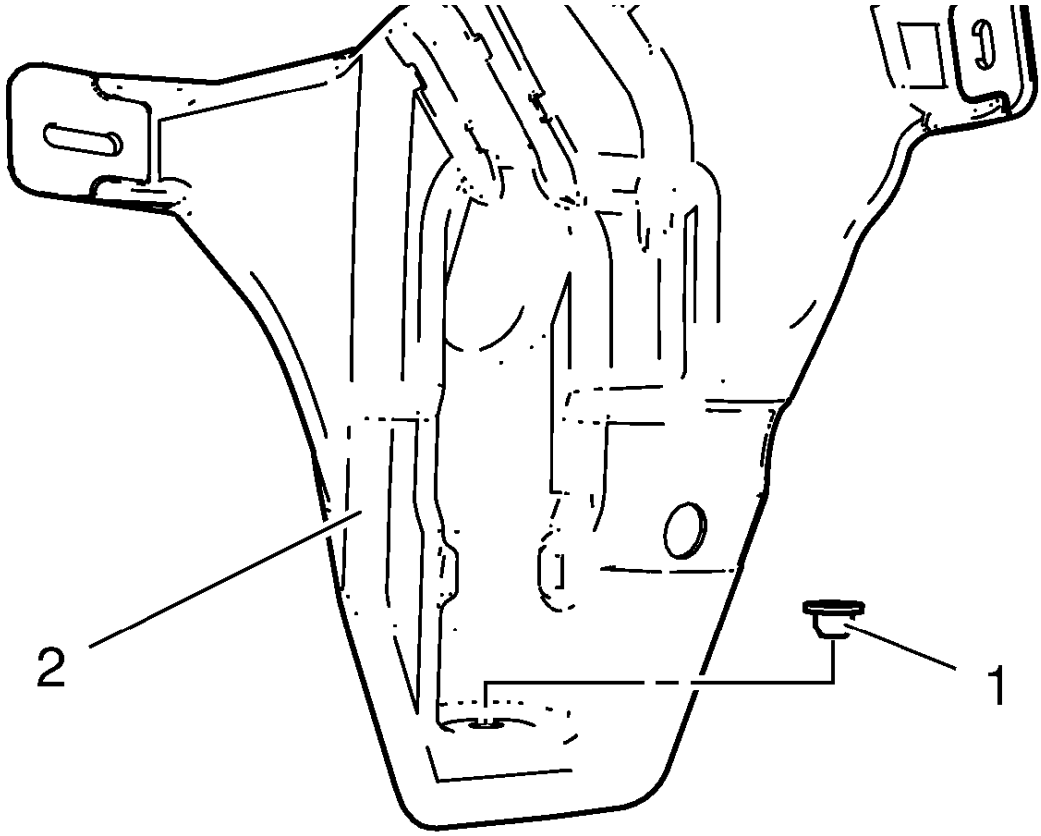

Fig. 11: Windshield Washer Pump Seal
Courtesy of GENERAL MOTORS COMPANY

1. Open the hood.
2. Remove the windshield washer pump. Refer to **Windshield Washer Pump Replacement**
3. Using a small flat-bladed tool, remove the washer pump terminal seal (1) from the washer solvent container (2).

Installation Procedure

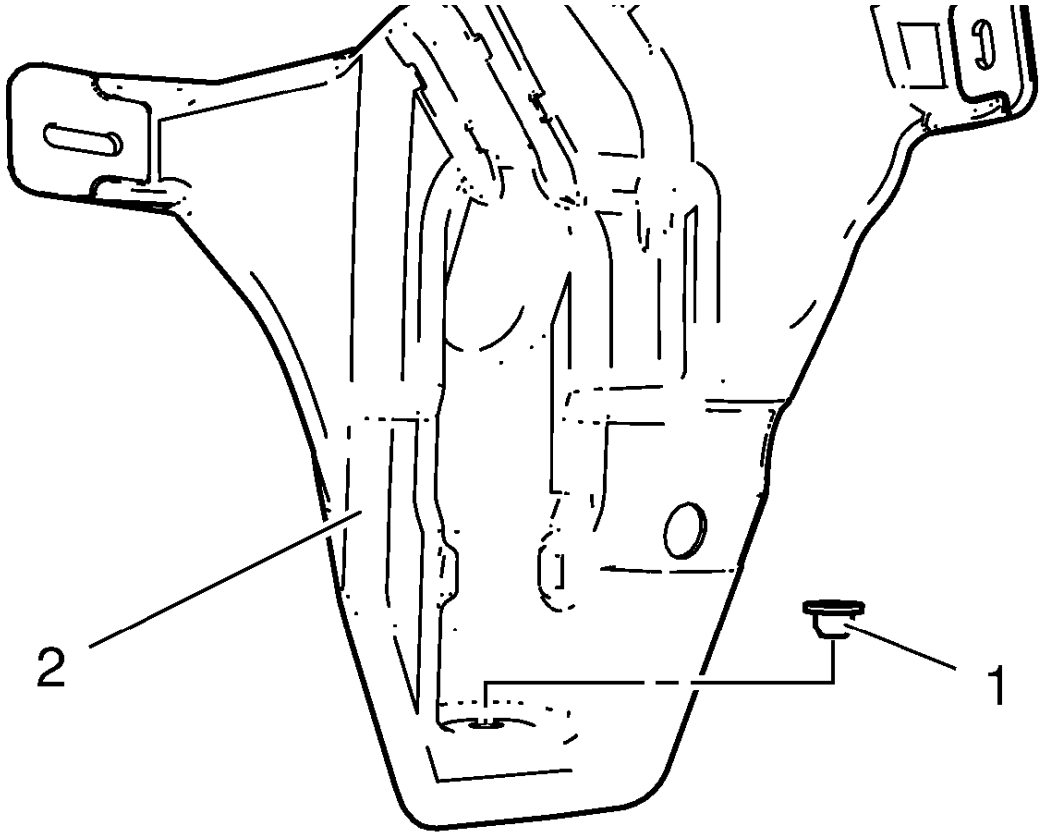

Fig. 12: Windshield Washer Pump Seal
Courtesy of GENERAL MOTORS COMPANY

1. Position the washer pump terminal seal (1) to the washer solvent container (2), pressing in until fully seated.
2. Install the windshield washer pump. Refer to **Windshield Washer Pump Replacement**
3. Close the hood.

AIR INLET GRILLE PANEL REPLACEMENT

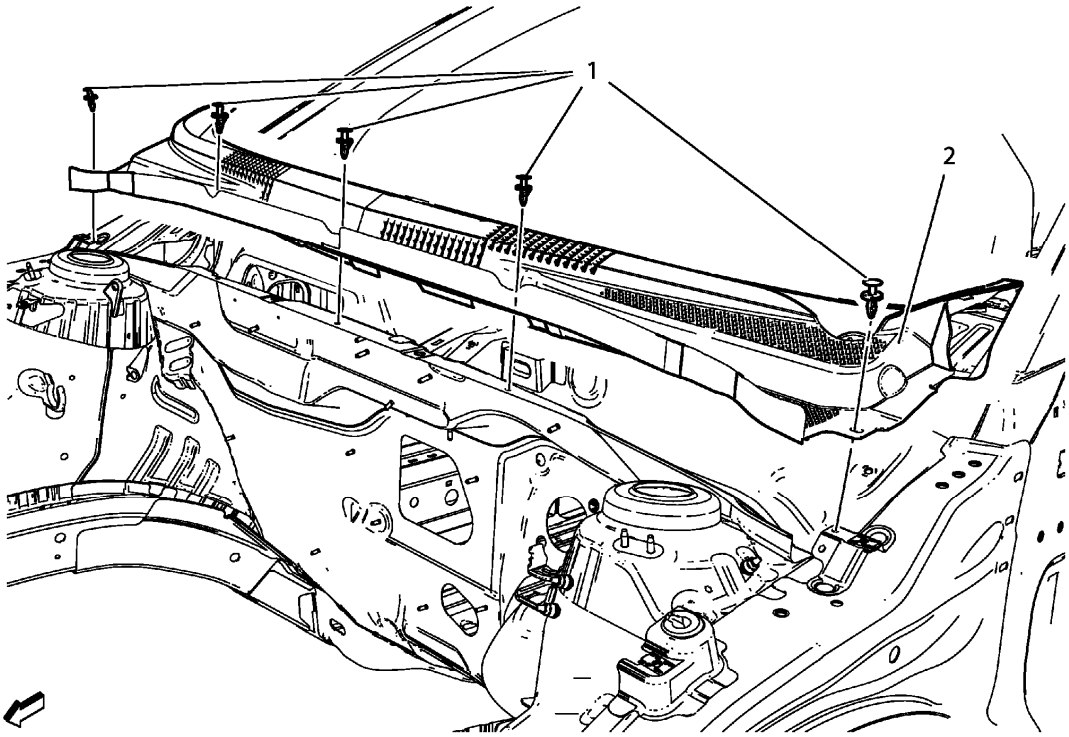

Fig. 13: Air Inlet Grille Panel And Clips
Courtesy of GENERAL MOTORS COMPANY

Air Inlet Grille Panel Replacement

Callout	Component Name
Preliminary Procedures 1. Remove the wiper arms. Refer to **Windshield Wiper Arm Replacement**. 2. Remove hood rear weatherstrip. Refer to **Hood Rear Weatherstrip Replacement** .	
1	Air Inlet Grille Panel Clip (Qty: 5)
2	Air Inlet Grille Panel Assembly

WINDSHIELD WIPER ARM REPLACEMENT

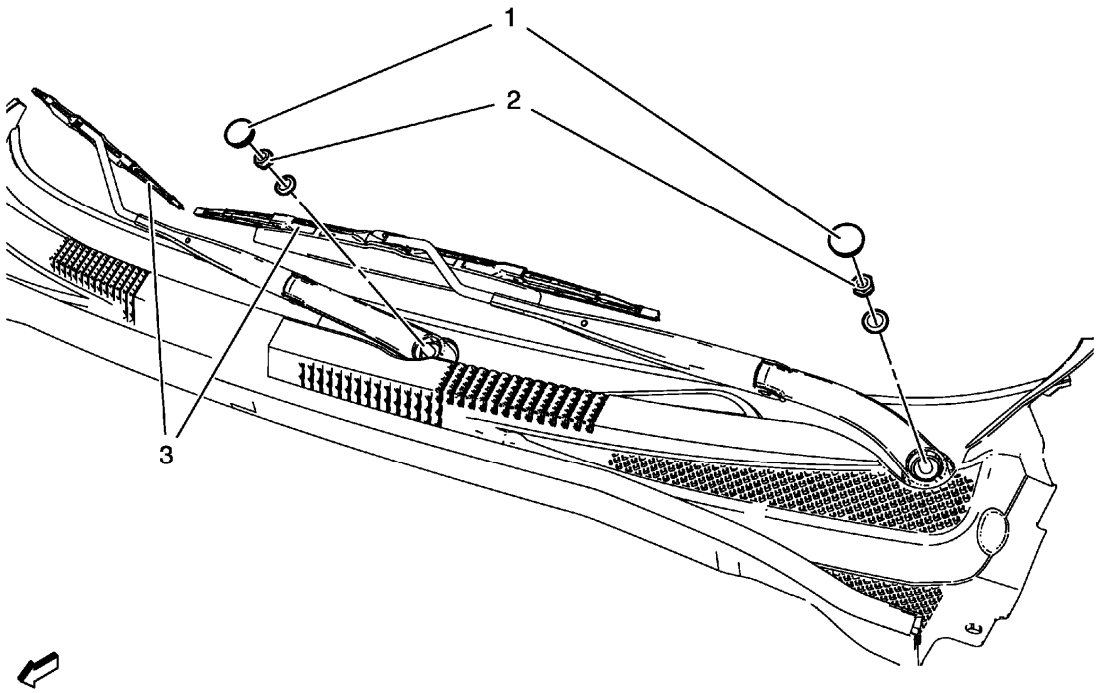

Fig. 14: Windshield Wiper Arm Components
Courtesy of GENERAL MOTORS COMPANY

Windshield Wiper Arm Replacement

Callout	Component Name
1	Windshield Wiper Arm Finish Cap **Procedure** Use a small flat-bladed tool to remove finish cap.
2	Windshield Wiper Arm Nut **CAUTION:** **Refer to Fastener Caution .** **Procedure** 1. Locate the transparent circle with a black dot in the center at the lower windshield blackout area. 2. Position the wiper arm to the pivot shaft so that the wiper blade is centered across the transparent circle. 3. Lift the arm blade portion while pushing down the arm onto the pivot shaft. 4. Install the wiper arm nut. 5. Hold the wiper arm stationary in position as previously stated. 6. Torque the wiper arm nut.

	7. Release the wiper arm assembly. 8. Repeat the same procedure for the other wiper arm. **Tighten** 24.5 N.m (18 lb ft)
3	Windshield Wiper Arm Assembly **Procedure** Grasp the end of the wiper arm at the wiper transmission pivot shaft and rock the arm side to side in order to release the windshield wiper arm from the wiper transmission pivot shaft.

WINDSHIELD WIPER BLADE REPLACEMENT

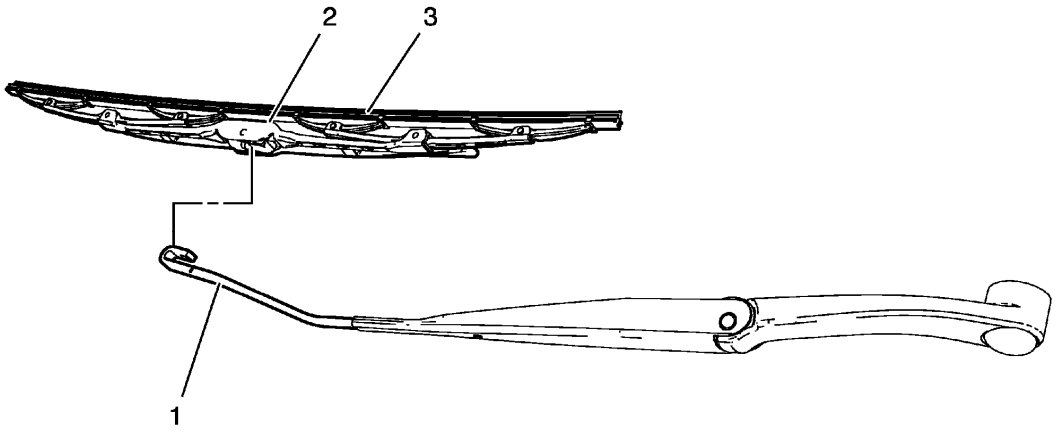

Fig. 15: Windshield Wiper Blade, Removal Tab And Wiper Arm
Courtesy of GENERAL MOTORS COMPANY

Windshield Wiper Blade Replacement

Callout	Component Name
Preliminary Procedures Raise the wiper arm up off the windshield.	
1	Windshield Washer Arm
2	Windshield Wiper Arm Blade Removal Tab **Procedure** 1. Push inward the square tab at the center top side of the wiper blade. 2. Rotate the wiper blade downward slightly. 3. Slide the wiper blade from the wiper arm. 4. Carefully release the wiper arm back to the windshield.

3	Windshield Washer Blade

WINDSHIELD WIPER MOTOR REPLACEMENT

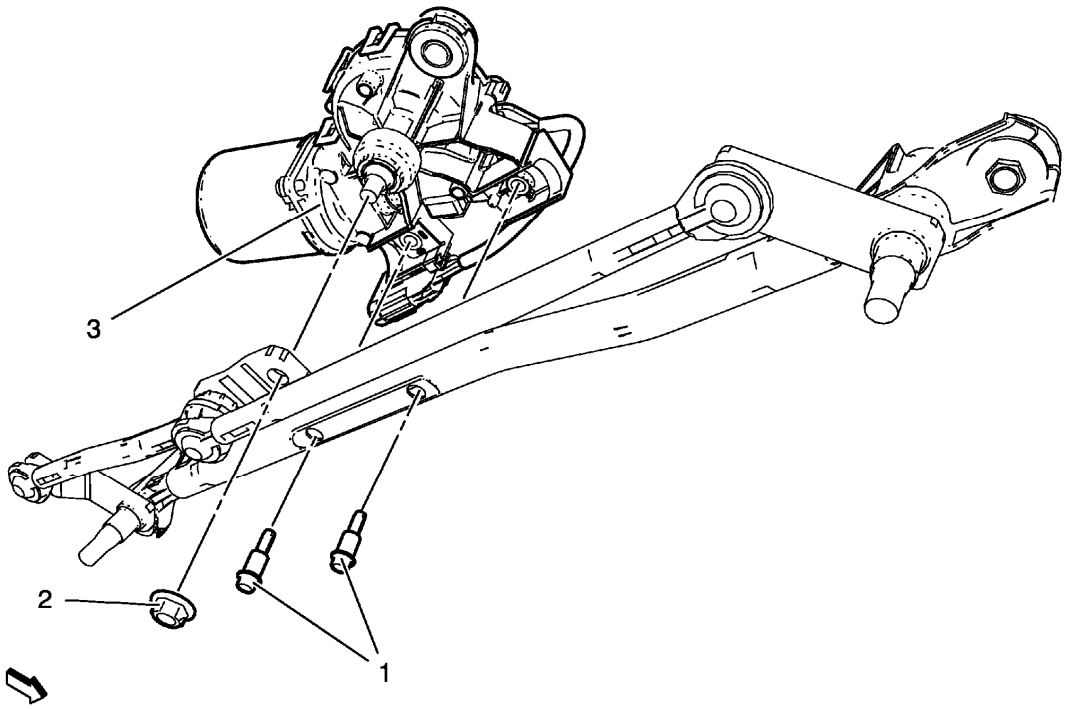

Fig. 16: Windshield Wiper Motor, Bolts And Nut
Courtesy of GENERAL MOTORS COMPANY

Windshield Wiper Motor Replacement

Callout	Component Name
Preliminary Procedures 1. Remove the windshield wiper arms. Refer to **Windshield Wiper Arm Replacement** 2. Remove the air inlet grille panel. Refer to **Air Inlet Grille Panel Replacement**. 3. Remove the wiper drive system module.	
1	Windshield Wiper Motor Bolts (Qty: 2) **CAUTION:** **Refer to Fastener Caution .** **Tighten** 10 N.m (89 lb in)
2	Windshield Wiper Motor Nut **Tighten**

	10 N.m (89 lb in)
3	Windshield Wiper Motor Assembly

WINDSHIELD WIPER TRANSMISSION REPLACEMENT

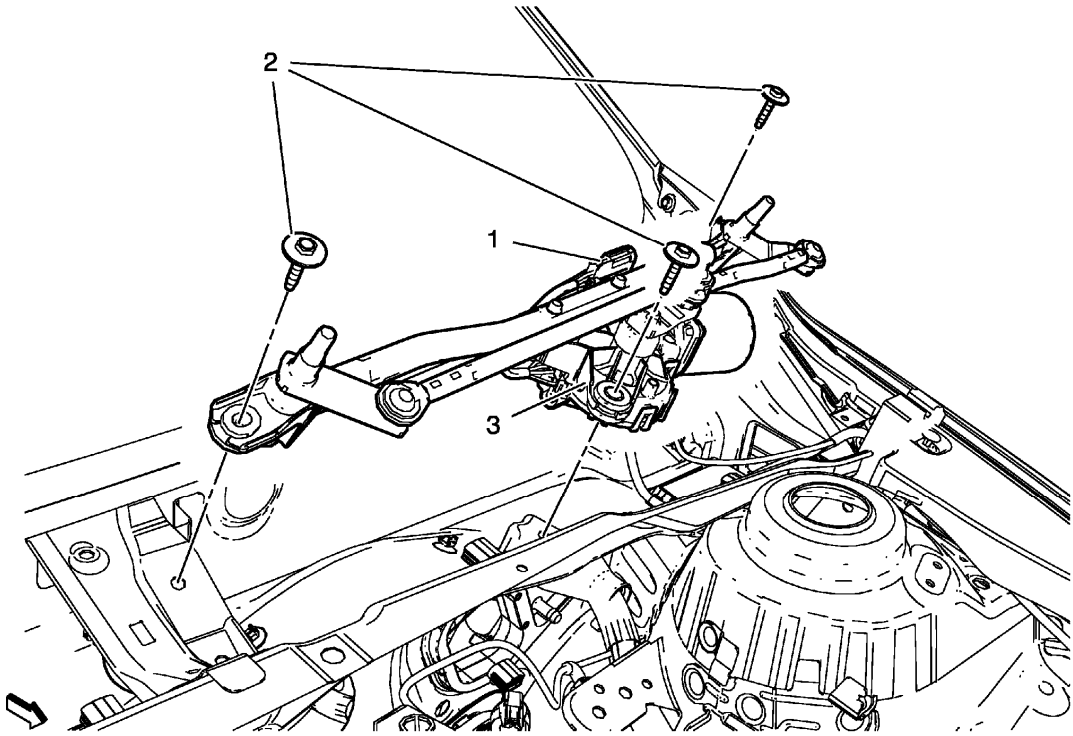

Fig. 17: Windshield Wiper Transmission, Bolts And Electrical Connector
Courtesy of GENERAL MOTORS COMPANY

Windshield Wiper Transmission Replacement

Callout	Component Name
Preliminary Procedures 1. Remove the wiper arms. Refer to **Windshield Wiper Arm Replacement**. 2. Remove the air inlet grille panel. Refer to **Air Inlet Grille Panel Replacement**.	
1	Electrical Connector
2	Windshield Wiper Transmission Bolts (Qty: 3) **CAUTION:** **Refer to Fastener Caution .** **Tighten** 10 N.m (89 lb in)
	Windshield Wiper Transmission

3	**Procedure** Remove components as needed.

WIPER BLADE ELEMENT CLEANING

Lift each blade assembly off of the windshield and clean the element with a cloth saturated with full strength washer solvent. Then rinse the blade assemblies with clear water.

WINDSHIELD WIPER ARM ADJUSTMENT

1. Loosen the windshield wiper arms from windshield wiper transmission. Refer to **Windshield Wiper Arm Replacement**

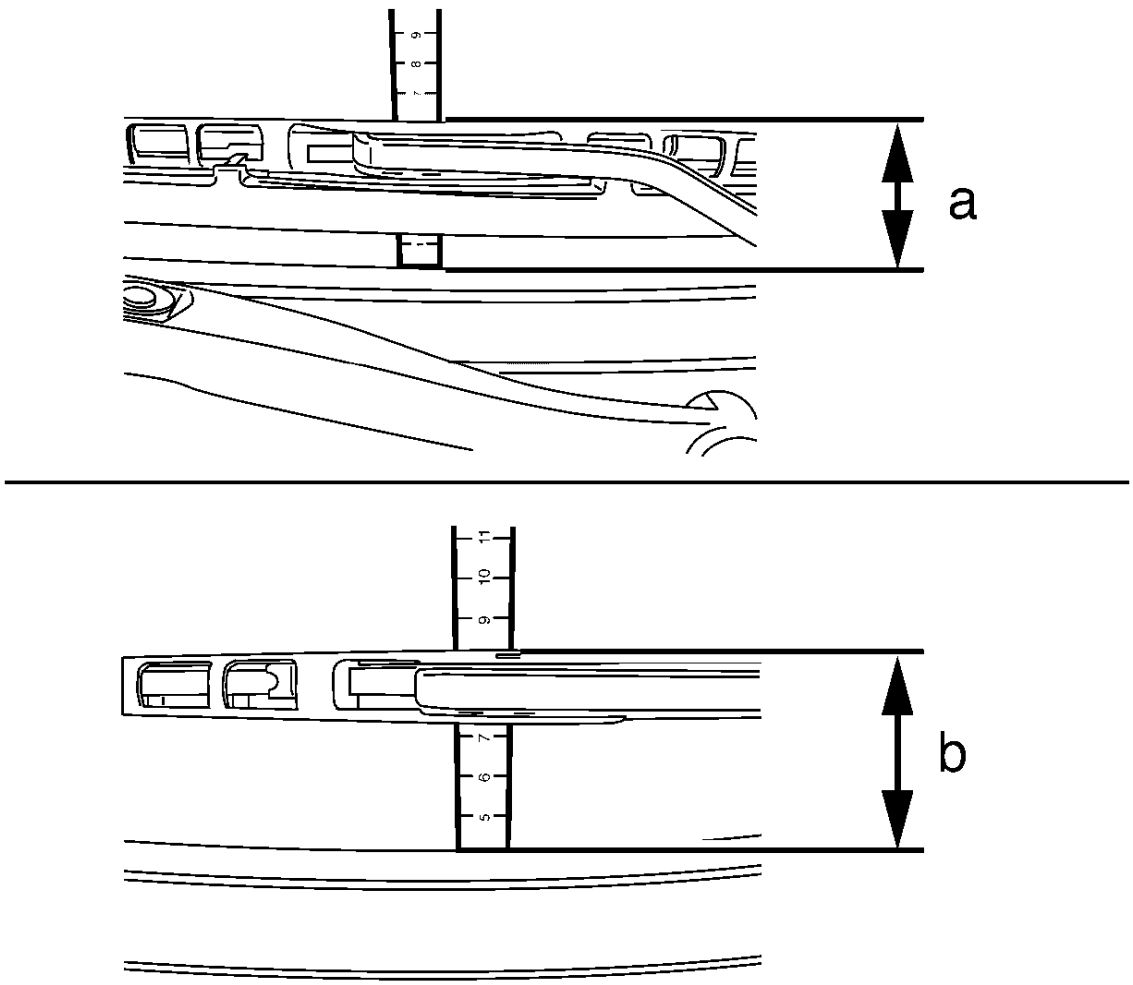

Fig. 18: Windshield Wiper Arm Adjustment
Courtesy of GENERAL MOTORS COMPANY

2. Measure the upper edge of water deflector (rubber lip) to wiper arm attachment point.

3. Position the wiper arm to the basic setting.
    - Driver side (a) approximately 6.5 cm (2.6 in)
    - Passenger side (b) approximately 8.5 cm (3.3 in).

DESCRIPTION AND OPERATION

WIPER/WASHER SYSTEM DESCRIPTION AND OPERATION

Wiper/Washer System Components

The wiper/washer system consists of the following electrical components:

- Windshield Wiper Relay
- Windshield Wiper Speed Control Relay
- Windshield Washer Pump Relay
- Windshield Washer Fluid Pump
- Windshield Wiper Motor
- Window Wiper/Washer Switch
- Body Control Module (BCM)
- Rain sensor module

Windshield Wiper System

The BCM determines the front wipe/wash system mode of operation by monitoring several signals from the front wipe/wash switch as indicated in the wiper switch.

The front wipe/wash switch receives a reference ground signal from the BCM. Each input of the BCM provides a switched battery pull-up for each front wiper/washer switch output signal it receives. All the BCM inputs are recognized as active when the wiper switch provides a path to the referenced ground signal. The first signal received by the BCM is the result of 6 resistors in the front wiper switch configured as a resistor ladder network. This signal is connected to a BCM analog to digital input. Depending on the function selected (High, Low, Intermittent 1 to 5, Mist, Off), the front wiper control switch connects a different set of resistors into the circuit resulting in different voltages appearing on the BCM A/D input. By monitoring this voltage, the BCM determines how to control the wiper motor On/Off Relay. It should be noted that High, Low, and Mist all have the same value on this signal circuit. The second signal received from the front wiper switch is active only when the front wiper switch is in the high speed wiper position. When the wiper switch is not in the high speed position, the switch is open and the signal circuit is pulled to battery by the BCM. When the wiper switch is in the high speed position, the switch pulls the circuit low. The BCM determines how to control the Wiper high/low speed relay from this input. The third signal received from the front wiper switch is from the momentary windshield wash control switch. When the washer switch is not active the switch is open and the signal circuit is pulled to battery by the BCM. When the washer switch is active, the switch pulls the circuit low. The BCM controls the windshield wash and windshield wash activated wiper operation based on this input.

The BCM controls front wiper motor operation through two output signals and the monitoring of one input signal. The two outputs (one high side drive, one low side drive) are used to control two external wiper motor

relays: front wiper motor on/off relay: which provides the wiper motor with battery power when it is activated by the high side drive signal (switched battery) from the BCM. When left deactivated, the normally closed contacts provide a ground to the wiper motor. Wiper high/low speed relay: when activated by a low side drive signal (ground) from the BCM, it switches the power supplied by the wiper motor's on/off relay to the motors high speed input. When left deactivated, the normally closed contacts connect the power supplied by the wiper motor's on/off relay to the motor's low speed input. The input used by the BCM is from the park switch located in the wiper motor assembly. When the wiper blades are not in the park position, the wiper park switch is open and the circuit is pulled up to battery by the BCM. When the wiper blades are in the park position at the bottom of the glass, the wiper park switch closes to ground pulling the park signal circuit low.

To initiate low speed operation, the BCM only energizes the front wiper motor on/off relay. This allows battery voltage from the wiper fuse to be applied through the switched contacts of the wiper motor on/off relay, through the normally closed contacts of the wiper high/low speed relay, to the low speed control circuit of the windshield wiper motor.

The BCM provides redundant circuitry which places battery power on its wiper motor on/off relay output with activation of its low assertion high speed wiper switch input. The BCM shall be capable of doing this, even if the module has lost all microprocessor control. This redundant circuit shall supply power while in the RUN and CRANK power modes. however; while in the CRANK power mode, the pass through shall only be active if the BCM is NOT in a computer operating properly state.

To initiate high speed operation, the BCM energizes both the front wiper motor on/off relay and the wiper high/low speed relay. This allows battery voltage from the wiper fuse to be applied through the switched contacts of the wiper motor on/off relay, through the switched contacts of the wiper high/low speed relay, to the high speed control circuit of the windshield wiper motor.

In order to perform an accurate read of the park switch and to ensure the wipers will come to rest while still in the park position, parking of the wipers only occurs while in a low speed wiper mode. This requires that if the wipers are performing a high speed wiper operation at the time they are required to park, the BCM shall transition the Wipers to low speed by deactivating the wiper high/low relay before attempting to park. In order to park the wipers, the BCM monitors the park circuit until the park switch pulls the park circuit to ground. At this time, the BCM will immediately deactivate the wiper motor on/off relay. The relay contacts will switch back to their normally closed position and will apply ground to the wiper motor power inputs through the normally closed contacts of the wiper high/low relay. This deactivates and dynamically brakes the wiper motor in the park position. When the wiper switch is turned to the OFF position while the wiper motor is somewhere in mid-cycle, the BCM will continue to operate the motor until the wipers reach the park position. If the BCM is running the wiper motor and does not see a state transition of the park switch after 8 s, the wipers will stop immediately when the wiper switch is turned to OFF. If the ignition is turned OFF while the wipers are in mid-cycle, the wipers will stop immediately, regardless of position. The BCM will park the wipers next time the ignition is turned ON.

The windshield wiper system MIST operation is identical to LOW speed operation, except that the MIST switch is a press and release type switch. When the wiper switch is moved to the MIST position and released, low speed wiper motor operation is started and will continue until 1 cycle is complete. If the wiper switch is moved to the MIST position and held, the wiper motor will operate in the LOW speed mode until the switch is released.

Windshield wiper intermittent operation is a low speed wiper motor function with a variable delay interval

between the wiper motor cycles. The duration of the delay is controlled by the front wiper control switch's intermittent 1 to intermittent 5 settings. The wiper operation is as follows:

1. The BCM will initiate a single wipe by activating its front wiper ON/OFF relay output.
2. At the completion of a single wipe, the BCM will park the wipers as described above.
3. The BCM will then pause the wipers in their park position for the time duration associated with intermittent delay switch setting.
4. When the delay time expires repeat Steps 1 and 3 until the system is turned off or taken out of intermittent mode. If the wiper switch is moved from a longer delay interval to a shorter delay interval, the BCM will command an immediate wipe cycle and reset the delay timer to the shorter delay interval.

Intermittent wiper operation may be vehicle speed sensitive. When enabled, the speed compensated intermittent feature causes the intermittent wiper delay intervals to become shorter as a function of increased speed. As vehicle speed is reduced the intervals will become closer to the predetermined.

Intermittent wiper operation may be vehicle speed sensitive. When enabled, the speed compensated intermittent feature causes the intermittent wiper delay intervals to become shorter as a function of increased speed. As vehicle speed is reduced the intervals will become closer to the predetermined.

Windshield Washer System

The BCM controls the windshield wash operation and windshield wash activated wiper operation. When the BCM detects the activation of the momentary windshield wash control switch, it activates its washer pump relay drive output which supplies battery power to the coil of the washer pump relay. This energizes the relay, which switches battery power to the pump motor. The BCM will also activate continuous low speed windshield wipes as described above. Upon deactivation of the windshield wash control switch, the wiper control module (BCM) shall deactivate the wash motor and will also park the wiper motor as described above unless the drip wipe feature is enabled. On some vehicles the drip wipe feature will be enabled and cause the system to provide additional wiping of the windshield after the switch has been released and fluid is no longer being applied. The front wash feature may attempt to detect a stuck switch. When enabled, activation of the wash feature shall be limited to 10 s.

Moisture Sensitive Wipers

The outside moisture sensor monitors moisture accumulation on the windshield and uses a windshield wiper/washer switch status input to provide wipe commands to the body control module (BCM). The DELAY positions on the wiper/washer switch are used to activate the AUTOMATIC rain sensing operating mode. They are also used to adjust the level of sensitivity to moisture accumulation, which determines the dwell time for commanding a wiper motor wipe cycle.

Accessory voltage is supplied to the outside moisture sensor through the 10A RAP Fuse, located in the rear fuse block. The sensor is grounded through the ground circuit and G402. Whenever the ignition is in the run or accessory positions, the BCM sends the wiper/washer switch status using a pulse width modulation (PWM) signal through the outside moisture sensor signal 1 circuit to the outside moisture sensor. When a wipe cycle is needed, the moisture sensor sends a PWM voltage signal through the moisture sensor signal 2 circuit back to the BCM requesting the wiper operation.

The outside moisture sensor uses the moisture sensor signal 2 circuit to command wiper motor wipe cycles and to confirm the moisture sensor signal 1 is being received. If at anytime communication between the outside moisture sensor and BCM is lost, the BCM will use the inputs from the windshield wiper/washer switch in the delay positions to operate the wiper motor at continuous variable delay intervals.

2013 ACCESSORIES & EQUIPMENT

Wiring Systems and Power Management - Repair Instructions - Cruze

REPAIR INSTRUCTIONS

GMLAN AND MEDIA ORIENTED SYSTEMS TRANSPORT (MOST) WIRING REPAIRS

Special Tools

- **EL-38125-10** Splice Sleeve Crimping Tool
- DuraSeal splice sleeves
- A wire stripping tool

For equivalent regional tools, refer to **Special Tools** .

The DuraSeal splice sleeves have the following 2 critical features:

- A special heat shrink sleeve environmentally seals the splice. The heat shrink sleeve contains a sealing adhesive inside.
- A cross hatched (knurled) core crimp provides necessary contact integrity for the sensitive, low energy circuits.

The GM Local Area Network (GMLAN) System requires special wiring repair procedures due to the sensitive nature of the circuitry. Follow the specific procedures and instructions when working on GMLAN connectors and terminals.

GMLAN Repairs

NOTE: When making a repair to any GMLAN network, the original wire length after the repair must be the same length as before the repair. If the network is a twisted pair, the twist must be maintained after the repair is completed.

GMLAN has 2 types of networks, low speed and high speed. Low speed GMLAN has a single wire and works at slow speeds. High speed GMLAN has 2 wires in a twisted pair and works at higher speeds. For more information on GMLAN, refer to **Data Link Communications Description and Operation** .

GMLAN Connector Terminal Repair

NOTE: A terminated lead can be used to replace damaged connector terminals for both high speed and low speed GMLAN systems. When making a connector terminal repair on a GMLAN high speed system with twisted pair wires, do not untwist the wires more than necessary to make the repair.

If the individual terminals are damaged on any GMLAN connection, use the appropriate connector repair procedure in order to repair the terminal. Refer to **Connector Repairs** for the appropriate connector repair

procedure.

GMLAN Wire Repair

NOTE: Refer to Wiring Repairs in the service information connector end views or the vehicle schematics in order to determine the correct wire size for the circuit you are repairing. You must obtain this information in order to ensure circuit integrity.

If any wire except the pigtail is damaged, repair the wire by splicing in a new section of wire of the same gauge size (0.5 mm^2 , 0.8 mm^2 , 1.0 mm^2 etc.). Use the DuraSeal splice sleeves and **EL-38125-10** tool. For wiring repair, refer to **Splicing Copper Wire Using Splice Sleeves** .

INSTRUMENT PANEL WIRING HARNESS FUSE BLOCK DISASSEMBLE

NOTE: To remove wires from the top part using terminal release tools, only steps 1, 3, 8, 9, 10, 11, 12 and 13 are required. Use release tool J-38125-38 for cavities 16-18, 20-34, 37-47.

Fuse Block Disassemble Procedure

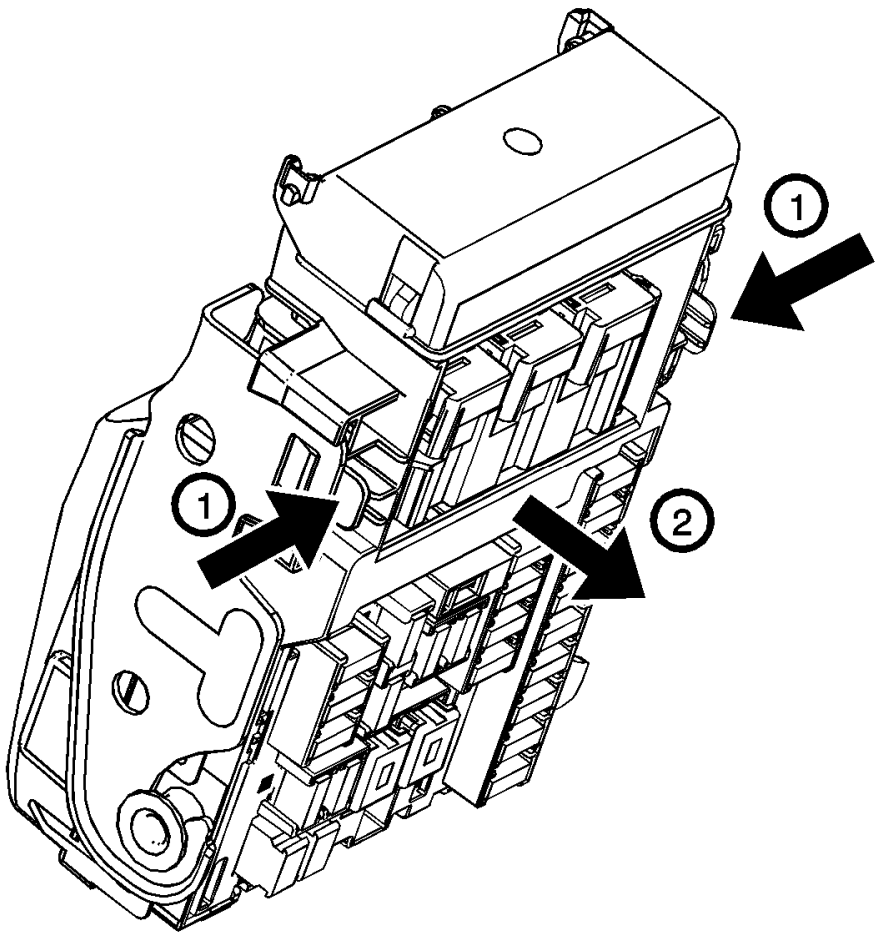

Fig. 1: Fuse Block & Locking Arms
Courtesy of GENERAL MOTORS COMPANY

1. Push the locking arms (1) and unlock the fuse block (2).

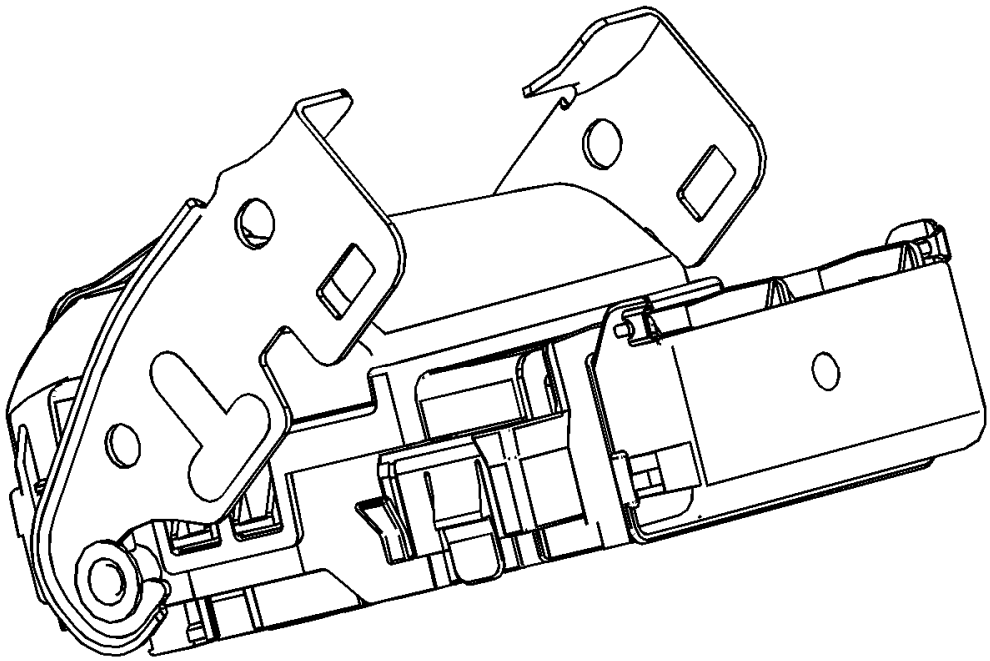

Fig. 2: Fuse Block In Unlocked Position
Courtesy of GENERAL MOTORS COMPANY

2. Fuse block unlocked.

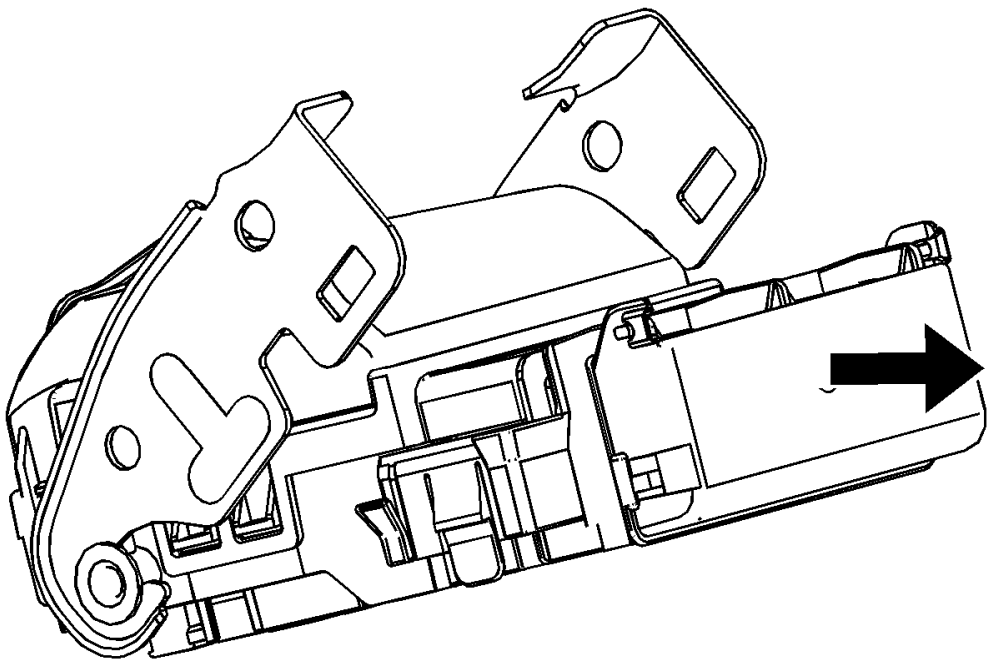

Fig. 3: Fuse Block & Bracket
Courtesy of GENERAL MOTORS COMPANY

3. Pull out and remove the fuse block from bracket.

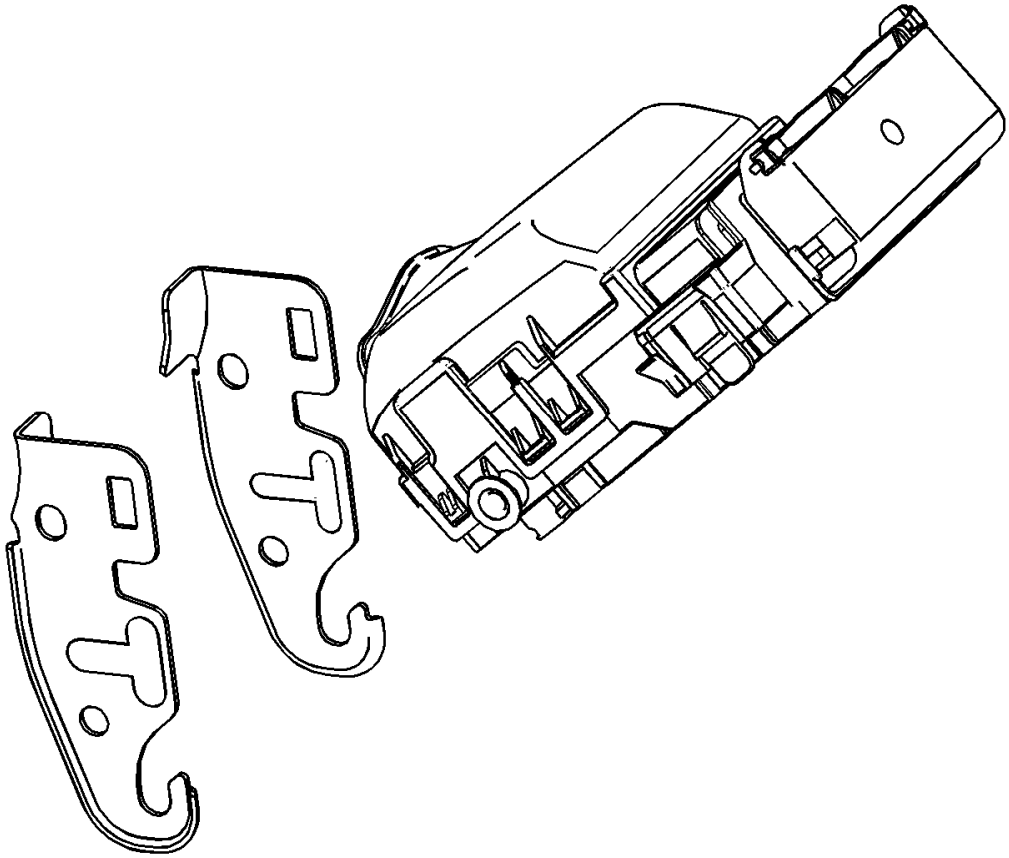

Fig. 4: Fuse Block & Brackets
Courtesy of GENERAL MOTORS COMPANY

4. Fuse block after removed from bracket.

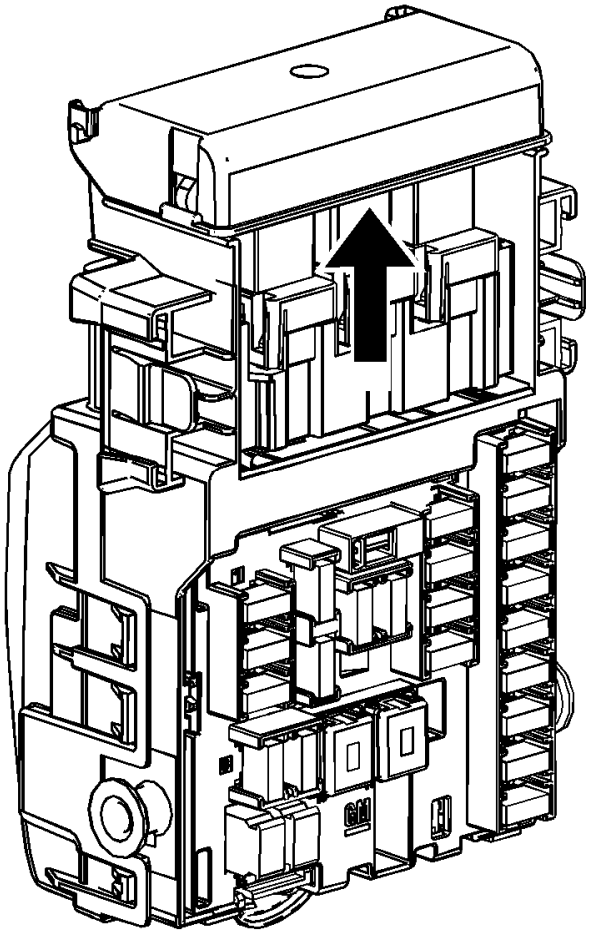

Fig. 5: Fuse Block & Relay Protection Cover
Courtesy of GENERAL MOTORS COMPANY

5. Push and open the relay protection cover.

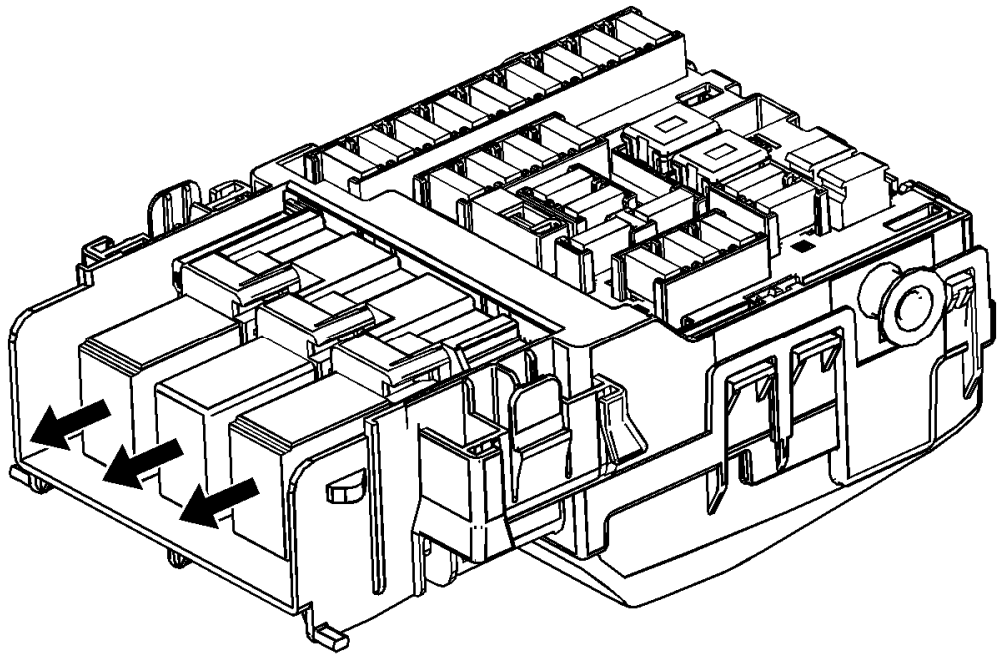

Fig. 6: Fuse Block Micro Relays
Courtesy of GENERAL MOTORS COMPANY

6. Remove micro relays (3x).

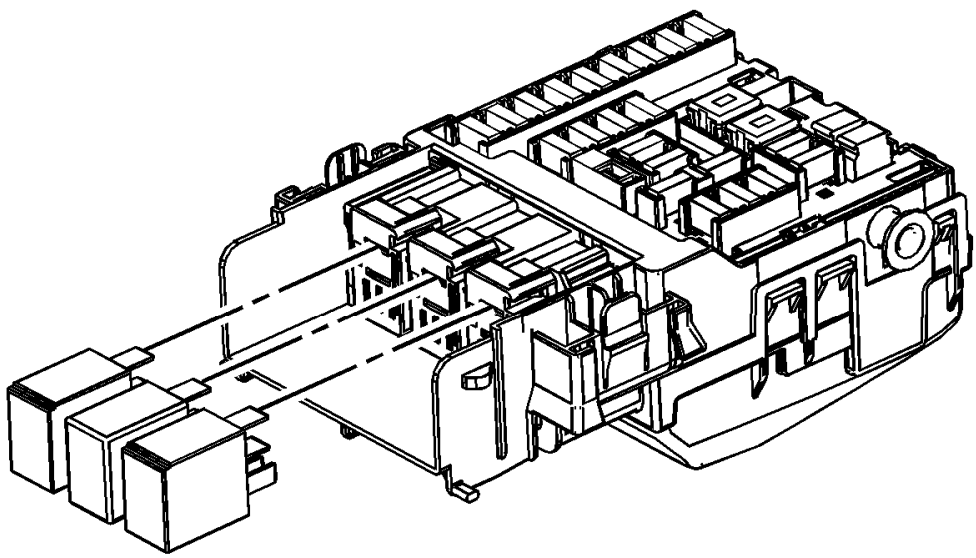

Fig. 7: Micro Relays
Courtesy of GENERAL MOTORS COMPANY

7. Fuse block with relays removed.

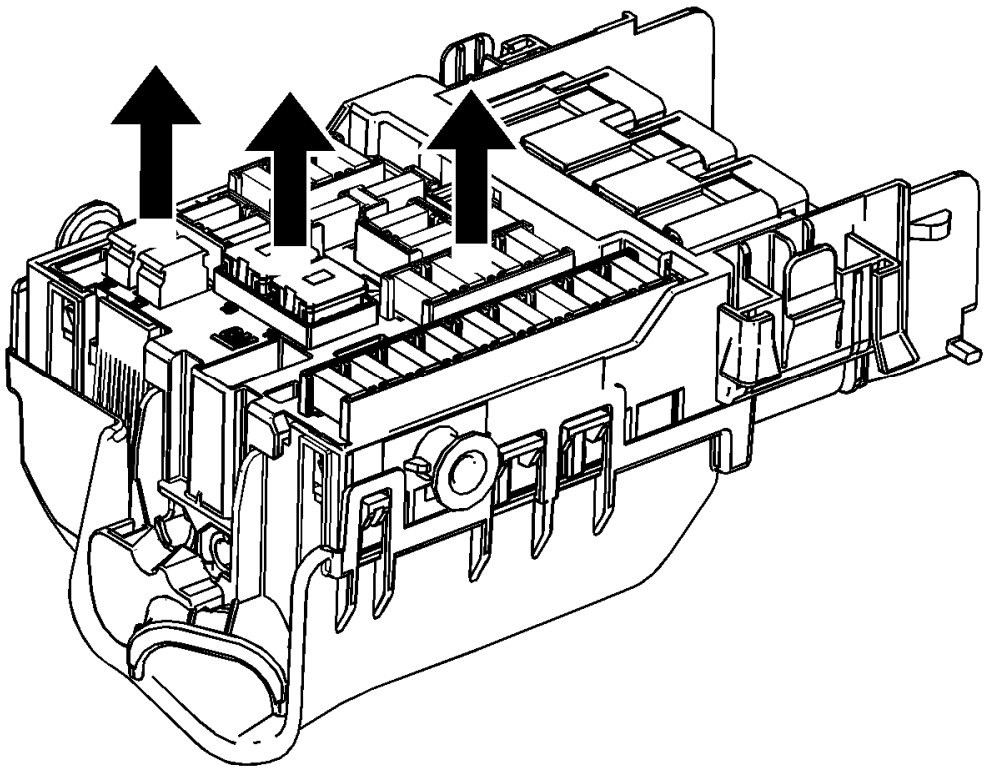

Fig. 8: Fuse Block Components
Courtesy of GENERAL MOTORS COMPANY

8. Remove mini fuses (22x), J-case fuses (2x), and circuit breakers (2x) from fuse block.

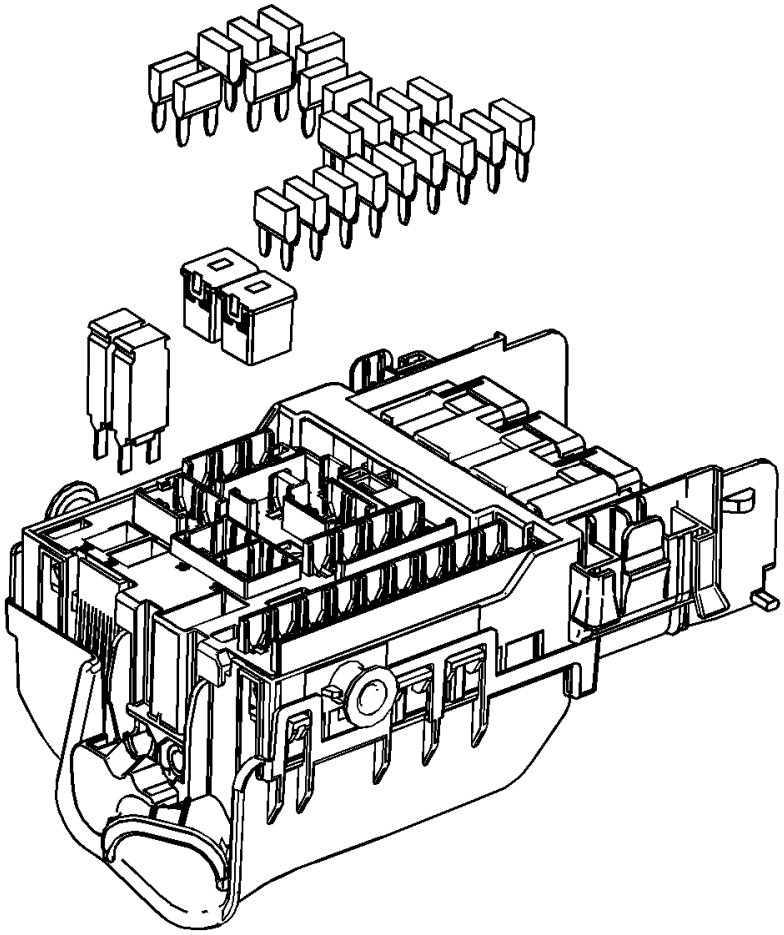

Fig. 9: View Of Fuse Block Components
Courtesy of GENERAL MOTORS COMPANY

9. Fuse block with all fuses and circuit breakers removed.

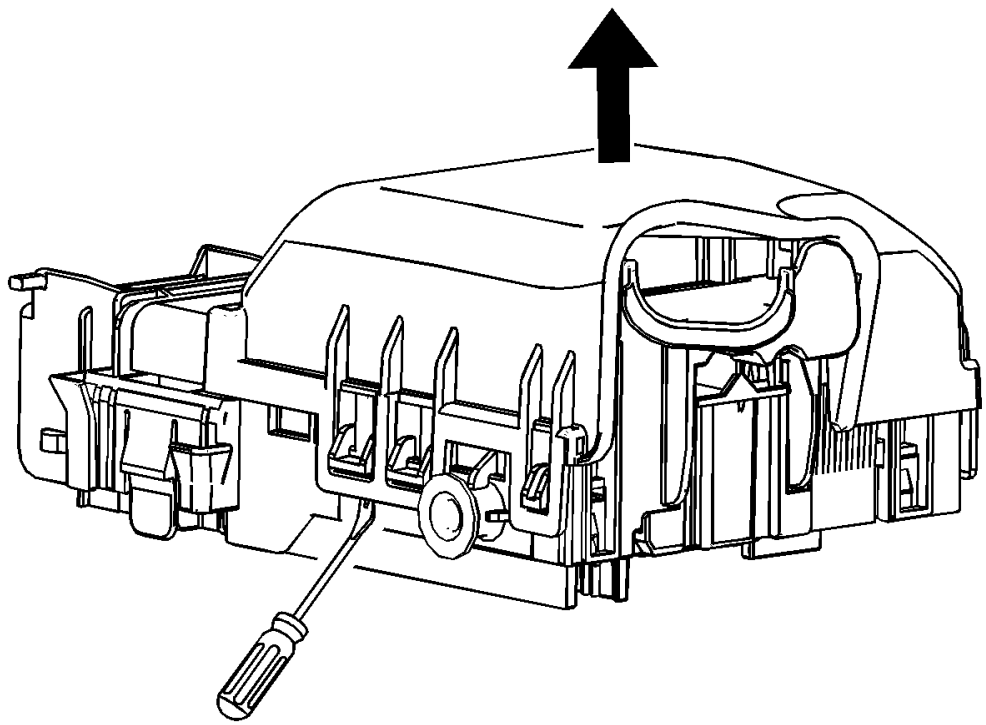

Fig. 10: Fuse Block Cover
Courtesy of GENERAL MOTORS COMPANY

10. Unlock (6 locking points) and remove bottom protection cover from fuse block.

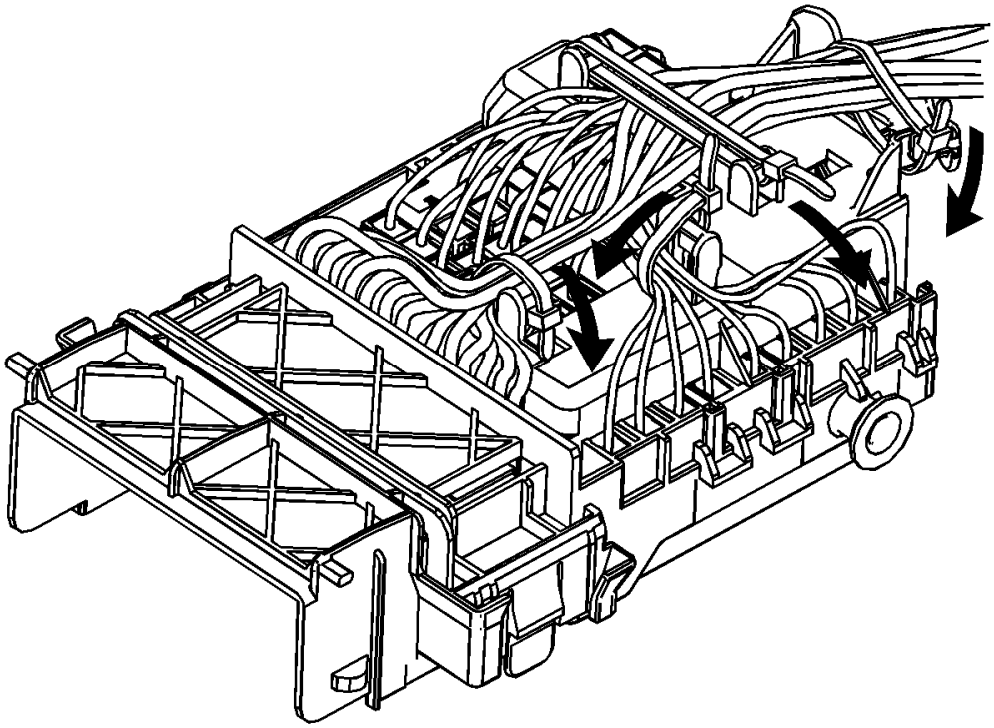

Fig. 11: Fuse Block Wires & Straps
Courtesy of GENERAL MOTORS COMPANY

11. Remove straps (4x) from wires.

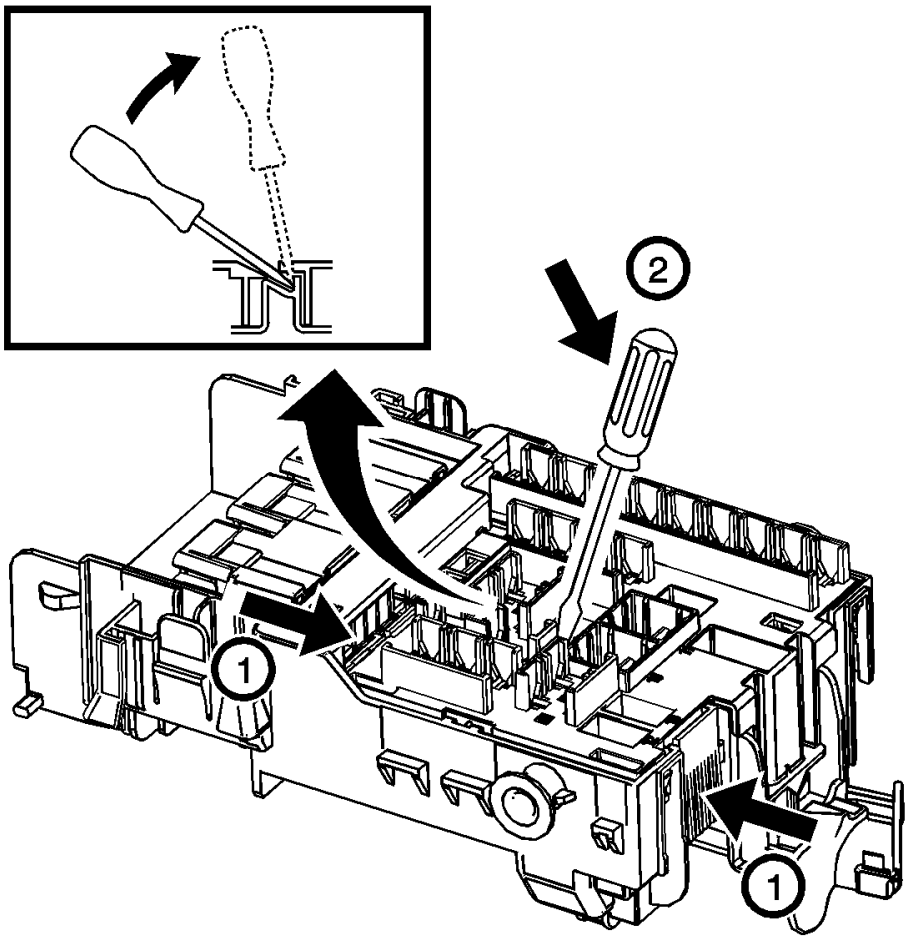

Fig. 12: Fuse Block Locking Arm Components
Courtesy of GENERAL MOTORS COMPANY

12. To place the top part (1) in pre-assembled position, press together locking arms on both sides of the bottom part (2), insert a pry tool into an appropriate hole in the top part and lever the top part upward until it remains in the pre-assembled position. Release the locking arms.

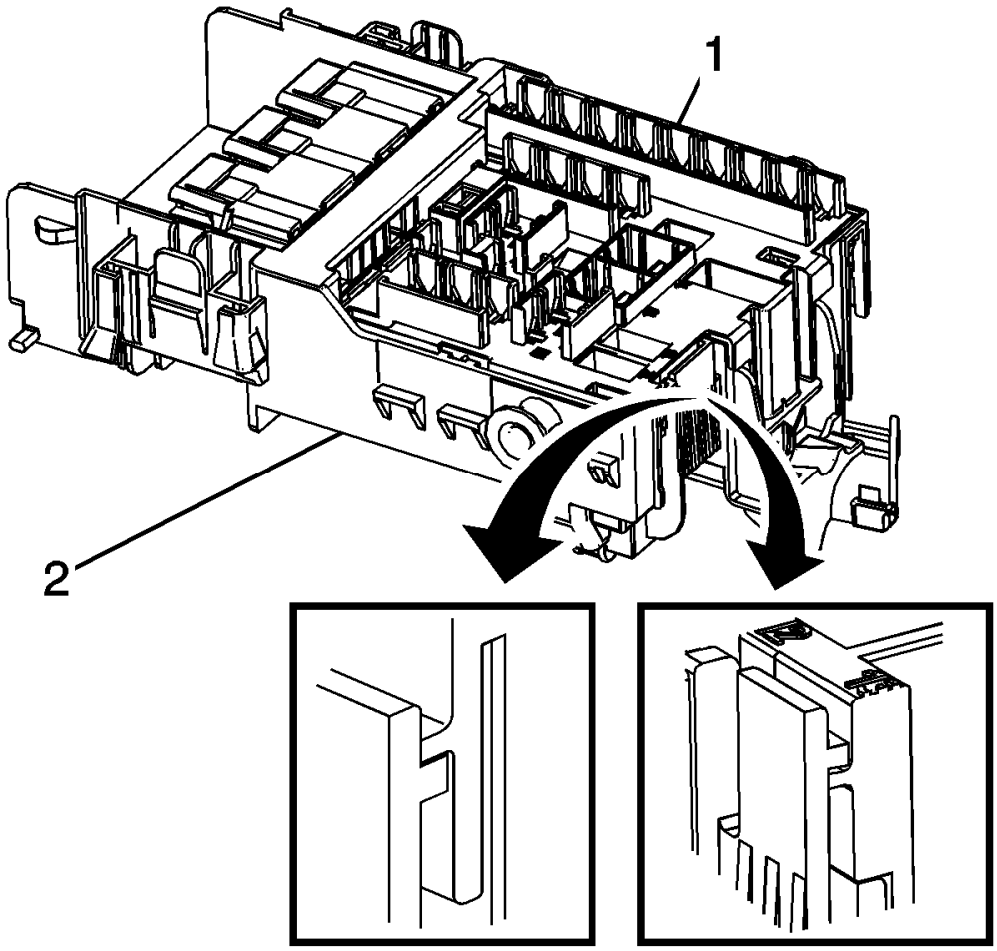

Fig. 13: Fuse Block Tabs
Courtesy of GENERAL MOTORS COMPANY

13. When the top part is in the pre-assembled position (required to release wire terminals), the tabs of the top part are on top of the tabs of the bottom part (left close-up view).

    When the top part is in the end-locking position (required after wires are inserted), the tabs of the bottom part are on top of the tabs of the top part (right close-up view).

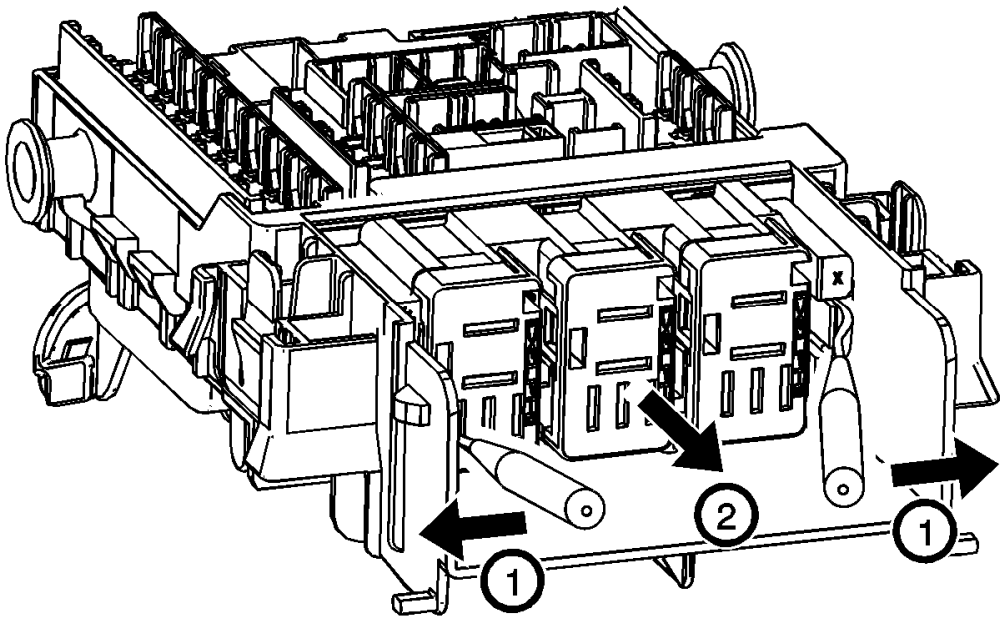

Fig. 14: Fuse Block Relays
Courtesy of GENERAL MOTORS COMPANY

14. Unlock and remove relay socket from fuse block.

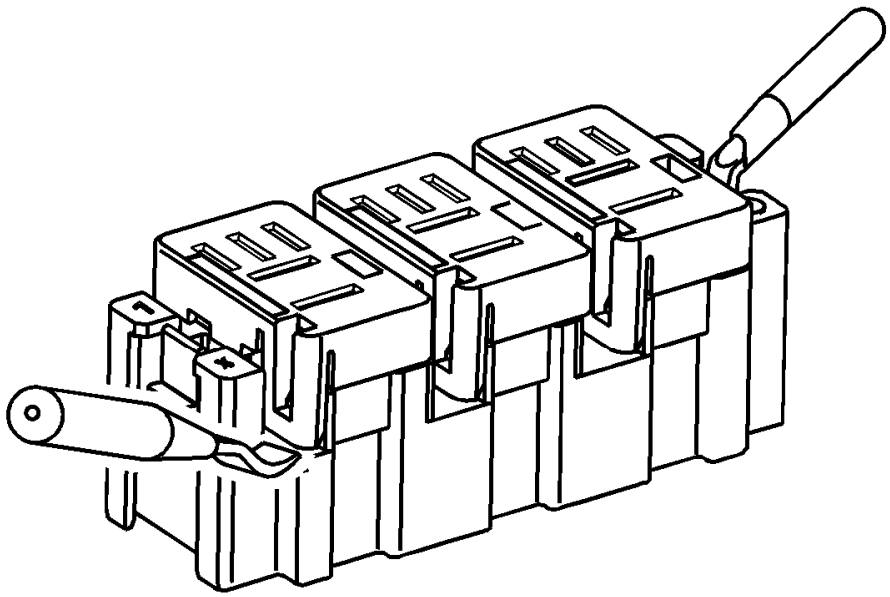

Fig. 15: Fuse Block Relay Socket & Locking Caps
Courtesy of GENERAL MOTORS COMPANY

15. Unlock (6 locking points) and remove locking caps (3x) from relay socket.

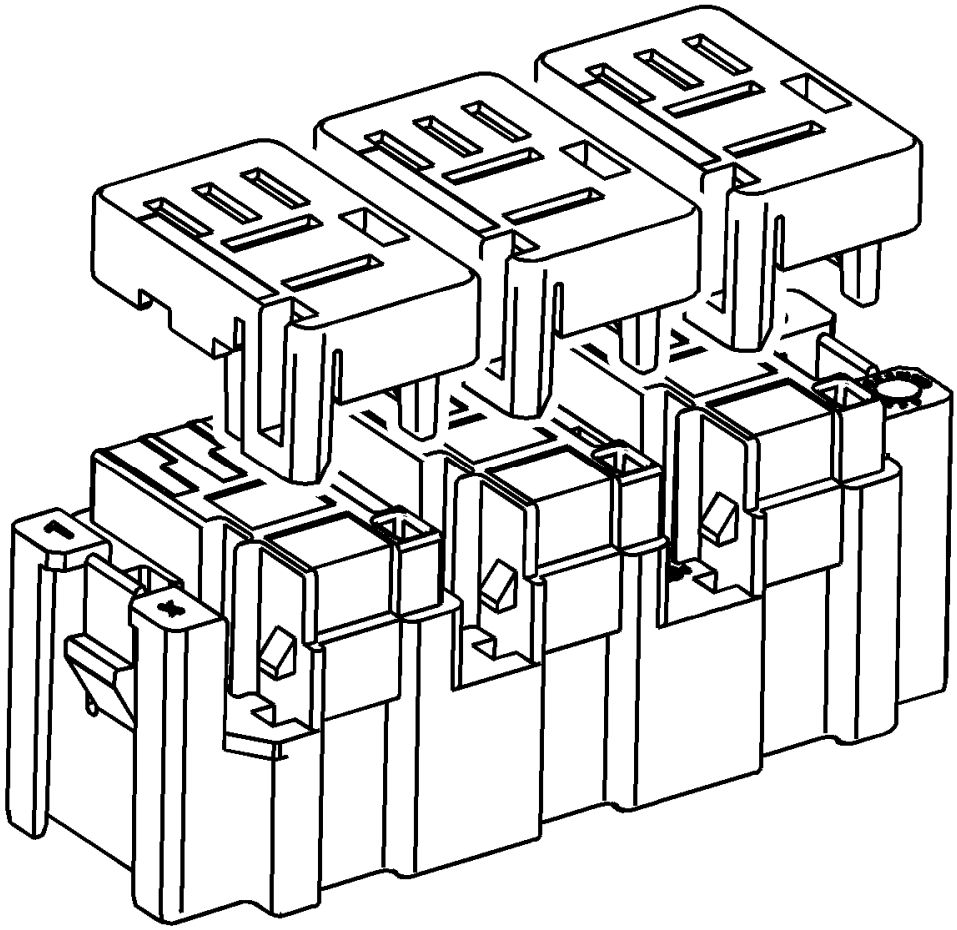

Fig. 16: Relay Socket & Locking Caps
Courtesy of GENERAL MOTORS COMPANY

16. Relay socket with locking caps removed.

RELAY REPLACEMENT (ATTACHED TO WIRE HARNESS)

Removal Procedure

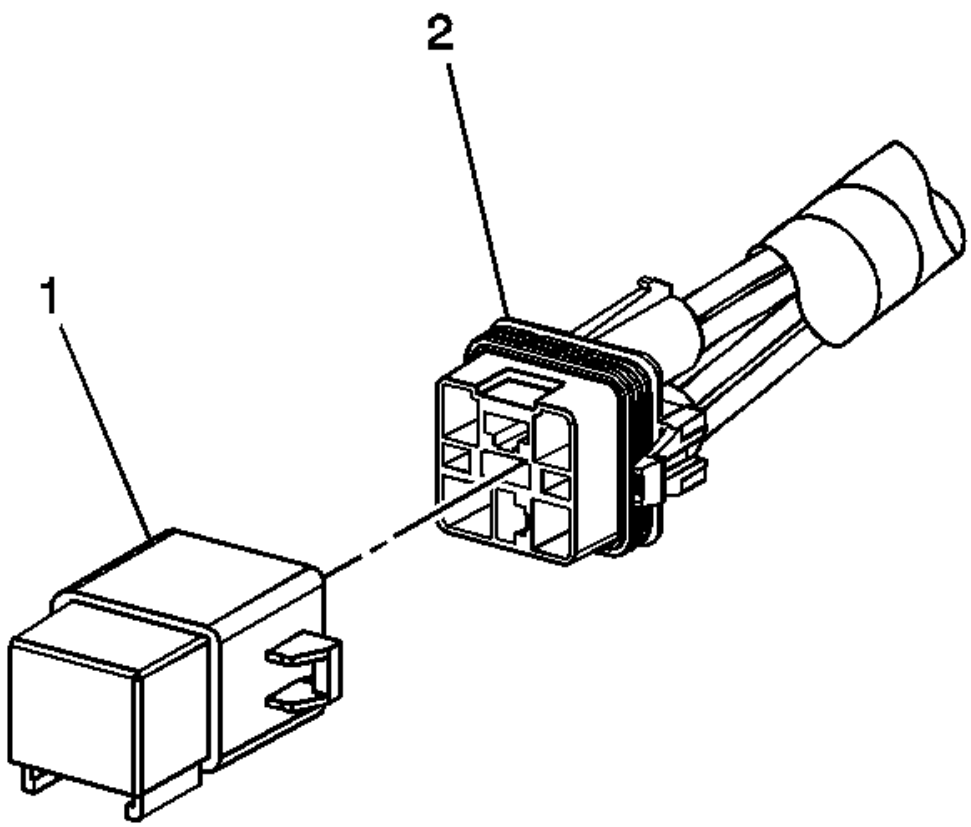

Fig. 17: Identifying Relay & Wire Harness Connector
Courtesy of GENERAL MOTORS COMPANY

1. Locate the relay. Refer to the **Master Electrical Component List** to locate the relay in the vehicle.
2. Remove any fasteners which hold the relay in place.
3. Remove any connector position assurance (CPA) devices or secondary locks.

NOTE: Use care when removing a relay in a wiring harness when the relay is secured by fasteners or tape.

4. Separate the relay (1) from the wire harness connector (2).

Installation Procedure

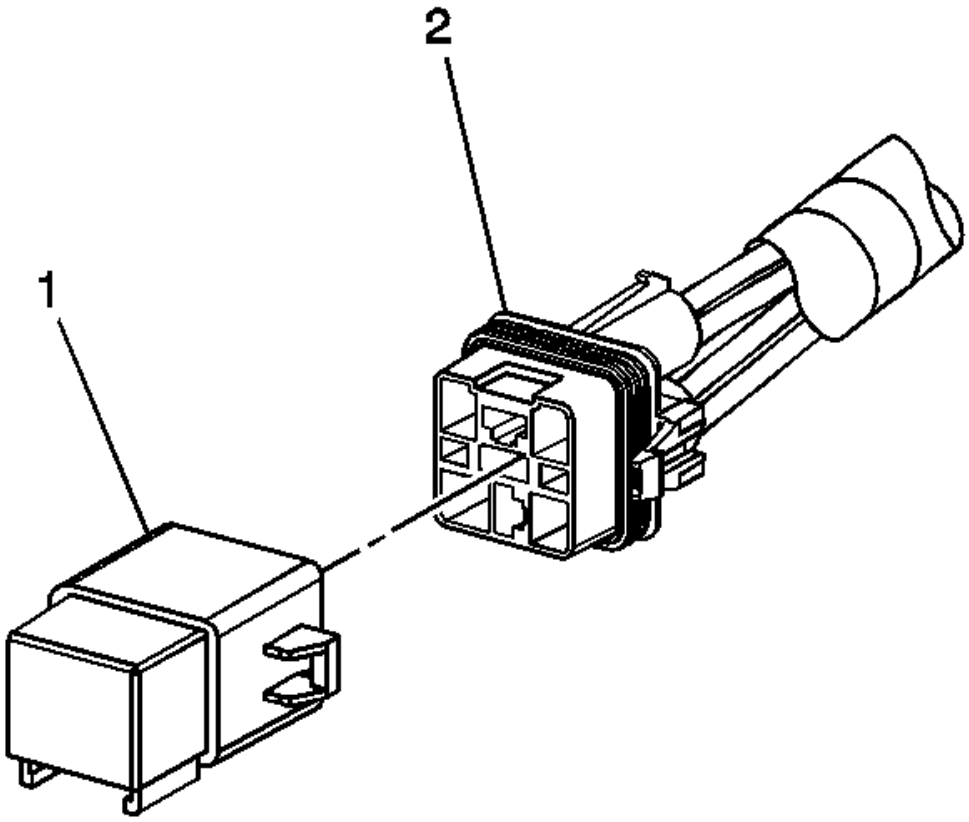

Fig. 18: Identifying Relay & Wire Harness Connector
Courtesy of GENERAL MOTORS COMPANY

1. Connect the relay (1) to the wire harness connector (2).
2. Install any connector position assurance (CPA) devices or secondary locks.
3. Install the relay using any fasteners or tape that originally held the relay in place.

RELAY REPLACEMENT (WITHIN AN ELECTRICAL CENTER)

Special Tools

EL-43244 Relay Puller Pliers

Removal Procedure

1. Remove the electrical center cover.

NOTE:

- **Always note the orientation of the relay.**

- **If equipped with a notch style relay; observe the location of the notch on the old relay to verify the new relay is installed with the notch in the same location.**
- **Ensure that the electrical center is secure, as not to put added stress on the wires or terminals.**

2. Locate the relay. Refer to **Electrical Center Identification Views** to locate the electrical center where the relay exists.

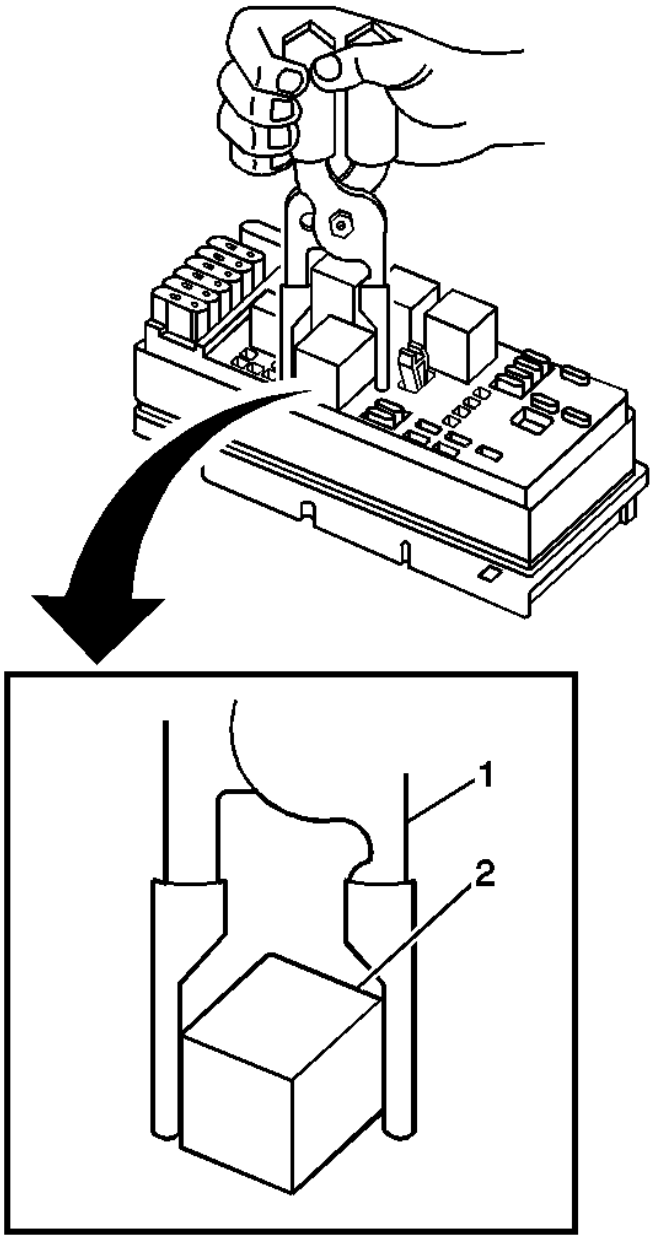

Fig. 19: Removing/Installing Relay
Courtesy of GENERAL MOTORS COMPANY

3. Using the EL-43244 (1) position the tool on opposing corners of the relay (2).

CAUTION: Use EL-43244 to pull the relay straight out from the electrical center terminals. The use of pliers or a flat bladed tool could damage the electrical center.

4. Remove the relay (2) from the electrical center.

Installation Procedure

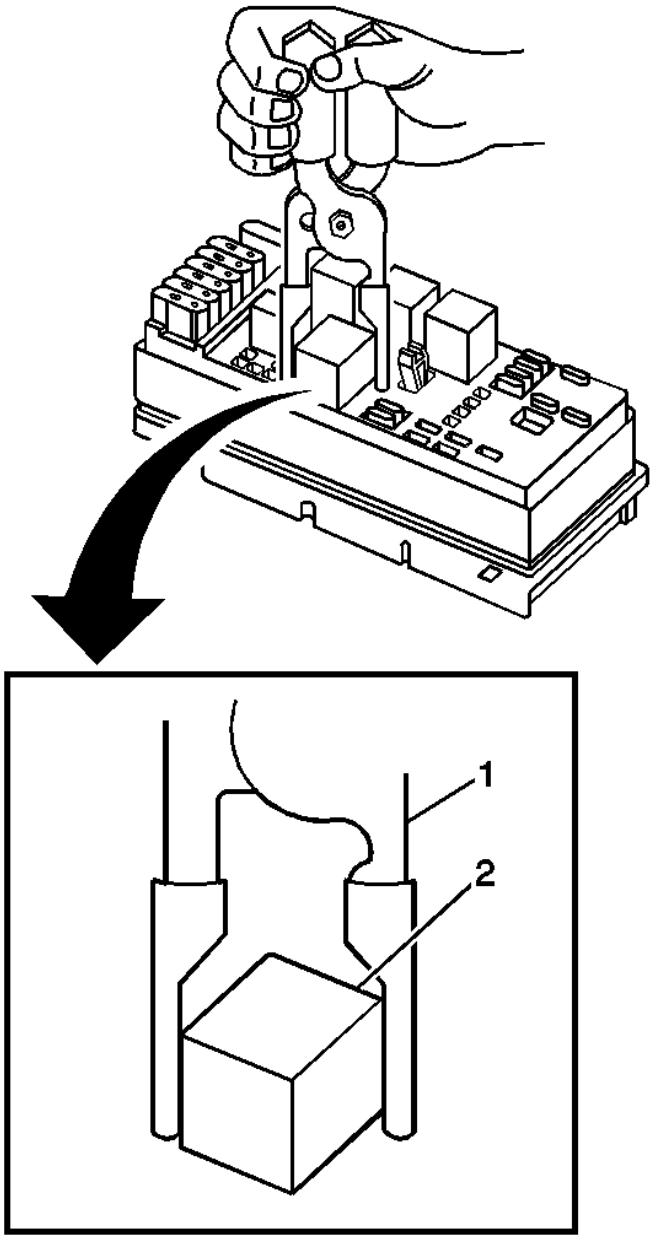

Fig. 20: Removing/Installing Relay
Courtesy of GENERAL MOTORS COMPANY

1. Install the relay (2) in the same position as removed.
2. Install the electrical center cover.

GROUND REPAIR

Electrical Grounds

Proper electrical system function relies on secure, positive, corrosion-free ground connections. Loose, stripped, or corroded connections increase the possibility of improper system function and loss of module communication. These conditions may also lead to unnecessary repairs and component replacements.

In general, electrical ground connections are accomplished using one, or a combination of, three attachment methods:

- Welded M6 stud and nut
- Welded M6 nut and bolt
- Welded M8 nut and bolt

CAUTION: Use GM approved replacement fasteners with conductive finish for electrical ground repair.

Determine which attachment method is used, and carry out the appropriate repair.

M6 Weld Stud Replacement

1. Select a location adjacent the damaged or missing M6 ground stud having 20 mm (0.79 in) clearance behind the panel surface and 20 mm (0.79 in) clearance surrounding the M6 rivet stud flange.
2. Using GM approved residue-free solvent or equivalent, remove any grease from the repair site and allow to dry.

NOTE: Ensure 20 mm (0.79 in) clearance is maintained behind the panel to be drilled.

3. Drill a 10 mm (0.40 in) diameter hole through the panel.
4. Carefully remove paint and primer from the area surrounding the rivet stud flange until bare metal is visible.

CAUTION: Use GM approved replacement fasteners with conductive finish for electrical ground repair.

5. Select a replacement conductive M6 rivet stud. Refer to GM parts catalog for the correct part number and application.
6. Using a rivet stud installer, install the replacement conductive M6 rivet stud.
7. Ensure the new rivet stud is securely fastened, with no detectable movement.

NOTE: The rivet stud and surrounding panel area must be properly refinished prior to the installation of the ground terminal and nut to maintain positive

electrical grounding.

8. Completely wrap the threads of the rivet stud with painters tape or equivalent.
9. Refinish the repair area using an anti-corrosion primer. Refer to **Anti-Corrosion Treatment and Repair** .
10. Allow the refinished repair area to cure sufficiently before removing the protective material applied to the rivet stud threads.
11. Remove the painters tape or equivalent from the rivet stud threads.
12. Using GM approved residue-free solvent or equivalent, thoroughly clean the rivet stud threads to remove any adhesive and allow to dry.
13. Carefully remove any corrosion from the electrical ground wire terminal. Refer to **Testing for Intermittent Conditions and Poor Connections** .
14. Using a small brush, apply Dielectric Lubricant GM P/N 12377900 (Canadian P/N 10953529) to the new conductive M6 rivet stud threads.
15. Install the ground terminal to the new rivet stud.
16. Select a new, conductive M6 nut. Refer to GM parts catalog for the correct part number and application.

CAUTION: Refer to Fastener Caution .

17. Install the M6 nut and tighten to 8 N.m (71 lb in).
18. Check for proper system operation.

M6 Weld Nut

CAUTION: Use GM approved replacement fasteners with conductive finish for electrical ground repair.

1. If the M6 weld nut at the electrical ground location is damaged or stripped, a new, conductive self-threading M7 bolt may be used to secure the ground terminal. Refer to GM parts catalog for the correct part number and application.
2. Using GM approved residue-free solvent or equivalent, remove any grease from the surface surrounding the weld nut and allow to dry.
3. Remove any loose metal particles from the damaged or stripped weld nut with a stiff brush.
4. Using a small brush, apply Dielectric Lubricant GM P/N 12377900 (Canadian P/N 10953529) to the new, conductive, self-threading M7 bolt threads.
5. Carefully remove any corrosion from the electrical ground terminal. Refer to **Testing for Intermittent Conditions and Poor Connections** .
6. Install the electrical ground terminal to the new, conductive M7 bolt.

CAUTION: Refer to Fastener Caution .

7. Install the M7 bolt and tighten to 9 N.m (80 lb in).
8. Check for proper system operation.

M6 Weld Nut (Alternative Repair)

CAUTION: Use GM approved replacement fasteners with conductive finish for electrical ground repair.

1. If the electrical ground location is accessible from both sides of the panel, a conductive M6 bolt and a conductive M6 nut may be used to secure the electrical ground terminal. Refer to GM parts catalog for the correct part number and application.
2. Select a location adjacent the damaged M6 weld nut having 20 mm (0.79) clearance behind the panel surface and 20 mm (0.79) clearance surrounding the new electrical ground site.
3. Using GM approved residue-free solvent or equivalent, remove any grease from the surface surrounding the ground location and allow to dry.

NOTE: Ensure 20 mm (0.79 in) clearance is maintained behind the panel to be drilled.

4. Drill a 10 mm (0.40 in) diameter hole through the panel.
5. Carefully remove paint and primer from the area surrounding the new ground site until bare metal is visible.
6. Using a small brush, apply Dielectric Lubricant GM P/N 12377900 (Canadian P/N 10953529) to the new, conductive M6 bolt threads.
7. Carefully remove any corrosion from the electrical ground terminal. Refer to **Testing for Intermittent Conditions and Poor Connections** .
8. Install the electrical ground terminal and new, conductive M6 bolt to the ground location.

CAUTION: Refer to Fastener Caution .

9. Install the conductive M6 nut and tighten to 8 N.m (71 lb in).

NOTE: The repair area must be properly refinished to maintain positive electrical grounding.

10. Refinish the repair area using an anti-corrosion primer. Refer to **Anti-Corrosion Treatment and Repair** .
11. Check for proper system operation.

M8 Weld Nut

CAUTION: Use GM approved replacement fasteners with conductive finish for electrical ground repair.

1. If the M8 weld nut electrical ground location is accessible from both sides of the panel, a conductive M8 bolt and a conductive M8 nut may be used to secure the ground terminal. Refer to GM parts catalog for the correct part numbers and application.
2. Select a location adjacent to M8 weld nut having 20 mm (0.79 in) clearance behind the panel surface and 20 mm (0.79 in) clearance surrounding the new electrical ground site.
3. Using GM approved residue-free solvent or equivalent, remove any grease from the surface surrounding the ground location and allow to dry.

NOTE: Ensure 20 mm (0.79 in) clearance is maintained behind the panel to be drilled.

4. Drill a 10 mm (0.40 in) diameter hole through the panel.
5. Carefully remove paint and primer from the area surrounding the new ground site until bare metal is visible.
6. Using a small brush, apply Dielectric Lubricant GM P/N 12377900 (Canadian P/N 10953529) to the new, conductive M8 bolt threads.
7. Carefully remove any corrosion from the electrical ground terminal. Refer to **Testing for Intermittent Conditions and Poor Connections** .
8. Install the electrical ground terminal and new, conductive M8 bolt to the ground location.

CAUTION: Refer to Fastener Caution .

9. Install the conductive M8 nut and tighten to 22 N.m (16 lb ft).

NOTE: The repair area must be properly refinished to maintain positive electrical grounding.

10. Refinish the repair area using an anti-corrosion primer. Refer to **Anti-Corrosion Treatment and Repair** .
11. Check for proper system operation.

M8 Weld Nut (Alternative Repair)

CAUTION: Use GM approved replacement fasteners with conductive finish for electrical ground repair.

1. If the M8 weld nut electrical ground location is not accessible from both sides of the panel, a conductive M6 rivet stud and a conductive M6 nut may be used to secure the ground terminal. Refer to GM parts catalog for the correct part numbers and application.

2. Select a location adjacent the damaged M8 weld nut having 20 mm (0.79 in) clearance behind the panel surface and 20 mm (0.79 in) clearance surrounding the new, conductive M6 rivet stud flange.
3. Using GM approved residue-free solvent or equivalent, remove any grease from the repair site and allow to dry.

NOTE: Ensure 20 mm (0.79 in) clearance is maintained behind the panel to be drilled.

4. Drill a 10 mm (0.40 in) diameter hole through the panel.
5. Carefully remove paint and primer from the area surrounding the rivet stud flange until bare metal is visible.
6. Using a rivet stud installer, install the replacement conductive M6 rivet stud.
7. Ensure the new rivet stud is securely fastened, with no detectable movement.

NOTE: The rivet stud and surrounding panel area must be properly refinished prior to the installation of the ground terminal and nut to maintain positive electrical grounding.

8. Completely wrap the threads of the rivet stud with painters tape or equivalent.
9. Refinish the repair area using an anti-corrosion primer. Refer to **Anti-Corrosion Treatment and Repair** .
10. Allow the refinished repair area to cure sufficiently before removing the protective material applied to the rivet stud threads.
11. Remove the painters tape or equivalent from the rivet stud threads.
12. Using GM approved residue-free solvent or equivalent, thoroughly clean the rivet stud threads to remove any adhesive and allow to dry.
13. Carefully remove any corrosion from the electrical ground wire terminal. Refer to **Testing for Intermittent Conditions and Poor Connections** .
14. Using a small brush, apply Dielectric Lubricant GM P/N 12377900 (Canadian P/N 10953529) to the new conductive M6 rivet stud threads.
15. Install the ground terminal to the new, conductive M6 rivet stud.

CAUTION: Refer to Fastener Caution .

16. Install the conductive M6 nut and tighten to 8 N.m (71 lb in).
17. Check for proper system operation.

FUSE BLOCK REPLACEMENT

Removal Procedure

1. Disconnect battery negative cable. Refer to **Battery Negative Cable Disconnection and Connection** .

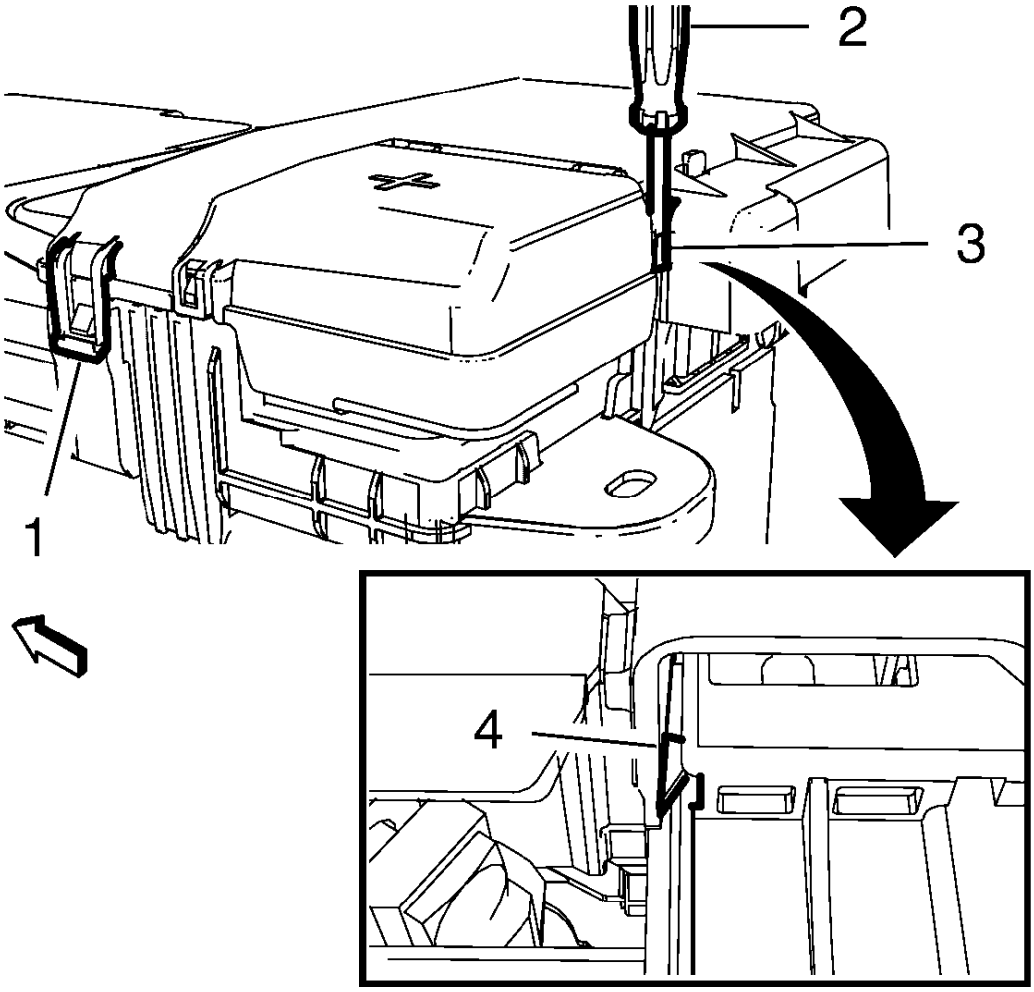

Fig. 21: Battery Fuse Box Cover
Courtesy of GENERAL MOTORS COMPANY

2. Unlock the retaining tab (1) on the battery fuse box cover.
3. Use a suitable screwdriver (2) to unlock the clip (4) through the window (3).

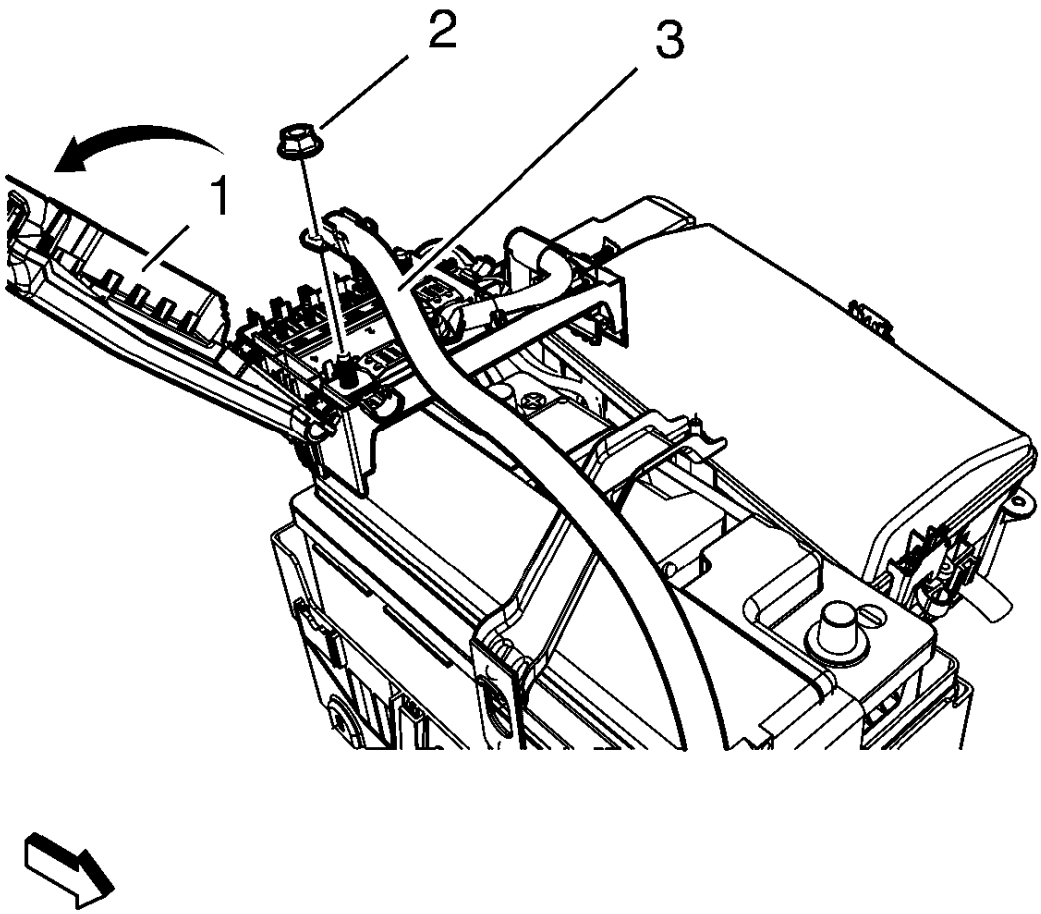

Fig. 22: View Of Fuse Box Cover, Battery Cable And Nut
Courtesy of GENERAL MOTORS COMPANY

NOTE: Pull the battery fuse box housing. DO NOT pull the flap.

4. Open the battery fuse box cover (1).
5. Remove the positive battery cable to starter nut (2).
6. Remove the positive battery cable to starter (3) from the battery.
7. Remove the positive battery cable. Refer to **Battery Positive Cable Replacement** .

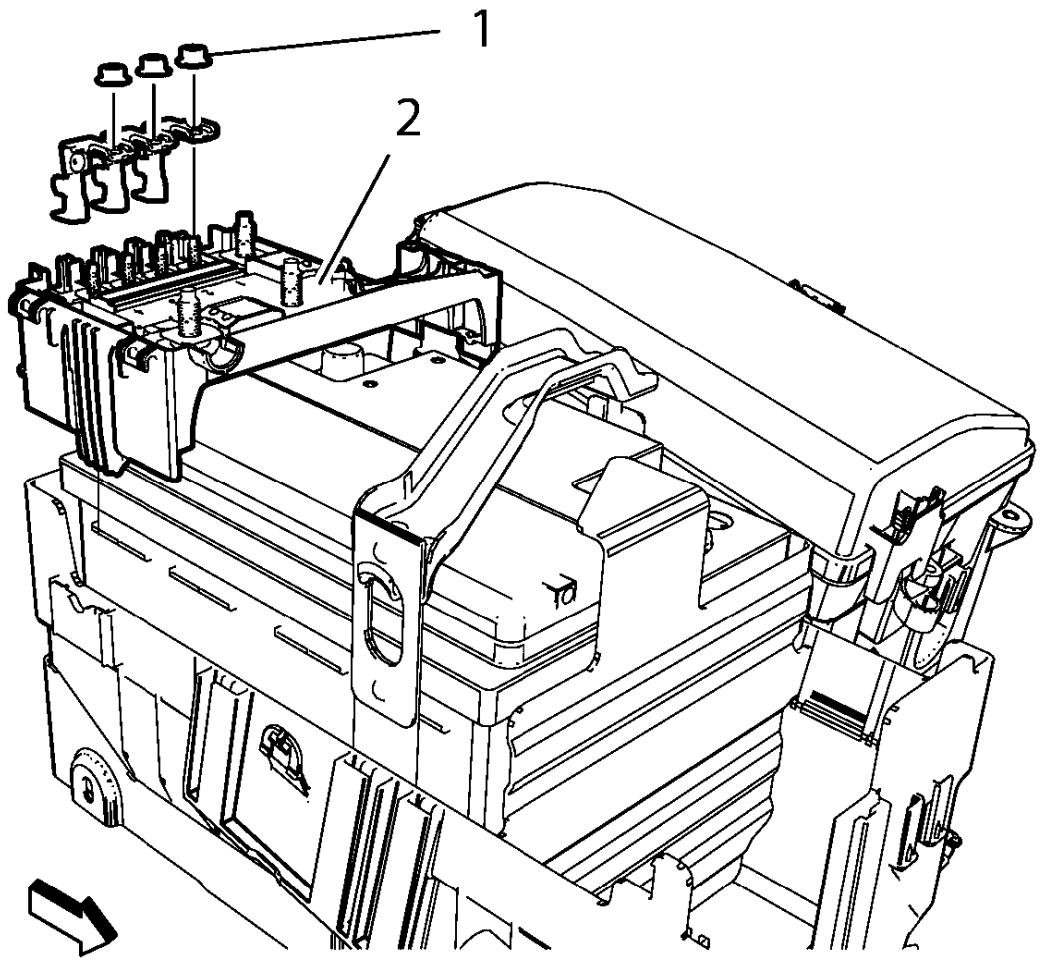

Fig. 23: Identifying Fuse Block, Body Wiring Harness And Nuts
Courtesy of GENERAL MOTORS COMPANY

8. Remove 2 body wiring harness nuts (1) and body wiring harness.
9. Remove fuse block (2).

Installation Procedure

1. Install fuse block.

CAUTION: Refer to Fastener Caution

2. Install body wiring harness and 2 body wiring harness nuts and tighten to 4.7 N.m (42 lb in).
3. Install the positive battery cable. Refer to **Battery Positive Cable Replacement** .

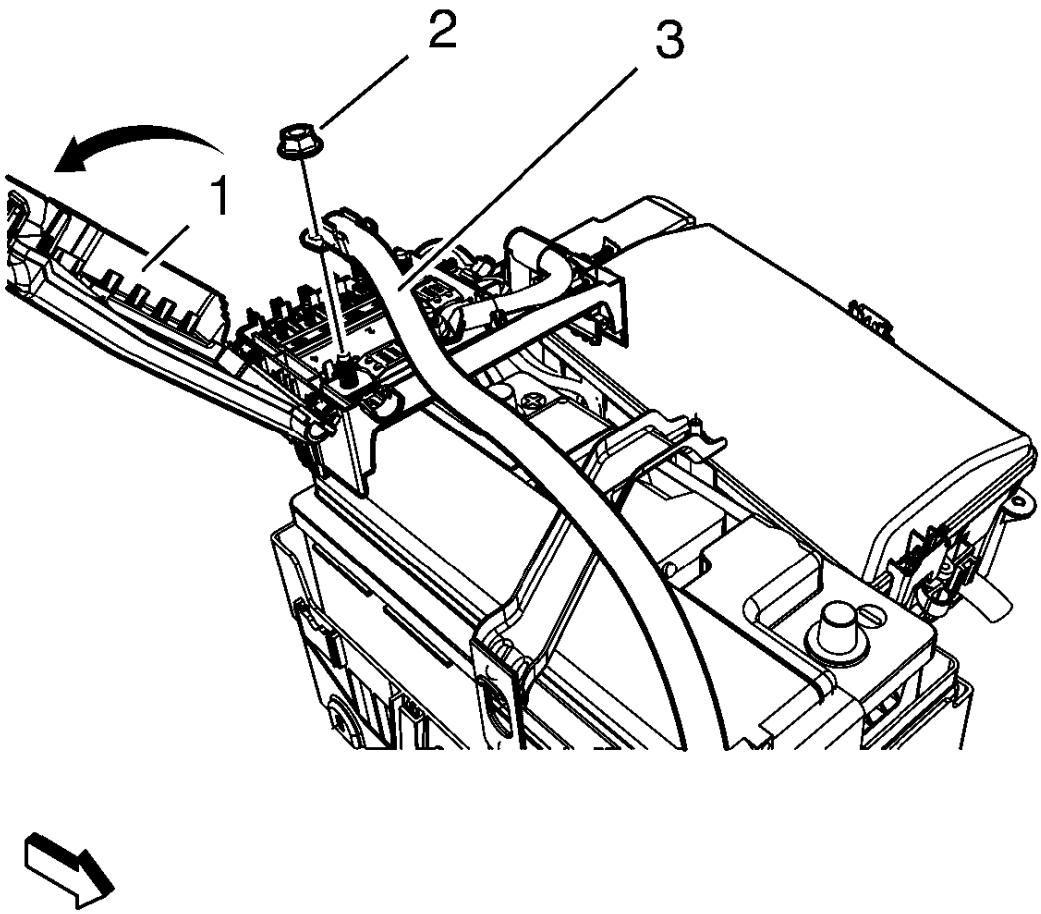

Fig. 24: View Of Fuse Box Cover, Battery Cable And Nut
Courtesy of GENERAL MOTORS COMPANY

4. Install the positive battery cable to starter (3).
5. Install the positive battery cable to starter nut (2) and tighten to 9 N.m (80 lb in).

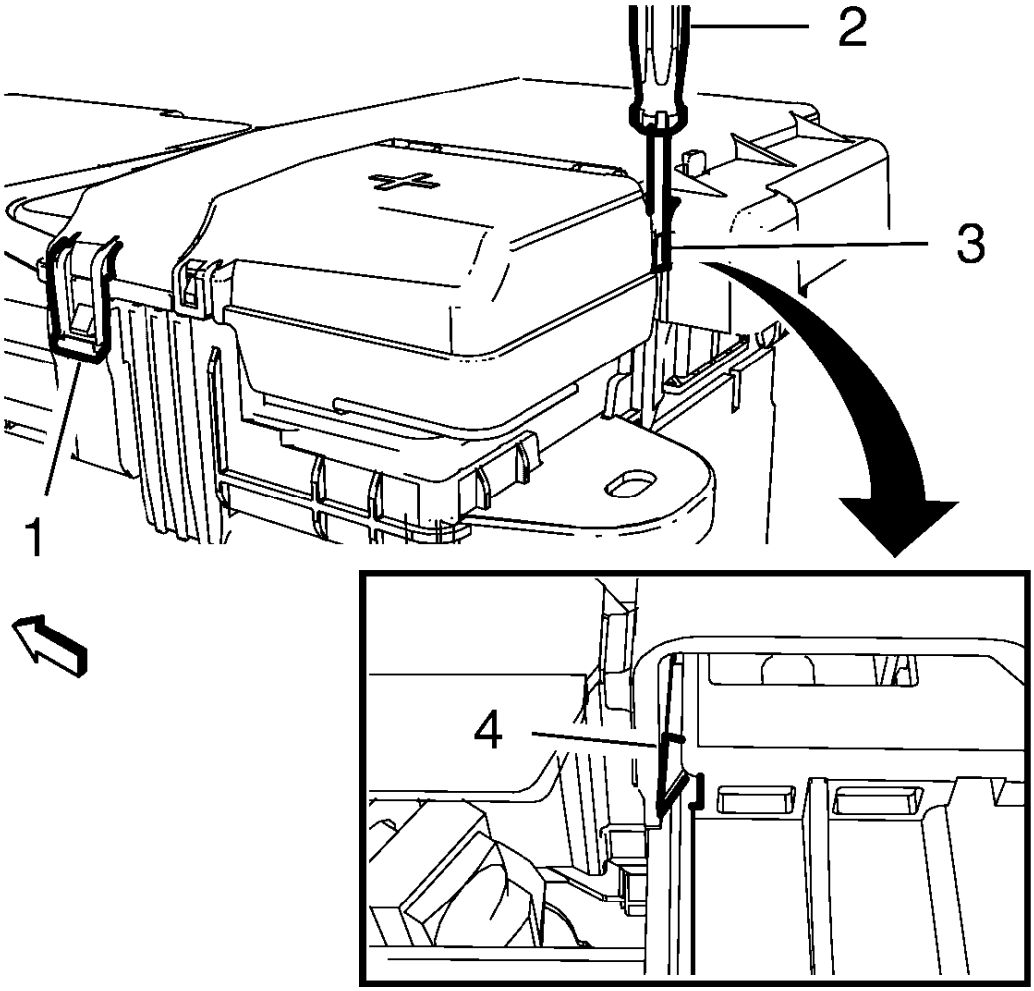

Fig. 25: Battery Fuse Box Cover
Courtesy of GENERAL MOTORS COMPANY

6. Close the battery fuse box cover and lock the retaining tabs (1) and (4).
7. Connect battery negative cable. Refer to **Battery Negative Cable Disconnection and Connection** .

FRONT COMPARTMENT FUSE BLOCK REPLACEMENT

Removal Procedure

1. Disconnect battery negative cable. Refer to **Battery Negative Cable Disconnection and Connection** .
2. Remove the front compartment fuse block cover. Refer to **Front Compartment Fuse Block Cover Replacement**.

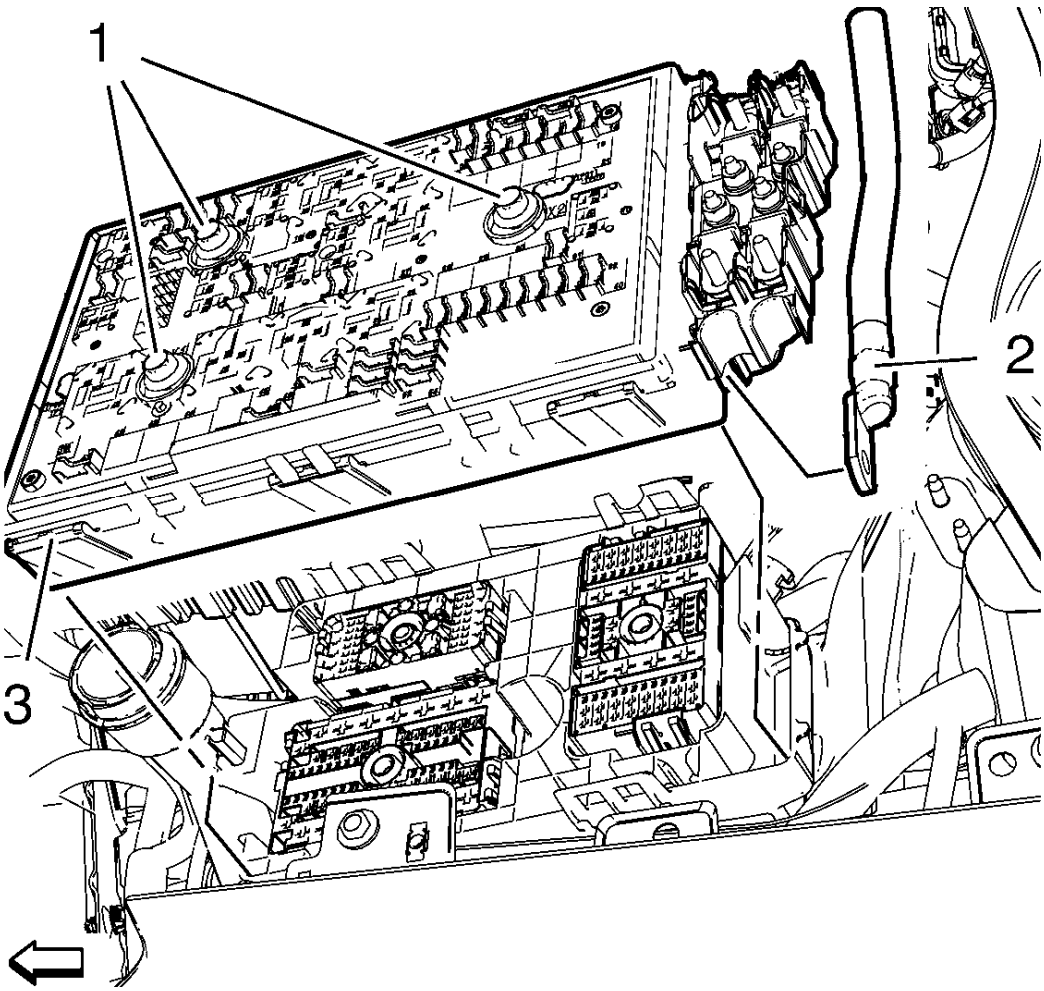

Fig. 26: View Of Front Compartment Fuse Block, Wiring Harness Supply And Fuse Block Bolt
Courtesy of GENERAL MOTORS COMPANY

NOTE: Bolts (1) are encapsulated on the end of threads so that they can not be removed from the fuse block. The fuse block must be pulled out to expose the positive cable lug.

3. Remove the 3 front compartment fuse block bolts (1).
4. Unlock retaining tabs and remove the front compartment fuse block (3).
5. Remove the front compartment fuse block wiring harness supply (2).

Installation Procedure

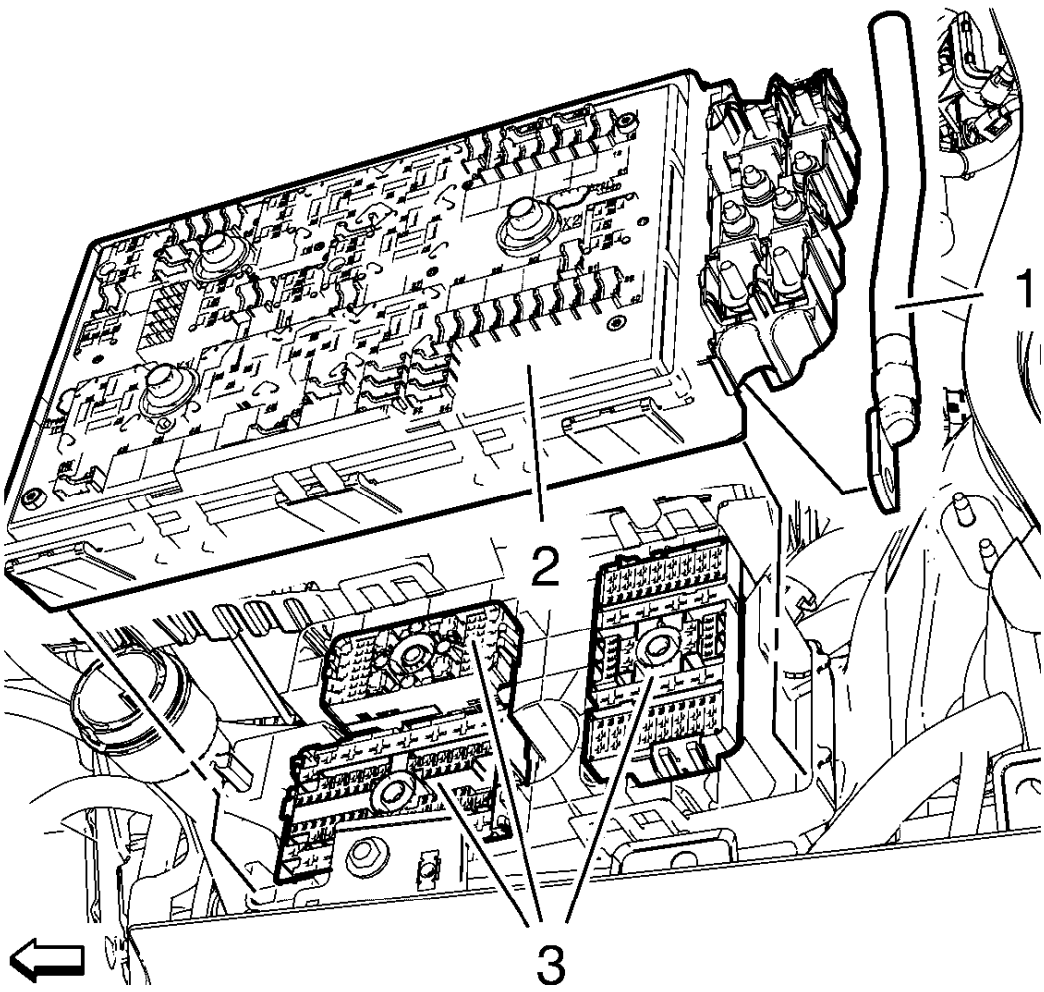

Fig. 27: Wiring Harness Supply, Front Compartment Fuse Block And Electrical Connectors
Courtesy of GENERAL MOTORS COMPANY

CAUTION: Refer to Fastener Caution .

1. Install front compartment fuse block wiring harness supply (1) and tighten to 12 N.m (106 lb in).
2. Push down the 3 electrical connectors (3) before installation of the front compartment fuse block (2).

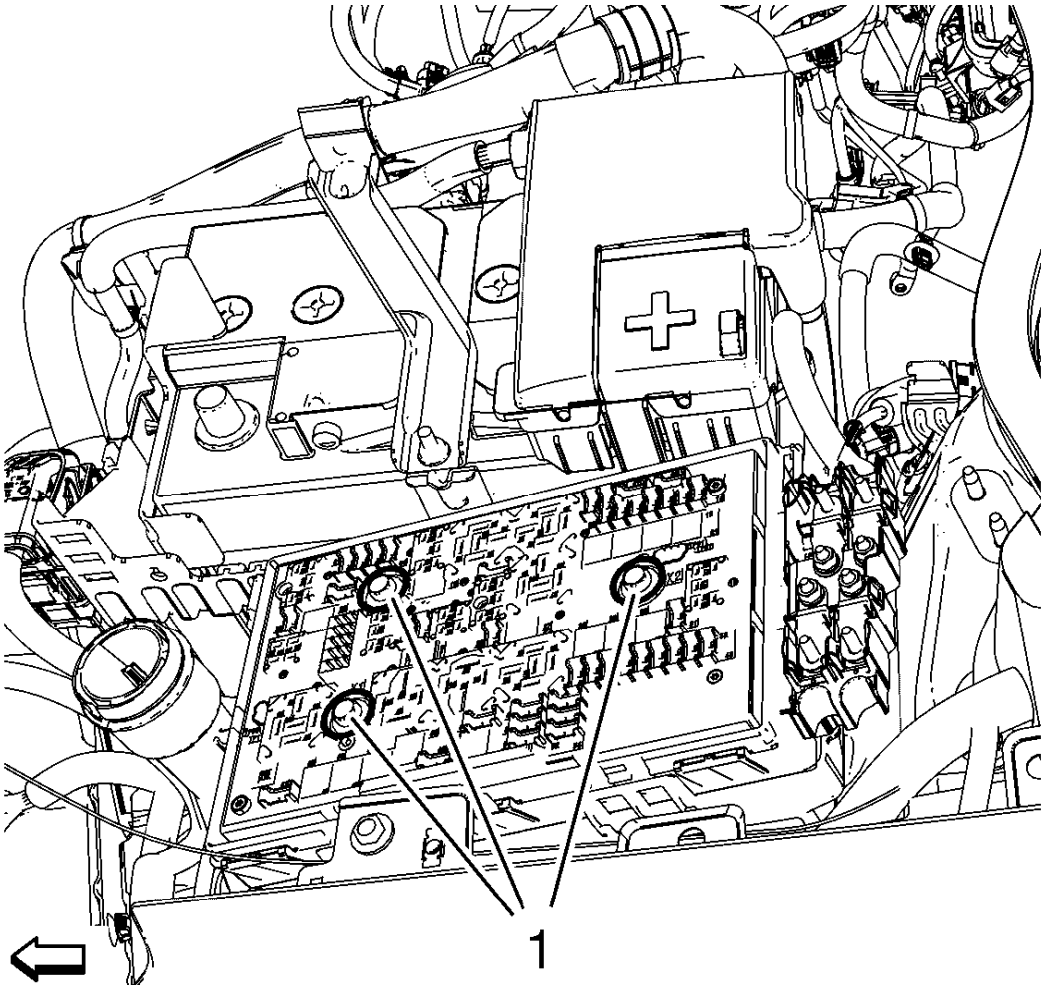

Fig. 28: Identifying Front Compartment Fuse Block Bolt
Courtesy of GENERAL MOTORS COMPANY

3. Install 3 front compartment fuse block bolts (1) and tighten to 6 N.m (53 lb in).
4. Install the front compartment fuse block cover. Refer to **Front Compartment Fuse Block Cover Replacement**.
5. Connect battery negative cable. Refer to **Battery Negative Cable Disconnection and Connection** .

FRONT COMPARTMENT FUSE BLOCK HOUSING REPLACEMENT

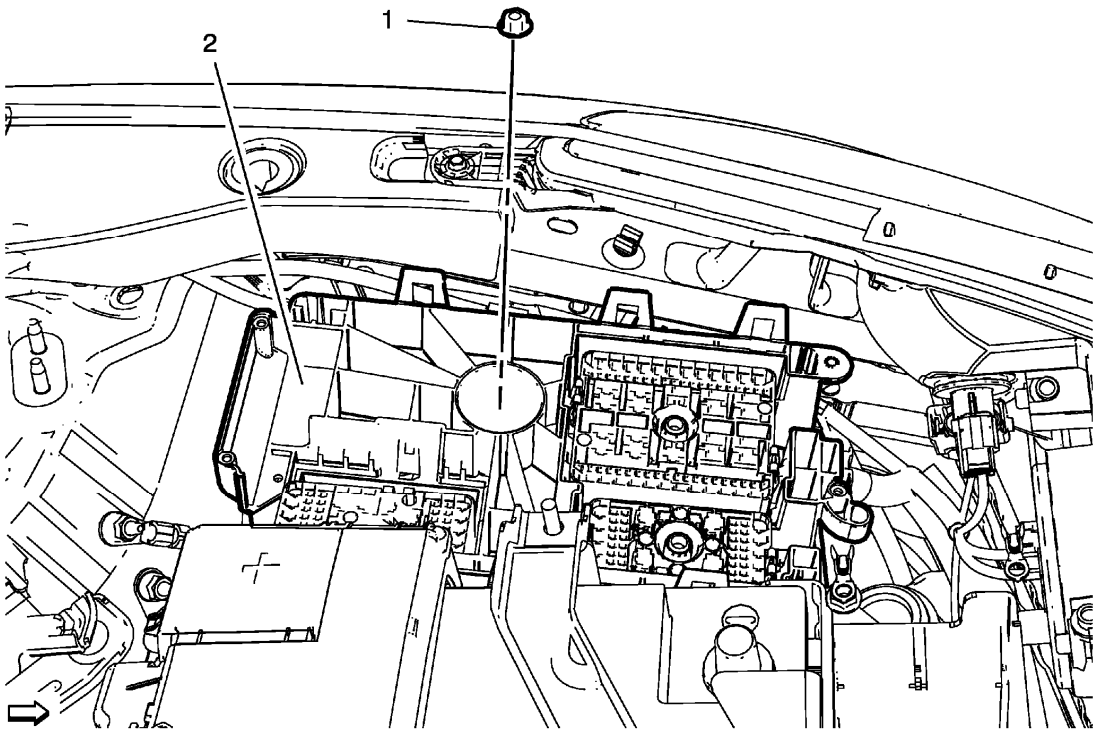

Fig. 29: Identifying Front Compartment Fuse Block Housing And Nut
Courtesy of GENERAL MOTORS COMPANY

Front Compartment Fuse Block Housing Replacement

Callout	Component Name
Preliminary Procedures 1. Disconnect the negative battery cable. Refer to **Battery Negative Cable Disconnection and Connection** . 2. Remove the windshield washer solvent container filler tube. Refer to **Windshield Washer Solvent Container Filler Tube Replacement** . 3. Remove front compartment fuse block. Refer to **Front Compartment Fuse Block Replacement**.	
1	Front Compartment Fuse Block Housing Nut **CAUTION:** **Refer to Fastener Caution .** **Tighten** 22 N.m(16 lb ft)
2	Front Compartment Fuse Block Housing **Procedure**

	1. Remove 3 electrical connectors from front compartment fuse block housing. 2. Remove attaching parts and unclip wiring harnesses from front compartment fuse block housing.

FRONT COMPARTMENT FUSE BLOCK COVER REPLACEMENT

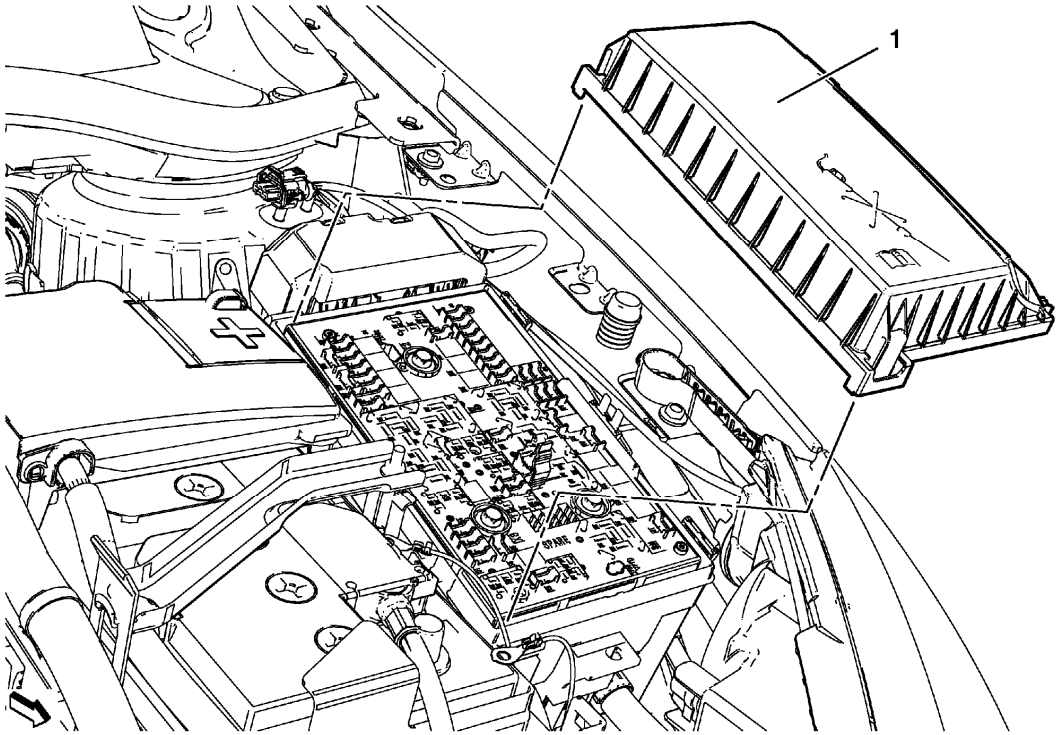

Fig. 30: Identifying Front Compartment Fuse Block Cover
Courtesy of GENERAL MOTORS COMPANY

Front Compartment Fuse Block Cover Replacement

Callout	Component Name
1	Front Compartment Fuse Block Cover **Procedure** Squeeze 3 tabs to release cover.

IGNITION LOCK CYLINDER REPLACEMENT

Removal Procedure

1. Disconnect the battery negative cable. Refer to **Battery Negative Cable Disconnection and Connection** .
2. Remove the steering column lower trim cover. Refer to **Steering Column Lower Trim Cover Replacement** .

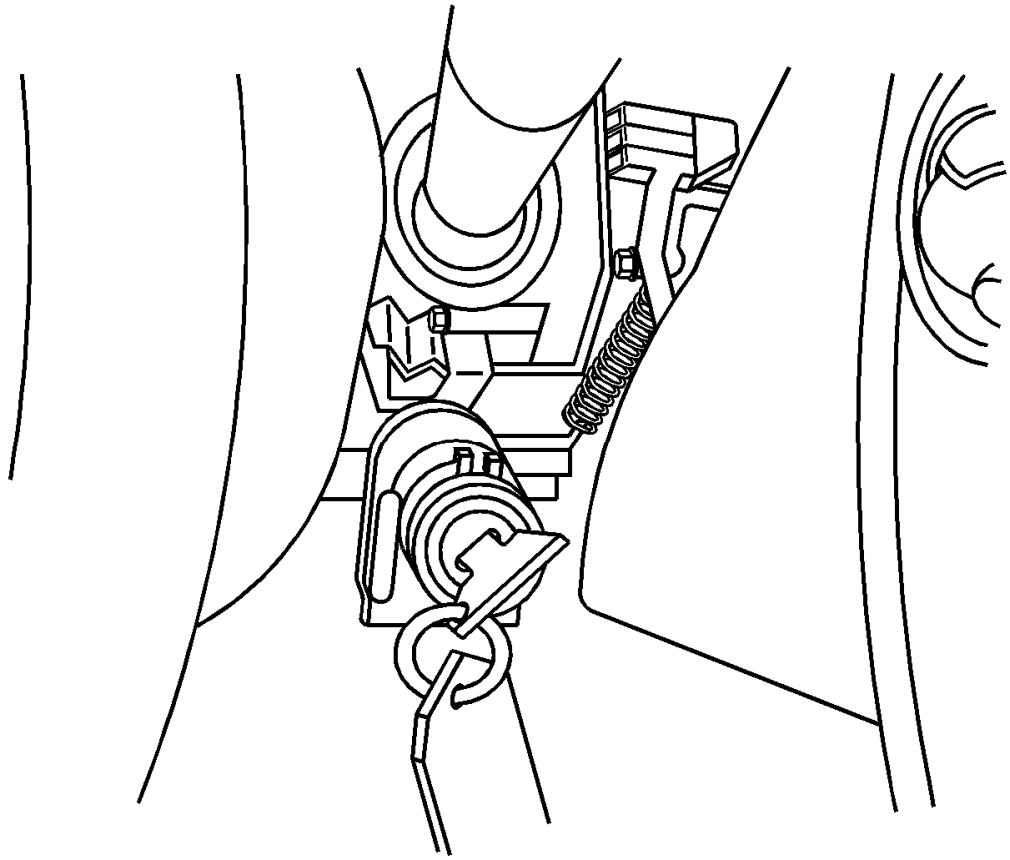

Fig. 31: Key & Ignition Lock Cylinder
Courtesy of GENERAL MOTORS COMPANY

3. Insert the key into the ignition lock cylinder and turn the key to the RUN position.

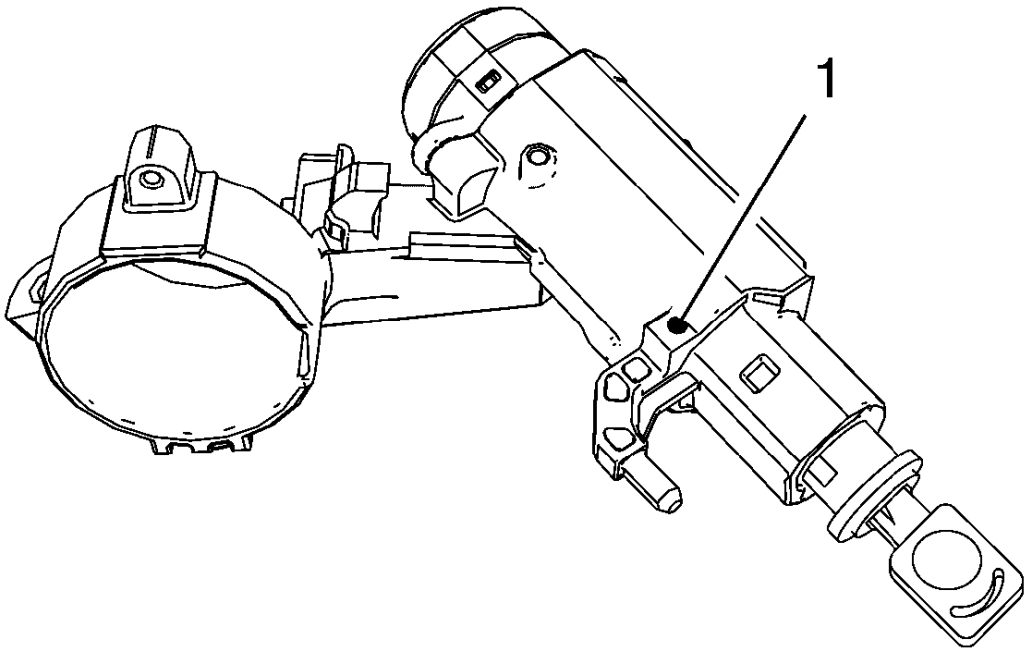

Fig. 32: Access Hole
Courtesy of GENERAL MOTORS COMPANY

4. Depress the retainer through the lock housing access hole (1) with a small Allen wrench or similar pick-type tool.
5. Remove the ignition lock cylinder from the lock housing.

Installation Procedure

1. If you are installing a new ignition lock cylinder, code the lock cylinder. Refer to **Key and Lock Cylinder Coding** .

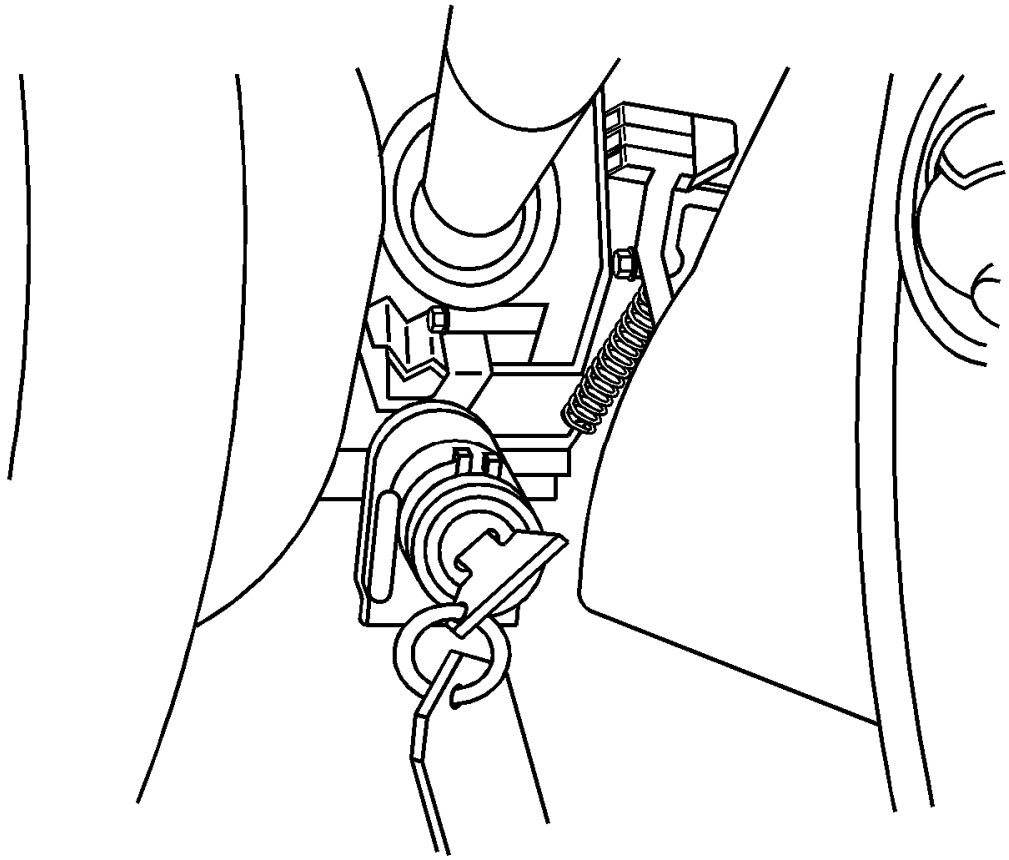

Fig. 33: Key & Ignition Lock Cylinder
Courtesy of GENERAL MOTORS COMPANY

2. Turn the key to the RUN position and insert ignition lock cylinder into the lock housing.
3. Turn the key to the LOCK position and remove the key from the ignition lock cylinder.
4. Install the steering column lower trim cover. Refer to **Steering Column Lower Trim Cover Replacement** .
5. Connect the battery negative cable. Refer to **Battery Negative Cable Disconnection and Connection** .

IGNITION AND START SWITCH REPLACEMENT

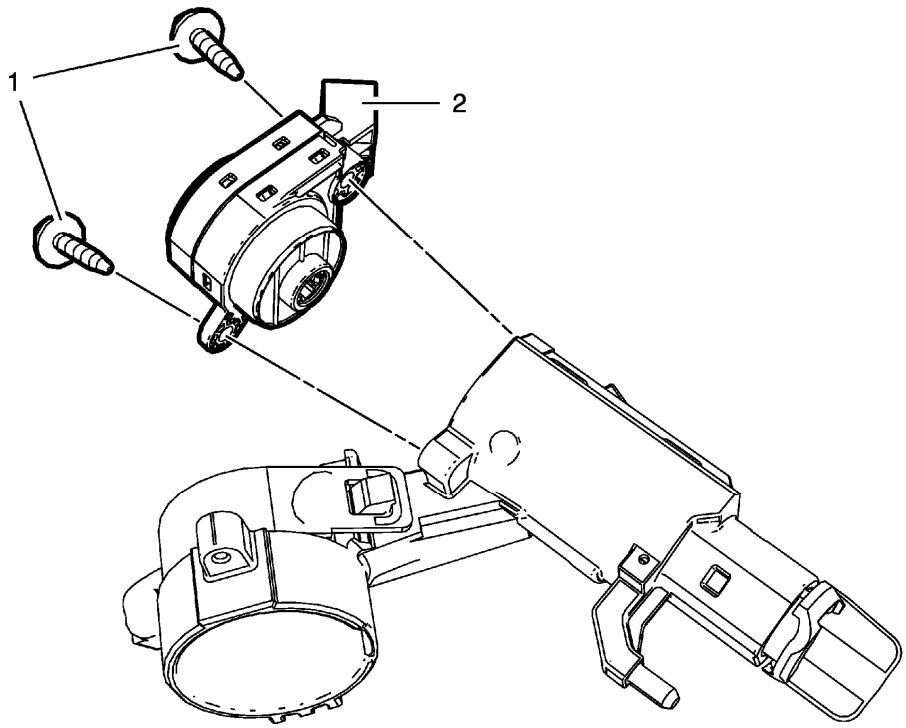

Fig. 34: Ignition Switch And Bolts
Courtesy of GENERAL MOTORS COMPANY

Ignition and Start Switch Replacement

Callout	Component Name
Preliminary Procedures 1. Disconnect the battery negative cable. Refer to **Battery Negative Cable Disconnection and Connection** . 2. Remove the steering column lower trim cover. Refer to **Steering Column Lower Trim Cover Replacement**	
1	Ignition and Start Switch Bolt (Qty: 2) **CAUTION:** **Refer to Fastener Caution .** **Procedure** Reposition the steering column wiring harness retainers in order to gain access to the switch bolts.
2	Ignition and Start Switch

ENGINE STOP/START MODE CONTROL SWITCH REPLACEMENT

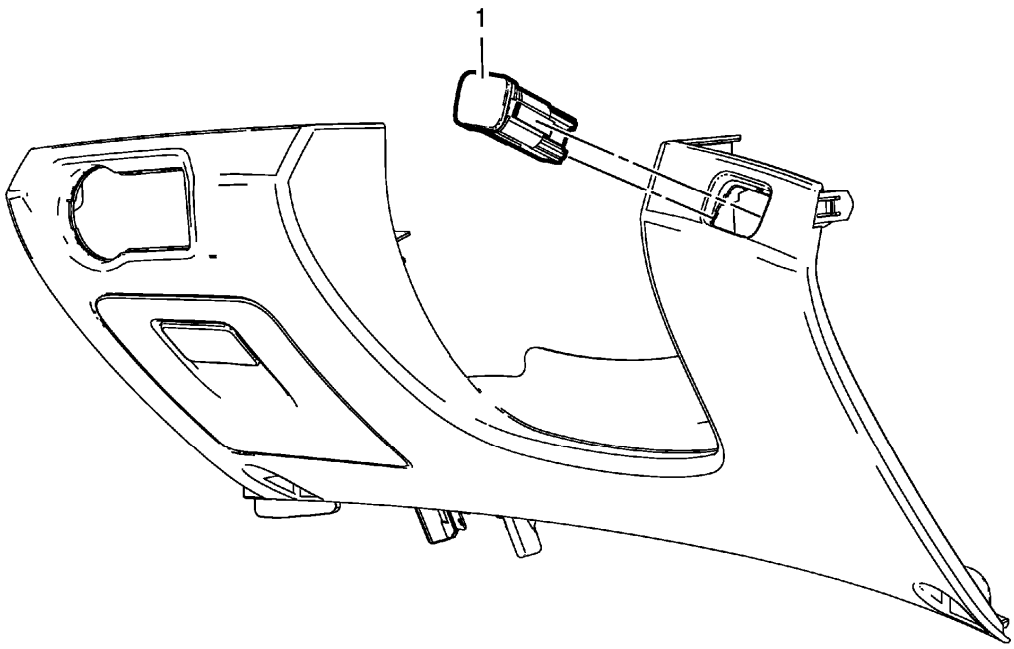

Fig. 35: Engine Stop/Start Mode Control Switch
Courtesy of GENERAL MOTORS COMPANY

Engine Stop/Start Mode Control Switch Replacement

Callout	Component Name
Preliminary Procedure Remove the instrument panel lower trim pad cover. Refer to **Instrument Panel Lower Trim Pad Cover Replacement (without Knee Airbag)** , **Instrument Panel Lower Trim Pad Cover Replacement (with Knee Airbag)** .	
1	Engine Stop/Start Mode Control Switch **Procedure** Unlock the retaining tabs.

IGNITION AND START SWITCH HOUSING REPLACEMENT

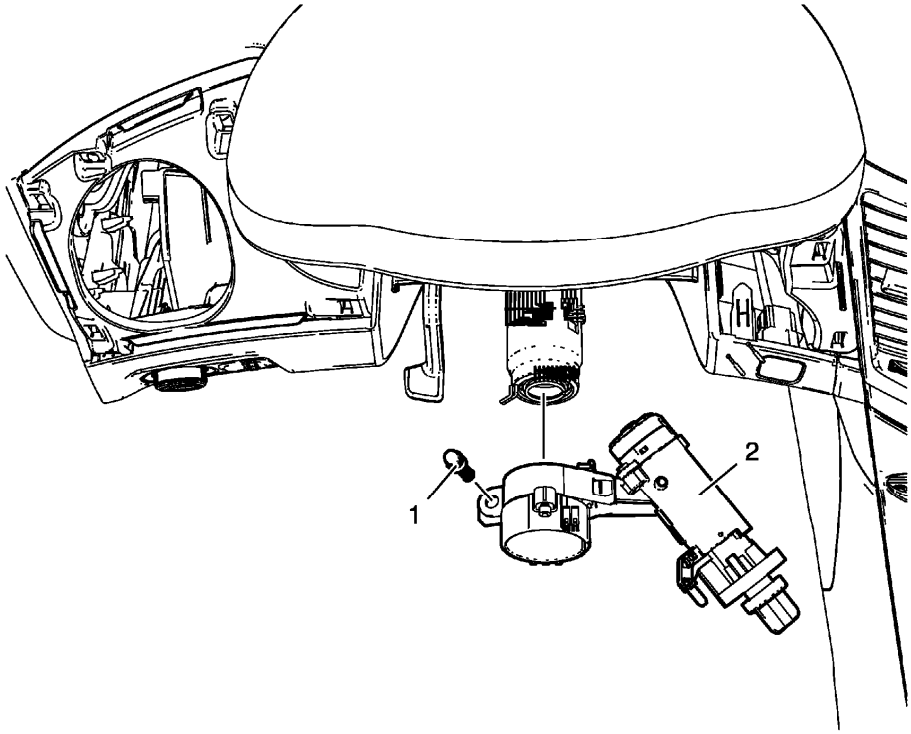

Fig. 36: Ignition And Start Switch Housing
Courtesy of GENERAL MOTORS COMPANY

Ignition and Start Switch Housing Replacement

Callout	Component Name
Preliminary Procedures 1. Remove the ignition lock cylinder. Refer to **Ignition Lock Cylinder Replacement** 2. Remove the turn signal switch bracket. Refer to **Turn Signal Switch Bracket Replacement**	
1	Ignition Lock Cylinder Bolt **CAUTION:** **Refer to Fastener Caution .** **Procedure** 1. Use a suitable chisel to remove bolt. 2. Install NEW bolt and tighten until head tears off.
2	Ignition and Start Switch Housing **Procedure** 1. Disconnect the electrical connector. 2. Remove ignition and start switch. Refer to **Ignition and Start**

	Switch Replacement.

2013 ACCESSORIES & EQUIPMENT

Air/Wind Noise - Cruze

DIAGNOSTIC INFORMATION AND PROCEDURES

AIR/WIND NOISE

Special Tools

- **CH-39570** Chassis Ear
- **GE-41416** Ultrasonic Leak Detector

For equivalent regional tools, refer to **Special Tools**.

WARNING: Refer to Assistant Driving Warning .

To analyze a reported windnoise condition, test drive the vehicle to determine the origin of the noise.

Choose a regular route with smooth and straight streets that run in all 4 directions: North, South, East, and West. The area should have little traffic or little noise in order to eliminate interference with the test.

NOTE: Often there is one primary leak source and one or more secondary leaks that contribute to the noise condition. Repairing only one of the contributing leak sources may not completely repair the total condition but only reduce the condition.

Drive the vehicle at the speed in which the noise was noticed, or until the noise is heard. Maintain safe and legal speeds.

Many of the waterleak diagnosis tests are also used for the windnoise diagnosis.

Most windnoise is caused either by leaking seals or by misaligned body surfaces. You can diagnose the following types of windnoise with the aid of **CH-39570** ear or **GE-41416** detector.

- Wind whistle
- Wind roar
- Wind rush

When moving at highway speeds, air pressure inside the vehicle becomes greater than the air pressure outside. When a leak occurs, the escaping air causes a hiss or a whistle.

Wind roar occurs when air passes over or through an opening between the 2 body surfaces. To correct the condition, adjust the alignment to the body surfaces.

Wind rush occurs when air presses over the vehicle's body, and is related to the aerodynamics of the vehicle. Wind whistle and wind roar are repairable. Rule out wind whistle and wind roar before concluding that the wind noise is due to wind rush.

Use the following inspections in order to aid in diagnosing wind whistle or wind roar:

1. Note the details for wind noise:
    - The perceived location
    - The location where the noise is loudest
    - When the noise occurs
    - The vehicle speed
    - The interior fan speed
    - The position of the windows
    - What the noise sounds like
2. Inspect the vehicle for the possible cause of the windnoise.
3. Test drive the vehicle and determine if the windnoise is external or internal.
4. Perform a visual inspection of the following components:
    - Loose fasteners
    - Torn weatherstrips
    - Broken weld joints
    - Sealer and/or adhesive skips

TRACING POWDER OR CHALK TEST

Clean the weatherstrips and the contact surfaces with cleaning solvent.

1. Apply powder or chalk in an unbroken line to the contact surface of the weatherstrip surrounding the perimeter of the suspected areas.
2. Close the panel completely without slamming the panel. Closing the panel completely presses the weatherstrip firmly against the mating surface.
3. Inspect the applied line on the weatherstrip. The applied line is marred where contact is good. A corresponding imprint is on the mating surfaces.
4. Gaps or irregularities in the powder or the chalk line on the mating surfaces indicate the areas with a poor seal.

AIR PRESSURE TEST

1. Mask off both the pressure relief valves.
2. Close all the windows.
3. Turn the vehicles ventilation fan to the on position, with the selector on high speed and in the defrost mode.
4. Unlock and close the doors.

5. Listen for escaping air along the door and the window seals with a stethoscope or a length of heater hose.

SOAP SUDS OR BUBBLE TEST

1. Mask off the pressure relief valves.
2. Close all the windows and the doors.
3. Turn the vehicles ventilation fan to the on position, with the selector on high speed and in the defrost mode.
4. Unlock and close the doors.
5. Apply the soap solution to the potential leak areas.
6. Look for bubbles revealing escaping air.

REPAIR INSTRUCTIONS

EXTERIOR WINDNOISE

WARNING: Refer to Assistant Driving Warning .

Exterior windnoise is louder when the vehicle is driven with one or more windows down. Exterior windnoise occurs when air passes over the body panels, the seams, or the openings. Use the following items during the test drive in order to aid in the detection of leaks:

- Mechanic's stethoscope or heater hose
- Masking tape-51 mm (2 in) width
- Strip caulk
- A water soluble marking pencil

1. While driving, determine the location of the exterior windnoise by lowering one window at a time. If the location corresponds with the condition in step 2, pull over and make a temporary repair with 51 mm (2 in) wide masking tape.
2. Tape over the gaps and the moldings one at a time. Test between each taping. Taping over the gaps and moldings will correct the condition.
3. Temporarily repair the condition with masking tape. Adjust the tape when needed.
4. Continue testing in order to determine if the noise has been eliminated or other leak areas exist.
5. When all the reported leak conditions are located, make permanent repairs using the proper alignment techniques and the sealing materials.

INTERIOR WINDNOISE

WARNING: Refer to Assistant Driving Warning .

Interior windnoise is not heard when the window is lowered. Interior windnoise is caused by the air leaving the inside of the vehicle through a seal or a seam.

1. Tape over the relief valves to cause added air pressure within the vehicle.
2. Test drive the vehicle and listen for windnoise or a whistle.
3. Pull the vehicle over and make the temporary repairs using masking tape. If you cannot determine the source of the windnoise, perform one or more of the following diagnostic tests:
   - **Air Pressure Test**
   - **Soap Suds or Bubble Test**
   - **Tracing Powder or Chalk Test**

SPECIAL TOOLS AND EQUIPMENT

SPECIAL TOOLS

Illustration	Tool Number/ Description
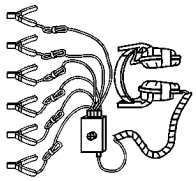	CH-39570 J 39570 Chassis Ear
	GE-41416 J 41416 Ultrasonic Leak Detector

2013 ACCESSORIES & EQUIPMENT

Bolted Exterior Body Panels and Closures - Cruze

SPECIFICATIONS

FASTENER TIGHTENING SPECIFICATIONS

Fastener Tightening Specifications

Application	Specification	
	Metric	English
Front Fender Bolt	8 N.m	71 lb in
Front Fender Bracket Bolt	9 N.m	80 lb in
Front Side Door Check Link Bolt	25 N.m	19 lb ft
Front Side Door Check Link Nut	9 N.m	80 lb in
Front Side Door Hinge Bolt - Body Side	32 N.m	24 lb ft
Front Side Door Hinge Bolt - Door Side	25 N.m	19 lb ft
Headlamp and Front Bumper Fascia Mount Panel Bolt	22 N.m	17 lb ft
Hood Hinge Bolt	26 Y	20 lb ft
Hood Hinge Reinforcement Nut	26 Y	20 lb ft
Rear Compartment Lid Hinge Bolt	9 Y	80 lb in
Rear Side Door Check Link Bolt	25 N.m	19 lb ft
Rear Side Door Check Link Nut	9 N.m	80 lb in
Rear Side Door Hinge Bolt - Body Side	32 N.m	24 lb ft
Rear Side Door Hinge Bolt - Door Side	25 N.m	19 lb ft

CLEARANCE AND FLUSHNESS SPECIFICATIONS

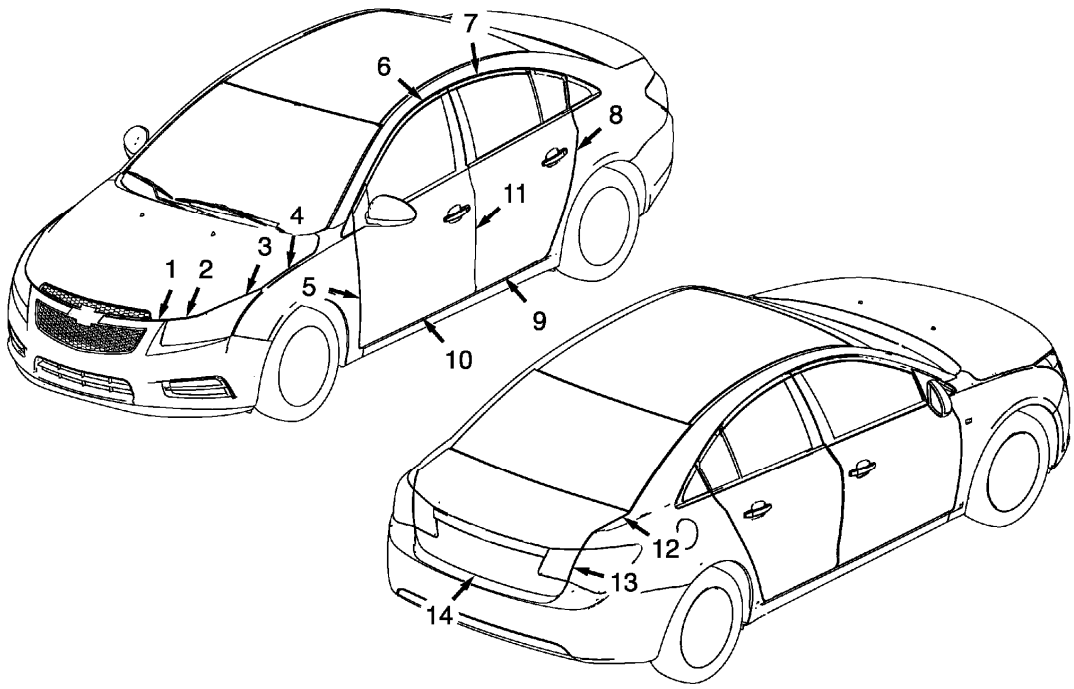

Fig. 1: Clearance And Flushness Specifications
Courtesy of GENERAL MOTORS COMPANY

Callout	Component Name	Clearance
1	Hood to Front Bumper Fascia	4.0 mm ± 1.0 mm
2	Hood to Headlamp	4.5 mm ± 1.5 mm
3	Hood to Headlamp	3.0 mm ± 1.0 mm
4	Hood to Fender	3.0 mm ± 0.75 mm
5	Front Side Door to Fender	3.5 mm ± 0.75 mm
6	Front Side Door to Body Side Outer Upper Panel	6.0 mm ± 1.0 mm
7	Rear Side Door to Body Side Outer Upper Panel	6.0 mm ± 1.0 mm
8	Rear Side Door to Quarter Outer Panel	3.5 mm ± 0.75 mm
9	Rear Side Door to Rocker Outer Panel	4.5 mm ± 1.0 mm
10	Front Side Door to Rocker Outer Panel	4.5 mm ± 1.0 mm
11	Front Side Door to Rear Side Door	3.5 mm ± 0.75 mm
12	Rear Compartment Lid to Quarter Outer Panel	3.0 mm ± 0.75 mm
13	Tail Lamp to Tail Lamp	4.0 mm ± 1.5 mm
	Rear Compartment Lid to Rear	

14	Bumper Fascia	5.5 mm ± 1.5 mm

DIAGNOSTIC INFORMATION AND PROCEDURES

DIAGNOSTIC CODE INDEX

DIAGNOSTIC CODE INDEX

DTC	Description
DTC B3006	DTC B3006 Hood Ajar Circuit

DTC B3006

Diagnostic Instructions

- Perform the **Diagnostic System Check - Vehicle** prior to using this diagnostic procedure.
- Review **Strategy Based Diagnosis** for an overview of the diagnostic approach.
- **Diagnostic Procedure Instructions** provides an overview of each diagnostic category.

DTC Descriptors

DTC B3006

Hood Ajar Circuit

For symptom byte information, refer to **Symptom Byte List** .

Diagnostic Fault Information

Circuit	Short to Ground	Open/High Resistance	Short to Voltage	Signal Performance
Signal	B3006 02	B3006 01, B3006 04	B3006 01	-
Ground	-	B3006 01, B3006 04	-	-

Circuit/System Description

The body control module (BCM) applies B+ to the hood ajar signal circuit and monitors the voltage to determine the position of the hood. When the hood is closed, the switch is open and voltage remains high. When the hood is open, the switch is closed and the voltage is pulled low.

Conditions for Running the DTC

The BCM continuously monitors for this DTC

Conditions for Setting the DTC

B3006 01

The BCM detects that the hood ajar switch signal circuit is shorted to battery.

B3006 02

The BCM detects that the hood ajar switch signal circuit is shorted to ground.

B3006 04

The BCM detects that the hood ajar switch signal circuit is open.

Action Taken When the DTC Sets

- The hood ajar switch input will be ignored as a content theft deterrent trigger.
- Remote vehicle start (if equipped) will be disabled.

Conditions for Clearing the DTC

- A current DTC will clear when the conditions for setting the DTC are no longer present.
- A history DTC will clear after 40 malfunction free ignition cycles.

Reference Information

Schematic Reference

Immobilizer Schematics

Connector End View Reference

COMPONENT CONNECTOR END VIEWS - INDEX

Description and Operation

Keyless Entry System Description and Operation (without BTM) , **Keyless Entry System Description and Operation (with BTM)**

Electrical Information Reference

- **Circuit Testing**
- **Connector Repairs**
- **Testing for Intermittent Conditions and Poor Connections**
- **Wiring Repairs**

Scan Tool Reference

Control Module References for scan tool information

Circuit/System Verification

1. Ignition ON.
2. Verify the scan tool Hood Ajar Switch parameter is Open when the hood is open and Closed when the hood is closed.
   - **If the parameter does not change**

     Refer to Circuit/System Testing below.

   - **If the parameter changes**
3. All OK.

Circuit/System Testing

1. Ignition OFF and all vehicle systems OFF, disconnect the harness connector at the B55 Hood Ajar Switch. It may take up to 2 min for all vehicle systems to power down.
2. Test for less than 10 ohms between the ground circuit terminal C and ground.
   - **If 10 ohms or greater**
     1. Ignition OFF
     2. Test for less than 2 ohms in the ground circuit end to end.
        - If 2 ohms or greater, repair the open/high resistance in the circuit.
        - If less than 2 ohms, repair the open/high resistance in the ground connection.
   - **If less than 10 ohms**
3. Ignition ON.
4. Test for greater than 10.5 V between the signal circuit terminal B and ground.
   - **If 11.5 V or less**
     1. Ignition OFF, disconnect the harness connector at the K9 Body Control Module.
     2. Test for infinite resistance between the signal circuit and ground.
        - If less than infinite resistance, repair the short to ground on the circuit.
        - If Infinite resistance.
     3. Test for less than 2 ohms in the signal circuit end to end.
        - If 2 ohms or greater, repair the open/high resistance in the circuit.
        - If less than 2 ohms, replace the K9 Body Control Module.
   - **If greater than 11.5 V**
5. Ignition OFF, disconnect the X4 and X7 harness connector at the K9 Body Control Module, ignition ON.
6. Test for less than 1 V between the signal circuit terminal B and ground.
   - **If 1 V or greater**

     Repair the short to voltage on the circuit.

   - **If less than 1 V**

7. Test or replace the B55 Hood Ajar Switch.

Component Testing

1. Ignition OFF, disconnect the harness connector at the B55 Hood Ajar Switch.
2. Test for 2738-3350 ohms between the signal terminal A and the signal terminal B with the hood latch in the closed position.
   - **If not between 2738-3350 ohms**

     Replace the B55 Hood Ajar Switch.

   - **If between 2738-3350 ohms**
3. Test for 658-806 ohms between the signal terminal A and the ground terminal C with the hood latch in the closed position.
   - **If not between 658-806 ohms**

     Replace the B55 Hood Ajar Switch.

   - **If between 658-806 ohms**
4. Test for 2080-2545 ohms between the signal terminal B and the ground terminal C with the hood latch in the closed position.
   - **If not between 2080-2545 ohms**

     Replace the B55 Hood Ajar Switch.

   - **If between 2080-2545 ohms**
5. Test for 2738-3350 ohms between the signal terminal A and the signal terminal B with the hood latch in the open position.
   - **If not between 2738-3350 ohms**

     Replace the B55 Hood Ajar Switch.

   - **If between 2738-3350 ohms**
6. Test for 2080-2545 ohms between the signal terminal A and the ground terminal C with the hood latch in the open position.
   - **If not between 2080-2545 ohms**

     Replace the B55 Hood Ajar Switch.

   - **If between 2080-2545 ohms**
7. Test for 658-806 ohms between the signal terminal B and the ground terminal C with the hood latch in the open position.
   - **If not between 658-806 ohms**

Replace the B55 Hood Ajar Switch.

- **If between 658-806 ohms**

8. All OK.

Repair Instructions

Perform the **Diagnostic Repair Verification** after completing the repair.

- **Hood Primary and Secondary Latch Replacement**
- **Control Module References** for body control module replacement, programming, and setup.

SYMPTOMS - BOLTED EXTERIOR BODY PANELS AND CLOSURES

IMPORTANT: The following steps must be completed before using the symptom tables.

1. Perform the **Diagnostic System Check - Vehicle** before using the symptom tables in order to verify that all of the following are true:
   - There are no DTCs set.
   - The control modules can communicate via the serial data links.
2. Review the system operation in order to familiarize yourself with the system functions. Refer to **Hood Ajar Indicator Description and Operation**.

Visual/Physical Inspection

- Inspect for aftermarket devices which could affect the operation of the systems. Refer to **Checking Aftermarket Accessories** .
- Inspect the easily accessible or visible system components for obvious damage or conditions which could cause the symptom.

Intermittent

Faulty electrical connections or wiring may be the cause of intermittent conditions. Refer to **Testing for Intermittent Conditions and Poor Connections** .

Symptom List

Refer to **Hood Ajar Indicator/Message Malfunction** in order to diagnose the symptom.

HOOD AJAR INDICATOR/MESSAGE MALFUNCTION

Diagnostic Instructions

- Perform the **Diagnostic System Check - Vehicle** prior to using this diagnostic procedure.
- Review **Strategy Based Diagnosis** for an overview of the diagnostic approach.

- **Diagnostic Procedure Instructions** provides an overview of each diagnostic category.

DTC Descriptors

DTC B3006

Hood Ajar Circuit

For symptom byte information, refer to **Symptom Byte List** .

Diagnostic Fault Information

Circuit	Short to Ground	Open/High Resistance	Short to Voltage	Signal Performance
Signal	B3006 02	B3006 01, B3006 04	B3006 01	-
Ground	-	B3006 01, B3006 04	-	-

Circuit/System Description

The body control module (BCM) applies B+ to the hood ajar signal circuit and monitors the voltage to determine the position of the hood. When the hood is closed, the switch is open and voltage remains high. When the hood is open, the switch is closed and the voltage is pulled low.

Conditions for Running the DTC

The BCM continuously monitors for this DTC

Conditions for Setting the DTC

B3006 01

The BCM detects that the hood ajar switch signal circuit is shorted to battery.

B3006 02

The BCM detects that the hood ajar switch signal circuit is shorted to ground.

B3006 04

The BCM detects that the hood ajar switch signal circuit is open.

Action Taken When the DTC Sets

- The hood ajar switch input will be ignored as a content theft deterrent trigger.
- Remote vehicle start (if equipped) will be disabled.

Conditions for Clearing the DTC

- A current DTC will clear when the conditions for setting the DTC are no longer present.
- A history DTC will clear after 40 malfunction free ignition cycles.

Reference Information

Schematic Reference

Immobilizer Schematics

Connector End View Reference

COMPONENT CONNECTOR END VIEWS - INDEX

Description and Operation

Keyless Entry System Description and Operation (without BTM) , **Keyless Entry System Description and Operation (with BTM)**

Electrical Information Reference

- **Circuit Testing**
- **Connector Repairs**
- **Testing for Intermittent Conditions and Poor Connections**
- **Wiring Repairs**

Scan Tool Reference

Control Module References for scan tool information

Circuit/System Verification

1. Ignition ON.
2. Verify the scan tool Hood Ajar Switch parameter is Open when the hood is open and Closed when the hood is closed.
    - **If the parameter does not change**

      Refer to Circuit/System Testing below.

    - **If the parameter changes**
3. All OK.

Circuit/System Testing

1. Ignition OFF and all vehicle systems OFF, disconnect the harness connector at the B55 Hood Ajar Switch. It may take up to 2 min for all vehicle systems to power down.

2. Test for less than 10 ohms between the ground circuit terminal C and ground.
    - **If 10 ohms or greater**
    1. Ignition OFF
    2. Test for less than 2 ohms in the ground circuit end to end.
        - If 2 ohms or greater, repair the open/high resistance in the circuit.
        - If less than 2 ohms, repair the open/high resistance in the ground connection.
    - **If less than 10 ohms**
3. Ignition ON.
4. Test for greater than 10.5 V between the signal circuit terminal B and ground.
    - **If 11.5 V or less**
    1. Ignition OFF, disconnect the harness connector at the K9 Body Control Module.
    2. Test for infinite resistance between the signal circuit and ground.
        - If less than infinite resistance, repair the short to ground on the circuit.
        - If Infinite resistance.
    3. Test for less than 2 ohms in the signal circuit end to end.
        - If 2 ohms or greater, repair the open/high resistance in the circuit.
        - If less than 2 ohms, replace the K9 Body Control Module.
    - **If greater than 11.5 V**
5. Ignition OFF, disconnect the X4 and X7 harness connector at the K9 Body Control Module, ignition ON.
6. Test for less than 1 V between the signal circuit terminal B and ground.
    - **If 1 V or greater**

      Repair the short to voltage on the circuit.

    - **If less than 1 V**
7. Test or replace the B55 Hood Ajar Switch.

Component Testing

1. Ignition OFF, disconnect the harness connector at the B55 Hood Ajar Switch.
2. Test for 2738-3350 ohms between the signal terminal A and the signal terminal B with the hood latch in the closed position.
    - **If not between 2738-3350 ohms**

      Replace the B55 Hood Ajar Switch.

    - **If between 2738-3350 ohms**
3. Test for 658-806 ohms between the signal terminal A and the ground terminal C with the hood latch in the closed position.
    - **If not between 658-806 ohms**

Replace the B55 Hood Ajar Switch.

- **If between 658-806 ohms**

4. Test for 2080-2545 ohms between the signal terminal B and the ground terminal C with the hood latch in the closed position.
   - **If not between 2080-2545 ohms**

     Replace the B55 Hood Ajar Switch.

   - **If between 2080-2545 ohms**
5. Test for 2738-3350 ohms between the signal terminal A and the signal terminal B with the hood latch in the open position.
   - **If not between 2738-3350 ohms**

     Replace the B55 Hood Ajar Switch.

   - **If between 2738-3350 ohms**
6. Test for 2080-2545 ohms between the signal terminal A and the ground terminal C with the hood latch in the open position.
   - **If not between 2080-2545 ohms**

     Replace the B55 Hood Ajar Switch.

   - **If between 2080-2545 ohms**
7. Test for 658-806 ohms between the signal terminal B and the ground terminal C with the hood latch in the open position.
   - **If not between 658-806 ohms**

     Replace the B55 Hood Ajar Switch.

   - **If between 658-806 ohms**
8. All OK.

Repair Instructions

Perform the **Diagnostic Repair Verification** after completing the repair.

- **Hood Primary and Secondary Latch Replacement**
- **Control Module References** for body control module replacement, programming, and setup.

REPAIR INSTRUCTIONS

FRONT END UPPER TIE BAR REPLACEMENT

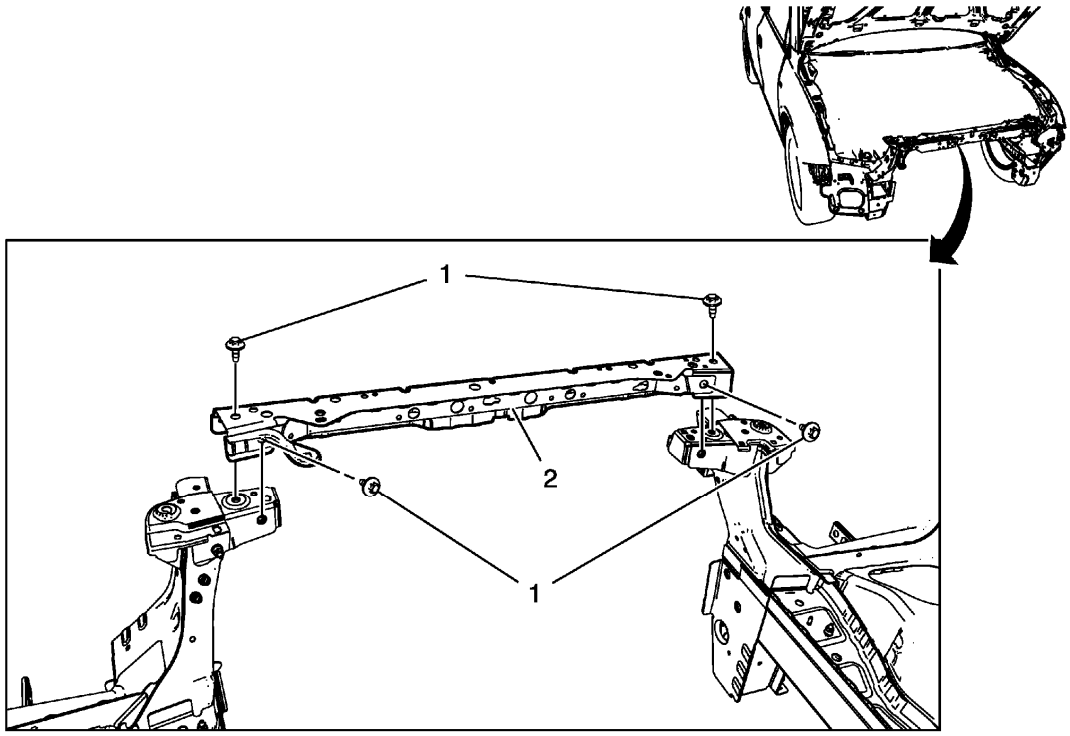

Fig. 2: Front End Upper Tie Bar
Courtesy of GENERAL MOTORS COMPANY

Front End Upper Tie Bar Replacement

Callout	Component Name
Preliminary Procedure 1. Remove the front bumper fascia. Refer to **Front Bumper Fascia Replacement** 2. Remove the radiator support bracket. Refer to **Radiator Support Bracket Replacement** 3. Remove the radiator grille reinforcement support. Refer to **Front Grille Support Replacement** 4. Remove the hood primary and secondary latch. Refer to **Hood Primary and Secondary Latch Replacement**	
1	Headlamp and Front Bumper Fascia Mount Panel Bolt (Qty: 4) **CAUTION:** **Refer to Fastener Caution** **Tighten** 22 N.m (17 lb ft)
2	Front End Upper Tie Bar

FRONT FENDER FRONT LOWER BRACKET REPLACEMENT

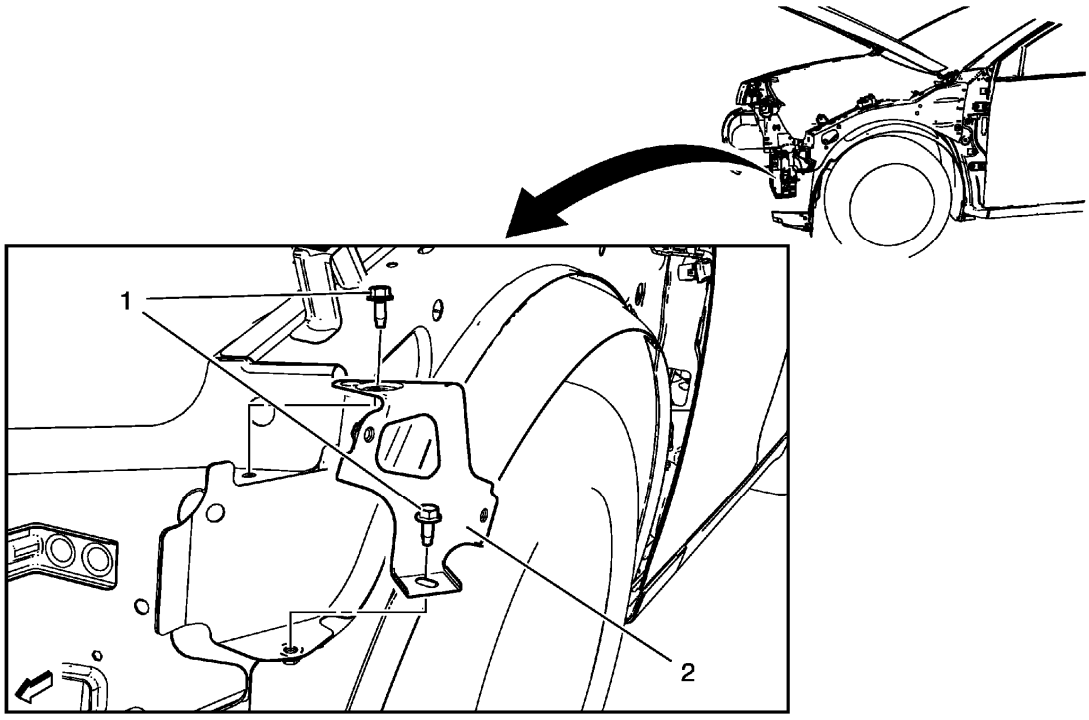

Fig. 3: Front Fender Front Lower Bracket
Courtesy of GENERAL MOTORS COMPANY

Front Fender Front Lower Bracket Replacement

Callout	Component Name
Preliminary Procedure 1. Remove the front bumper fascia. Refer to **Front Bumper Fascia Replacement** . 2. Remove the headlamp. Refer to **Headlamp Replacement** . 3. Remove the front fender. Refer to **Front Fender Replacement**.	
1	Front Fender Bracket Bolt **CAUTION:** **Refer to Fastener Caution .** **Tighten** 9 N.m(80 lb in)
2	Front Fender Front Lower Bracket

HOOD PRIMARY LATCH RELEASE CABLE REPLACEMENT

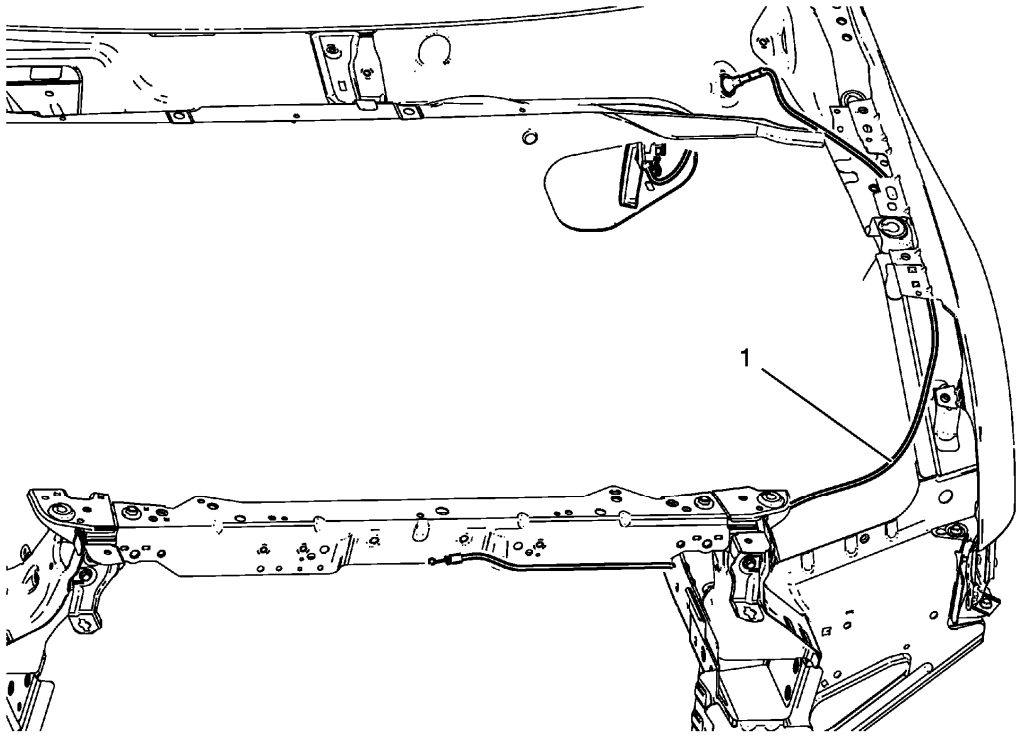

Fig. 4: Hood Primary Latch Release Cable
Courtesy of GENERAL MOTORS COMPANY

Hood Primary Latch Release Cable Replacement

Callout	Component Name
Preliminary Procedure 1. Remove hood primary latch release cable handle. Refer to **Hood Primary Latch Release Cable Handle Replacement**. 2. Remove the front bumper fascia. Refer to **Front Bumper Fascia Replacement** . 3. Remove the radiator grille support. Refer to **Front Grille Support Replacement**. 4. Remove the air inlet grille panel. Refer to **Air Inlet Grille Panel Replacement** .	
1	Hood Primary Latch Release Cable **Procedure** To release the hood primary latch release cable, unhook from hood primary and secondary latch.

REAR SIDE DOOR CHECK REPLACEMENT

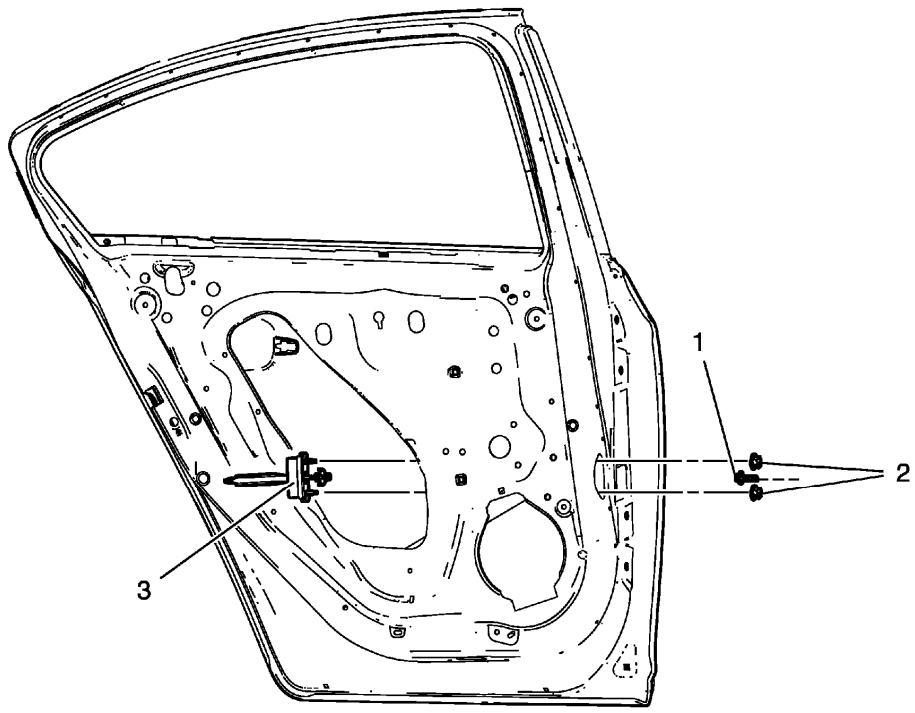

Fig. 5: Rear Side Door Check
Courtesy of GENERAL MOTORS COMPANY

Rear Side Door Check Replacement

Callout	Component Name
Preliminary Procedure 1. Remove rear side door trim panel. Refer to **Rear Side Door Trim Replacement** 2. Remove the rear side door water deflector. Refer to **Rear Side Door Water Deflector Replacement**	
1	Rear Side Door Check Bolt **CAUTION:** **Refer to Fastener Caution** **TIP:** Place the door in the full open position. **Tighten** 25 N.m (18 lb ft)
2	Rear Side Door Check Nut **Procedure** Remove the water deflector. **Tighten** 9 N.m (79 lb in)
3	Rear Side Door Check

FRONT SIDE DOOR REPLACEMENT

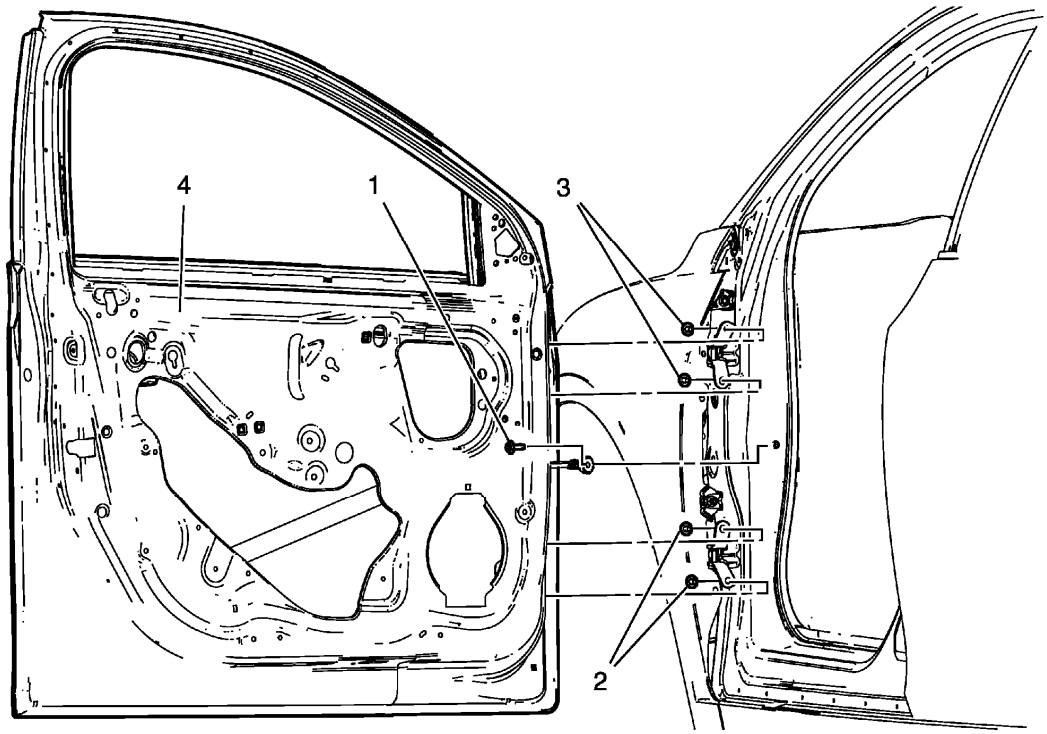

Fig. 6: Front Side Door Mounting Hardware
Courtesy of GENERAL MOTORS COMPANY

Front Side Door Replacement

Callout	Component Name
Preliminary Procedures Remove the front side door trim panel. Refer to **Front Side Door Trim Replacement** .	
1	Front Side Door Check Link Bolt **CAUTION:** **Refer to Fastener Caution .** **Procedure** 1. Remove the water deflector. Refer to **Front Side Door Water Deflector Replacement** . 2. Disconnect the battery. Refer to **Battery Negative Cable Disconnection and Connection** . 3. Disconnect the door electrical connector. 4. Support the door before removing the hinge bolts. 5. With the aid of an assistant, remove the door.

	Tighten 25 N.m (18 lb ft)
2	Front Side Door Lower Hinge Bolt (Qty: 2) **Tighten** 25 N.m (18 lb ft)
3	Front Side Door Upper Hinge Bolt (Qty: 2) **Tighten** 25 N.m (18 lb ft)
4	Front Side Door **Procedure** 1. Transfer all of the internal components. 2. Adjust the front side door as needed. Refer to **Clearance and Flushness Specifications**.

REAR SIDE DOOR REPLACEMENT

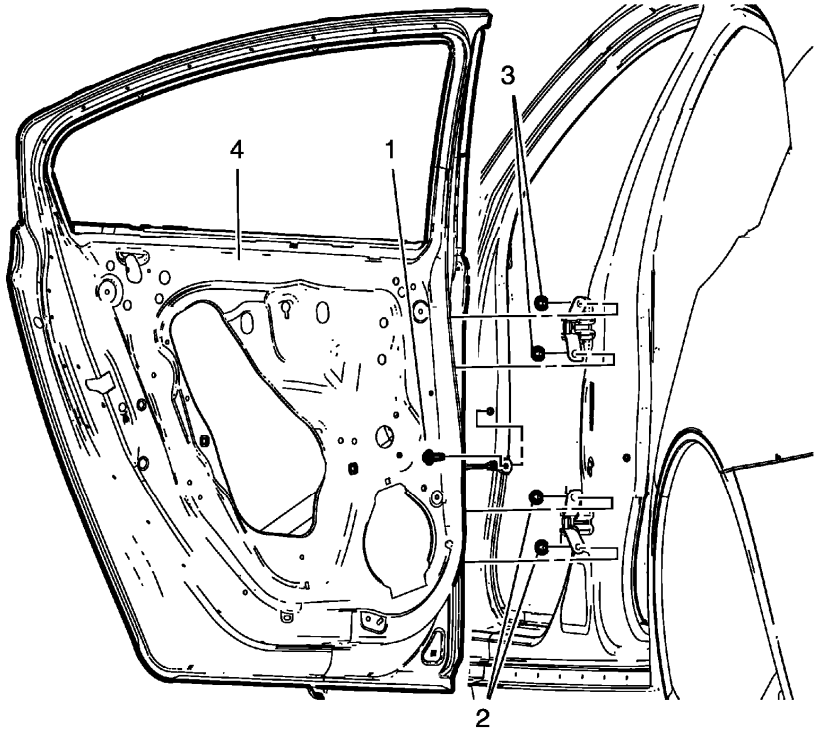

Fig. 7: Rear Side Door Mounting Hardware
Courtesy of GENERAL MOTORS COMPANY

Rear Side Door Replacement

Callout	Component Name

Preliminary Procedures
Remove the rear side door trim panel. Refer to **Rear Side Door Trim Replacement** .

1	Rear Side Door Check Link Bolt **CAUTION:** **Refer to Fastener Caution .** **Procedure** 1. Remove the water deflector. Refer to **Rear Side Door Water Deflector Replacement** . 2. Disconnect the battery. Refer to **Battery Negative Cable Disconnection and Connection** . 3. Disconnect the door electrical connector. 4. Support the door before removing the hinge bolts. 5. With the aid of an assistant, remove the door. **Tighten** 25 N.m (18 lb ft)
2	Rear Side Door Lower Hinge Bolt (Qty: 2) **Tighten** 25 N.m (18 lb ft)
3	Rear Side Door Upper Hinge Bolt (Qty: 2) **Tighten** 25 N.m (18 lb ft)
4	Rear Side Door **Procedure** 1. Transfer all of the internal components. 2. Adjust the rear side door as needed. Refer to **Clearance and Flushness Specifications**.

FRONT FENDER REPLACEMENT

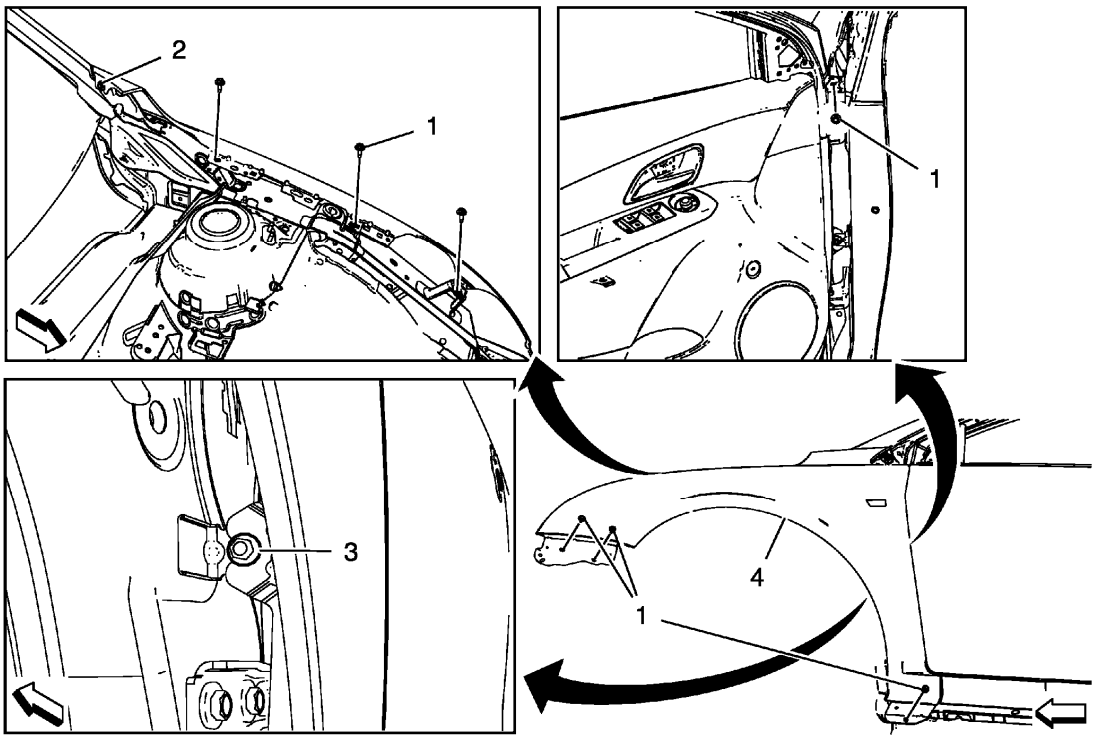

Fig. 8: Front Fender Mounting Hardware
Courtesy of GENERAL MOTORS COMPANY

Front Fender Replacement

Callout	Component Name
Preliminary Procedure 1. Remove the front bumper fascia. Refer to **Front Bumper Fascia Replacement** 2. Remove front bumper fascia guide. Refer to **Front Bumper Fascia Replacement** 3. Remove the wheelhouse liner. Refer to **Front Wheelhouse Liner Replacement** 4. Remove the headlamp. Refer to **Headlamp Replacement** 5. Remove the air inlet grille panel. Refer to **Air Inlet Grille Panel Replacement** 6. Remove the front fender shipping cover. Refer to **Front Fender Shipping Cover Replacement** 7. Remove the front fender insulator. Refer to **Front Fender Insulator Replacement**	
1	Front Fender Bolt (Qty: 7) **CAUTION:** **Refer to Fastener Caution** **Tighten** 8 N.m (70 lb in)
	Front Fender Bolt

2	**Tighten** 8 N.m (70 lb in)
3	Front Fender Bolt **TIP:** Simply loosen the bolt rather than remove. **Tighten** 8 N.m(70 lb in)
4	Front Fender

FRONT FENDER SHIPPING COVER REPLACEMENT

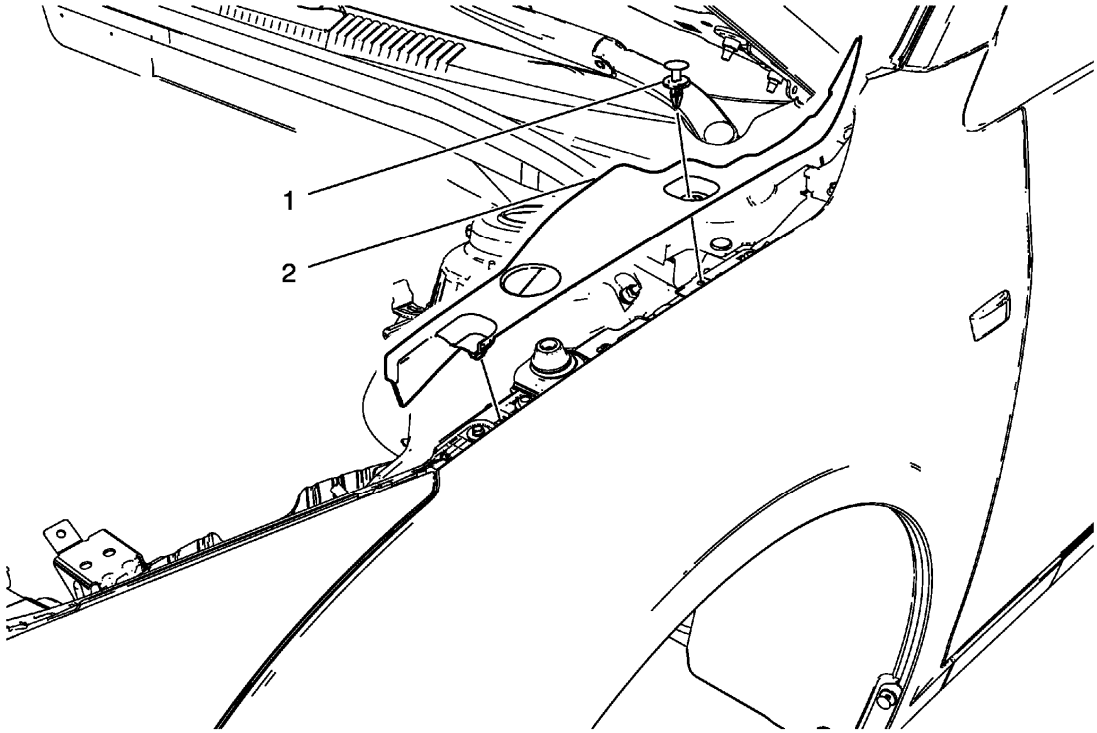

Fig. 9: Front Fender Shipping Cover
Courtesy of GENERAL MOTORS COMPANY

Front Fender Shipping Cover Replacement

Callout	Component Name
1	Front Fender Shipping Cover Retainer
2	Front Fender Shipping Cover

HOOD PRIMARY LATCH RELEASE CABLE HANDLE REPLACEMENT

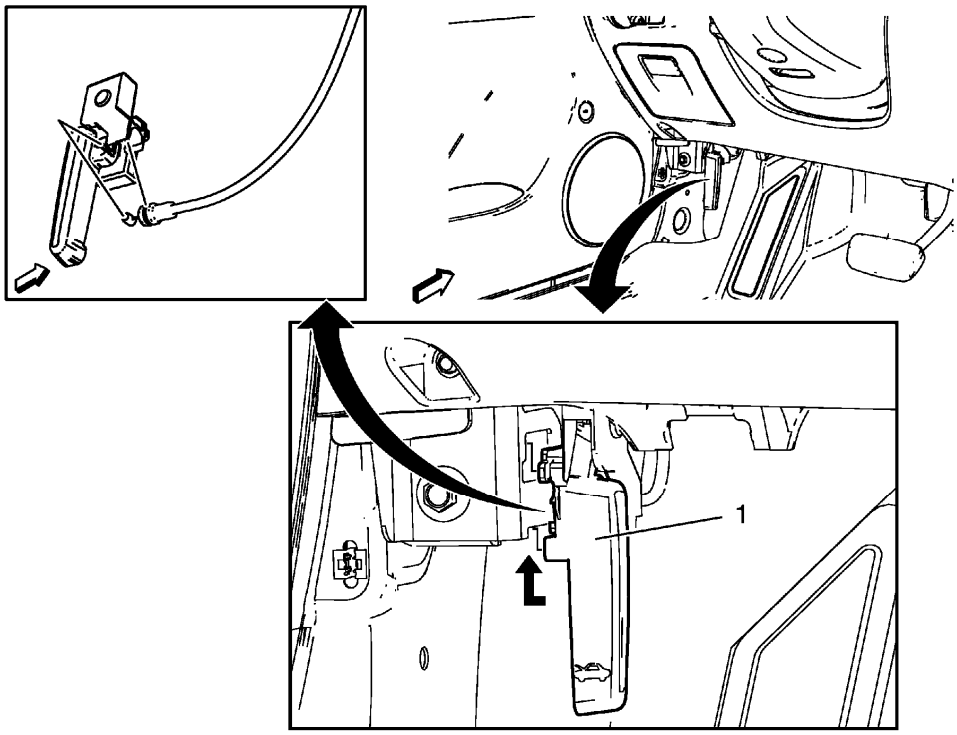

Fig. 10: Hood Primary Latch Release Cable Handle Hood Primary Latch Release Cable Handle
Courtesy of GENERAL MOTORS COMPANY

Hood Primary Latch Release Cable Handle Replacement

Callout	Component Name
Preliminary Procedure Remove the front side door sill trim plate. Refer to **Front Side Door Sill Trim Plate Replacement** .	
1	Hood Primary Latch Release Cable Handle **Procedure** 1. Pull down the hood primary latch release cable handle. 2. To release the handle, pull down the cable and unhook from the handle.

FRONT SIDE DOOR UPPER HINGE AND LOWER HINGE REPLACEMENT

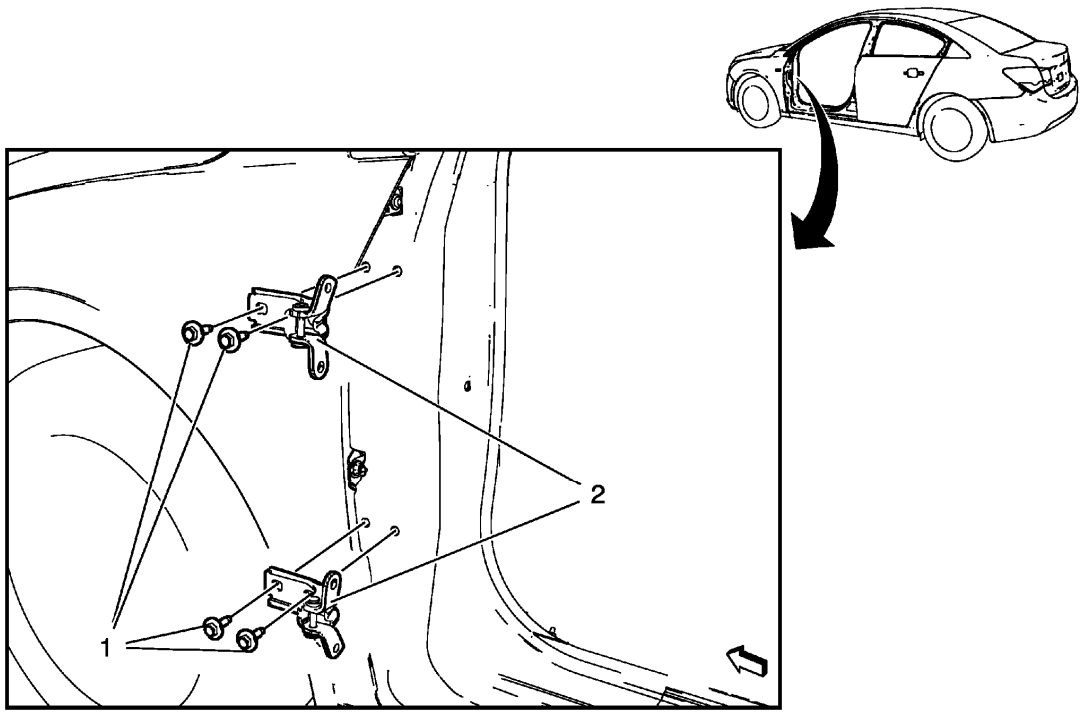

Fig. 11: Front Side Door Upper Hinge and Door Lower Hinge
Courtesy of GENERAL MOTORS COMPANY

Front Side Door Upper Hinge and Lower Hinge Replacement

Callout	Component Name
Preliminary Procedures 1. Remove the front wheelhouse liner. Refer to **Front Wheelhouse Liner Replacement** . 2. Remove the front fender insulator. Refer to **Front Fender Insulator Replacement**. 3. Remove the front side door. Refer to **Front Side Door Replacement**.	
1	Front Side Door Hinge Bolt (Qty: 4) **CAUTION:** **Refer to Fastener Caution .** **Tighten** 32 N.m (24 lb ft)
2	Front Side Door Hinge **Procedure** Adjust front side door as needed. Refer to **Clearance and Flushness Specifications**.

HOOD HINGE REPLACEMENT

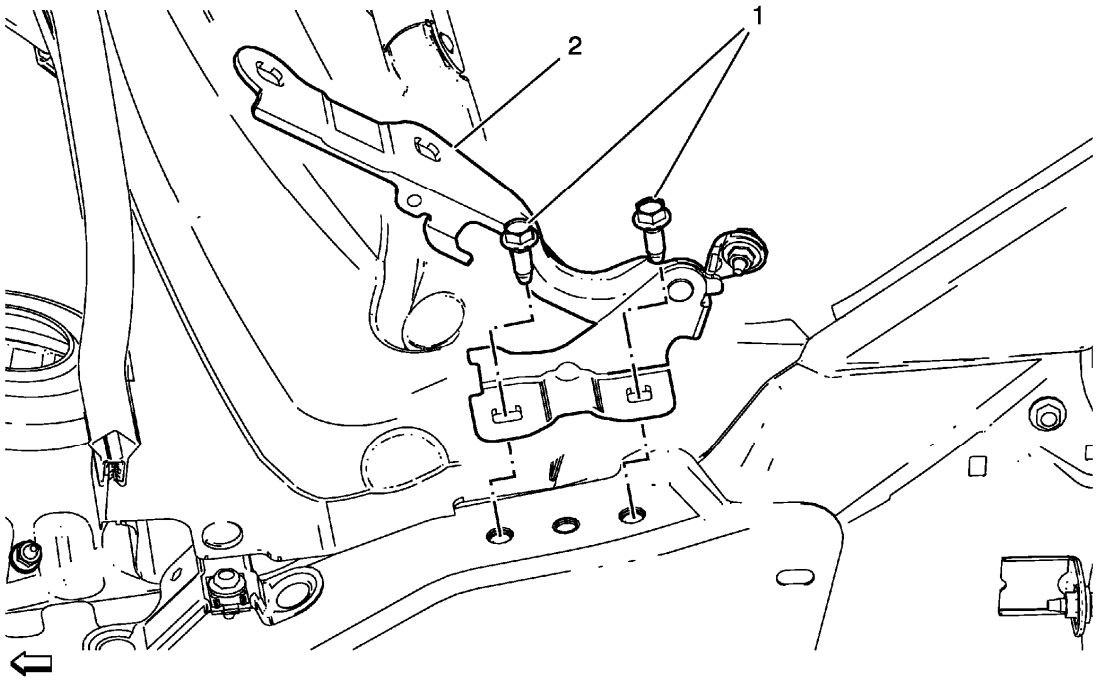

Fig. 12: Hood Hinge
Courtesy of GENERAL MOTORS COMPANY

Hood Hinge Replacement

Callout	Component Name
Preliminary Procedure 1. Remove the hood. Refer to **Hood Replacement**. 2. Remove the front fender. Refer to **Front Fender Replacement**.	
1	Hood Hinge Bolt (Qty: 2) **CAUTION:** **Refer to Fastener Caution .** **Tighten** 26 N.m (19 lb ft)
2	Hood Hinge

REAR COMPARTMENT LID REAR HINGE REPLACEMENT

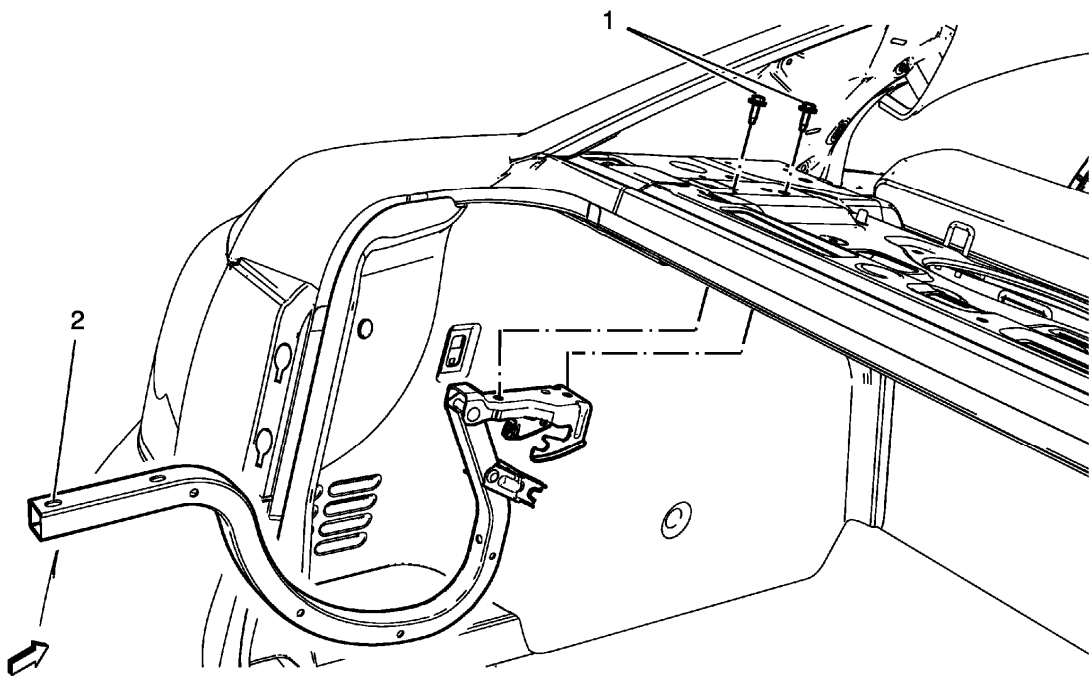

Fig. 13: Rear Compartment Lid Rear Hinge
Courtesy of GENERAL MOTORS COMPANY

Rear Compartment Lid Rear Hinge Replacement

Callout	Component Name
Preliminary Procedures 1. Remove the rear compartment lid. Refer to **Rear Compartment Lid Replacement**. 2. Remove the rear window panel trim. Refer to **Rear Window Panel Trim Replacement** . 3. Remove the rear compartment lid hinge torque rod. Refer to **Rear Compartment Lid Hinge Torque Rod Replacement**.	
1	Rear Compartment Lid Rear Hinge Bolt (Qty: 2) **CAUTION:** **Refer to Fastener Caution .** **Tighten** 9 N.m (80 lb in)
2	Rear Compartment Lid Rear Hinge **Procedure** Adjust rear compartment lid as needed. Refer to **Clearance and Flushness Specifications**.

REAR SIDE DOOR UPPER HINGE AND LOWER HINGE REPLACEMENT

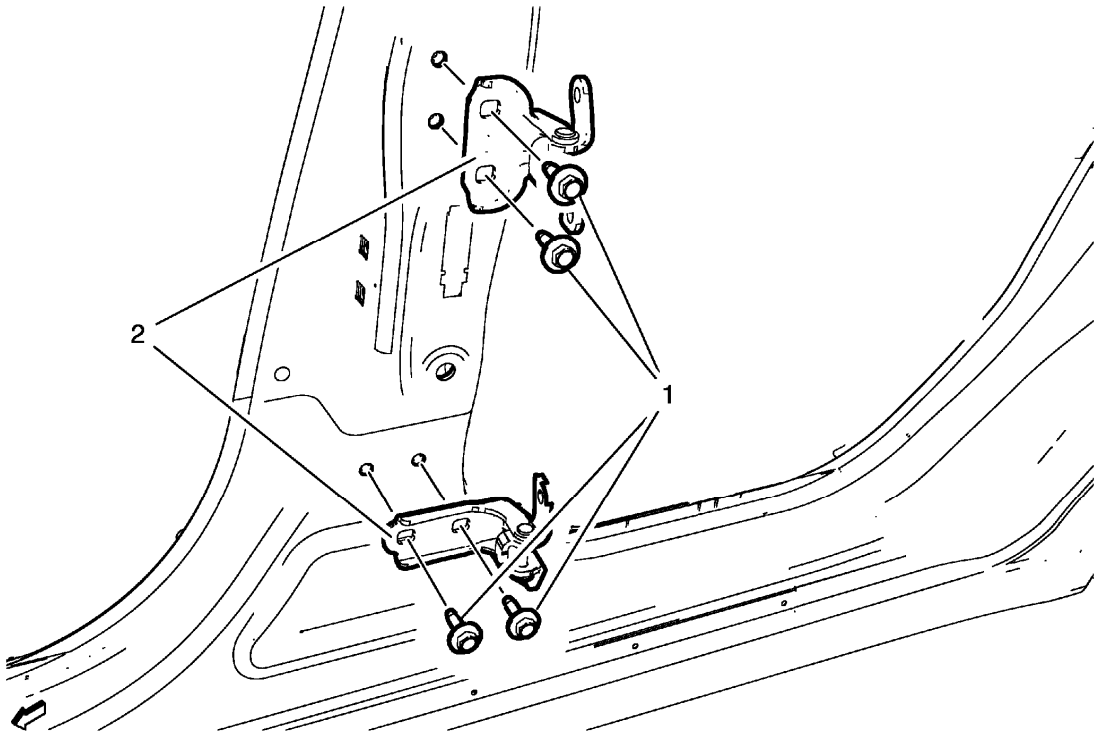

Fig. 14: Rear Side Door Upper Hinge and Door Lower Hinge
Courtesy of GENERAL MOTORS COMPANY

Rear Side Door Upper Hinge and Lower Hinge Replacement

Callout	Component Name
Preliminary Procedures Remove the rear side door. Refer to **Rear Side Door Replacement**.	
1	Rear Side Door Hinge Bolt (Qty: 4) **CAUTION:** **Refer to Fastener Caution .** **Tighten** 32 N.m (24 lb ft)
2	Rear Side Door Hinge **Procedure** Adjust rear side door as needed. Refer to **Clearance and Flushness Specifications**.

HOOD REPLACEMENT

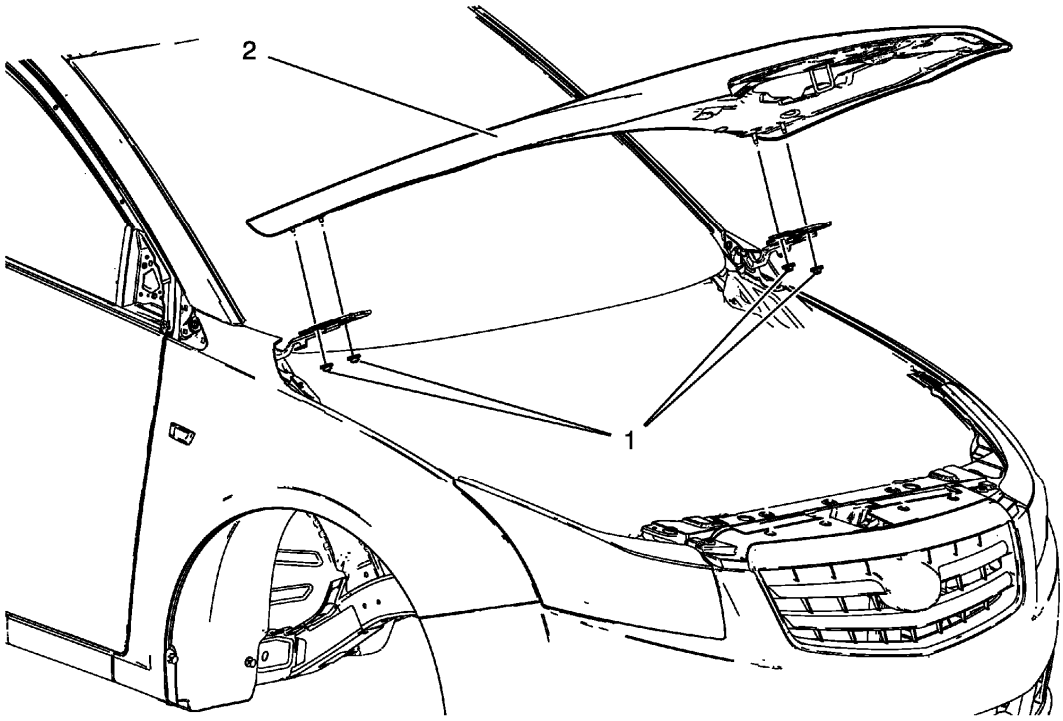

Fig. 15: Hood Hinge Reinforcement Nuts
Courtesy of GENERAL MOTORS COMPANY

Hood Replacement

Callout	Component Name
WARNING: **When a hood hold open device is being removed or installed, provide alternate support to avoid the possibility of damage to the vehicle or personal injury.** **Preliminary Procedure** Remove the windshield washer nozzle hose. Refer to **Windshield Washer Nozzle Hose Replacement** .	
1	Hood Hinge Reinforcement Nut (Qty: 4) **CAUTION:** **Refer to Fastener Caution .** **Tighten** 26 N.m (19 lb ft)
2	Hood **Procedure** 1. Transfer components as necessary.

	2. Adjust hood as needed. Refer to **Clearance and Flushness Specifications**.

FRONT FENDER INSULATOR REPLACEMENT

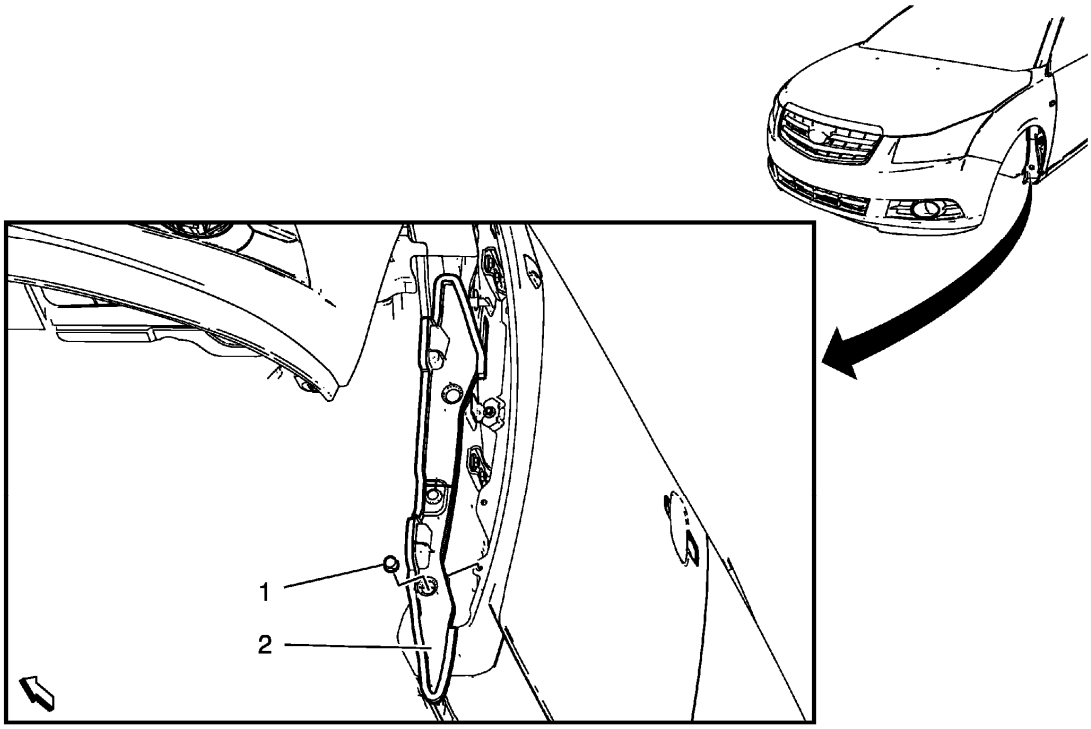

Fig. 16: Front Fender Insulator
Courtesy of GENERAL MOTORS COMPANY

Front Fender Insulator Replacement

Callout	Component Name
Preliminary Procedure Remove the front wheelhouse liner. Refer to **Front Wheelhouse Liner Replacement** .	
1	Front Fender Insulator Retainer
2	Front Fender Insulator

HOOD INSULATOR REPLACEMENT

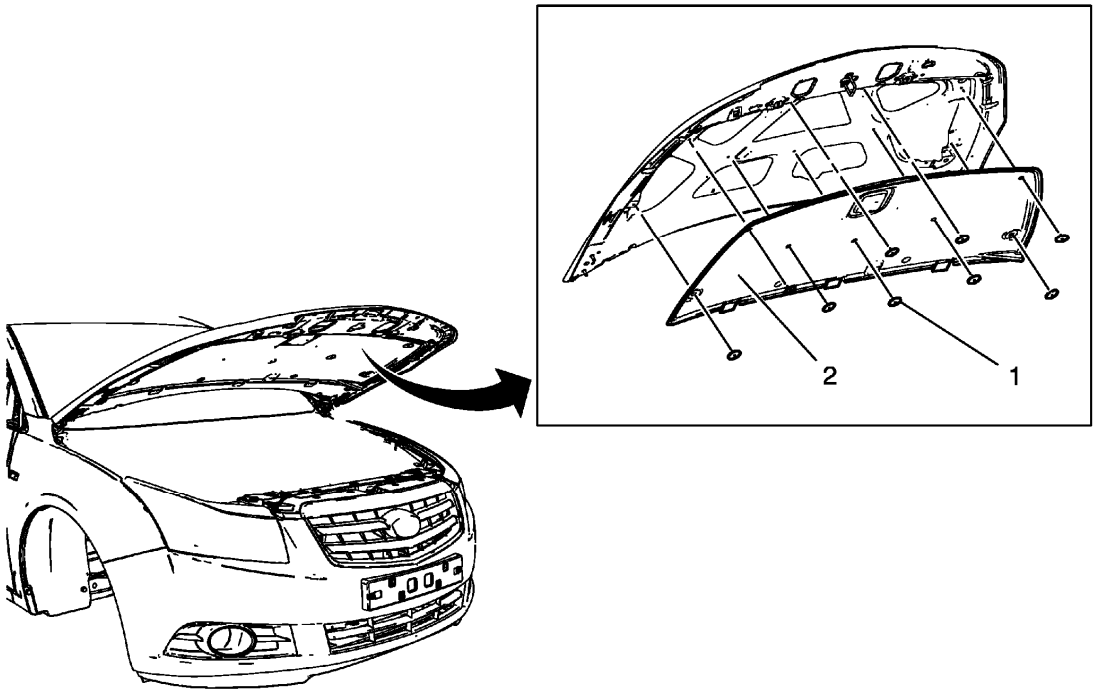

Fig. 17: Hood Insulator
Courtesy of GENERAL MOTORS COMPANY

Hood Insulator Replacement

Callout	Component Name
1	Hood Insulator Retainer (Qty: 9)
2	Hood Insulator

HOOD PRIMARY AND SECONDARY LATCH REPLACEMENT

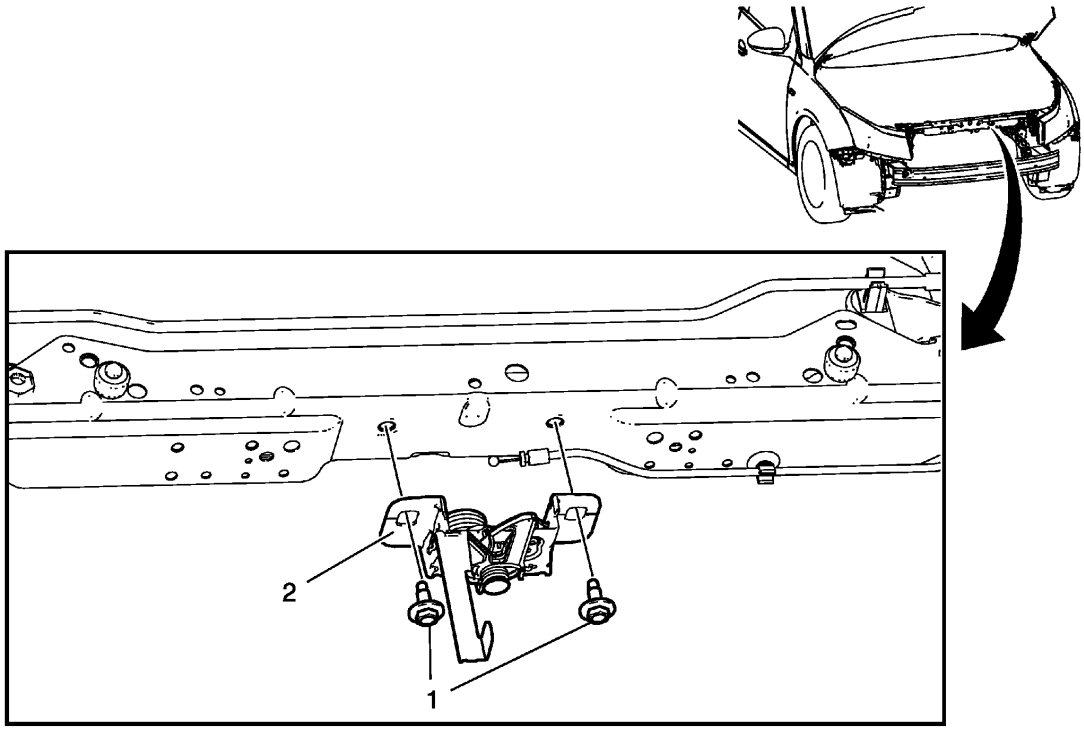

Fig. 18: Hood Primary Latch and Hood Secondary Latch
Courtesy of GENERAL MOTORS COMPANY

Hood Primary and Secondary Latch Replacement

Callout	Component Name
Preliminary Procedure 1. Remove the front bumper fascia. Refer to **Front Bumper Fascia Replacement** . 2. Remove the radiator grille support reinforcement. Refer to **Front Grille Support Replacement**.	
1	Hood Primary and Secondary Latch Retainer Bolt (Qty: 2) **CAUTION:** **Refer to Fastener Caution .** **Tighten** 20 N.m (15 lb ft).
2	Hood Primary and Secondary Latch **Procedure** 1. To release the hood primary and secondary latch unhook the hood primary latch release cable. 2. Disconnect electrical connectors as needed.

REAR COMPARTMENT LID REPLACEMENT

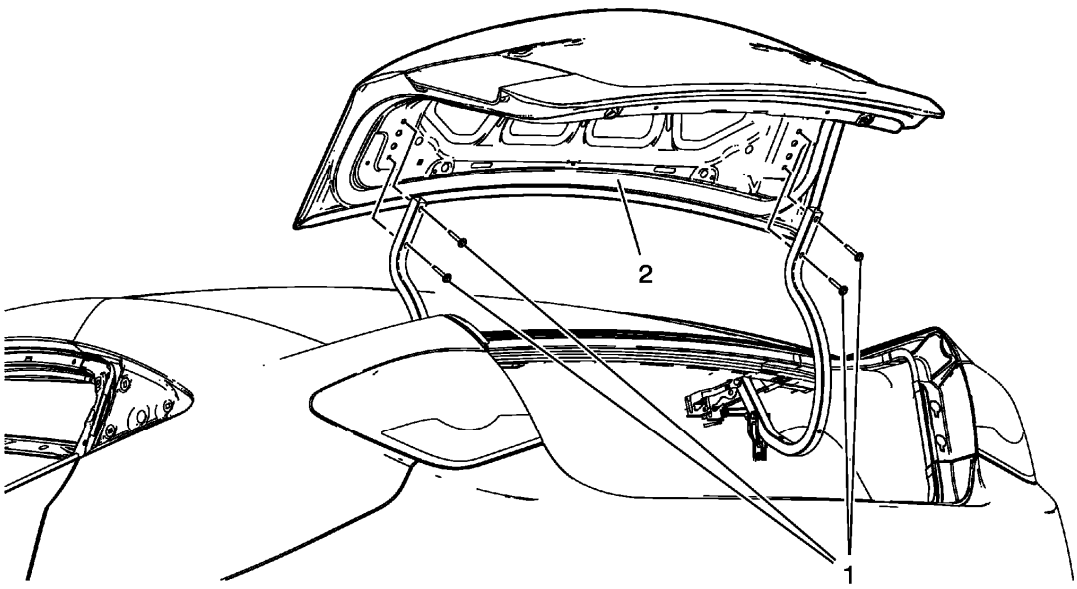

Fig. 19: Rear Compartment Lid Hinge Bolts
Courtesy of GENERAL MOTORS COMPANY

Rear Compartment Lid Replacement

Callout	Component Name
Preliminary Procedure Remove the rear compartment lid inner panel trim. Refer to **Rear Compartment Lid Inner Panel Trim Replacement** .	
1	Rear Compartment Lid Hinge Bolt (Qty: 4) **CAUTION:** **Refer to Fastener Caution .** **Tighten** 9 N.m (80 lb ft)
2	Rear Compartment Lid **Procedure** 1. Disconnect the electrical connector. 2. Adjust rear compartment as needed. Refer to **Clearance and Flushness Specifications**.

	3. Transfer components as necessary.

FRONT SIDE DOOR CHECK REPLACEMENT

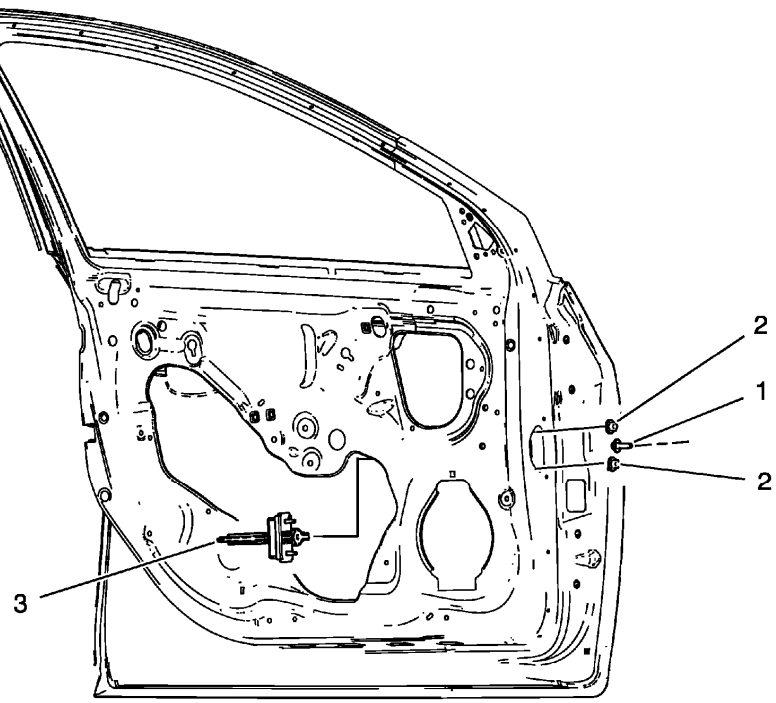

Fig. 20: Front Side Door Check
Courtesy of GENERAL MOTORS COMPANY

Front Side Door Check Replacement

Callout	Component Name
Prliminary Procedure 1. Remove front side door trim panel. Refer to **Front Side Door Trim Replacement** 2. Remove the front side door water deflector. Refer to **Front Side Door Water Deflector Replacement**	
1	Front Side Door Check Link Bolt **CAUTION:** **Refer to Fastener Caution** **TIP:** Place the door in the full open position. **Tighten** 25 N.m (18 lb ft)
	Front Side Door Check Link Nut

2	**Procedure** Remove the water deflector. **Tighten** 9 N.m (79 lb in)
3	Front Side Door Check

FUEL TANK FILLER DOOR REPLACEMENT

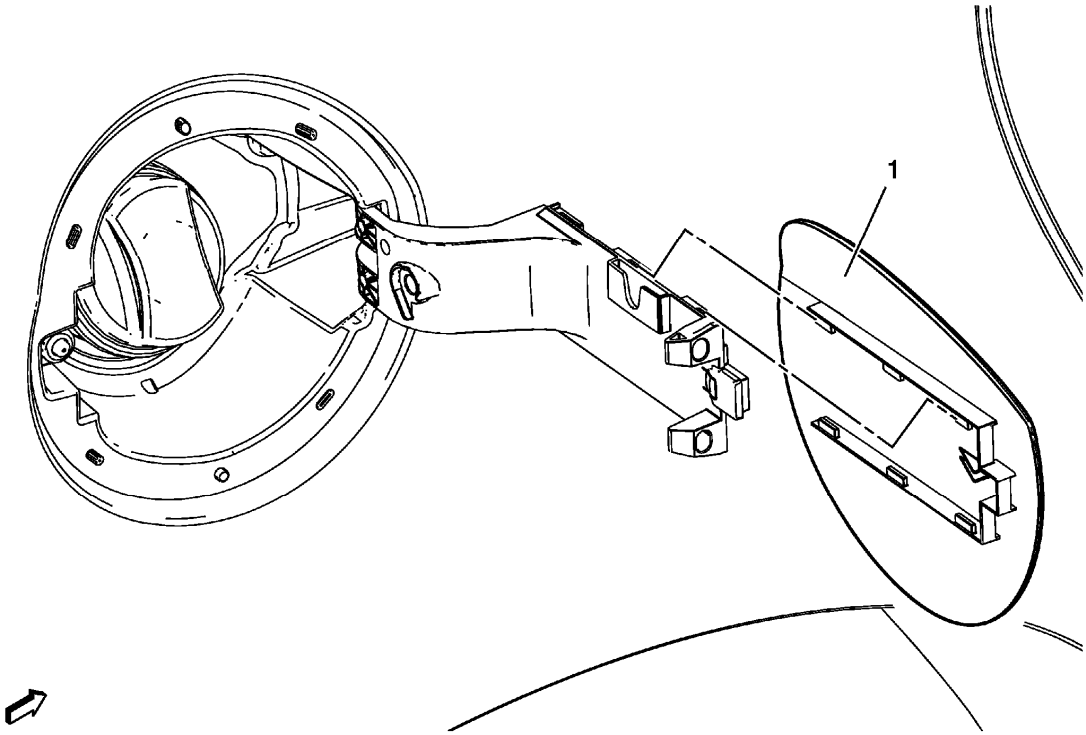

Fig. 21: Fuel Tank Filler Door Fuel Tank Filler Door
Courtesy of GENERAL MOTORS COMPANY

Fuel Tank Filler Door Replacement

Callout	Component Name
1	Fuel Tank Filler Door **Procedure** 1. Open the fuel tank filler door. 2. Unclip the fuel tank filler door.

FUEL TANK FILLER PIPE HOUSING REPLACEMENT

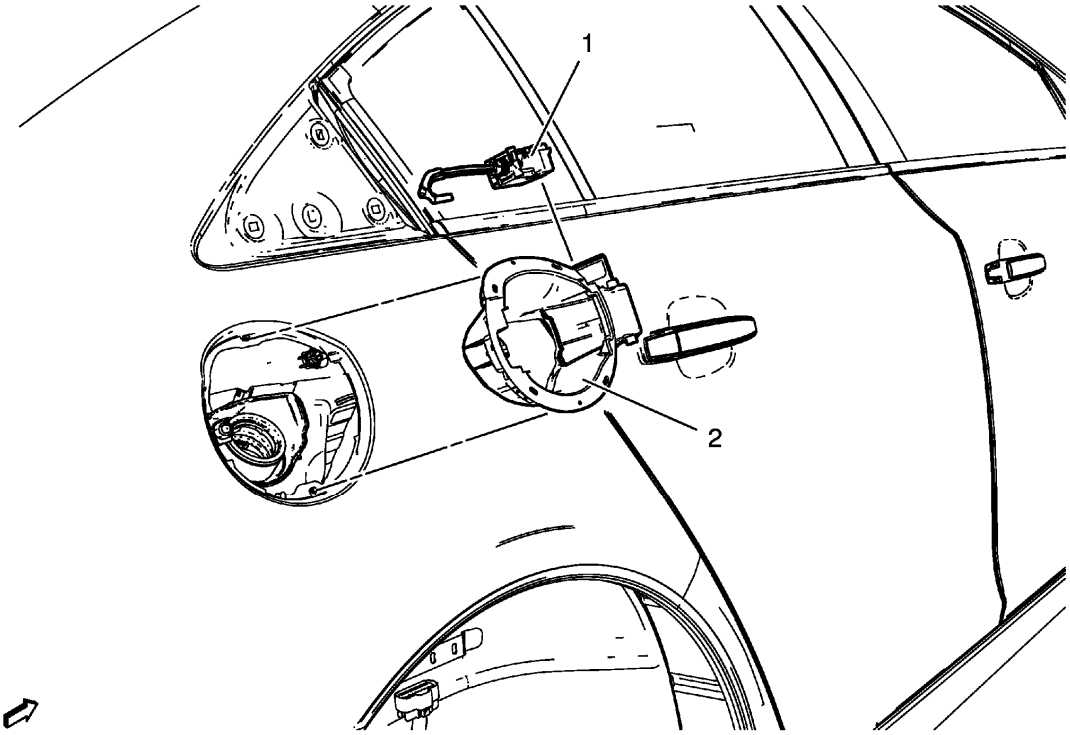

Fig. 22: Fuel Tank Filler Pipe Housing
Courtesy of GENERAL MOTORS COMPANY

Fuel Tank Filler Pipe Housing Replacement

Callout	Component Name
Preliminary Procedure Remove rear wheelhouse panel liner. Refer to **Rear Wheelhouse Liner Replacement** .	
1	Fuel Tank Filler Door Lock Actuator **Procedure** Disconnect electrical connector.
2	Fuel Tank Filler Pipe Housing **Procedure** Unclip 4 clips and remove. **TIP:** Push fuel tank filler door lock actuator locking rod in closed position.

HOOD HOLD-OPEN ROD REPLACEMENT

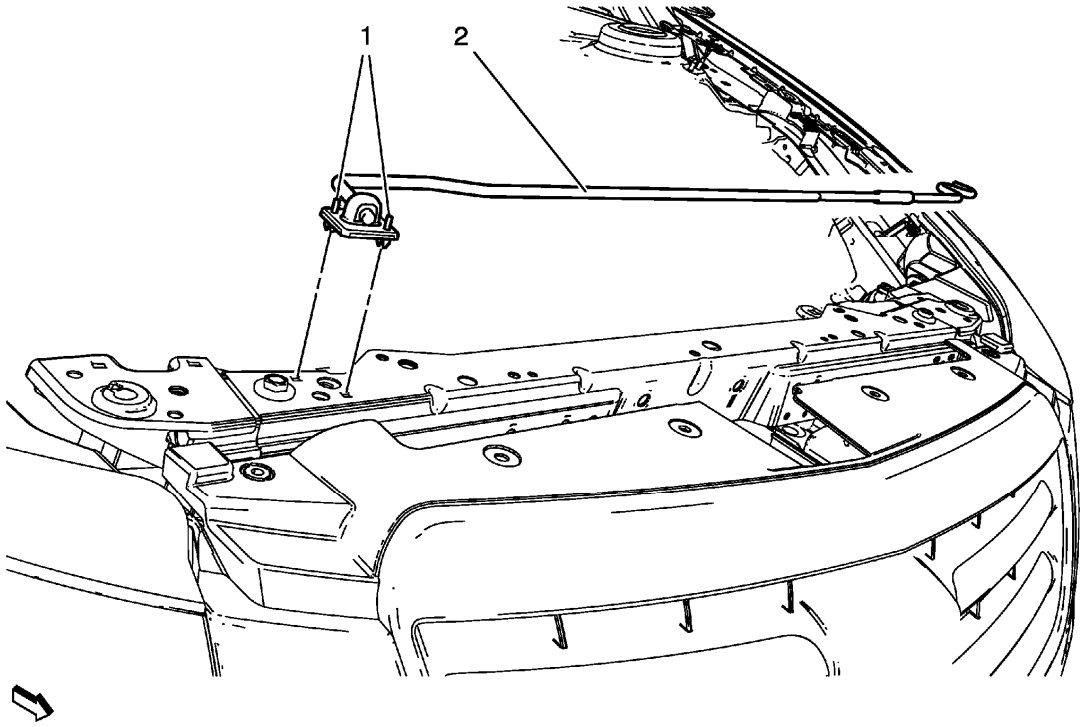

Fig. 23: Hood Hold-Open Rod
Courtesy of GENERAL MOTORS COMPANY

Hood Hold-Open Rod Replacement

Callout	Component Name
WARNING: **Refer to Hood Hold-Open Device Warning .** **Preliminary Procedure** Remove the radiator grille reinforcement support. Refer to **Front Grille Support Replacement**.	
1	Hood Hold Open Rod Pivot (Qty: 2)
2	Hood Hold Open Rod

REAR COMPARTMENT LID HINGE TORQUE ROD REPLACEMENT

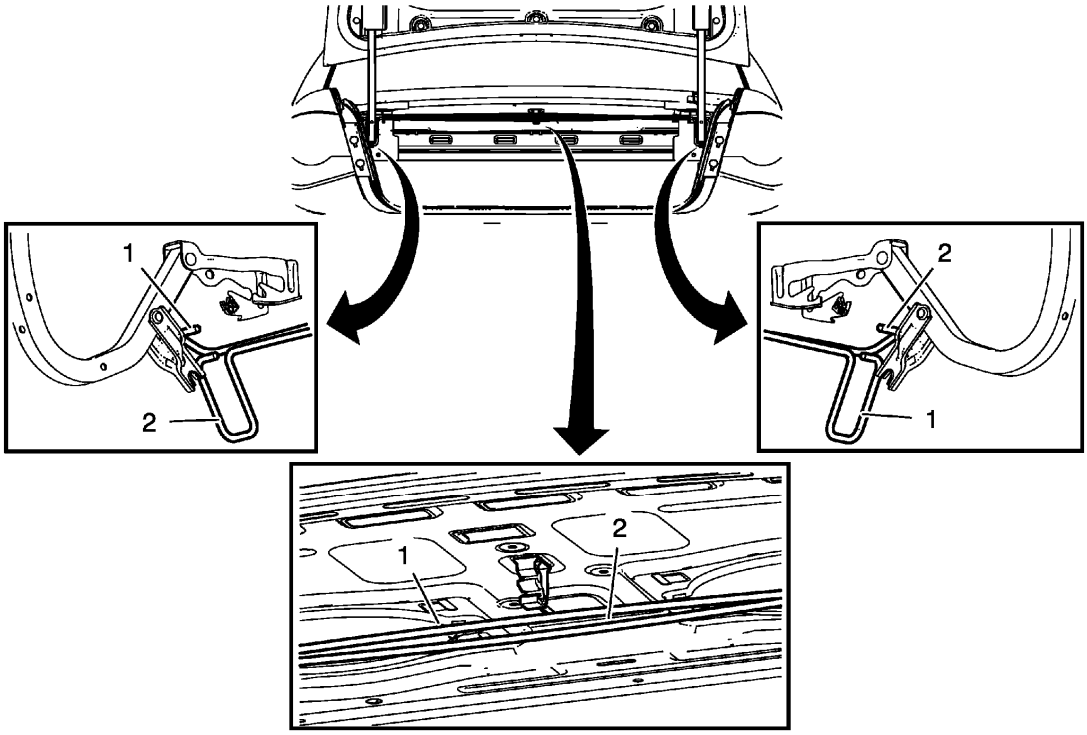

Fig. 24: Rear Compartment Lid Hinge Torque Rods & Components
Courtesy of GENERAL MOTORS COMPANY

Rear Compartment Lid Hinge Torque Rod Replacement

Callout	Component Name
WARNING: **When a rear compartment lid hold open device is being removed or installed, provide alternate support to avoid the possibility of damage to the vehicle or personal injury.**	
1	Rear Compartment Lid Hinge Torque Rod - Right Side **Procedure** 1. Using a suitable pair of pliers, rotate the torque rod upward to release it from the swing bracket and slowly rotate the torque rod downward until the tension is released. 2. Unclip torque rod from hinge retainers. 3. Remove the torque rod from the center support. 4. Remove the torque rod from the vehicle.
2	Rear Compartment Lid Hinge Torque Rod - Left Side **Procedure** 1. Using a suitable pair of pliers, rotate the torque rod upward to release it from the swing bracket and slowly rotate the torque

	rod downward until the tension is released. 2. Unclip torque rod from hinge retainers. 3. Remove the torque rod from the center support. 4. Remove the torque rod from the vehicle.

HOOD REAR WEATHERSTRIP REPLACEMENT

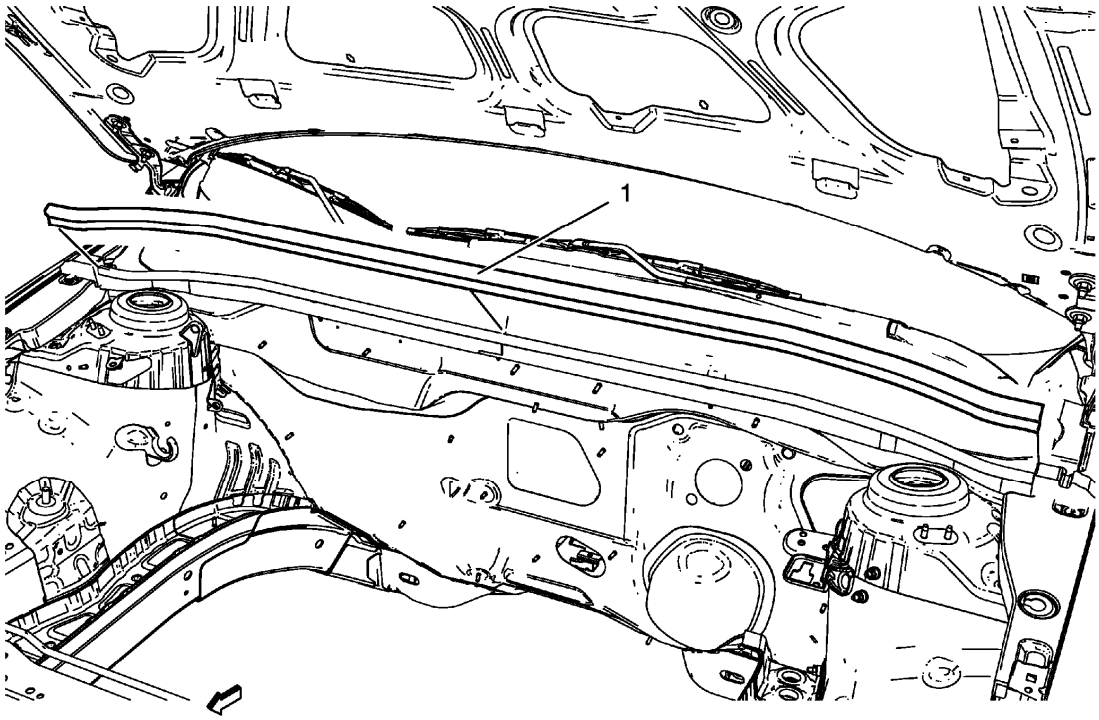

Fig. 25: Hood Rear Weatherstrip
Courtesy of GENERAL MOTORS COMPANY

Hood Rear Weatherstrip Replacement

Callout	Component Name
1	Hood Rear Weatherstrip

FRONT GRILLE SUPPORT REPLACEMENT

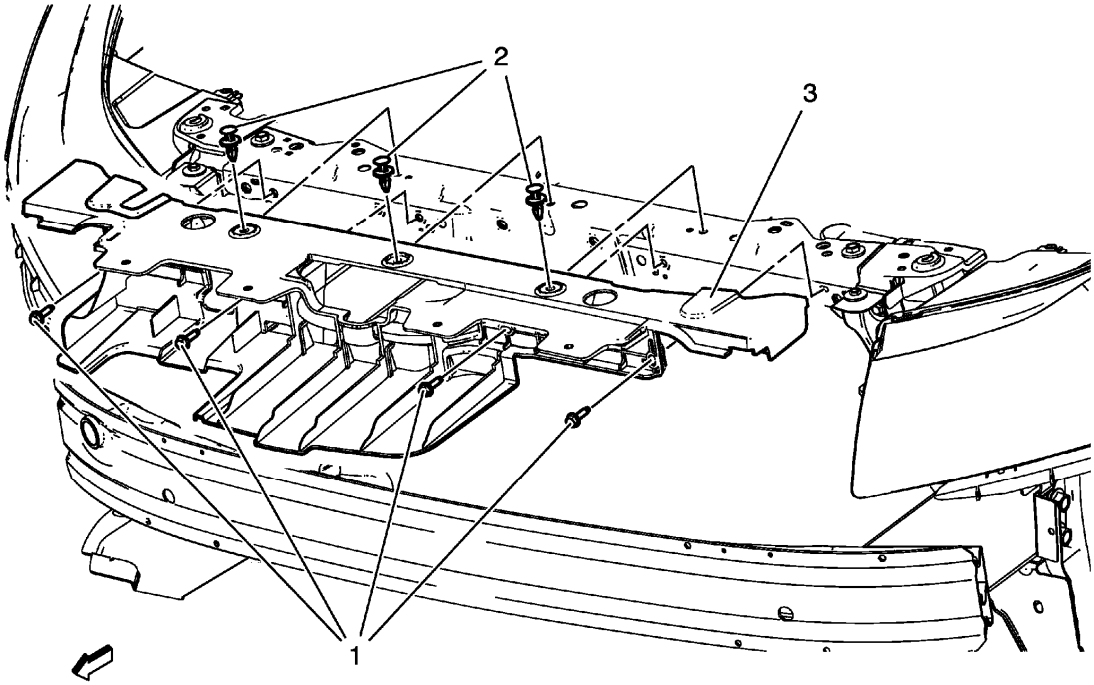

Fig. 26: Radiator Grille Reinforcement Support
Courtesy of GENERAL MOTORS COMPANY

Front Grille Support Replacement

Callout	Component Name
Preliminary Procedure Remove the front bumper fascia. Refer to **Front Bumper Fascia Replacement** .	
1	Radiator Grille Reinforcement Support Bolt (Qty: 4) **CAUTION:** **Refer to Fastener Caution .** **Tighten** 10 N.m (89 lb in).
2	Radiator Grille Reinforcement Support Retainer (Qty: 3)
3	Radiator Grille Reinforcement Support

FRONT OR REAR SIDE DOOR LOWER WEATHERSTRIP REPLACEMENT

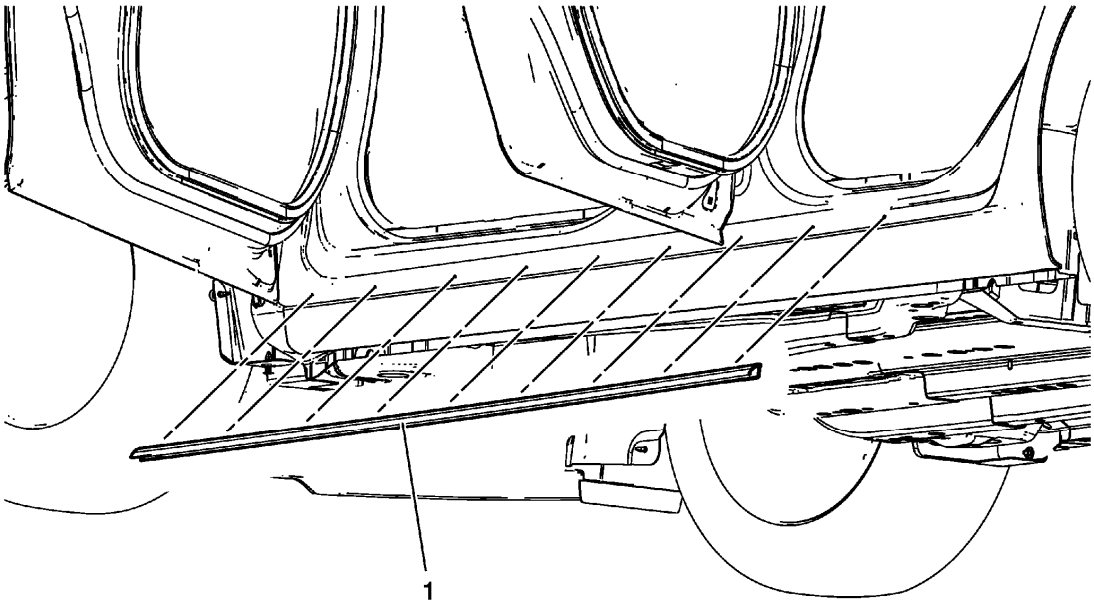

Fig. 27: Side Door Lower Weatherstrip
Courtesy of GENERAL MOTORS COMPANY

Front or Rear Side Door Lower Weatherstrip Replacement

Callout	Component Name
1	Front and Rear Side Door Lower Weatherstrip **Procedure** 1. Open the side doors at full opening position. 2. Unclip the front and rear side door lower weatherstrip from the rocker outer panel.

FRONT SIDE DOOR WEATHERSTRIP REPLACEMENT - DOOR SIDE

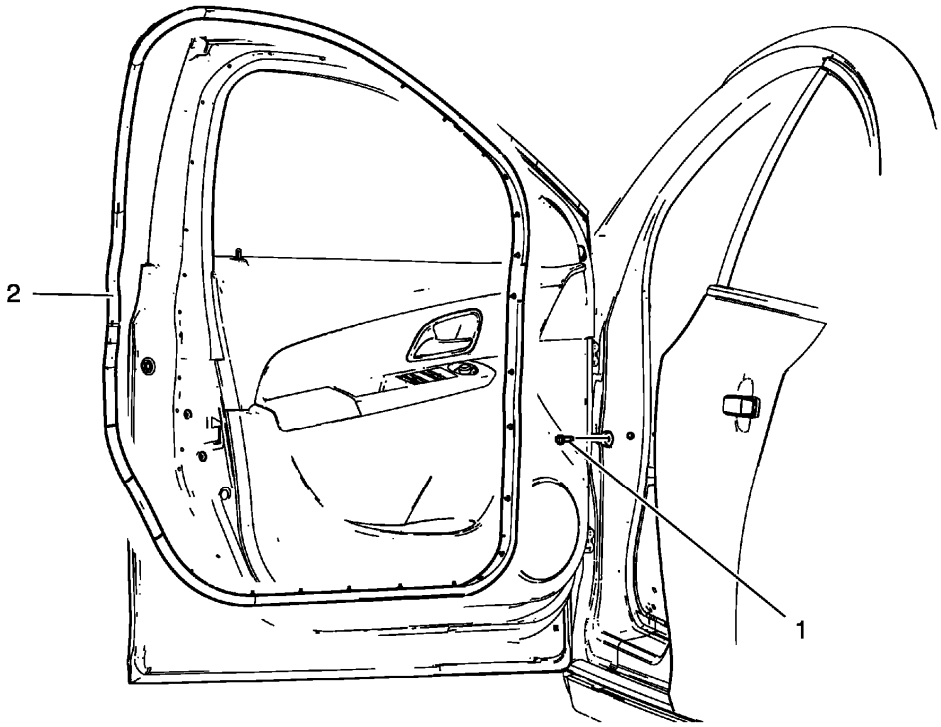

Fig. 28: Front Side Door Weatherstrip - Door Side
Courtesy of GENERAL MOTORS COMPANY

Front Side Door Weatherstrip Replacement - Door Side

Callout	Component Name
1	Front Side Door Check Bolt **CAUTION:** **Refer to Fastener Caution .** **Tighten** 25 N.m (19 lb ft)
2	Front Side Door Weatherstrip - Door Side **Procedure** 1. Unclip weatherstrip from front side door. 2. When removing protective liners from adhesive tape, be careful not to touch tape with hands and do not allow tape to come in contact with dirt or any foreign matter prior to adhesion.

FRONT SIDE DOOR WEATHERSTRIP REPLACEMENT - BODY SIDE

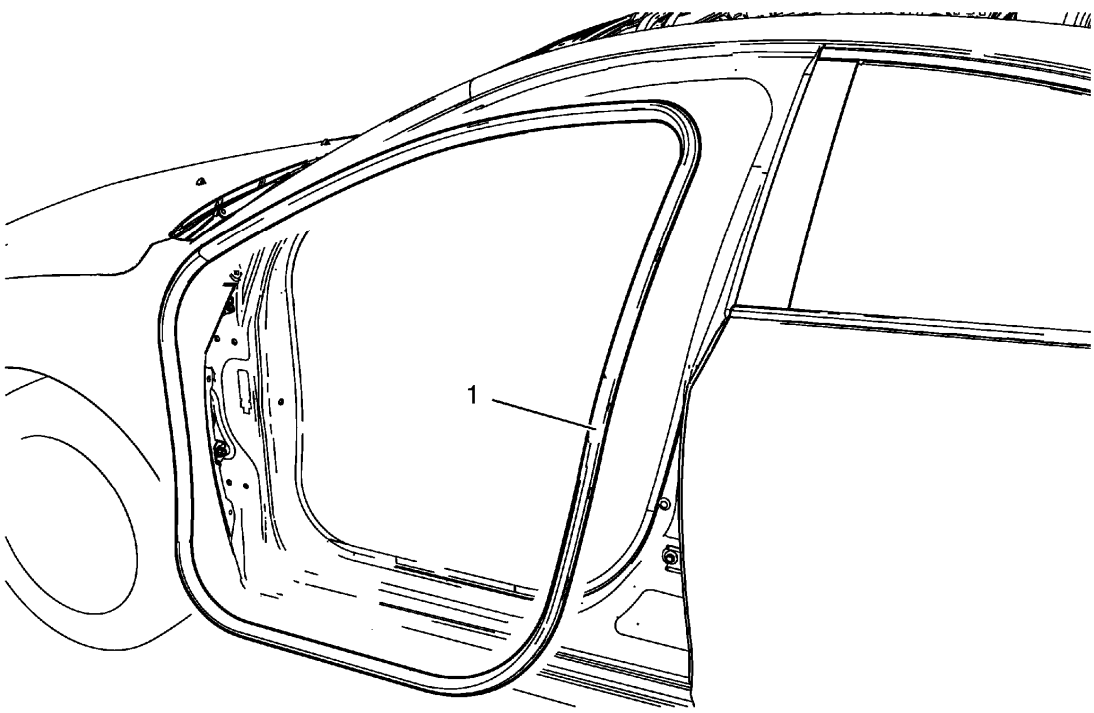

Fig. 29: Front Side Door Weatherstrip - Body Side
Courtesy of GENERAL MOTORS COMPANY

Front Side Door Weatherstrip Replacement - Body Side

Callout	Component Name
1	Front Side Door Weatherstrip- Body Side **Procedure** 1. Start at the rear upper corner of the door opening and pull the weatherstrip away from the door opening flange. 2. Position the weatherstrip in the upper corner of the center pillar. 3. Working downward along the front edge, install the weatherstrip on the door opening flange ensuring that the carrier is fully seated in the corners. 4. Using a rubber mallet, ensure that the weatherstrip is seated on the entire door opening flange.

REAR COMPARTMENT LID WEATHERSTRIP REPLACEMENT

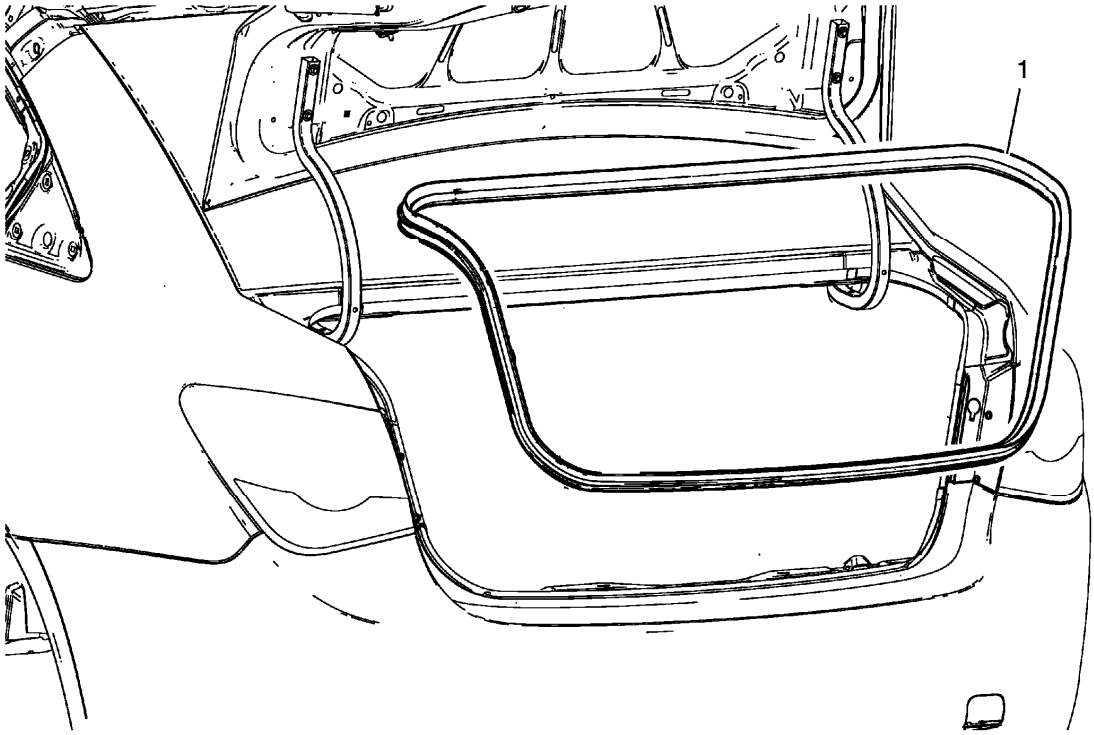

Fig. 30: Rear Compartment Lid Weatherstrip
Courtesy of GENERAL MOTORS COMPANY

Rear Compartment Lid Weatherstrip Replacement

Callout	Component Name
1	Rear Compartment Lid Weatherstrip **Procedure** 1. Start at the upper corner of the rear compartment opening and pull the weatherstrip away from the rear compartment opening flange. 2. Position the weatherstrip in the upper corner of the rear compartment opening. 3. Working downward along the edge, install the weatherstrip on the rear compartment opening flange ensuring that the carrier is fully seated in the corners. 4. Using a rubber mallet, ensure that the weatherstrip is seated on the entire trunk opening flange.

REAR SIDE DOOR WEATHERSTRIP REPLACEMENT - DOOR SIDE

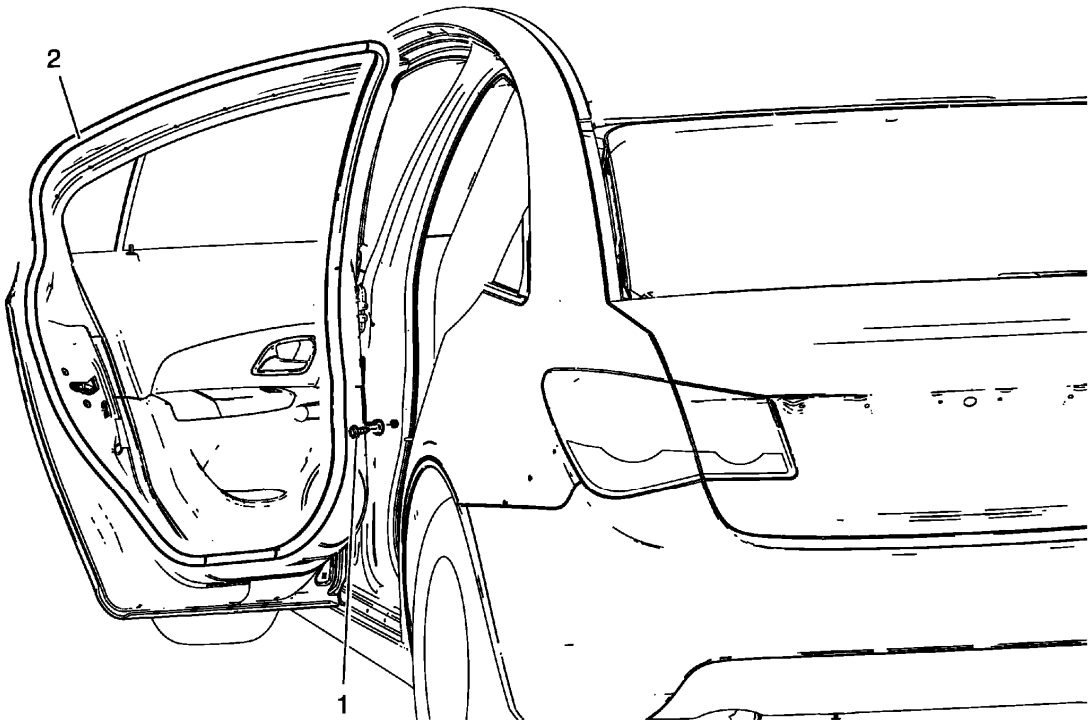

Fig. 31: Rear Side Door Weatherstrip - Door Side
Courtesy of GENERAL MOTORS COMPANY

Rear Side Door Weatherstrip Replacement - Door Side

Callout	Component Name
1	Rear Side Door Check Bolt **CAUTION:** **Refer to Fastener Caution .** **Tighten** 25 N.m (19 lb ft)
2	Rear Side Door Weatherstrip - Door Side **Procedure** 1. Unclip weatherstrip from rear side door. 2. When removing protective liners from adhesive tape, be careful not to touch tape with hands and do not allow tape to come in contact with dirt or any foreign matter prior to adhesion.

REAR SIDE DOOR WEATHERSTRIP REPLACEMENT - BODY SIDE

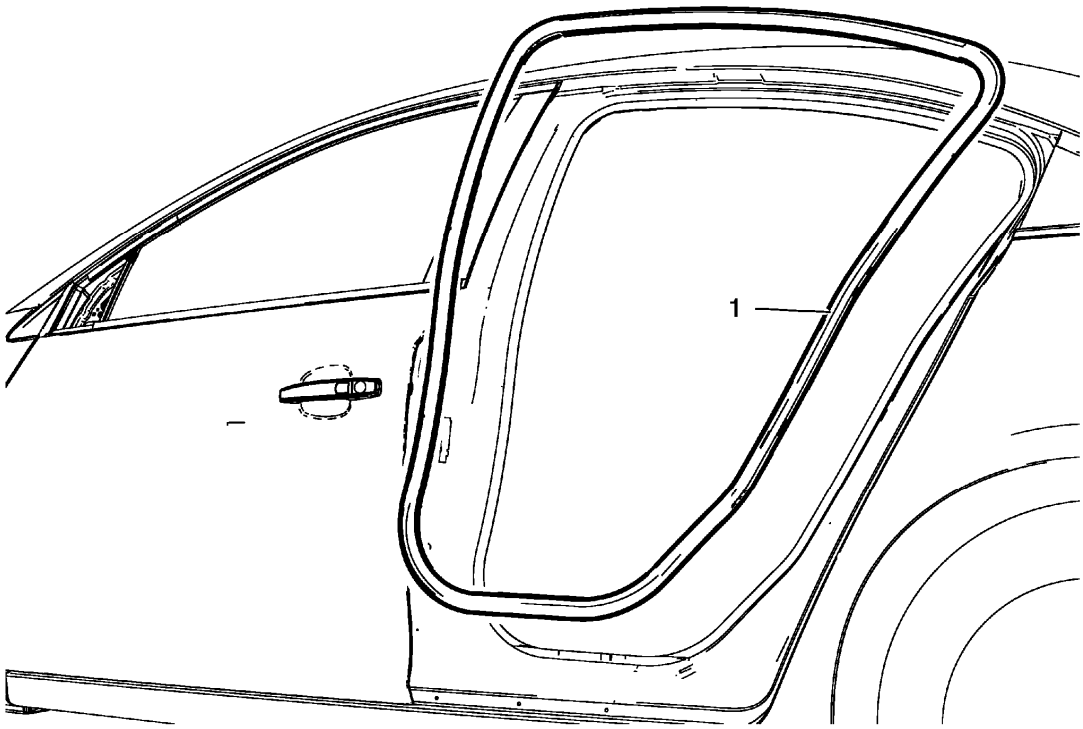

Fig. 32: Rear Side Door Weatherstrip - Body Side
Courtesy of GENERAL MOTORS COMPANY

Rear Side Door Weatherstrip Replacement - Body Side

Callout	Component Name
1	Rear Side Door Weatherstrip- Body Side **Procedure** 1. Start at the front upper corner of the door opening and pull the weatherstrip away from the door opening flange. 2. Position the weatherstrip in the upper corner of the center pillar. 3. Working downward along the front edge, install the weatherstrip on the door opening flange ensuring that the carrier is fully seated in the corners. 4. Using a rubber mallet, ensure that the weatherstrip is seated on the entire door opening flange.

DESCRIPTION AND OPERATION

HOOD AJAR INDICATOR DESCRIPTION AND OPERATION

Hood Ajar Switch

The body control module (BCM) applies B+ to the hood ajar signal circuit and monitors the voltage to determine the position of the hood. When the hood is closed, the switch is open and voltage remains high. When the hood is open, the switch is closed and the voltage is pulled low.

The BCM uses the hood ajar switch as a content theft deterrent alarm trigger.

Hood Ajar Indicator/Message

When the hood is ajar, a message is displayed on the DIC or the hood ajar indicator will be illuminated.

2013 ACCESSORIES & EQUIPMENT

Bumpers and Fascias - Cruze

SPECIFICATIONS

FASTENER TIGHTENING SPECIFICATIONS

Fastener Tightening Specifications

Application	Specification	
	Metric	English
Drivetrain and Front Suspension Frame Bolt Front	160 N.m	118 lb ft
Front Bumper Energy Absorber Bracket Bolt	22 Y	16 lb ft
Front Bumper Fascia Air Deflector Bolt	2.5 N.m	22 lb in
Front Bumper Fascia Bolt	9 N.m	80 lb in
Front Bumper Impact Bar Bolt	110 N.m	81 lb ft
Front Wheelhouse Liner Bolt	2.5 N.m	22 lb in
Rear Bumper Energy Absorber Nut	40 N.m	30 lb ft
Rear Wheelhouse Liner Bolt	2.5 N.m	22 lb in

SCHEMATIC WIRING DIAGRAMS

ACTIVE GRILLE AIR SHUTTER WIRING SCHEMATICS

Active Grille Air Shutter (Y8X) Wiring Schematics

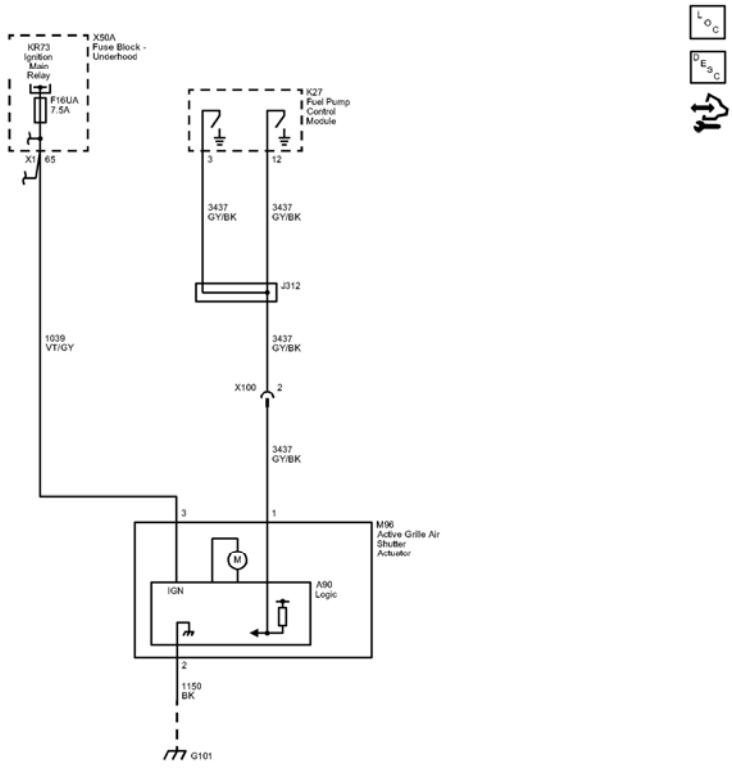

Fig. 1: Active Grille Air Shutter (Y8X) Wiring Schematics
Courtesy of GENERAL MOTORS COMPANY

Callout	Component Name
1039	Run/Crank Ignition 1 Voltage
1039 VT/GY	1039 VT/GY
CAV_3	3
CAV_65	65
CONN_X1	X1
3437	Shutter Valve Solenoid Control
3437_GY/BK	3437 GY/BK
CAV_3	3
3437_GY/BK	3437 GY/BK
CAV_1	1
CAV_12	12
1150	Ground
1150_BK	1150 BK
CAV_2	2
3437_GY/BK	3437 GY/BK
3437_GY/BK	3437 GY/BK
CAV_2	2

G101	G101
F16UA	F16UA 7.5A
X100	X100
J312	J312
KR73	
X50A	
A90	Logic
M96	(Y8K)
K27	

DIAGNOSTIC INFORMATION AND PROCEDURES

DIAGNOSTIC CODE INDEX

DIAGNOSTIC CODE INDEX

DTC	Description
DTC P059F or U0284	DTC U0284 Lost Communication with Active Grille Air Shutter 1 Motor Module DTC P059F Active Grille Air Shutter Performance

DTC P059F OR U0284

Diagnostic Instructions

- Perform the **Diagnostic System Check - Vehicle** prior to using this diagnostic procedure.
- Review **Strategy Based Diagnosis** for an overview of the diagnostic approach.
- **Diagnostic Procedure Instructions** provides an overview of each diagnostic category.

DTC Descriptors

DTC U0284

Lost Communication with Active Grille Air Shutter 1 Motor Module

DTC P059F

Active Grille Air Shutter Performance

Diagnostic Fault Information

Circuit	Short to Ground	Open/High Resistance	Short to Voltage	Signal Performance
Ignition	U0284, P059F	U0284, P059F	--	--
Control - Terminal 3	U0284, P059F	U0284, P059F	U0284, P059F	U0284, P059F

Control - Terminal 12	U0284, P059F	U0284, P059F	U0284, P059F	U0284, P059F
Ground	-	U0284, P059F	-	--

Circuit/System Description

The active grille air shutter actuator closes louvers at the front bumper to enhance vehicle aerodynamics in driving situations where cooling and A/C loads are relatively low and high levels of front end airflow are not required. If high levels of airflow are required the active grille air shutter actuator opens the louvers. The control signal from the fuel pump control module, ignition and ground circuits enable the active grille air shutter actuator to operate. If the conditions for opening the louvers are reached the fuel pump control module commands the active grille air shutter actuator to open the louvers.

Conditions for Running the DTC

- The ambient temperature is above 2.5°C (36.5°F).
- The engine is running.
- The ignition voltage is greater than 10 V.
- The DTC runs continuously when the above conditions are met.
- If the ambient temperature is below 10°C (50°F) when the vehicle is first started, this DTC will be disabled.

Conditions for Setting the DTC

- The DTC P059F will be set during a key cycle when the commanded louver position can not be achieved after 3 attempts are made to move the louver. The DTC will be stored as current for this key cycle but the malfunction indicator lamp (MIL) will not be illuminated.
- On the next key cycle the louver will be commanded to move again. If the commanded louver position can not be achieved after 3 more attempts, the MIL will be illuminated and DTC P059F will be set as current.
- The DTC U0284 will set if there is no communication on the bi-directional control circuit.

Action Taken When the DTC Sets

DTC P059F is a type B DTC.

Conditions for Clearing the DTC

DTC P059F is a type B DTC.

Reference Information

Schematic Reference

Active Grille Air Shutter Schematics

Connector End View Reference

COMPONENT CONNECTOR END VIEWS - INDEX

Description and Operation

Active Grille Air Shutter Description and Operation

Electrical Information Reference

- **Circuit Testing**
- **Connector Repairs**
- **Testing for Intermittent Conditions and Poor Connections**
- **Wiring Repairs**

Scan Tool Reference

Control Module References for scan tool information

Circuit/System Verification

1. Ignition ON.
2. Verify DTC P069E, or U0109 is not set
   - **If any of the DTCs are set**

     Refer to **Diagnostic Trouble Code (DTC) List - Vehicle** for further diagnosis.

   - **If none of the DTCs are set**
3. Verify the active grille air shutter actuator opens and closes the louvers at the front bumper when performing the Active Grille Air Shutter Actuator test with a scan tool.
   - **If the louvers at the front bumper do not open and close and the test result is fail**

     Refer to Circuit/System Testing below.

   - **If the louvers at the front bumper open and close and the test result is pass**
4. Verify none of the following conditions are present:
   - Snow or ice packed in the front fascia which prevents the louvers from moving.
   - Debris or foreign objects which prevent the louvers from moving.
   - **If any of the conditions are present**

     Clear any snow, ice or foreign objects from the front grille.

   - **If none of the conditions are present**
5. All OK

Circuit/System Testing

1. Ignition OFF, and all vehicle systems OFF, disconnect the harness connector at the M96 active grille air shutter actuator. It may take up to 2 minutes for all vehicle systems to power down.
2. Test for less than 10 ohms between the ground circuit terminal 2 and ground.
    - **If 10 ohms or greater**
    1. Ignition OFF.
    2. Test for less than 2 ohms in the ground circuit end to end.
        - If 2 ohms or greater, repair the open/high resistance in the circuit.
        - If less than 2 ohms, repair the open/high resistance in the ground connection.
    - **If less than 10 ohms**
3. Ignition ON.
4. Verify a test lamp illuminates between the ignition circuit terminal 3 and ground.
    - **If the test lamp does not illuminate and the circuit fuse is good**
    1. Ignition OFF.
    2. Test for less than 2 ohms in the ignition circuit end to end.
        - If 2 ohms or greater, repair the open/high resistance in the circuit.
        - If less than 2 ohms, verify the fuse is not open and there is voltage at the fuse.
    - **If the test lamp does not illuminate and the circuit fuse is open**
    1. Ignition OFF.
    2. Test for infinite resistance between the ignition circuit and ground.
        - If less than infinite resistance, repair the short to ground on the circuit.
        - If infinite resistance, replace the M96 active grille air shutter actuator.
    - **If the test lamp illuminates**
5. Connect a test lamp between the control circuit terminal 1 and the ignition circuit terminal 3.
6. Verify the test lamp blinks ON and OFF.
    - **If the test lamp is always OFF**
    1. Ignition OFF, disconnect the harness connector at the K27 fuel pump control module, ignition ON.
    2. Test for less than 1 V between the control circuit and ground.
        - If 1 V or greater, repair the short to voltage on the circuit.
        - If less than 1 V
    3. Ignition OFF.
    4. Test for less than 2 ohms between the K27 fuel pump control module control circuit terminal 3 and the M96 active grille air shutter actuator terminal 1.
        - If 2 ohms or greater, repair the open/high resistance in the circuit.
        - If less than 2 ohms, replace the K27 fuel pump control module.
    - **If the test lamp is always ON**
    1. Ignition OFF, disconnect the harness connector at the K27 fuel pump control module.
    2. Test for infinite resistance between the control circuit and ground.
        - If less than infinite resistance, repair the short to ground on the circuit.

- If infinite resistance, replace the K27 fuel pump control module.

- **If the test lamp turns ON and OFF**

7. Ignition OFF, connector the harness connector at the M96 active grille air shutter actuator. Disconnect the harness connector at the K27 fuel pump control module, Ignition ON.
8. Test for greater than 11 V between the control circuit terminal 12 and ground.
   - **If 11 V or less**
   1. Ignition OFF, disconnect the harness connector at the M96 active grille air shutter actuator.
   2. Test for less than 2 ohms between the K27 fuel pump control module control circuit terminal 12 and the M96 active grille air shutter actuator terminal 1.
      - If 2 ohms or greater, repair the open/high resistance in the circuit.
      - If less than 2 ohms, replace the M96 active grille air shutter actuator.
   - **If greater than 11 V**
9. Test or replace the M96 active grille air shutter actuator.
10. Verify DTC U0284 is not set.
    - **If the DTC is set**

      Replace the K27 fuel pump control module.

    - **If the DTC is not set**
11. All OK

Repair Instructions

Perform the **Diagnostic Repair Verification** after completing the repair.

- **Front Bumper Fascia Air Deflector Actuator Replacement**
- **Control Module References** for fuel pump control module replacement, programming and setup

ACTIVE GRILLE AIR SHUTTER MALFUNCTION

Diagnostic Instructions

- Perform the **Diagnostic System Check - Vehicle** prior to using this diagnostic procedure.
- Review **Strategy Based Diagnosis** for an overview of the diagnostic approach.
- **Diagnostic Procedure Instructions** provides an overview of each diagnostic category.

DTC Descriptors

DTC U0284

Lost Communication with Active Grille Air Shutter 1 Motor Module

DTC P059F

Active Grille Air Shutter Performance

Diagnostic Fault Information

Circuit	Short to Ground	Open/High Resistance	Short to Voltage	Signal Performance
Ignition	U0284, P059F	U0284, P059F	--	--
Control - Terminal 3	U0284, P059F	U0284, P059F	U0284, P059F	U0284, P059F
Control - Terminal 12	U0284, P059F	U0284, P059F	U0284, P059F	U0284, P059F
Ground	-	U0284, P059F	-	--

Circuit/System Description

The active grille air shutter actuator closes louvers at the front bumper to enhance vehicle aerodynamics in driving situations where cooling and A/C loads are relatively low and high levels of front end airflow are not required. If high levels of airflow are required the active grille air shutter actuator opens the louvers. The control signal from the fuel pump control module, ignition and ground circuits enable the active grille air shutter actuator to operate. If the conditions for opening the louvers are reached the fuel pump control module commands the active grille air shutter actuator to open the louvers.

Conditions for Running the DTC

- The ambient temperature is above 2.5°C (36.5°F).
- The engine is running.
- The ignition voltage is greater than 10 V.
- The DTC runs continuously when the above conditions are met.
- If the ambient temperature is below 10°C (50°F) when the vehicle is first started, this DTC will be disabled.

Conditions for Setting the DTC

- The DTC P059F will be set during a key cycle when the commanded louver position can not be achieved after 3 attempts are made to move the louver. The DTC will be stored as current for this key cycle but the malfunction indicator lamp (MIL) will not be illuminated.
- On the next key cycle the louver will be commanded to move again. If the commanded louver position can not be achieved after 3 more attempts, the MIL will be illuminated and DTC P059F will be set as current.
- The DTC U0284 will set if there is no communication on the bi-directional control circuit.

Action Taken When the DTC Sets

DTC P059F is a type B DTC.

Conditions for Clearing the DTC

DTC P059F is a type B DTC.

Reference Information

Schematic Reference

Active Grille Air Shutter Schematics

Connector End View Reference

COMPONENT CONNECTOR END VIEWS - INDEX

Description and Operation

Active Grille Air Shutter Description and Operation

Electrical Information Reference

- **Circuit Testing**
- **Connector Repairs**
- **Testing for Intermittent Conditions and Poor Connections**
- **Wiring Repairs**

Scan Tool Reference

Control Module References for scan tool information

Circuit/System Verification

1. Ignition ON.
2. Verify DTC P069E, or U0109 is not set
   - **If any of the DTCs are set**

     Refer to **Diagnostic Trouble Code (DTC) List - Vehicle** for further diagnosis.

   - **If none of the DTCs are set**
3. Verify the active grille air shutter actuator opens and closes the louvers at the front bumper when performing the Active Grille Air Shutter Actuator test with a scan tool.
   - **If the louvers at the front bumper do not open and close and the test result is fail**

     Refer to Circuit/System Testing below.

   - **If the louvers at the front bumper open and close and the test result is pass**
4. Verify none of the following conditions are present:
   - Snow or ice packed in the front fascia which prevents the louvers from moving.
   - Debris or foreign objects which prevent the louvers from moving.
   - **If any of the conditions are present**

Clear any snow, ice or foreign objects from the front grille.

- **If none of the conditions are present**

5. All OK

Circuit/System Testing

1. Ignition OFF, and all vehicle systems OFF, disconnect the harness connector at the M96 active grille air shutter actuator. It may take up to 2 minutes for all vehicle systems to power down.
2. Test for less than 10 ohms between the ground circuit terminal 2 and ground.
   - **If 10 ohms or greater**
   1. Ignition OFF.
   2. Test for less than 2 ohms in the ground circuit end to end.
      - If 2 ohms or greater, repair the open/high resistance in the circuit.
      - If less than 2 ohms, repair the open/high resistance in the ground connection.
   - **If less than 10 ohms**
3. Ignition ON.
4. Verify a test lamp illuminates between the ignition circuit terminal 3 and ground.
   - **If the test lamp does not illuminate and the circuit fuse is good**
   1. Ignition OFF.
   2. Test for less than 2 ohms in the ignition circuit end to end.
      - If 2 ohms or greater, repair the open/high resistance in the circuit.
      - If less than 2 ohms, verify the fuse is not open and there is voltage at the fuse.
   - **If the test lamp does not illuminate and the circuit fuse is open**
   1. Ignition OFF.
   2. Test for infinite resistance between the ignition circuit and ground.
      - If less than infinite resistance, repair the short to ground on the circuit.
      - If infinite resistance, replace the M96 active grille air shutter actuator.
   - **If the test lamp illuminates**
5. Connect a test lamp between the control circuit terminal 1 and the ignition circuit terminal 3.
6. Verify the test lamp blinks ON and OFF.
   - **If the test lamp is always OFF**
   1. Ignition OFF, disconnect the harness connector at the K27 fuel pump control module, ignition ON.
   2. Test for less than 1 V between the control circuit and ground.
      - If 1 V or greater, repair the short to voltage on the circuit.
      - If less than 1 V
   3. Ignition OFF.
   4. Test for less than 2 ohms between the K27 fuel pump control module control circuit terminal 3 and the M96 active grille air shutter actuator terminal 1.

- If 2 ohms or greater, repair the open/high resistance in the circuit.
- If less than 2 ohms, replace the K27 fuel pump control module.

- **If the test lamp is always ON**

1. Ignition OFF, disconnect the harness connector at the K27 fuel pump control module.
2. Test for infinite resistance between the control circuit and ground.
   - If less than infinite resistance, repair the short to ground on the circuit.
   - If infinite resistance, replace the K27 fuel pump control module.

- **If the test lamp turns ON and OFF**

7. Ignition OFF, connector the harness connector at the M96 active grille air shutter actuator. Disconnect the harness connector at the K27 fuel pump control module, Ignition ON.
8. Test for greater than 11 V between the control circuit terminal 12 and ground.
   - **If 11 V or less**

   1. Ignition OFF, disconnect the harness connector at the M96 active grille air shutter actuator.
   2. Test for less than 2 ohms between the K27 fuel pump control module control circuit terminal 12 and the M96 active grille air shutter actuator terminal 1.
      - If 2 ohms or greater, repair the open/high resistance in the circuit.
      - If less than 2 ohms, replace the M96 active grille air shutter actuator.

   - **If greater than 11 V**
9. Test or replace the M96 active grille air shutter actuator.
10. Verify DTC U0284 is not set.
    - **If the DTC is set**

      Replace the K27 fuel pump control module.

    - **If the DTC is not set**
11. All OK

Repair Instructions

Perform the **Diagnostic Repair Verification** after completing the repair.

- **Front Bumper Fascia Air Deflector Actuator Replacement**
- **Control Module References** for fuel pump control module replacement, programming and setup

REPAIR INSTRUCTIONS

FRONT BUMPER ENERGY ABSORBER REPLACEMENT

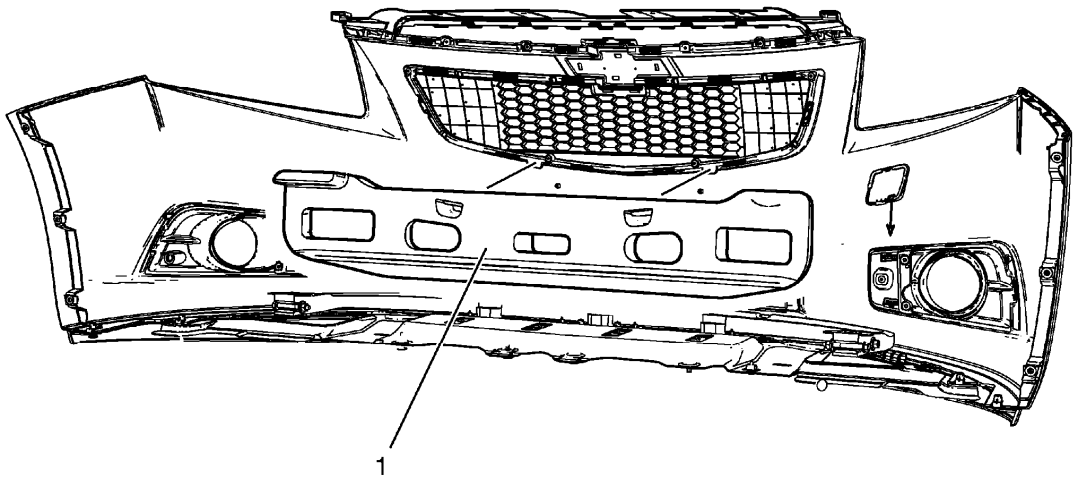

Fig. 2: Front Bumper Energy Absorber
Courtesy of GENERAL MOTORS COMPANY

Front Bumper Energy Absorber Replacement

Callout	Component Name
Preliminary Procedure Remove the front bumper fascia. Refer to **Front Bumper Fascia Replacement**.	
1	Front Bumper Energy Absorber **Procedure** Unclip from front bumper fascia.

FRONT BUMPER IMPACT BAR REPLACEMENT

Removal Procedure

WARNING: Refer to Approved Equipment for Collision Repair Warning .

WARNING: Refer to Glass and Sheet Metal Handling Warning .

1. Disable the SIR System. Refer to **SIR Disabling and Enabling** .
2. Disconnect the negative battery cable. Refer to **Battery Negative Cable Disconnection and Connection** .

3. Remove all related panels and components.

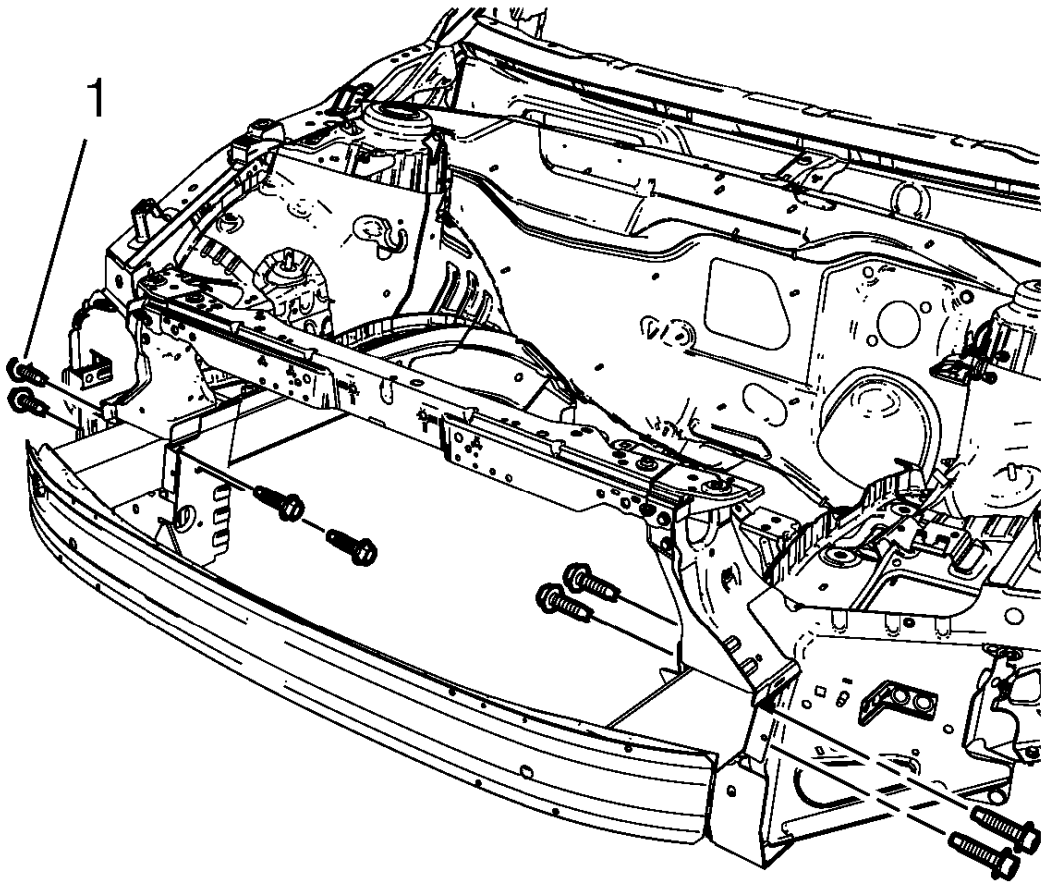

Fig. 3: Front Bumper Impact Bar And Front Bumper Impact Bar Bolts
Courtesy of GENERAL MOTORS COMPANY

4. Remove the 8 front bumper impact bar bolts (1).

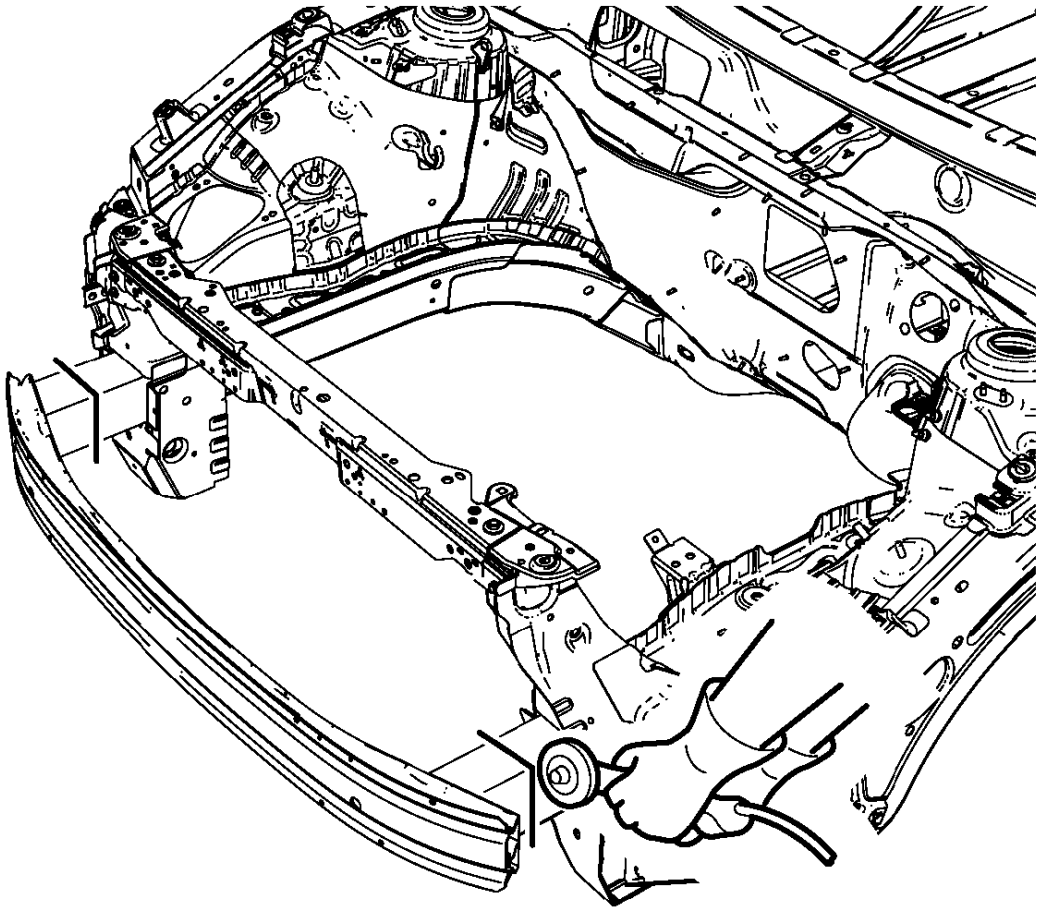

Fig. 4: Front Bumper Impact Bar Cut Points
Courtesy of GENERAL MOTORS COMPANY

5. Cut the front bumper impact bar left and right.
6. Locate and mark all factory welds.

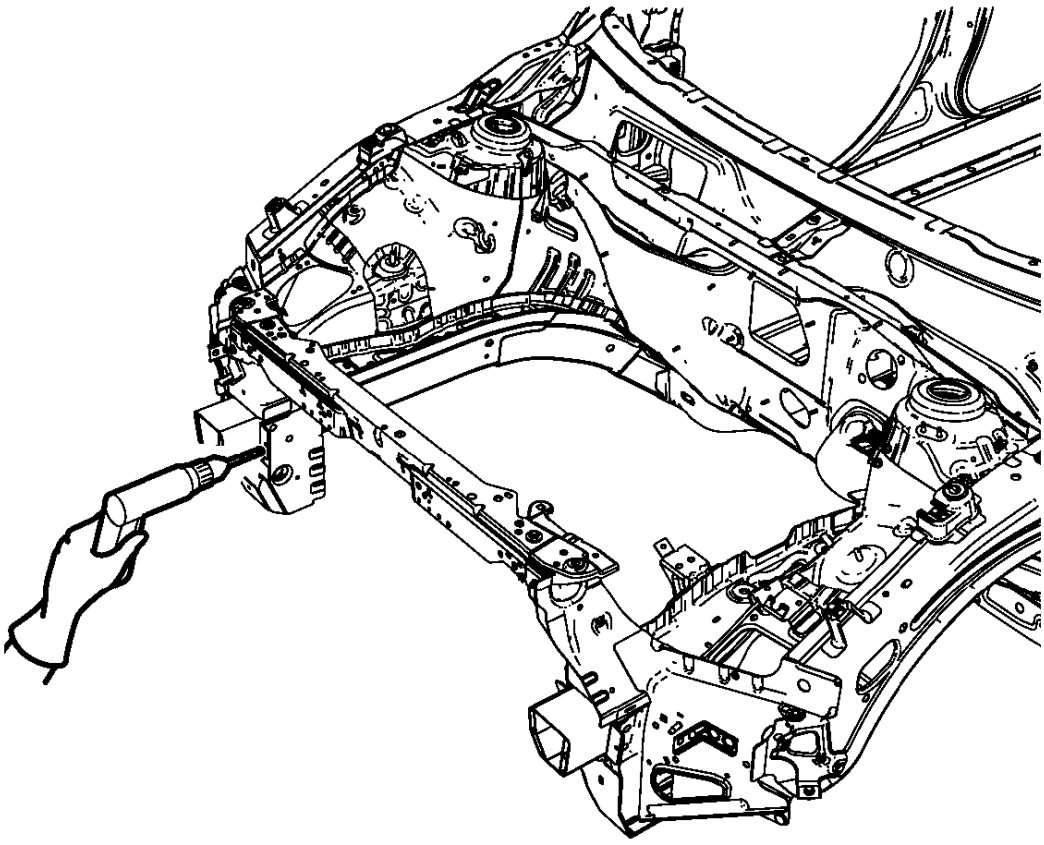

Fig. 5: Drilling Factory Welds
Courtesy of GENERAL MOTORS COMPANY

7. Drill all factory welds.

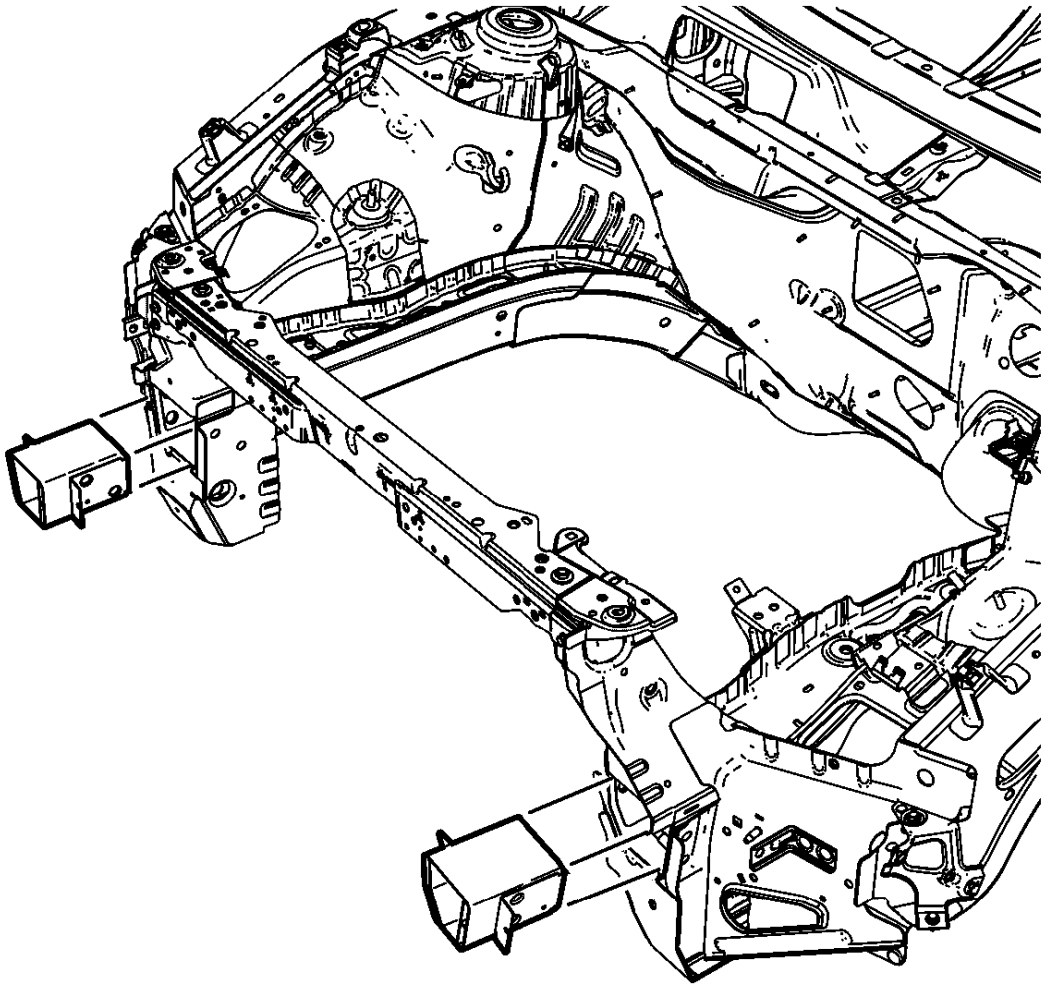

Fig. 6: Remaining Parts Of Front Bumper Impact Bar
Courtesy of GENERAL MOTORS COMPANY

8. Remove the remaining parts of the front bumper impact bar.

Installation Procedure

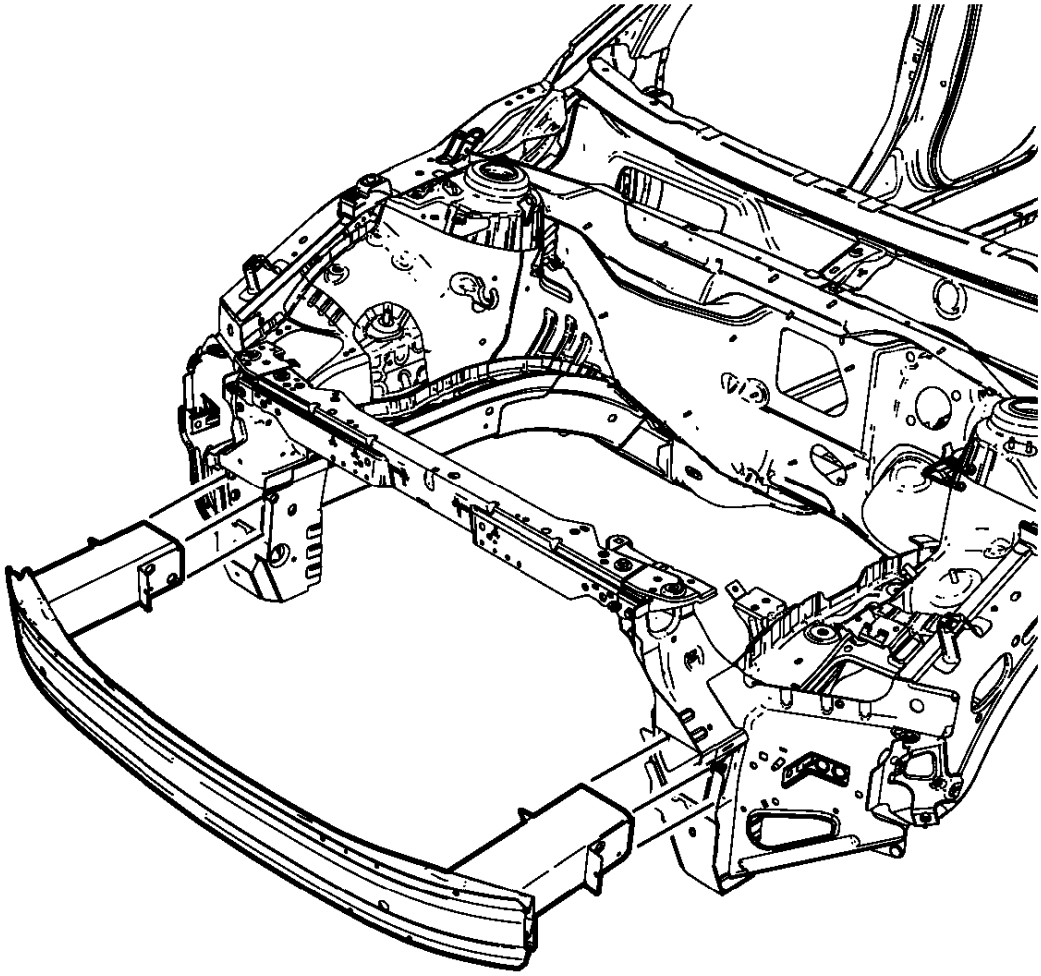

Fig. 7: Front Bumper Impact Bar
Courtesy of GENERAL MOTORS COMPANY

1. Position the front bumper impact bar on the vehicle.

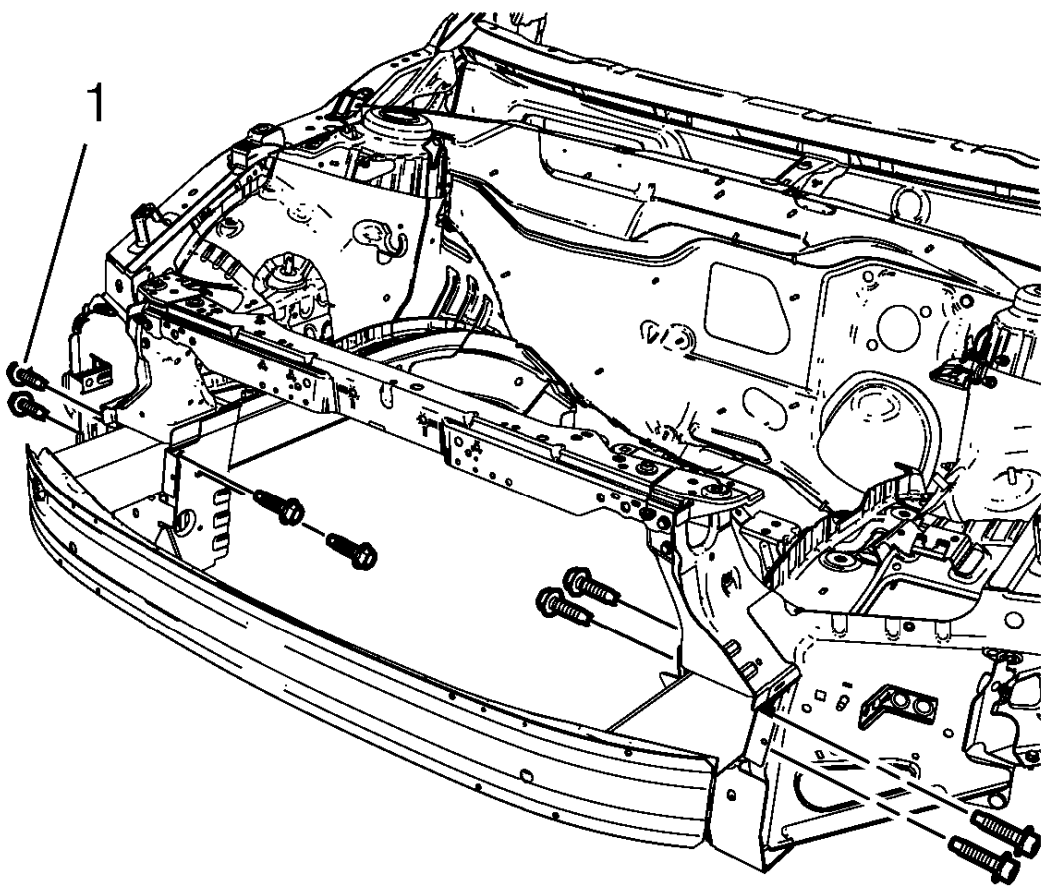

Fig. 8: Front Bumper Impact Bar And Front Bumper Impact Bar Bolts
Courtesy of GENERAL MOTORS COMPANY

CAUTION: Refer to Fastener Caution .

NOTE: Use only the original front bumper impact bar bolts. Replace bolts if damaged.

2. Install the 8 front bumper impact bar bolts (1) and tighten to 110 N.m (81 lb ft).
3. Paint the repaired area. Refer to **Basecoat/Clearcoat Paint Systems** .
4. Install all related panels and components.
5. Connect the negative battery cable. Refer to **Battery Negative Cable Disconnection and Connection** .
6. Enable the SIR system. Refer to **SIR Disabling and Enabling** .

FRONT BUMPER FASCIA REPLACEMENT

Removal Procedure

1. Remove the front bumper fascia opening lower cover. Refer to **Front Bumper Fascia Opening Lower Cover Replacement**.

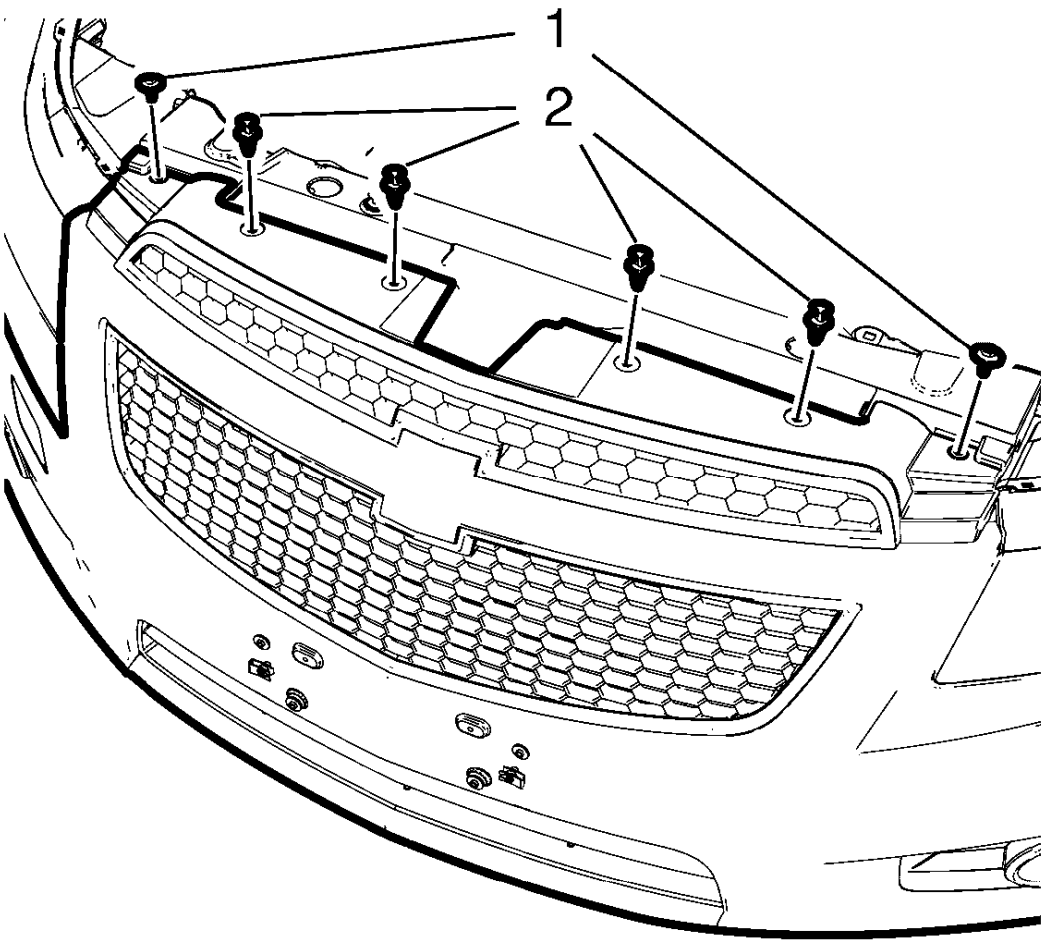

Fig. 9: Front Bumper Fascia Upper And Bolts
Courtesy of GENERAL MOTORS COMPANY

2. Remove the front bumper fascia upper bolts (1).
3. Remove the front bumper fascia upper retainers (2).

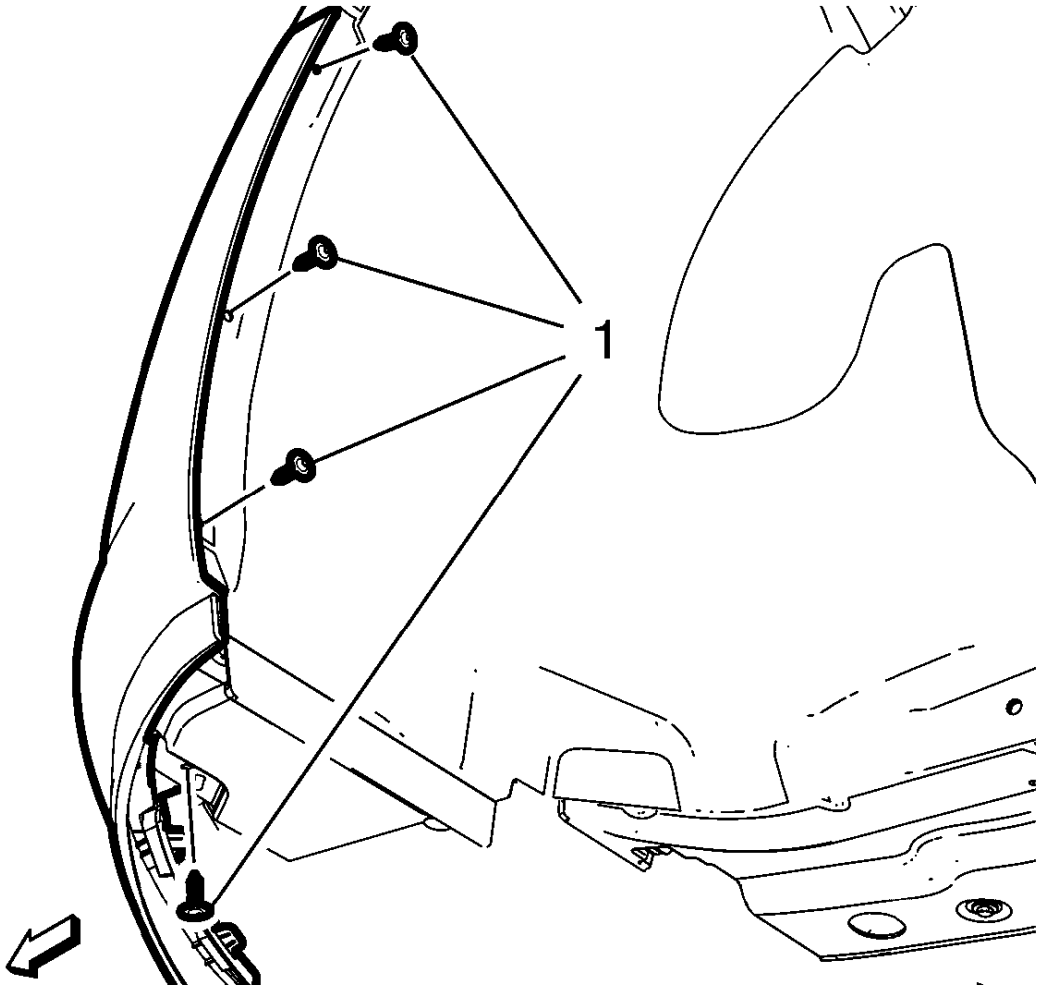

Fig. 10: Front Wheelhouse Liner
Courtesy of GENERAL MOTORS COMPANY

4. Remove the front wheelhouse liner bolts (1) on both sides.

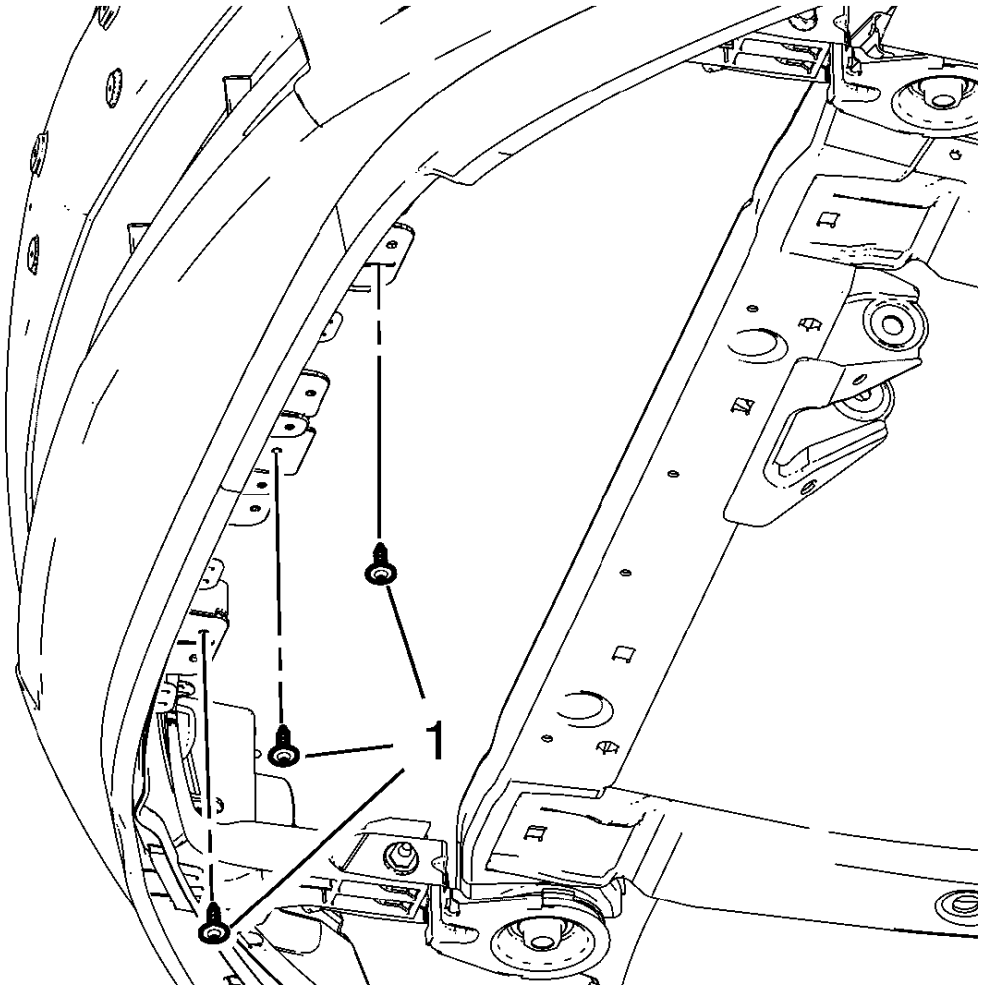

Fig. 11: Lower Stiffener Bolts
Courtesy of GENERAL MOTORS COMPANY

5. If equipped, remove the lower stiffener bolts (1).

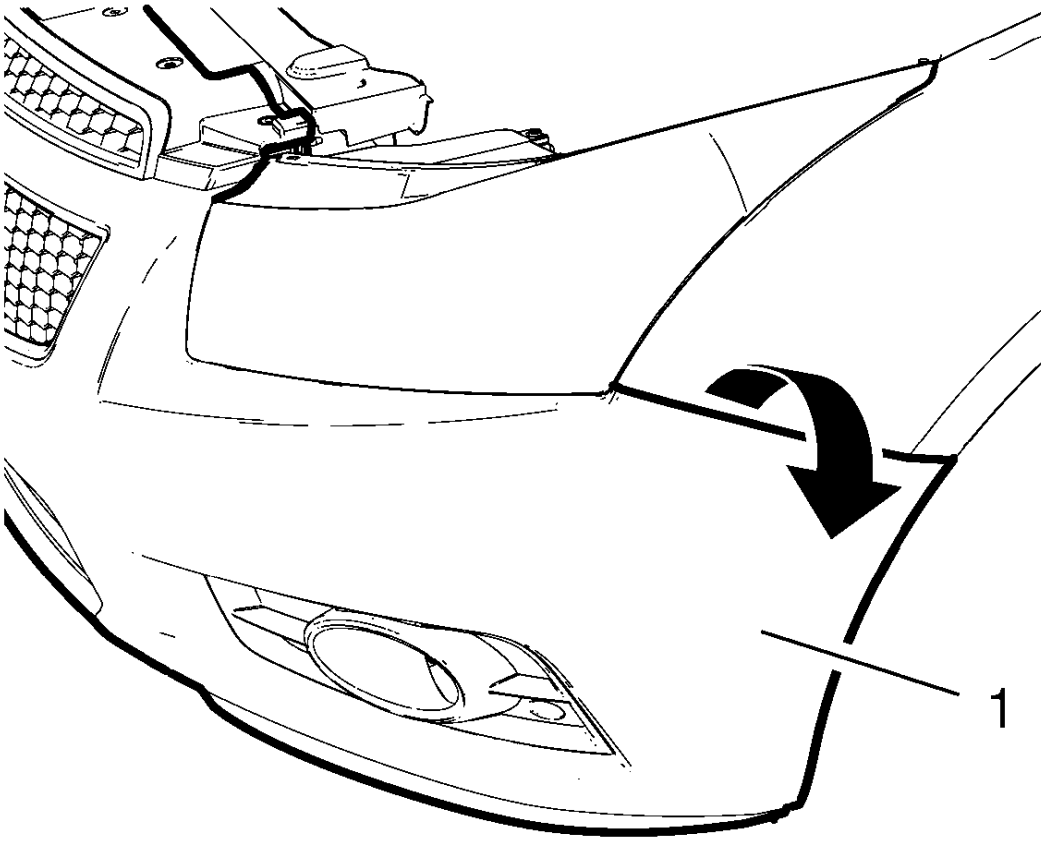

Fig. 12: Pulling Front Bumper Fascia Carefully Outward
Courtesy of GENERAL MOTORS COMPANY

NOTE: Use a plastic trim tool if necessary. Use care when removing the fascia. Fascia might rip apart if forced.

6. Pull the front bumper fascia (1) carefully outward in order to release the retaining tabs from front bumper fascia guides.
7. Disconnect any electrical connectors.

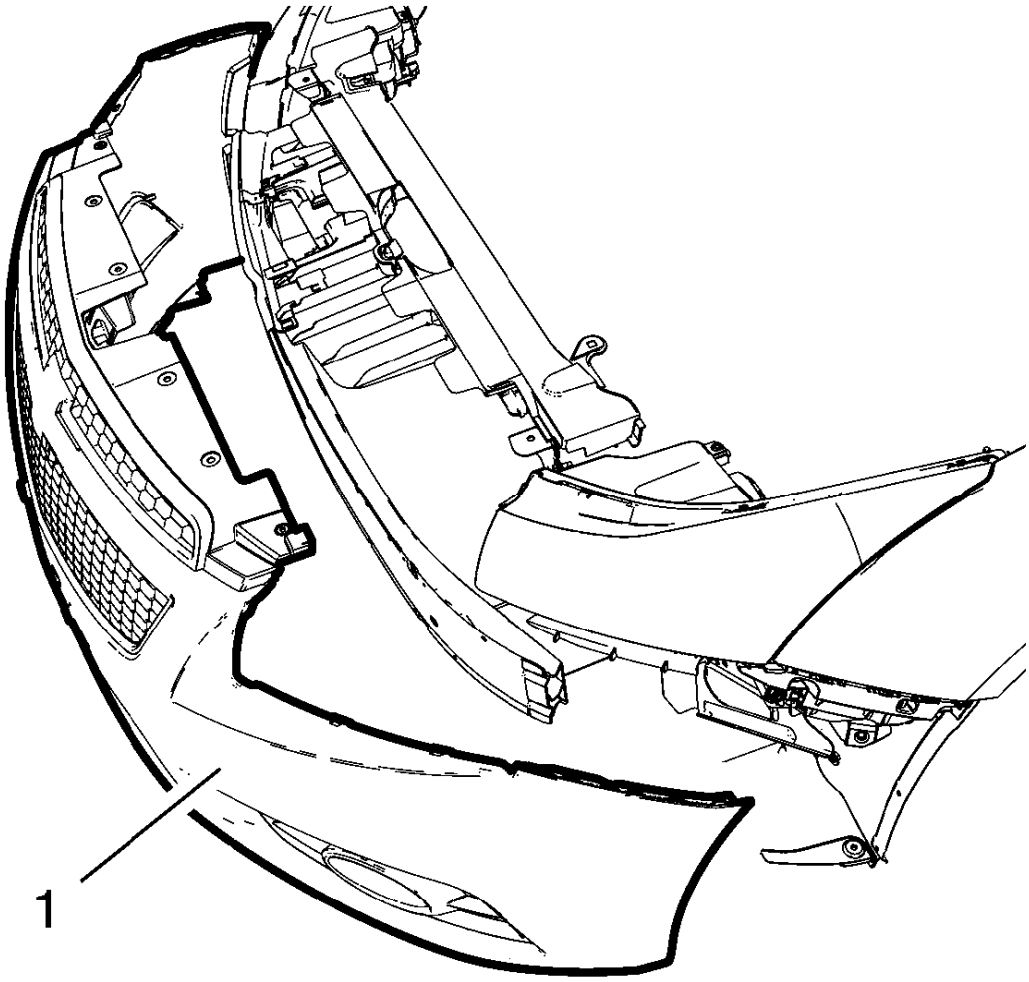

Fig. 13: Front Bumper Fascia
Courtesy of GENERAL MOTORS COMPANY

8. With the aid of an assistant remove the front bumper fascia (1).
9. Transfer or replace parts as needed.

Installation Procedure

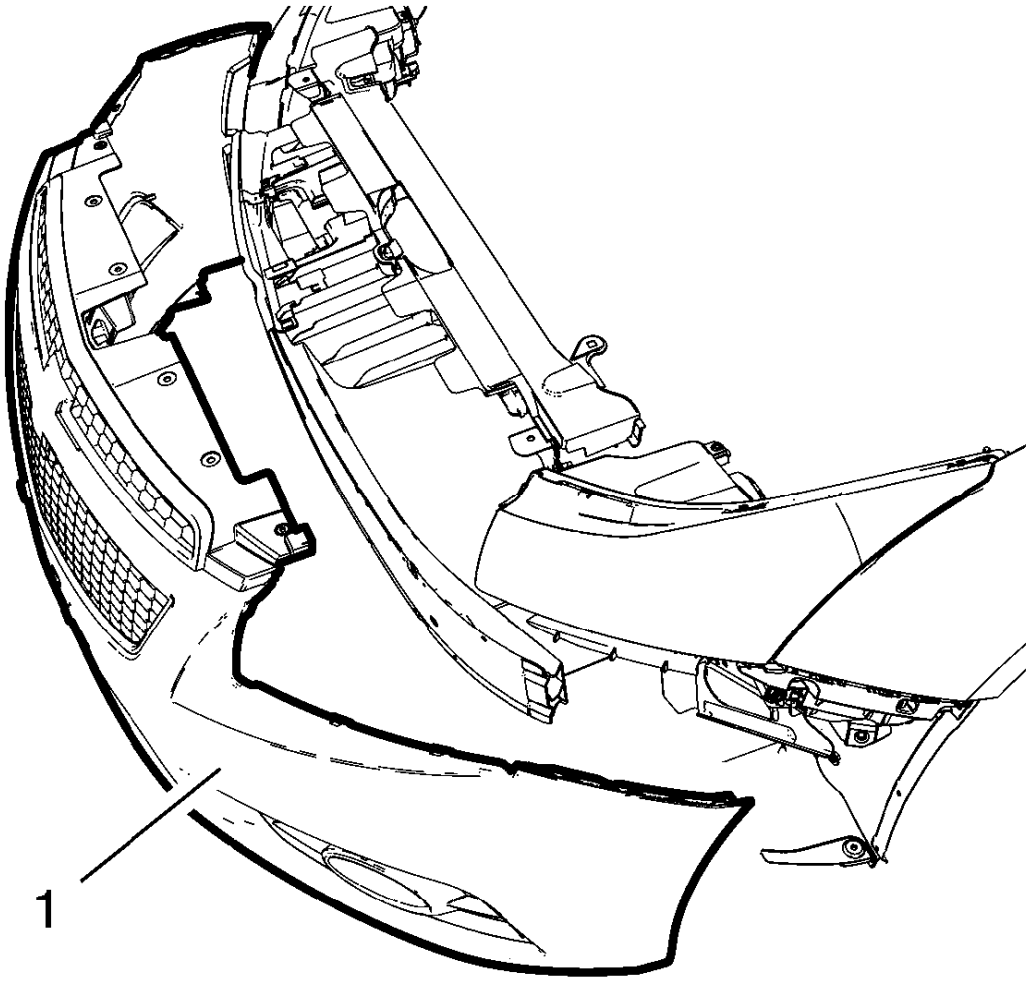

Fig. 14: Front Bumper Fascia
Courtesy of GENERAL MOTORS COMPANY

1. With the aid of an assistant install the front bumper fascia (1).
2. Carefully push in the retaining tabs of front bumper fascia into the front bumper fascia guides.
3. Connect any electrical connectors.

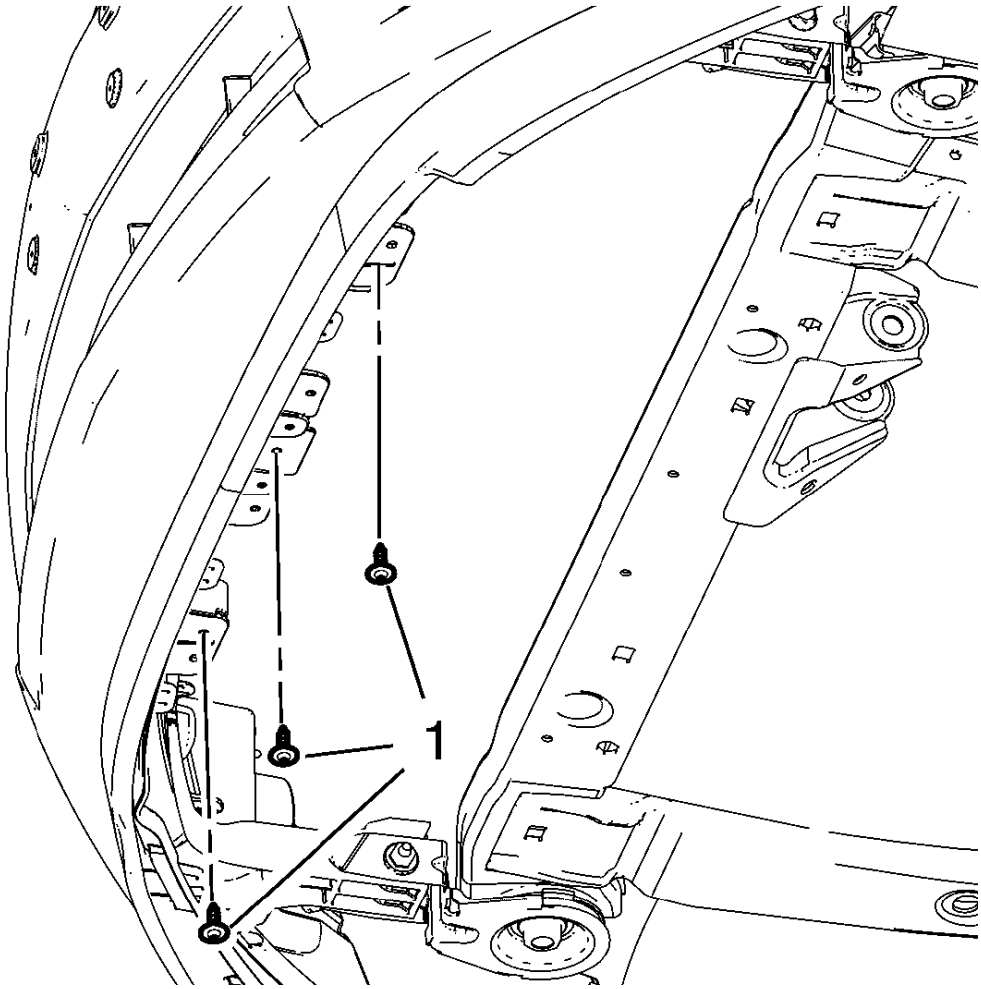

Fig. 15: Lower Stiffener Bolts
Courtesy of GENERAL MOTORS COMPANY

CAUTION: Refer to Fastener Caution .

4. If equipped, install the lower stiffener bolts (1) and tighten to 2.5 (22 lb in).

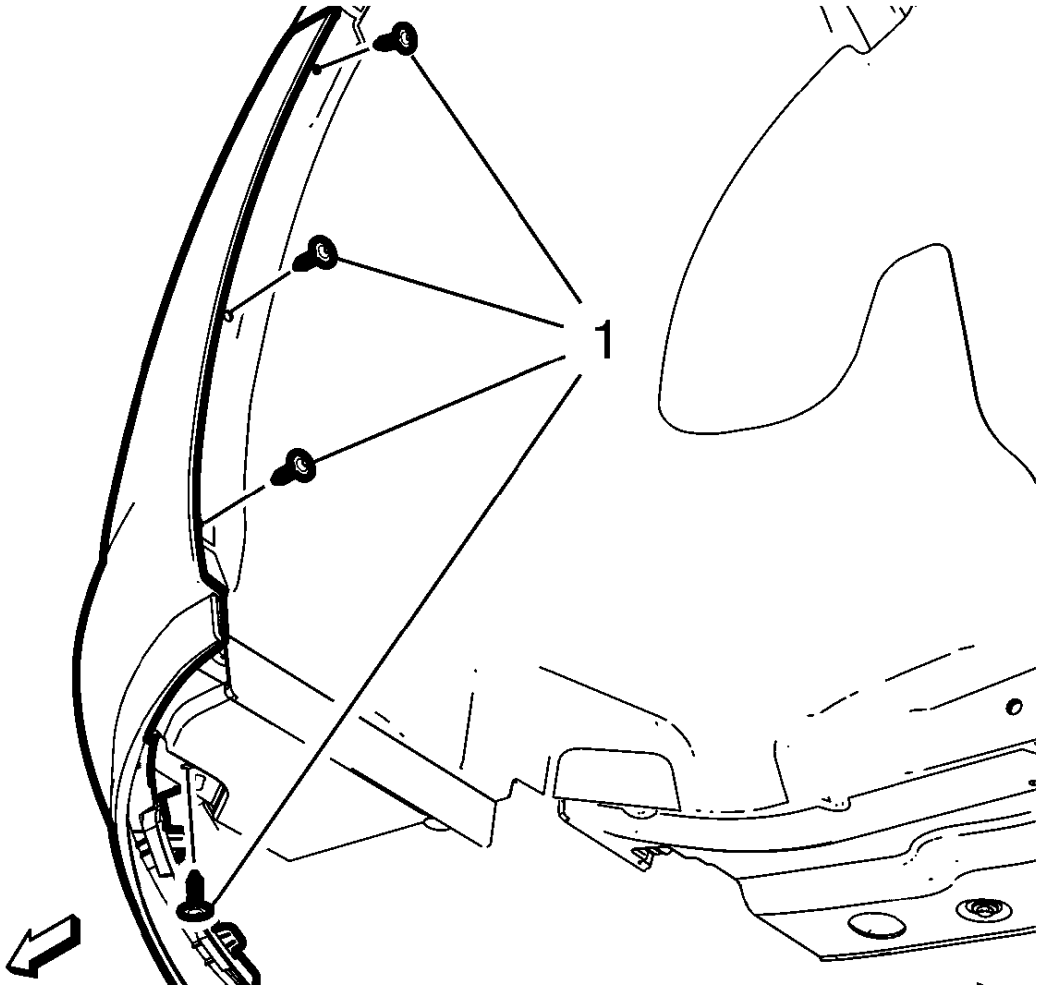

Fig. 16: Front Wheelhouse Liner
Courtesy of GENERAL MOTORS COMPANY

5. Install the front wheelhouse liner bolts (1) and tighten to 2.5 (22 lb in).

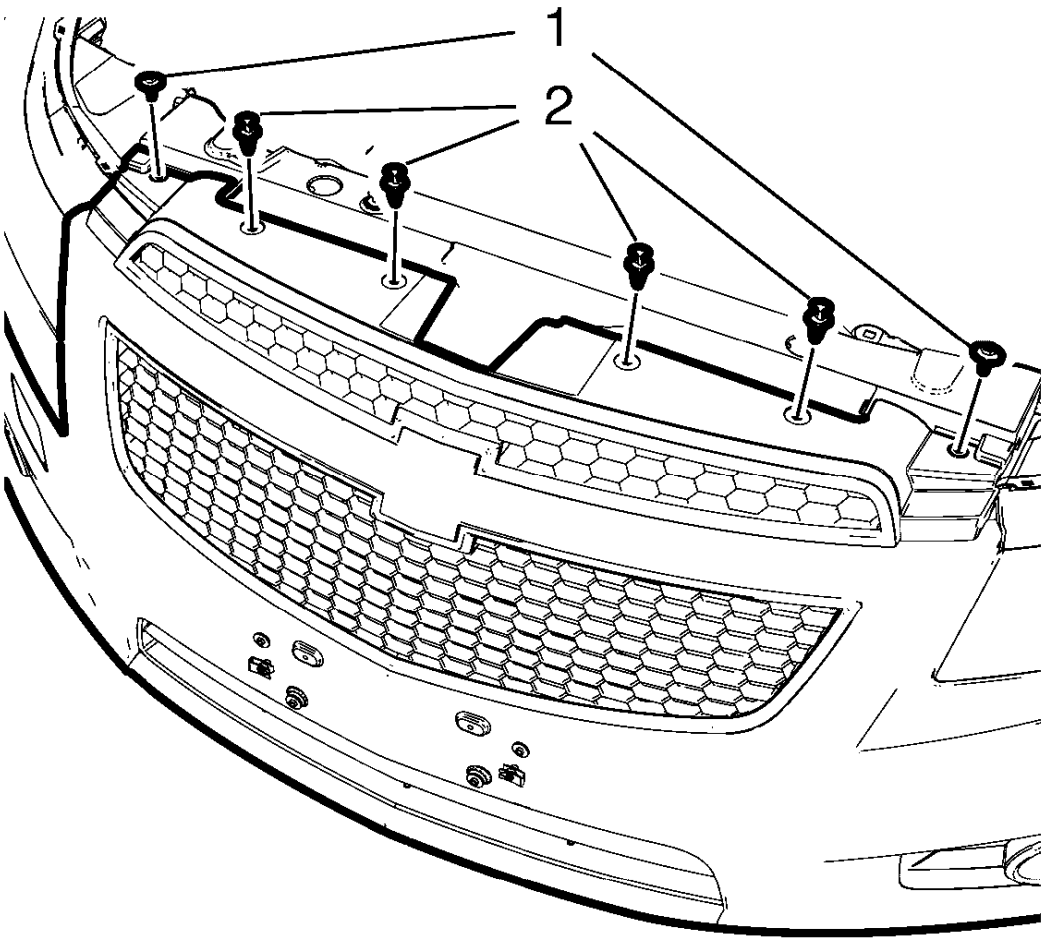

Fig. 17: Front Bumper Fascia Upper And Bolts
Courtesy of GENERAL MOTORS COMPANY

6. Install the front bumper fascia upper retainers (2).
7. Install the front bumper fascia upper bolts (1) and tighten to 9 (80 lb in).
8. Install the front bumper fascia opening lower cover. Refer to **Front Bumper Fascia Opening Lower Cover Replacement**.

FRONT BUMPER FASCIA GUIDE REPLACEMENT

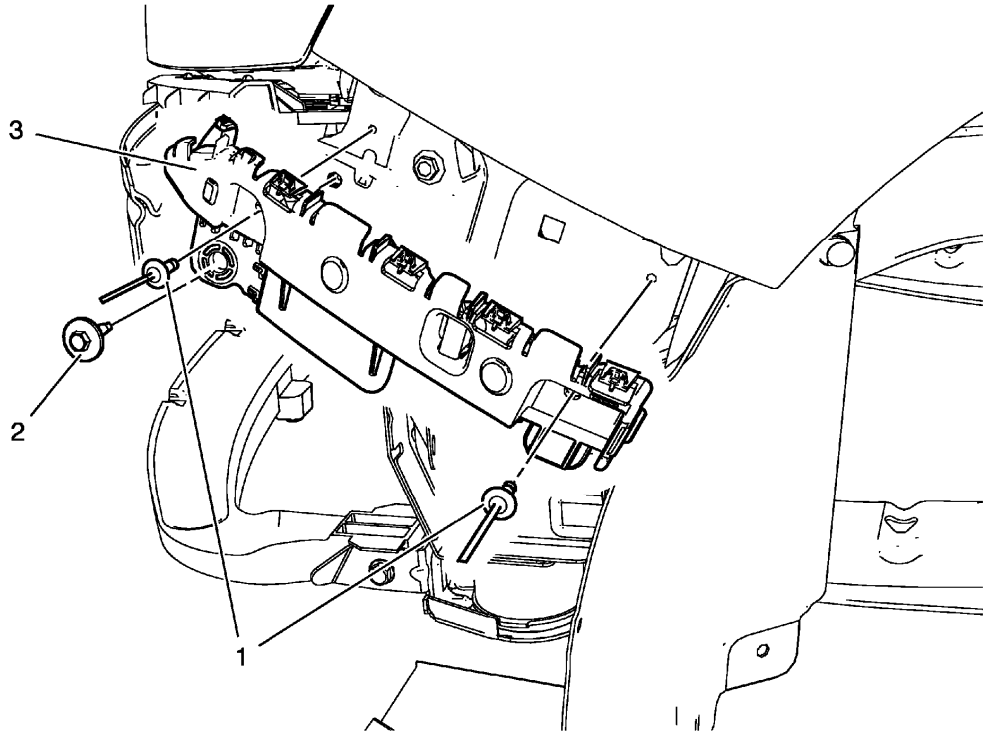

Fig. 18: Front Bumper Fascia Guide
Courtesy of GENERAL MOTORS COMPANY

Front Bumper Fascia Guide Replacement

Callout	Component Name
Preliminary Procedure Remove the front bumper fascia. Refer to **Front Bumper Fascia Replacement**.	
1	Front Bumper Fascia Guide Rivet (Qty: 2)
2	Headlamp Bolt **CAUTION:** **Refer to Fastener Caution .** **Tighten** 2.5 N.m (23 lb in)
3	Front Bumper Fascia Guide

FRONT BUMPER LOWER FASCIA BRACKET REPLACEMENT

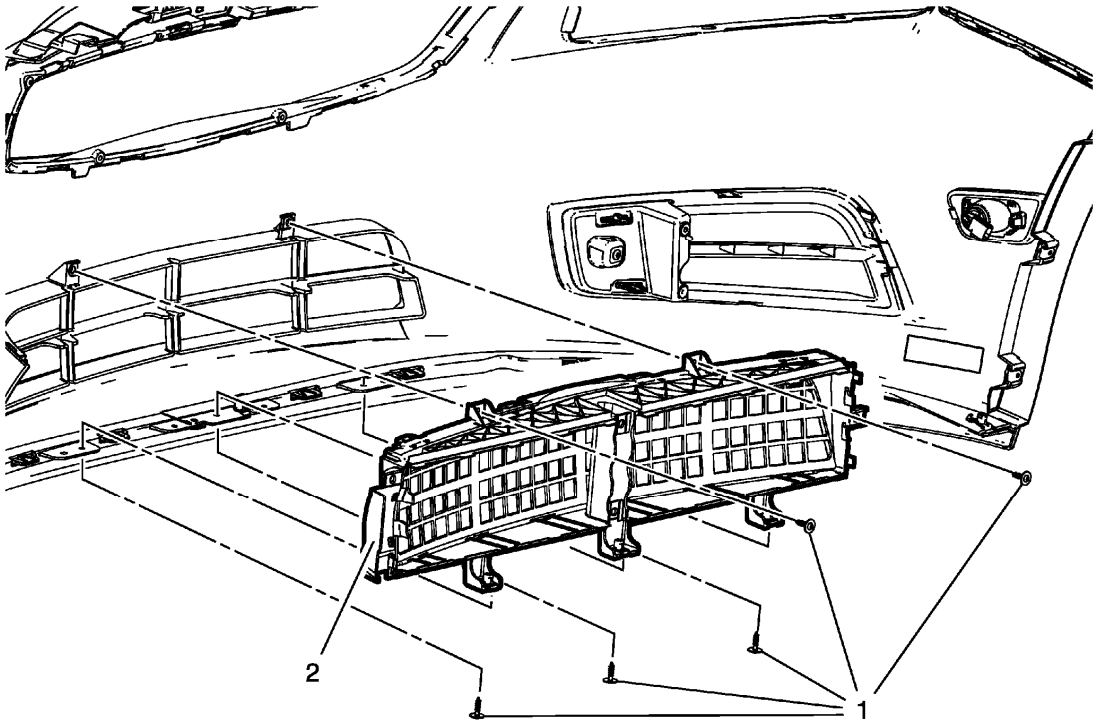

Fig. 19: Front Bumper Lower Fascia Bracket
Courtesy of GENERAL MOTORS COMPANY

Front Bumper Lower Fascia Bracket Replacement

Callout	Component Name
Preliminary Procedures Remove the aero shutter front bumper fascia air deflector. Refer to **Aero Shutter Front Bumper Fascia Air Deflector Replacement**.	
1	Front Bumper Lower Fascia Bracket Bolt (Qty: 5)
2	Front Bumper Lower Fascia Bracket **Procedure** Remove the front bumper lower fascia grille. Refer to **Front Bumper Lower Fascia Grille Replacement** .

FRONT BUMPER FASCIA OPENING LOWER COVER REPLACEMENT

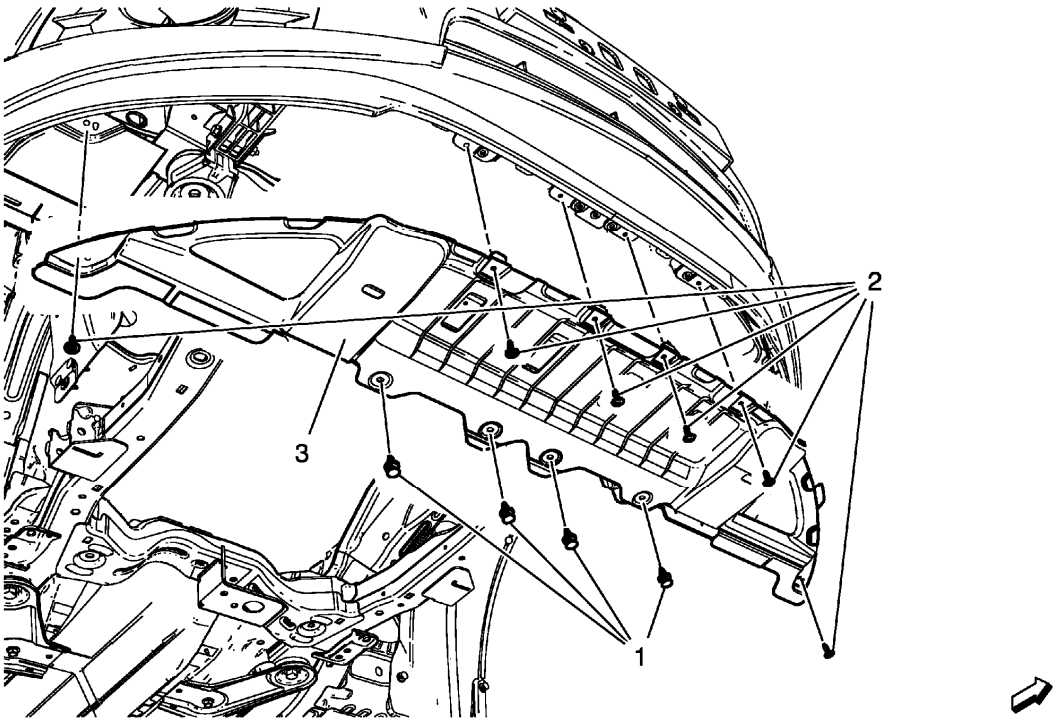

Fig. 20: Front Bumper Fascia Opening Lower Cover
Courtesy of GENERAL MOTORS COMPANY

Front Bumper Fascia Opening Lower Cover Replacement

Callout	Component Name
Preliminary Procedures Raise and support the vehicle. Refer to **Lifting and Jacking the Vehicle** .	
1	Front Bumper Fascia Opening Lower Cover Retainer (Qty: 4)
2	Front Bumper Fascia Opening Lower Cover Bolt (Qty: 6) **CAUTION:** **Refer to Fastener Caution .** **Tighten** 2.5 N.m (23 lb in)
3	Front Bumper Fascia Opening Lower Cover

FRONT BUMPER FASCIA OUTER BRACKET REPLACEMENT

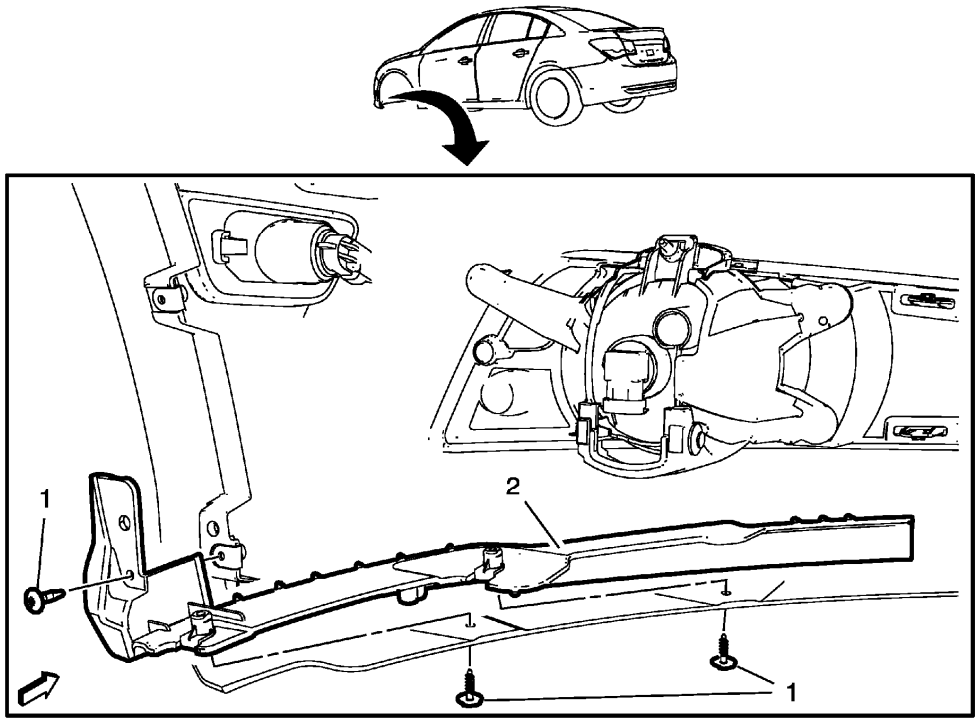

Fig. 21: Front Bumper Fascia Outer Bracket
Courtesy of GENERAL MOTORS COMPANY

Front Bumper Fascia Outer Bracket Replacement

Callout	Component Name
Preliminary Procedures Remove the front wheelhouse liner. Refer to **Front Wheelhouse Liner Replacement** .	
1	Front Bumper Fascia Outer Bracket Bolt (Qty: 3)
2	Front Bumper Fascia Outer Bracket

FRONT BUMPER FASCIA AIR DEFLECTOR REPLACEMENT

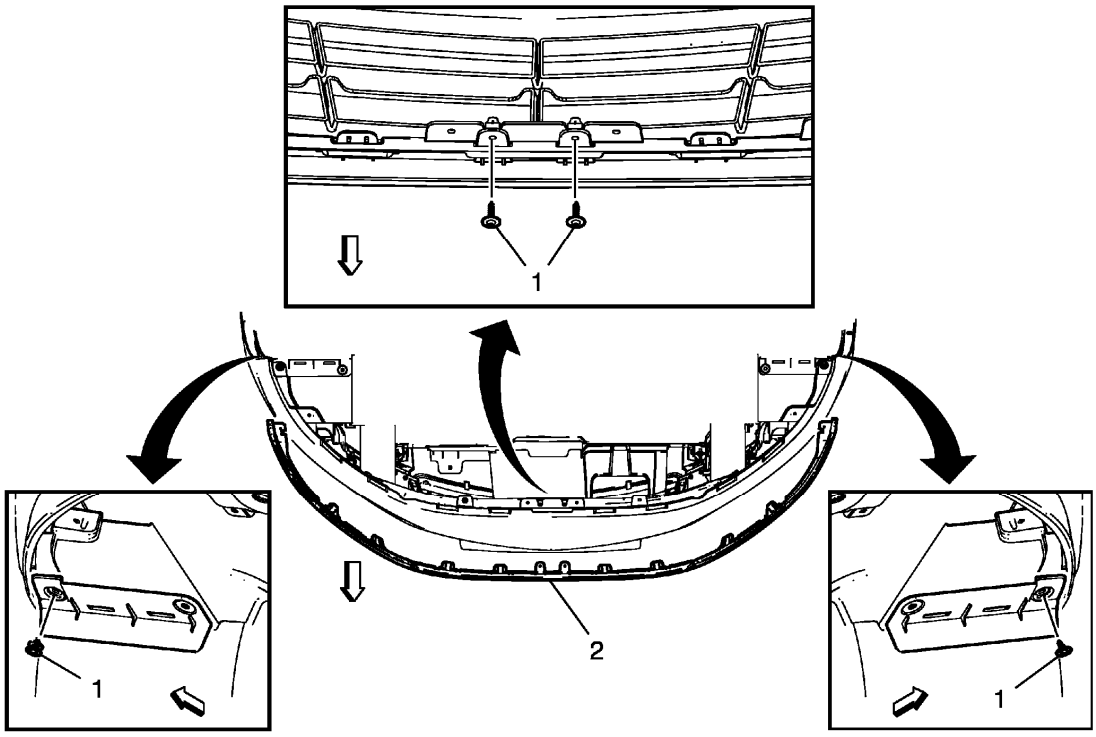

Fig. 22: Front Bumper Fascia Air Deflector
Courtesy of GENERAL MOTORS COMPANY

Front Bumper Fascia Air Deflector Replacement

Callout	Component Name
Preliminary Procedure Remove the front bumper fascia opening lower cover. Refer to **Front Bumper Fascia Opening Lower Cover Replacement**.	
1	Front Bumper Fascia Air Deflector Bolt (Qty: 4) **CAUTION:** **Refer to Fastener Caution .** **Tighten** 2.5 N.m (23 lb in)
2	Front Bumper Fascia Air Deflector **Procedure** Unclip from front bumper fascia.

FRONT BUMPER FASCIA AIR DEFLECTOR ACTUATOR REPLACEMENT

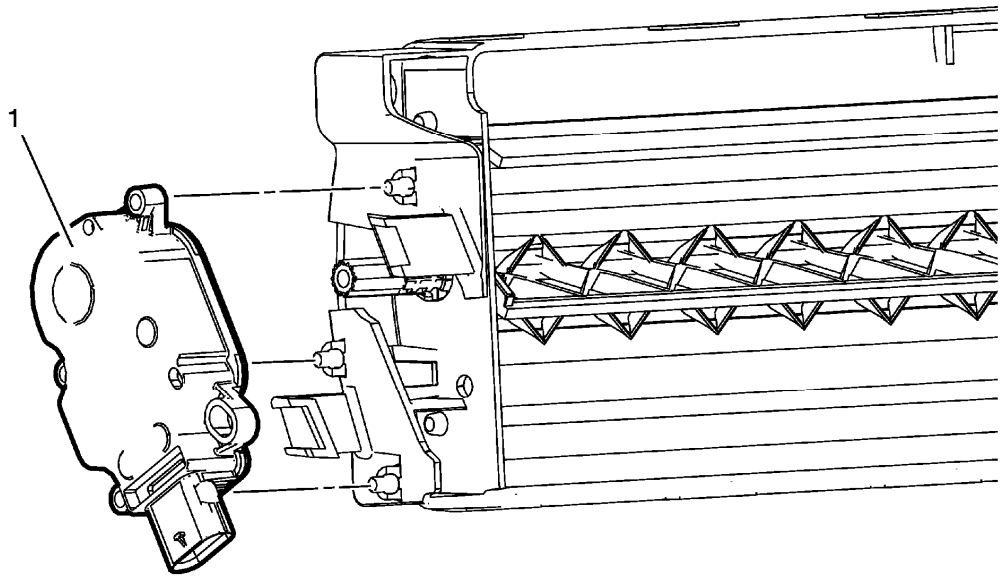

Fig. 23: Front Bumper Fascia Air Deflector Actuator
Courtesy of GENERAL MOTORS COMPANY

Front Bumper Fascia Air Deflector Actuator Replacement

Callout	Component Name
Preliminary Procedures Remove the aero shutter front bumper fascia air deflector. Refer to **Aero Shutter Front Bumper Fascia Air Deflector Replacement**.	
1	Front Bumper Fascia Air Deflector Actuator **Procedure** Unclip from aero shutter front bumper fascia air deflector. **NOTE:** **The aero shutter actuator have splines and can be installed in multiple positions.**

AERO SHUTTER FRONT BUMPER FASCIA AIR DEFLECTOR REPLACEMENT

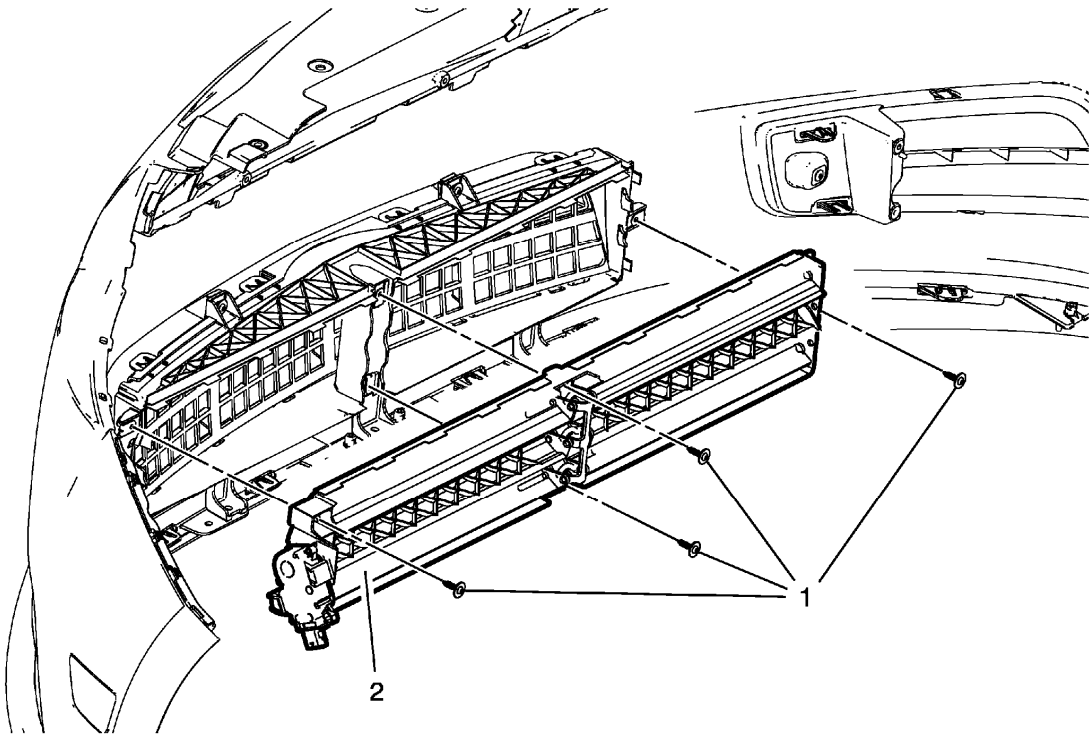

Fig. 24: Aero Shutter Front Bumper Fascia Air Deflector
Courtesy of GENERAL MOTORS COMPANY

Aero Shutter Front Bumper Fascia Air Deflector Replacement

Callout	Component Name
Preliminary Procedures Remove the front bumper fascia. Refer to **Front Bumper Fascia Replacement**.	
1	Aero Shutter Front Bumper Fascia Air Deflector Bolt (Qty: 4)
2	Aero Shutter Front Bumper Fascia Air Deflector **Procedure** Release the 3 integral clips retaining aero shutter to fascia.

REAR BUMPER FASCIA REPLACEMENT

Removal Procedure

1. Raise and support the vehicle. Refer to **Lifting and Jacking the Vehicle** .
2. Remove the tail lamps. Refer to **Tail Lamp Replacement** .

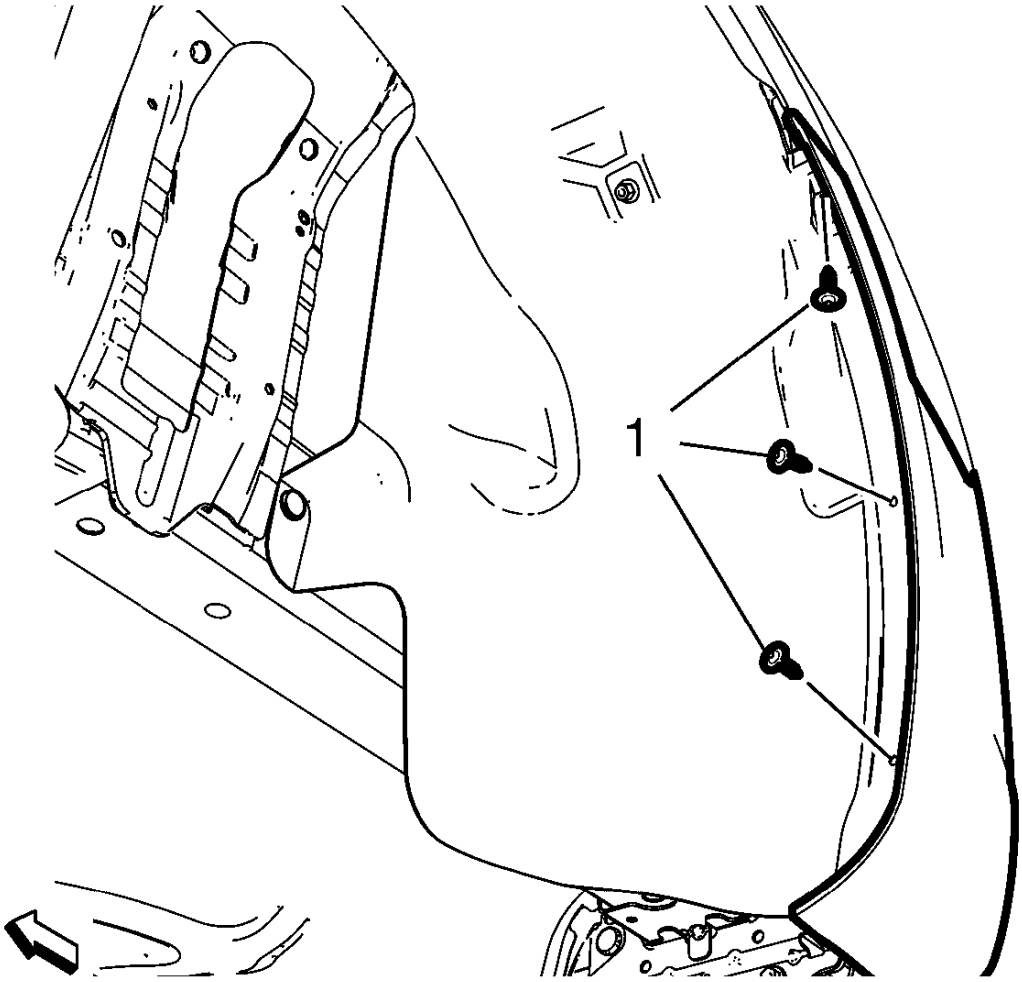

Fig. 25: Rear Wheelhouse Liner And Bolts
Courtesy of GENERAL MOTORS COMPANY

3. Remove the rear wheelhouse liner bolts (1) on both sides.

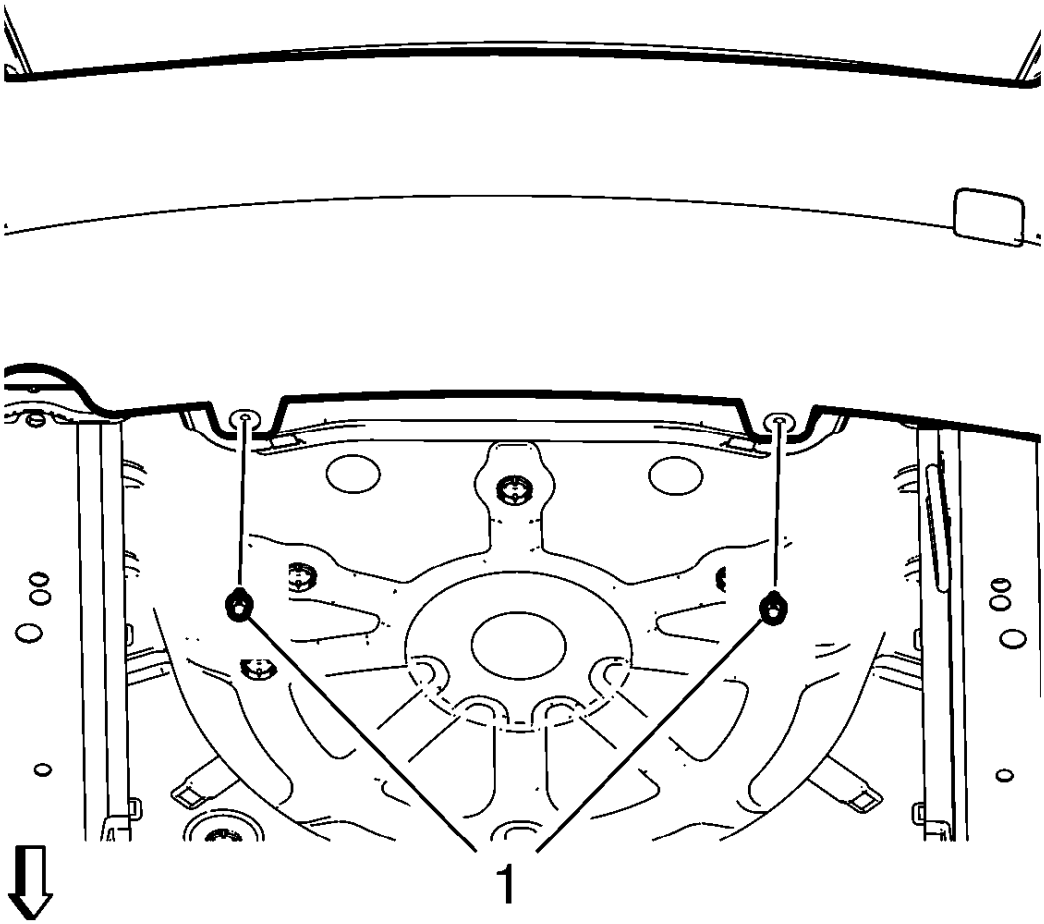

Fig. 26: Rear Bumper Fascia Lower Retainers
Courtesy of GENERAL MOTORS COMPANY

4. Remove the rear bumper fascia lower retainers (1).

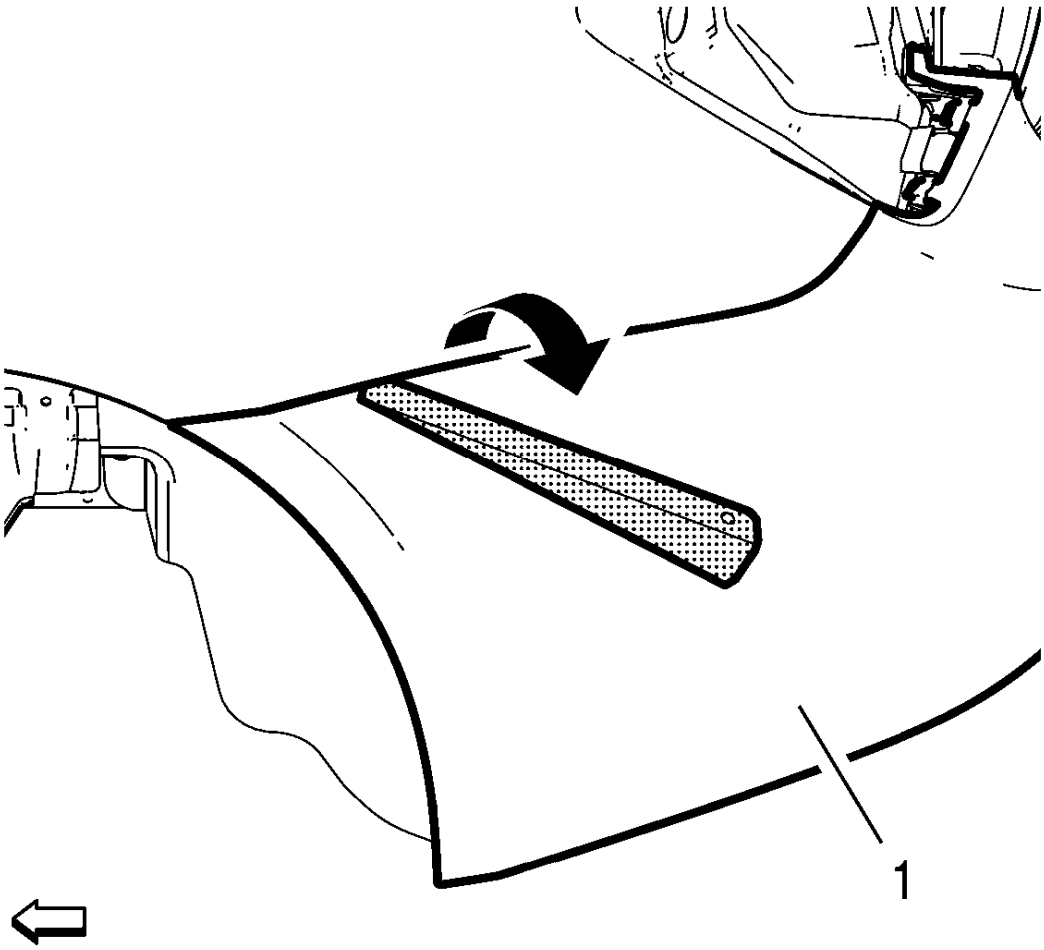

Fig. 27: Carefully Pulling Rear Bumper Fascia Outward
Courtesy of GENERAL MOTORS COMPANY

NOTE: Use care when removing the fascia. Fascia might rip apart if forced.

5. Pull the rear bumper fascia (1) carefully outward and use a plastic tool in order to release the retaining tabs from rear bumper fascia guides.

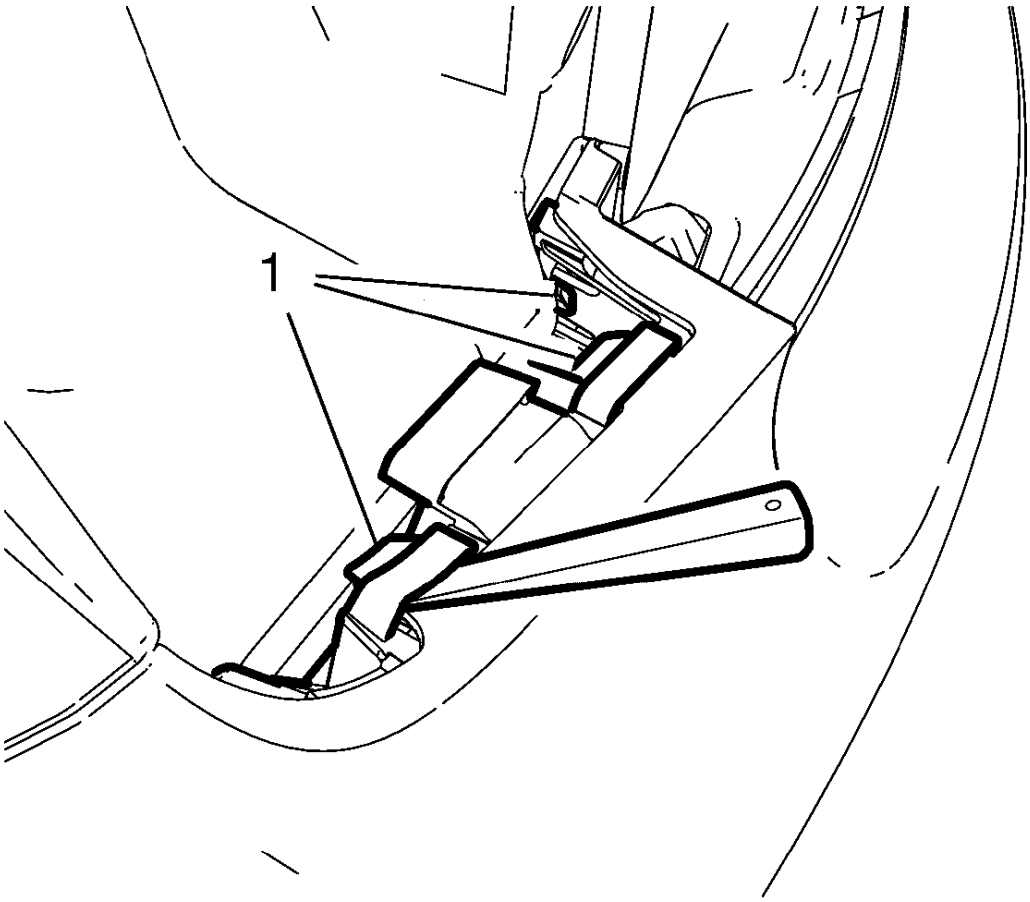

Fig. 28: Releasing Rear Bumper Retainer Tabs
Courtesy of GENERAL MOTORS COMPANY

6. Use a plastic trim tool to release the retaining tabs of rear bumper fascia (1).
7. Disconnect any electrical connectors.

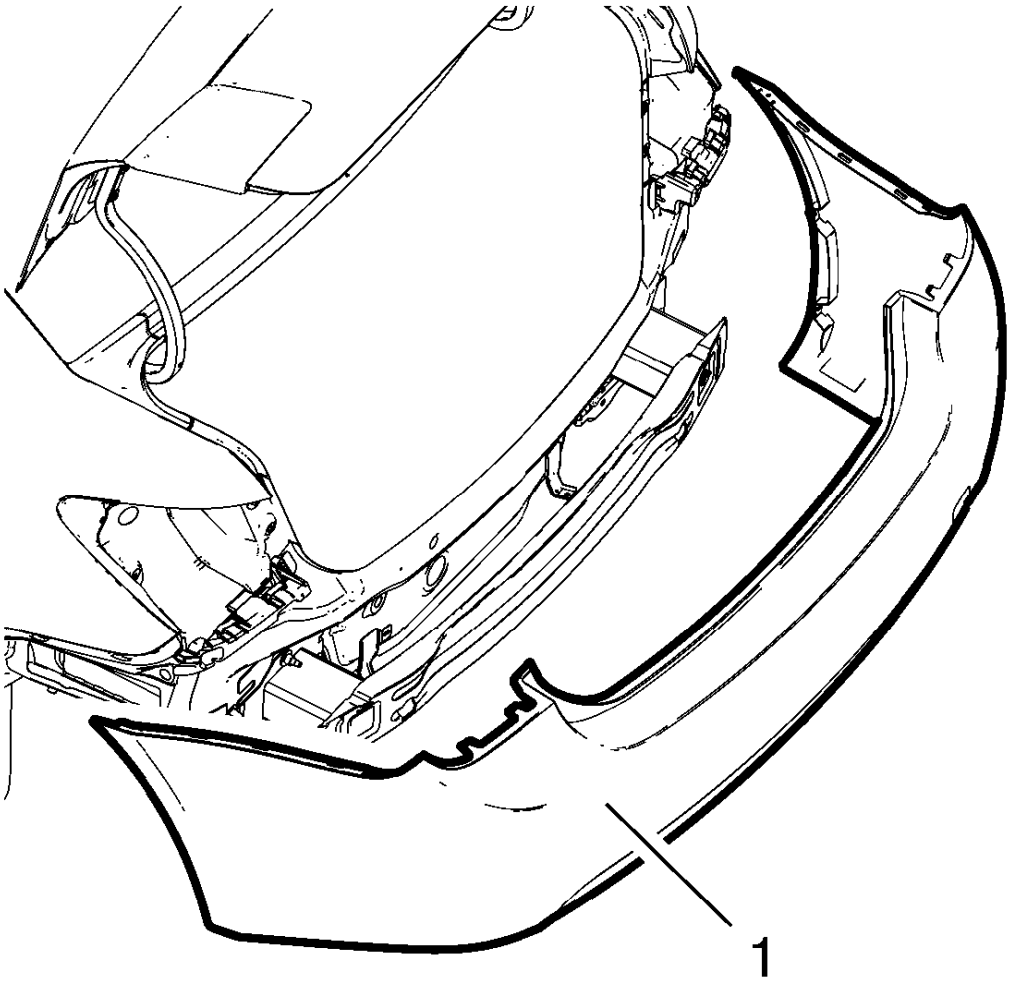

Fig. 29: Rear Bumper Fascia
Courtesy of GENERAL MOTORS COMPANY

8. With the aid of an assistant remove the rear bumper fascia (1).
9. Transfer or replace parts as needed.

Installation Procedure

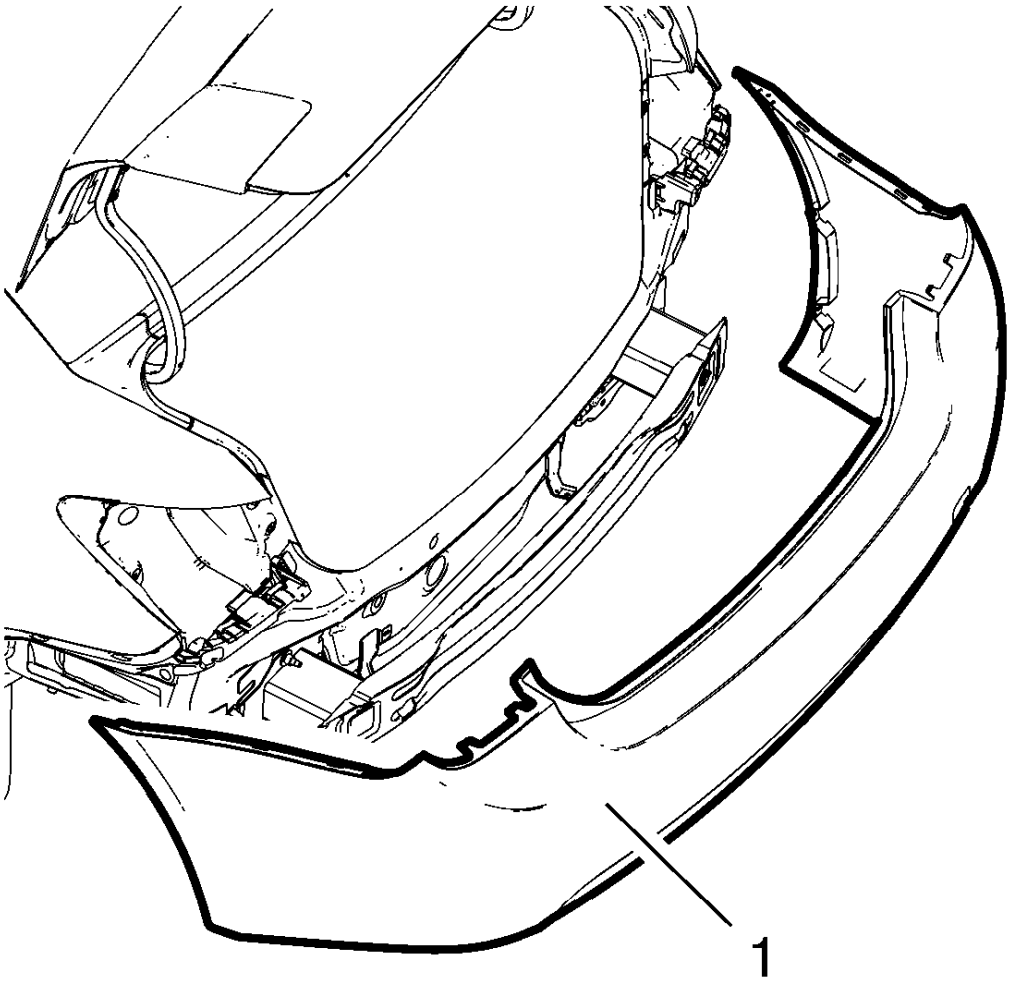

Fig. 30: Rear Bumper Fascia
Courtesy of GENERAL MOTORS COMPANY

1. With the aid of an assistant install the rear bumper fascia (1).
2. Carefully push in the retaining tabs of rear bumper fascia into the rear bumper fascia guides.
3. Connect any electrical connectors.

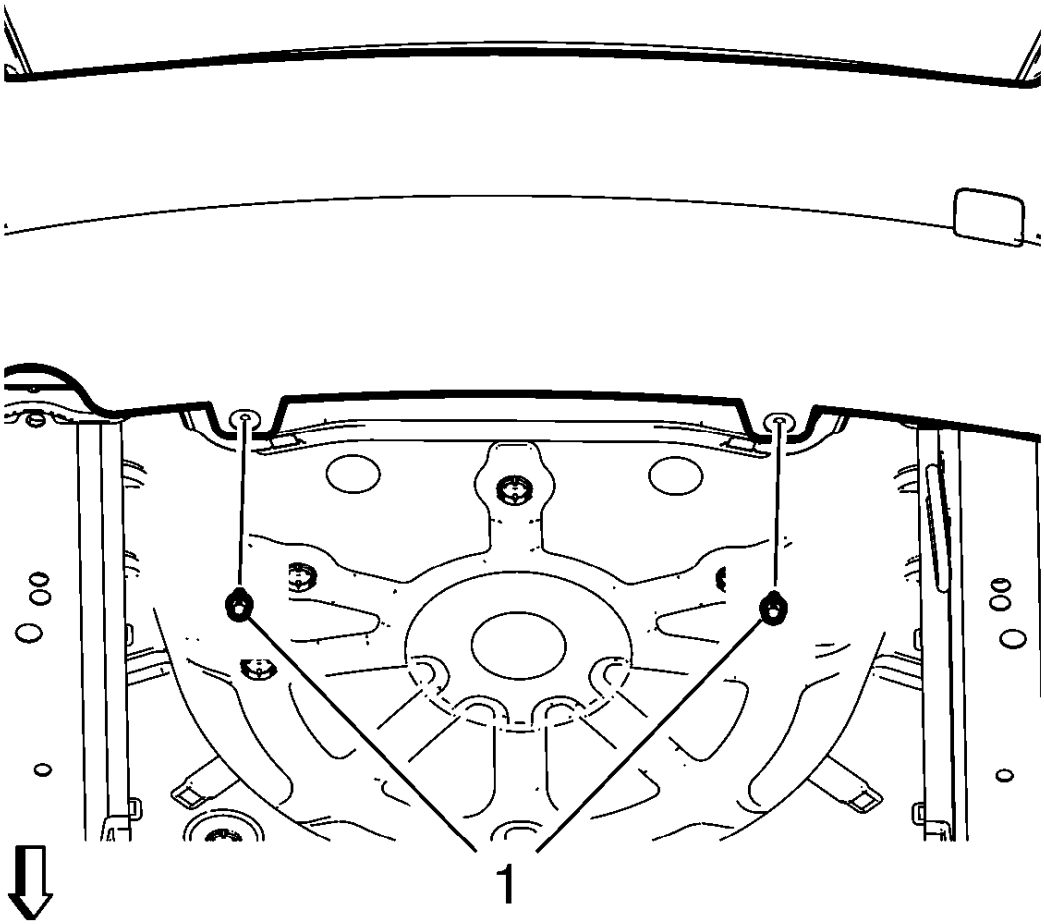

Fig. 31: Rear Bumper Fascia Lower Retainers
Courtesy of GENERAL MOTORS COMPANY

4. Install the rear bumper fascia lower retainers (1).

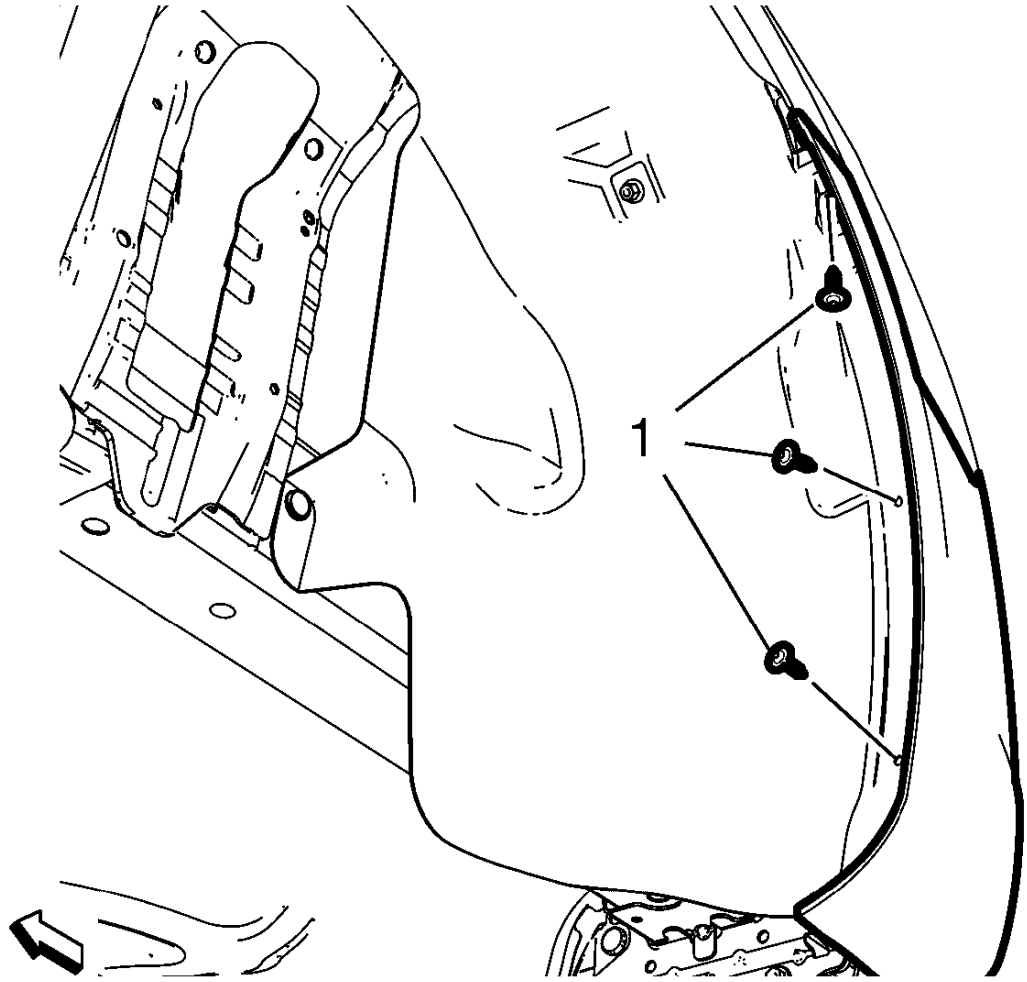

Fig. 32: Rear Wheelhouse Liner And Bolts
Courtesy of GENERAL MOTORS COMPANY

CAUTION: Refer to Fastener Caution .

5. Install the rear wheelhouse liner bolts (1) and tighten with 2.5 N.m (22 lb in).
6. Install the tail lamps. Refer to **Tail Lamp Replacement** .

REAR BUMPER FASCIA BRACKET REPLACEMENT - OUTER

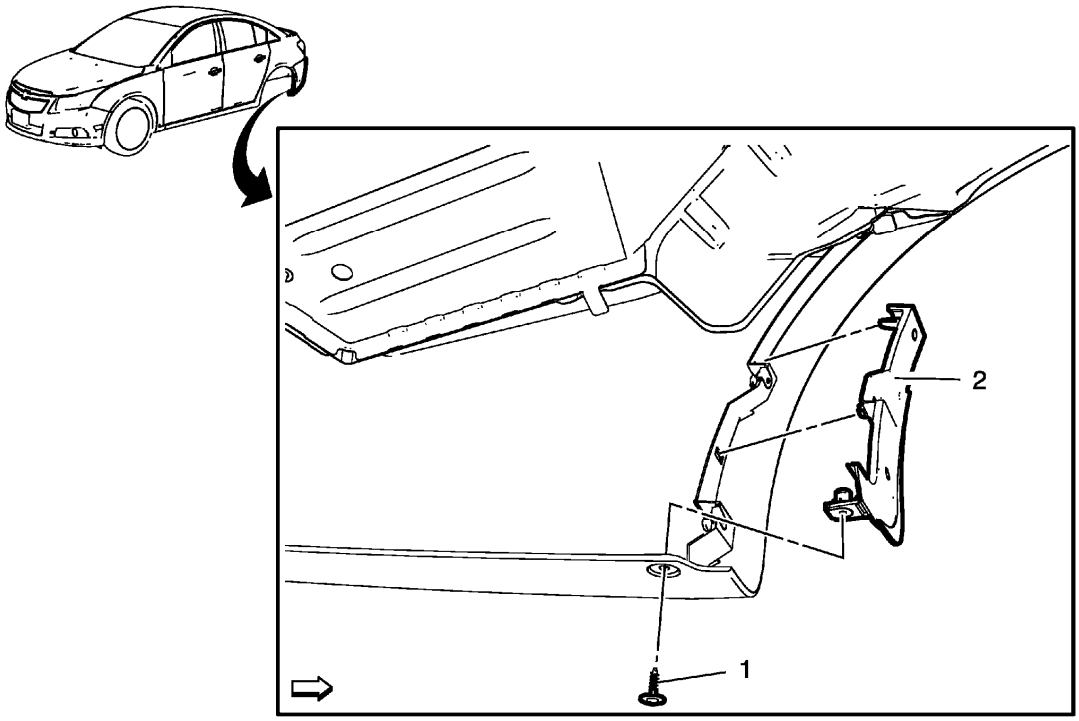

Fig. 33: Rear Bumper Fascia Bracket - Outer
Courtesy of GENERAL MOTORS COMPANY

Rear Bumper Fascia Bracket Replacement - Outer

Callout	Component Name
Preliminary Procedures Remove the rear wheelhouse panel liner. Refer to **Rear Wheelhouse Liner Replacement** .	
1	Rear Bumper Fascia Outer Bracket Bolt
2	Rear Bumper Fascia Outer Bracket **Procedure** Unclip the rear bumper fascia outer bracket from rear bumper fascia.

REAR BUMPER FASCIA GUIDE REPLACEMENT

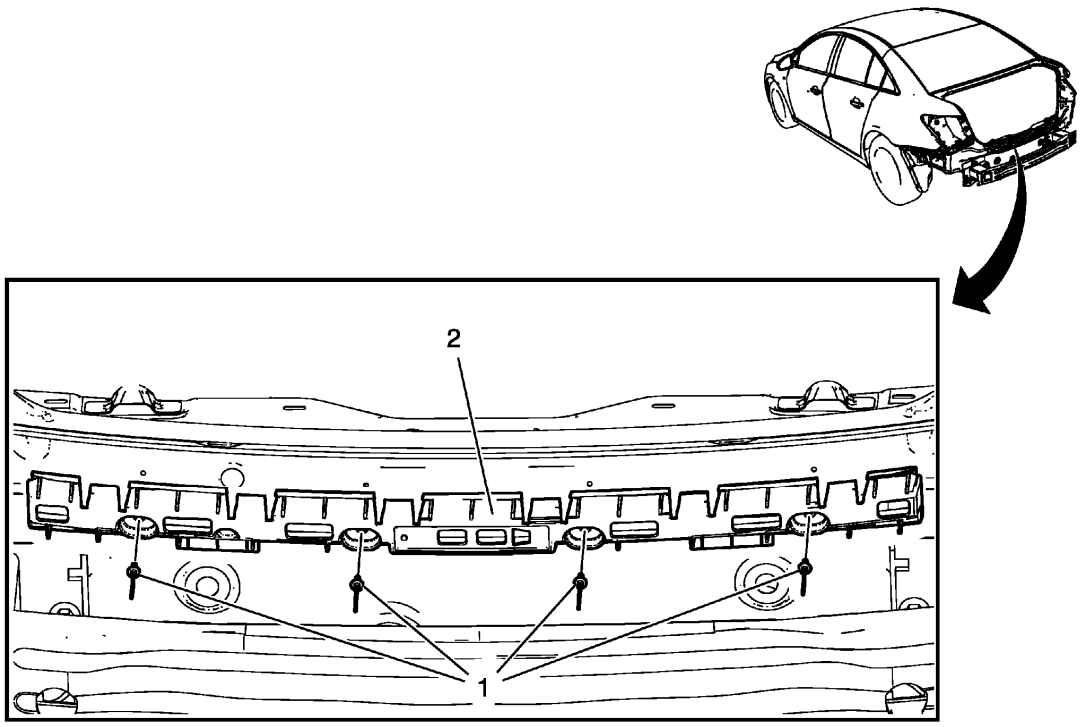

Fig. 34: Rear Bumper Fascia Guide
Courtesy of GENERAL MOTORS COMPANY

Rear Bumper Fascia Guide Replacement

Callout	Component Name
Preliminary Procedure Remove the rear bumper fascia. Refer to **Rear Bumper Fascia Replacement**.	
1	Rear Bumper Fascia Guide Rivet (Qty: 4)
2	Rear Bumper Fascia Guide

REAR BUMPER FASCIA INNER GUIDE REPLACEMENT

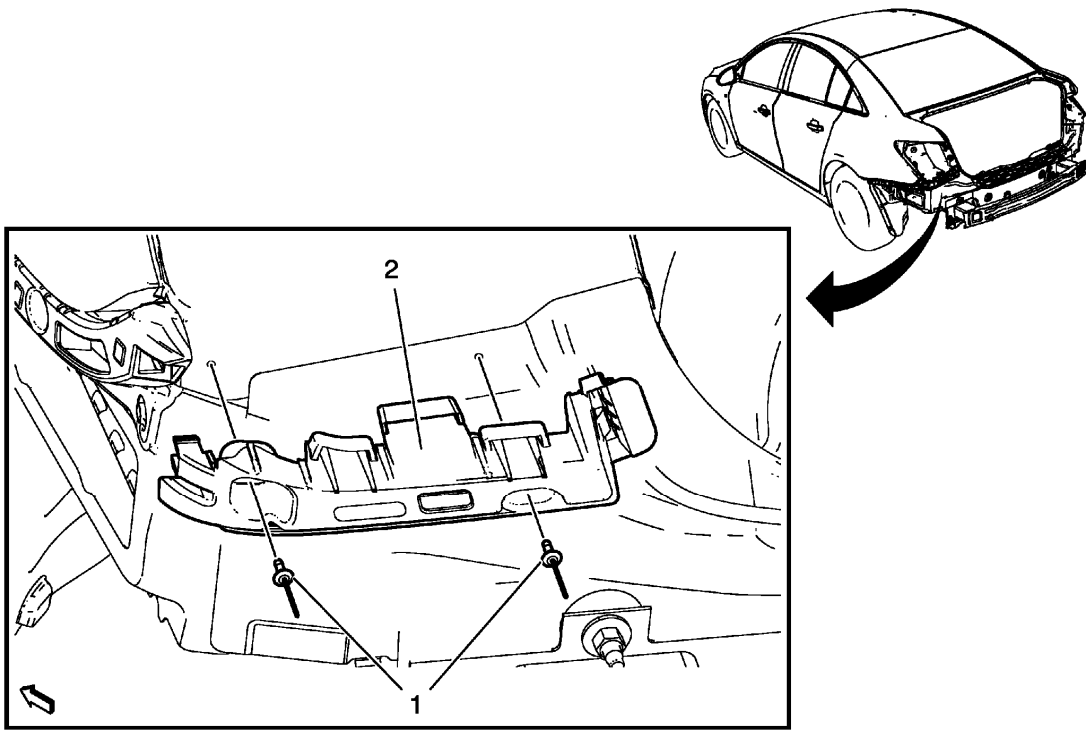

Fig. 35: Rear Bumper Fascia Inner Guide
Courtesy of GENERAL MOTORS COMPANY

Rear Bumper Fascia Inner Guide Replacement

Callout	Component Name
Preliminary Procedure Remove the rear bumper fascia. Refer to **Rear Bumper Fascia Replacement**.	
1	Rear Bumper Fascia Inner Guide Rivet (Qty: 2)
2	Rear Bumper Fascia Inner Guide.

REAR BUMPER FASCIA OUTER GUIDE REPLACEMENT

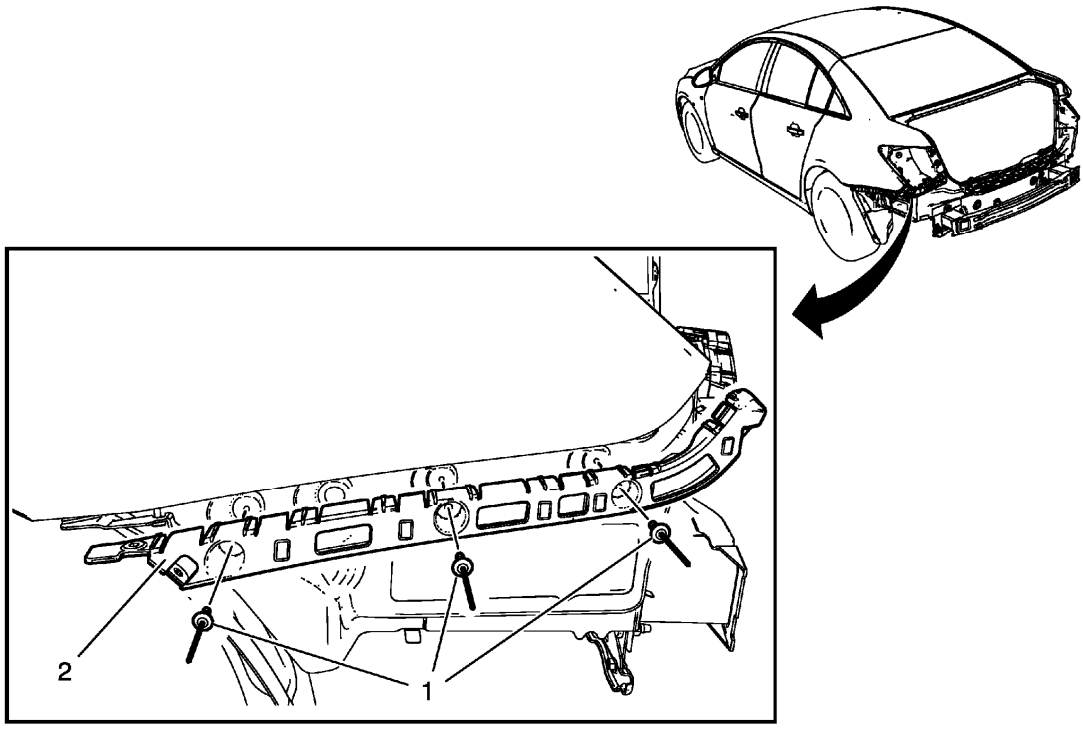

Fig. 36: Rear Bumper Fascia Outer Guide
Courtesy of GENERAL MOTORS COMPANY

Rear Bumper Fascia Outer Guide Replacement

Callout	Component Name
Preliminary Procedure Remove the rear bumper fascia. Refer to **Rear Bumper Fascia Replacement**.	
1	Rear Bumper Fascia Outer Guide Rivet (Qty: 3)
2	Rear Bumper Fascia Outer Guide

REAR BUMPER IMPACT BAR REPLACEMENT

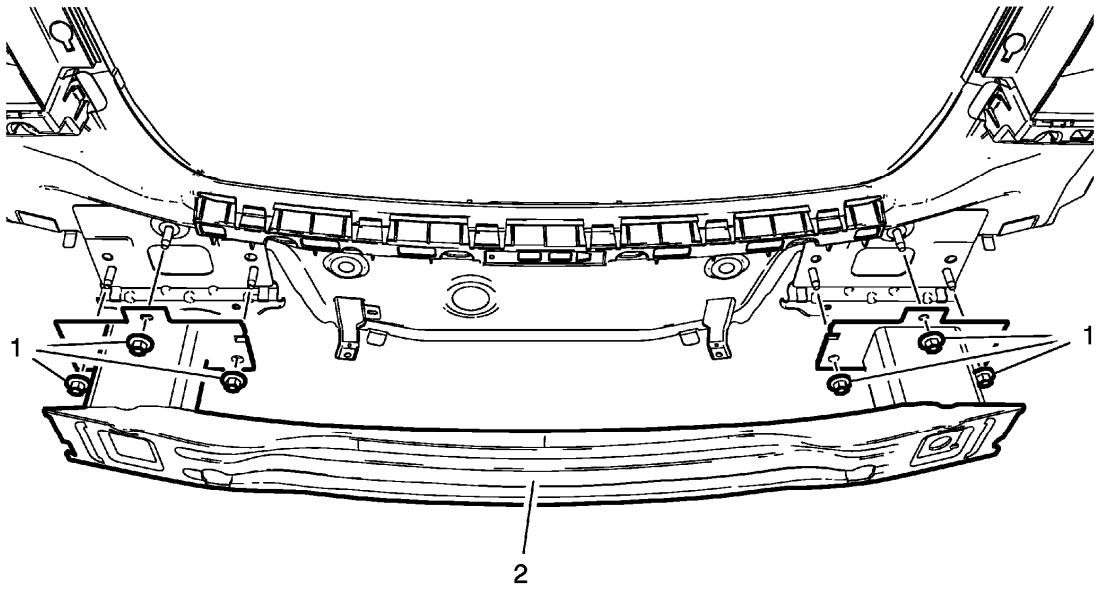

Fig. 37: Rear Bumper Impact Bar
Courtesy of GENERAL MOTORS COMPANY

Rear Bumper Impact Bar Replacement

Callout	Component Name
Preliminary Procedure Remove the rear bumper fascia. Refer to **Rear Bumper Fascia Replacement**.	
1	Rear Bumper Energy Absorber Nut (Qty: 6) **CAUTION:** **Refer to Fastener Caution .** **Tighten** 40 N.m (30 lb ft)
2	Rear Bumper Impact Bar

DESCRIPTION AND OPERATION

ACTIVE GRILLE AIR SHUTTER DESCRIPTION AND OPERATION

The active grille air shutter actuator closes louvers at the front bumper to enhance vehicle aerodynamics in driving situations where cooling and A/C loads are relatively low and high levels of front end airflow are not required. If high levels of airflow are required the active grille air shutter actuator opens the louvers. The control signal from the fuel pump control module, ignition and ground circuits enable the active grille air shutter

actuator to operate. If the conditions for opening the louvers are reached the fuel pump control module commands the active grille air shutter actuator to open the louvers.

The single active grille air shutter system consists of an individual motor operated mechanism hinged behind the vehicle front grille for controlling the amount of air entering the engine compartment. It includes three wires, ground, power and pulse width modulated signal to the actuator. The fuel pump control module determines shutter state based on various vehicle conditions such as vehicle speed, coolant temperature, fan state, refrigerant system pressure, A/C compressor state and ambient temperature. The pulsed signal controlling the shutter mechanism will be able to control the shutter to close/open positions.

The actuator is powered by an ignition circuit that is active when the key is in the RUN position. The vehicle may have to be driven for up to 13 minutes at speeds greater than 41 kph (25 mph) before the shutter begins to move. If low ambient temperature is detected, the shutter will remain in the closed position.

2013 ACCESSORIES & EQUIPMENT

Collision Repair - Cruze

SPECIFICATIONS

DIMENSIONS - BODY

Point-to-Point Measurements

Point-to-point measurements are for reference only. All measurements are given in millimeters. Use these measurements for diagnosing and estimating. Point-to-point measurements are duplicated with tram bar pointers set at equal lengths. All die marks, holes, slots, and fasteners are measured to the center. All dimensions are symmetrical unless otherwise specified

Front End - Part 1

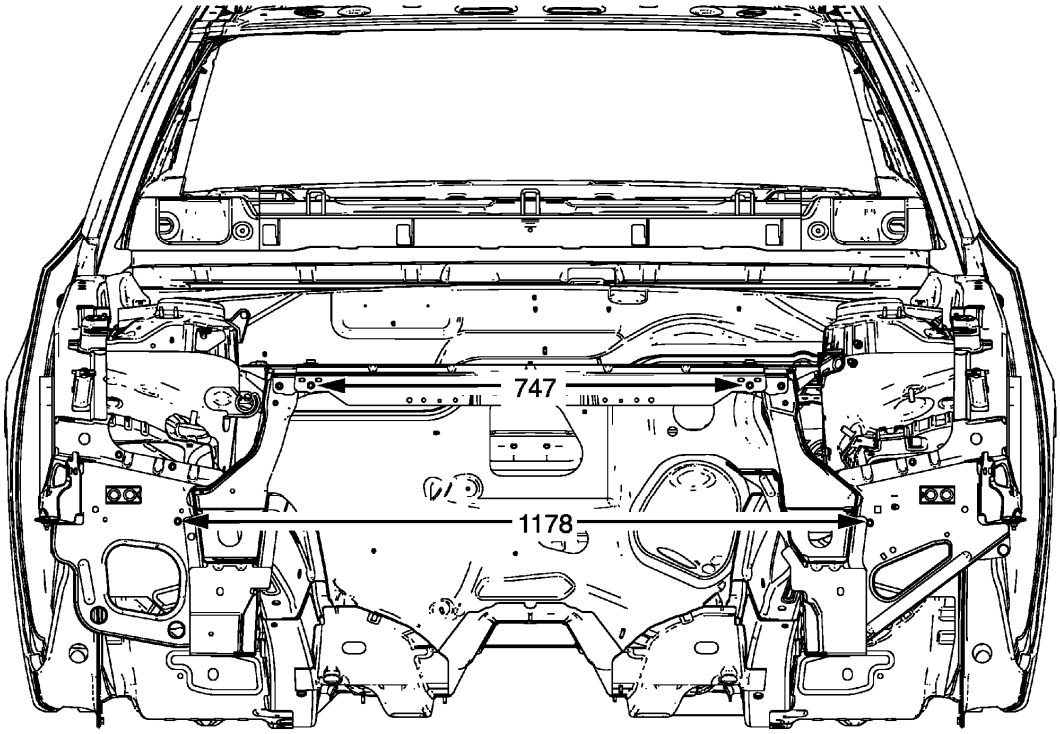

Fig. 1: Front End Body Dimensions - Part 1
Courtesy of GENERAL MOTORS COMPANY

Front End - Part 2

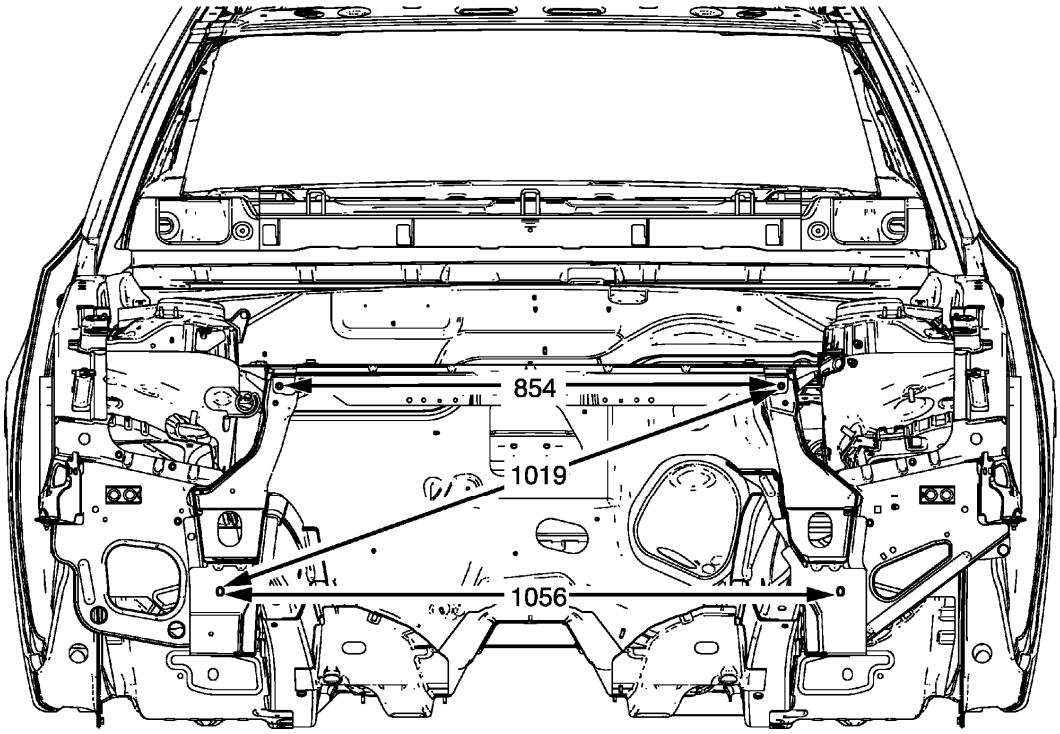

Fig. 2: Front End Body Dimensions - Part 2
Courtesy of GENERAL MOTORS COMPANY

Engine Compartment - Part 1

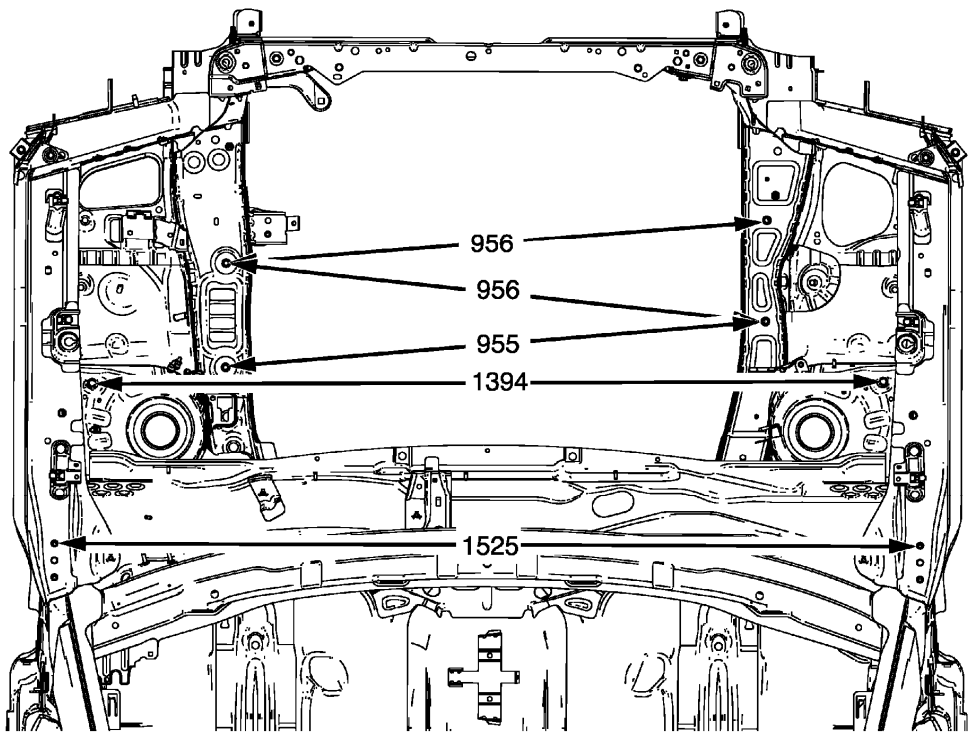

Fig. 3: Engine Compartment Dimensions - Part 1
Courtesy of GENERAL MOTORS COMPANY

Engine Compartment - Part 2

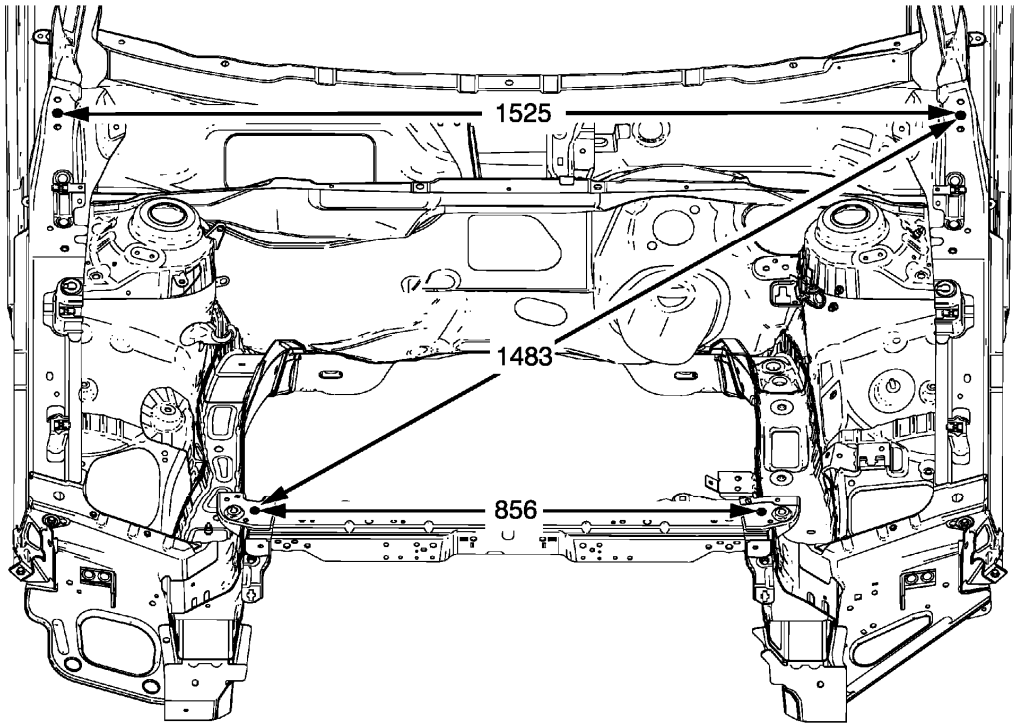

Fig. 4: Engine Compartment Dimensions - Part 2
Courtesy of GENERAL MOTORS COMPANY

Front End Lower

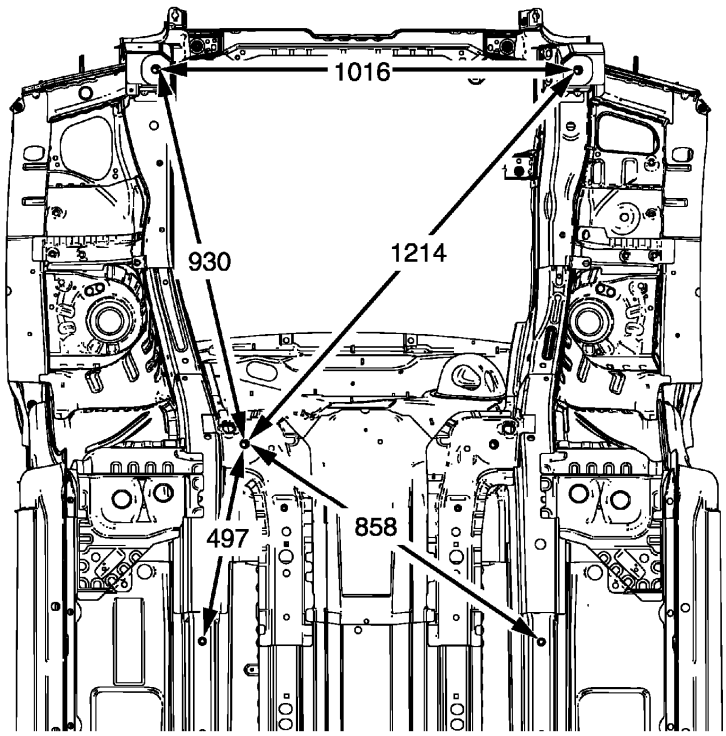

Fig. 5: Front End Lower Dimensions
Courtesy of GENERAL MOTORS COMPANY

Rear End Lower

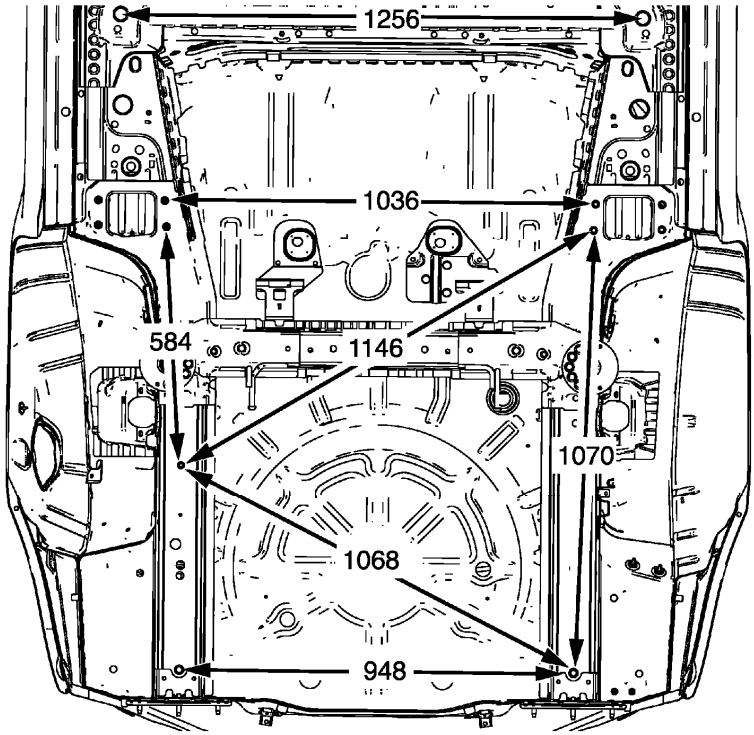

Fig. 6: Rear End Lower Dimensions
Courtesy of GENERAL MOTORS COMPANY

Rear End

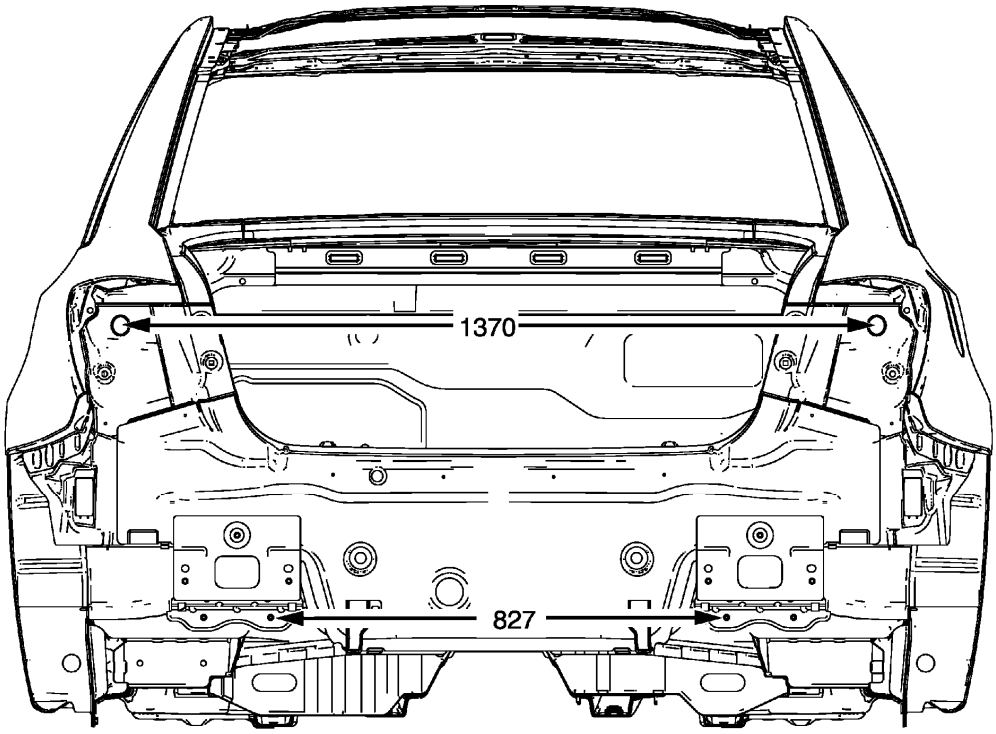

Fig. 7: Rear End Dimensions
Courtesy of GENERAL MOTORS COMPANY

Side

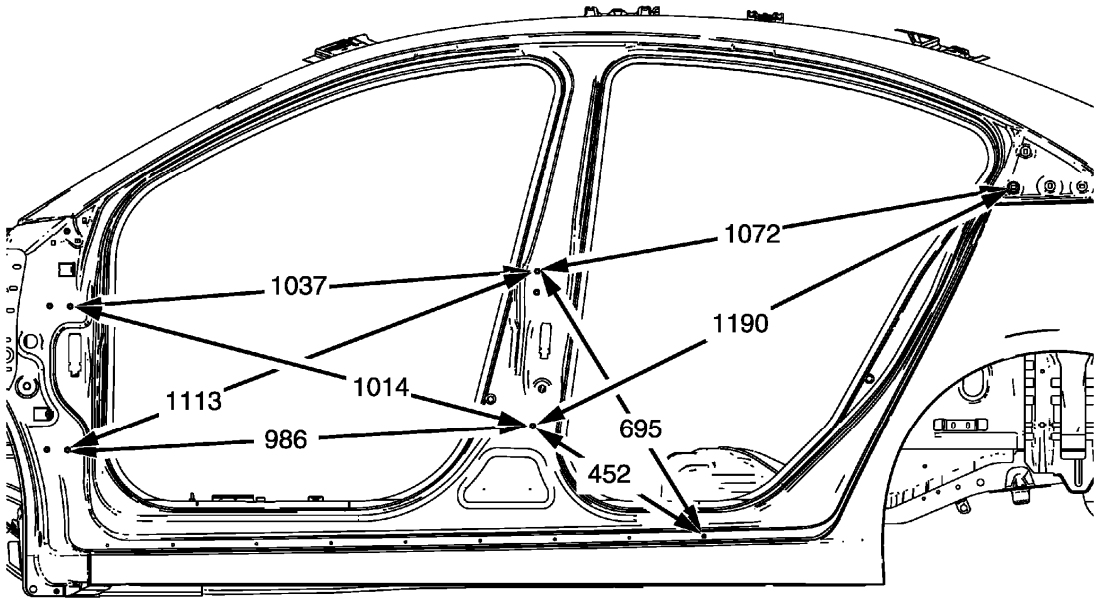

Fig. 8: Side Dimensions
Courtesy of GENERAL MOTORS COMPANY

Front Seat Mounting Points

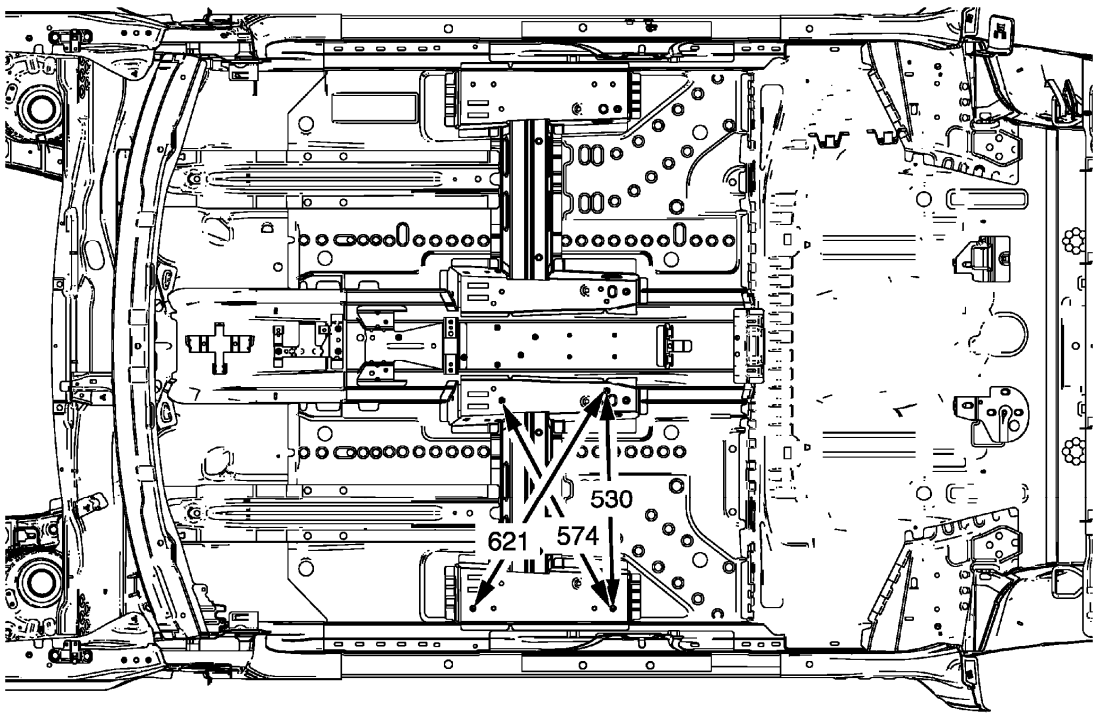

Fig. 9: Front Seat Mounting Points
Courtesy of GENERAL MOTORS COMPANY

VISUAL IDENTIFICATION

STRUCTURE IDENTIFICATION

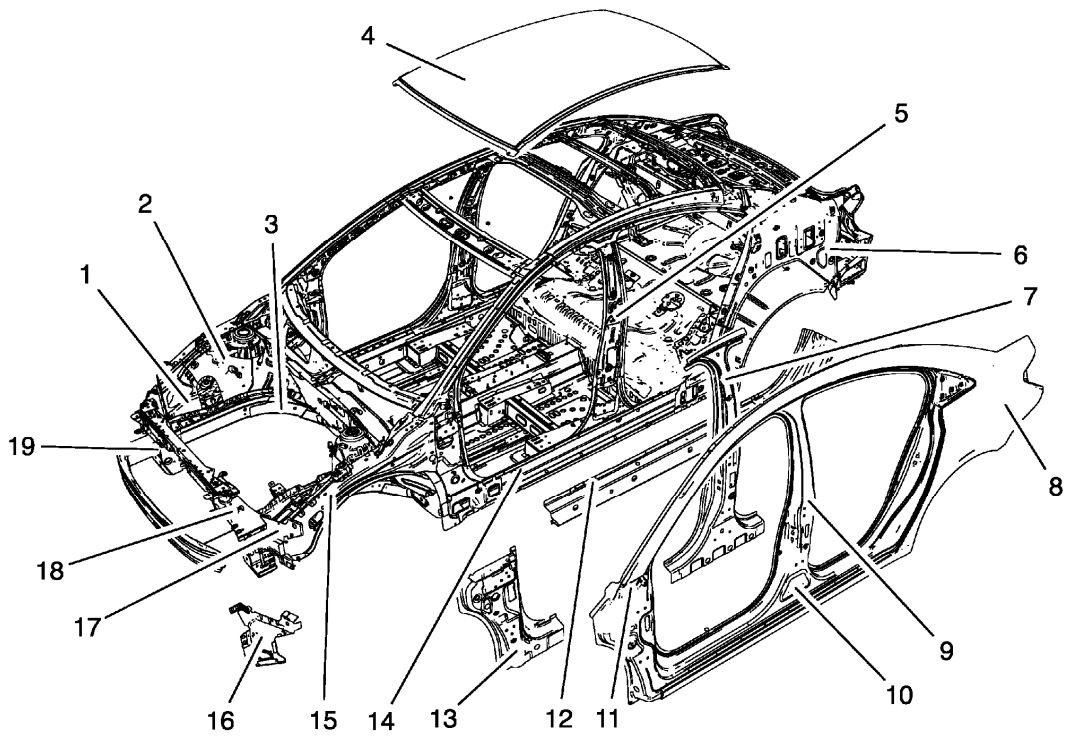

Fig. 10: Body Panel System Component Identification (Front)
Courtesy of GENERAL MOTORS COMPANY

View Front

Number	Description	Material	Procedure
1	Front Wheelhouse Front Panel	High Strength Low Alloy Steel	Front Wheelhouse Front Panel Replacement
2	Front Wheelhouse Panel	Mild Steel	Front Wheelhouse Panel Replacement
3	Front Rail	• Mild Steel • High Strength Low Alloy Steel	Front Rail Replacement
4	Roof Outer Panel	Mild Steel	Roof Outer Panel Replacement
5	Center Pillar Inner Panel	Dual Phase Steel	Center Pillar Inner Panel Replacement
			Body Side Inner Panel

6	Body Side Inner Panel	**Mild Steel**	**Sectioning**
7	Center Pillar Reinforcement	• Outer Panel Reinforcement Mild Steel - **Mild Steel** • Center Pillar Stiffener Dual Phase Steel - **Dual Phase Steel**	**Center Pillar Reinforcement Replacement**
8	Quarter Outer Panel	**Mild Steel**	**Quarter Outer Panel Sectioning**
9	Center Pillar - Outer	**Mild Steel**	**Center Pillar Sectioning - Outer**
10	Rocker Outer Panel	**Mild Steel**	**Rocker Outer Panel Replacement**
11	Front Hinge Pillar Body	**Mild Steel**	**Front Hinge Pillar Body Sectioning**
12	Body Side Outer Panel Reinforcement	**Dual Phase Steel**	**Body Side Outer Panel Reinforcement Replacement**
13	Body Hinge Pillar Lower Reinforcement	**Mild Steel**	**Body Hinge Pillar Lower Reinforcement Replacement**
14	Rocker Inner Panel	**Ultra High Strength Dual Phase Steel**	**Rocker Inner Panel Replacement**
15	Front Compartment Upper Side Rail	**High Strength Low Alloy Steel**	**Front Compartment Upper Side Rail Replacement**
16	Headlamp Mount Panel	**Mild Steel**	**Headlamp Mount Panel Replacement**
17	Front Wheelhouse Panel Rear Reinforcement	**Mild Steel**	**Front Wheelhouse Panel Rear Reinforcement Replacement**
18	Front End Upper Tie Bar Support	**Mild Steel**	**Front End Upper Tie Bar Support Replacement**
19	Front Bumper Impact Bar	**Mild Steel**	**Front Bumper Impact Bar Replacement**

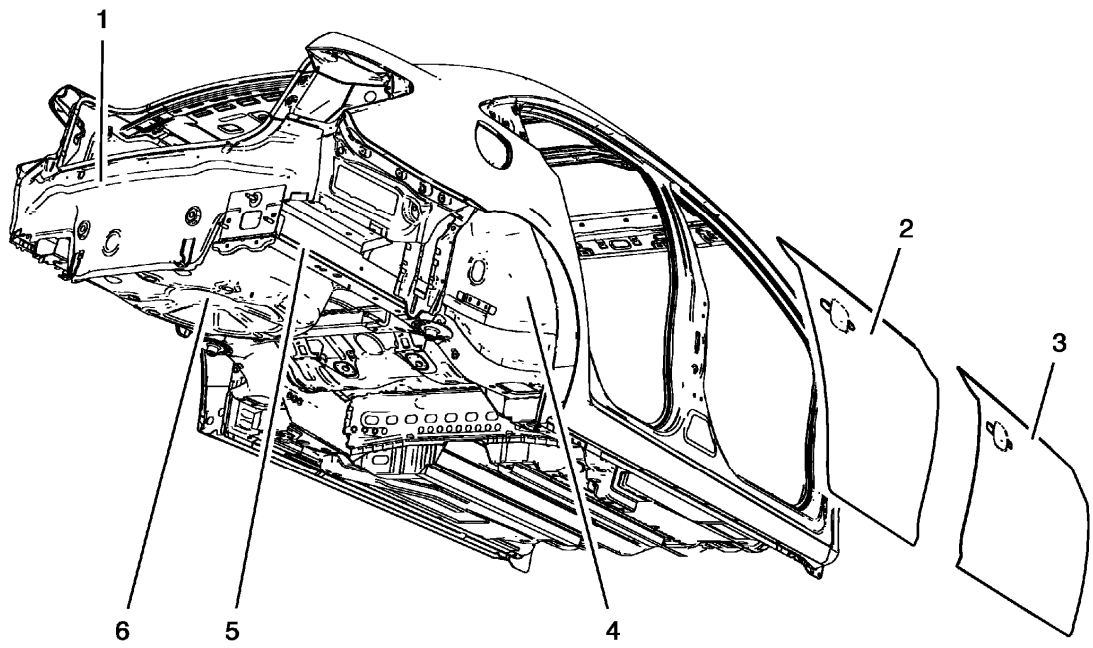

Fig. 11: Body Panel System Component Identification (Rear)
Courtesy of GENERAL MOTORS COMPANY

View Rear

Number	Description	Material	Procedure
1	Body Rear End Panel	**Mild Steel**	**Body Rear End Panel Replacement**
2	Rear Side Door Outer Panel	**Mild Steel**	**Rear Side Door Outer Panel Replacement**
3	Front Side Door Outer Panel	**Mild Steel**	**Front Side Door Outer Panel Replacement**
4	Rear Wheelhouse Panel	**Mild Steel**	**Rear Wheelhouse Panel Replacement**
5	Rear Rail	**High Strength Low Alloy Steel**	**Rear Rail Sectioning**
6	Rear Compartment Floor Panel	**Mild Steel**	**Rear Compartment Floor Panel Sectioning**

REPAIR INSTRUCTIONS

HEADLAMP MOUNT PANEL REPLACEMENT

Removal Procedure

WARNING: Refer to Approved Equipment for Collision Repair Warning .

WARNING: Refer to Glass and Sheet Metal Handling Warning .

1. Disable the SIR System. Refer to **SIR Disabling and Enabling** .
2. Disconnect the negative battery cable. Refer to **Battery Negative Cable Disconnection and Connection** .
3. Remove all related panels and components.
4. Visually inspect the damage. Repair as much of the damage as possible.
5. Remove the sealers and anti-corrosion materials from the repair area, as necessary. Refer to **Anti-Corrosion Treatment and Repair** .

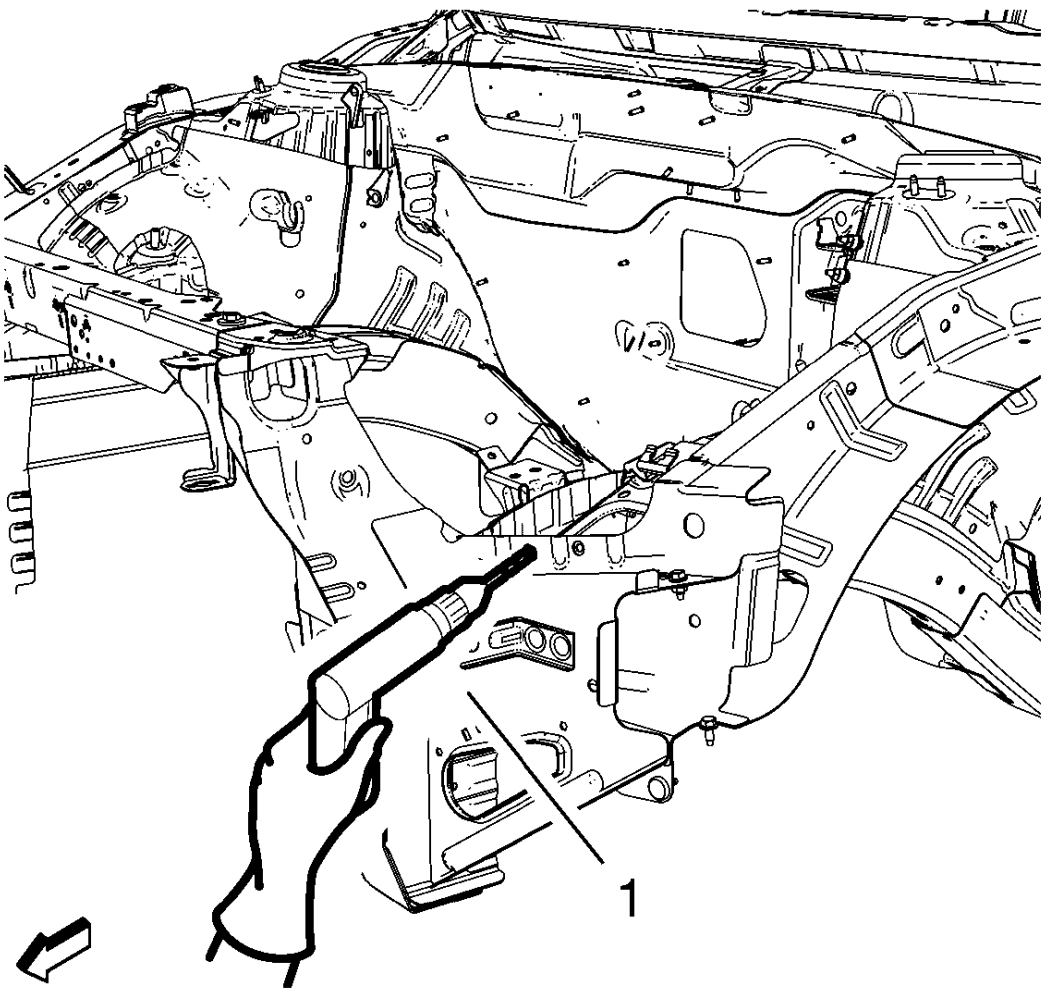

Fig. 12: Drilling Out Factory Welds On Headlamp Mount Panel
Courtesy of GENERAL MOTORS COMPANY

6. Locate and mark all the necessary factory welds of the headlamp mount panel (1).
7. Drill all factory welds. Note the number and location of welds for installation of the service assembly.

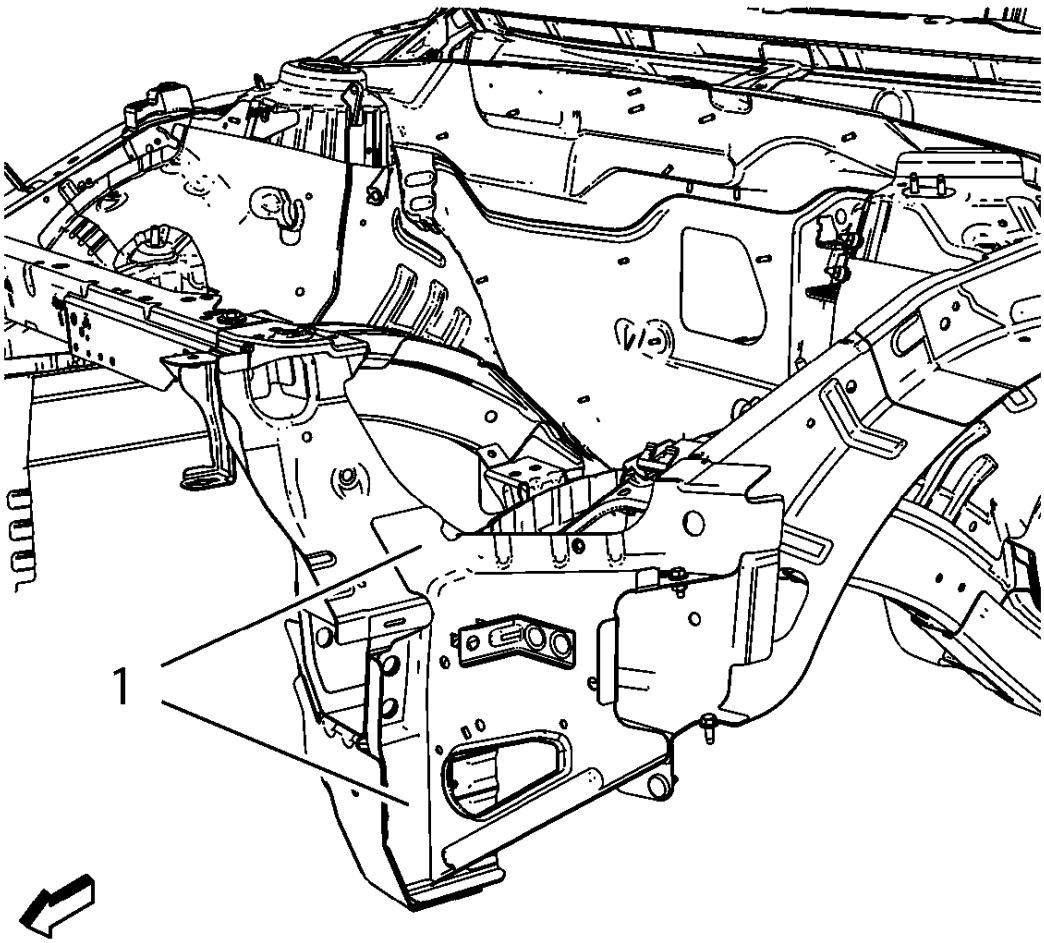

Fig. 13: Adhesive Cutting Points
Courtesy of GENERAL MOTORS COMPANY

8. Cut the adhesive (1) with an appropriate tool.

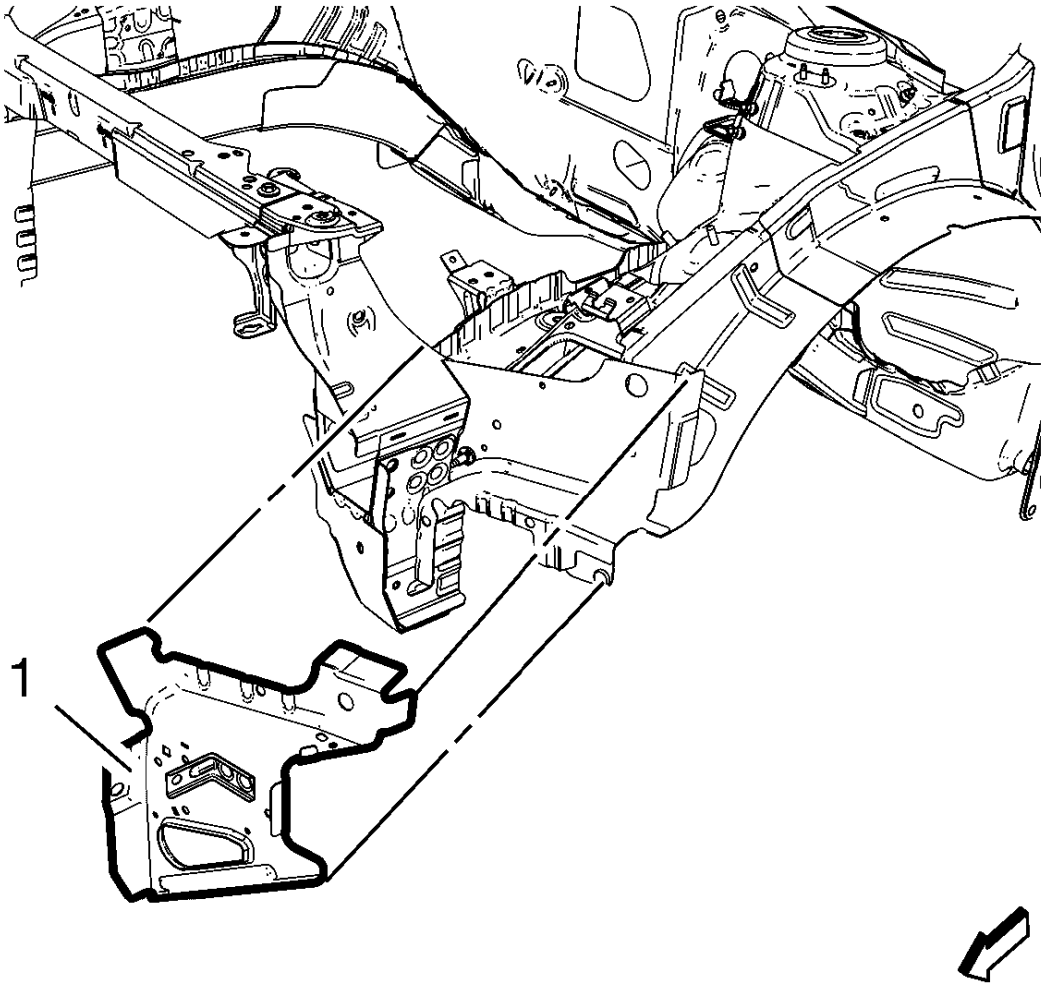

Fig. 14: Headlamp Mount Panel
Courtesy of GENERAL MOTORS COMPANY

9. Remove the headlamp mount panel (1).

Installation Procedure

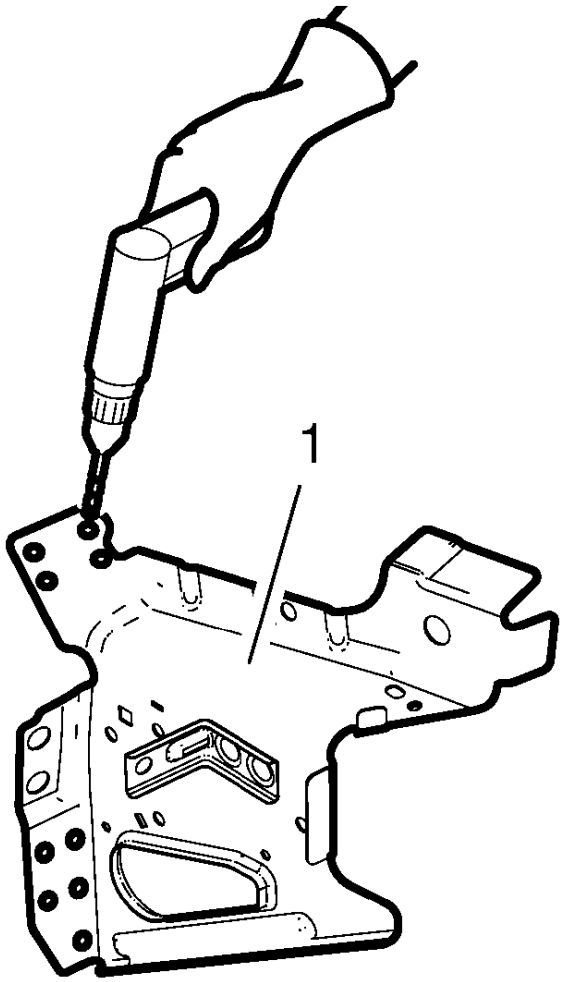

Fig. 15: Drilling Holes For Plug Welding Headlamp Mount Panel
Courtesy of GENERAL MOTORS COMPANY

1. Drill 8 mm (5/16 in) for plug welding instead of the adhesive noted from the original panel.
2. Drill 8 mm (5/16 in) for plug welding along the edges of the headlamp mount panel (1) as noted from the original panel.
3. Clean and prepare the attaching surfaces for welding.

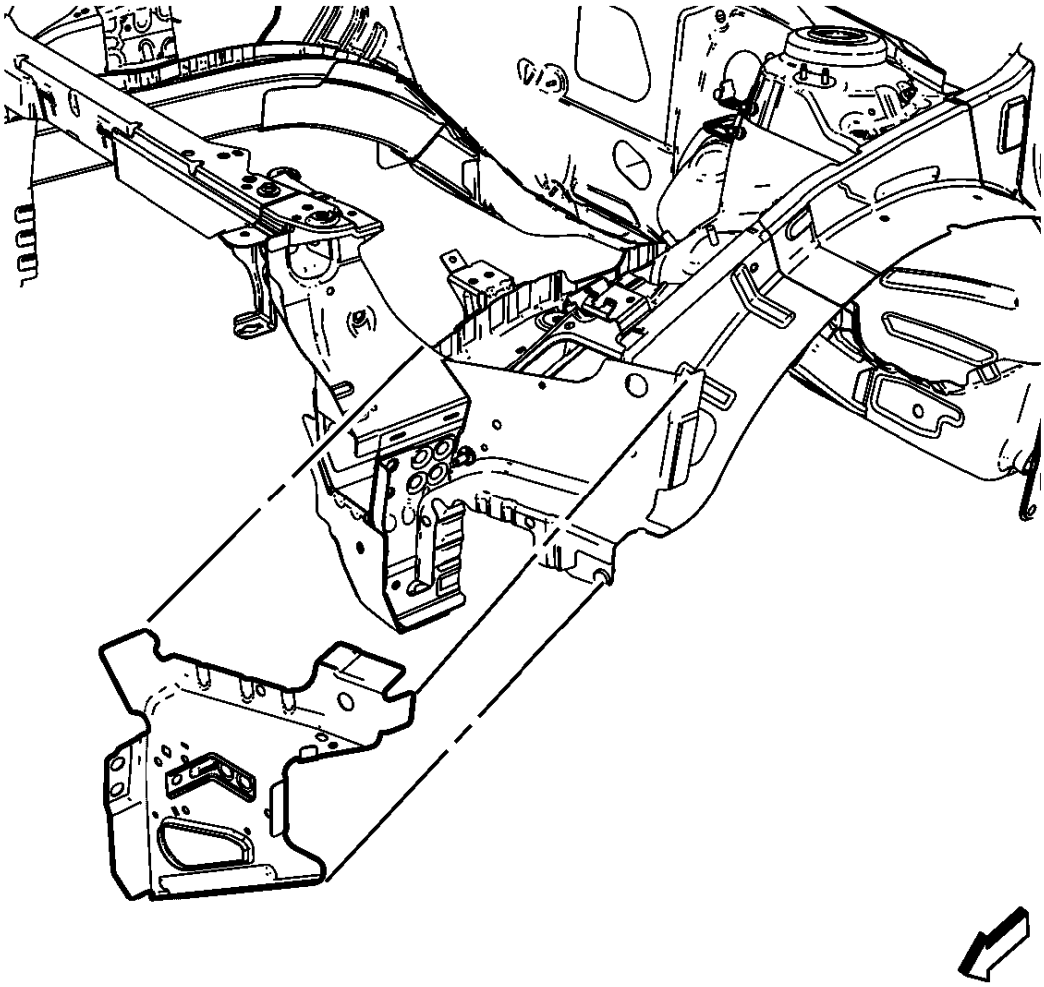

Fig. 16: Headlamp Mount Panel
Courtesy of GENERAL MOTORS COMPANY

4. Position the headlamp mount panel (1) on the vehicle.
5. Verify the fit of the headlamp mount panel.
6. Clamp the headlamp mount panel into position.

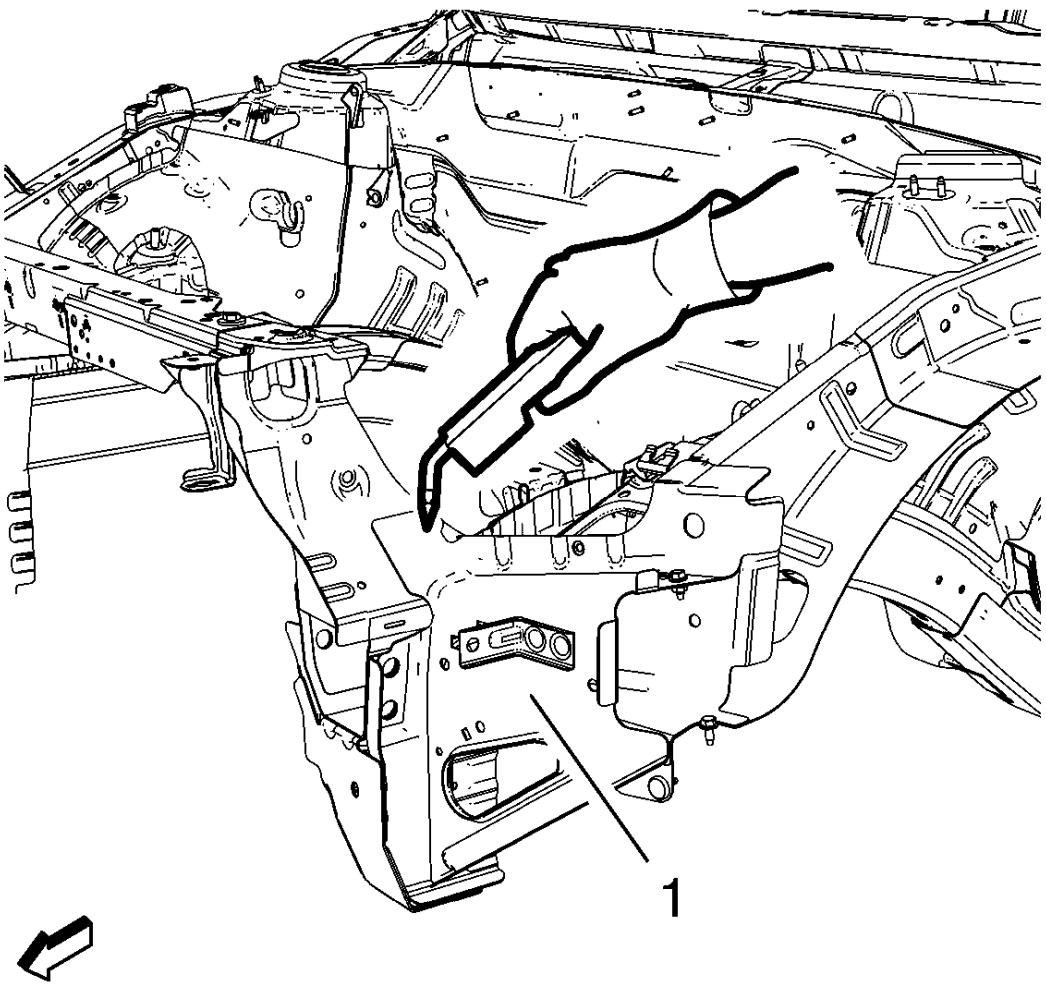

Fig. 17: Welding Headlamp Mount Panel
Courtesy of GENERAL MOTORS COMPANY

7. Plug weld the headlamp mount panel (1) accordingly.
8. Apply the sealers and anti-corrosion materials to the repair area, as necessary. Refer to **Anti-Corrosion Treatment and Repair** .
9. Paint the repaired area. Refer to **Basecoat/Clearcoat Paint Systems** .
10. Install all related panels and components.
11. Connect the negative battery cable. Refer to **Battery Negative Cable Disconnection and Connection** .
12. Enable the SIR system. Refer to **SIR Disabling and Enabling** .

FRONT END UPPER TIE BAR SUPPORT REPLACEMENT

NOTE: According to different corrosion warranties, only the regional mandatory joining methods are allowed.

Removal Procedure

WARNING: Refer to Approved Equipment for Collision Repair Warning

WARNING: Refer to Glass and Sheet Metal Handling Warning

1. Disable the SIR System. Refer to **SIR Disabling and Enabling**
2. Disconnect the negative battery cable. Refer to **Battery Negative Cable Disconnection and Connection**
3. Remove all related panels and components.
4. Visually inspect the damage. Repair as much of the damage as possible.
5. Remove the sealers and anti-corrosion materials from the repair area, as necessary. Refer to **Anti-Corrosion Treatment and Repair**

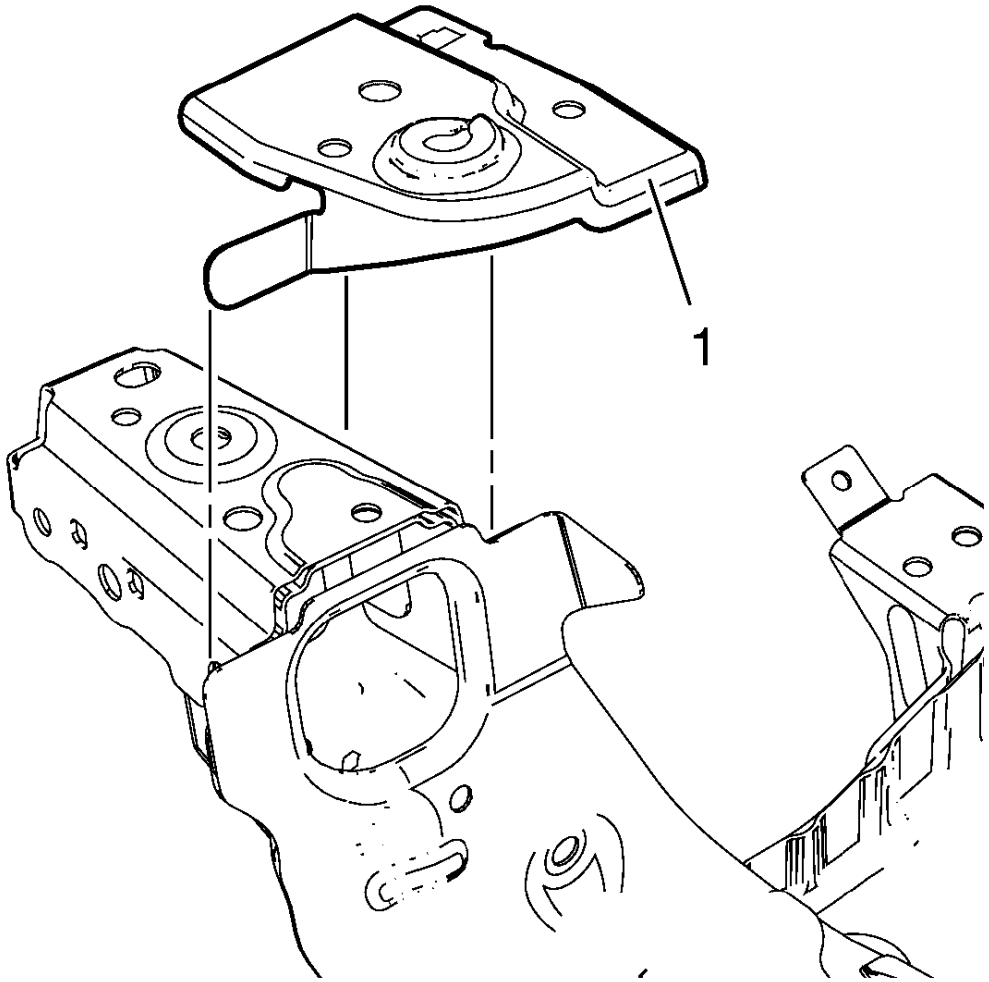

Fig. 18: Hood Front Bumper Bracket
Courtesy of GENERAL MOTORS COMPANY

6. Locate and mark all the necessary factory welds of the hood front bumper bracket (1).

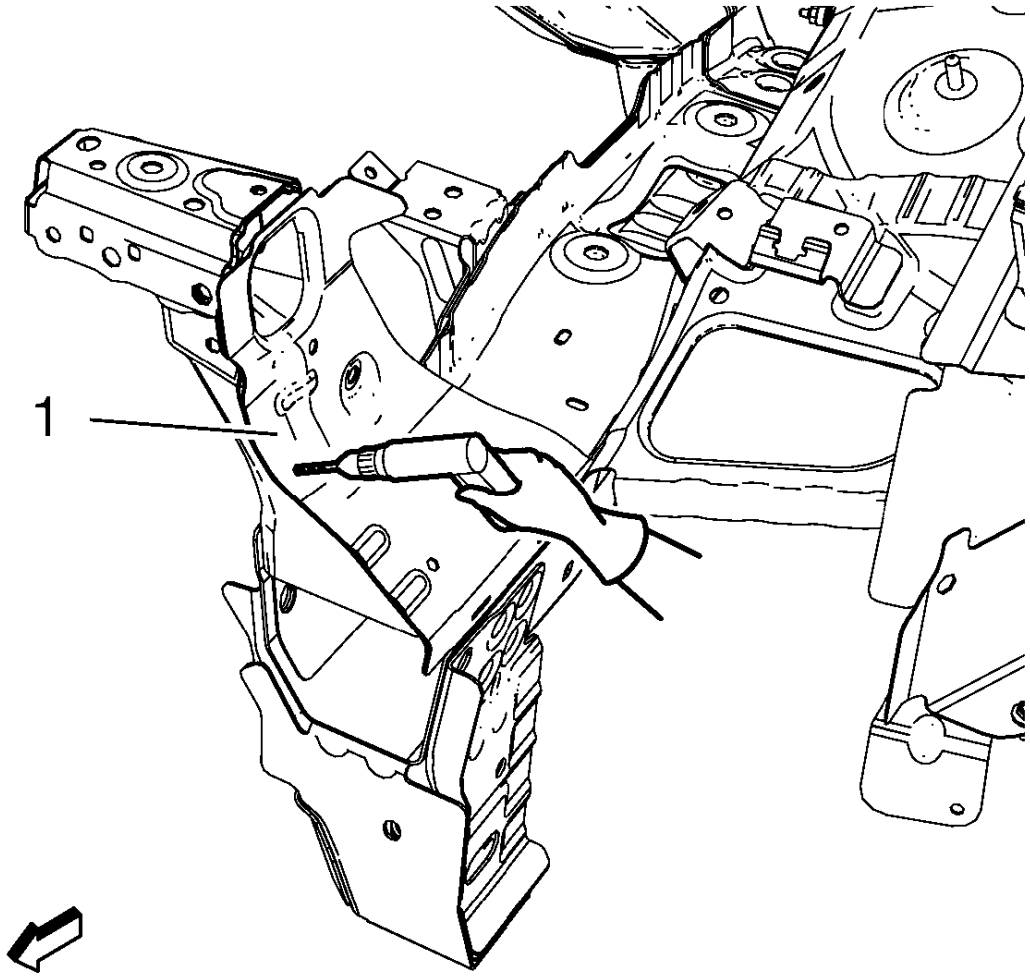

Fig. 19: Drilling Factory Welds On Front End Sheet Metal Cross Panel Reinforcement
Courtesy of GENERAL MOTORS COMPANY

7. Locate and mark all the necessary factory welds of the front end sheet metal cross panel reinforcement (1).
8. Drill all factory welds. Note the number and location of welds for installation of the service assembly.

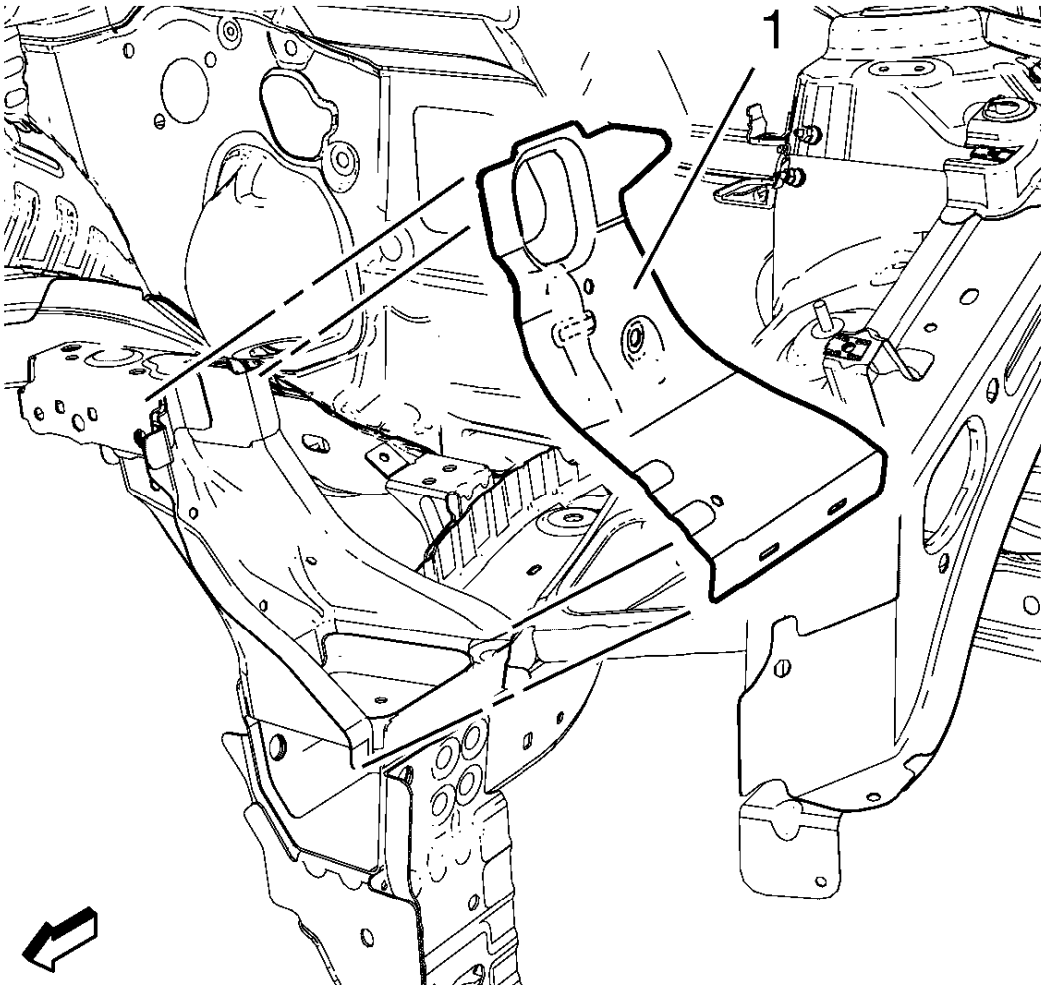

Fig. 20: Front End Sheet Metal Cross Panel Reinforcement
Courtesy of GENERAL MOTORS COMPANY

9. Remove the front end sheet metal cross panel reinforcement (1).
10. Drill all factory welds.

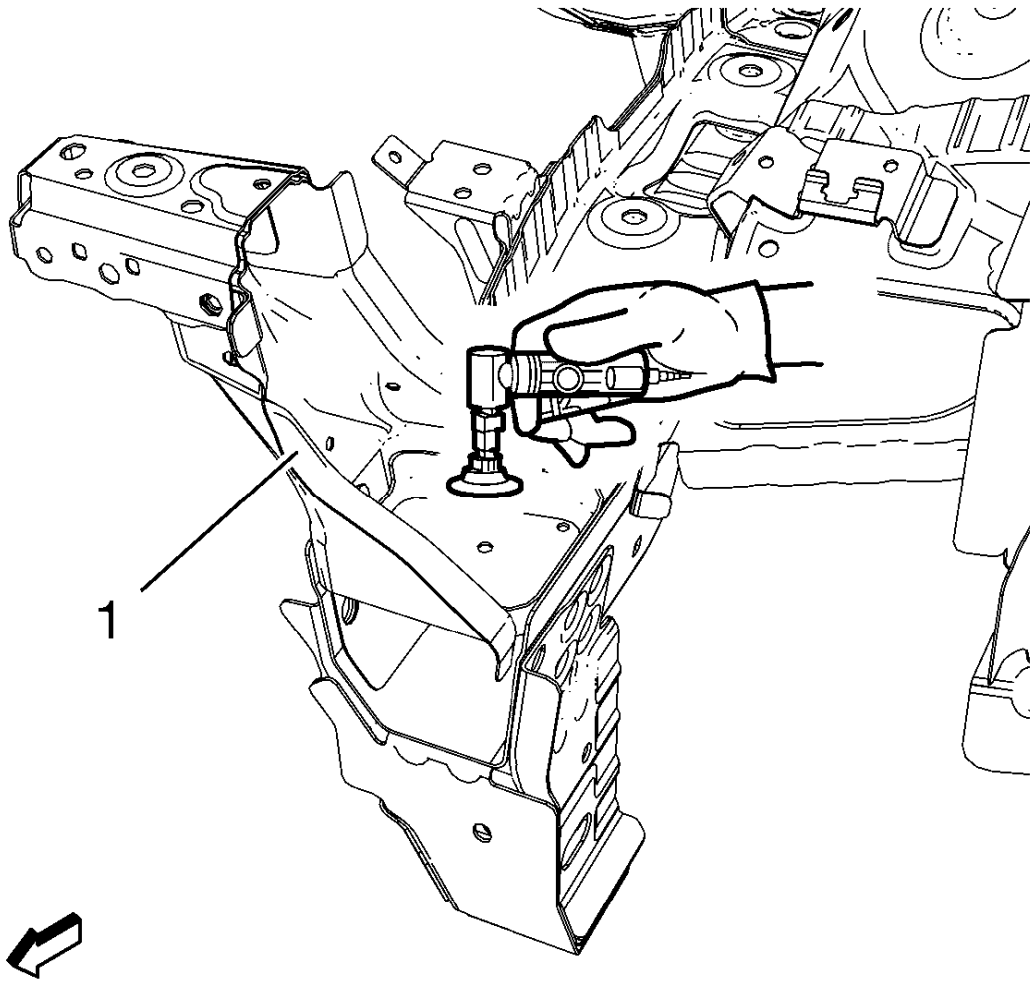

Fig. 21: Grinding Factory Welds At Front End Upper Tie Bar Support
Courtesy of GENERAL MOTORS COMPANY

11. Grind factory welds of the front end upper tie bar support (1).

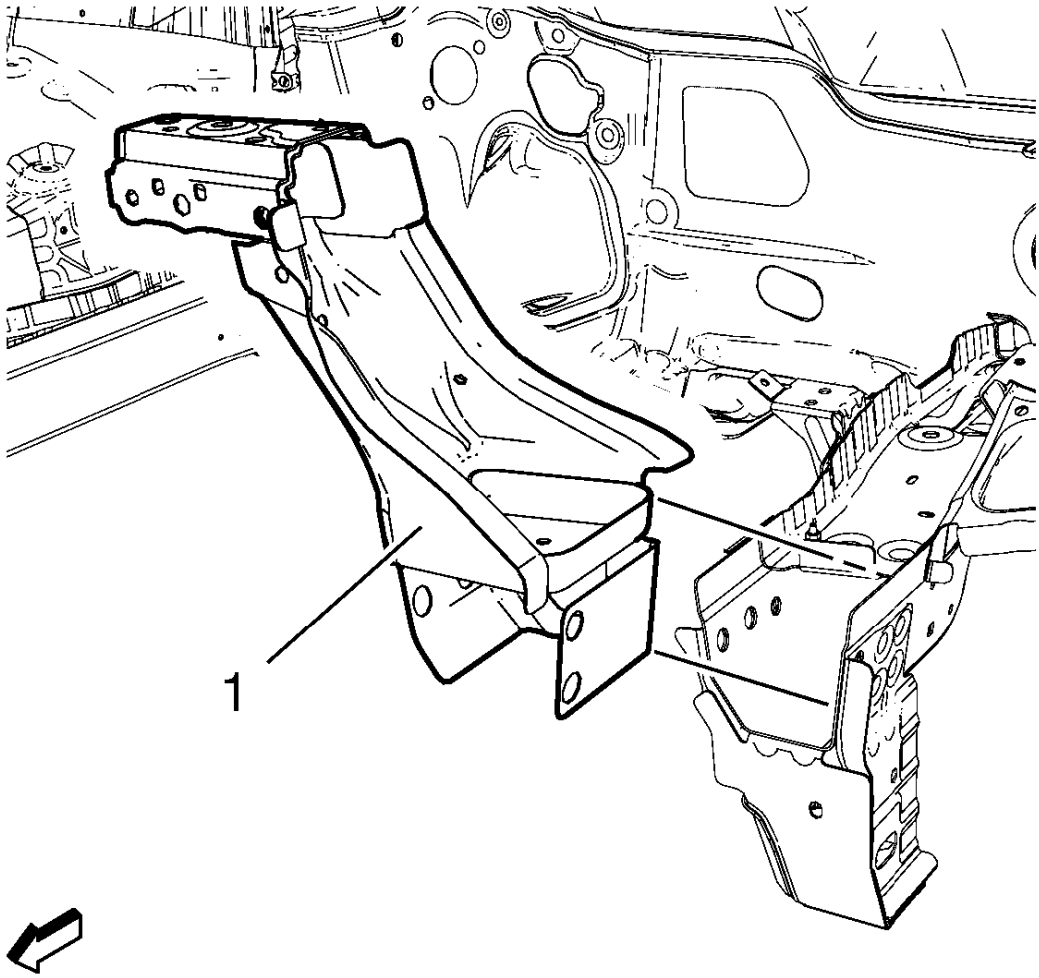

Fig. 22: Front End Upper Tie Bar Support
Courtesy of GENERAL MOTORS COMPANY

12. Remove the front end upper tie bar support (1).

Installation Procedure

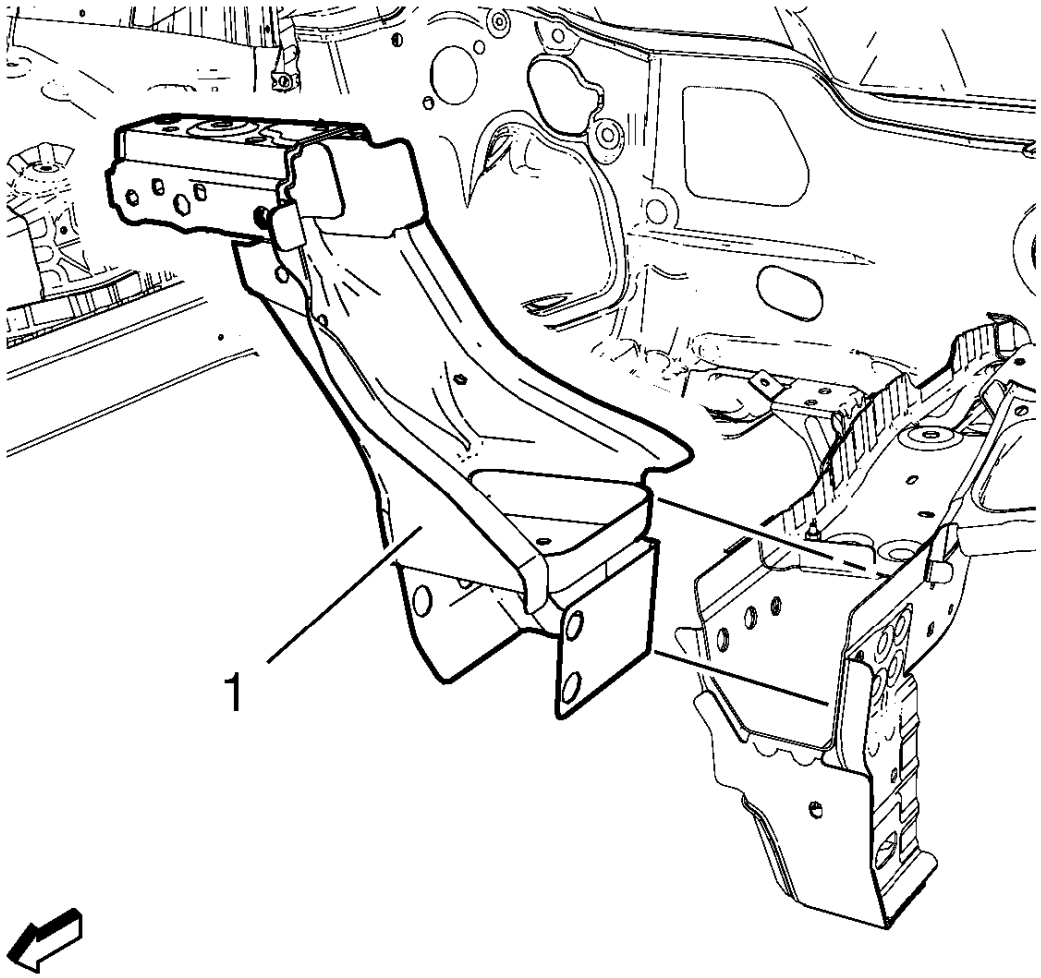

Fig. 23: Front End Upper Tie Bar Support
Courtesy of GENERAL MOTORS COMPANY

1. Position the front end upper tie bar support (1) on the vehicle.
2. Verify the fit of the front end upper tie bar support.
3. Clamp the front end upper tie bar support into position.

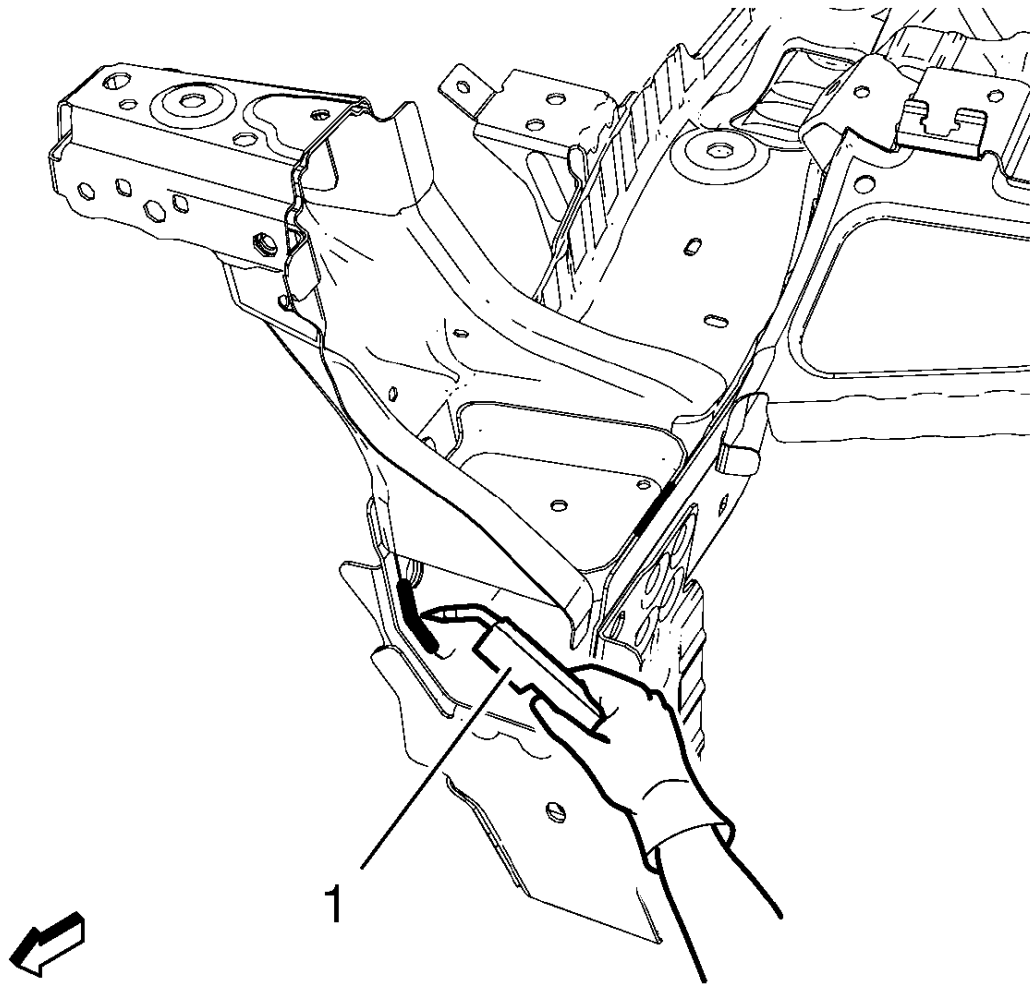

Fig. 24: Welding Front End Upper Tie Bar Support
Courtesy of GENERAL MOTORS COMPANY

4. Weld accordingly (1).

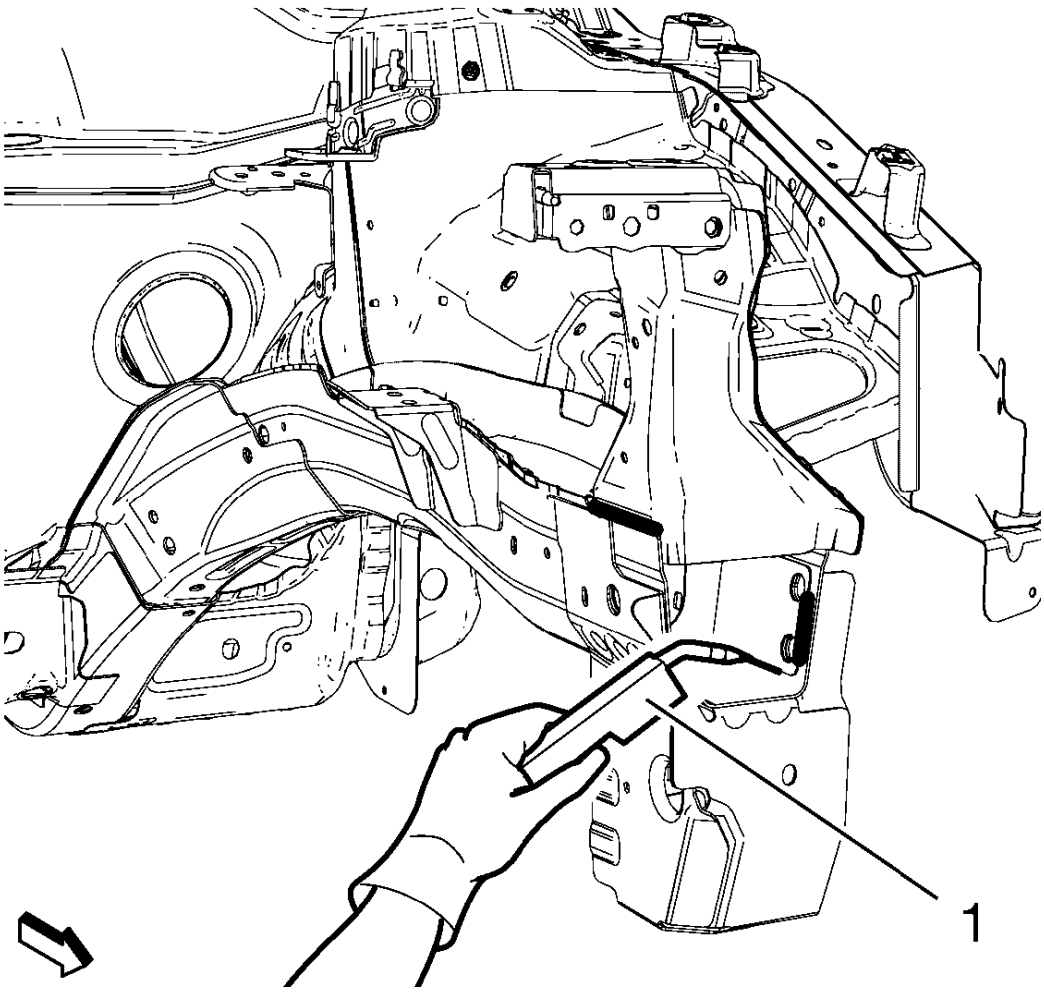

Fig. 25: Welding Front End Upper Tie Bar Support
Courtesy of GENERAL MOTORS COMPANY

5. Weld accordingly (1).
6. Grind down weld seams as needed for related panels and components.

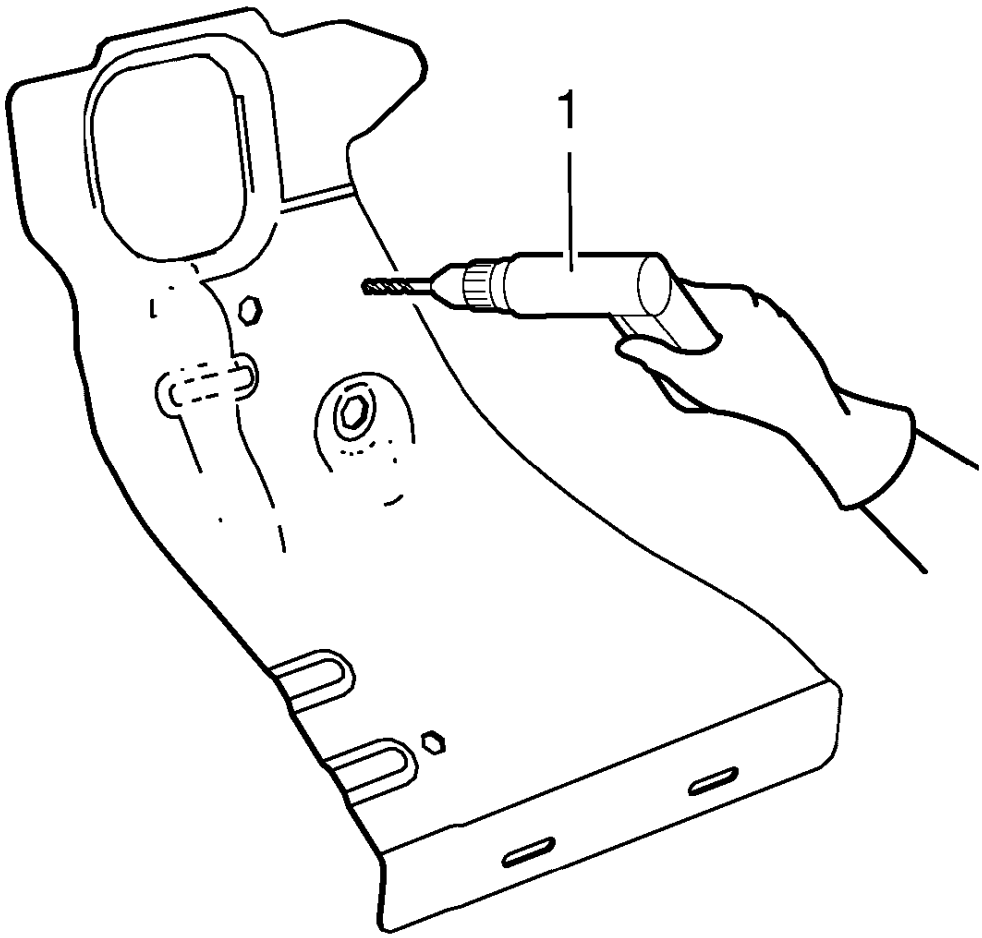

Fig. 26: Drilling Holes For Plug Welding Front End Sheet Metal Cross Panel Reinforcement
Courtesy of GENERAL MOTORS COMPANY

7. Drill 8 mm (5/16 in) holes for plug welding along the edges of the front end sheet metal cross panel reinforcement as noted from the original panel (1).
8. Clean and prepare the attaching surfaces for welding.

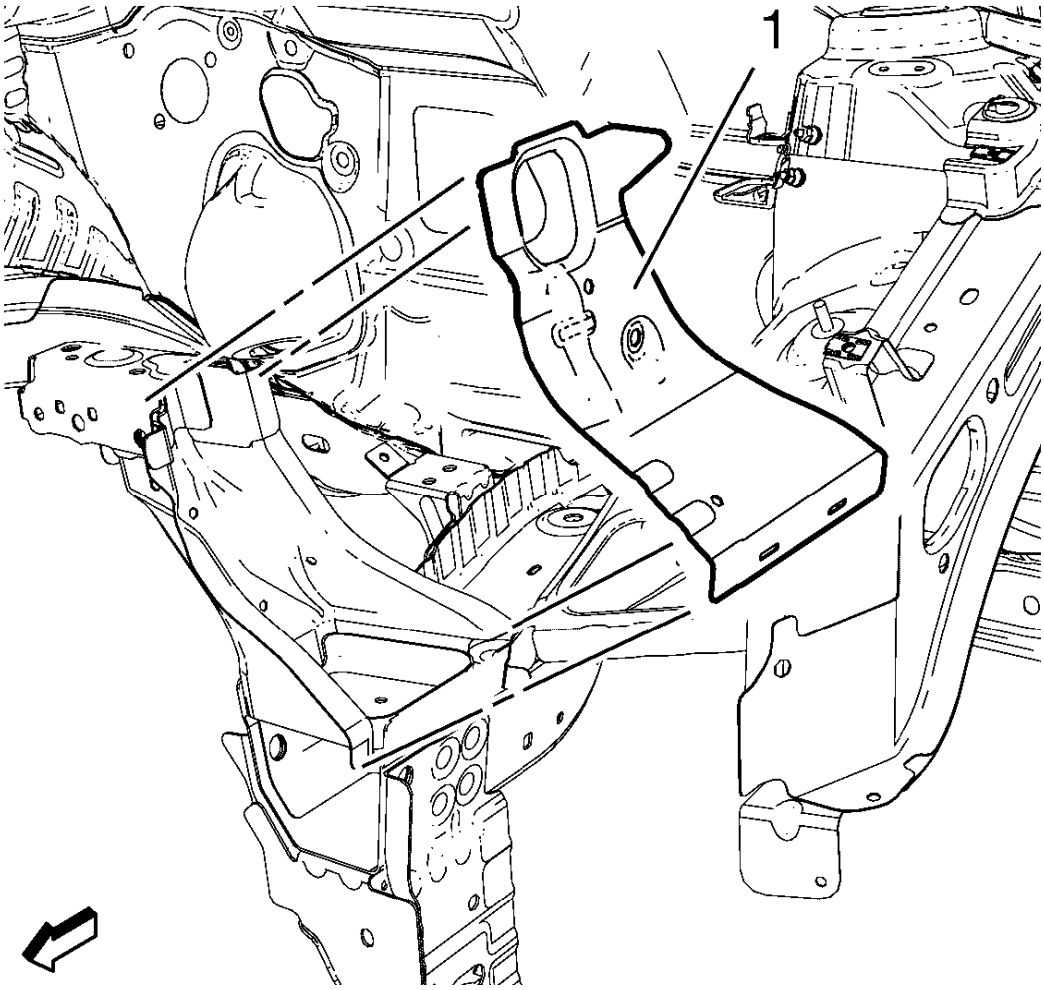

Fig. 27: Front End Sheet Metal Cross Panel Reinforcement
Courtesy of GENERAL MOTORS COMPANY

9. Position the front end sheet metal cross panel reinforcement (1) on the vehicle.
10. Verify the fit of the front end upper tie bar.
11. Clamp the front end sheet metal cross panel reinforcement into position.

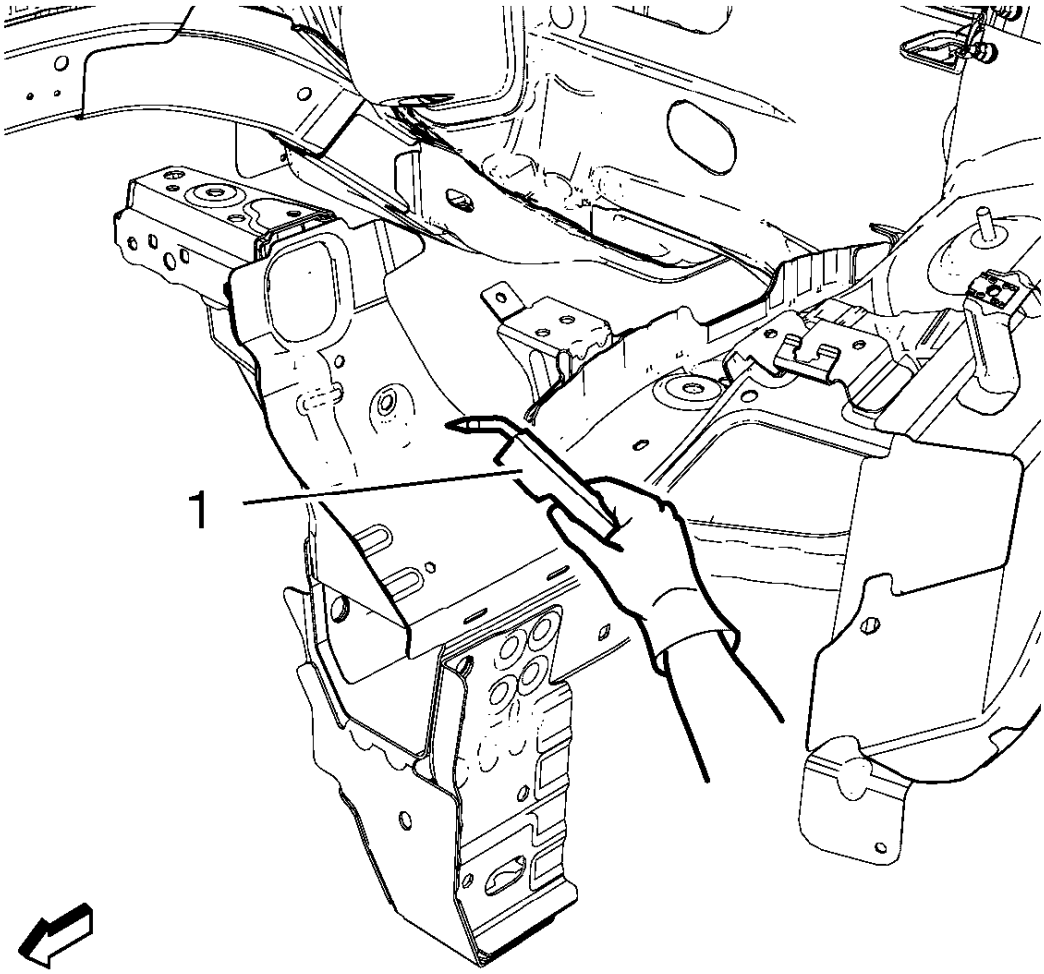

Fig. 28: Welding Front End Sheet Metal Cross Panel Reinforcement
Courtesy of GENERAL MOTORS COMPANY

12. Plug weld accordingly (1).
13. Use factory slots for slot brazing.

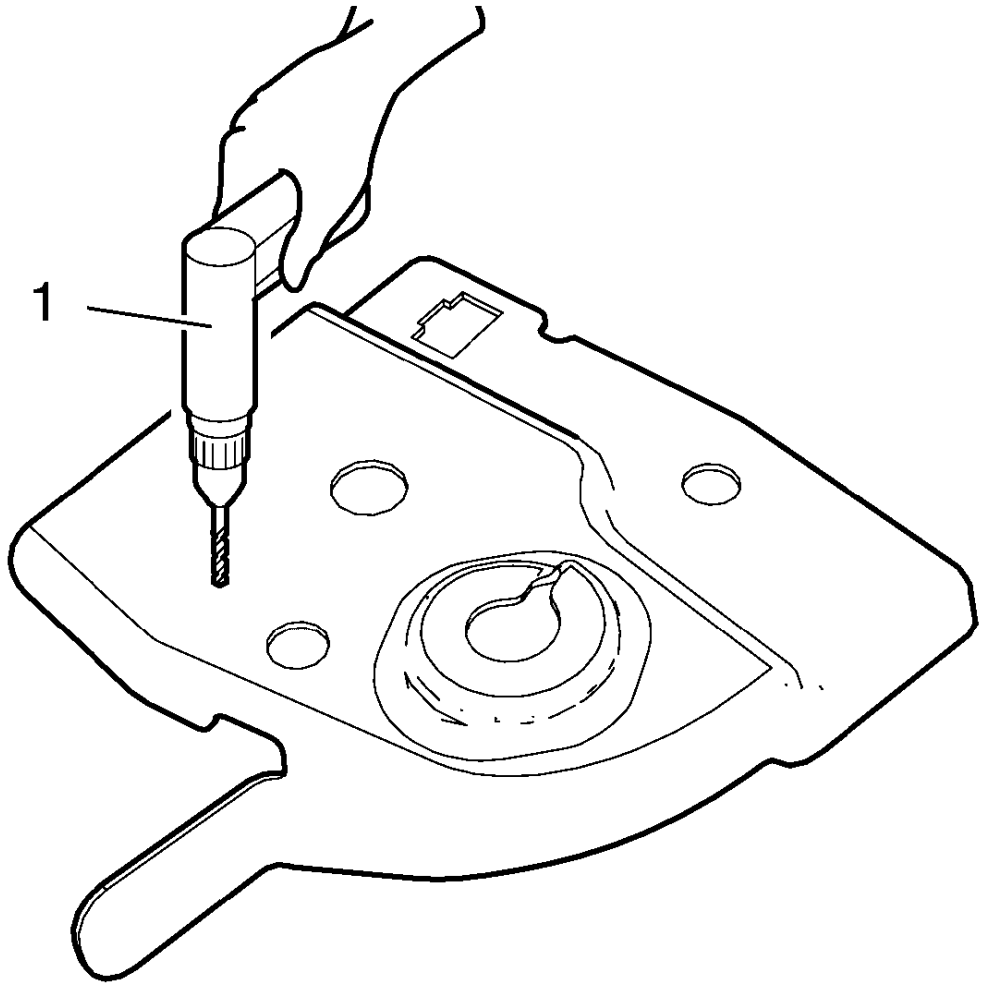

Fig. 29: Drilling Holes For Plug Welding Panel
Courtesy of GENERAL MOTORS COMPANY

14. Drill 8 mm (5/16 in) holes for plug welding as noted from the original panel (1).

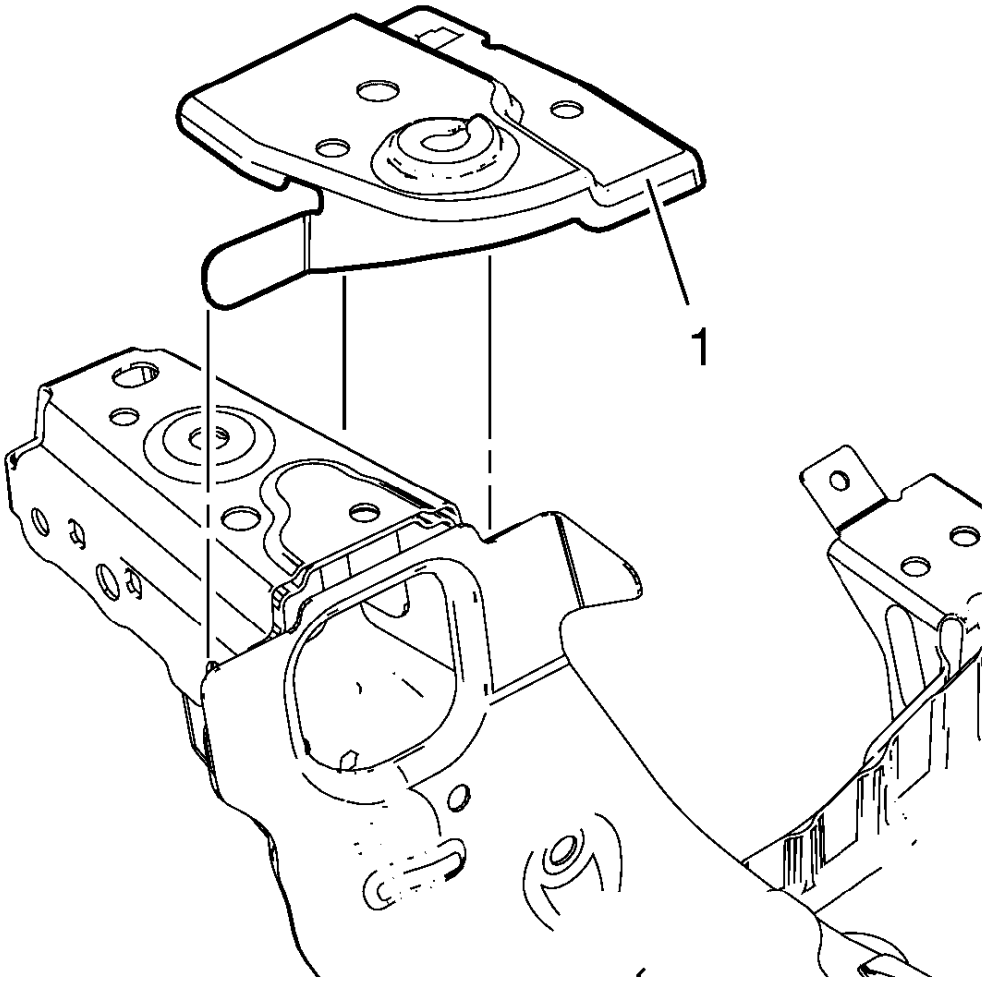

Fig. 30: Hood Front Bumper Bracket
Courtesy of GENERAL MOTORS COMPANY

15. Position the hood front bumper bracket (1) on the vehicle.
16. Clamp the hood front bumper bracket into position.

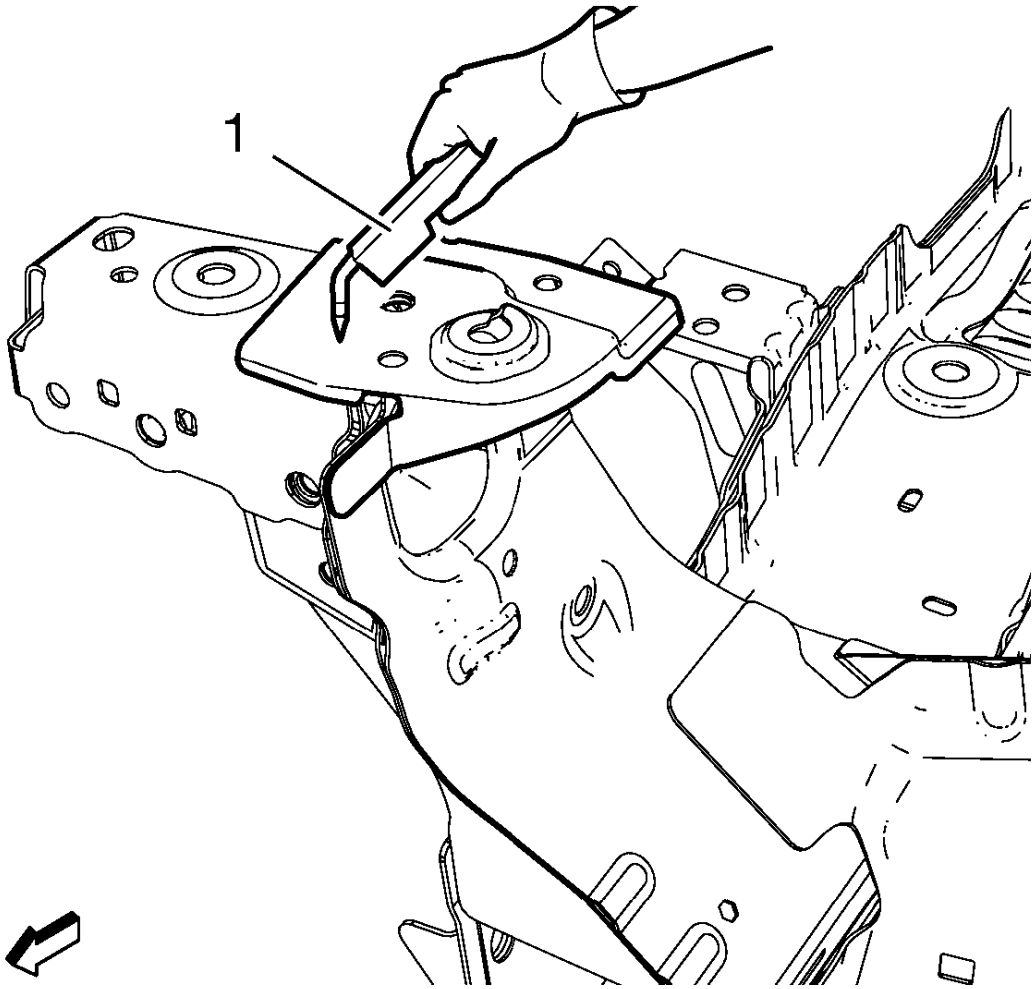

Fig. 31: Welding Hood Front Bumper Bracket
Courtesy of GENERAL MOTORS COMPANY

17. Plug weld accordingly (1).
18. Install front bumper impact bar before applying the sealers and anti-corrosion materials. Refer to **Front Bumper Impact Bar Replacement**
19. Apply the sealers and anti-corrosion materials to the repair area, as necessary. Refer to **Anti-Corrosion Treatment and Repair**
20. Paint the repaired area.
21. Install all related panels and components.
22. Connect the negative battery cable. Refer to **Battery Negative Cable Disconnection and Connection**
23. Enable the SIR system. Refer to **SIR Disabling and Enabling**

FRONT WHEELHOUSE FRONT PANEL REPLACEMENT

Removal Procedure

WARNING: Refer to Approved Equipment for Collision Repair Warning .

WARNING: Refer to Glass and Sheet Metal Handling Warning .

1. Disable the SIR System. Refer to **SIR Disabling and Enabling** .
2. Disconnect the negative battery cable. Refer to **Battery Negative Cable Disconnection and Connection** .
3. Remove all related panels and components.
4. Visually inspect the damage. Repair as much of the damage as possible.
5. Remove the sealers and anti-corrosion materials from the repair area, as necessary. Refer to **Anti-Corrosion Treatment and Repair** .

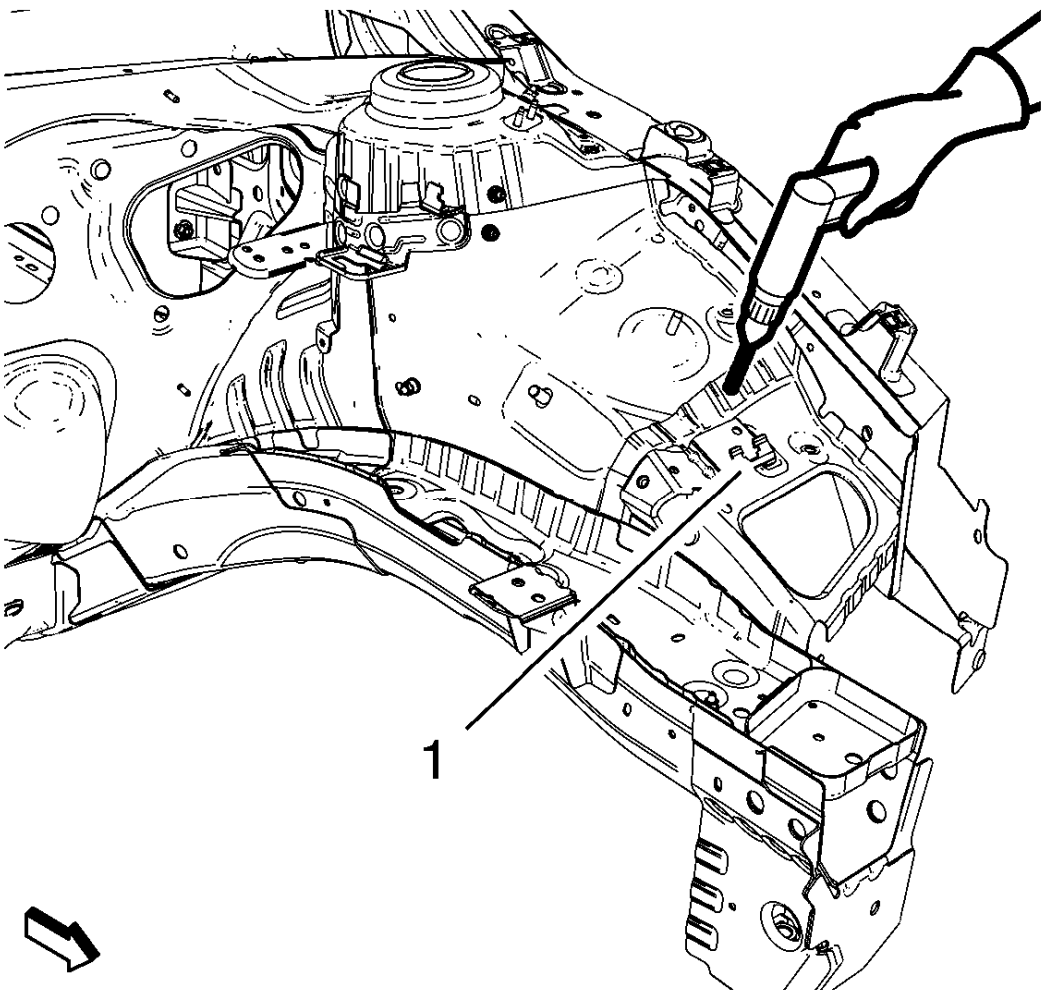

Fig. 32: Drilling Factory Welds At Front Wheelhouse Front Panel

Courtesy of GENERAL MOTORS COMPANY

6. Locate and mark all the necessary factory welds of the front wheelhouse front panel (1).
7. Drill all factory welds. Note the number and location of welds for installation of the service assembly.

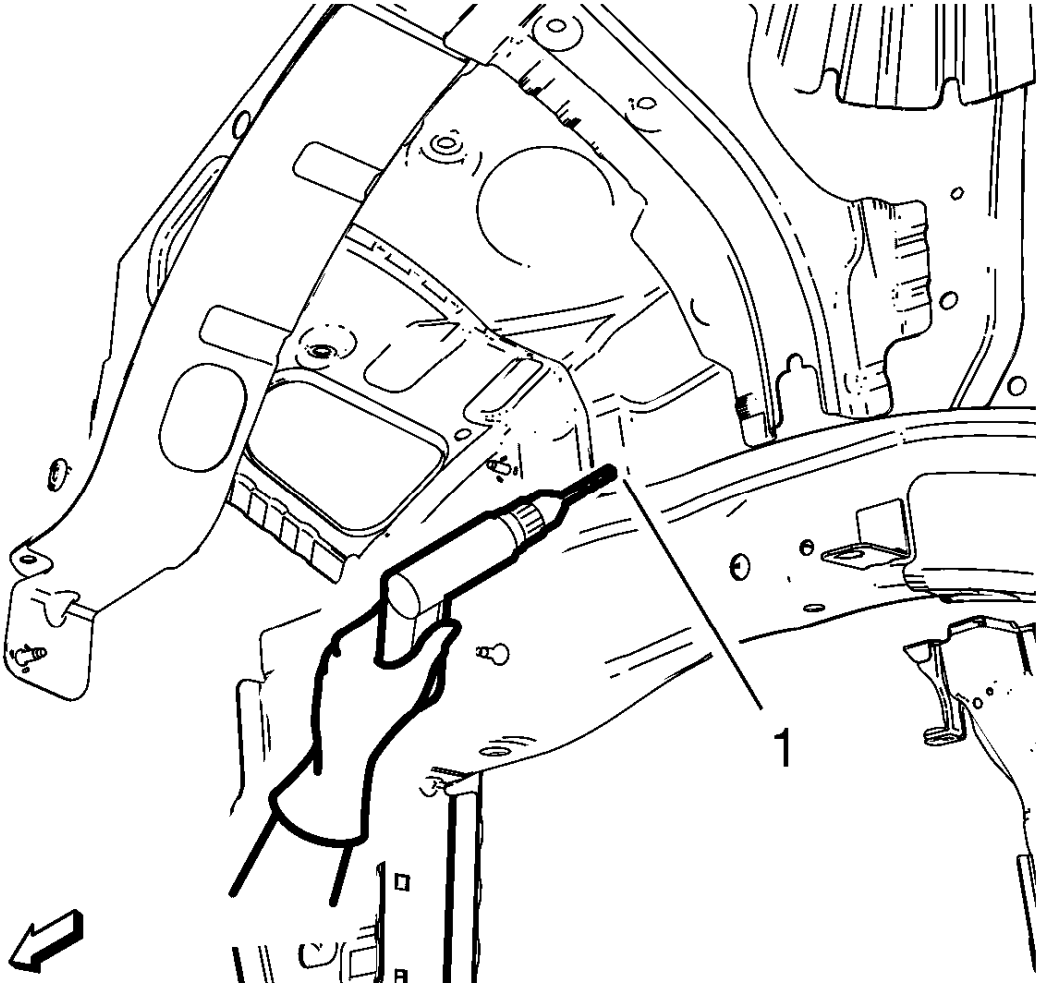

Fig. 33: Drilling Hidden Factory Weld Where Front Wheelhouse Front Panel And Front Wheelhouse Overlap
Courtesy of GENERAL MOTORS COMPANY

8. Drill hidden factory weld (1) where front wheelhouse front panel and front wheelhouse overlap.

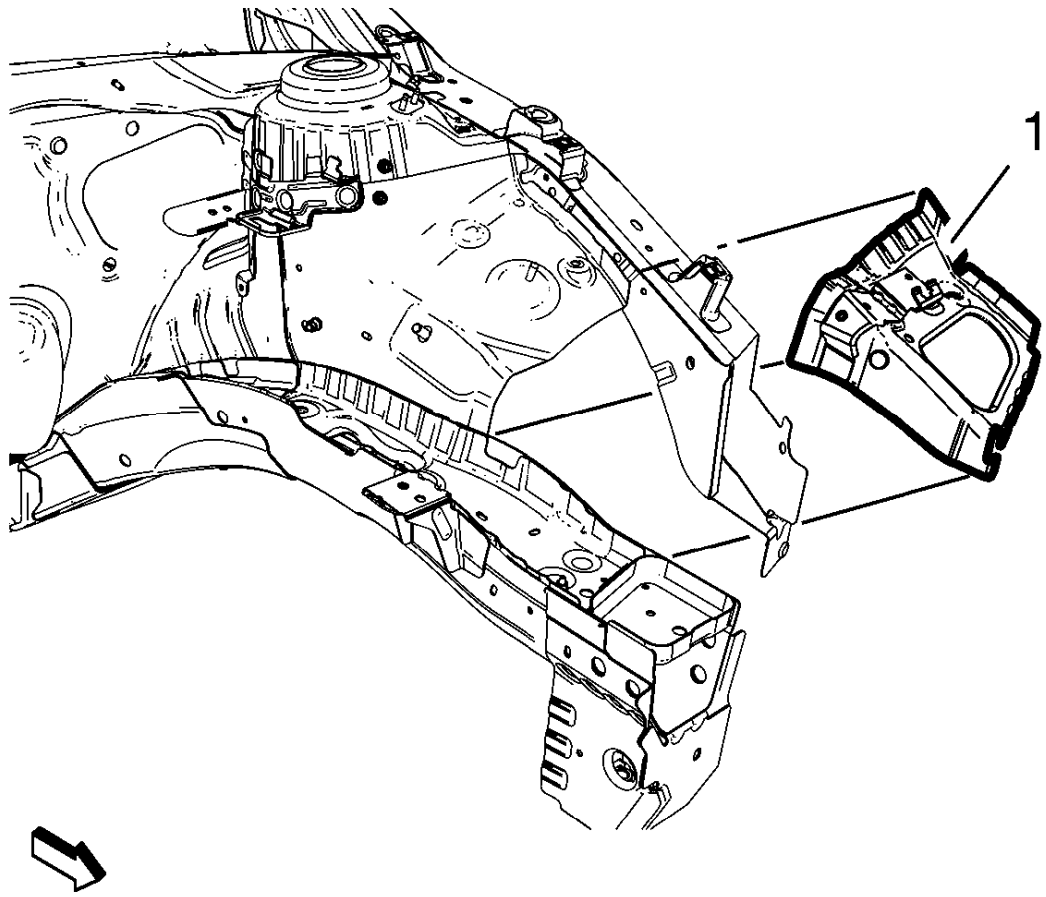

Fig. 34: Front Wheelhouse Front Panel
Courtesy of GENERAL MOTORS COMPANY

9. Remove the front wheelhouse front panel (1).

Installation Procedure

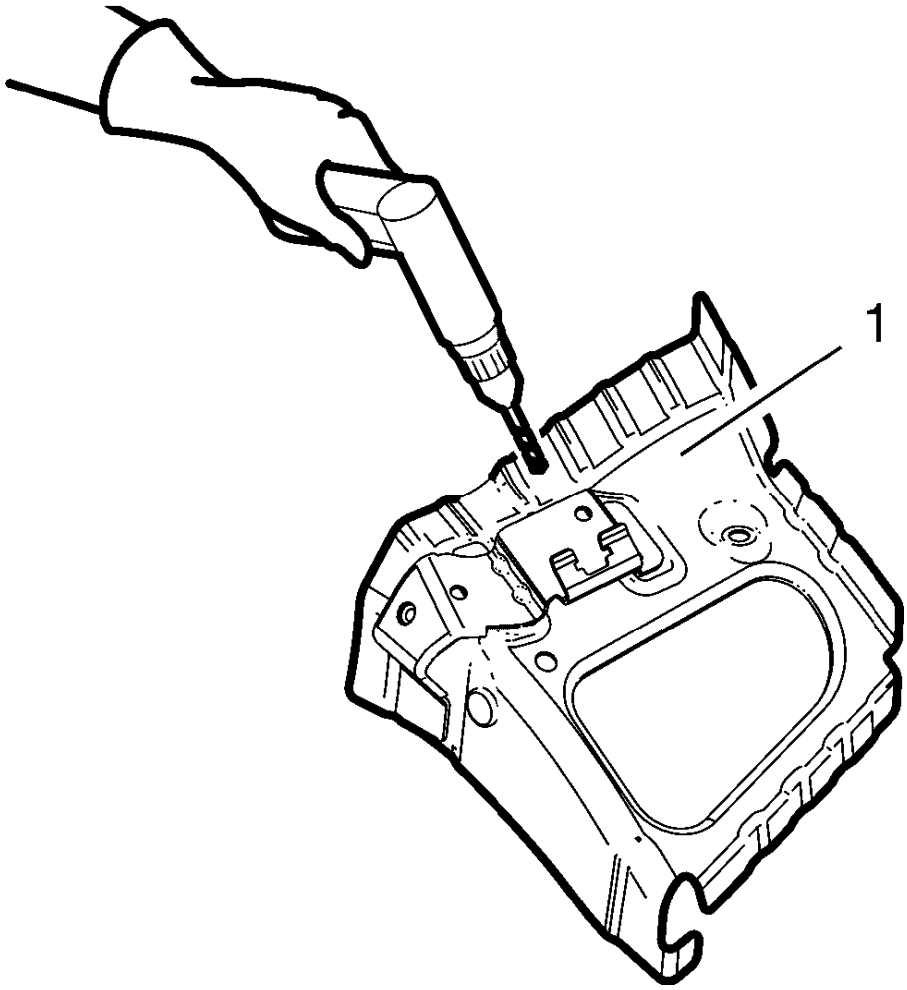

Fig. 35: Drilling 8 mm (5/16 in) Hole For Plug Welding New Front Wheelhouse Front Panel
Courtesy of GENERAL MOTORS COMPANY

1. Drill 8 mm (5/16 in) for plug welding along the edges of the front wheelhouse front panel (1) as noted from the original panel.

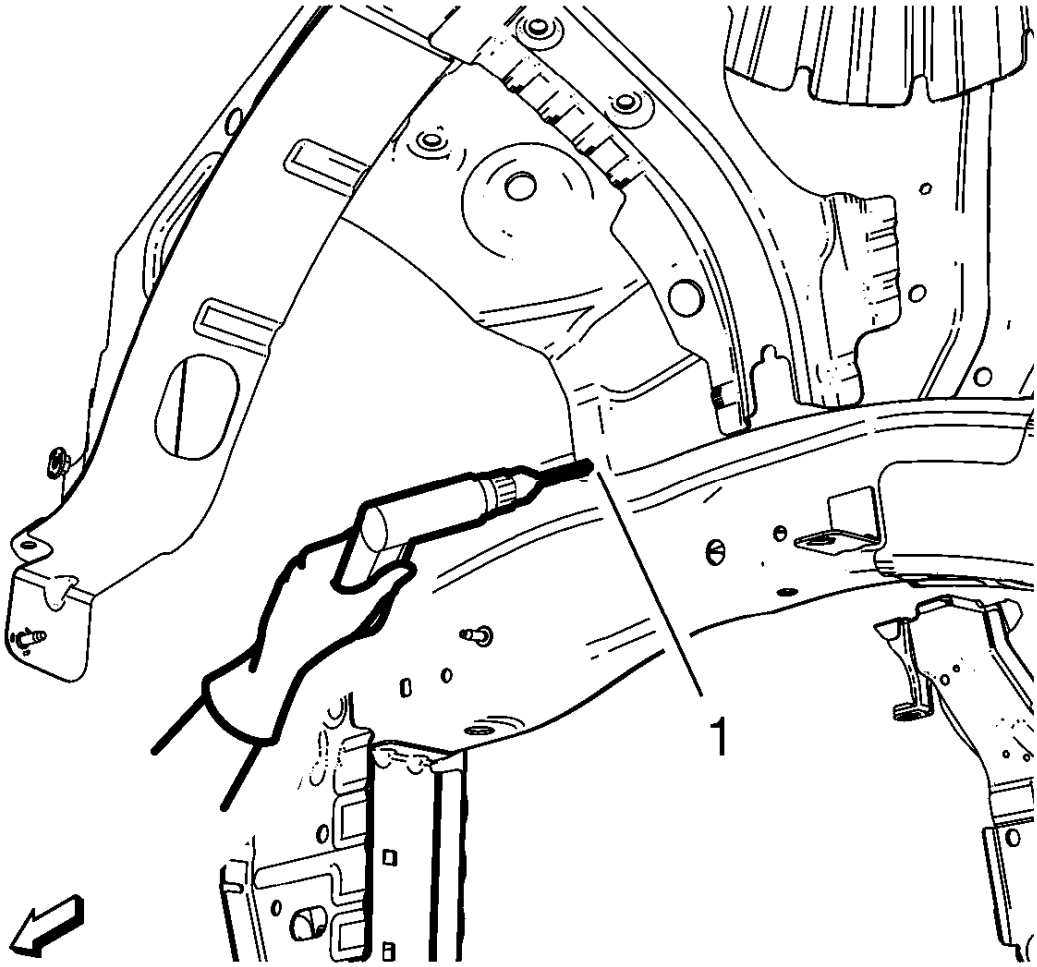

Fig. 36: Drilling Hole For Welding Where Front Wheelhouse Front Panel And Front Wheelhouse Overlap
Courtesy of GENERAL MOTORS COMPANY

2. Drill 8 mm (5/16 in) for plug welding (1) where front wheelhouse front panel and front wheelhouse overlap.
3. Clean and prepare the attaching surfaces for welding.

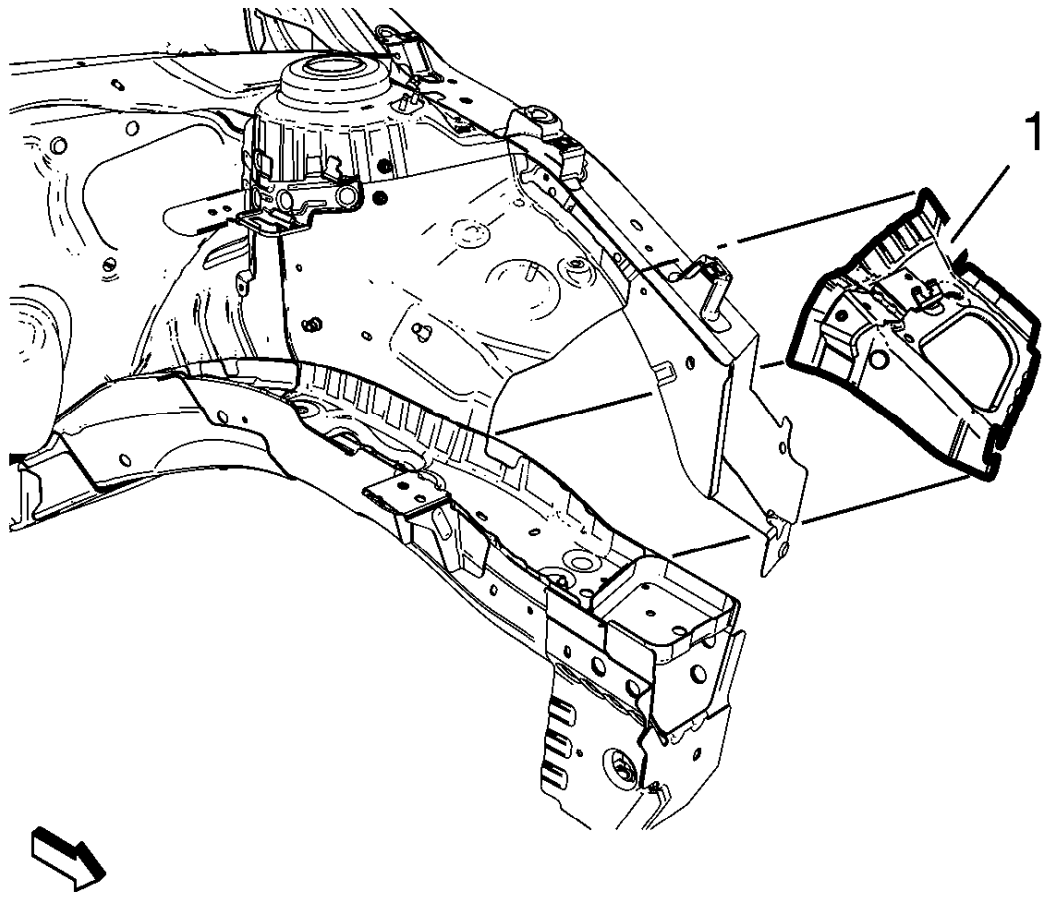

Fig. 37: Front Wheelhouse Front Panel
Courtesy of GENERAL MOTORS COMPANY

4. Position the front wheelhouse front panel (1) on the vehicle.
5. Verify the fit of the front wheelhouse front panel.
6. Clamp the front wheelhouse front panel into position.

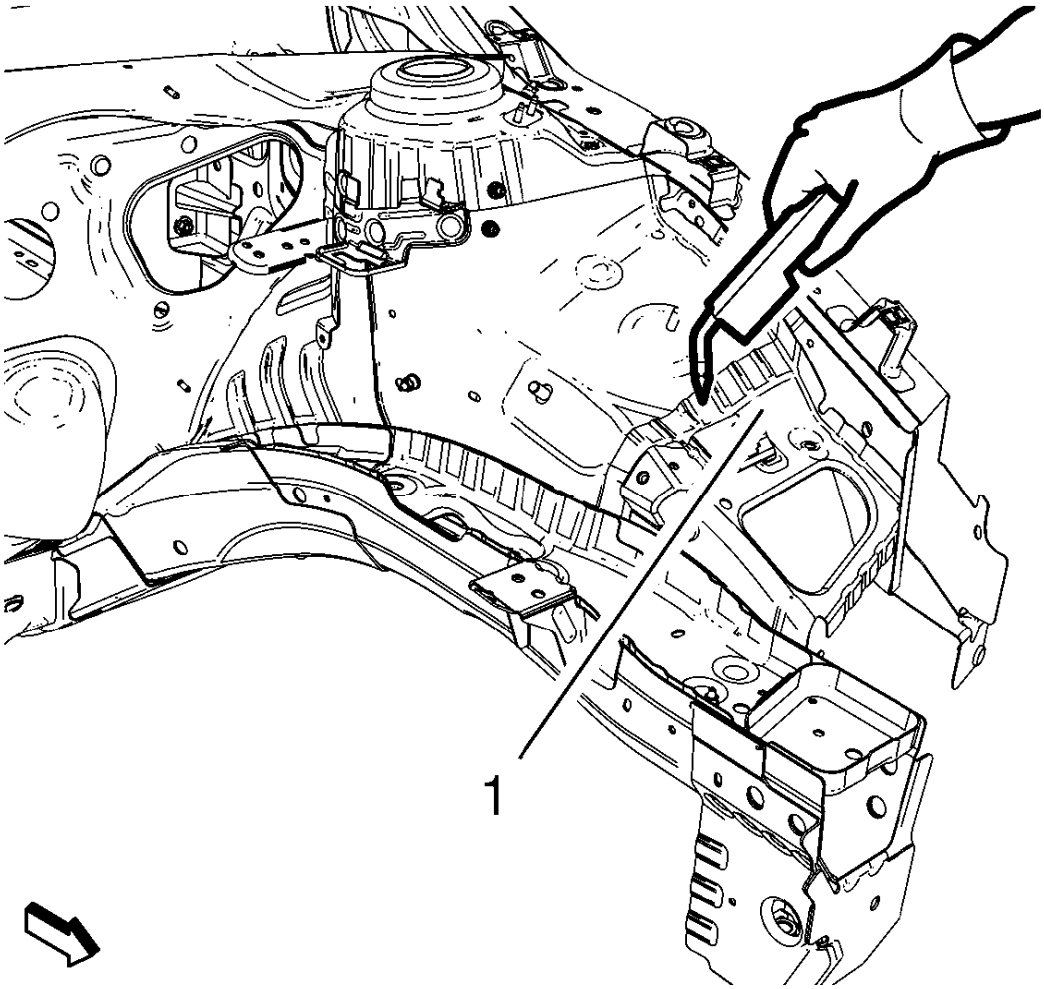

Fig. 38: Welding Front Wheelhouse Front Panel
Courtesy of GENERAL MOTORS COMPANY

7. Plug weld the front wheelhouse front panel (1) accordingly.

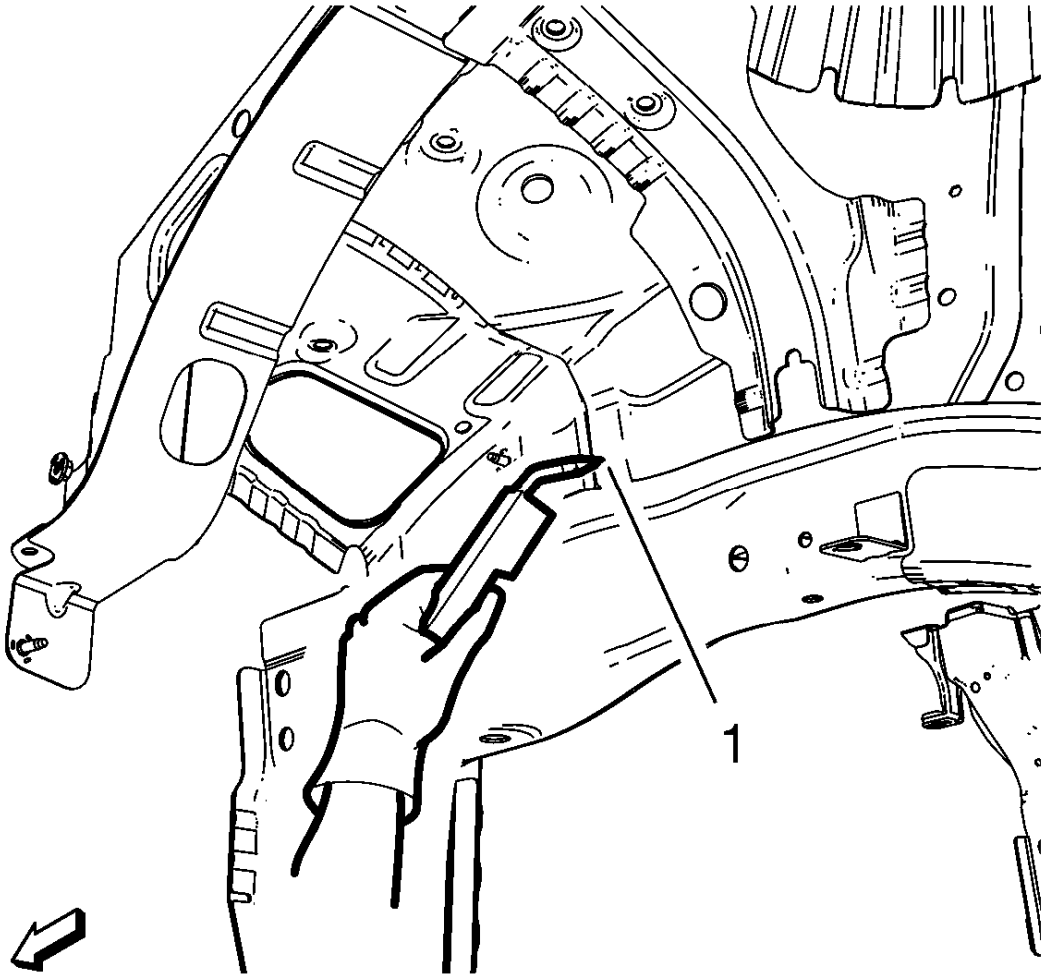

Fig. 39: Welding Joint From Front Wheelhouse Front Panel To Front Wheelhouse
Courtesy of GENERAL MOTORS COMPANY

8. Plug weld (1) the joint from front wheelhouse front panel to front wheelhouse accordingly.
9. Apply the sealers and anti-corrosion materials to the repair area, as necessary. Refer to **Anti-Corrosion Treatment and Repair** .
10. Paint the repaired area. Refer to **Basecoat/Clearcoat Paint Systems** .
11. Install all related panels and components.
12. Connect the negative battery cable. Refer to **Battery Negative Cable Disconnection and Connection** .
13. Enable the SIR system. Refer to **SIR Disabling and Enabling** .

FRONT WHEELHOUSE PANEL REPLACEMENT

Removal Procedure

WARNING: Refer to Approved Equipment for Collision Repair Warning .

WARNING: Refer to Glass and Sheet Metal Handling Warning .

1. Disable the SIR System. Refer to **SIR Disabling and Enabling** .
2. Disconnect the negative battery cable. Refer to **Battery Negative Cable Disconnection and Connection** .
3. Remove all related panels and components.
4. Visually inspect the damage. Repair as much of the damage as possible.
5. Remove the sealers and anti-corrosion materials from the repair area, as necessary. Refer to **Anti-Corrosion Treatment and Repair** .

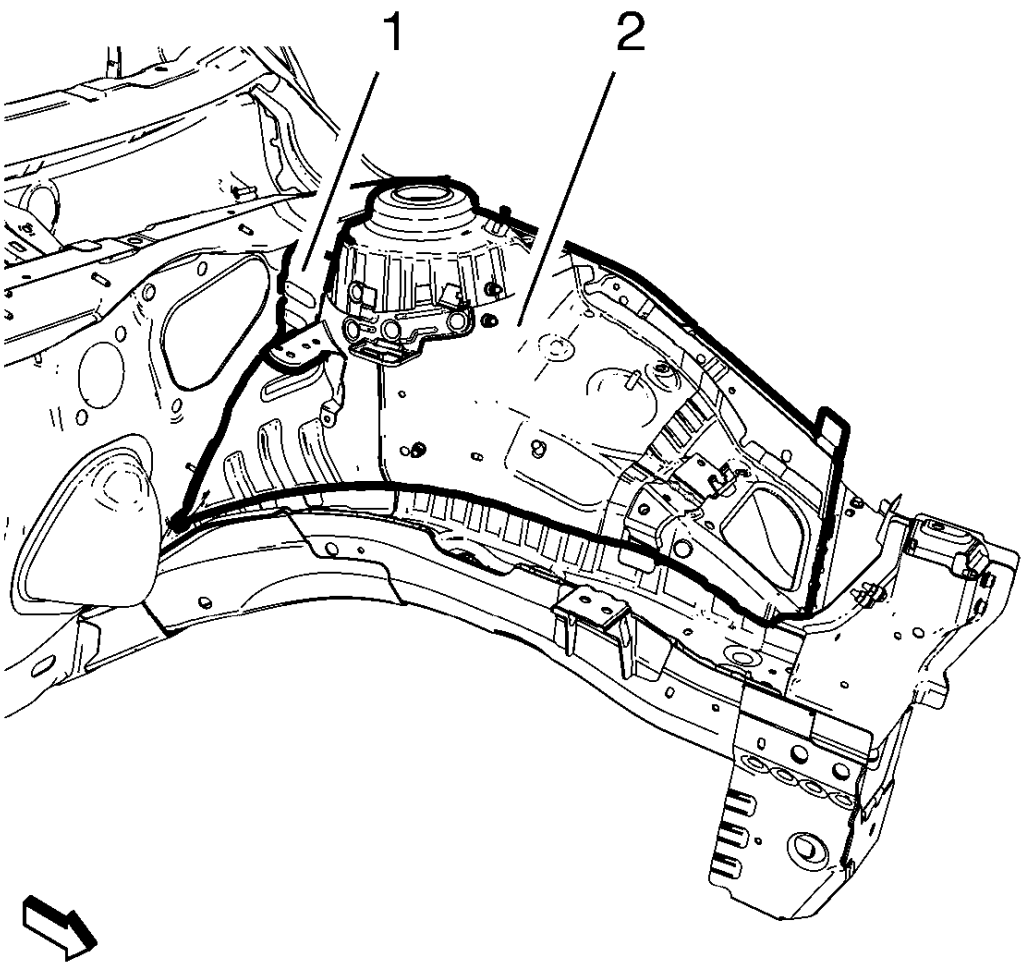

Fig. 40: Front Wheelhouse Rear Panel Brace
Courtesy of GENERAL MOTORS COMPANY

NOTE: Front wheelhouse rear panel brace (1) remains to the body.

6. Locate and mark all the necessary factory welds of the front wheelhouse panel (2).

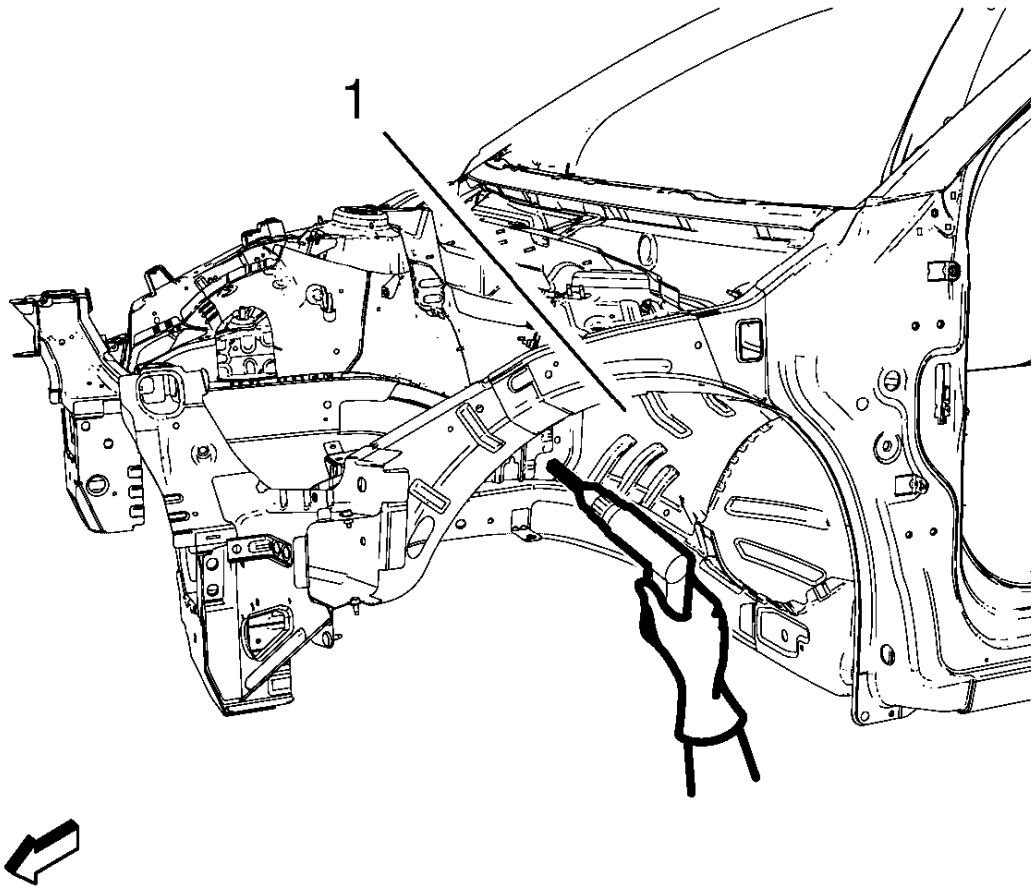

Fig. 41: Drilling All Factory Welds At Front Wheelhouse Panel
Courtesy of GENERAL MOTORS COMPANY

7. Drill all factory welds of the front wheelhouse panel (1). Note the number and location of welds for installation of the service assembly.

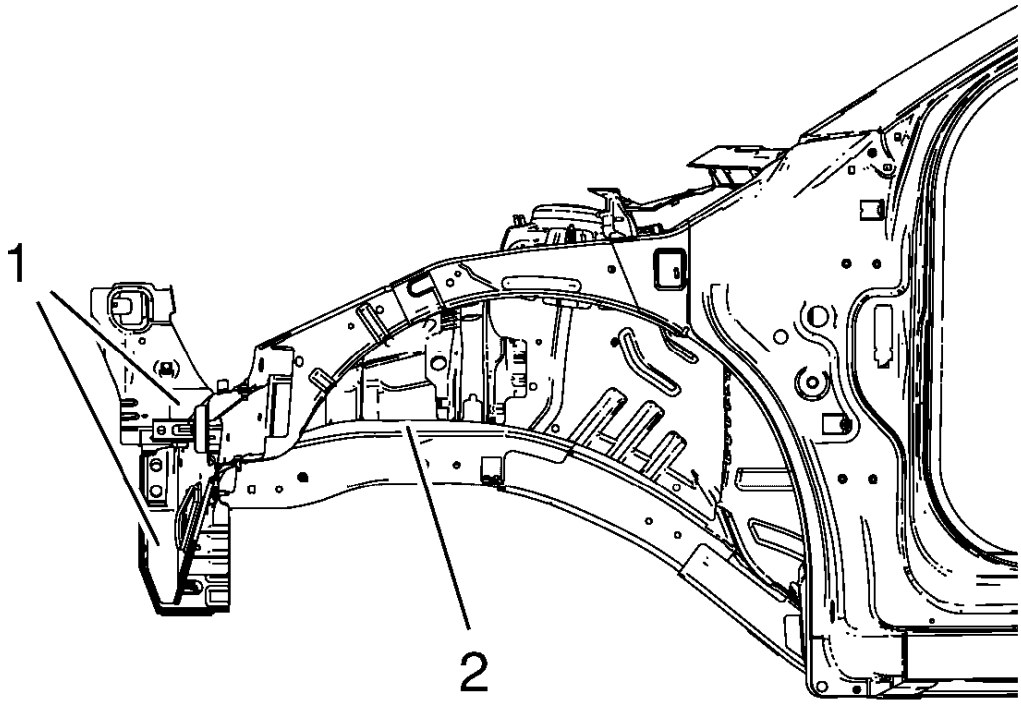

Fig. 42: Adhesive Cutting Area Where Front Wheelhouse And Front Compartment Side Rail Overlap
Courtesy of GENERAL MOTORS COMPANY

8. Cut the adhesive in the front area (1) and where the front wheelhouse and the front compartment side rail overlap (2) with an appropriate tool.

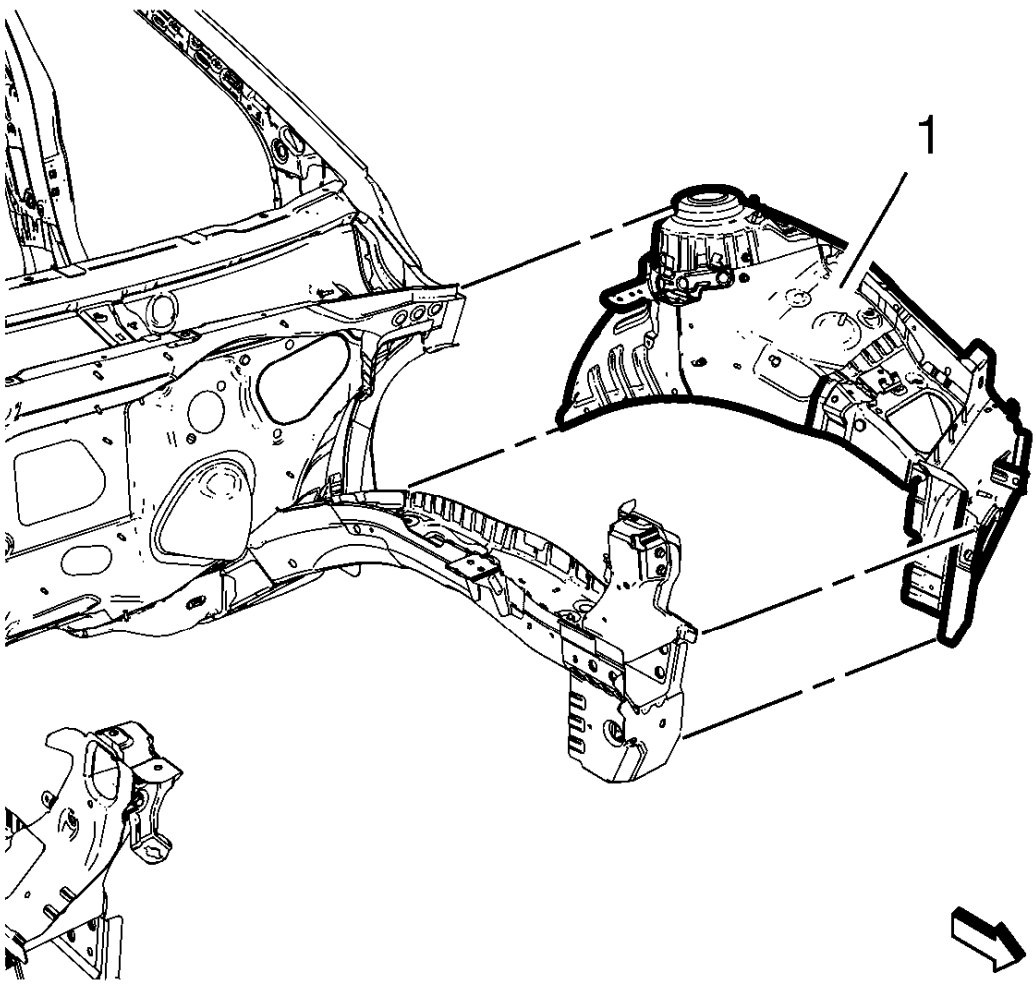

Fig. 43: Front Wheelhouse Panel
Courtesy of GENERAL MOTORS COMPANY

9. Remove the front wheelhouse panel (1).

Installation Procedure

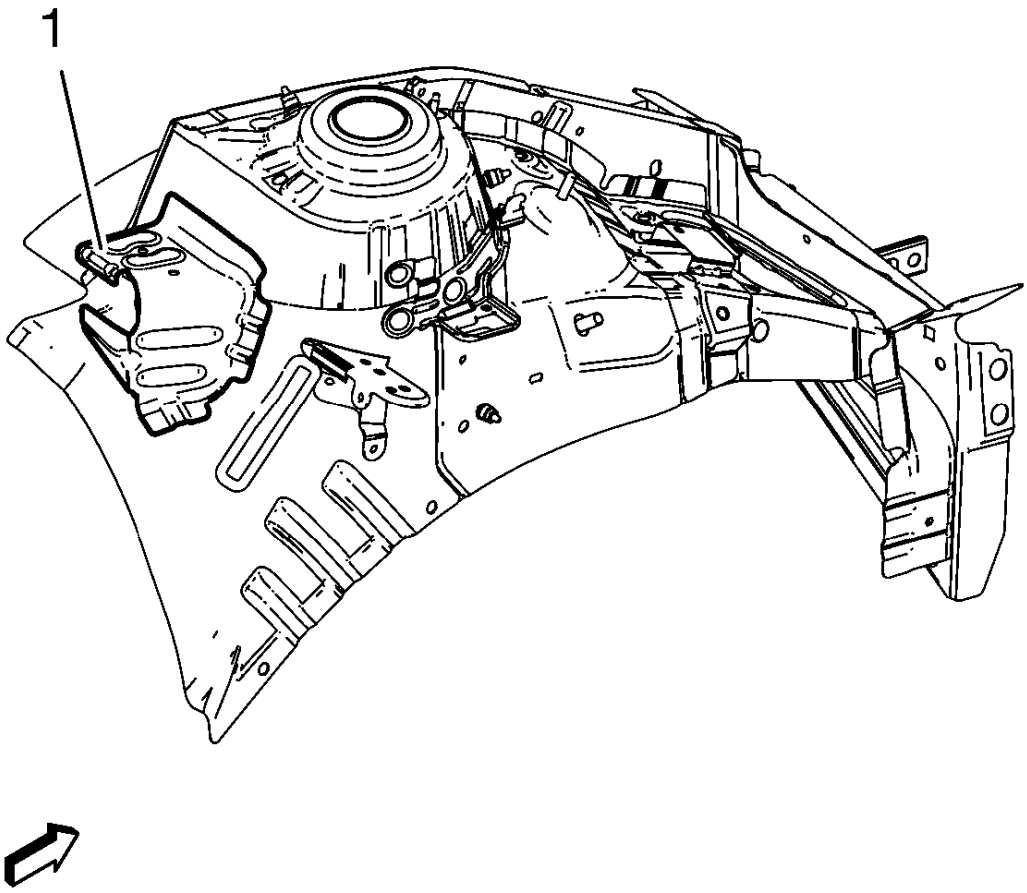

Fig. 44: Front Wheelhouse Rear Panel Brace
Courtesy of GENERAL MOTORS COMPANY

1. Remove the front wheelhouse rear panel brace (1) from service panel.

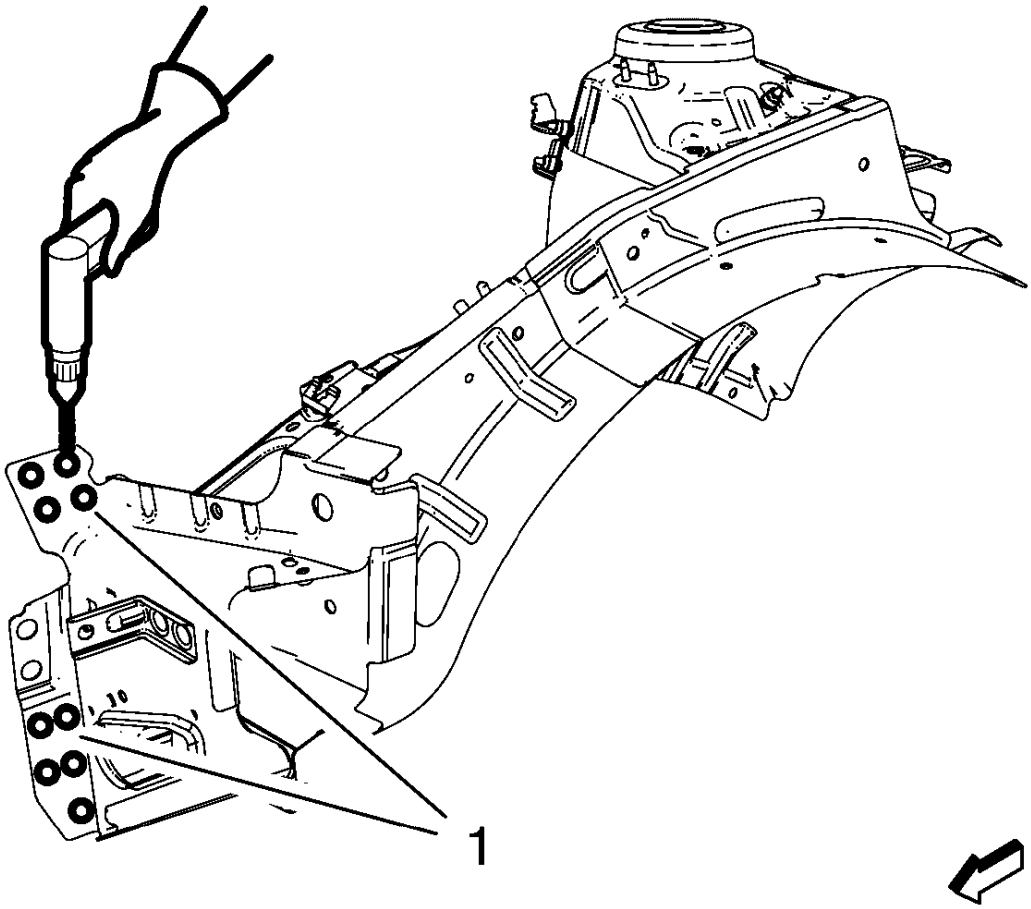

Fig. 45: Drilling 8 mm (5/16 in) Hole For Plug Welding
Courtesy of GENERAL MOTORS COMPANY

2. Drill 8 mm (5/16 in) for plug welding (1) instead of the adhesive noted from the front area of the original panel.

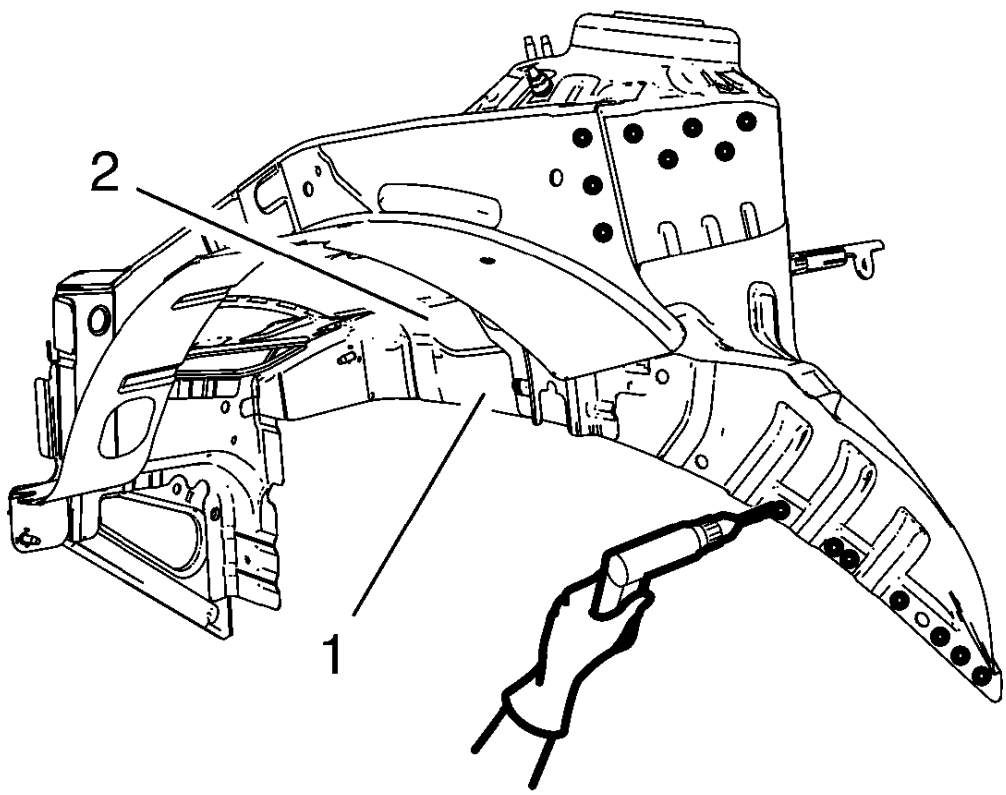

Fig. 46: Drilling Hole For Plug Welding Front Wheelhouse Panel
Courtesy of GENERAL MOTORS COMPANY

NOTE: Double the number of drills at the flange where front wheelhouse panel and front compartment side rail overlap (1).

3. Drill 8 mm (5/16 in) for plug welding along the edges of the front wheelhouse panel (2) as noted from the original panel.
4. Clean and prepare the attaching surfaces for welding.

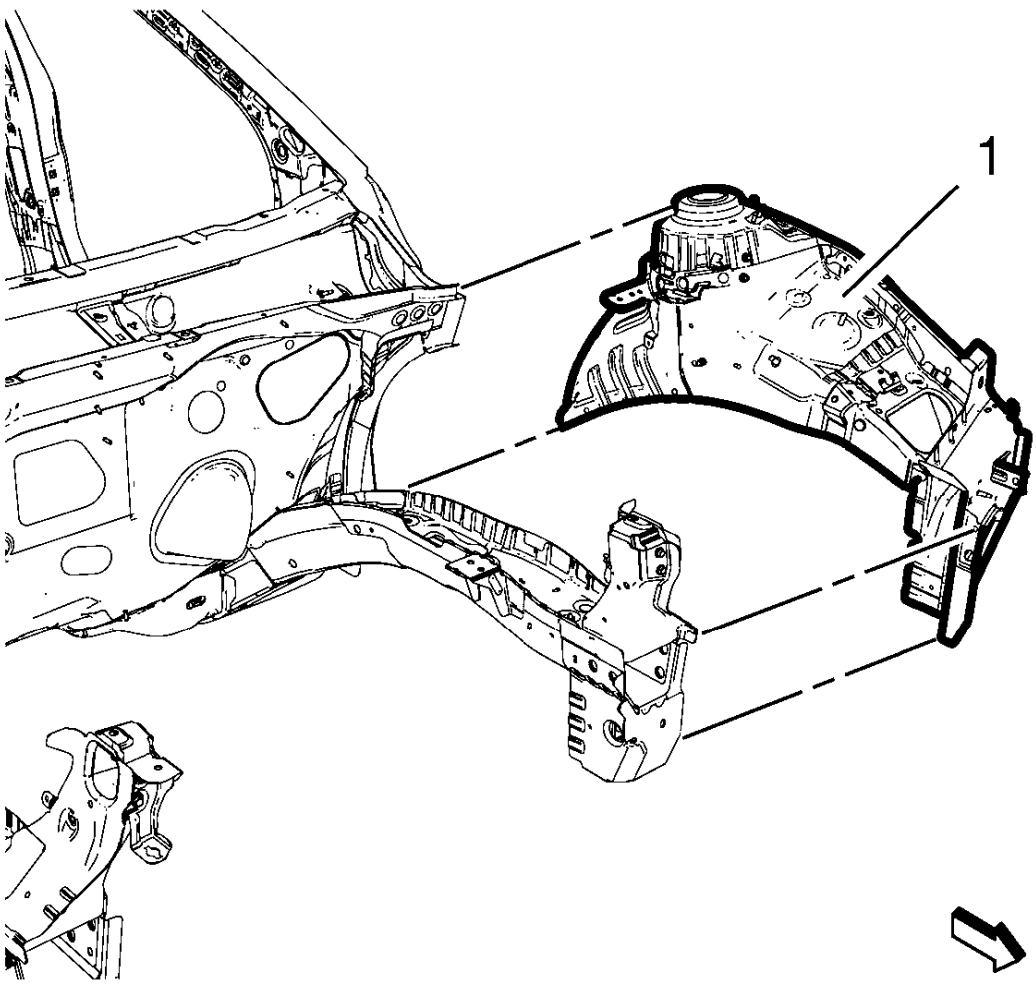

Fig. 47: Front Wheelhouse Panel
Courtesy of GENERAL MOTORS COMPANY

5. Position the front wheelhouse panel (1) on the vehicle.
6. Verify the fit of the front wheelhouse.
7. Clamp the front wheelhouse into position.

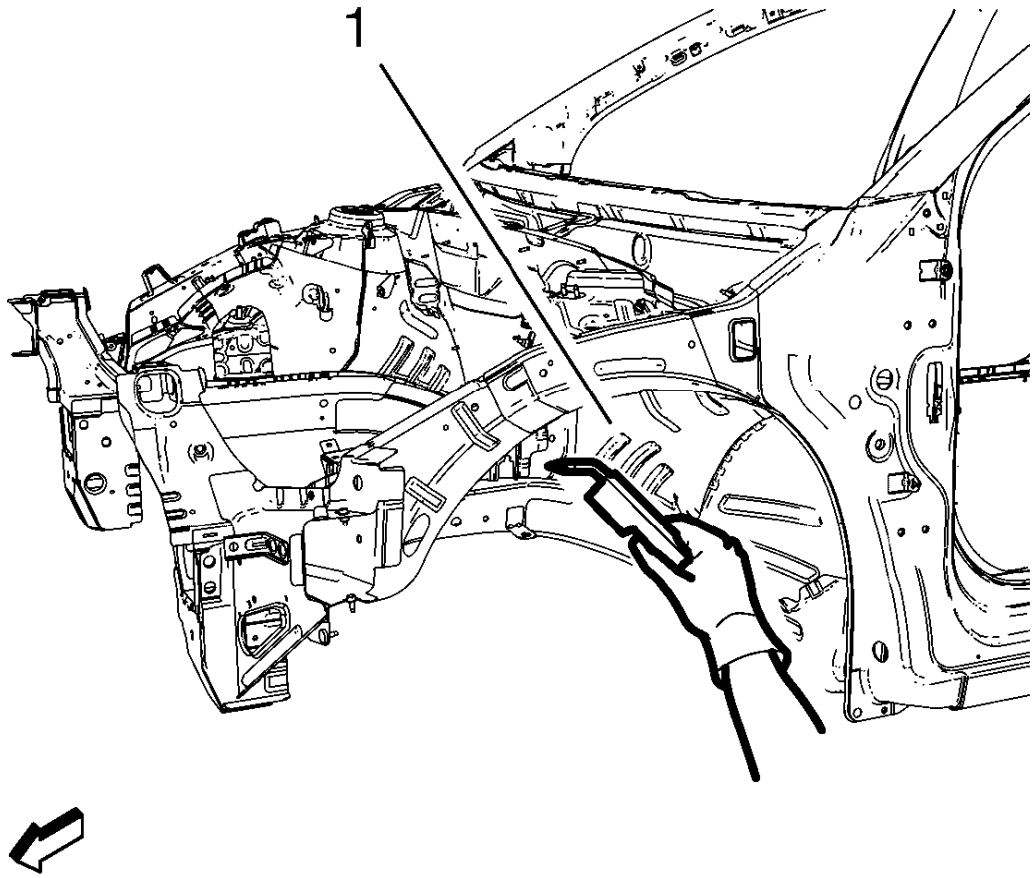

Fig. 48: Welding Front Wheelhouse Panel
Courtesy of GENERAL MOTORS COMPANY

8. Plug weld the front wheelhouse panel (1) accordingly.
9. Apply the sealers and anti-corrosion materials to the repair area, as necessary. Refer to **Anti-Corrosion Treatment and Repair** .
10. Paint the repaired area. Refer to **Basecoat/Clearcoat Paint Systems** .
11. Install all related panels and components.
12. Connect the negative battery cable. Refer to **Battery Negative Cable Disconnection and Connection** .
13. Enable the SIR system. Refer to **SIR Disabling and Enabling** .

FRONT WHEELHOUSE PANEL REAR REINFORCEMENT REPLACEMENT

Removal Procedure

WARNING: Refer to Approved Equipment for Collision Repair Warning .

WARNING: Refer to Glass and Sheet Metal Handling Warning .

1. Disable the SIR System. Refer to **SIR Disabling and Enabling** .
2. Disconnect the negative battery cable. Refer to **Battery Negative Cable Disconnection and Connection** .
3. Remove all related panels and components.
4. Visually inspect the damage. Repair as much of the damage as possible.
5. Remove the sealers and anti-corrosion materials from the repair area, as necessary. Refer to **Anti-Corrosion Treatment and Repair** .

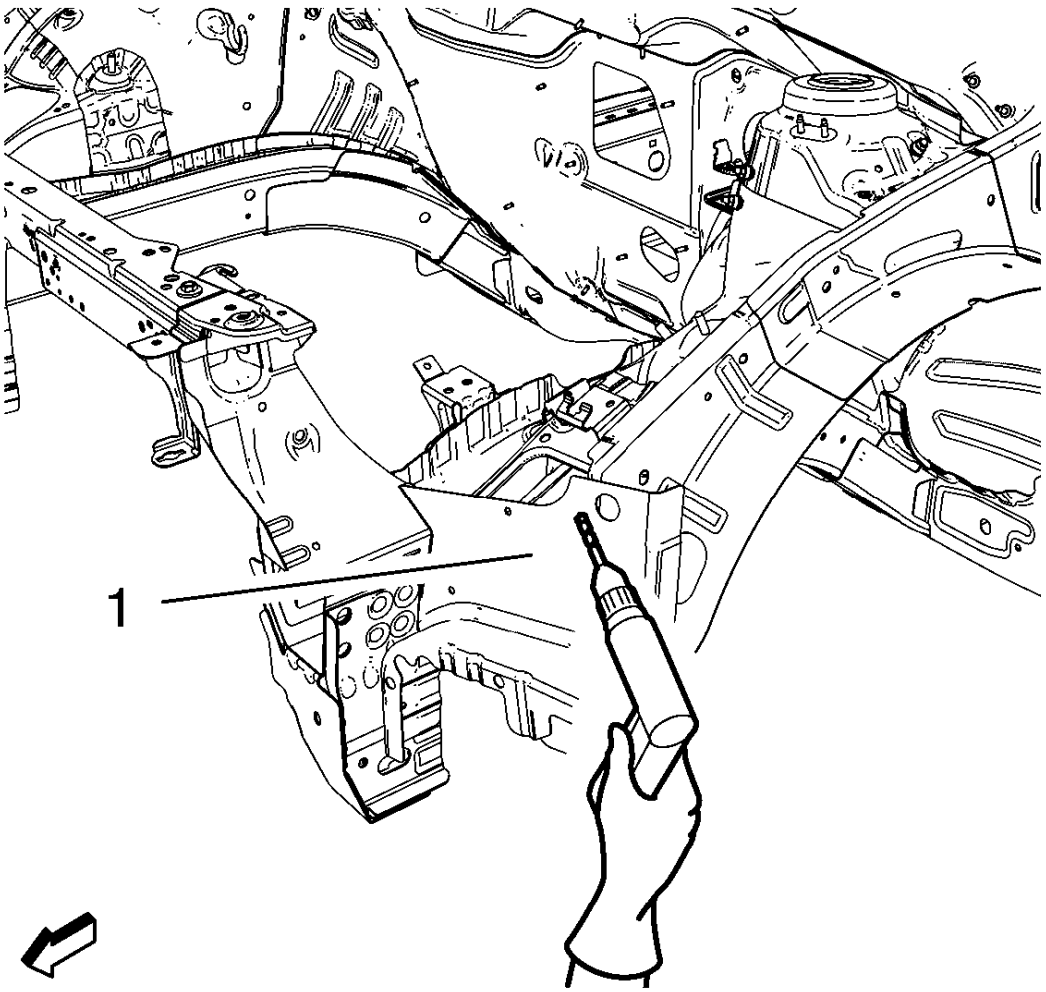

Fig. 49: Drilling Factory Welds At Front Wheelhouse Panel Rear Reinforcement
Courtesy of GENERAL MOTORS COMPANY

6. Locate and mark all the necessary factory welds of the front wheelhouse panel rear reinforcement (1).
7. Drill all factory welds. Note the number and location of welds for installation of the service assembly.

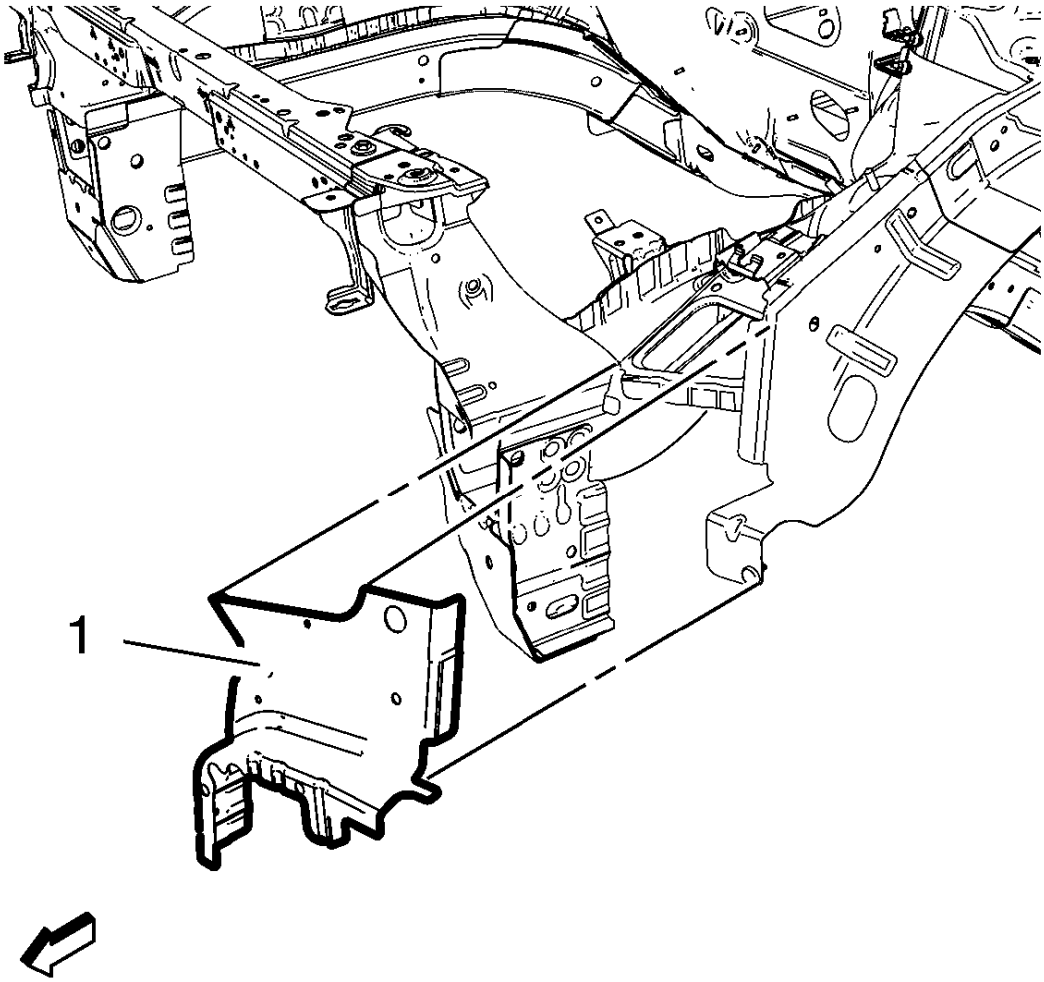

Fig. 50: Front Wheelhouse Panel Rear Reinforcement
Courtesy of GENERAL MOTORS COMPANY

8. Remove the front wheelhouse panel rear reinforcement (1).

Installation Procedure

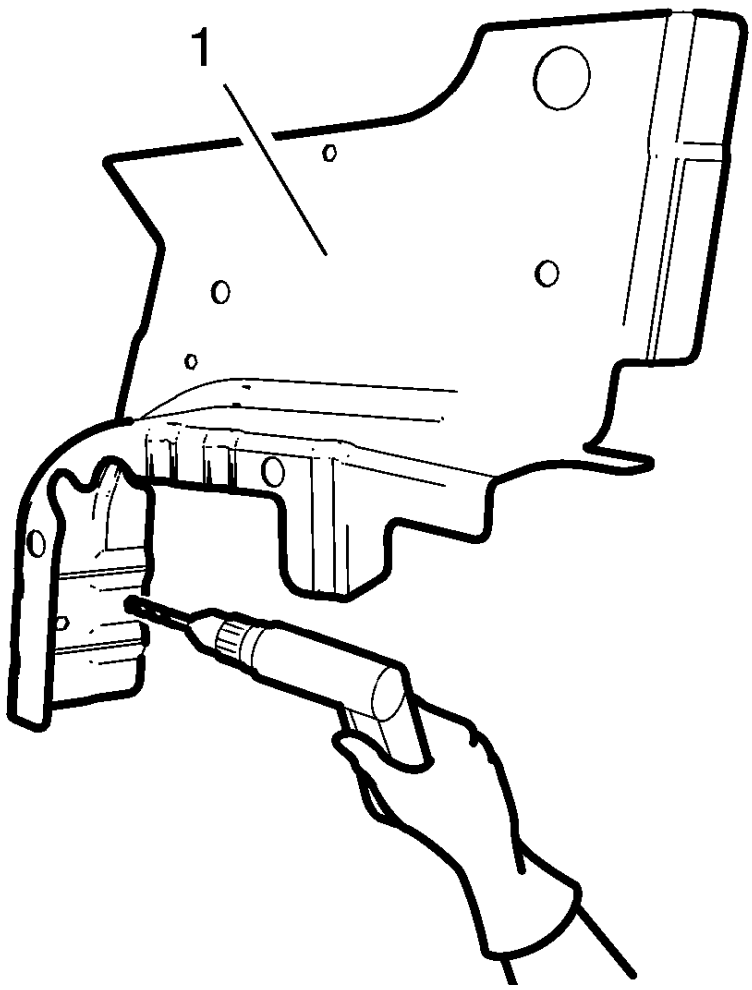

Fig. 51: Drilling Hole For Plug Welding New Front Wheelhouse Panel Rear Reinforcement
Courtesy of GENERAL MOTORS COMPANY

1. Drill 8 mm (5/16 in) for plug welding along the edges of the front wheelhouse panel rear reinforcement (1) as noted from the original panel.

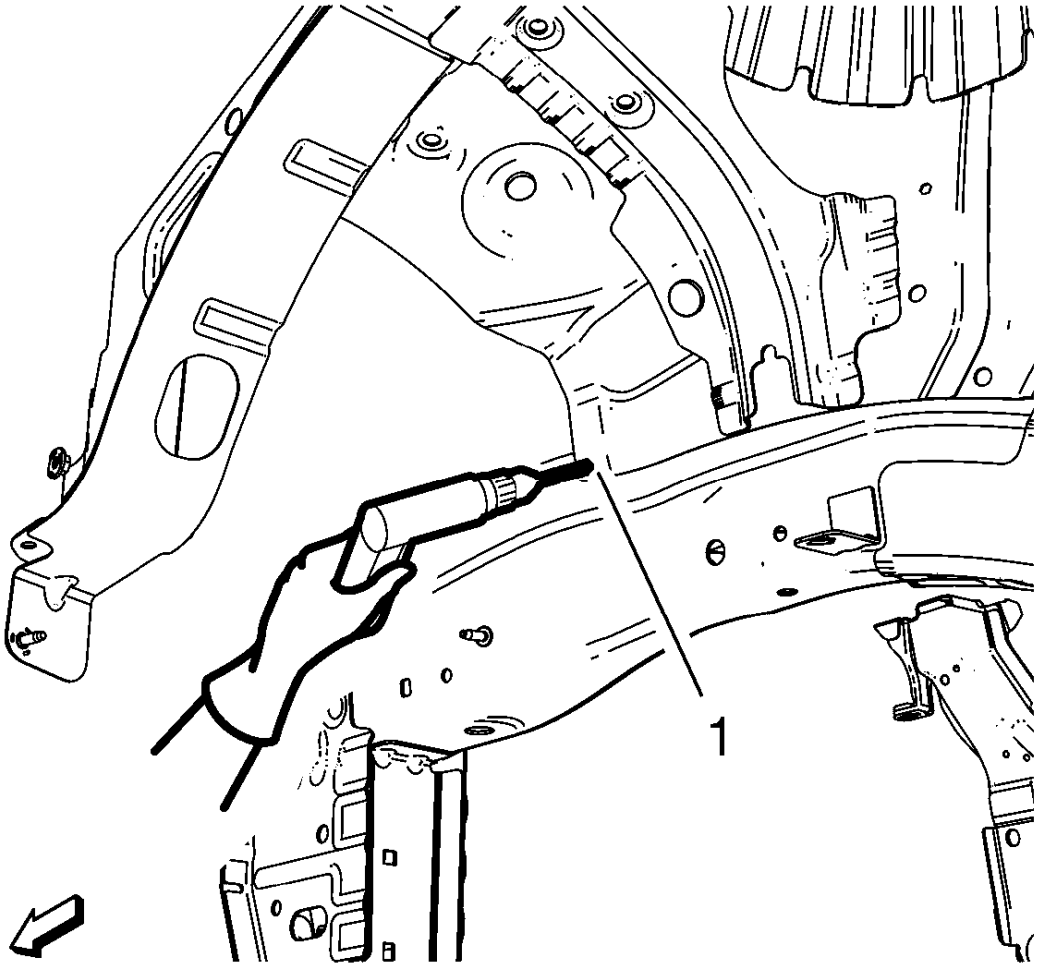

Fig. 52: Drilling Hole For Welding Where Front Wheelhouse Front Panel And Front Wheelhouse Overlap
Courtesy of GENERAL MOTORS COMPANY

2. Drill 8 mm (5/16 in) for plug welding (1) where front wheelhouse front panel and front wheelhouse panel rear reinforcement overlap.
3. Clean and prepare the attaching surfaces for welding.

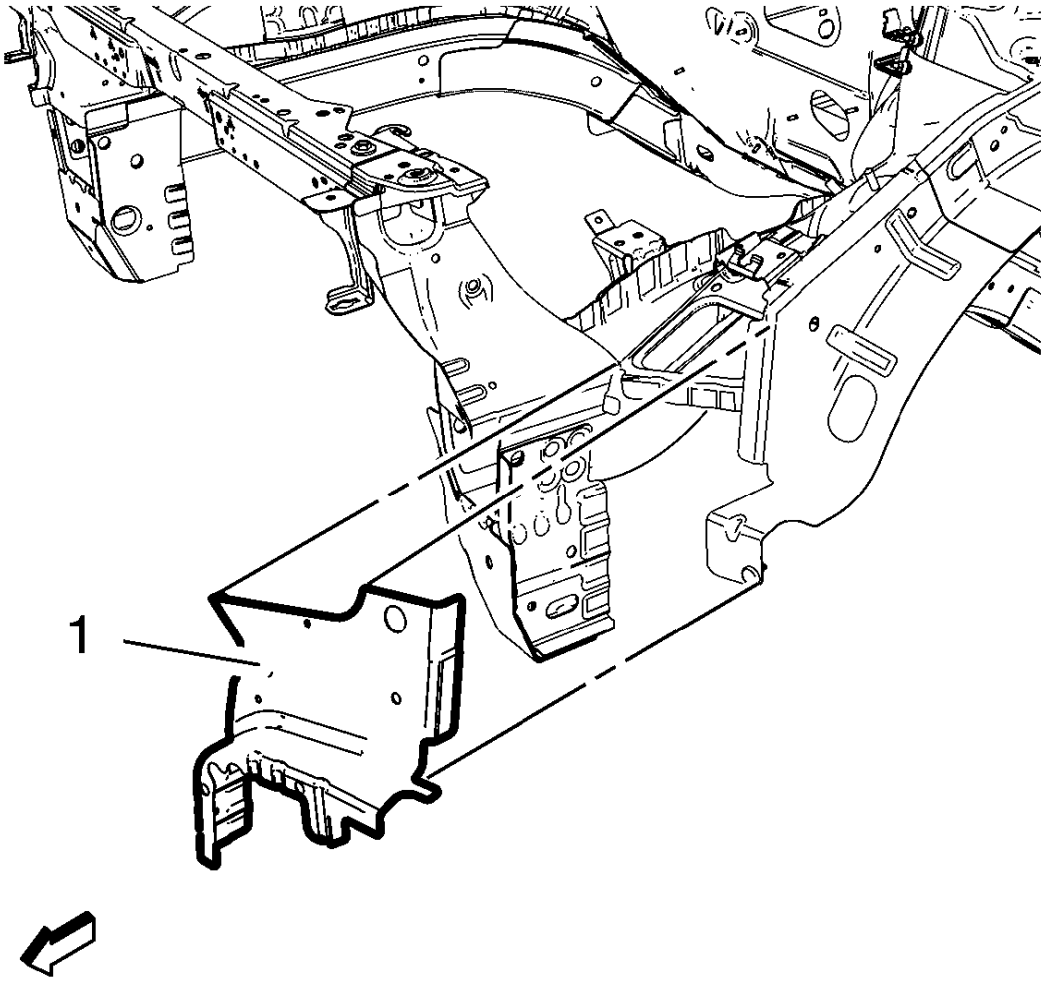

Fig. 53: Front Wheelhouse Panel Rear Reinforcement
Courtesy of GENERAL MOTORS COMPANY

4. Position the front wheelhouse panel rear reinforcement (1) on the vehicle.
5. Verify the fit of the front wheelhouse panel rear reinforcement.
6. Clamp the front wheelhouse panel rear reinforcement into position.

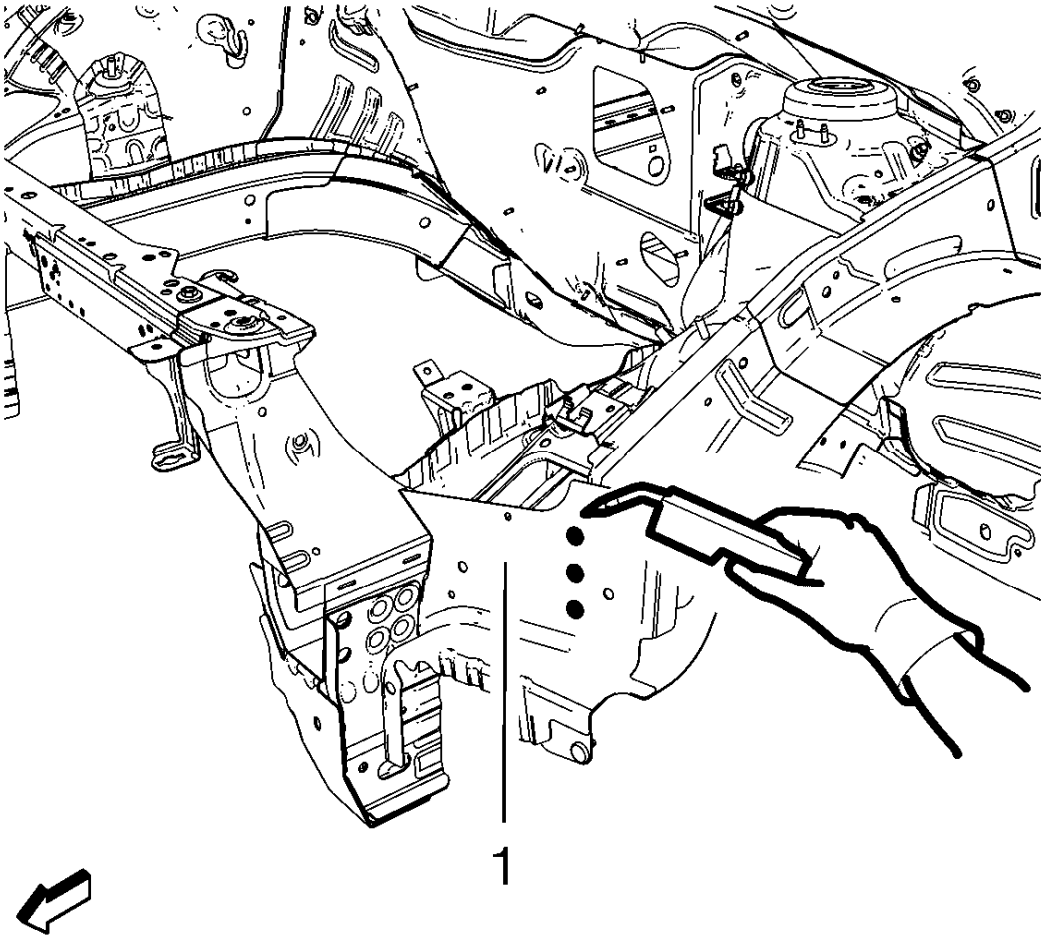

Fig. 54: Welding Front Wheelhouse Panel Rear Reinforcement
Courtesy of GENERAL MOTORS COMPANY

7. Plug weld the front wheelhouse panel rear reinforcement (1) accordingly.

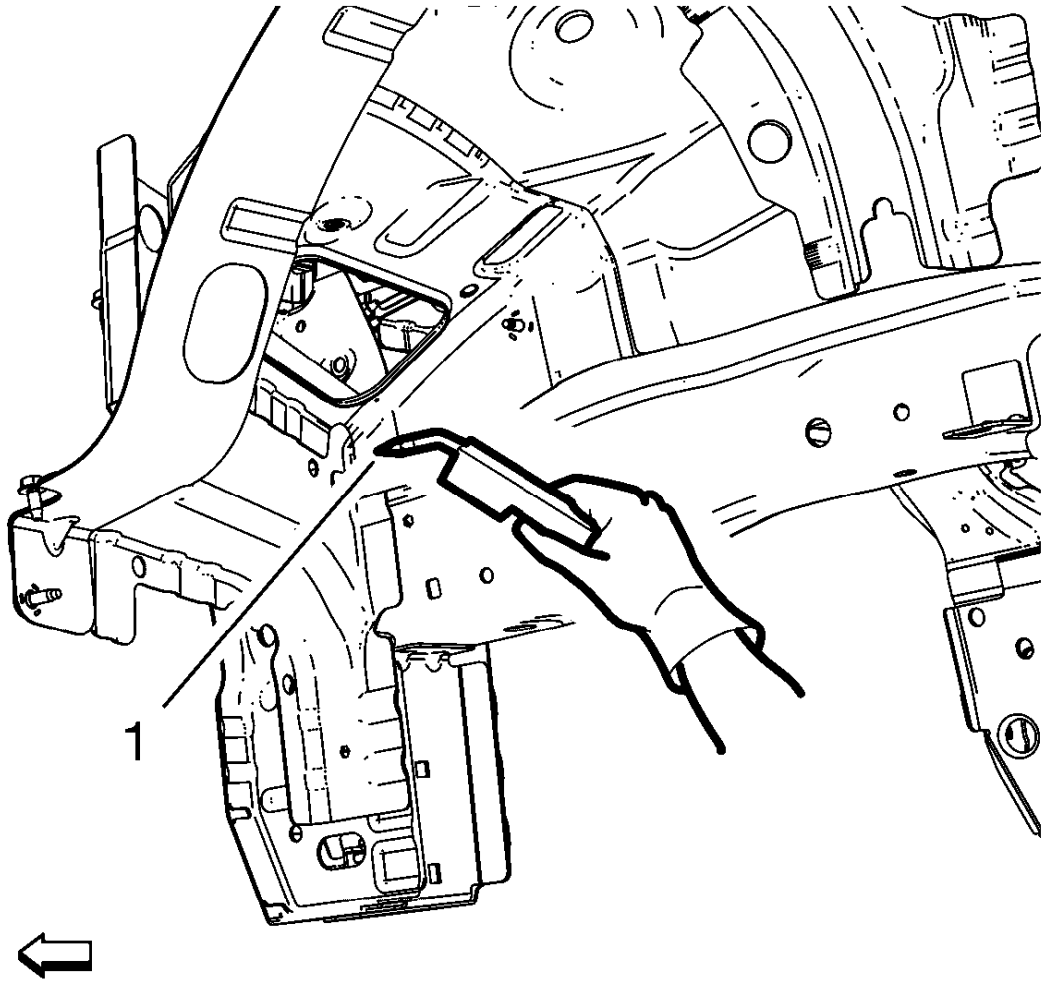

Fig. 55: Welding Joint From Front Wheelhouse Panel Rear Reinforcement To Front Wheelhouse Front Panel
Courtesy of GENERAL MOTORS COMPANY

8. Plug weld (1) the joint from front wheelhouse panel rear reinforcement to front wheelhouse front panel accordingly.
9. Apply the sealers and anti-corrosion materials to the repair area, as necessary. Refer to **Anti-Corrosion Treatment and Repair** .
10. Paint the repaired area. Refer to **Basecoat/Clearcoat Paint Systems** .
11. Install all related panels and components.
12. Connect the negative battery cable. Refer to **Battery Negative Cable Disconnection and Connection** .
13. Enable the SIR system. Refer to **SIR Disabling and Enabling** .

FRONT COMPARTMENT UPPER SIDE RAIL REPLACEMENT

Removal Procedure

WARNING: Refer to Approved Equipment for Collision Repair Warning .

WARNING: Refer to Glass and Sheet Metal Handling Warning .

1. Disable the SIR System. Refer to **SIR Disabling and Enabling** .
2. Disconnect the negative battery cable. Refer to **Battery Negative Cable Disconnection and Connection** .
3. Remove all related panels and components.
4. Visually inspect the damage. Repair as much of the damage as possible.
5. Remove the sealers and anti-corrosion materials from the repair area, as necessary. Refer to **Anti-Corrosion Treatment and Repair** .

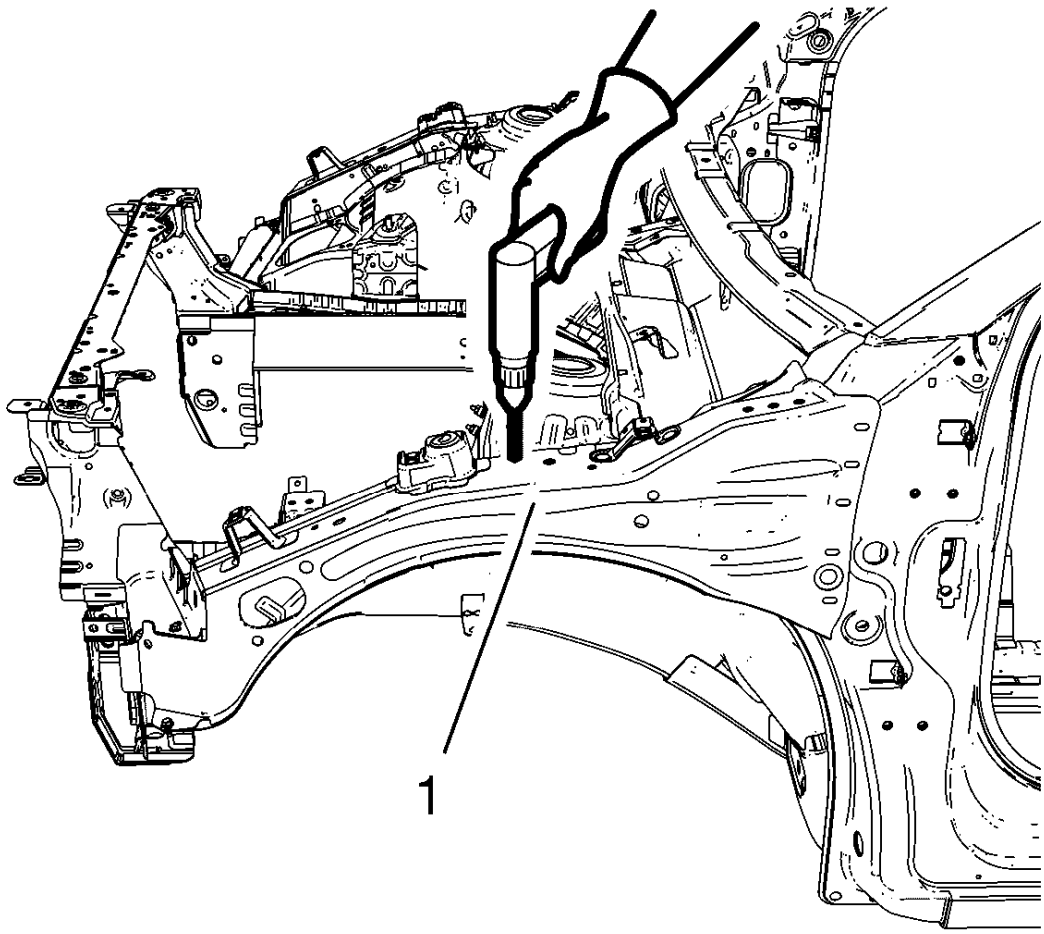

Fig. 56: Drilling Factory Welds And Weld Seams Of Front Compartment Upper Side Rail

Courtesy of GENERAL MOTORS COMPANY

6. Locate and mark all the necessary factory welds and weld seams of the front compartment upper side rail (1).
7. Drill all factory welds. Note the number and location of welds for installation of the service assembly.

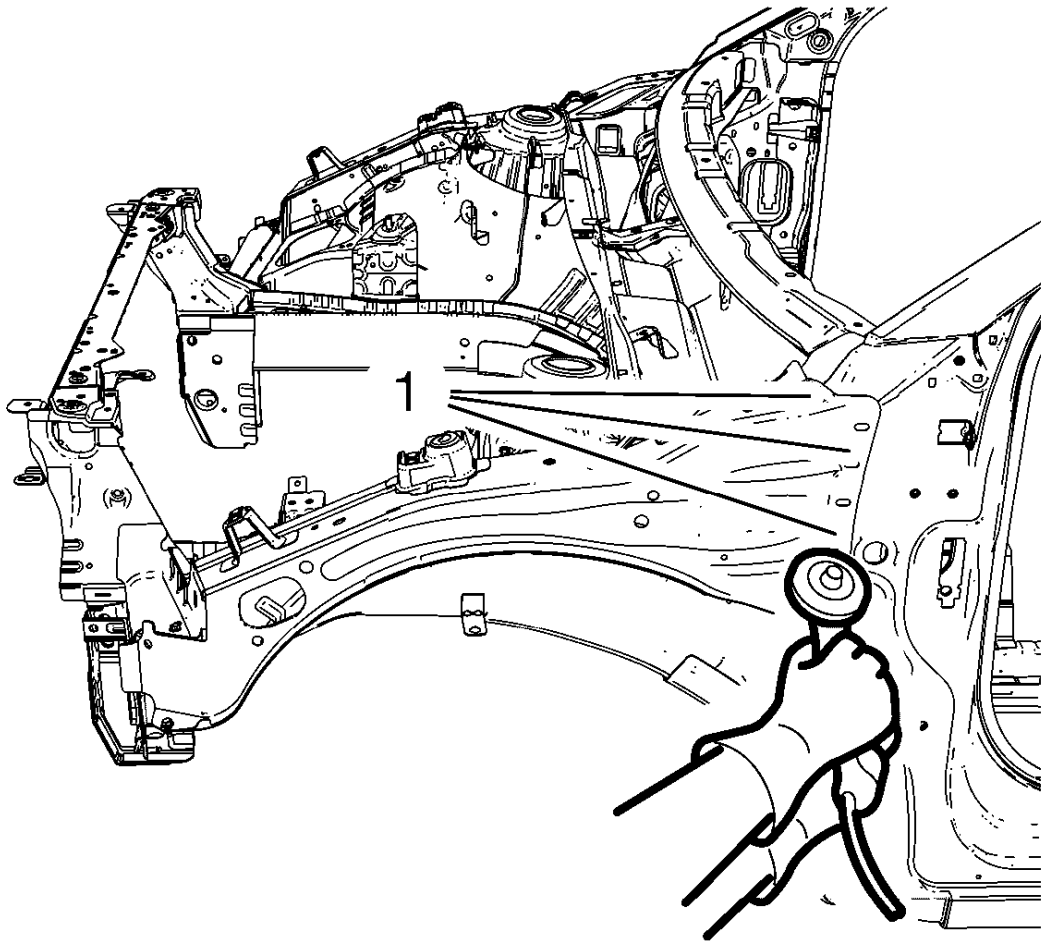

Fig. 57: Grinding Factory Weld Seams Of Front Compartment Upper Side Rail
Courtesy of GENERAL MOTORS COMPANY

8. Grind factory weld seams (1) of the front compartment upper side rail.

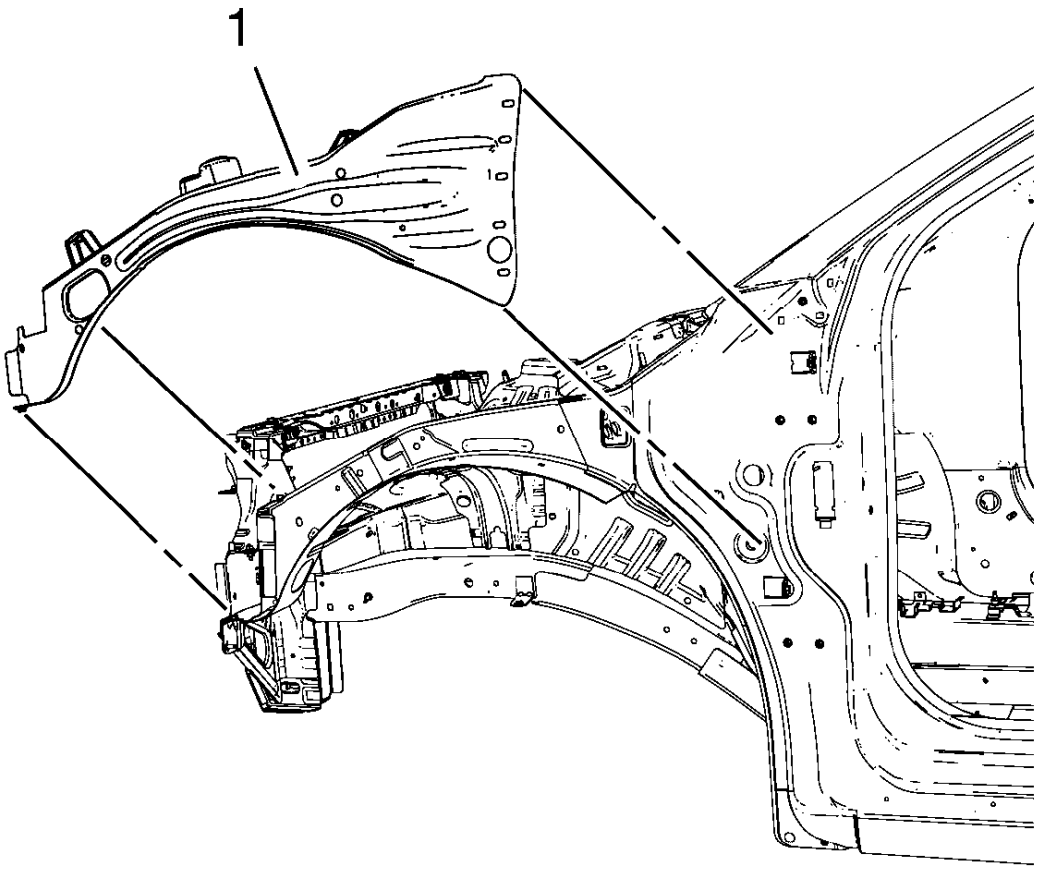

Fig. 58: Front Compartment Upper Side Rail
Courtesy of GENERAL MOTORS COMPANY

9. Remove the front compartment upper side rail (1).

Installation Procedure

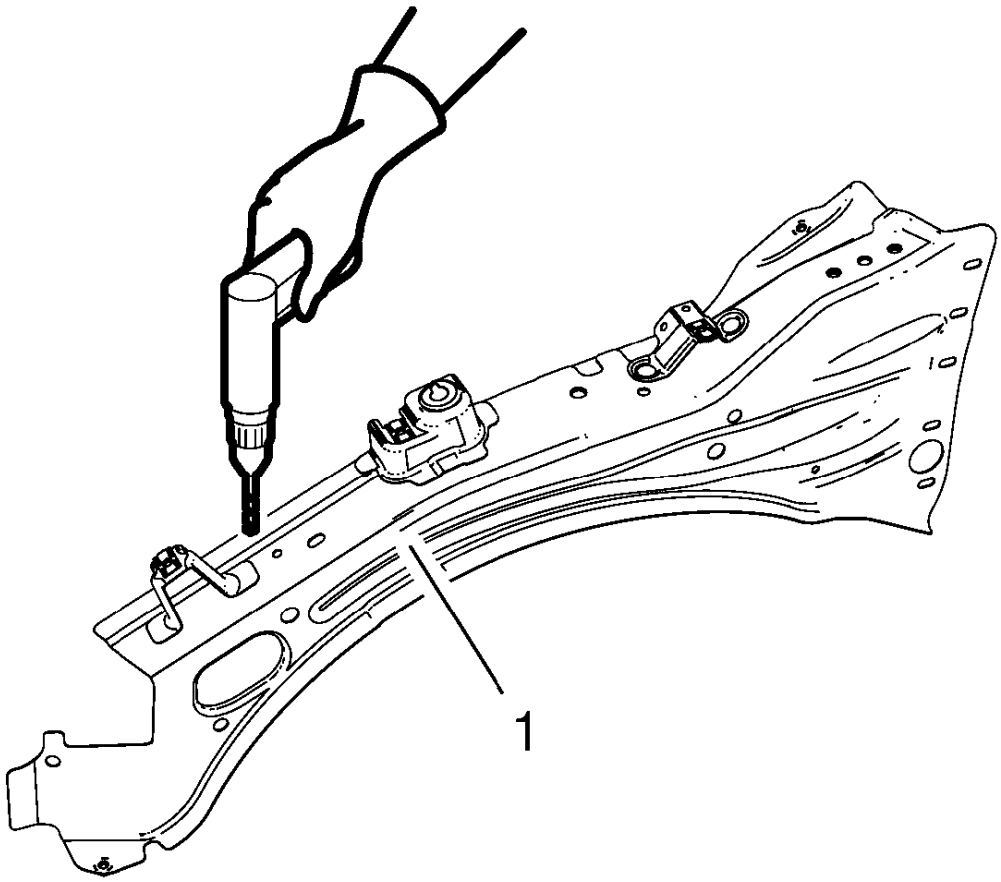

Fig. 59: Drilling Hole For Plug Welding New Front Compartment Upper Side Rail
Courtesy of GENERAL MOTORS COMPANY

1. Drill 8 mm (5/16 in) for plug welding along the edges of the front compartment upper side rail (1) as noted from the original panel.
2. Clean and prepare the attaching surfaces for welding.
3. Position the front compartment upper side rail on the vehicle.
4. Verify the fit of the front compartment upper side rail.
5. Clamp the front compartment upper side rail into position.

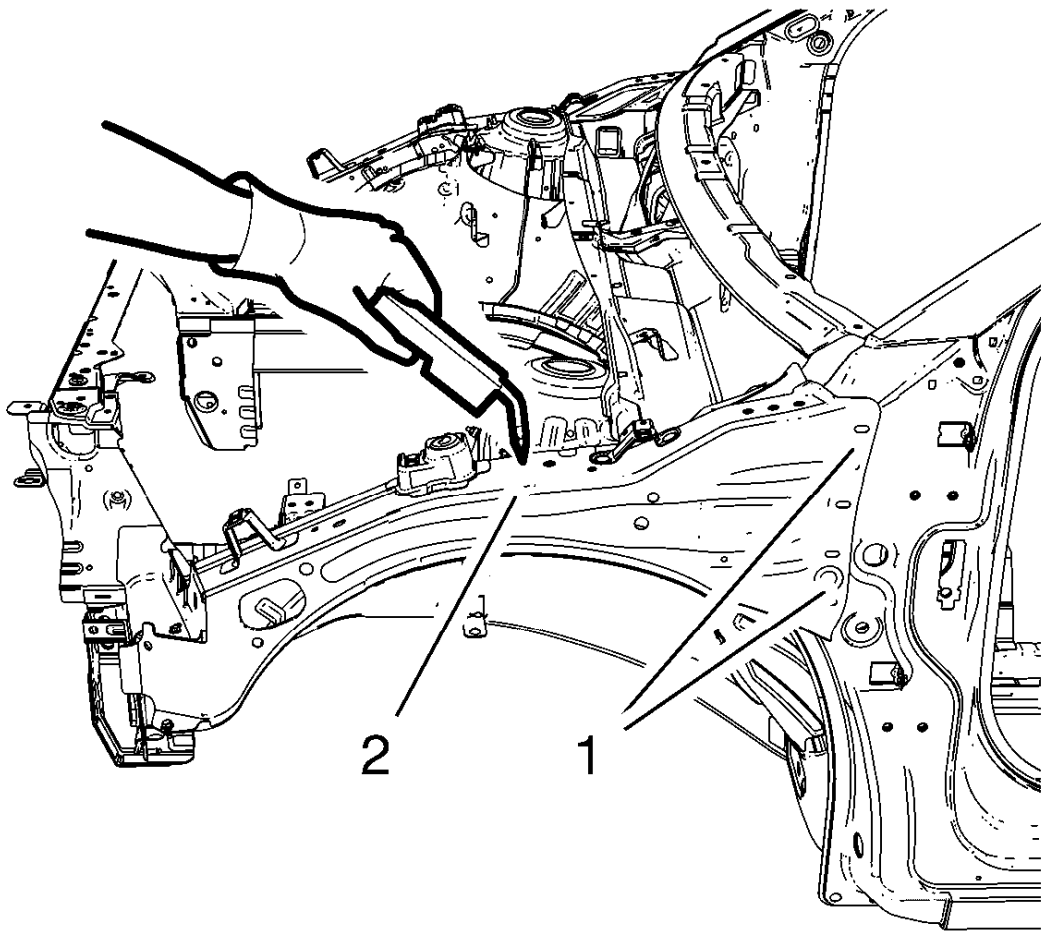

Fig. 60: Welding Front Compartment Upper Side Rail
Courtesy of GENERAL MOTORS COMPANY

NOTE: Plug weld factory slots in the front hinge pillar body area (1) as noted from the original panel.

6. Plug weld the front compartment upper side rail (2) accordingly.
7. Apply the sealers and anti-corrosion materials to the repair area, as necessary. Refer to **Anti-Corrosion Treatment and Repair** .
8. Paint the repaired area. Refer to **Basecoat/Clearcoat Paint Systems** .
9. Install all related panels and components.
10. Connect the negative battery cable. Refer to **Battery Negative Cable Disconnection and Connection** .
11. Enable the SIR system. Refer to **SIR Disabling and Enabling** .

FRONT HINGE PILLAR BODY SECTIONING

Removal Procedure

WARNING: Refer to Approved Equipment for Collision Repair Warning .

WARNING: Refer to Collision Sectioning Warning .

WARNING: Refer to Glass and Sheet Metal Handling Warning .

1. Disable the SIR System. Refer to **SIR Disabling and Enabling** .
2. Disconnect the negative battery cable. Refer to **Battery Negative Cable Disconnection and Connection** .
3. Remove all related panels and components.
4. Visually inspect the damage. Repair as much of the damage as possible.
5. Remove the sealers and anti-corrosion materials from the repair area, as necessary. Refer to **Anti-Corrosion Treatment and Repair** .

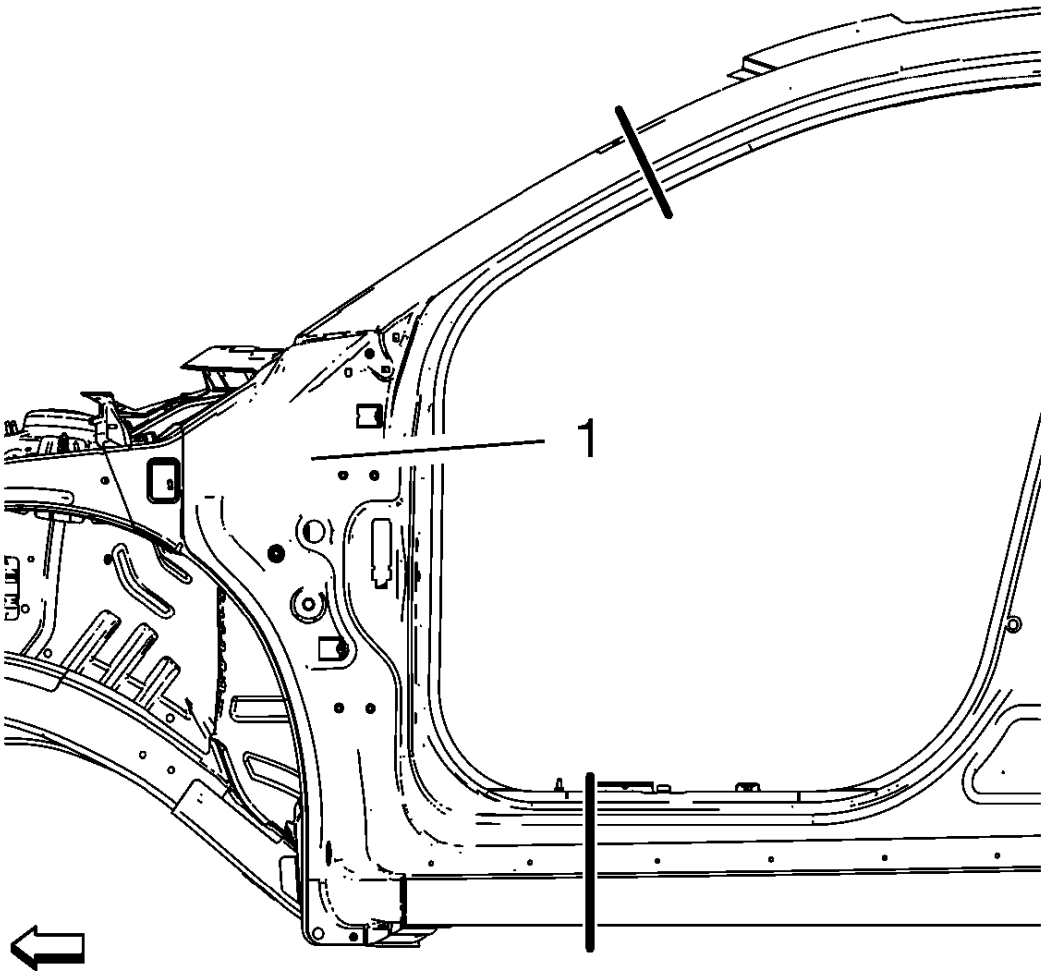

Fig. 61: Identifying Cut Lines On Front Hinge Pillar Body
Courtesy of GENERAL MOTORS COMPANY

6. Create cut lines on the front hinge pillar body (1).

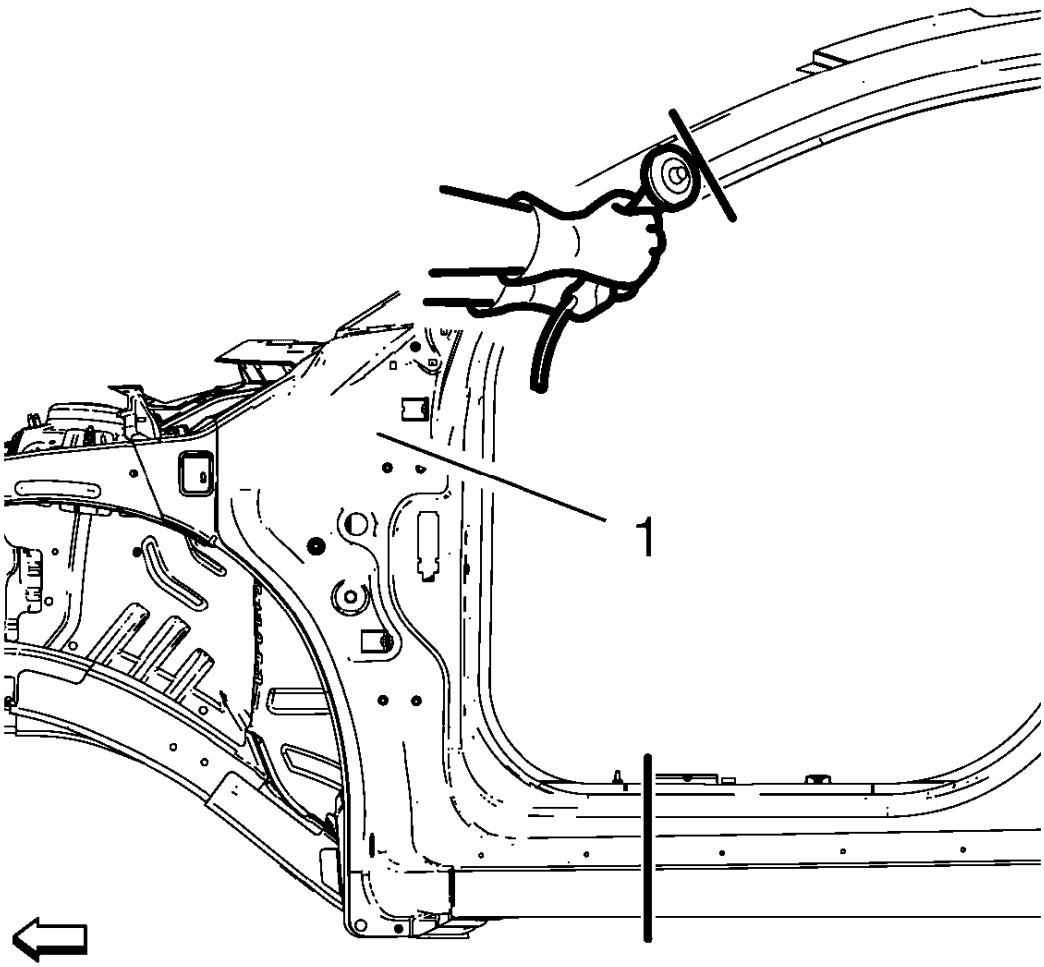

Fig. 62: Cutting Front Hinge Pillar Body
Courtesy of GENERAL MOTORS COMPANY

NOTE: Do not damage any inner panels or reinforcements.

7. Cut the front hinge pillar body (1) where sectioning is to be performed.

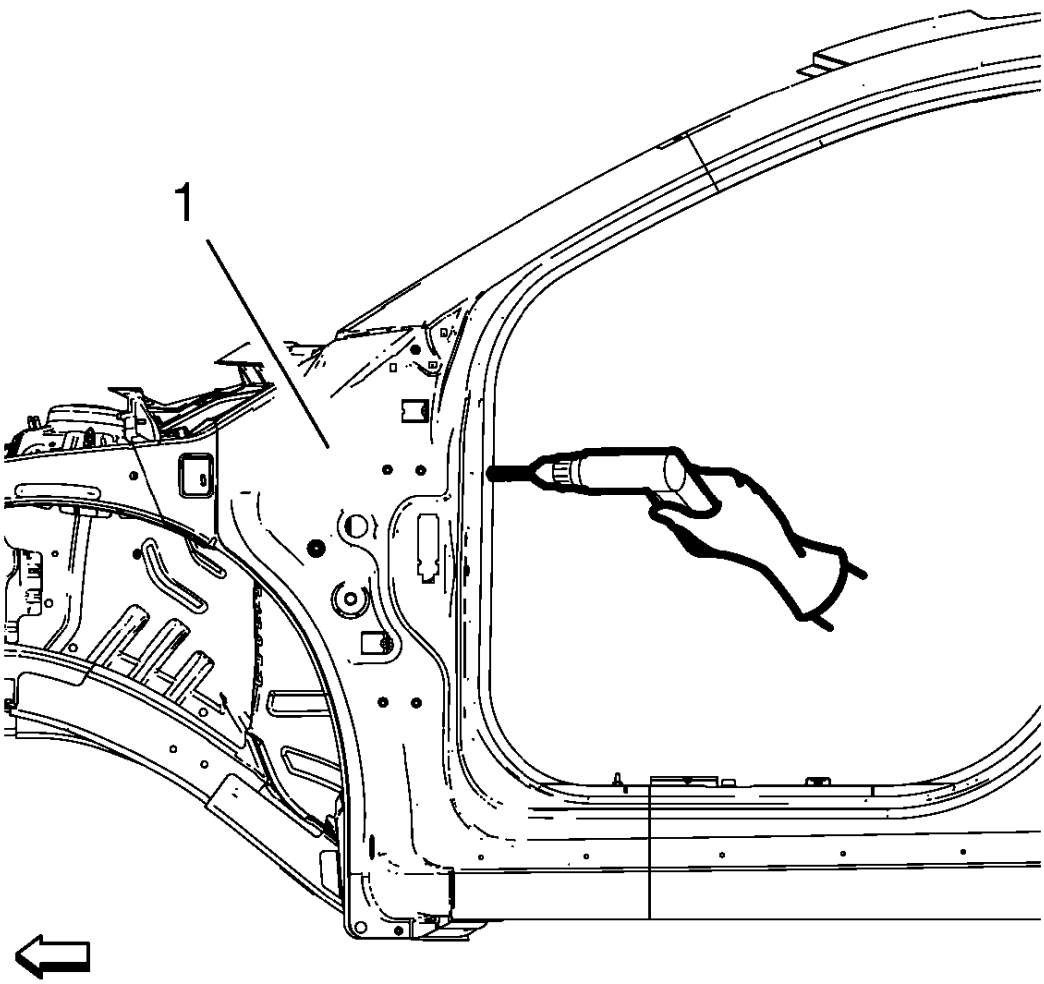

Fig. 63: Drilling Factory Welds From Front Hinge Pillar Body
Courtesy of GENERAL MOTORS COMPANY

8. Locate and mark all the necessary factory welds of the front hinge pillar body (1).
9. Drill all factory welds. Note the number and location of welds for installation of the service assembly.

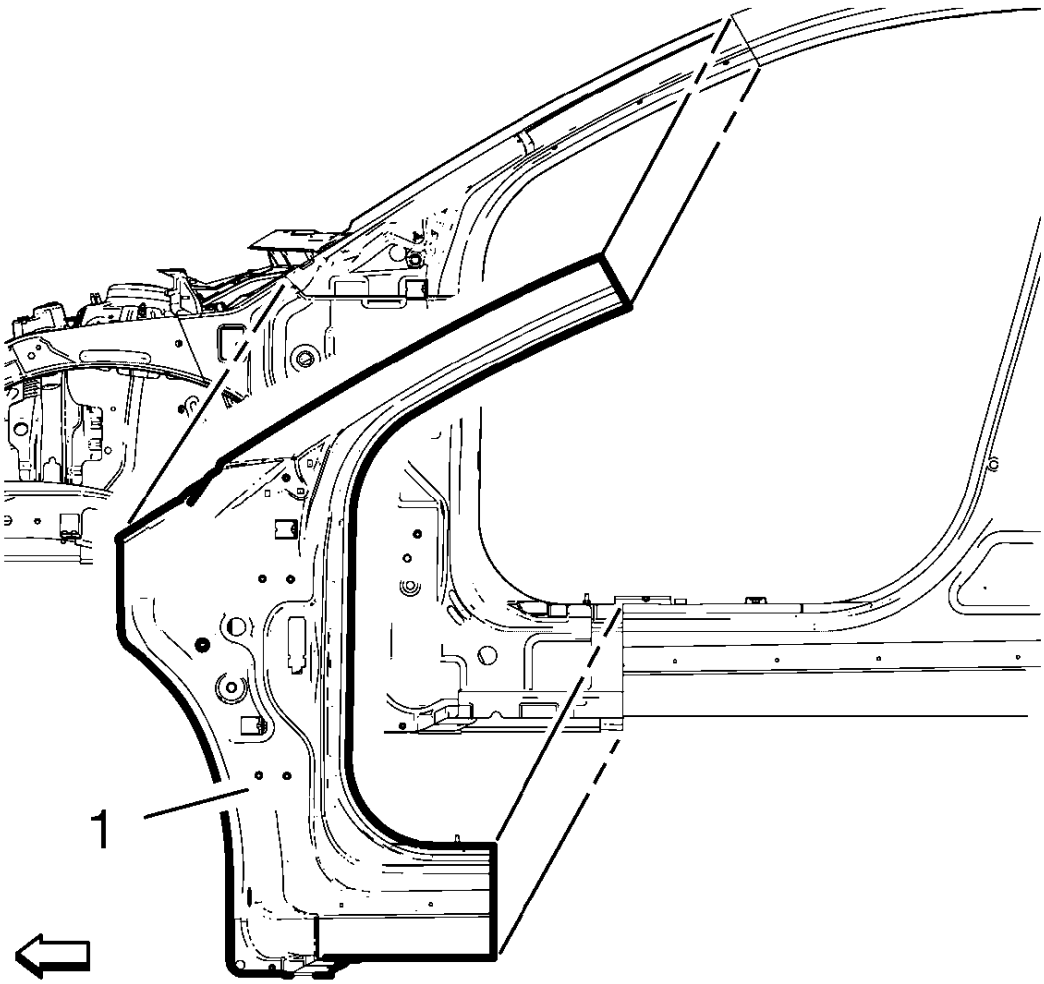

Fig. 64: Front Hinge Pillar Body
Courtesy of GENERAL MOTORS COMPANY

10. Remove the damaged front hinge pillar body (1).

Installation Procedure

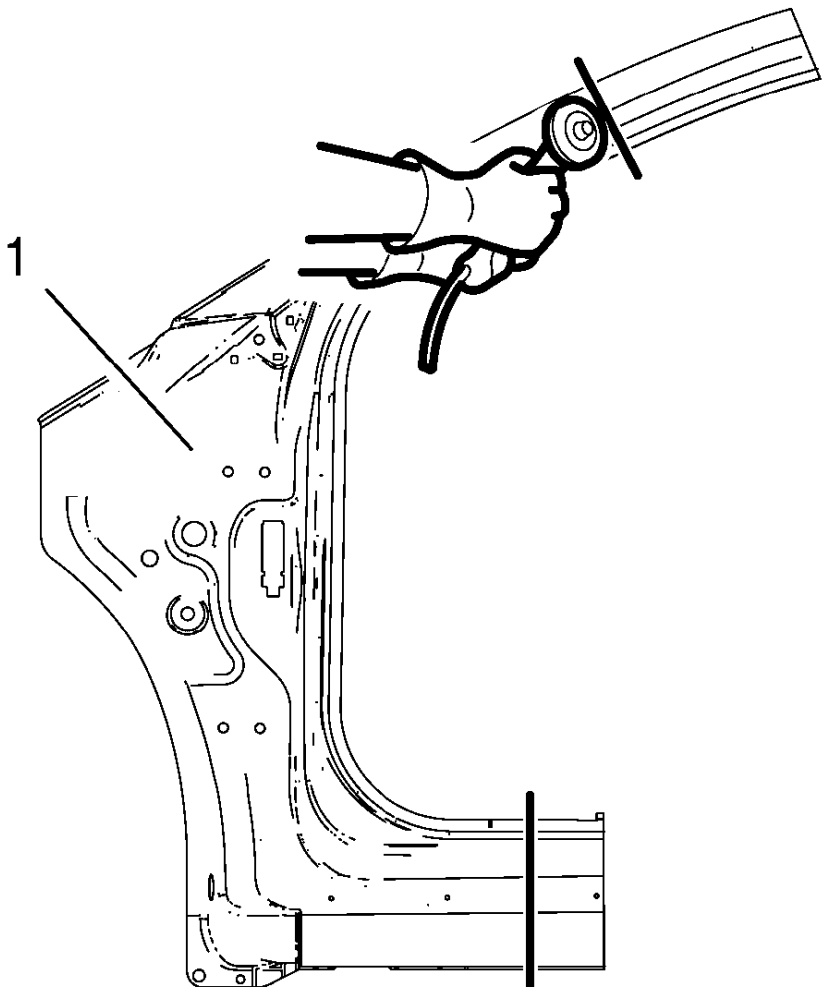

Fig. 65: Cutting New Front Hinge Pillar Body
Courtesy of GENERAL MOTORS COMPANY

1. Cut the front hinge pillar body (1) in corresponding locations to fit the remaining original panel. The sectioning joint should be trimmed to allow a gap of one-and-one-half-times the metal thickness at the sectioning joint.
2. Create a 50 mm (2 in) backing plate from the unused portion of the service part.
3. Drill 8 mm (5/16 in) along the sectioning cut on the remaining original part. Locate these holes 13 mm (1/2 in) from the edge of part and spaced 40 mm (1 1/2 in) apart.
4. Prepare all mating surfaces as necessary.
5. Fit the backing plates halfway into the sectioning joints, clamp in place and plug weld to the vehicle.
6. Align the front hinge pillar body.

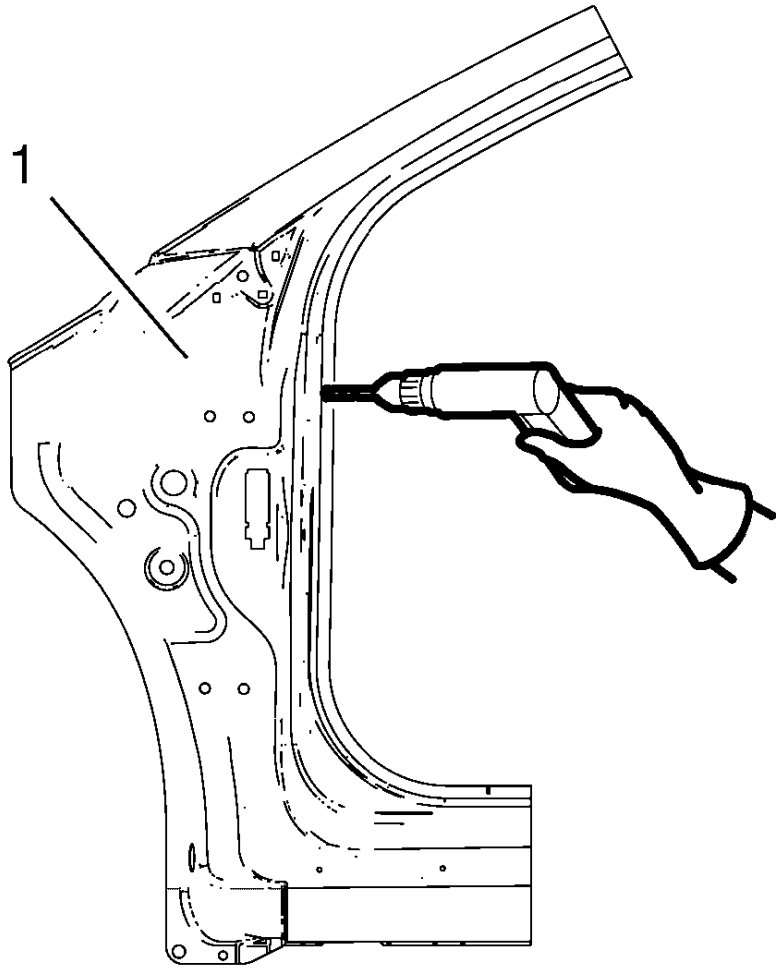

Fig. 66: Drilling Hole For Plug Welding New Front Hinge Pillar Body
Courtesy of GENERAL MOTORS COMPANY

7. Drill 8 mm (5/16 in) for plug welding along the edges of the front hinge pillar body (1) as noted from the original panel.
8. Clean and prepare the attaching surfaces for welding.
9. Position the front hinge pillar body on the vehicle.
10. Verify the fit of the front hinge pillar body.
11. Clamp the front hinge pillar body into position.

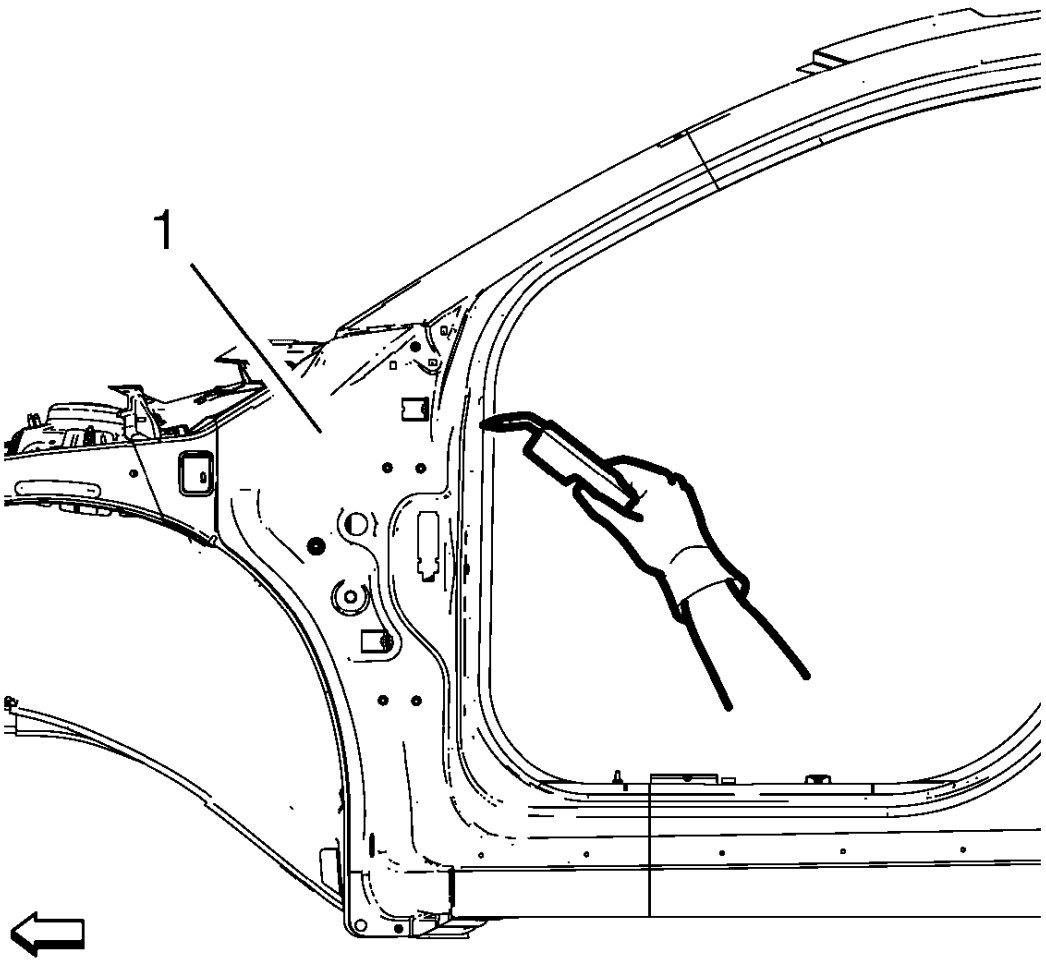

Fig. 67: Welding Front Hinge Pillar Body
Courtesy of GENERAL MOTORS COMPANY

12. Plug weld the front hinge pillar body (1) accordingly.
13. To create a solid weld with minimum heat distortion, make 25 mm (1 in) stitch welds along the seam with 25 mm (1 in) gaps between them. Then go back and complete the stitch weld.
14. Apply the sealers and anti-corrosion materials to the repair area, as necessary. Refer to **Anti-Corrosion Treatment and Repair** .
15. Paint the repaired area. Refer to **Basecoat/Clearcoat Paint Systems** .
16. Install all related panels and components.
17. Connect the negative battery cable. Refer to **Battery Negative Cable Disconnection and Connection** .
18. Enable the SIR system. Refer to **SIR Disabling and Enabling** .

BODY HINGE PILLAR LOWER REINFORCEMENT REPLACEMENT

Removal Procedure

WARNING: Refer to Approved Equipment for Collision Repair Warning .

WARNING: Refer to Collision Sectioning Warning .

WARNING: Refer to Glass and Sheet Metal Handling Warning .

1. Disable the SIR System. Refer to **SIR Disabling and Enabling** .
2. Disconnect the negative battery cable. Refer to **Battery Negative Cable Disconnection and Connection** .
3. Remove all related panels and components.
4. Visually inspect the damage. Repair as much of the damage as possible.
5. Remove the sealers and anti-corrosion materials from the repair area, as necessary. Refer to **Anti-Corrosion Treatment and Repair** .

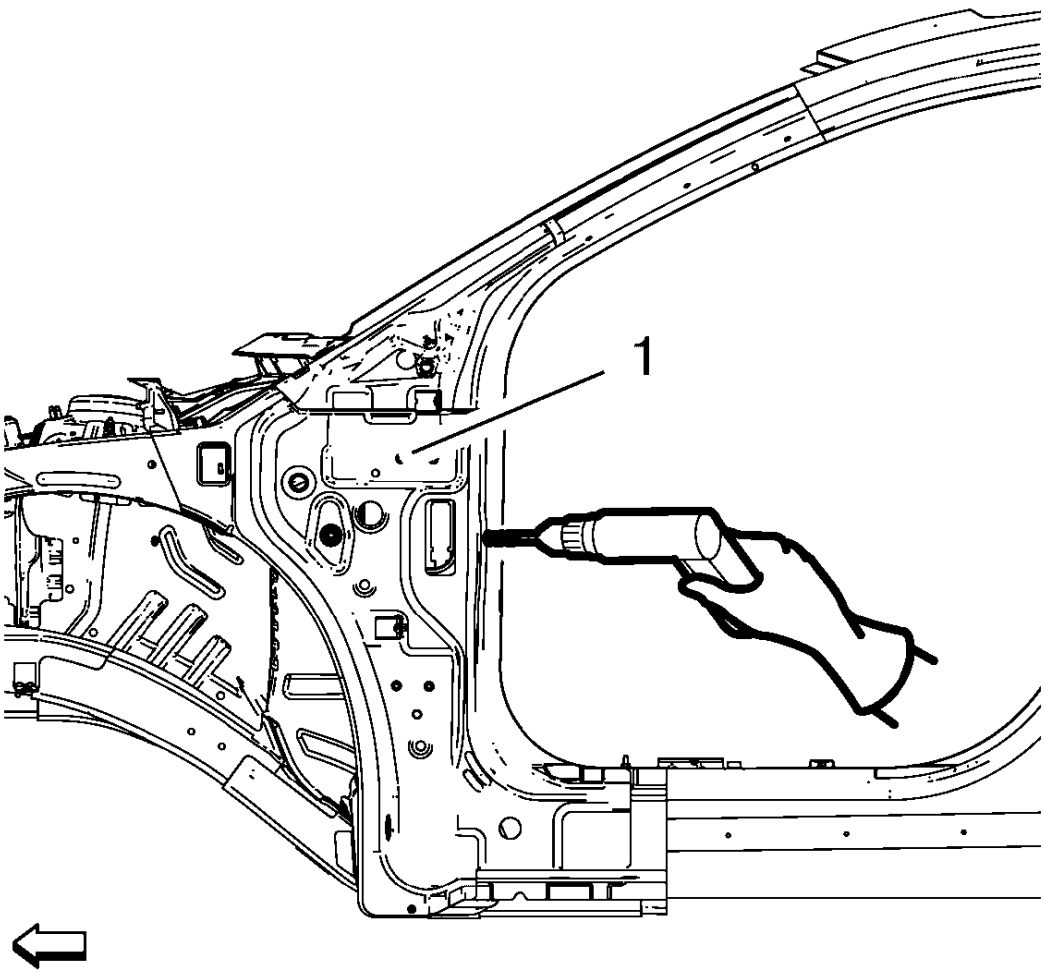

Fig. 68: Drilling Factory Welds Of Body Hinge Pillar Lower Reinforcement
Courtesy of GENERAL MOTORS COMPANY

6. Locate and mark all the necessary factory welds of the body hinge pillar lower reinforcement (1).
7. Drill all factory welds. Note the number and location of welds for installation of the service assembly.

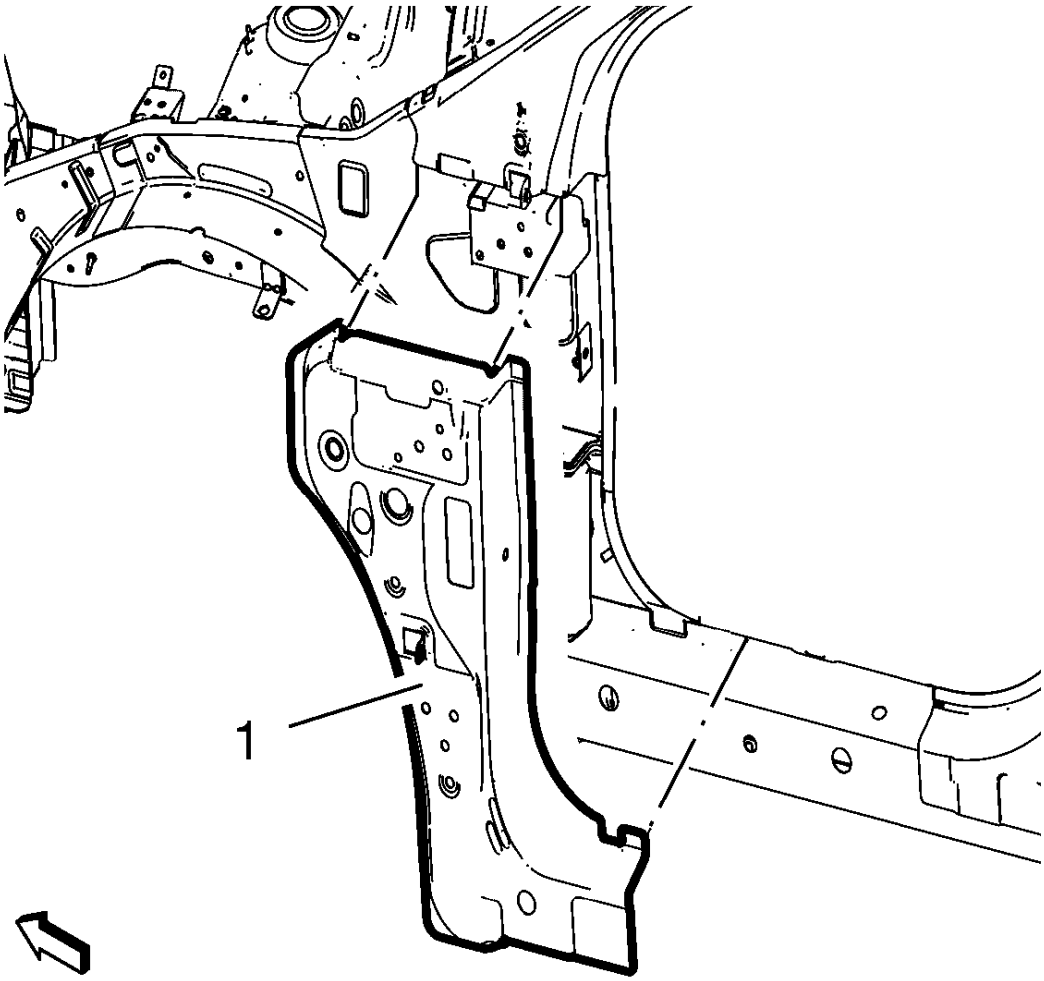

Fig. 69: Body Hinge Pillar Lower Reinforcement
Courtesy of GENERAL MOTORS COMPANY

8. Remove the damaged body hinge pillar lower reinforcement (1).

Installation Procedure

1. Prepare all mating surfaces as necessary.
2. Align the body hinge pillar lower reinforcement.

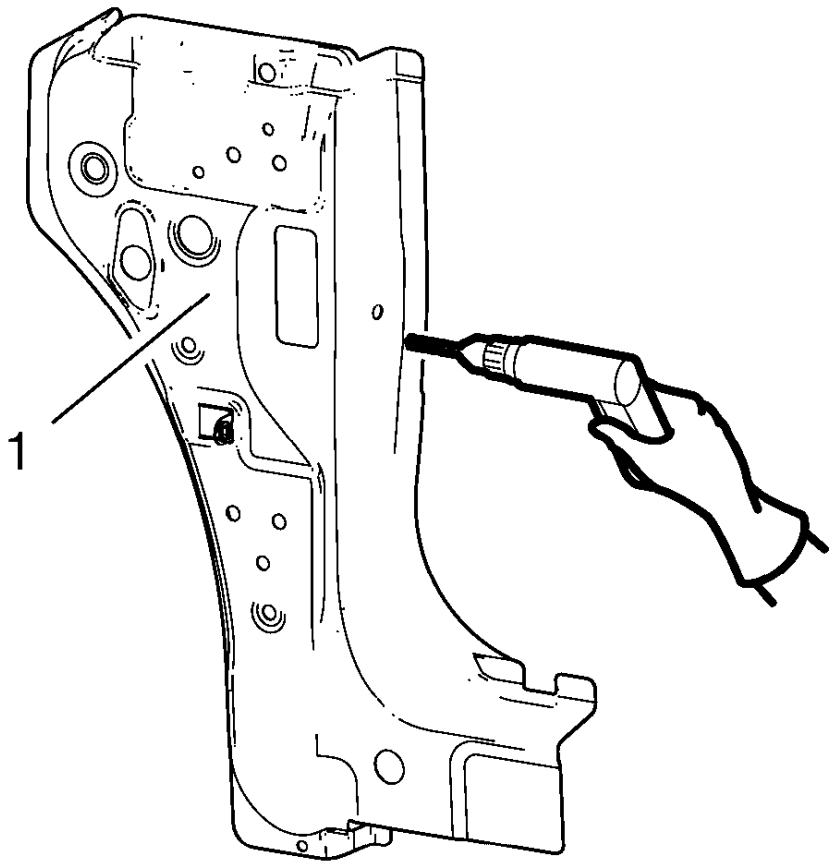

Fig. 70: Drilling Hole For Plug Welding Body Hinge Pillar Lower Reinforcement
Courtesy of GENERAL MOTORS COMPANY

3. Drill 8 mm (5/16 in) for plug welding along the edges of the body hinge pillar lower reinforcement (1) as noted from the original panel.
4. Clean and prepare the attaching surfaces for welding.

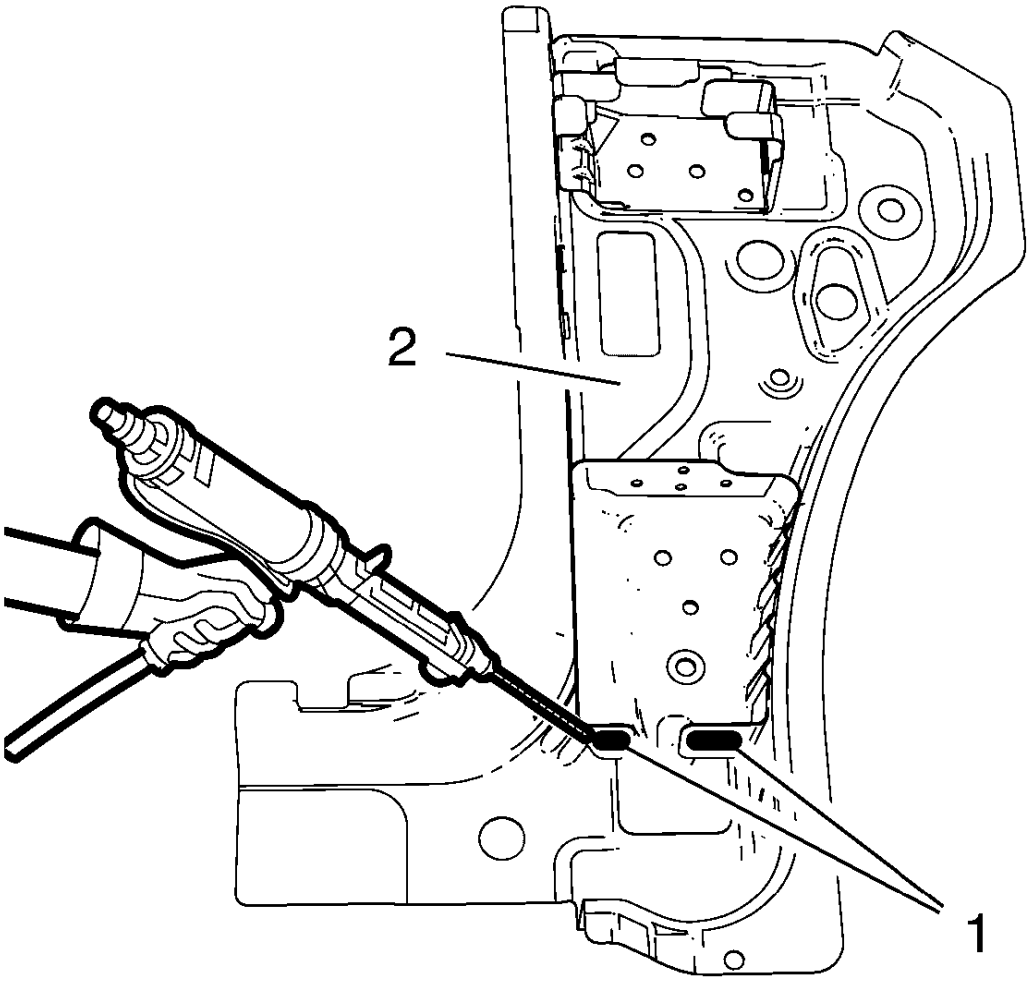

Fig. 71: Applying Adhesive To Body Hinge Pillar Lower Reinforcement
Courtesy of GENERAL MOTORS COMPANY

5. Apply adhesive (1) to body hinge pillar lower reinforcement (2).
6. Position the body hinge pillar lower reinforcement on the vehicle.
7. Verify the fit of the body hinge pillar lower reinforcement.
8. Clamp the body hinge pillar lower reinforcement into position.

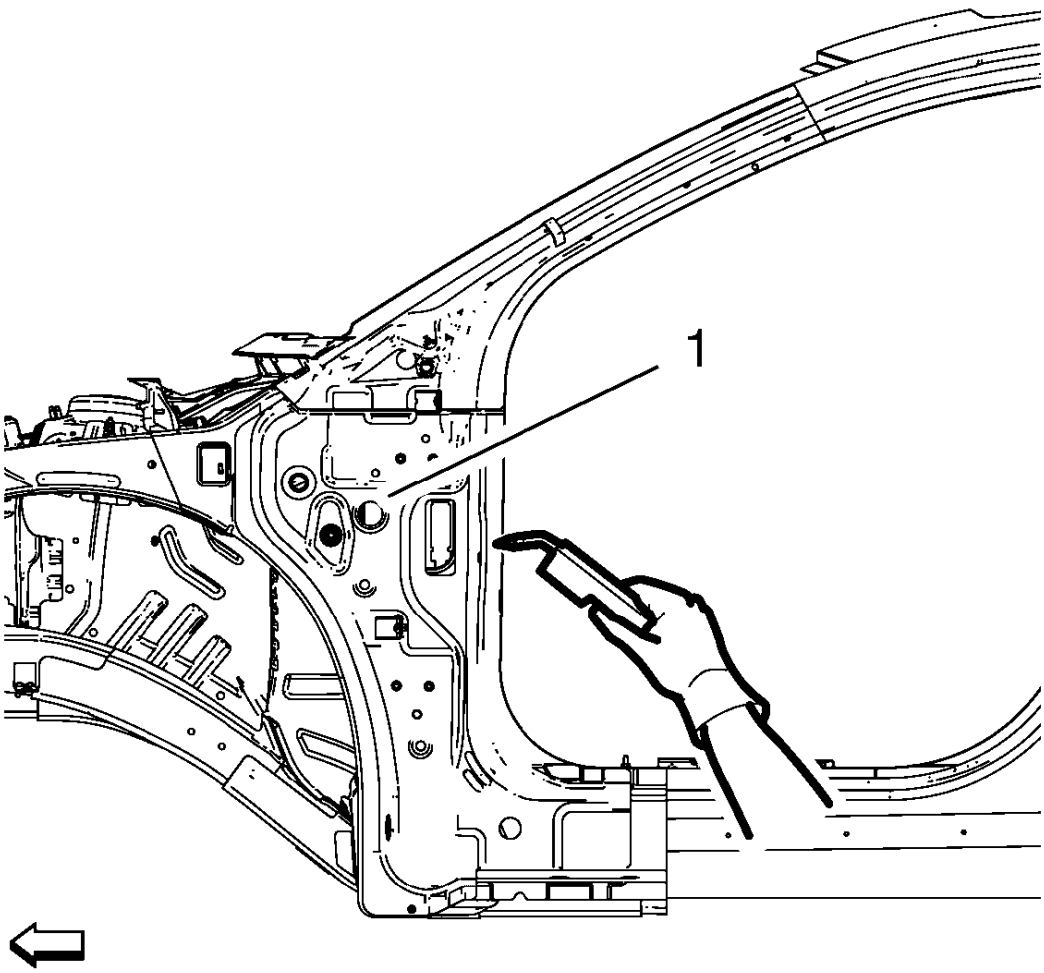

Fig. 72: Welding Body Hinge Pillar Lower Reinforcement
Courtesy of GENERAL MOTORS COMPANY

9. Plug weld the body hinge pillar lower reinforcement (1) accordingly.
10. To create a solid weld with minimum heat distortion, make 25 mm (1 in) stitch welds along the seam with 25 mm (1 in) gaps between them. Then go back and complete the stitch weld.
11. Apply the sealers and anti-corrosion materials to the repair area, as necessary. Refer to **Anti-Corrosion Treatment and Repair** .
12. Paint the repaired area. Refer to **Basecoat/Clearcoat Paint Systems** .
13. Install all related panels and components.
14. Connect the negative battery cable. Refer to **Battery Negative Cable Disconnection and Connection** .
15. Enable the SIR system. Refer to **SIR Disabling and Enabling** .

ROOF OUTER PANEL REPLACEMENT

Removal Procedure

WARNING: Refer to Approved Equipment for Collision Repair Warning .

1. Disable the SIR System. Refer to **SIR Disabling and Enabling** .
2. Disconnect the negative battery cable. Refer to **Battery Negative Cable Disconnection and Connection** .
3. Remove all related panels and components.
4. Visually inspect the damage. Repair as much of the damage as possible.
5. Remove the sealers and anti-corrosion materials from the repair area, as necessary. Refer to **Anti-Corrosion Treatment and Repair** .
6. Locate and mark all factory welds.

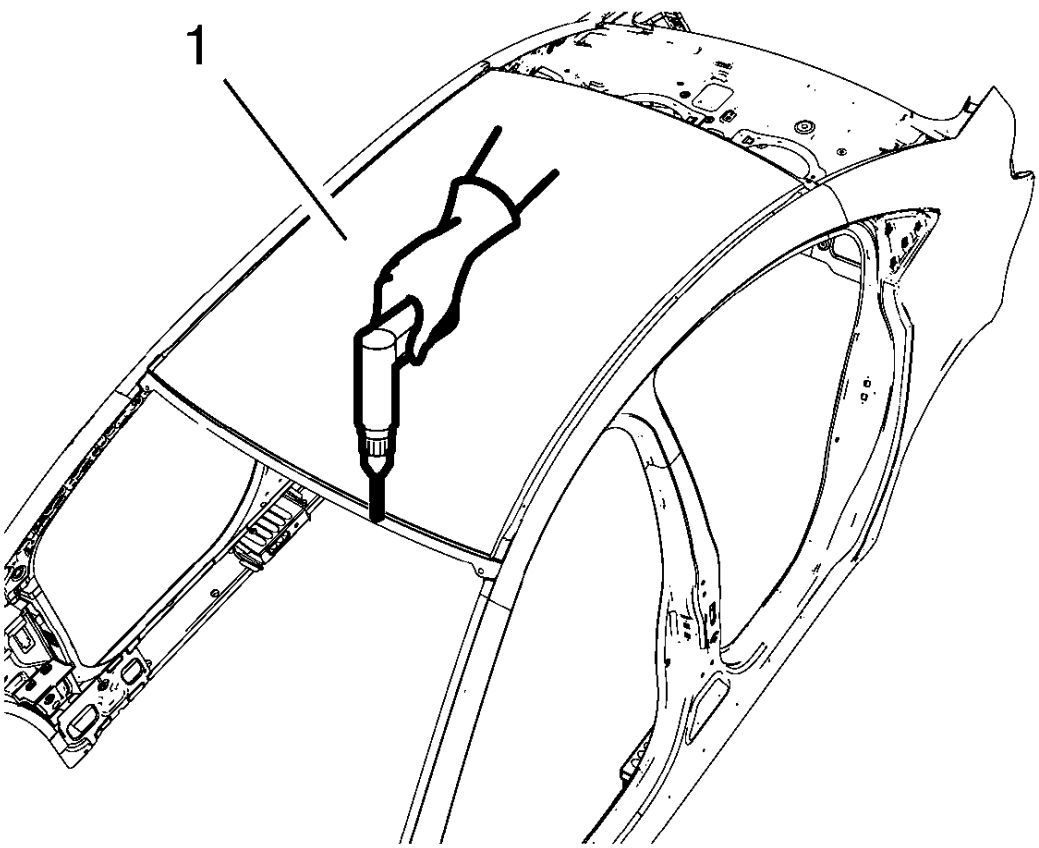

Fig. 73: Drill All Roof Outer Panel Factory Welds
Courtesy of GENERAL MOTORS COMPANY

7. Drill all factory welds (1). Note the number and location of welds for installation of the service assembly.
8. Cut the adhesive with an appropriate tool.

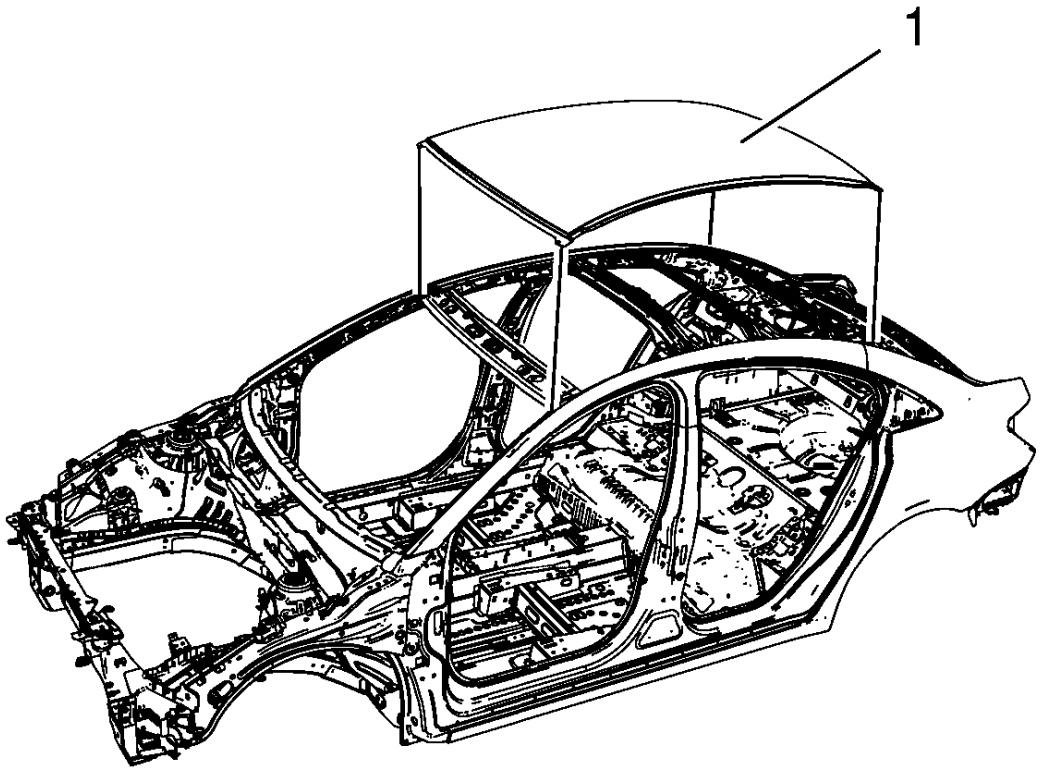

Fig. 74: Roof Panel
Courtesy of GENERAL MOTORS COMPANY

9. Remove the damaged roof panel (1).

Installation Procedure

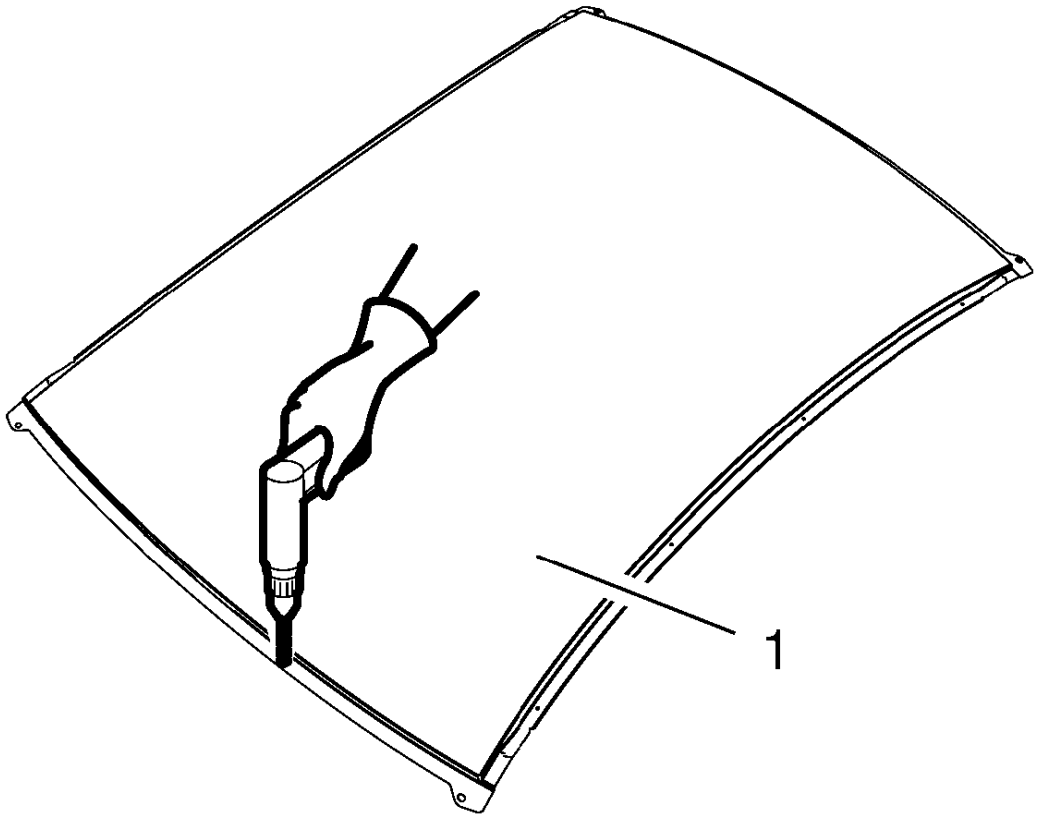

Fig. 75: Drilling New Roof Outer Panel For Welding
Courtesy of GENERAL MOTORS COMPANY

1. Drill 8 mm (5/16 in) for plug welding along the edges of the service panel (1) as noted from the original panel.
2. Clean and prepare the attaching surfaces for welding.

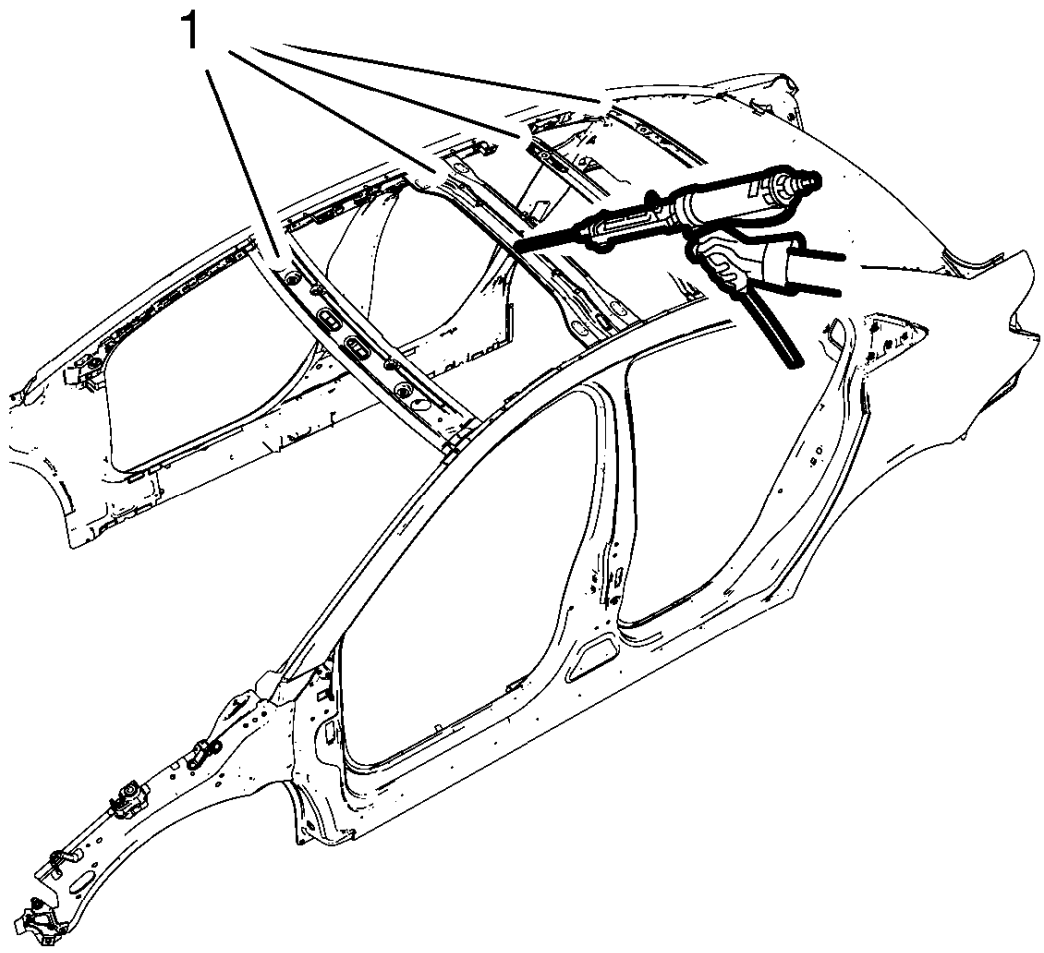

Fig. 76: Applying One-Part Windshield Urethane Adhesive
Courtesy of GENERAL MOTORS COMPANY

3. Apply one-part windshield urethane adhesive (1) as noted from the original panel.
4. Position the roof panel on the vehicle.
5. Verify the fit of the panel.
6. Clamp the panel into position.

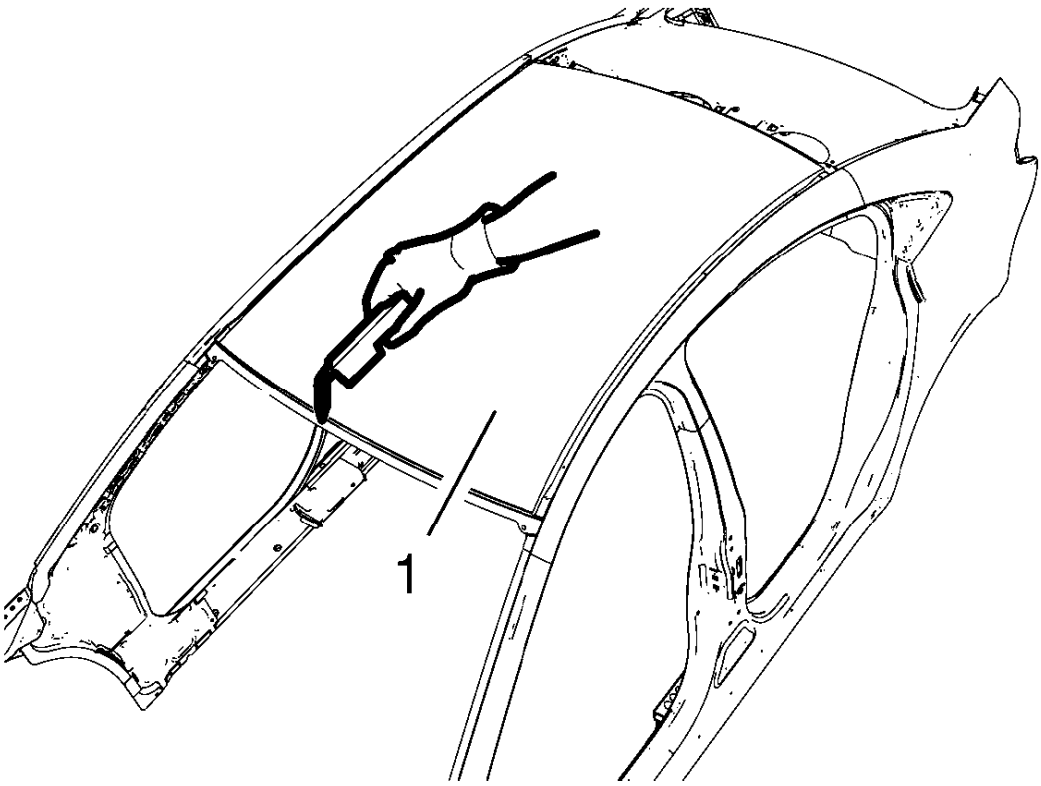

Fig. 77: Welding Roof Outer Panel
Courtesy of GENERAL MOTORS COMPANY

7. Plug weld the roof outer panel (1) accordingly.
8. Apply the sealers and anti-corrosion materials to the repair area, as necessary. Refer to **Anti-Corrosion Treatment and Repair** .
9. Paint the repaired area. Refer to **Basecoat/Clearcoat Paint Systems** .
10. Install all related panels and components.
11. Connect the negative battery cable. Refer to **Battery Negative Cable Disconnection and Connection** .
12. Enable the SIR system. Refer to **SIR Disabling and Enabling** .

ROCKER INNER PANEL REPLACEMENT

Removal Procedure

WARNING: Refer to Approved Equipment for Collision Repair Warning .

WARNING: Refer to Collision Sectioning Warning .

WARNING: Refer to Glass and Sheet Metal Handling Warning .

1. Disable the SIR System. Refer to **SIR Disabling and Enabling** .
2. Disconnect the negative battery cable. Refer to **Battery Negative Cable Disconnection and Connection** .
3. Remove all related panels and components.
4. Visually inspect the damage. Repair as much of the damage as possible.
5. Remove the sealers and anti-corrosion materials from the repair area, as necessary. Refer to **Anti-Corrosion Treatment and Repair** .

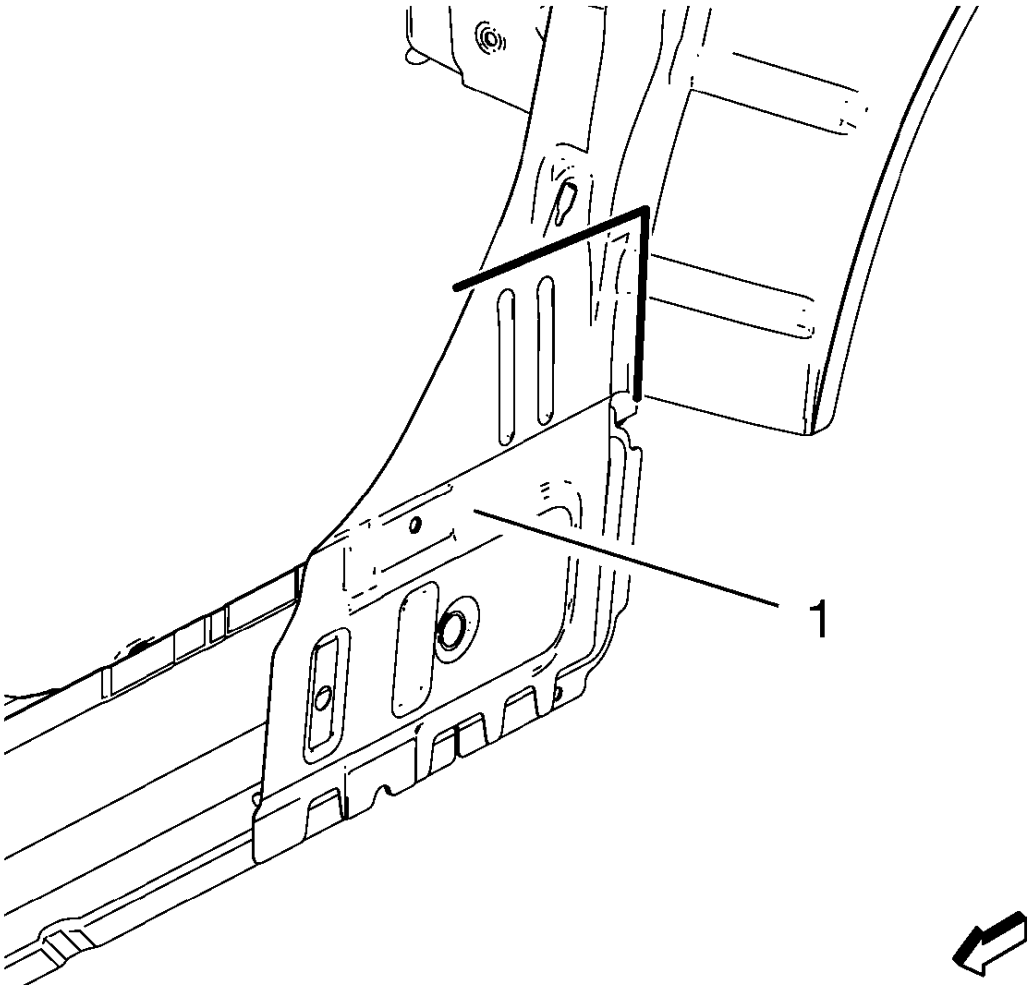

Fig. 78: Body Side Inner Panel
Courtesy of GENERAL MOTORS COMPANY

6. Create cut lines on the body side inner panel (1).

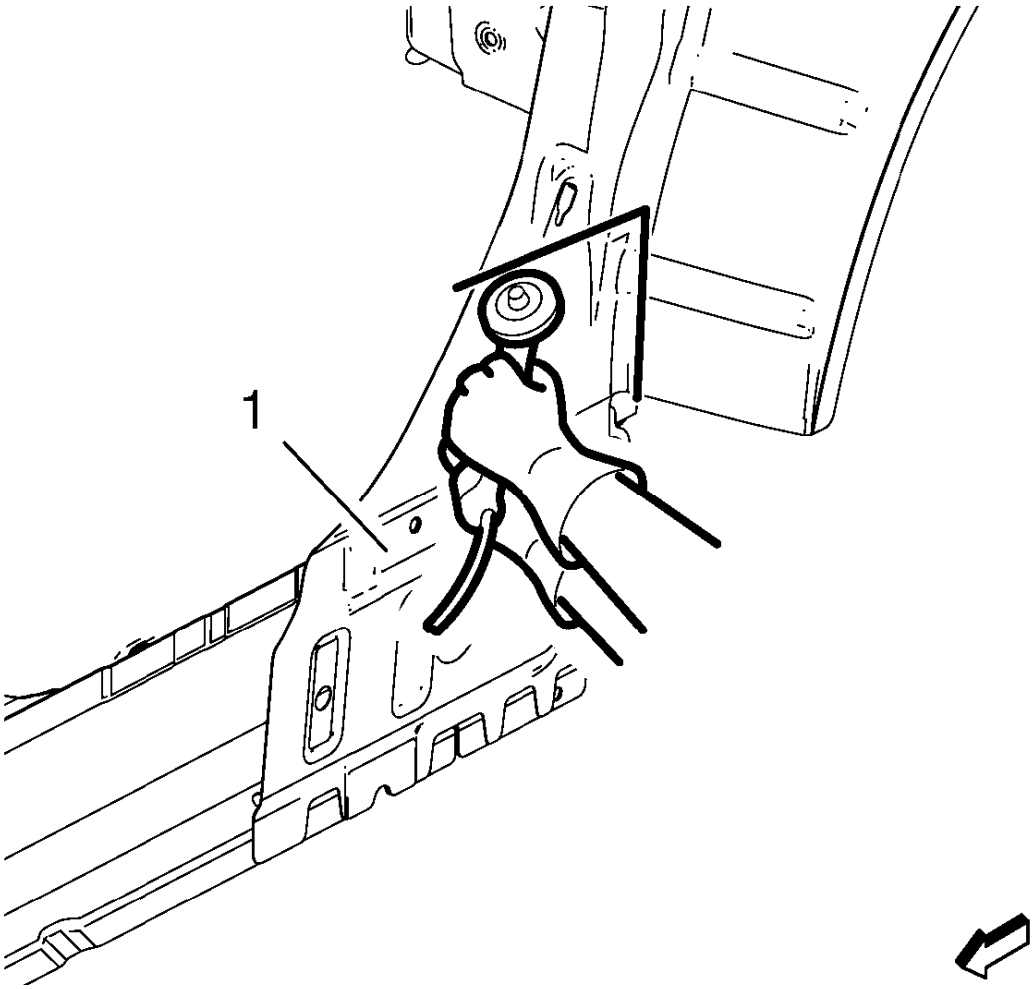

Fig. 79: Cutting Body Side Inner Panel
Courtesy of GENERAL MOTORS COMPANY

NOTE: Do not damage any inner panels or reinforcements.

7. Cut the body side inner panel (1) where sectioning is to be performed.

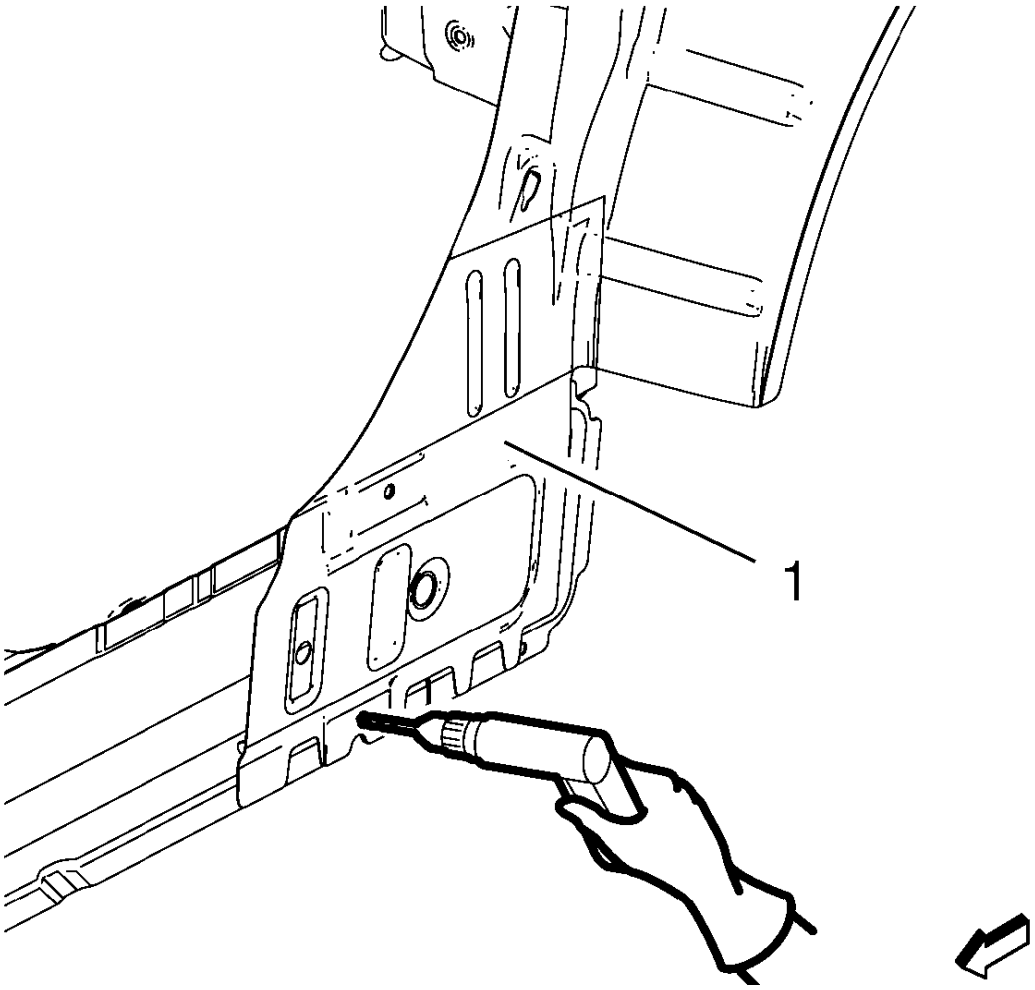

Fig. 80: Drilling Out Factory Welds Of Body Side Inner Panel
Courtesy of GENERAL MOTORS COMPANY

8. Locate and mark all the necessary factory welds of the body side inner panel (1).
9. Drill all factory welds. Note the number and location of welds for installation of the service assembly.

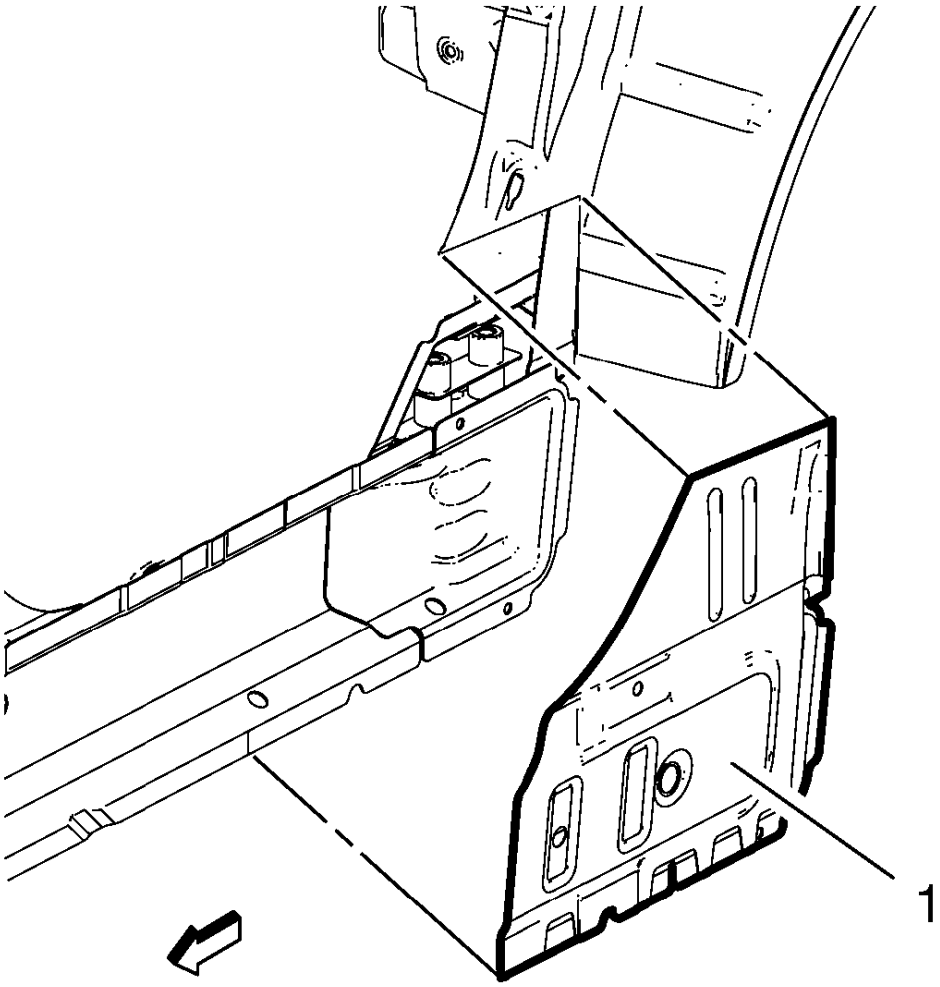

Fig. 81: body side inner panel
Courtesy of GENERAL MOTORS COMPANY

10. Remove the body side inner panel (1).

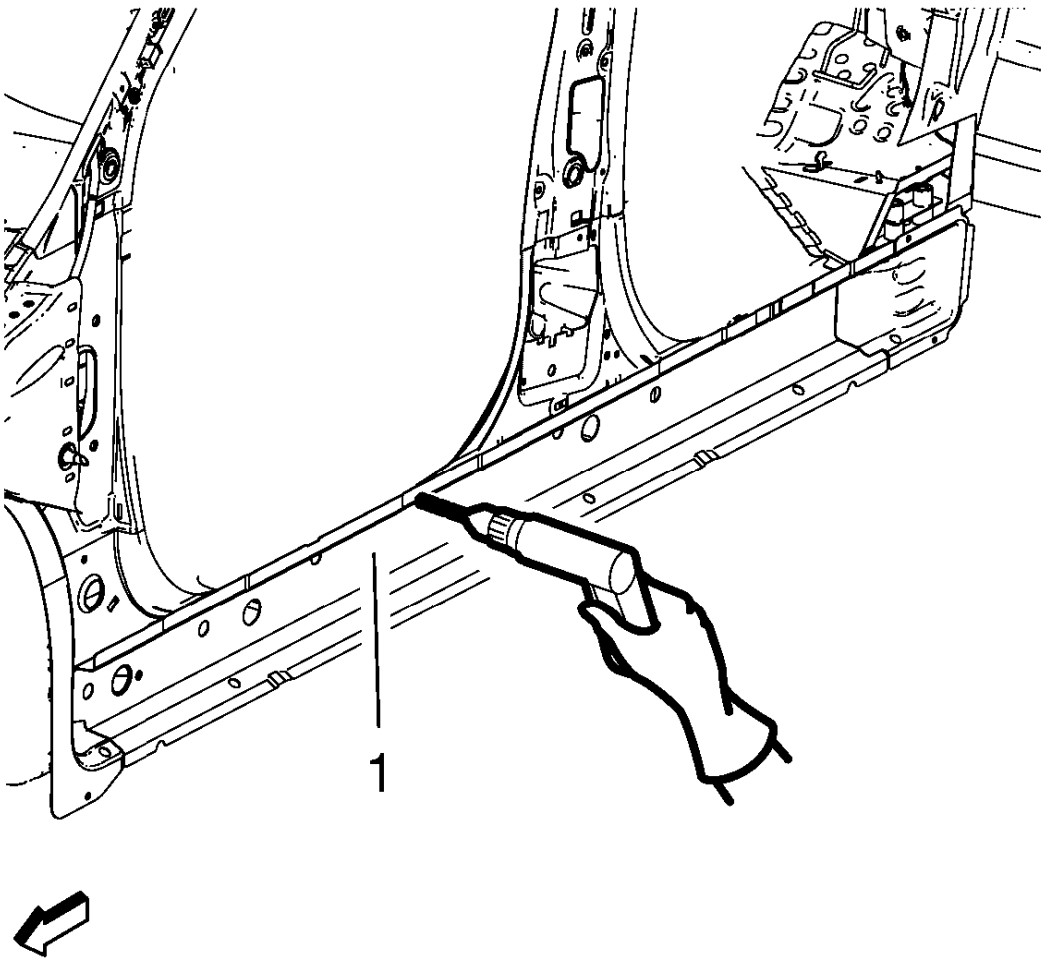

Fig. 82: Drilling Out Factory Welds Of Rocker Inner Panel
Courtesy of GENERAL MOTORS COMPANY

11. Locate and mark all the necessary factory welds of the rocker inner panel (1).
12. Drill all factory welds. Note the number and location of welds for installation of the service assembly.

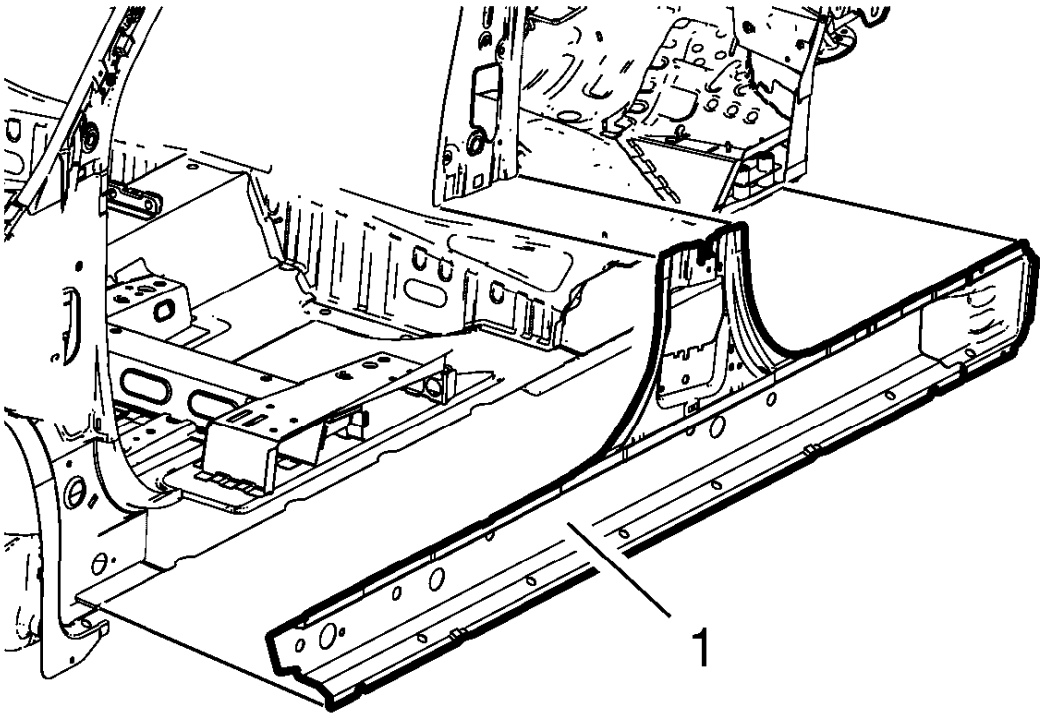

Fig. 83: Rocker Inner Panel
Courtesy of GENERAL MOTORS COMPANY

13. Remove the damaged rocker inner panel (1).

Installation Procedure

1. Align the rocker inner panel.

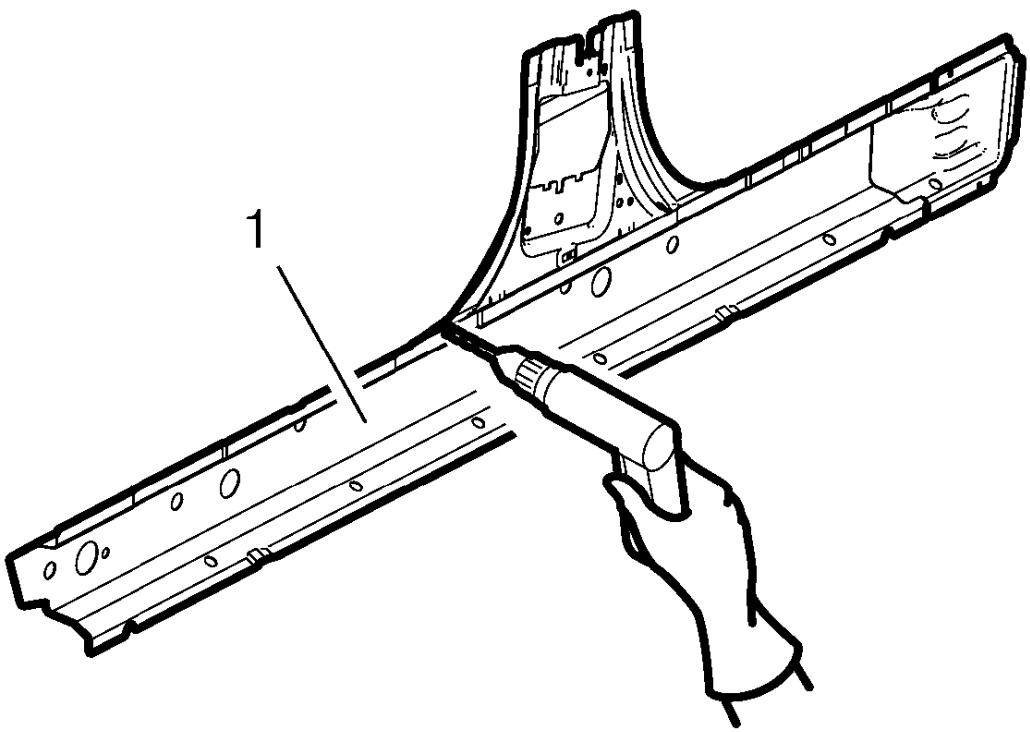

Fig. 84: Drilling Holes For Welding Rocker Inner Panel
Courtesy of GENERAL MOTORS COMPANY

2. Drill 8 mm (5/16 in) for plug welding along the edges of the rocker inner panel (1) as noted from the original panel.
3. Clean and prepare the attaching surfaces for welding.
4. Position the rocker inner panel on the vehicle.
5. Verify the fit of the quarter outer panel.
6. Clamp the rocker inner panel into position.

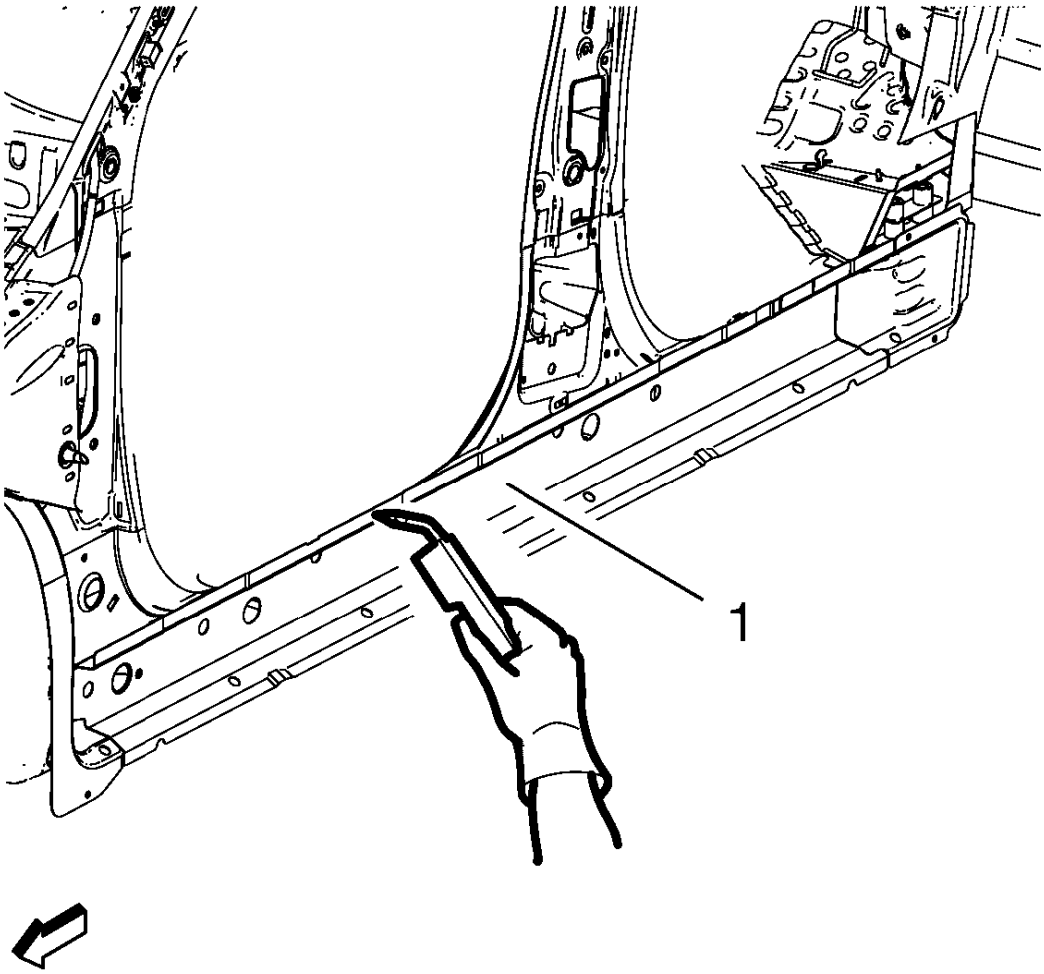

Fig. 85: Welding Rocker Inner Panel
Courtesy of GENERAL MOTORS COMPANY

7. Plug weld the rocker inner panel (1) accordingly.

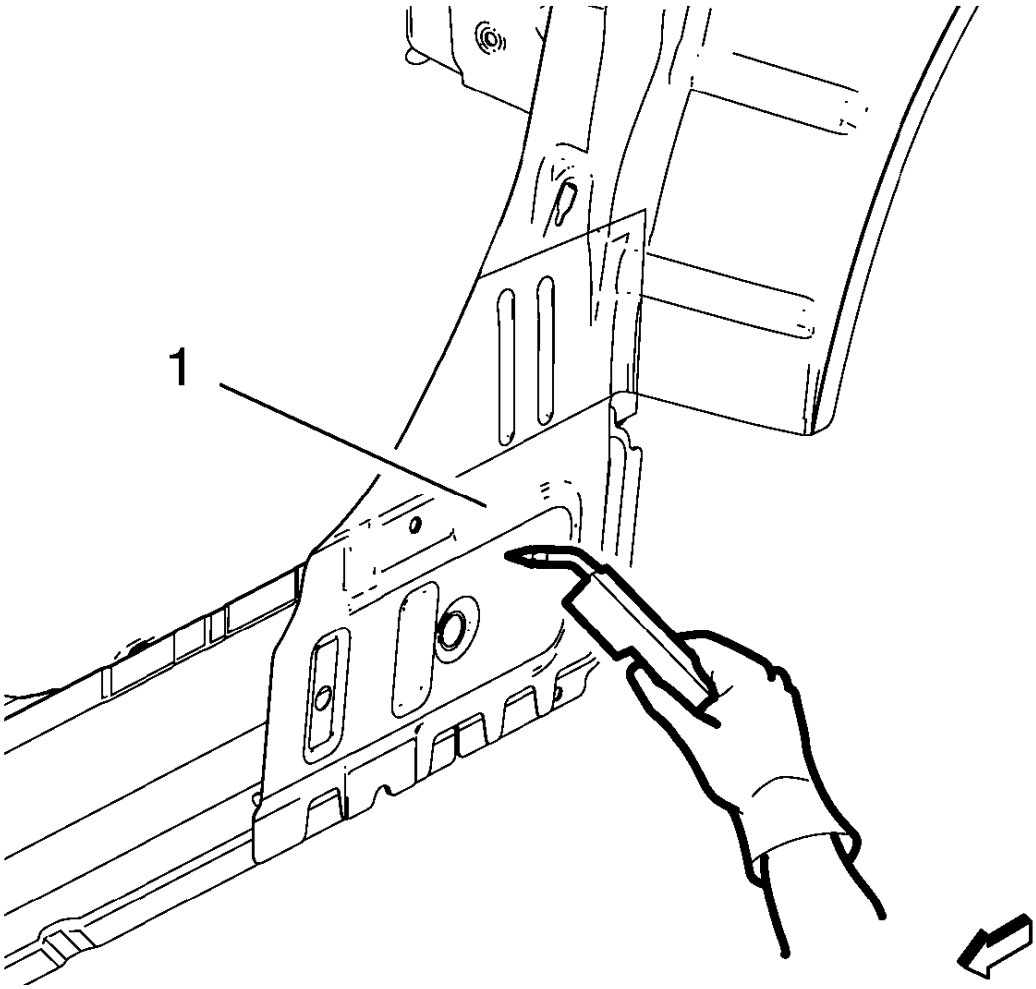

Fig. 86: Welding Body Side Inner Panel
Courtesy of GENERAL MOTORS COMPANY

8. Plug weld the body side inner panel (1) accordingly.
9. To create a solid weld with minimum heat distortion, make 25 mm (1 in) stitch welds along the seam with 25 mm (1 in) gaps between them. Then go back and complete the stitch weld.
10. Apply the sealers and anti-corrosion materials to the repair area, as necessary. Refer to **Anti-Corrosion Treatment and Repair** .
11. Paint the repaired area. Refer to **Basecoat/Clearcoat Paint Systems** .
12. Install all related panels and components.
13. Connect the negative battery cable. Refer to **Battery Negative Cable Disconnection and Connection** .
14. Enable the SIR system. Refer to **SIR Disabling and Enabling** .

ROCKER OUTER PANEL REPLACEMENT

NOTE: **According to different corrosion warranties, only the regional mandatory joining methods are allowed.**

Removal Procedure

WARNING: **Refer to Approved Equipment for Collision Repair Warning .**

WARNING: **Refer to Collision Sectioning Warning .**

WARNING: **Refer to Glass and Sheet Metal Handling Warning .**

1. Disable the SIR System. Refer to **SIR Disabling and Enabling** .
2. Disconnect the negative battery cable. Refer to **Battery Negative Cable Disconnection and Connection** .
3. Remove all related panels and components.
4. Visually inspect the damage. Repair as much of the damage as possible.
5. Remove the sealers and anti-corrosion materials from the repair area, as necessary. Refer to **Anti-Corrosion Treatment and Repair** .

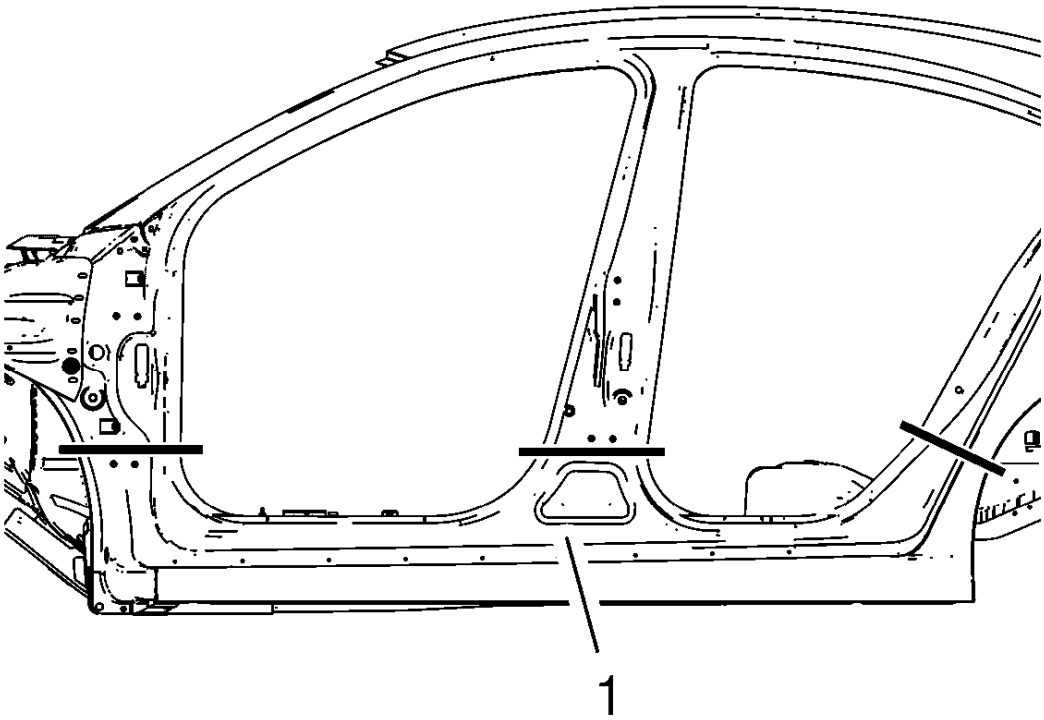

Fig. 87: Locating Cut Lines On Rocker Outer Panel
Courtesy of GENERAL MOTORS COMPANY

6. Create cut lines on the rocker outer panel (1).

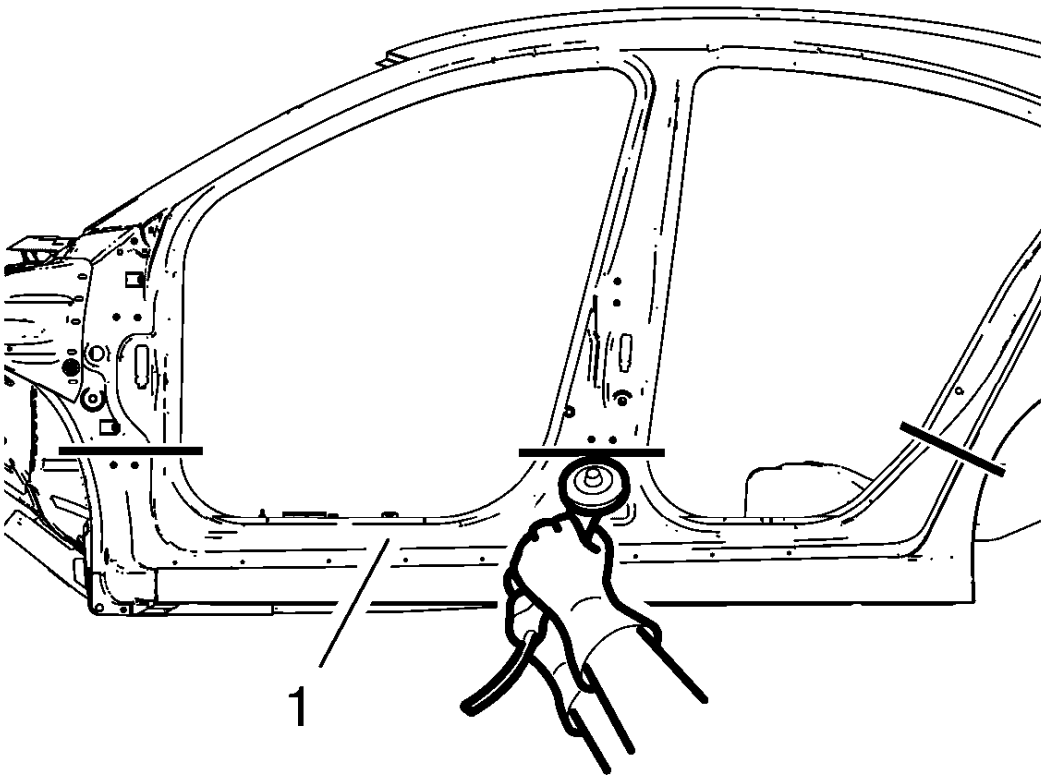

Fig. 88: Cutting Rocker Outer Panel
Courtesy of GENERAL MOTORS COMPANY

NOTE: Do not damage any inner panels or reinforcements.

7. Cut the rocker outer panel (1) where sectioning is to be performed.

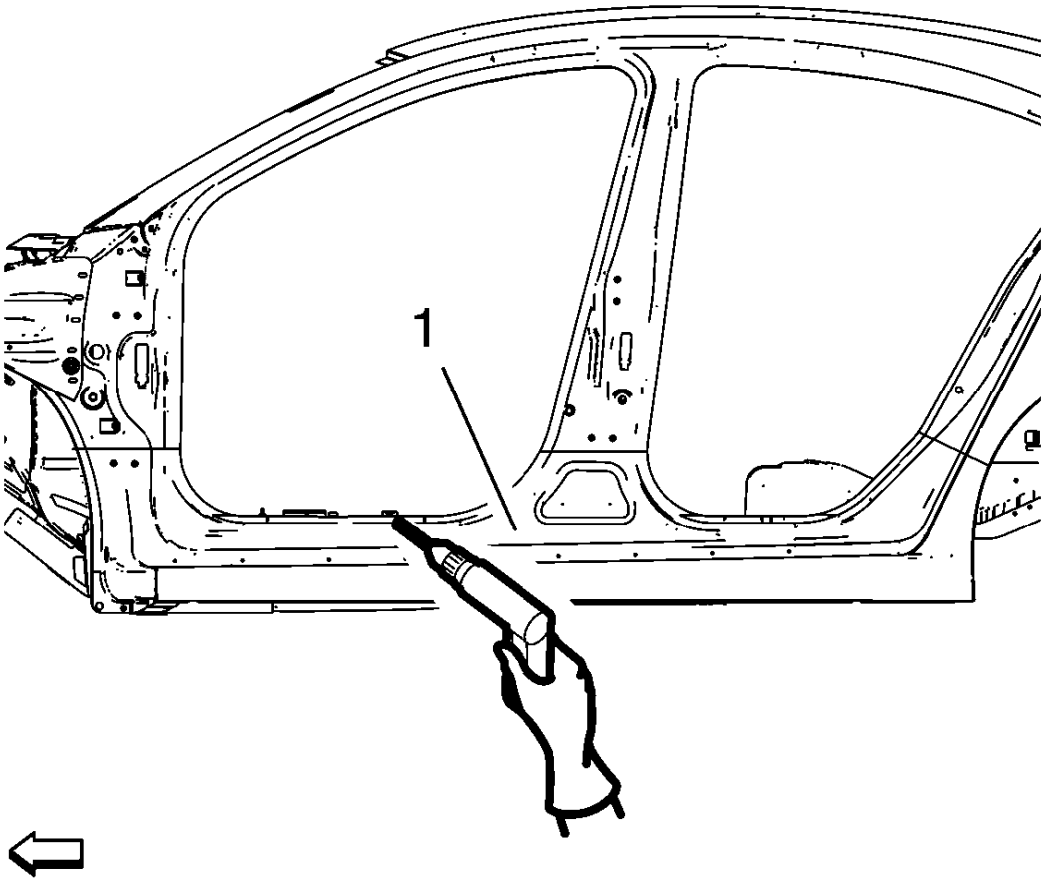

Fig. 89: Drilling Factory Welds Of Rocker Outer Panel
Courtesy of GENERAL MOTORS COMPANY

8. Locate and mark all the necessary factory welds of the rocker outer panel (1).
9. Drill all factory welds.

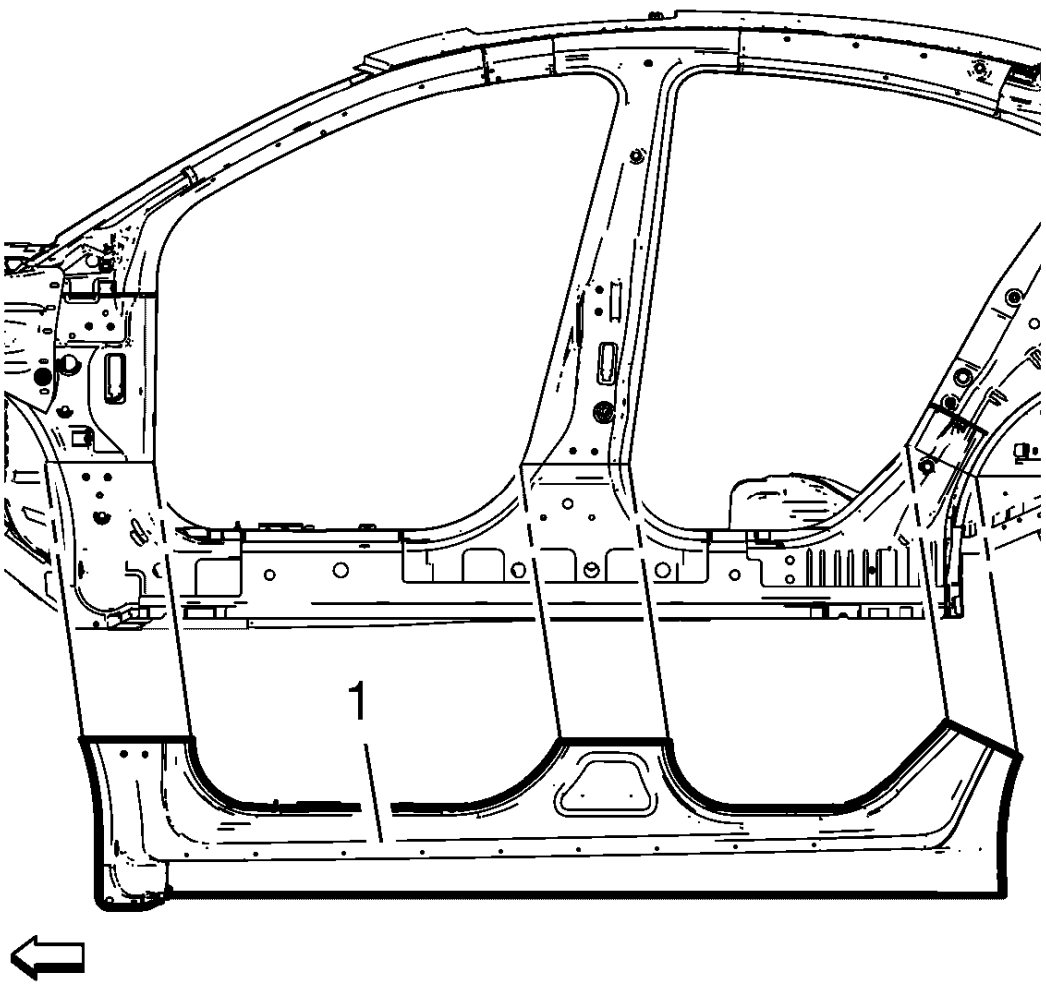

Fig. 90: Rocker Outer Panel
Courtesy of GENERAL MOTORS COMPANY

10. Remove the damaged rocker outer panel (1).

Installation Procedure

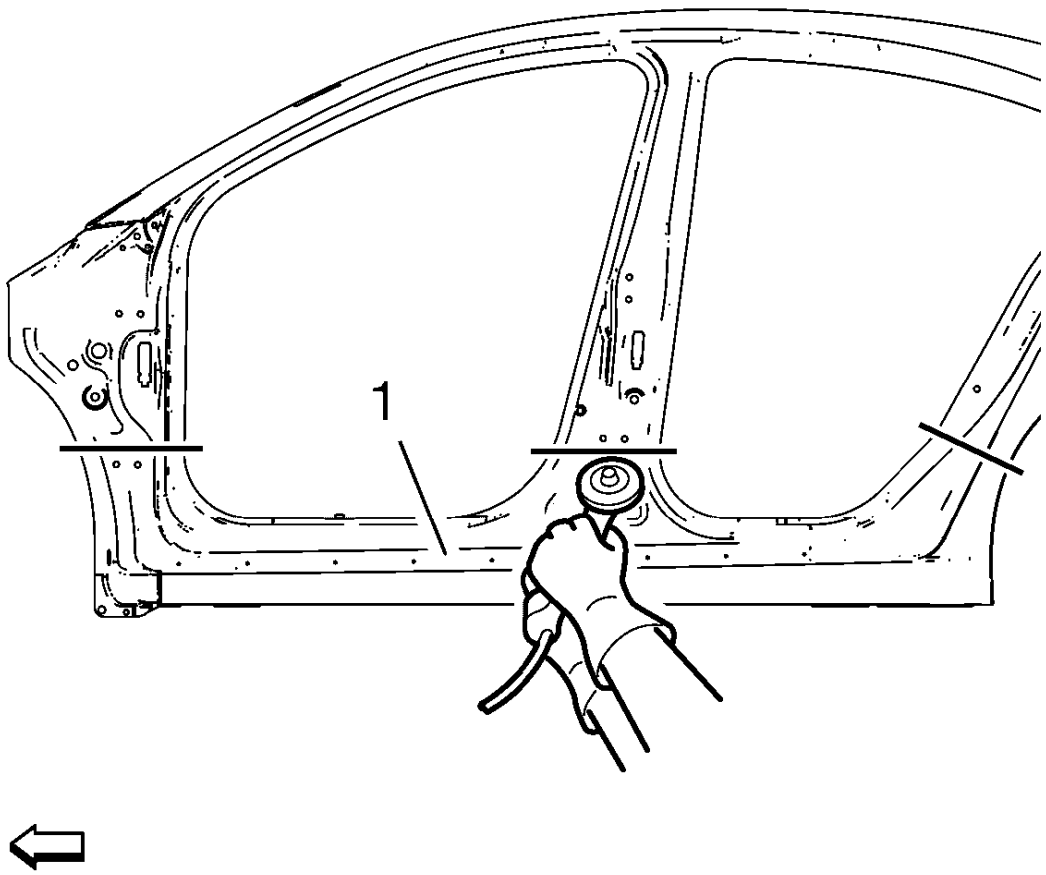

Fig. 91: Cutting Rocker Outer Panel
Courtesy of GENERAL MOTORS COMPANY

1. Cut the rocker outer panel (1) in corresponding locations to fit the remaining original panel. The sectioning joint should be trimmed to allow a gap of one-and-one-half-times the metal thickness at the sectioning joint.
2. Create 50 mm (2 in) backing plates from the unused portion of the service part.
3. Drill 8 mm (5/16 in) holes for plug welding along the sectioning cut on the remaining original part. Locate these holes 13 mm (1/2 in) from the edge of part and spaced 40 mm (1 1/2 in) apart.
4. Prepare all mating surfaces as necessary.
5. Fit the backing plates halfway into the sectioning joints, clamp in place and weld to the vehicle.
6. Align the rocker outer panel.

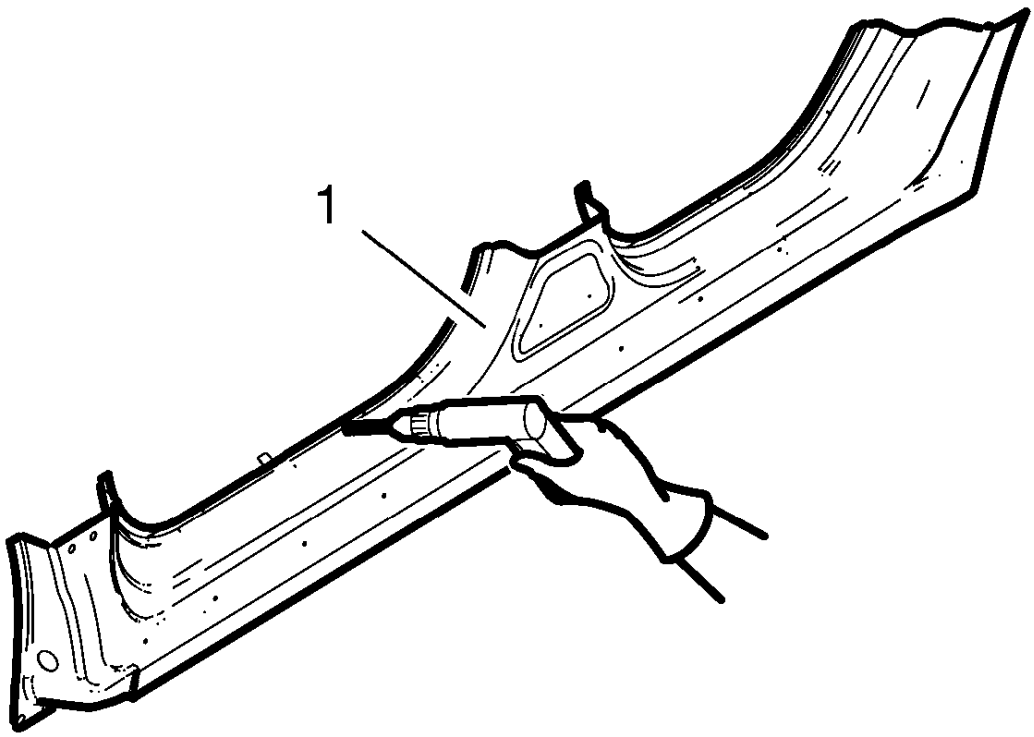

Fig. 92: Drilling Hole For Plug Welding New Rocker Outer Panel
Courtesy of GENERAL MOTORS COMPANY

7. Drill 8 mm (5/16 in) for plug welding along the edges of the rocker outer panel (1) as noted from the original panel.
8. Clean and prepare the attaching surfaces for welding.

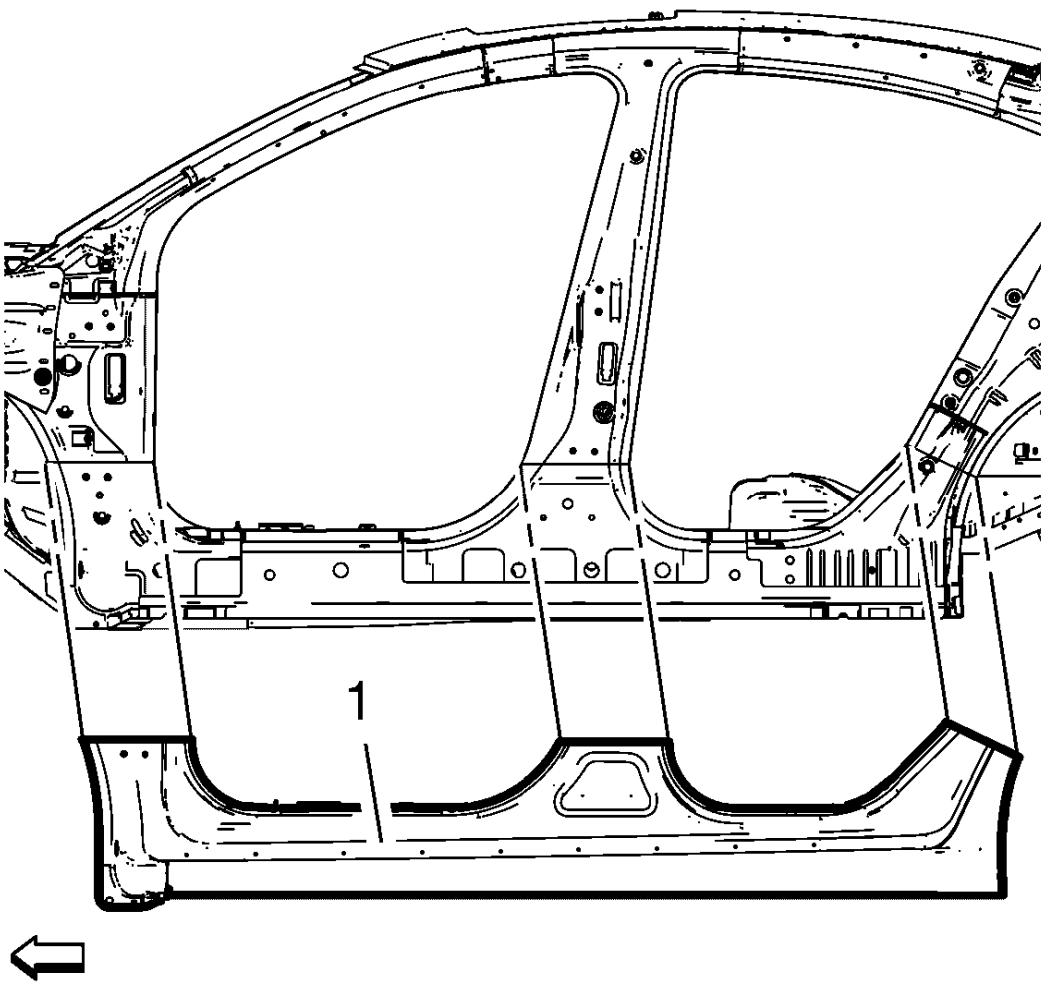

Fig. 93: Rocker Outer Panel
Courtesy of GENERAL MOTORS COMPANY

9. Position the rocker outer panel (1) on the vehicle.
10. Verify the fit of the rocker outer panel.
11. Clamp the rocker outer panel into position.

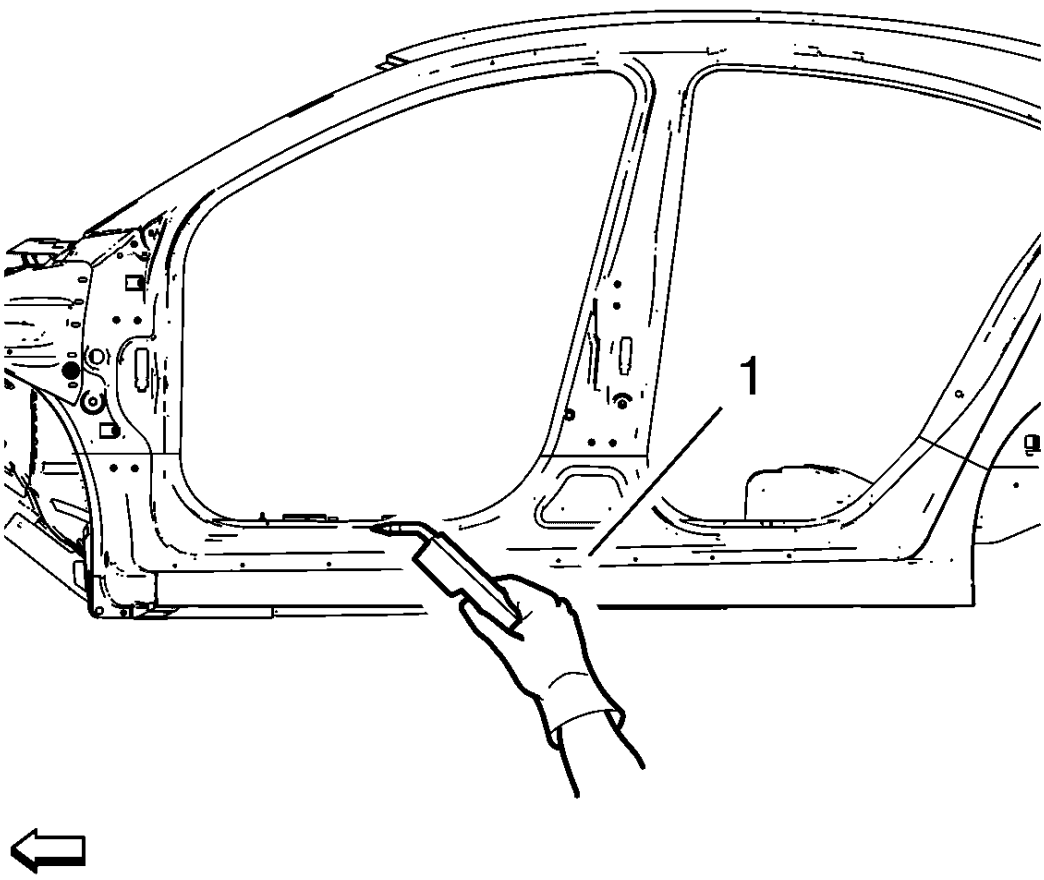

Fig. 94: Welding Rocker Outer Panel
Courtesy of GENERAL MOTORS COMPANY

12. Plug weld the rocker outer panel (1) accordingly.
13. To create a solid weld with minimum heat distortion, make 25 mm (1 in) stitch welds along the seam with 25 mm (1 in) gaps between them. Then go back and complete the stitch weld.
14. Apply the sealers and anti-corrosion materials to the repair area, as necessary. Refer to **Anti-Corrosion Treatment and Repair** .
15. Paint the repaired area.
16. Install all related panels and components.
17. Connect the negative battery cable. Refer to **Battery Negative Cable Disconnection and Connection** .
18. Enable the SIR system. Refer to **SIR Disabling and Enabling** .

BODY SIDE OUTER PANEL REINFORCEMENT REPLACEMENT

Removal Procedure

WARNING: Refer to Approved Equipment for Collision Repair Warning .

WARNING: Refer to Collision Sectioning Warning .

WARNING: Refer to Glass and Sheet Metal Handling Warning .

1. Disable the SIR System. Refer to **SIR Disabling and Enabling** .
2. Disconnect the negative battery cable. Refer to **Battery Negative Cable Disconnection and Connection** .
3. Remove all related panels and components.
4. Visually inspect the damage. Repair as much of the damage as possible.
5. Remove the sealers and anti-corrosion materials from the repair area, as necessary. Refer to **Anti-Corrosion Treatment and Repair** .

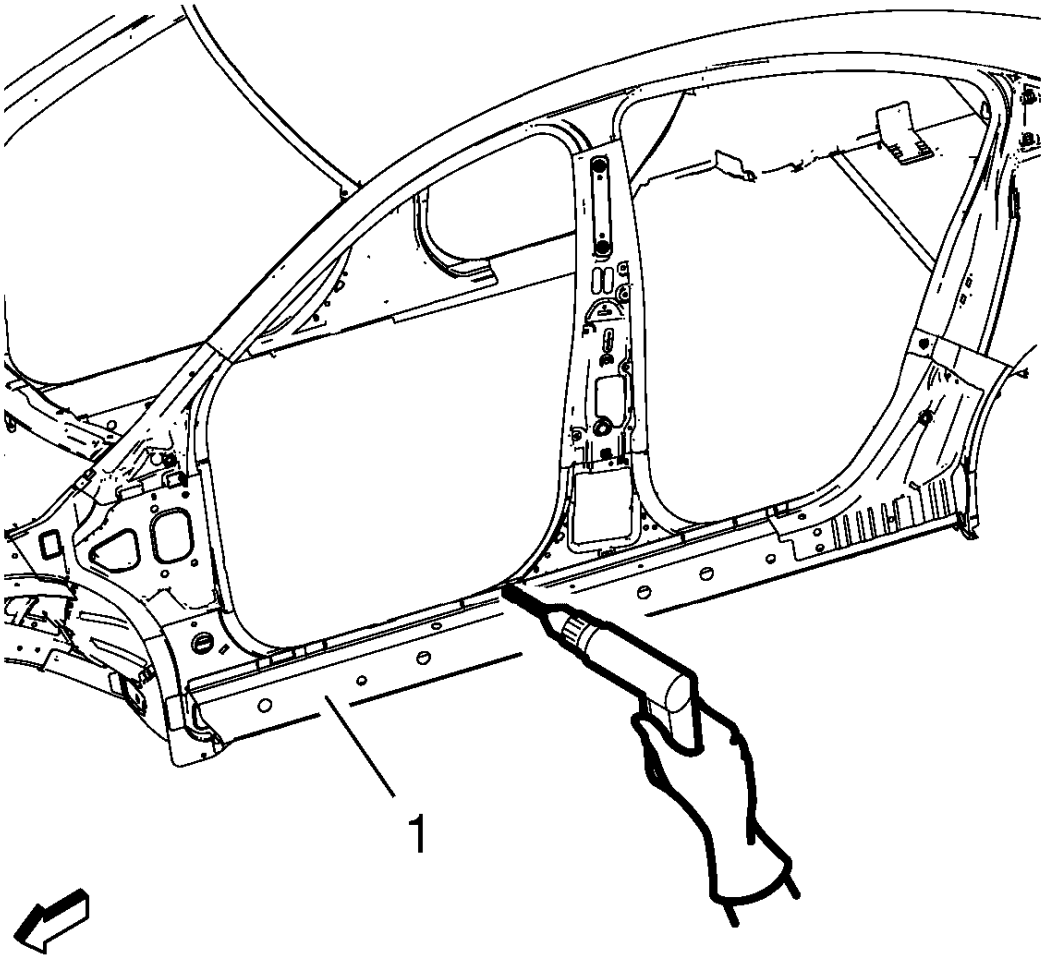

Fig. 95: Drilling Factory Welds Of The Body Side Outer Panel Reinforcement
Courtesy of GENERAL MOTORS COMPANY

6. Locate and mark all the necessary factory welds of the body side outer panel reinforcement (1).
7. Drill all factory welds. Note the number and location of welds for installation of the service assembly.

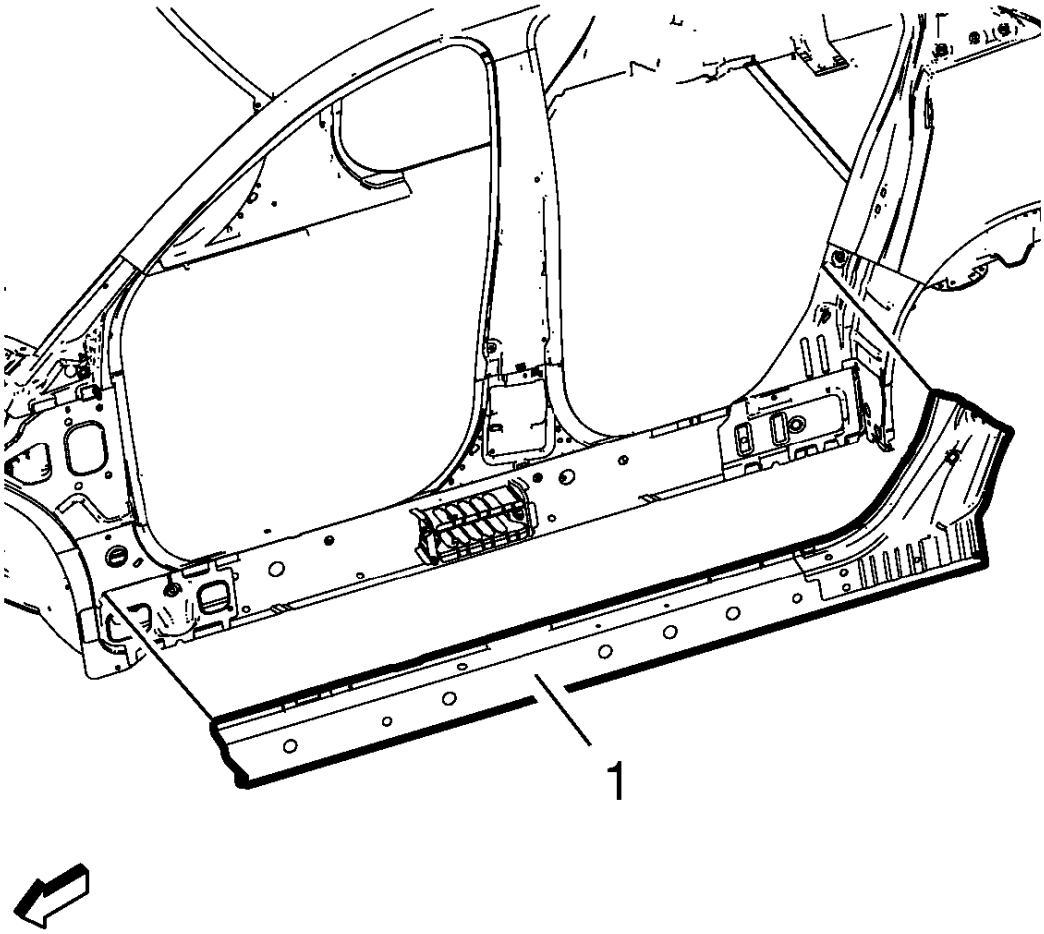

Fig. 96: Body Side Outer Panel Reinforcement
Courtesy of GENERAL MOTORS COMPANY

8. Remove the damaged body side outer panel reinforcement (1).

Installation Procedure

1. Align the body side outer panel reinforcement.

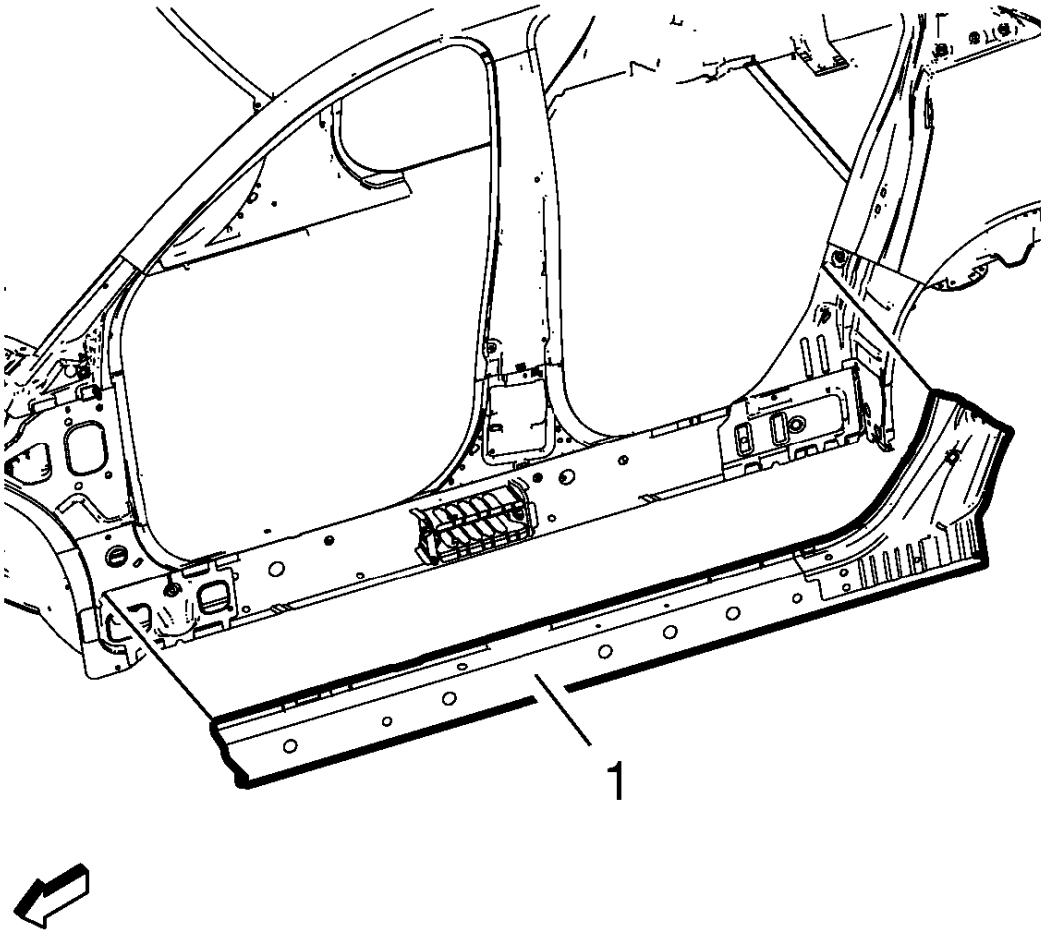

Fig. 97: Body Side Outer Panel Reinforcement
Courtesy of GENERAL MOTORS COMPANY

2. Drill 8 mm (5/16 in) for plug welding along the edges of the body side outer panel reinforcement (1) as noted from the original panel.
3. Clean and prepare the attaching surfaces for welding.

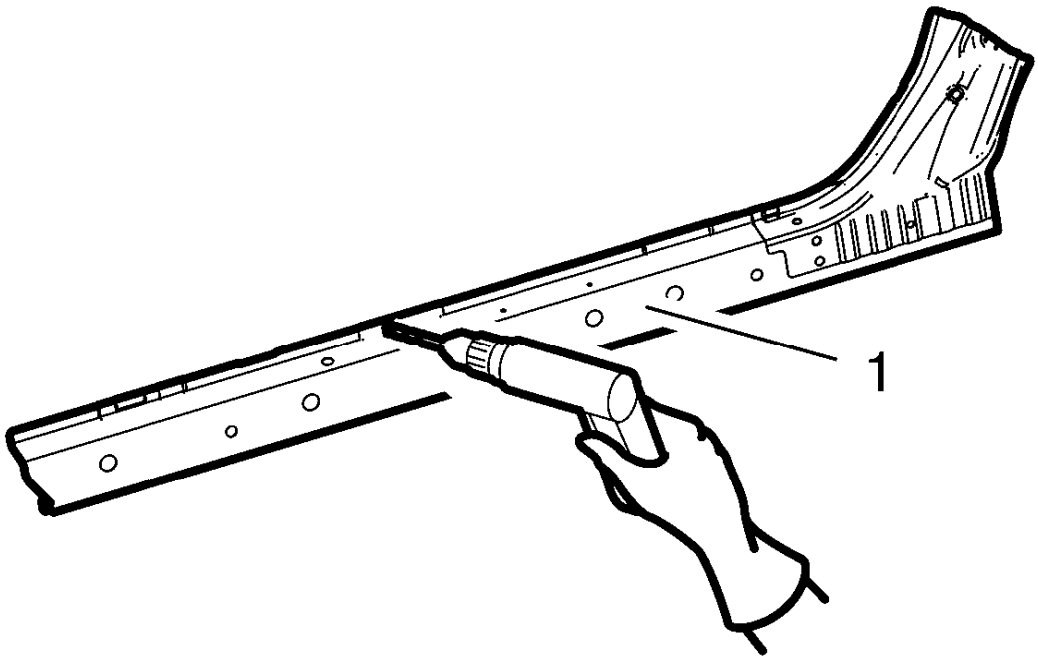

Fig. 98: Drilling Hole For Plug Welding New Body Side Outer Panel Reinforcement
Courtesy of GENERAL MOTORS COMPANY

4. Position the body side outer panel reinforcement (1) on the vehicle.
5. Verify the fit of the body side outer panel reinforcement.
6. Clamp the body side outer panel reinforcement into position.

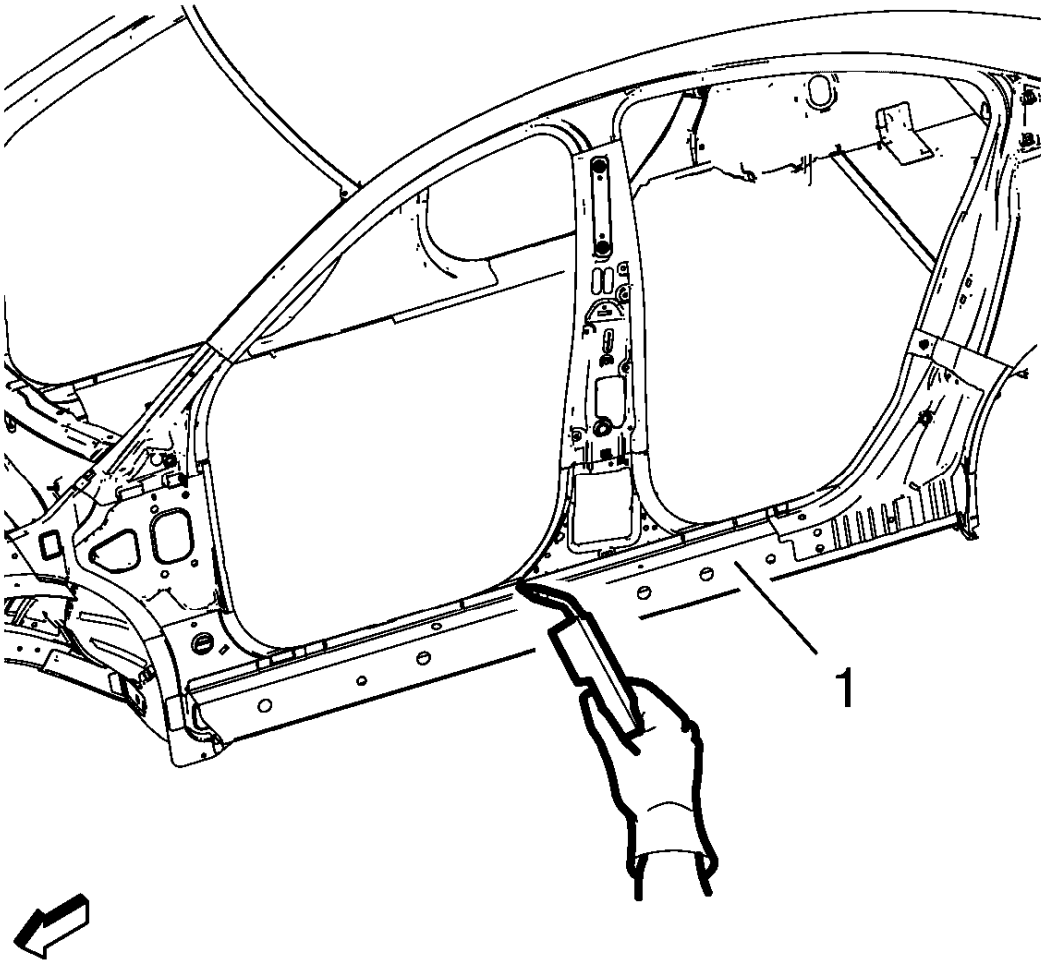

Fig. 99: Welding Body Side Outer Panel Reinforcement
Courtesy of GENERAL MOTORS COMPANY

7. Plug weld the body side outer panel reinforcement (1) accordingly.
8. Apply the sealers and anti-corrosion materials to the repair area, as necessary. Refer to **Anti-Corrosion Treatment and Repair** .
9. Paint the repaired area. Refer to **Basecoat/Clearcoat Paint Systems** .
10. Install all related panels and components.
11. Connect the negative battery cable. Refer to **Battery Negative Cable Disconnection and Connection** .
12. Enable the SIR system. Refer to **SIR Disabling and Enabling** .

BODY SIDE INNER PANEL SECTIONING

Removal Procedure

WARNING: Refer to Approved Equipment for Collision Repair Warning .

WARNING: Refer to Collision Sectioning Warning .

WARNING: Refer to Glass and Sheet Metal Handling Warning .

1. Disable the SIR System. Refer to **SIR Disabling and Enabling** .
2. Disconnect the negative battery cable. Refer to **Battery Negative Cable Disconnection and Connection** .
3. Remove all related panels and components.
4. Visually inspect the damage. Repair as much of the damage as possible.
5. Remove the sealers and anti-corrosion materials from the repair area, as necessary. Refer to **Anti-Corrosion Treatment and Repair** .

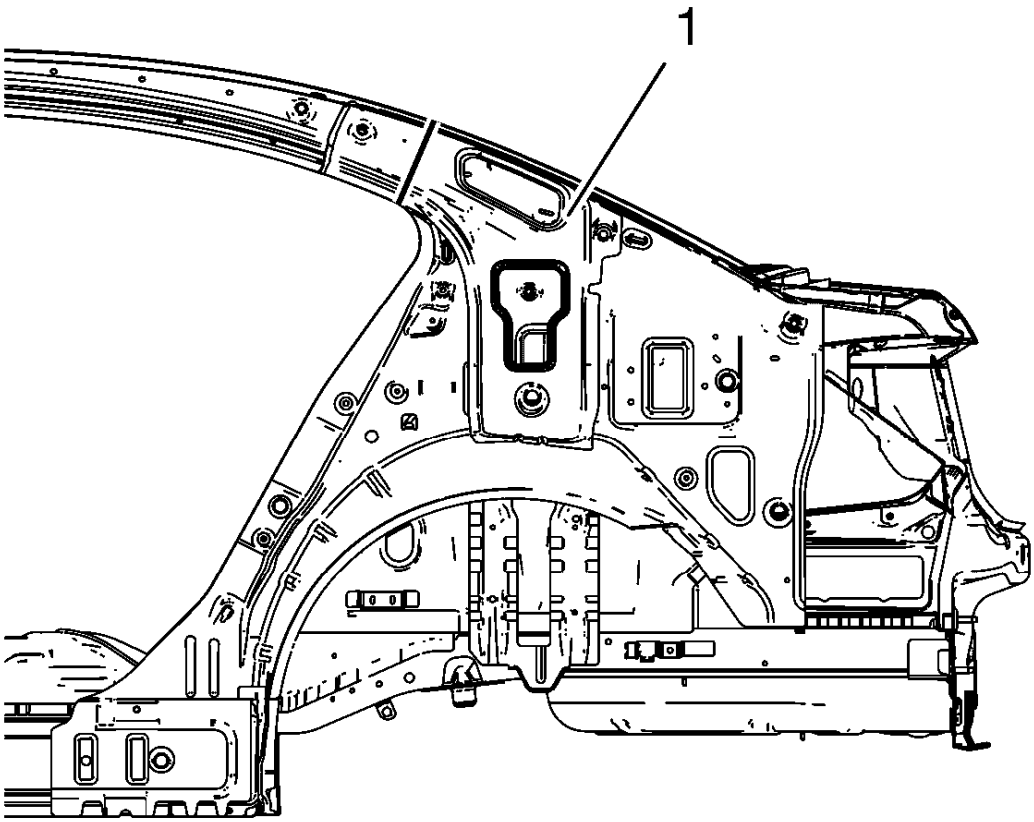

Fig. 100: Body Lock Pillar Upper Reinforcement
Courtesy of GENERAL MOTORS COMPANY

6. Create cut lines on the body lock pillar upper reinforcement (1).

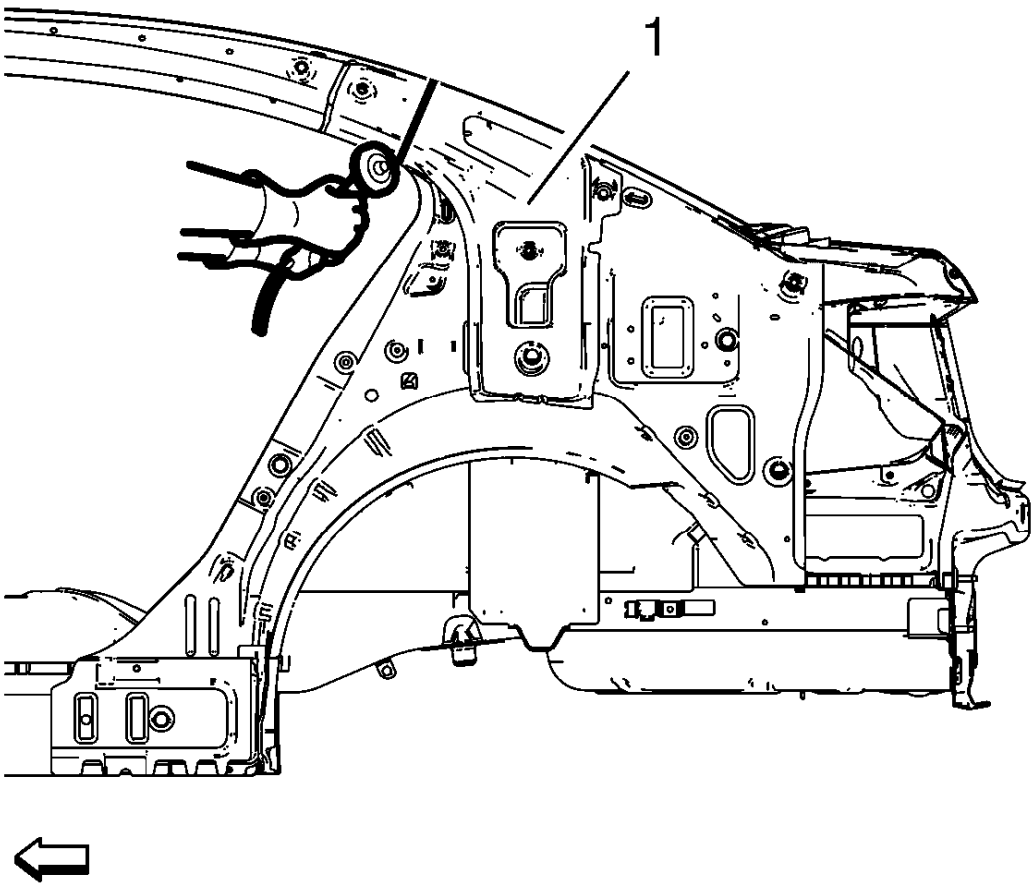

Fig. 101: Cutting Body Lock Pillar Upper Reinforcement
Courtesy of GENERAL MOTORS COMPANY

NOTE: Do not damage any other panels or reinforcements.

7. Cut the body lock pillar upper reinforcement (1) where sectioning is to be performed.

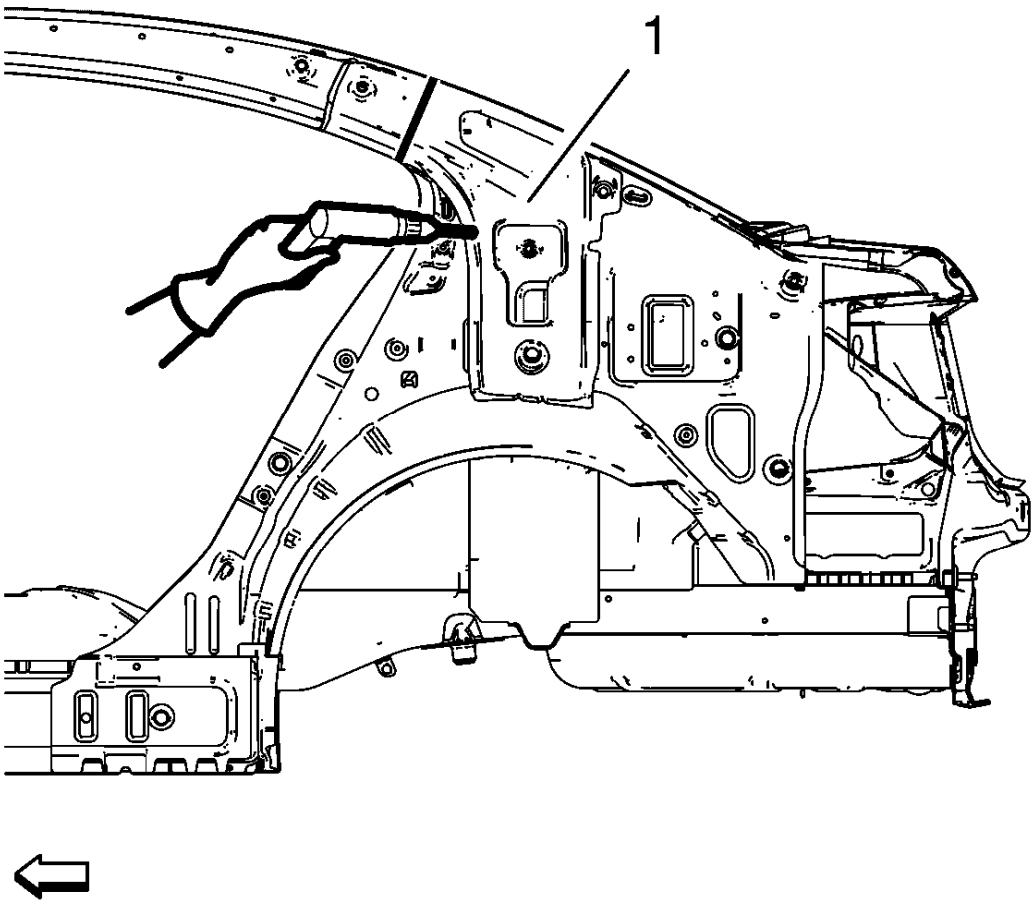

Fig. 102: Drilling Factory Welds From Body Lock Pillar Upper Reinforcement
Courtesy of GENERAL MOTORS COMPANY

8. Locate and mark all the necessary factory welds of the body lock pillar upper reinforcement (1).
9. Drill all factory welds. Note the number and location of welds for installation of the service assembly.

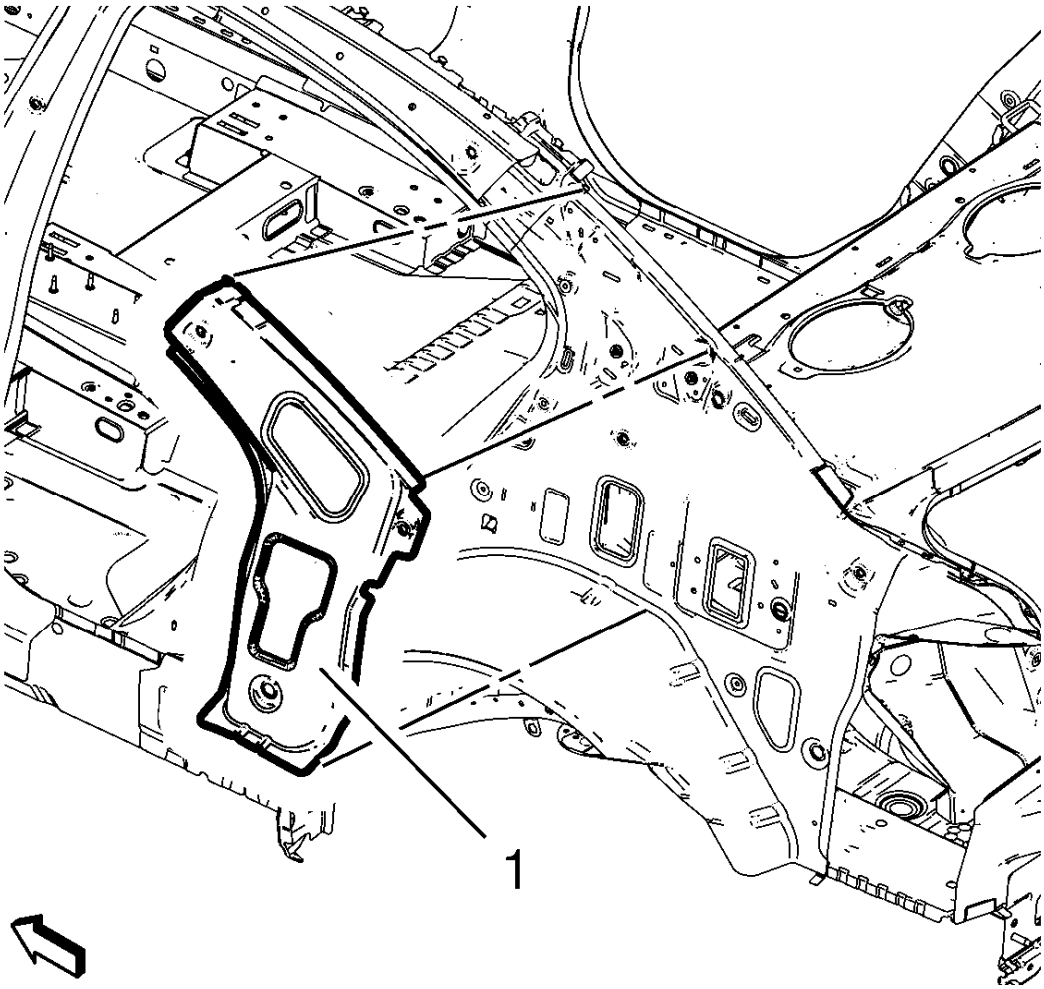

Fig. 103: Lock Pillar Upper Reinforcement
Courtesy of GENERAL MOTORS COMPANY

10. Remove the damaged body lock pillar upper reinforcement (1).

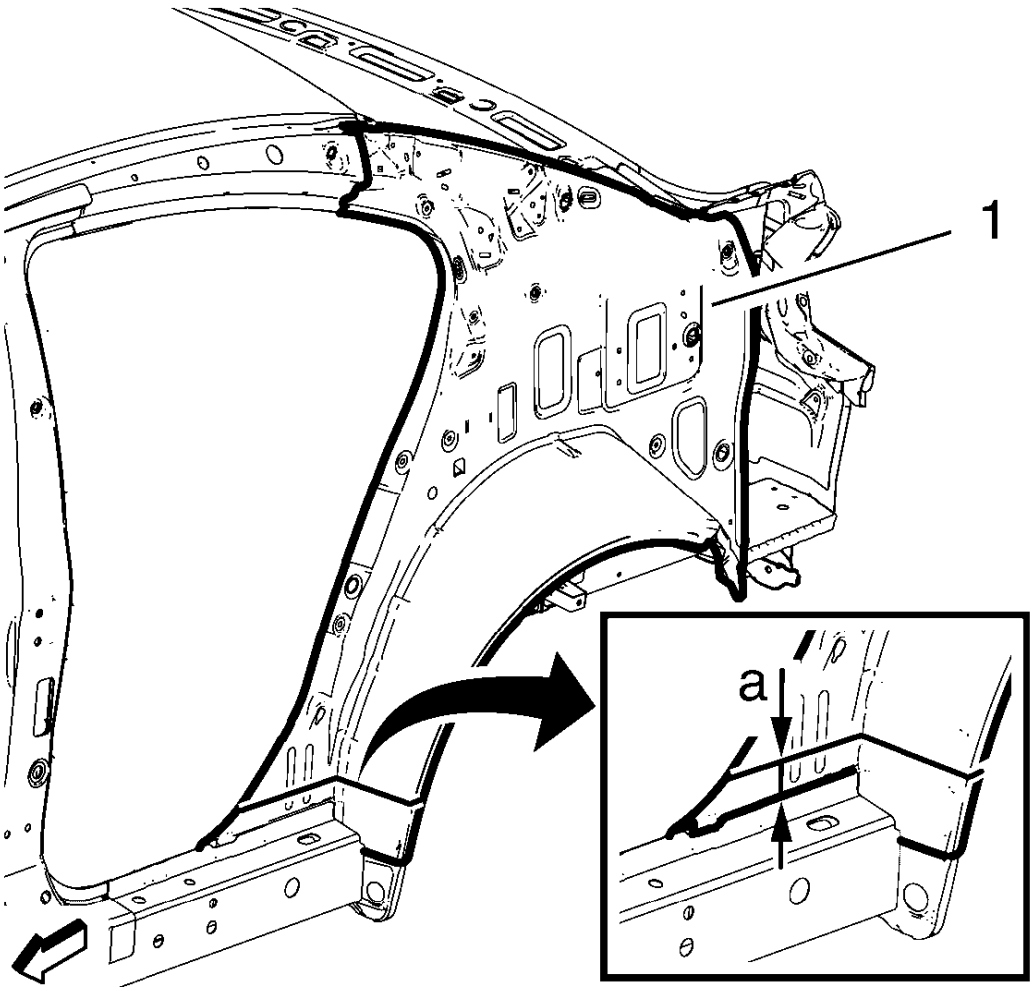

Fig. 104: Body Side Inner Panel
Courtesy of GENERAL MOTORS COMPANY

NOTE: Cut the body side inner panel (a) 30 mm (1.2 in) above the body side outer panel reinforcement.

11. Create cut lines on the body side inner panel (1).

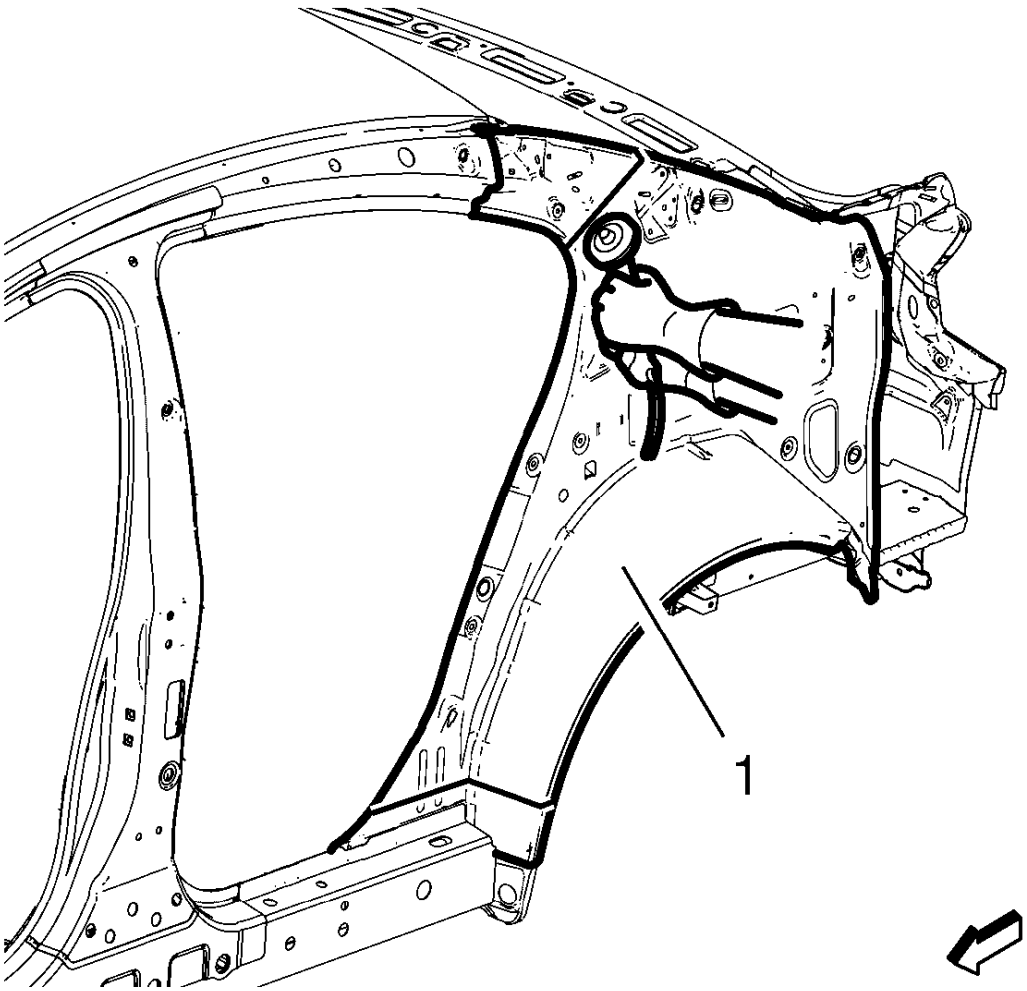

Fig. 105: Cutting Body Side Inner Panel
Courtesy of GENERAL MOTORS COMPANY

NOTE: Do not damage any other panels or reinforcements.

12. Cut the body side inner panel (1) where sectioning is to be performed.

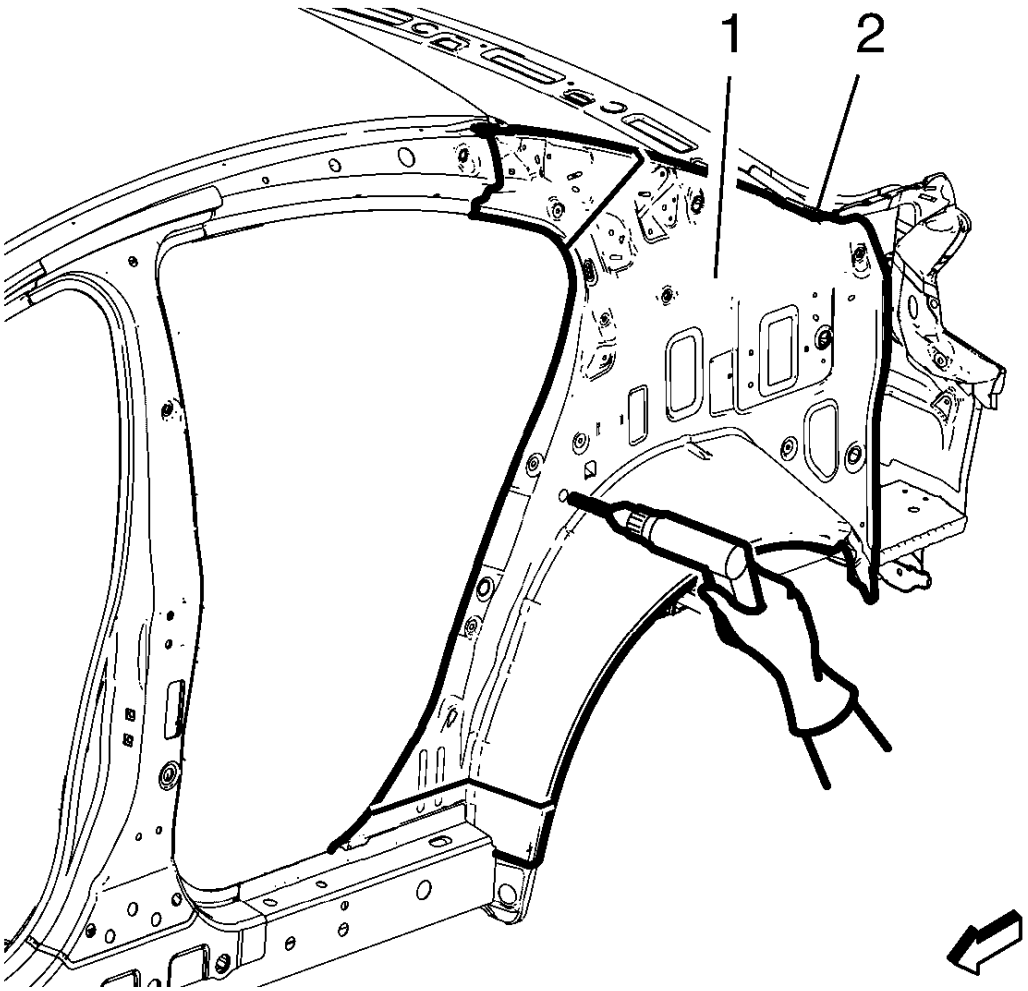

Fig. 106: Drilling Factory Welds Of Body Side Inner Panel
Courtesy of GENERAL MOTORS COMPANY

NOTE: Drill hidden factory welds where body side outer rear panel drain gutter (2) and body side inner panel overlap.

13. Locate and mark all the necessary factory welds of the body side inner panel (1).
14. Drill all factory welds. Note the number and location of welds for installation of the service assembly.

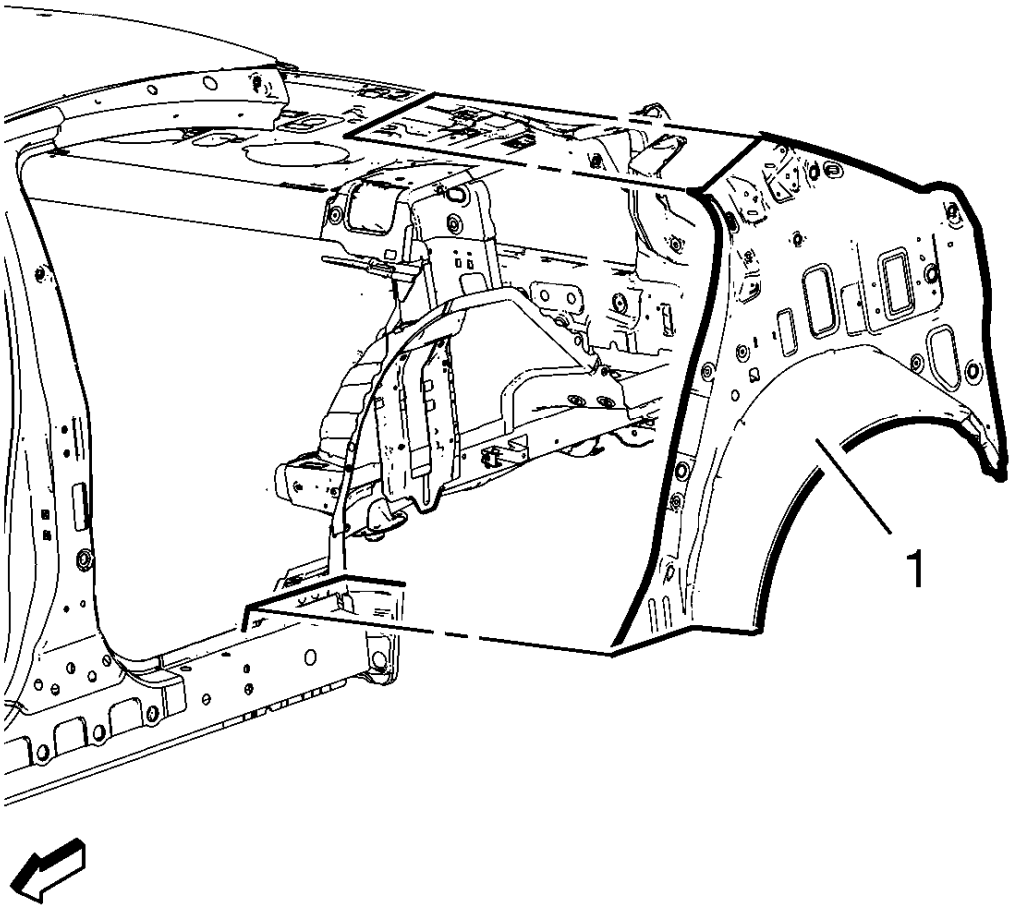

Fig. 107: Body Side Inner Panel
Courtesy of GENERAL MOTORS COMPANY

15. Remove the damaged body side inner panel (1).

Installation Procedure

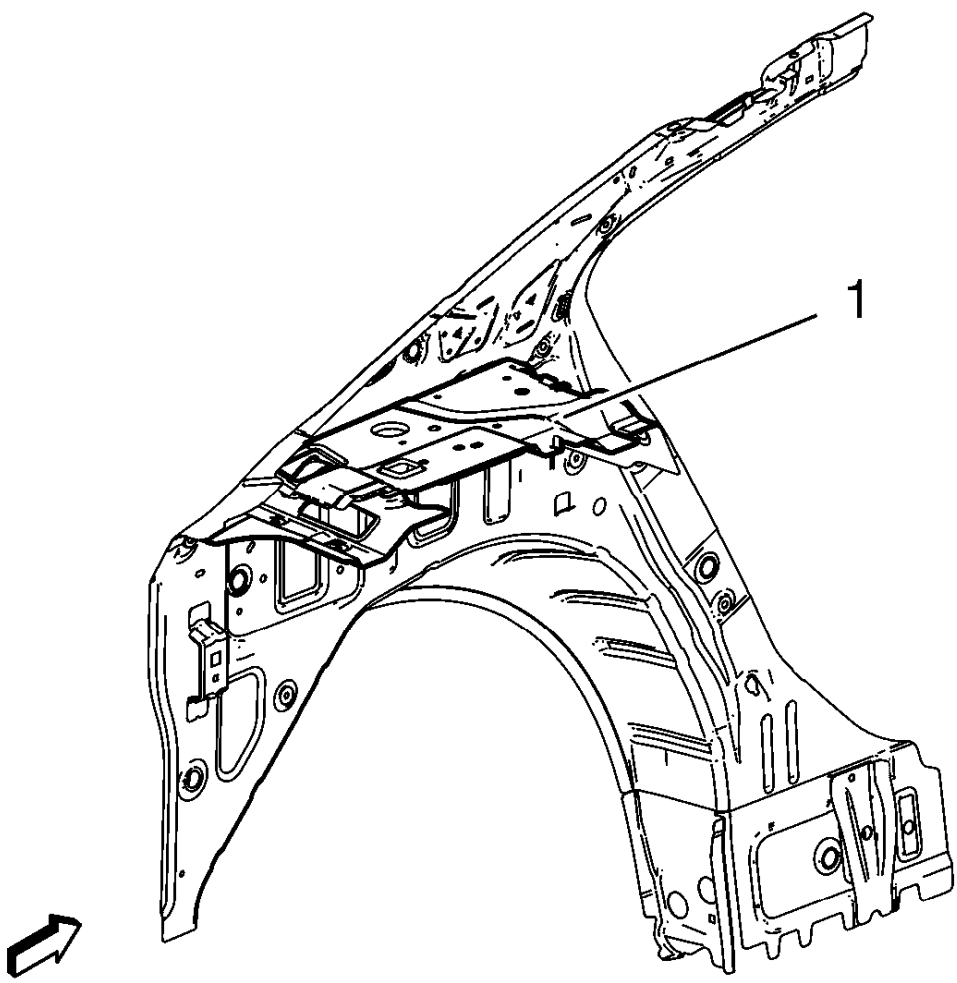

Fig. 108: Rear End Upper Panel Extension
Courtesy of GENERAL MOTORS COMPANY

1. Remove rear end upper panel extension (1) from service part.

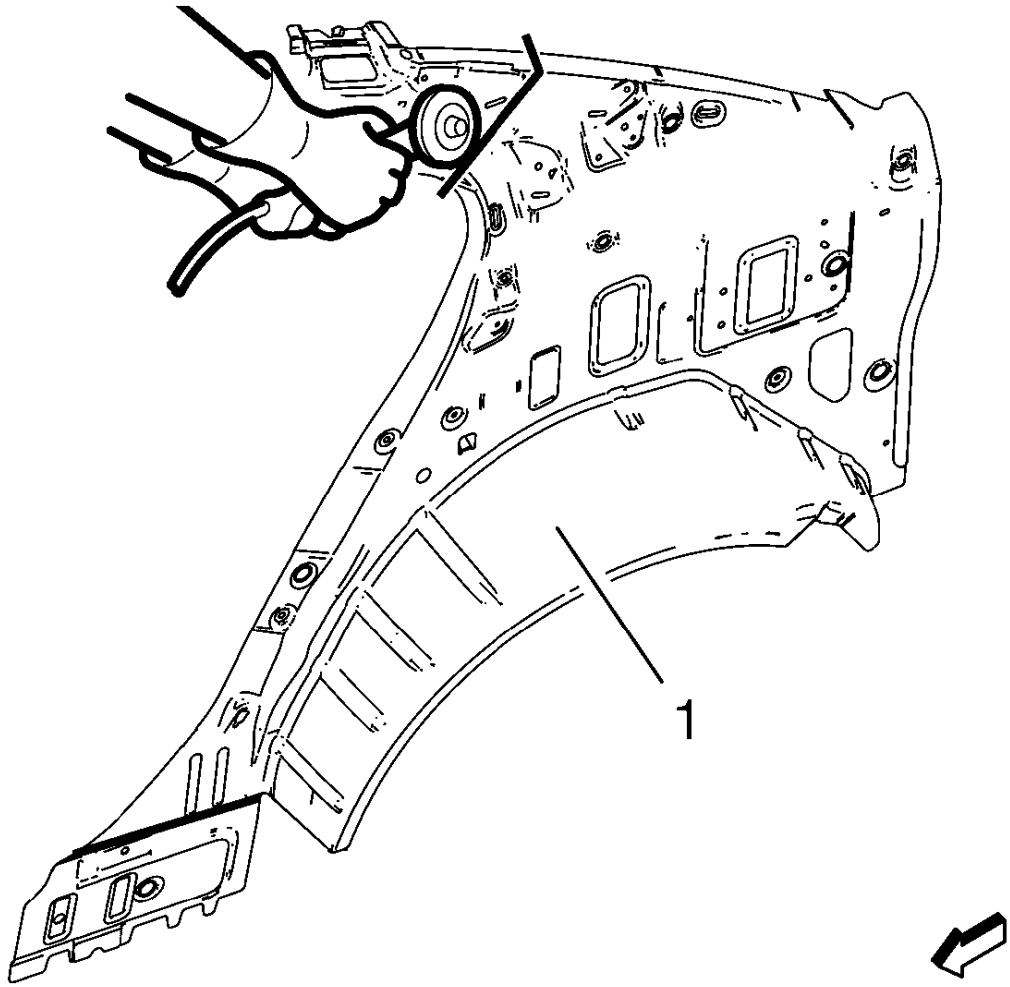

Fig. 109: Cutting Body Side Inner Panel
Courtesy of GENERAL MOTORS COMPANY

NOTE: Cut the body side inner panel lower 30 mm (1.2 in) longer. It should overlap with the remaining of the original panel.

2. Cut the body side inner panel in corresponding locations to fit the remaining original panel. The sectioning joint should be trimmed to allow a gap of one-and-one-half-times the metal thickness at the sectioning joint.
3. Create a 50 mm (2 in) backing plate from the unused portion of the service part.
4. Drill 8 mm (5/16 in) along the sectioning cut on the remaining original part. Locate these holes 13 mm (1/2 in) from the edge of part and spaced 40 mm (1 1/2 in) apart.
5. Prepare all mating surfaces as necessary.
6. Fit the backing plates halfway into the sectioning joints, clamp in place and plug weld to the vehicle.

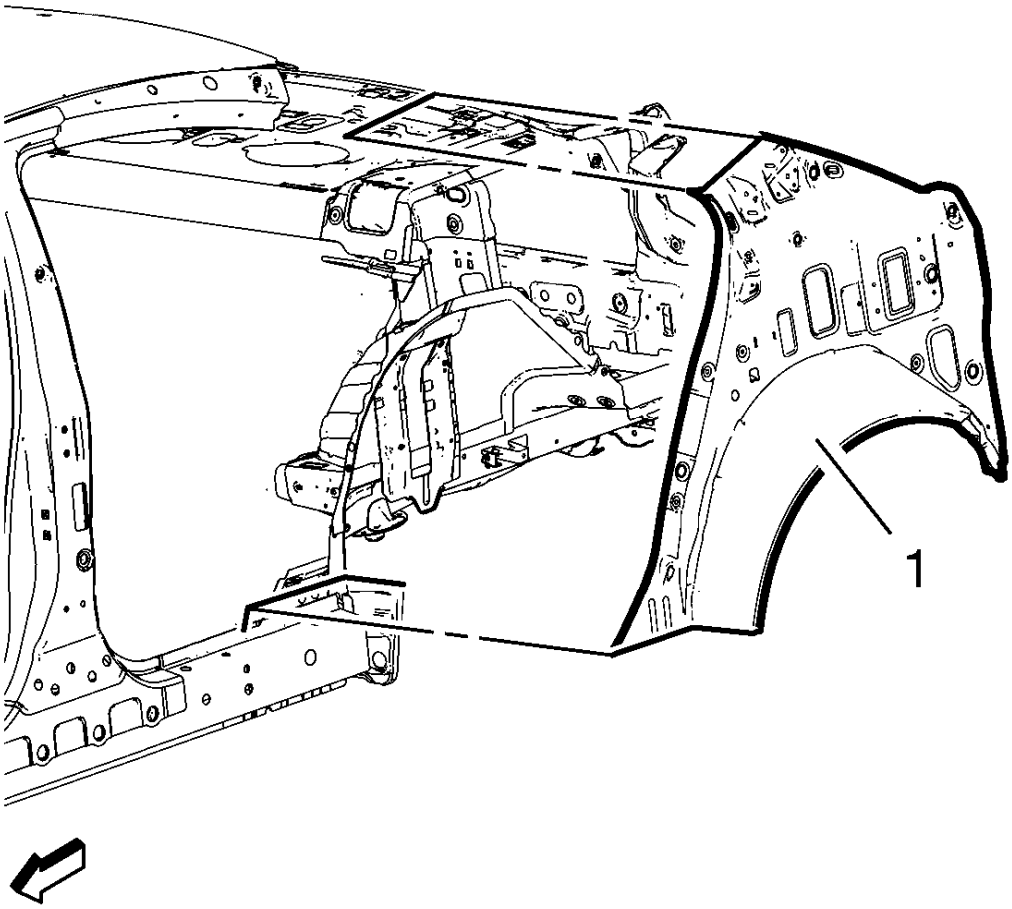

Fig. 110: Body Side Inner Panel
Courtesy of GENERAL MOTORS COMPANY

7. Position the body side inner panel (1).
8. Verify the fit of the panel.
9. Clamp the body side inner panel into position.

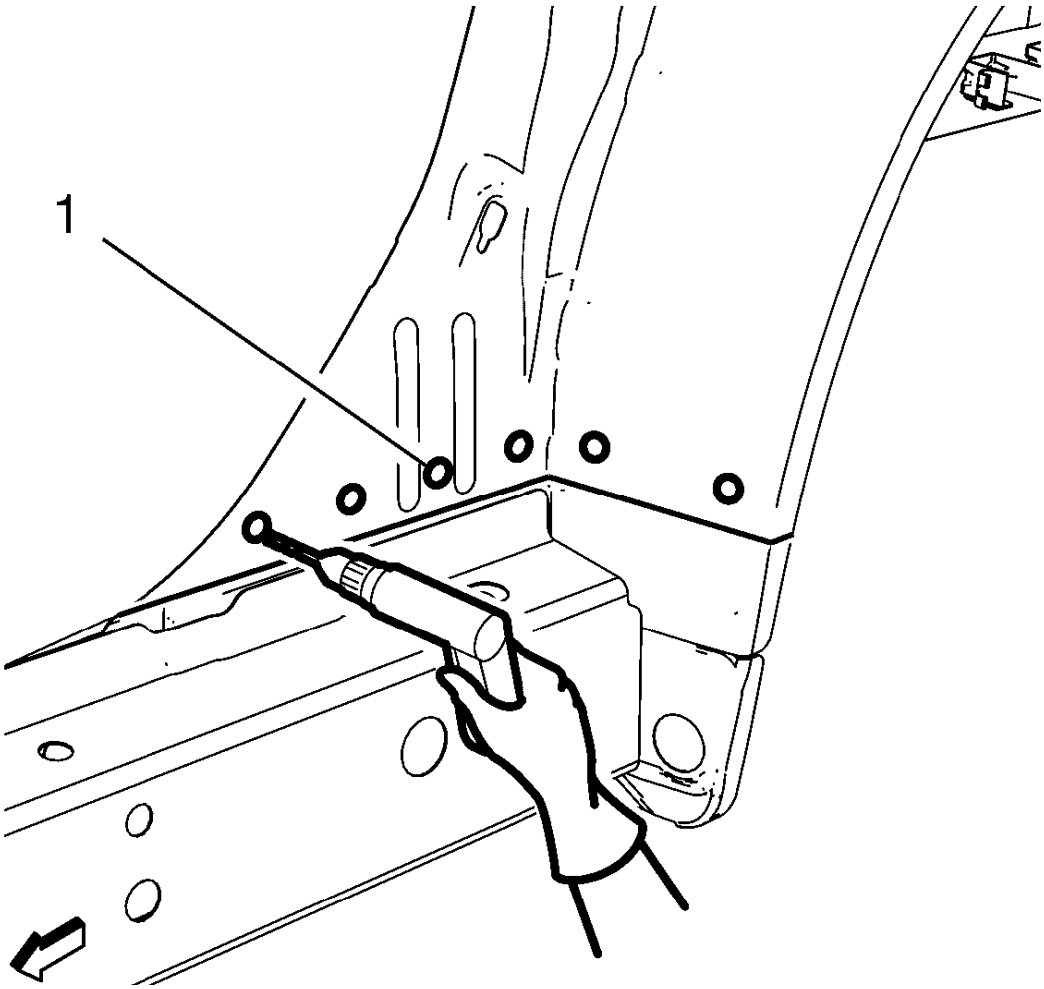

Fig. 111: Drilling Rivet Attachment Holes Of Service Body Side Inner Panel
Courtesy of GENERAL MOTORS COMPANY

10. Using a 7 mm (17/64 in) bit, drill the rivet attachment holes (1) into the service body side inner panel.
11. Remove the service body side inner panel.

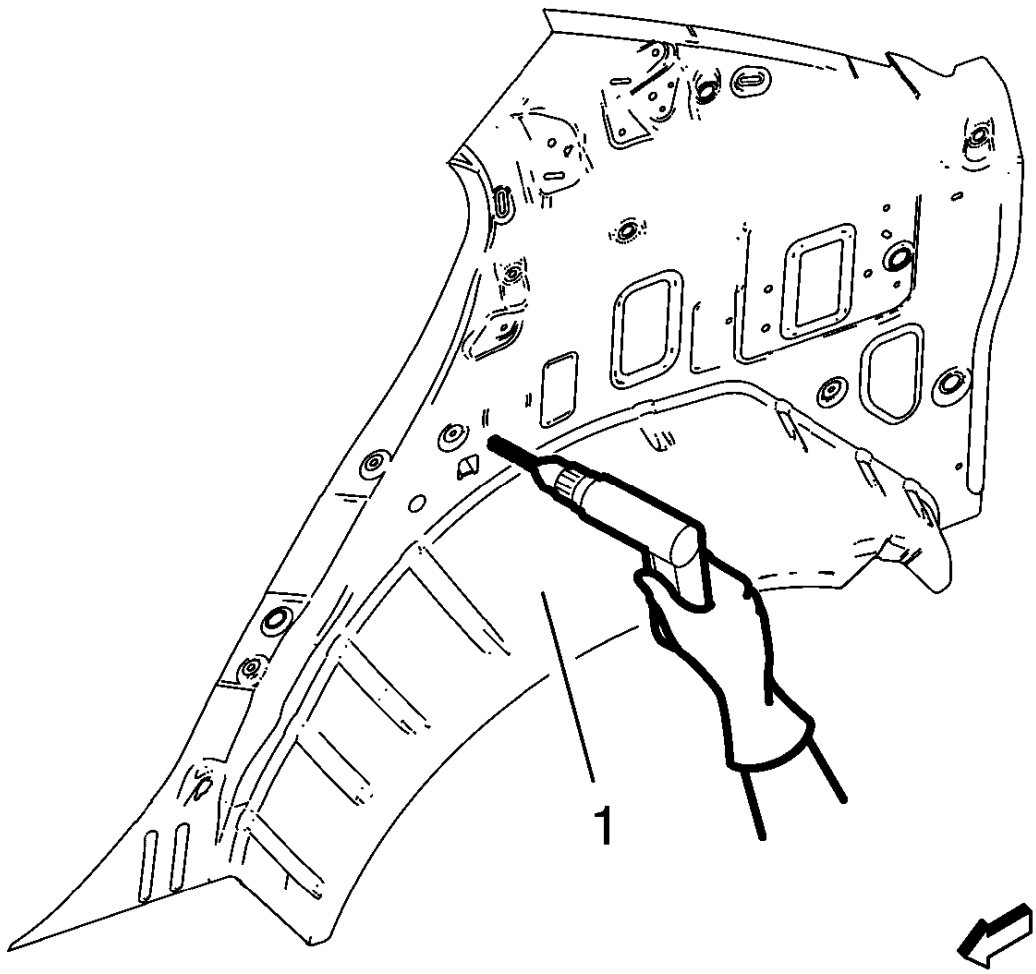

Fig. 112: Drilling Hole For Welding Body Side Inner Panel
Courtesy of GENERAL MOTORS COMPANY

12. Drill 8 mm (5/16 in) for plug welding along the edges of the body side inner panel (1) as noted from the original panel.
13. Prepare the bonding mating areas by grinding to bare steel the surface of the panels in the repair area.
14. Apply GM-approved weld-thru coating or equivalent to all mating surfaces. Refer to **Anti-Corrosion Treatment and Repair** .

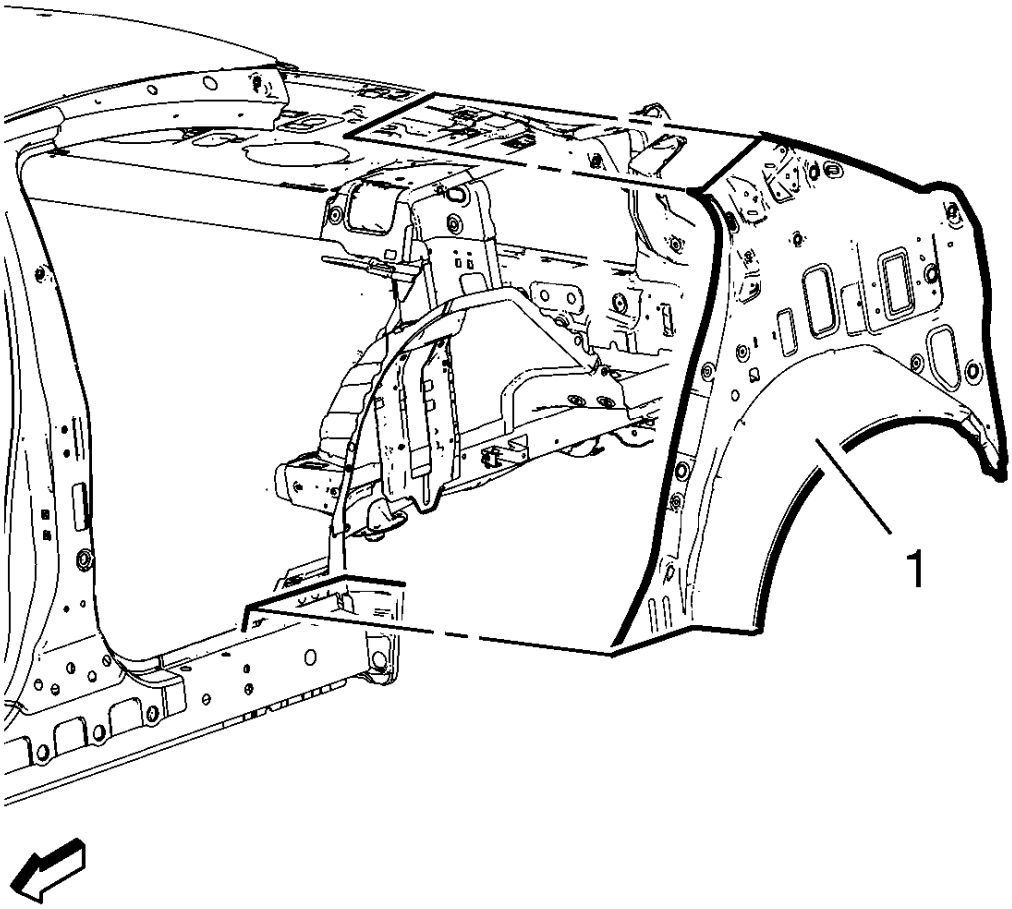

Fig. 113: Body Side Inner Panel
Courtesy of GENERAL MOTORS COMPANY

15. Position the body side inner panel (1).
16. Verify the fit of the panel.
17. Clamp the body side inner panel into position.

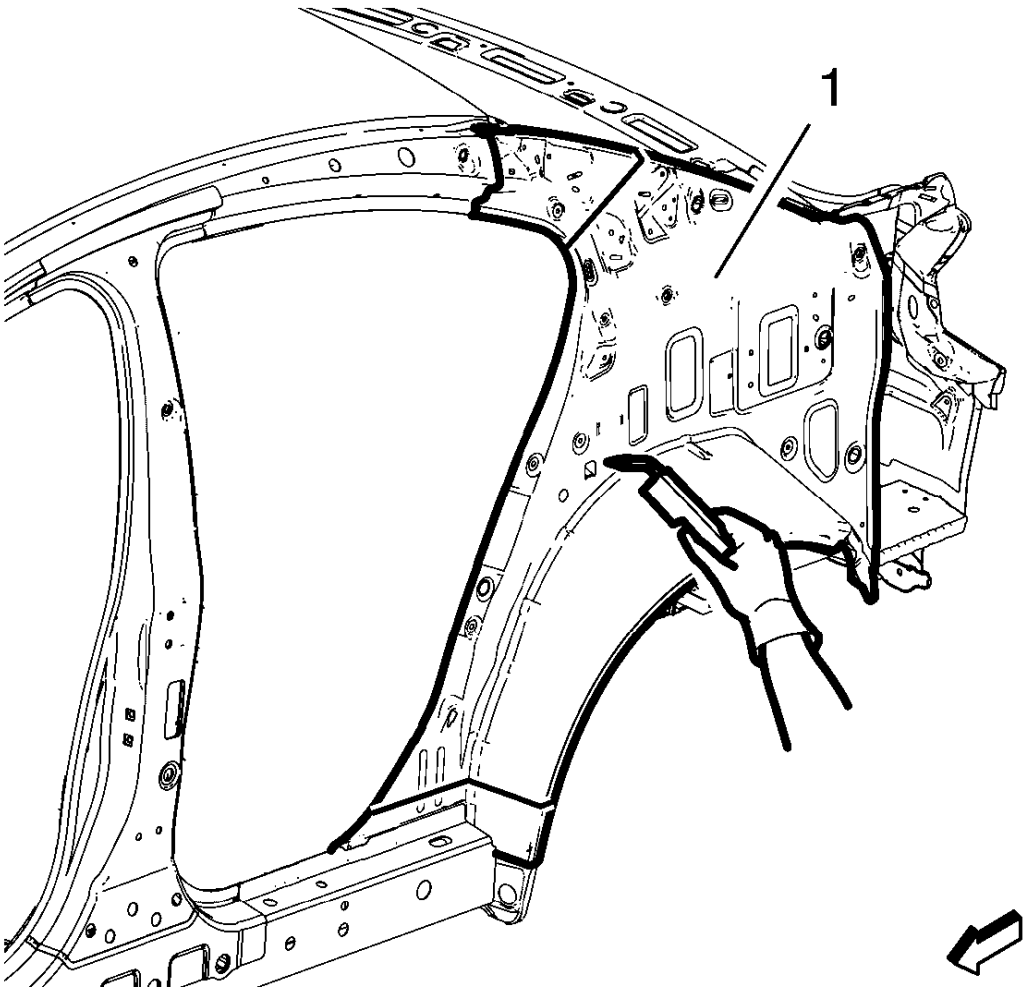

Fig. 114: Welding Body Side Inner Panel
Courtesy of GENERAL MOTORS COMPANY

18. Plug weld the body side inner panel (1) accordingly.
19. To create a solid weld with minimum heat distortion, make 25 mm (1 in) stitch welds along the seam with 25 mm (1 in) gaps between them. Then go back and complete the stitch weld.

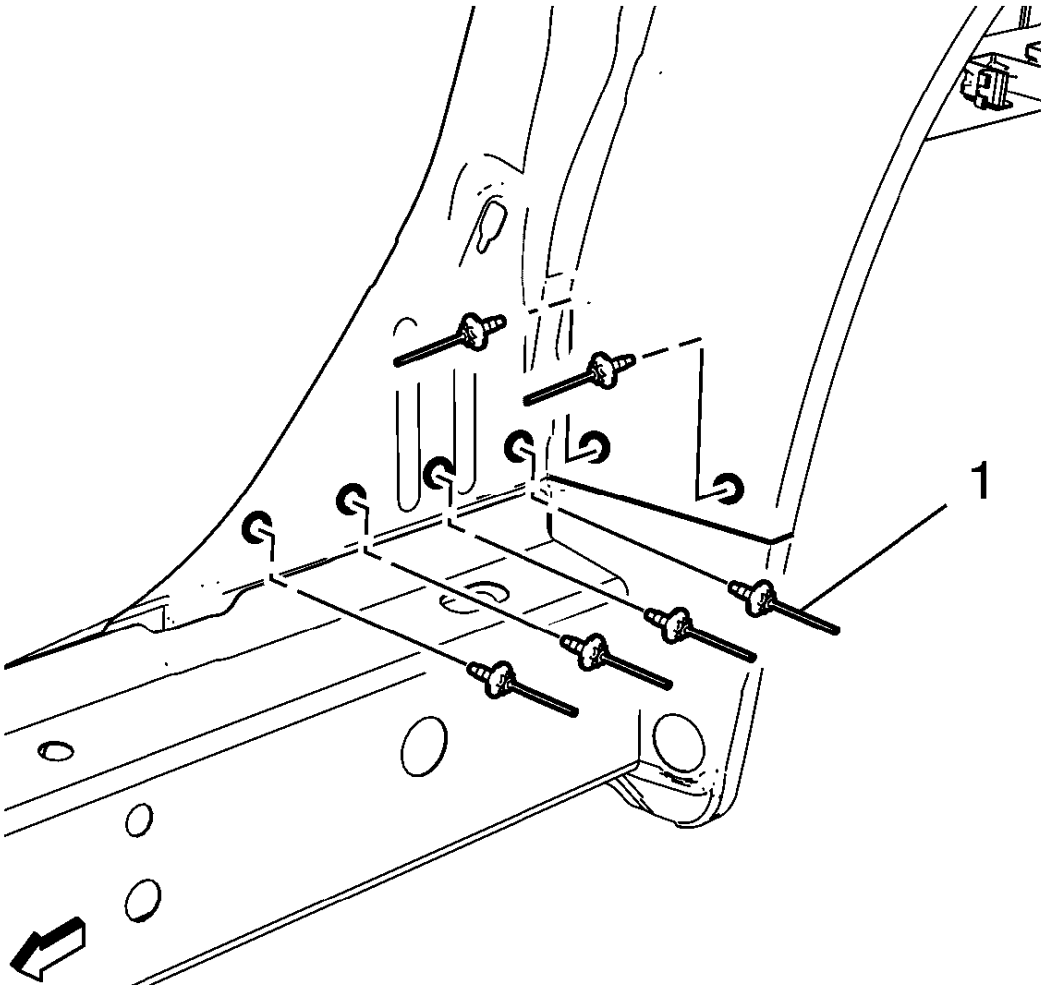

Fig. 115: Body Side Inner Panel Lower Rivets
Courtesy of GENERAL MOTORS COMPANY

20. Install the 14 mm (17/32 in) long rivets (1) to the body side inner panel lower.

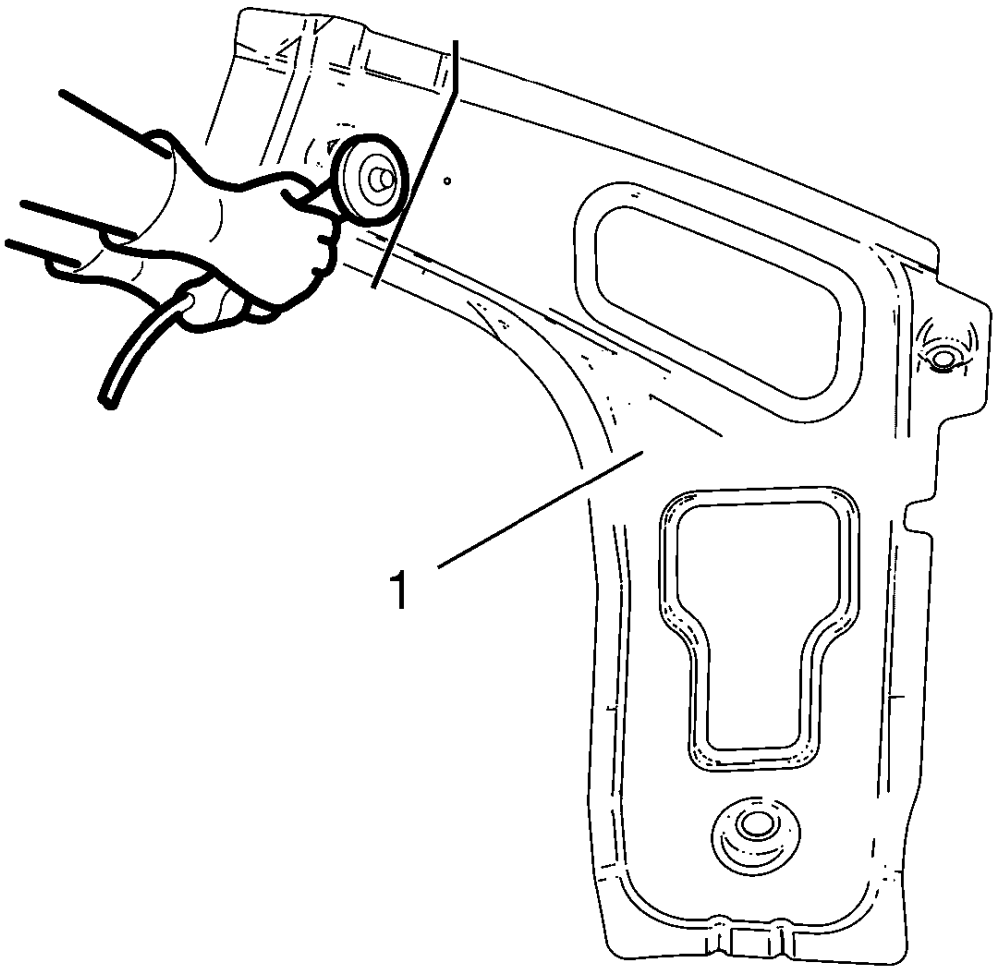

Fig. 116: Cutting Body Lock Pillar Upper Reinforcement
Courtesy of GENERAL MOTORS COMPANY

21. Cut the body lock pillar upper reinforcement (1) in corresponding locations to fit the remaining original panel. The sectioning joint should be trimmed to allow a gap of one-and-one-half-times the metal thickness at the sectioning joint.
22. Create a 50 mm (2 in) backing plate from the unused portion of the service part.
23. Drill 8 mm (5/16 in) along the sectioning cut on the remaining original part. Locate these holes 13 mm (1/2 in) from the edge of part and spaced 40 mm (1 1/2 in) apart.
24. Prepare all mating surfaces as necessary.
25. Fit the backing plates halfway into the sectioning joints, clamp in place and plug weld to the vehicle.
26. Align the body lock pillar upper reinforcement.

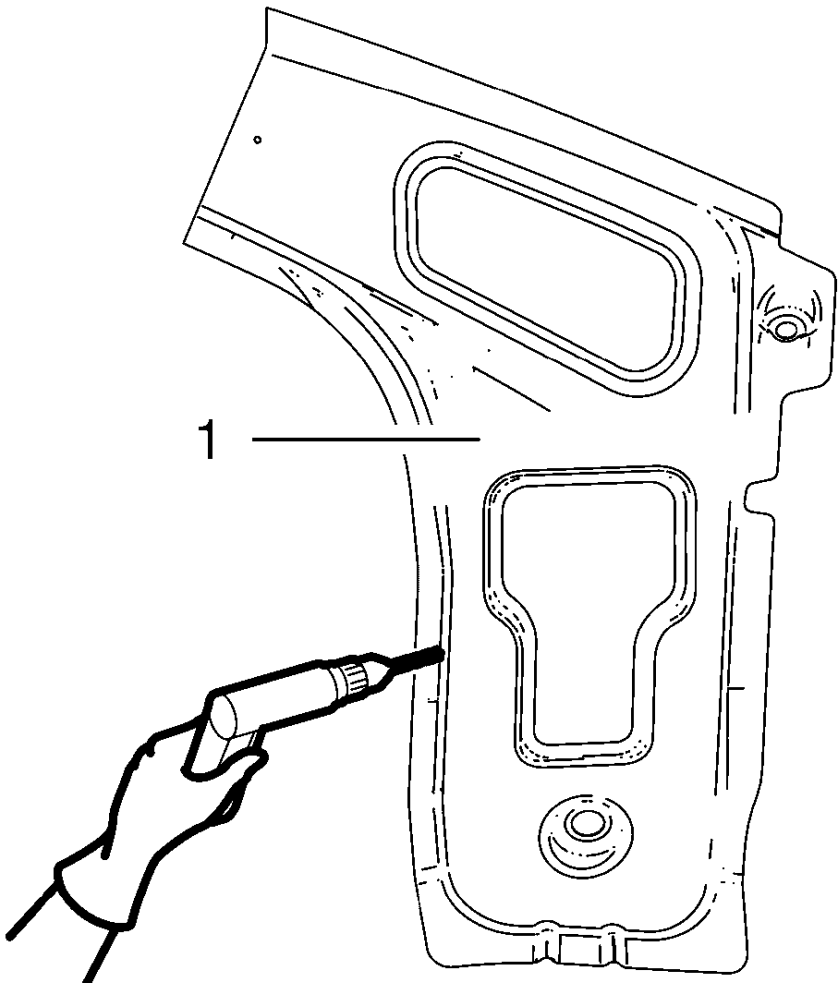

Fig. 117: Drilling Body Lock Pillar Upper Reinforcement For Welding
Courtesy of GENERAL MOTORS COMPANY

27. Drill 8 mm (5/16 in) for plug welding along the edges of the body lock pillar upper reinforcement (1) as noted from the original panel.
28. Clean and prepare the attaching surfaces for welding.

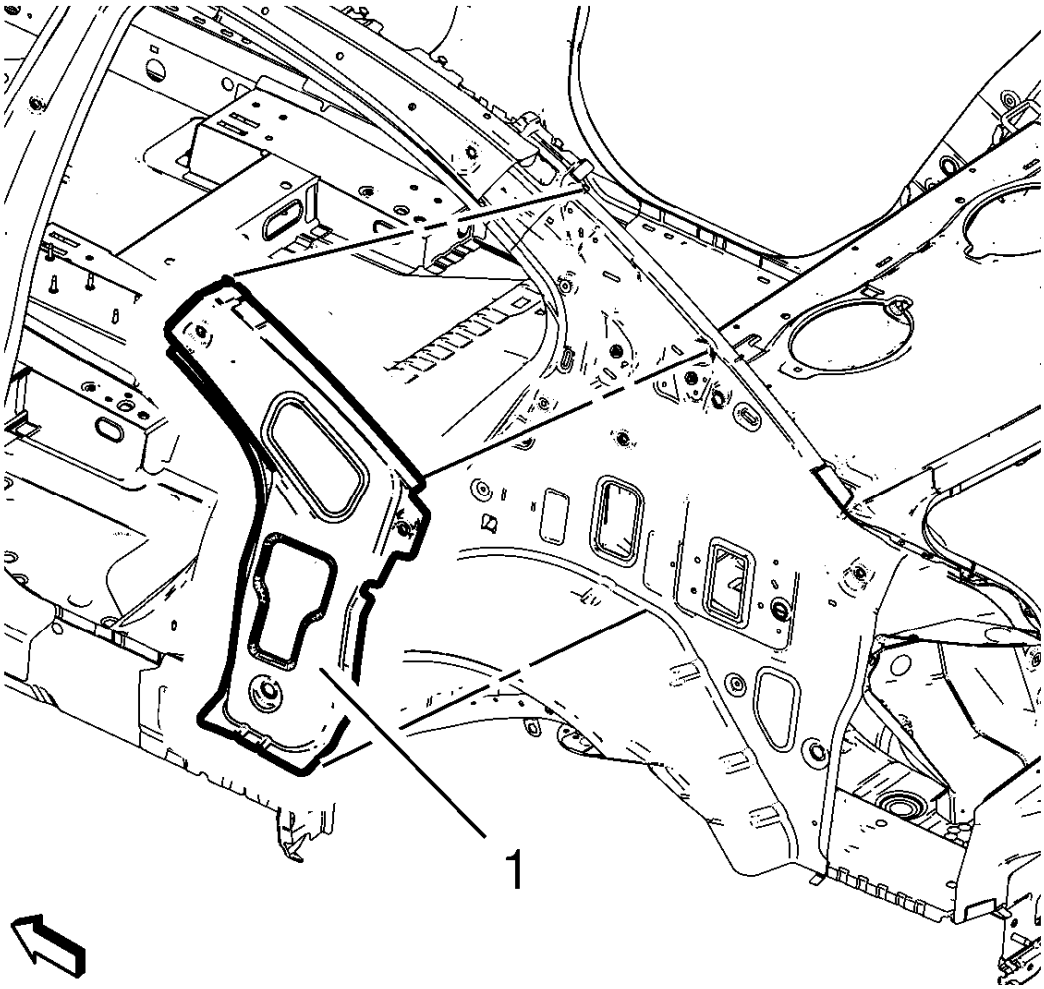

Fig. 118: Lock Pillar Upper Reinforcement
Courtesy of GENERAL MOTORS COMPANY

29. Position the body lock pillar upper reinforcement (1).
30. Verify the fit of the panel.
31. Clamp the body lock pillar upper reinforcement into position.

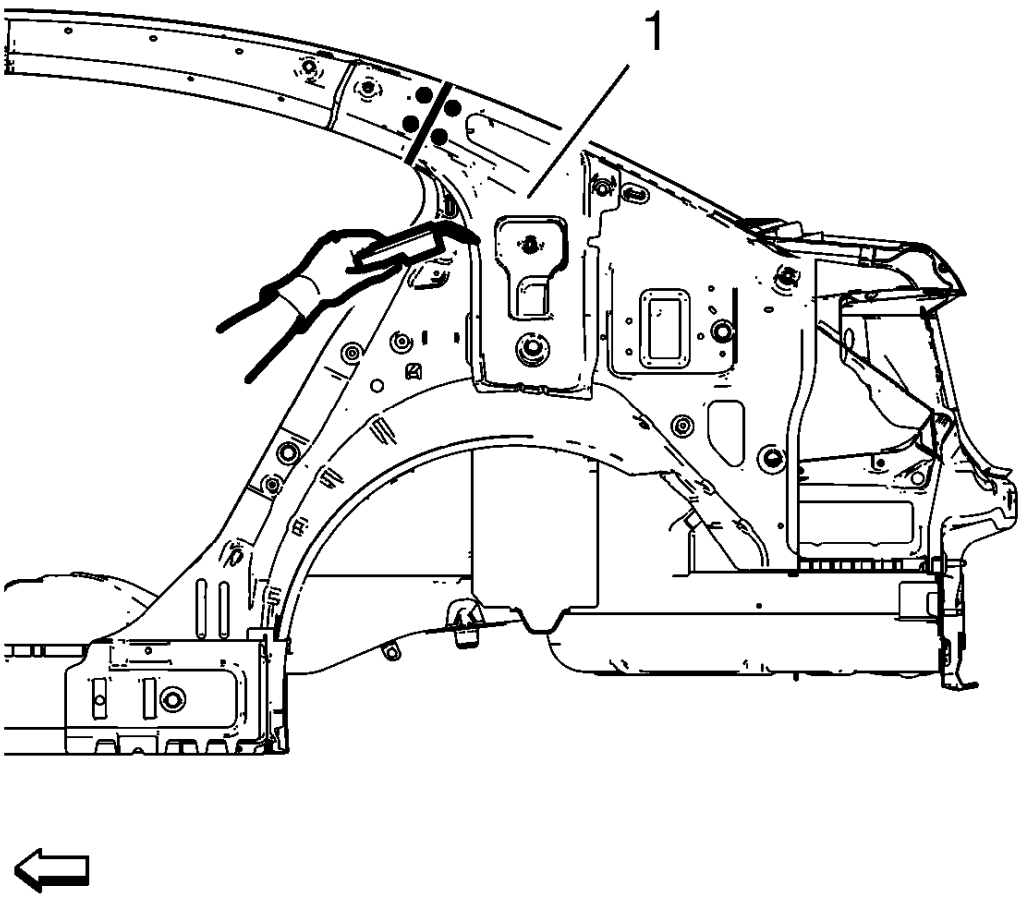

Fig. 119: Welding Body Lock Pillar Upper Reinforcement
Courtesy of GENERAL MOTORS COMPANY

32. Plug weld the body lock pillar upper reinforcement (1) accordingly.
33. Apply the sealers and anti-corrosion materials to the repair area, as necessary. Refer to **Anti-Corrosion Treatment and Repair** .
34. Paint the repaired area. Refer to **Basecoat/Clearcoat Paint Systems** .
35. Install all related panels and components.
36. Connect the negative battery cable. Refer to **Battery Negative Cable Disconnection and Connection** .
37. Enable the SIR System. Refer to **SIR Disabling and Enabling** .

REAR COMPARTMENT FLOOR PANEL SECTIONING

Removal Procedure

WARNING: Refer to Approved Equipment for Collision Repair Warning .

WARNING: Refer to Glass and Sheet Metal Handling Warning .

1. Disable the SIR System. Refer to **SIR Disabling and Enabling** .
2. Disconnect the negative battery cable. Refer to **Battery Negative Cable Disconnection and Connection** .
3. Remove all related panels and components.
4. Visually inspect the damage. Repair as much of the damage as possible.
5. Remove the sealers and anti-corrosion materials from the repair area, as necessary. Refer to **Anti-Corrosion Treatment and Repair** .

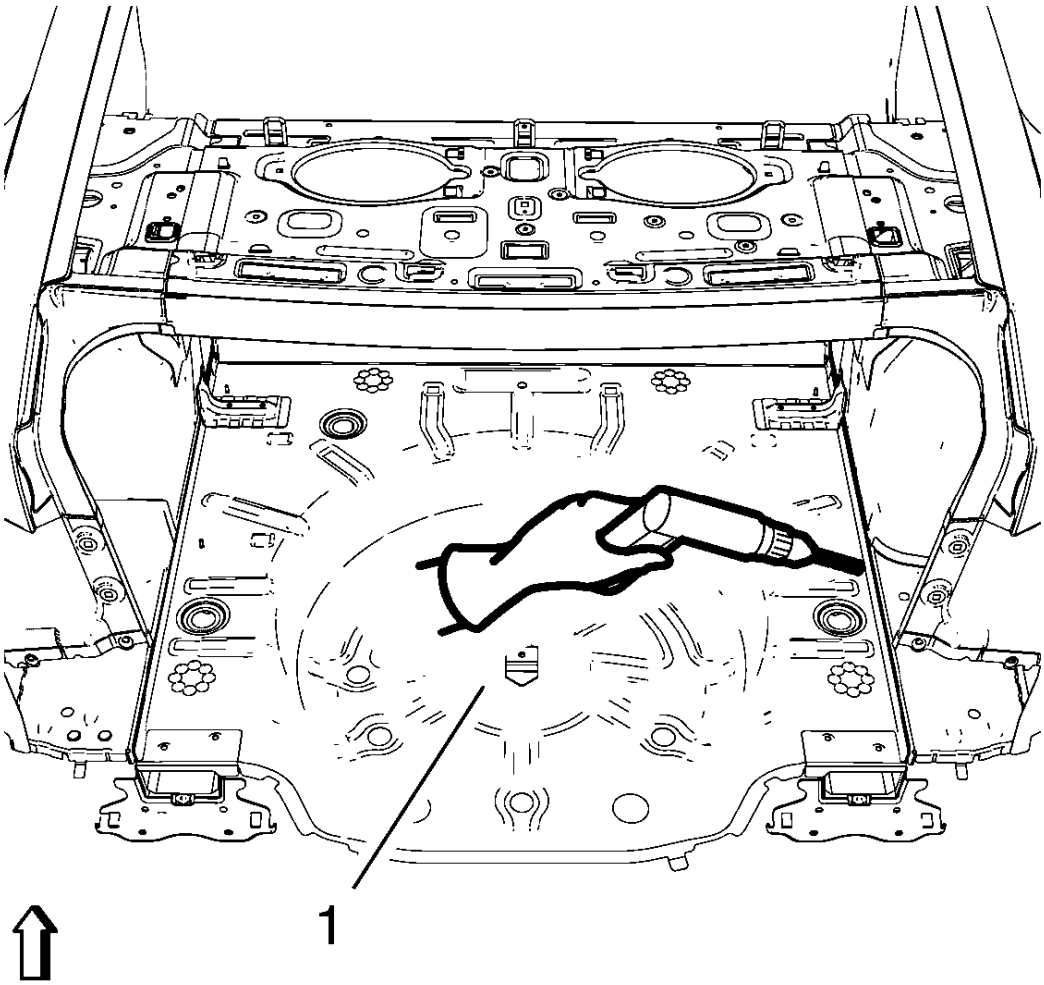

Fig. 120: Drilling Welds Of Rear Compartment Floor Panel
Courtesy of GENERAL MOTORS COMPANY

6. Locate and mark all the necessary factory welds of the rear compartment floor panel (1).
7. Note the number and location of weld studs for installation of the service assembly.
8. Drill all factory welds. Note the number and location of welds for installation of the service assembly.

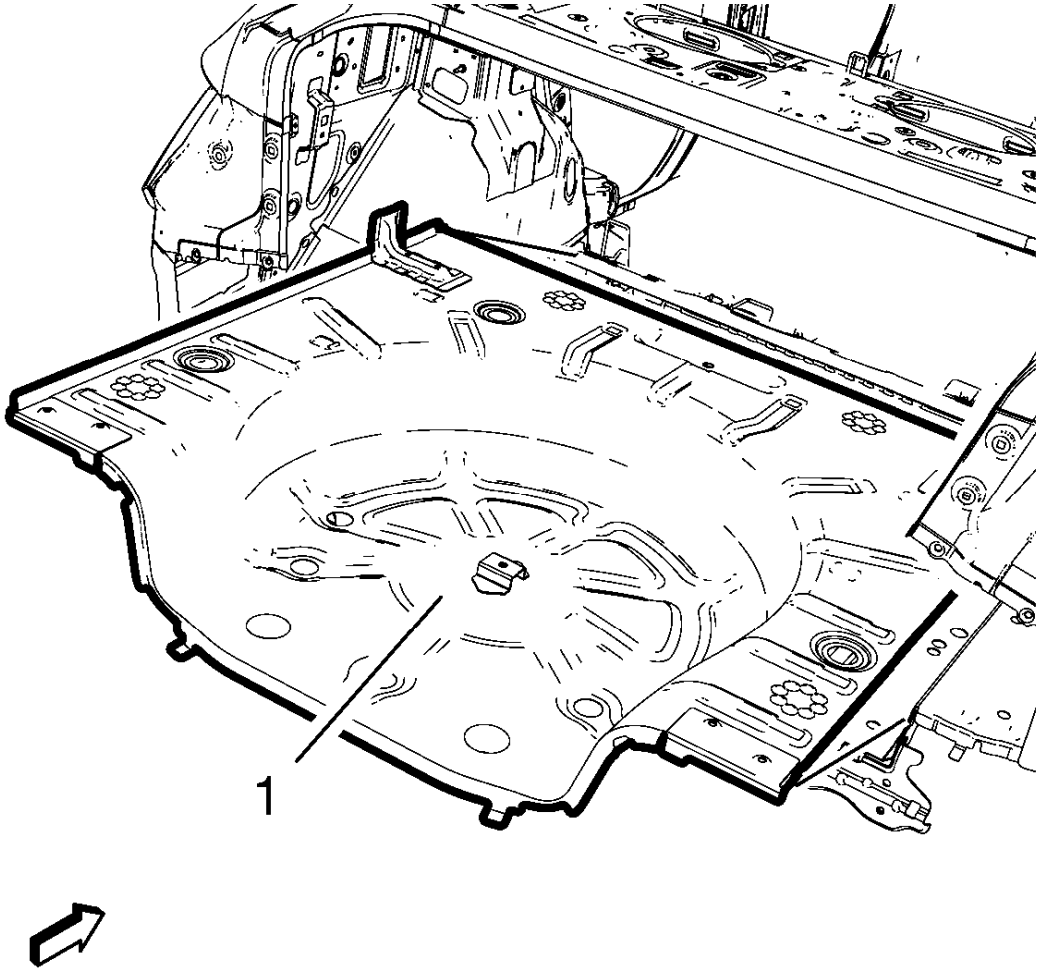

Fig. 121: Rear Compartment Floor Panel
Courtesy of GENERAL MOTORS COMPANY

9. Remove the damaged rear compartment floor panel (1).

Installation Procedure

1. Align the rear compartment floor panel.

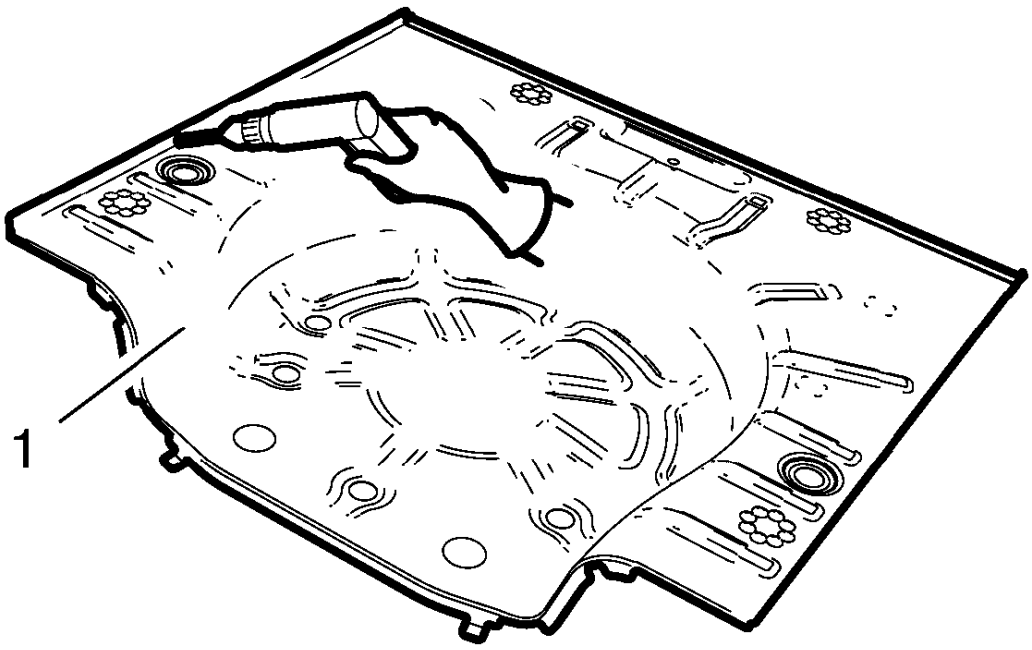

Fig. 122: Drilling Holes For Welding New Rear Compartment Floor Panel
Courtesy of GENERAL MOTORS COMPANY

2. Drill 8 mm (5/16 in) for plug welding along the edges of the rear compartment floor panel (1) as noted from the original panel.
3. Clean and prepare the attaching surfaces for welding.
4. Position the rear compartment floor panel on the vehicle.
5. Verify the fit of the rear compartment floor panel.
6. Clamp the rear compartment floor panel into position.

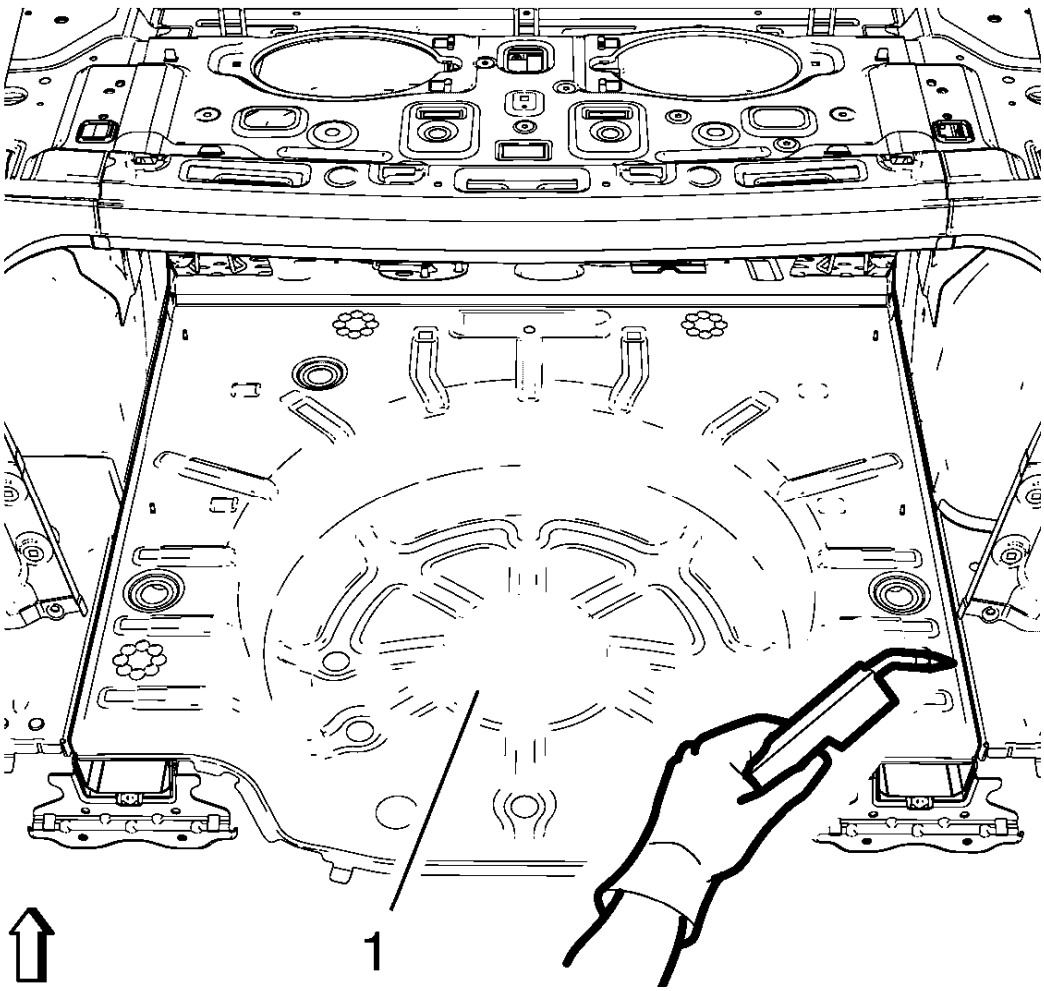

Fig. 123: Welding Rear Compartment Floor
Courtesy of GENERAL MOTORS COMPANY

7. Plug weld the rear compartment floor (1) accordingly.
8. Weld accordingly the weld studs as noted.
9. Apply the sealers and anti-corrosion materials to the repair area, as necessary. Refer to **Anti-Corrosion Treatment and Repair** .
10. Paint the repaired area. Refer to **Basecoat/Clearcoat Paint Systems** .
11. Install all related panels and components.
12. Connect the negative battery cable. Refer to **Battery Negative Cable Disconnection and Connection** .
13. Enable the SIR system. Refer to **SIR Disabling and Enabling** .

REAR WHEELHOUSE PANEL REPLACEMENT

Removal Procedure

WARNING: Refer to Approved Equipment for Collision Repair Warning .

WARNING: Refer to Glass and Sheet Metal Handling Warning .

1. Disable the SIR System. Refer to **SIR Disabling and Enabling** .
2. Disconnect the negative battery cable. Refer to **Battery Negative Cable Disconnection and Connection** .
3. Remove all related panels and components.
4. Visually inspect the damage. Repair as much of the damage as possible.
5. Remove the sealers and anti-corrosion materials from the repair area, as necessary. Refer to **Anti-Corrosion Treatment and Repair** .

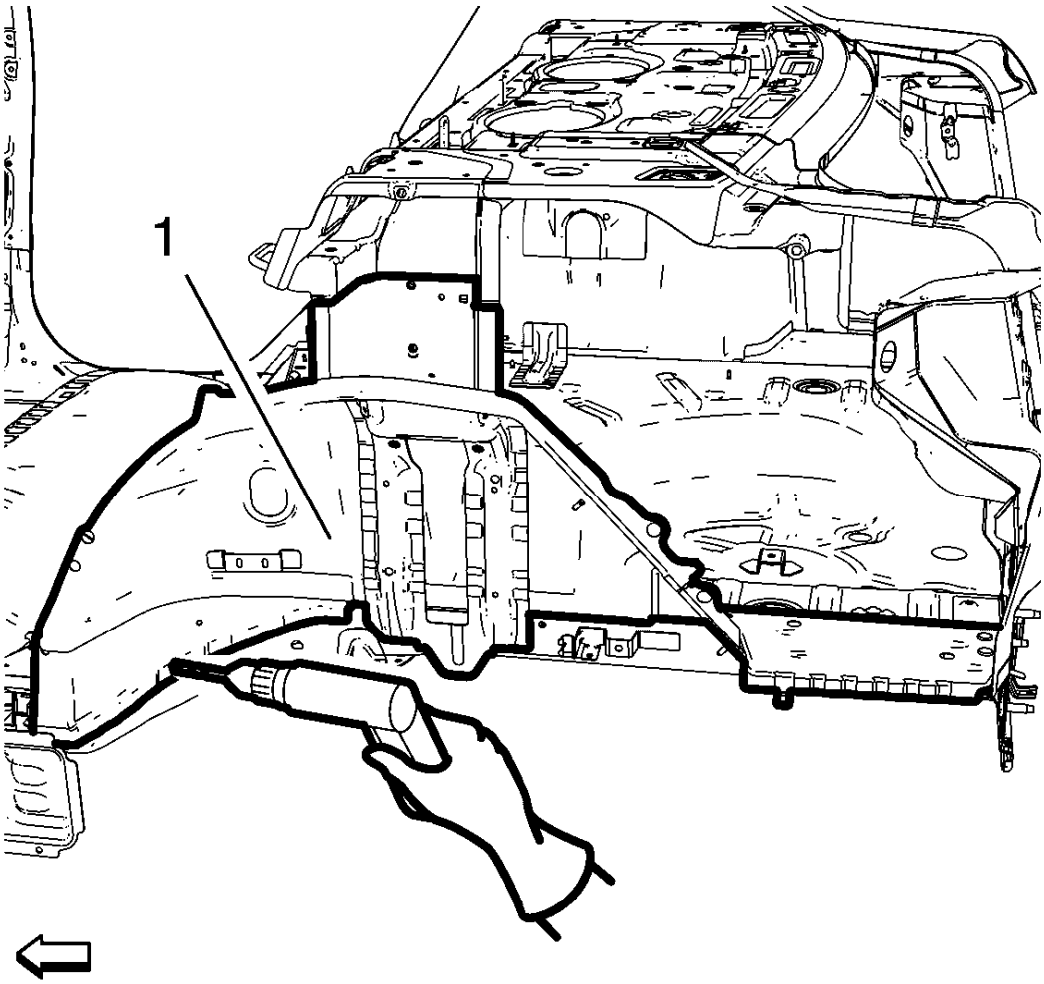

Fig. 124: Drilling Factory Welds Of Rear Inner Wheelhouse Panel

Courtesy of GENERAL MOTORS COMPANY

6. Locate and mark all the necessary factory welds of the rear inner wheelhouse panel (1).
7. Drill all factory welds.

NOTE: Note the number and location of welds for installation of the service assembly.

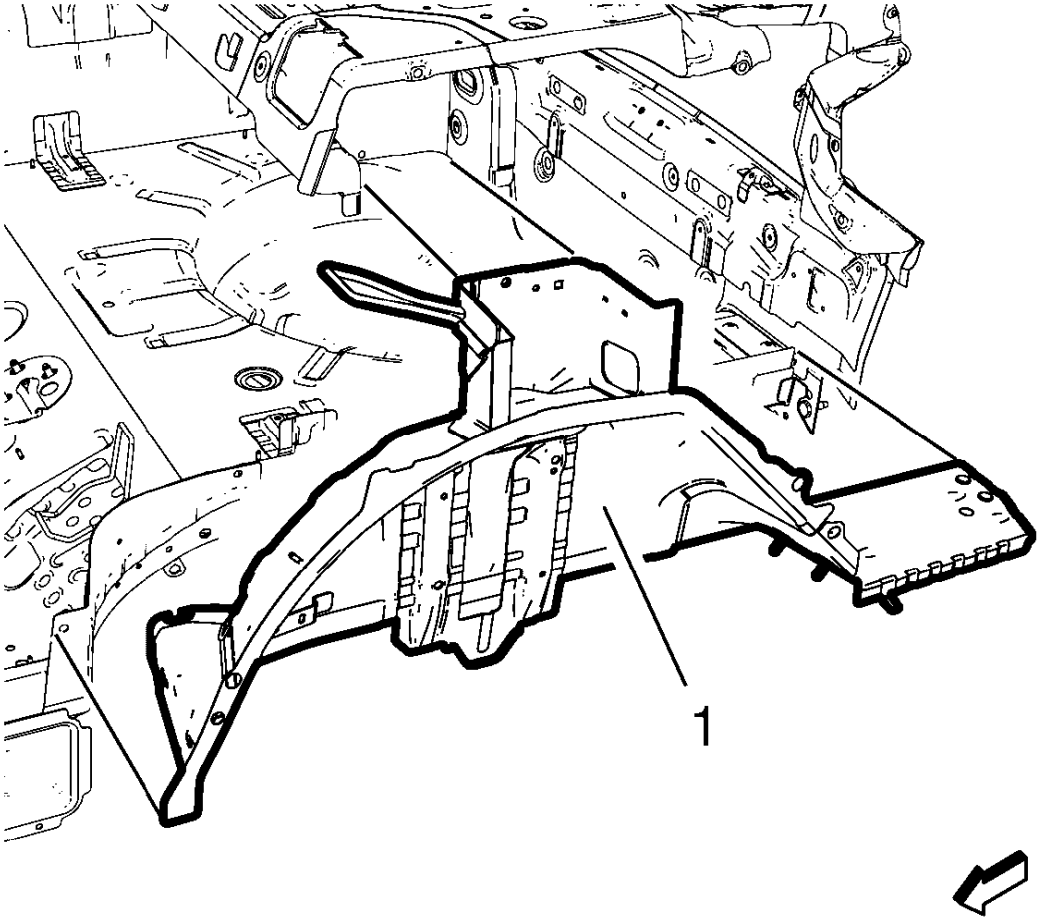

Fig. 125: Rear Inner Wheelhouse Panel
Courtesy of GENERAL MOTORS COMPANY

8. Remove the rear inner wheelhouse panel (1).

Installation Procedure

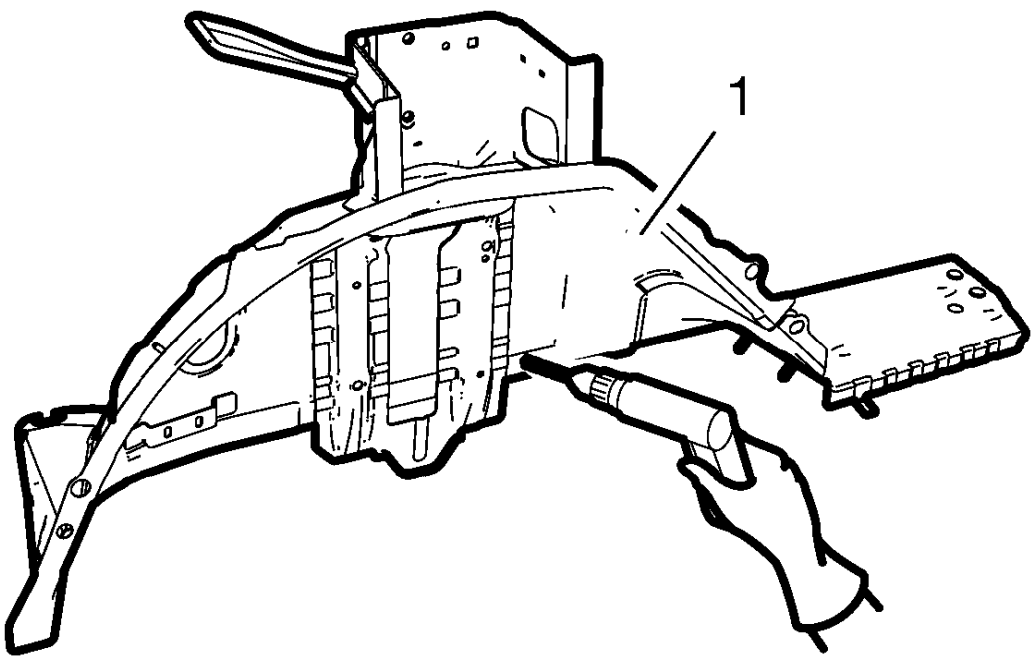

Fig. 126: Drilling Holes For Welding New Rear Inner Wheelhouse Panel
Courtesy of GENERAL MOTORS COMPANY

NOTE: If the location of the original plug weld holes can not be determined, space the plug weld holes every 40 mm (1 1/2 in).

1. Drill 8 mm (5/16 in) for plug welding along the edges of the rear inner wheelhouse panel (1) as noted from the original panel.
2. Clean and prepare the attaching surfaces for welding.

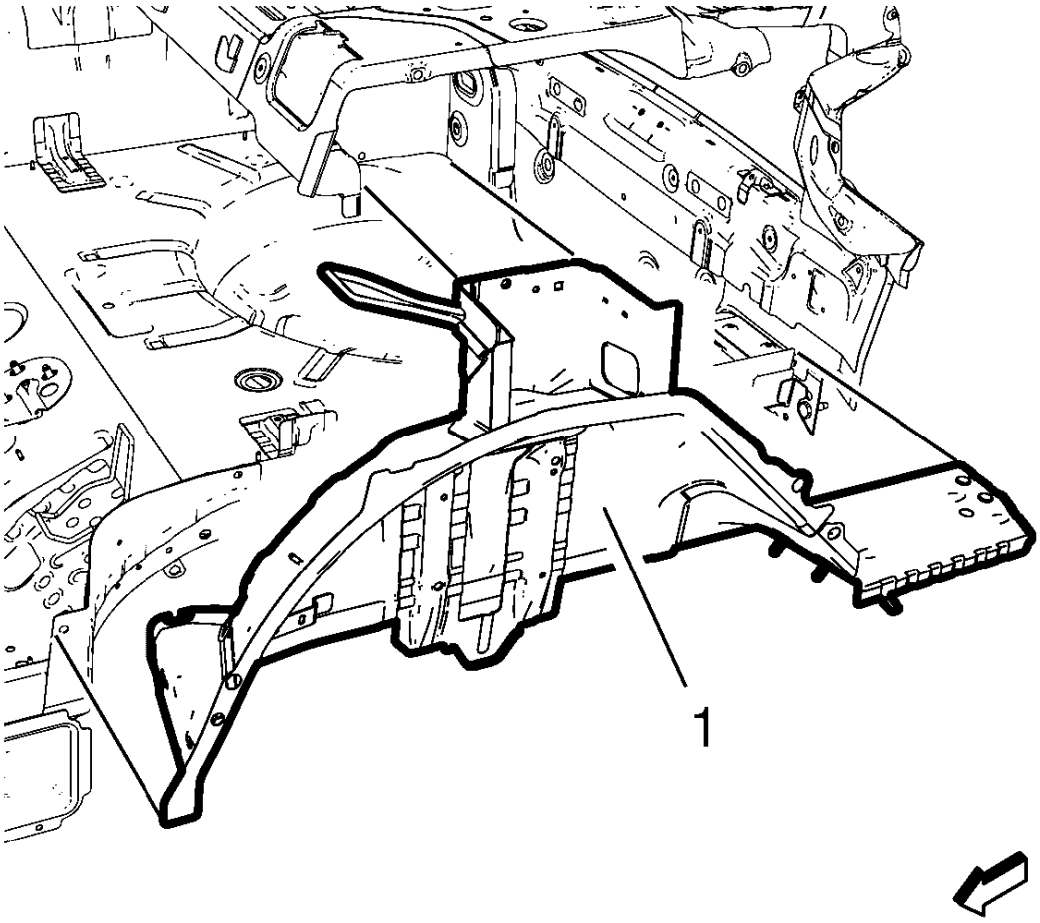

Fig. 127: Rear Inner Wheelhouse Panel
Courtesy of GENERAL MOTORS COMPANY

3. Position the rear inner wheelhouse panel (1) on the vehicle.
4. Verify the fit of the rear inner wheelhouse.
5. Clamp the rear inner wheelhouse into position.

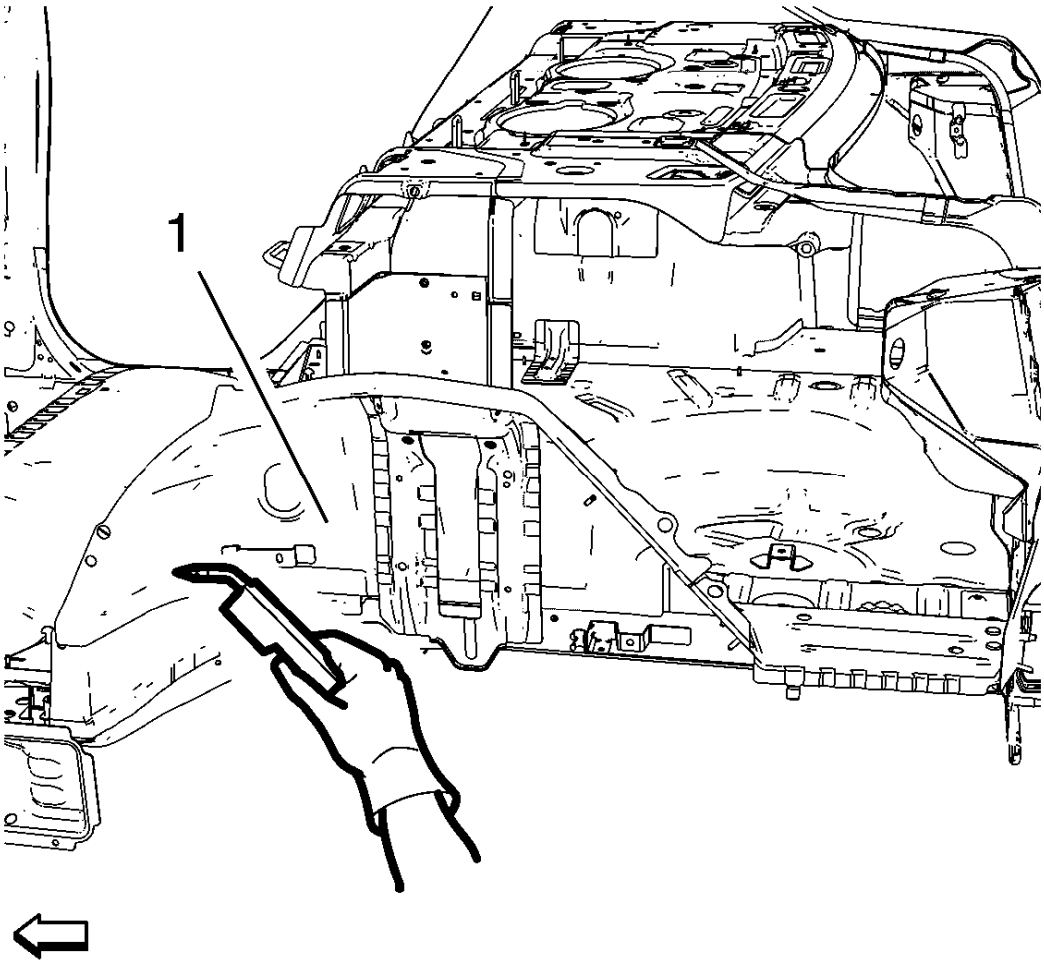

Fig. 128: Welding Rear Inner Wheelhouse Panel
Courtesy of GENERAL MOTORS COMPANY

6. Plug weld the rear wheelhouse panel (1) accordingly.
7. Apply the sealers and anti-corrosion materials to the repair area, as necessary. Refer to **Anti-Corrosion Treatment and Repair** .
8. Paint the repaired area. Refer to **Basecoat/Clearcoat Paint Systems** .
9. Install all related panels and components.
10. Connect the negative battery cable. Refer to **Battery Negative Cable Disconnection and Connection** .
11. Enable the SIR system. Refer to **SIR Disabling and Enabling** .

QUARTER OUTER PANEL SECTIONING

Removal Procedure

WARNING: Refer to Approved Equipment for Collision Repair Warning .

WARNING: Refer to Collision Sectioning Warning .

WARNING: Refer to Glass and Sheet Metal Handling Warning .

1. Disable the SIR System. Refer to **SIR Disabling and Enabling** .
2. Disconnect the negative battery cable. Refer to **Battery Negative Cable Disconnection and Connection** .
3. Remove all related panels and components.
4. Visually inspect the damage. Repair as much of the damage as possible.
5. Remove the sealers and anti-corrosion materials from the repair area, as necessary. Refer to **Anti-Corrosion Treatment and Repair** .

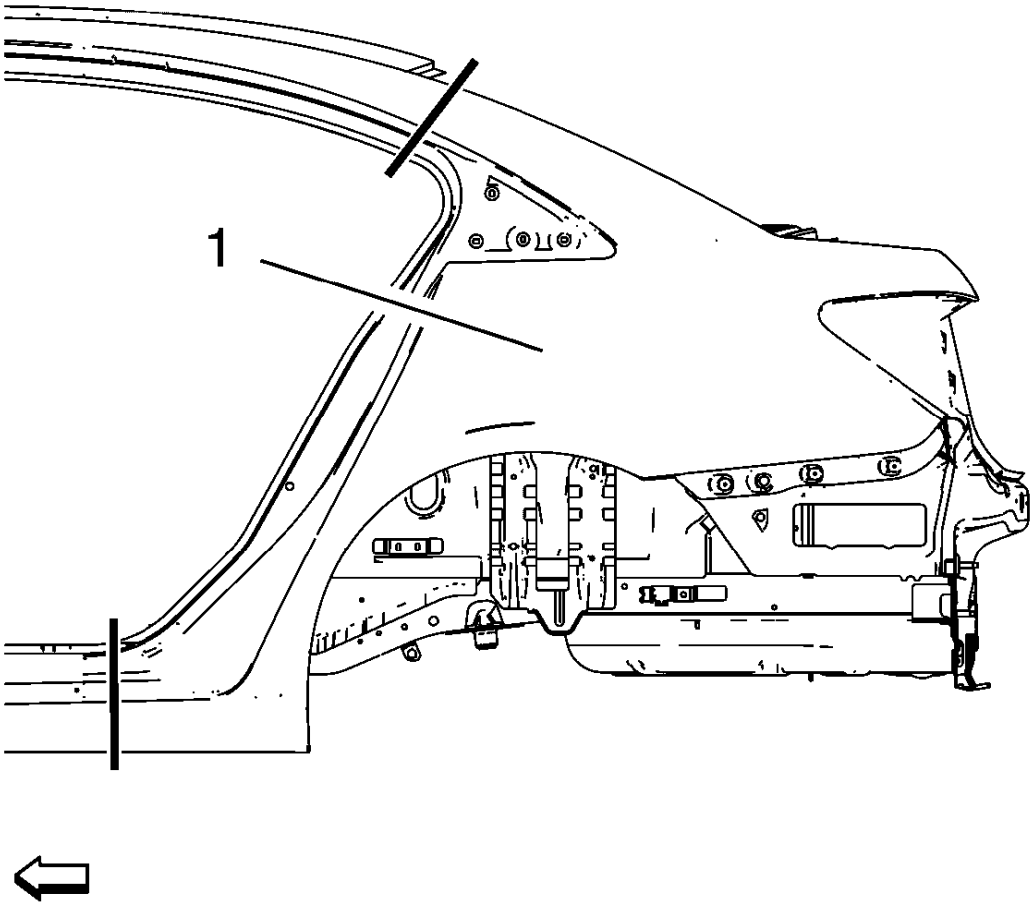

Fig. 129: Cut Lines On Quarter Outer Panel
Courtesy of GENERAL MOTORS COMPANY

6. Create cut lines on the quarter outer panel (1).

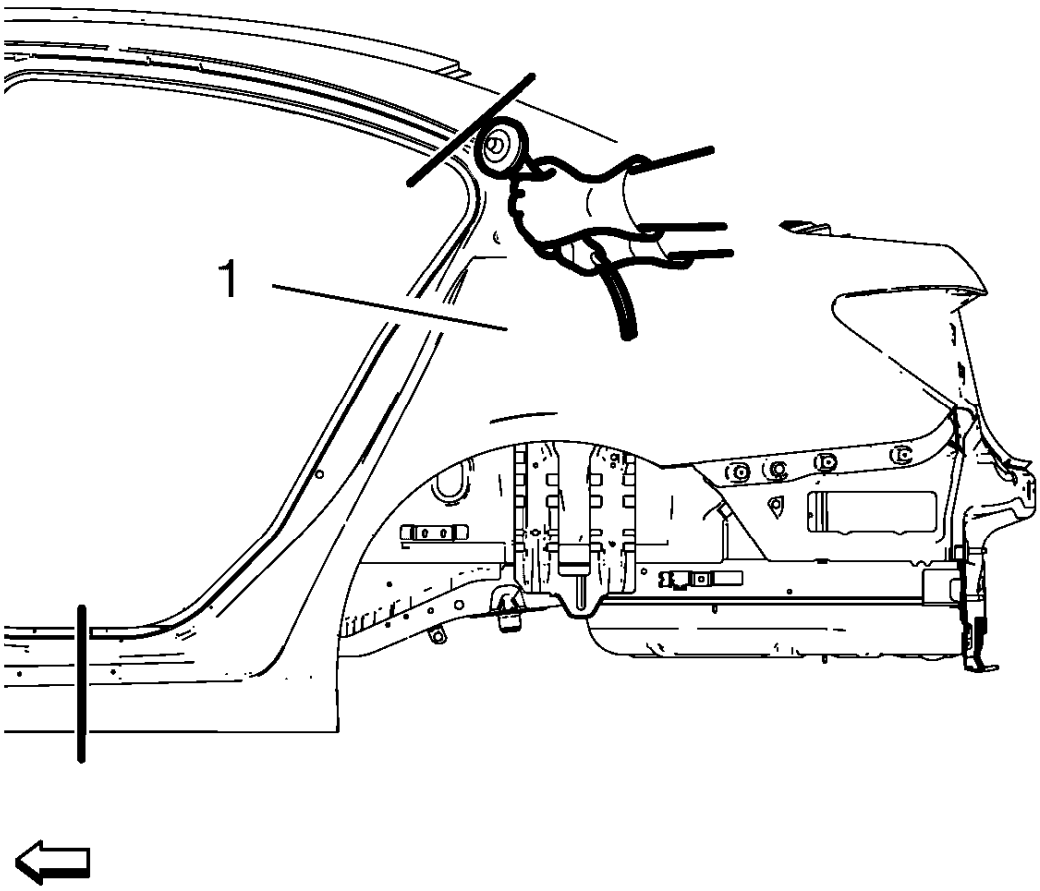

Fig. 130: Cutting Quarter Outer Panel
Courtesy of GENERAL MOTORS COMPANY

NOTE: Do not damage any inner panels or reinforcements.

7. Cut the quarter outer panel (1) where sectioning is to be performed.

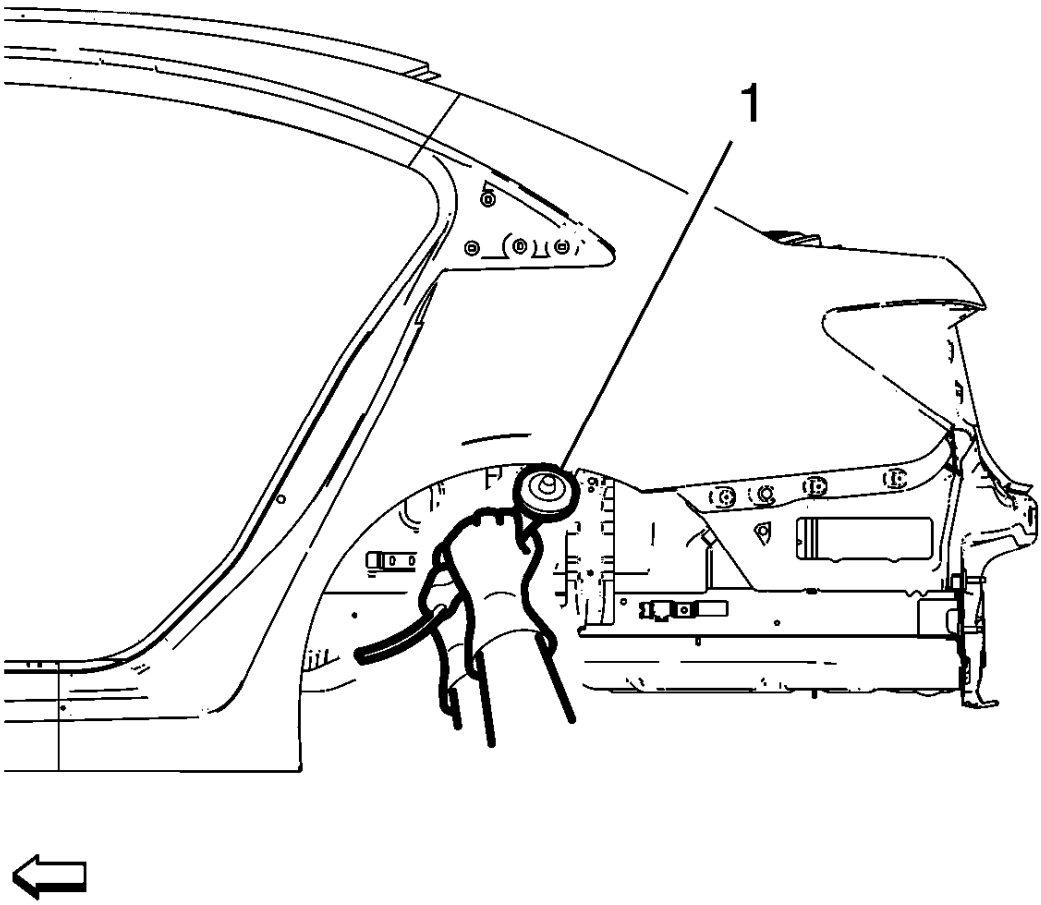

Fig. 131: Cutting Wheelhouse Flanging
Courtesy of GENERAL MOTORS COMPANY

8. Open the wheelhouse flanging (1).

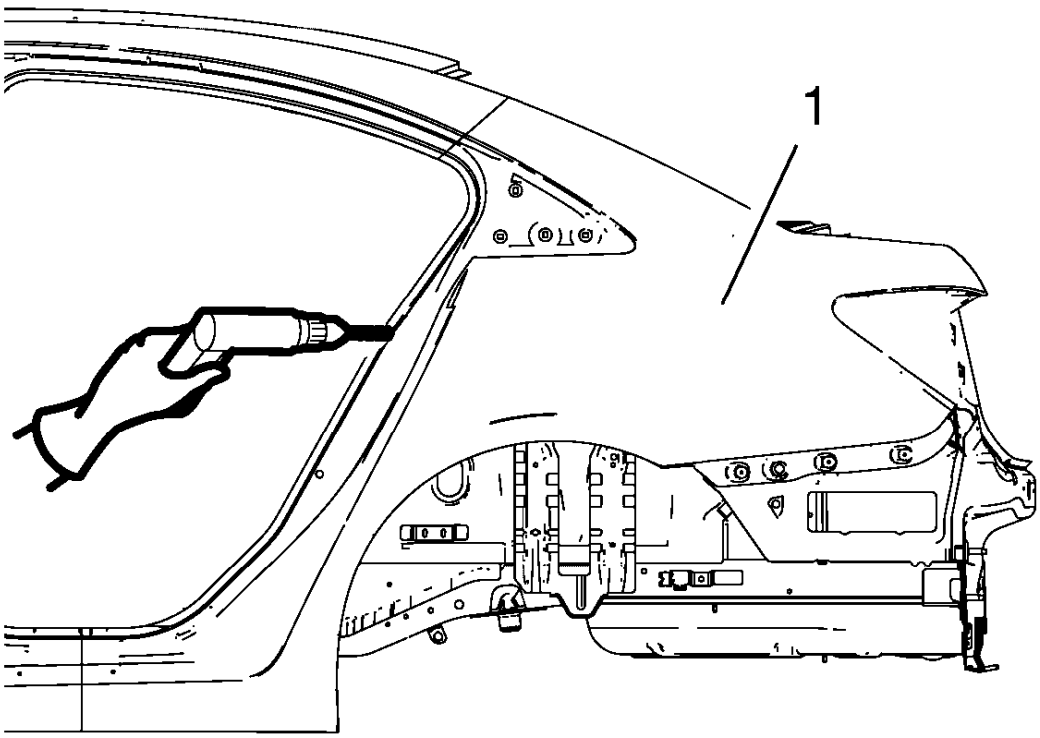

Fig. 132: Drilling Factory Welds On Quarter Outer Panel
Courtesy of GENERAL MOTORS COMPANY

9. Locate and mark all the necessary factory welds of the quarter outer panel (1).
10. Drill all factory welds. Note the number and location of welds for installation of the service assembly.

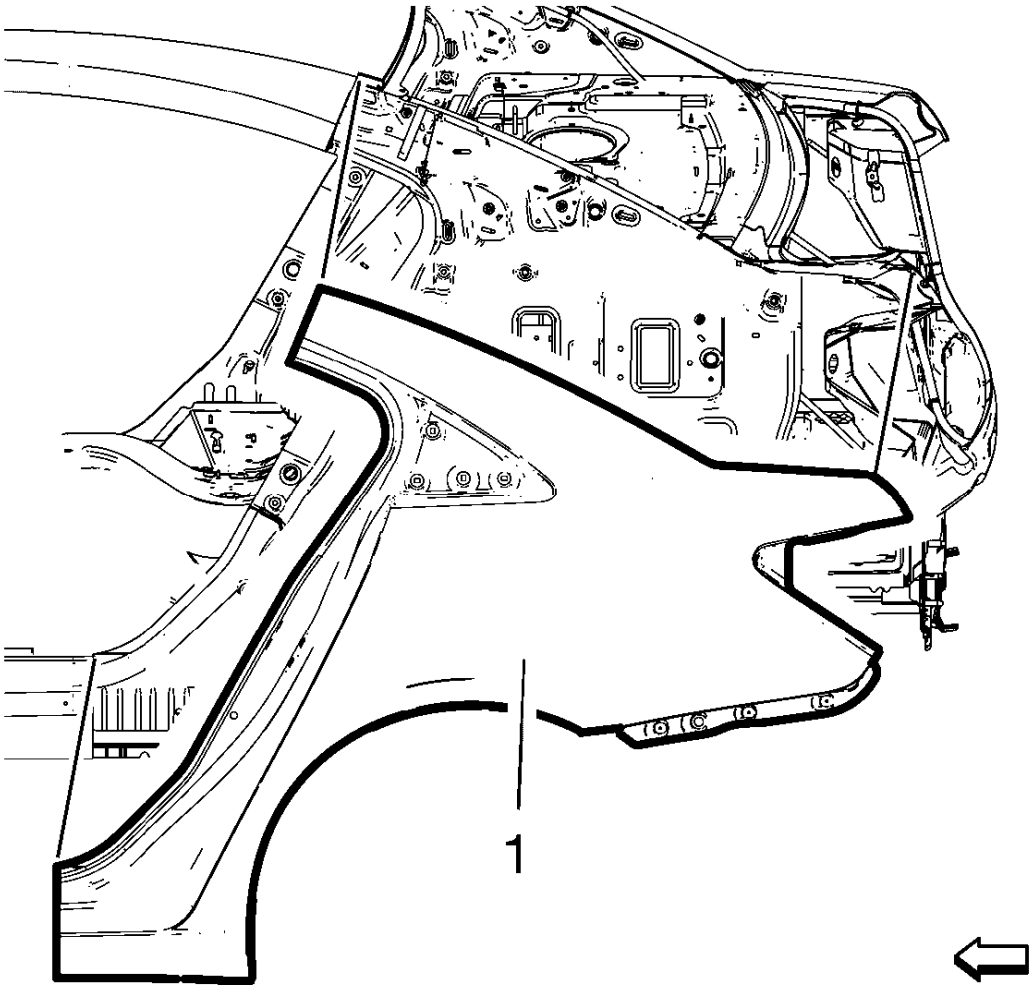

Fig. 133: Quarter Outer Panel
Courtesy of GENERAL MOTORS COMPANY

11. Remove the damaged quarter outer panel (1).

Installation Procedure

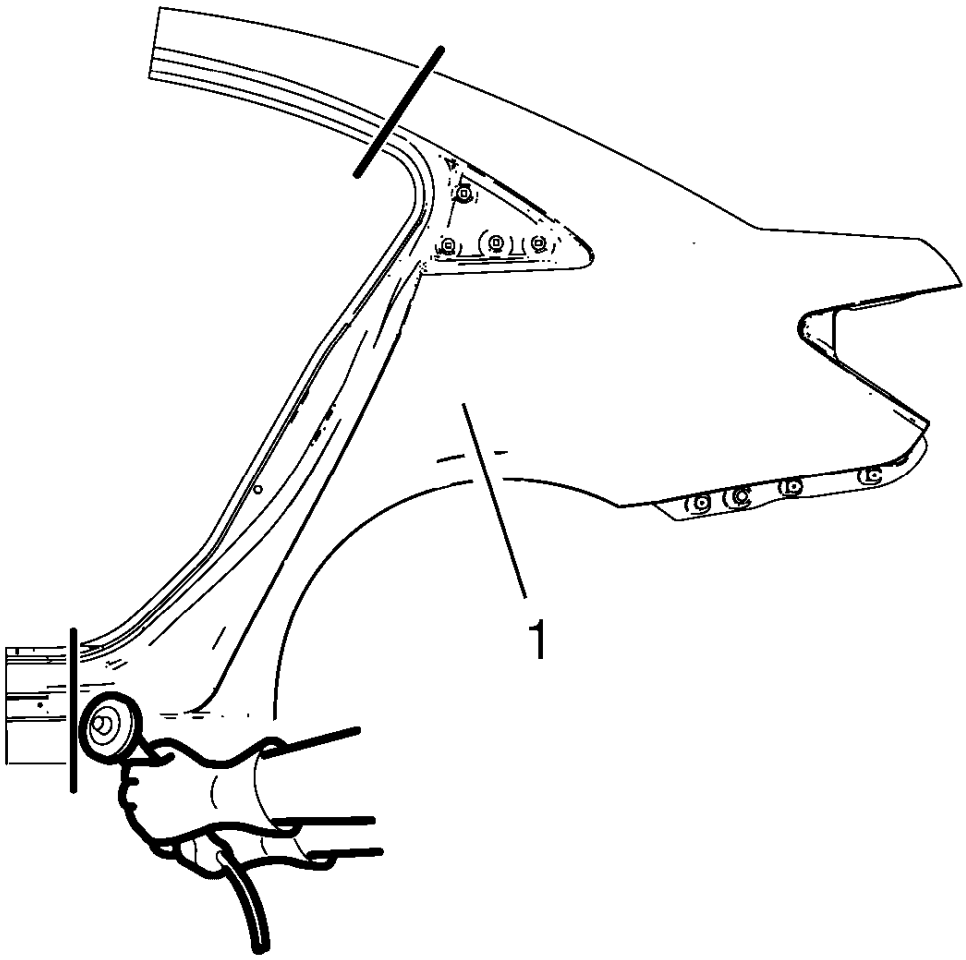

Fig. 134: Cutting Quarter Outer Panel
Courtesy of GENERAL MOTORS COMPANY

1. Cut the quarter outer panel (1) in corresponding locations to fit the remaining original panel. The sectioning joint should be trimmed to allow a gap of one-and-one-half-times the metal thickness at the sectioning joint.
2. Create a 50 mm (2 in) backing plate from the unused portion of the service part.
3. Drill 8 mm (5/16 in) along the sectioning cut on the remaining original part. Locate these holes 13 mm (1/2 in) from the edge of part and spaced 40 mm (1 1/2 in) apart.
4. Prepare all mating surfaces as necessary.
5. Fit the backing plates halfway into the sectioning joints, clamp in place and plug weld to the vehicle.
6. Align the quarter outer panel.

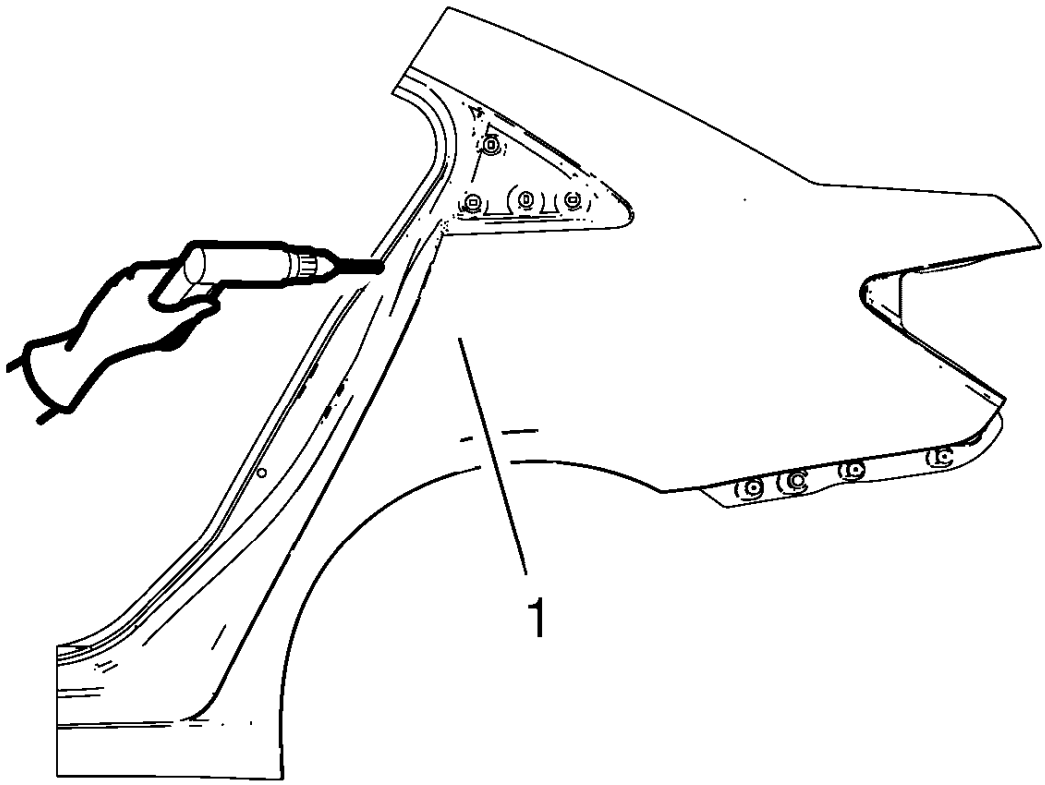

Fig. 135: Drilling Holes For Welding New Quarter Outer Panel
Courtesy of GENERAL MOTORS COMPANY

7. Drill 8 mm (5/16 in) for plug welding along the edges of the quarter outer panel (1) as noted from the original panel.
8. Clean and prepare the attaching surfaces for welding.

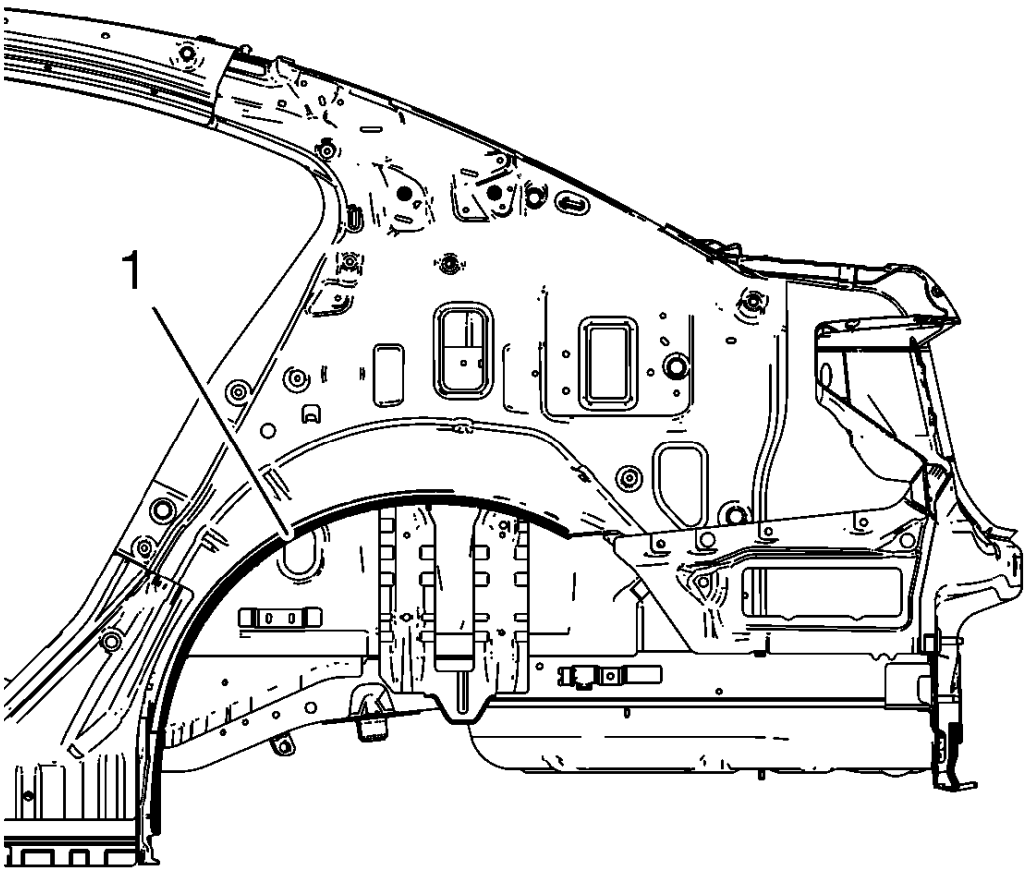

Fig. 136: Applying One-Part Windshield Urethane Adhesive
Courtesy of GENERAL MOTORS COMPANY

9. Apply structural adhesive (1) as noted from the original panel.
10. Position the quarter outer panel on the vehicle.
11. Verify the fit of the quarter outer panel.
12. Clamp the quarter outer panel into position.

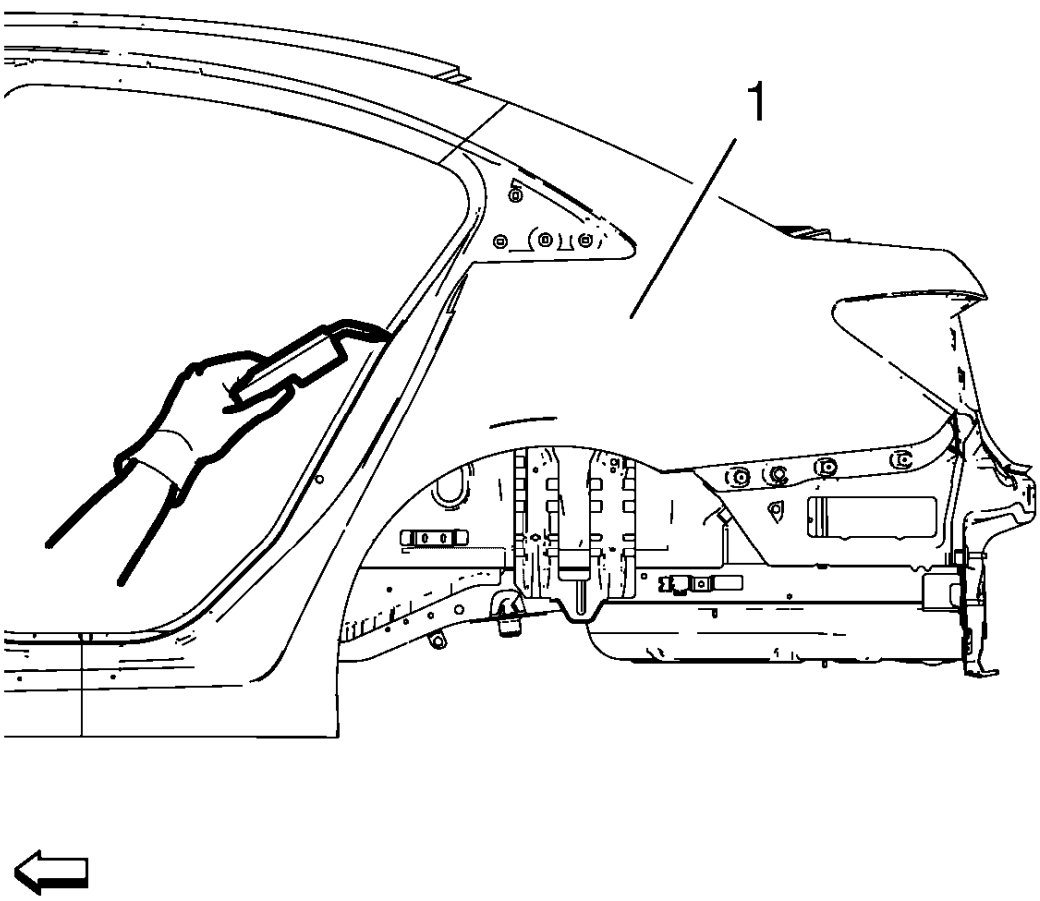

Fig. 137: Welding Quarter Outer Panel
Courtesy of GENERAL MOTORS COMPANY

13. Plug weld the quarter outer panel (1) accordingly.
14. To create a solid weld with minimum heat distortion, make 25 mm (1 in) stitch welds along the seam with 25 mm (1 in) gaps between them. Then go back and complete the stitch weld.
15. Using a hammer re-hem the hem flanges of the wheelhouse flanging of the quarter outer panel (1)..

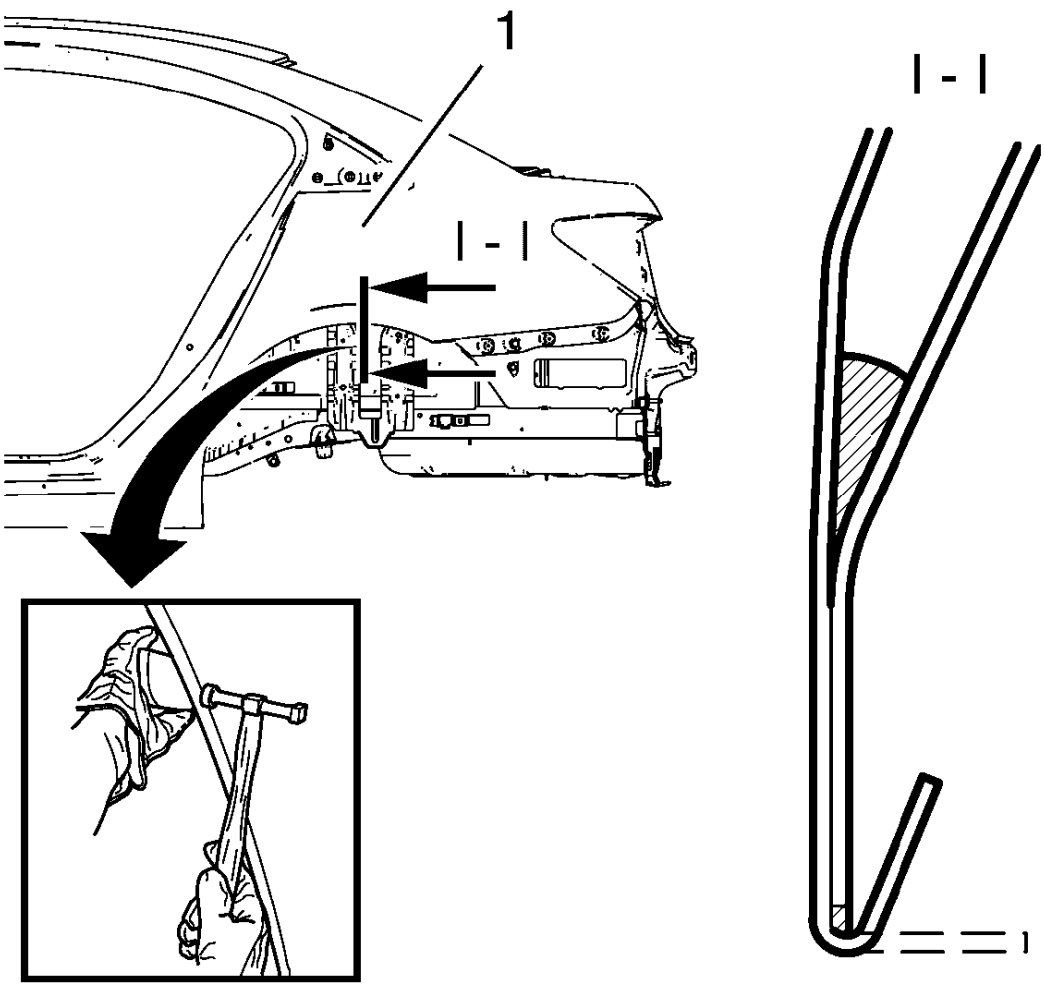

Fig. 138: Hammering In Stages Along Hem Flanges
Courtesy of GENERAL MOTORS COMPANY

16. Continue to hammer in stages along the hem flanges.
17. Apply the sealers and anti-corrosion materials to the repair area, as necessary. Refer to **Anti-Corrosion Treatment and Repair** .
18. Paint the repaired area. Refer to **Basecoat/Clearcoat Paint Systems** .
19. Install all related panels and components.
20. Connect the negative battery cable. Refer to **Battery Negative Cable Disconnection and Connection** .
21. Enable the SIR system. Refer to **SIR Disabling and Enabling** .

BODY REAR END PANEL REPLACEMENT

Removal Procedure

WARNING: Refer to Approved Equipment for Collision Repair Warning .

WARNING: Refer to Glass and Sheet Metal Handling Warning .

1. Disable the SIR System. Refer to **SIR Disabling and Enabling** .
2. Disconnect the negative battery cable. Refer to **Battery Negative Cable Disconnection and Connection** .
3. Remove all related panels and components.
4. Visually inspect the damage. Repair as much of the damage as possible.
5. Remove the sealers and anti-corrosion materials from the repair area, as necessary. Refer to **Anti-Corrosion Treatment and Repair** .

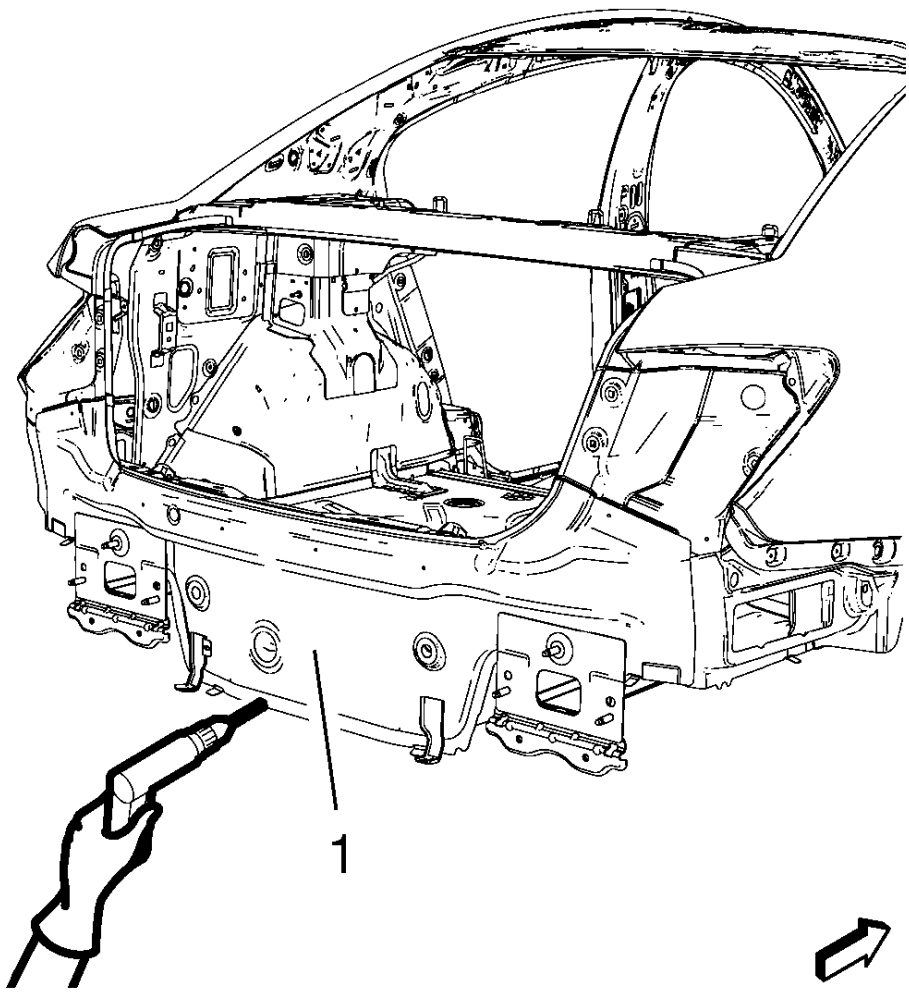

Fig. 139: Drilling Factory Welds Of Body Rear End Panel
Courtesy of GENERAL MOTORS COMPANY

6. Locate and mark all the necessary factory welds of the body rear end panel (1).

NOTE: Note the number and location of welds for installation of the service assembly.

7. Drill all factory welds.

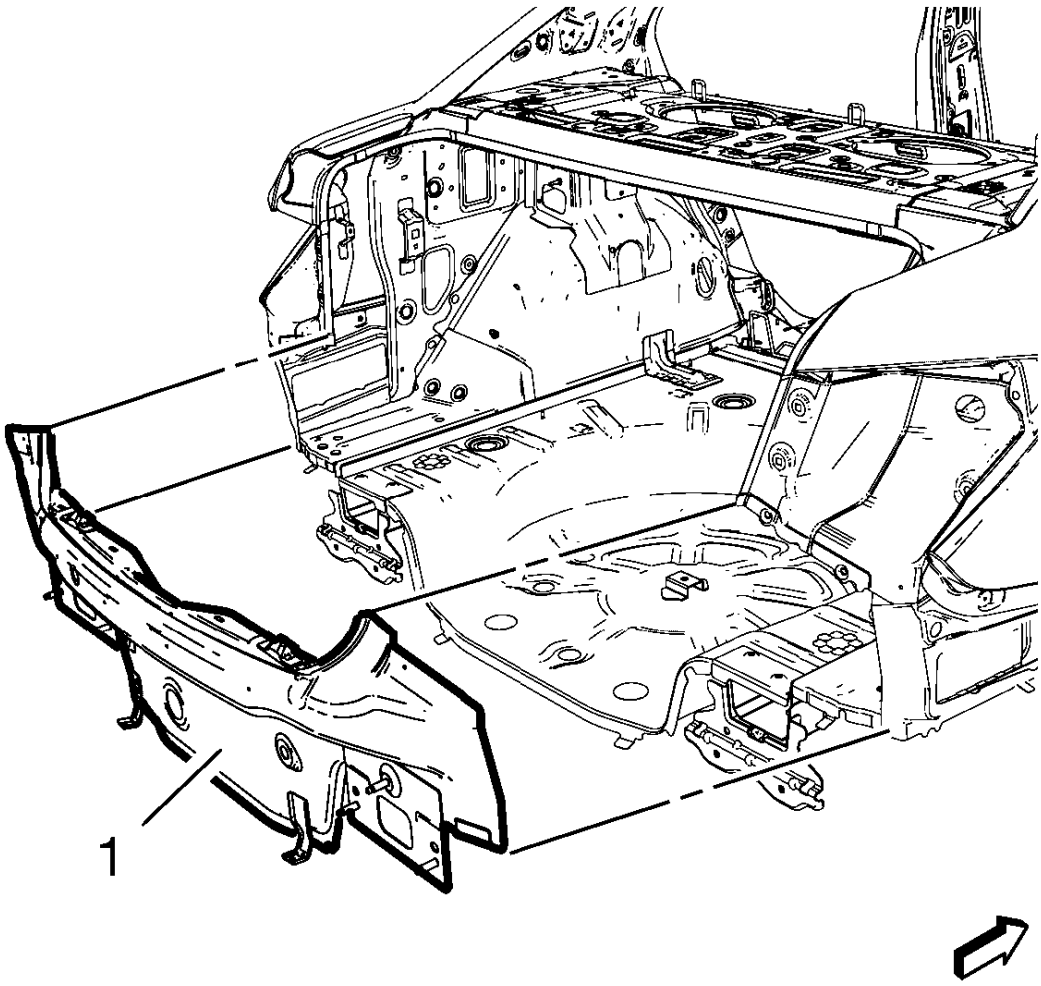

Fig. 140: Body Rear End Panel
Courtesy of GENERAL MOTORS COMPANY

8. Remove the body rear end panel (1).

Installation Procedure

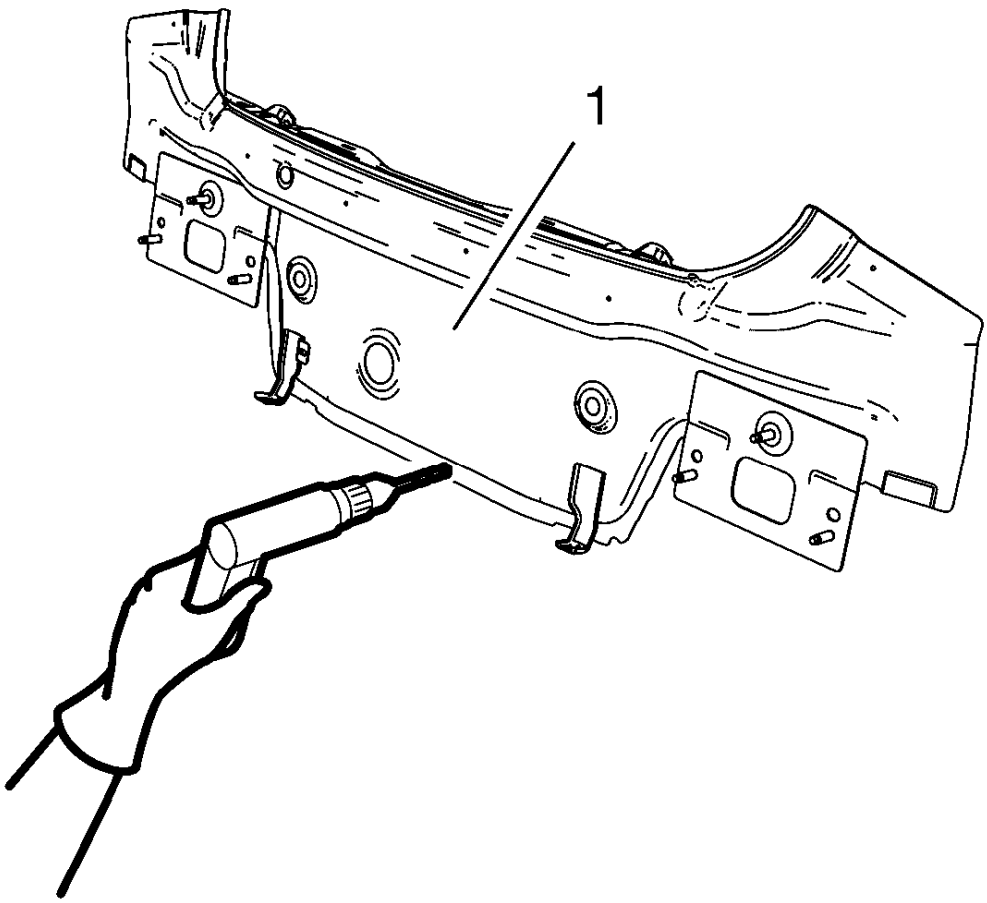

Fig. 141: Drilling Holes For Welding New Body Rear End Panel
Courtesy of GENERAL MOTORS COMPANY

NOTE: If the location of the original plug weld holes can not be determined, space the plug weld holes every 40 mm (1 1/2 in).

1. Drill 8 mm (5/16 in) for plug welding along the edges of the body rear end panel (1) as noted from the original panel.
2. Clean and prepare the attaching surfaces for welding.

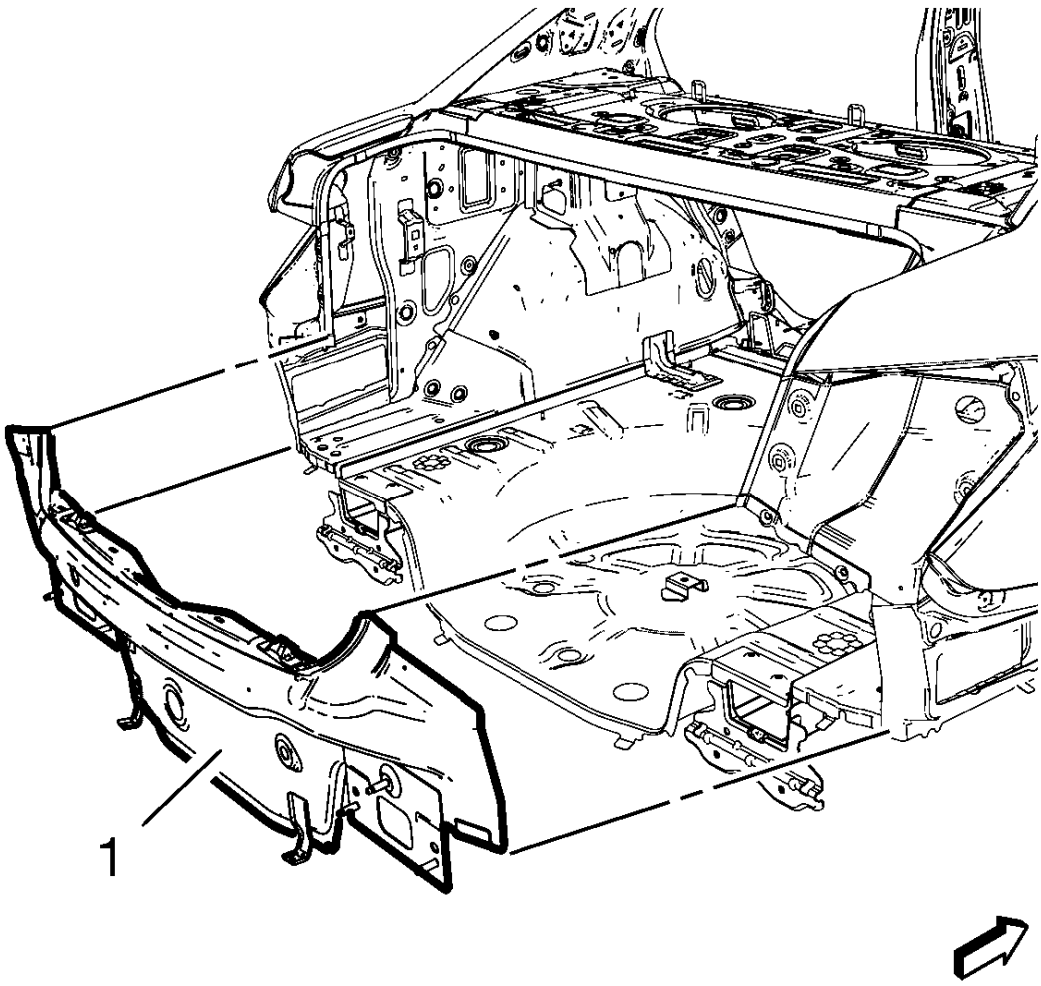

Fig. 142: Body Rear End Panel
Courtesy of GENERAL MOTORS COMPANY

3. Position the body rear end panel (1) on the vehicle.
4. Verify the fit of the body rear end panel.
5. Clamp the body rear end panel into position.

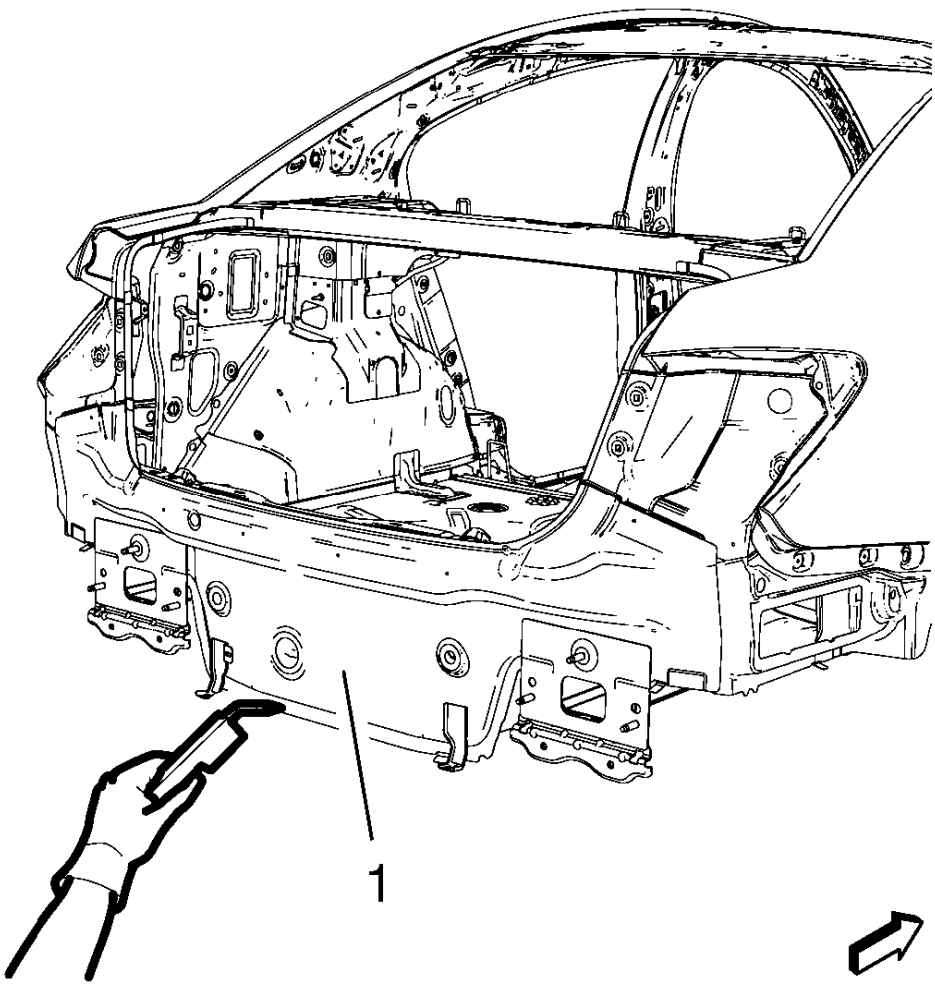

Fig. 143: Welding Body Rear End Panel
Courtesy of GENERAL MOTORS COMPANY

6. Plug weld the body rear end panel (1) accordingly.
7. Apply the sealers and anti-corrosion materials to the repair area, as necessary. Refer to **Anti-Corrosion Treatment and Repair** .
8. Paint the repaired area. Refer to **Basecoat/Clearcoat Paint Systems** .
9. Install all related panels and components.
10. Connect the negative battery cable. Refer to **Battery Negative Cable Disconnection and Connection** .
11. Enable the SIR system. Refer to **SIR Disabling and Enabling** .

FRONT RAIL REPLACEMENT

Removal Procedure

WARNING: Refer to Approved Equipment for Collision Repair Warning .

1. Disable the SIR system. Refer to **SIR Disabling and Enabling** .
2. Disconnect the negative battery cable. Refer to **Battery Negative Cable Disconnection and Connection** .
3. Remove all related panels and components.
4. Repair as much of the damage as possible to factory specifications. Refer to **Dimensions - Body**.
5. Note the location and remove the sealers and anti-corrosion materials from the repair area. Refer to **Anti-Corrosion Treatment and Repair** .

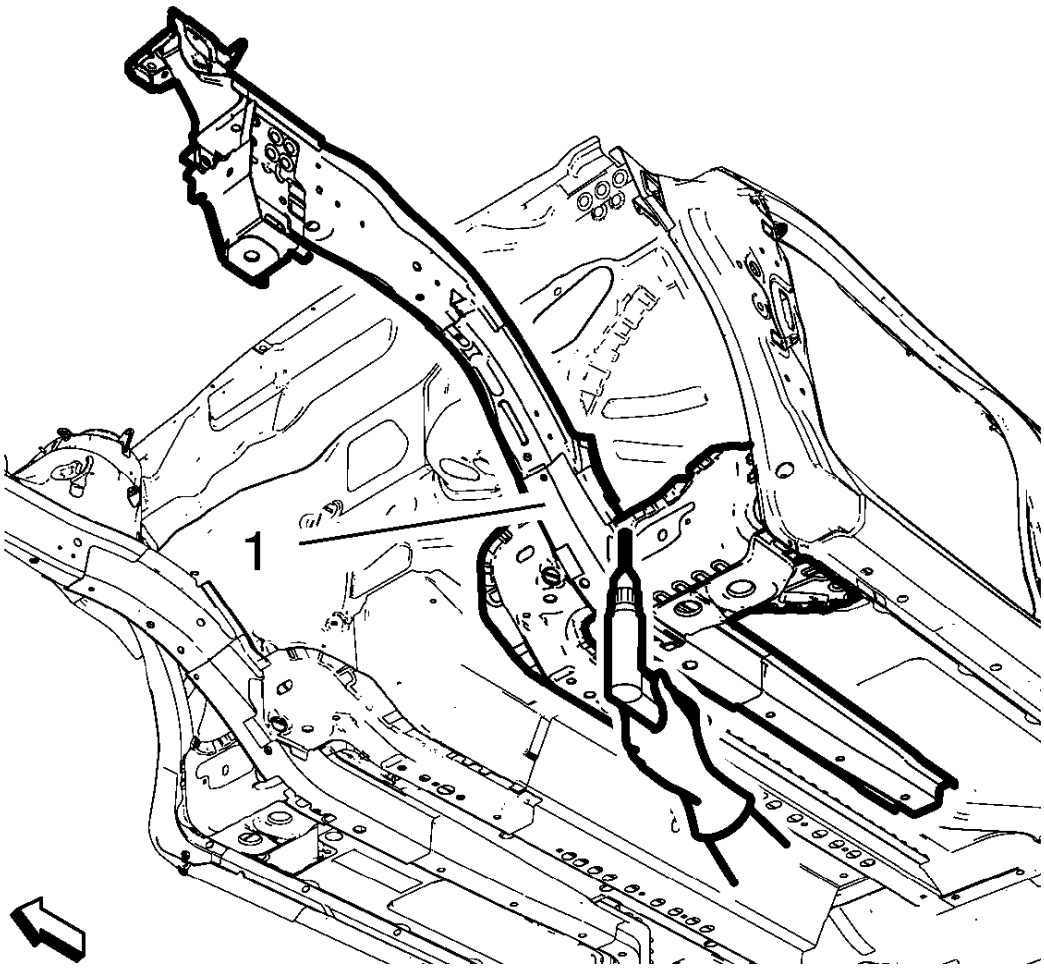

Fig. 144: Drilling Outl Factory Welds From Front Rail
Courtesy of GENERAL MOTORS COMPANY

NOTE: Do not damage any inner panels or reinforcements.

6. Locate and drill out all factory welds. Note the number and location of the welds for installation of the

front rail (1).

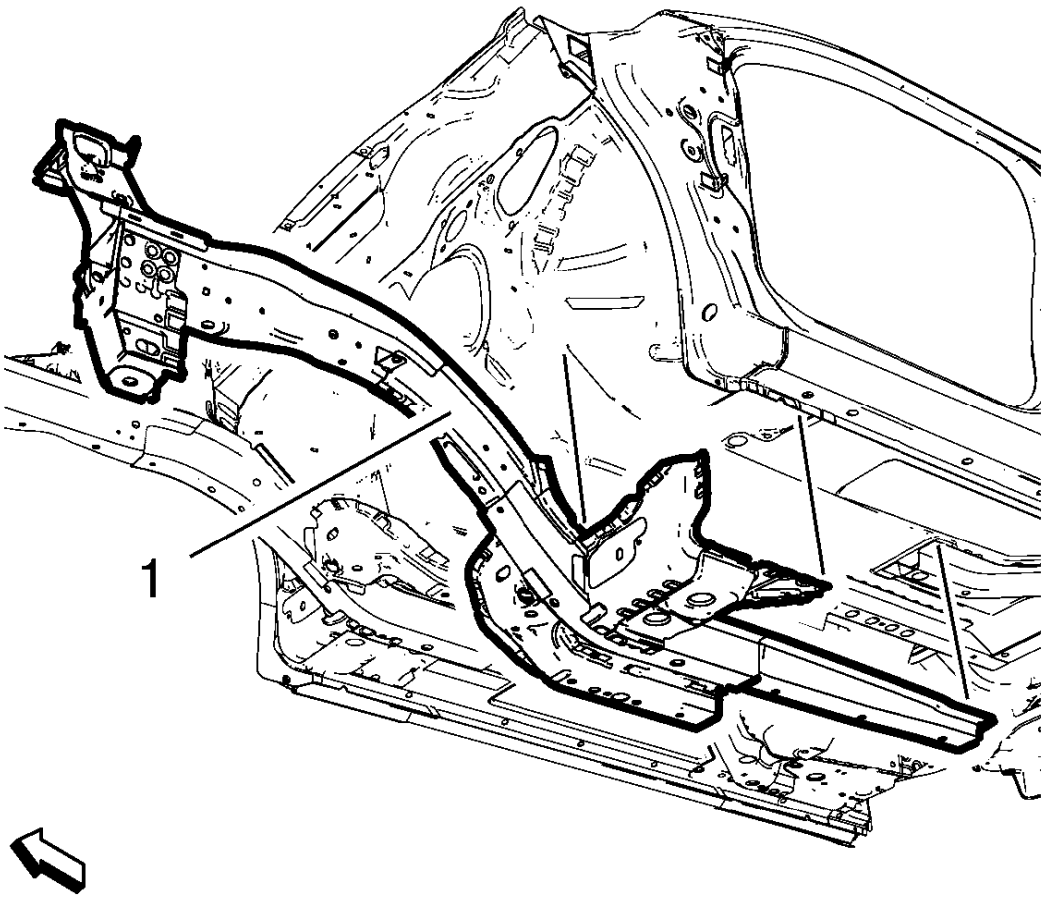

Fig. 145: Front Rail
Courtesy of GENERAL MOTORS COMPANY

7. Remove the damaged front rail (1).

Installation Procedure

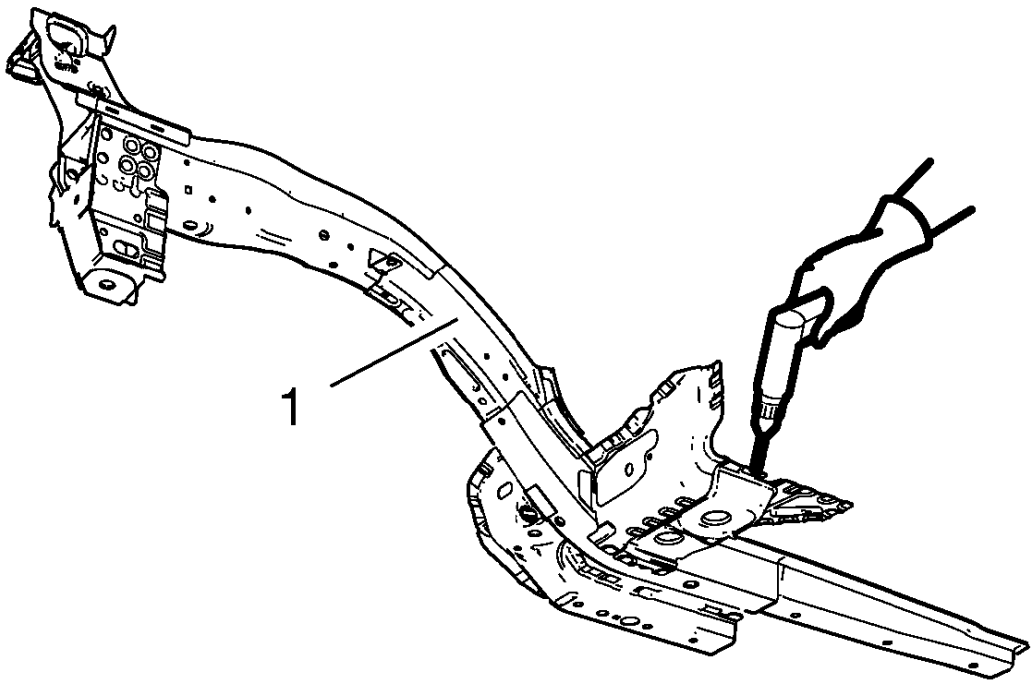

Fig. 146: Drilling Plug Weld Holes In New Front Rail
Courtesy of GENERAL MOTORS COMPANY

NOTE: **If the location of the original plug weld holes can not be determined, space the plug weld holes every 40 mm (1 1/2 in) apart.**

Some panels may have structural weld-thru adhesive. Replace the weld-thru adhesive with an additional spot weld between each factory spot weld.

1. Drill 8 mm (5/16 in) plug weld holes in the service part front rail (1) as necessary in the locations noted from the original panel.
2. Prepare all mating surfaces as necessary.
3. Apply GM-approved Weld-Thru Coating or equivalent to all mating surfaces. Refer to **Anti-Corrosion Treatment and Repair** .

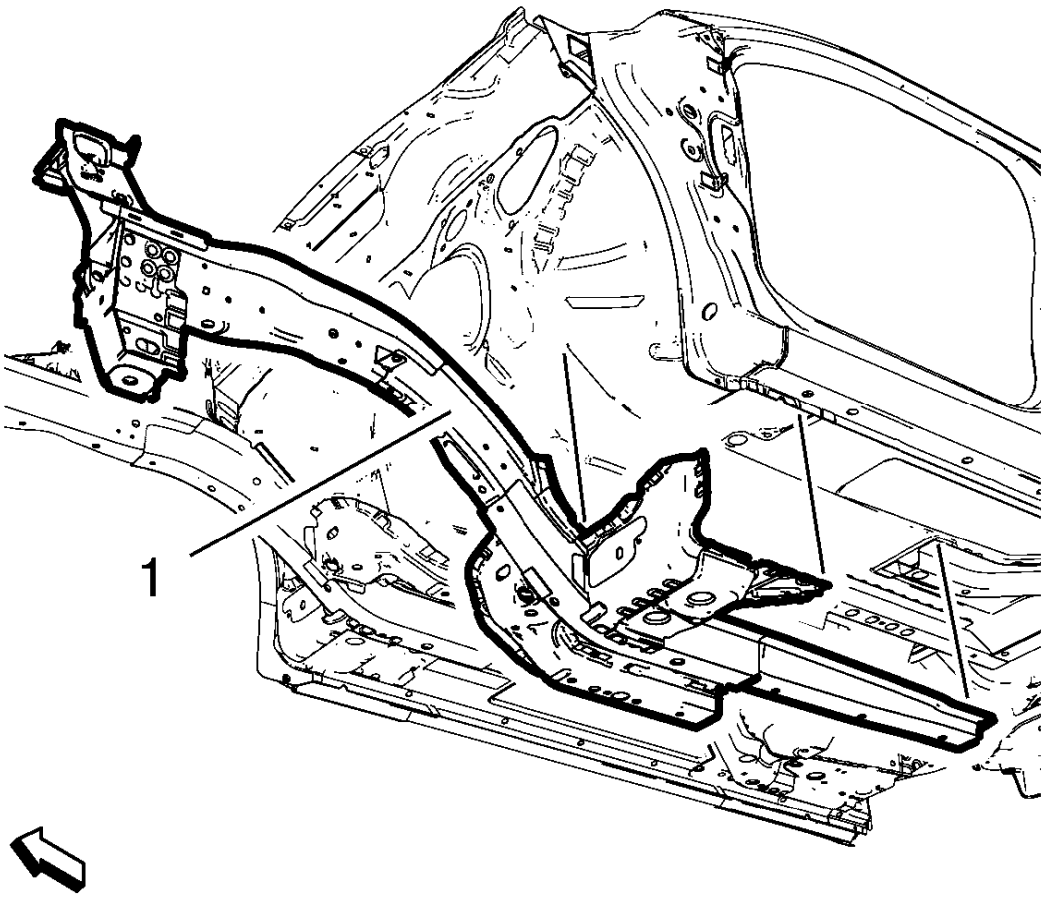

Fig. 147: Front Rail
Courtesy of GENERAL MOTORS COMPANY

4. Position the front rail (1) to the vehicle using 3-dimensional measuring equipment. Clamp the rail in place.

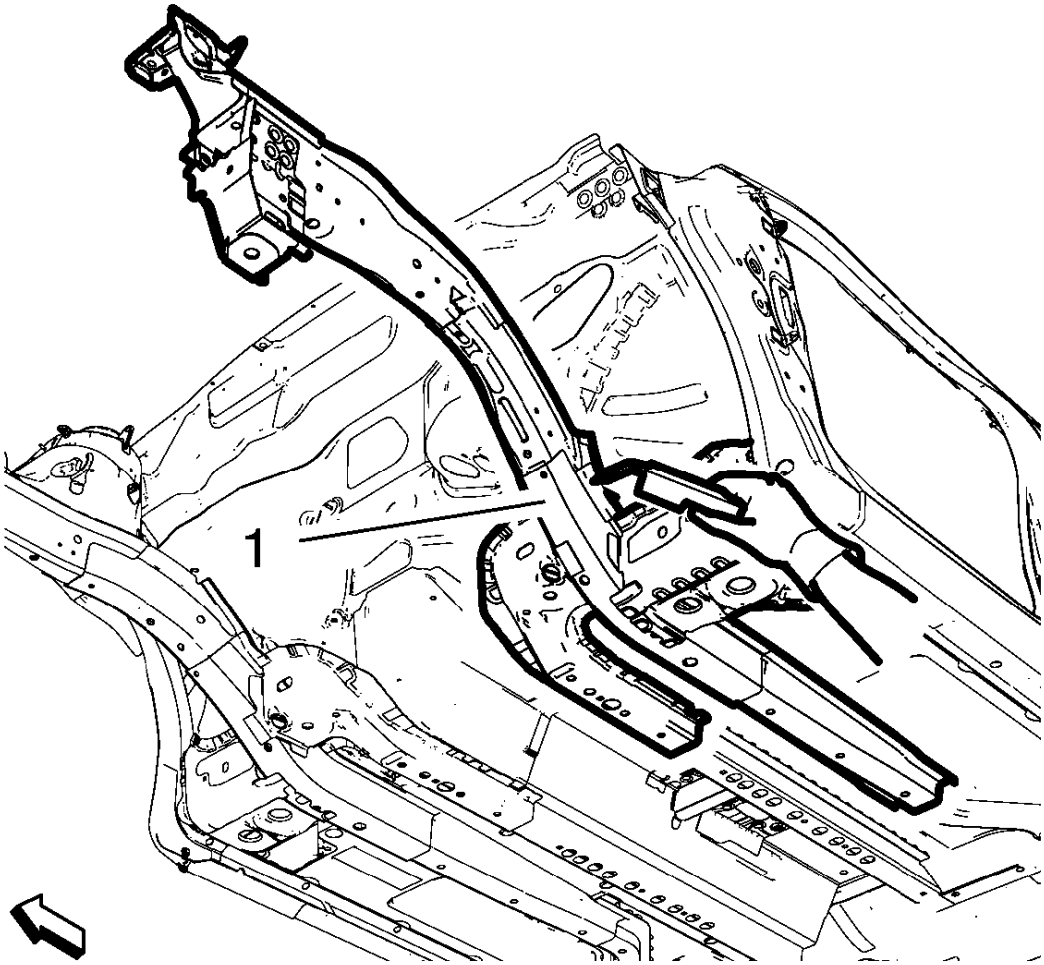

Fig. 148: Welding Front Rail
Courtesy of GENERAL MOTORS COMPANY

5. Plug weld the front rail (1) accordingly.
6. Clean and prepare all welded surfaces.
7. Install all related panels and components.
8. Apply the sealers and anti-corrosion materials to the repair area, as necessary. Refer to **Anti-Corrosion Treatment and Repair** .
9. Paint the repair area. Refer to **Basecoat/Clearcoat Paint Systems** .
10. Connect the negative battery cable. Refer to **Battery Negative Cable Disconnection and Connection** .
11. Enable the SIR system. Refer to **SIR Disabling and Enabling** .

CENTER PILLAR INNER PANEL REPLACEMENT

Removal Procedure

WARNING: Refer to Approved Equipment for Collision Repair Warning .

WARNING: Refer to Glass and Sheet Metal Handling Warning .

1. Disable the SIR System. Refer to **SIR Disabling and Enabling** .
2. Disconnect the negative battery cable. Refer to **Battery Negative Cable Disconnection and Connection** .
3. Remove all related panels and components.
4. Visually inspect the damage. Repair as much of the damage as possible.
5. Remove the sealers and anti-corrosion materials from the repair area, as necessary. Refer to **Anti-Corrosion Treatment and Repair** .
6. Locate and mark all factory welds.

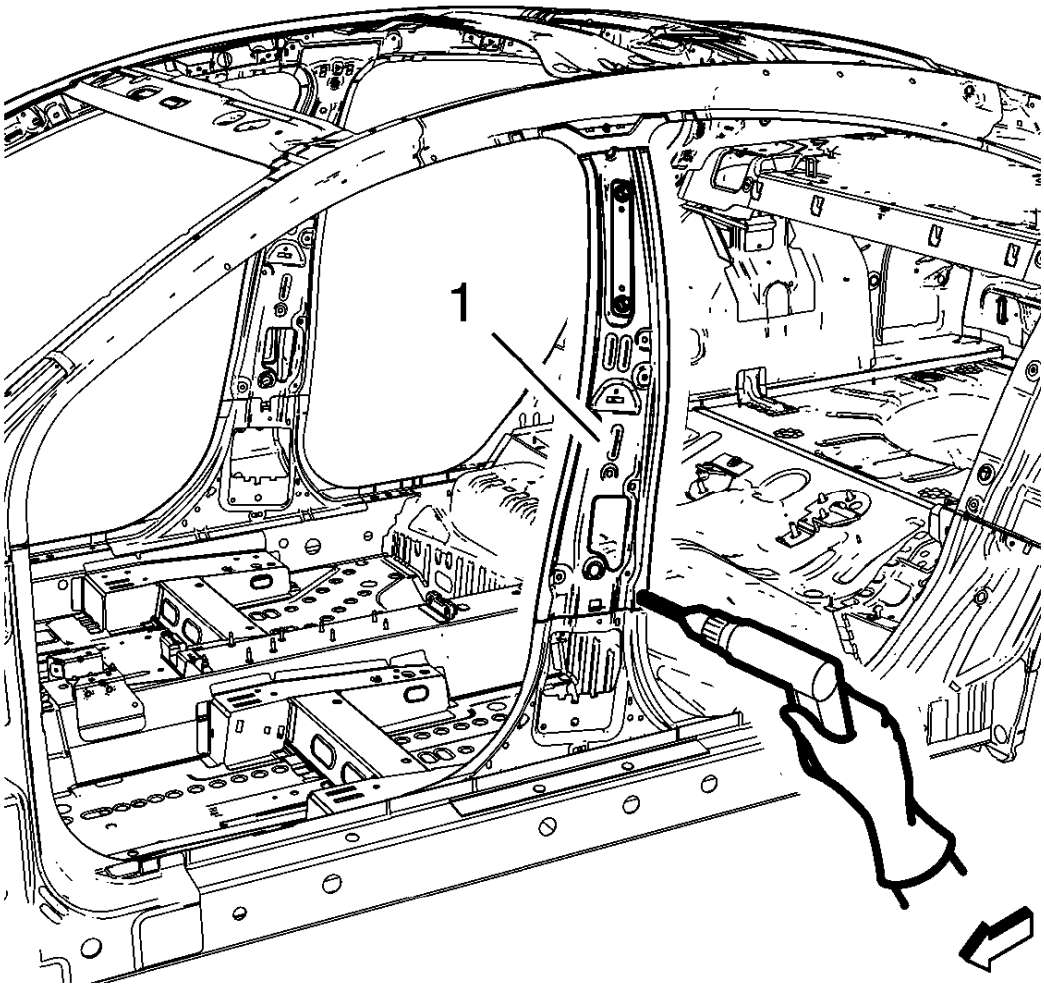

Fig. 149: Drilling Factory Welds From Lower Center Pillar Inner Panel
Courtesy of GENERAL MOTORS COMPANY

7. Drill all factory welds lower of the center pillar inner panel (1). Note the number and location of welds for installation of the service assembly.

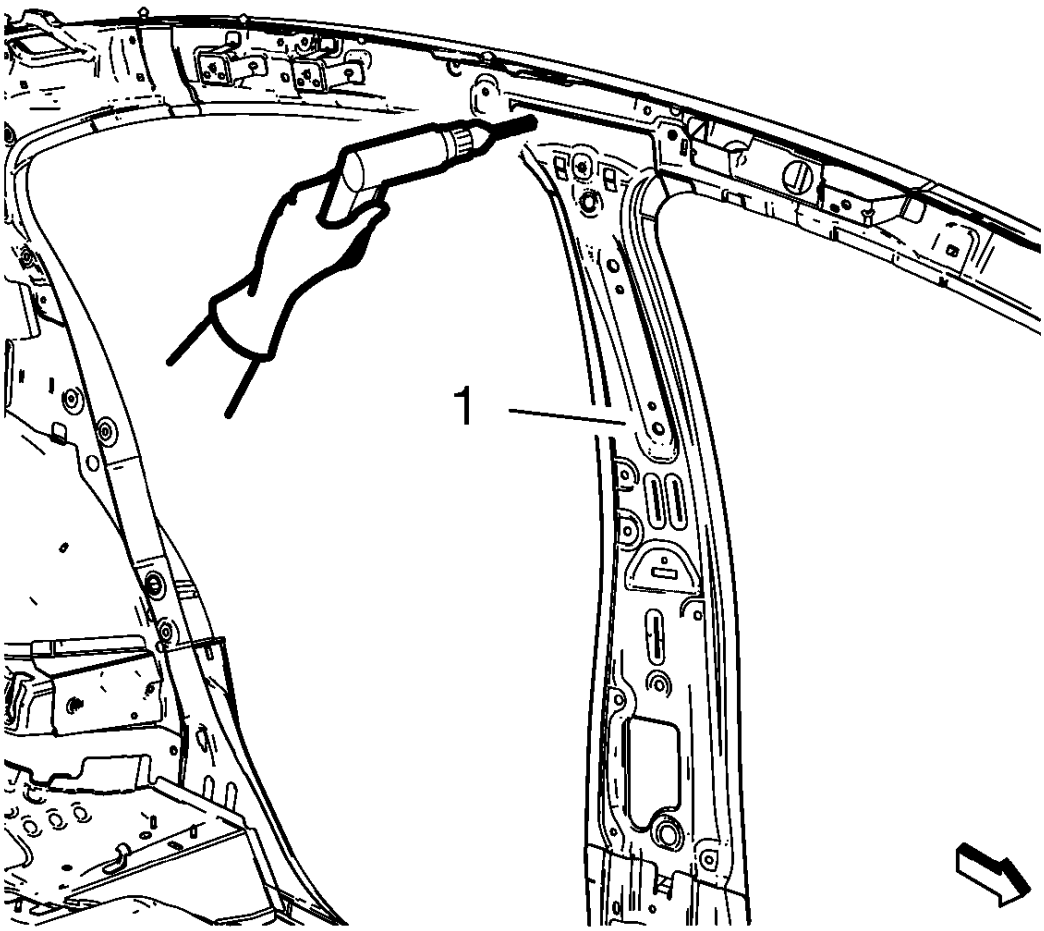

Fig. 150: Drilling Factory Welds From Upper Center Pillar Inner Panel
Courtesy of GENERAL MOTORS COMPANY

8. Drill all factory welds upper of the center pillar inner panel (1). Note the number and location of welds for installation of the service assembly.

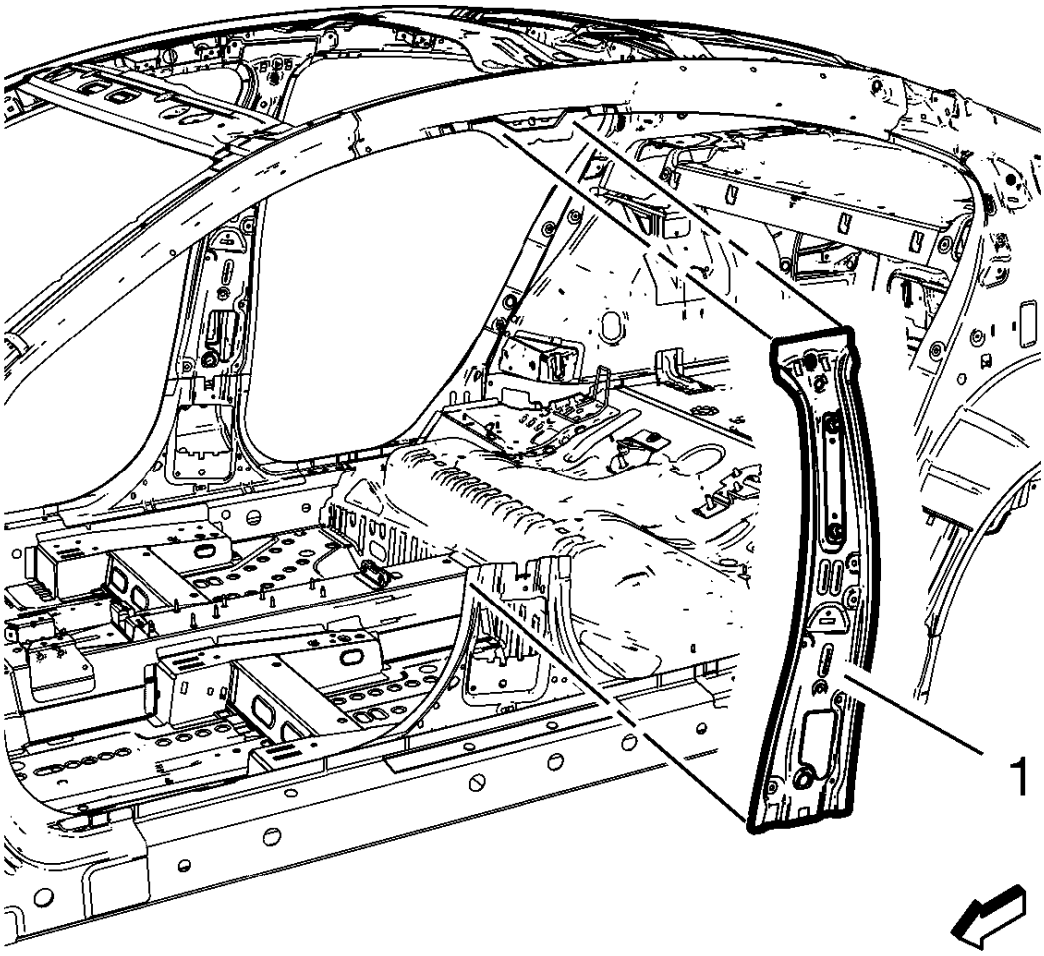

Fig. 151: Center Pillar Inner Panel
Courtesy of GENERAL MOTORS COMPANY

9. Remove the damaged center pillar inner panel (1).

Installation Procedure

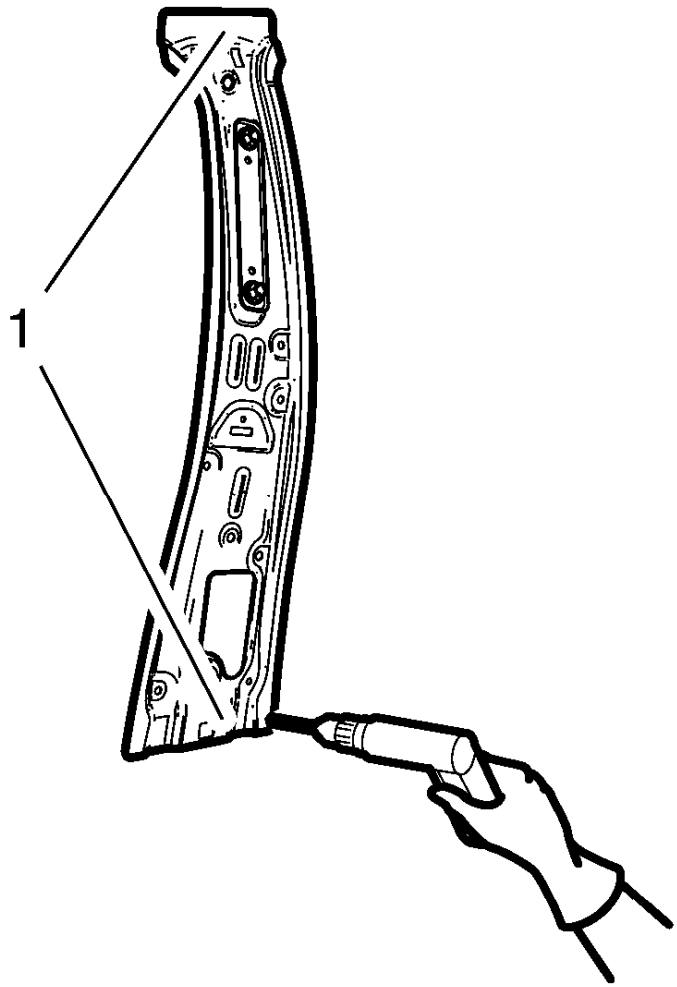

Fig. 152: Drilling Holes Plug Welding Holes In New Center Pillar Inner Panel
Courtesy of GENERAL MOTORS COMPANY

1. Drill 8 mm (5/16 in) for plug welding along the edges of the center pillar inner panel (1) as noted from the original panel.
2. Clean and prepare the attaching surfaces for welding.

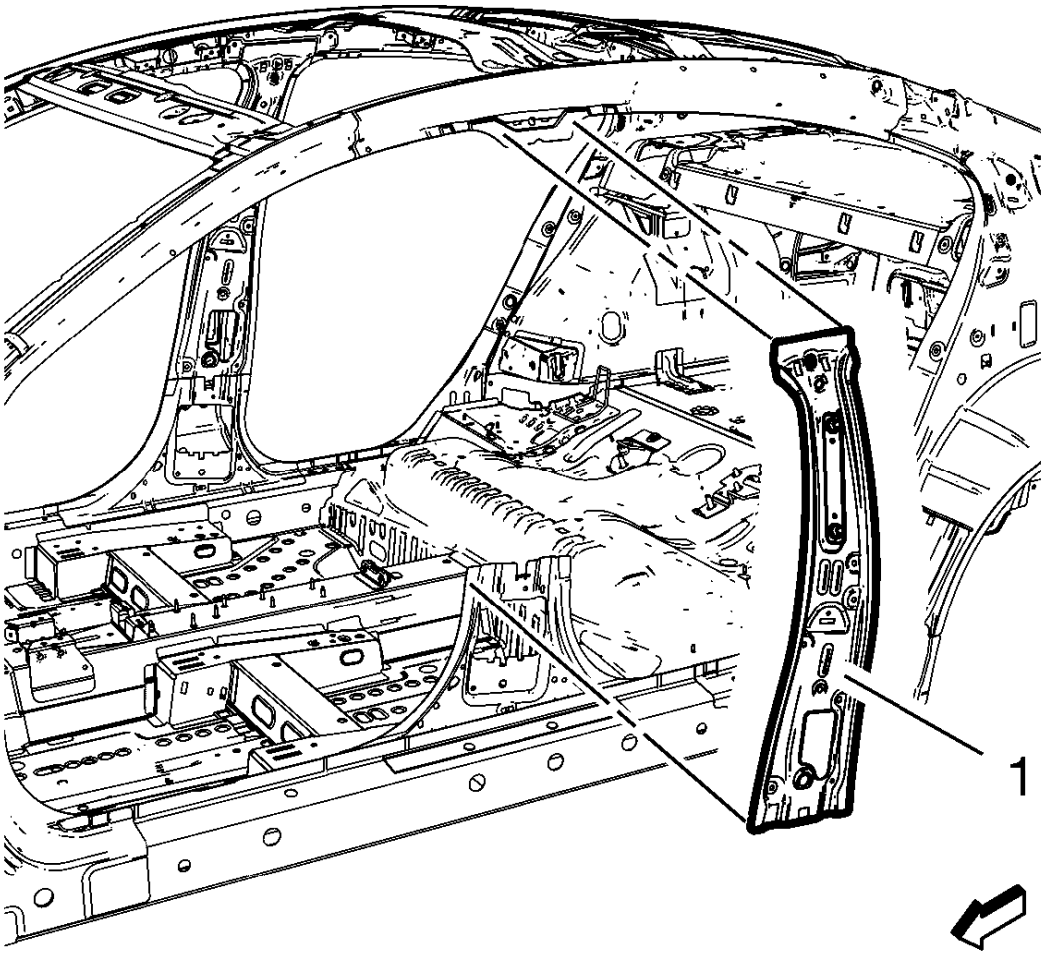

Fig. 153: Center Pillar Inner Panel
Courtesy of GENERAL MOTORS COMPANY

3. Position the center pillar inner panel (1) on the vehicle.
4. Verify the fit of the panel.
5. Clamp the center pillar inner panel into position.

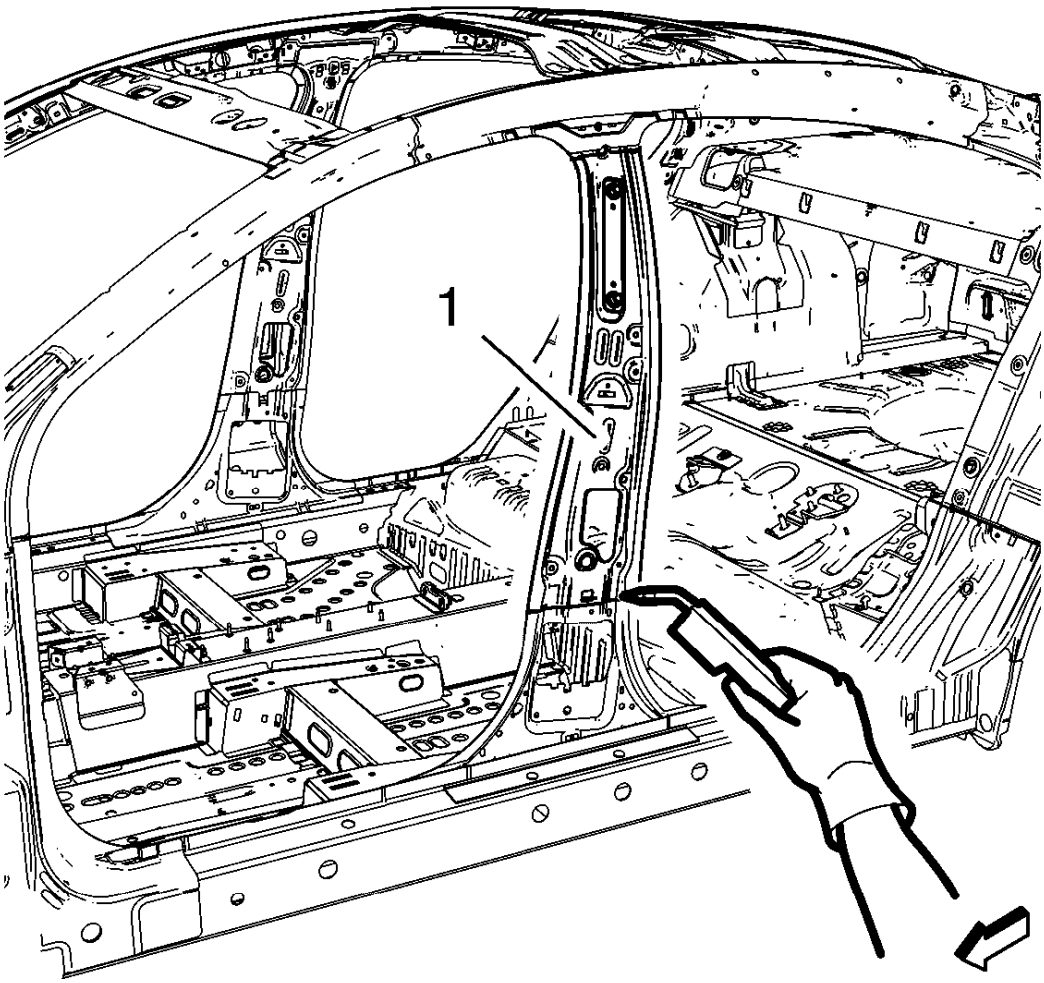

Fig. 154: Welding Upper And Lower Center Pillar Inner Panel
Courtesy of GENERAL MOTORS COMPANY

6. Plug weld accordingly center pillar inner panel (1) upper and lower.
7. Apply the sealers and anti-corrosion materials to the repair area, as necessary. Refer to **Anti-Corrosion Treatment and Repair** .
8. Paint the repaired area. Refer to **Basecoat/Clearcoat Paint Systems** .
9. Install all related panels and components.
10. Connect the negative battery cable. Refer to **Battery Negative Cable Disconnection and Connection** .
11. Enable the SIR system. Refer to **SIR Disabling and Enabling** .

CENTER PILLAR REINFORCEMENT REPLACEMENT

Removal Procedure

WARNING: Refer to Approved Equipment for Collision Repair Warning .

WARNING: Refer to Glass and Sheet Metal Handling Warning .

1. Disable the SIR System. Refer to **SIR Disabling and Enabling** .
2. Disconnect the negative battery cable. Refer to **Battery Negative Cable Disconnection and Connection** .
3. Remove all related panels and components.
4. Visually inspect the damage. Repair as much of the damage as possible.
5. Remove the sealers and anti-corrosion materials from the repair area, as necessary. Refer to **Anti-Corrosion Treatment and Repair** .

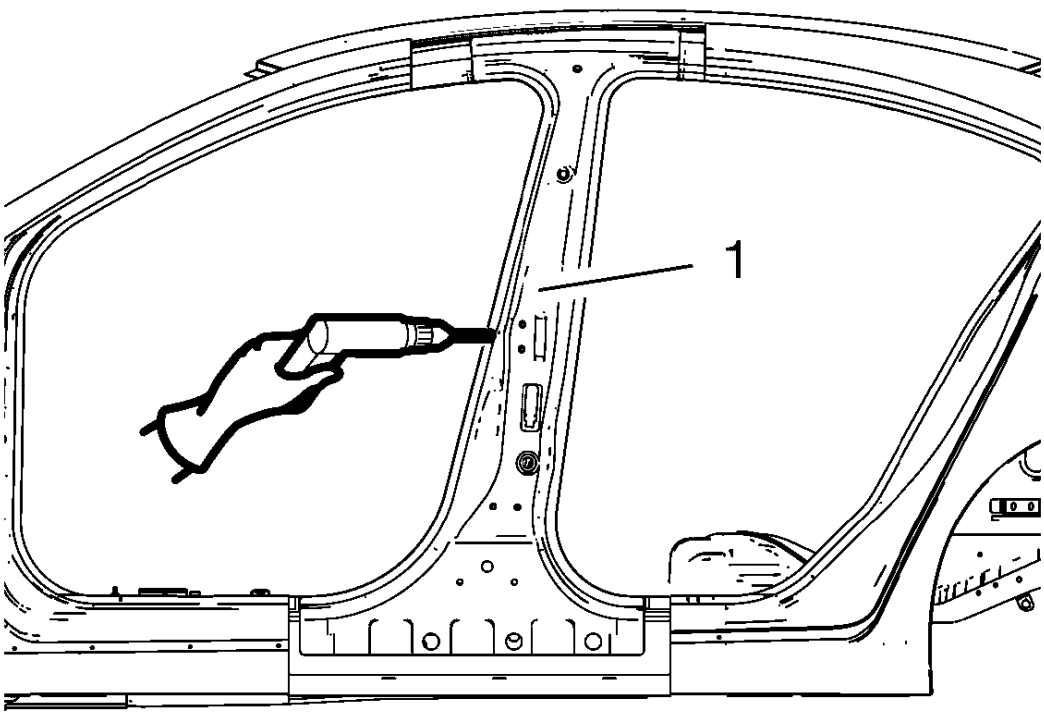

Fig. 155: Drilling Factory Welds Of Center Pillar Reinforcement
Courtesy of GENERAL MOTORS COMPANY

6. Locate and mark all the necessary factory welds of the center pillar reinforcement (1)
7. Drill all factory welds. Note the number and location of welds for installation of the service assembly.

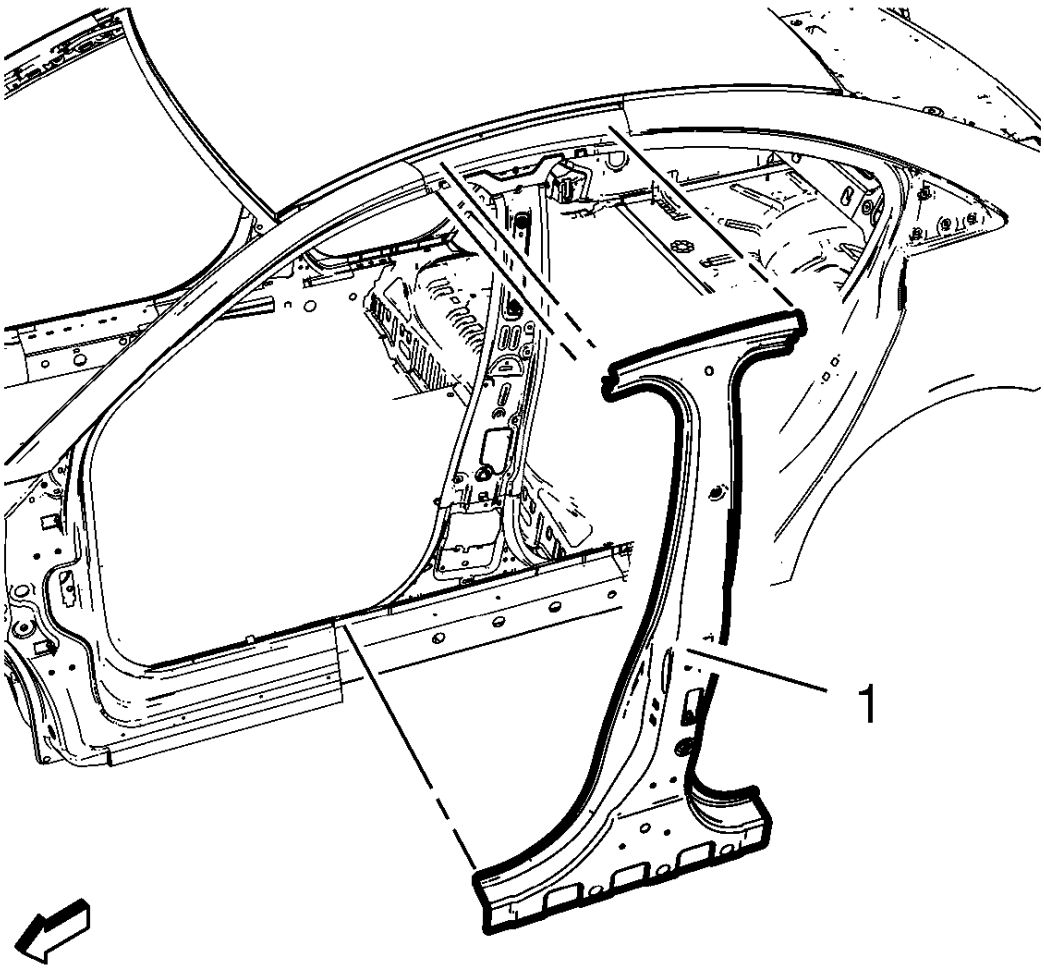

Fig. 156: center pillar reinforcement
Courtesy of GENERAL MOTORS COMPANY

8. Remove the damaged center pillar reinforcement (1).

Installation Procedure

1. Prepare all mating surfaces as necessary.
2. Align the center pillar reinforcement.

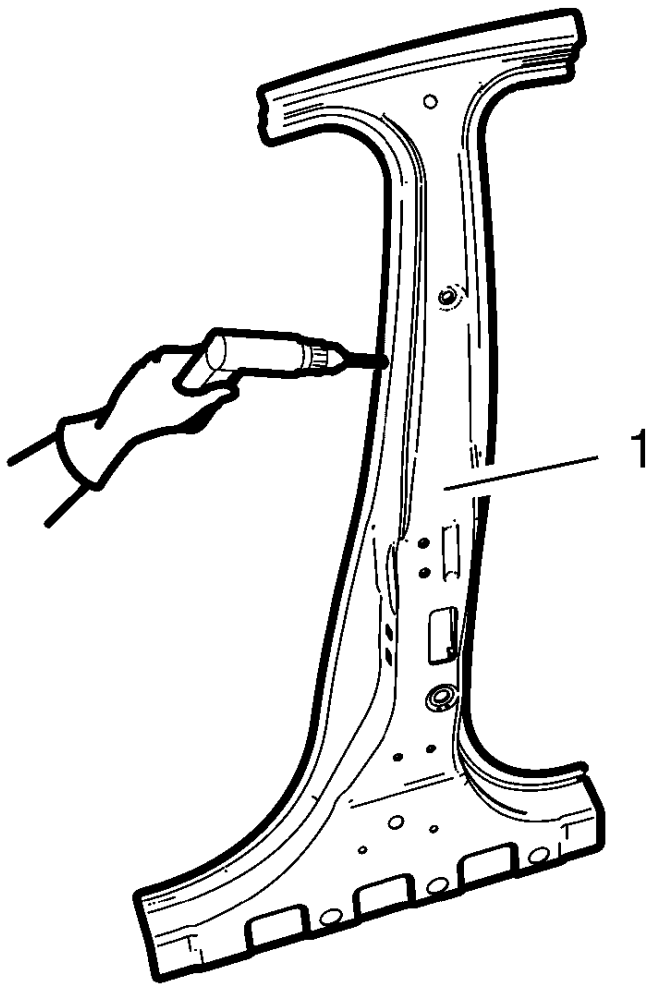

Fig. 157: Drilling Plug Weld Holes For New Center Pillar Reinforcement
Courtesy of GENERAL MOTORS COMPANY

3. Drill 8 mm (5/16 in) for plug welding along the edges of the center pillar reinforcement (1) as noted from the original panel.
4. Clean and prepare the attaching surfaces for welding.

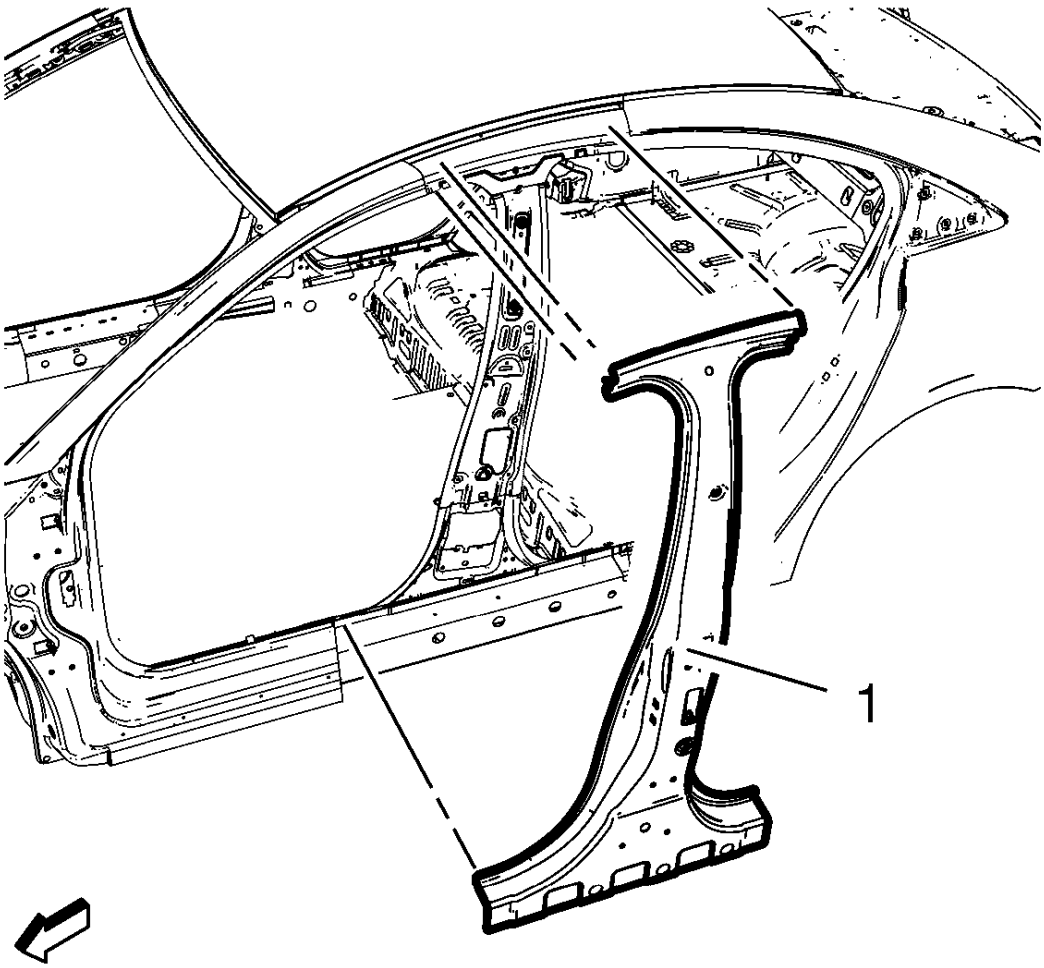

Fig. 158: Center pillar reinforcement
Courtesy of GENERAL MOTORS COMPANY

5. Position the center pillar reinforcement (1) on the vehicle.
6. Verify the fit of the center pillar reinforcement.
7. Clamp the center pillar reinforcement into position.

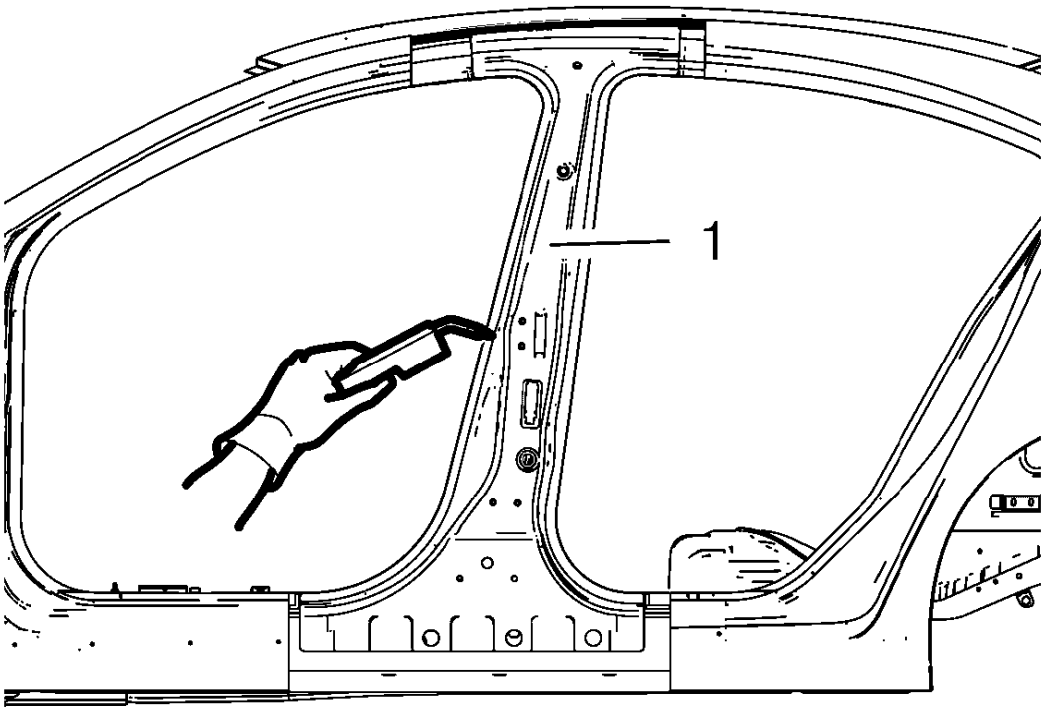

Fig. 159: Welding Center Pillar Reinforcement
Courtesy of GENERAL MOTORS COMPANY

8. Plug weld the center pillar reinforcement (1) accordingly.
9. To create a solid weld with minimum heat distortion, make 25 mm (1 in) stitch welds along the seam with 25 mm (1 in) gaps between them. Then go back and complete the stitch weld.
10. Apply the sealers and anti-corrosion materials to the repair area, as necessary. Refer to **Anti-Corrosion Treatment and Repair** .
11. Paint the repaired area. Refer to **Basecoat/Clearcoat Paint Systems** .
12. Install all related panels and components.
13. Connect the negative battery cable. Refer to **Battery Negative Cable Disconnection and Connection** .
14. Enable the SIR system. Refer to **SIR Disabling and Enabling** .

CENTER PILLAR SECTIONING - OUTER

Removal Procedure

WARNING: Refer to Approved Equipment for Collision Repair Warning .

WARNING: Refer to Collision Sectioning Warning .

WARNING: Refer to Glass and Sheet Metal Handling Warning .

1. Disable the SIR System. Refer to **SIR Disabling and Enabling** .
2. Disconnect the negative battery cable. Refer to **Battery Negative Cable Disconnection and Connection** .
3. Remove all related panels and components.
4. Visually inspect the damage. Repair as much of the damage as possible.
5. Remove the sealers and anti-corrosion materials from the repair area, as necessary. Refer to **Anti-Corrosion Treatment and Repair** .

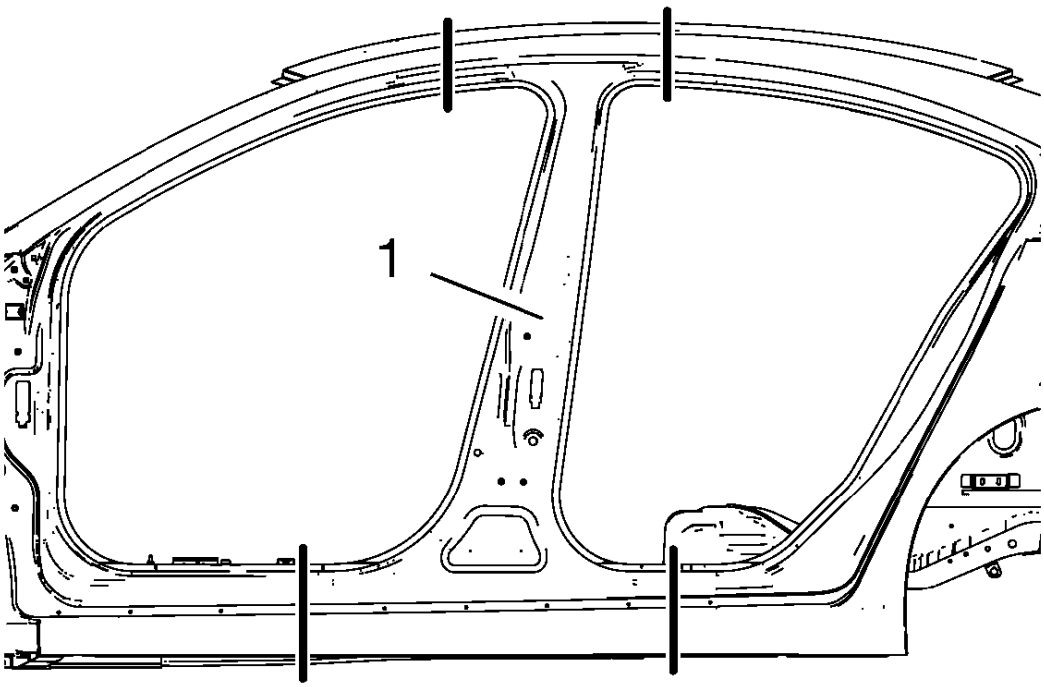

Fig. 160: Locating Cut Lines On Center Pillar
Courtesy of GENERAL MOTORS COMPANY

6. Create cut lines on the center pillar (1).

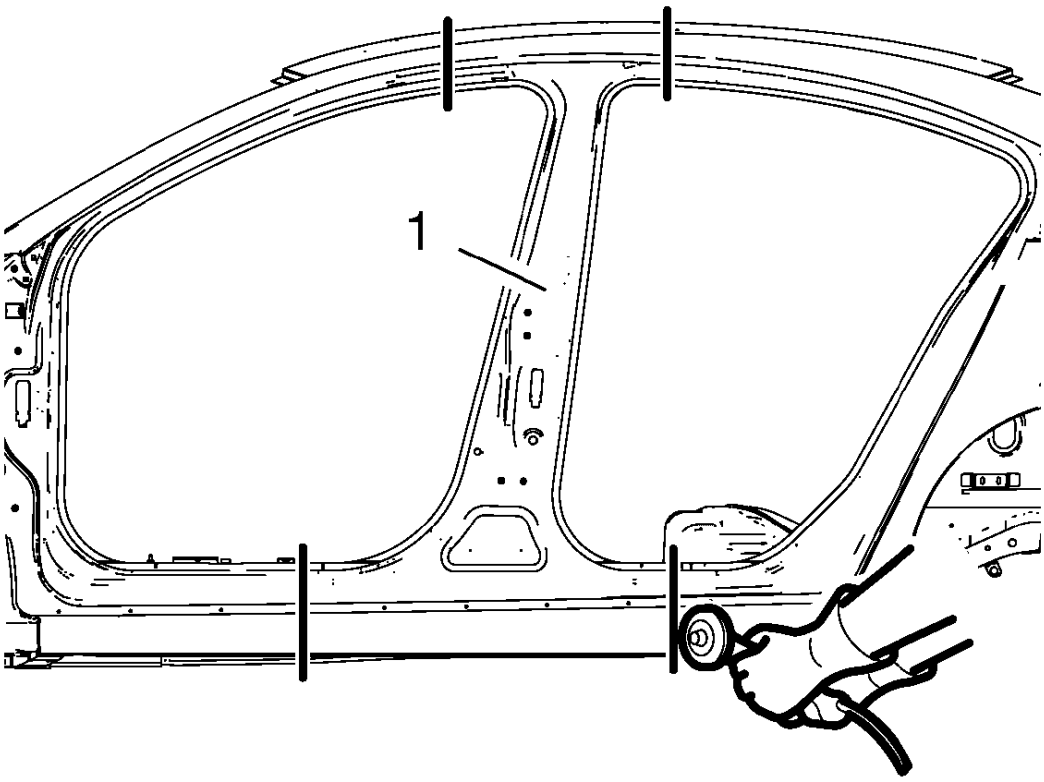

Fig. 161: Cutting Center Pillar
Courtesy of GENERAL MOTORS COMPANY

NOTE: Do not damage any inner panels or reinforcements.

7. Cut the center pillar (1) where sectioning is to be performed.

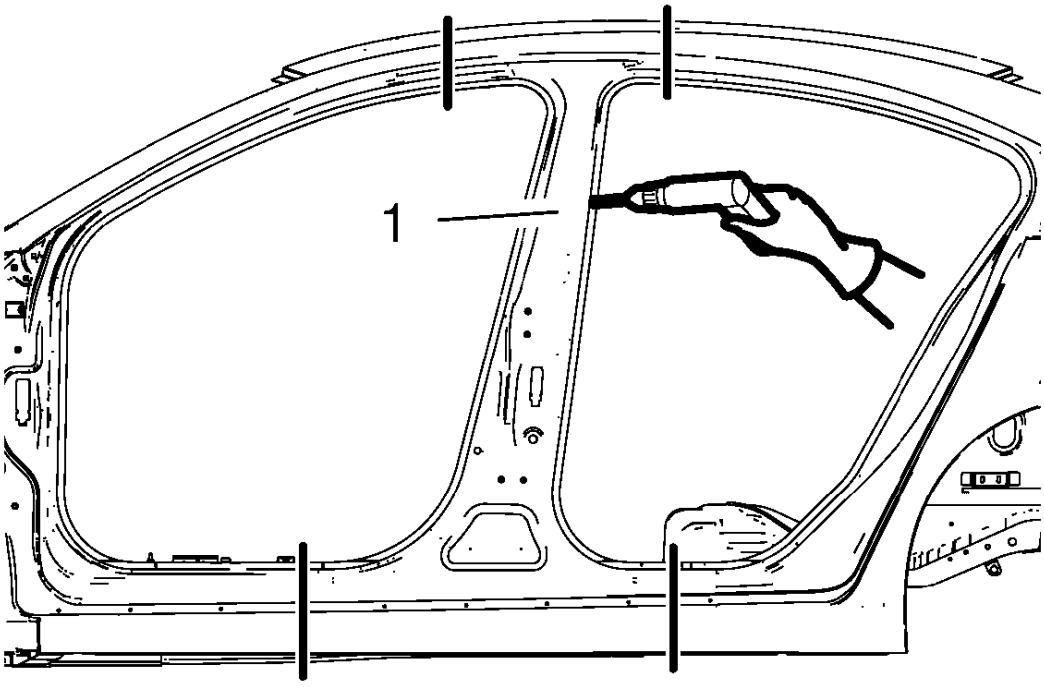

Fig. 162: Drilling Factory Welds Of Center Pillar
Courtesy of GENERAL MOTORS COMPANY

8. Locate and mark all the necessary factory welds of the center pillar (1).
9. Drill all factory welds. Note the number and location of welds for installation of the service assembly.

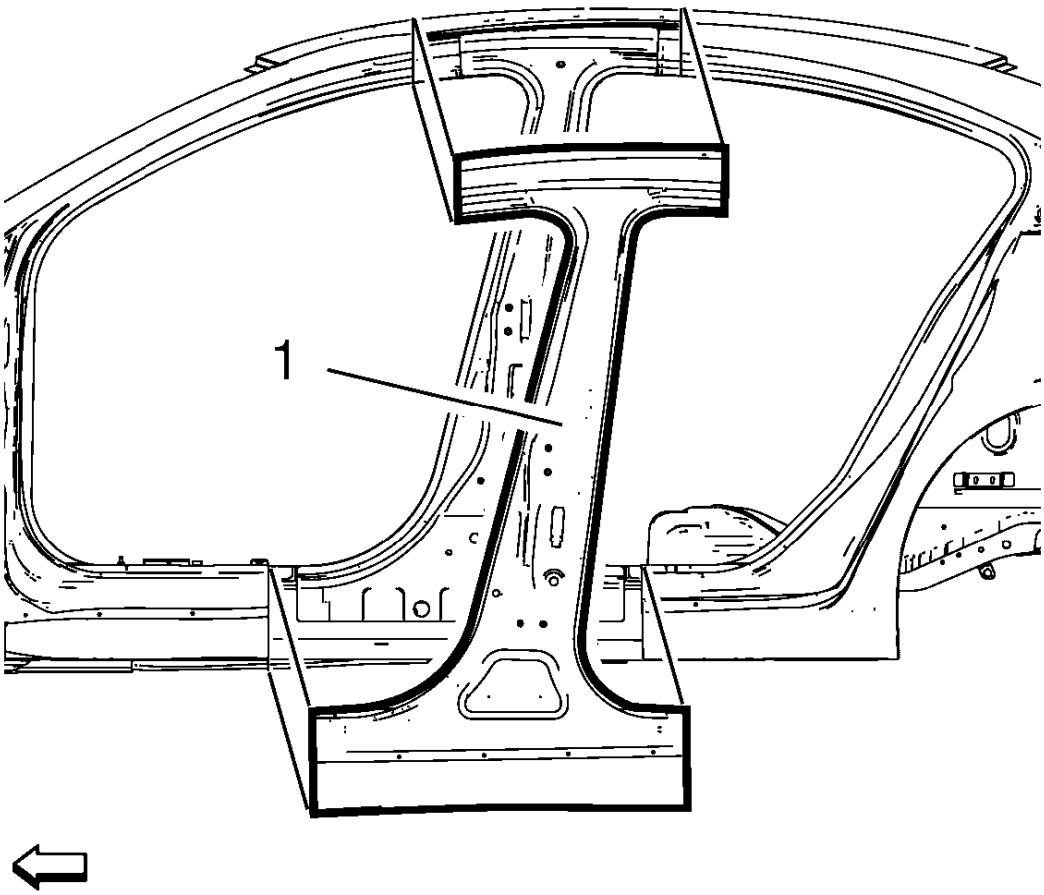

Fig. 163: Center Pillar
Courtesy of GENERAL MOTORS COMPANY

10. Remove the damaged center pillar (1).

Installation Procedure

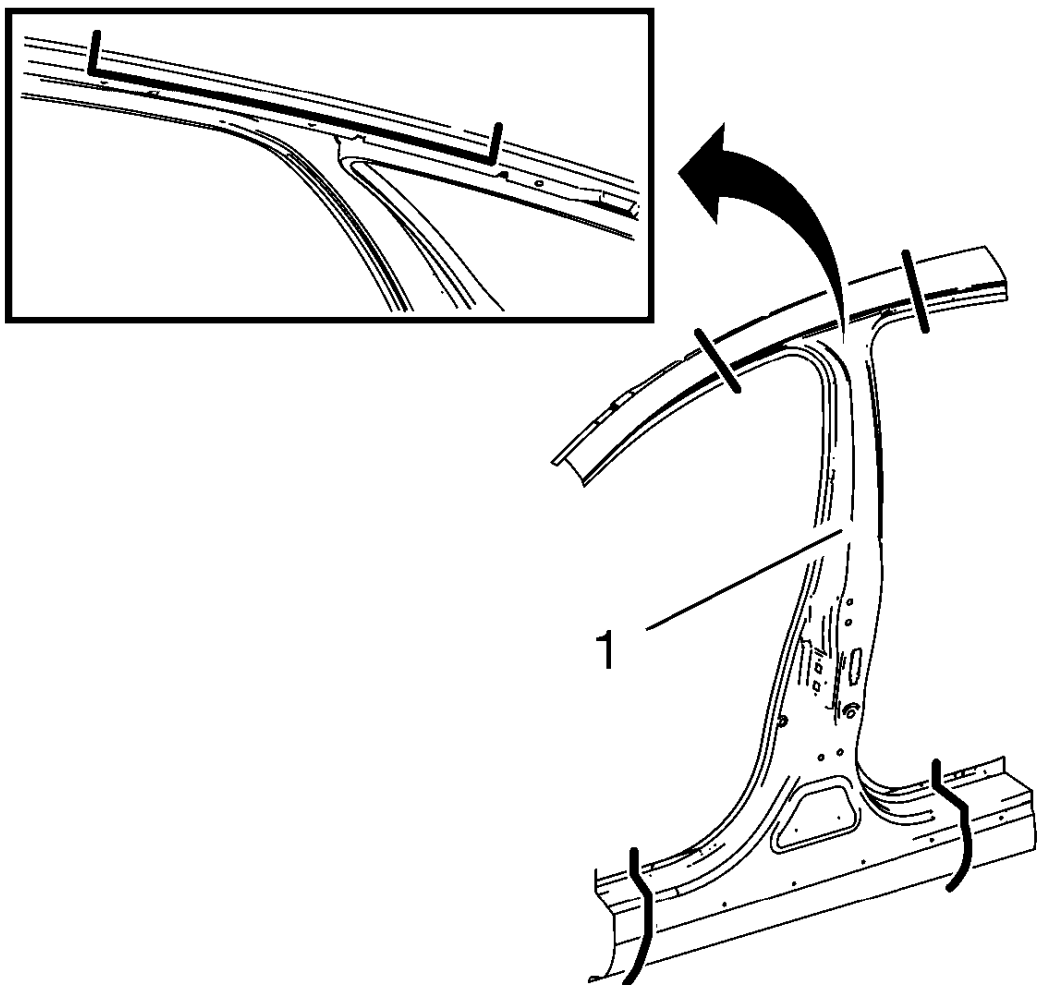

Fig. 164: Center Pillar Cut Lines
Courtesy of GENERAL MOTORS COMPANY

1. Cut the center pillar (1) in corresponding locations to fit the remaining original panel. The sectioning joint should be trimmed to allow a gap of one-and-one-half-times the metal thickness at the sectioning joint.
2. Create a 50 mm (2 in) backing plate from the unused portion of the service part.
3. Drill 8 mm (5/16 in) along the sectioning cut on the remaining original part. Locate these holes 13 mm (1/2 in) from the edge of part and spaced 40 mm (1 1/2 in) apart.
4. Prepare all mating surfaces as necessary.
5. Fit the backing plates halfway into the sectioning joints, clamp in place and plug weld to the vehicle.
6. Align the center pillar.

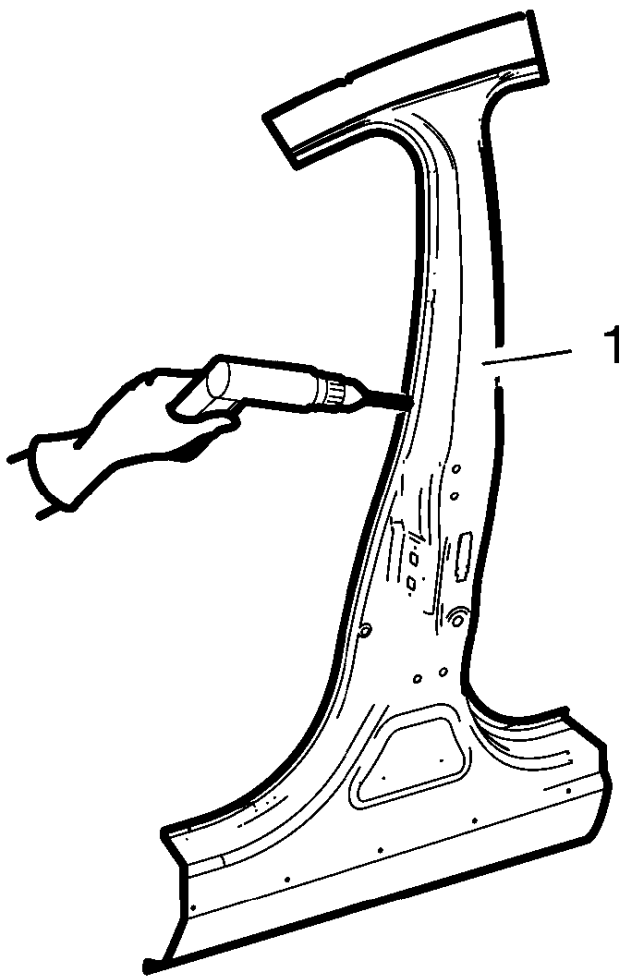

Fig. 165: Drilling Holes For Plug Welding New Center Pillar
Courtesy of GENERAL MOTORS COMPANY

7. Drill 8 mm (5/16 in) for plug welding along the edges of the center pillar (1) as noted from the original panel.
8. Clean and prepare the attaching surfaces for welding.

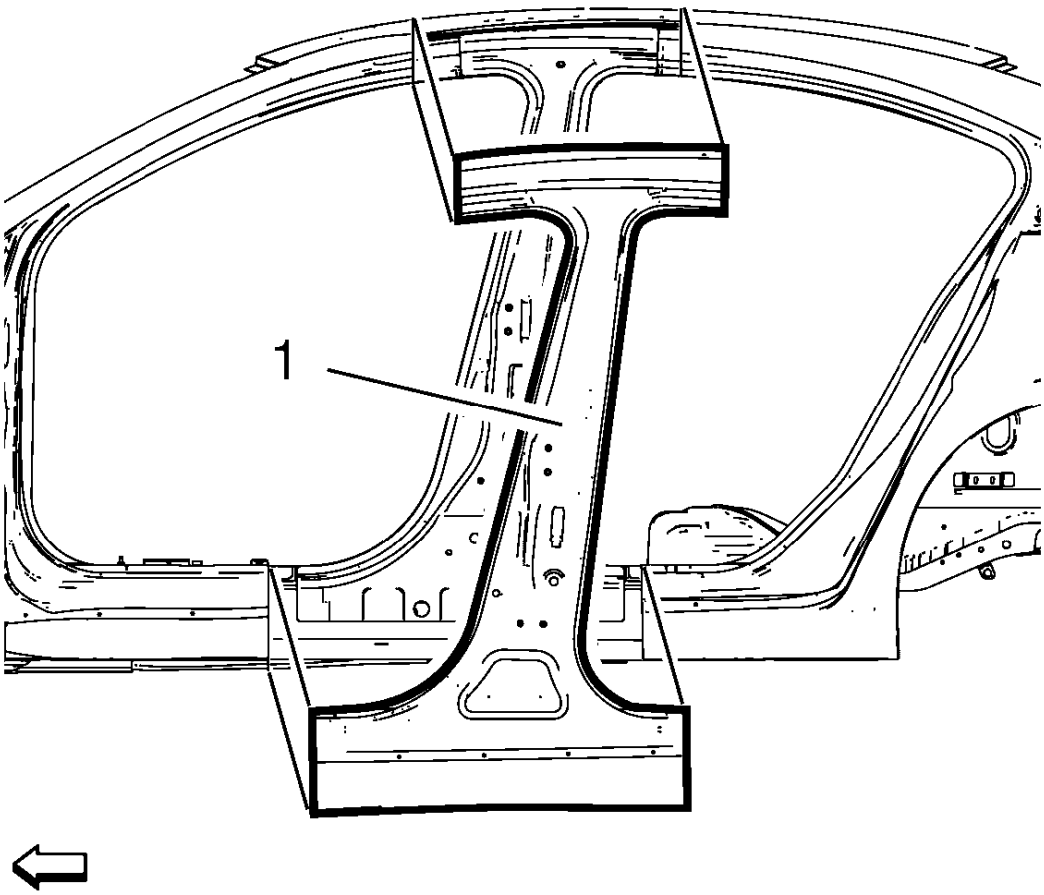

Fig. 166: Center Pillar
Courtesy of GENERAL MOTORS COMPANY

9. Position the center pillar (1) on the vehicle.
10. Verify the fit of the center pillar.
11. Clamp the center pillar into position.

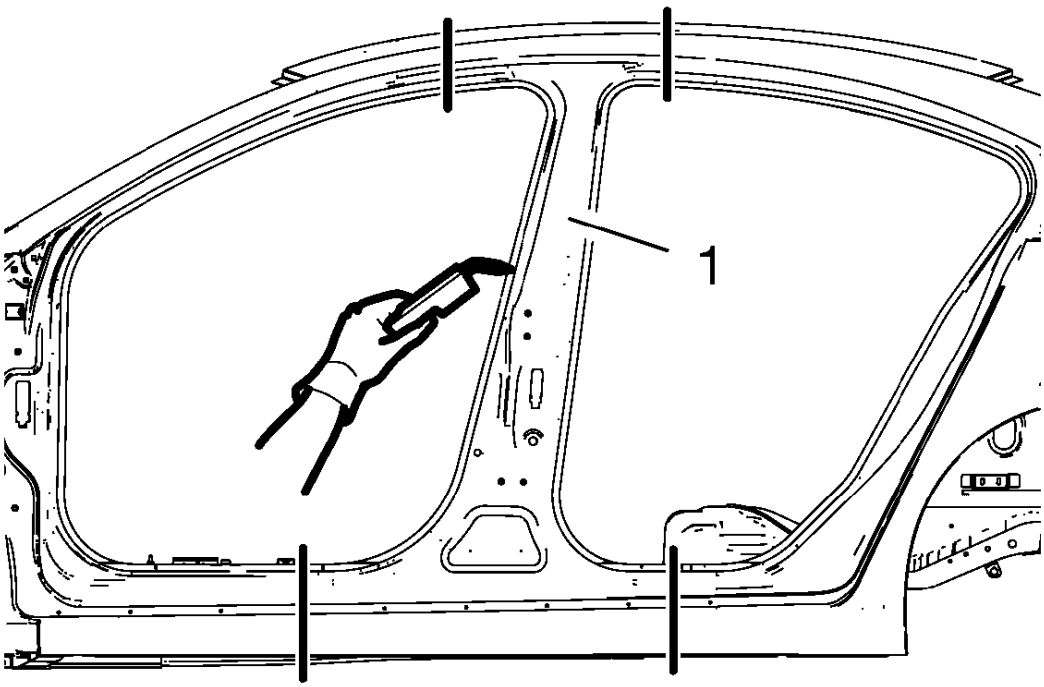

Fig. 167: Welding Center Pillar
Courtesy of GENERAL MOTORS COMPANY

12. Plug weld the center pillar (1) accordingly.
13. To create a solid weld with minimum heat distortion, make 25 mm (1 in) stitch welds along the seam with 25 mm (1 in) gaps between them. Then go back and complete the stitch weld.
14. Apply the sealers and anti-corrosion materials to the repair area, as necessary. Refer to **Anti-Corrosion Treatment and Repair** .
15. Paint the repaired area. Refer to **Basecoat/Clearcoat Paint Systems** .
16. Install all related panels and components.
17. Connect the negative battery cable. Refer to **Battery Negative Cable Disconnection and Connection** .
18. Enable the SIR system. Refer to **SIR Disabling and Enabling** .

FRONT SIDE DOOR OUTER PANEL REPLACEMENT

Removal Procedure

WARNING: Refer to Glass and Sheet Metal Handling Warning .

1. Disable the SIR System. Refer to **SIR Disabling and Enabling** .
2. Disconnect the negative battery cable. Refer to **Battery Negative Cable Disconnection and Connection** .
3. Remove the front side door. Refer to **Front Side Door Replacement** .
4. Remove the front side door outside handle. Refer to **Front Side Door Outside Handle Replacement** .
5. Remove the outside rearview mirror. Refer to **Outside Rearview Mirror Replacement** .
6. Remove the sealers and anti-corrosion materials from the repair area, as necessary. Refer to **Anti-Corrosion Treatment and Repair** .

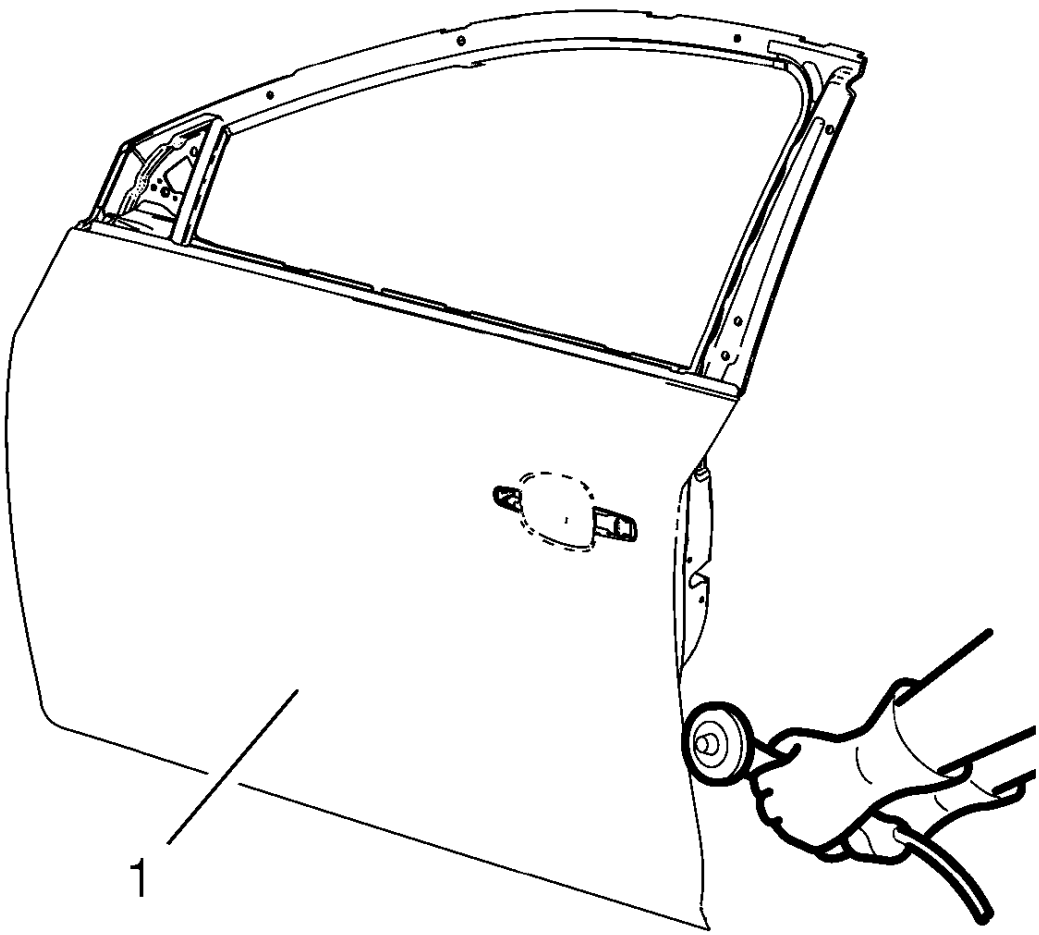

Fig. 168: Grinding Edges Of Front Side Door Outer Panel
Courtesy of GENERAL MOTORS COMPANY

7. Grind the edges of the front side door outer panel (1) to separate the outer door panel from the door shell.

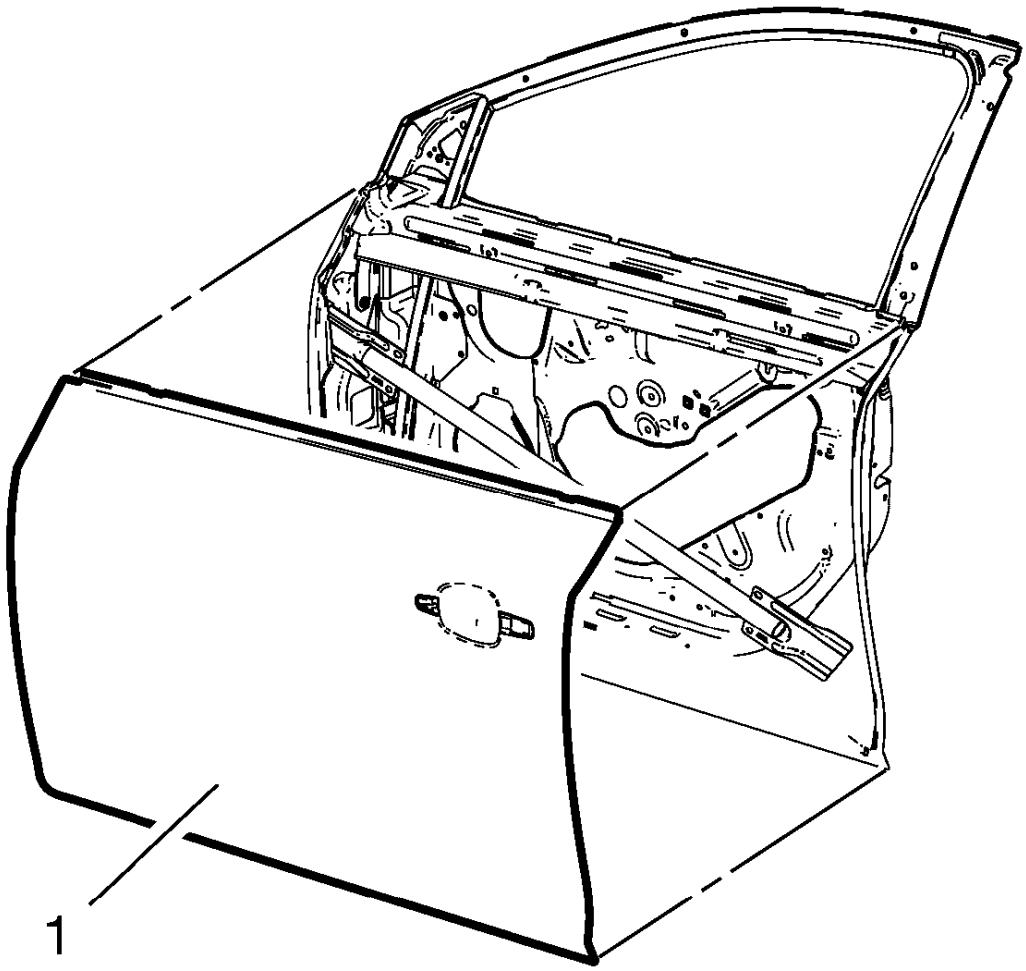

Fig. 169: Front Side Door Outer Door Panel
Courtesy of GENERAL MOTORS COMPANY

8. Remove the front side door outer door panel (1).
9. Note the location of the adhesive for installation of the service assembly.
10. Remove the sealers and anti-corrosion materials from the repair area, as necessary. Refer to **Anti-Corrosion Treatment and Repair** .
11. Straighten the edges of the door shell.

Installation Procedure

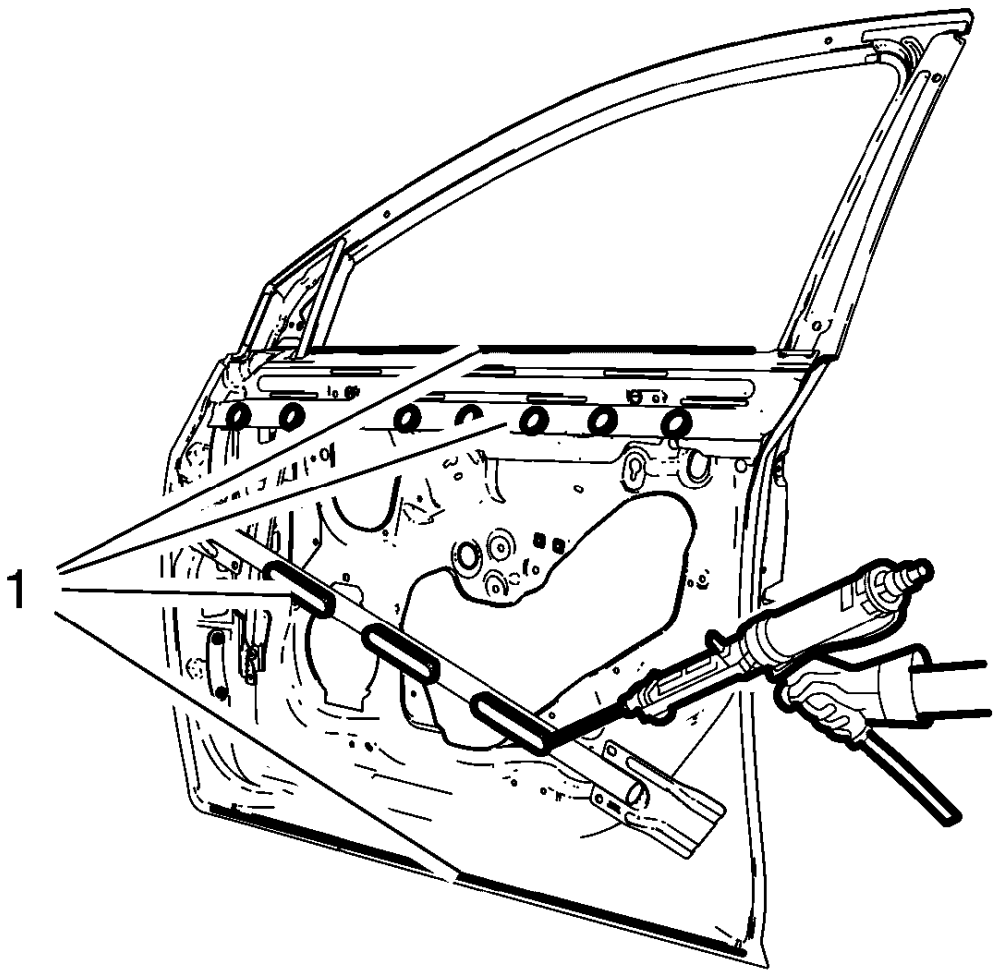

Fig. 170: Applying Urethane Adhesive To Front Side Door
Courtesy of GENERAL MOTORS COMPANY

1. Apply urethane adhesive (1) to the front side door as noted from the original panel.
2. Align the front side door outer panel.
3. Verify the fit of the front side door outer panel.
4. Clamp the front side door outer panel into position.
5. Using a hammer re-hem the hem flanges around the door shell.

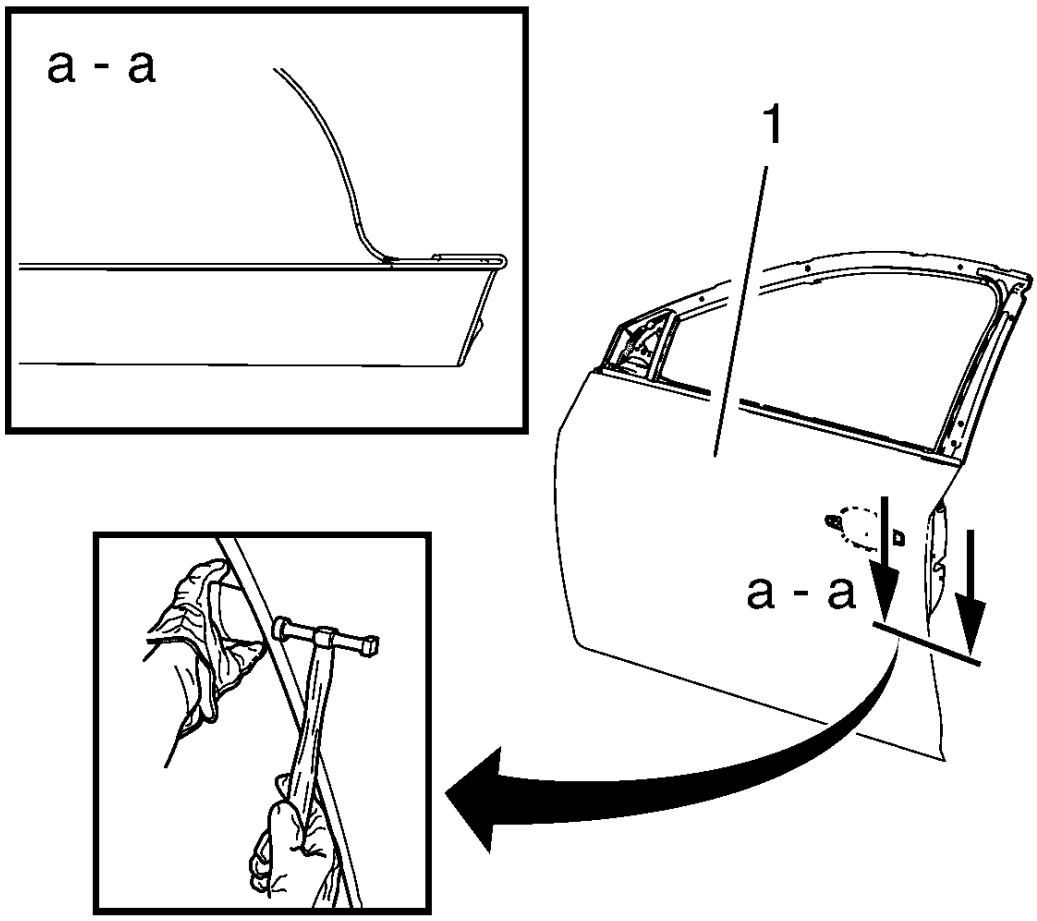

Fig. 171: Hammering In Stages Along Hem Flanges Of Front Side Door Outer Panel
Courtesy of GENERAL MOTORS COMPANY

6. Continue to hammer in stages along the hem flanges of the front side door outer panel (1).
7. Apply the sealers and anti-corrosion materials to the repair area, as necessary. Refer to **Anti-Corrosion Treatment and Repair** .
8. Install the outside rearview mirror. Refer to **Outside Rearview Mirror Replacement** .
9. Install the front side door outside handle. Refer to **Front Side Door Outside Handle Replacement** .
10. Install the front side door. Refer to **Front Side Door Replacement** .
11. Paint the repaired area. Refer to **Basecoat/Clearcoat Paint Systems** .
12. Install all related panels and components.
13. Connect the negative battery cable. Refer to **Battery Negative Cable Disconnection and Connection** .
14. Enable the SIR system. Refer to **SIR Disabling and Enabling** .

REAR SIDE DOOR OUTER PANEL REPLACEMENT

Removal Procedure

WARNING: Refer to Glass and Sheet Metal Handling Warning .

1. Disable the SIR System. Refer to **SIR Disabling and Enabling** .
2. Disconnect the negative battery cable. Refer to **Battery Negative Cable Disconnection and Connection** .
3. Remove the rear side door. Refer to **Rear Side Door Replacement** .
4. Remove the rear side door outside handle. Refer to **Rear Side Door Outside Handle Replacement** .
5. Remove the sealers and anti-corrosion materials from the repair area, as necessary. Refer to **Anti-Corrosion Treatment and Repair** .

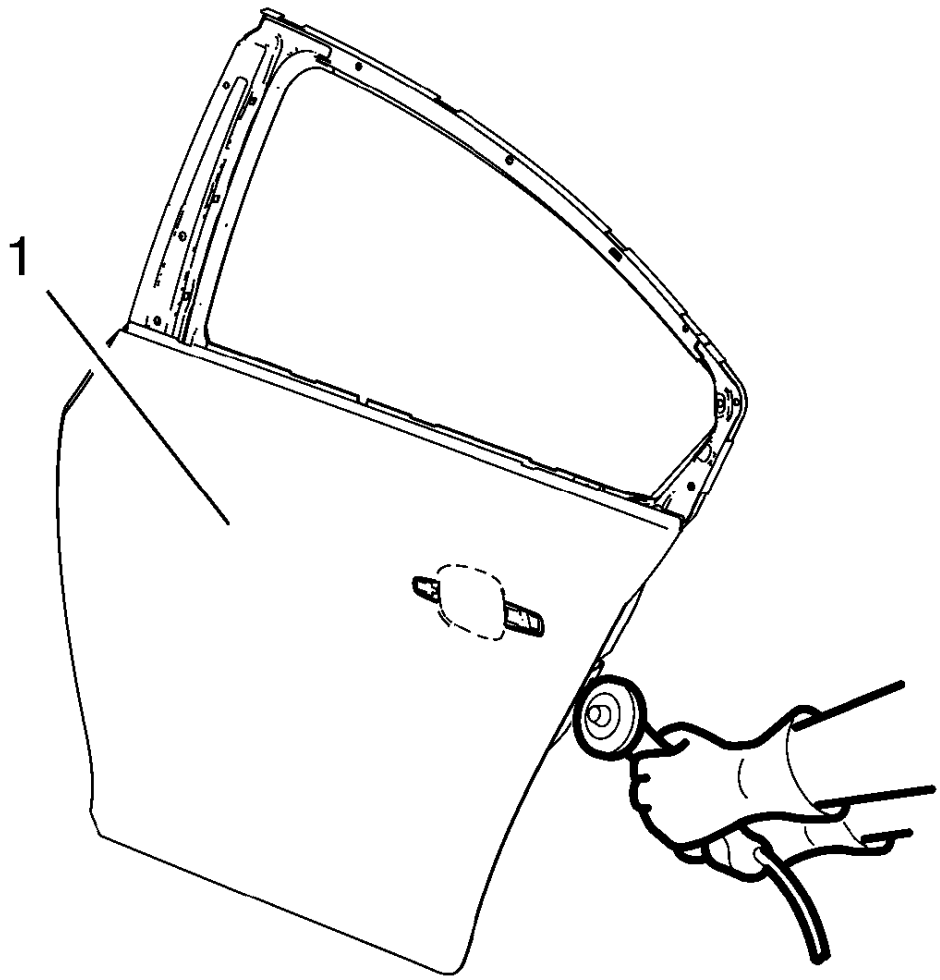

Fig. 172: Grinding Edges Of Rear Side Door Outer Panel
Courtesy of GENERAL MOTORS COMPANY

6. Grind the edges of the rear side door outer panel (1) to separate the outer door panel from the door shell.

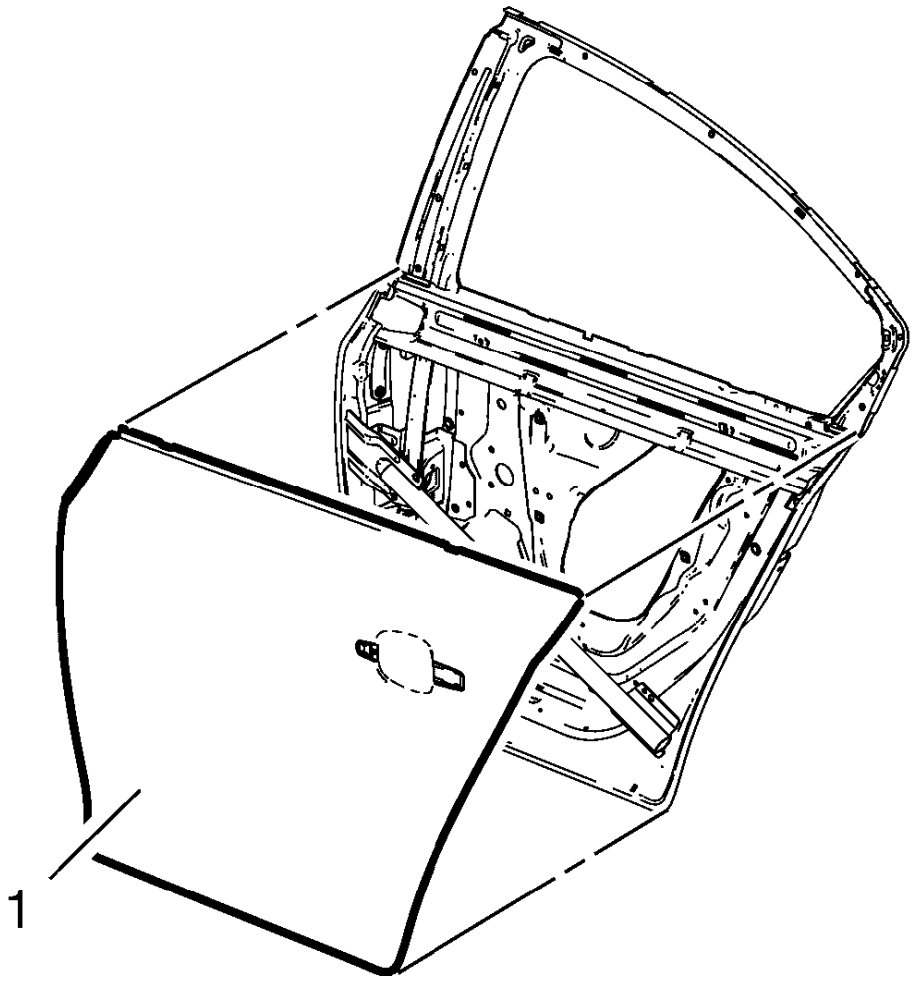

Fig. 173: Rear Side Door Outer Door Panel
Courtesy of GENERAL MOTORS COMPANY

7. Remove the rear side door outer door panel (1).
8. Remove the sealers and anti-corrosion materials from the repair area, as necessary. Refer to **Anti-Corrosion Treatment and Repair** .
9. Straighten the edges of the door shell.

Installation Procedure

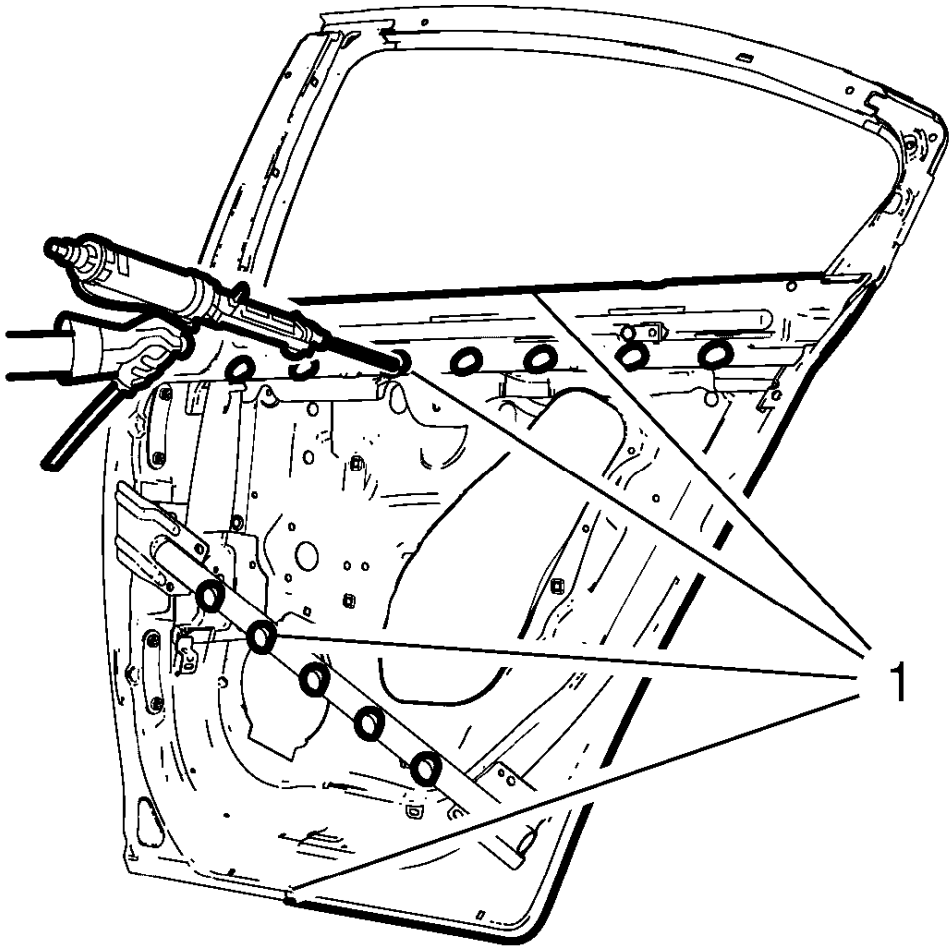

Fig. 174: Applying Urethane Adhesive To Rear Side Door
Courtesy of GENERAL MOTORS COMPANY

1. Apply urethane adhesive (1) to the rear side door as noted from the original panel.
2. Align the rear side door outer panel.
3. Verify the fit of the rear side door outer panel.
4. Clamp the rear side door outer panel into position.
5. Using a hammer re-hem the hem flanges around the door shell.

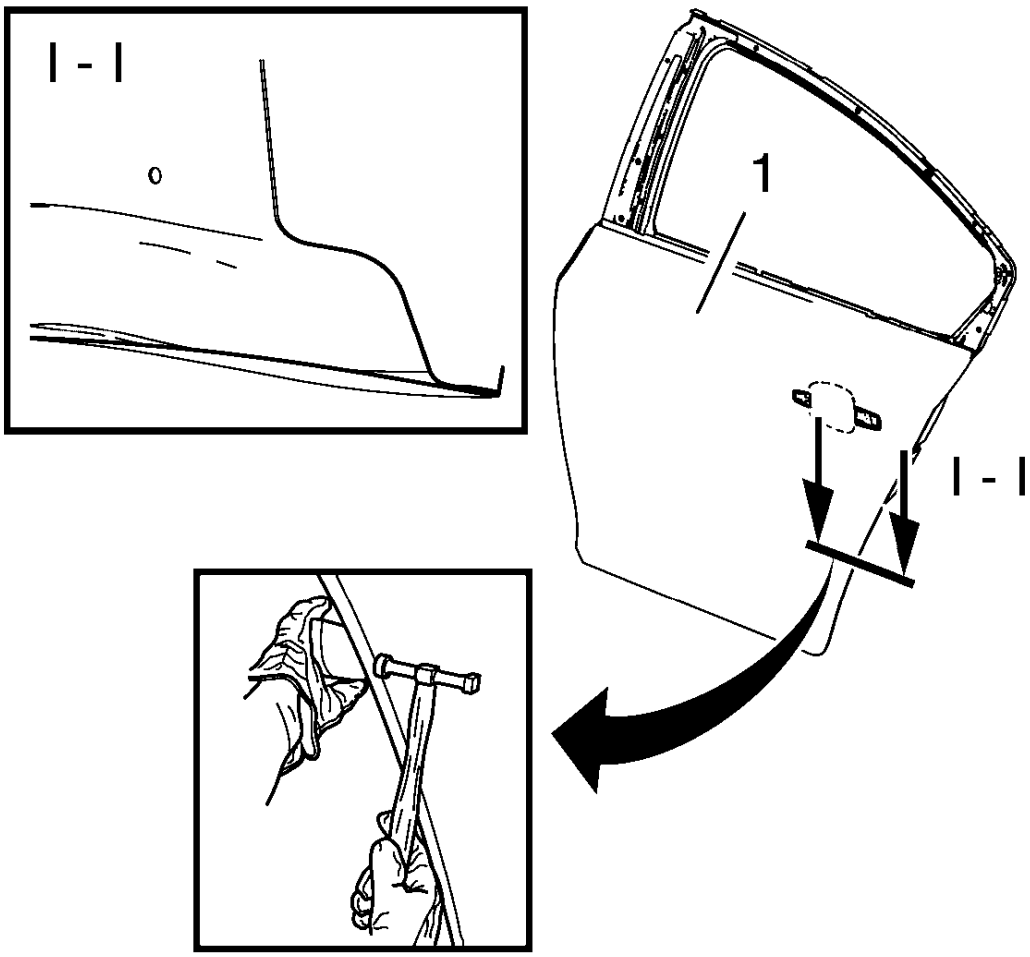

Fig. 175: Hammering In Stages Along Hem Flanges Of Rear Side Door Outer Panel
Courtesy of GENERAL MOTORS COMPANY

6. Continue to hammer in stages along the hem flanges of the rear side door outer panel (1).
7. Apply the sealers and anti-corrosion materials to the repair area, as necessary. Refer to **Anti-Corrosion Treatment and Repair** .
8. Install the rear side door outside handle. Refer to **Rear Side Door Outside Handle Replacement** .
9. Install the rear side door. Refer to **Rear Side Door Replacement** .
10. Paint the repaired area. Refer to **Basecoat/Clearcoat Paint Systems** .
11. Install all related panels and components.
12. Connect the negative battery cable. Refer to **Battery Negative Cable Disconnection and Connection** .
13. Enable the SIR system. Refer to **SIR Disabling and Enabling** .

REAR RAIL SECTIONING

Removal Procedure

WARNING: Refer to Approved Equipment for Collision Repair Warning .

WARNING: Refer to Collision Sectioning Warning .

WARNING: Refer to Glass and Sheet Metal Handling Warning .

1. Disable the SIR System. Refer to **SIR Disabling and Enabling** .
2. Disconnect the negative battery cable. Refer to **Battery Negative Cable Disconnection and Connection** .
3. Remove all related panels and components.
4. Visually inspect the damage. Repair as much of the damage as possible.
5. Remove the sealers and anti-corrosion materials from the repair area, as necessary. Refer to **Anti-Corrosion Treatment and Repair** .

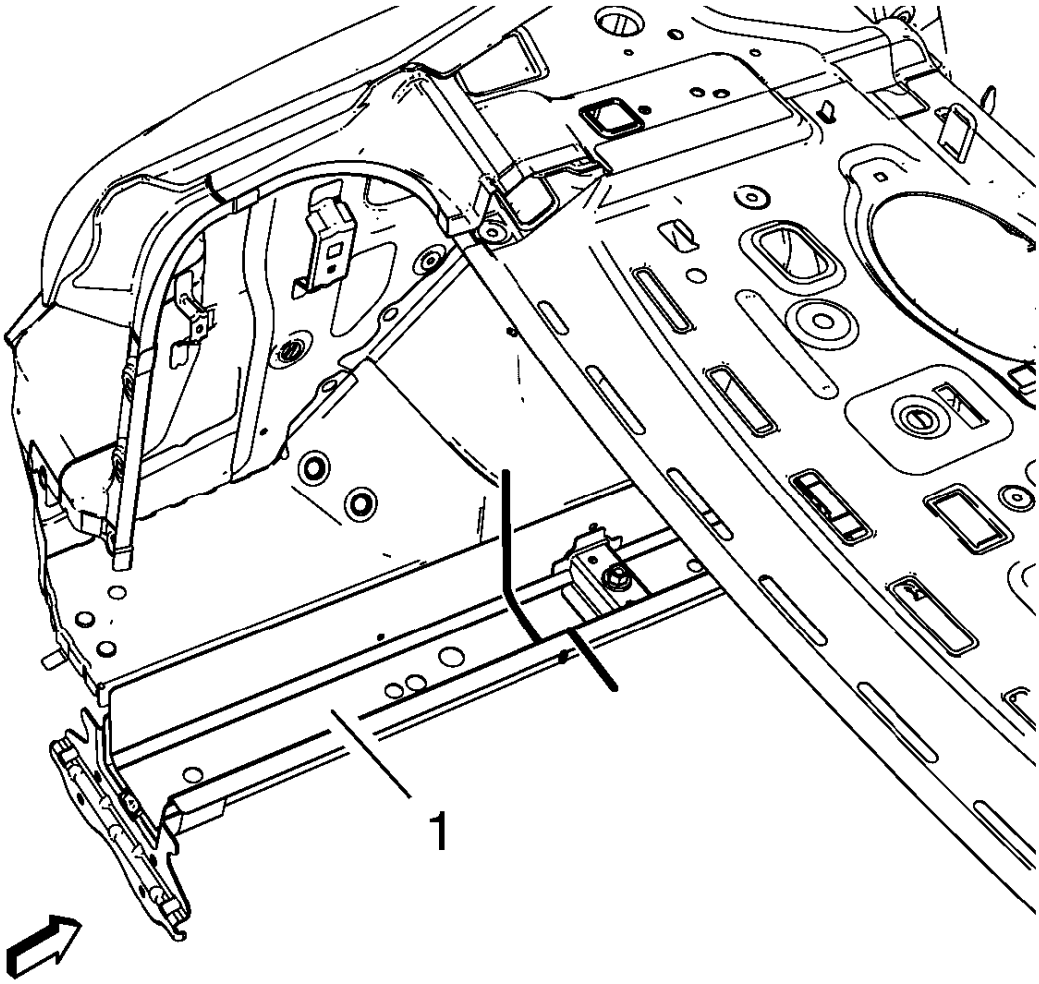

Fig. 176: Cut Lines On Rear Side Rail
Courtesy of GENERAL MOTORS COMPANY

6. Create cut lines on the rear side rail (1).

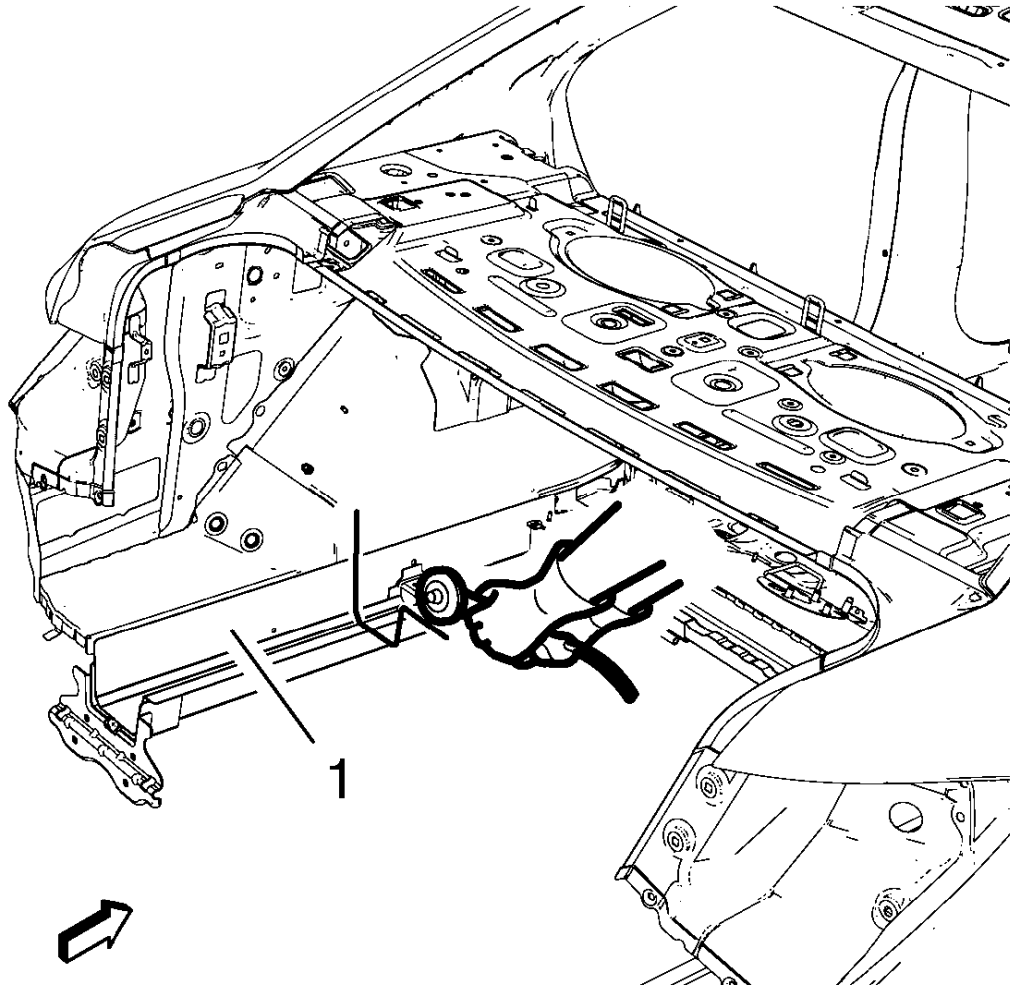

Fig. 177: Cutting Rear Side Rail
Courtesy of GENERAL MOTORS COMPANY

NOTE: Do not damage any other panels or reinforcements.

7. Cut the panel (1) where sectioning is to be performed.

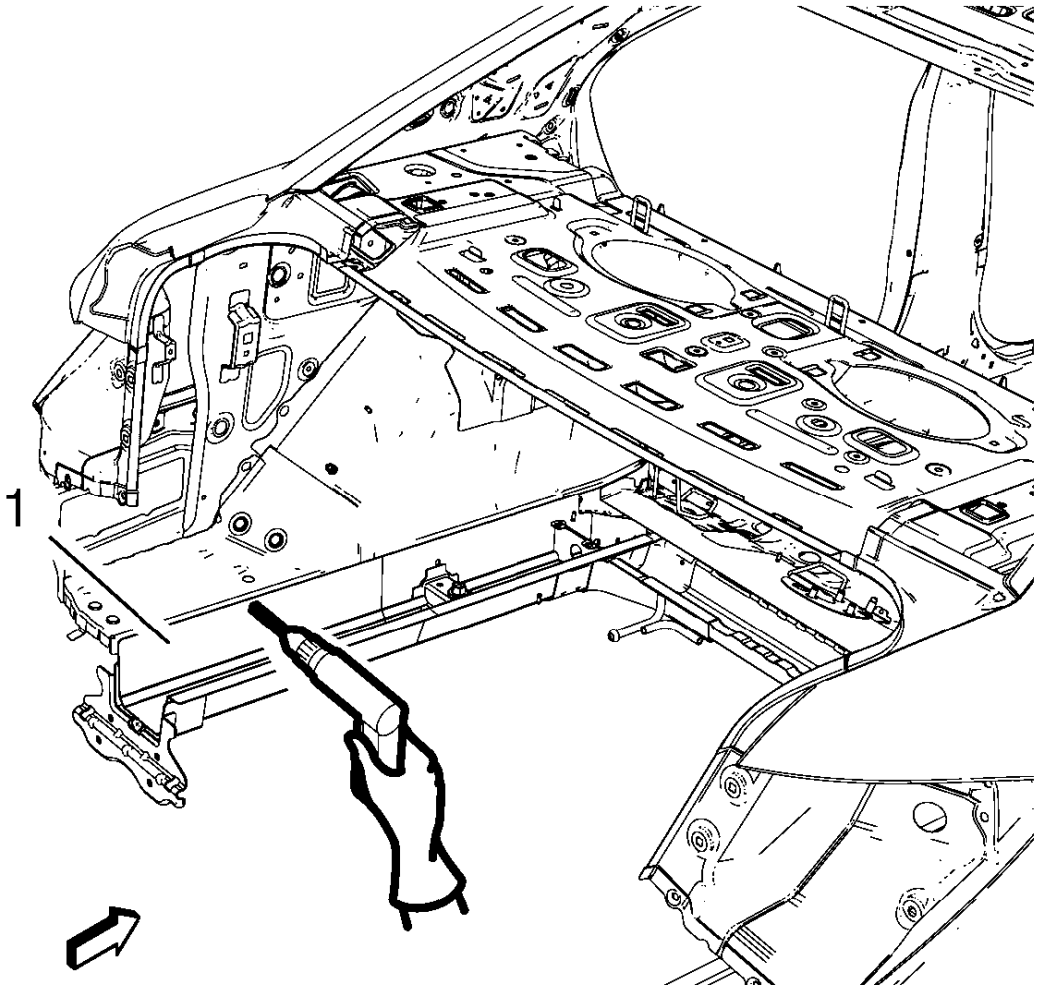

Fig. 178: Drilling Factory Welds Of Rear Side Rail
Courtesy of GENERAL MOTORS COMPANY

8. Locate and mark all the necessary factory welds of the rear side rail (1).
9. Drill all factory welds. Note the number and location of welds for installation of the service assembly.

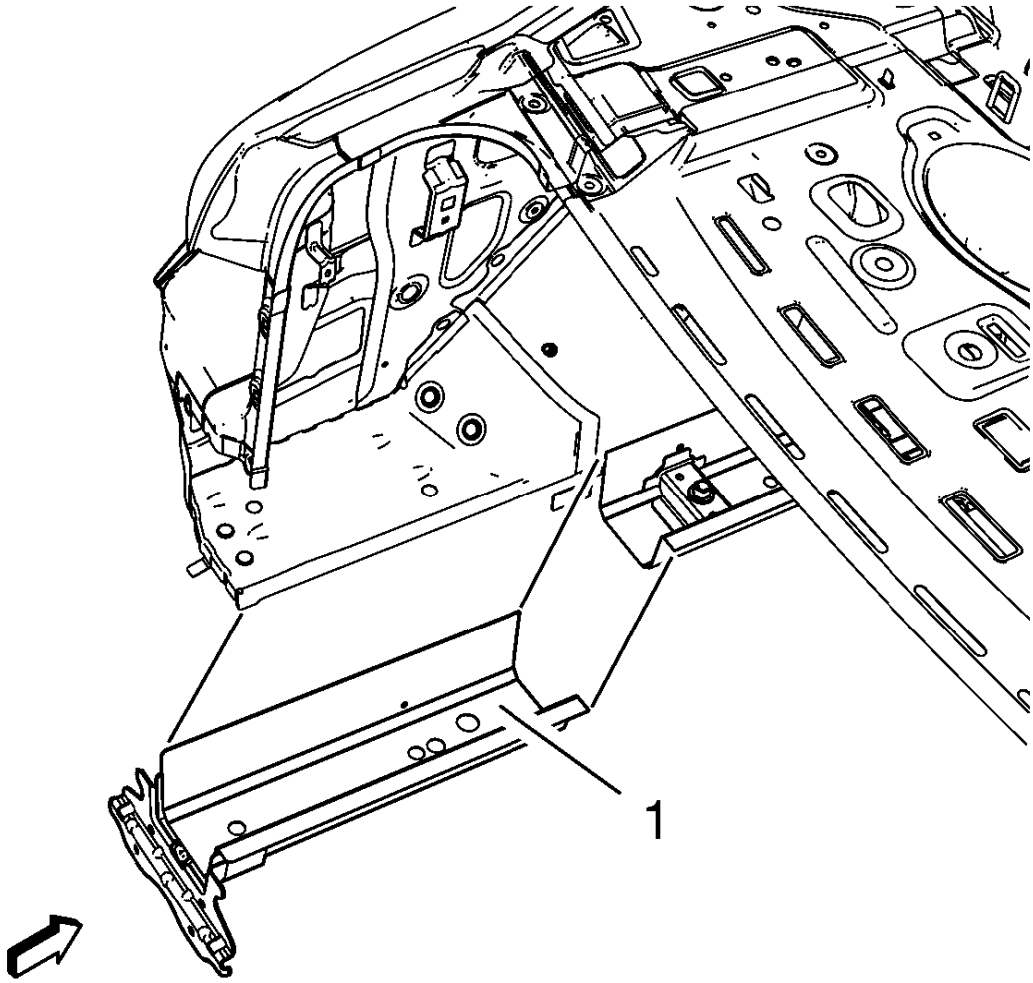

Fig. 179: Rear Side Rail
Courtesy of GENERAL MOTORS COMPANY

10. Remove the damaged rear side rail (1).

Installation Procedure

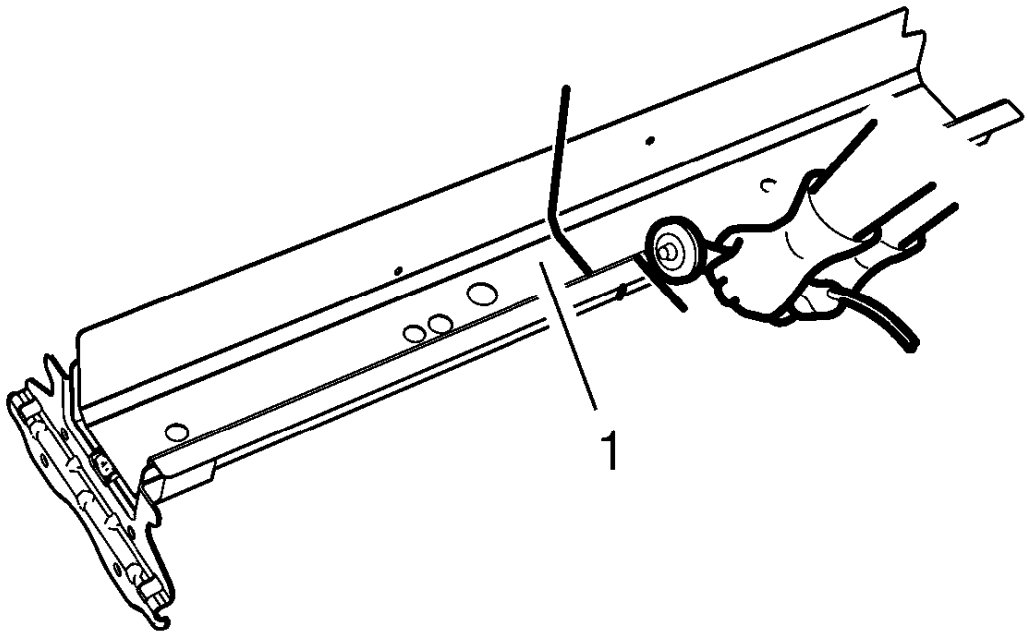

Fig. 180: Cutting New Rear Side Rail
Courtesy of GENERAL MOTORS COMPANY

1. Cut the rear side rail (1) in corresponding locations to fit the remaining original panel. The sectioning joint should be trimmed to allow a gap of one-and-one-half-times the metal thickness at the sectioning joint.
2. Prepare all mating surfaces as necessary.
3. Align the rear side rail.

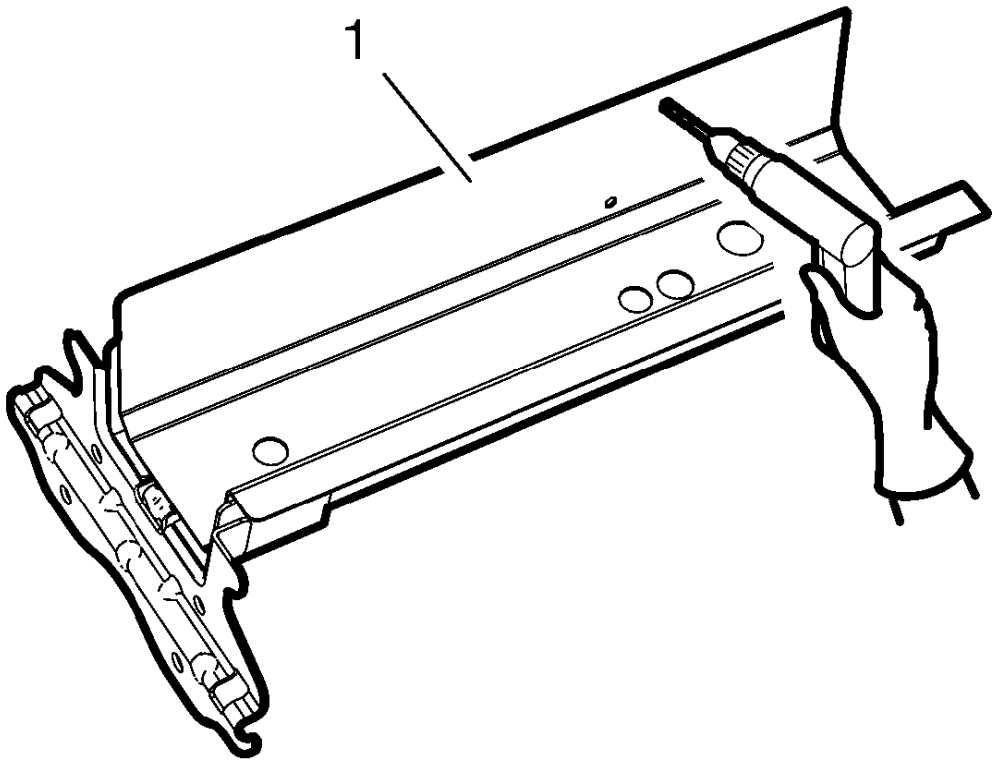

Fig. 181: Drill Holes For Plug Welding New Rear Side Rail
Courtesy of GENERAL MOTORS COMPANY

4. Drill 8 mm (5/16 in) for plug welding along the edges of the rear side rail (1) as noted from the original panel.
5. Clean and prepare the attaching surfaces for welding.

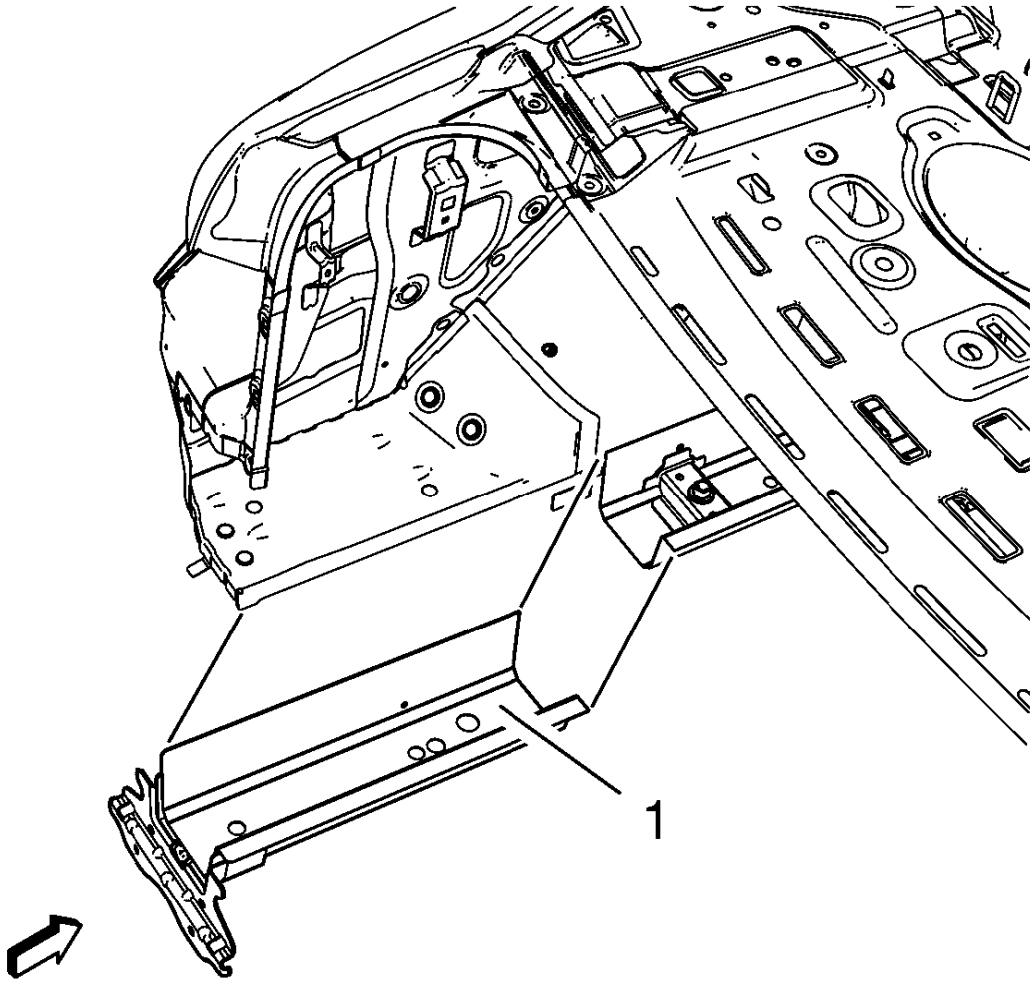

Fig. 182: Rear Side Rail
Courtesy of GENERAL MOTORS COMPANY

6. Position the rear side rail (1) on the vehicle.
7. Verify the fit of the rear side rail.
8. Clamp the rear side rail into position.

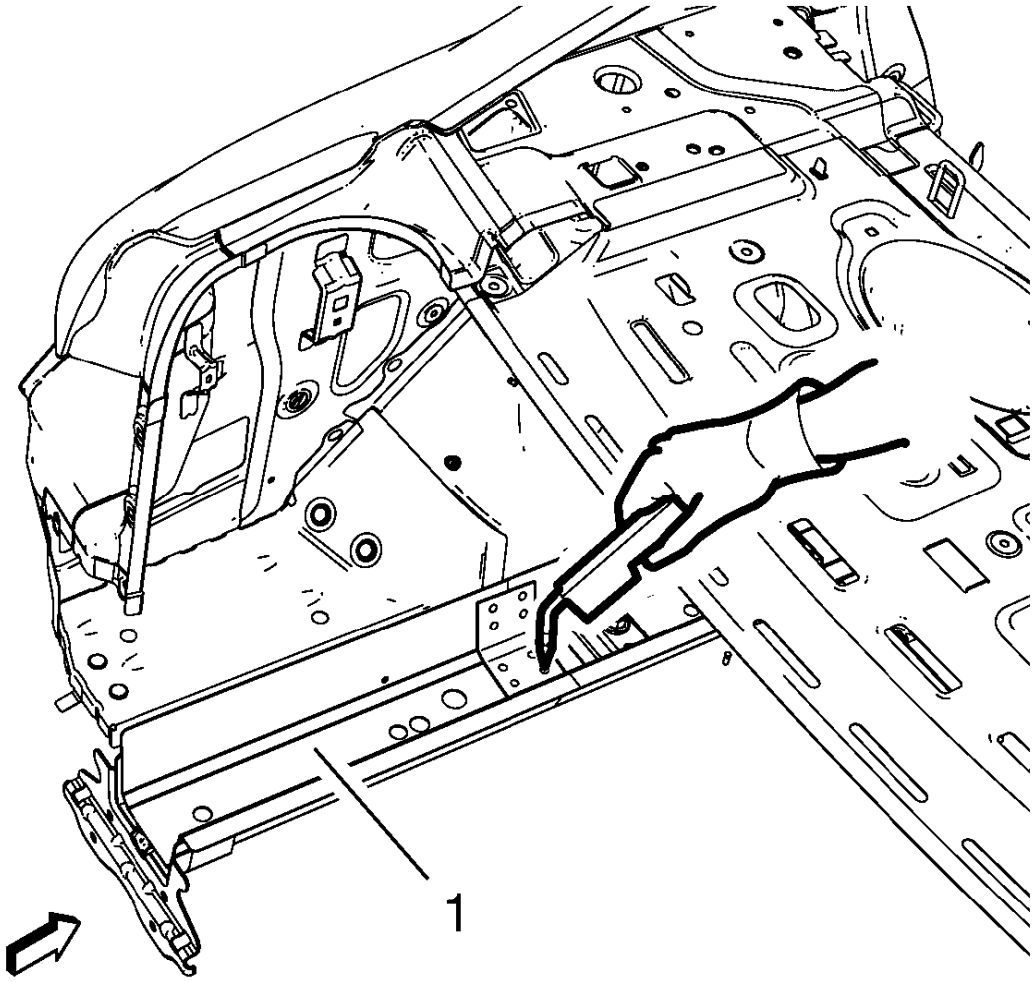

Fig. 183: Welding Rear Side Rail
Courtesy of GENERAL MOTORS COMPANY

9. Plug weld the rear side rail (1) accordingly.
10. To create a solid weld with minimum heat distortion, make 25 mm (1 in) stitch welds along the seam with 25 mm (1 in) gaps between them. Then go back and complete the stitch weld.
11. Apply the sealers and anti-corrosion materials to the repair area, as necessary. Refer to **Anti-Corrosion Treatment and Repair** .
12. Paint the repaired area. Refer to **Basecoat/Clearcoat Paint Systems** .
13. Install all related panels and components.
14. Connect the negative battery cable. Refer to **Battery Negative Cable Disconnection and Connection** .
15. Enable the SIR System. Refer to **SIR Disabling and Enabling** .

RESISTANCE SPOT WELDED FULL PANEL REPLACEMENT

NOTE: **Use this procedure for all panels that are replaced at the factory seams, unless a specific procedure exists in the Collision Repair section of this vehicle's service information.**

Removal Procedure

WARNING: **Refer to Approved Equipment for Collision Repair Warning .**

1. Disable the SIR system. Refer to **SIR Disabling and Enabling** .
2. Disconnect the negative battery cable. Refer to **Battery Negative Cable Disconnection and Connection** .
3. Remove all related panels and components.
4. Repair as much of the damage as possible to factory specifications.

WARNING: **Refer to Foam Sound Deadeners Warning .**

5. Note the location and remove the sealers and anti-corrosion materials from the repair area, as necessary. Refer to **Anti-Corrosion Treatment and Repair** .

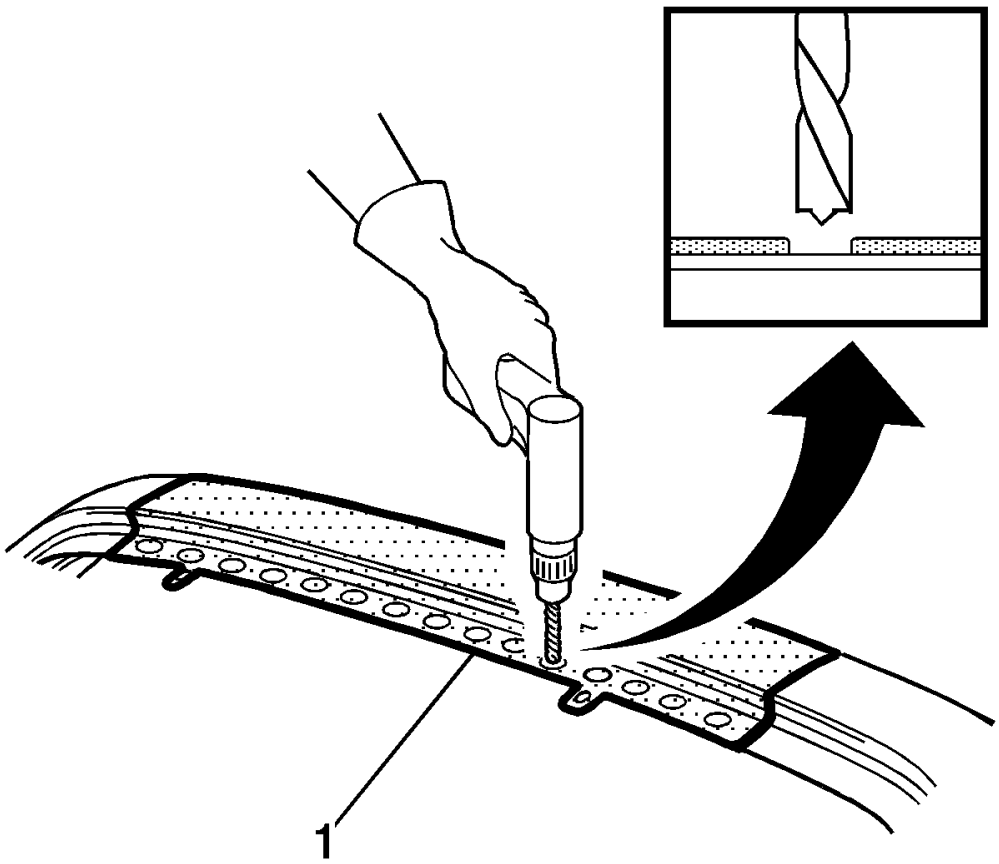

Fig. 184: Drilling Out Factory Welds (Full Panel)
Courtesy of GENERAL MOTORS COMPANY

NOTE: Do not damage any inner panels or reinforcements.

6. Locate and drill out all factory welds (1). Note the number and location of the welds for installation of the service part.

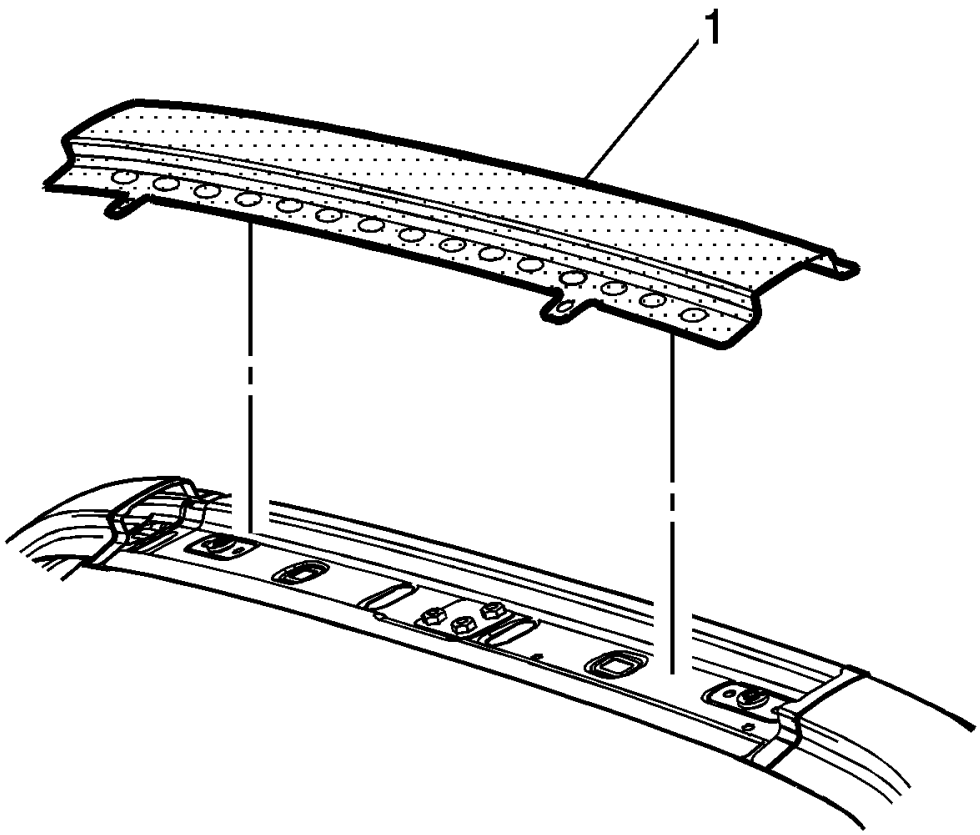

Fig. 185: View Of Damaged Part (Full Panel)
Courtesy of GENERAL MOTORS COMPANY

7. Remove the damaged part (1).

Installation Procedure

NOTE: If the location of the original plug weld holes cannot be determined, space the plug weld holes every 40 mm (1 1/2 in) apart. Where structural adhesive was present, space the plug weld holes every 20 mm (3/4 in) apart.

1. Prepare all mating surfaces as necessary.
2. Apply GM-approved Weld-Thru Coating or equivalent to all mating surfaces. Refer to **Anti-Corrosion Treatment and Repair** .
3. Position the service part. Clamp in place.

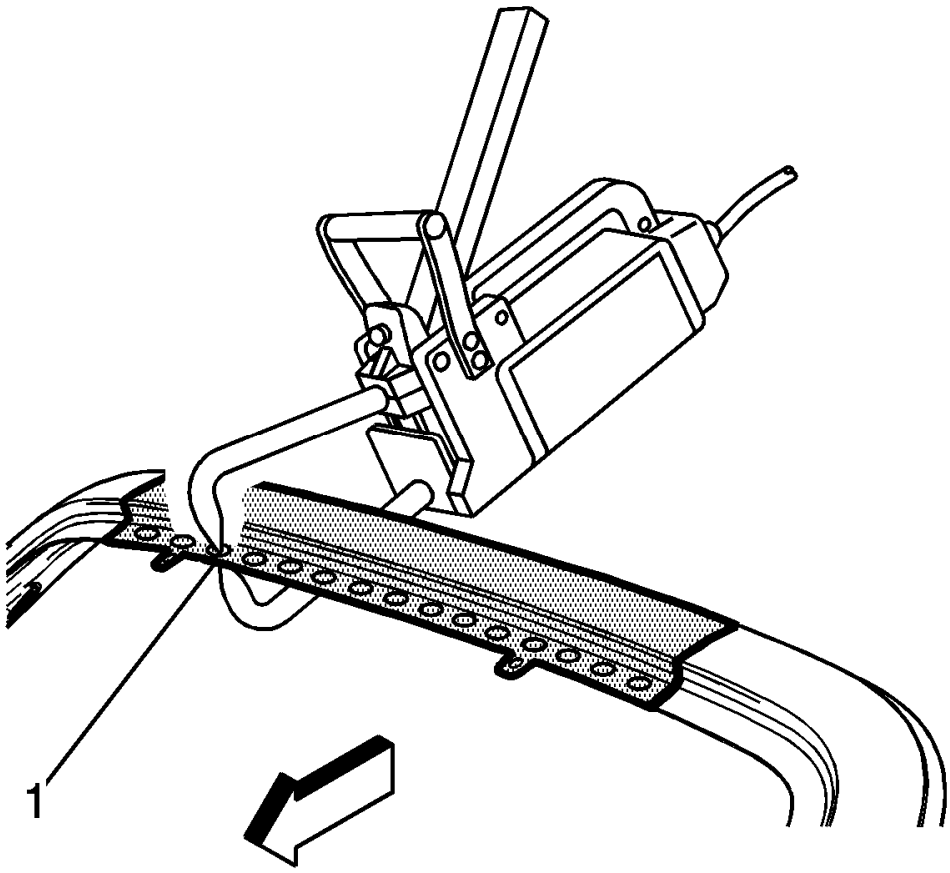

Fig. 186: Welding New Part (Full Panel)
Courtesy of GENERAL MOTORS COMPANY

4. Apply welds accordingly (1).
5. Clean and prepare all welded surfaces.
6. Apply the sealers and anti-corrosion materials to the repair area, as necessary. Refer to **Anti-Corrosion Treatment and Repair** .
7. Paint the repair area. Refer to **Basecoat/Clearcoat Paint Systems** .
8. Install all related panels and components.
9. Connect the negative battery cable. Refer to **Battery Negative Cable Disconnection and Connection** .
10. Enable the SIR system. Refer to **SIR Disabling and Enabling** .

MIG WELDED FULL PANEL REPLACEMENT

Removal Procedure

WARNING: Refer to Approved Equipment for Collision Repair Warning .

NOTE: **Use this procedure for all panels that are replaced at the factory seams, unless a specific procedure exists in the Collision Repair section of this vehicle's service information.**

1. Disable the SIR system. Refer to **SIR Disabling and Enabling** .
2. Disconnect the negative battery cable. Refer to **Battery Negative Cable Disconnection and Connection** .
3. Remove all related panels and components.
4. Repair as much of the damage as possible to factory specifications.

WARNING: **Refer to Foam Sound Deadeners Warning .**

5. Note the location and remove the sealers and anti-corrosion materials from the repair area, as necessary. Refer to **Anti-Corrosion Treatment and Repair** .

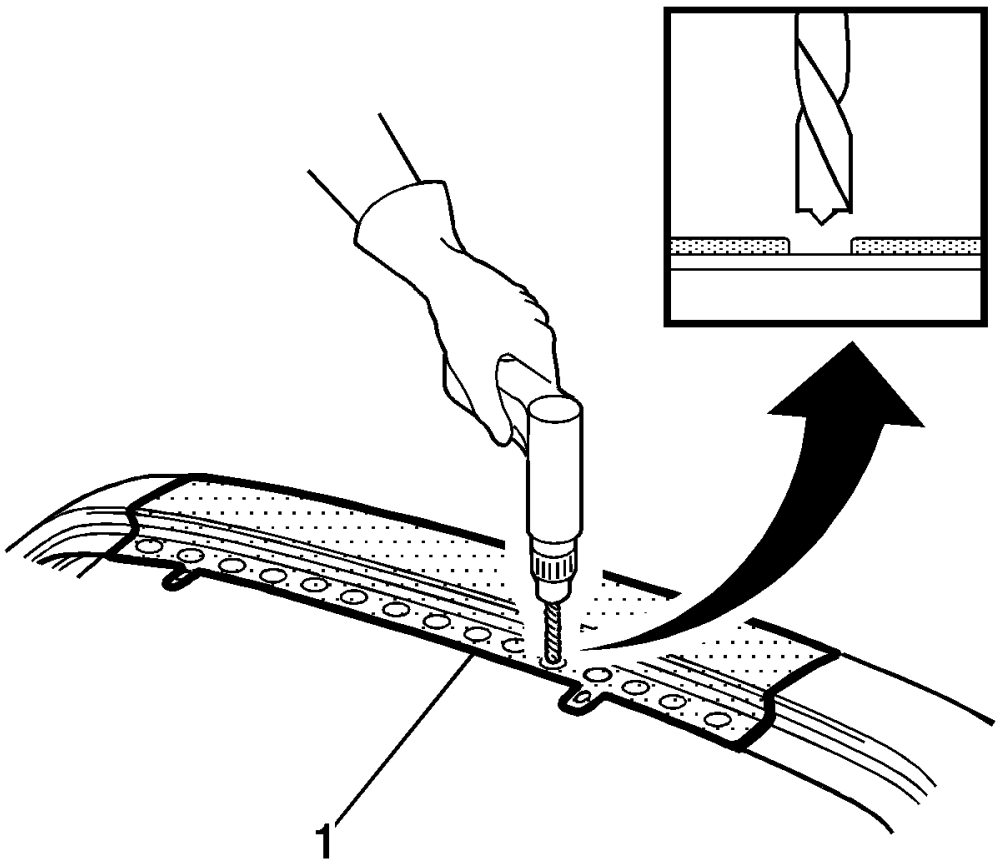

Fig. 187: Drilling Out Factory Welds (Full Panel)
Courtesy of GENERAL MOTORS COMPANY

NOTE: Do not damage any inner panels or reinforcements.

6. Locate and drill out all factory welds (1). Note the number and location of the welds for installation of the service part.

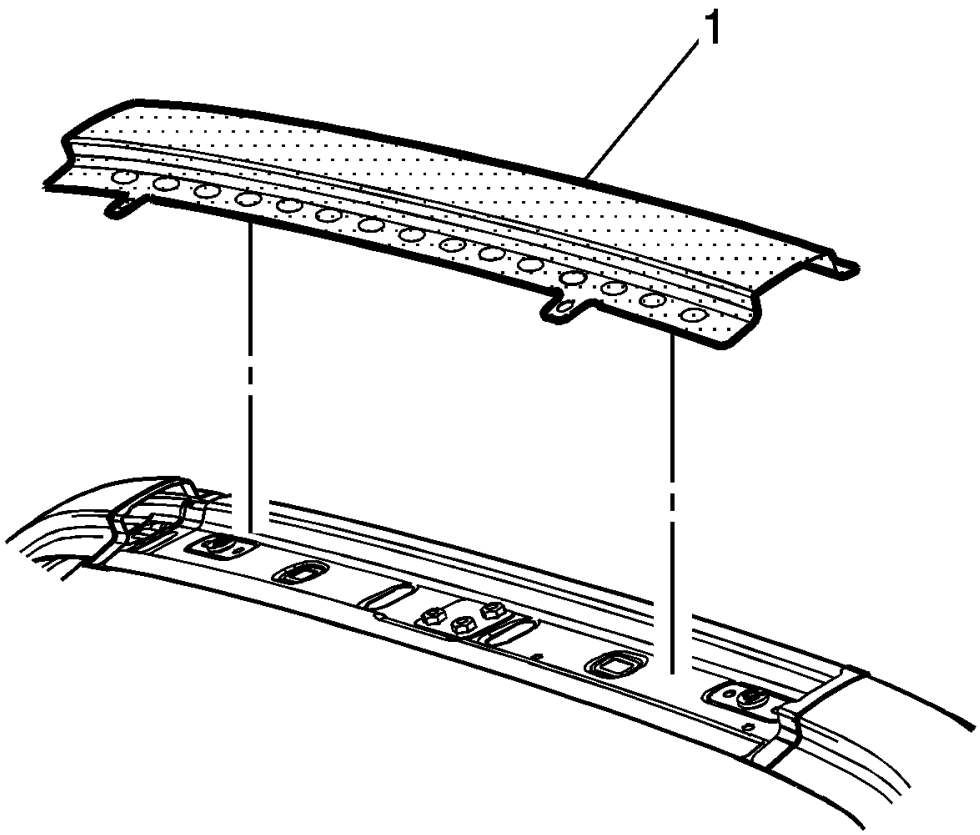

Fig. 188: View Of Damaged Part (Full Panel)
Courtesy of GENERAL MOTORS COMPANY

7. Remove the damaged part (1).

Installation Procedure

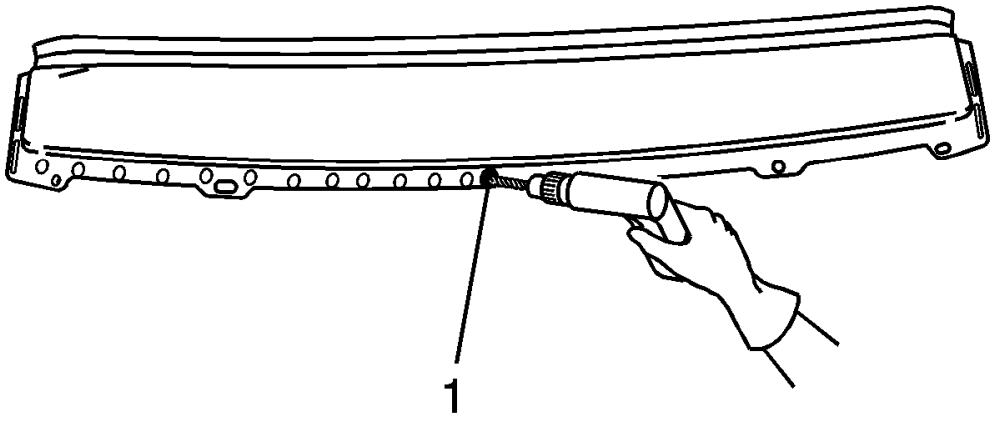

Fig. 189: Drilling Plug Weld Holes (Full Panel)
Courtesy of GENERAL MOTORS COMPANY

NOTE: If the location of the original plug weld holes can not be determined, space the plug weld holes every 40 mm (1 1/2 in) apart. Where structural adhesive was present, space the plug weld holes every 20 mm (3/4 in) apart.

1. Drill 8 mm (5/16 in) plug weld holes in the service part as necessary in the locations noted from the original panel (1).
2. Prepare all attachment surfaces as necessary.
3. Prepare all mating surfaces as necessary.
4. Apply GM-approved Weld-Thru Coating or equivalent to all mating surfaces. Refer to **Anti-Corrosion Treatment and Repair** .
5. Position the service part. Clamp in place.

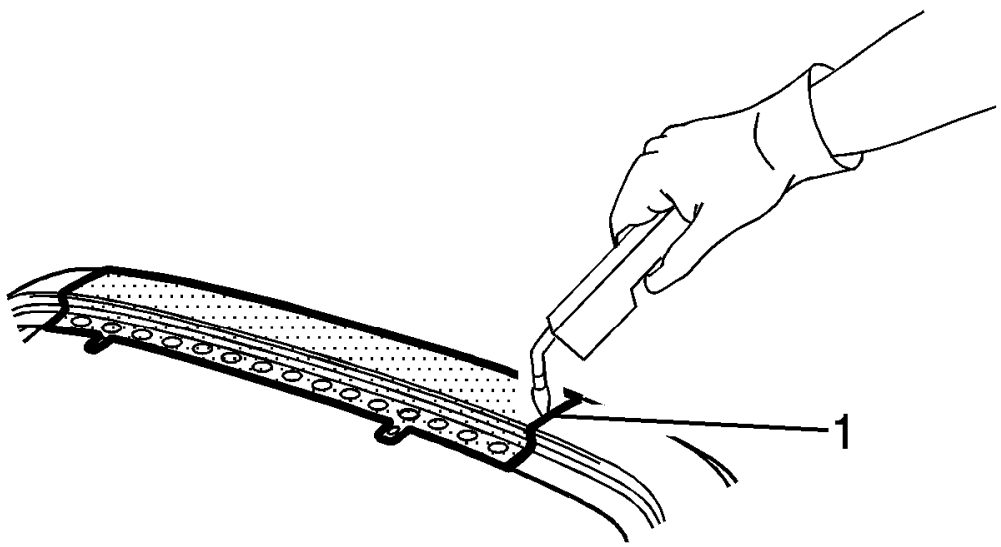

Fig. 190: Plug Welding Service Part (Full Panel)
Courtesy of GENERAL MOTORS COMPANY

6. Plug weld accordingly (1).
7. Clean and prepare all welded surfaces.
8. Apply the sealers and anti-corrosion materials to the repair area, as necessary. Refer to **Anti-Corrosion Treatment and Repair** .
9. Paint the repair area. Refer to **Basecoat/Clearcoat Paint Systems** .
10. Install all related panels and components.
11. Connect the negative battery cable. Refer to **Battery Negative Cable Disconnection and Connection** .
12. Enable the SIR system. Refer to **SIR Disabling and Enabling** .

DESCRIPTION AND OPERATION

DUAL PHASE STEEL

This information provides repair recommendations and general guidelines for steel classified as Dual Phase

Steel, also known as DP. This type of steel normally has a tensile strength below 780 MPa.

General Motors recommends the following when repairing or replacing this type of steel during collision repair.

NOTE: The use of heat to repair damage is not recommended for this classification of steel.

Recommended Repairs

- Cold repairs can be performed on this type of steel, unless the damage includes kinks. If the damage includes kinks, the part should be replaced.
- Sectioning or partial replacement of this type of steel is recommended only at approved locations, in a specific sectioning procedure.
- This type of steel can be used as a sleeve, or backer plate, when recommended in a specific sectioning procedure.
- Squeeze Resistance Spot Welding can be used to replace factory spot welds, where applicable.
- MIG plug welding and MIG stitch welding can be used on this type of steel.
- MIG Brazing can be used on this type of steel.

HIGH STRENGTH LOW ALLOY STEEL

This information provides repair recommendations and general guidelines for steel classified as High Strength Low Alloy Steel, also known as HSLA. This type of steel normally has a tensile strength range from 300-700 MPa.

General Motors recommends the following when repairing or replacing this type of steel during collision repair.

Recommended Repairs

- Cold repairs can be performed on this type of steel, unless the damage includes kinks. If the damage includes kinks, the part should be replaced.
- Controlled use of heat can be used to repair damage, if the heat does not exceed 650°C (1200°F). The heat should be applied a maximum of 2 times, for up to 90 seconds.
- Sectioning or partial replacement of this type of steel is recommended only at approved locations, in a specific sectioning procedure.
- This type of steel can be used as a sleeve, or backer plate, during sectioning procedures.
- Squeeze Resistance Spot Welding can be used to replace factory spot welds, where applicable.
- MIG plug welding and MIG stitch welding can be used on this type of steel.
- MIG Brazing can be used on this type of steel.

MILD STEEL

This information provides repair recommendations and general guidelines for steel classified as Mild Steel. This type of steel normally has a tensile strength less than 270 MPa. This includes the common steel names of:

- Mild Steel
- Bake Hardenable Steel (BH)
- Solid Solution Strengthened Steel

General Motors recommends the following when repairing or replacing this type of steel during collision repair.

Recommended Repairs:

- Cold repairs can be performed on this type of steel, unless the damage includes kinks. If the damage includes kinks, the part should be replaced.
- Controlled use of heat can be used to repair damage, if the heat does not exceed 650°C (1200°F). The heat should be applied a maximum of 2 times, for up to 90 seconds.
- Sectioning or partial replacement of this type of steel is recommended only at approved locations, in a specific sectioning procedure.
- This type of steel can be used as a sleeve, or backer plate, when recommended in a specific sectioning procedure.
- Squeeze Resistance Spot Welding can be used to replace factory spot welds, where applicable
- MIG plug welding and MIG stitch welding can be used on this type of steel.
- MIG Brazing can be used on this type of steel.

ULTRA HIGH STRENGTH DUAL PHASE STEEL

This information provides repair recommendations and general guidelines for steel classified as Ultra High Strength Dual Phase Steel, also known as DPX. This type of steel normally has a tensile strength of 780 MPa, or greater.

General Motors recommends the following when repairing or replacing this type of steel during collision repair.

NOTE:

- **Repair of this type of steel is not recommended.**
- **This type of steel should be replaced at factory joints only. Sectioning or partial replacement is not recommended.**
- **The use of heat to repair damage is not recommended for this type of steel.**
- **Stitch Welding is not recommended for this type of steel (unless replacing a factory installed stitch weld).**
- **This type of steel should not be used as a backing reinforcement or a sleeve for a sectioning joint.**

Recommended Repairs:

- Squeeze Resistance Spot Welding can be used to replace factory spot welds, where applicable.
- MIG plug welding can be used to replace factory spot welds.
- MIG Brazing can be used to replace factory spot welds.

2013 ACCESSORIES & EQUIPMENT

Exterior Trim - Cruze

SPECIFICATIONS

FASTENER TIGHTENING SPECIFICATIONS

Fastener Tightening Specifications

Application	Specification	
	Metric	English
Front Fog Lamp Bezel Bolt	2.5 N.m	23 lb in
Front Side Door Window Frame Cover Bolt	2 N.m	18 lb in
Radiator Grille Bolt	2.5 N.m	23 lb in
Radiator Grille Emblem Screw	2.5 N.m	23 lb in
Radiator Grille Support Bolt	4.5 N.m	40 lb in
Radiator Lower Grille Bolt	2.5 N.m	23 lb in
Radiator Upper Grille Bolt	2.5 N.m	23 lb in
Rear Side Door Window Frame Cover Bolt	2 N.m	18 lb in

REPAIR INSTRUCTIONS

BODY SIDE UPPER REAR APPLIQUE REPLACEMENT

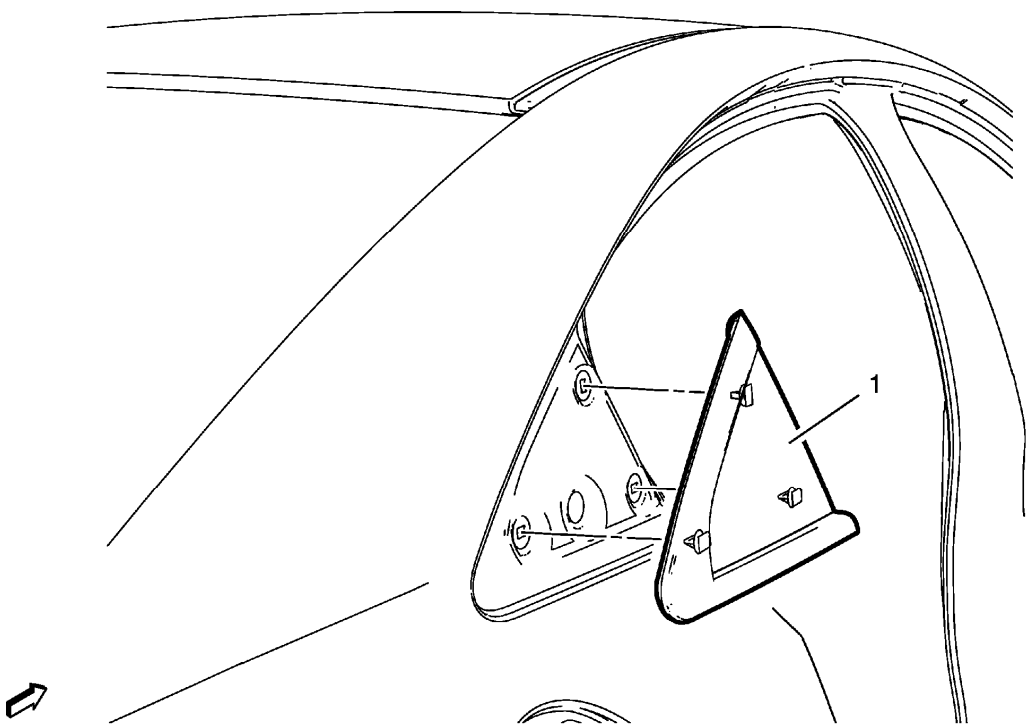

Fig. 1: Body Side Upper Rear Applique
Courtesy of GENERAL MOTORS COMPANY

Body Side Upper Rear Applique Replacement

Callout	Component Name
Preliminary Procedures Open either the left rear or right rear door in order to access the backside of the body side upper rear applique.	
1	Body Side Upper Rear Applique **Procedure** Use flat bladed tool to unclip the body side upper rear applique clips.

REAR COMPARTMENT LID APPLIQUE REPLACEMENT

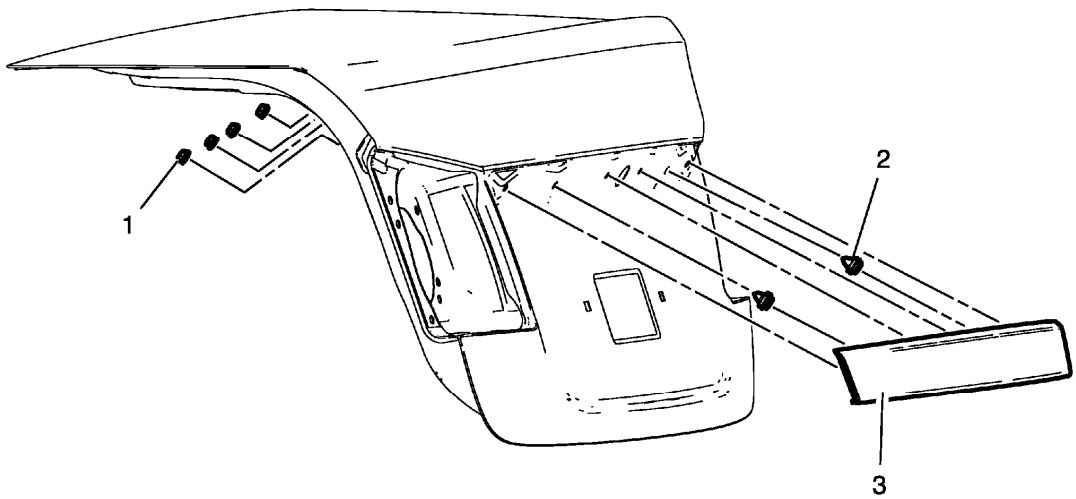

Fig. 2: Rear Compartment Lid Applique
Courtesy of GENERAL MOTORS COMPANY

Rear Compartment Lid Applique Replacement

Callout	Component Name
Preliminary Procedures Remove the rear compartment lid inner panel trim. Refer to **Rear Compartment Lid Inner Panel Trim Replacement** .	
	Rear Compartment Lid Applique Assembly Nut (Qty: 4) **CAUTION:**

1	**Refer to Fastener Caution .** **Tighten:** 7 N.m (62 lb in)
2	Rear Compartment Lid Applique Clip (Qty: 2) **TIP:** Depress the clip fingers and push outward in order to remove the rear applique.
3	Rear Compartment Lid Applique Assembly **Procedure** 1. Disconnect the electrical connector. 2. Disengage the electrical harness grommet from the rear compartment inner panel. 3. Remove the applique assembly from the rear compartment lid. 4. Transfer parts as needed to the new applique.

FRONT FOG LAMP BEZEL REPLACEMENT

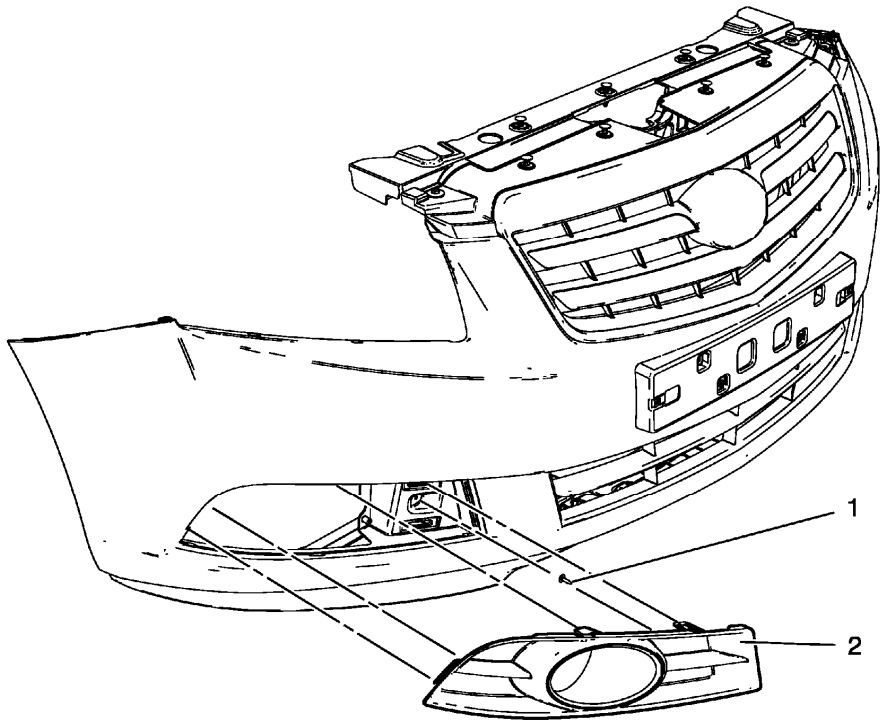

Fig. 3: View Of Front Fog Lamp Bezel And Screw
Courtesy of GENERAL MOTORS COMPANY

Front Fog Lamp Bezel Replacement

Callout	Component Name
Preliminary Procedures 1. Remove the front bumper fascia. Refer to **Front Bumper Fascia Replacement** . 2. Remove the front fog lamp. Refer to **Front Fog Lamp Replacement** .	
1	Front Fog Lamp Bezel Screw **CAUTION:** **Refer to Fastener Caution .** **Tighten** 2.5 N.m (23 lb in)
2	Front Fog Lamp Bezel **Procedure** 1. Disengage the four inner retainer tabs securing the bezel to the front bumper fascia. 2. Pull outward from the outer edge in order to release the outer retention clips securing the bezel to the front bumper fascia. 3. Remove the front fog lamp bezel.

ROCKER PANEL DECAL REPLACEMENT

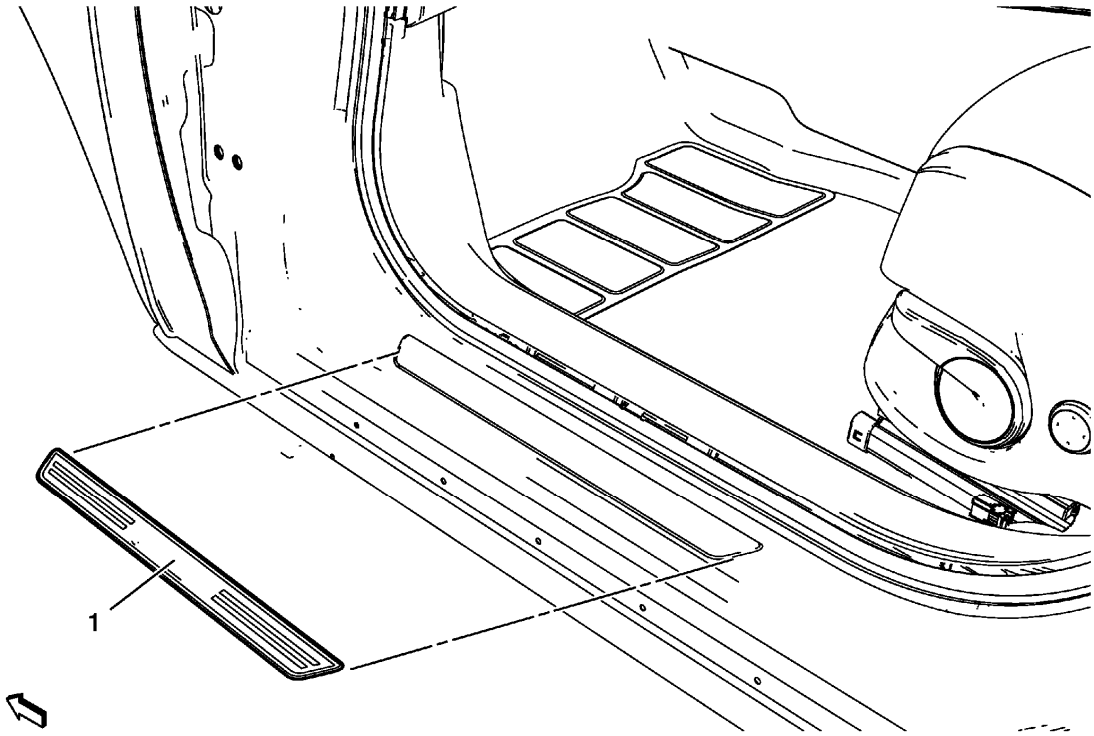

Fig. 4: Rocker Panel Decal
Courtesy of GENERAL MOTORS COMPANY

Rocker Panel Decal Replacement

Callout	Component Name
1	Rocker Panel Decal **CAUTION:** **Refer to Exterior Trim Emblem Removal Caution .** **Procedure** 1. The part and surface should be 21°C (70°F) prior to installation. The vehicle should remain 21°C (70°F) for one hour after assembly to allow adhesive to develop sufficient bond strength. 2. Use a Heat Gun or equivalent to remove the old decal. Clean all adhesive from the rocker panel and wipe the surface dry with a clean lint free towel prior to installing the new decal. 3. When removing protective liners from the adhesive tape, be careful not to touch tape with hands and do not allow the tape to come in contact with dirt or any foreign matter prior to adhesion. 4. Using the palm of the hand, wet out the decal to the rocker panel to ensure full adhesion of the emblem is made.

FRONT SIDE DOOR WINDOW FRAME COVER REPLACEMENT

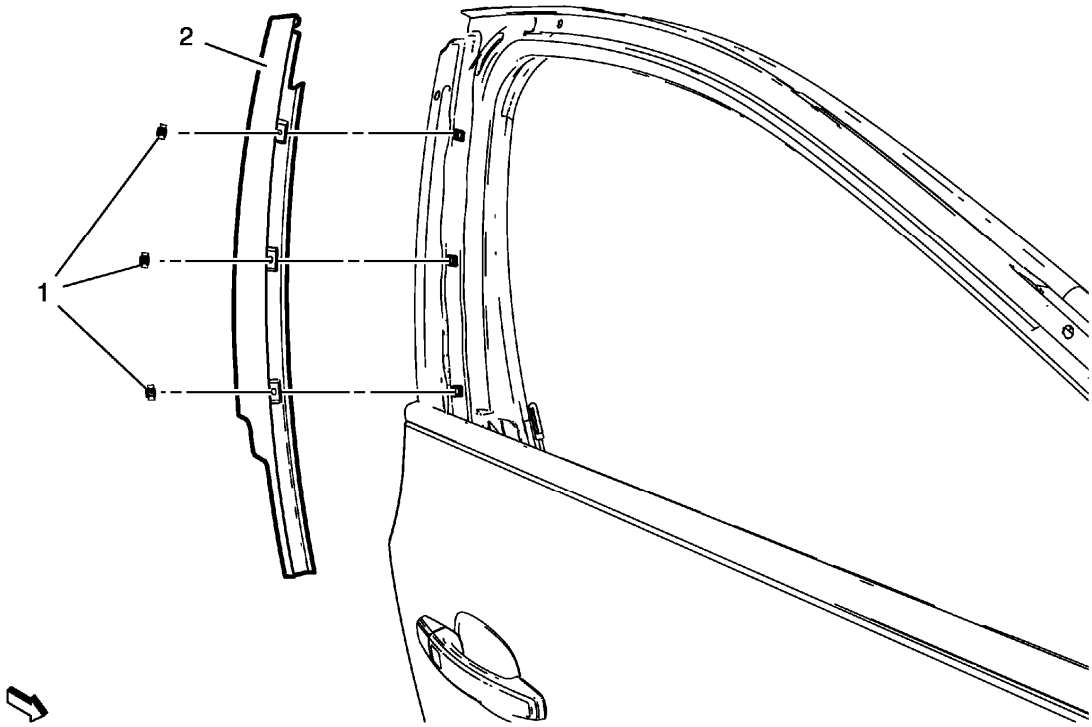

Fig. 5: Identifying Front Side Door Window Frame Cover And Bolts
Courtesy of GENERAL MOTORS COMPANY

Front Side Door Window Frame Cover Replacement

Callout	Component Name
Preliminary Procedures Remove the front side door window weatherstrip. Refer to **Front Side Door Window Weatherstrip Replacement**	
1	Front Side Door Window Frame Cover Bolt (Qty: 3) **CAUTION:** **Refer to Fastener Caution .**
2	Front Side Door Window Frame Cover

FRONT SIDE DOOR WINDOW FRAME REAR COVER REPLACEMENT

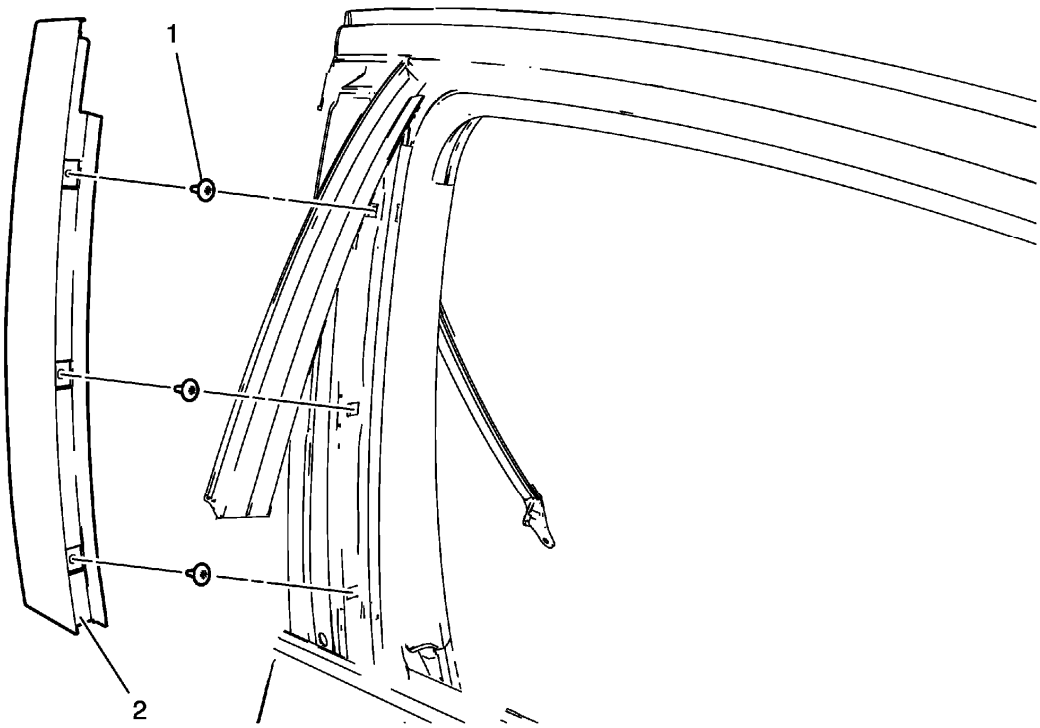

Fig. 6: Front Side Door Window Frame Rear Cover
Courtesy of GENERAL MOTORS COMPANY

Front Side Door Window Frame Rear Cover Replacement

Callout	Component Name
1	Front Side Door Window Frame Rear Cover Bolt (Qty: 3) **CAUTION:** **Refer to Fastener Caution .** **Procedure** Pull the window weatherstrip aside. **Tighten** 2 N.m (18 lb in)
2	Front Side Door Window Frame Rear Cover

REAR SIDE DOOR WINDOW FRAME FRONT COVER REPLACEMENT

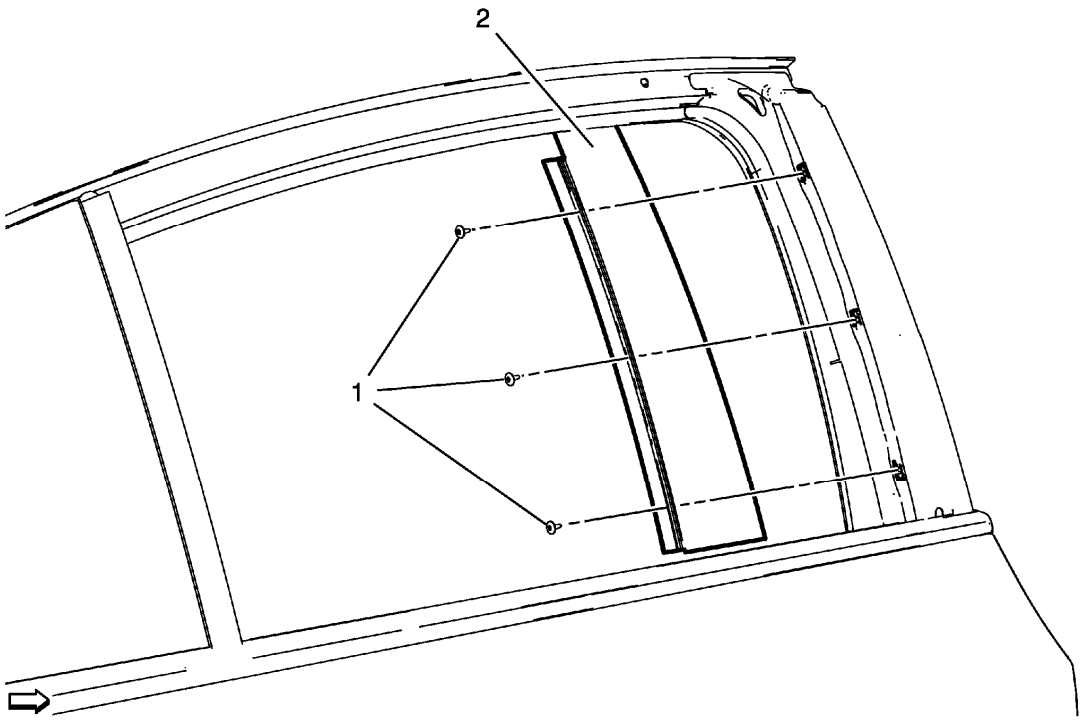

Fig. 7: View Of Rear Side Door Window Frame Front Cover And Bolts
Courtesy of GENERAL MOTORS COMPANY

Rear Side Door Window Frame Front Cover Replacement

Callout	Component Name
1	Rear Side Door Window Frame Front Cover Bolt (Qty: 3) **CAUTION:** **Refer to Fastener Caution .** **Procedure** To access the bolts, loosen the rear side door window weatherstrip.
2	Rear Side Door Window Frame Front Cover

RADIATOR GRILLE EMBLEM/NAMEPLATE REPLACEMENT

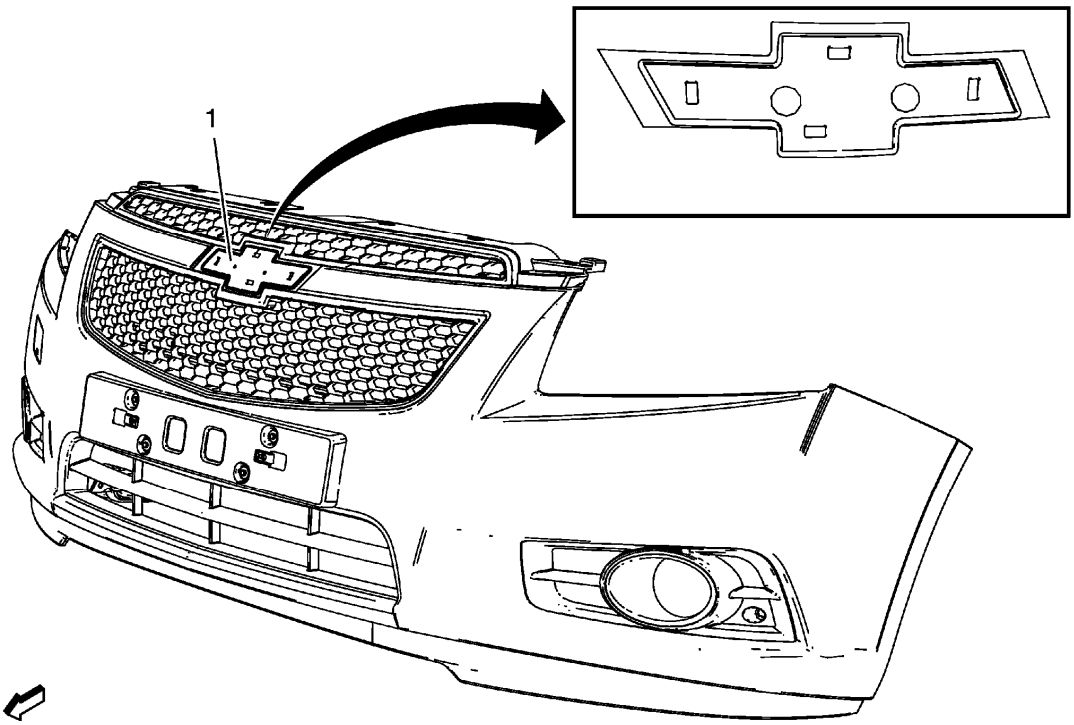

Fig. 8: View Of Radiator Grille Emblem
Courtesy of GENERAL MOTORS COMPANY

Radiator Grille Emblem/Nameplate Replacement

Callout	Component Name
1	Radiator Grille Emblem

REAR COMPARTMENT LID EMBLEM/NAMEPLATE REPLACEMENT (BOWTIE)

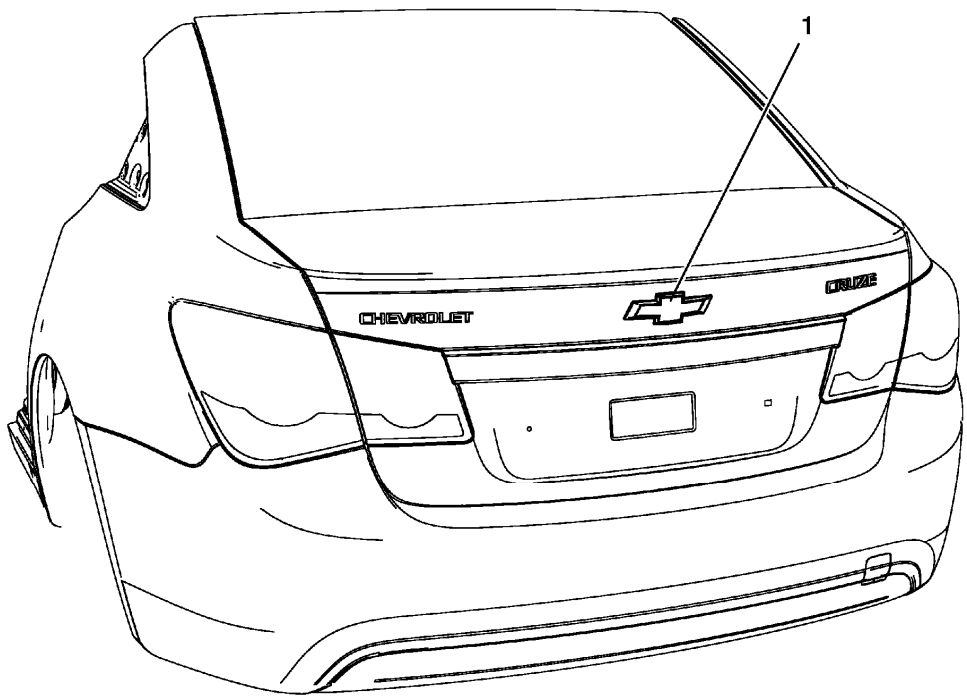

Fig. 9: View Of Rear Compartment Lid Emblem
Courtesy of GENERAL MOTORS COMPANY

Rear Compartment Lid Emblem/Nameplate Replacement (Bowtie)

Callout	Component Name
1	Rear Compartment Lid Emblem **CAUTION:** **Refer to Exterior Trim Emblem Removal Caution .** **Procedure** 1. The part and surface should be 21°C (70°F) prior to installation. The vehicle should remain 21°C (70°F) for one hour after assembly to allow adhesive to develop sufficient bond strength. 2. Use a Heat Gun or equivalent to Remove the old nameplate. Clean all adhesive from the rear compartment panel and wipe the surface dry with a clean lint-free towel prior to installing the new nameplate. 3. When removing protective liners from the adhesive tape, be careful not to touch tape with hands and do not allow tape to come in contact with dirt or any foreign matter prior to adhesion. 4. Close the rear compartment lid prior to adhesion. 5. Using the palm of the hand, wet out the emblem to the rear

	compartment lid to ensure full adhesion of the emblem is made.

REAR COMPARTMENT LID EMBLEM/NAMEPLATE REPLACEMENT (CHEVROLET)

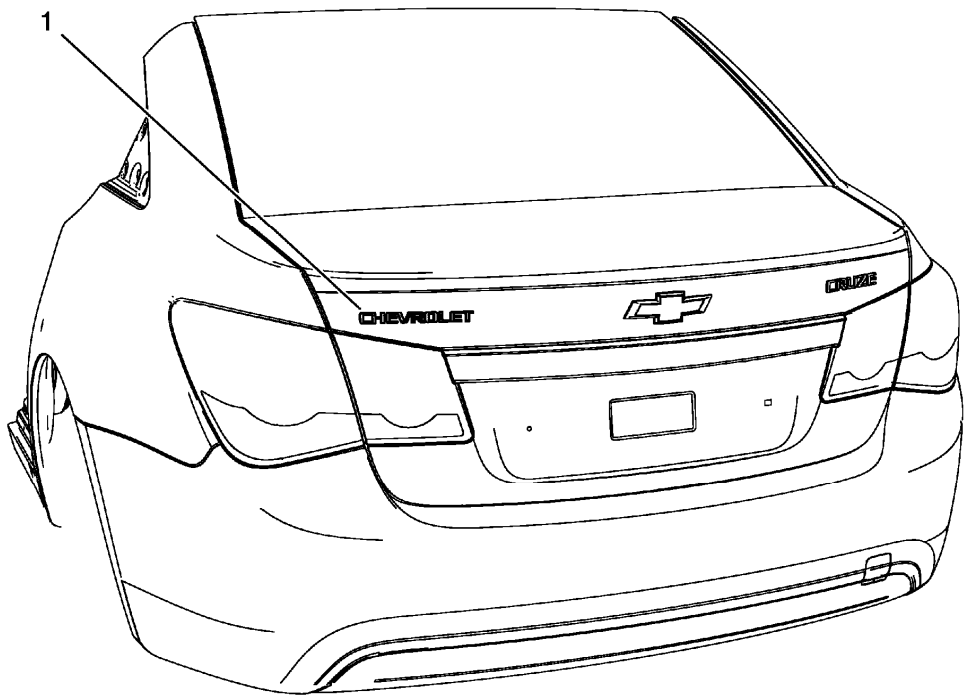

Fig. 10: Rear Compartment Lid Emblem/Nameplate (Chevrolet)
Courtesy of GENERAL MOTORS COMPANY

Rear Compartment Lid Emblem/Nameplate Replacement (Chevrolet)

Callout	Component Name
1	Rear Compartment Lid Emblem **CAUTION:** **Refer to Exterior Trim Emblem Removal Caution .** **Procedure** 1. The part and surface should be 21°C (70°F) prior to installation. The vehicle should remain 21°C (70°F) for one hour after assembly to allow adhesive to develop sufficient bond strength. 2. Use a Heat Gun or equivalent to Remove the old nameplate. Clean all adhesive from the rear compartment panel and wipe the surface dry with a clean lint-free towel prior to installing the new nameplate. 3. When removing protective liners from the adhesive tape, be careful

	not to touch tape with hands and do not allow tape to come in contact with dirt or any foreign matter prior to adhesion. 4. Close the rear compartment lid prior to adhesion. 5. Using the palm of the hand, wet out the emblem to the rear compartment lid to ensure full adhesion of the emblem is made.

REAR COMPARTMENT LID EMBLEM/NAMEPLATE REPLACEMENT (LT OR LTZ)

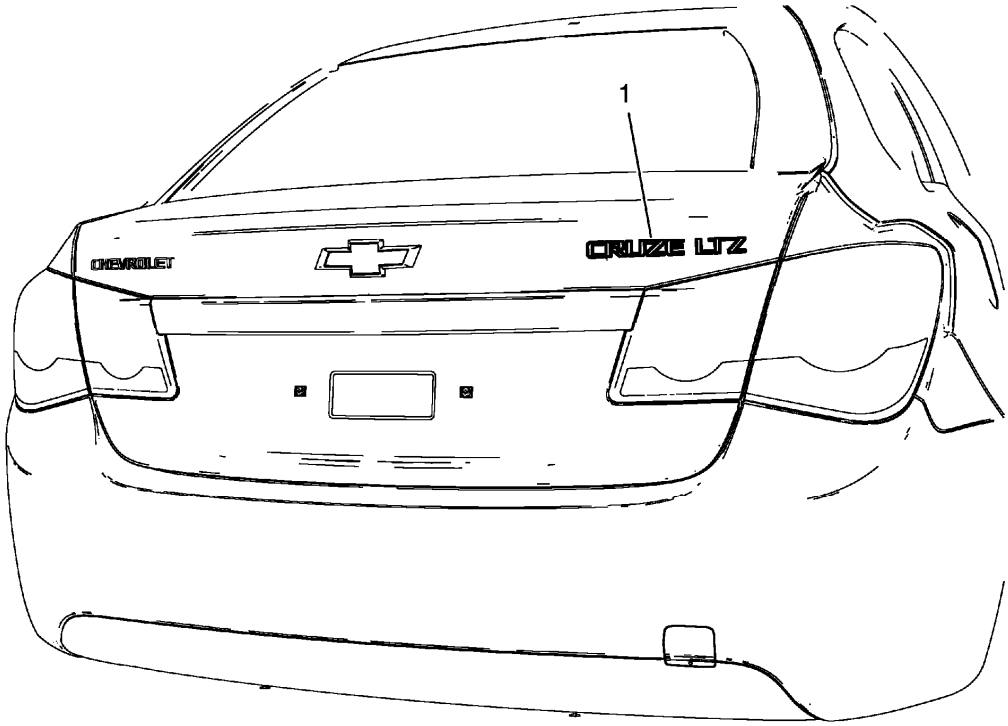

Fig. 11: View Of Rear Compartment Lid Emblem
Courtesy of GENERAL MOTORS COMPANY

Rear Compartment Lid Emblem/Nameplate Replacement (LT or LTZ)

Callout	Component Name
1	Rear Compartment Lid Emblem **CAUTION:** **Refer to Exterior Trim Emblem Removal Caution .** **Procedure** 1. The part and surface should be 21°C (70°F) prior to installation. The vehicle should remain 21°C (70°F) for one hour after assembly to allow adhesive to develop sufficient bond strength. 2. Use a Heat Gun or equivalent to Remove the old emblem. Clean all

	adhesive from the rear compartment panel and wipe the surface dry with a clean lint-free towel prior to installing the new emblem. 3. When removing protective liners from the adhesive tape, be careful not to touch tape with hands and do not allow tape to come in contact with dirt or any foreign matter prior to adhesion. 4. Close the rear compartment lid prior to adhesion. 5. Using the palm of the hand, wet out the emblem to the rear compartment lid to ensure full adhesion of the emblem is made.

REAR COMPARTMENT LID EMBLEM/NAMEPLATE REPLACEMENT (CRUZE - RIGHT SIDE)

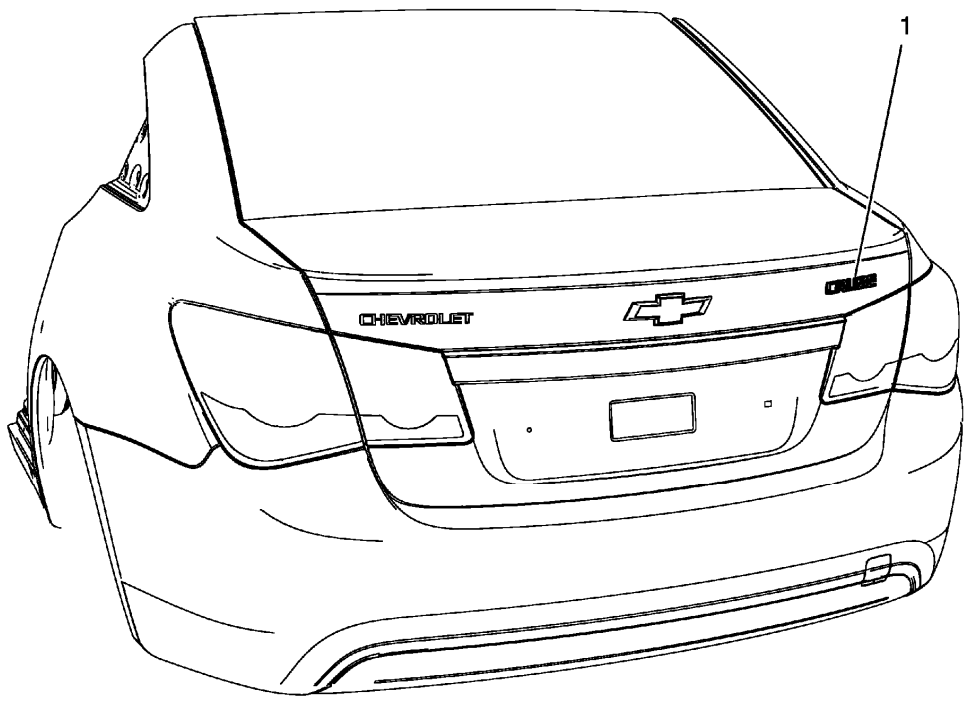

Fig. 12: Rear Compartment Lid Emblem/Nameplate (Cruze - Right Side)
Courtesy of GENERAL MOTORS COMPANY

Rear Compartment Lid Emblem/Nameplate Replacement (Cruze - Right Side)

Callout	Component Name
	Rear Compartment Lid Emblem **CAUTION:** **Refer to Exterior Trim Emblem Removal Caution .** **Procedure** 1. The part and surface should be 21°C (70°F) prior to installation.

1	The vehicle should remain 21°C (70°F) for one hour after assembly to allow adhesive to develop sufficient bond strength. 2. Use a Heat Gun or equivalent to Remove the old nameplate. Clean all adhesive from the rear compartment panel and wipe the surface dry with a clean lint-free towel prior to installing the new nameplate. 3. When removing protective liners from the adhesive tape, be careful not to touch tape with hands and do not allow tape to come in contact with dirt or any foreign matter prior to adhesion. 4. Close the rear compartment lid prior to adhesion. 5. Using the palm of the hand, wet out the emblem to the rear compartment lid to ensure full adhesion of the emblem is made.

REAR COMPARTMENT LID EMBLEM/NAMEPLATE REPLACEMENT (CRUZE - LEFT SIDE)

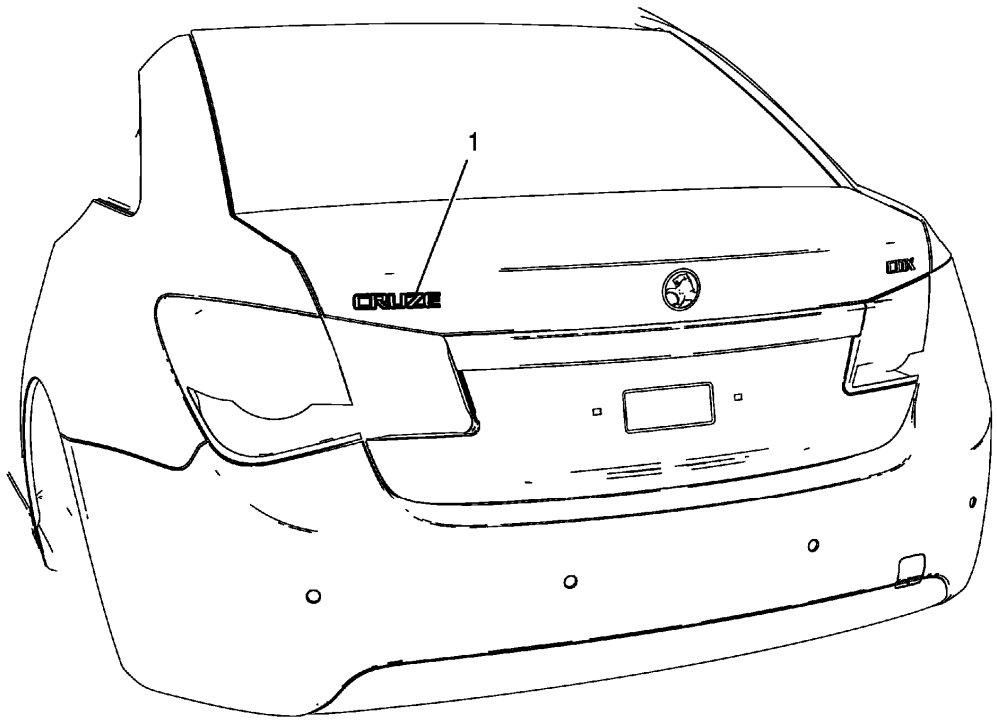

Fig. 13: Rear Compartment Lid Emblem/Nameplate (Cruze - Left Side)
Courtesy of GENERAL MOTORS COMPANY

Rear Compartment Lid Emblem/Nameplate Replacement (Cruze - Left Side)

Callout	Component Name
	Rear Compartment Lid Emblem **CAUTION:** **Refer to Exterior Trim Emblem Removal Caution .**

1	**Procedure** 1. The part and surface should be 21°C (70°F) prior to installation. The vehicle should remain 21°C (70°F) for one hour after assembly to allow adhesive to develop sufficient bond strength. 2. Use a Heat Gun or equivalent to Remove the old nameplate. Clean all adhesive from the rear compartment panel and wipe the surface dry with a clean lint-free towel prior to installing the new nameplate. 3. When removing protective liners from the adhesive tape, be careful not to touch tape with hands and do not allow tape to come in contact with dirt or any foreign matter prior to adhesion. 4. Close the rear compartment lid prior to adhesion. 5. Using the palm of the hand, wet out the emblem to the rear compartment lid to ensure full adhesion of the emblem is made.

FRONT BUMPER LOWER FASCIA GRILLE REPLACEMENT

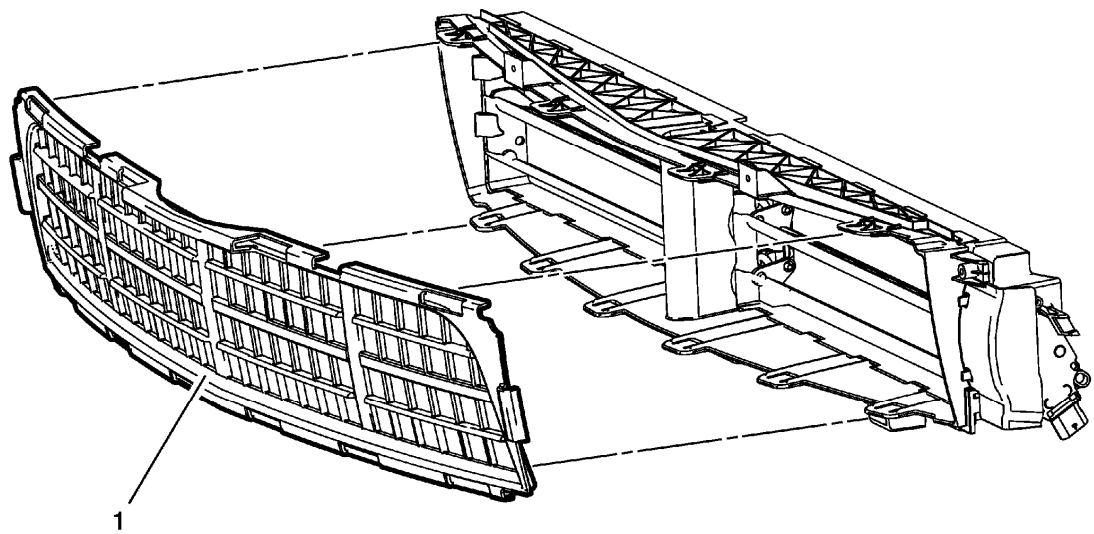

Fig. 14: Identifying Front Bumper Lower Fascia Grille
Courtesy of GENERAL MOTORS COMPANY

Front Bumper Lower Fascia Grille Replacement

Callout	Component Name
Preliminary Procedures	

Remove the aero shutter front bumper fascia air deflector. Refer to **Aero Shutter Front Bumper Fascia Air Deflector Replacement** .	
1	Front Bumper Lower Fascia Grille **Procedure** Unclip from front bumper lower fascia bracket.

FRONT BUMPER LOWER FASCIA CENTER GRILLE REPLACEMENT

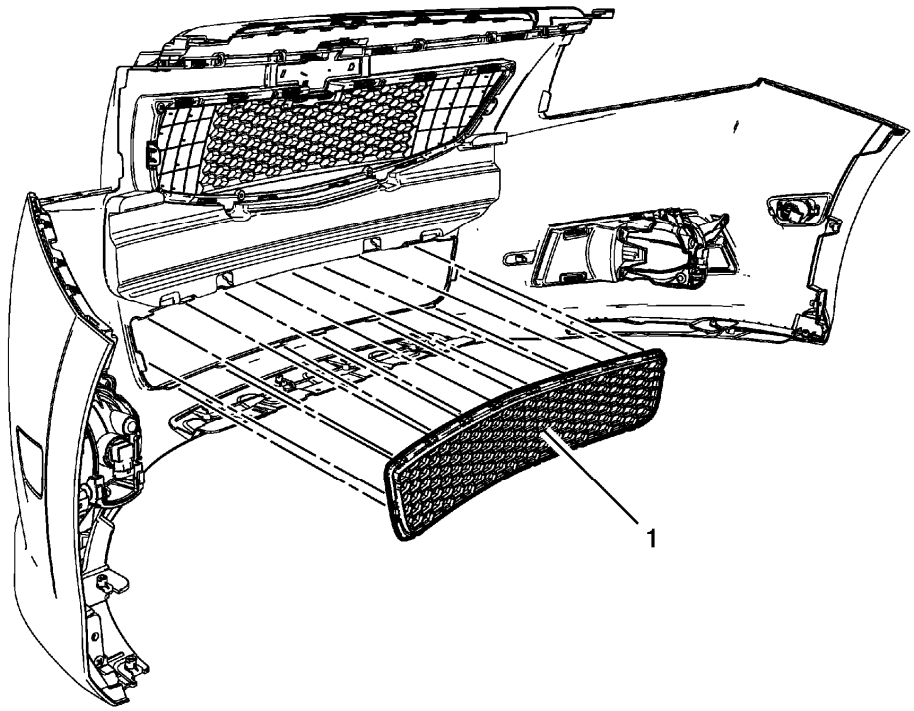

Fig. 15: Identifying Front Bumper Lower Fascia Center Grille
Courtesy of GENERAL MOTORS COMPANY

Front Bumper Lower Fascia Center Grille Replacement

Callout	Component Name
Preliminary Procedures Remove the front bumper energy absorber. Refer to **Front Bumper Energy Absorber Replacement** .	
1	Front Bumper Lower Fascia Center Grille **Procedure** Release the retaining tabs using a flat bladed tool.

FRONT UPPER GRILLE REPLACEMENT

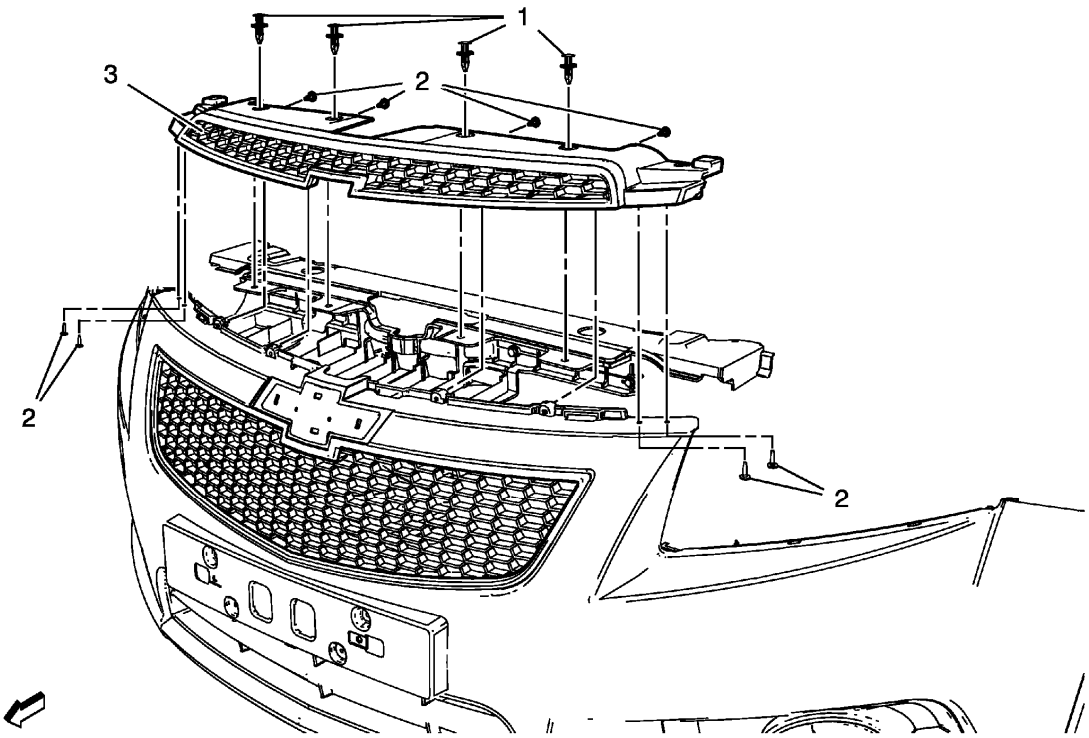

Fig. 16: View Of Radiator Upper Grille, Clips And Screws
Courtesy of GENERAL MOTORS COMPANY

Front Upper Grille Replacement

Callout	Component Name
Preliminary Procedures Remove the front bumper fascia. Refer to **Front Bumper Fascia Replacement** .	
1	Radiator Upper Grille Clip (Qty: 4)
2	Radiator Upper Grille Screw (Qty: 8) **CAUTION:** **Refer to Fastener Caution .** **Tighten** 2.5 N.m (22 lb in)
3	Radiator Upper Grille

FRONT LOWER GRILLE REPLACEMENT

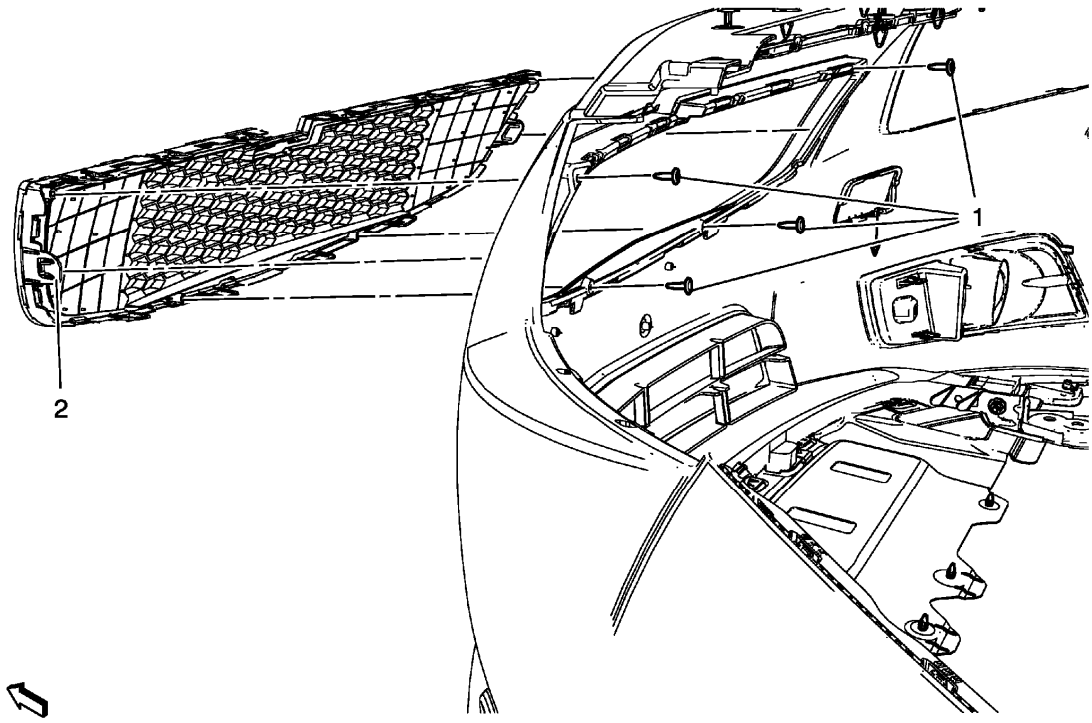

Fig. 17: View Of Radiator Lower Grille And Screws
Courtesy of GENERAL MOTORS COMPANY

Front Lower Grille Replacement

Callout	Component Name
Preliminary Procedures Remove the front bumper fascia. Refer to **Front Bumper Fascia Replacement** .	
1	Radiator Lower Grille Screw (Qty: 4) **CAUTION:** **Refer to Fastener Caution .** **Tighten** 2.5 N.m (22 lb in)
2	Radiator Lower Grille **Procedure** Release 12 retainers using a flat bladed tool.

ROCKER PANEL MOLDING REPLACEMENT

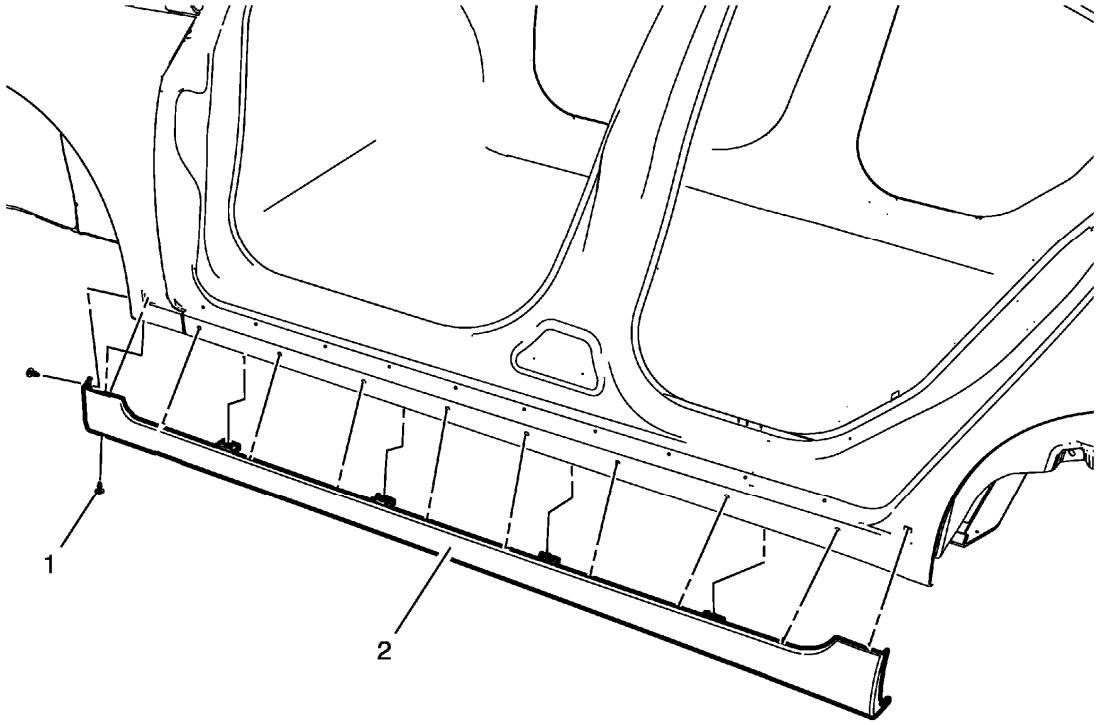

Fig. 18: View Of Rocker Panel Molding And Retainers
Courtesy of GENERAL MOTORS COMPANY

Rocker Panel Molding Replacement

Callout	Component Name
1	Rocker Panel Molding Retainer (Qty: 16)
2	Rocker Panel Molding

REAR END SPOILER REPLACEMENT

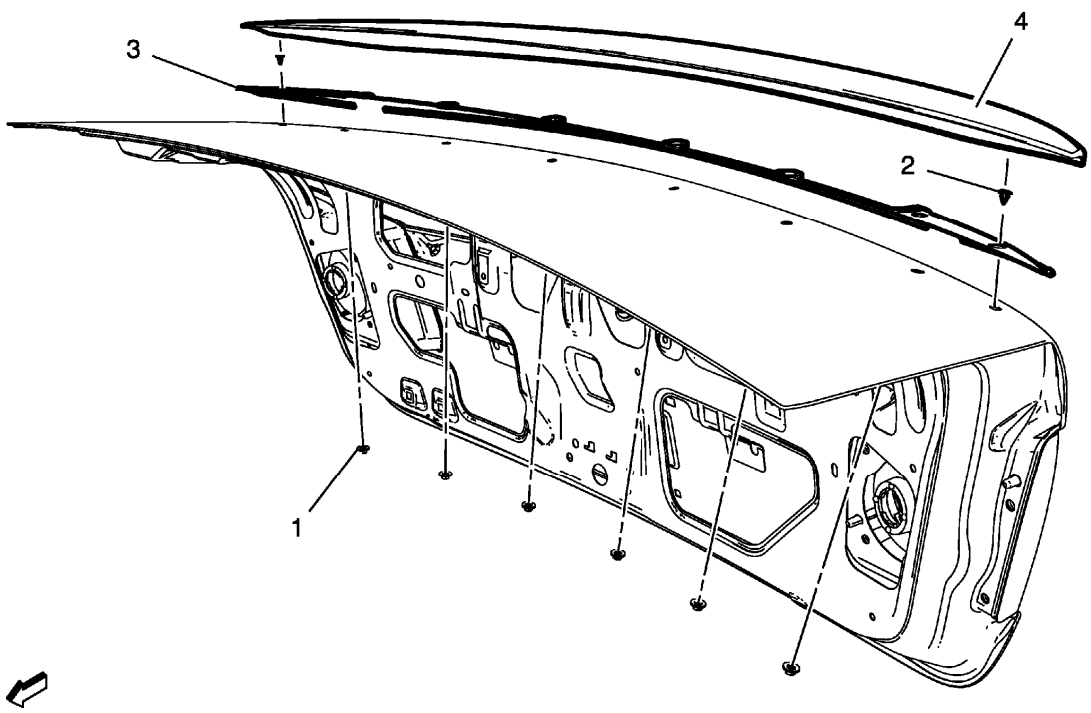

Fig. 19: Rear End Spoiler
Courtesy of GENERAL MOTORS COMPANY

Rear End Spoiler Replacement

Callout	Component Name
Preliminary Procedures Remove the rear compartment lid inner panel trim. Refer to **Rear Compartment Lid Inner Panel Trim Replacement** .	
1	Rear End Spoiler Fastener (Qty: 6) **CAUTION:** **Refer to Fastener Caution .** **Tighten** 9 N.m (80 lb in)
2	Rear End Spoiler Retainer (Qty: 2)
3	Rear End Spoiler Tape
4	Rear End Spoiler

DESCRIPTION AND OPERATION

WATER MANAGEMENT DESCRIPTION AND OPERATION

Plenum Water Flow Direction and Cleaning

A large percentage of water will flow off the windshield area into the plenum chamber drain system and then down the outside on the plenum to the underside of the vehicle. To ensure that the plenum chamber water management system performs properly, the air inlet grille panel, plenum chamber, and drains must not be blocked with debris.

In the graphic below the gray arrows show the water flow direction in the plenum chamber and drains system.

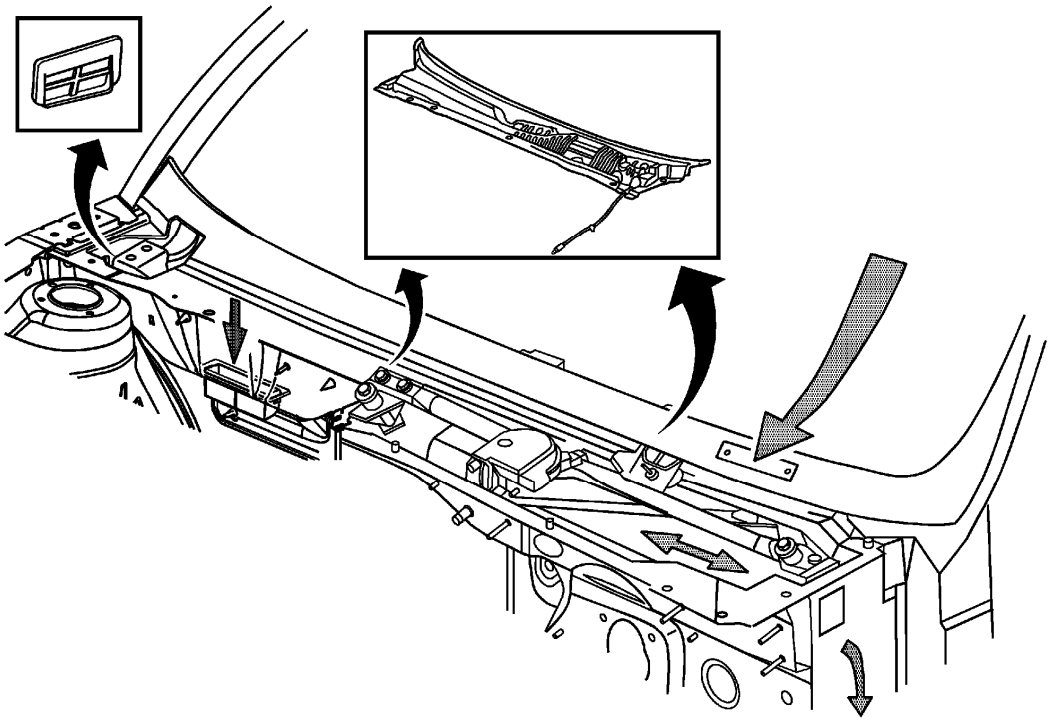

Fig. 20: Plenum Water Flow Direction And Cleaning
Courtesy of GENERAL MOTORS COMPANY

Plenum Chamber and Drain Valve-Cleaning

The plenum chamber is located in front of the windshield and below the air inlet grille panel.

1. Remove the air inlet grille panel. Refer to **Air Inlet Grille Panel Replacement** .
2. Clean the plenum chamber, drains and the air inlet grille panel of debris blockage.
3. Flush the plenum chamber, drains and the air inlet grille panel with clean water.
4. Install the air inlet grille panel. Refer to **Air Inlet Grille Panel Replacement**

2013 ACCESSORIES & EQUIPMENT

Floor Coverings and Headlinings - Cruze

REPAIR INSTRUCTIONS

FLOOR CARPET DRYING

If the carpet or the pad or insulator is wet, use the following criteria for drying or for replacing the components:

- For a 1-piece carpet assembly bonded to a cotton or a fiber padding, replace the entire assembly.
- For a 2-piece carpet assembly with a cotton or a fiber padding, replace the padding only. While the carpet is out of the vehicle, dry the carpet using the method described below.
- For a 1-piece carpet assembly bonded to a foam padding or attached to a synthetic padding, dry the carpet using the method described below.
- For a 2-piece carpet assembly with a synthetic padding, dry the assembly using the method described below.

Drying Method

1. If you observe puddles of liquid on the carpet face, use a wet vacuum to remove the excess moisture.
2. Blot the face of the carpet with a towel in order to absorb as much moisture as possible.
3. Point a fan at the affected area and air dry the carpet.

FRONT FLOOR PANEL CARPET REPLACEMENT

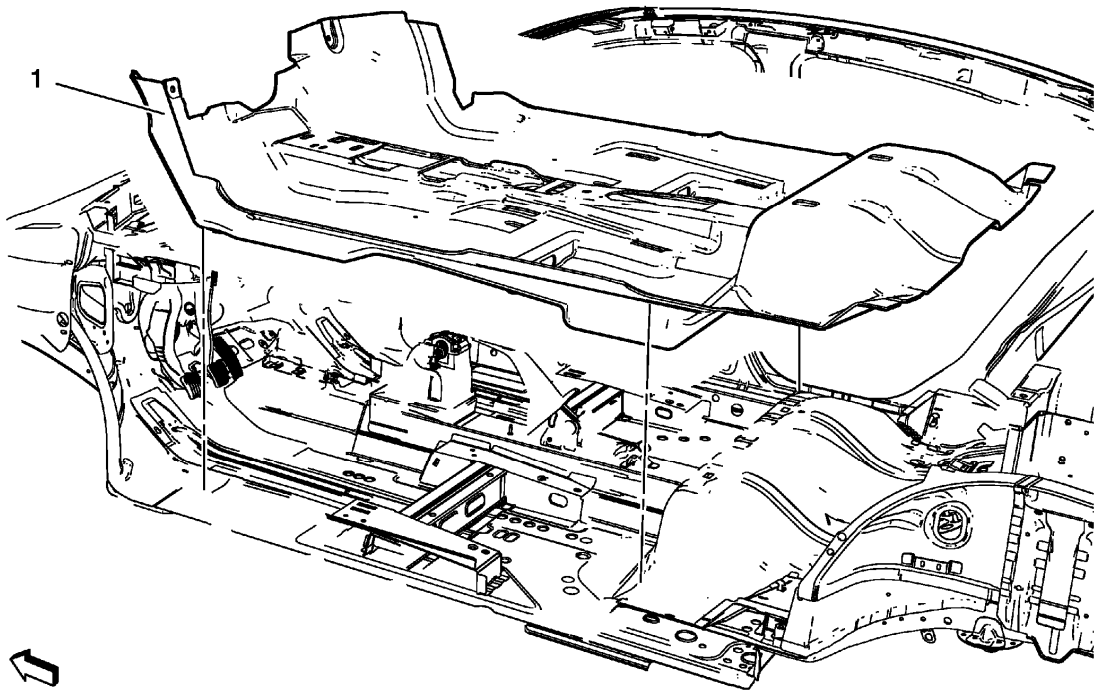

Fig. 1: View Of Front Floor Panel Carpet Assembly
Courtesy of GENERAL MOTORS COMPANY

Front Floor Panel Carpet Replacement

Callout	Component Name
Preliminary Procedures 1. Remove front seats. Refer to **Driver or Passenger Seat Removal and Installation** . 2. Remove rear seat. Refer to **Rear Seat Removal and Installation (40 Percent Seat)** , **Rear Seat Removal and Installation (60 Percent Seat)** . 3. Remove the front floor console. Refer to **Front Floor Console Replacement** . 4. Remove front sill panels. Refer to **Front Side Door Sill Trim Plate Replacement** . 5. Remove rear sill panels. Refer to **Rear Side Door Sill Trim Plate Replacement** . 6. Remove center pillar lower garnish moldings. Refer to **Center Pillar Lower Garnish Molding Replacement** .	
1	Front Floor Panel Carpet Assembly **Procedure** Loosen Transmission Control.

FLOOR CARPET RETAINER REPLACEMENT (ITW)

Removal Procedure

WARNING: Wear safety glasses in order to avoid eye damage.

1. Remove the front floor panel carpet. Refer to **Front Floor Panel Carpet Replacement**.

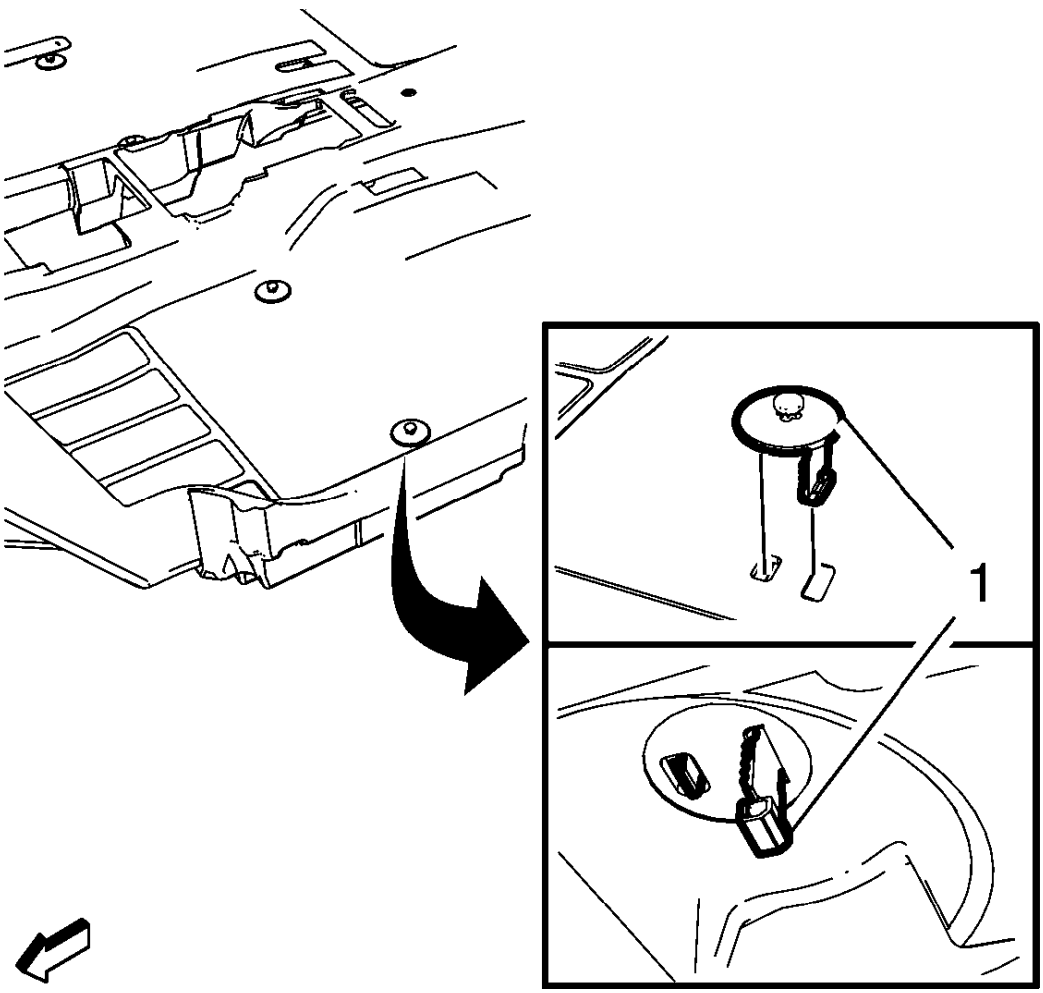

Fig. 2: Floor Panel Carpet Retainer
Courtesy of GENERAL MOTORS COMPANY

2. Disengage the front floor panel carpet retainer (1) on the rear side of the front floor panel carpet.
3. Remove the front floor panel carpet retainer (1) upwards.

Installation Procedure

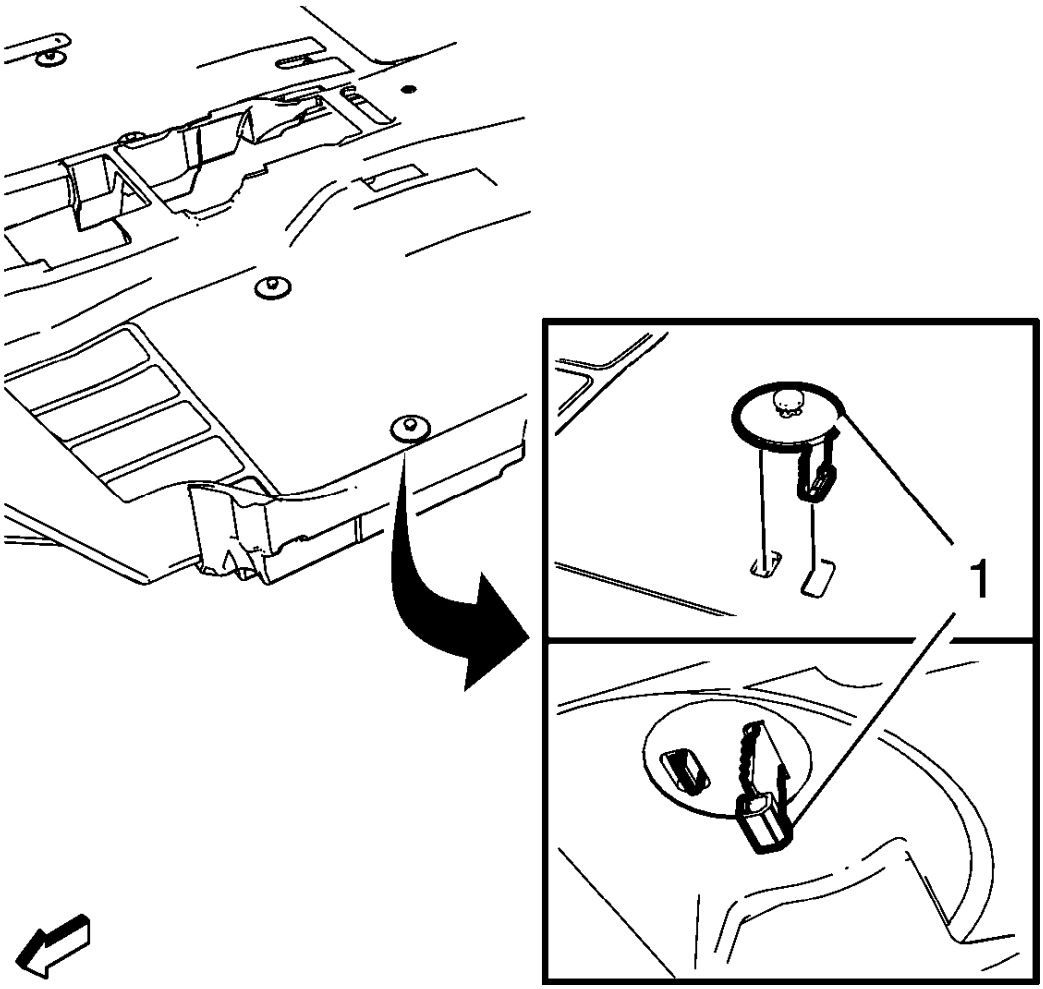

Fig. 3: Floor Panel Carpet Retainer
Courtesy of GENERAL MOTORS COMPANY

1. Align the front floor panel carpet retainer (1) to the cutout in the carpet.
2. Engage the front floor panel carpet retainer (1) on the rear side of the front floor panel carpet.
3. Install the front floor panel carpet. Refer to **Front Floor Panel Carpet Replacement**.

FLOOR CARPET RETAINER REPLACEMENT (SAXONIA)

Removal Procedure

WARNING: Wear safety glasses in order to avoid eye damage.

1. Remove the front floor panel carpet. Refer to **Front Floor Panel Carpet Replacement**.

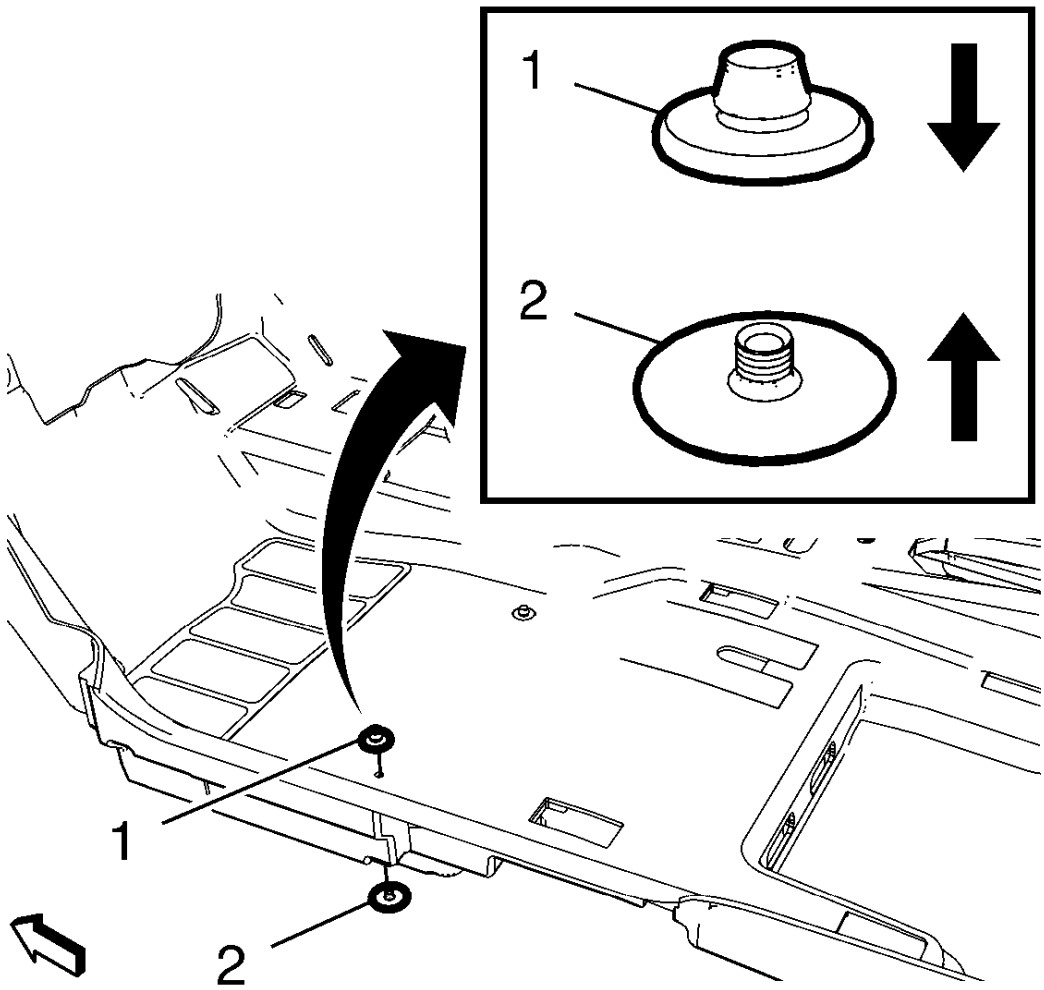

Fig. 4: Floor Carpet Retainer
Courtesy of GENERAL MOTORS COMPANY

2. Remove the upper part of the floor carpet retainer (1) with a suitable tool. Remove the remaining pieces through the cutout in the floor panel carpet.

Installation Procedure

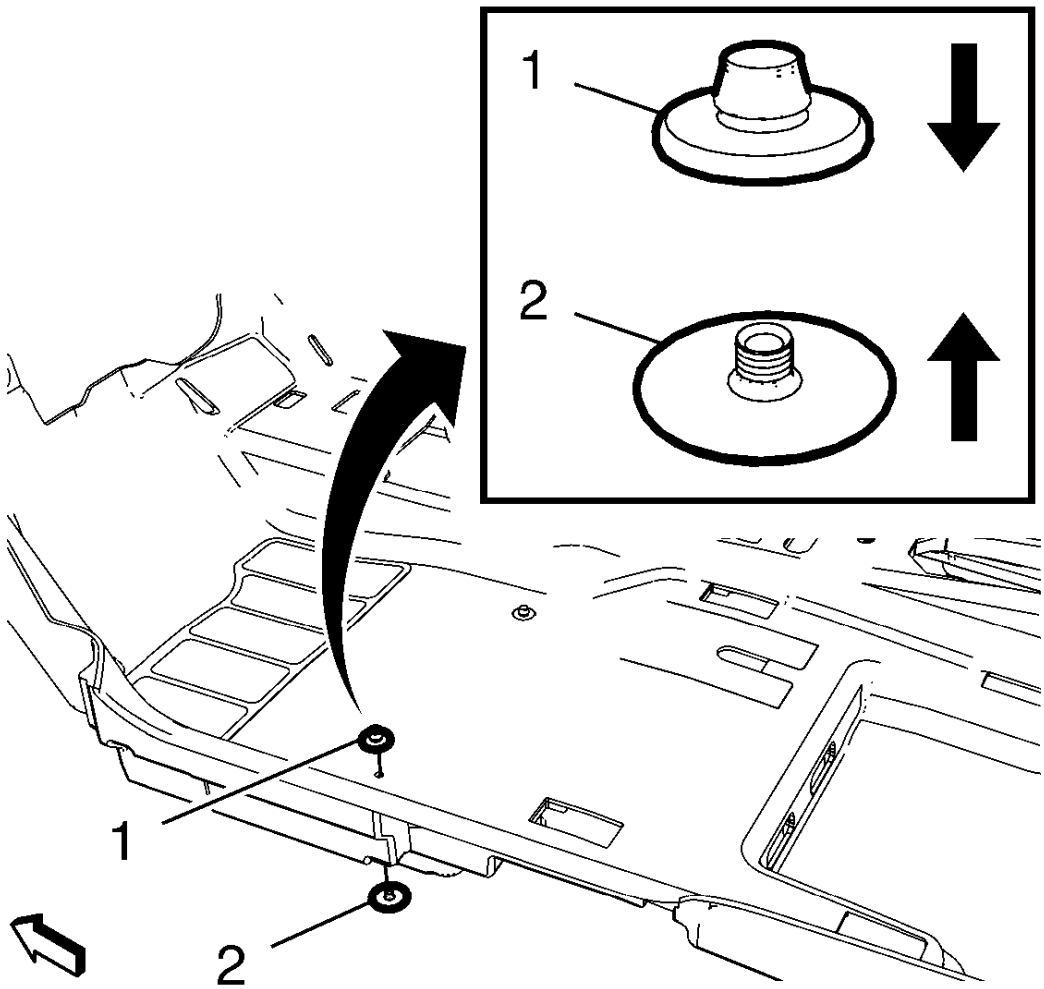

Fig. 5: Floor Carpet Retainer
Courtesy of GENERAL MOTORS COMPANY

1. Align the lower part of the floor panel carpet retainer to the cutout in the carpet. Turn over the carpet, while maintaining the center position of the retainer.
2. Position the upper part of the retainer (1) aligning to the lower part of the retainer. Hold the lower part of the retainer with a suitable tool and push down hard on the upper part of the retainer to engage several retention rings.
3. While still holding the lower part of the retainer, lightly tap on the upper part of the retainer using a rubber mallet to engage the remaining retention rings.
4. Install the front floor panel carpet. Refer to **Front Floor Panel Carpet Replacement**.

FLOOR CARPET AUXILIARY MAT RETAINER REPLACEMENT

Auxiliary Mat Retainer Identification

There are two different suppliers of auxiliary floor mat retainers for this vehicle, ITW and Saxonia. The style of

the retainers for the mats and carpet are different for both suppliers. Additionally, the mat retainers and carpet retainers are NOT interchangeable between the two suppliers. Always determine the style of retainer used for a specific vehicle prior to replacing auxiliary mat retainers or carpet retainers.

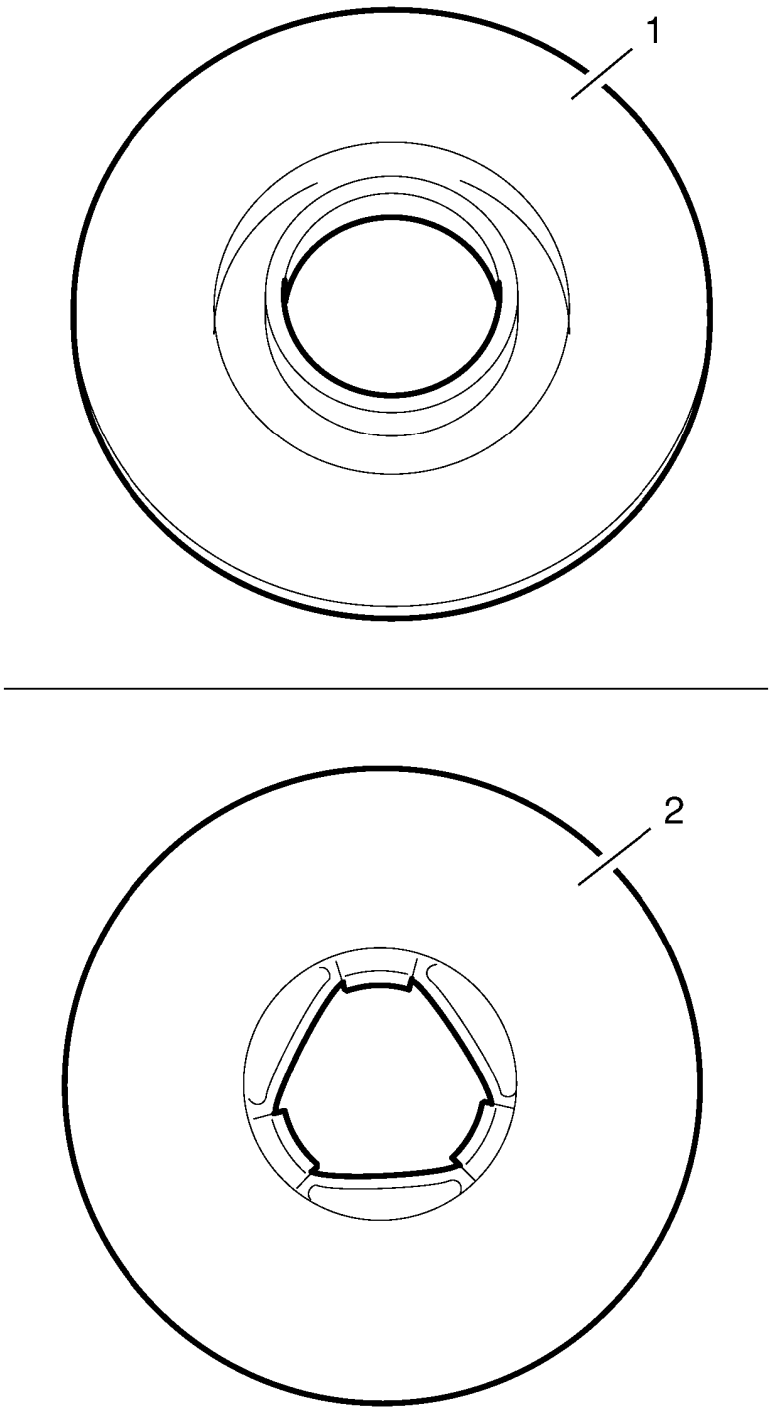

Fig. 6: Auxiliary Mat Fastener

Courtesy of GENERAL MOTORS COMPANY

Perform the following visual inspection of the auxiliary mat retainers to determine which style of retainer was used:

1. Remove the auxiliary mat from the vehicle.
2. Look at the backside of the retainer on the auxiliary mat. If the center of the lower section is round, the retainer was made by Saxonia (1). If the center of the lower section has a triangle, the retainer was made by ITW (2).
3. Once identification is complete, continue with the following replacement procedure. If replacement of the floor carpet retainer is necessary, refer to **Floor Carpet Retainer Replacement (ITW)**, **Floor Carpet Retainer Replacement (Saxonia)**.

Removal Procedure

WARNING: Wear safety glasses in order to avoid eye damage.

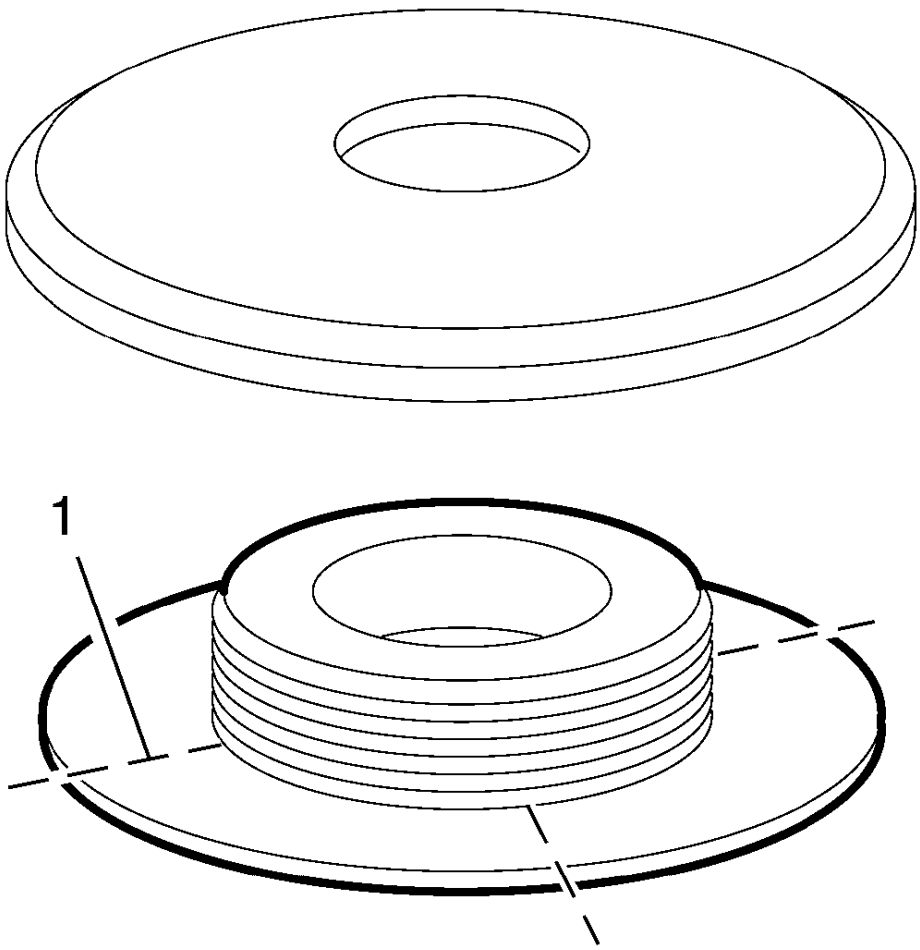

Fig. 7: Cutting Carpet Retainer
Courtesy of GENERAL MOTORS COMPANY

1. From the backside of the floor mat, cut four lines (1) through the plastic at the shown locations using a pair of cutters.
2. Using suitable pliers, break off each piece and push the remaining piece through the mat retainer hole.

Installation Procedure

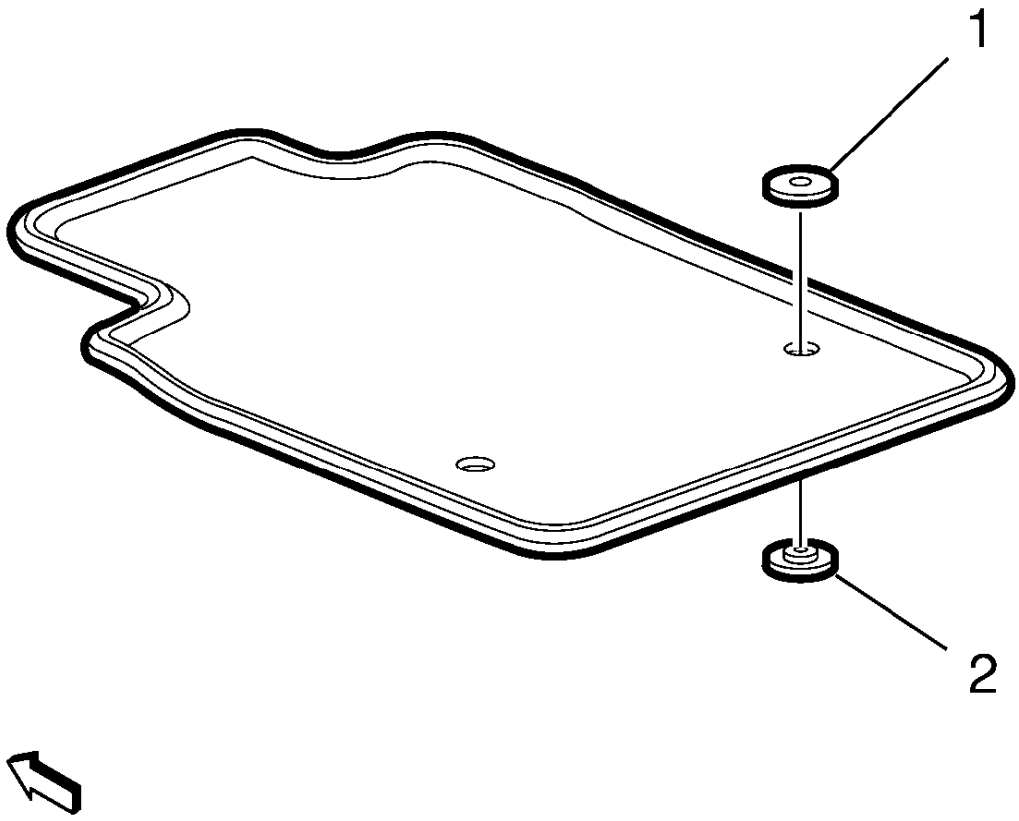

Fig. 8: Mat Retainer
Courtesy of GENERAL MOTORS COMPANY

1. Align the upper piece of the mat retainer (1) to center of the mat retainer hole. Turn the mat over while maintaining the center position of the retainer.
2. Install the lower piece of the mat retainer (2) onto the mat, aligning it with the upper retainer. Push down hard to engage several retention rings.
3. Lightly tap on the retainer with a rubber mallet to engage the remaining retention rings.
4. Install floor mat to vehicle.

HEADLINING TRIM PANEL REPLACEMENT (WITHOUT SUNROOF)

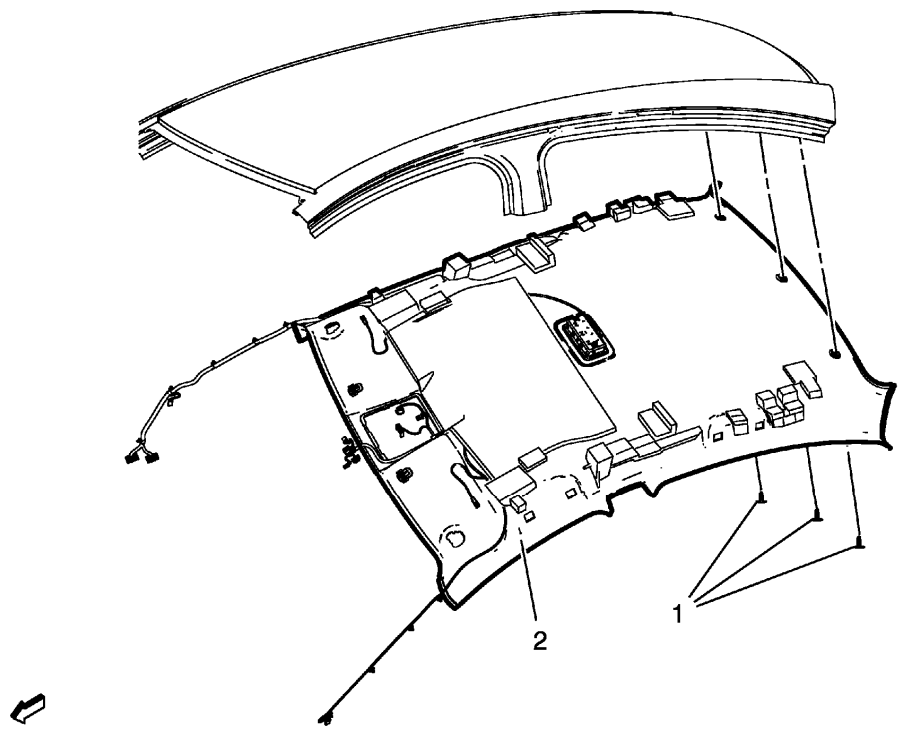

Fig. 9: Headlining Trim Panel (Without Sunroof)
Courtesy of GENERAL MOTORS COMPANY

Headlining Trim Panel Replacement (without Sunroof)

Callout	Component Name

WARNING:
Do not attempt to repair or alter the head impact energy-absorbing material glued to the headliner or to the garnish trims. If the material is damaged, replace the headliner and/or the garnish trim. Failure to do so could result in personal injury.

CAUTION:
If a vehicle is equipped with a head curtain inflator module ensure that the inflator module and tether are undamaged. If tether or curtain airbag are damaged in any way, they must be replaced.

CAUTION:
Use care when working around the head curtain inflator module. Sharp tools may puncture the curtain airbag. If the head curtain inflator module is damaged in any way, it must be replaced.

Preliminary Procedures

1. Disable the SIR system. Refer to **SIR Disabling and Enabling** .
2. Remove the sunshades. Refer to **Sunshade Replacement** .
3. Remove the sunshade supports. Refer to **Sunshade Support Replacement** .
4. Remove the roof console. Refer to **Roof Console Replacement** .

5. Remove the inside rearview mirror mount plate cover. Refer to **Inside Rearview Mirror Mount Plate Cover Replacement** .
6. Remove the assist handles. Refer to **Assist Handle Replacement** .
7. Remove the windshield garnish moldings. Refer to **Windshield Garnish Molding Replacement** .
8. Remove the center pillar upper garnish moldings. Refer to **Center Pillar Upper Garnish Molding Replacement** .
9. Remove the quarter window garnish moldings. Refer to **Quarter Window Garnish Molding Replacement** .
10. Remove the rear and both front seats. Refer to **Rear Seat Cushion Removal and Installation** , and **Driver or Passenger Seat Removal and Installation** .

1	Headliner Trim Panel Retainer (Qty: 3)
2	Headliner Trim Panel Assembly **Procedure** 1. To disconnect the front harness, remove the instrument panel compartment. Refer to **Instrument Panel Compartment Replacement** . 2. Disconnect the electrical connectors. 3. When replacing the headliner transfer all the foams to the new headliner. **NOTE:** **Removal and installation of the headliner must be completed through the rear door opening. Always service with the aid of an assistant to prevent kinking or damage to the headliner. When installing a new headliner, tape any unused connector to the headliner with a high adhesive tape.**

HEADLINING TRIM PANEL REPLACEMENT (WITH SUNROOF)

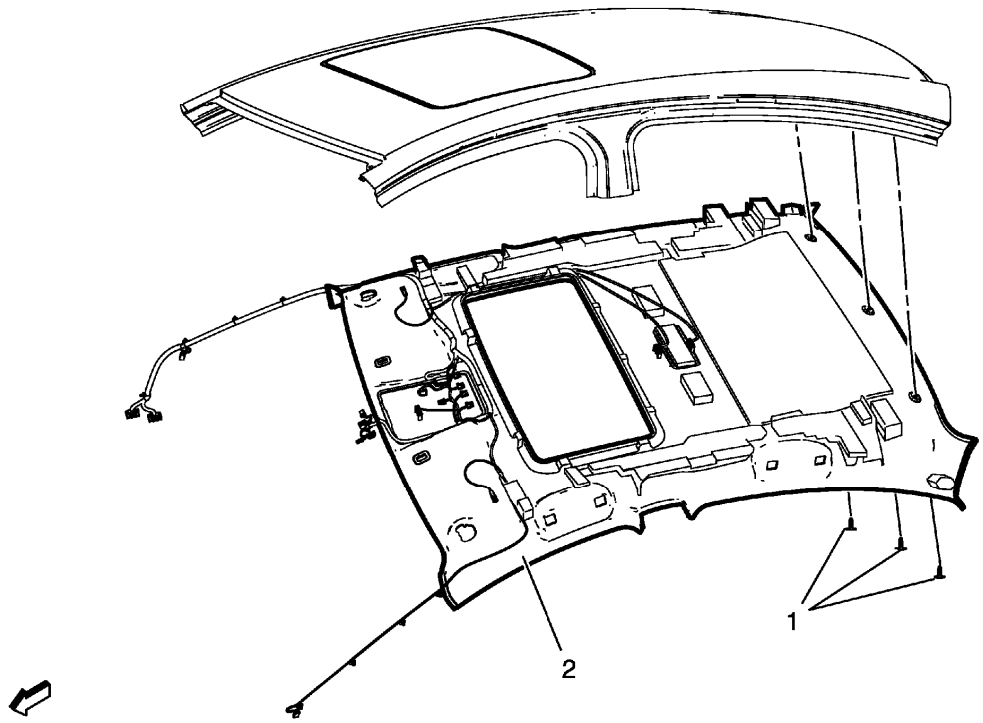

Fig. 10: Headlining Trim Panel (With Sunroof)
Courtesy of GENERAL MOTORS COMPANY

Headlining Trim Panel Replacement (with Sunroof)

Callout	Component Name

WARNING:
Do not attempt to repair or alter the head impact energy-absorbing material glued to the headliner or to the garnish trims. If the material is damaged, replace the headliner and/or the garnish trim. Failure to do so could result in personal injury.

CAUTION:
If a vehicle is equipped with a head curtain inflator module ensure that the inflator module and tether are undamaged. If tether or curtain airbag are damaged in any way, they must be replaced.

CAUTION:
Use care when working around the head curtain inflator module. Sharp tools may puncture the curtain airbag. If the head curtain inflator module is damaged in any way, it must be replaced.

Preliminary Procedures

1. Disable the SIR system. Refer to **SIR Disabling and Enabling** .
2. Remove the sunshades. Refer to **Sunshade Replacement** .
3. Remove the sunshade supports. Refer to **Sunshade Support Replacement** .
4. Remove the roof console. Refer to **Roof Console Replacement** .

5. Remove the inside rearview mirror mount plate cover. Refer to **Inside Rearview Mirror Mount Plate Cover Replacement** .
6. Remove the assist handles. Refer to **Assist Handle Replacement** .
7. Remove the windshield garnish moldings. Refer to **Windshield Garnish Molding Replacement** .
8. Remove the center pillar upper garnish moldings. Refer to **Center Pillar Upper Garnish Molding Replacement** .
9. Remove the quarter window garnish moldings. Refer to **Quarter Window Garnish Molding Replacement** .
10. Remove the rear and both front seats. Refer to **Rear Seat Cushion Removal and Installation** , and **Driver or Passenger Seat Removal and Installation** .

1	Headliner Trim Panel Retainer (Qty: 3)
2	Headliner Trim Panel Assembly **Procedure** 1. To disconnect the front harness, remove the instrument panel compartment. Refer to **Instrument Panel Compartment Replacement** . 2. Disconnect the electrical connectors. 3. When replacing the headliner transfer all the foams to the new headliner. **NOTE:** **Removal and installation of the headliner must be completed through the rear door opening. Always service with the aid of an assistant to prevent kinking or damage to the headliner. When installing a new headliner, tape any unused connector to the headliner with a high adhesive tape.**

2013 ACCESSORIES & EQUIPMENT

Frame and Underbody - Cruze

SPECIFICATIONS

FASTENER TIGHTENING SPECIFICATIONS

Fastener Tightening Specifications

Application	Specification	
	Metric	English
Drivetrain and Front Suspension Frame Bolt Front	160	118 lb ft
Drivetrain and Front Suspension Frame Bolt Rear	160	118 lb ft
Front Compartment Insulator Bolt	3	27 lb in
Front Compartment Splash Shield Bolt	3	27 lb in
Front Wheelhouse Liner Bolt	2.5	22 lb in
Intermediate Steering Shaft Lower Bolt	34	25 lb ft
Power Steering Fluid Cooling Pipe Bolt	9	80 lb in
Power Steering Inlet and Outlet Hose Bolt	11	97 lb in
Rear Wheelhouse Liner Bolt	2.5	22 lb in
Stabilizer Shaft Link Nut (1)	65	48 lb ft
Steering Linkage Tie Rod Nut	65	48 lb ft
Transmission Front Mount Bolt	100	74 lb ft
Transmission Rear Mount Bracket Bolt	100	74 lb ft
(1) = Use new fastener		

REPAIR INSTRUCTIONS

ENGINE SHIELD REPLACEMENT

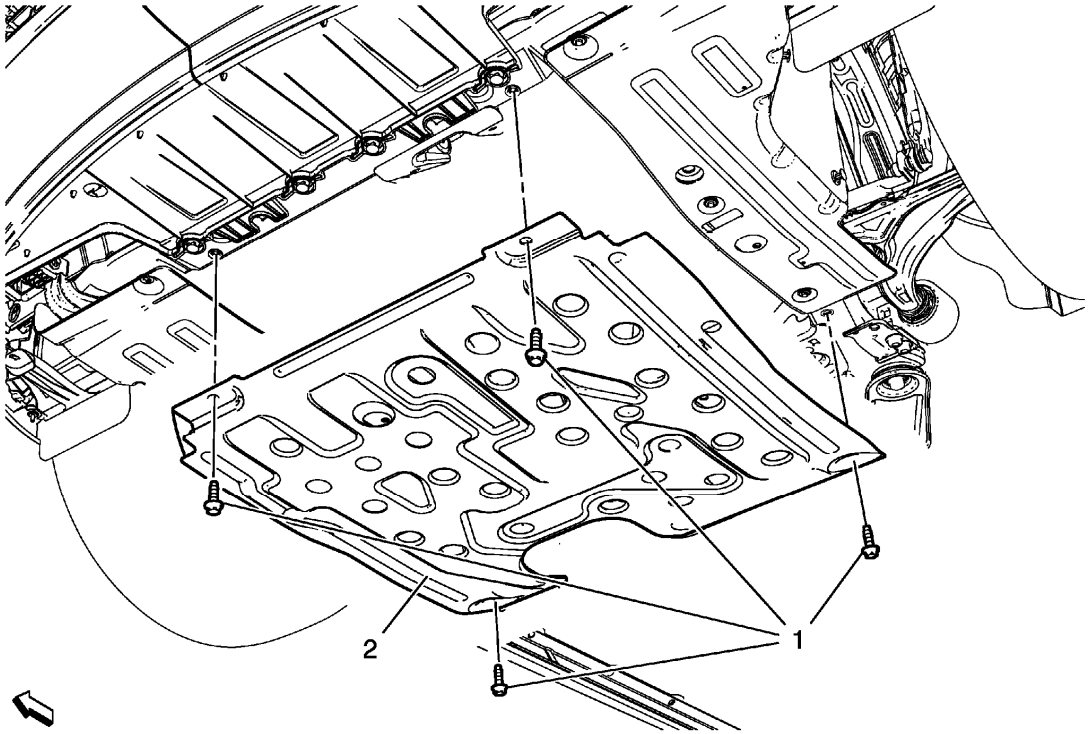

Fig. 1: View Of Engine Shield And Bolts
Courtesy of GENERAL MOTORS COMPANY

Engine Shield Replacement

Callout	Component Name
Preliminary Procedure Raise and support the vehicle. Refer to **Lifting and Jacking the Vehicle** .	
1	Engine Shield Bolt (Qty: 4) **CAUTION:** **Refer to Fastener Caution .** **Tighten** 40 N.m (30 lb ft)
2	Engine Shield

FRONT COMPARTMENT INSULATOR REPLACEMENT

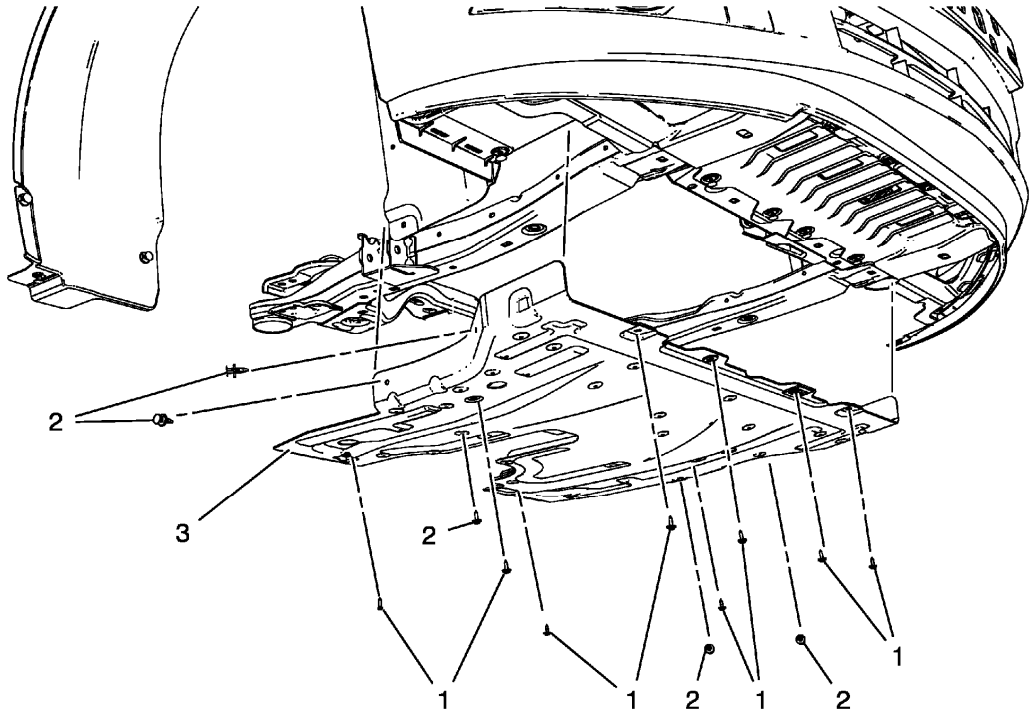

Fig. 2: Identifying Front Compartment Insulator, Screws And Plastic Retainers
Courtesy of GENERAL MOTORS COMPANY

Front Compartment Insulator Replacement

Callout	Component Name
Preliminary Procedure Raise and support the vehicle. Refer to **Lifting and Jacking the Vehicle** .	
1	Front Compartment Insulator Screw (Qty: 8) **CAUTION:** **Refer to Fastener Caution .** **Tighten** 3 N.m (27 lb in)
2	Front Compartment Insulator Plastic Retainer (Qty: 5)
3	Front Compartment Insulator

FRONT COMPARTMENT AIR DEFLECTOR REPLACEMENT

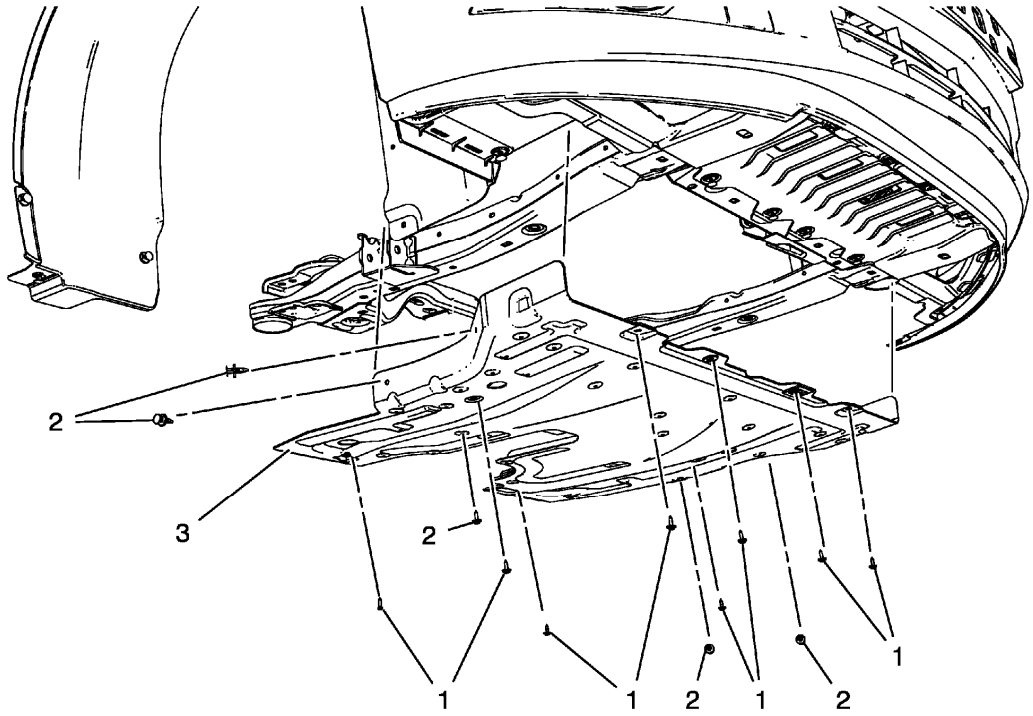

Fig. 3: Identifying Front Compartment Insulator, Screws And Plastic Retainers
Courtesy of GENERAL MOTORS COMPANY

Front Compartment Air Deflector Replacement

Callout	Component Name
Preliminary Procedure Raise and support the vehicle. Refer to **Lifting and Jacking the Vehicle** .	
1	Front Compartment Air Deflector (Qty: 8) **CAUTION:** **Refer to Fastener Caution .** **Tighten** 3 N.m (27 lb in)
2	Front Compartment Air Deflector Plastic Retainer (Qty: 5)
3	Front Compartment Air Deflector

UNDERBODY FRONT AIR DEFLECTOR REPLACEMENT - LEFT SIDE

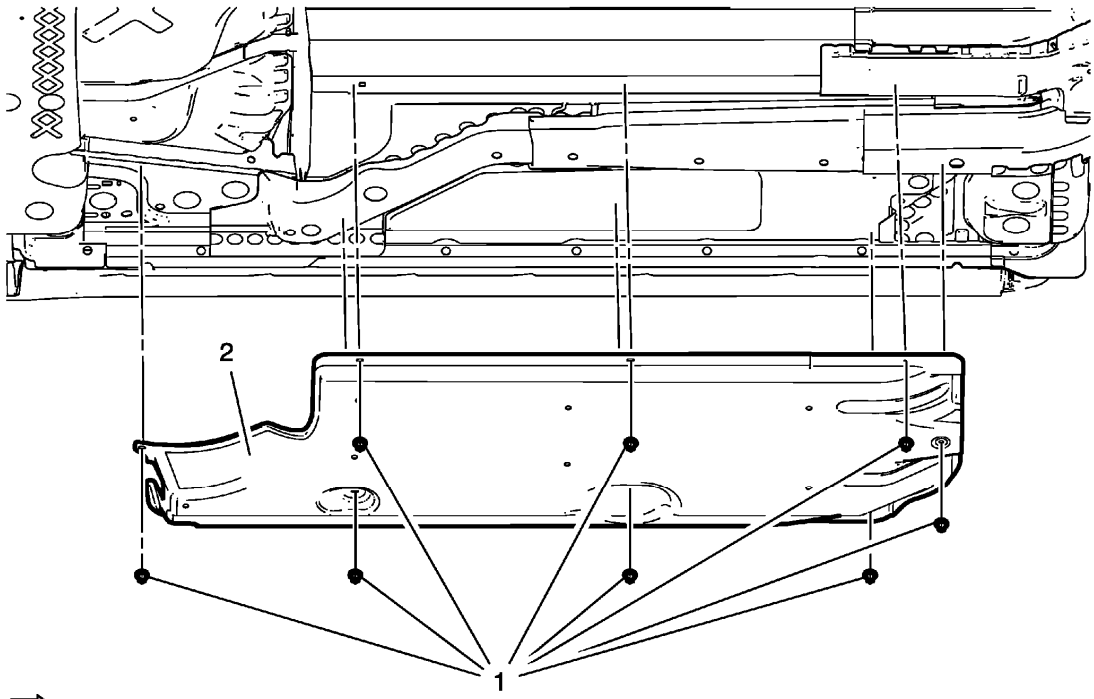

Fig. 4: Underbody Front Air Deflector And Retainers - Left Side
Courtesy of GENERAL MOTORS COMPANY

Underbody Front Air Deflector Replacement - Left Side

Callout	Component Name
Preliminary Procedure Raise the vehicle. Refer to **Lifting and Jacking the Vehicle** .	
1	Underbody Front Air Deflector Retainer (Qty: 8)
2	Underbody Front Air Deflector - Left Side

UNDERBODY FRONT AIR DEFLECTOR REPLACEMENT - RIGHT SIDE

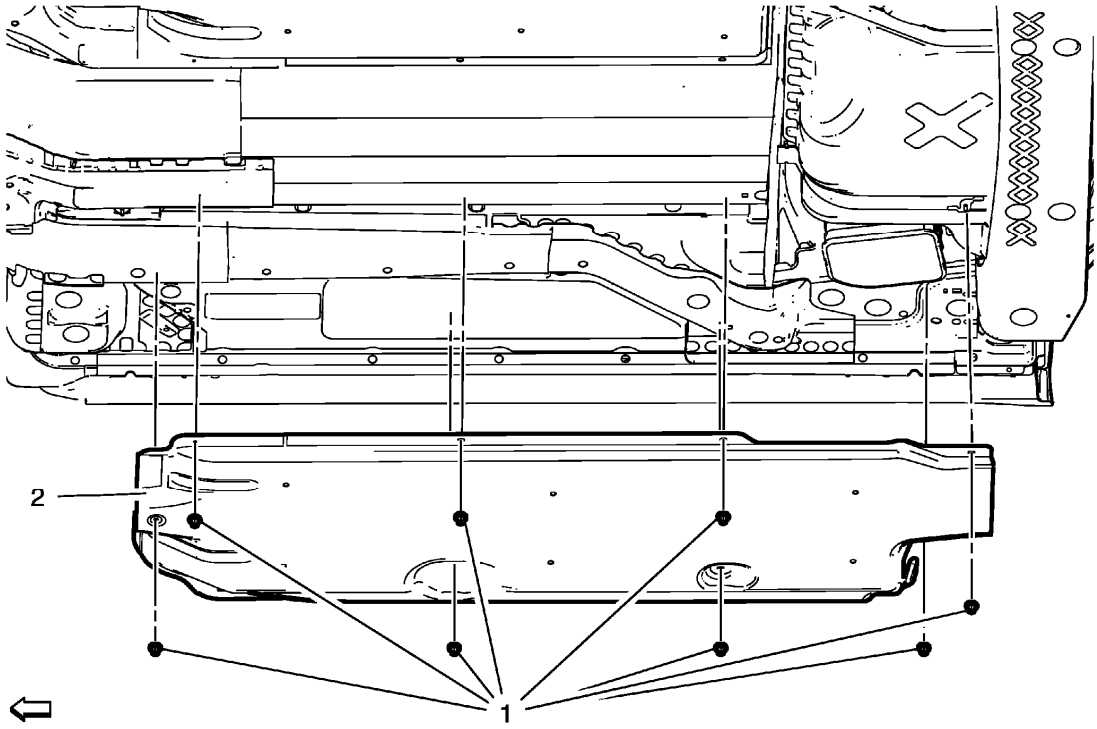

Fig. 5: Underbody Front Air Deflector - Right Side
Courtesy of GENERAL MOTORS COMPANY

Callout	Component Name
Preliminary Procedures Raise the vehicle. Refer to **Lifting and Jacking the Vehicle** .	
1	Underbody Front Air Deflector Retainer (Qty: 8)
2	Underbody Front Air Deflector - Right Side

UNDERBODY REAR AIR DEFLECTOR REPLACEMENT

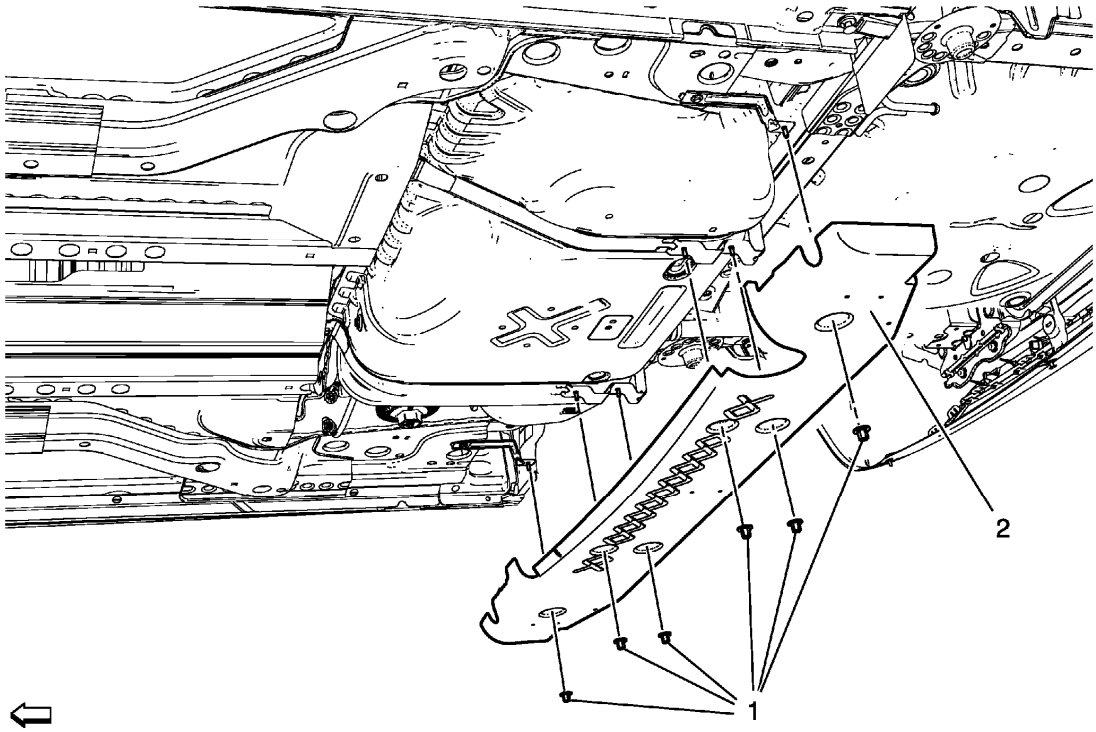

Fig. 6: Underbody Rear Air Deflector And Nuts
Courtesy of GENERAL MOTORS COMPANY

Underbody Rear Air Deflector Replacement

Callout	Component Name
Preliminary Procedure Raise and support the vehicle. Refer to **Lifting and Jacking the Vehicle** .	
1	Underbody Rear Air Deflector Nut (Qty: 6) **CAUTION:** **Refer to Fastener Caution .**
2	Underbody Rear Air Deflector

DRIVETRAIN AND FRONT SUSPENSION FRAME REPLACEMENT

Removal Procedure

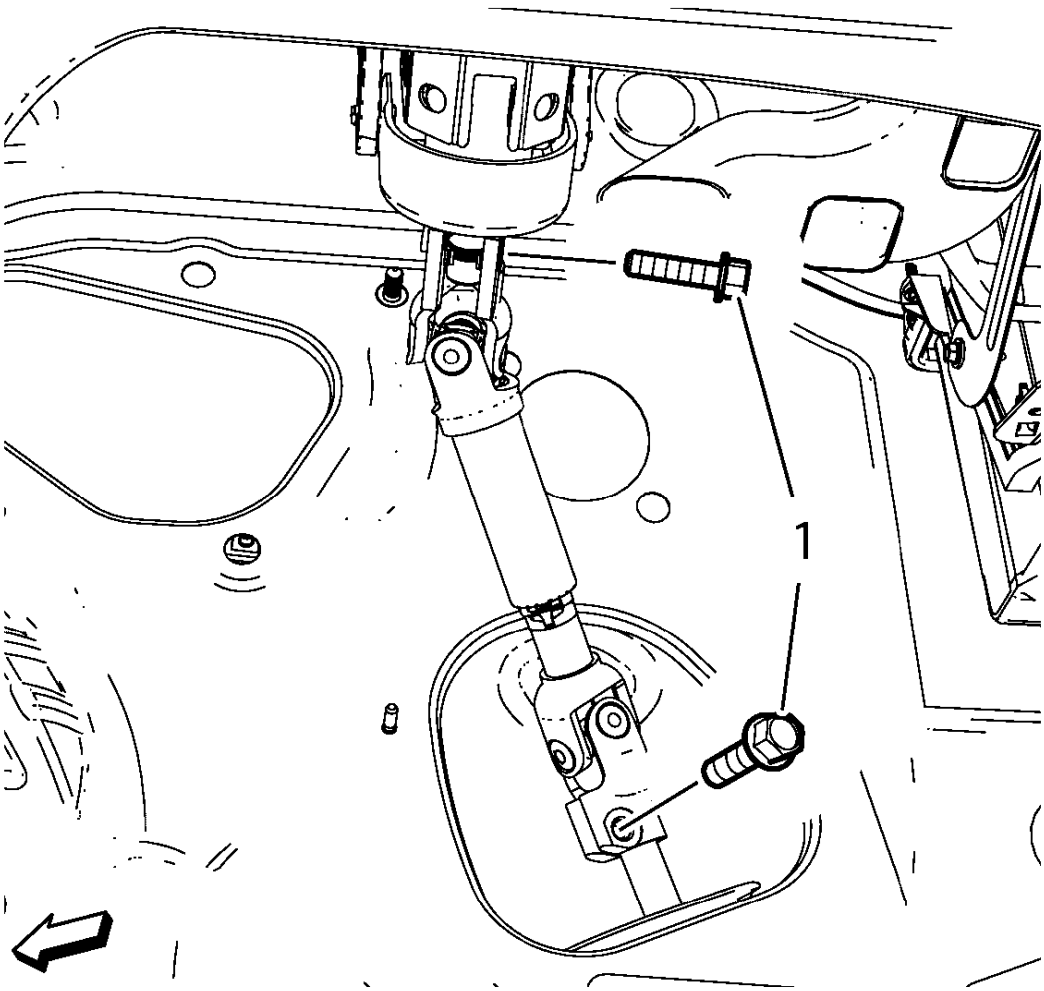

Fig. 7: Lower Steering Intermediate Shaft Bolts
Courtesy of GENERAL MOTORS COMPANY

CAUTION: With wheels of the vehicle facing straight ahead, secure the steering wheel utilizing steering column anti-rotation pin, steering column lock, or a strap to prevent rotation. Locking of the steering column will prevent damage and a possible malfunction of the SIR system. The steering wheel must be secured in position before disconnecting the following components:

- **The steering column**
- **The intermediate shaft(s)**
- **The steering gear**

After disconnecting these components, do not rotate the steering wheel or move the front tires and wheels. Failure to follow this

procedure may cause the SIR coil assembly to become un-centered and cause possible damage to the SIR coil. If you think the SIR coil has become un-centered, refer to your specific SIR coil's centering procedure to re-center SIR Coil.

1. Support the radiator and condenser from above using the condenser tabs on each side.
2. Remove the lower steering intermediate shaft bolt (1).
3. Raise the vehicle on a hoist. Refer to **Lifting and Jacking the Vehicle** .
4. Remove the tire and wheel assemblies. Refer to **Tire and Wheel Removal and Installation** .
5. Remove the exhaust front pipe. Refer to **Exhaust Front Pipe Replacement** .
6. Remove the wheelhouse liners. Refer to **Front Wheelhouse Liner Replacement**.
7. Remove the front compartment insulator, if equipped. Refer to **Front Compartment Insulator Replacement**.
8. Remove the front bumper fascia opening lower cover. Refer to **Front Bumper Fascia Opening Lower Cover Replacement** .

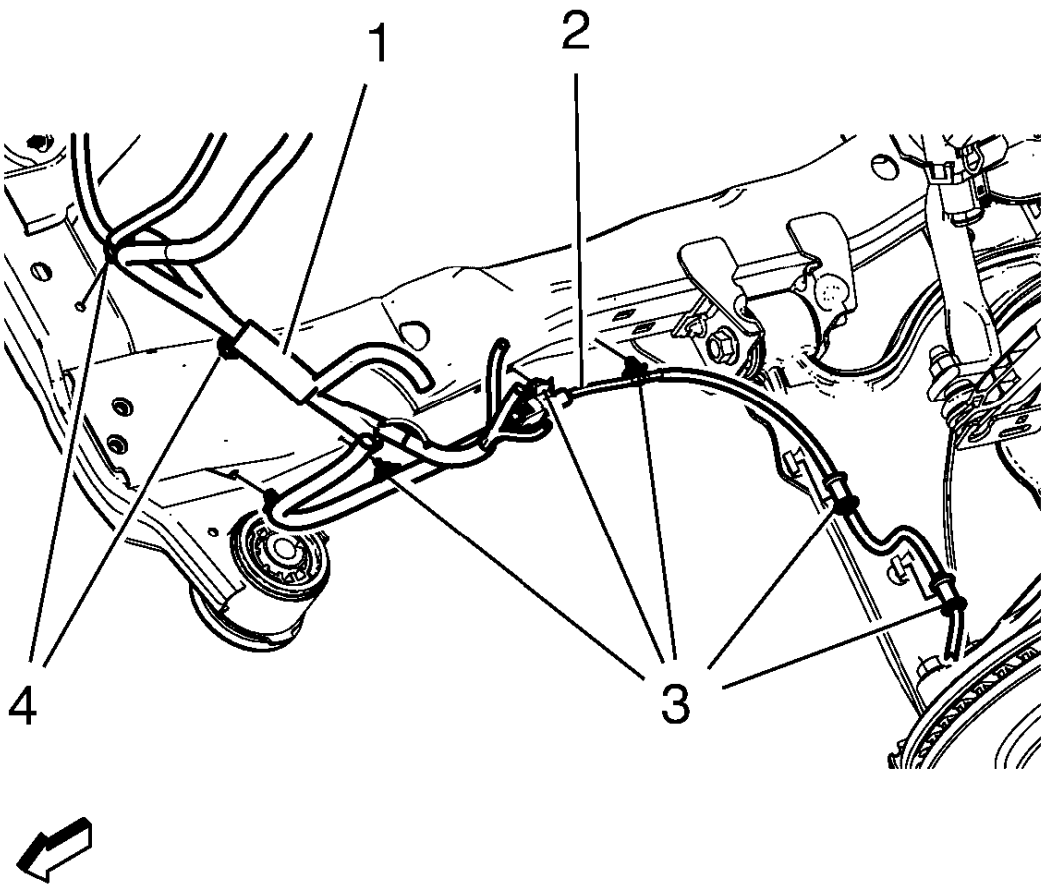

Fig. 8: Radiator Wiring Harness, Wheel Speed Sensor Wiring Harness And Retainers
Courtesy of GENERAL MOTORS COMPANY

9. Remove the wheel speed sensor wiring harness (2) from the frame on both sides.

   Remove the wiring harness retainers (3) from the frame and the lower control arm.

10. Remove the radiator wiring harness (1) from the frame.

    Remove the wiring harness retainers (4) from the frame.

11. Remove the lower ball joints from the steering knuckles. Refer to **Lower Control Arm Replacement** .

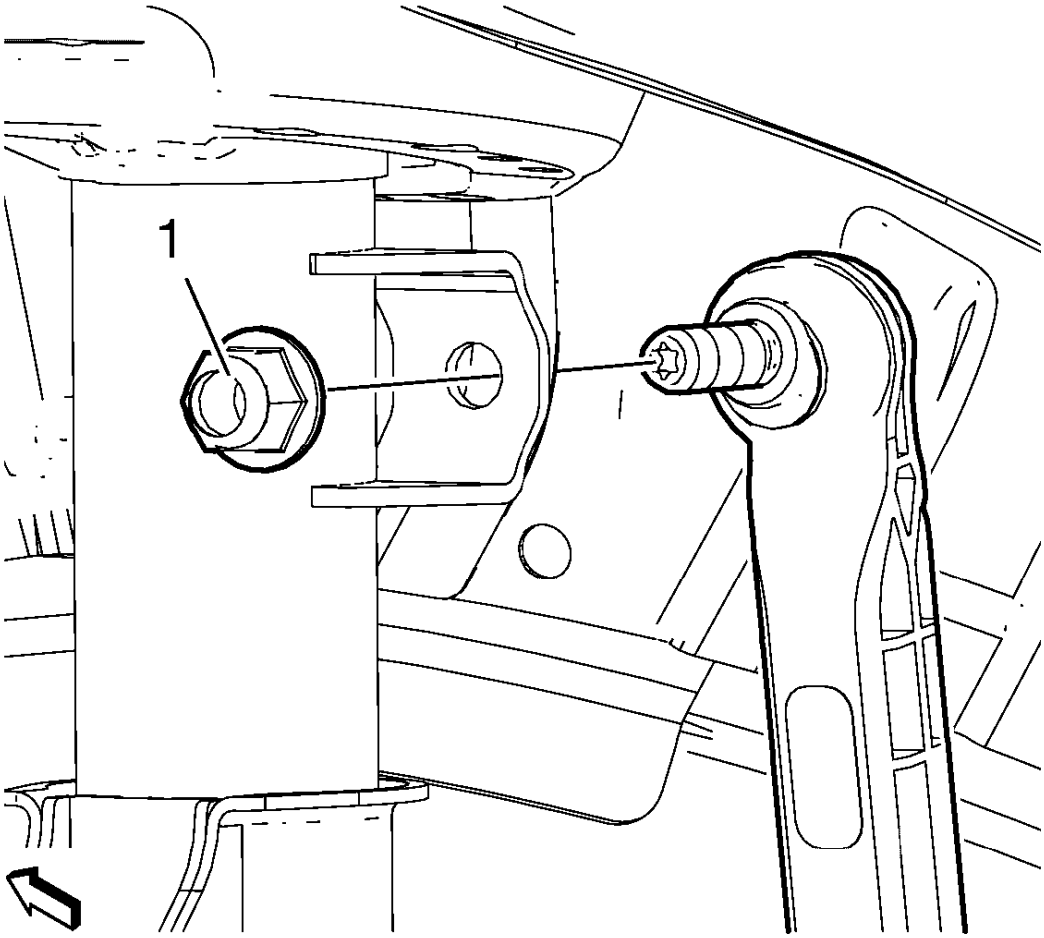

Fig. 9: Stabilizer Link Nut
Courtesy of GENERAL MOTORS COMPANY

12. Remove and DISCARD the stabilizer link nut (1) from the strut.
13. Remove the outer tie rods and tie rod nuts from the steering knuckles. Refer to **Steering Linkage Outer Tie Rod Replacement** .
14. Install the engine support fixture. For the 1.4L engine, refer to **Engine Support Fixture** .

    For the 1.8L engine, refer to **Engine Support Fixture** .

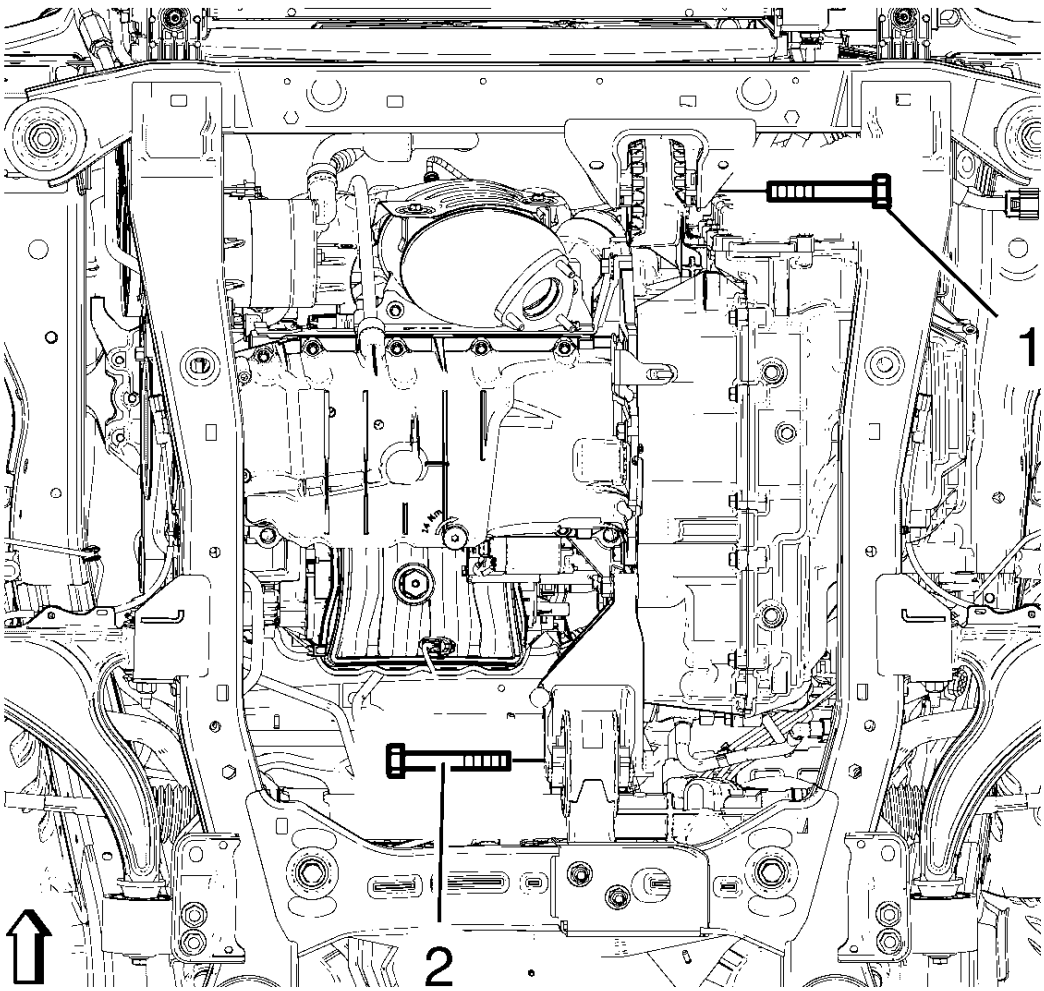

Fig. 10: Identifying Front And Rear Transmission Mount Bracket Bolts
Courtesy of GENERAL MOTORS COMPANY

15. Remove the front (1) and the rear (2) transmission mount bracket bolts.

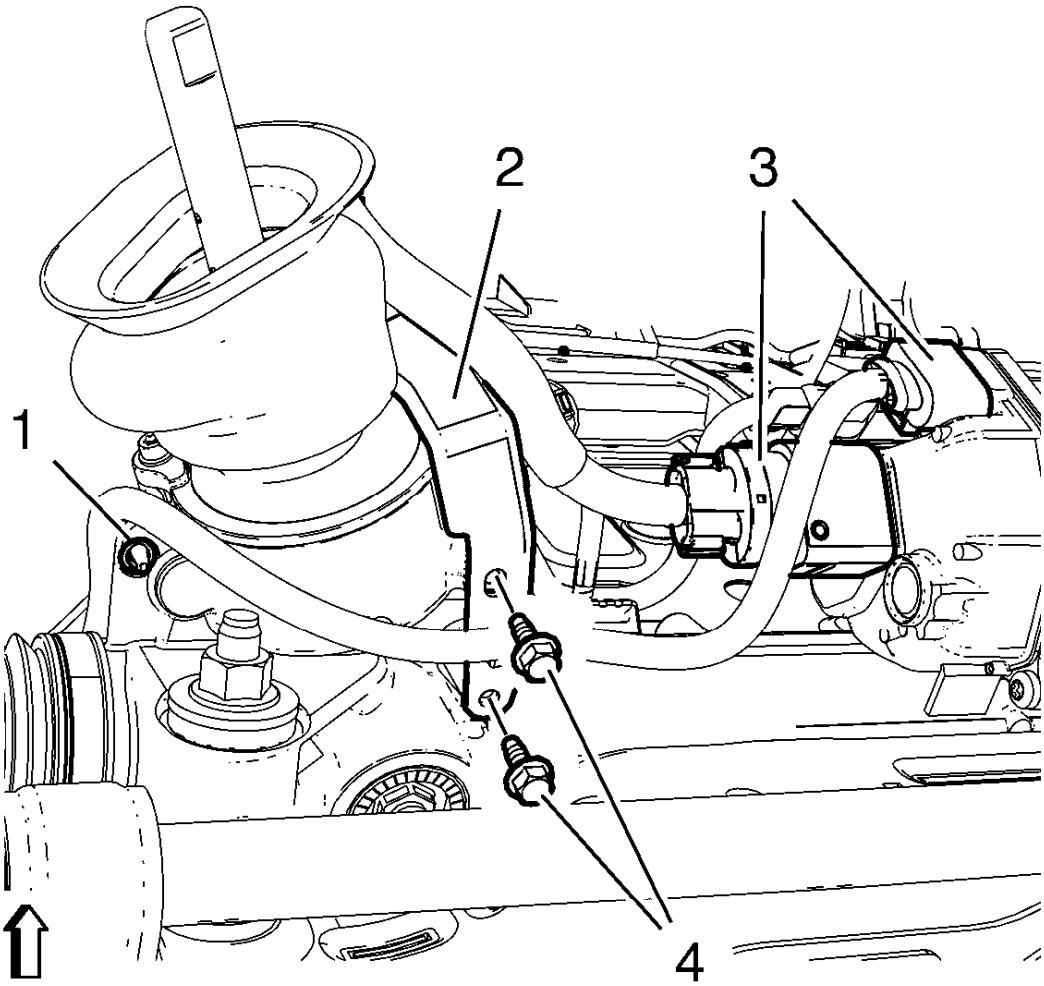

Fig. 11: Transmission Wiring Harness, Plugs, Bracket & Bolts
Courtesy of GENERAL MOTORS COMPANY

16. Carefully disconnect 2 wiring harness plugs (3) from the steering gear with a suitable tool. Refer to **FEP Connectors (Steering Gear)** .
17. Using a suitable engine support table or equivalent, lower the vehicle until the drivetrain and front suspension frame contacts the engine support table.

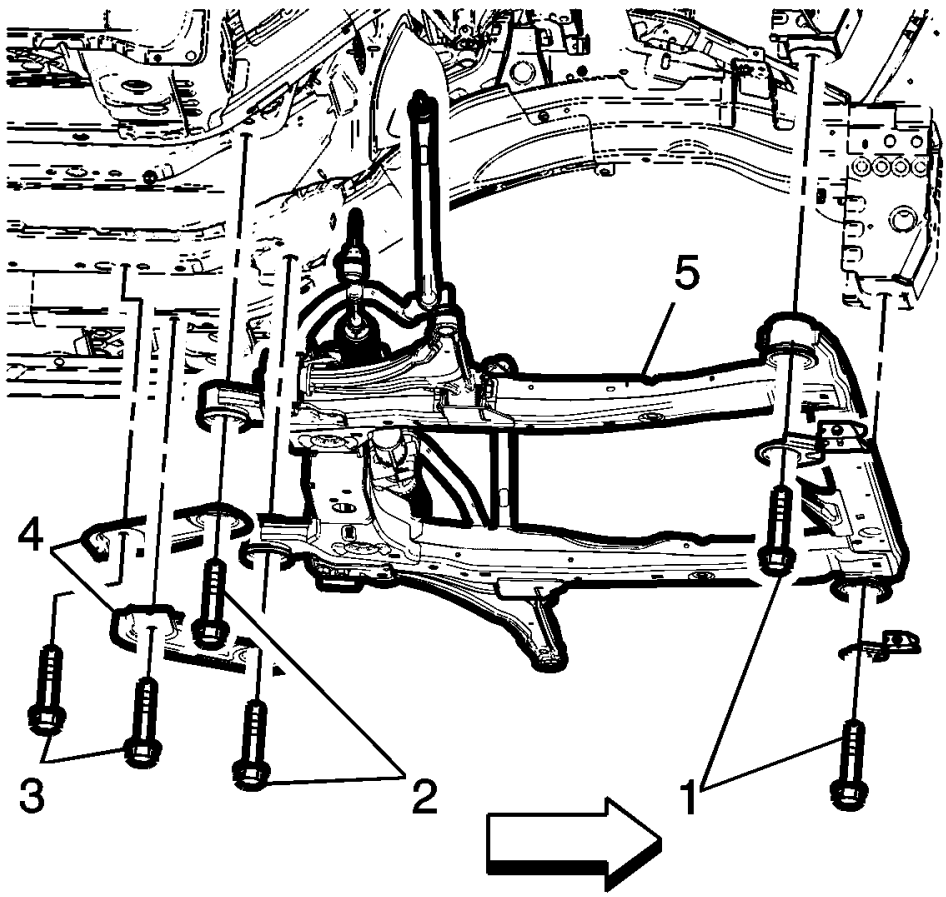

Fig. 12: Front Suspension Frame And Bolts
Courtesy of GENERAL MOTORS COMPANY

18. Remove the frame front bolts (1).
19. Remove the frame rear bolts (2).
20. Remove and DISCARD the rear frame reinforcement bolts (3).
21. Remove the frame reinforcements (4).
22. Remove the frame (5) from the vehicle.
23. Remove the following components if replacing the frame:
    - The lower control arms-Refer to **Lower Control Arm Replacement** .
    - The stabilizer shaft-Refer to **Stabilizer Shaft Replacement** .
    - The radiator support brackets.
    - The steering gear-Refer to **Steering Gear Replacement** .

Installation Procedure

CAUTION: Refer to Fastener Caution .

CAUTION: Refer to Torque-to-Yield Fastener Caution .

1. Install the following components on the drivetrain and front suspension frame if removed:
   - The radiator support brackets and tighten to 22 N.m (16 lb ft) plus 45 degrees.
   - The stabilizer shaft-Refer to **Stabilizer Shaft Replacement** .
   - The lower control arms-Refer to **Lower Control Arm Replacement** .
   - The steering gear-Refer to **Steering Gear Replacement** .

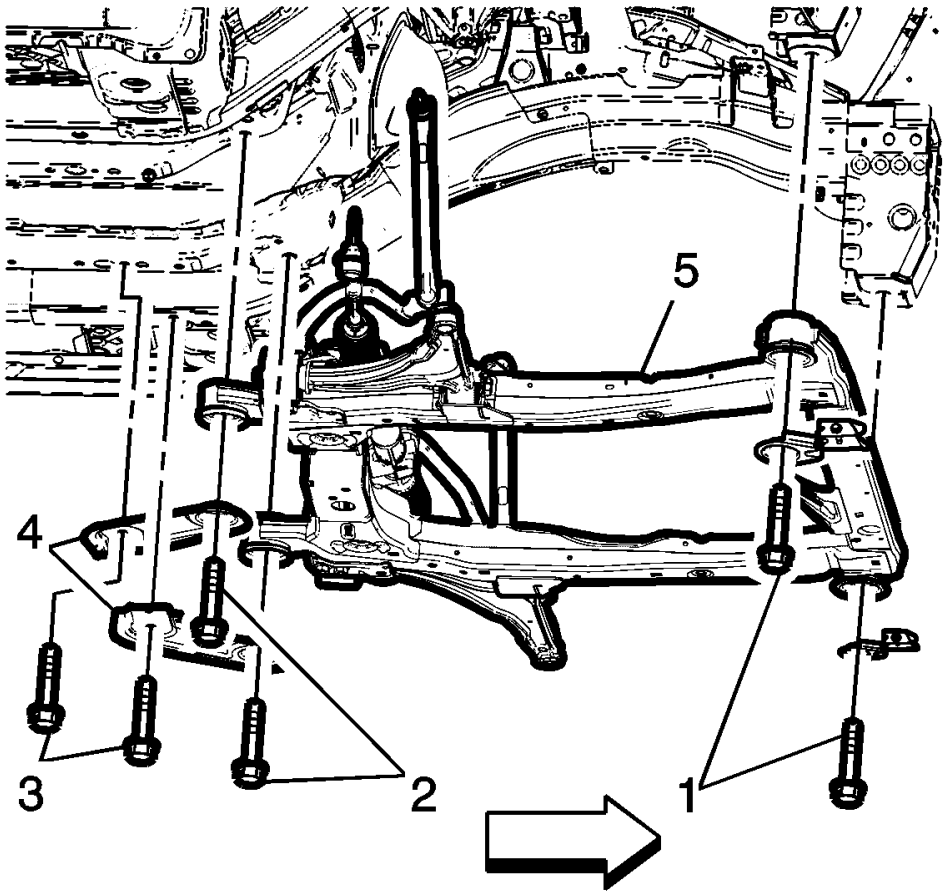

Fig. 13: Front Suspension Frame And Bolts
Courtesy of GENERAL MOTORS COMPANY

2. Install the frame (5) into the vehicle.
3. Install the frame reinforcements (4).

4. Install the frame rear bolts (2) and tighten to 160 N.m (118 lb ft).
5. Install NEW frame reinforcement bolts (3) and tighten to 60 N.m (44 lb ft) plus 45 degrees.
6. Install the frame front bolts (1) and tighten to 160 N.m (118 lb ft).
7. Remove the support for the power steering gear.

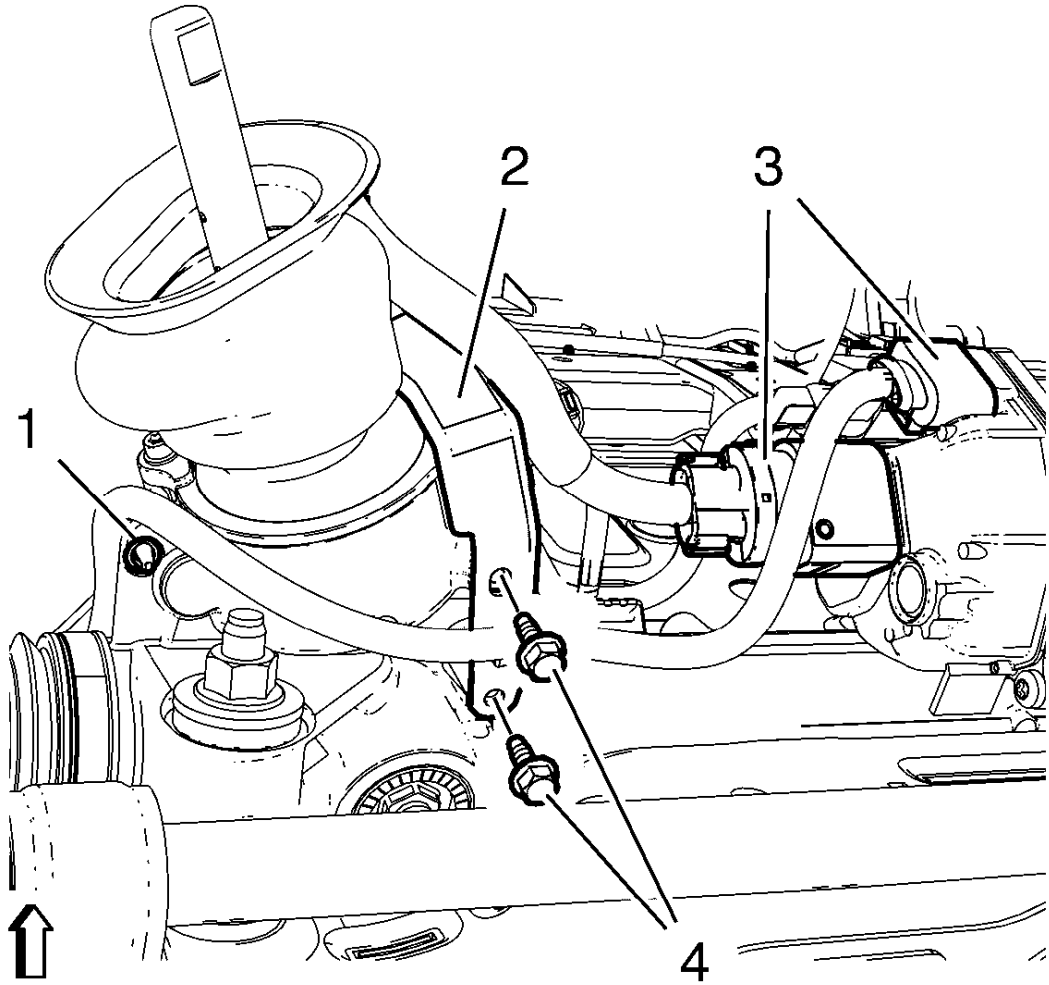

Fig. 14: Transmission Wiring Harness, Plugs, Bracket & Bolts
Courtesy of GENERAL MOTORS COMPANY

8. Install and tighten 2 wiring harness bracket bolts (4) to 9 N.m (80 lb in).
9. Tighten wiring harness retainer (1) to steering gear.
10. Connect 2 wiring harness plugs (3).
11. Install the front bumper energy absorber bracket bolt.

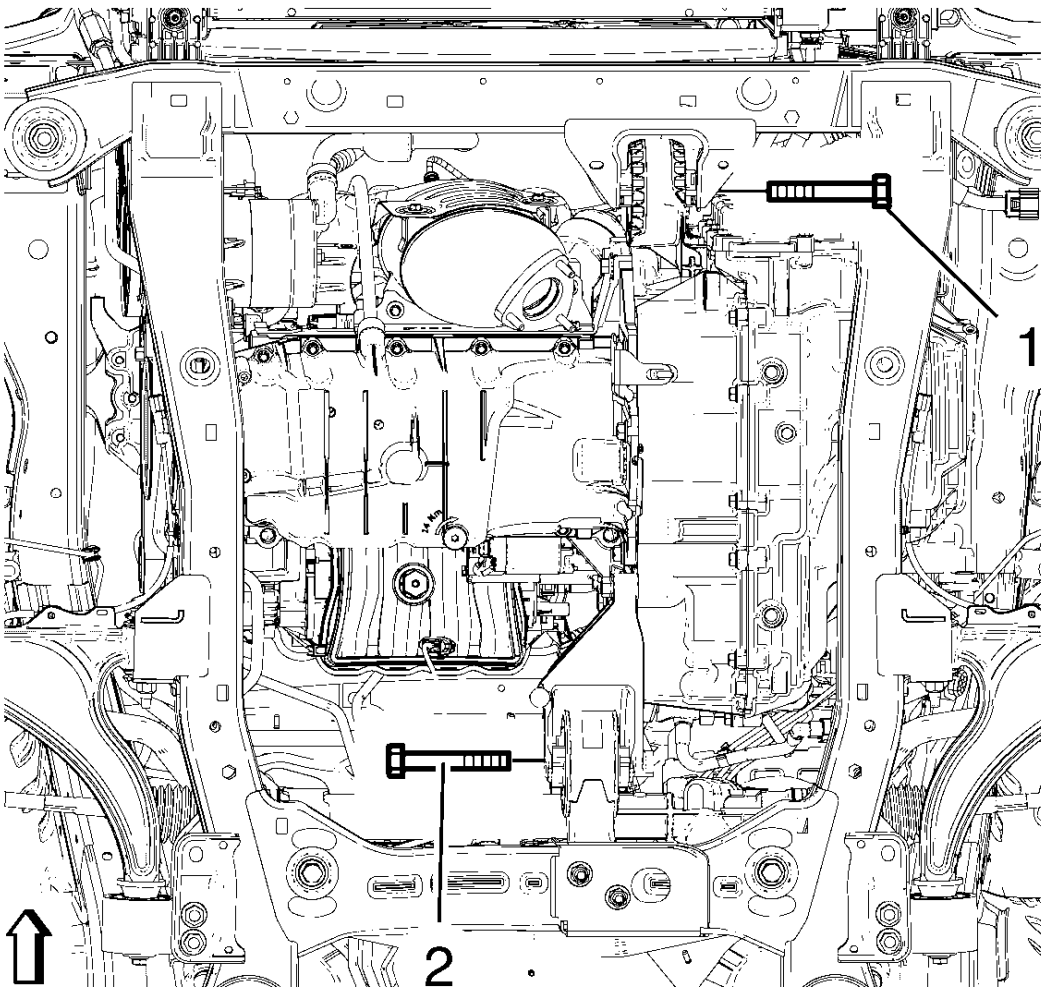

Fig. 15: Identifying Front And Rear Transmission Mount Bracket Bolts
Courtesy of GENERAL MOTORS COMPANY

12. Install the front transmission mount bolt (1) and tighten to 100 N.m (74 lb ft).
13. Install the rear transmission mount bracket bolt (2) and tighten to 100 N.m (74 lb ft).
14. Install the outer tie rods and tie rod nuts to the steering knuckles. Refer to **Steering Linkage Outer Tie Rod Replacement** .

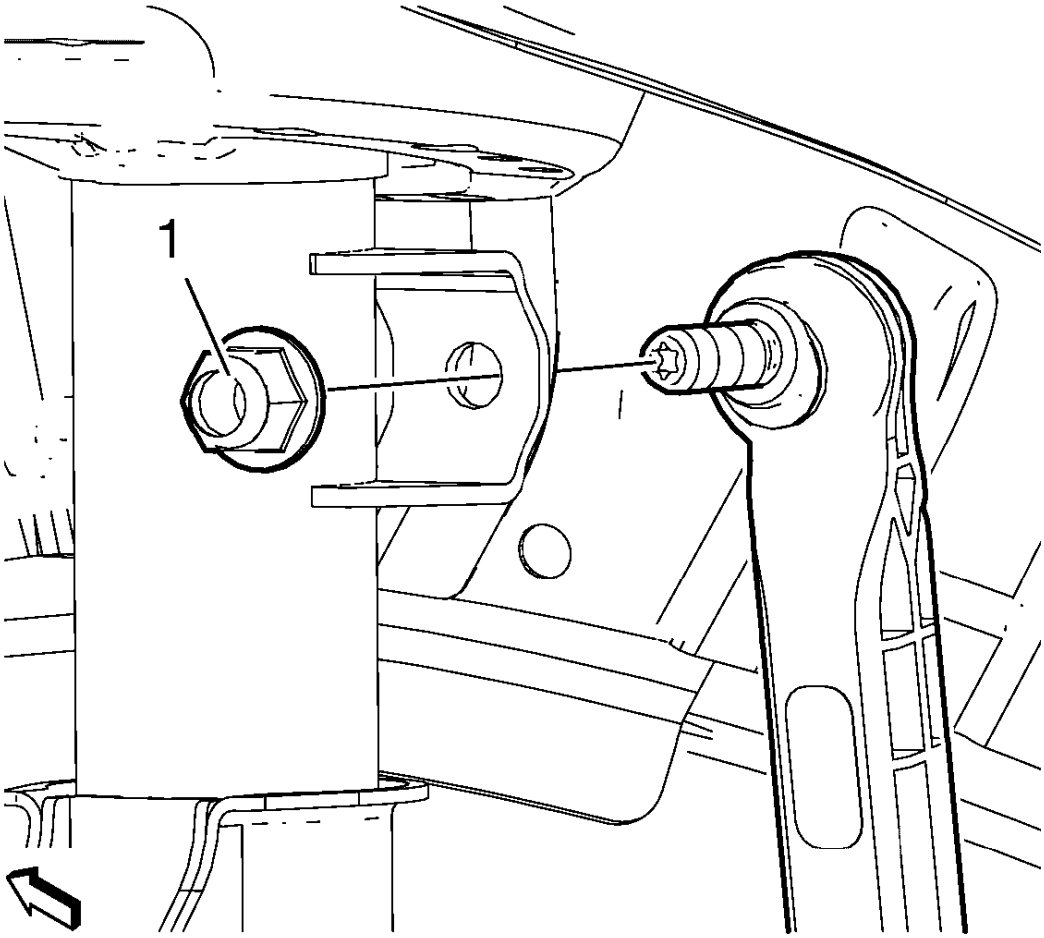

Fig. 16: Stabilizer Link Nut
Courtesy of GENERAL MOTORS COMPANY

15. Install the NEW steering linkage tie rod nuts and tighten to 35 N.m (26 lb ft).
16. Install the lower ball joints to the steering knuckles. Refer to **Lower Control Arm Replacement** .

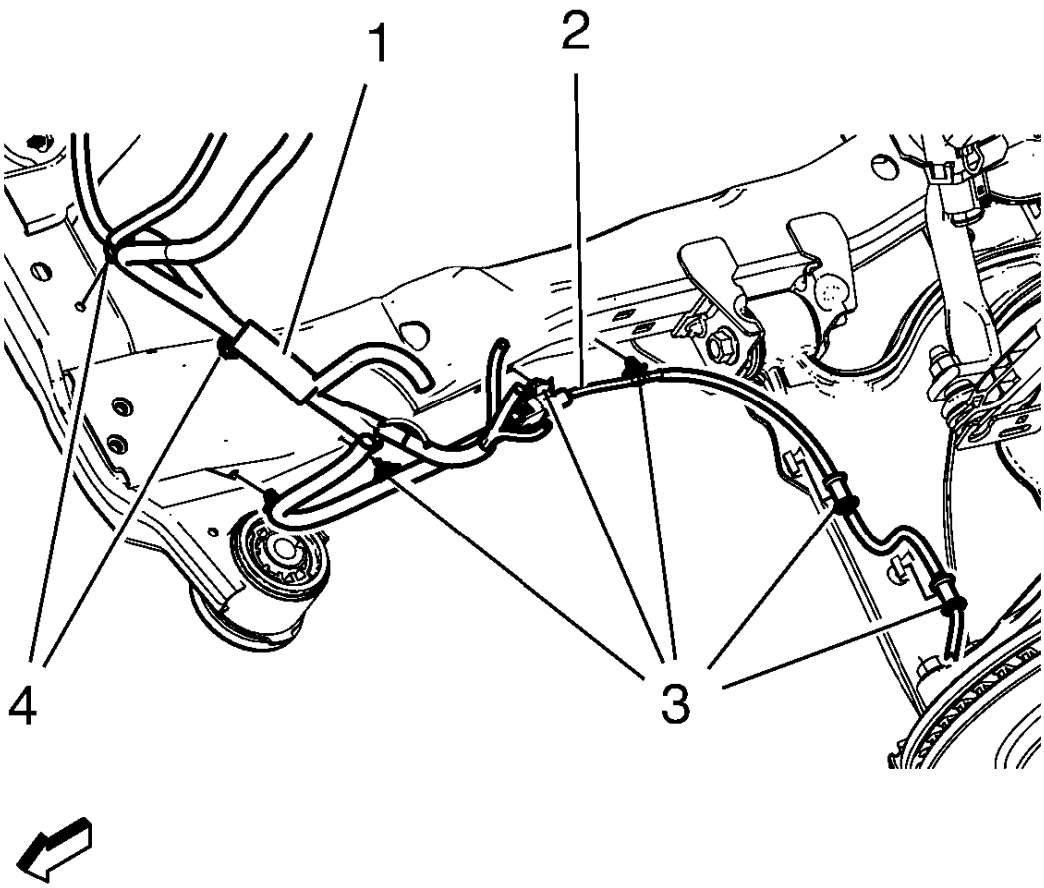

Fig. 17: Radiator Wiring Harness, Wheel Speed Sensor Wiring Harness And Retainers
Courtesy of GENERAL MOTORS COMPANY

17. Install the wheel speed sensor wiring harness (2) to the frame on both sides.

    Install the wiring harness retainers (3) to the frame and the lower control arm.

18. Install the radiator wiring harness (1) to the frame.

    Install the wiring harness retainers (4) to the frame.

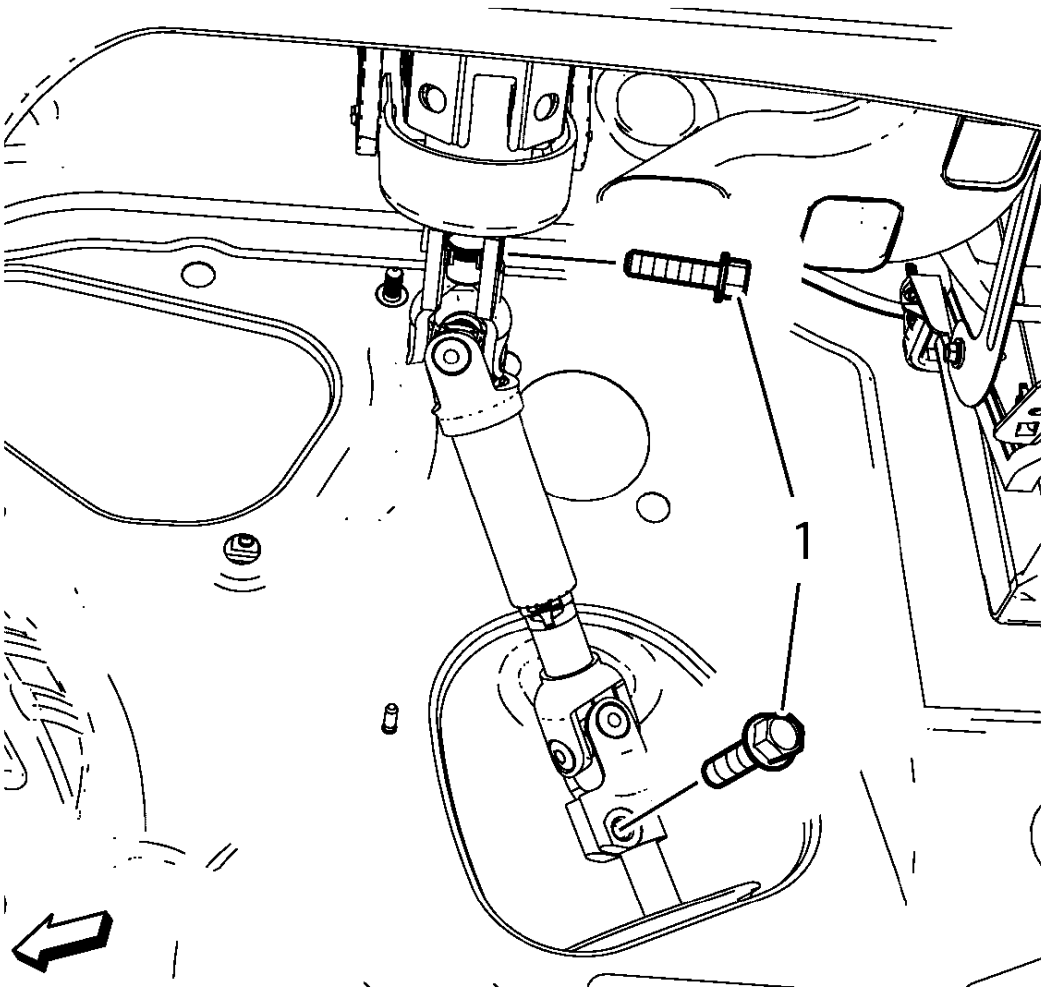

Fig. 18: Lower Steering Intermediate Shaft Bolts
Courtesy of GENERAL MOTORS COMPANY

19. Install the NEW lower steering intermediate shaft (1) bolt and tighten to 25 N.m (18 lb ft) plus 180 degrees.
20. Remove the support of the radiator and condenser.
21. Lower the vehicle on a hoist. Refer to **Lifting and Jacking the Vehicle** .
22. Install the wheelhouse liners. Refer to **Front Wheelhouse Liner Replacement**.
23. Install the tire and wheel assemblies. Refer to **Tire and Wheel Removal and Installation** .
24. Install the exhaust front pipe. Refer to **Exhaust Front Pipe Replacement** .
25. Install the front compartment insulator, if equipped. Refer to **Front Compartment Insulator Replacement**.
26. Install the front bumper fascia opening lower cover. Refer to **Front Bumper Fascia Opening Lower Cover Replacement** .
27. Perform a wheel alignment. Refer to **Front Camber Adjustment** .

DRIVETRAIN AND FRONT SUSPENSION FRAME INSULATOR REPLACEMENT

Special Tools

- **CH-906-14** Adapter
- **CH-906-42** Adapter
- **CH-50342** Threaded Rod

For equivalent regional tools. Refer to **Special Tools**.

Removal Procedure

1. Remove the drivetrain and front suspension frame. Refer to **Drivetrain and Front Suspension Frame Replacement**.

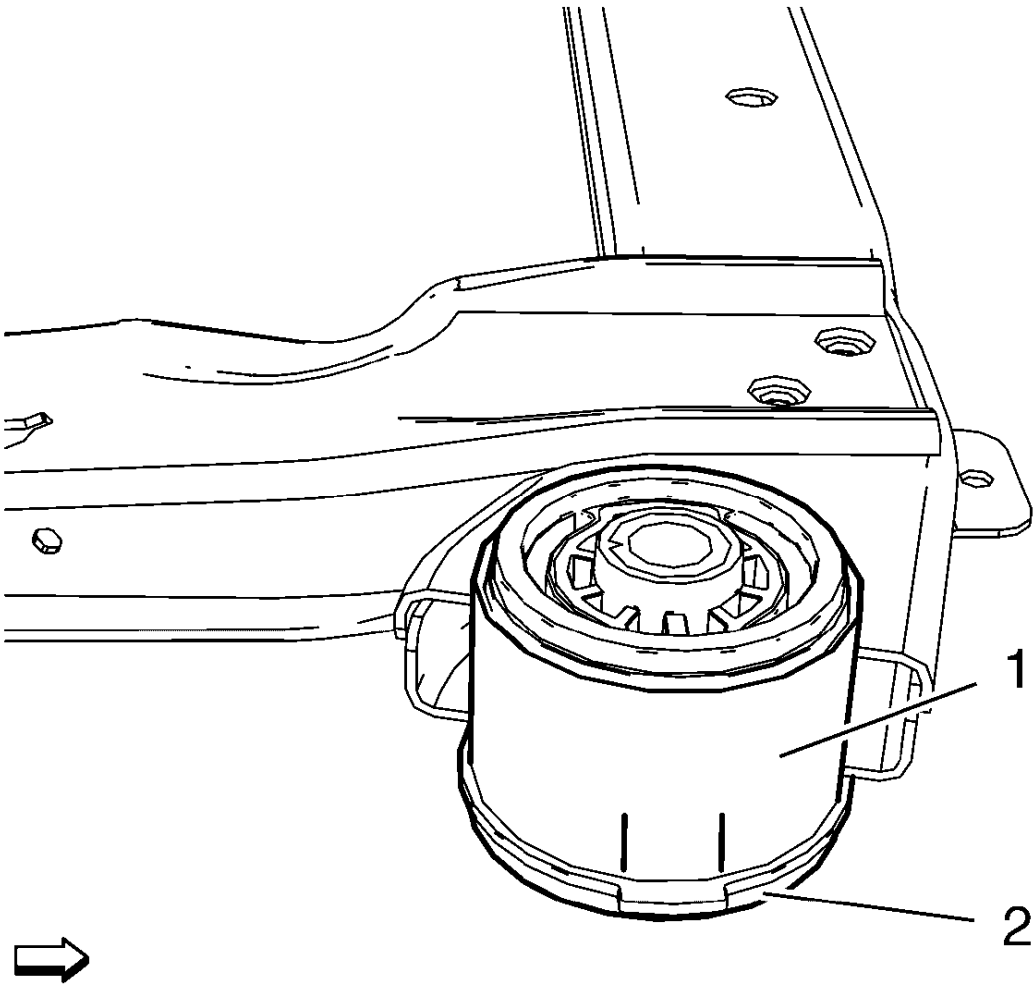

Fig. 19: View Of Frame And Insulator
Courtesy of GENERAL MOTORS COMPANY

2. Mark installation position of insulator (2) at frame (1).

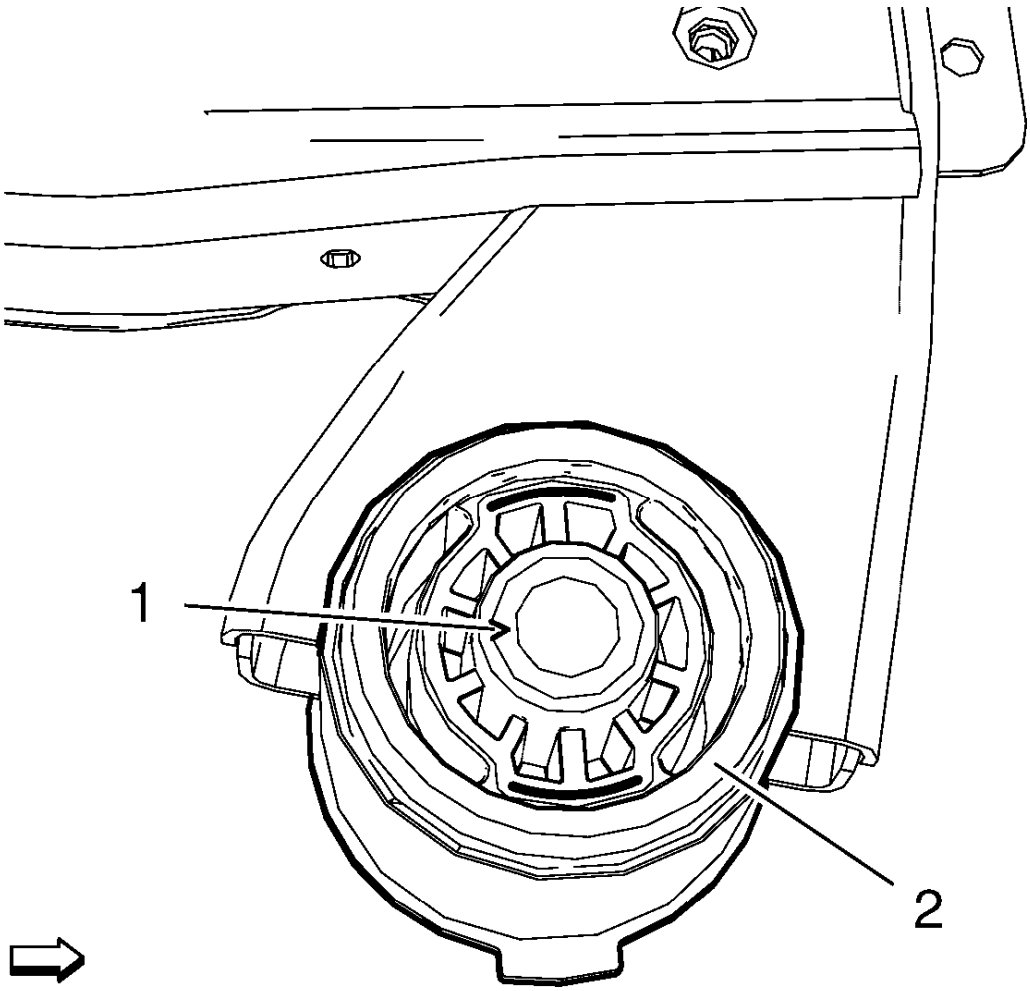

Fig. 20: Identifying Frame Insulator And Core
Courtesy of GENERAL MOTORS COMPANY

NOTE: Drilling holes into the insulator rubber to ease removal of the core.

3. Cut out frame insulator core (1) from frame insulator (2).

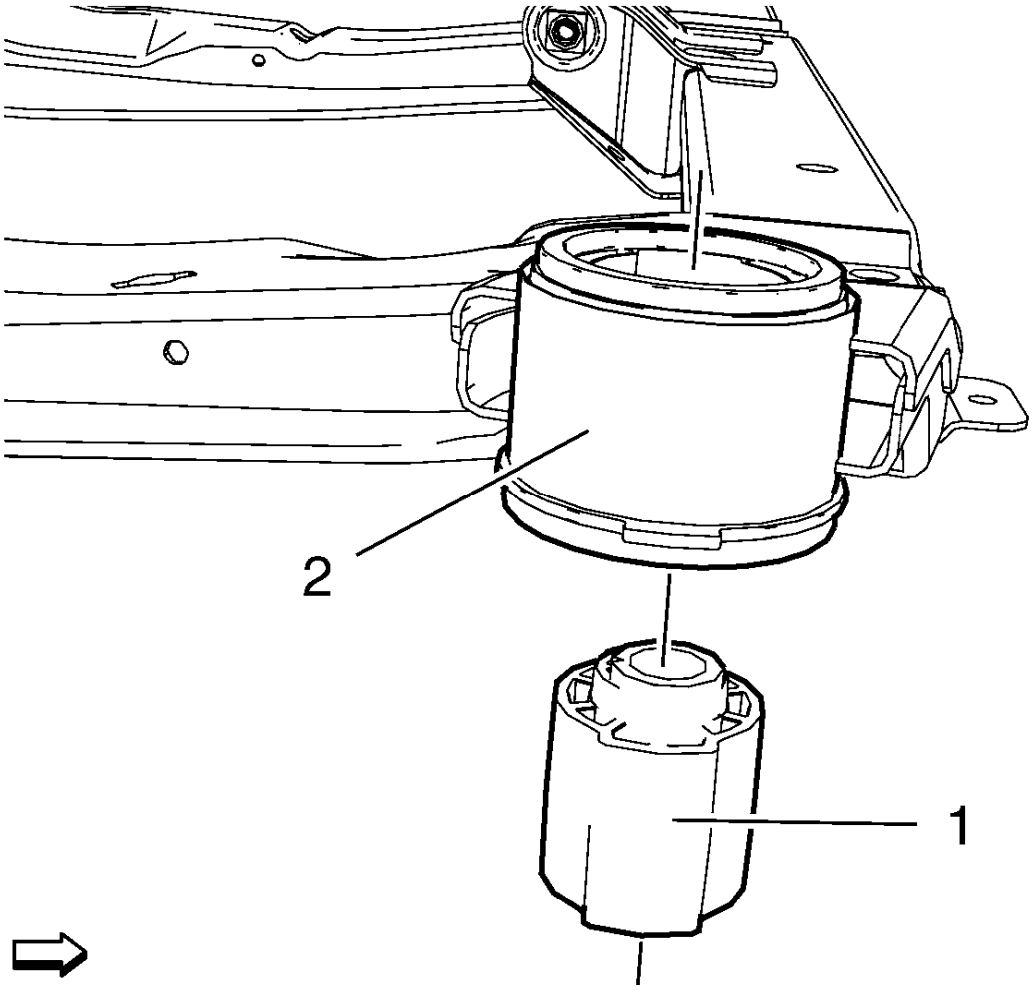

Fig. 21: View Of Frame Insulator And Core
Courtesy of GENERAL MOTORS COMPANY

4. Remove frame insulator core (1) from outer frame insulator (2).

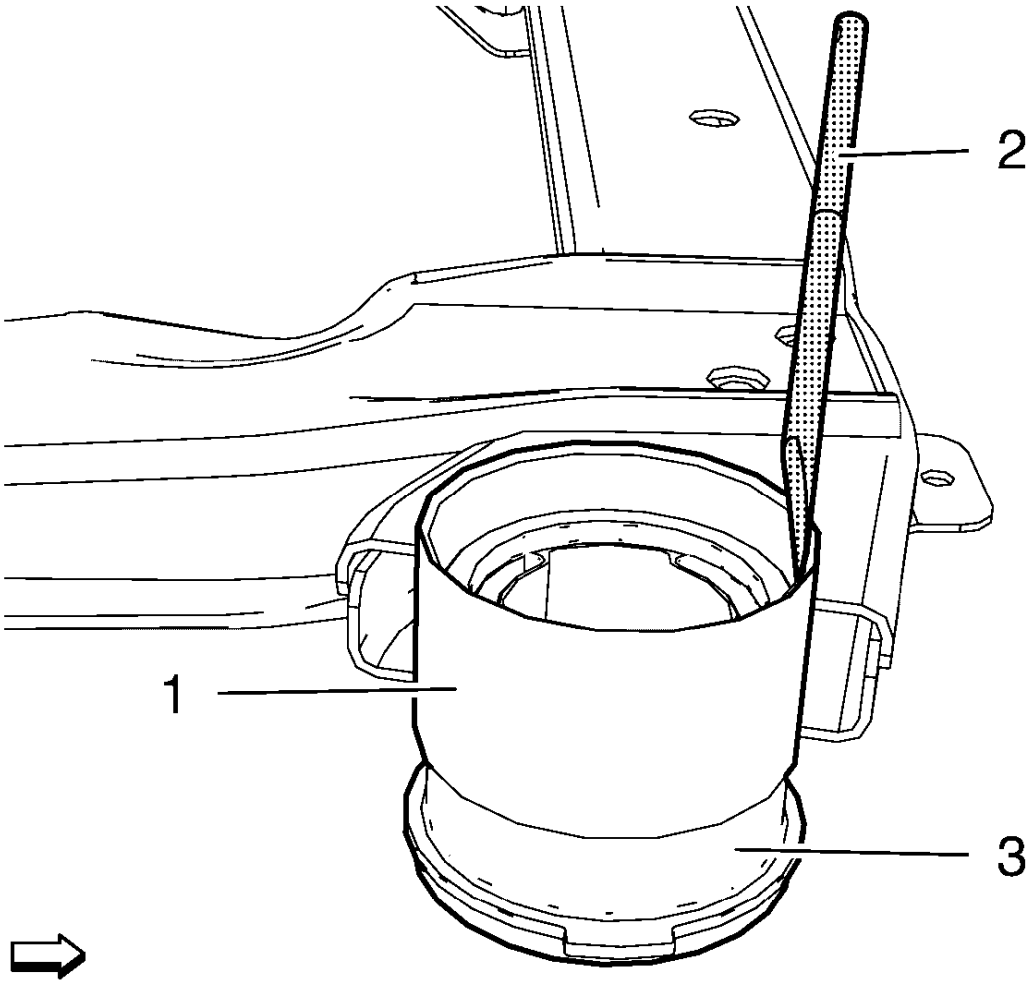

Fig. 22: View Of Front Suspension Frame, Insulator And Chisel
Courtesy of GENERAL MOTORS COMPANY

5. Remove the frame insulator (3) from drivetrain and front suspension frame (1) using a chisel (2) or equivalent.

Installation Procedure

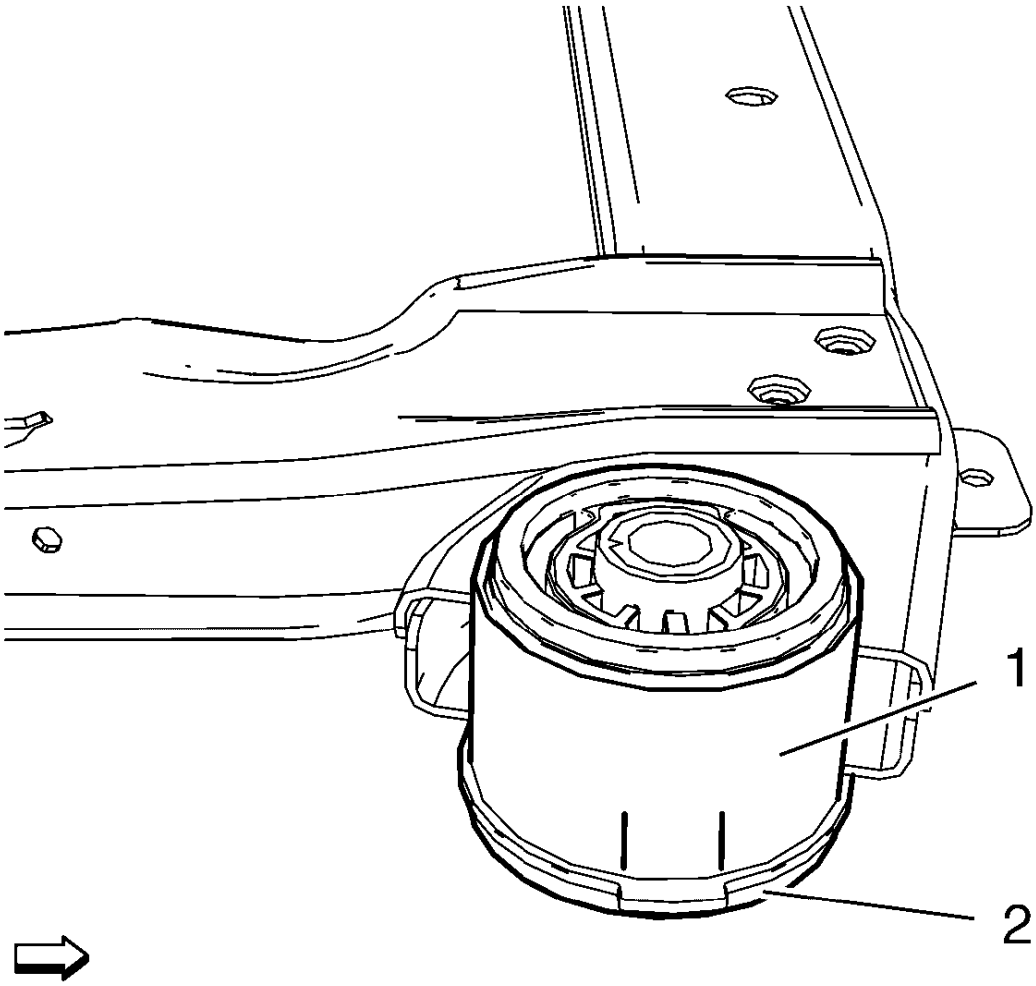

Fig. 23: View Of Frame And Insulator
Courtesy of GENERAL MOTORS COMPANY

1. Install the following components on the drivetrain and front suspension frame:
   - **CH-906-14** Adapter.
   - **CH-906-42** Adapter.
   - **CH-50342** Threaded Rod.

   NOTE: Check marking of frame insulator.

   - Align the insulator tab with the alignment marks (1) on the frame.
2. Carefully install the frame insulator in to the front suspension frame.
3. Install the drivetrain and front suspension frame. Refer to **Drivetrain and Front Suspension Frame Replacement**.

FRONT WHEELHOUSE LINER REPLACEMENT

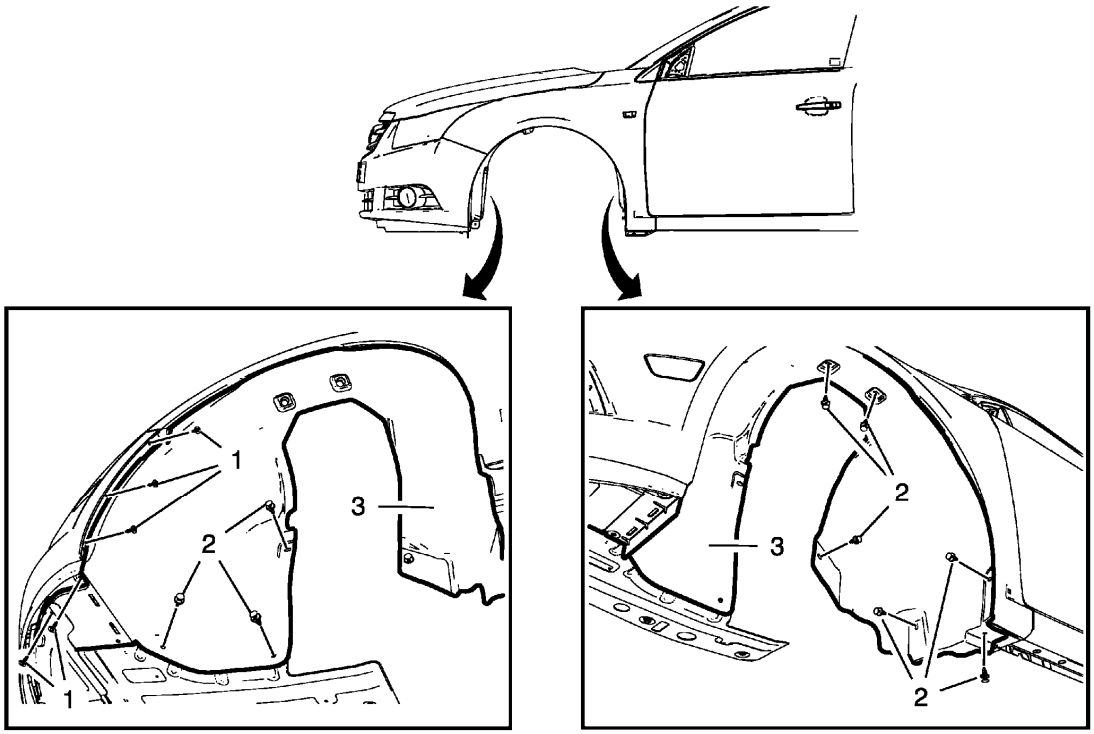

Fig. 24: Front Wheelhouse Liner
Courtesy of GENERAL MOTORS COMPANY

Front Wheelhouse Liner Replacement

Callout	Component Name
Preliminary Procedures Remove the tire and wheel assembly. Refer to **Tire and Wheel Removal and Installation** .	
1	Front Wheelhouse Liner Screw (Qty: 5) **CAUTION:** **Refer to Fastener Caution .** **Tighten** 2.5 N.m (23 lb in)
2	Front Wheelhouse Liner Plastic Retainer (Qty: 9)
3	Front Wheelhouse Liner

REAR WHEELHOUSE LINER REPLACEMENT

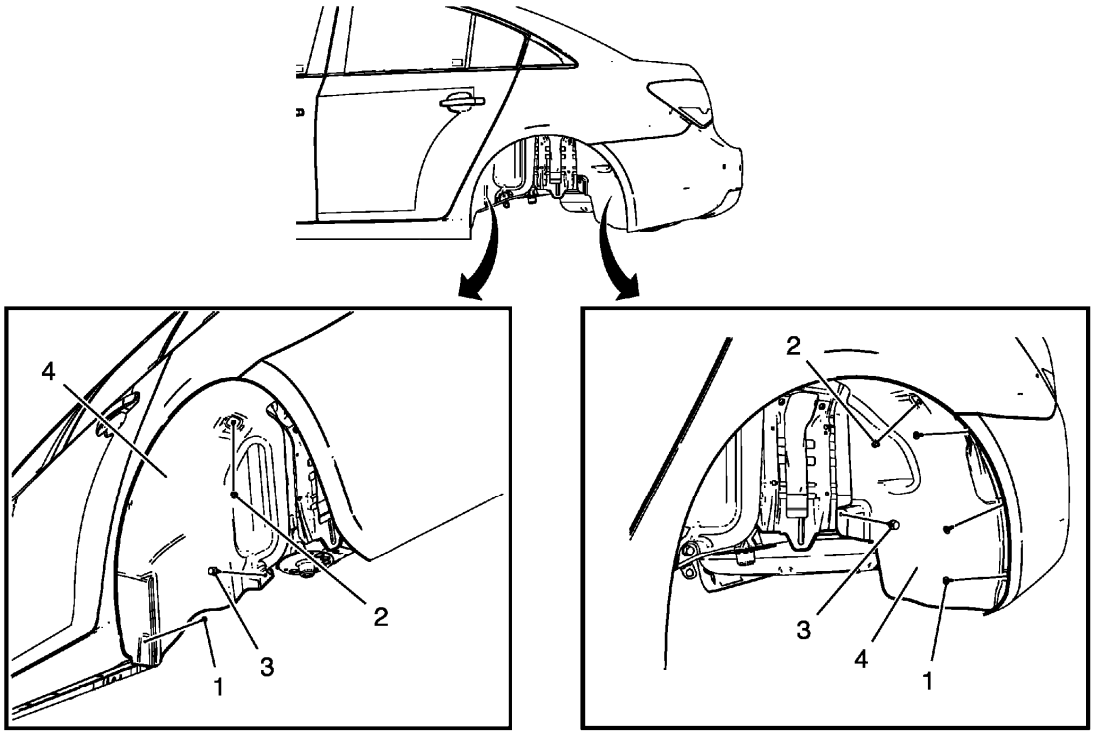

Fig. 25: View Of Rear Wheelhouse Panel Liner, Retainers, Nuts And Screws
Courtesy of GENERAL MOTORS COMPANY

Rear Wheelhouse Liner Replacement

Callout	Component Name
Preliminary Procedure Remove the tire and wheel assembly. Refer to **Tire and Wheel Removal and Installation** .	
1	Rear Wheelhouse Panel Liner Screw (Qty: 4) **CAUTION:** **Refer to Fastener Caution .** **Tighten** 2.5 N.m (23 lb in)
2	Rear Wheelhouse Panel Liner Nut (Qty: 2) **Tighten** 2.5 N.m (23 lb in)
3	Rear Wheelhouse Panel Liner Plastic Retainer (Qty: 2)
4	Rear Wheelhouse Panel Liner

SPECIAL TOOLS AND EQUIPMENT

SPECIAL TOOLS

Illustration	Tool Number/ Description
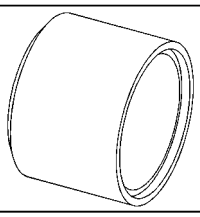	CH 906-14 Adapter
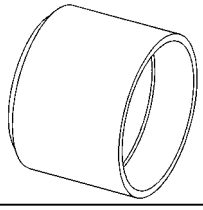	CH 906-42 Adapter
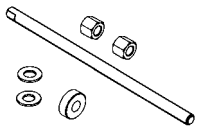	CH 50342 Threaded Rod

2013 ACCESSORIES & EQUIPMENT

Instrument Panel and Console Trim - Cruze

SPECIFICATIONS

FASTENER TIGHTENING SPECIFICATIONS

Fastener Tightening Specifications

Application	Specification	
	Metric	English
Driver Information Display Bezel Screw	2.5 N.m	22 lb in
Driver Information Display Screw	2.5 N.m	22 lb in
Front Floor Console Screw	2.5 N.m	22 lb in
Front Floor Console Storage Tray Screw	2.5 N.m	22 lb in
Front Floor Console Armrest Bolt	2.5 N.m	22 lb in
Instrument Carrier Support Bolt	9 N.m	80 lb in
Instrument Carrier Support Screw	2.5 N.m	22 lb in
Instrument Cluster Screw	2.5 N.m	22 lb in
Instrument Cluster Display Switch Screw	1.5 N.m	13 lb in
Instrument Panel Accessory Bezel Screw	2.5 N.m	22 lb in
Instrument Panel Assembly Screw	9 Y	80 lb in
Instrument Panel Bolt	9 N.m	80 lb in
Instrument Panel Screw	2.5 N.m	22 lb in
Instrument Panel Cluster Lower Trim Plate Screw	2.5 N.m	22 lb in
Instrument Panel Compartment Bracket Bolt	9 N.m	80 lb in
Instrument Panel Compartment Bracket Screw	2.5 N.m	22 lb in
Instrument Panel Compartment Screw	2.5 N.m	22 lb in
Instrument Panel Inflatable Restraint Module Bracket Nut	9 Y	80 lb in
Instrument Panel Lower Trim Pad Screw	2.5 N.m	22 lb in
Instrument Panel Outer Air Outlet Duct Screw	2.5 N.m	22 lb in
Instrument Panel Steering Column Lower Trim Cover Bolt	2.5 N.m	22 lb in
Instrument Panel Tie Bar Bolt	20 N.m	15 lb ft
Instrument Panel Tie Bar Brace Bolt	20 N.m	15 lb ft
Instrument Panel Upper Compartment Screw	2.5 N.m	22 lb in
Instrument Panel Upper Trim Pad Screw	2.5 N.m	22 lb in
Steering Column Lower Trim Cover Bolt	2.5 N.m	22 lb in

REPAIR INSTRUCTIONS

INSTRUMENT PANEL INSULATOR SEAL REPLACEMENT

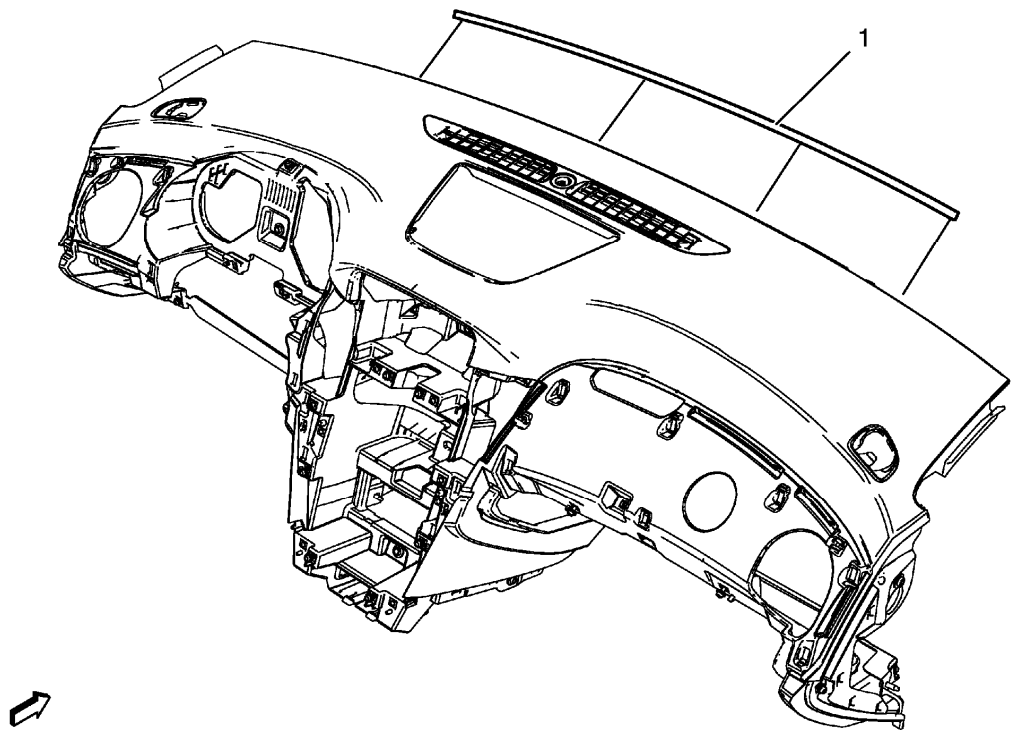

Fig. 1: View Of Instrument Panel Insulator Seal
Courtesy of GENERAL MOTORS COMPANY

Instrument Panel Insulator Seal Replacement

Callout	Component Name
Preliminary Procedures Remove the instrument panel assembly. Refer to **Instrument Panel Assembly Replacement**.	
1	Instrument Panel Insulator Seal

INSTRUMENT PANEL INSULATOR PANEL REPLACEMENT - RIGHT SIDE

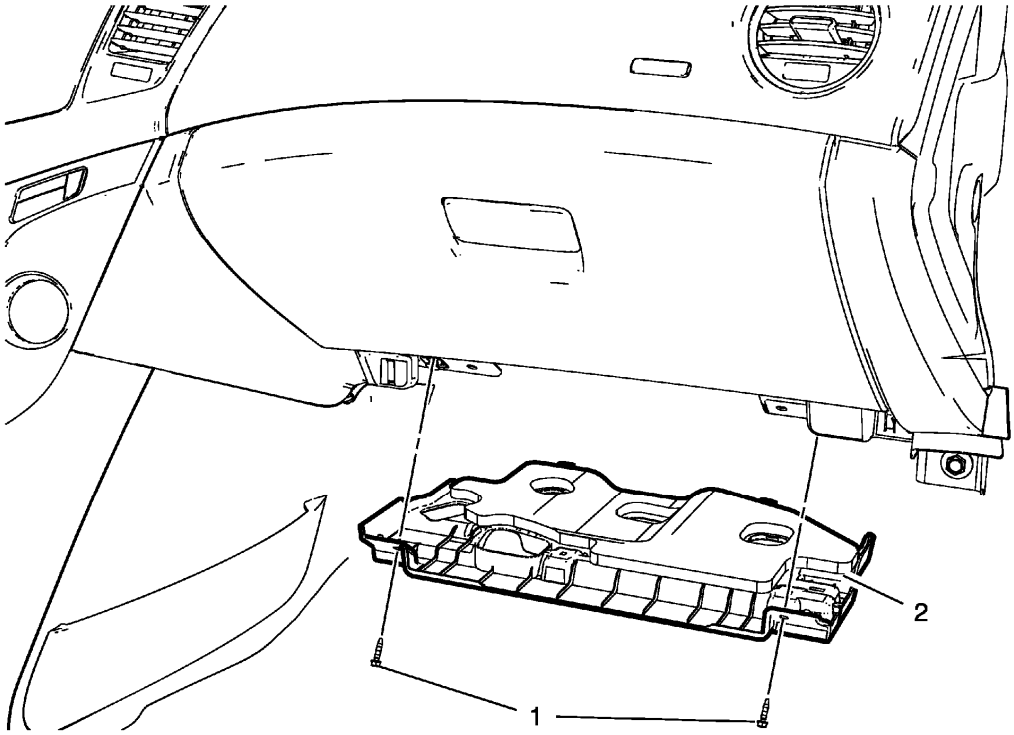

Fig. 2: Instrument Panel Insulator Panel - Right Side
Courtesy of GENERAL MOTORS COMPANY

Instrument Panel Insulator Panel Replacement - Right Side

Callout	Component Name
1	Instrument Panel Insulator Panel Fastener (Qty: 2) **CAUTION:** **Refer to Fastener Caution .**
2	Instrument Panel Insulator Panel

INSTRUMENT PANEL CENTER UPPER MOLDING REPLACEMENT

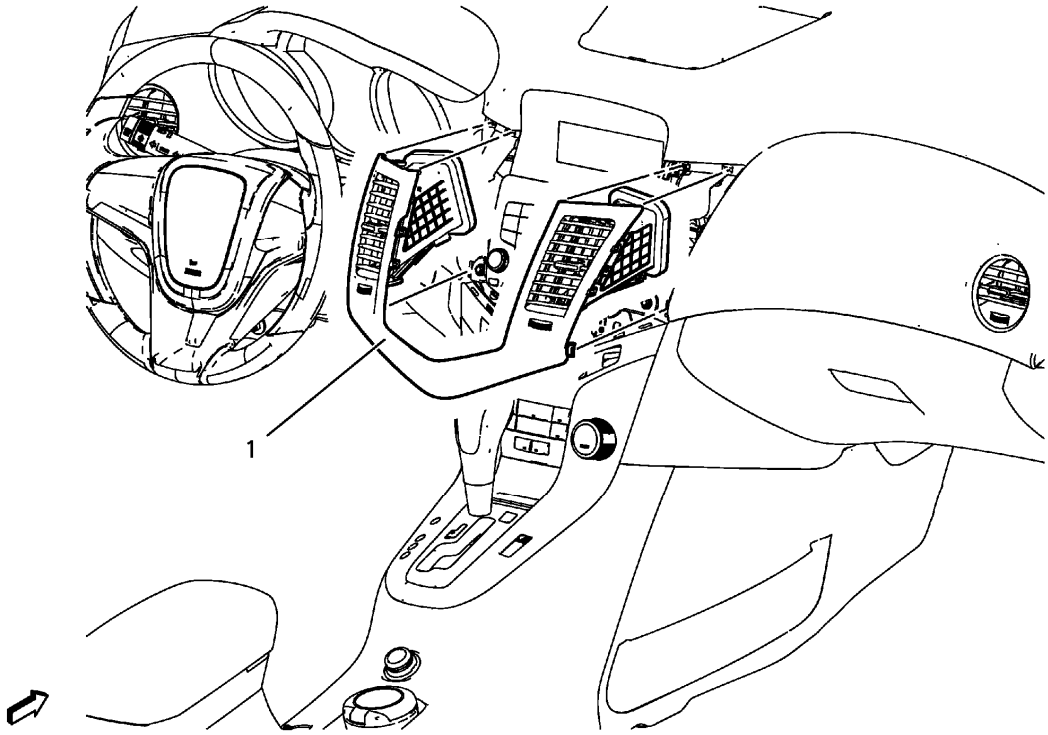

Fig. 3: View Of Instrument Panel Center Upper Molding Assembly
Courtesy of GENERAL MOTORS COMPANY

Instrument Panel Center Upper Molding Replacement

Callout	Component Name
1	Instrument Panel Center Upper Molding Assembly **Procedure** 1. Use a flat-bladed plastic trim tool to remove the instrument panel center upper molding. 2. When replacing the instrument panel center upper molding, remove both instrument panel center air outlet. Refer to **Instrument Panel Center Air Outlet Replacement** .

INSTRUMENT PANEL UPPER TRIM PANEL REPLACEMENT - RIGHT SIDE

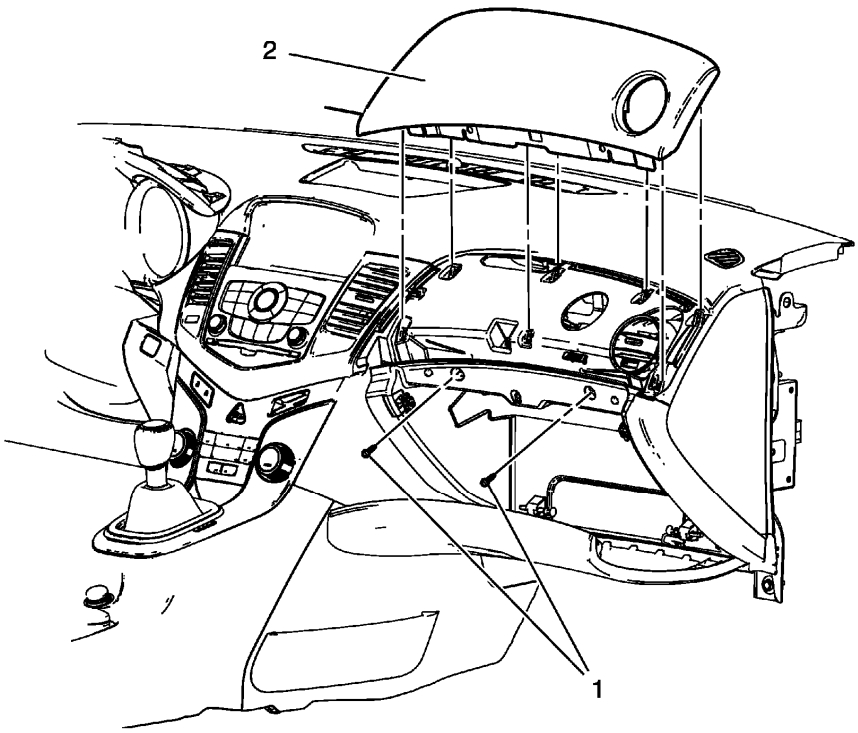

Fig. 4: Instrument Panel Upper Trim Panel - Right Side
Courtesy of GENERAL MOTORS COMPANY

Instrument Panel Upper Trim Panel Replacement - Right Side

Callout	Component Name
Preliminary Procedures Remove the instrument panel compartment. Refer to **Instrument Panel Compartment Replacement**.	
1	Instrument Panel Upper Trim Panel Screw (Qty 2) **CAUTION:** **Refer to Fastener Caution .** **Tighten** 2.5 N.m (22 lb in)
2	Instrument Panel Upper Trim Panel

INSTRUMENT PANEL UPPER TRIM PANEL REPLACEMENT - LEFT SIDE

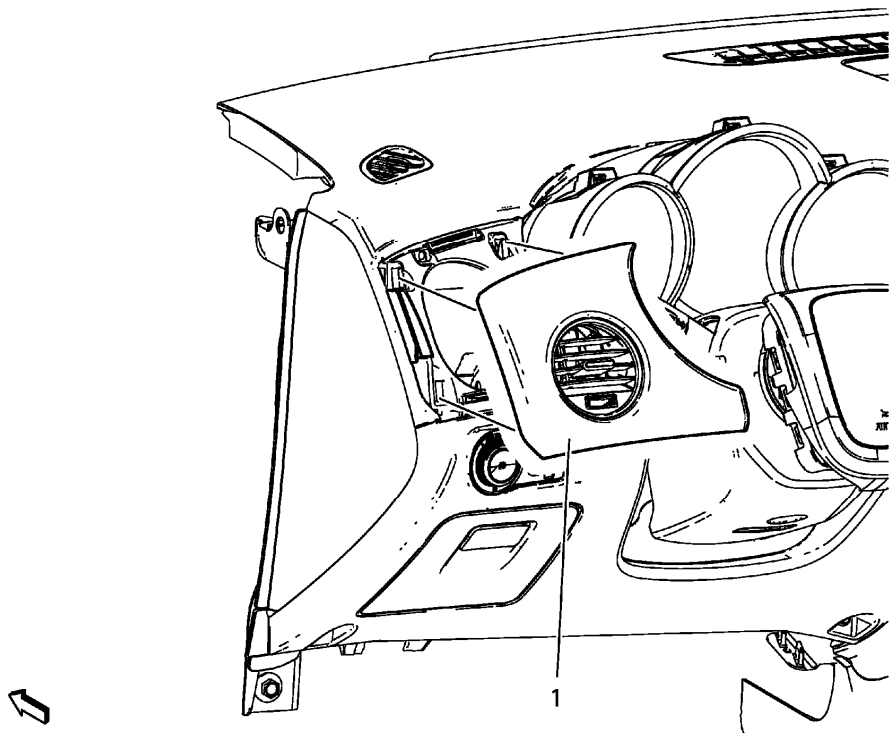

Fig. 5: Instrument Panel Upper Trim Panel - Left Side
Courtesy of GENERAL MOTORS COMPANY

Instrument Panel Upper Trim Panel Replacement - Left Side

Callout	Component Name
Preliminary Procedures Remove instrument panel cluster. Refer to **Instrument Cluster Replacement** .	
1	Instrument Panel Upper Trim Panel- Left Side **Procedure** When replacing the instrument panel upper trim panel, transfer the instrument panel outer air outlet.

INSTRUMENT PANEL ACCESSORY BEZEL REPLACEMENT

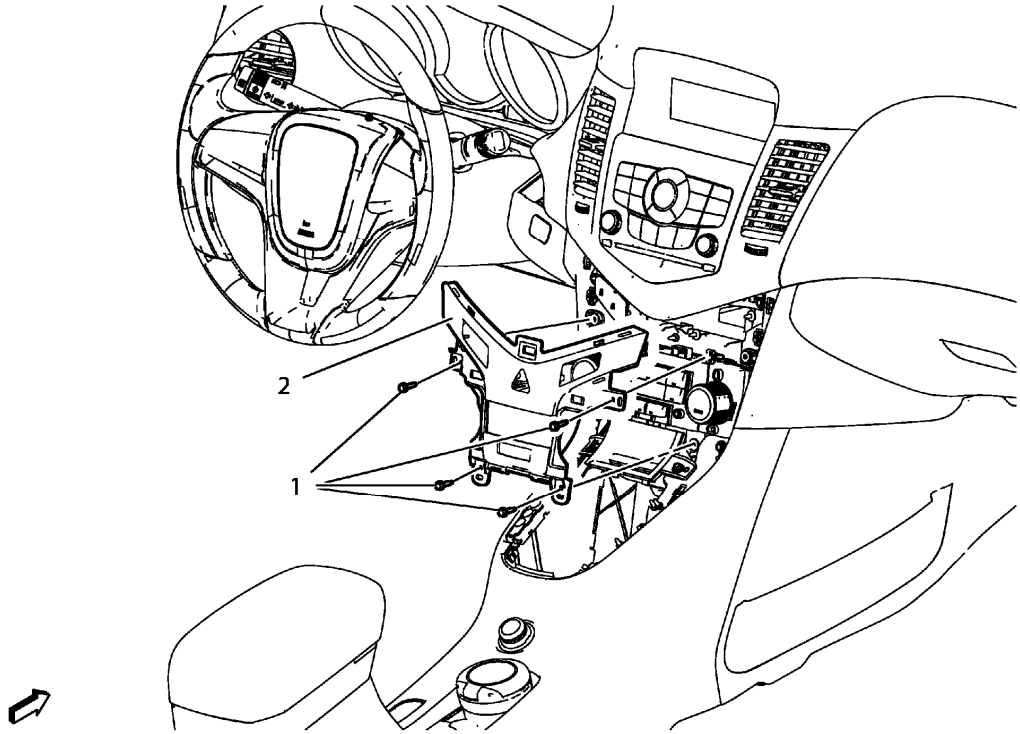

Fig. 6: View Of Instrument Panel Accessory Bezel And Screws
Courtesy of GENERAL MOTORS COMPANY

Instrument Panel Accessory Bezel Replacement

Callout	Component Name
Preliminary Procedures 1. Remove the instrument panel center upper molding. Refer to **Instrument Panel Center Upper Molding Replacement**. 2. Remove the front floor console stowage tray. Refer to **Front Floor Console Stowage Tray Replacement**.	
1	Instrument Panel Accessory Bezel Screw (Qty: 4) **CAUTION:** **Refer to Fastener Caution .** **Tighten** 2.5 N.m (22 lb in).
2	Instrument Panel Accessory Bezel **Procedure** 1. Gently pry the outer edges of the bezel to release clips.

	2. Disconnect electrical connectors. 3. Transfer parts as needed.

DRIVER INFORMATION DISPLAY BEZEL REPLACEMENT

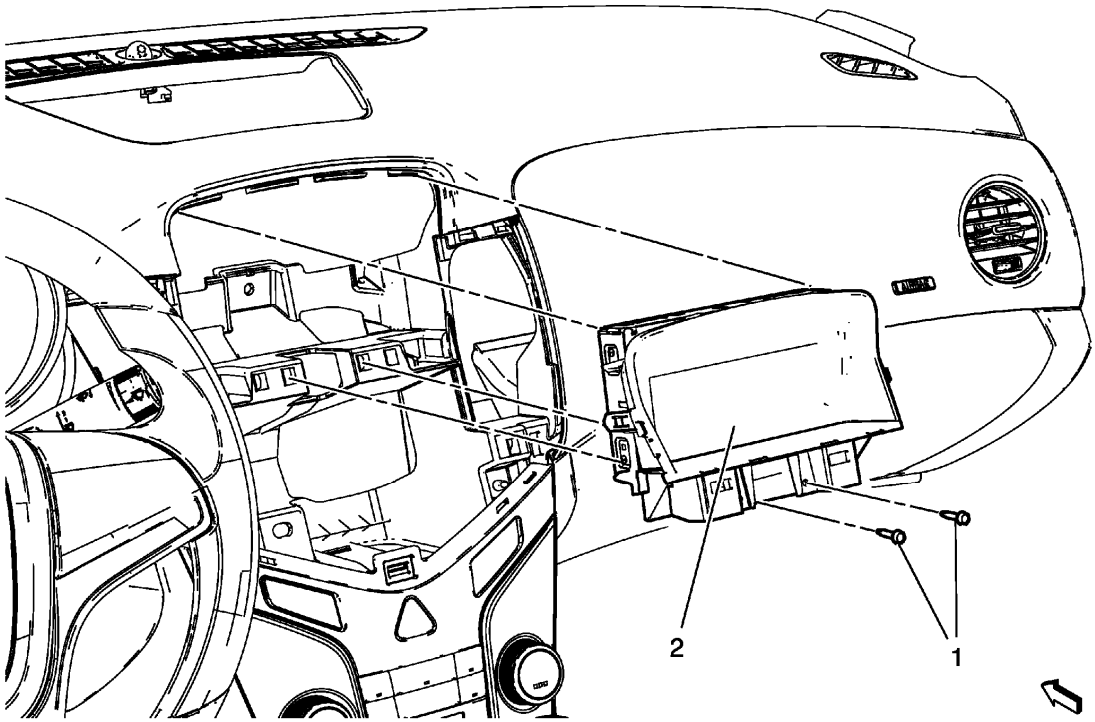

Fig. 7: View Of Driver Information Display Bezel And Screws
Courtesy of GENERAL MOTORS COMPANY

Driver Information Display Bezel Replacement

Callout	Component Name
Preliminary Procedures Remove the radio control module. Refer to **Radio Control Module Replacement** .	
1	Driver Information Display Bezel Screw (Qty: 2) **CAUTION:** **Refer to Fastener Caution** **Tighten** 2.5 N.m (22 lb in)
	Driver Information Display Bezel **Procedure**

2	1. Depress tabs on side of bezel. 2. When replacing the driver information display bezel, remove the driver information display. Refer to **Driver Information Display Replacement** .

INSTRUMENT PANEL CLUSTER TRIM PLATE REPLACEMENT

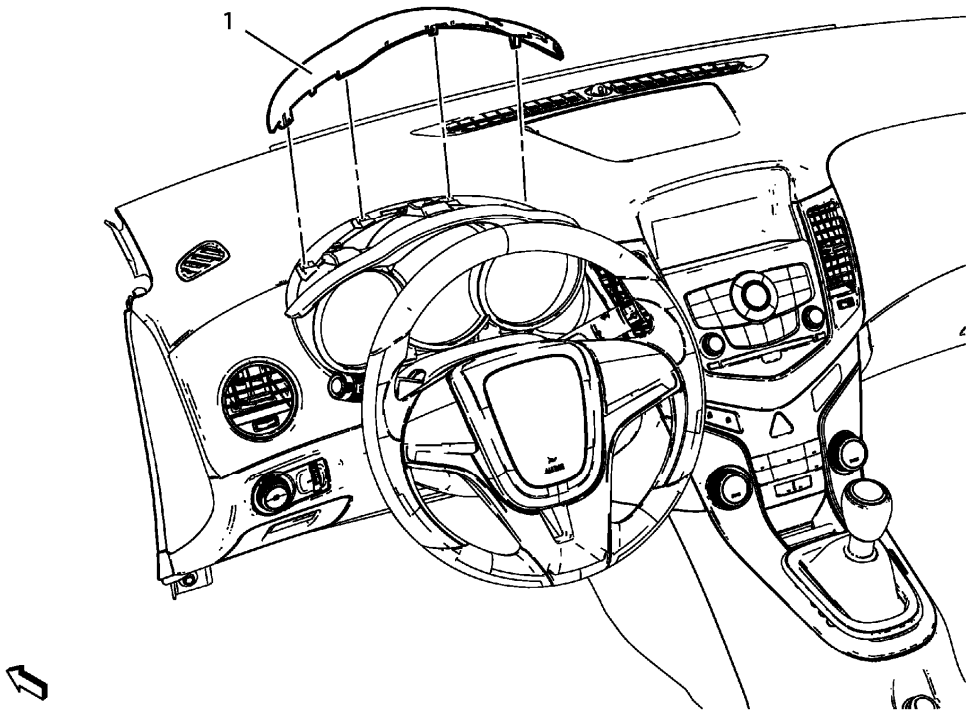

Fig. 8: View Of Instrument Panel Cluster Trim Plate Assembly
Courtesy of GENERAL MOTORS COMPANY

Instrument Panel Cluster Trim Plate Replacement

Callout	Component Name
1	Instrument Panel Cluster Trim Plate Assembly **Procedure** Remove the instrument panel cluster lower trim plate, if needed. Refer to **Instrument Panel Cluster Lower Trim Plate Replacement**

INSTRUMENT PANEL OUTER TRIM COVER REPLACEMENT - RIGHT SIDE

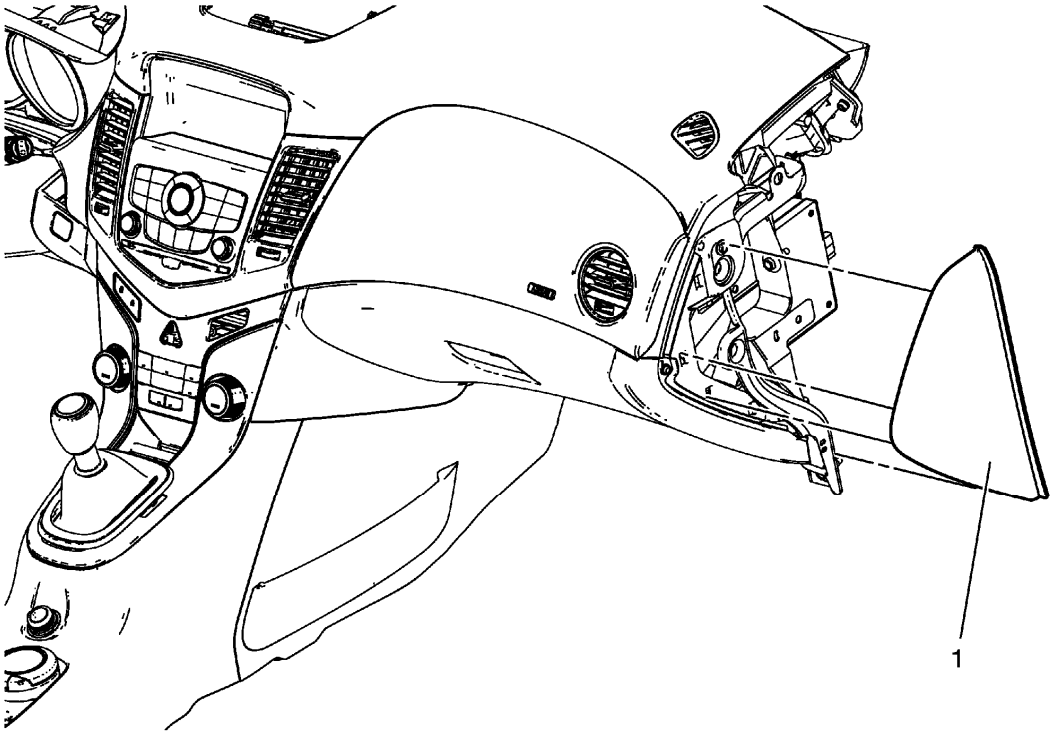

Fig. 9: View Of Instrument Panel Outer Trim Cover - Right Side
Courtesy of GENERAL MOTORS COMPANY

Instrument Panel Outer Trim Cover Replacement - Right Side

Callout	Component Name
1	Instrument Panel Outer Trim Cover- Right Side.

INSTRUMENT PANEL OUTER TRIM COVER REPLACEMENT - LEFT SIDE

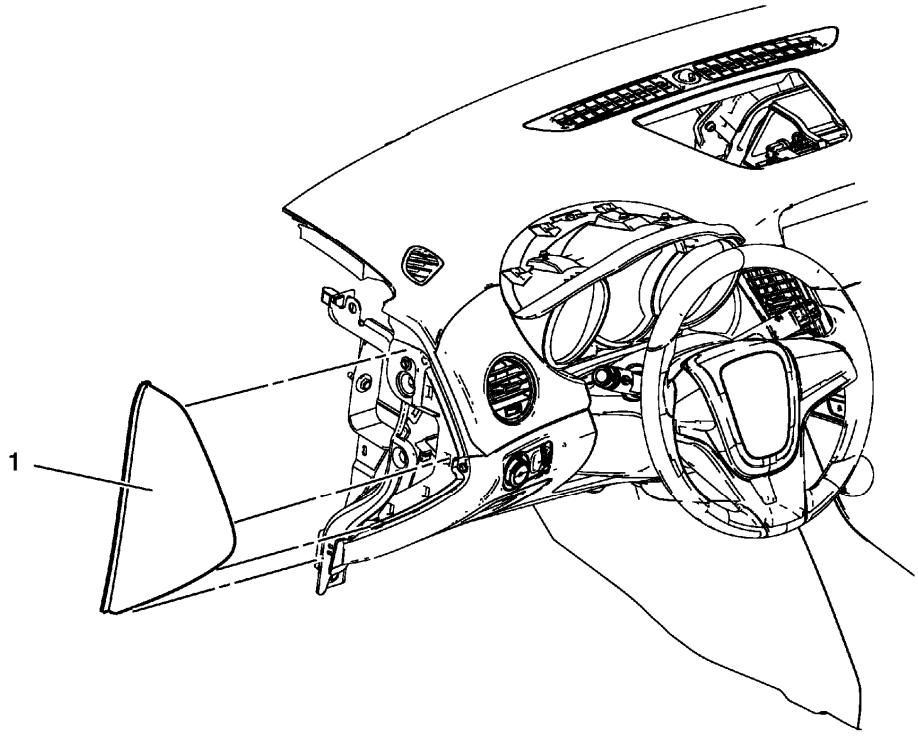

Fig. 10: View Of Instrument Panel Outer Trim Cover - Left Side
Courtesy of GENERAL MOTORS COMPANY

Instrument Panel Outer Trim Cover Replacement - Left Side

Callout	Component Name
1	Instrument Panel Outer Trim Cover- Left Side.

INSTRUMENT PANEL LOWER TRIM PAD COVER REPLACEMENT (WITHOUT KNEE AIRBAG)

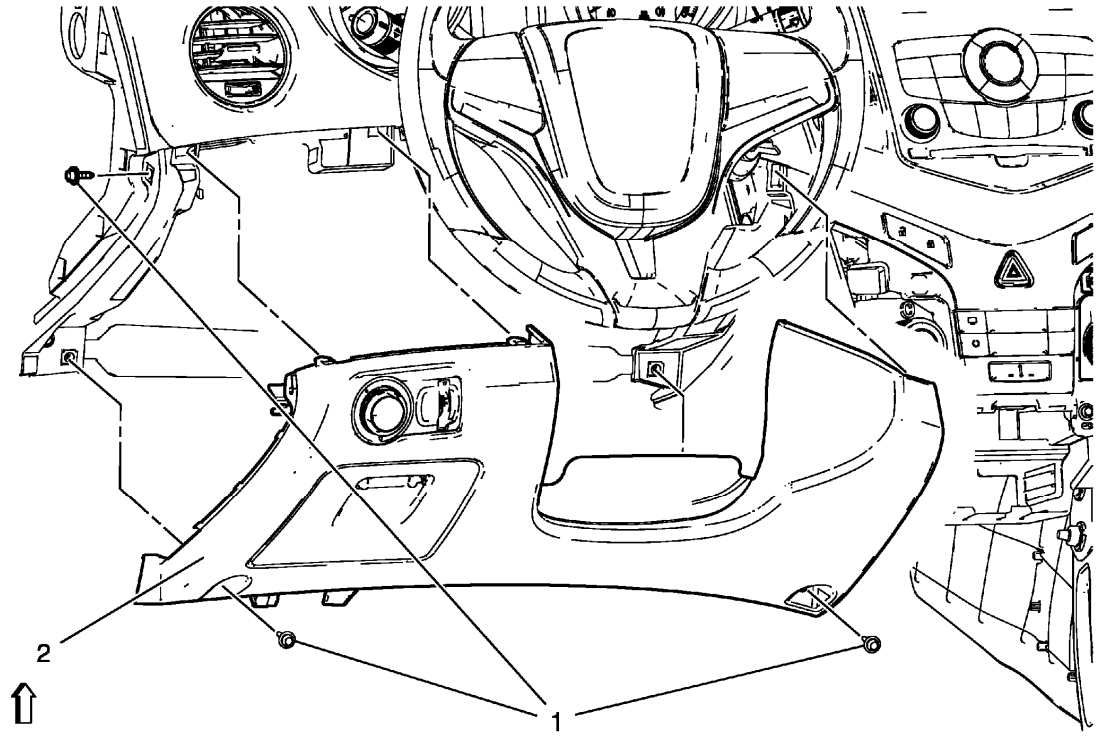

Fig. 11: View Of Instrument Panel Lower Trim Pad Cover Assembly And Screws
Courtesy of GENERAL MOTORS COMPANY

Instrument Panel Lower Trim Pad Cover Replacement (without Knee Airbag)

Callout	Component Name
Preliminary Procedure Remove the left outer trim cover. Refer to **Instrument Panel Outer Trim Cover Replacement - Left Side**.	
1	Instrument Panel Lower Trim Pad Cover Screw (Qty: 3) **CAUTION:** **Refer to Fastener Caution** **Tighten** 2.5 N.m (23 lb in)
2	Instrument Panel Lower Trim Pad Cover Assembly **Procedure** 1. Remove headlamp switch. Refer to **Headlamp Switch Replacement** 2. Disconnect the electrical connectors. 3. When replacing the lower trim pad cover, transfer all necessary

	components.

INSTRUMENT PANEL LOWER TRIM PAD COVER REPLACEMENT (WITH KNEE AIRBAG)

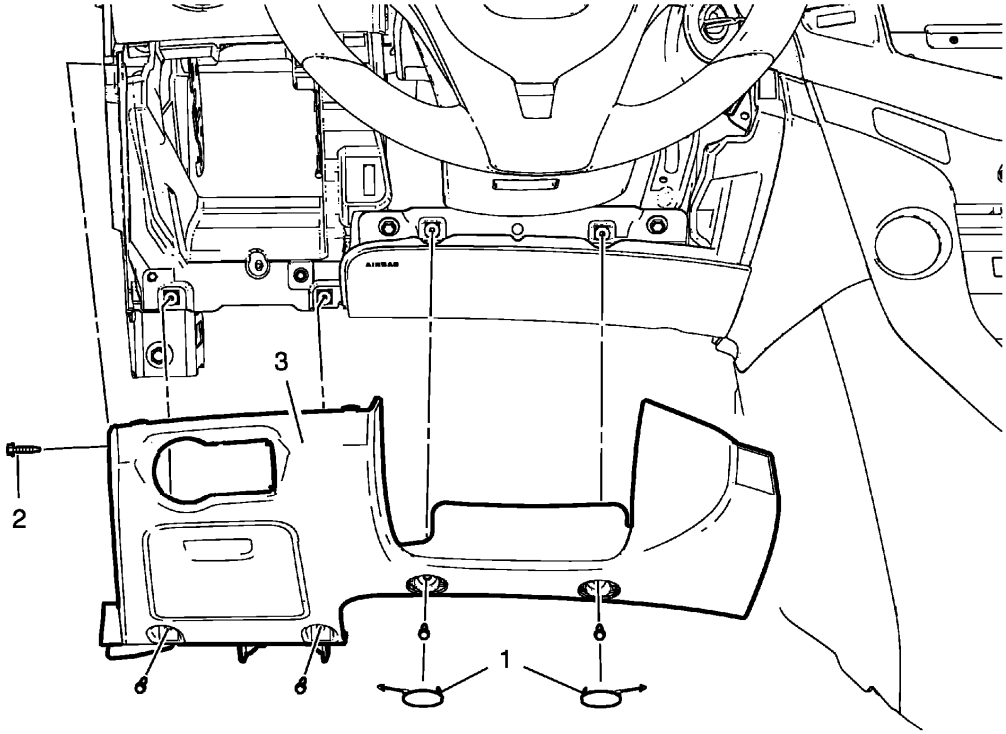

Fig. 12: Instrument Panel Lower Trim Pad Cover (With Knee Airbag)
Courtesy of GENERAL MOTORS COMPANY

Instrument Panel Lower Trim Pad Cover Replacement (with Knee Airbag)

Callout	Component Name
Preliminary Procedures Remove the left outer trim cover. Refer to **Instrument Panel Outer Trim Cover Replacement - Left Side**.	
1	Instrument Panel Lower Trim Pad Cover Screw Cover (Qty: 2)
2	Instrument Panel Lower Trim Pad Cover Screw (Qty: 5) **CAUTION:** **Refer to Fastener Caution .** **Tighten** 2.5 N.m (22 lb in)
	Instrument Panel Lower Trim Pad Cover Assembly **Procedure**

3	1. Remove headlamp switch. Refer to **Headlamp Switch Replacement** . 2. Disconnect the electrical connectors. 3. When replacing the lower trim pad cover, transfer all necessary components.

INSTRUMENT PANEL LOWER TRIM PANEL REPLACEMENT - LEFT SIDE

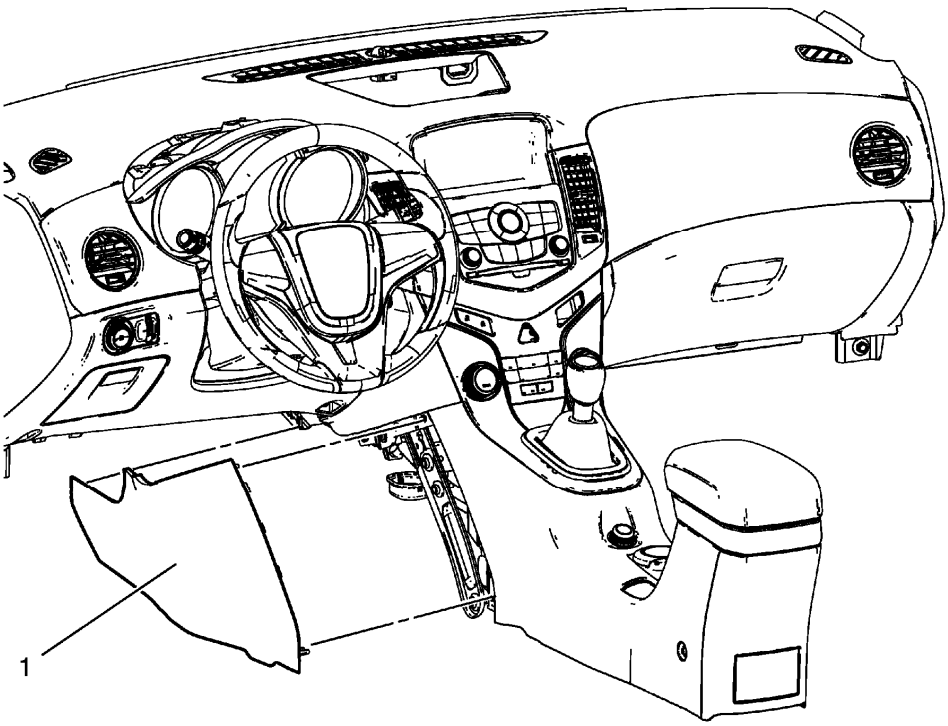

Fig. 13: View Of Instrument Panel Lower Trim Panel - Left Side
Courtesy of GENERAL MOTORS COMPANY

Instrument Panel Lower Trim Panel Replacement - Left Side

Callout	Component Name
1	Instrument Panel Lower Trim Panel Replacement - Left Side

INSTRUMENT PANEL CLUSTER LOWER TRIM PLATE REPLACEMENT

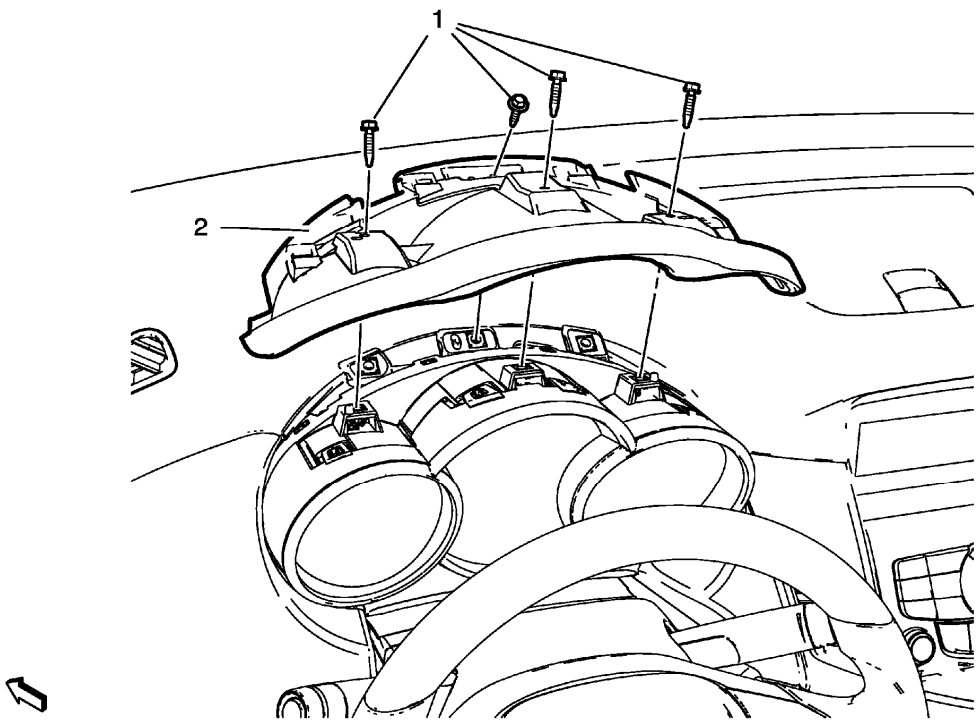

Fig. 14: Instrument Panel Cluster Lower Trim Plate
Courtesy of GENERAL MOTORS COMPANY

Instrument Panel Cluster Lower Trim Plate Replacement

Callout	Component Name
Preliminary Procedures Remove instrument panel cluster trim plate. Refer to **Instrument Panel Cluster Trim Plate Replacement**.	
1	Instrument Panel Cluster Lower Trim Plate Screw (Qty: 4) **CAUTION:** **Refer to Fastener Caution .** **Tighten** 2.5 N.m (22 lb in)
2	Instrument Panel Cluster Lower Trim Plate

INSTRUMENT PANEL LOWER TRIM PANEL REPLACEMENT - RIGHT SIDE

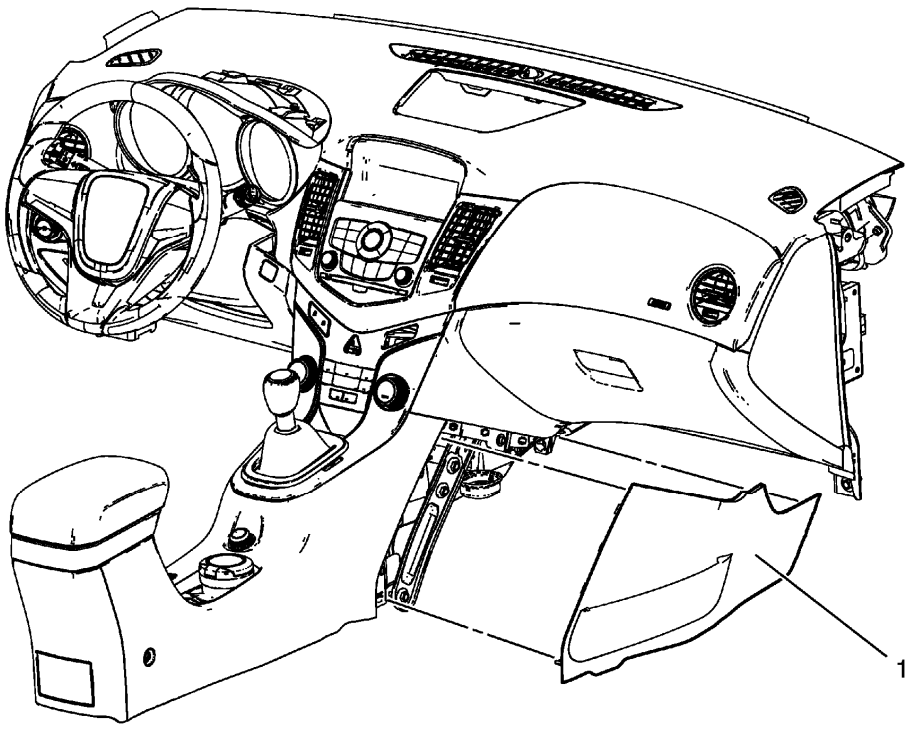

Fig. 15: View Of Instrument Panel Lower Trim Panel - Right Side
Courtesy of GENERAL MOTORS COMPANY

Instrument Panel Lower Trim Panel Replacement - Right Side

Callout	Component Name
1	Instrument Panel Lower Trim Panel Replacement - Right Side

INSTRUMENT PANEL UPPER COMPARTMENT REPLACEMENT

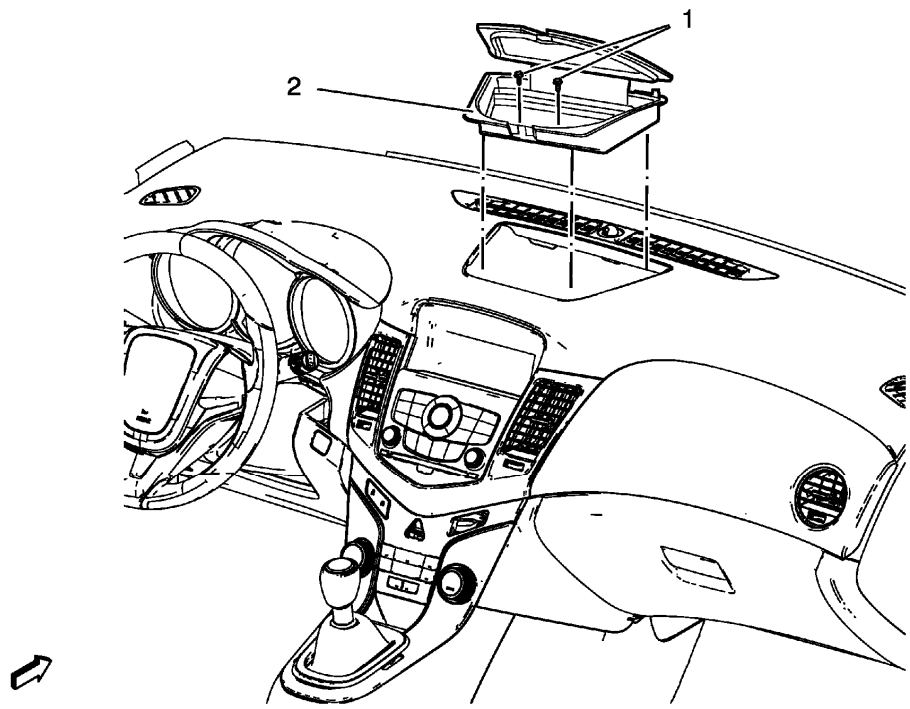

Fig. 16: View Of Instrument Panel Upper Compartment Assembly And Screws
Courtesy of GENERAL MOTORS COMPANY

Instrument Panel Upper Compartment Replacement

Callout	Component Name
1	Instrument Panel Upper Compartment Screw (Qty: 2) **CAUTION:** **Refer to Fastener Caution .** **Procedure** Before removing the instrument panel upper compartment screws, remove mat. **Tighten** 2.5 N.m (23 lb in)
2	Instrument Panel Upper Compartment Assembly

INSTRUMENT PANEL COMPARTMENT REPLACEMENT

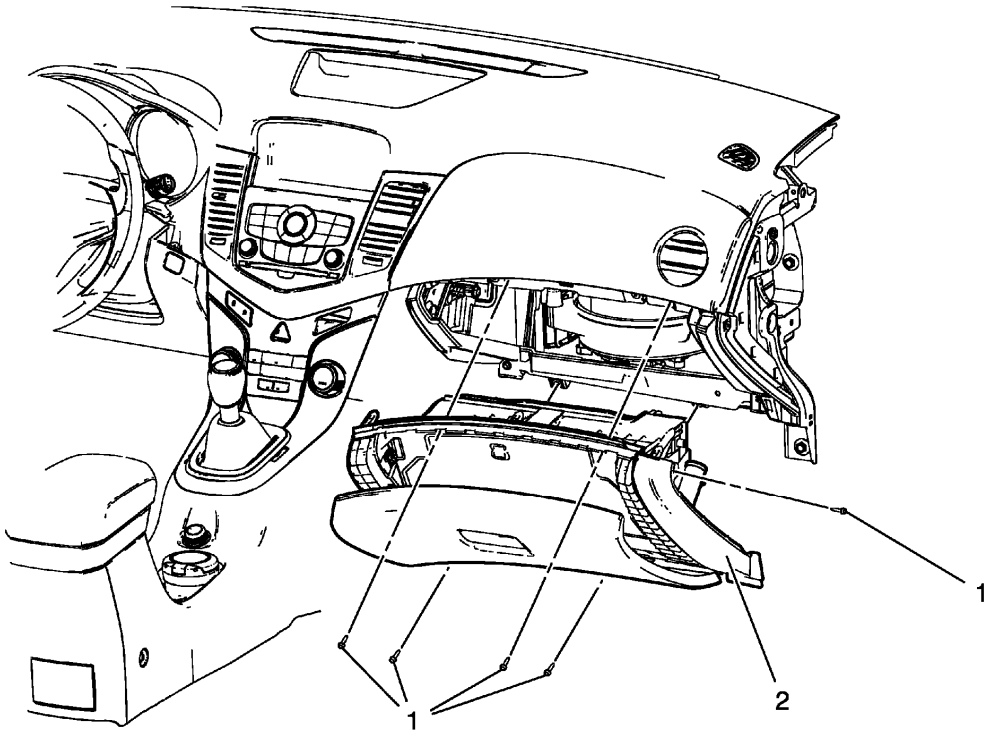

Fig. 17: View Of Instrument Panel Compartment And Screws
Courtesy of GENERAL MOTORS COMPANY

Instrument Panel Compartment Replacement

Callout	Component Name
Preliminary Procedures 1. Remove the instrument panel insulator panel. Refer to **Instrument Panel Insulator Panel Replacement - Right Side**. 2. Remove the inflatable restraint instrument panel lower module, if equipped. Refer to **Instrument Panel Lower Airbag Replacement - Passenger Side** . 3. Remove the instrument panel outer trim cover - right side. Refer to **Instrument Panel Outer Trim Cover Replacement - Right Side**.	
1	Instrument Panel Compartment Screw (Qty: 5) **CAUTION:** **Refer to Fastener Caution .** **Tighten** 2.5 N.m (22 lb in)
2	Instrument Panel Compartment

INSTRUMENT PANEL MOLDING REPLACEMENT

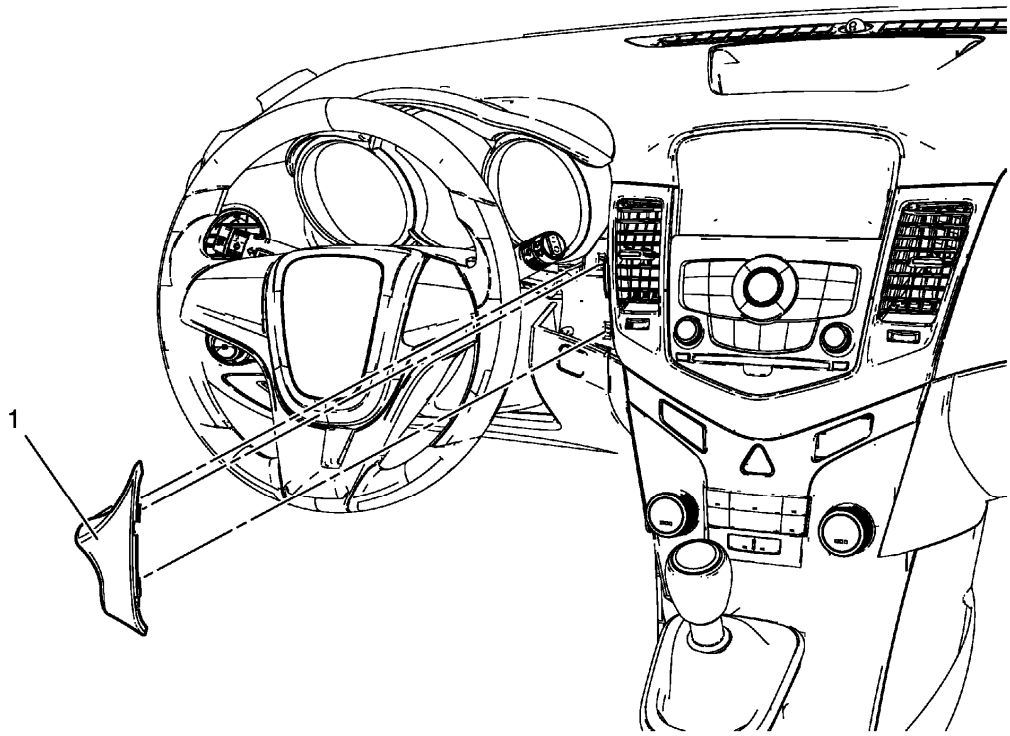

Fig. 18: View Of Instrument Panel Molding Assembly
Courtesy of GENERAL MOTORS COMPANY

Instrument Panel Molding Replacement

Callout	Component Name
1	Instrument Panel Molding Assembly.

INSTRUMENT PANEL UPPER TRIM PAD INSERT REPLACEMENT

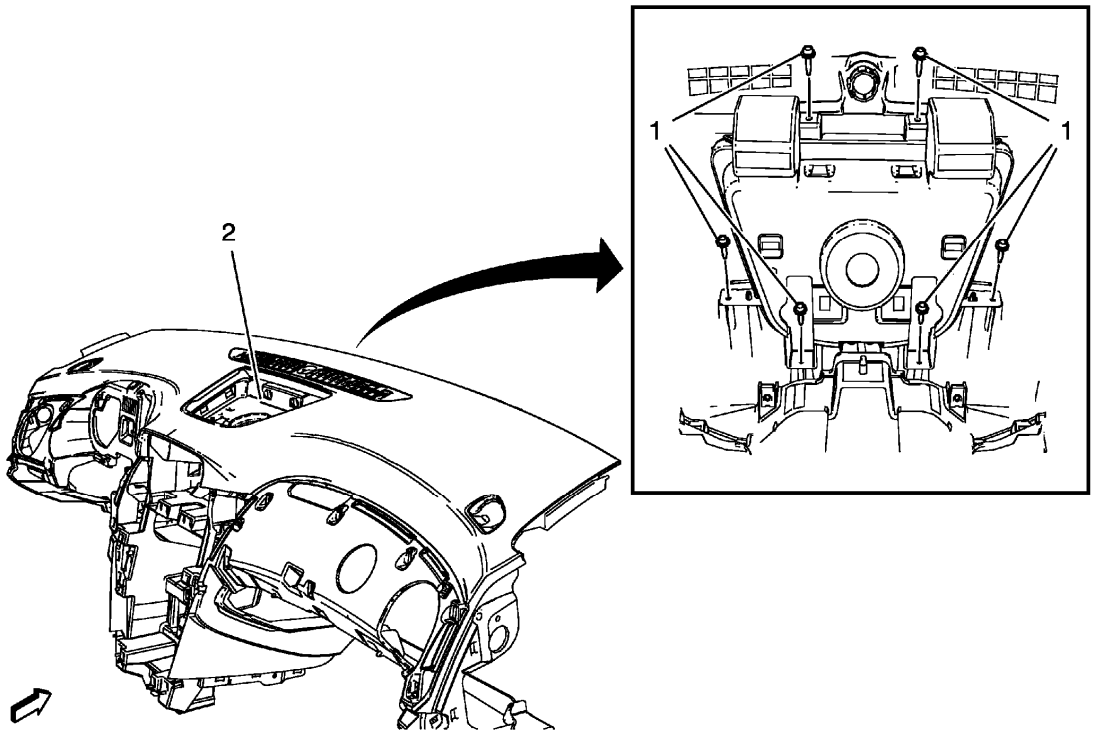

Fig. 19: Instrument Panel Upper Trim Pad Insert
Courtesy of GENERAL MOTORS COMPANY

Instrument Panel Upper Trim Pad Insert Replacement

Callout	Component Name
Preliminary Procedures Remove the instrument panel assembly. Refer to **Instrument Panel Assembly Replacement**.	
1	Instrument Panel Upper Trim Pad Insert Screw (Qty: 6) **CAUTION:** **Refer to Fastener Caution .** **Tighten** 2.5 N.m (22 lb in)
2	Instrument Panel Upper Trim Pad Insert

INSTRUMENT PANEL INFLATABLE RESTRAINT MODULE BRACKET REPLACEMENT

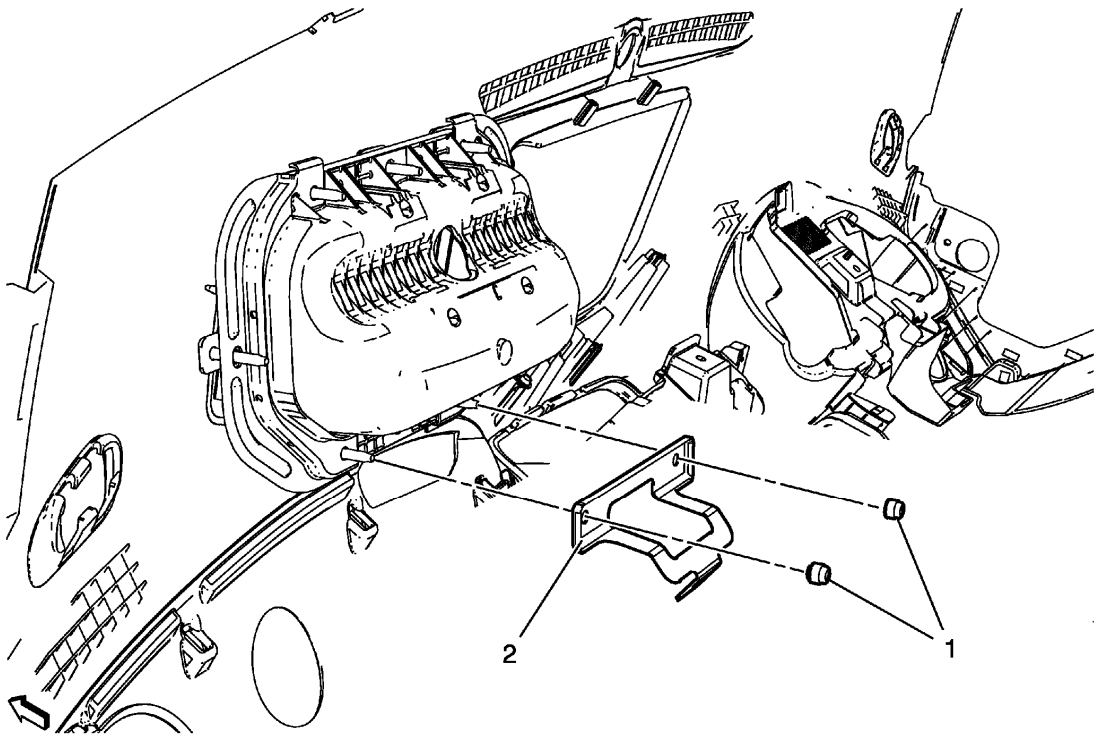

Fig. 20: View Of Instrument Panel Inflatable Restraint Module Bracket Assembly And Nuts
Courtesy of GENERAL MOTORS COMPANY

Instrument Panel Inflatable Restraint Module Bracket Replacement

Callout	Component Name
Preliminary Procedures Remove the instrument panel assembly. Refer to **Instrument Panel Assembly Replacement**.	
1	Instrument Panel Inflatable Restraint Module Bracket Nut (Qty: 2) **CAUTION:** **Refer to Fastener Caution .** **Tighten** 9 N.m (80 lb in)
2	Instrument Panel Inflatable Restraint Module Bracket Assembly

INSTRUMENT PANEL ASSEMBLY REPLACEMENT

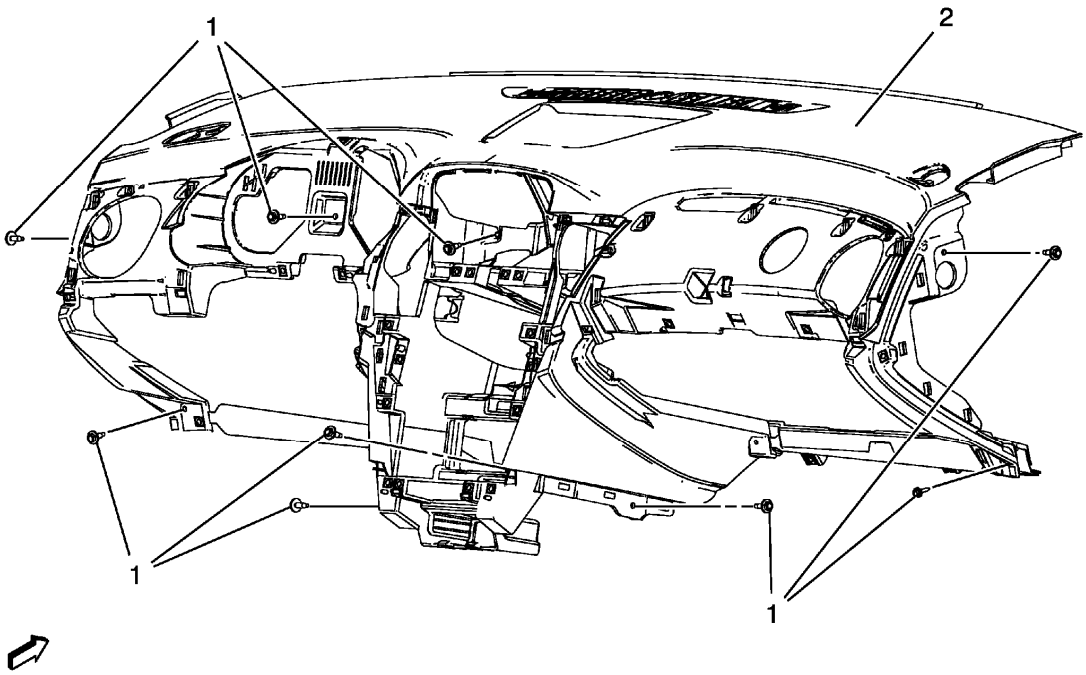

Fig. 21: View Of Instrument Panel Assembly And Screws
Courtesy of GENERAL MOTORS COMPANY

Instrument Panel Assembly Replacement

Callout	Component Name
Preliminary Procedures	
1. Disable the SIR system. Refer to **SIR Disabling and Enabling** .	
2. Remove the windshield garnish moldings. Refer to **Windshield Garnish Molding Replacement** .	
3. Remove the front floor console assembly. Refer to **Front Floor Console Replacement**.	
4. Remove the radio assembly. Refer to **Radio Replacement** .	
5. Remove the driver information display bezel. Refer to **Driver Information Display Bezel Replacement**.	
6. Remove the instrument panel accessory bezel. Refer to **Instrument Panel Accessory Bezel Replacement**.	
7. Remove the steering column. Refer to **Steering Column Replacement** .	
8. Remove the left instrument panel outer trim cover. Refer to **Instrument Panel Outer Trim Cover Replacement - Left Side**.	
9. Remove the instrument panel compartment assembly. Refer to **Instrument Panel Compartment Replacement**.	
10. Remove the instrument panel molding. Refer to **Instrument Panel Molding Replacement**.	
11. Remove the instrument panel upper trim panels. Refer to **Instrument Panel Upper Trim Panel Replacement - Right Side**, and **Instrument Panel Upper Trim Panel Replacement - Left Side**.	

1	Instrument Panel Assembly Screw (Qty: 9) **CAUTION:** **Refer to Fastener Caution .** **Tighten** 9 N.m (80 lb in)
2	Instrument Panel Assembly **Procedure** 1. Note location and routing of the instrument panel wiring harness prior to removal of the instrument panel assembly to ensure proper reinstallation. 2. Disconnect the wiring harness from the instrument panel assembly. 3. With the aid of an assistant, remove the instrument panel assembly from the vehicle. 4. When replacing the instrument panel assembly, transfer all necessary components.

INSTRUMENT PANEL TIE BAR REPLACEMENT

Removal Procedure

1. Remove instrument panel assembly. Refer to **Instrument Panel Assembly Replacement**.

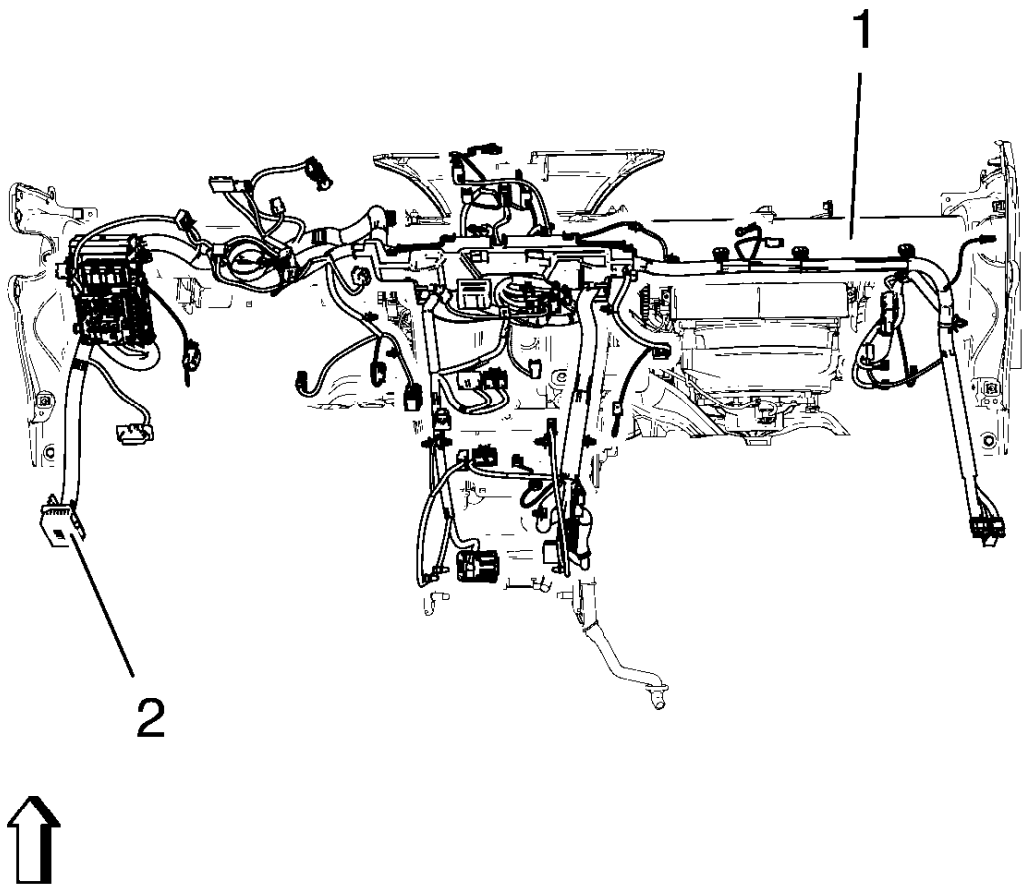

Fig. 22: Instrument Panel Wiring Harness And Instrument Panel Tie Bar
Courtesy of GENERAL MOTORS COMPANY

2. Remove instrument panel wiring harness (2) from instrument panel tie bar (1).

   Disconnect electrical connectors.

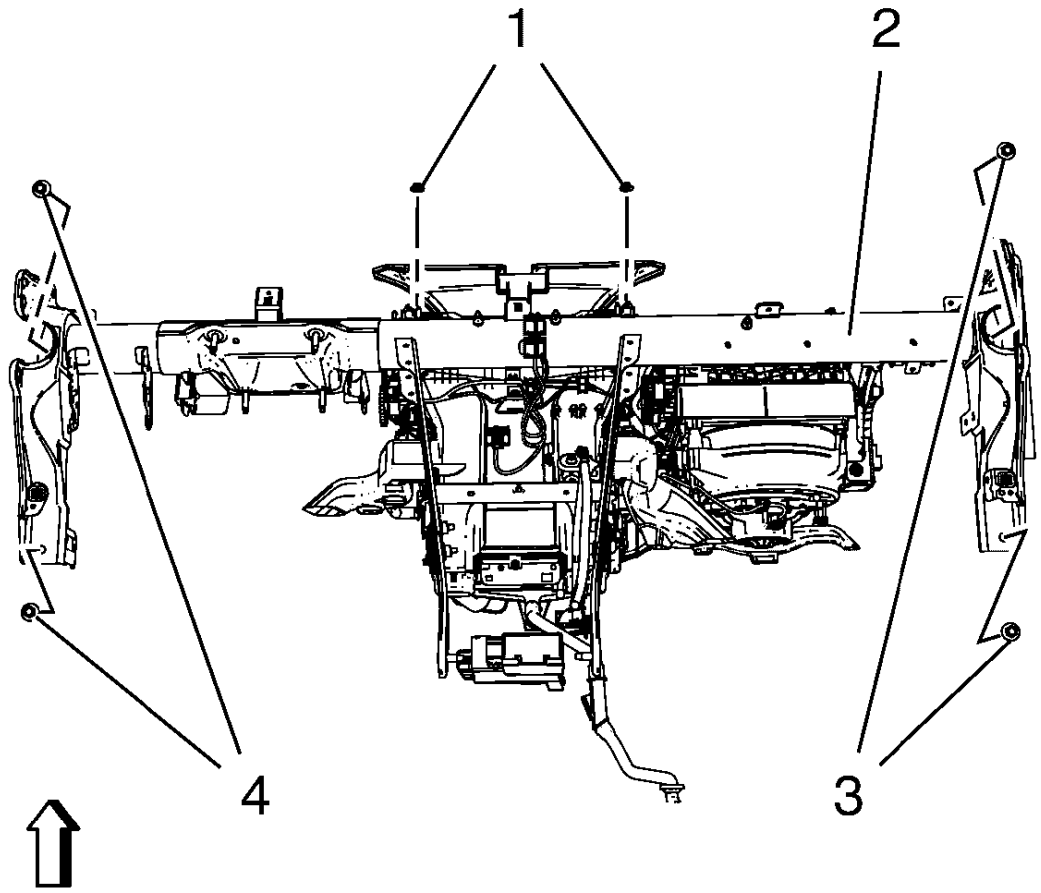

Fig. 23: Instrument Panel Tie Bar, Bolts And Nuts
Courtesy of GENERAL MOTORS COMPANY

3. Remove instrument panel tie bar (2).
    1. Remove 4 instrument panel tie bar bolts (3, 4).
    2. Remove 2 instrument panel tie bar nuts (1).

Installation Procedure

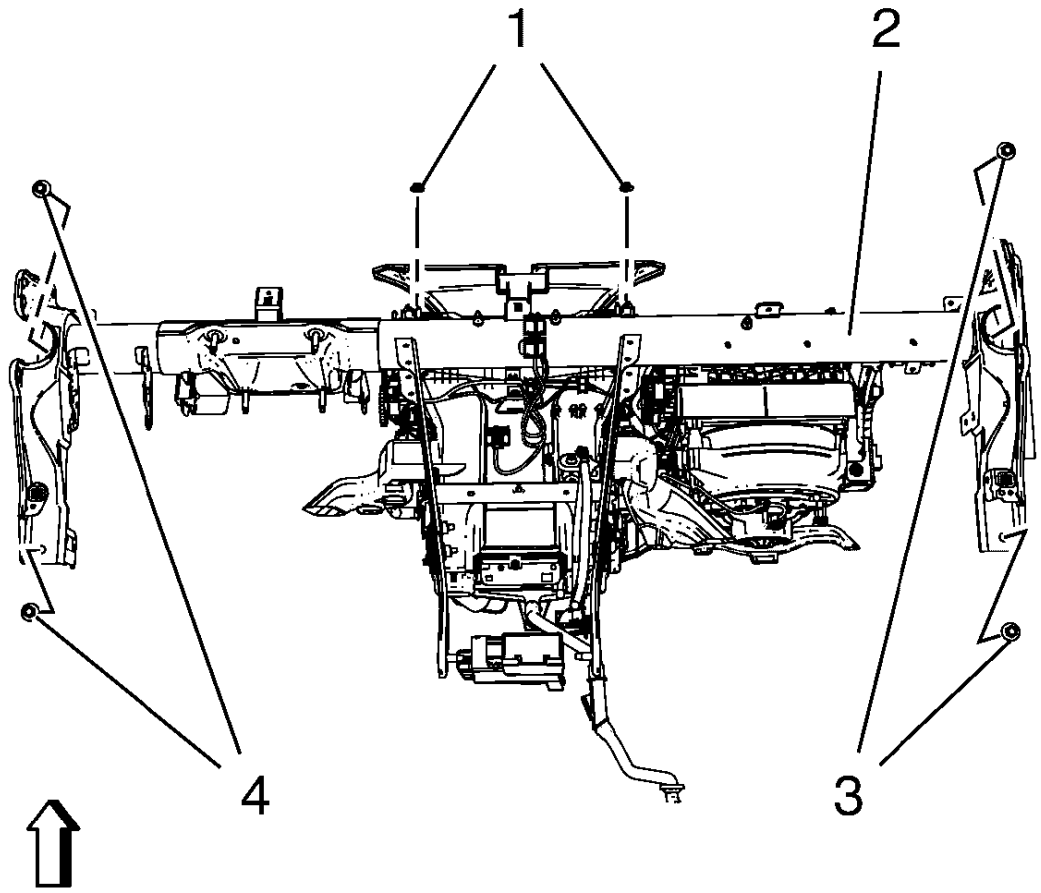

Fig. 24: Instrument Panel Tie Bar, Bolts And Nuts
Courtesy of GENERAL MOTORS COMPANY

CAUTION: Refer to Fastener Caution .

1. Install instrument panel tie bar (2).
    1. Install 4 instrument panel tie bar bolts (3, 4) and tighten to 22 N.m (16 lb ft).
    2. Install 2 instrument panel tie bar nuts (1) and tighten to 9 N.m (80 lb in).

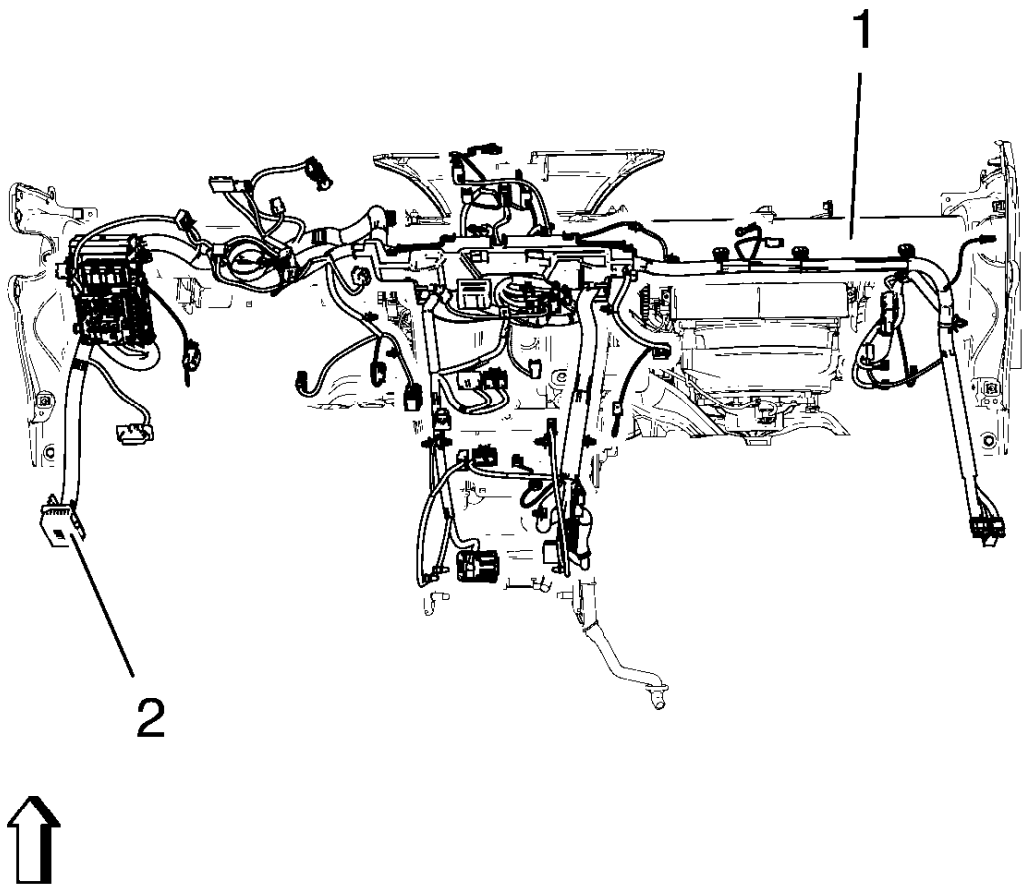

Fig. 25: Instrument Panel Wiring Harness And Instrument Panel Tie Bar
Courtesy of GENERAL MOTORS COMPANY

2. Install instrument panel wiring harness (2) to instrument panel tie bar (1).

   Connect electrical connectors.

3. Install instrument panel assembly. Refer to **Instrument Panel Assembly Replacement**.

INSTRUMENT PANEL TIE BAR BRACE REPLACEMENT

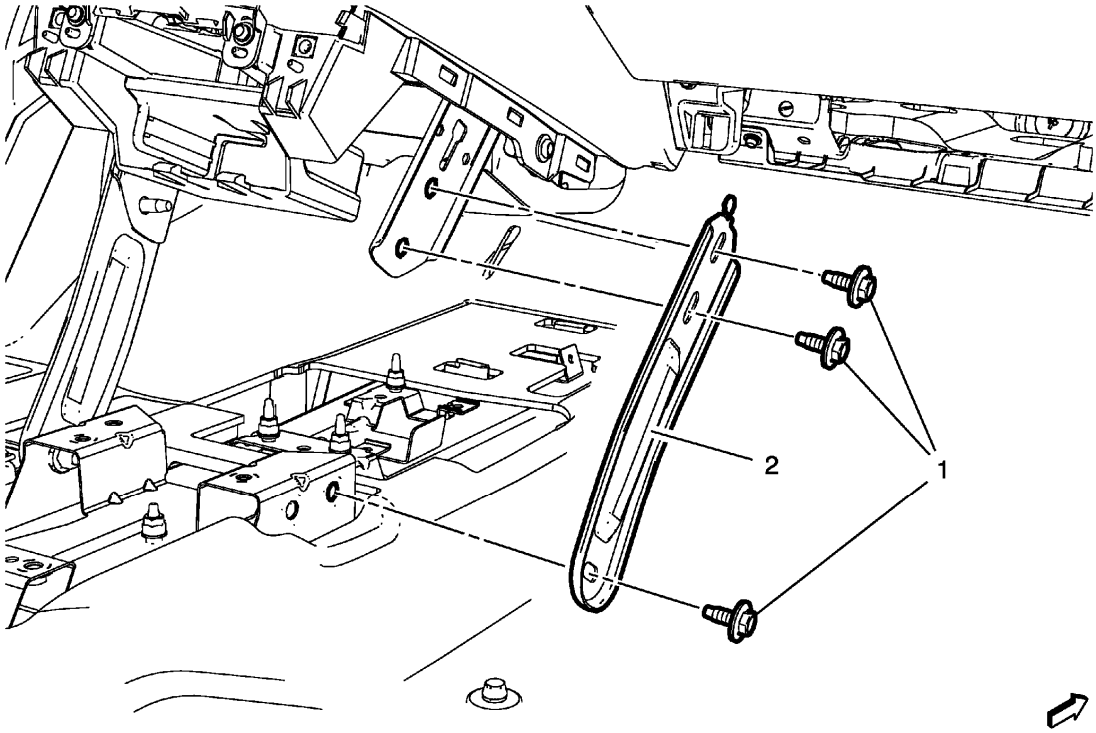

Fig. 26: Instrument Panel Tie Bar Brace
Courtesy of GENERAL MOTORS COMPANY

Instrument Panel Tie Bar Brace Replacement

Callout	Component Name
Preliminary Procedure Remove the front floor console. Refer to **Front Floor Console Replacement**.	
1	Instrument Panel Tie Bar Brace Fastener (Qty: 3) **CAUTION:** **Refer to Fastener Caution .** **Tighten** 22 N.m (16 lb ft)
2	Instrument Panel Tie Bar Brace

FRONT FLOOR CONSOLE STOWAGE TRAY REPLACEMENT

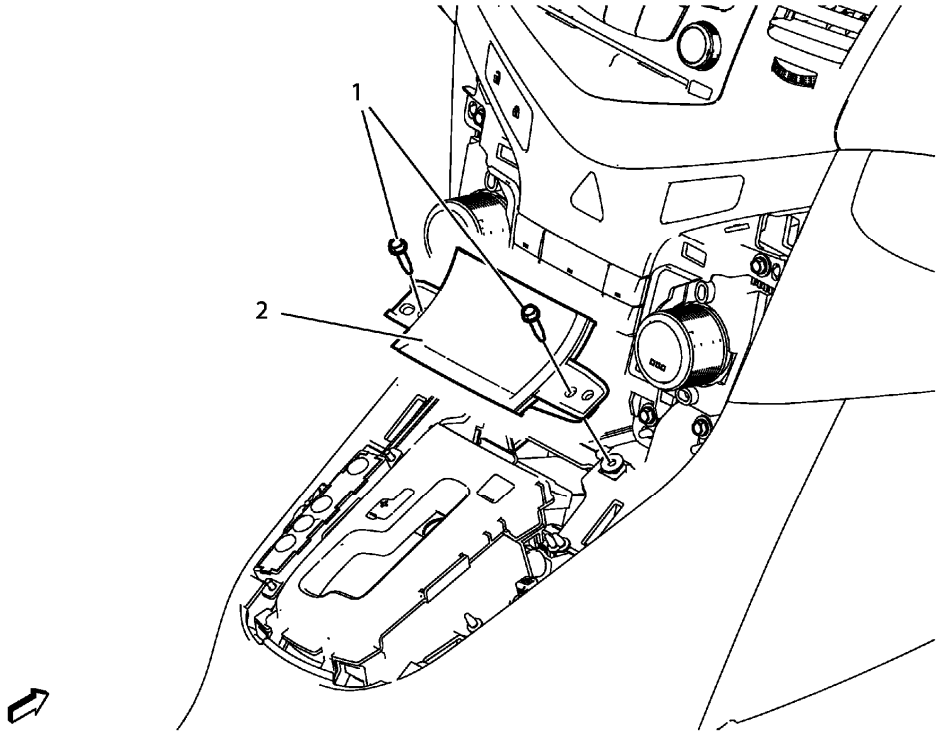

Fig. 27: View Of Front Floor Console Storage Tray And Screws
Courtesy of GENERAL MOTORS COMPANY

Front Floor Console Stowage Tray Replacement

Callout	Component Name
Preliminary Procedures Remove the automatic or manual transmission control lever trim cover. Refer to **Automatic or Manual Transmission Control Lever Trim Cover Replacement**.	
1	Front Floor Console Storage Tray Screw (Qty: 2) **CAUTION:** **Refer to Fastener Caution** **Tighten** 2.5 N.m (22 lb in)
2	Front Floor Console Storage Tray

FRONT FLOOR CONSOLE COMPARTMENT REPLACEMENT

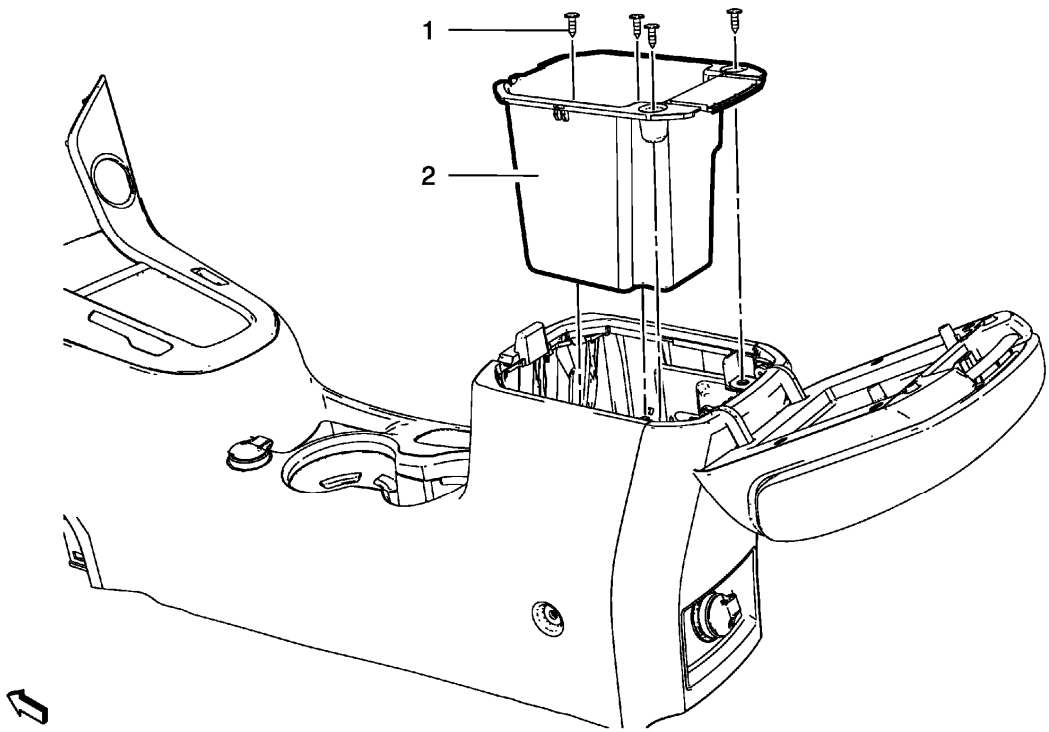

Fig. 28: Front Floor Console Compartment
Courtesy of GENERAL MOTORS COMPANY

Front Floor Console Compartment Replacement

Callout	Component Name
1	Front Floor Console Compartment Fastener (Qty: 4) **CAUTION:** **Refer to Fastener Caution .** **Procedure** To gain access to the lower inner fasteners, remove the front floor console compartment liner.
2	Front Floor Console Compartment **Procedure** 1. Disconnect electrical connectors. 2. If replacing the front floor console compartment, transfer the audio disc player, USB, auxiliary in and memory card receptacle. Refer to **Audio Disc Player, USB, Auxiliary In, and Memory Card Receptacle Replacement** .

AUTOMATIC OR MANUAL TRANSMISSION CONTROL LEVER TRIM COVER REPLACEMENT

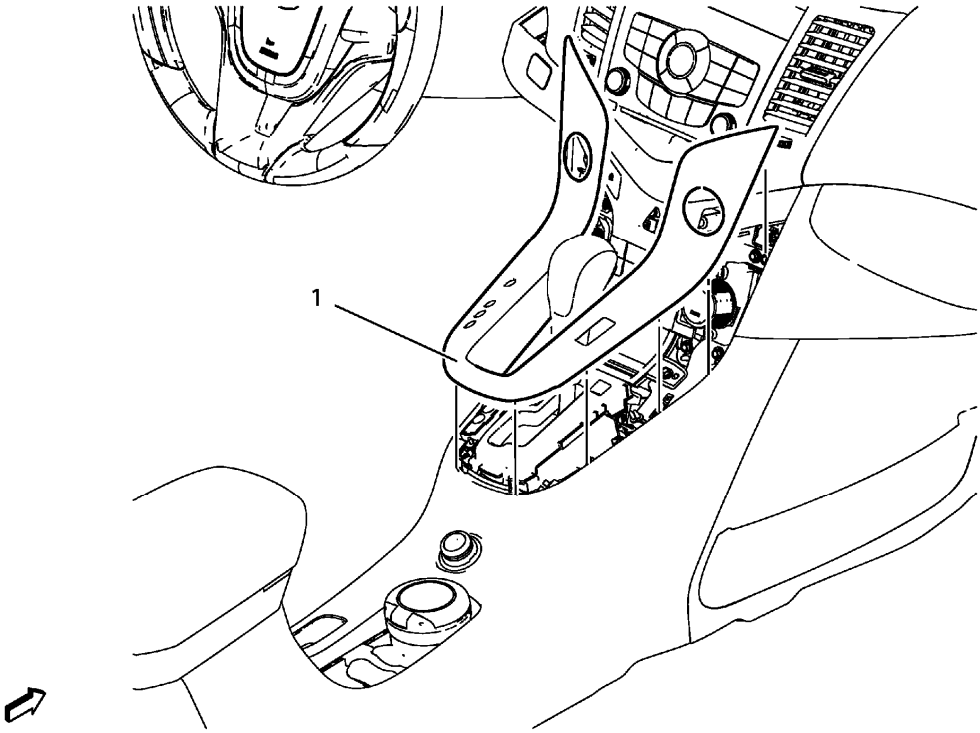

Fig. 29: View Of Transmission Control Lever Trim Cover Assembly
Courtesy of GENERAL MOTORS COMPANY

Automatic or Manual Transmission Control Lever Trim Cover Replacement

Callout	Component Name
1	Transmission Control Lever Trim Cover Assembly **Procedure** 1. Unclip and reposition the shift boot (manual transmission) 2. Disconnect the electrical connection as necessary.

FRONT FLOOR CONSOLE REPLACEMENT

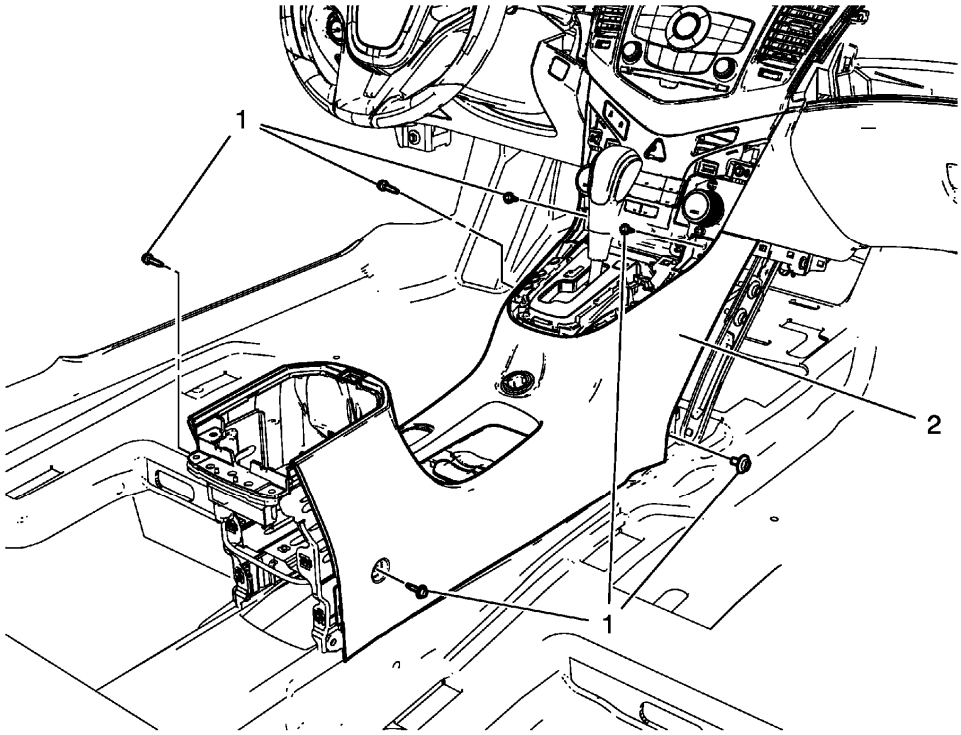

Fig. 30: View Of Front Floor Console And Screws
Courtesy of GENERAL MOTORS COMPANY

Front Floor Console Replacement

Callout	Component Name
Preliminary Procedures 1. Remove the instrument panel lower trim panel - left side. Refer to **Instrument Panel Lower Trim Panel Replacement - Left Side**. 2. Remove the instrument panel lower trim panel - right side. Refer to **Instrument Panel Lower Trim Panel Replacement - Right Side**. 3. Remove transmission control lever trim cover. Refer to **Automatic or Manual Transmission Control Lever Trim Cover Replacement**.	
1	Front Floor Console Screw (Qty: 6) **CAUTION:** **Refer to Fastener Caution .** **Tighten** 2.5 N.m (22 lb in)
2	Front Floor Console **Procedure**

	1. Disconnect electrical connectors. 2. Transfer parts as needed.

FRONT FLOOR CONSOLE ARMREST REPLACEMENT

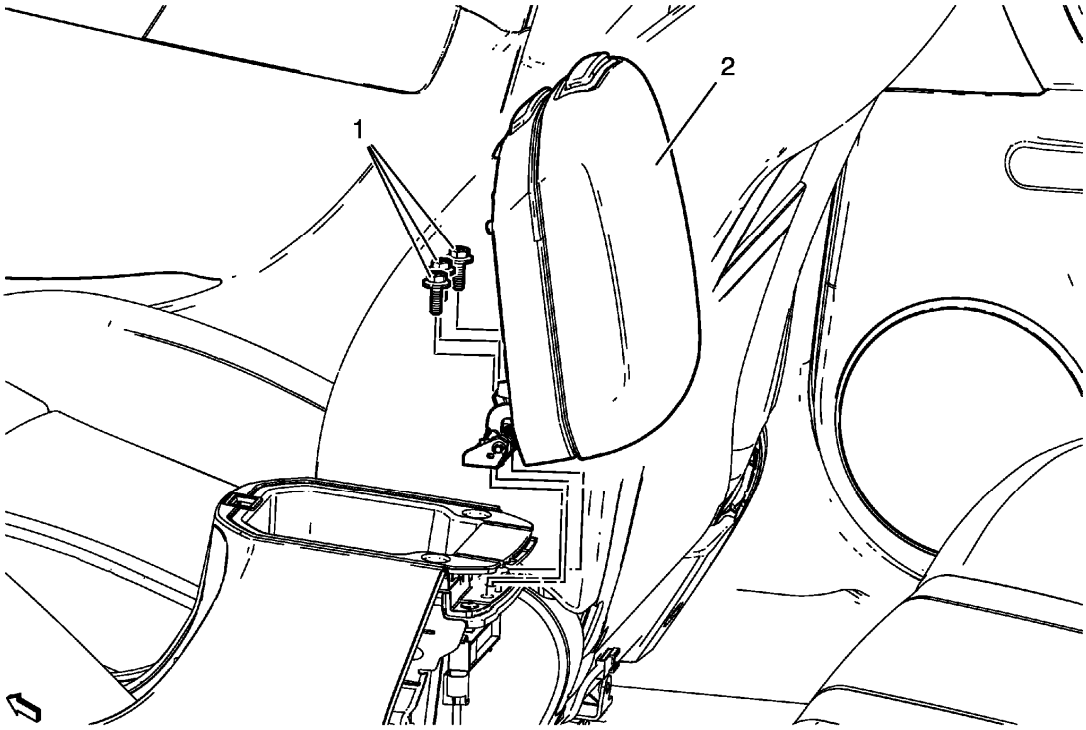

Fig. 31: View Of Front Floor Console Armrest And Bolts
Courtesy of GENERAL MOTORS COMPANY

Front Floor Console Armrest Replacement

Callout	Component Name
Preliminary Procedures 1. Remove the front floor console rear cover. Refer to **Front Floor Console Rear Cover Replacement**. 2. Remove the front floor console compartment. Refer to **Front Floor Console Compartment Replacement**.	
1	Front Floor Console Armrest Bolt (Qty: 3) **CAUTION:** **Refer to Fastener Caution .** **Tighten** 2.5 N.m (22 lb in)

2	Front Floor Console Armrest

FRONT FLOOR CONSOLE REAR COVER REPLACEMENT

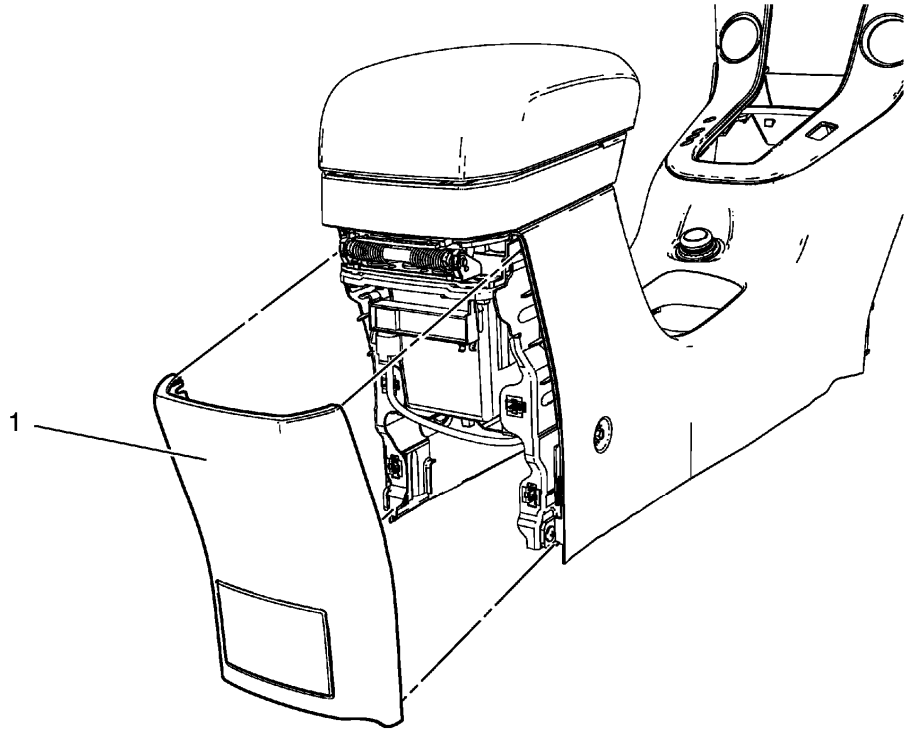

Fig. 32: View Of Front Floor Console Rear Cover Assembly
Courtesy of GENERAL MOTORS COMPANY

Front Floor Console Rear Cover Replacement

Callout	Component Name
1	Front Floor Console Rear Cover Assembly **Procedure** 1. Grasp the cover assembly and pull rearward disengaging the retainer clips securing the cover to the floor console. 2. Disconnect the electrical connections. 3. When replacing the front floor console rear cover assembly, transfer all necessary components.

ROOF CONSOLE REPLACEMENT

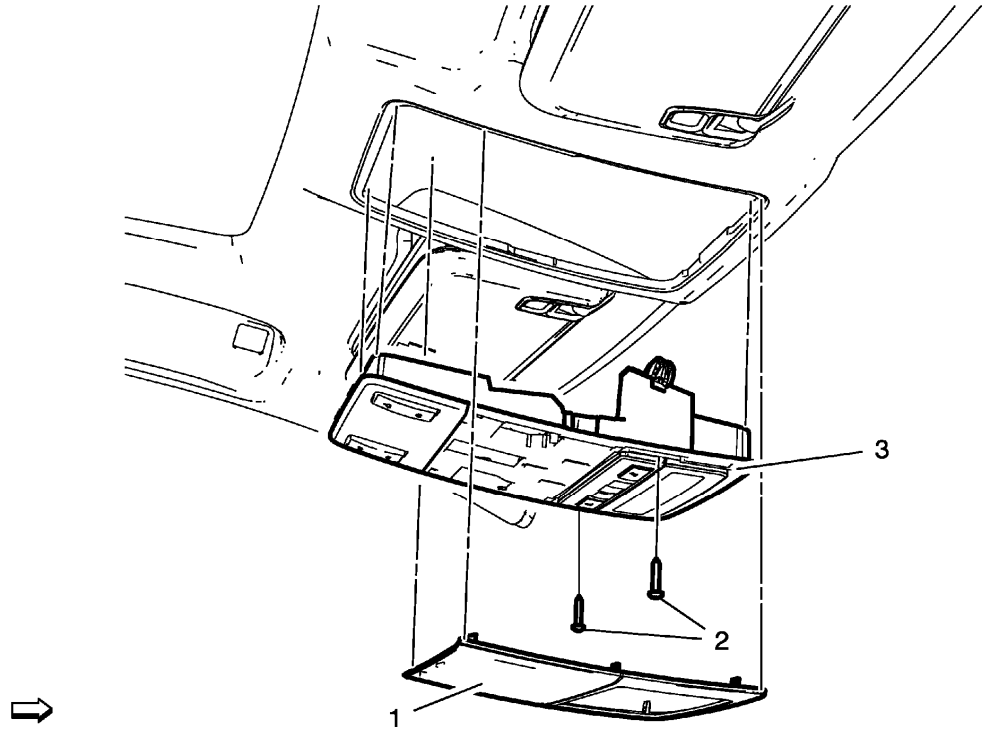

Fig. 33: View Of Roof Console Assembly, Reading Lamp Bezel And Screws
Courtesy of GENERAL MOTORS COMPANY

Roof Console Replacement

Callout	Component Name
1	Reading Lamp Bezel
2	Roof Console Screw (Qty: 2) **CAUTION:** **Refer to Fastener Caution .** **Tighten** 2.5 N.m (22 lb in)
3	Roof Console Assembly **Procedure** 1. Disconnect the electrical connectors. 2. If equipped, transfer the mobile telephone microphone when replacing the roof console. Refer to **Mobile Telephone Microphone Replacement** .

SPECIAL TOOLS AND EQUIPMENT

SPECIAL TOOLS

Illustration	Tool Number/ Description
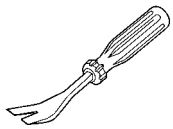	BO-569-A KM-569-A Plug Lifter
	DT-6459-B DW240-090 MKM-J-6459-B Torque Wrench
	GE-604-D MKM-604-D Torx Bit and Socket Set

2013 ACCESSORIES & EQUIPMENT

Interior Trim and Paneling - Cruze

SPECIFICATIONS

FASTENER TIGHTENING SPECIFICATIONS

Fastener Tightening Specifications

Application	Specification	
	Metric	English
Assist Handle	6 N.m	53 lb in
Front Side Door Armrest Pull Cup Bolt	2 N.m	18 lb in
Front Side Door Inside Handle Bolt	2 N.m	18 lb in
Front Side Door Trim Bolt	2.5 N.m	23 lb in
Front Side Door Trim Bracket Bolt	2.5 N.m	23 lb in
Front Side Door Window Switch Bezel Screw	2.5 N.m	23 lb in
Rear Side Door Armrest Pull Cup Bolts	2 N.m	18 lb in
Rear Side Door Inside Handle Bolt	2 N.m	18 lb in
Rear Side Door Trim Bolt	2.5 N.m	23 lb in
Rear Side Door Trim Bracket Bolt	2.5 N.m	23 lb in
Rear Side Door Window Switch Bezel Screw	2.5 N.m	23 lb in
Sunshade Bolt	3 N.m	27 lb in
Sunshade Support Bolt	3 N.m	27 lb in

REPAIR INSTRUCTIONS

FRONT SIDE DOOR WINDOW SWITCH BEZEL REPLACEMENT

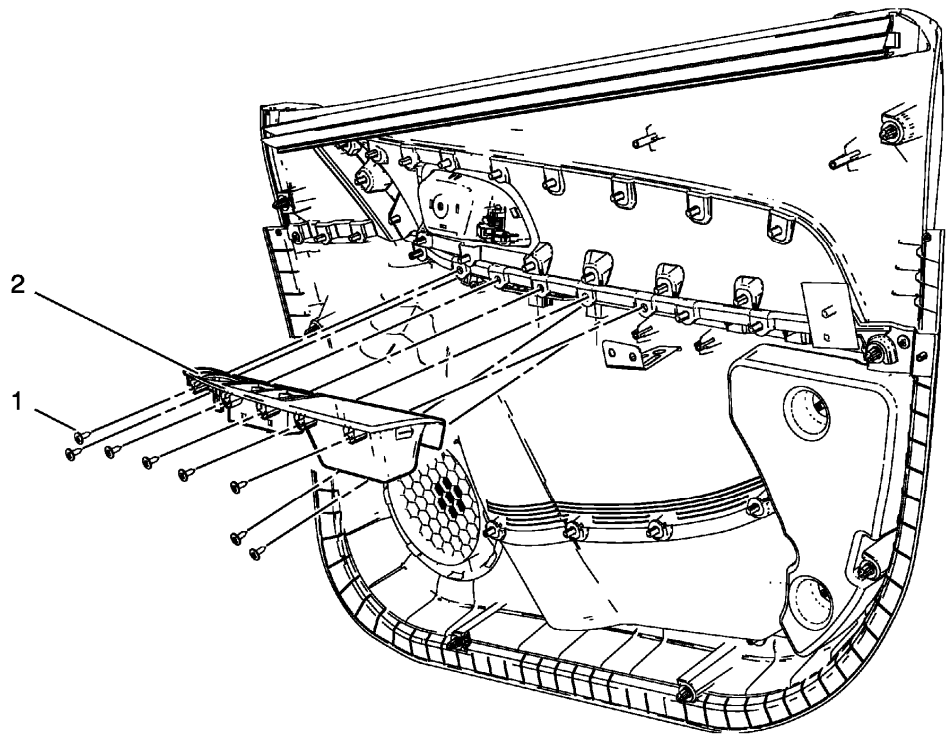

Fig. 1: Identifying Front Side Door Window Switch Bezel
Courtesy of GENERAL MOTORS COMPANY

Front Side Door Window Switch Bezel Replacement

Callout	Component Name
Preliminary Procedures Remove the front side door trim. Refer to **Front Side Door Trim Replacement**.	
1	Front Side Door Window Switch Bezel Screw (Qty: 8) **CAUTION:** **Refer to Fastener Caution .** **Procedure** Remove screws from the backside of the door trim panel. **Tighten** 2.5 N.m (22 lb in)
2	Front Side Door Window Switch Bezel **Procedure** Lift and remove the switch bezel from the door trim panel.

REAR SIDE DOOR WINDOW SWITCH BEZEL REPLACEMENT

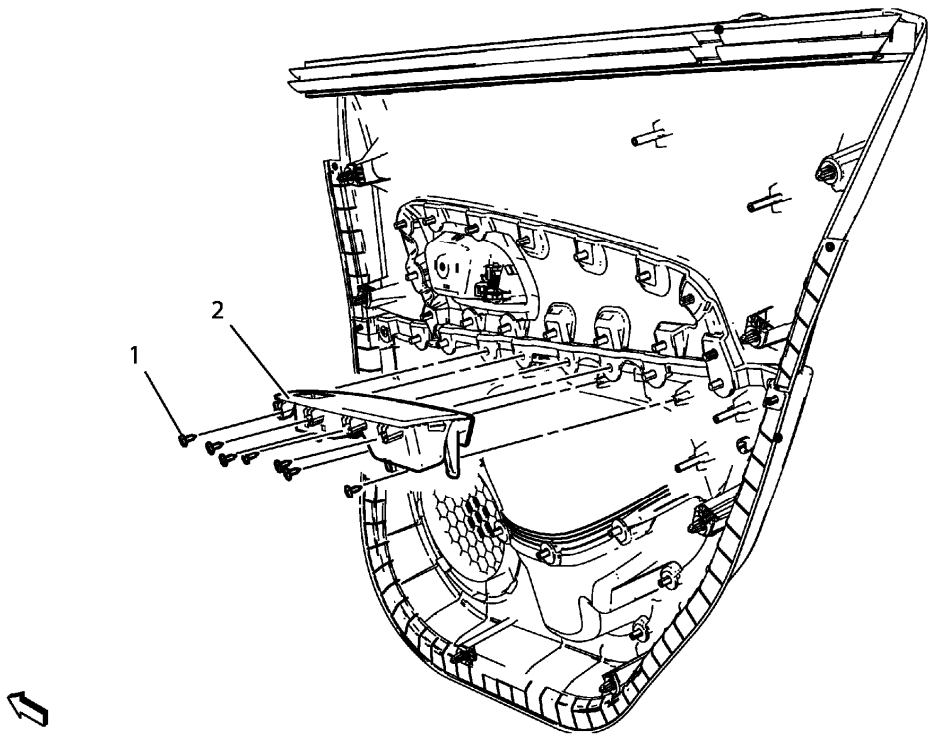

Fig. 2: Rear Side Door Window Switch Bezel
Courtesy of GENERAL MOTORS COMPANY

Rear Side Door Window Switch Bezel Replacement

Callout	Component Name
Preliminary Procedures Remove the rear side door trim. Refer to **Rear Side Door Trim Replacement**.	
1	Rear Side Door Window Switch Bezel Screw (Qty: 7) **CAUTION:** **Refer to Fastener Caution .** **Procedure** Remove screws from the backside of the door trim panel. **Tighten** 2.5 N.m (22 lb in)
2	Rear Side Door Window Switch Bezel **Procedure** Lift and remove the switch bezel from the door trim panel.

FRONT OR REAR SIDE DOOR LOCKING ROD KNOB TRIM COVER REPLACEMENT

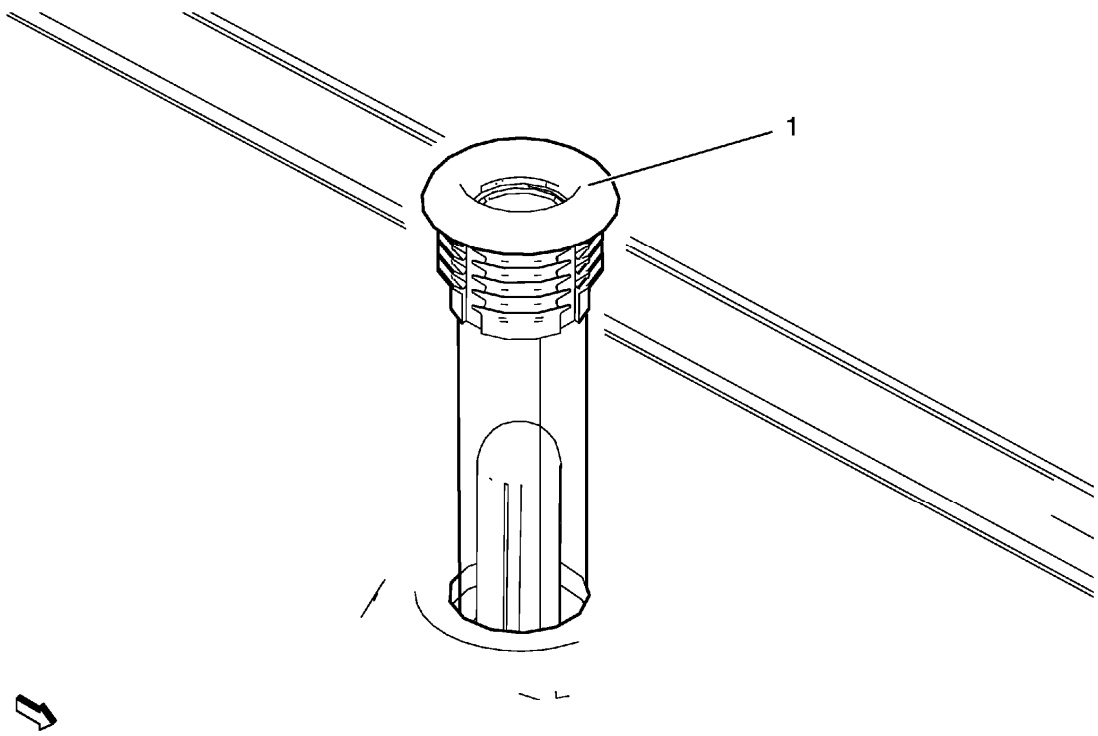

Fig. 3: Side Door Locking Rod Knob Trim Cover
Courtesy of GENERAL MOTORS COMPANY

Front or Rear Side Door Locking Rod Knob Trim Cover Replacement

Callout	Component Name
1	Side Door Locking Rod Knob Trim Cover Assembly

FRONT SIDE DOOR UPPER TRIM COVER REPLACEMENT

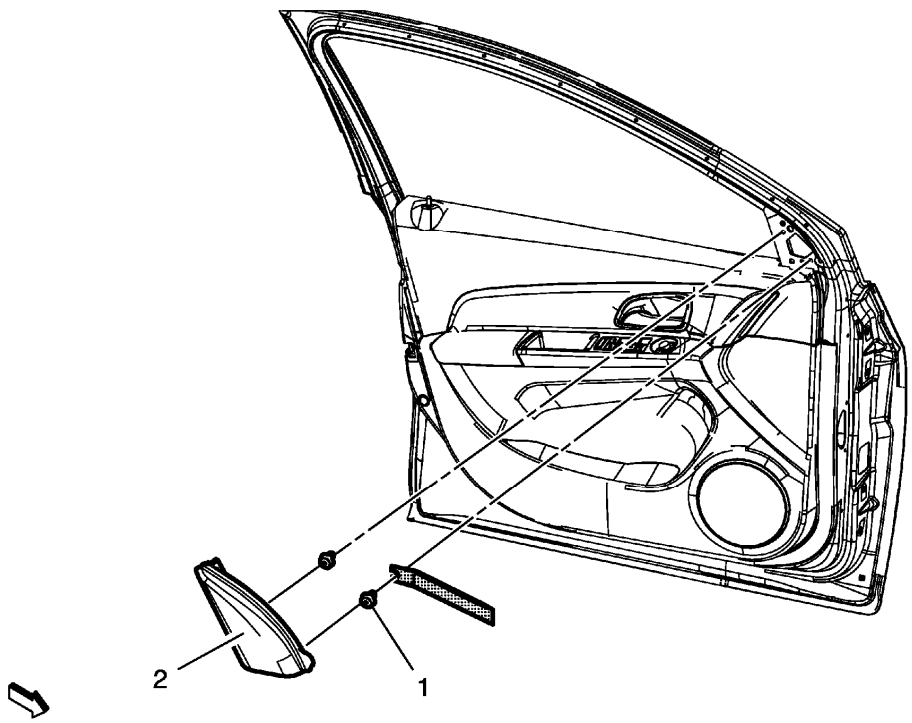

Fig. 4: Front Side Door Upper Trim Cover
Courtesy of GENERAL MOTORS COMPANY

Front Side Door Upper Trim Cover Replacement

Callout	Component Name
1	Front Side Door Upper Trim Cover Clip (Qty: 2) **CAUTION:** **To prevent damage to the trim cover and clips, remember the following:** **1. DO NOT disengage the clips by pulling the trim cover for removal, since trim cover clips damage could result.** **2. If a detached clip is damaged or broken, it must be replaced.** **3. Properly align and gently press the trim cover for installation.** **Procedure** Use **B0-38778** remover or equivalent tools to disengage the front side door trim cover from the door. **Special Tools** **B0-38778** Door Trim Panel Clip Remover For equivalent regional tools, refer to **Special Tools**.
2	Front Side Door Upper Trim Cover

FRONT SIDE DOOR TRIM REPLACEMENT

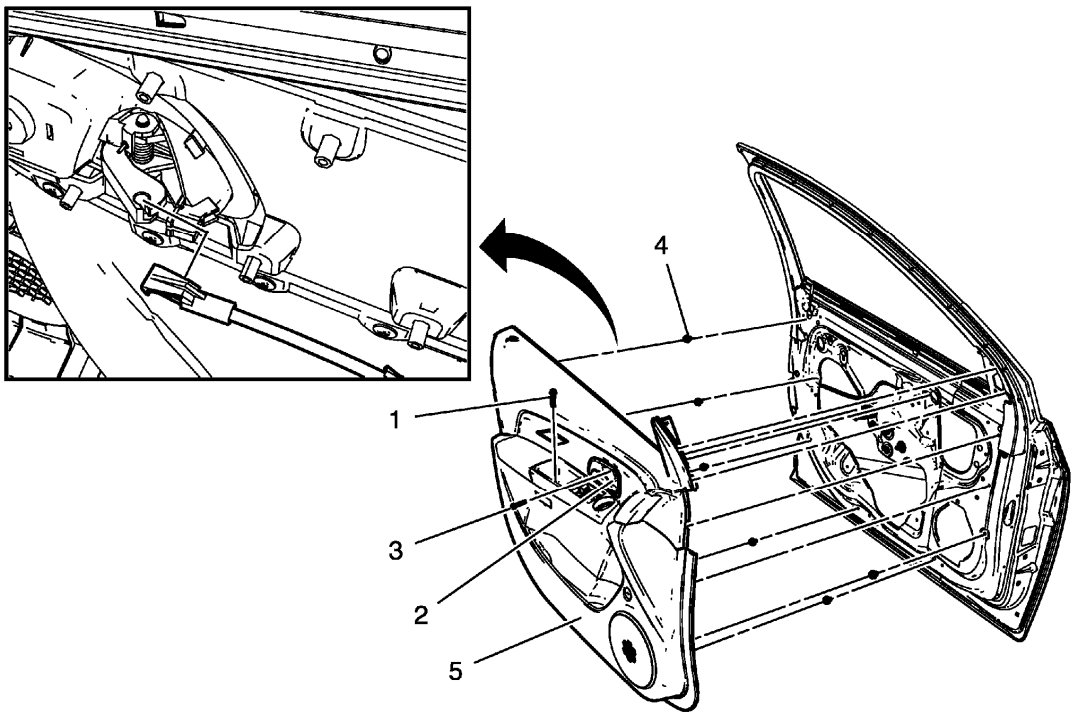

Fig. 5: Locating Front Side Door Trim Components
Courtesy of GENERAL MOTORS COMPANY

Front Side Door Trim Replacement

Callout	Component Name
Preliminary Procedures Remove the front side door upper trim cover. Refer to **Front Side Door Upper Trim Cover Replacement**.	
1	Front Side Door Pull Handle Bolt **CAUTION:** **Refer to Fastener Caution .** **Tighten** 2 N.m (18 lb in)
2	Front Side Door Inside Handle Bolt Finish Cap **Procedure** Pull handle back to remove cap. Use suitable tool to unsnap.
3	Front Side Door Inside Handle Bolt **Tighten** 2.5 N.m (22 lb in)
	Front Side Door Trim Clip (Qty: 8)

4	**NOTE:** **Use a NEW retainer before installing the front side door trim.** **Special Tools** **BO-38778** Door Trim Panel Clip Remover For equivalent regional tools, refer to **Special Tools**.
5	Front Side Door Trim **Procedure** 1. Pull upwards on the door lock retainer cable to disengage. 2. Disconnect the electrical connectors. **TIP:** Only use **BO-38778** remover to disengage the door trim clips from the door. Do not disengage the clips by pulling from the map pocket area, since this can distort the trim panel.

FRONT SIDE DOOR WATER DEFLECTOR REPLACEMENT

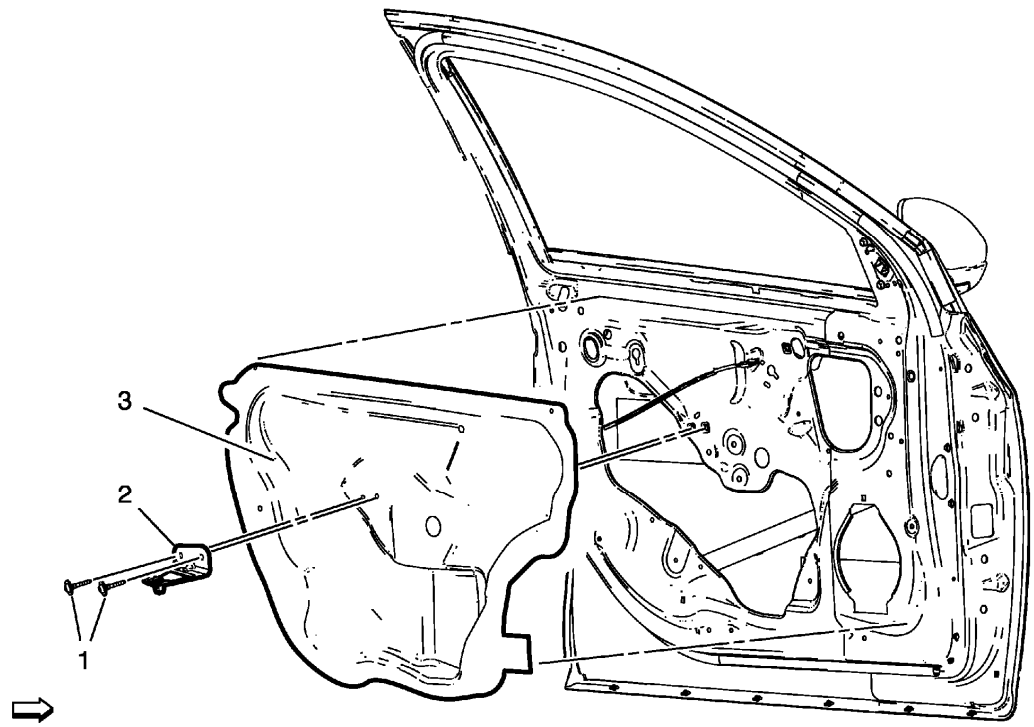

Fig. 6: Front Side Door Water Deflector
Courtesy of GENERAL MOTORS COMPANY

Front Side Door Water Deflector Replacement

Callout	Component Name
Preliminary Procedures Remove the front side door trim. Refer to **Front Side Door Trim Replacement**.	
1	Front Side Door Trim Panel Bracket Fastener (Qty: 2) **CAUTION:** **Refer to Fastener Caution .**
2	Front Side Door Trim Panel Bracket
3	Front Side Door Water Deflector **Procedure** Pull the water deflector from the door. Guide electrical connectors through the water deflector while removing it from the door.

REAR SIDE DOOR WATER DEFLECTOR REPLACEMENT

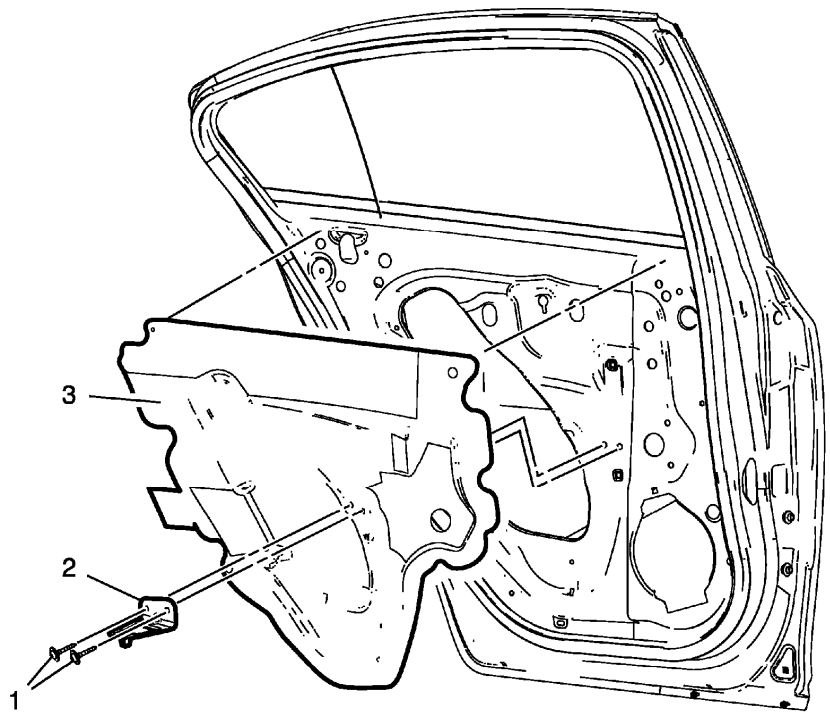

Fig. 7: Rear Side Door Water Deflector
Courtesy of GENERAL MOTORS COMPANY

Rear Side Door Water Deflector Replacement

Callout	Component Name
Preliminary Procedures Remove the rear side door trim. Refer to **Rear Side Door Trim Replacement**.	
	Rear Side Door Trim Panel Bracket Fastener (Qty: 2)

1	**CAUTION:** **Refer to Fastener Caution .**
2	Rear Side Door Trim Panel Bracket
3	Rear Side Door Water Deflector **Procedure** Pull the water deflector from the door. Guide electrical connectors through the water deflector while removing it from the door.

REAR SIDE DOOR WINDOW GARNISH MOLDING REPLACEMENT

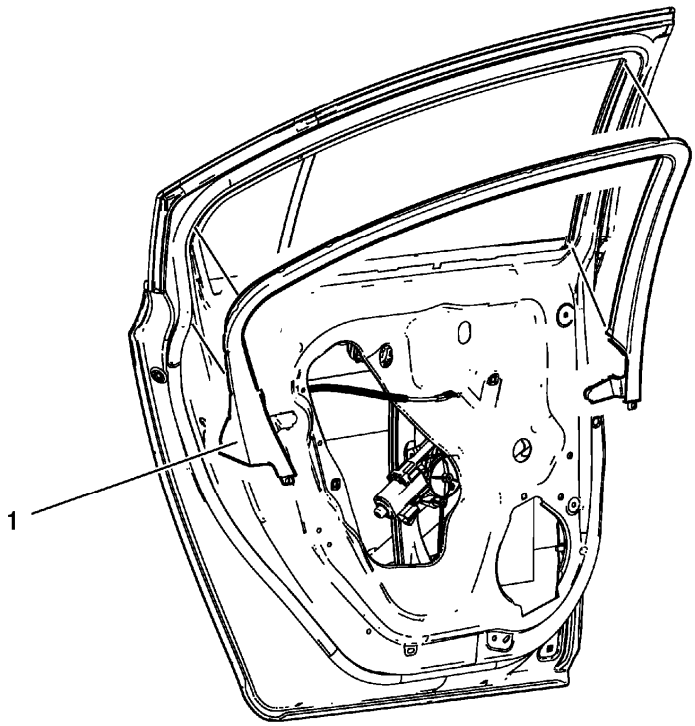

Fig. 8: Rear Side Door Window Garnish Molding
Courtesy of GENERAL MOTORS COMPANY

Rear Side Door Window Garnish Molding Replacement

Callout	Component Name
Preliminary Procedures Remove the rear side door trim. Refer to **Rear Side Door Trim Replacement**.	
1	Rear Side Door Window Garnish Molding

FRONT SIDE DOOR WINDOW GARNISH MOLDING REPLACEMENT

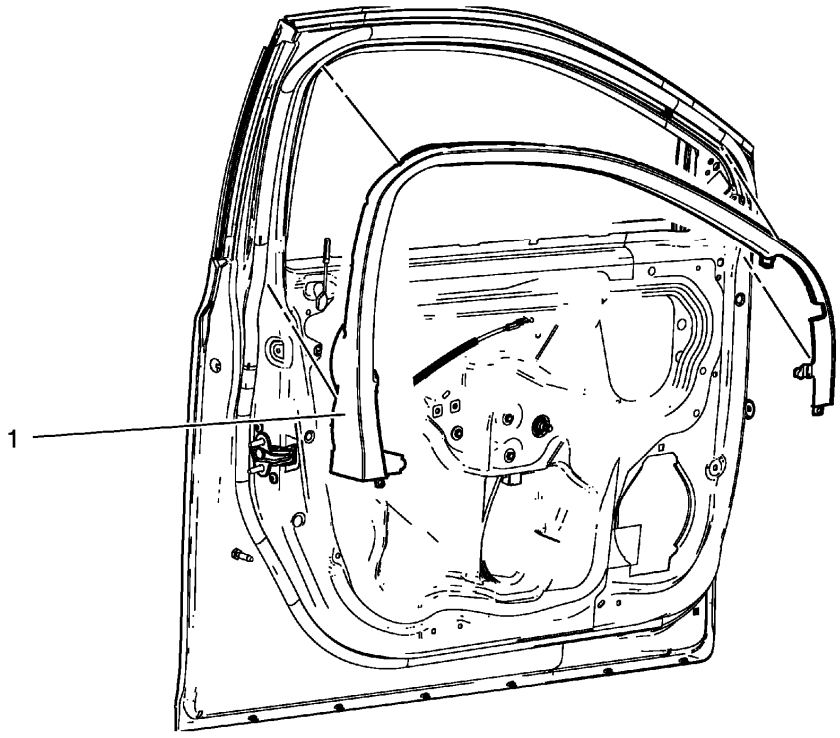

Fig. 9: Identifying Front Side Door Window Garnish Molding
Courtesy of GENERAL MOTORS COMPANY

Front Side Door Window Garnish Molding Replacement

Callout	Component Name
Preliminary Procedures Remove the front side door trim. Refer to **Front Side Door Trim Replacement**.	
1	Front Side Door Window Garnish Molding

FRONT SIDE DOOR SILL TRIM PLATE REPLACEMENT

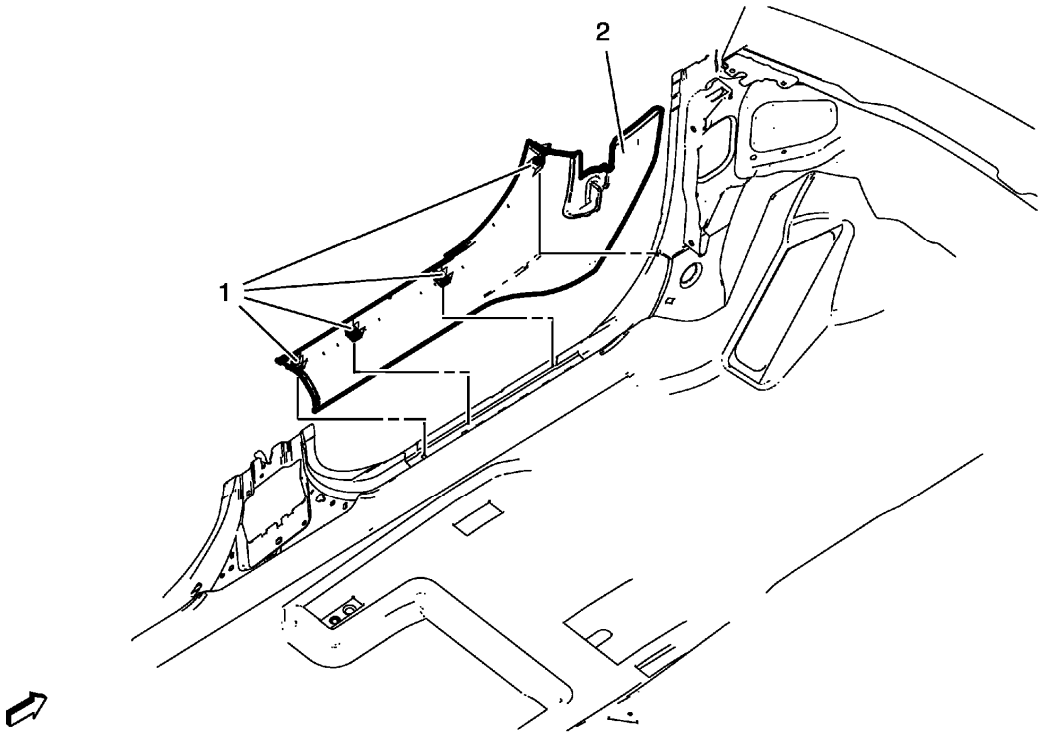

Fig. 10: Identifying Front Side Door Sill Trim Plate
Courtesy of GENERAL MOTORS COMPANY

Front Side Door Sill Trim Plate Replacement

Callout	Component Name
1	Front Side Door Sill Trim Plate Clip (Qty: 4) **NOTE:** **On the outboard side of the trim plate, start from the rear of the trim plate and work toward the front of the vehicle. The trim tool should be positioned close to the trim plate clips.**
2	Front Side Door Sill Trim Plate

REAR SIDE DOOR SILL TRIM PLATE REPLACEMENT

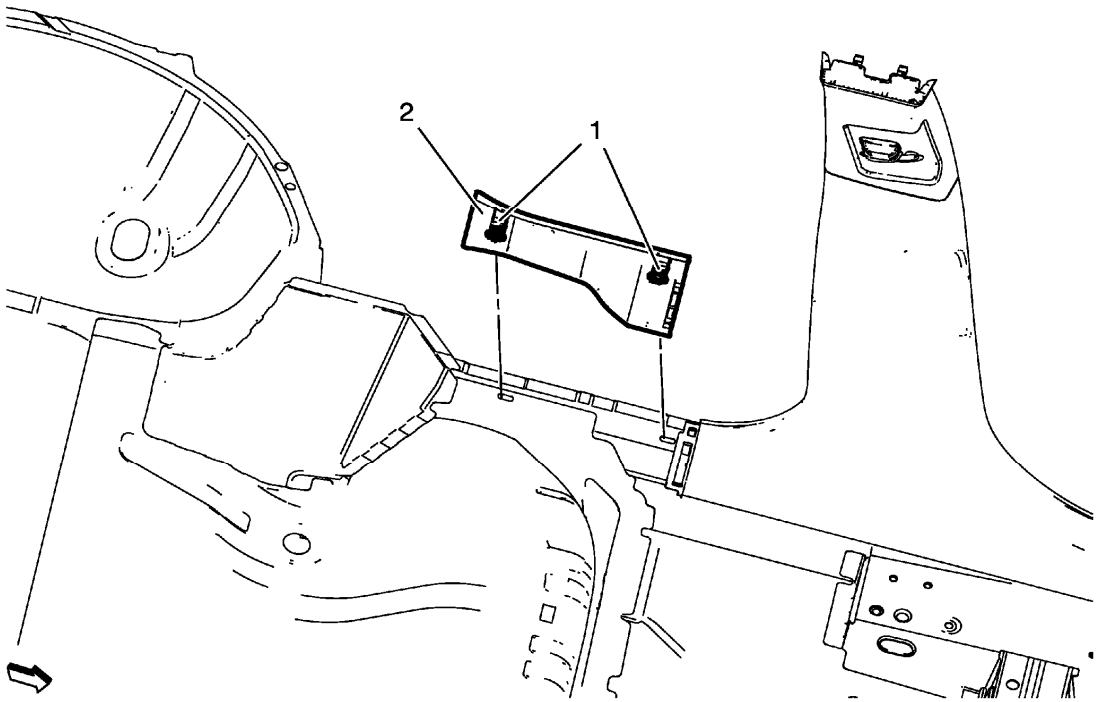

Fig. 11: Rear Side Door Sill Trim Plate
Courtesy of GENERAL MOTORS COMPANY

Rear Side Door Sill Trim Plate Replacement

Callout	Component Name
1	Rear Side Door Sill Trim Plate Clip (Qty: 2)
2	Rear Side Door Sill Trim Plate

ASSIST HANDLE REPLACEMENT

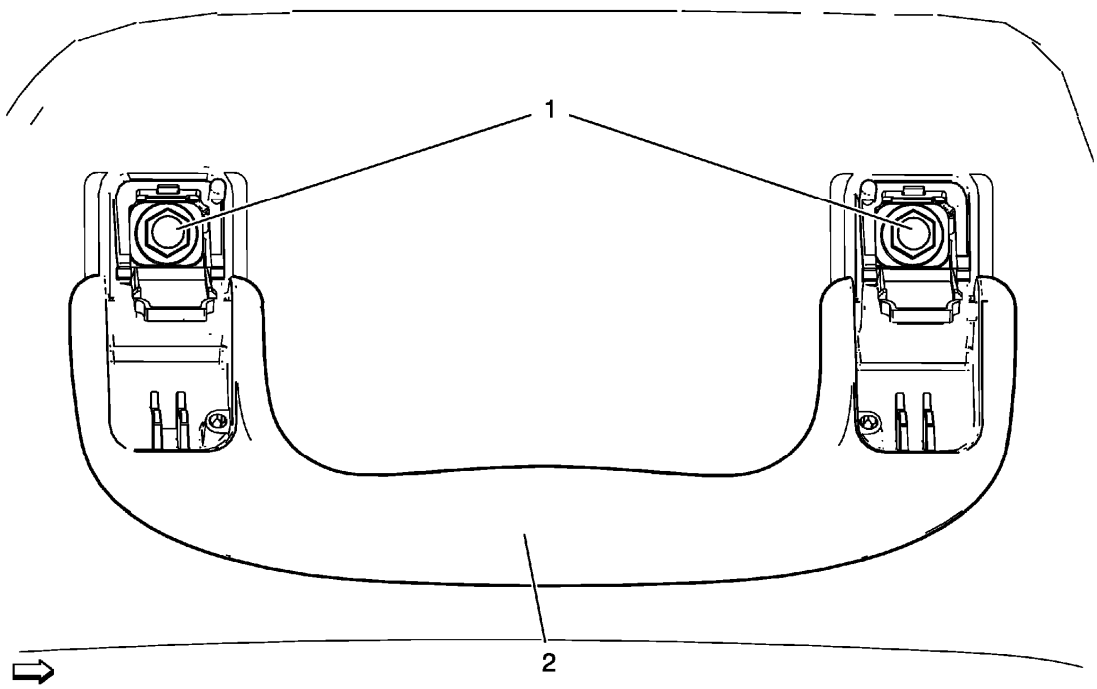

Fig. 12: Identifying Assist Handle & Screws
Courtesy of GENERAL MOTORS COMPANY

Assist Handle Replacement

Callout	Component Name
1	Assist Handle Screw (Qty: 2) **CAUTION:** **Refer to Fastener Caution .** **Procedure** 1. Fold the assist handle downward and hold. 2. Use a small flat-bladed tool to open the assist handle covers to access the screws. **Tighten** 6 N.m (53 lb in)
2	Assist Handle Assembly

INSIDE REARVIEW MIRROR MOUNT PLATE COVER REPLACEMENT

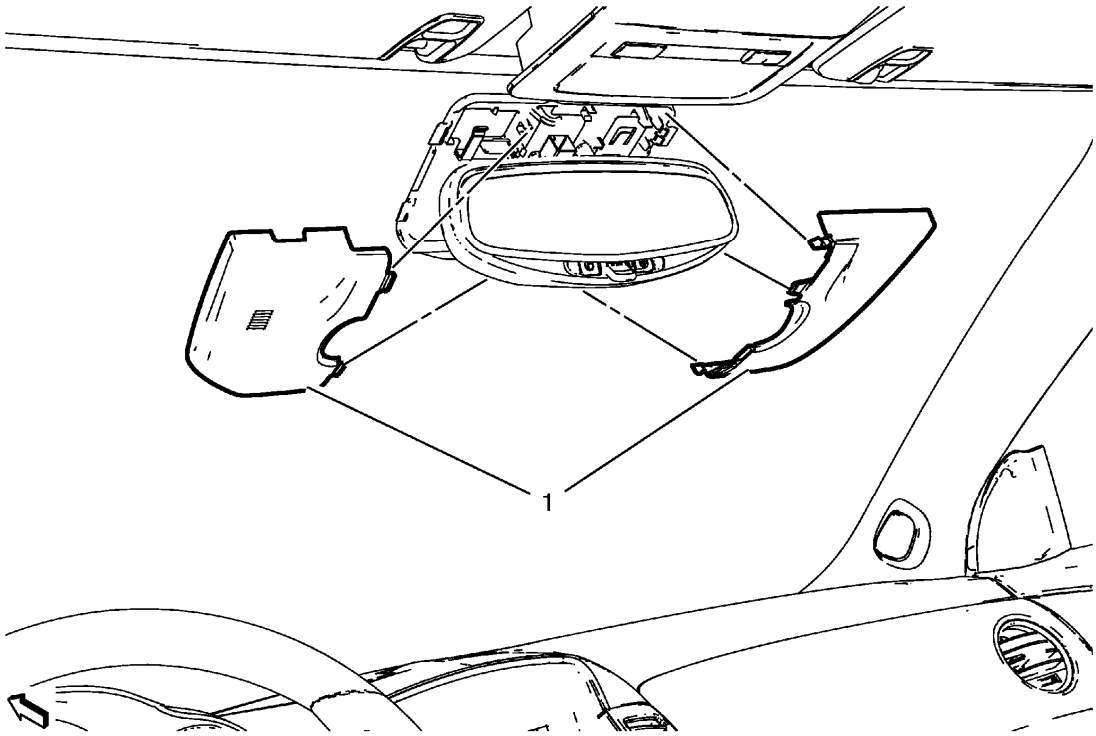

Fig. 13: Inside Rearview Mirror Mount Plate Cover
Courtesy of GENERAL MOTORS COMPANY

Inside Rearview Mirror Mount Plate Cover Replacement

Callout	Component Name
1	Inside Rearview Mirror Mount Plate Cover

SUNSHADE REPLACEMENT

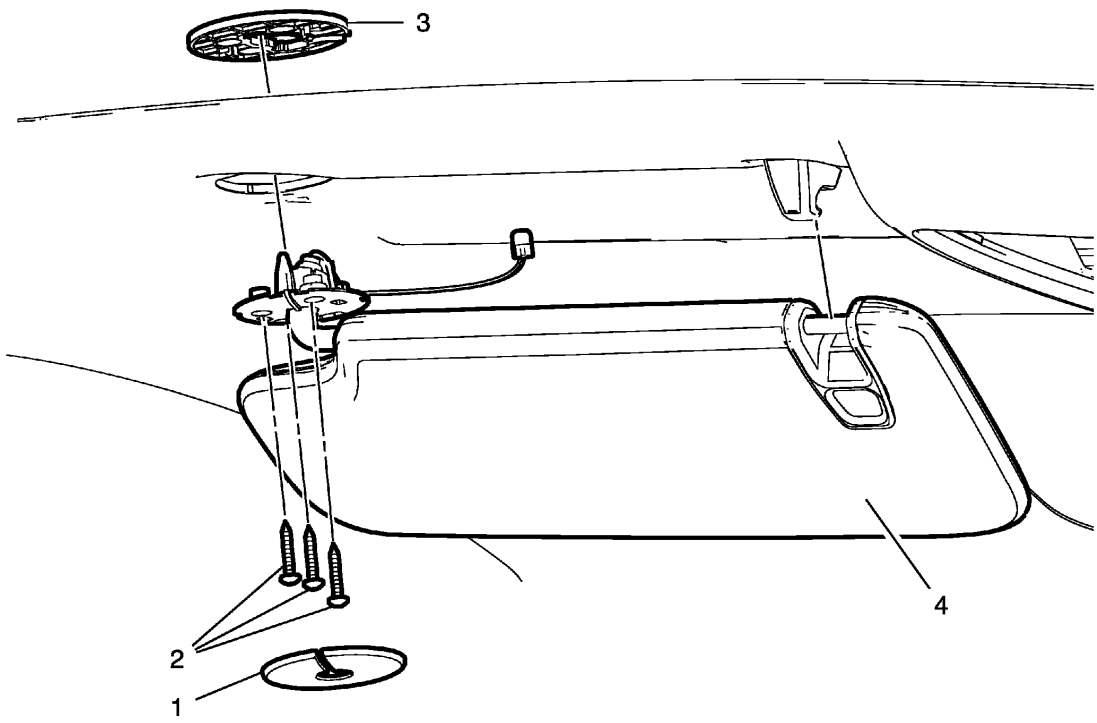

Fig. 14: Sunshade Components
Courtesy of GENERAL MOTORS COMPANY

Sunshade Replacement

Callout	Component Name
Preliminary Procedures Lower the front of the headliner to access the sunshade electrical connector, if necessary. Refer to **Headlining Trim Panel Replacement (without Sunroof)** , **Headlining Trim Panel Replacement (with Sunroof)** .	
1	Sunshade Support Bolt Cover
2	Sunshade Fastener (Qty: 3) **CAUTION:** **Refer to Fastener Caution .**
3	Sunshade Retainer
4	Sunshade **Procedure** 1. Disconnect the electrical connector. 2. Unclip the sunshade retainer from the headliner and sunshade.

SUNSHADE SUPPORT REPLACEMENT

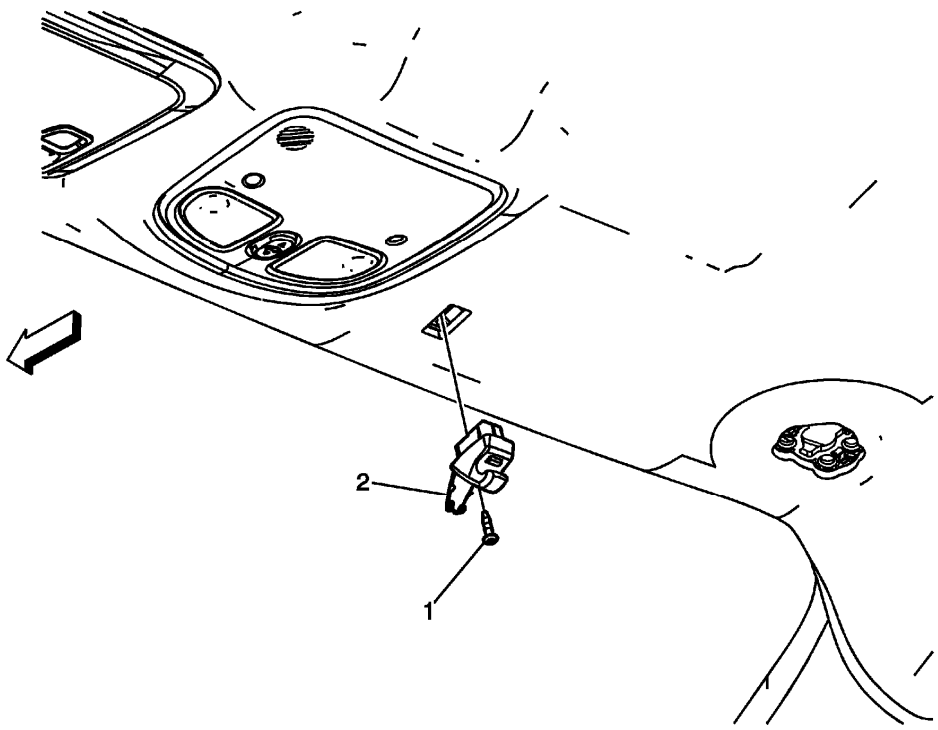

Fig. 15: View Of Sunshade Anchor
Courtesy of GENERAL MOTORS COMPANY

Sunshade Support Replacement

Callout	Component Name
1	Sunshade Support Screw **CAUTION:** **Refer to Fastener Caution .** **Procedure** Open the sunshade support screw access cover with a appropriate tool. **Tighten** 3 N.m (27 lb in)
2	Sunshade Support

WINDSHIELD GARNISH MOLDING REPLACEMENT

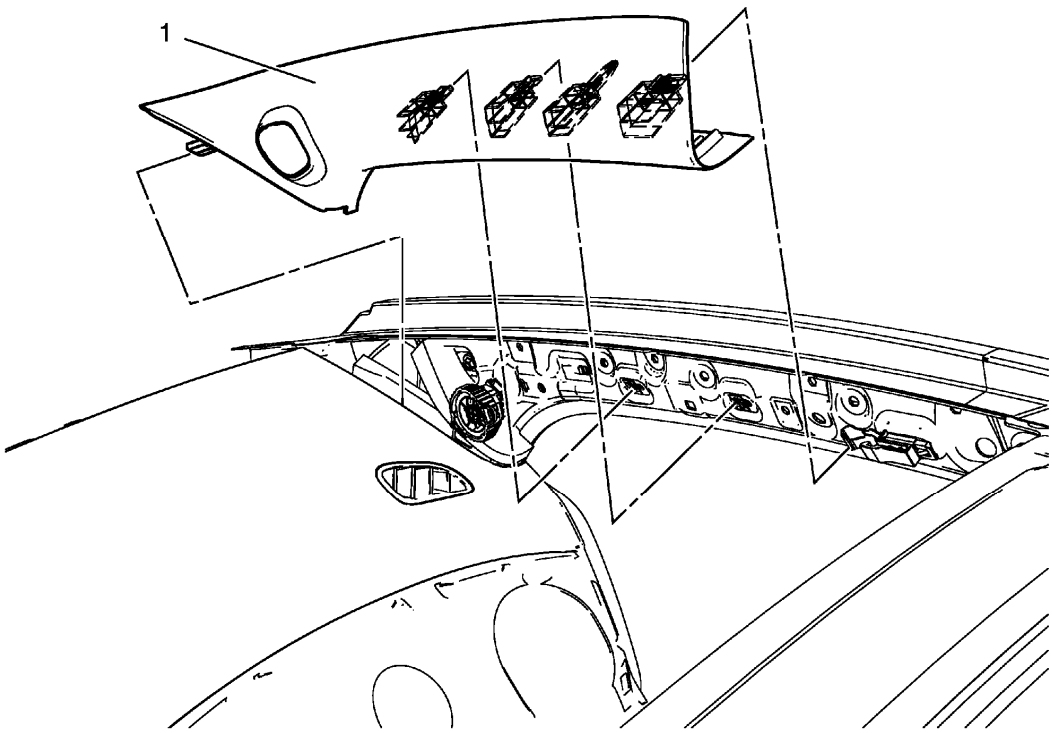

Fig. 16: Windshield Garnish Molding
Courtesy of GENERAL MOTORS COMPANY

Windshield Garnish Molding Replacement

Callout	Component Name
Preliminary Procedures Disable the SIR system. Refer to **SIR Disabling and Enabling** .	
1	Windshield Garnish Molding **Procedure** 1. Loosen tether clip and steel clips. 2. Disconnect electrical connector. 3. The tether clip at the upper portion of the garnish molding MUST be replaced any time the garnish molding is removed.

CENTER PILLAR UPPER GARNISH MOLDING REPLACEMENT

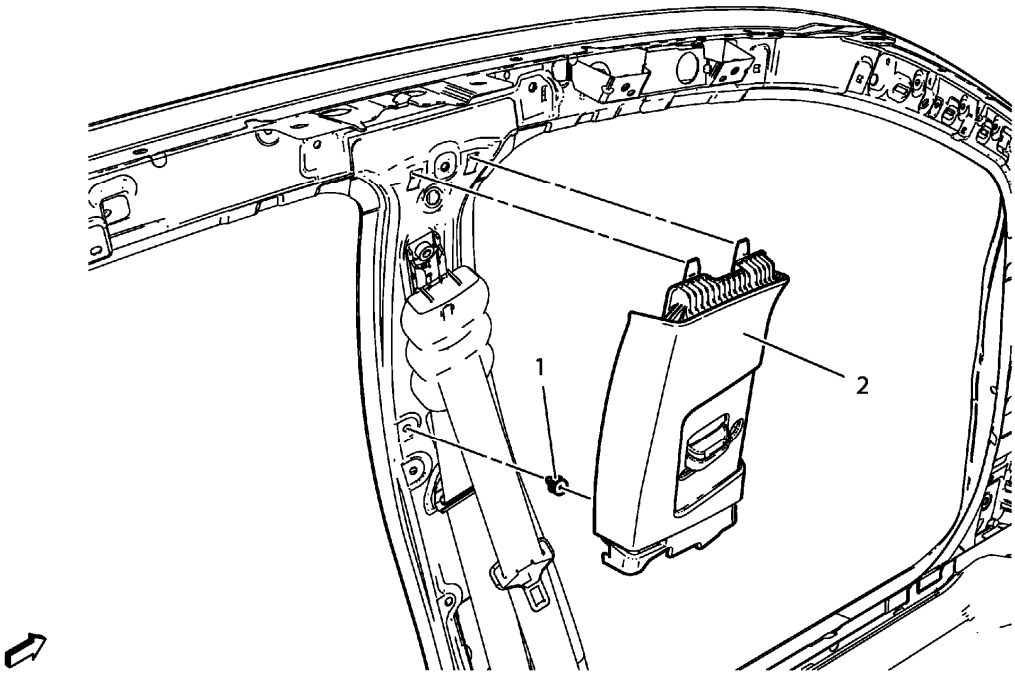

Fig. 17: Identifying Center Pillar Upper Garnish Molding
Courtesy of GENERAL MOTORS COMPANY

Center Pillar Upper Garnish Molding Replacement

Callout	Component Name
Preliminary Procedures 1. Remove the center pillar lower garnish molding. Refer to **Center Pillar Lower Garnish Molding Replacement**. 2. Remove the seat belt from the front seat. Refer to **Driver or Passenger Seat Retractor Side Belt Replacement** .	
1	Center Pillar Upper Garnish Molding Clip
2	Center Pillar Upper Garnish Molding **Procedure** When replacing the center pillar upper garnish molding, remove the seat belt through the molding.

CENTER PILLAR LOWER GARNISH MOLDING REPLACEMENT

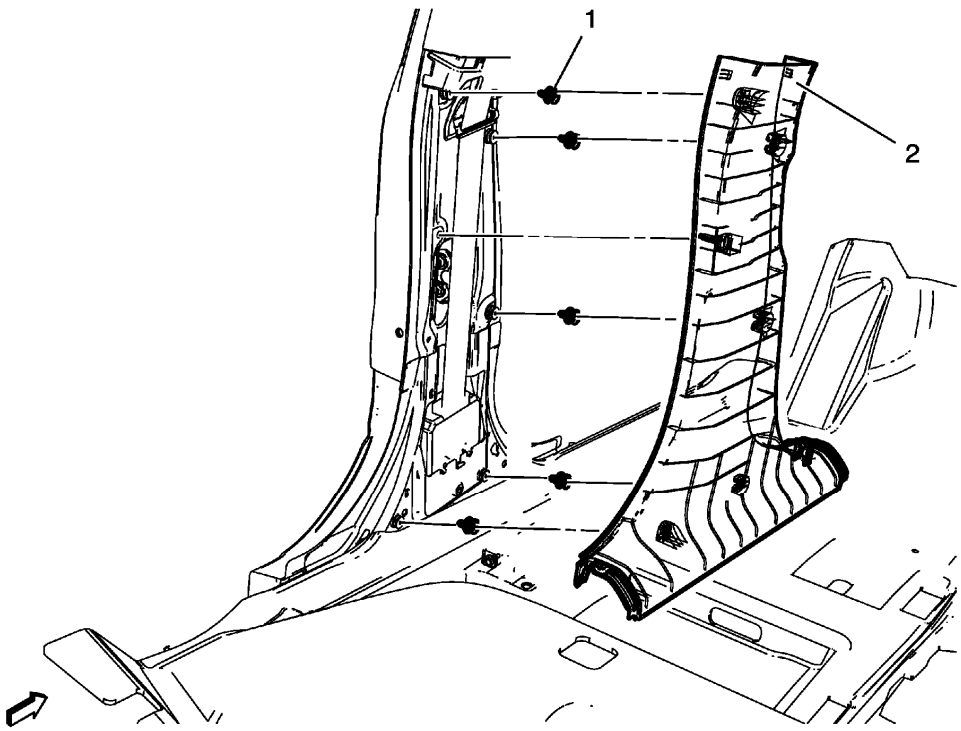

Fig. 18: Identifying Center Pillar Lower Garnish Molding
Courtesy of GENERAL MOTORS COMPANY

Center Pillar Lower Garnish Molding Replacement

Callout	Component Name
Preliminary Procedures 1. Remove the front side door sill trim plate. Refer to **Front Side Door Sill Trim Plate Replacement**. 2. Remove the rear side door sill trim plate. Refer to **Rear Side Door Sill Trim Plate Replacement**.	
1	Center Pillar Lower Garnish Molding Retainer (Qty: 6)
2	Center Pillar Lower Garnish Molding

QUARTER WINDOW GARNISH MOLDING REPLACEMENT

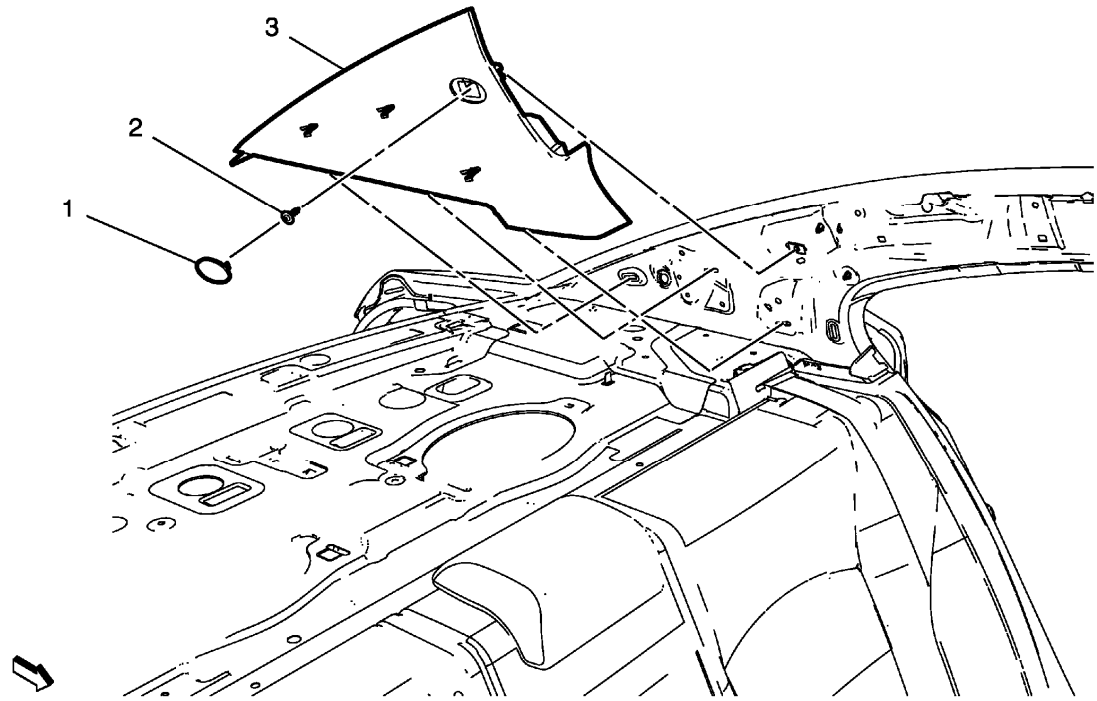

Fig. 19: Quarter Window Garnish Molding
Courtesy of GENERAL MOTORS COMPANY

Quarter Window Garnish Molding Replacement

Callout	Component Name
1	Quarter Window Garnish Molding Bolt Cap **Procedure** Use a small flat bladed trim tool to aid in removal of the cap.
2	Quarter Window Garnish Molding Bolt **CAUTION:** **Refer to Fastener Caution .**
3	Quarter Window Garnish Molding **Procedure** Use a small flat bladed trim tool to aid in removal of the cap.

BODY SIDE TRIM PANEL REPLACEMENT

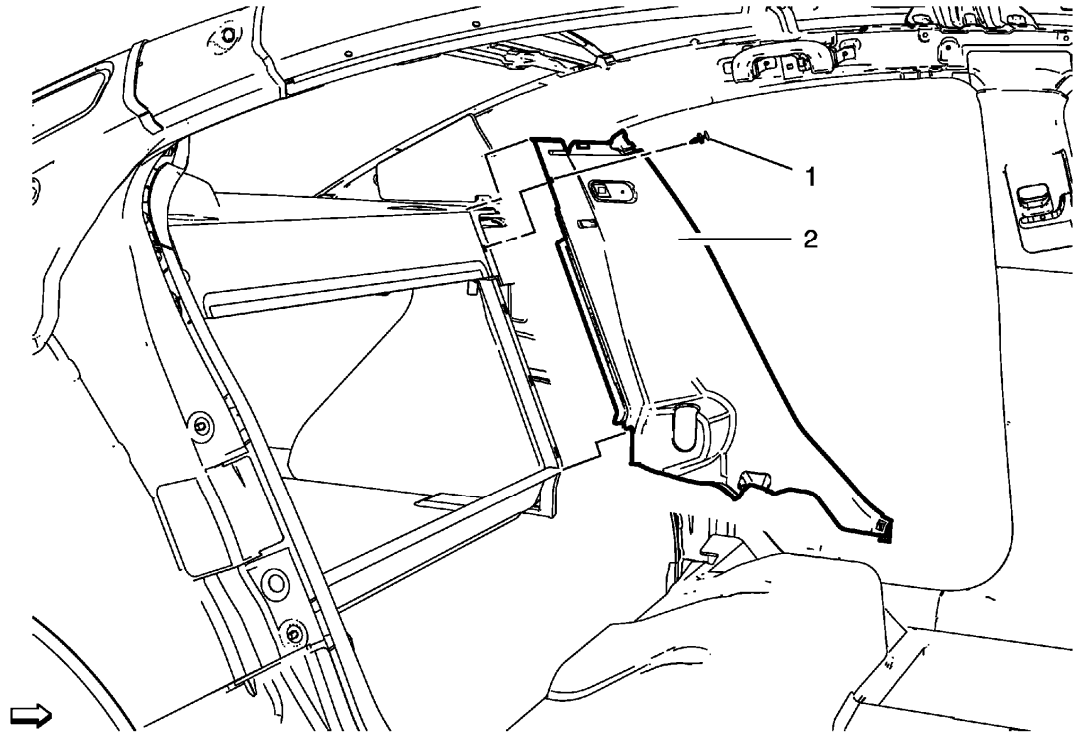

Fig. 20: Body Side Trim Panel
Courtesy of GENERAL MOTORS COMPANY

Body Side Trim Panel Replacement

Callout	Component Name
Preliminary Procedures 1. Remove rear side door sill trim plate. Refer to **Rear Side Door Sill Trim Plate Replacement**. 2. Remove quarter window garnish molding. Refer to **Quarter Window Garnish Molding Replacement**. 3. Remove rear seat. Refer to **Rear Seat Removal and Installation (40 Percent Seat)** , **Rear Seat Removal and Installation (60 Percent Seat)** .	
1	Body Side Trim Panel Clip
2	Body Side Trim Panel **Procedure** Remove the trim panel forward in driving direction in order to release from the body clips.

RADIO FRONT SIDE DOOR SPEAKER GRILLE BEZEL REPLACEMENT

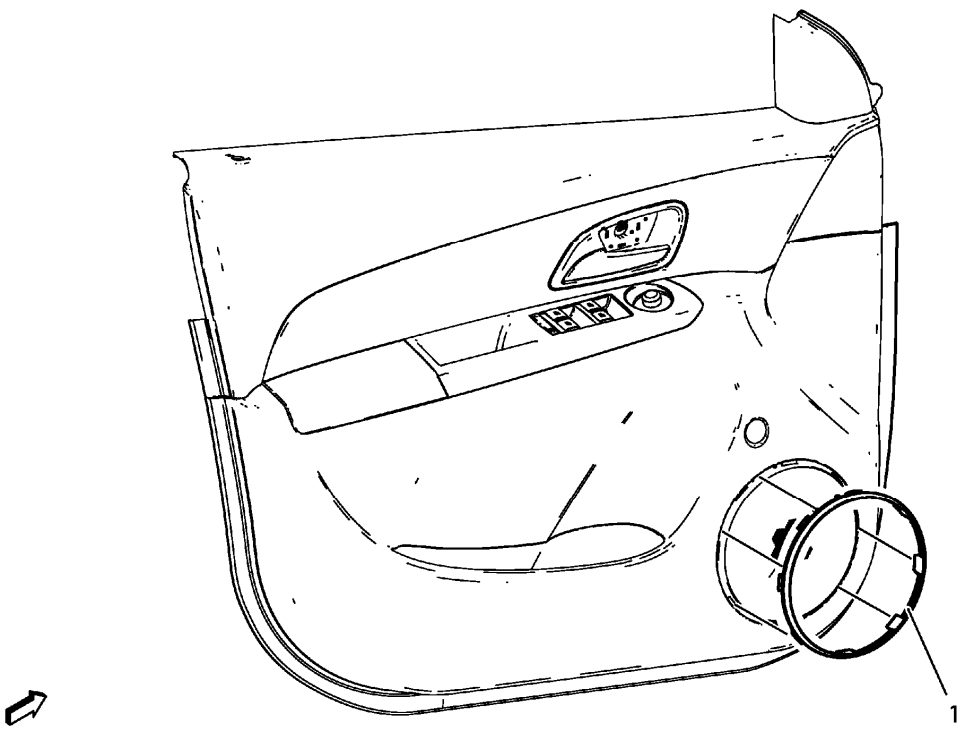

Fig. 21: Radio Front Side Door Speaker Grille Bezel
Courtesy of GENERAL MOTORS COMPANY

Radio Front Side Door Speaker Grille Bezel Replacement

Callout	Component Name
1	Radio Front Side Door Speaker Grille Bezel Assembly

RADIO REAR SIDE DOOR SPEAKER GRILLE BEZEL REPLACEMENT

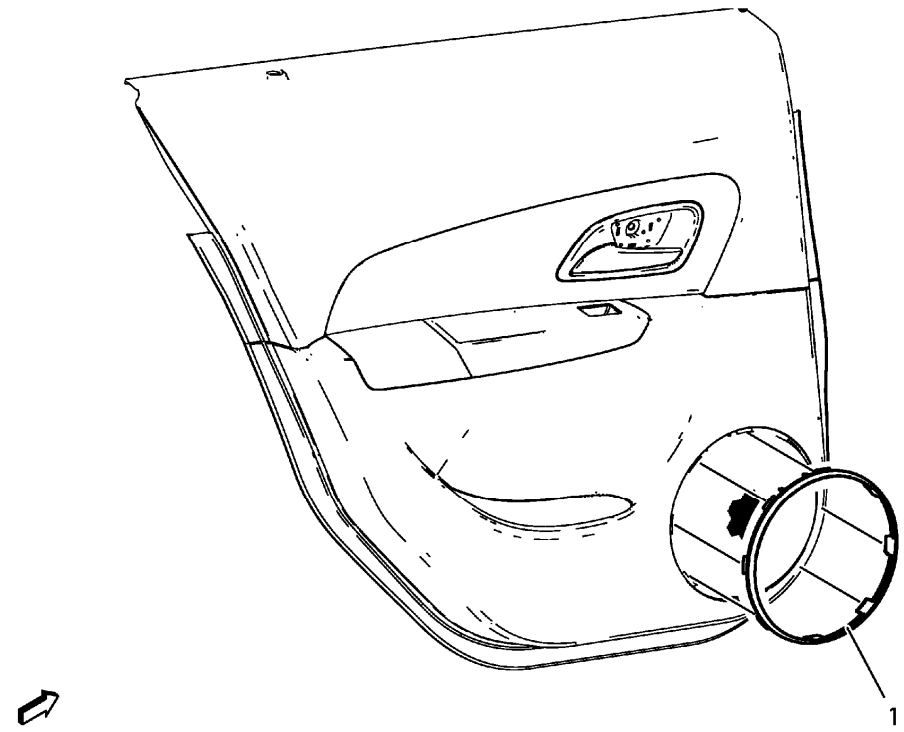

Fig. 22: Radio Rear Side Door Speaker Grille Bezel
Courtesy of GENERAL MOTORS COMPANY

Radio Rear Side Door Speaker Grille Bezel Replacement

Callout	Component Name
1	Radio Rear Side Door Speaker Grille Bezel Assembly

REAR WINDOW PANEL TRIM REPLACEMENT

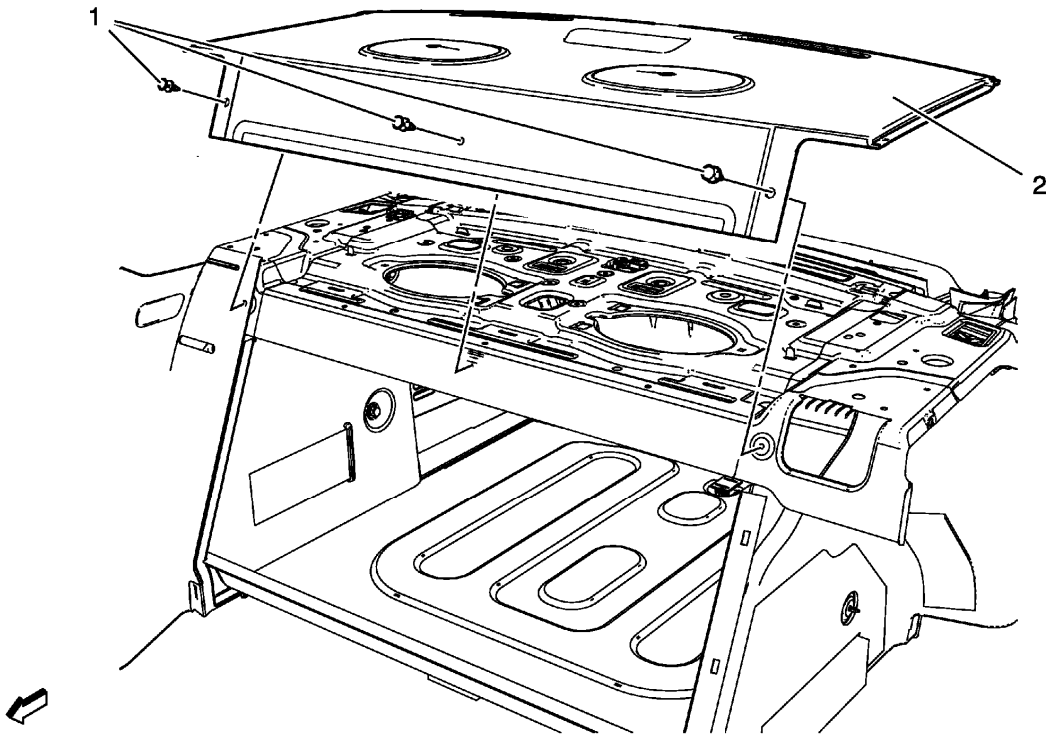

Fig. 23: Rear Window Panel Trim
Courtesy of GENERAL MOTORS COMPANY

Rear Window Panel Trim Replacement

Callout	Component Name
Preliminary Procedures 1. Remove the rear seat back. 2. Remove the high mount stop lamp. Refer to **High Mount Stop Lamp Replacement** .	
1	Rear Window Panel Trim Clip (Qty: 6)
2	Rear Window Panel Trim

REAR COMPARTMENT FLOOR PANEL TRIM REPLACEMENT

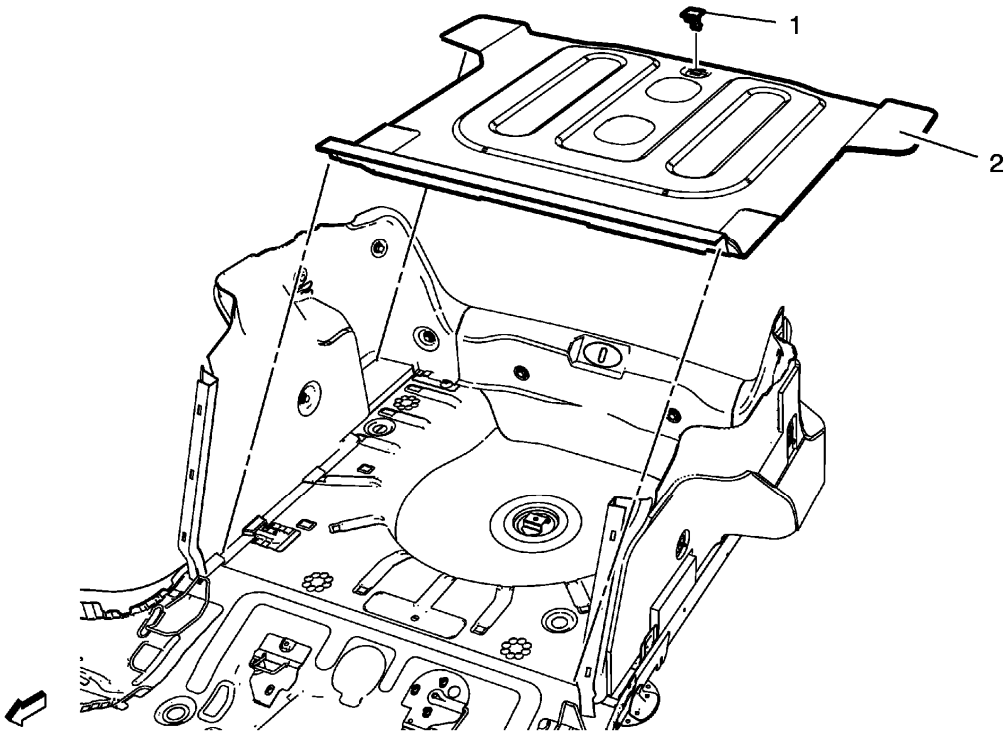

Fig. 24: Rear Compartment Floor Panel Trim
Courtesy of GENERAL MOTORS COMPANY

Rear Compartment Floor Panel Trim Replacement

Callout	Component Name
1	Rear Compartment Convenience Hook
2	Rear Compartment Floor Panel Trim

REAR SIDE DOOR TRIM REPLACEMENT

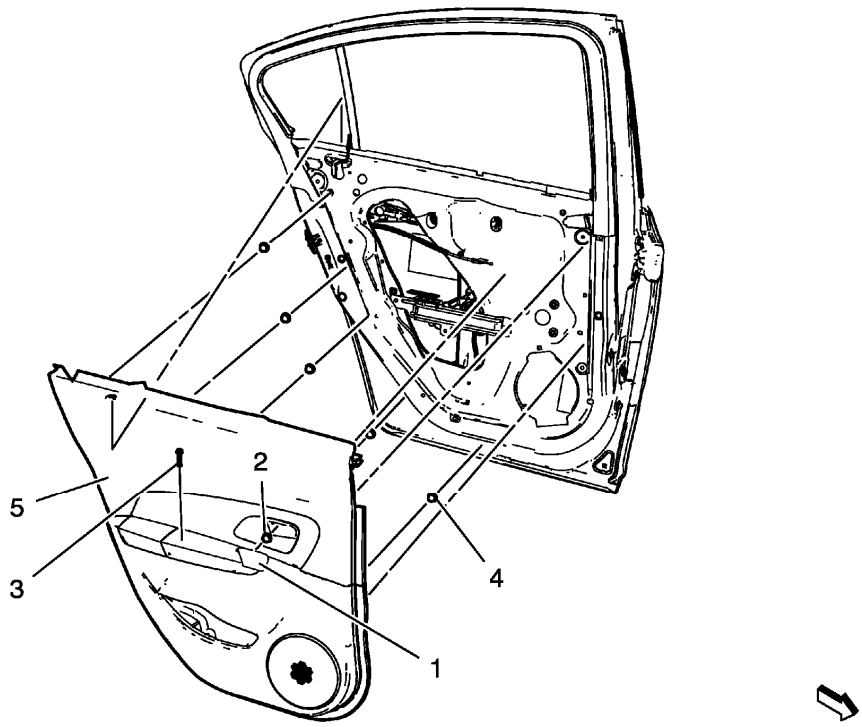

Fig. 25: Rear Side Door Trim
Courtesy of GENERAL MOTORS COMPANY

Rear Side Door Trim Replacement

Callout	Component Name
1	Rear Side Door Inside Handle Bolt Finish Cap **Procedure** Pull handle back to remove cap. Use suitable tool to unsnap.
2	Rear Side Door Inside Handle Screw **CAUTION:** **Refer to Fastener Caution .** **Tighten** 2.5 N.m (22 lb in)
3	Rear Side Door Pull Handle Screw **Tighten** 2.5 N.m (22 lb in)
4	Rear Side Door Trim Clip (Qty: 5) **NOTE:** **Use a NEW retainer before installing the rear side door trim.**

	Special Tools **BO-38778** Door Trim Panel Clip Remover For equivalent regional tools, refer to **Special Tools**.
5	Rear Side Door Trim Assembly **Procedure** 1. Pull upwards on the door lock retainer cable to disengage. 2. Disconnect the electrical connectors. **TIP:** Only use **BO-38778** remover to disengage the door trim clips from the door. Do not disengage the clips by pulling from the map pocket area, since this can distort the trim panel.

REAR COMPARTMENT LID PULL HANDLE REPLACEMENT

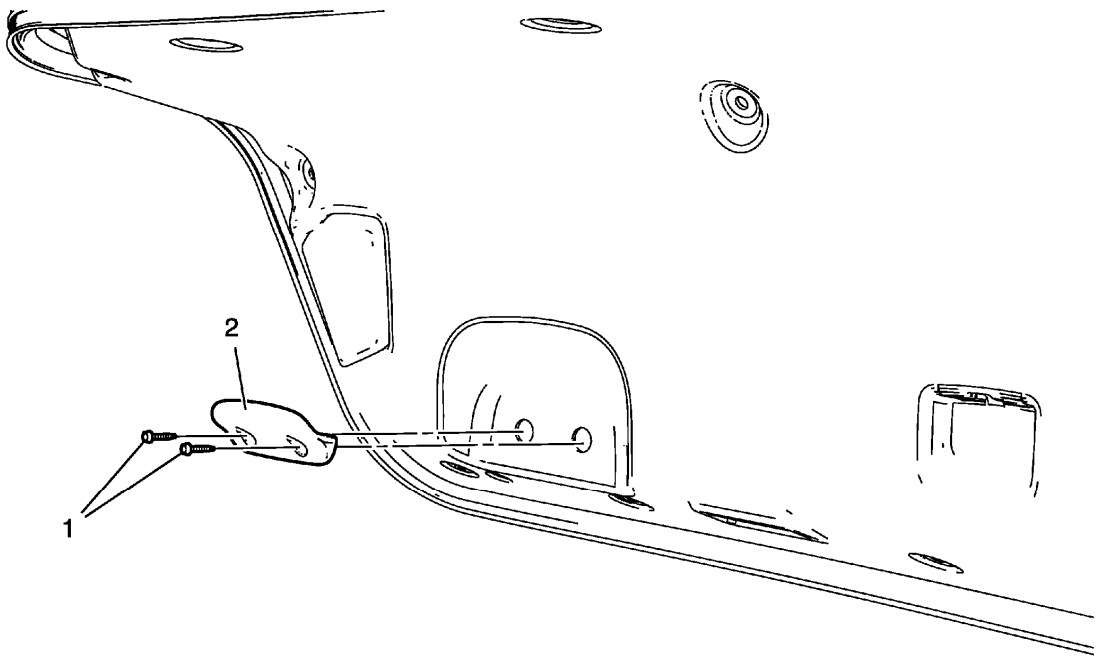

Fig. 26: Rear Compartment Lid Pull Handle
Courtesy of GENERAL MOTORS COMPANY

Rear Compartment Lid Pull Handle Replacement

Callout	Component Name
	Rear Compartment Lid Pull Handle Fastener (Qty: 2)

1	**CAUTION:** **Refer to Fastener Caution .**
2	Rear Compartment Lid Pull Handle

REAR COMPARTMENT SILL TRIM PLATE REPLACEMENT

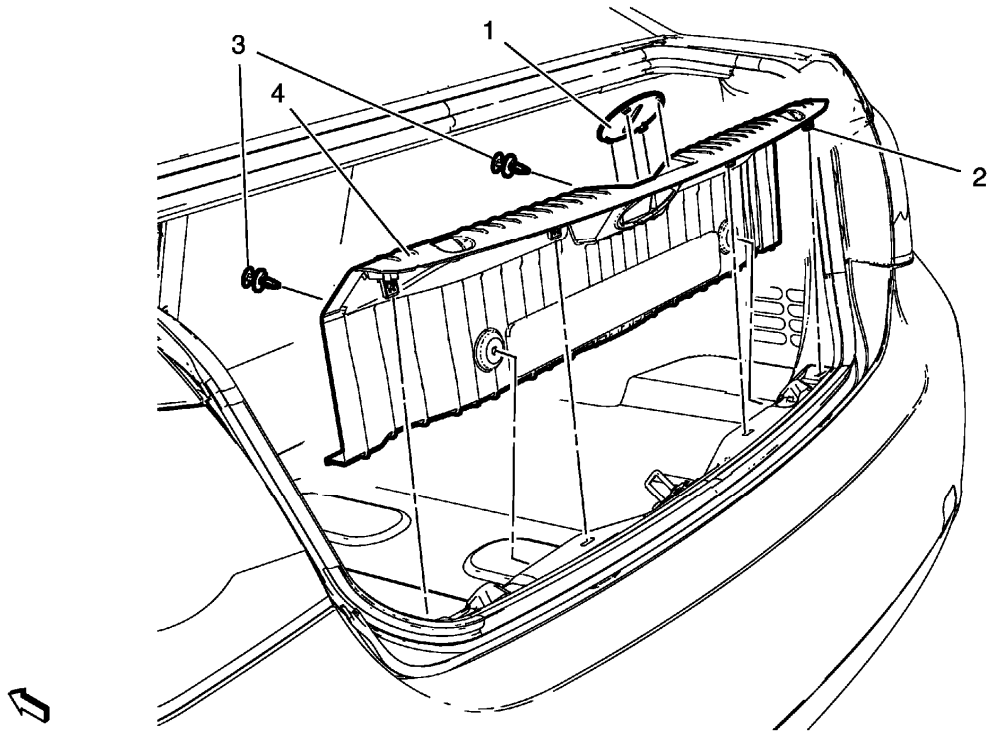

Fig. 27: Rear Compartment Sill Trim Plate
Courtesy of GENERAL MOTORS COMPANY

Rear Compartment Sill Trim Plate Replacement

Callout	Component Name
1	Rear Compartment Lid Latch Striker Cover
2	Rear Compartment Sill Trim Plate Clip (Qty: 4)
3	Rear Compartment Sill Trim Plate Retainer (Qty: 2) **Procedure** Push in retainers in order to release trim plate.
4	Rear Compartment Sill Trim Plate

REAR COMPARTMENT LID INNER PANEL TRIM REPLACEMENT

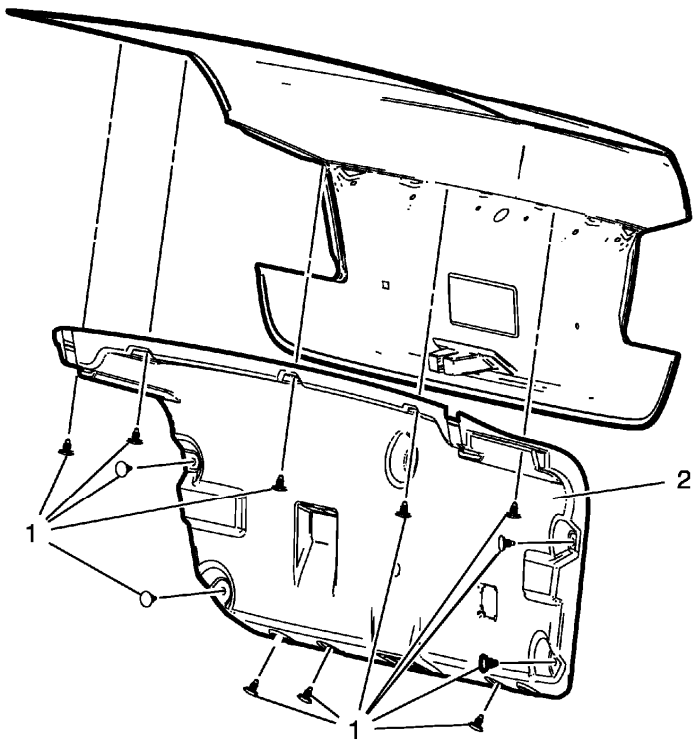

Fig. 28: Rear Compartment Lid Inner Panel Trim
Courtesy of GENERAL MOTORS COMPANY

Rear Compartment Lid Inner Panel Trim Replacement

Callout	Component Name
Preliminary Procedures 1. Remove the rear compartment lid pull handle. Refer to **Rear Compartment Lid Pull Handle Replacement**. 2. Remove the rear compartment lid latch cover. Refer to **Rear Compartment Lid Latch Cover Replacement**.	
1	Rear Compartment Lid Inner Panel Trim Retainer (Qty: 12)
2	Rear Compartment Lid Inner Panel Trim **Procedure** Reposition the emergency release handle as required.

REAR COMPARTMENT LID LATCH COVER REPLACEMENT

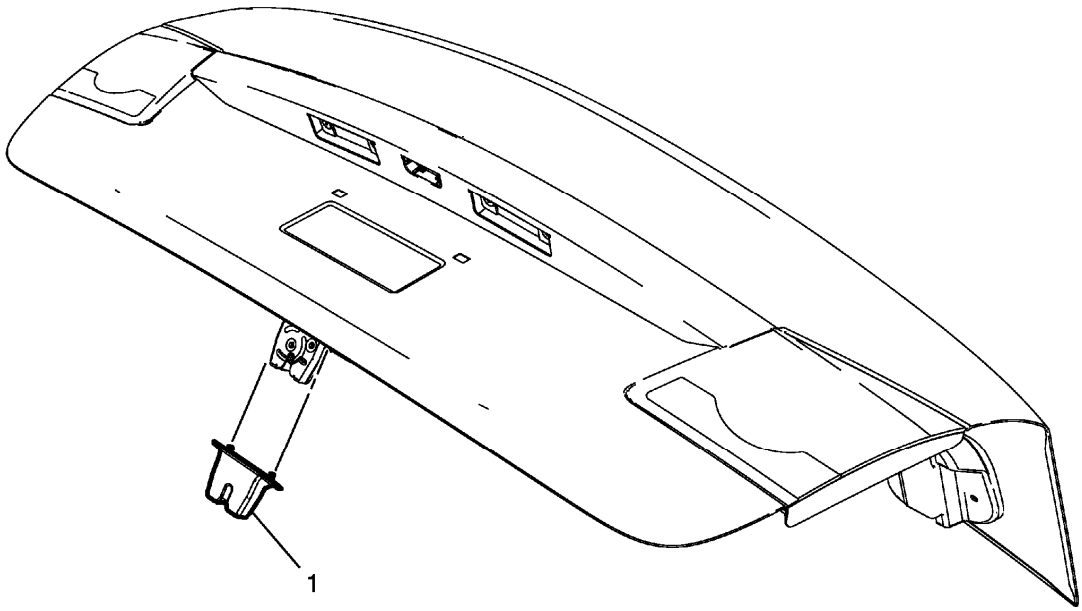

Fig. 29: Rear Compartment Lid Latch Cover
Courtesy of GENERAL MOTORS COMPANY

Rear Compartment Lid Latch Cover Replacement

Callout	Component Name
1	Rear Compartment Lid Latch Cover **Procedure** Use a small flat-bladed tool to pull and release the rear compartment lid latch cover.

REAR COMPARTMENT SIDE TRIM REPLACEMENT - LEFT SIDE

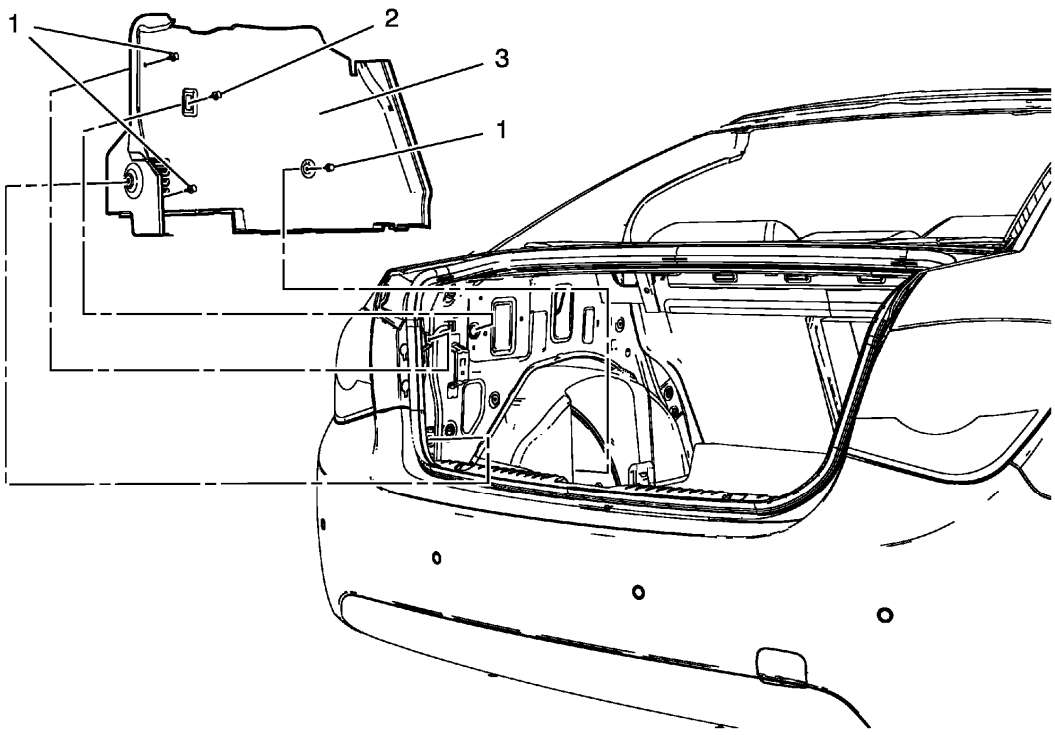

Fig. 30: Rear Compartment Side Trim - Left Side
Courtesy of GENERAL MOTORS COMPANY

Rear Compartment Side Trim Replacement - Left Side

Callout	Component Name
Preliminary Procedures Remove rear compartment sill trim plate. Refer to **Rear Compartment Sill Trim Plate Replacement**.	
1	Rear Compartment Side Trim Retainer (Qty: 3)
2	Rear Compartment Side Trim Fastener **CAUTION:** **Refer to Fastener Caution .**
3	Rear Compartment Side Trim

REAR COMPARTMENT SIDE TRIM REPLACEMENT - RIGHT SIDE

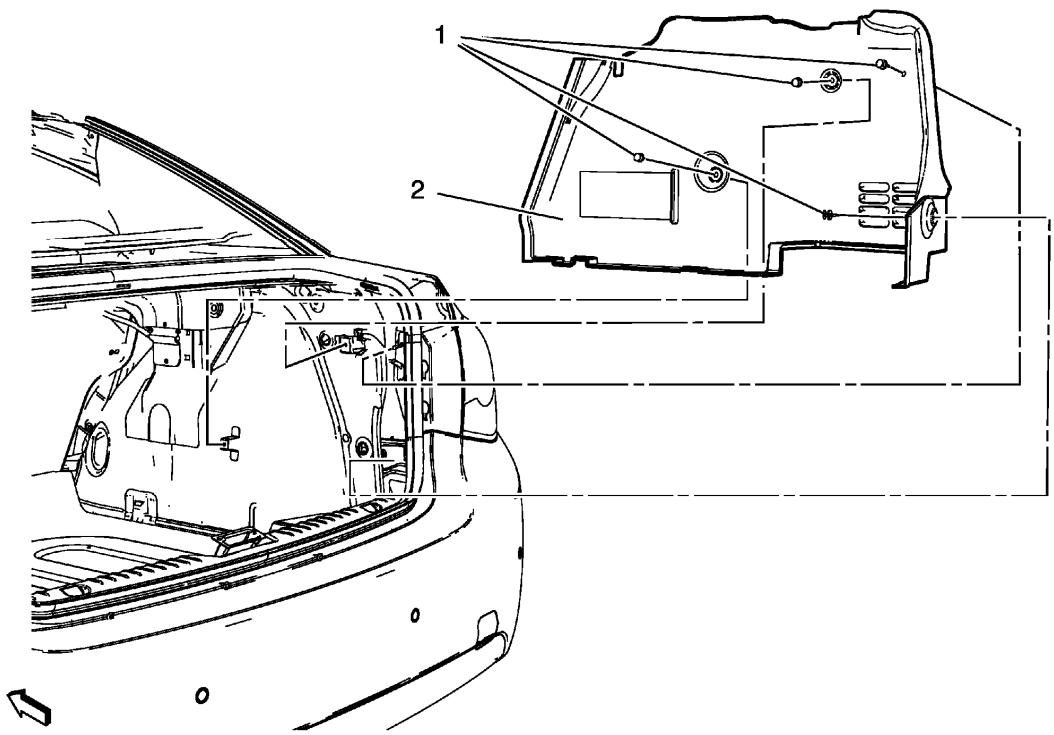

Fig. 31: Identifying Rear Compartment Side Trim - Right Side
Courtesy of GENERAL MOTORS COMPANY

Rear Compartment Side Trim Replacement - Right Side

Callout	Component Name
Preliminary Procedure Remove rear compartment sill trim plate. Refer to **Rear Compartment Sill Trim Plate Replacement**	
1	Body Side Trim Panel Retainer (Qty: 4)
2	Body Side Trim Panel Assembly

SPECIAL TOOLS AND EQUIPMENT

SPECIAL TOOLS

Illustration	Tool Number / Description
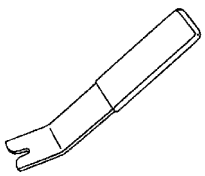	BO-38778 J-38778 Door Trim Pad Clip Remover

2013 ACCESSORIES & EQUIPMENT

Paint and Coatings - Cruze

SPECIFICATIONS

CLEARCOAT REPAIR SPECIFICATIONS - 3M PRODUCTS

Clearcoat Repair Specifications - 3M Products

Paint Condition	Wet Sanding	Scratch Refinement	Compounding	Rotary Polisher	Dual Action Orbital Polisher	Hand Glazing Polishing
New vehicle prep or fine wheel marks	-	-	-	-	• Perfect-It 3000 Swirl Mark Remover P/N 06064 • Perfect-It Foam Polishing Pad P/N 05725/38 • Hookit DA 6-inch Backup Pad P/N 05776	• Perfect-It Wax P/N 39026/395 • Detail Clo P/N 06016
Swirl marks, water spotting, or light oxidation	-	-	-	• Perfect-It 3000 Swirl Mark Remover P/N 06064 • Perfect-It Foam Polishing Pad P/N 05725/38 • Hookit SBS/Perfect-it Backup Pad P/N	• Perfect-It 3000 Swirl Mark Remover P/N 06064 • Perfect-It Foam Polishing Pad P/N 05725/38 • Hookit DA 6-inch	• Perfect-It 3000 Swir Mark Remover P/N 06066 • Perfect-It I Foam DA Pad P/N 05729 • Detail Clo P/N 06016 • Perfect-It Wax P/N

				05717/18	Backup Pad P/N 05776	39026/395
Overspray or medium oxidation	-	-	• Perfect-It III Cleaning Clay P/N 38070 • Perfect-It 3000 Rubbing Compound P/N 06060/62 • Superbuff III Buff Pad P/N 05703/04	• Perfect-It 3000 Swirl Mark Remover P/N 06064 • Perfect-It Foam Polishing Pad P/N 05725/38 • Hookit SBS/Perfect-it Backup Pad P/N 05717/18	• Perfect-It 3000 Swirl Mark Remover P/N 06064 • Perfect-It Foam Polishing Pad P/N 05725/38 • Hookit DA 6-inch Backup Pad P/N 05776	• Perfect-It 3000 Swir Mark Remover P/N 06066 • Perfect-It I Foam DA Pad P/N 05729 • Detail Clo P/N 06016 • Perfect-It Wax P/N 39026/395
Heavy oxidation or minor acid rain pitting	Micro Fine 2000	-	• Perfect-It 3000 Rubbing Compound P/N 06060/62 • Superbuff III Buff Pad P/N 05703/04	• Perfect-It 3000 Swirl Mark Remover P/N 06064 • Perfect-It Foam Polishing Pad P/N 05725/38 • Hookit SBS/Perfect-It Backup Pad P/N 05717/18	• Perfect-It 3000 Swirl Mark Remover P/N 06064 • Perfect-It Foam Polishing Pad P/N 05725/38 • Hookit DA 6 in Backup Pad P/N 05776	• Perfect-It 3000 Swir Mark Remover P/N 06066 • Perfect-It I Foam DA Pad P/N 05729 • Detail Clo P/N 06016 • Perfect-It Wax P/N 39026/395
		• Trizact Hookit II Foam Disc 6 in 3000 P/N 02075	• Perfect-It 3000	• Perfect-It 3000 Swirl Mark Remover P/N 06064	• Perfect-It 3000 Swirl Mark Remover P/N	• Perfect-It 3000 Swir Mark Remover P/N 06066

Dust nibs, minor scratches, or major acid rain pitting	Micro Fine 1500 or 2000	• Hookit II Soft Interface Pad 6 in P/N 05274 • Hookit II Painters Disc Pad 6 in P/N 05251	Rubbing Compound P/N 06060/62 • Superbuff III Buff Pad P/N 05703/04	• Perfect-It Foam Polishing Pad P/N 05725/38 • Hookit SBS/Perfect-It Backup Pad P/N 05717/18	06064 • Perfect-It Foam Polishing Pad P/N 05725/38 • Hookit DA 6 in Backup Pad P/N 05776	• Perfect-It I Foam DA Pad P/N 05729 • Detail Clo P/N 06016 • Perfect-It Wax P/N 39026/395
Orange peel, paint runs or sags	• Hookit II Film Disc 6 in P1200 P/N 00868 • Hookit II Film Disc 6 in P1500 P/N 000850 • Hookit II Painters Disc Pad P/N 05251	• Trizact Hookit II Foam Disc 6 in 3000 P/N 02075 • Hookit II Soft Interface Pad 6 in P/N 05274 • Hookit II Painters Disc Pad 6 in P/N 05251	• Perfect-It 3000 Rubbing Compound P/N 06060/62 • Superbuff III Buff Pad P/N 05703/04	• Perfect-It 3000 Swirl Mark Remover P/N 06064 • Perfect-It Foam Polishing Pad P/N 05725/38 • Hookit SBS/Perfect-It Backup Pad P/N 05717/18	• Perfect-It 3000 Swirl Mark Remover P/N 06064 • Perfect-It Foam Polishing Pad P/N 05725/38 • Hookit DA 6 in Backup Pad P/N 05776	• Perfect-It 3000 Swir Mark Remover P/N 06066 • Perfect-It I Foam DA Pad P/N 05729 • Detail Clo P/N 06016 • Perfect-It Wax P/N 39026/395

INTRODUCTION

BASECOAT/CLEARCOAT PAINT SYSTEMS

WARNING: Exposure to isocyanates during paint preparation and application processes can cause severe breathing problems. Read and follow all of the instructions from the manufacturers of painting materials, equipment, and protective gear.

All paint finish repairs of rigid exterior surfaces must meet GM standards. Refer to the latest revision of the GM

Approved Refinish Materials book to identify the paint systems you may use that have been engineered to meet GM standards. The GM Approved Refinish Materials book supplies all approved products, including volatile organic compound (VOC) compliant regulations recommended by the individual manufacturer, and detailed procedures for materials used in their paint system.

The latest revision of the GM Approved Refinish Materials booklet is located on the Genuine GM Parts website at www.genuinegmparts.com.

ANTI-CORROSION TREATMENT AND REPAIR

WARNING: When applying sound deadeners, or anti-corrosion materials due care and preventative measures must be exercised to prevent any material from being sprayed into door and quarter panel mechanisms such as door locks, window run channels, window regulators and seat belt retractors, as well as any moving or rotating mechanical or suspension parts on the underbody, particularly the parking brake cable. After material application, be sure that all body drain holes are open. Improper application may increase chance of corrosion damage or limit the operation of moving parts, resulting in personal injury.

Any procedure that disturbs these special treatments, such as panel replacement or collision damage repair operations, may leave the metal unprotected and result in corrosion. Proper recoating of these surfaces with service-type anti-corrosion material is essential.

After repair and/or replacement parts are installed, all accessible bare metal surfaces must be treated with metal conditioner and reprimed. Refer to the GM Approved Refinish Materials book which identifies the paint systems you may use.

The latest revision of the GM Approved Refinish Materials booklet is located on the Goodwrench website at www.gmgoodwrench.com.

Anti-corrosion compounds are light-bodied materials designed to penetrate between metal-to-metal surfaces, such as pinch-weld joints, hem flanges, and integral panel attaching points where metal surfaces are difficult to coat with conventional undercoating materials, and are inaccessible for painting. The materials that are suitable for interior and exterior are listed in the chart below. Conventional undercoating is recommended in order to coat large areas, such as replacement door and quarter outer panels, floor pan sections, lids, hoods, fenders, etc. During undercoating operations, care should be taken to prevent the material from being sprayed into door and quarter panel hardware mechanisms, such as door locks, window run channels, window regulators, and seat belt retractors. On the underbody, the material should not be applied to any moving or rotating part, energy absorbing bumper components, or shock absorbers. After undercoating, ensure that all body drain holes are open.

Interior Protectant

The following products are available from GM Dealer Equipment. For technical information, call 187-Permatex (1-877-376-2839):

Permatex Part Number	Description
310-JDI-UCA1	Permatex Canister and Wand Assembly
310-81881	Permatex Amber Rust Proofing (24 oz) (Qty of 12)
310-81882	Permatex Amber Rust Proofing (1 gal)

Exterior Protectants

The following product is available from *ECP, Inc. Contact them at 1-800-323-3521 or www.ecpinc.net.

Part Number	Description
178660	Nox Rust X-121B (12 cans per case)

The following products are available from your local *3M® distributor, or call 1-800-521-8180, ext. 779-5165.

3M® Part Number	Description
08804	Water-Based Undercoat
08801	No Clean-Up Applicator Gun
05917	Weld-Thru Coating
08891	Rust Fighter-I

The following product is available from *Transtar Autobody Technologies. Contact the company at 1-800-824-2843 or www.tat-co.com

Part Number	Description
4353	Weld-Through Primer

*We believe these sources and their products to be reliable. There may be additional manufacturers of such material. General Motors does not endorse, indicate any preference for, or assume any responsibility for the products from these firms, or for any such items which may be available from other sources.

These sealers are intended to prevent water and dust from entering the vehicle and also are anti-corrosion barriers. Sealers are applied to such areas as rear compartment lid hem flanges, wheelhouse, quarter outer, floor, cowl, roof, and various other panel to panel attaching points. The originally sealed joints are obvious and any damage to these sealed locations should be corrected by resealing. Attaching points of new replacement panels should be resealed. Replacement lids and doors will also require sealing in the hem flange areas.

Flanged joints, overlap joints, and seams should be sealed using a quality sealer of medium-bodied consistency. The sealer used must retain its flexible characteristics after curing and be paintable.

Open joints which require bridging of the sealer in order to close a gap should be sealed using a heavy-bodied caulking material. Follow the label directions for the material selected.

Color application may be required in order to restore repaired areas such as hood, fenders, doors, quarters, lid, roof, engine compartment, underbody, and inner panels to original appearance. When this is necessary, conventional refinishing preparation, undercoat buildup, and color application techniques should be followed.

Deadener materials, spray-on type, are used on various metal panels in order to provide corrosion resistance and joint sealing. They control the general noise level inside the passenger area of the vehicle. When deadeners are disturbed because of damage, are removed during repair operations, or a new replacement panel is installed, the deadener material must be replaced by a service equivalent material. The application pattern and location of deadener materials can be determined by observing the original production installation.

Cleaning of the interior and underbody panel surfaces is necessary when original galvanized or other anti-corrosion materials have been burned off during welding or heating operations. Removal of the residue from burning will require additional care in such areas as interior surfaces of box-type construction and when configurations of the metal panels limit access to interior surfaces.

PAINT IDENTIFICATION

WARNING: Exposure to isocyanates during paint preparation and application processes can cause severe breathing problems. Read and follow all of the instructions from the manufacturers of painting materials, equipment, and protective gear.

NOTE: Always refer to the GM Approved Refinish Materials book. This book identifies the paint systems you may use.

The latest revision of the GM Approved Refinish Materials booklet is located on the Goodwrench website at www.gmgoodwrench.com.

Use the service parts identification label to identify the type of paint technology, paint codes, trim level, and any special order paint colors on the vehicle. Refer to **Vehicle Certification, Tire Placard, Anti-Theft, and Service Parts ID Label** .

REPAIR INSTRUCTIONS

CLEARCOAT REPAIR WITHOUT REPAINTING

Repair Procedure

1. Thoroughly wash the repair area with Liquid Wash and Wax GM P/N 1052870 or the equivalent.
2. Environmental damage may be corrected. Refer to **Environmental Fallout (Acid Rain)**, or **Rail Dust Damage Repair**.

   IMPORTANT: Follow all of the instructions from the manufacturer of the polishing material.

3. Use a paint gauge before, during, and after sanding and/or polishing, to avoid removing too much clearcoat. Refer to **Paint Gauges**.

ENVIRONMENTAL FALLOUT (ACID RAIN)

CAUTION: Refer to Clearcoat/Ultraviolet Screeners Caution .

NOTE: Always refer to the manufacturer's packaged instructions for the detailed procedures of materials used for compounding and/or polishing.

Since the severity of the condition varies from area to area, proper diagnosis of the contamination extent is critical to the success of the repairs. Perform the diagnosis under high intensity fluorescent lighting on the horizontal surfaces (hood, roof panel, rear compartment lid), after the surfaces have been properly cleaned by washing the vehicle with GM Wash and Wax GM P/N 1237841 (Canadian P/N 10953203), or equivalent.

There are 3 basic types of acid rain damage:

Surface Level Contamination

May be repaired by simply washing the vehicle, cleaning the surface with a silicone wax and grease remover, neutralizing acidic residue, and finesse polishing-Refer to Surface Level Contamination Repair.

Clearcoat Etching

Slight etching is still noticeable after the above washing and finesse polishing procedure. Refer to Slight Clearcoat Damage - Wet Sanding, Finesse Polishing.

Basecoat Etching

Severe etching beyond the clearcoat into the basecoat in the affected areas will require refinishing. Refer to **Basecoat/Clearcoat Paint Systems**.

Surface Level Contamination Repair

1. Thoroughly wash and dry the contaminated area with GM Wash and Wax GM P/N 1237841 (Canadian P/N 10953203), or equivalent.
2. Clean the affected area with silicone, wax and grease remover.
3. Remove and neutralize acidic residue by cleaning the contaminated areas with a mixture of baking soda and water (1 tablespoon of baking soda per 1 liter or 1 quart of water). Rinse thoroughly and dry the panel completely.
4. Apply finesse-type polish with a foam panel. If damage has been repaired, remove any swirl marks with a dual action orbital polisher and foam pad. Refer to **Clearcoat Repair Specifications - 3M Products**.
5. If some damage remains, refer to Slight Clearcoat Damage - Wet Sanding, Finesse Polishing.

Slight Clearcoat Damage - Wet Sanding, Finesse Polishing

1. Select a small contaminated test area.
2. Film thickness should be taken prior to the sanding and polishing. Refer to **Paint Gauges**.
3. Wet sand and finesse polish the contaminated test area. Refer to **Clearcoat Repair Specifications - 3M**

Products. If during the polishing you suspect or observe that etching has penetrated into the basecoat, too much clearcoat has been removed during sanding, or base color is transferred to the polishing pad during polishing, then the affected areas will require refinishing. Refer to **Basecoat/Clearcoat Paint Systems**.

PAINT GAUGES

Paint thickness gauges measure the total thickness of the vehicle finish. It is important to accurately measure the thickness of the finish on each vehicle as the thickness of the finish will vary on each vehicle. Use a paint gauge before the sanding process in order to accurately measure how much finish there is to remove before, during, and after the sanding process. Paint gauges range from magnetic pull type to sophisticated electronic types, and are available from a variety of sources. The older magnetic type gauges, at best have a 5 percent accuracy range and are not sensitive enough to detect removal of 0.02 mm 0.5 mil (0.0005 in) clearcoat. The newer type magnetic gauges have improved accuracy ranges. Most gauges are confined to checking either ferrous metal, steel, non-ferrous metal, or aluminum panel. At this time, there are no viable gauges for reading film thickness on composite (SCM doors, RIM fenders) panels. The more sophisticated (ETG) electronic paint thickness gauges digital type gauges are able to read film thickness on both ferrous and non-ferrous metal panel. Digital ETG gauges may have an accuracy range of 1 percent and include thickness standards for recalibration. The following paint thickness gauges are available. Call 1-800-GM-TOOLS for information:

Paint Thickness Gauges

- 147-5437-ETG Standard model
- 147-5437-ETG-P Standard model with print option
- 147-5437-N-ETG-N Non-ferrous model for aluminum panels
- 147-5437-NP-ETG-NP Non-ferrous model with print option
- 147-54437-SD-ETG Steel and aluminum gauge

CLEARCOAT THICKNESS

The clearcoat on the vehicle is typically 0.059-0.078 mm (1.5-2 mils [0.0015-0.0020 in]) thick. The clearcoat contains ultraviolet screeners. Removing more than 0.5 mils (0.019 in) of the clearcoat may result in early paint failure.

RAIL DUST DAMAGE REPAIR

WARNING: Refer to Eye Protection Warning .

NOTE: If rail dust has penetrated into the basecoat, the panel requires refinishing. Ensure all the rail dust has been removed prior to refinishing or the rust spots will return.

Rail dust damage comes from the tiny iron particles produced from the friction between the train wheels and the track. It can also be deposited on vehicles if stored near any operation producing iron dust (i.e., steel ore yards). This dust can either lay on top of, or embed into the paint surface. It is usually diagnosed as bumps in the paint surface or rust colored spots in the paint.

1. Move the vehicle to a cool shaded area and ensure the vehicle surfaces are cool during the removal process.
2. Thoroughly wash the repair area with Liquid Wash and Wax GM P/N 1052870, or equivalent.
3. Wipe the area dry.
4. Clean the affected area with silicone, wax and grease remover.
5. Perform the removal process according to the manufacturer's directions of the type of repair material used (Gel Type Oxalic Acid or Clay Type Non-Acid Based). If, upon inspection, some particles are still present, the process may be repeated. If the damage has been repaired, complete the repair to the entire panel.
6. Polish the entire panel after the removal process. Refer to **Clearcoat Repair Specifications - 3M Products**. If small pits remain in the clearcoat after all of the damage has been repaired, refer to **Clearcoat Repair without Repainting**.

2013 ACCESSORIES & EQUIPMENT

Plastic Panel Information and Repair - Cruze

SPECIFICATIONS

FLEXIBLE PLASTIC PART REPAIR MATERIALS

Product- 88861039, *88861040, High Strength Plastic Repair 50 ml

Components- 12 cartridges with 2 mixers each

Structural and Cosmetic

Recommended Repair Material

Product	Components	Recommended Repair Material	Work Time 70°F	Handling Strength at 70°F
88861039 *88861040 High Strength Plastic Repair 50 ml	12 cartridges with 2 mixers each	Structural and cosmetic bonding and repairing of all flexible plastics. Requires GM P/N 12378462 on TPO plastics. Will also bond e-coated/primed metals.	90 seconds	10 minutes
* TPO, TEO, (Polyolefin Plastics) require the application of polyolefin adhesive primer before the GM P/N 88861039 repair compound is applied.				

Working Time

Product	Adhesive Sandability at 70°F	Part Paintability at 70°F	Adhesive Full Cure at 70°F	Program
88861039 *88861040 High Strength Plastic Repair 50 ml	20 minutes	30 minutes	24 hours	Bumper covers, emblems, door trims, exterior and interior repairs*
* TPO, TEO, (Polyolefin Plastics) require the application of polyolefin adhesive primer before the GM P/N 88861039 repair compound is applied.				

RIGID PLASTIC PART REPAIR MATERIALS

Rigid Plastic Part Repair Materials

Thermoset Plastic Type	Type of Repair	Recommended Repair Material	Availability

Sheet metal compound (SMC), RIM rigid plastic parts	Cosmetic filling	GM Goodwrench® Structural Bonding Epoxy (GM P/N 12345726 or equivalent)	GM Dealer
		Sikkens Polystop LP™ or equivalent polyester repair putty	Refer to a local paint supplier
Most rigid plastic parts	Cosmetic repair, adhesive bonding	GM Goodwrench® Structural Bonding Epoxy (GM P/N 12345726 or equivalent)	GM Dealer
		Lord Fusor® SMC Body Panel Repair Adhesive or equivalent	Refer to local paint supplier
Most rigid plastic parts	Adhesive bonding	GM Goodwrench® Structural Bonding Epoxy (GM P/N 12345726 or equivalent)	GM Dealer
		Dynatron Dyna-Weld Plio Grip® or equivalent (OE structural adhesive)	Refer to local paint supplier
Most rigid plastic parts	Adhesive structural* bonding	GM Goodwrench® Structural Bonding Epoxy (GM P/N 12345726 or equivalent)	GM Dealer
Most rigid plastic parts	Adhesive bonding Structural bonding	Ashland Pliogrip® 7773B-3-minute Ashland Pliogrip® 7779B-10-minute Ashland Pliogrip® 7770B-35-minute	Supplied by Crest Industries 1-800-822-4100 fax 1-800-344-4461
SRIM most rigid plastic parts	Cosmetic repair, adhesive bonding	GM Goodwrench® SRIM™ repair kit (GM P/N 12378523) or SIA™ Adhesives, INC. SRIM™ repair kit P/N 30208030001 adhesive 200ML TUBES P/N 30208020001 50ML TUBES P/N 30208010001	SIA Adhesives, INC. customer service 1-330-374-2468
* Structural adhesive bonding may require the use of a pneumatic applicator, A8-37479-1A, or equivalent, to speed the application of the GM P/N 12345726 epoxy.			Kent-Moore 1-800-GM-TOOLS

REPAIR INSTRUCTIONS

GENERAL PLASTIC REPAIR

WARNING: In order to reduce the risk of personal injury when exposed to toxic fumes while grinding, cutting, or applying repair material on any type of sheet molded compound or RIM rigid plastic, observe the following guidelines:

- **Work in a properly ventilated area**
- **Apply protective cream to any exposed skin**
- **Remove any mixture that comes into contact with skin**
- **Wash skin with cold water to remove glass and resin dust**
- **Use a sander with a vacuum attachment**
- **Follow the repair material manufacturer's instructions**

Also, always wear the following:

- **An approved respirator, or air supplied respirator**
- **Eye protection**
- **Rubber gloves**
- **Earplugs**
- **Protective clothing**

The following procedures should be followed when repairing all types of thermoset plastic:

- Follow the manufacturer's application and curing recommendations.
- Do not intermix systems. Use the supplies and the repair materials from the same manufacturer.
- Clean the inner and outer surfaces of the repair area with a soap impregnated scouring pad in order to remove any dirt or mold release agent.
- Clean the area with a wax and grease remover, using only enough of the remover to dampen a cloth. Allow the panel to dry thoroughly.
- Remove the surface finish from the area to be repaired. Adhesives are designed to adhere to the plastic substrate, not the finish.
- Prime a metal surface before applying the repair material.
- Inspect the rear side of the work area before making repairs in order to avoid possible damage to wires, motors, etc.

DESCRIPTION AND OPERATION

HOW TO IDENTIFY PLASTIC PARTS

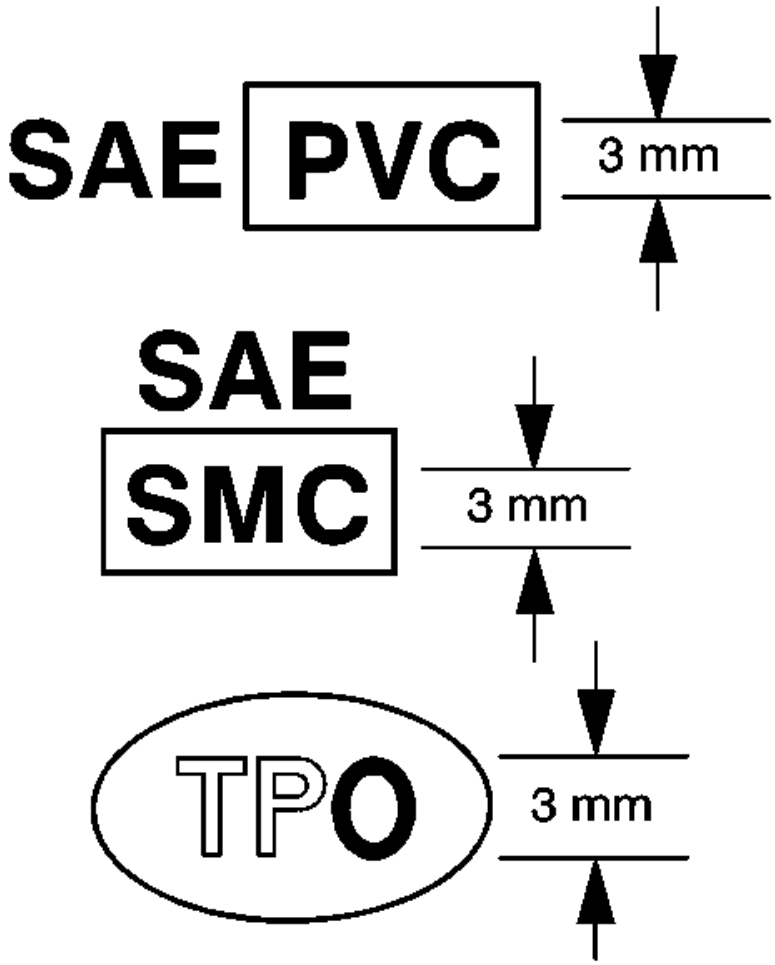

Fig. 1: Identifying SAE Code
Courtesy of GENERAL MOTORS COMPANY

Plastic parts can be identified by the SAE code, which is usually found on the rear of the part, and/or by the characteristics of the plastic. Knowing the type of plastic aids in selecting the proper repair materials and in selecting the proper repair procedure.

Look for the SAE code stamped into the part.

Code Found

Match the code to those in the plastic identification chart to determine whether the plastic is thermoplastic or thermoset plastic, and whether the plastic is rigid or flexible. Refer to **Plastic Identification and Refinishing Systems**.

No Code Found

WARNING: Do NOT use a plastic burn test to distinguish the type of plastic. The burn

test produces vapors which are harmful.

Perform one or both of the following tests to determine if the part is thermoplastic polyolefin or thermoset non-polyolefin.

Float Test

1. Cut a shaving of plastic from the back of the part.

   The shaving should be free of mold release agents and paint.

2. Place the shaving in a container of water.
   - Thermoplastic polyolefin floats.
   - Thermoset non-polyolefin sinks.

Abrasion Test

- Sand a spot near the damaged area with Grade 36 Roloc Disc.
- Thermoplastic polyolefin material melts or frays when sanded.
- Thermoset non-polyolefin material sands cleanly.

Thermoplastic and thermoset plastics can be either rigid or flexible. Thermoplastic plastic parts are best repaired with a hot iron plastic material-feed welder, but are usually replaced. Thermoset plastic can be repaired with epoxy or other more rigid 2 package repair material.

- For rigid thermoset repair materials, refer to **Rigid Plastic Part Repair Materials**.
- For flexible thermoset repair materials, refer to **Flexible Plastic Part Repair Materials**.
- For general repair instructions, refer to **General Plastic Repair**.

PLASTIC IDENTIFICATION AND REFINISHING SYSTEMS

Plastic Identification and Refinishing Systems

Identifying Symbol- Old Symbol in ()s	Chemical Composition or Plastic Family Name	Typical Area(s) Where Part is Used	Examples of Common / Trade Names	Type of Plastic
ABS	Acrylonitrile / Butadiene-Styrene	Armrest Support, Console, IPC, Steering Column Bracket / Jacket, Trim Molding	ABS, Absafil, Magnum, Cycolac, Dyel, Kralastic, Lustran	Thermoplastic
ABS + PC	Acrylonitrile / Butadiene-Styrene + Polycarbonate	Instrument Panel, IPC	Bayblend, Cycoloy, KHA, Pulse	Rigid
		Head Rest Cover, Instrument Panel		

ABS / PVC	ABS/Vinyl (Soft)	Pad, Trim Molding / Panel	ABS Vinyl	Flexible, Vinyl
EPDM	Ethylene Propylene Diene Monomer	Body Panel, Bumper Impact Strip	EPDM, Nordel	Rigid
EVA (EVAC)	Ethylene / Vinyl Acetate	Head Rest Cover, Misc Soft Trim	Elvax, Microthane	Flexible
PA	Polyamide	Headlamp Bezels, Quarter Panel Extensions, Exterior Finish Trim Panels	Nylon, Capron, Zytel, Rilsan, Minion, Vydyne, Welland	Rigid
PA, PAG, PAGG	Polyamide	Exterior Finish Trim Panel, Headlamp Bezel, Quarter Panel Extension	Capron, Minlon, Nylon, Rilsan, Vydyne, Wellamid, Zytel	Rigid, Thermoset
PA + PPE	Polymide + Polypheneylene Ether	Exterior Trim, Fender	GTX	Rigid, Thermoset
PBT + TEEE (PBTP + EEBC)	Polybutylene, Terephthalate + Ether, Ester Block Compound	Fascia, Rocker Panel Molding	Bexloy M	Rigid
PC	Polycarbonate	Interior Rigid / Hard Trim Panel, Valance Panel	Calibre, Lexan, Merlon, Makrolon	Rigid, Thermoset
PC + PETP	Polycarbonate + Polybutylene, Terephthalate	Bumper Fascia	Macroblend, Valox, Xenoy	Flexible, Thermoset
PE	Polyethylene	Fuel Tank Shield, Inner Fender Panel, Interior Trim Panel, Seat Belt Cover, Spoiler, Valance	Alathon, Dylan, Foriflex, Hi-fax, Hosalen, Marlex, Paxon	Rigid, Thermoplastic
PF	Phenol Formaldehyde	Ashtray	Amberol, Bakelite, Durez, Genal, Phenolic, Plyophen, Resinox	Rigid, Thermoset
PP	Polypropylene	Bumper Fascia, Cowl Panel, Deflector Panel, Door Panel, Inner Fender, Interior Molding, Kick Panel, Load Floor, Radiator Shroud,	Azdel, Daplen, Escorene, Marlex, Novolen, Oleflo, Profax, Tenite	Flexible, Thermoplastic

		Wheel Cover		
PPE (PPO)	Polyphenylene Ether	Bezels, Chromed Plastic, Headlamp Door, Ornaments	Noryl, Oleflo, Prevex	Rigid, Thermoset
PS	Polystyrene	Dash Panel, Door Panel	Durathon, Dylan, Lustrex, Polystyrol, Styron	Flexible, Soft
PUR	Polyurethane, Thermoset (Unsaturated)	Bumper Fascia, Filler Panel, Front/Rear Body Panel, Pickup Box	Bayflex, Castethane, RIM, RRIM, SRIM	Thermoset
PVC	Polyvinyl Chloride (Vinyl)	Interior Soft Trim, I/P Skins, Roof Cover	Geon, Pliovic, Unichem, Vinoflex, Vinyl, Vinylite	Flexible, Vinyl
SAN (SA)	Styrene Acrylonitrite	Center Console, Glove Box Door, Interior Trim Panel	Foracryl, Lustran, Tyril	Rigid
TEO (EP, EPM, TPO)	Ethylene / Propylene (Rubber)	Air Dam, Bumper Fascia, Valance Panel	EPI, EPII, TPO, TPR (Thermoplastic Rubber)	Flexible, Thermoplastic
TPO	Thermal Plastic Oletin	Bumper Covers	TPO	Flexible Thermoplastic
TPU (TPUR)	Polyurethane, Polyolefin	Bumper Fascia, Gravel Deflector, Soft Filler Panel, Window Molding	Estane, Pellethane, Roylar, Toxin	Flexible, Thermoplastic
UP	Polyester / Thermoset	Air Scoop, Air Spoiler, Fascia Extension, Hood, Instrument Housing, Rear Compartment Lid, Roof, Ventilation Grid	Fiberglass, Premi-glass, Selectron, SMC, Vibrinmat	Rigid, Thermoset
For symbols not listed in this table, contact the Society of Automotive Engineers, 400 Commonwealth Drive, Warrendale, PA 15096-0001.				

2013 ACCESSORIES & EQUIPMENT

Seat Hardware, Trim, and Upholstery - Cruze

SPECIFICATIONS

FASTENER TIGHTENING SPECIFICATIONS

Fastener Tightening Specifications

Application	Specification	
	Metric	English
Front Seat Adjuster Bolt	20 N.m	15 lb ft
Front Seat Anchor Plate Bolt	9 N.m	80 lb in
Front Seat Backrest Bolt	34.5 N.m	25 lb ft
Front Seat Belt Buckle Bolt	45 N.m	33 lb ft
Front Seat Cushion Inner Trim Panel Screw	2.5 N.m	22 lb in
Front Seat Cushion Outer Trim Panel Screw	2.5 N.m	22 lb in
Front Seat Mounting Bolt	45 N.m	33 lb ft
Rear Seat Back Armrest Hinget Nut	4.5 N.m	40 lb in
Rear Seat Back Armrest Hinge Bolt	9 N.m	80 lb in

REPAIR INSTRUCTIONS

DRIVER OR PASSENGER SEAT REMOVAL AND INSTALLATION

Removal Procedure

WARNING: When carrying a live inflator module, make sure the bag opening is pointed away from you. This minimizes the chance of injury in the case of an accidental deployment. Never carry the inflator module by the wires. Never carry the inflator module by the connector on the underside of the module.

Make sure that the bag and trim cover are facing up whenever you place a live inflator module on any surface. This is necessary to provide a free space for the bag to expand in the unlikely event of accidental deployment.

Never rest the steering column assembly on the steering wheel with the inflator module face down, and the column vertical. This may result in personal injury.

WARNING: Refer to SIR Warning .

1. Disable the supplemental inflatable restraint (SIR) system. Refer to **SIR Disabling and Enabling** .
2. Disconnect the seat belt from the seat belt tensioner. Refer to **Front Seat Belt Anchor Plate Tensioner Replacement**

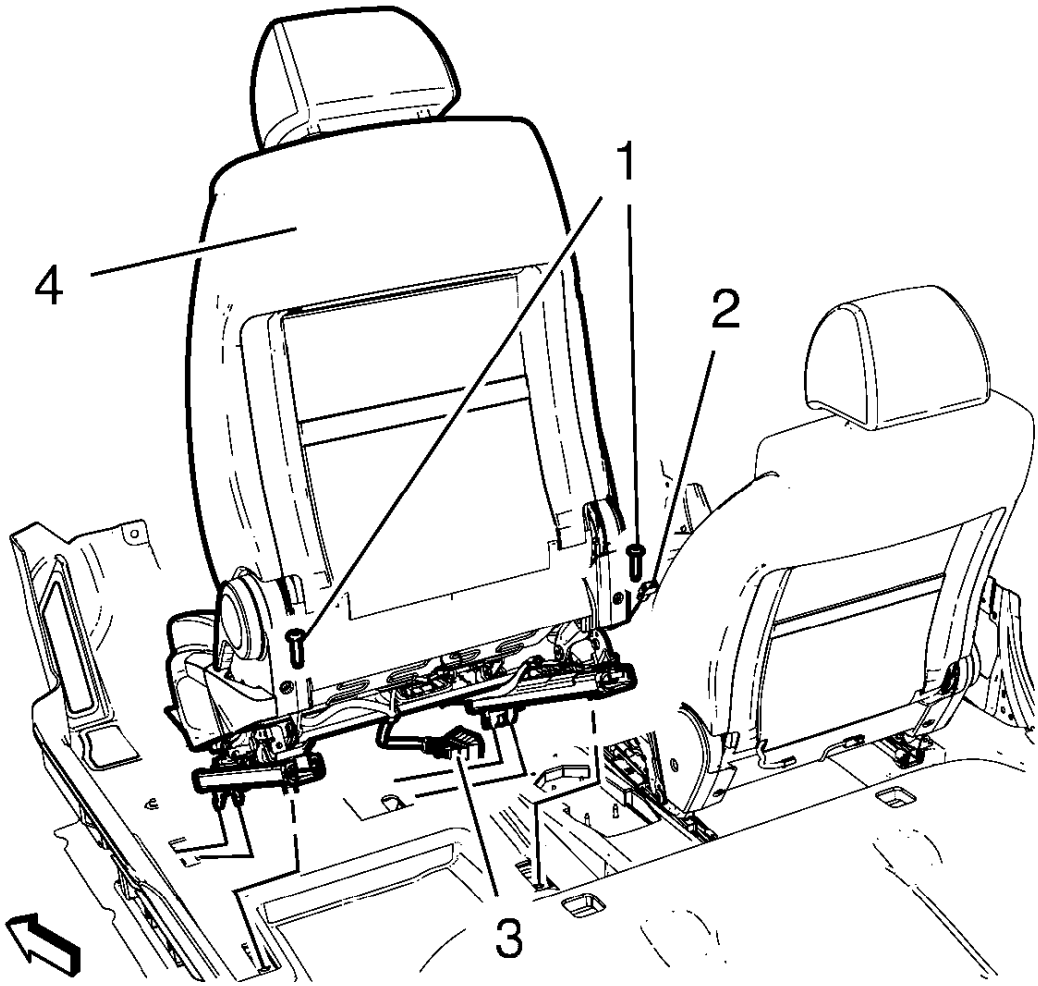

Fig. 1: Front Seat Components
Courtesy of GENERAL MOTORS COMPANY

3. Unscrew the 2 bolts (1).
4. Release and disconnect the wiring harness plug (3) front seat.
5. Remove the front seat (4) from the guide in front.

Installation Procedure

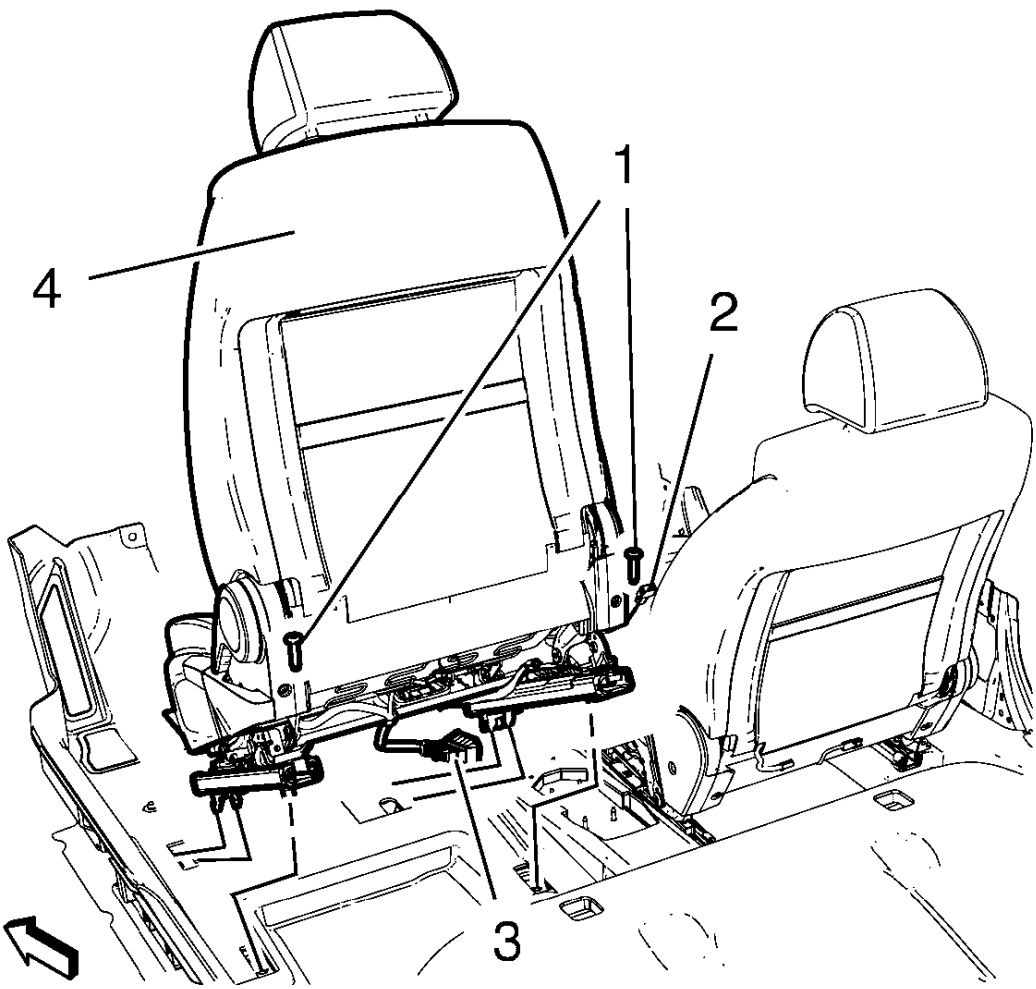

Fig. 2: Front Seat Components
Courtesy of GENERAL MOTORS COMPANY

1. Perform the front seat track synchronization. Refer to **Front Seat Track Synchronization**.
2. Install the front seat (4) to the guide in front.
3. Connect and latch the wiring harness plug (3) front seat.

CAUTION: Refer to Fastener Caution .

4. Install the 2 bolts (1) and tighten to 45 N.m (33 lb ft).
5. Connect the seat belt to the seat belt tensioner. Refer to **Front Seat Belt Anchor Plate Tensioner Replacement**
6. Enable the SIR system. Refer to **SIR Disabling and Enabling** .

FRONT SEAT OUTER RECLINER UPPER FINISH COVER REPLACEMENT

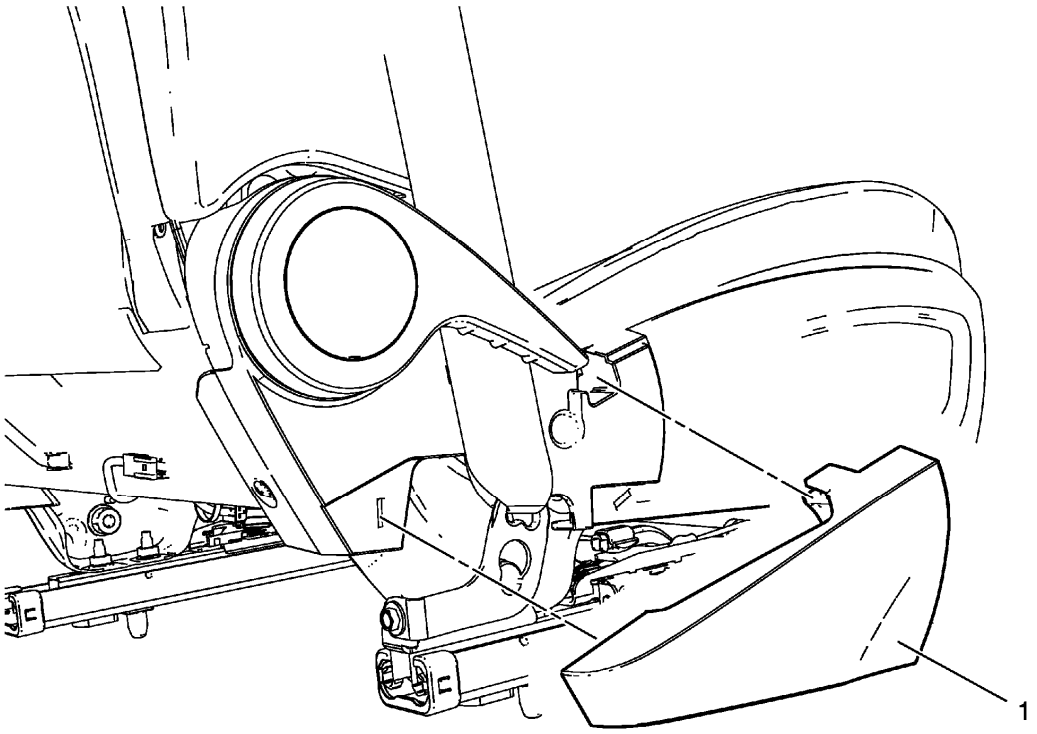

Fig. 3: Front Seat Outer Recliner Upper Finish Cover
Courtesy of GENERAL MOTORS COMPANY

Front Seat Outer Recliner Upper Finish Cover Replacement

Callout	Component Name
1	Front Seat Outer Recliner Upper Finish Cover

DRIVER OR PASSENGER SEAT ADJUSTER VERTICAL ACTUATOR HANDLE REPLACEMENT

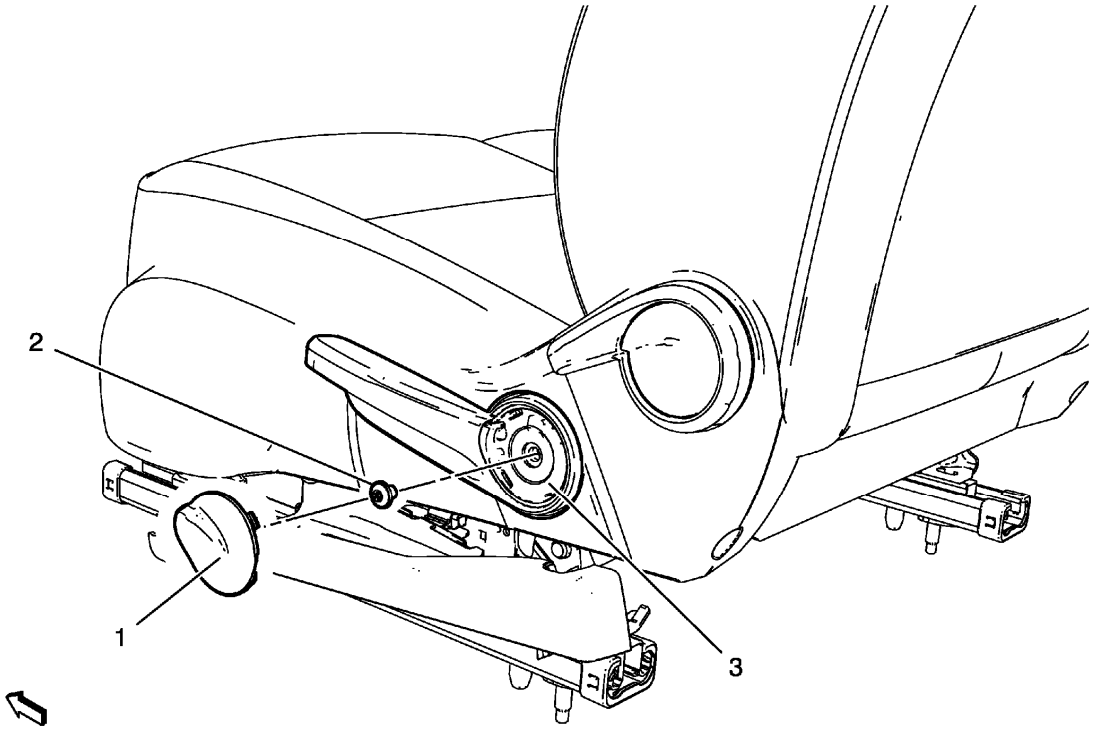

Fig. 4: Seat Adjuster Vertical Actuator Handle, Bolt & Cap
Courtesy of GENERAL MOTORS COMPANY

Driver or Passenger Seat Adjuster Vertical Actuator Handle Replacement

Callout	Component Name
1	Front Seat Adjuster Vertical Actuator Handle Cap Bolt
2	Front Seat Adjuster Vertical Actuator Handle Bolt **CAUTION:** **Refer to Fastener Caution .**
3	Front Seat Adjuster Vertical Actuator Handle

DRIVER OR PASSENGER SEAT ADJUSTER HANDLE REPLACEMENT

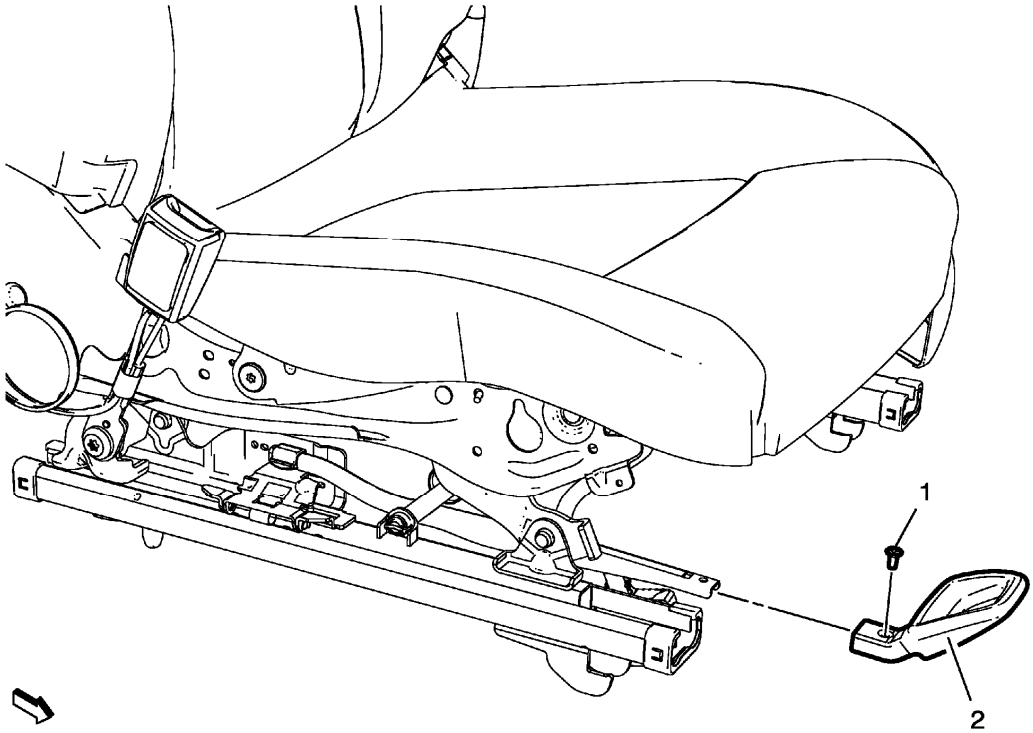

Fig. 5: Driver Or Passenger Seat Adjuster Handle
Courtesy of GENERAL MOTORS COMPANY

Driver or Passenger Seat Adjuster Handle Replacement

Callout	Component Name
1	Front Seat Adjuster Handle Bolt **CAUTION:** **Refer to Fastener Caution .**
2	Front Seat Adjuster Handle

FRONT SEAT TILT ADJUSTER LEVER REPLACEMENT

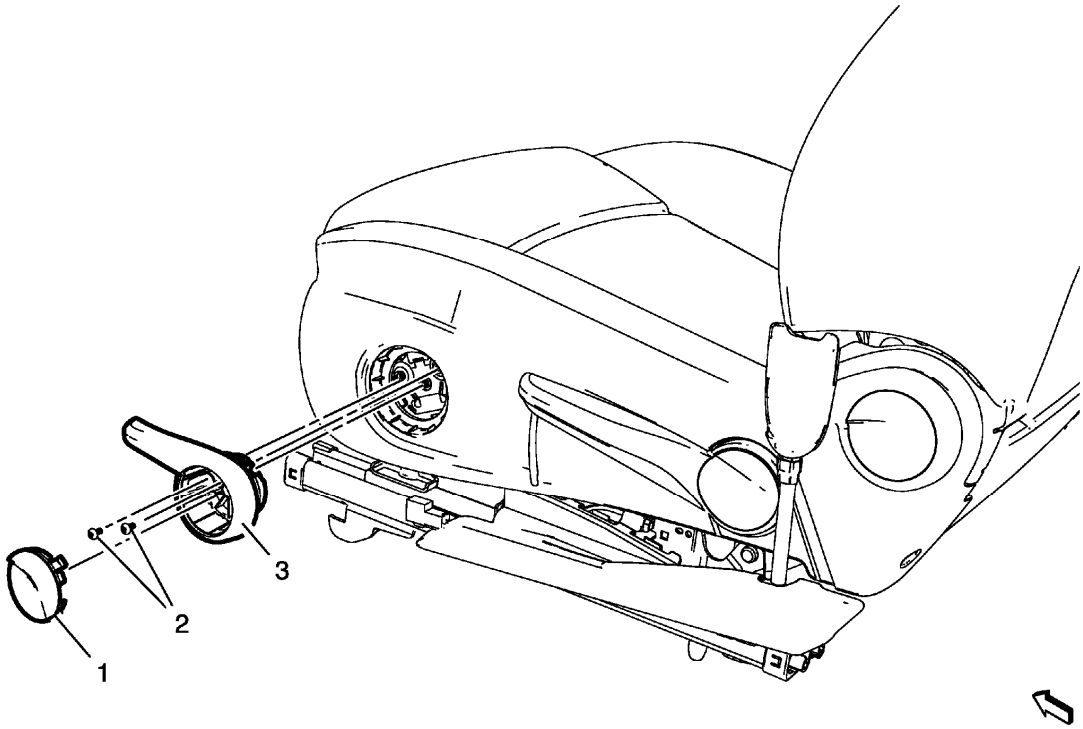

Fig. 6: Front Seat Tilt Adjuster Lever
Courtesy of GENERAL MOTORS COMPANY

Front Seat Tilt Adjuster Lever Replacement

Callout	Component Name
1	Front Seat Tilt Adjuster Lever Bolt Cap
2	Front Seat Tilt Adjuster Lever Fastener (Qty: 2) **CAUTION:** **Refer to Fastener Caution .** **Tighten** 20 N.m (15 lb ft)
3	Front Seat Tilt Adjuster Lever **Procedure** Use a small flat-bladed tool to release the front seat tilt adjuster lever bolt cap.

FRONT SEAT TRACK SYNCHRONIZATION

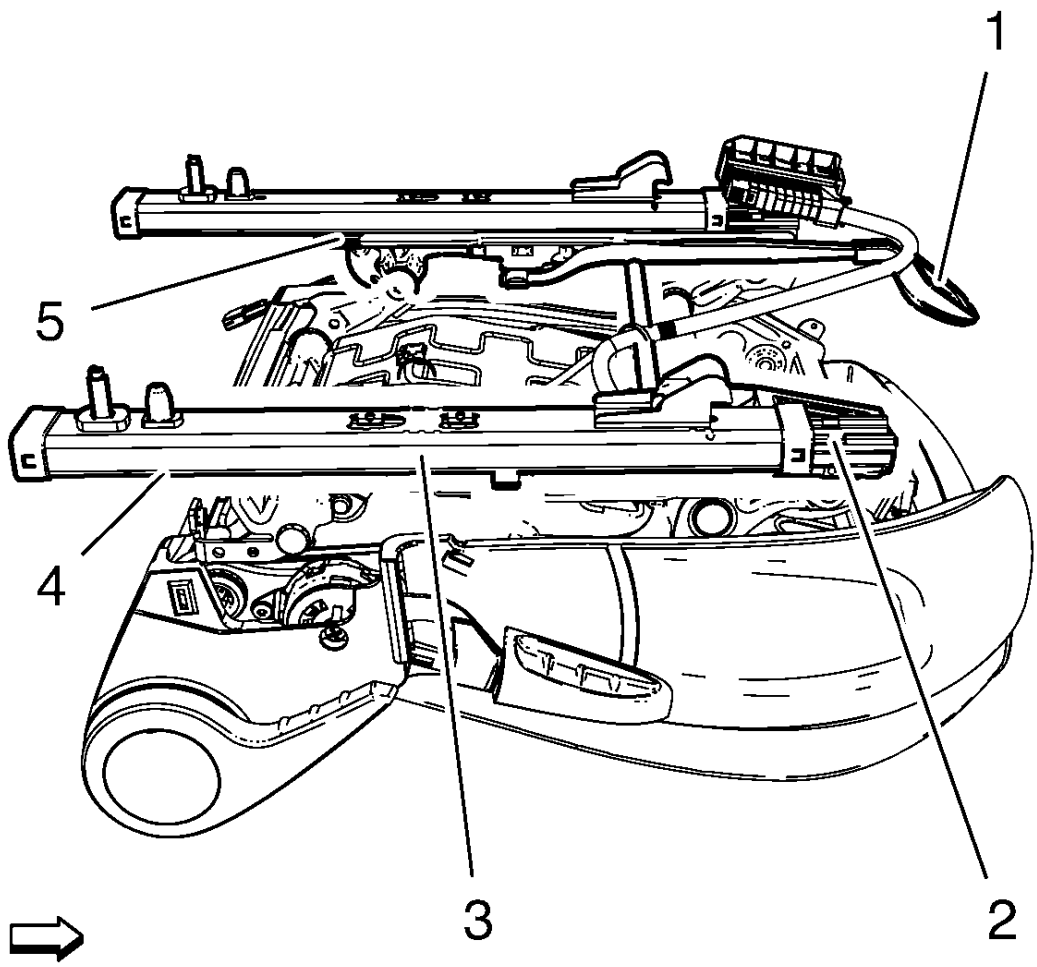

Fig. 7: Inboard Track Assembly And Outboard Track Assembly
Courtesy of GENERAL MOTORS COMPANY

The fore/aft manual adjuster is composed of an inboard track assembly (5), and outboard track (4) assembly, and an adjuster handle (1). Each track assembly is made of an upper track (2) and a lower track (3). Both tracks need to be aligned prior to installing in the vehicle.

To align the front seat tracks, do the following:

1. Remove the seat from the vehicle.

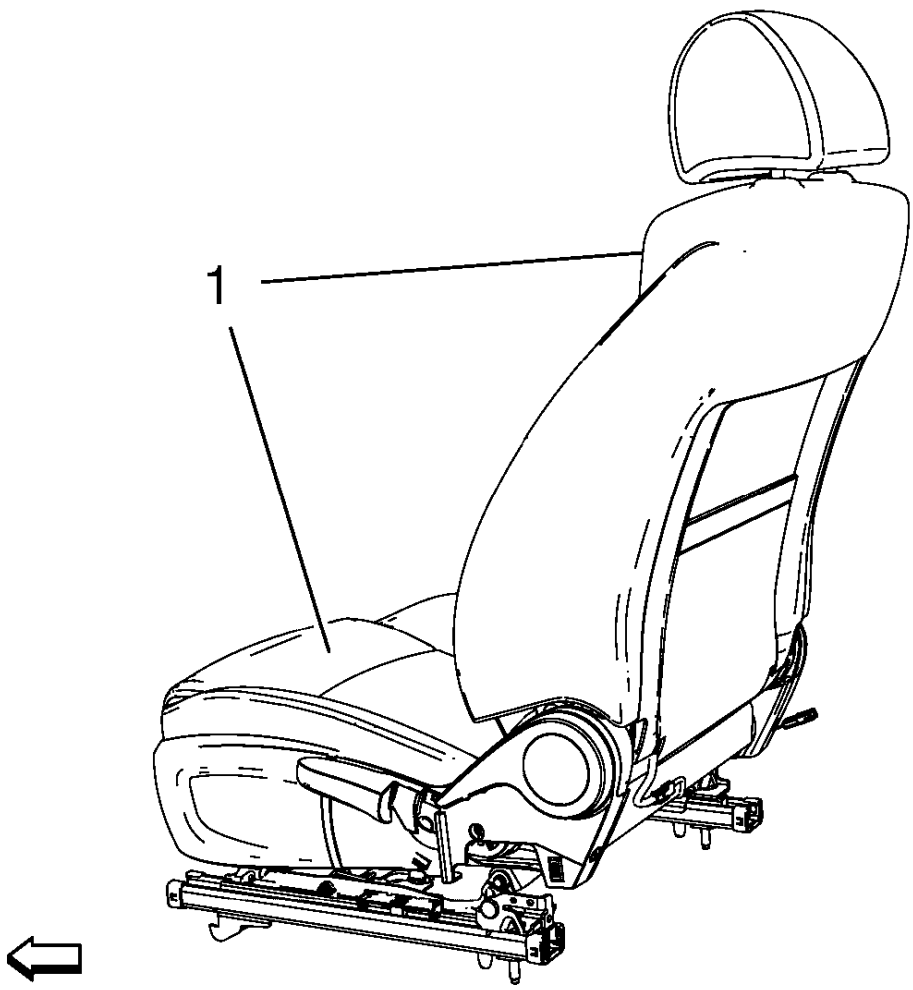

Fig. 8: Seat
Courtesy of GENERAL MOTORS COMPANY

2. Put the seat (1) upside down on a table, or on the floor as shown.
3. Unlock both tracks by pushing the adjuster handle down.
4. While pushing the adjuster handle down, move each lower track rearward until contact between the end travel stops.
5. Release the adjuster handle.
6. Move each lower track forward until an audible noise is heard, indicating that the track is fully locked.
7. At this stage both manual tracks are aligned.

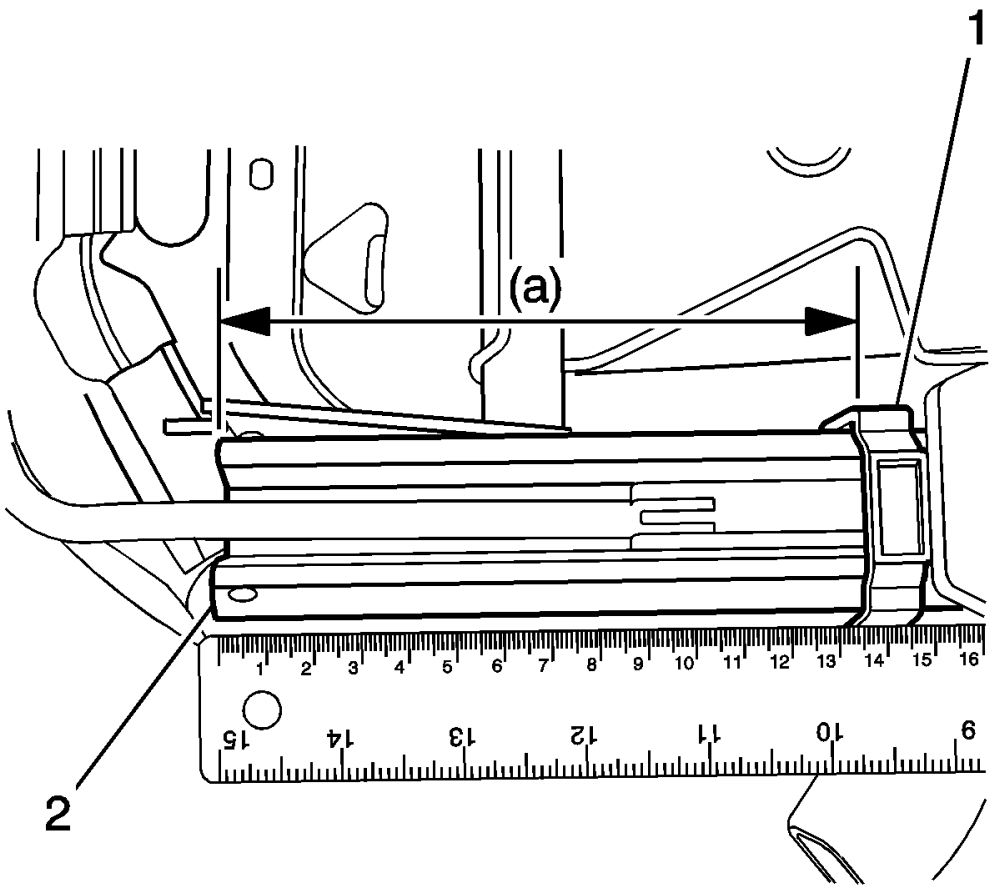

Fig. 9: Identifying Overhang Measurement
Courtesy of GENERAL MOTORS COMPANY

8. Measure the overhang from the front edge of the plastic end cap (1) on the lower track to the front edge of the upper track (2). Measurement for each track must be 138 mm or as close as possible.
9. Install the seat in the vehicle without touching the adjuster handle. Then tighten the rear bolts prior to any track adjustment.
10. While sitting in the seat, cycle the tracks fore/aft and lock the tracks at different positions. Check to see whether the tracks are aligned.

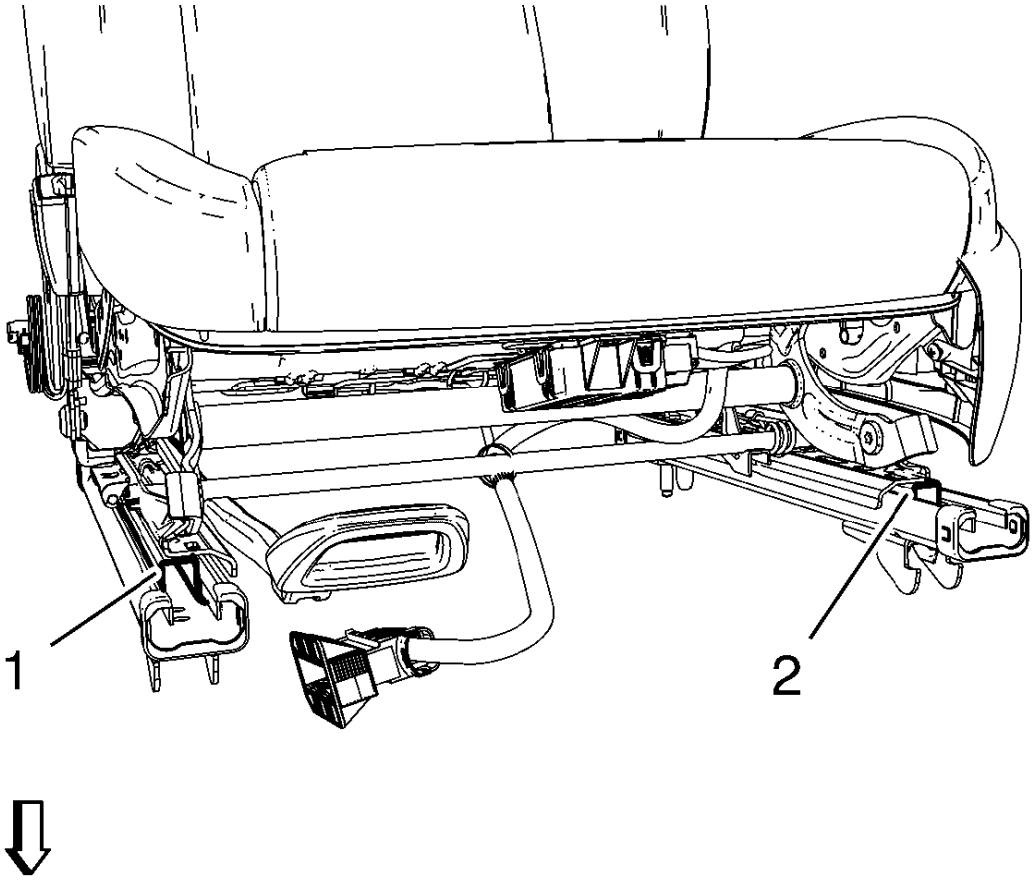

Fig. 10: Inboard And Outboard Tracks
Courtesy of GENERAL MOTORS COMPANY

11. Visually inspect the tracks, adjust the upper tracks flush with the front of the lower tracks. Check that the configuration in locked position is identical for both inboard (1) and outboard tracks (2).

DRIVER OR PASSENGER SEAT HEAD RESTRAINT REPLACEMENT

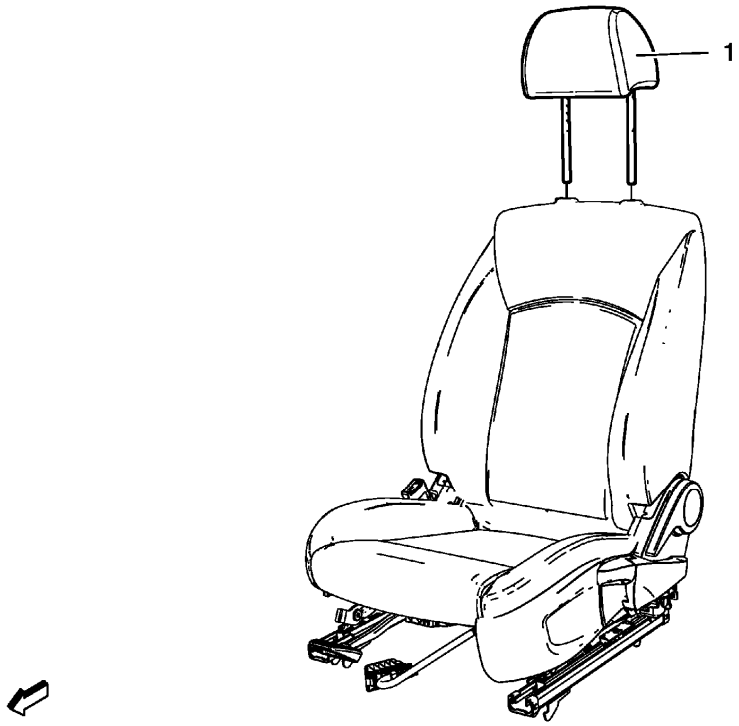

Fig. 11: Driver Or Passenger Seat Head Restraint
Courtesy of GENERAL MOTORS COMPANY

Driver or Passenger Seat Head Restraint Replacement

Callout	Component Name
1	Front Seat Head Restraint **Procedure** 1. Raise the headrest to the full upward position. 2. Push both flush button on the head restraint guide. 3. Remove the head restraint by pulling up on the restraint.

DRIVER OR PASSENGER SEAT HEAD RESTRAINT GUIDE REPLACEMENT

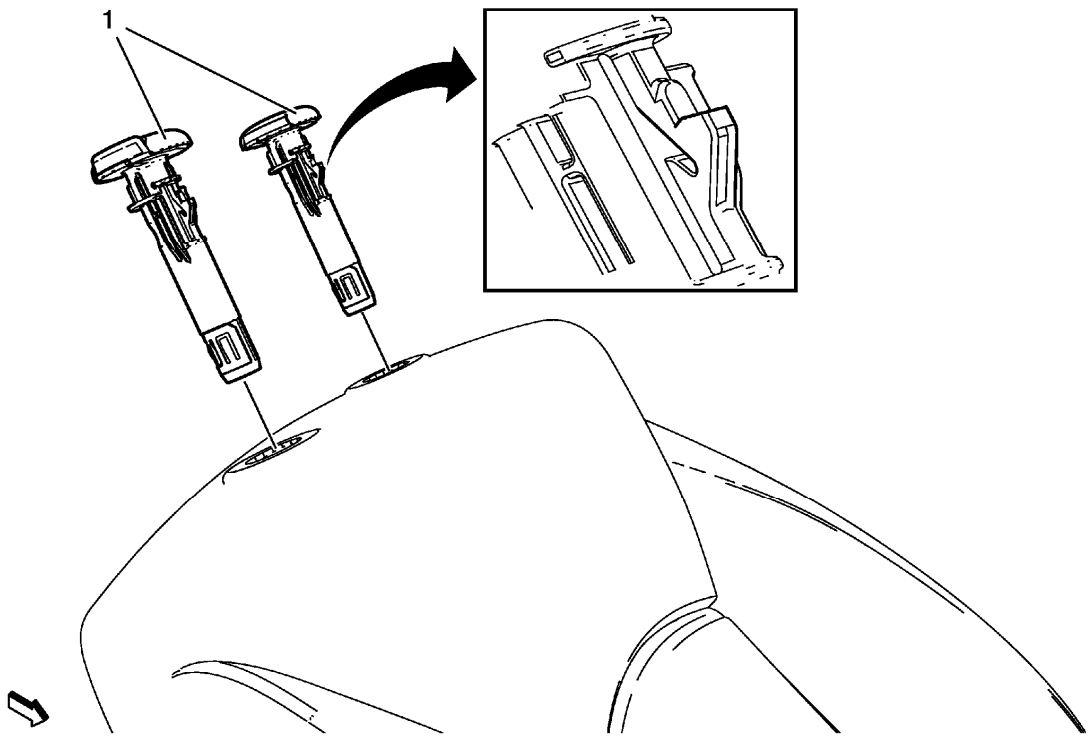

Fig. 12: Driver Or Passenger Seat Head Restraint Guide
Courtesy of GENERAL MOTORS COMPANY

Driver or Passenger Seat Head Restraint Guide Replacement

Callout	Component Name
Preliminary Procedures Remove front seat head restraint. Refer to **Driver or Passenger Seat Head Restraint Replacement**.	
1	Front Seat Head Restraint Guide **Procedure** Use a flat-bladed tool to release guide for removal.

DRIVER OR PASSENGER SEAT CUSHION CLOSEOUT COVER REPLACEMENT

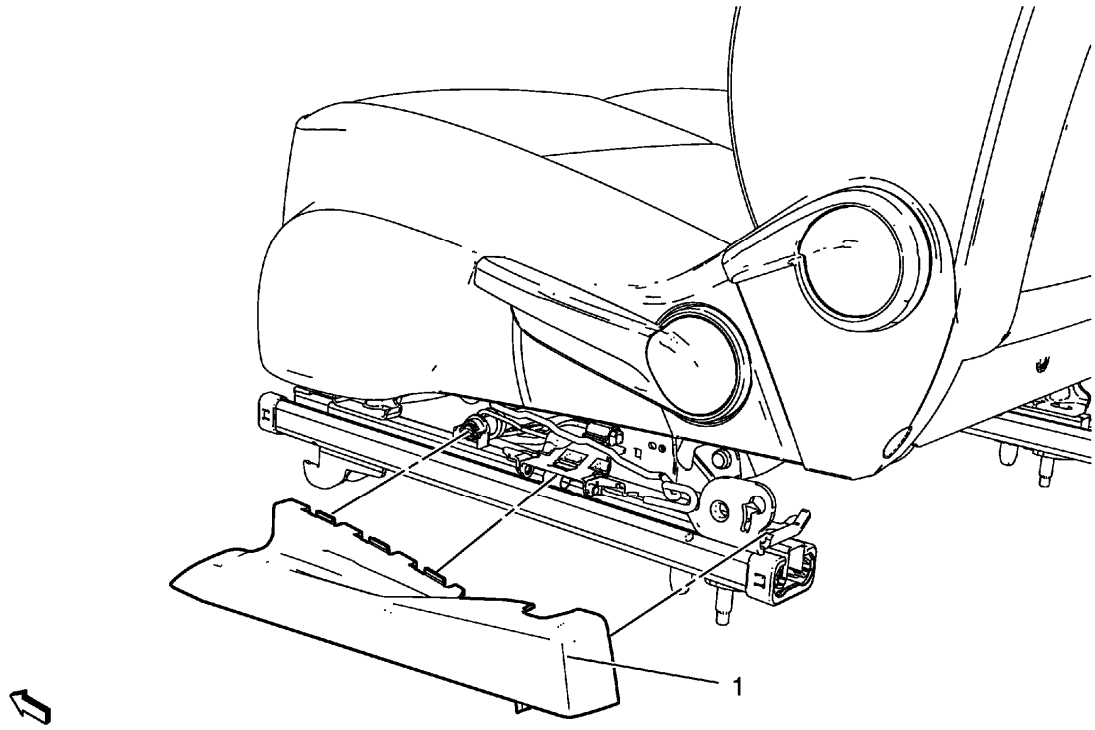

Fig. 13: Driver or Passenger Seat Outer Adjuster Finish Cover
Courtesy of GENERAL MOTORS COMPANY

Driver or Passenger Seat Cushion Closeout Cover Replacement

Callout	Component Name
1	Drive or Passenger Seat Cushion Closeout Cover

FRONT SEAT CUSHION OUTER TRIM PANEL REPLACEMENT

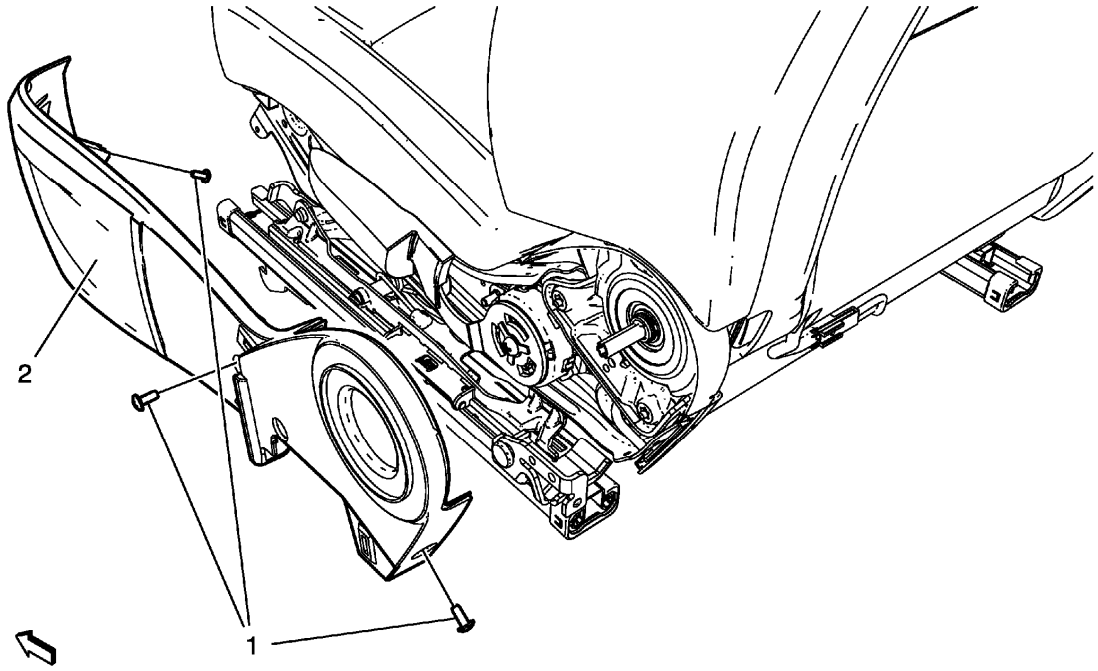

Fig. 14: Front Seat Cushion Outer Trim Panel
Courtesy of GENERAL MOTORS COMPANY

Front Seat Cushion Outer Trim Panel Replacement

Callout	Component Name
Preliminary Procedures 1. Remove the front seat. Refer to **Driver or Passenger Seat Removal and Installation** 2. Remove the front seat adjuster vertical actuator, if equipped. Refer to **Driver or Passenger Seat Adjuster Vertical Actuator Handle Replacement**. 3. Remove the front seat tilt adjuster lever, if equipped **Front Seat Tilt Adjuster Lever Replacement**. 4. Remove the front seat recliner handle. Refer to **Front Seat Back Recliner Handle Replacement**	
1	Front Seat Cushion Outer Trim Panel Screw (Qty: 3) **CAUTION:** **Refer to Fastener Caution .** **Tighten** 2.5 N.m (22 lb in)
2	Front Seat Cushion Outer Trim Panel **Procedure** Transfer driver seat adjuster switch, if equipped. Refer to **Driver**

	Seat Adjuster Switch Replacement .

FRONT SEAT CUSHION INNER TRIM PANEL REPLACEMENT

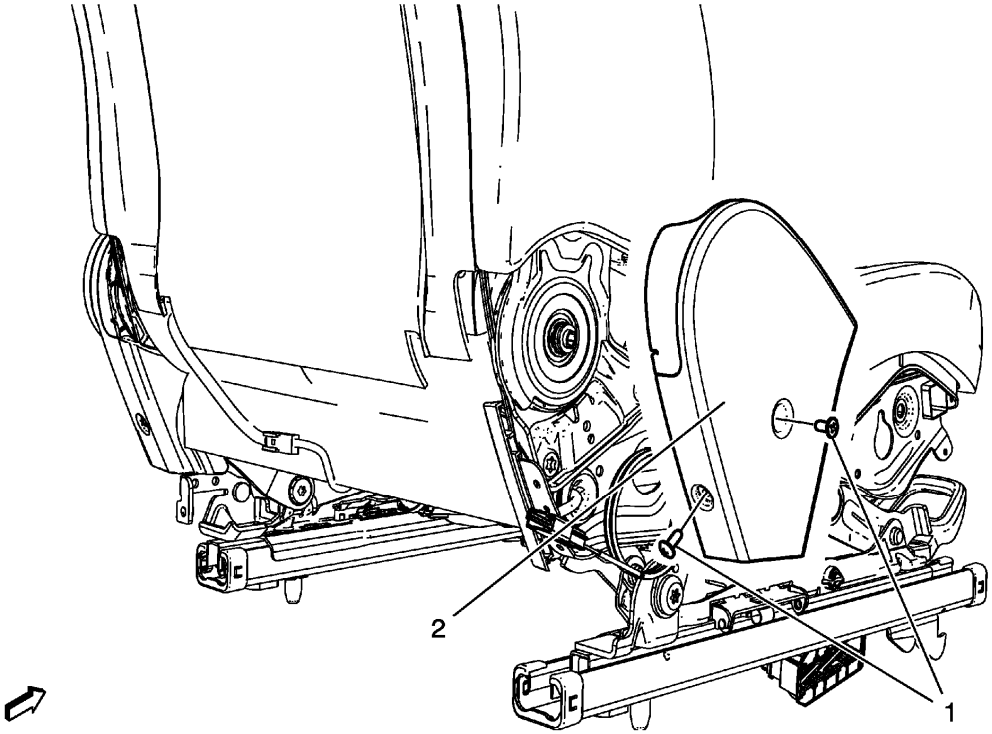

Fig. 15: Front Seat Cushion Inner Trim Panel
Courtesy of GENERAL MOTORS COMPANY

Front Seat Cushion Inner Trim Panel Replacement

Callout	Component Name
Preliminary Procedures Remove the front seat. Refer to **Driver or Passenger Seat Removal and Installation**.	
1	Front Seat Cushion Inner Trim Panel Screw (Qty: 2) **CAUTION:** **Refer to Fastener Caution .** **Tighten** 2.5 N.m (22 lb in)
2	Front Seat Cushion Inner Trim Panel

FRONT SEAT CUSHION COVER AND PAD REPLACEMENT

Removal Procedure

WARNING: Refer to SIR Warning .

WARNING: Replace the passenger presence system as a complete assembly to prevent possible injury to the occupant. The bladder, the pressure sensor, the seat cushion, and the control module are assembled and calibrated as a unit. Using only some of the components in the service kit will cause the passenger presence system to operate improperly.

WARNING: To avoid personal injuries, re-zero the passenger presence system whenever you remove or replace the seat cushion or trim. Failure to do so may cause the system to malfunction.

1. Remove driver or passenger seat. Refer to **Driver or Passenger Seat Removal and Installation**.
2. Remove front seat recliner handle. Refer to **Front Seat Back Recliner Handle Replacement**.
3. Remove seat cushion inner trim panel. Refer to **Front Seat Cushion Inner Trim Panel Replacement**.
4. Remove seat cushion outer trim panel. Refer to **Front Seat Cushion Outer Trim Panel Replacement**.

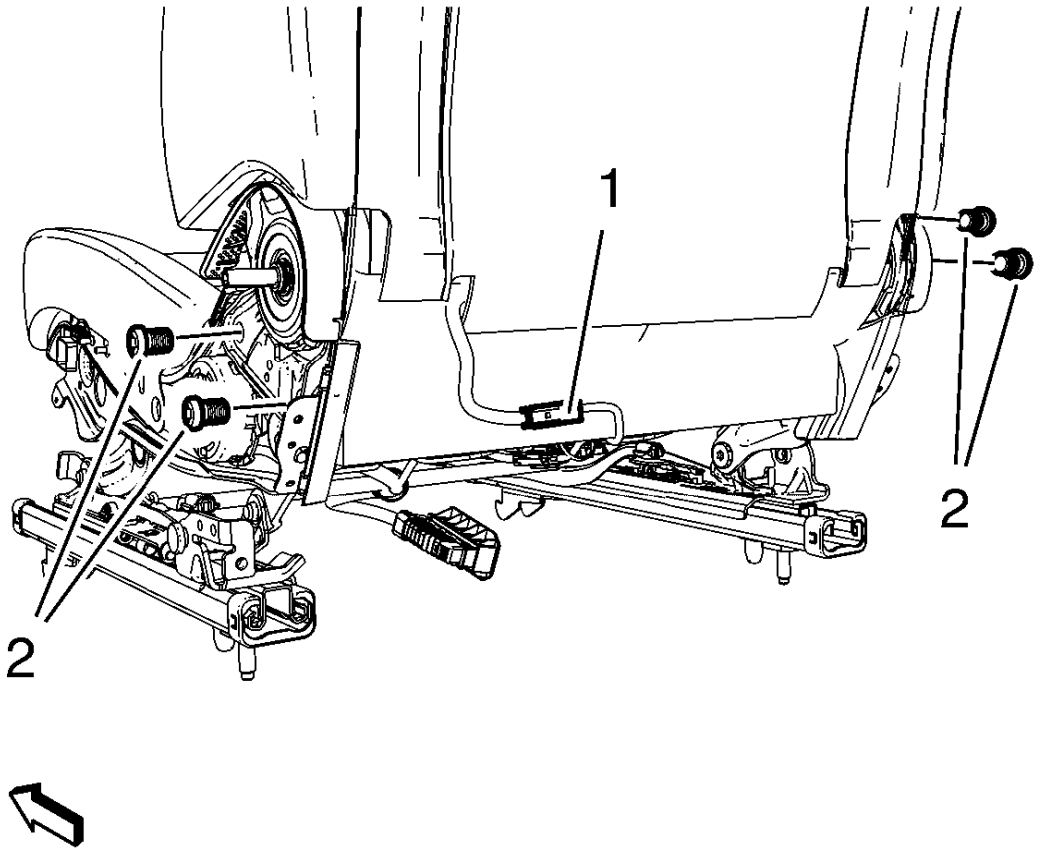

Fig. 16: Wiring Harness Plug
Courtesy of GENERAL MOTORS COMPANY

5. Detach cushion cover from backrest below.
6. Disconnect wiring harness plug (1), if equipped.
7. Release the seat wiring harness as required from the seat bottom.
8. Remove front seat backrest 4 screw (2).
9. Remove backrest.

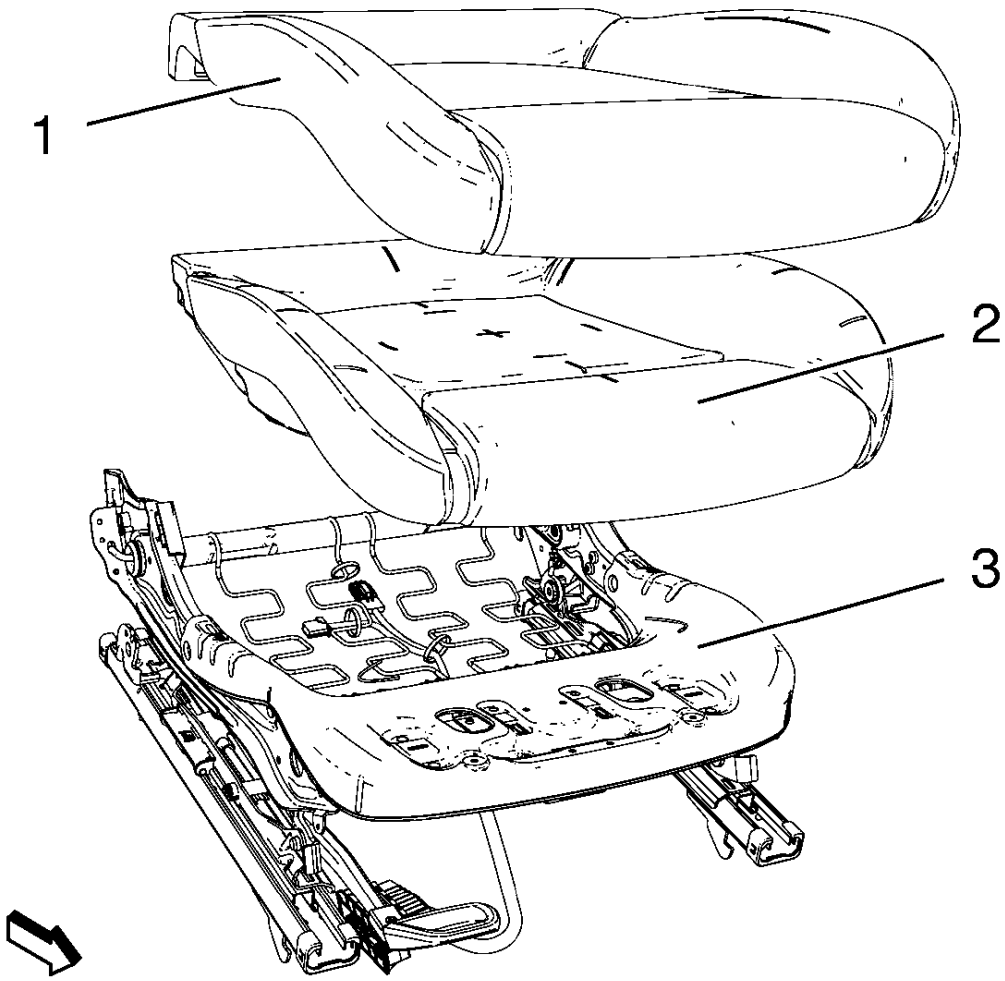

Fig. 17: Cushion Cover, Seat Frame And Pad
Courtesy of GENERAL MOTORS COMPANY

10. Detach cushion cover (1) from seat frame (3) all the way round.
11. Remove cushion cover (1) with pad (2) from frame (3).
12. Remove cushion cover (1) from pad (2).

Installation Procedure

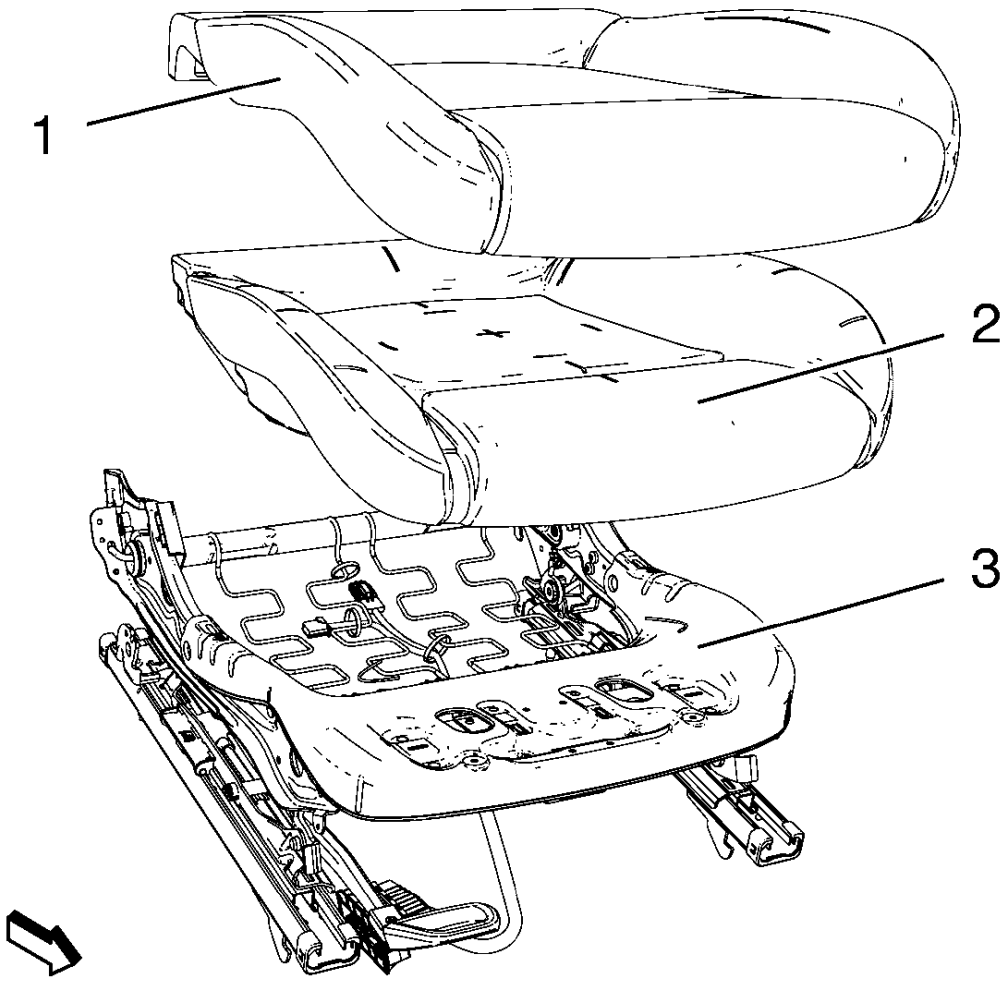

Fig. 18: Cushion Cover, Seat Frame And Pad
Courtesy of GENERAL MOTORS COMPANY

1. Install cushion cover (1) to pad (2).
2. Install cushion cover (1) with pad (2) to frame (3).
3. Attach cushion cover (1) from seat frame (3) all the way round.

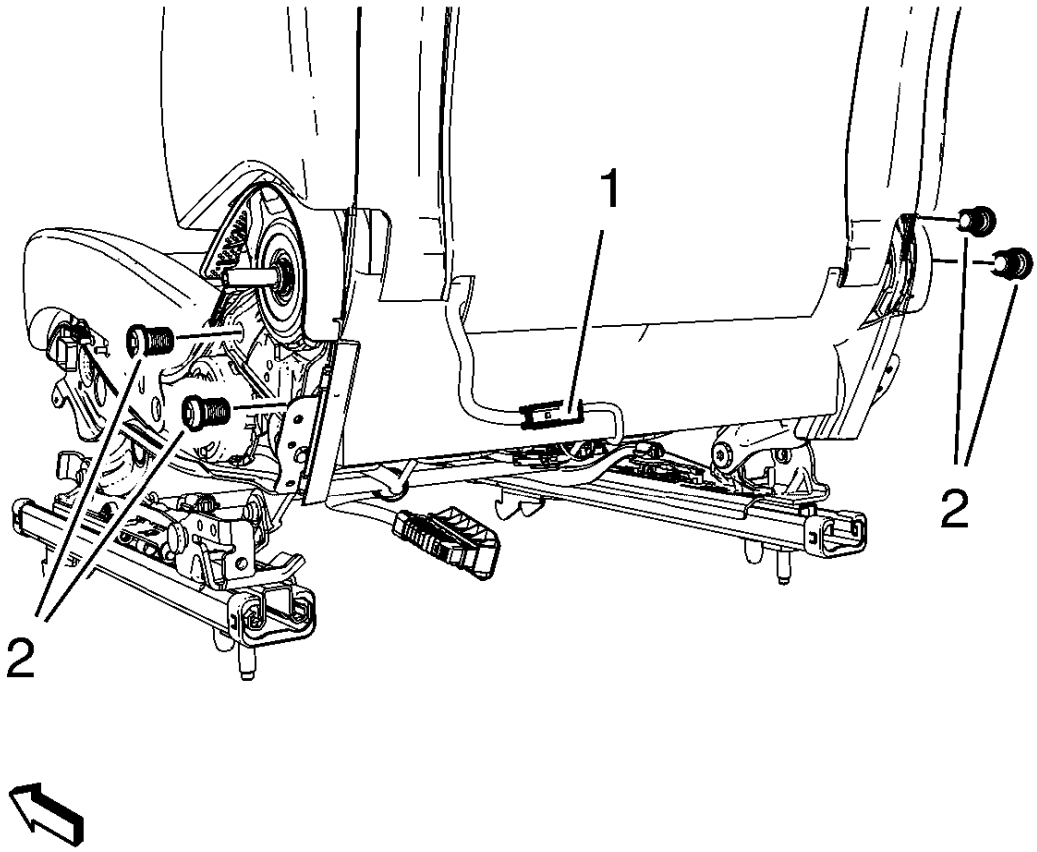

Fig. 19: Wiring Harness Plug
Courtesy of GENERAL MOTORS COMPANY

4. Install backrest.

CAUTION: Refer to Fastener Caution .

5. Install 4 screws (2) and tighten to 35 N.m (26 lb ft).
6. Connect the wiring harness plug (1), if equipped.
7. Install the seat wiring harness as required to the seat bottom.
8. Attach cushion cover to backrest below.
9. Install seat cushion outer trim panel. Refer to **Front Seat Cushion Outer Trim Panel Replacement**.
10. Install seat cushion inner trim panel. Refer to **Front Seat Cushion Inner Trim Panel Replacement**.
11. Install front seat recliner handle. Refer to **Front Seat Back Recliner Handle Replacement**.

12. Install driver or passenger seat. Refer to **Driver or Passenger Seat Removal and Installation**.
13. After working on the passenger seat, program or re-zero the inflatable restraint passenger presence system after repairs or replacement. Refer to **Control Module References** .

DRIVER OR PASSENGER SEAT CUSHION PAD WIRE REPLACEMENT

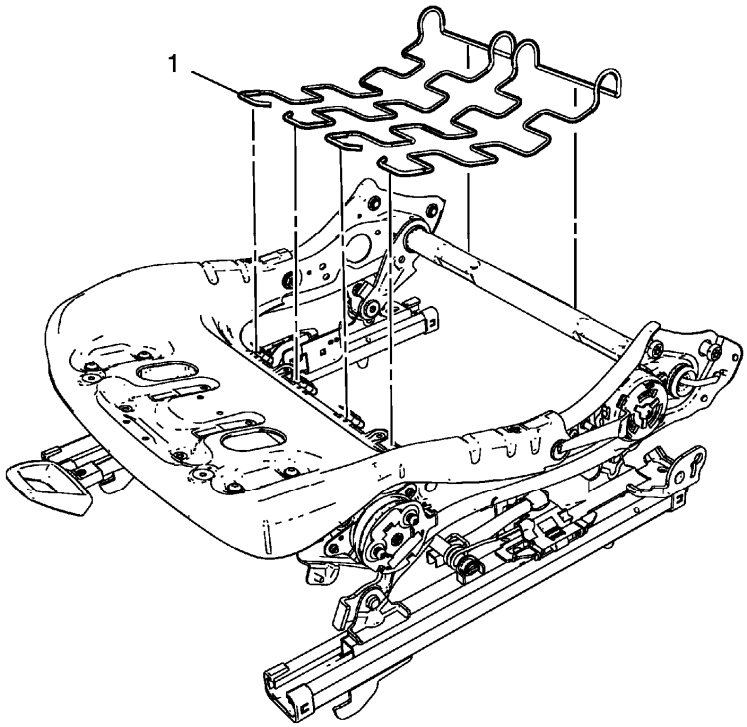

Fig. 20: Driver Or Passenger Seat Cushion Pad Wire
Courtesy of GENERAL MOTORS COMPANY

Driver or Passenger Seat Cushion Pad Wire Replacement

Callout	Component Name
Preliminary Procedures Remove the front seat cushion cover and pad. Refer to **Front Seat Cushion Cover and Pad Replacement**.	
1	Front Seat Cushion Pad Wire.

DRIVER OR PASSENGER SEAT BACK COVER AND PAD REPLACEMENT

Removal Procedure

WARNING: Refer to SIR Warning .

WARNING: Replace the passenger presence system as a complete assembly to

prevent possible injury to the occupant. The bladder, the pressure sensor, the seat cushion, and the control module are assembled and calibrated as a unit. Using only some of the components in the service kit will cause the passenger presence system to operate improperly.

WARNING: Do not repair or replace the seat stitching or seams in the seat back trim cover with an internal mounted seat side airbag module. Replace the complete seat back trim cover from the OEM. Non-OEM seat stitching may cause improper airbag deployment which could result in personal injury.

1. Remove driver or passenger seat. Refer to **Driver or Passenger Seat Removal and Installation**.
2. Remove the seat adjuster handle, if equipped. Refer to **Driver or Passenger Seat Adjuster Handle Replacement**
3. Remove front seat recliner handle. Refer to **Front Seat Back Recliner Handle Replacement**.
4. Remove seat cushion inner trim panel. Refer to **Front Seat Cushion Inner Trim Panel Replacement**.
5. Remove seat cushion outer trim panel. Refer to **Front Seat Cushion Outer Trim Panel Replacement**.
6. Remove front seat head restraint guide. Refer to **Driver or Passenger Seat Head Restraint Guide Replacement**.

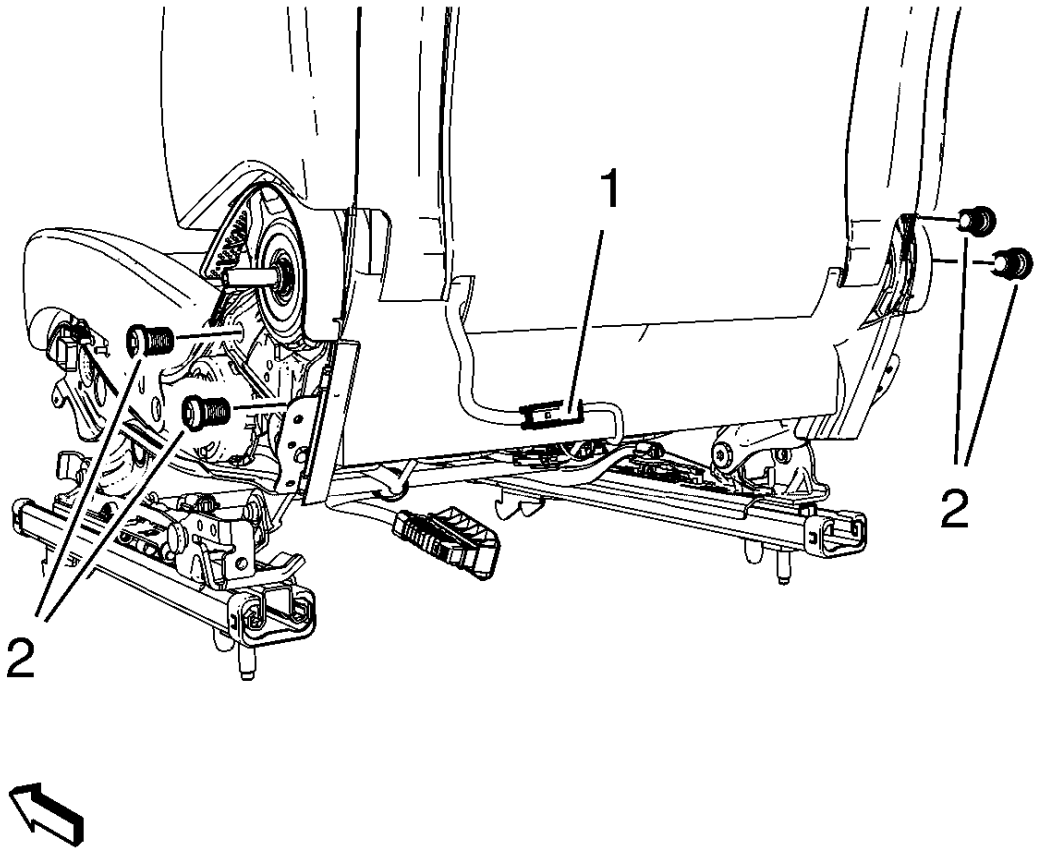

Fig. 21: Wiring Harness Plug
Courtesy of GENERAL MOTORS COMPANY

7. Disengage the trim clips and bungee straps from the seat cushion springs beneath the seat cushion.
8. Release and disconnect wiring harness plug (1), if equipped.
9. Remove the 4 front seat back fasteners (2).
10. Remove the seat back assembly from the cushion assembly and place on a protected surface.

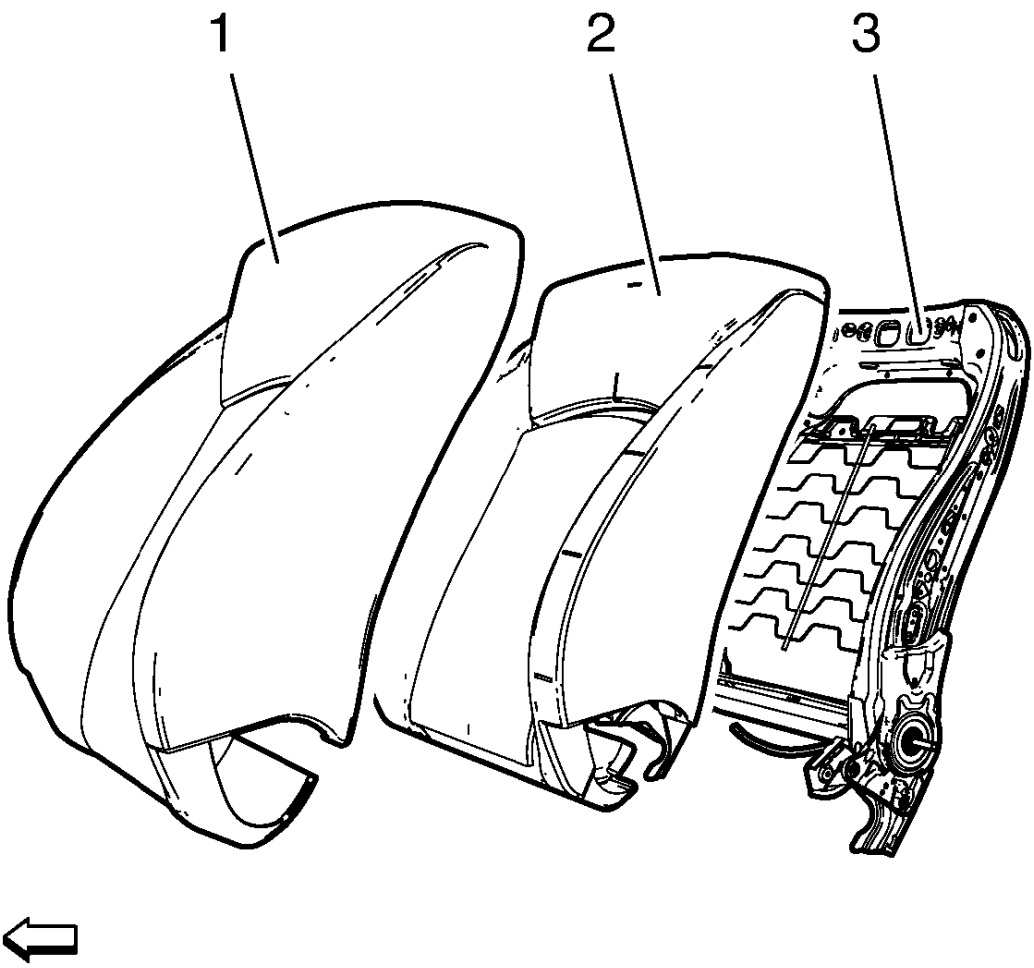

Fig. 22: Cushion Cover, Pad And Frame
Courtesy of GENERAL MOTORS COMPANY

CAUTION: Do not pull up on the rear portion of the seat back cover without releasing the upper channel retainer. This retainer secures the seat back cover to the seat back frame. Failure to release the upper channel retainer prior to seat back cover removal will damage the seat back cover.

11. Loosen the front seat back cover (1) from the frame (3).
    - Disengage the J-channel retainer at the bottom of the seat back cover and separate the front and rear portions of the seat back cover.
    - Open the 2 zippers on the backside of the seat back cover.
    - Disengage the visible seat back cover retainers.

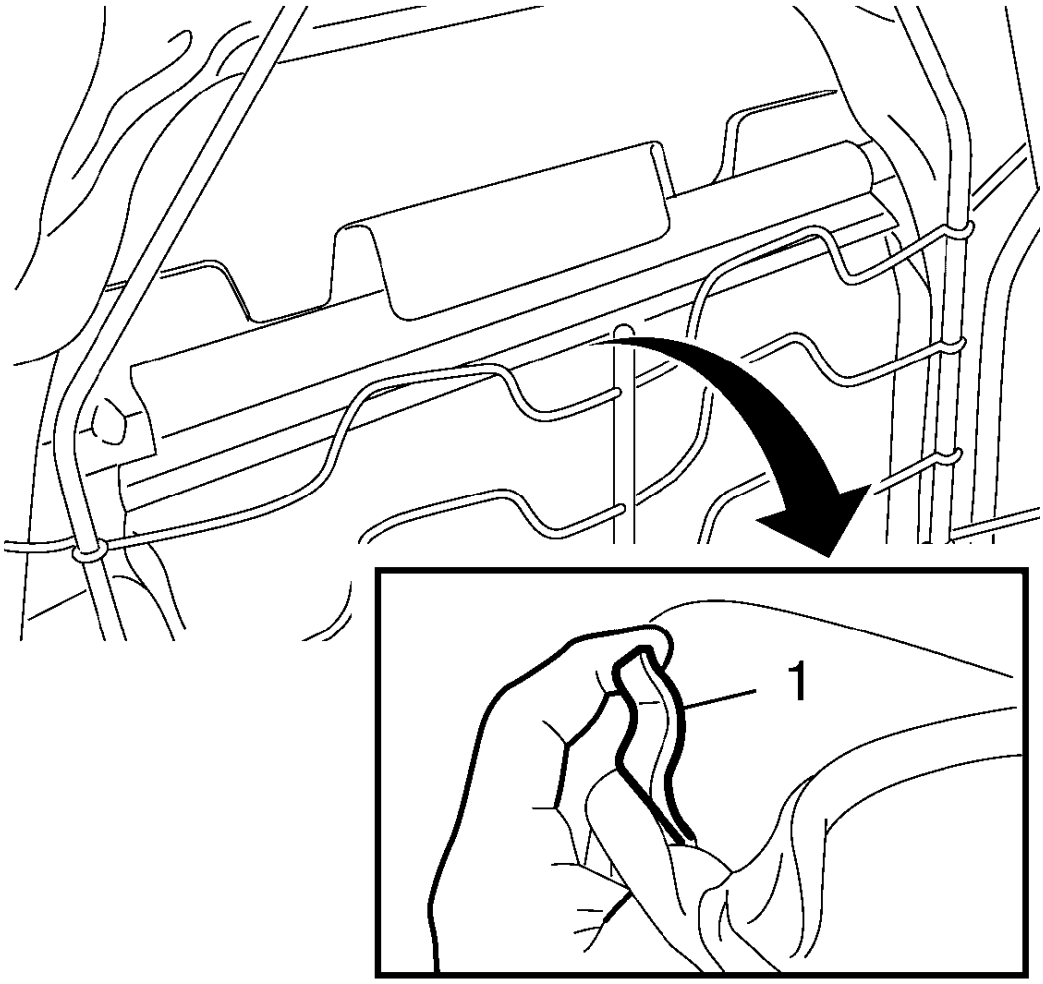

Fig. 23: Front Seat Back Cover Upper Retainer
Courtesy of GENERAL MOTORS COMPANY

12. Remove the front seat back cover upper retainer (1) from the frame.
    - Position the front portion of the seat back cover forward on the seat back frame.
    - Lift the front portion of the seat back cover and seat back pad enough to gain access to the upper retainer.
    - Disengage the upper retainer from the seat back frame.

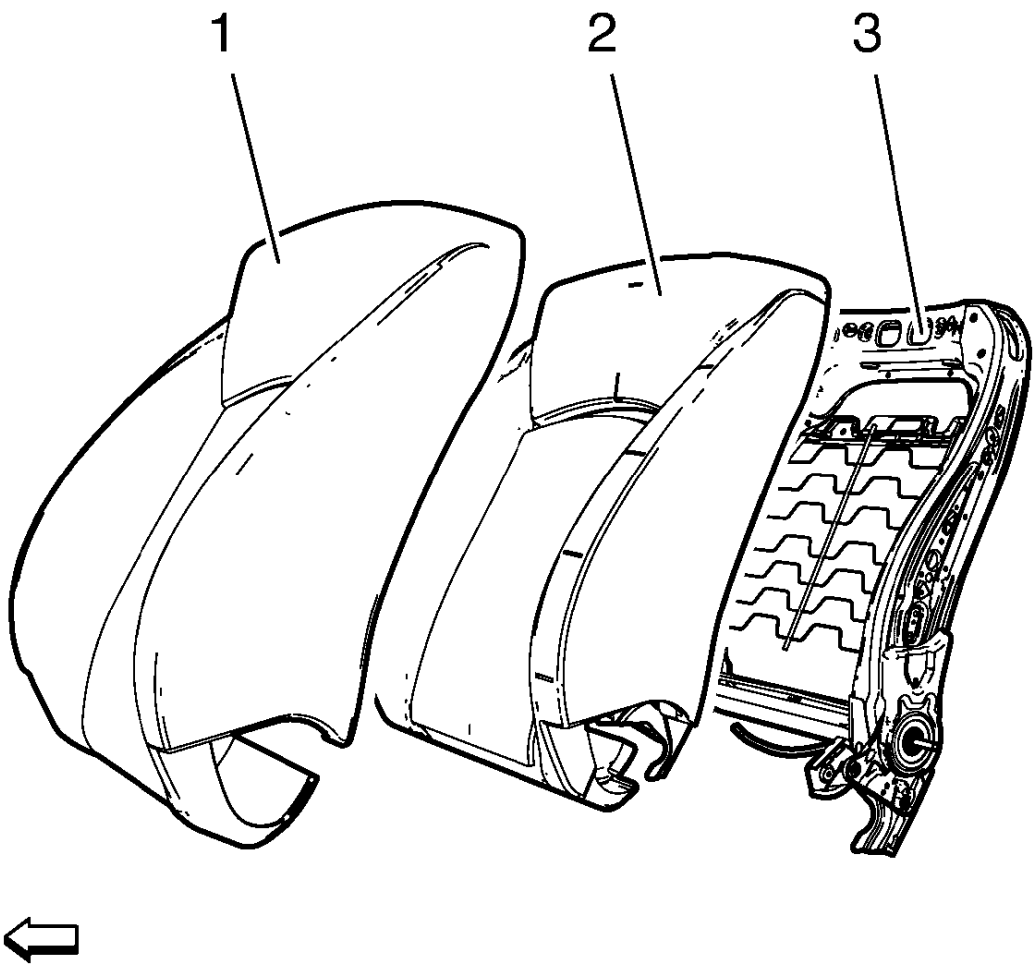

Fig. 24: Cushion Cover, Pad And Frame
Courtesy of GENERAL MOTORS COMPANY

13. Remove the front seat back cover (1) from the pad (2).
    - Remove the seat back cover (1) from velcro on the vertical trench attachments.
    - Separate the cross-seat retainer on lower tie downs.
    - Starting at the rear, pull the trim cover up over the top of the seat.
14. Remove the seat side airbag. Refer to **Front Seat Outboard Seat Back Airbag Replacement** .
15. Remove the front seat back cushion pad (2).
16. Remove the front seat back cushion heater, if equipped. Refer to **Driver or Passenger Seat Back Cushion Heater Replacement** .

Installation Procedure

1. Install the front seat back cushion heater to the new cushion pad, if equipped. Refer to **Driver or Passenger Seat Back Cushion Heater Replacement** .

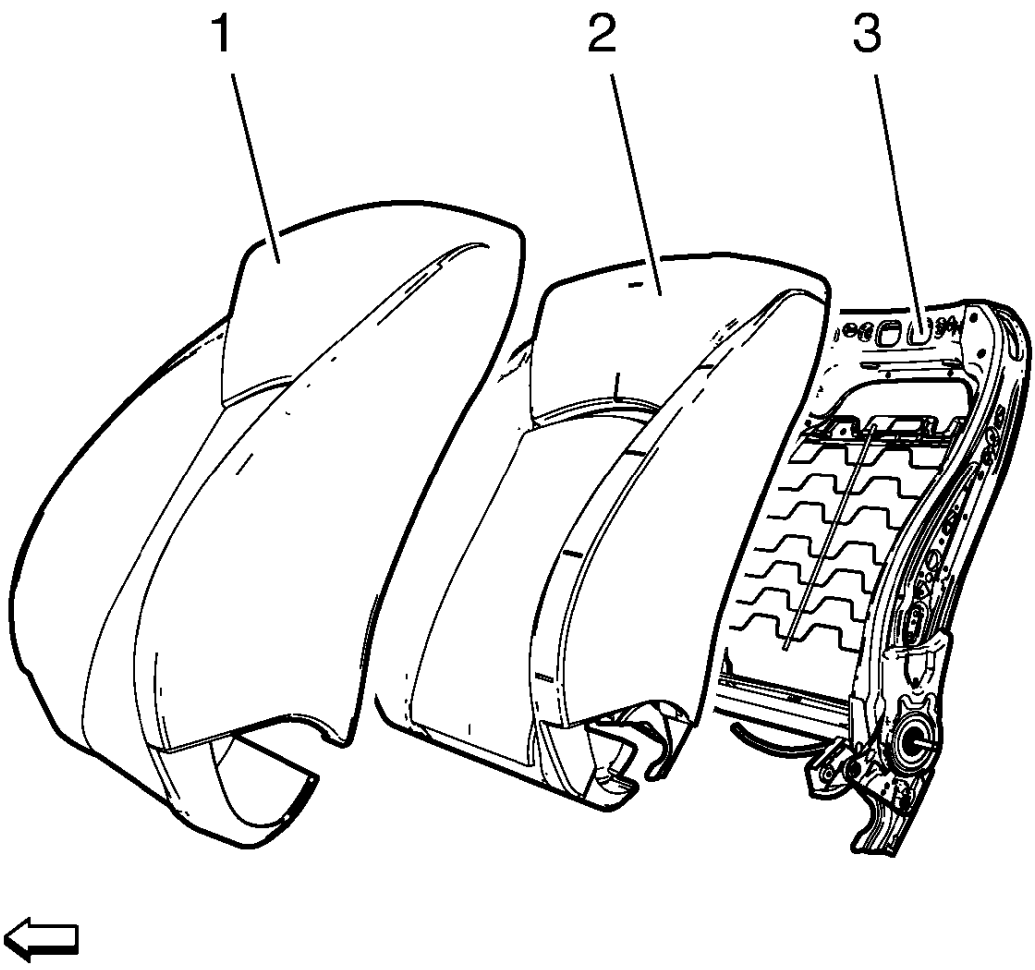

Fig. 25: Cushion Cover, Pad And Frame
Courtesy of GENERAL MOTORS COMPANY

2. Install the seat back cover (1) to the seat back pad (2).
    - Install the seat back cover (1) onto velcro on vertical trench attachments.
    - Attach the cross-seat retainer on lower tie downs.
    - Position the seat back cover (1) and pad (2) to the seat back frame (3).
3. Install the seat side airbag. Refer to **Front Seat Outboard Seat Back Airbag Replacement** .
4. Secure the seat back cover (1) to seat back frame (3).
    - Install the seat back cover upper retainer to the seat back frame.
    - Position the front portion of the seat back cover around the bottom of the seat back frame.
    - Secure the seat back cover retainers all the way around.
    - Close the 2 zippers on the backside of the seat back cover.
    - Connect the J-retainer to secure the front and rear portions of the seat back cover.

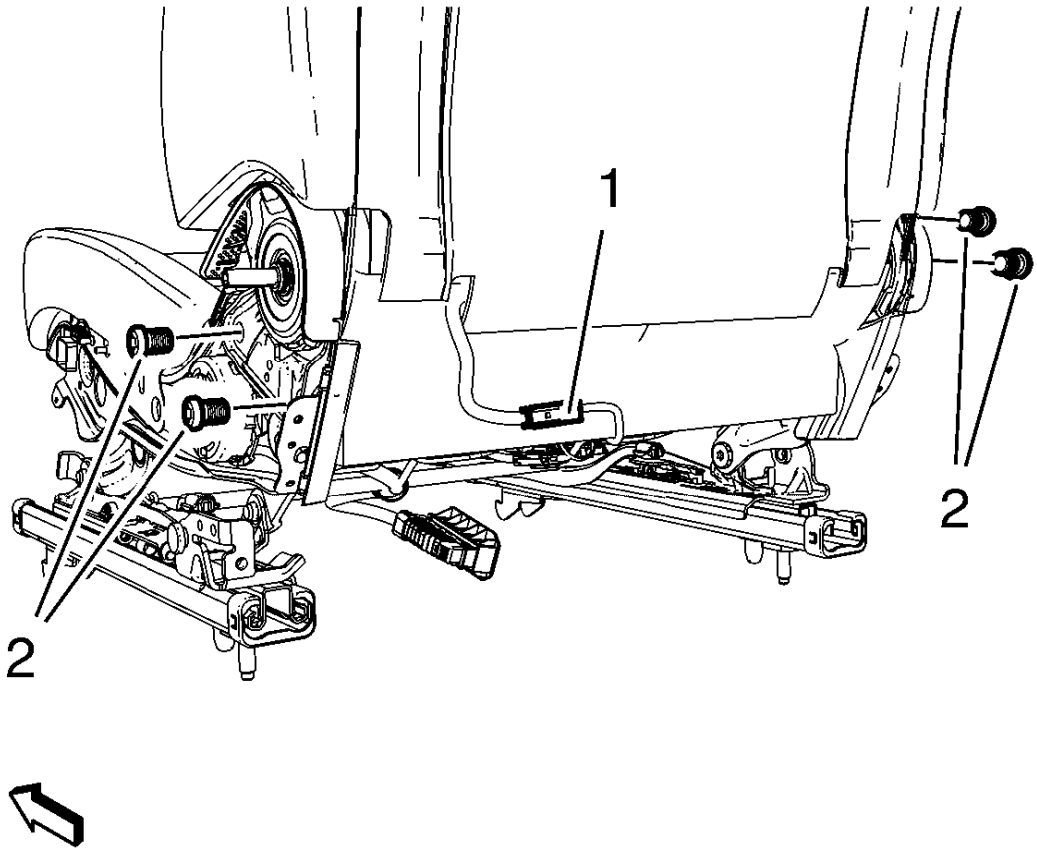

Fig. 26: Wiring Harness Plug
Courtesy of GENERAL MOTORS COMPANY

5. Install the seat back to the seat cushion.

CAUTION: Refer to Fastener Caution .

6. Install the front seat back bolts (2) and tighten to 35 N.m (26 lb ft).
7. Connect the wiring harness plug (1), if equipped.
8. Install the seat wiring harness as required to the seat cushion frame.
9. Attach cushion cover below the seat back.
10. Install front seat head restraint guide. Refer to **Driver or Passenger Seat Head Restraint Guide Replacement**.
11. Install seat cushion outer trim panel. Refer to **Front Seat Cushion Outer Trim Panel Replacement**.

12. Install seat cushion inner trim panel. Refer to **Front Seat Cushion Inner Trim Panel Replacement**.
13. Install front seat recliner handle. Refer to **Front Seat Back Recliner Handle Replacement**.
14. Install seat adjuster handle, if equipped. Refer to **Driver or Passenger Seat Adjuster Handle Replacement**.
15. Install driver or passenger seat. Refer to **Driver or Passenger Seat Removal and Installation**.

FRONT SEAT BACK RECLINER HANDLE REPLACEMENT

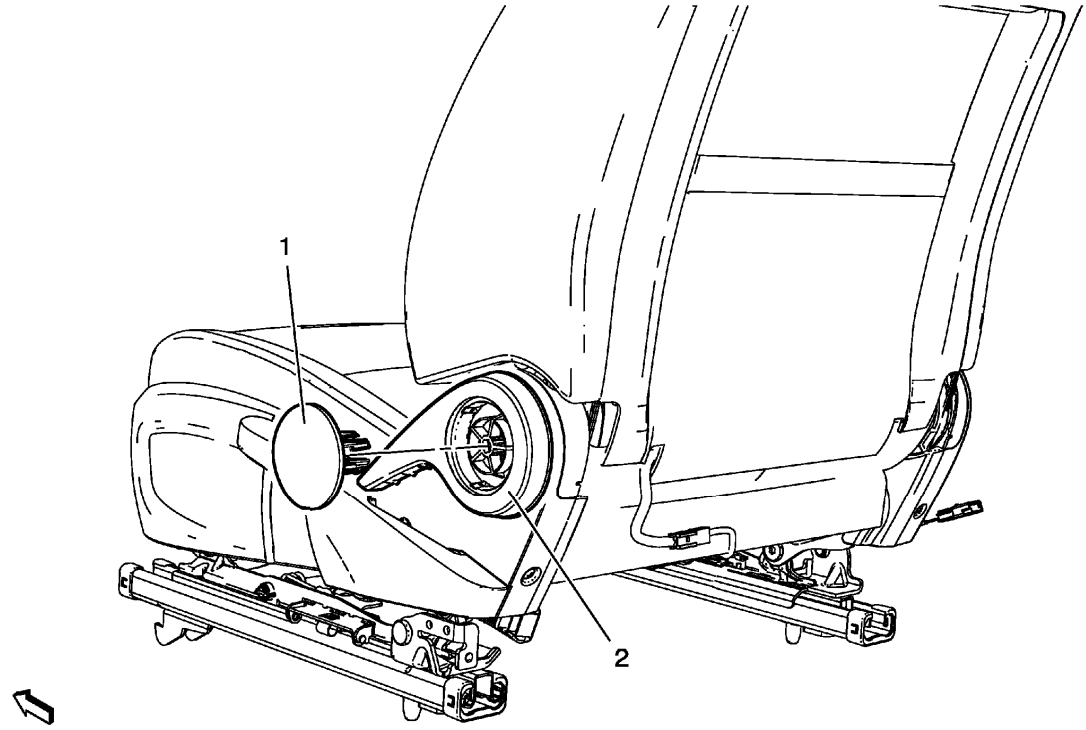

Fig. 27: Driver Or Passenger Seat Recliner Handle
Courtesy of GENERAL MOTORS COMPANY

Front Seat Back Recliner Handle Replacement

Callout	Component Name
1	Front Seat Recliner Handle Panel **Procedure** Use flat blade to remove panel.
2	Front Seat Recliner Handle **Procedure** Use flat blade to remove handle.

DRIVER SEAT FRAME REPLACEMENT

Removal Procedure

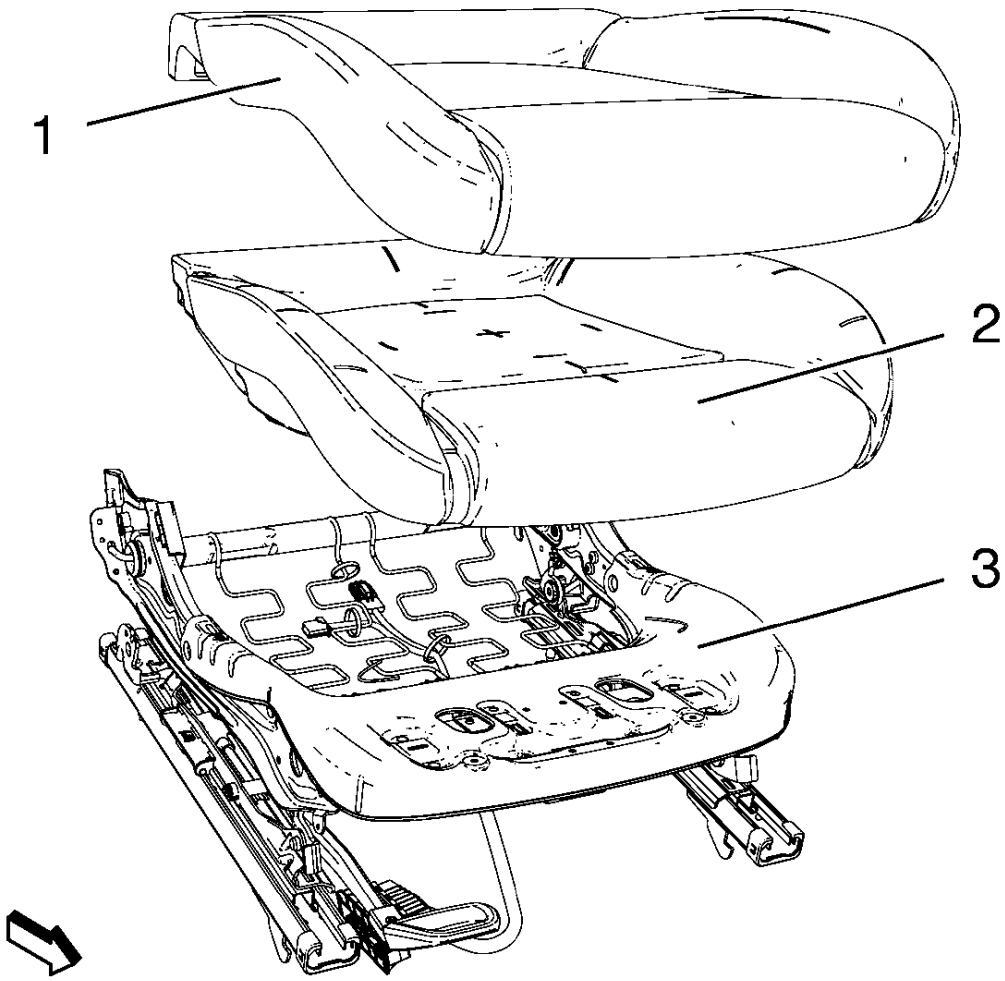

Fig. 28: Cushion Cover, Seat Frame And Pad
Courtesy of GENERAL MOTORS COMPANY

1. Remove front seat cushion cover (1) and pad (2) from frame (3). Refer to **Front Seat Cushion Cover and Pad Replacement**

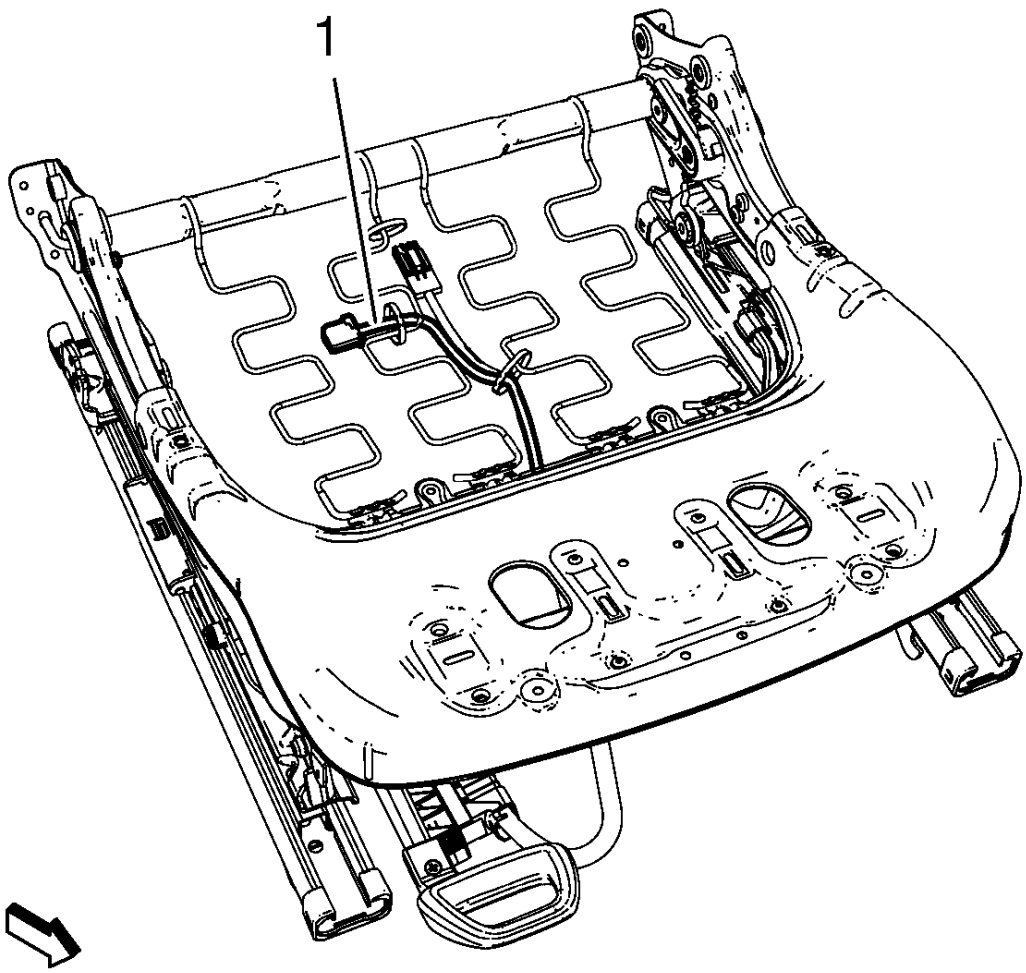

Fig. 29: Driver Seat Frame Wire Harness
Courtesy of GENERAL MOTORS COMPANY

2. Remove the wire harness (1), if equipped.

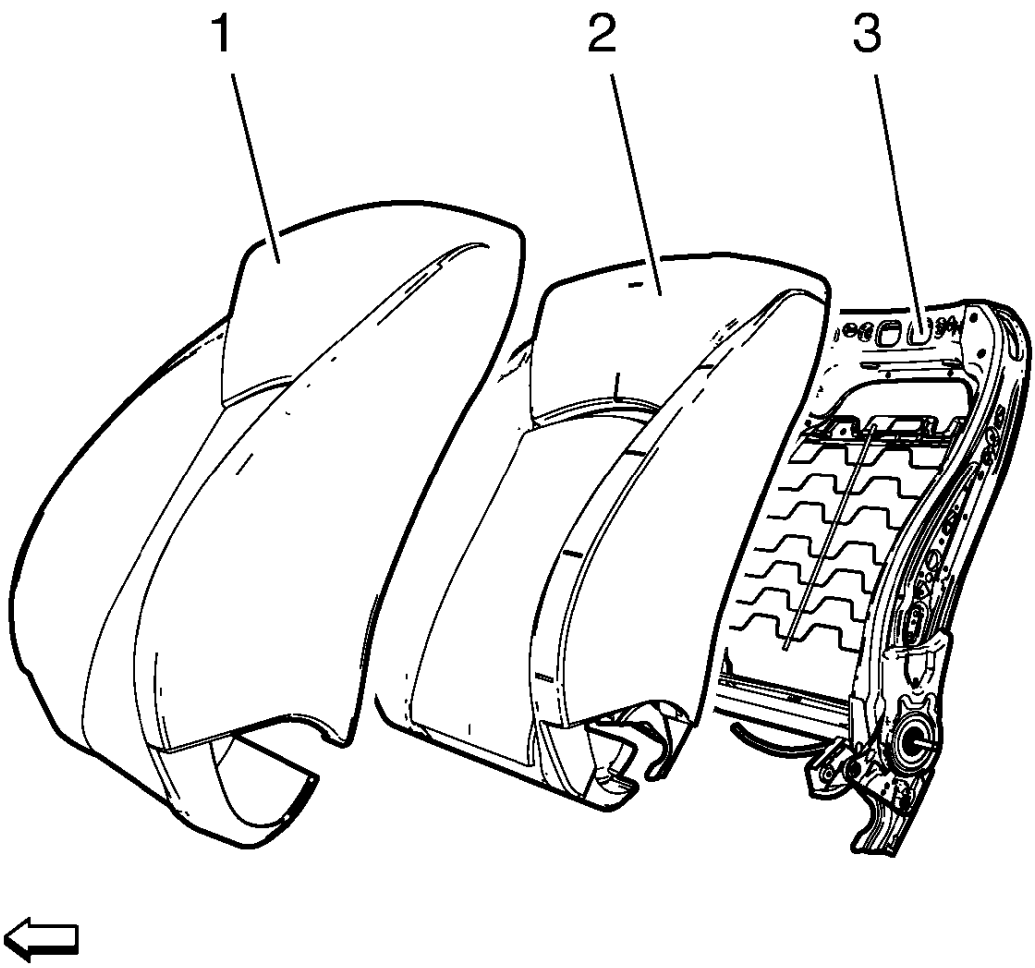

Fig. 30: Cushion Cover, Pad And Frame
Courtesy of GENERAL MOTORS COMPANY

3. Remove front seat back cushion cover (1) and pad (2) from frame (3). Refer to **Driver or Passenger Seat Back Cover and Pad Replacement**

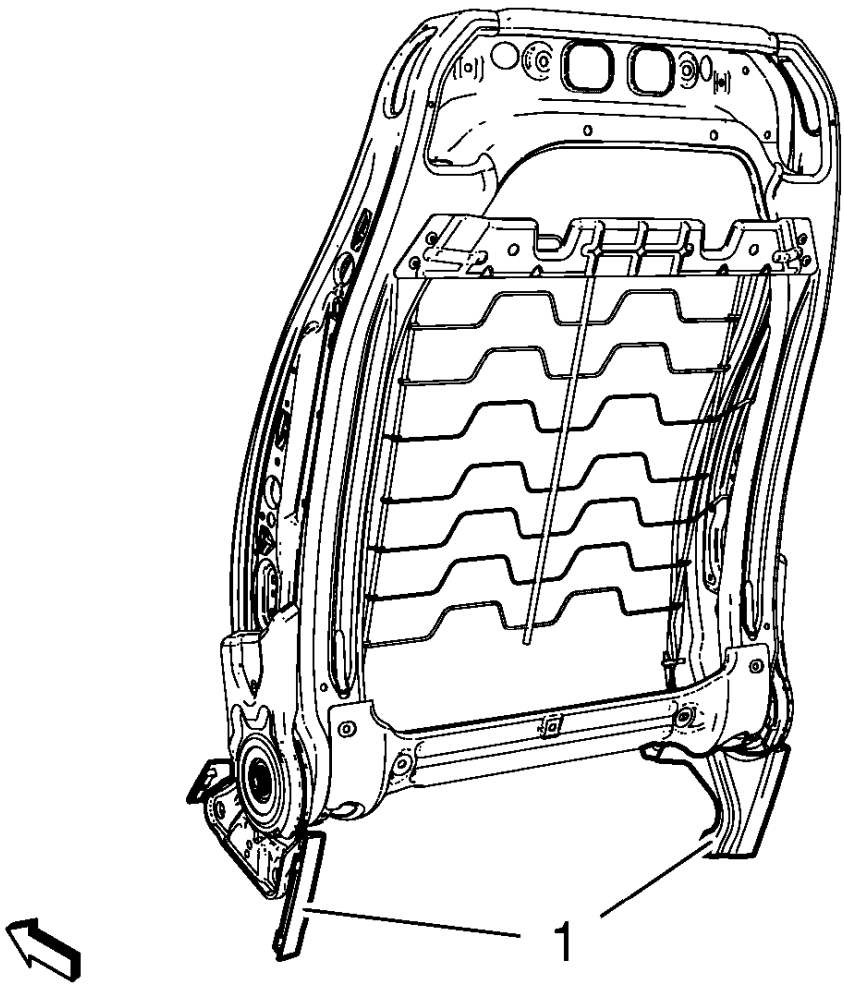

Fig. 31: Inner Seat Frame Cover
Courtesy of GENERAL MOTORS COMPANY

4. Remove inner seat frame cover (1).
5. Remove the wire harness, if equipped.

Installation Procedure

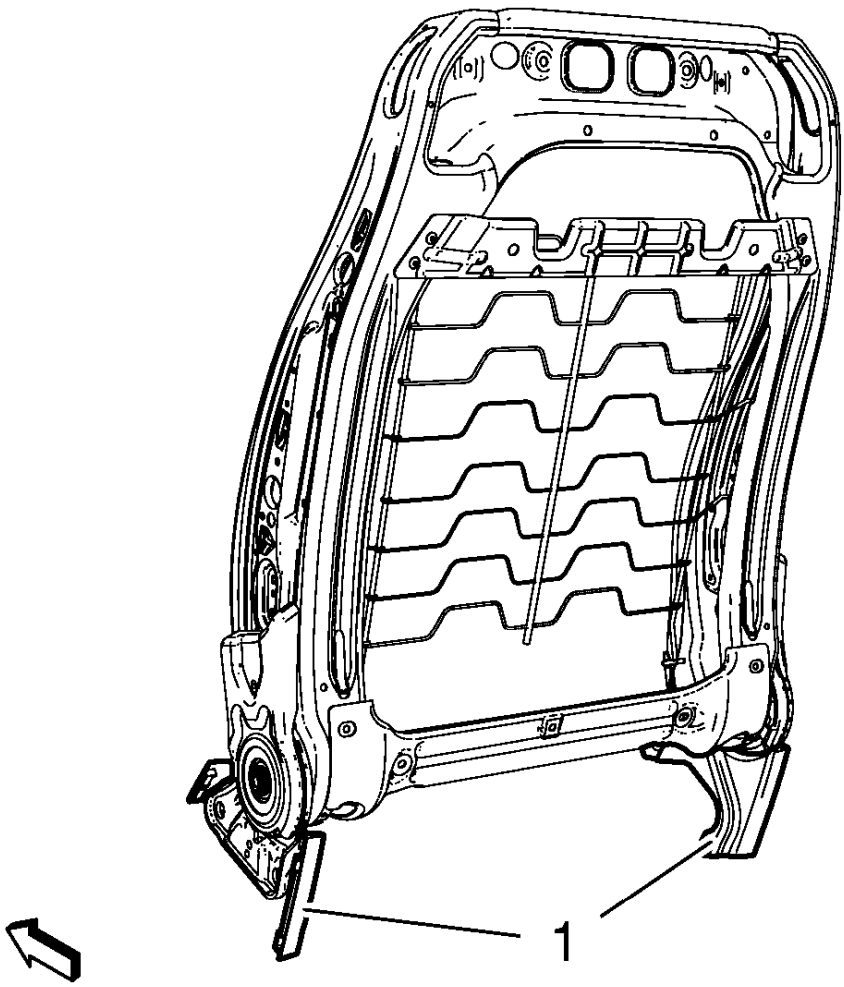

Fig. 32: Inner Seat Frame Cover
Courtesy of GENERAL MOTORS COMPANY

1. Install the wire harness, if equipped.
2. Install inner seat frame cover (1).

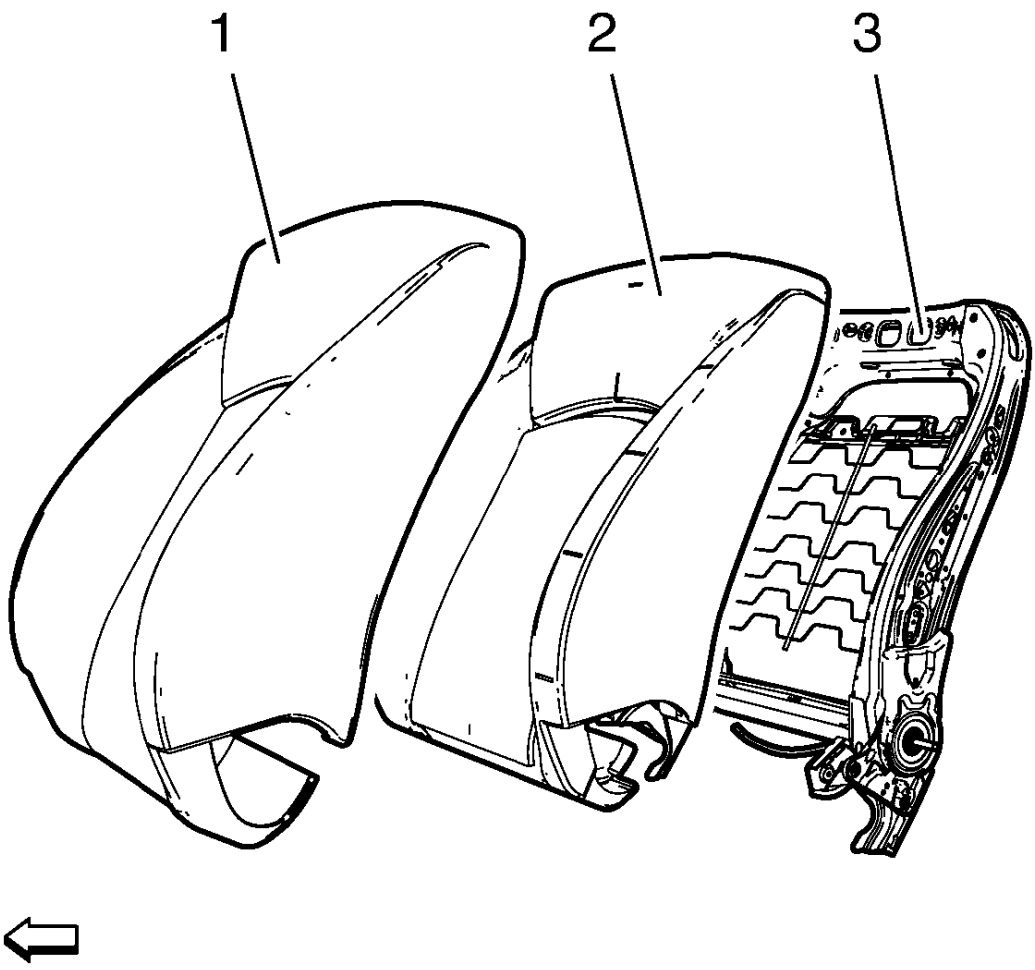

Fig. 33: Cushion Cover, Pad And Frame
Courtesy of GENERAL MOTORS COMPANY

3. Install front seat back cushion cover (1) and pad (2) to frame (3). Refer to **Driver or Passenger Seat Back Cover and Pad Replacement**

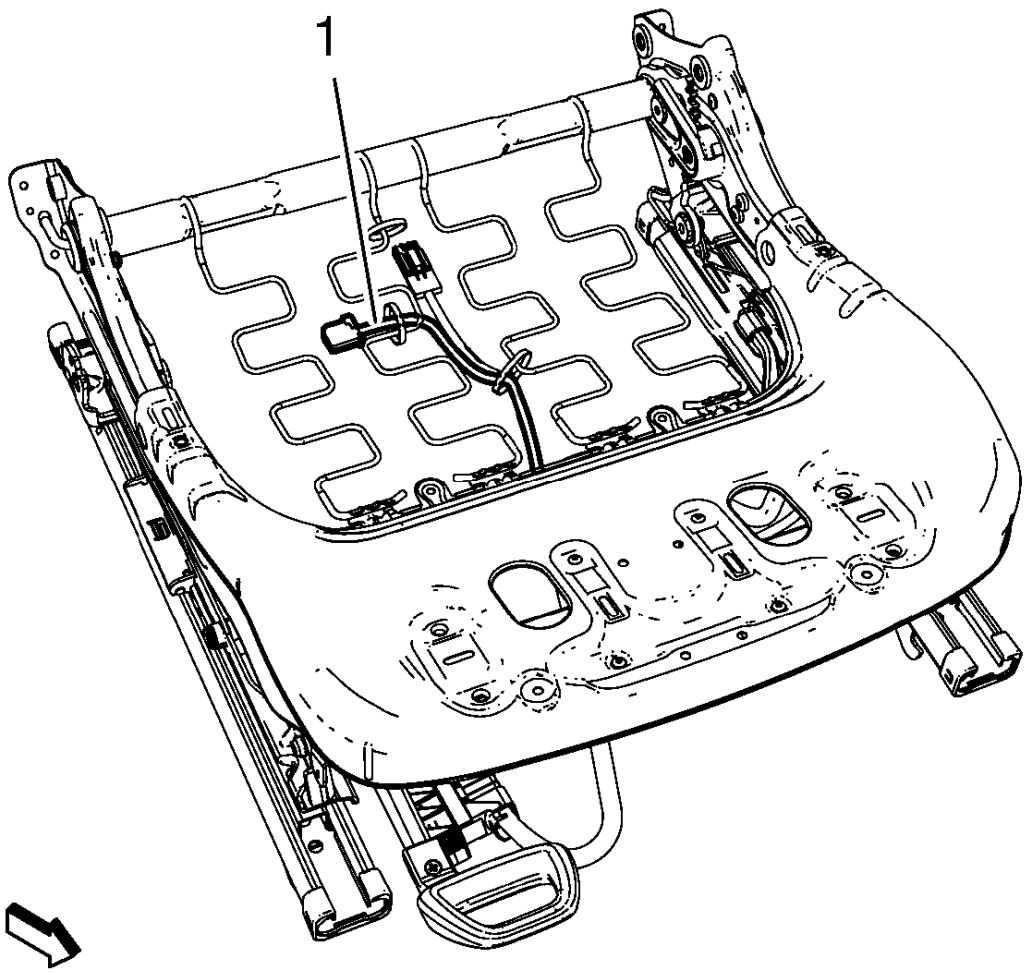

Fig. 34: Driver Seat Frame Wire Harness
Courtesy of GENERAL MOTORS COMPANY

4. Install the wire harness (1), if equipped.

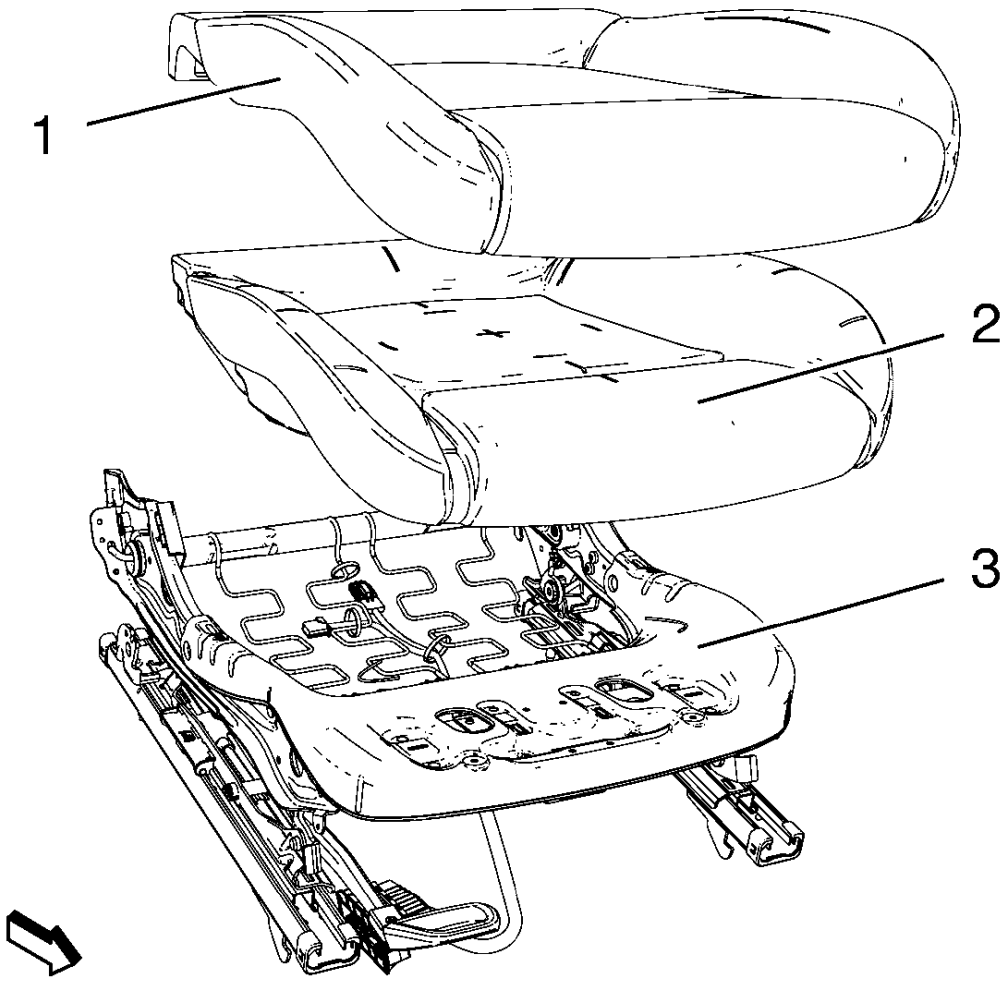

Fig. 35: Cushion Cover, Seat Frame And Pad
Courtesy of GENERAL MOTORS COMPANY

5. Install front seat cushion cover (1) and pad (2) to frame (3). Refer to **Front Seat Cushion Cover and Pad Replacement**

PASSENGER SEAT FRAME REPLACEMENT

Removal Procedure

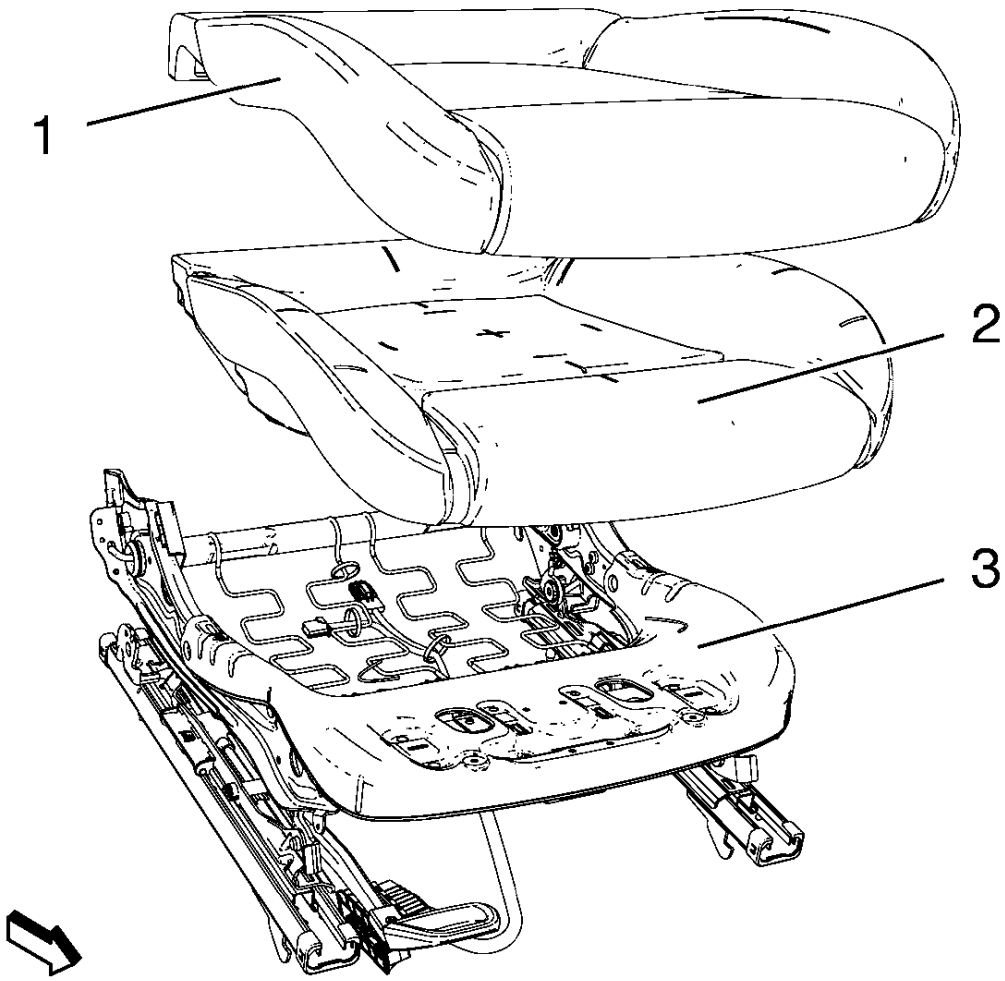

Fig. 36: Cushion Cover, Seat Frame And Pad
Courtesy of GENERAL MOTORS COMPANY

1. Remove front seat cushion cover (1) and pad (2) from frame (3). Refer to **Front Seat Cushion Cover and Pad Replacement**

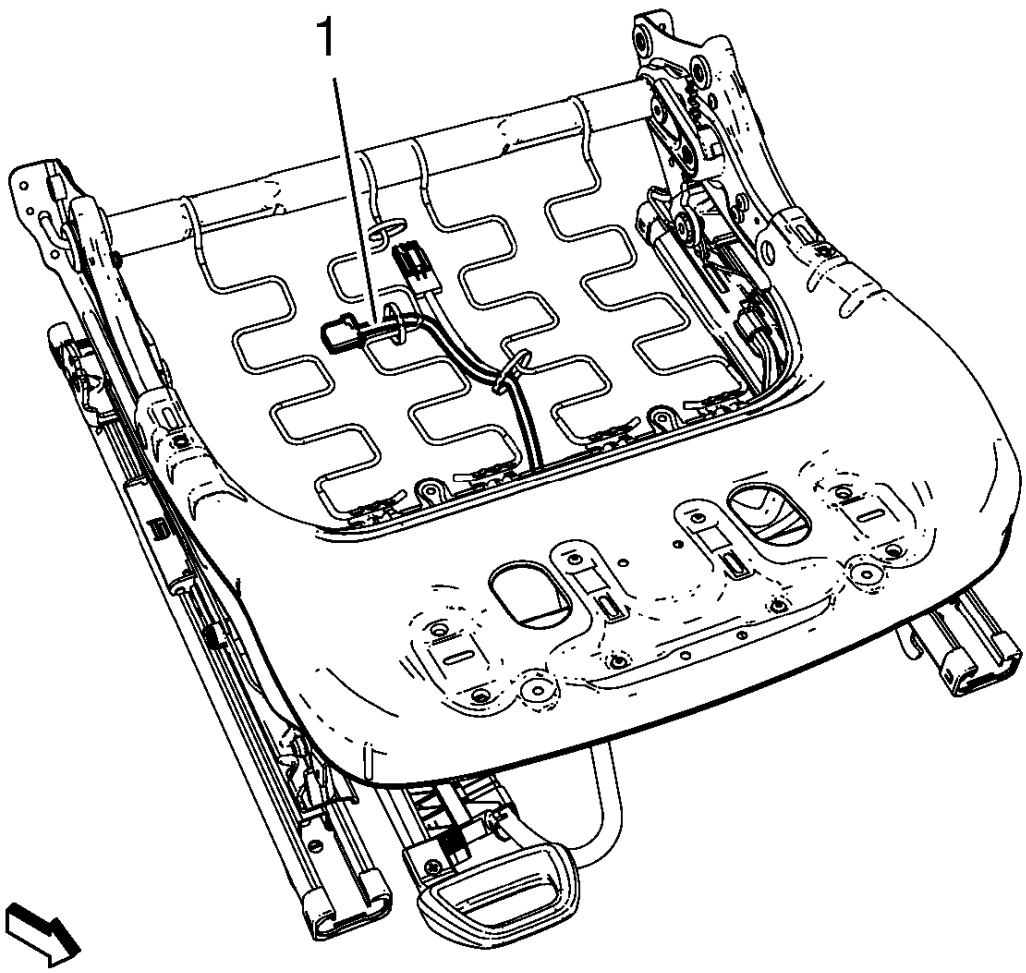

Fig. 37: Driver Seat Frame Wire Harness
Courtesy of GENERAL MOTORS COMPANY

2. Remove the wire harness (1), if equipped.

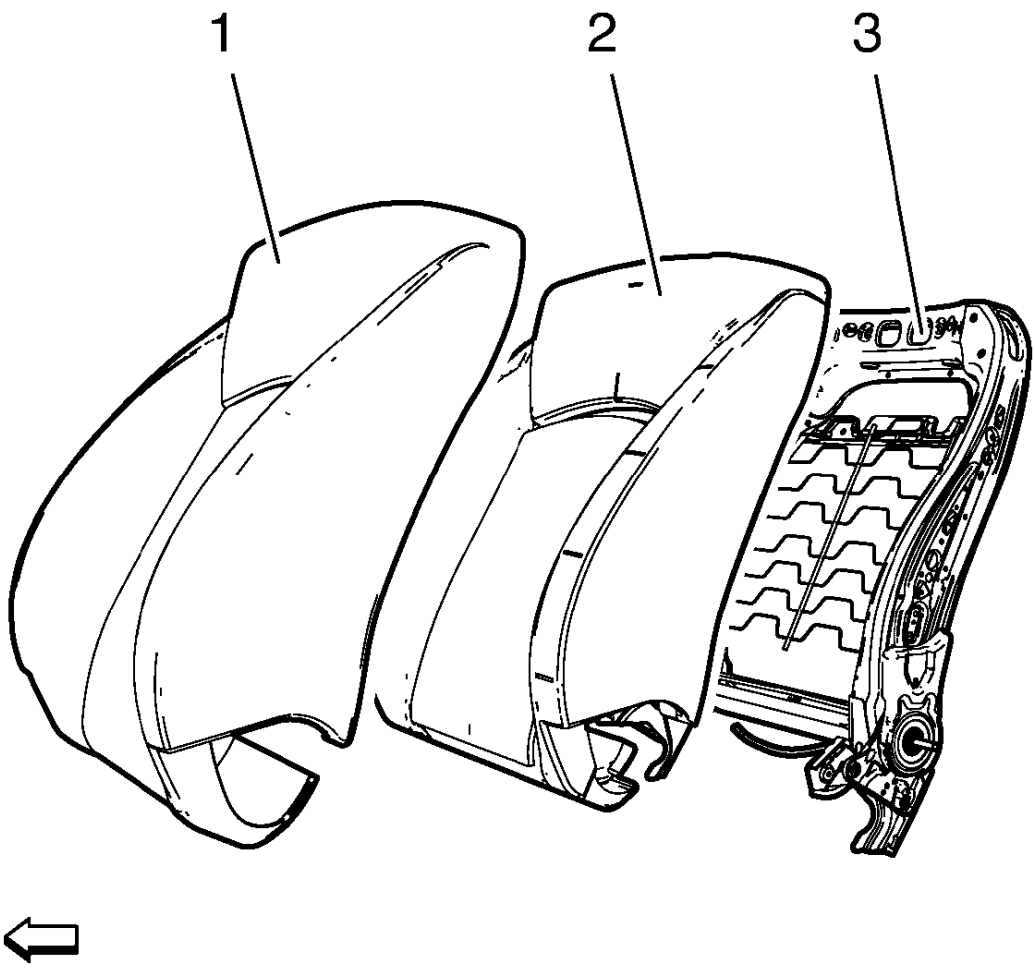

Fig. 38: Cushion Cover, Pad And Frame
Courtesy of GENERAL MOTORS COMPANY

3. Remove front seat back cushion cover (1) and pad (2) from frame (3). Refer to **Driver or Passenger Seat Back Cover and Pad Replacement**

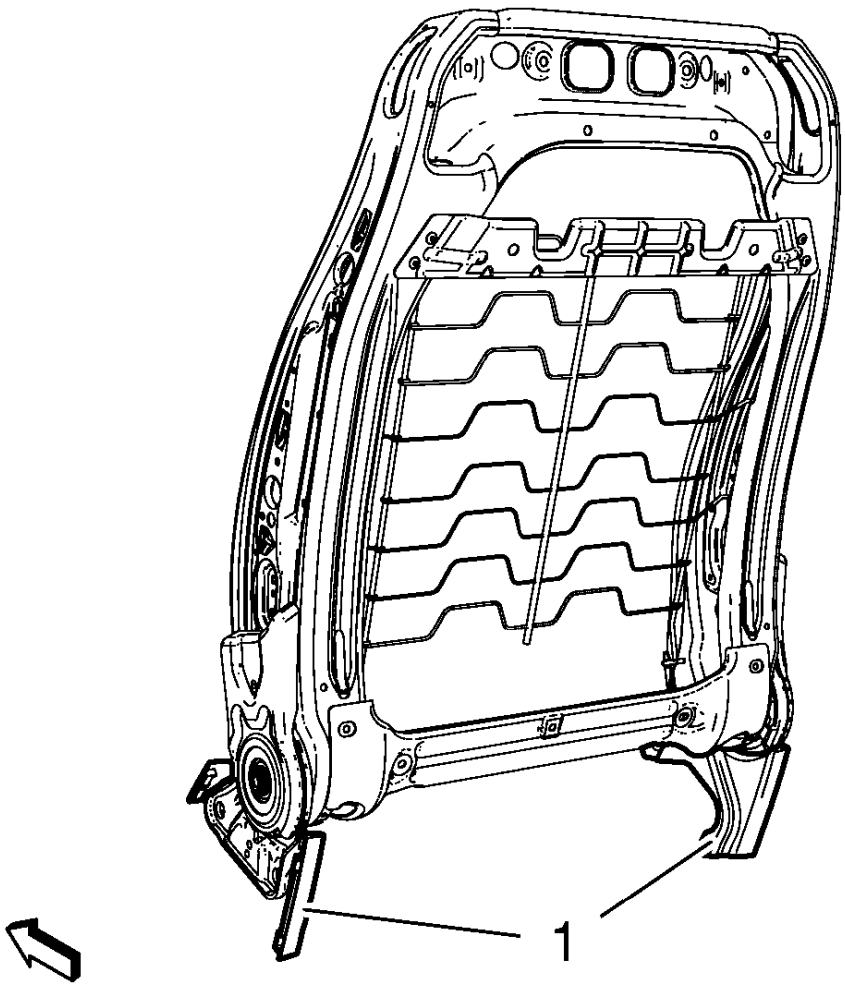

Fig. 39: Inner Seat Frame Cover
Courtesy of GENERAL MOTORS COMPANY

4. Remove inner seat frame cover (1).
5. Remove the wire harness, if equipped.

Installation Procedure

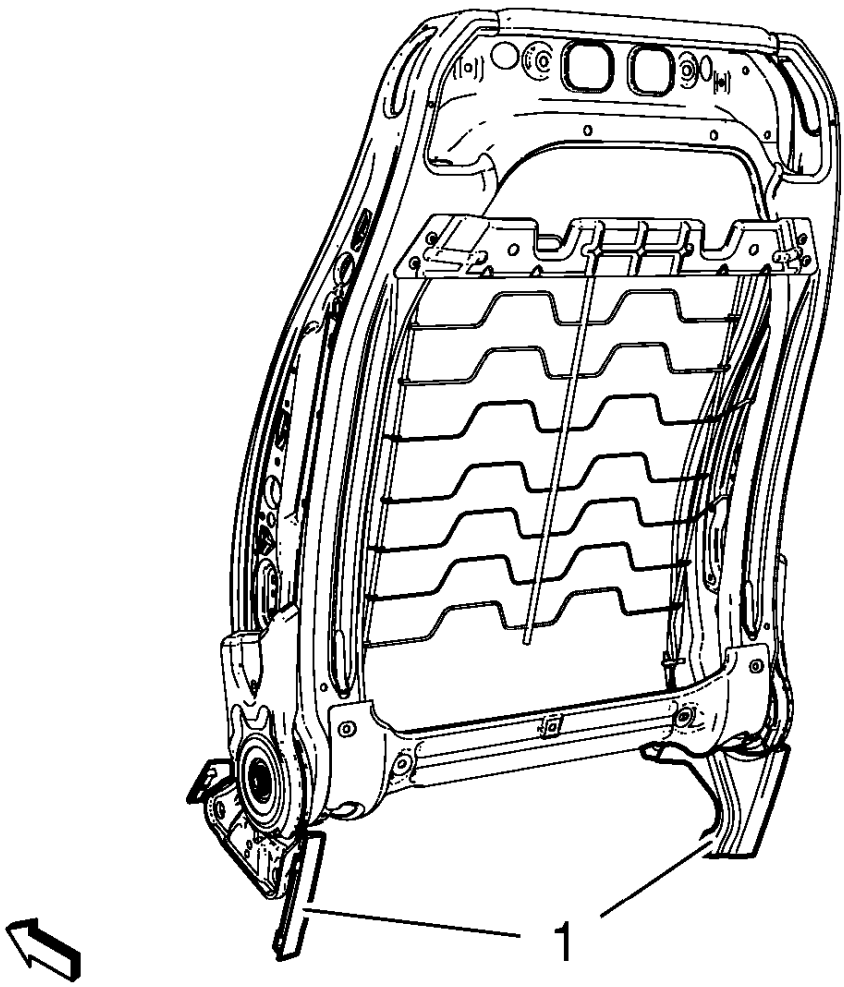

Fig. 40: Inner Seat Frame Cover
Courtesy of GENERAL MOTORS COMPANY

1. Install the wire harness, if equipped.
2. Install inner seat frame cover (1).

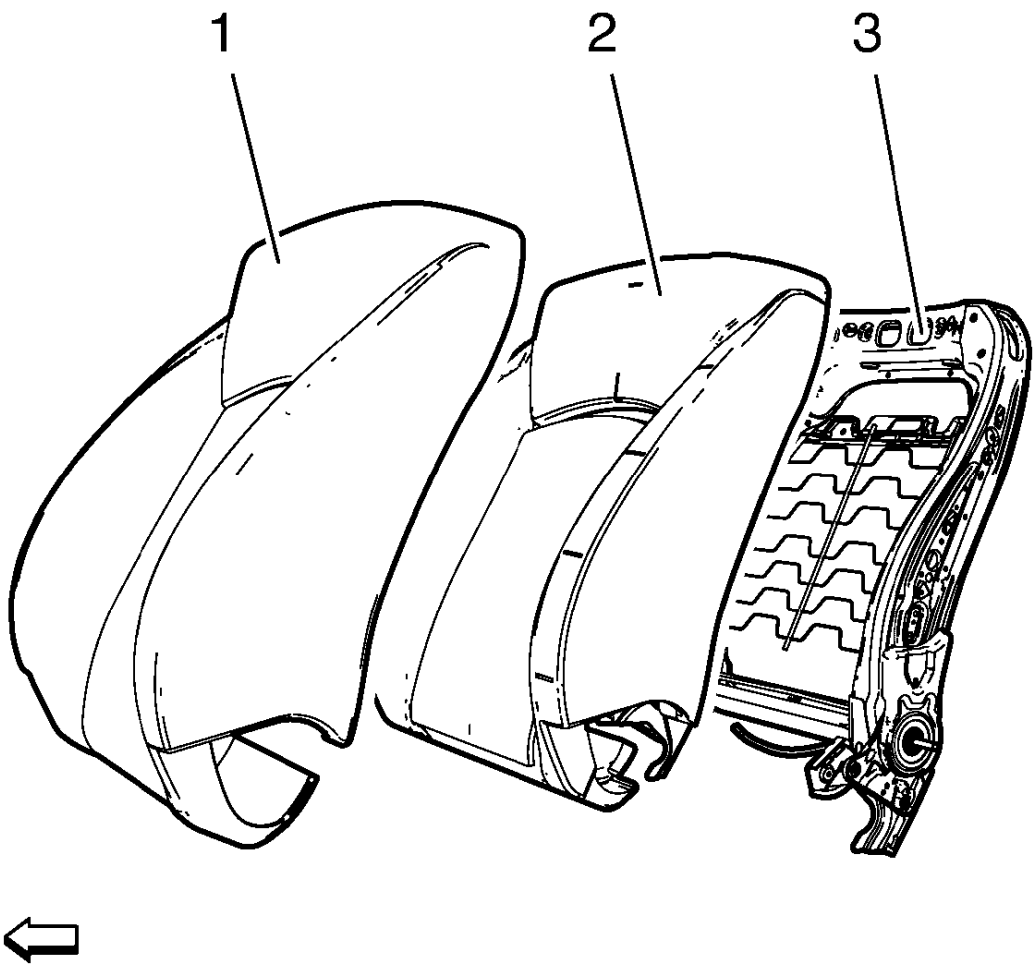

Fig. 41: Cushion Cover, Pad And Frame
Courtesy of GENERAL MOTORS COMPANY

3. Install front seat back cushion cover (1) and pad (2) to frame (3). Refer to **Driver or Passenger Seat Back Cover and Pad Replacement**

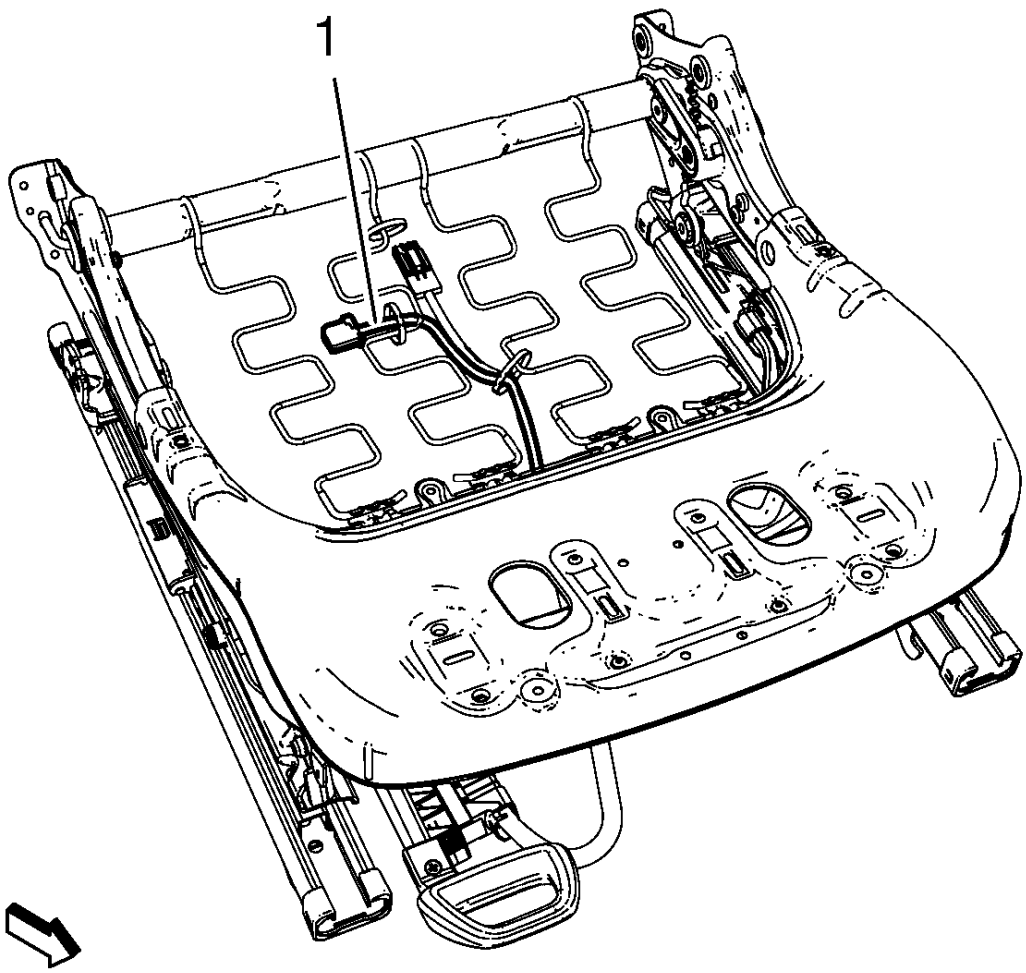

Fig. 42: Driver Seat Frame Wire Harness
Courtesy of GENERAL MOTORS COMPANY

4. Install the wire harness (1), if equipped.

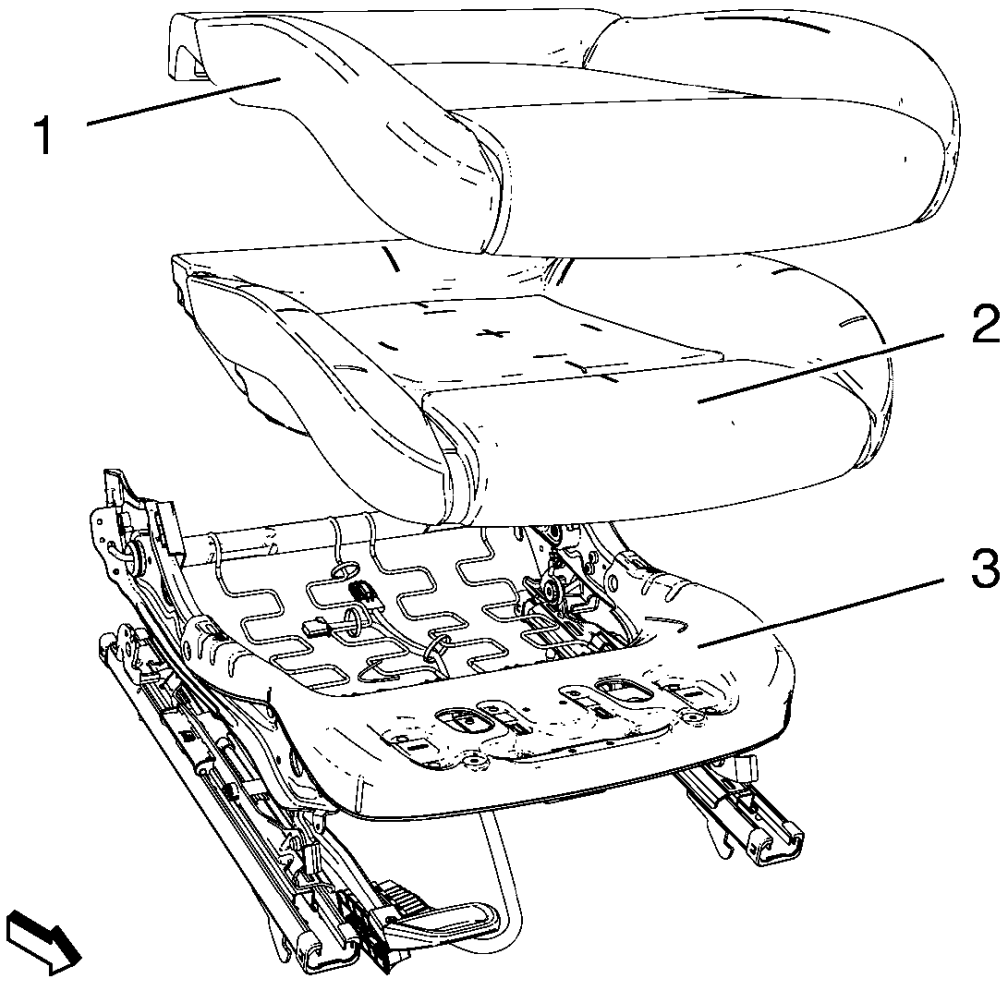

Fig. 43: Cushion Cover, Seat Frame And Pad
Courtesy of GENERAL MOTORS COMPANY

5. Install front seat cushion cover (1) and pad (2) to frame (3). Refer to **Front Seat Cushion Cover and Pad Replacement**

REAR SEAT REMOVAL AND INSTALLATION (40 PERCENT SEAT)

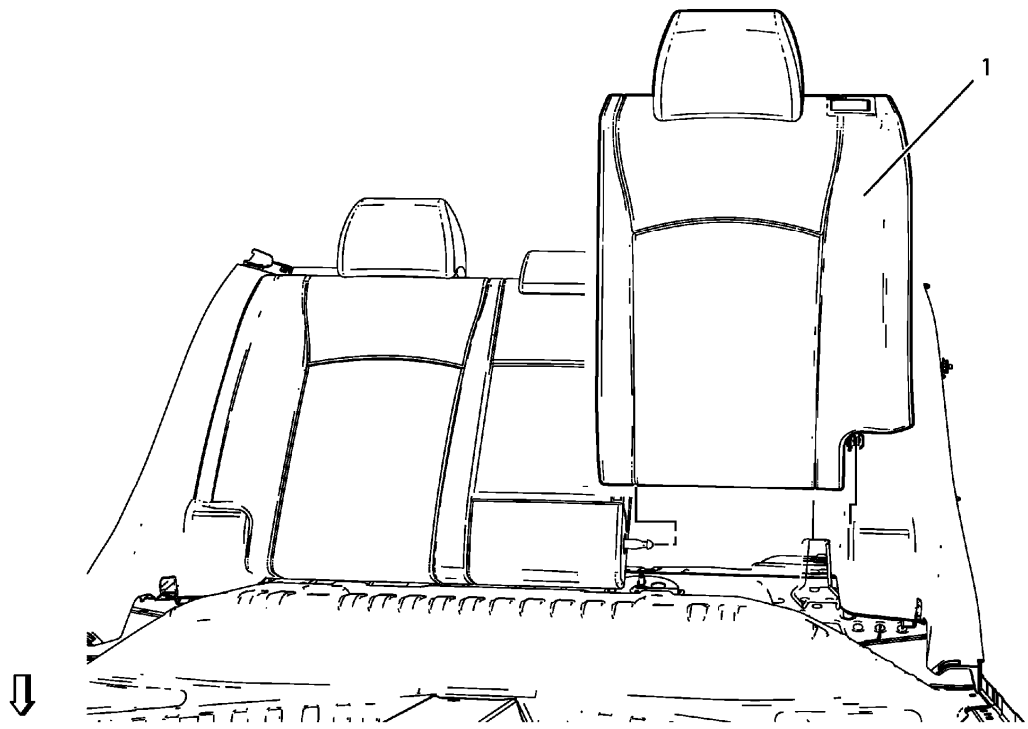

Fig. 44: Rear Seat (40 Percent Seat)
Courtesy of GENERAL MOTORS COMPANY

Rear Seat Removal and Installation (40 Percent Seat)

Callout	Component Name
Preliminary Procedures Remove the rear seat cushion. Refer to **Rear Seat Cushion Removal and Installation**.	
1	Rear Seat Back - Left Side **Procedure** 1. Fold down rear seat backrest. 2. Remove rear seat backrest from both side guide.

REAR SEAT REMOVAL AND INSTALLATION (60 PERCENT SEAT)

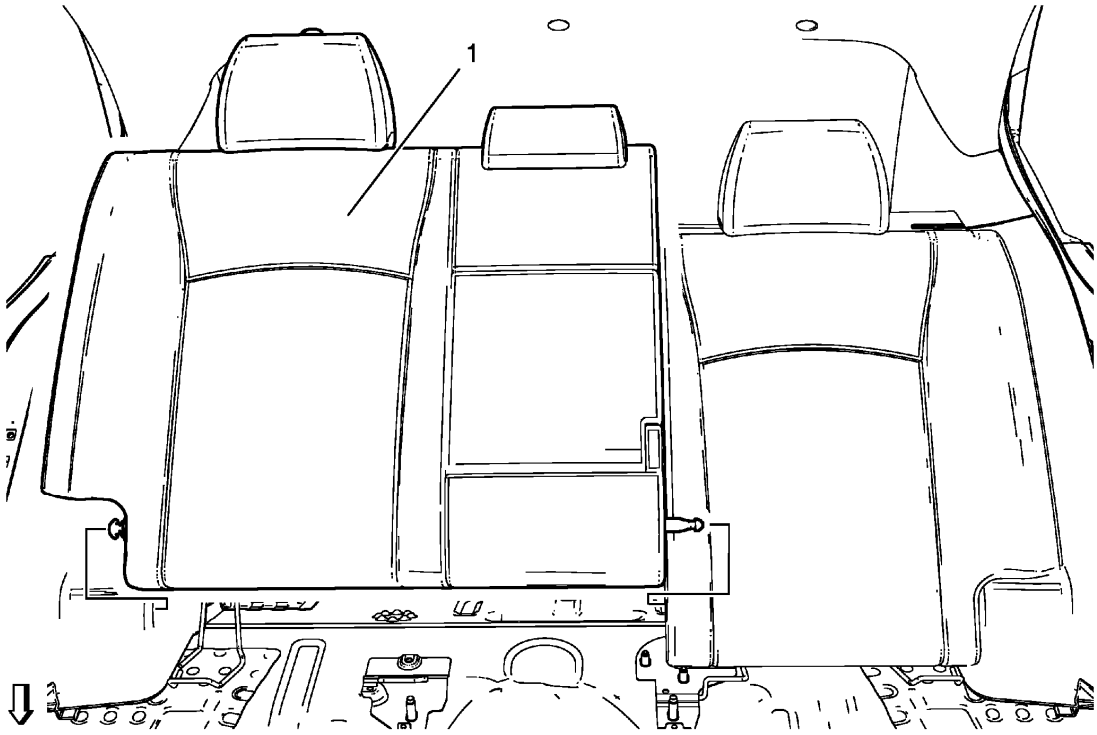

Fig. 45: Rear Seat (60 Percent Seat)
Courtesy of GENERAL MOTORS COMPANY

Rear Seat Removal and Installation (60 Percent Seat)

Callout	Component Name
Preliminary Procedures 1. Remove the right rear seat back cushion bolster. Refer to **Rear Seat Back Bolster Replacement**. 2. Remove the rear seat belt buckle. Refer to **Rear Seat Buckle Side Belt Replacement** .	
1	Rear Seat Back- Right Side **Procedure** 1. Fold down the rear seat back. 2. Lift up on the outer side of the seat back to disengage from the outer guide. 3. Pull the seat back outboard to disengage from the inner guide.

REAR SEAT ARMREST REPLACEMENT

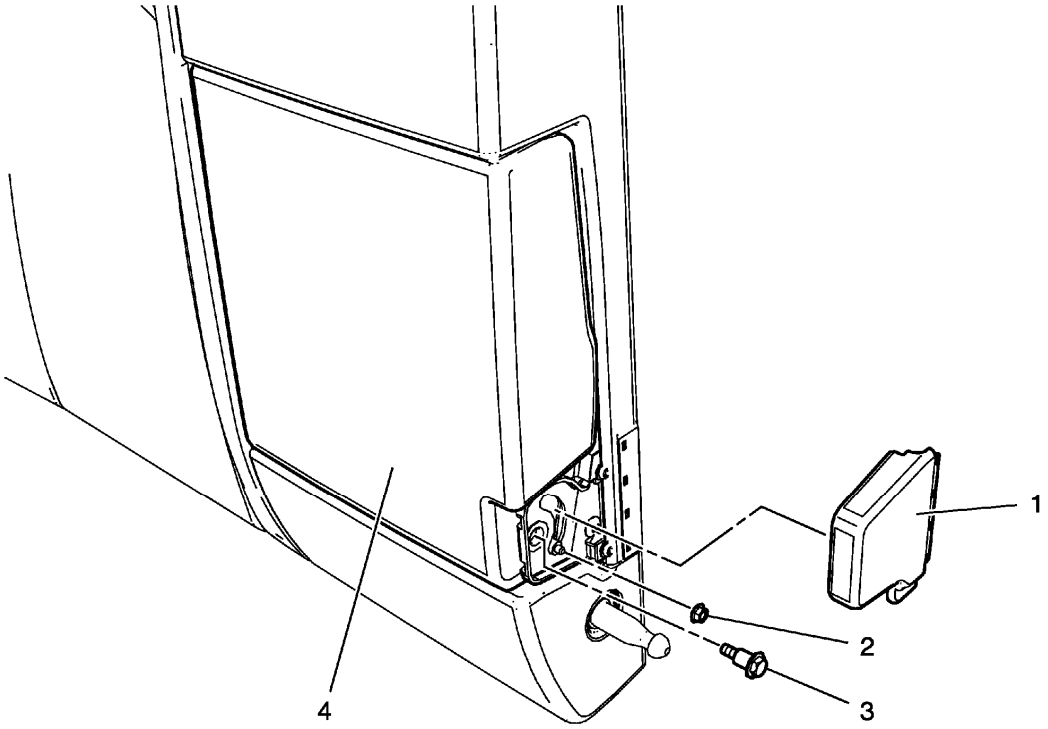

Fig. 46: Rear Seat Armrest
Courtesy of GENERAL MOTORS COMPANY

Rear Seat Armrest Replacement

Callout	Component Name
Preliminary Procedures Remove the rear seat back - right side. Refer to **Rear Seat Removal and Installation (40 Percent Seat)**, **Rear Seat Removal and Installation (60 Percent Seat)**.	
1	Rear Seat Armrest Hinge Cover **Procedure** Release four tabs and carefully slide the cover forward.
2	Rear Seat Armrest Hinge Nut **CAUTION:** **Refer to Fastener Caution .** **Tighten** 4.5 N.m (40 lb in)
3	Rear Seat Armrest Hinge Bolt **Tighten** 9 N.m (80 lb in)
4	Rear Seat Armrest **Procedure** Position the stud so that it could pass the armrest bracket.

REAR SEAT HEAD RESTRAINT REPLACEMENT

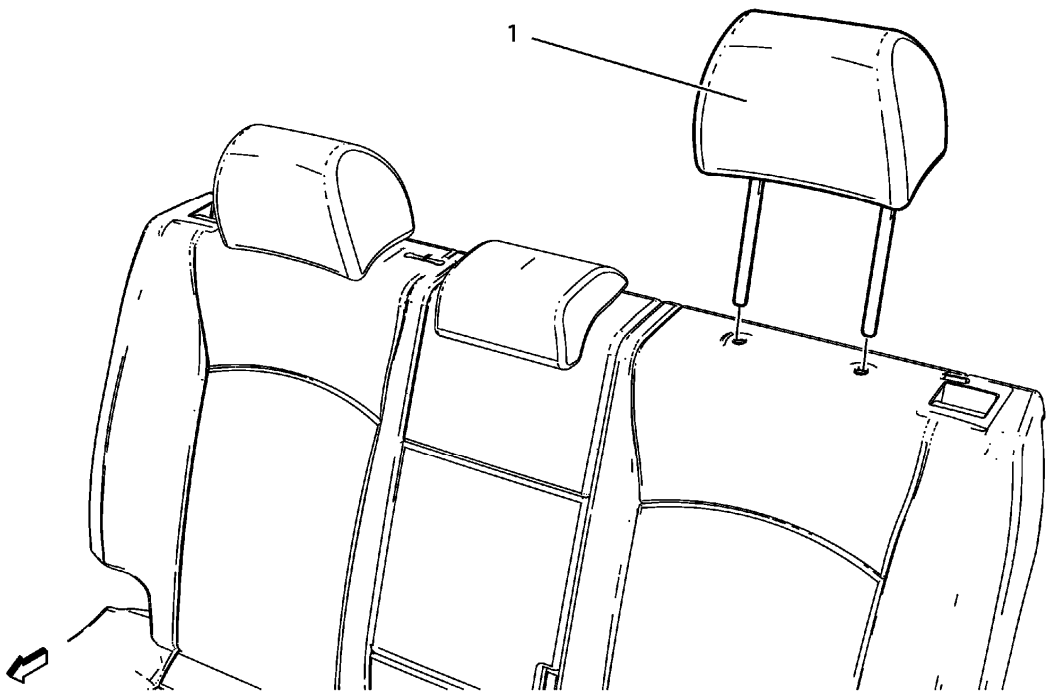

Fig. 47: Rear Seat Head Restraint
Courtesy of GENERAL MOTORS COMPANY

Rear Seat Head Restraint Replacement

Callout	Component Name
1	Rear Seat Head Restraint **Procedure** Push the head restraint guide button and remove the head restraint.

REAR SEAT HEAD RESTRAINT GUIDE REPLACEMENT

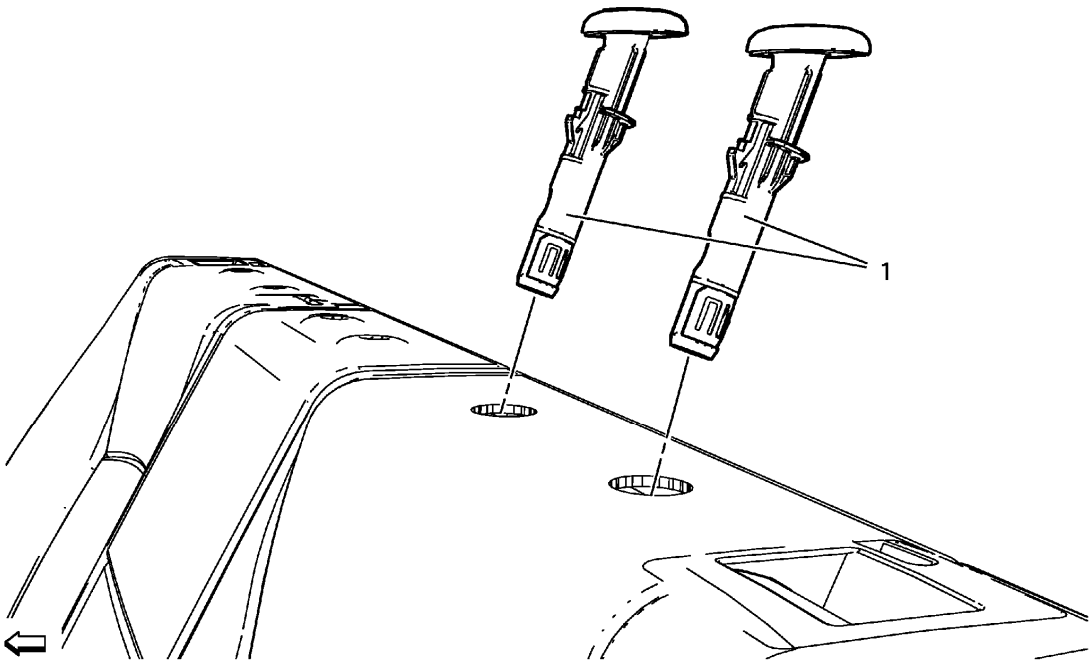

Fig. 48: Rear Seat Head Restraint Guide
Courtesy of GENERAL MOTORS COMPANY

Rear Seat Head Restraint Guide Replacement

Callout	Component Name
Preliminary Procedures Remove the rear seat head restraint. Refer to **Rear Seat Head Restraint Replacement**.	
1	Rear Seat Head Restraint Guide (Qty: 2) **Procedure** Unclip the rear seat head restraint guide with a suitable device.

REAR SEAT BACK BOLSTER REPLACEMENT

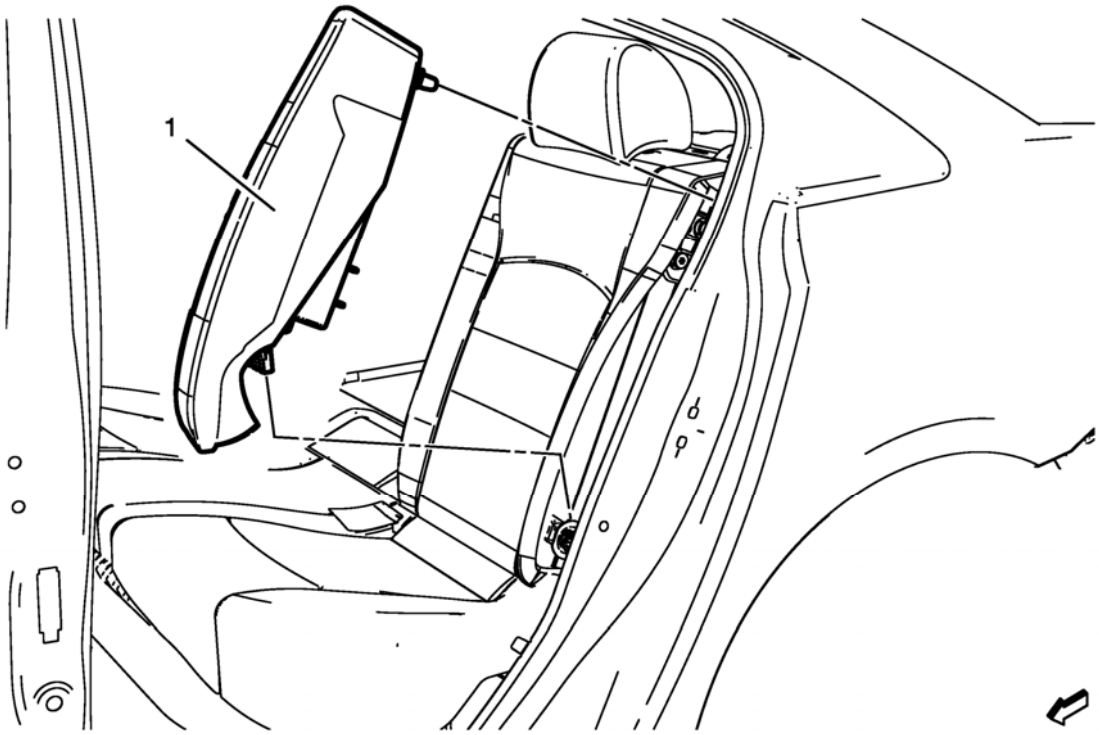

Fig. 49: Rear Seat Back Cushion Bolster
Courtesy of GENERAL MOTORS COMPANY

Rear Seat Back Bolster Replacement

Callout	Component Name
Preliminary Procedures Disable the SIR system. Refer to **SIR Disabling and Enabling** .	
1	Rear Seat Back Cushion Bolster **WARNING:** **Refer to SIR Warning .** **WARNING:** **Do not repair or replace the seat stitching or seams in the seat back trim cover with an internal mounted seat side airbag module. Replace the complete seat back trim cover from the OEM. Non-OEM seat stitching may cause improper airbag deployment which could result in personal injury.** **Procedure** 1. Pull bolster very hard from top to disengage retainers. 2. Replace all damaged retainers and tap back holes in body sheet metal, if necessary. 3. Disconnect electrical connector.

	4. Remove rear seat back cushion bolster. 5. Remove the rear seat side inflatable module, if equipped. Refer to **Rear Seat Outboard Seat Back Airbag Replacement** .

REAR SEAT BACK SIDE CUSHION COVER REPLACEMENT

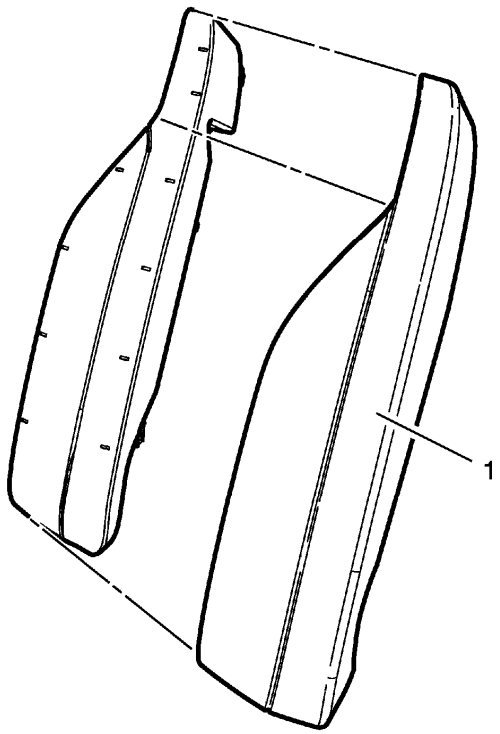

Fig. 50: Rear Seat Back Side Cushion Cover
Courtesy of GENERAL MOTORS COMPANY

Rear Seat Back Side Cushion Cover Replacement

Callout	Component Name
Preliminary Procedures **WARNING:** **Do not repair or replace the seat stitching or seams in the seat back trim cover with an internal mounted seat side airbag module. Replace the complete seat back trim cover from the OEM. Non-OEM seat stitching may cause improper airbag deployment which could result in personal injury.** Remove the rear seat side inflatable restraint module. Refer to **Rear Seat Outboard Seat Back Airbag Replacement** .	
	Rear Seat Back Side Cushion Cover **Procedure**

1	1. Loosen the rear seat back side cushion cover. 2. Remove the hog rings. 3. Remove the rear seat back side cushion cover. 4. Attach the rear seat back side cushion cover and install the hog rings. 5. Install the rear seat back side cushion cover.

REAR SEAT BACK CUSHION PIVOT SUPPORT REPLACEMENT

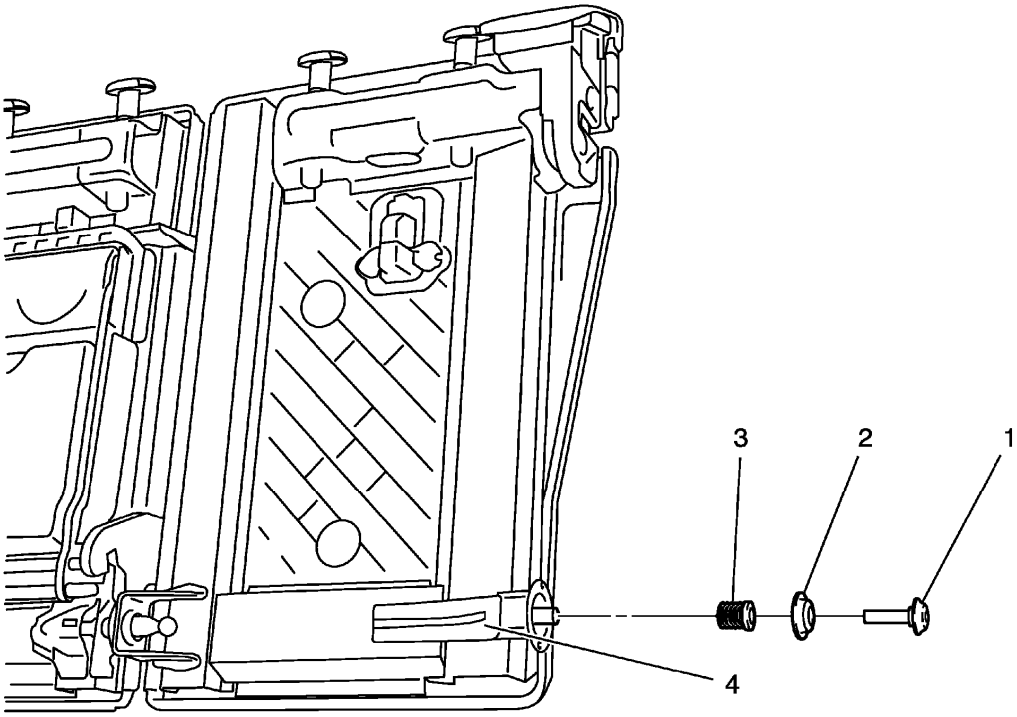

Fig. 51: Rear Seat Back Cushion Pivot Support & Components
Courtesy of GENERAL MOTORS COMPANY

Rear Seat Back Cushion Pivot Support Replacement

Callout	Component Name
Preliminary Procedures Remove the rear seat back. Refer to **Rear Seat Removal and Installation (40 Percent Seat)**, **Rear Seat Removal and Installation (60 Percent Seat)**.	
1	Rear Seat Back Outer Pivot Bolt **CAUTION:** **Refer to Fastener Caution .**

	Tighten 23 N.m (17 lb ft)
2	Rear Seat Back Cushion Pivot Bolt Bushing
3	Rear Seat Back Cushion Outer Pivot Bolt Spring
4	Rear Seat Back Cushion Pivot Support

REAR SEAT CUSHION COVER AND PAD REPLACEMENT

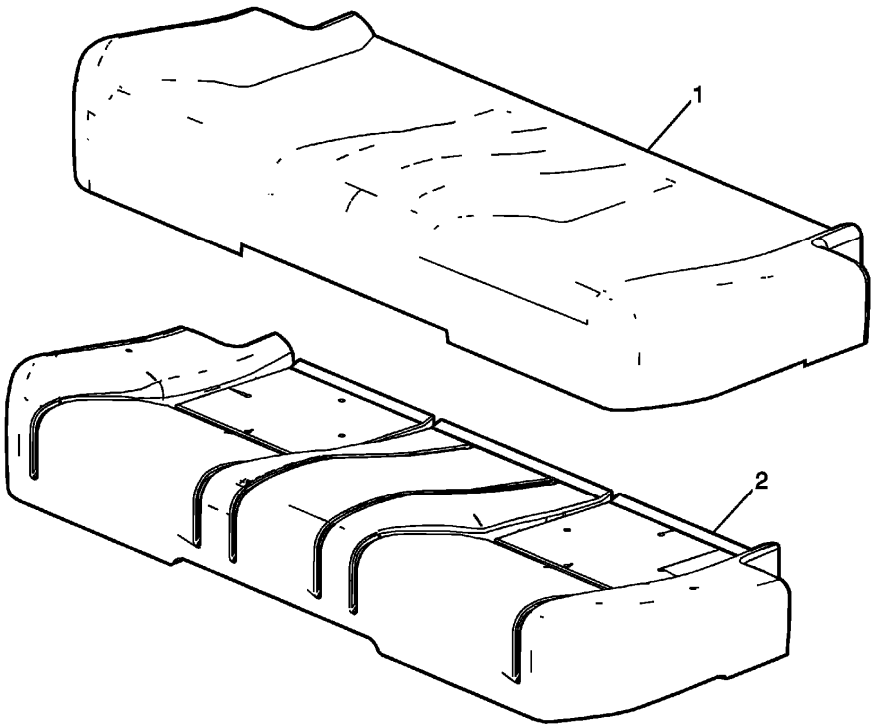

Fig. 52: Identifying Rear Seat Cushion Cover & Pad
Courtesy of GENERAL MOTORS COMPANY

Rear Seat Cushion Cover and Pad Replacement

Callout	Component Name
Preliminary Procedures Remove the rear seat cushion. Refer to **Rear Seat Cushion Removal and Installation**.	
1	Rear Seat Cushion Cover **Procedure** 1. Remove the hog rings that secure the rear seat cushion cover to the pad. 2. Remove seat cushion cover from Velcro.
2	Rear Seat Cushion Pad

REAR SEAT CUSHION REMOVAL AND INSTALLATION

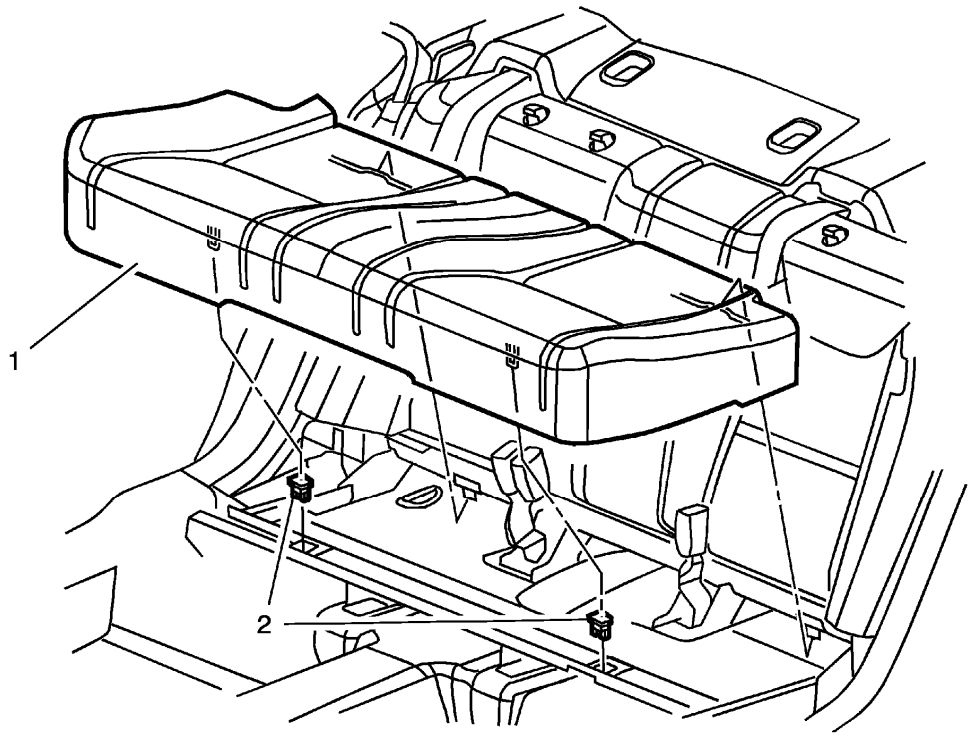

Fig. 53: Rear Seat Cushion
Courtesy of GENERAL MOTORS COMPANY

Rear Seat Cushion Removal and Installation

Callout	Component Name
1	Rear Seat Cushion **Procedure** 1. Pull up on the front of the seat cushion to disengage the retainers, and lift out of the vehicle. A high amount of upward force will be required. 2. After removal of the retainers, the sheet metal will be slightly deformed outward. Use a small hammer and pound the sheet metal back to its original, flat appearance. 3. When re-installing the seat, the hooks at the rear of the seat must go over and behind the mushroom clips at the rear of the floor. 4. When installing new plastic retainers on the front of the seat, ONLY seat the retainer to the first click, otherwise the insertion force into the sheet metal will be greatly increased.
2	Seat Cushion Retainer (Qty: 2)

REAR SEAT BACK LATCH REPLACEMENT (40 PERCENT SEAT)

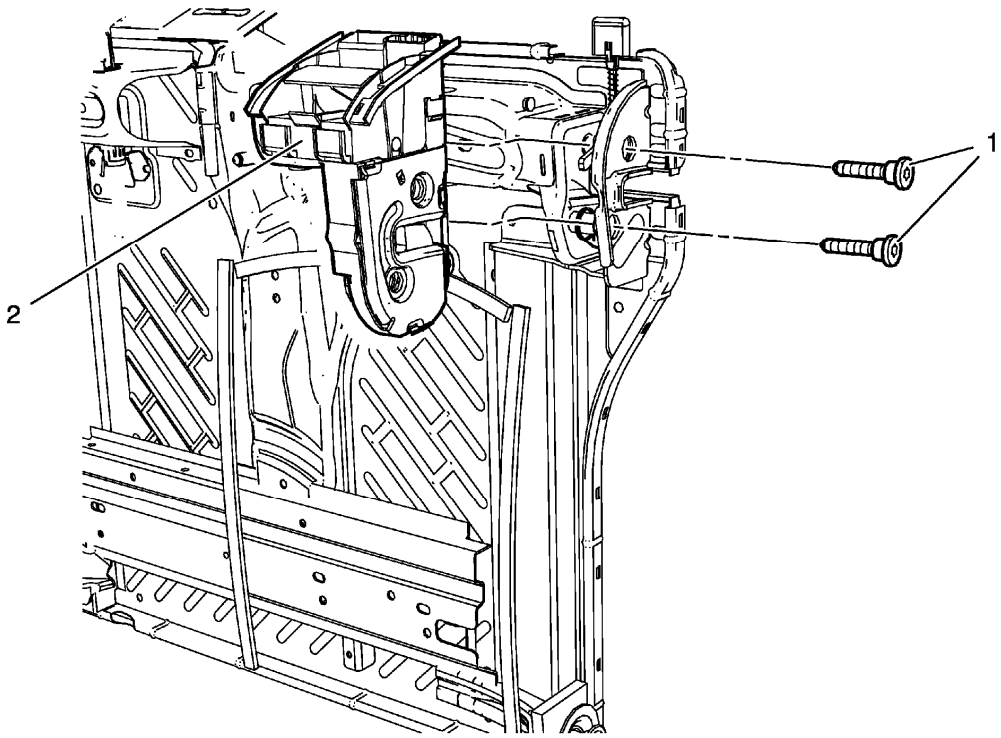

Fig. 54: Rear Seat Back Latch (40 Percent Seat)
Courtesy of GENERAL MOTORS COMPANY

Rear Seat Back Latch Replacement (40 Percent Seat)

Callout	Component Name
Preliminary Procedures 1. Remove the rear seat - left side. Refer to **Rear Seat Removal and Installation (40 Percent Seat)**, **Rear Seat Removal and Installation (60 Percent Seat)**. 2. Remove the rear seat back cushion cover and pad - left side. Refer to **Rear Seat Back Cushion Cover and Pad Replacement - Left Side**.	
1	Rear Seat Back Latch Bolt (Qty: 2) **CAUTION:** **Refer to Fastener Caution .** **Tighten** 45 N.m (33 lb ft)
2	Rear Seat Back Latch

REAR SEAT BACK LATCH REPLACEMENT (60 PERCENT SEAT)

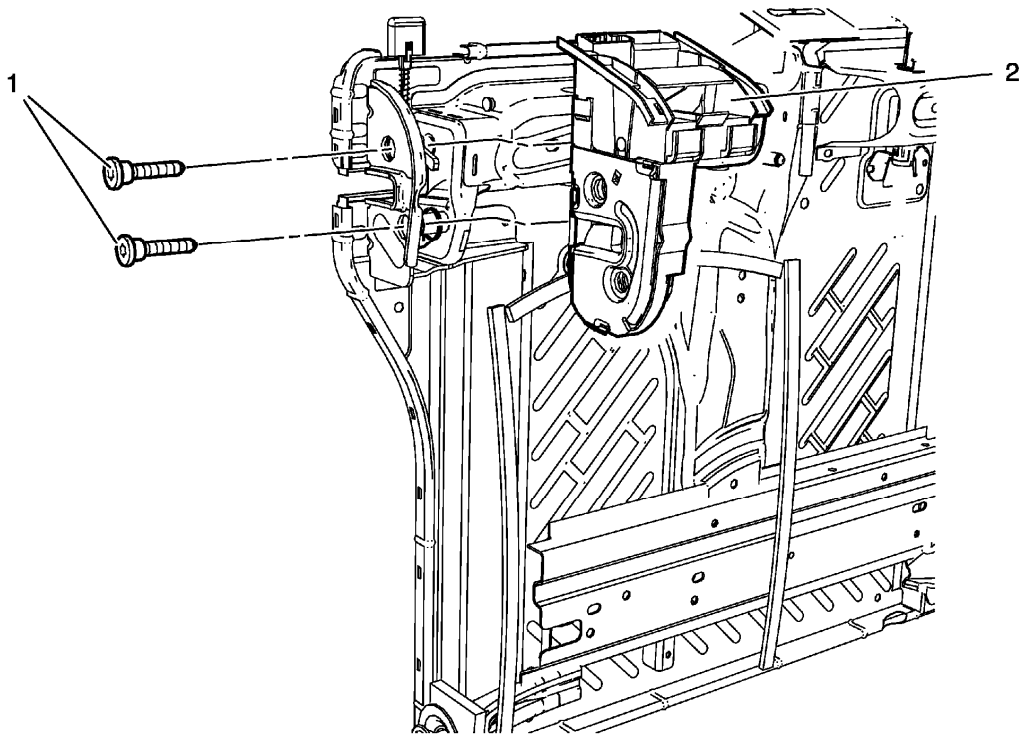

Fig. 55: Rear Seat Back Latch (60 Percent Seat)
Courtesy of GENERAL MOTORS COMPANY

Rear Seat Back Latch Replacement (60 Percent Seat)

Callout	Component Name
Preliminary Procedures 1. Remove the rear seat - right side. Refer to **Rear Seat Removal and Installation (40 Percent Seat)**, **Rear Seat Removal and Installation (60 Percent Seat)**. 2. Remove the rear seat armrest. Refer to **Rear Seat Armrest Replacement**. 3. Remove the rear seat back cushion cover and pad - right side. Refer to **Rear Seat Back Cushion Cover and Pad Replacement - Right Side**.	
1	Rear Seat Back Latch Bolt (Qty: 2) **CAUTION:** **Refer to Fastener Caution .** **Tighten** 45 N.m (33 lb ft)
2	Rear Seat Back Latch

REAR SEAT BELT OPENING COVER REPLACEMENT

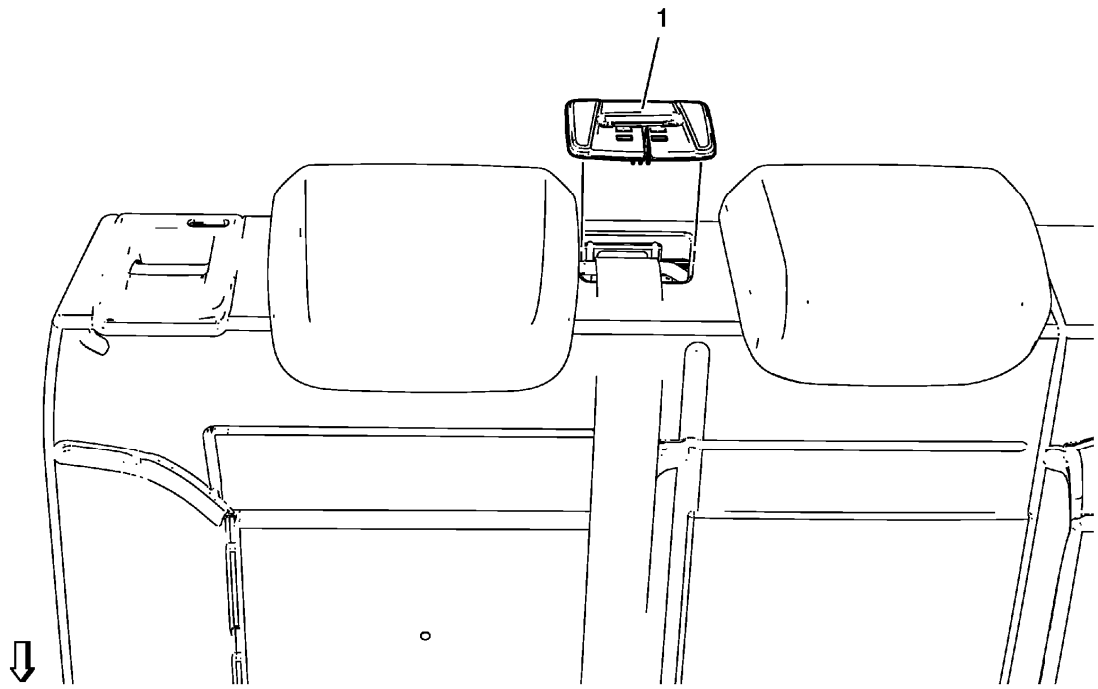

Fig. 56: Rear Seat Shoulder Belt Opening Cover
Courtesy of GENERAL MOTORS COMPANY

Rear Seat Belt Opening Cover Replacement

Callout	Component Name
1	Rear Seat Shoulder Belt Opening Cover

REAR SEAT BACK CUSHION PANEL REPLACEMENT (40 PERCENT SEAT)

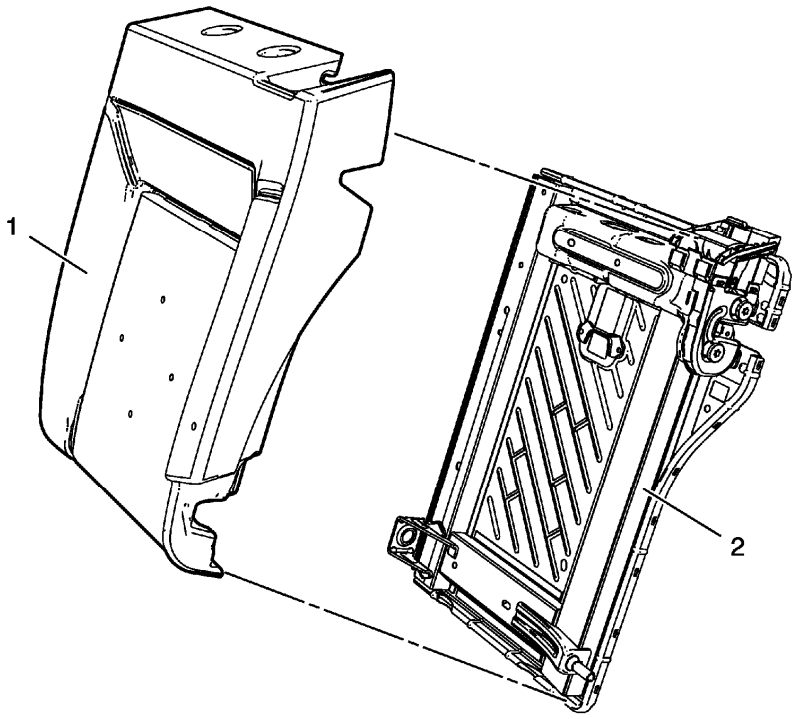

Fig. 57: Rear Seat Back Cushion Panel, Cover And Pad (40 Percent Seat)
Courtesy of GENERAL MOTORS COMPANY

Rear Seat Back Cushion Panel Replacement (40 Percent Seat)

Callout	Component Name
Preliminary Procedures 1. Remove the rear seat back. 2. Remove the rear seat back cushion latch release knob bezel. Refer to **Rear Seat Back Cushion Latch Release Knob Bezel Replacement (60 Percent Seat)**, **Rear Seat Back Cushion Latch Release Knob Bezel Replacement (40 Percent Seat)**. 3. Remove the rear seat head restraint guide. Refer to **Rear Seat Head Restraint Guide Replacement**. 4. Remove the rear seat back cushion pivot support. Refer to **Rear Seat Back Cushion Pivot Support Replacement**.	
1	Rear Seat Back Cushion Cover and Pad
2	Rear Seat Back Cushion Panel

REAR SEAT BACK CUSHION PANEL REPLACEMENT (60 PERCENT SEAT)

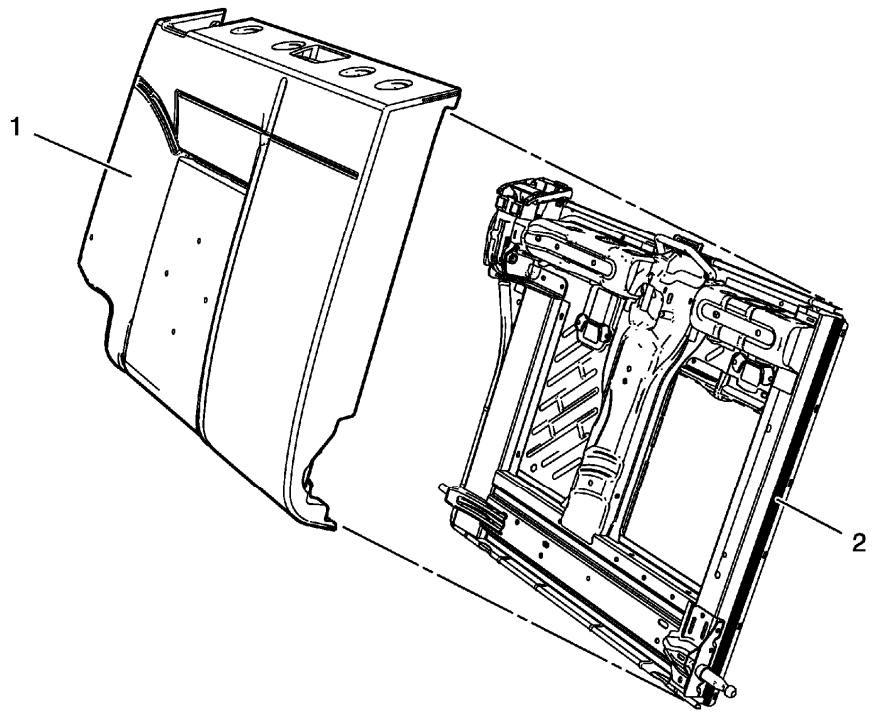

Fig. 58: Rear Seat Back Cushion Panel, Cover And Pad (60 Percent Seat)
Courtesy of GENERAL MOTORS COMPANY

Rear Seat Back Cushion Panel Replacement (60 Percent Seat)

Callout	Component Name
Preliminary Procedures 1. Remove the rear seat back. 2. Remove the rear seat back cushion latch release knob bezel. Refer to **Rear Seat Back Cushion Latch Release Knob Bezel Replacement (60 Percent Seat)**, **Rear Seat Back Cushion Latch Release Knob Bezel Replacement (40 Percent Seat)**. 3. Remove the rear seat shoulder belt opening cover. Refer to **Rear Seat Belt Opening Cover Replacement**. 4. Remove the rear seat head restraint guides. Refer to **Rear Seat Head Restraint Guide Replacement**.	
1	Rear Seat Back Cushion Cover and Pad
2	Rear Seat Back Cushion Panel

REAR SEAT BACK CUSHION COVER AND PAD REPLACEMENT - LEFT SIDE

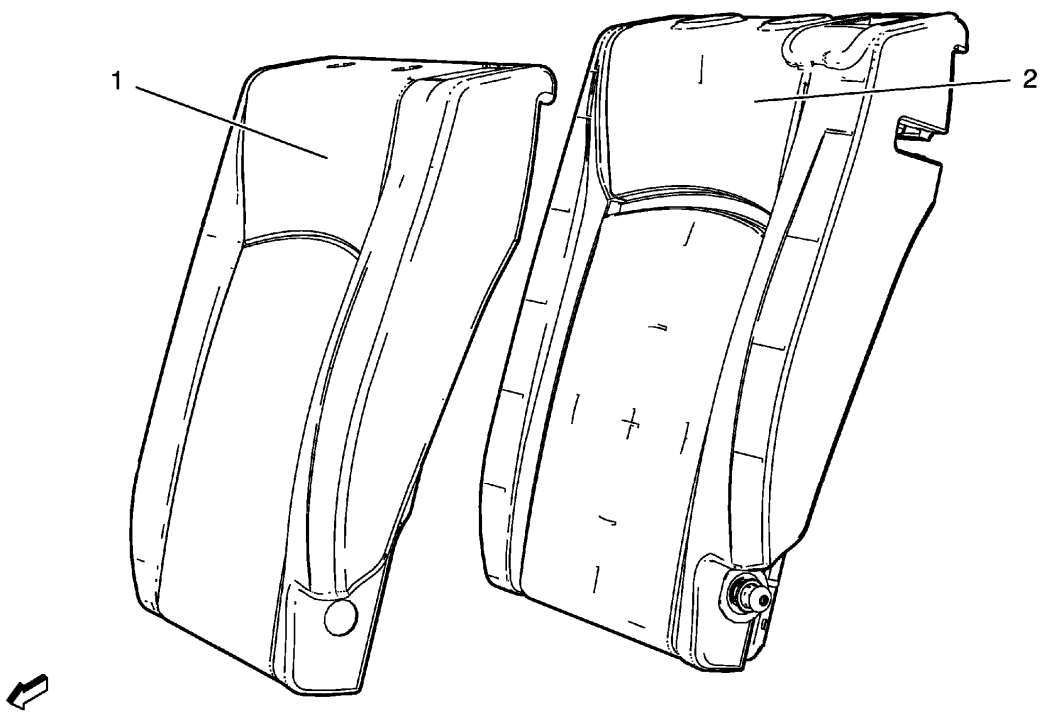

Fig. 59: Rear Seat Back Cushion Cover And Pad - Left Side
Courtesy of GENERAL MOTORS COMPANY

Rear Seat Back Cushion Cover and Pad Replacement - Left Side

Callout	Component Name
Preliminary Procedures Remove the rear seat - left side. Refer to **Rear Seat Removal and Installation (40 Percent Seat)**, **Rear Seat Removal and Installation (60 Percent Seat)**.	
1	Rear Seat Back Cushion Cover **Procedure** 1. Remove the staples from the seat back cover. 2. Remove seat back cushion cover from Velcro.
2	Rear Seat Back Cushion Pad

REAR SEAT BACK CUSHION COVER AND PAD REPLACEMENT - RIGHT SIDE

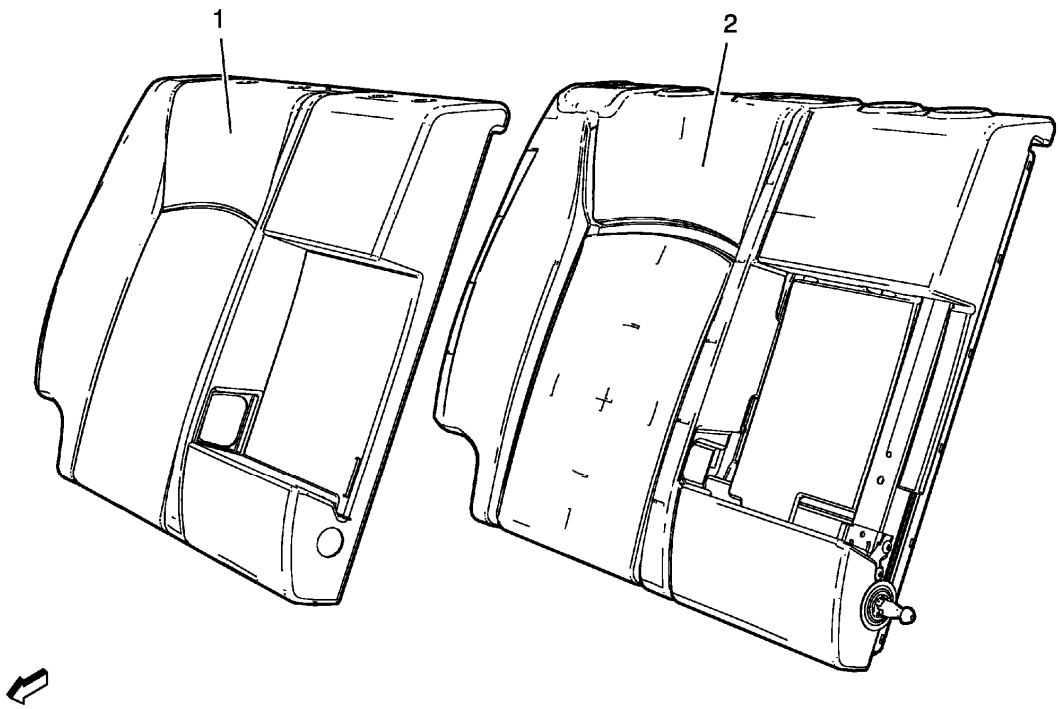

Fig. 60: Rear Seat Back Cushion Cover And Pad - Right Side
Courtesy of GENERAL MOTORS COMPANY

Rear Seat Back Cushion Cover and Pad Replacement - Right Side

Callout	Component Name
Preliminary Procedures 1. Remove the rear seat back - right side. Refer to **Rear Seat Removal and Installation (40 Percent Seat)**, **Rear Seat Removal and Installation (60 Percent Seat)**. 2. Remove the rear seat armrest. Refer to **Rear Seat Armrest Replacement**. 3. Remove the rear seat belt opening cover. Refer to **Rear Seat Belt Opening Cover Replacement** 4. Remove the rear seat head restraint guides. Refer to **Rear Seat Head Restraint Guide Replacement** 5. Remove the right rear seat back cushion latch release knob bezel. Refer to **Rear Seat Back Cushion Latch Release Knob Bezel Replacement (60 Percent Seat)**, **Rear Seat Back Cushion Latch Release Knob Bezel Replacement (40 Percent Seat)** 6. Remove the rear seat back cushion pivot support. Refer to **Rear Seat Back Cushion Pivot Support Replacement**	
1	Rear Seat Back Cushion Cover **Procedure** 1. Remove the J-channels from the seat back cover. 2. Remove seat back cushion cover from Velcro.

2	Rear Seat Back Cushion Pad

REAR SEAT BACK CUSHION HINGE REPLACEMENT

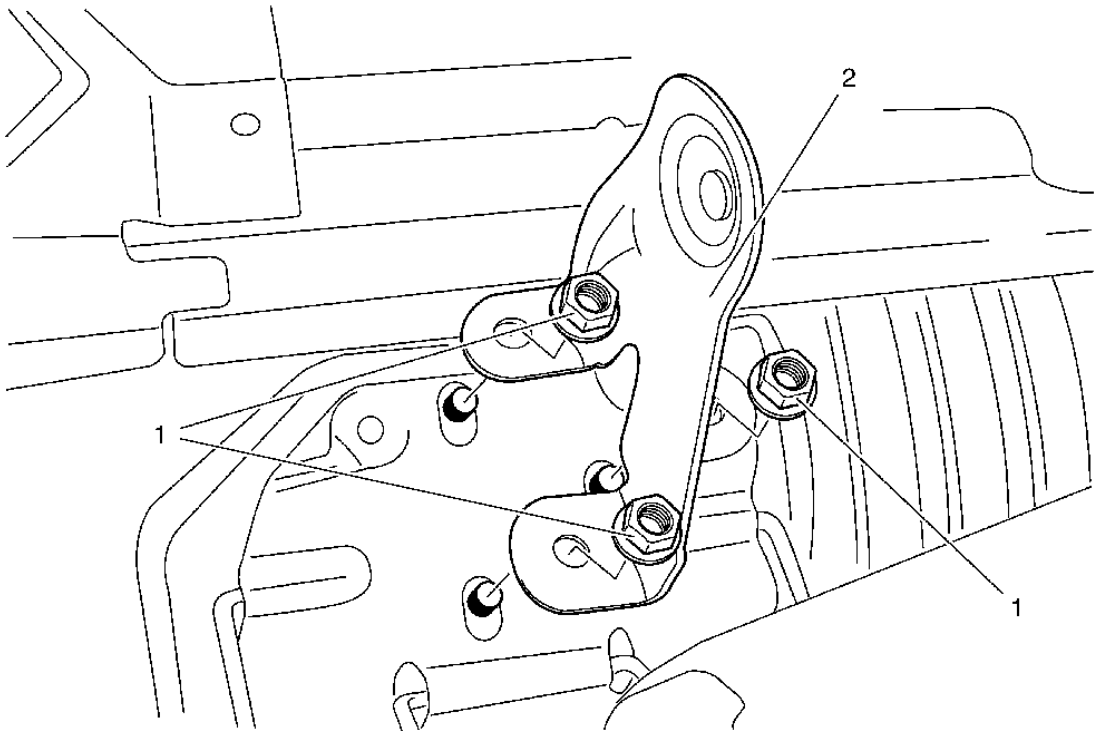

Fig. 61: Rear Seat Back Cushion Hinge & Fasteners
Courtesy of GENERAL MOTORS COMPANY

Rear Seat Back Cushion Hinge Replacement

Callout	Component Name
Preliminary Procedures Remove the rear seat back (60 percent seat). Refer to **Rear Seat Removal and Installation (40 Percent Seat)**, **Rear Seat Removal and Installation (60 Percent Seat)**.	
1	Rear Seat Back Cushion Hinge Fastener (Qty: 3) **CAUTION:** **Refer to Fastener Caution .** **Tighten** 45 N.m (33 lb ft)
2	Rear Seat Back Cushion Hinge **Procedure** Detach the rear seat back cushion hinge from the guide pin.

REAR SEAT BACK CUSHION LATCH RELEASE KNOB BEZEL REPLACEMENT (40 PERCENT

SEAT)

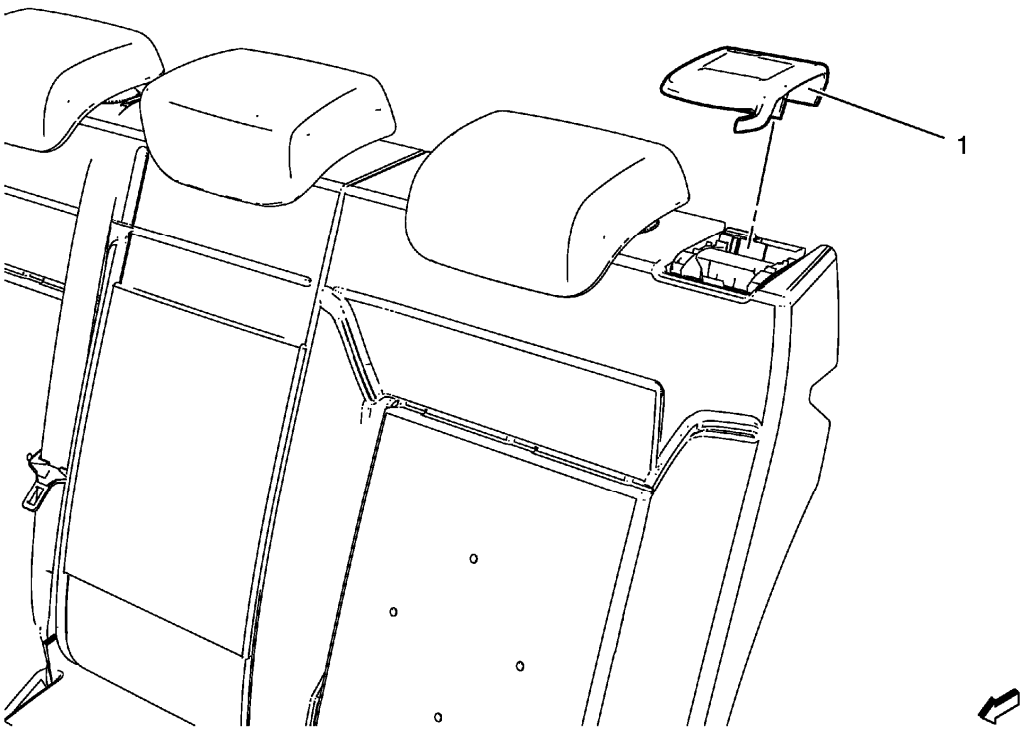

Fig. 62: Rear Seat Back Cushion Latch Release Knob Bezel (40 Percent Seat)
Courtesy of GENERAL MOTORS COMPANY

Rear Seat Back Cushion Latch Release Knob Bezel Replacement (40 Percent Seat)

Callout	Component Name
1	Rear Seat Back Cushion Latch Release Knob Bezel **Procedure** Release the rear seat back cushion latch release knob bezel using a commercial screwdriver.

REAR SEAT BACK CUSHION LATCH RELEASE KNOB BEZEL REPLACEMENT (60 PERCENT SEAT)

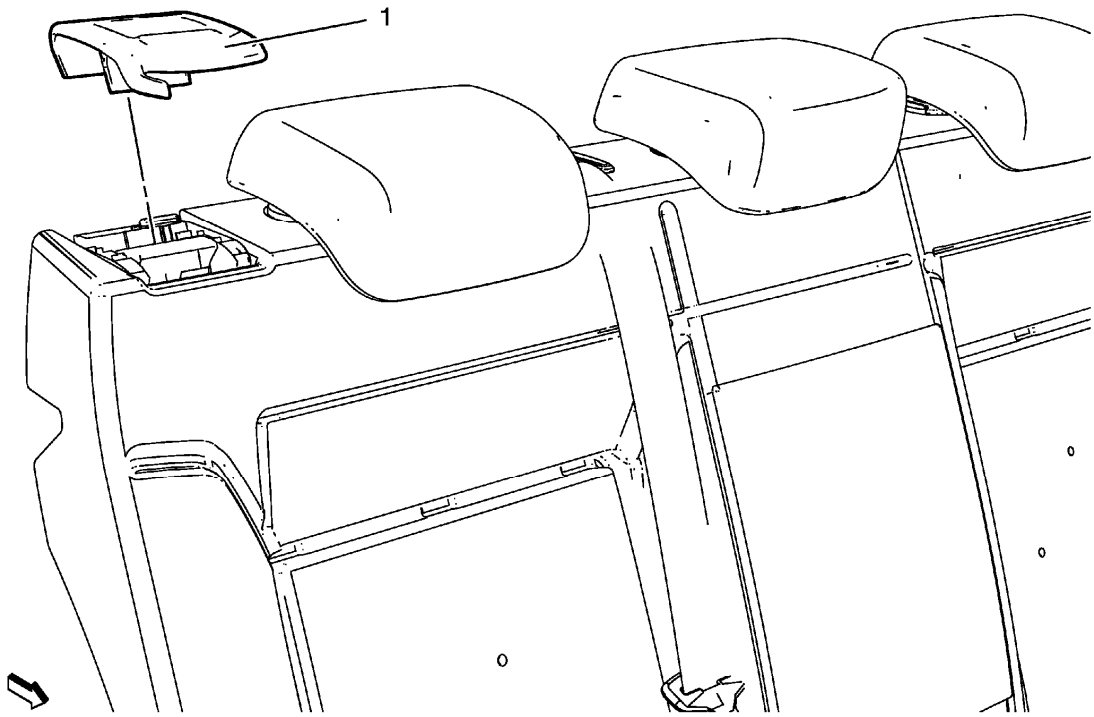

Fig. 63: Rear Seat Back Cushion Latch Release Knob Bezel (60 Percent Seat)
Courtesy of GENERAL MOTORS COMPANY

Rear Seat Back Cushion Latch Release Knob Bezel Replacement (60 Percent Seat)

Callout	Component Name
1	Rear Seat Back Cushion Latch Release Knob Bezel **Procedure** Release the rear seat back cushion latch release knob bezel using a commercial screwdriver.

THREAD REPAIR

General purpose thread repair kits are available commercially.

WARNING: Refer to Safety Glasses Warning .

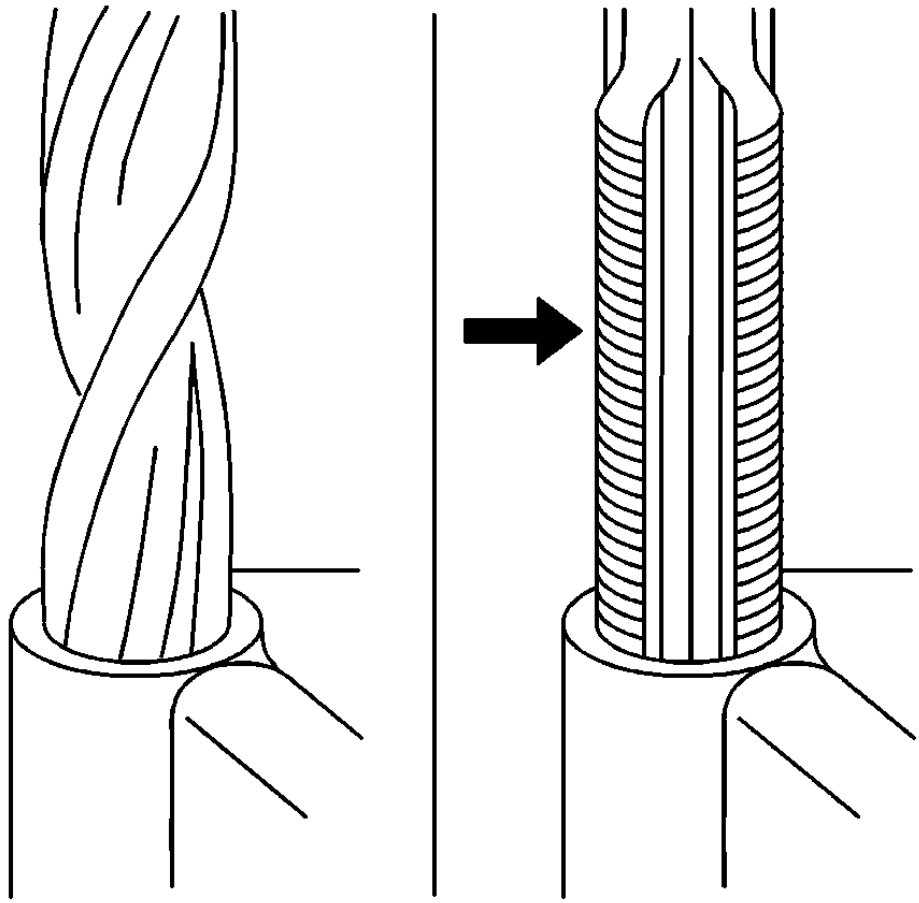

Fig. 64: Drilling & Tapping Damaged Threads
Courtesy of GENERAL MOTORS COMPANY

NOTE: **Refer to the thread repair kit manufacturer's instructions regarding the size of the drill and which tap to use.**

Always avoid any buildup of chips. Back out the tap every few turns and remove the chips.

1. Determine the size, the pitch, and the depth of the damaged thread.
2. Adjust the stop collars on the cutting tool as needed. Tap the stop collars to the required depth.
3. Drill out the damaged thread.
4. Remove the chips.
5. Apply clean engine oil to the top thread.
6. Use the tap in order to cut new thread.
7. Clean the thread.

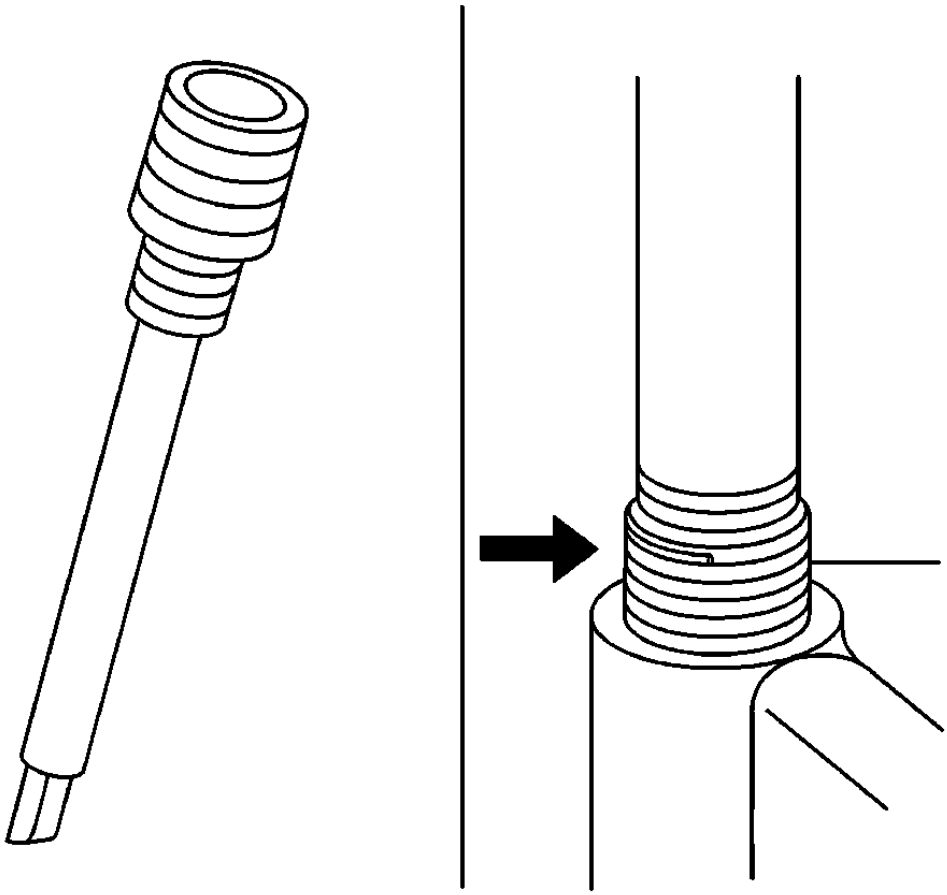

Fig. 65: View Of Thread Insert
Courtesy of GENERAL MOTORS COMPANY

NOTE: The thread insert should be flush to 1 turn below the surface.

8. Screw the thread insert onto the mandrel of the thread insert installer. Engage the tang of the thread insert onto the end of the mandrel.
9. Lubricate the thread insert with clean engine oil - except when installing in aluminum - and install the thread insert.
10. If the tang of the thread insert does not break off when backing out the thread insert installer, break off the tang using a drift punch.

2013 ACCESSORIES & EQUIPMENT

Squeaks and Rattles - Cruze

DIAGNOSTIC INFORMATION AND PROCEDURES

SQUEAKS AND RATTLES

NOTE: Squeaks and rattles are caused by improperly controlled relative motion between vehicle components. There are 4 ways to prevent squeaks and rattles.

- Attach the component that squeaks or rattles securely.
- Separate the components that squeak or rattle to prevent contact.
- Insulate the components that squeak or rattle.
- Insulate low uniform friction surfaces to eliminate stickslip motion.

SYMPTOMS - SQUEAKS AND RATTLES

Rattle Coming From the Side Rail

Checks	Action
Check the brake lines.	• Tap lightly on the brake lines and listen for a rattle. • Install plastic tie straps to secure the brake lines tightly together.

Rattle Under Vehicle at Higher RPM

Checks	Action
Check for heat shield contact with the underbody.	• Raise the vehicle and perform a visual inspection. • Bend the heat shield slightly to gain clearance from the underbody.

Thump From Rear of Vehicle on Bumps

Checks	Action
Check for a properly secured spare tire or tire repair kit in the rear compartment.	• Open the rear compartment and perform a visual inspection of the spare tire or the tire repair kit and the tools. • Tightly secure the spare tire or the tire repair kit and all tools. • Perform a road test to verify that the noise is eliminated.

Glass Knock Coming From the Rear of the Vehicle When Driving Over Bumps

Checks	Action
Check for an out-of-adjustment hatchback latch.	• Test drive the vehicle in order to verify this condition. • Loosen the latch nuts and adjust the latch downward.

Rattle Coming From Door

Checks	Action
Check for rattling electrical connectors inside the door trim panel.	• Tap on the trim panel and listen for a rattle. • Remove the trim panel and wrap foam padding around the connectors as required.

Squeak When Operating Doors

Checks	Action
Check for a lack of lubrication of the door hinge pins.	• Operate the doors and listen for squeaks. • Lubricate the door hinge pins with light oil and coat with lithium grease.

Squeak Coming From Console When Shifting Manual Transmission Condition Occurs In Cold Weather with a Cold Engine

Checks	Action
Check the manual transaxle control lever lower boot.	• Move the control lever between gears and listen for squeaks. • Remove the floor console and replace the lower shift boot or apply talcum powder to the lower shift boot.

Buzz From the Left Side of Instrument Panel

Checks	Action
Check for vibration of the fuse box cover against the instrument panel side trim.	• Tap on the cover with a finger and listen for a buzz. • Apply felt pads to the side trim where the cover makes contact.

Squeak Coming From Instrument Cluster Trim Plate

Checks	Action
Check for rubbing the cluster trim plate on the instrument panel.	• Test drive the vehicle in order to verify this condition. • Remove the instrument cluster trim plate and install felt tape to the edges.

SPECIAL TOOLS AND EQUIPMENT

SPECIAL TOOLS

Illustration	Tool Number/ Description

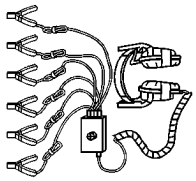	CH 39570 J 39570 Chassis Ear
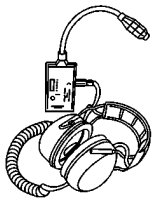	GE 41416 J 41416 Ultrasonic Leak Detector

2013 ACCESSORIES & EQUIPMENT

Sunroof - Cruze

SPECIFICATIONS

FASTENER TIGHTENING SPECIFICATIONS

Fastener Tightening Specifications

Application	Specification	
	Metric	English
Sunroof Module Bolt	9 N.m	80 lb in
Sunroof Module Bracket Screw	9 N.m	80 lb in
Sunroof Sunshade Bolt	9 N.m	80 lb in
Sunroof Window Motor Bolt	4 N.m	36 lb in
Sunroof Window Screw	4 N.m	36 lb in

SCHEMATIC WIRING DIAGRAMS

SUNROOF WIRING SCHEMATICS

CF5

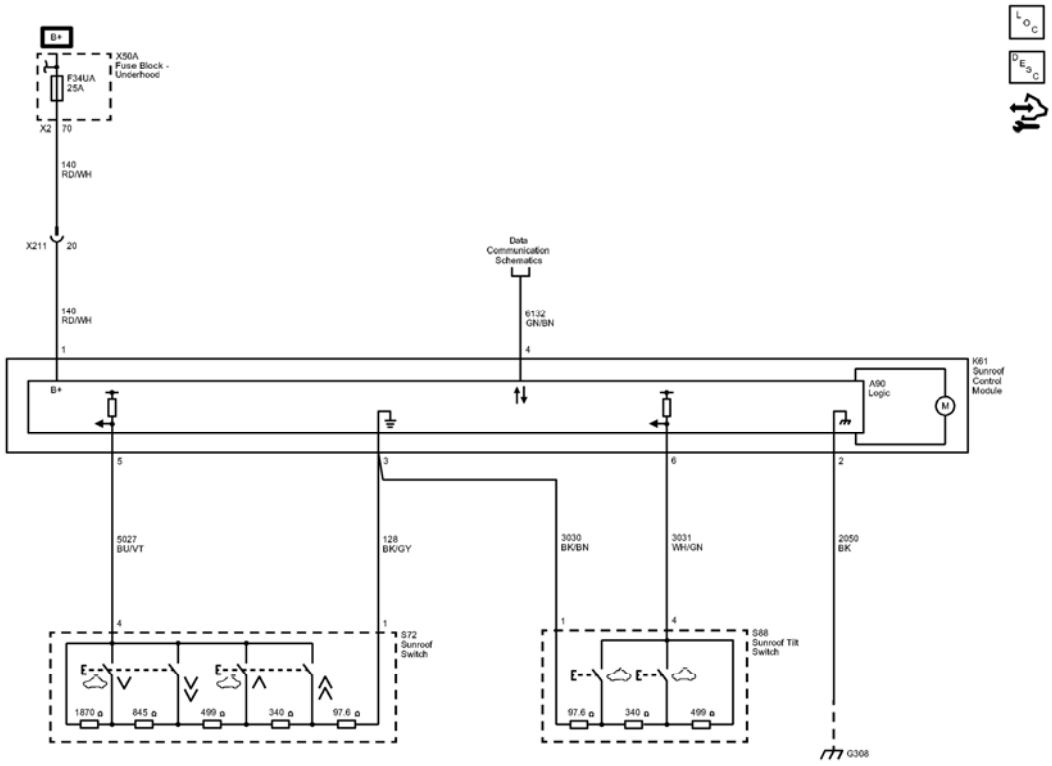

Fig. 1: Sunroof (CF5) Wiring Schematics
Courtesy of GENERAL MOTORS COMPANY

Callout	Component Name
128	Sunroof Switch Low Reference
140	Battery Positive Voltage
CAV_1	1
CAV_70	70
CONN_X2	X2
5027	Sunroof Switch Data (1)
5027_BU/VT	5027 BU/VT
CAV_4	4
CAV 5	5
3030	Sunroof Vent Switch Low Reference
3030_BK/BN	3030 BK/BN
CAV_1	1
128_BK/GY	128 BK/GY
CAV_1	1
CAV_3	3

3031	Sunroof Vent Switch Signal
3031_WH/GN	3031 WH/GN
CAV_4	4
CAV_6	6
2050	Ground
2050_BK	2050 BK
CAV_2	2
6132	Linear Interconnect Network Bus 1
6132_GN/BN	6132 GN/BN
CAV_4	4
140_RD/WH	140 RD/WH
140_RD/WH	140 RD/WH
CAV_20	20
F34UA	F34UA 25A
X211	X211
Data_Communication_Schematics_REF	Data Communication Schematics
S72	(CF5)
X50A	
K61	(CF5)
A90	Logic
S88	(CF5)

COMPONENT LOCATOR

SUNROOF COMPONENT VIEWS

Sunroof

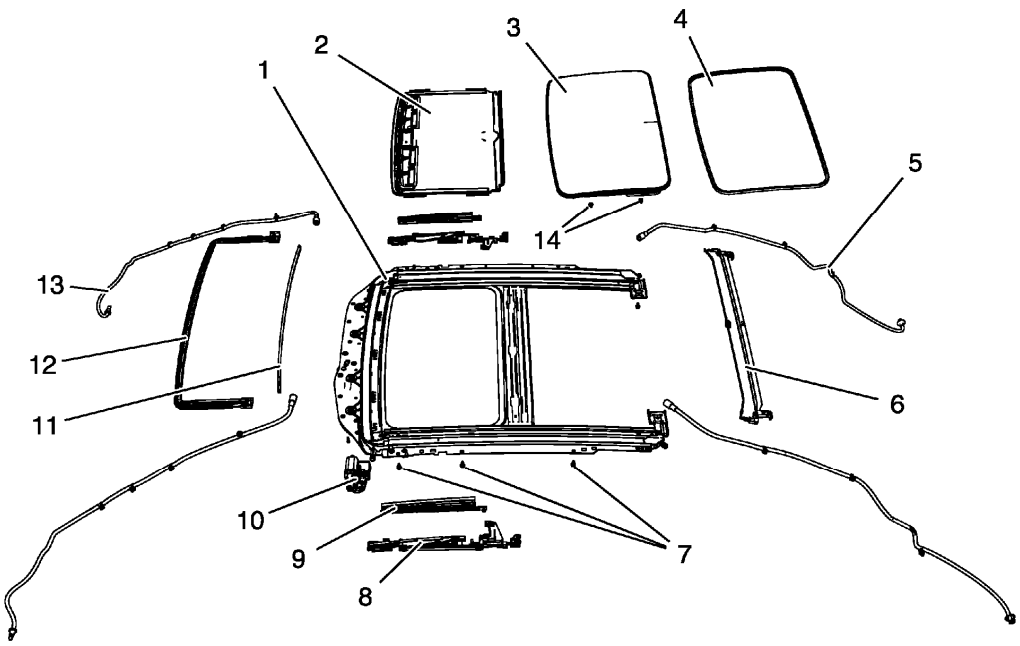

Fig. 2: Sunroof Components
Courtesy of GENERAL MOTORS COMPANY

Callout	Component Name
1	Sunroof Frame
2	Sunroof Sunshade
3	Sunroof Window
4	Sunroof Window Seal
5	Sunroof Housing Rear Drain Hose
6	Sunroof Housing Drain Gutter
7	Sunroof Frame Bolts
8	Sunroof Window Guide
9	Sunroof Air Deflector Cover
10	Sunroof Window Motor
11	Sunroof Window Seal
12	Sunroof Air Deflector
13	Sunroof Housing Front Drain Hose
14	Sunroof Window Bolts

DIAGNOSTIC INFORMATION AND PROCEDURES

DIAGNOSTIC CODE INDEX

DIAGNOSTIC CODE INDEX

DTC	Description
DTC B3664	DTC B3664 02 Sunroof Position Select Switch High Signal Circuit Short to Ground DTC B3664 05 Sunroof Position Select Switch High Signal Circuit High Voltage/Open DTC B3664 59 Sunroof Position Select Switch High Signal Circuit Protection Time-Out
DTC B3697	DTC B3697 00 Sunroof Actuator Malfunction DTC B3697 39 Sunroof Actuator Internal Malfunction DTC B3697 42 Sunroof Actuator Calibration Not Programmed DTC B3697 4B Sunroof Actuator Calibration Not Learned
DTC B369C	DTC B369C 02 Sunroof Tilt Position Select Switch Circuit Short to Ground DTC B369C 05 Sunroof Tilt Position Select Switch Circuit High Voltage/Open DTC B369C 59 Sunroof Tilt Position Select Switch Circuit Protection Time-Out

DTC B3664

Diagnostic Instructions

- Perform the **Diagnostic System Check - Vehicle** prior to using this diagnostic procedure.
- Review **Strategy Based Diagnosis** for an overview of the diagnostic approach.
- **Diagnostic Procedure Instructions** provides an overview of each diagnostic category.

DTC Descriptors

DTC B3664 02

Sunroof Position Select Switch High Signal Circuit Short to Ground

DTC B3664 05

Sunroof Position Select Switch High Signal Circuit High Voltage/Open

DTC B3664 59

Sunroof Position Select Switch High Signal Circuit Protection Time-Out

Diagnostic Fault Information

Circuit	Short to Ground	Open/High Resistance	Short to Voltage	Signal Performance
Signal	B3664 02	B3664 05	B3664 05	-
Low Reference	-	1	1	-
1. Power Sunroof Slide Malfunction				

Circuit/System Description

The sunroof switch is connected directly to the sunroof control module and provides detent positions for open, express open, off, close, and express close. The sunroof switch completes the circuit between two signals proved by the sunroof control module, a reference ground input and a pull-up voltage provided by an analog to digital switch input. The sunroof switch places a different resistor ladder network in the circuit depending on the function selected.

Conditions for Running the DTC

The ignition is ON.

Conditions for Setting the DTC

B3664 02

The sunroof control module has detected and reported via serial data that the sunroof switch signal is shorted to ground.

B3664 05

The sunroof control module has detected and reported via serial data that the sunroof switch signal is open or shorted to voltage.

B3664 59

The sunroof control module has detected and reported via serial data that the sunroof switch has been in the same active position for 20 seconds after the glass has stopped moving in the requested direction due to reaching the end of the allowable motion.

Action Taken When the DTC Sets

DTC B3664 is stored in the body control module (BCM) memory.

Conditions for Clearing the DTC

The BCM no longer detects a malfunction in the sunroof switch signal circuit.

Reference Information

Schematic Reference

Sunroof Schematics

Connector End View Reference

COMPONENT CONNECTOR END VIEWS - INDEX

Description and Operation

Sunroof Description and Operation

Electrical Information Reference

- **Circuit Testing**
- **Connector Repairs**
- **Testing for Intermittent Conditions and Poor Connections**
- **Wiring Repairs**

Scan Tool Reference

Control Module References for scan tool information

Circuit/System Testing

1. Ignition OFF and all vehicle systems OFF, disconnect the harness connector at the S72 Sunroof Switch. It may take up to 2 minutes for all vehicle systems to power down.
2. Test for less than 10 ohms between the low reference circuit terminal 1 and ground.
    - **If 10 ohms or greater**
    1. Ignition OFF, disconnect the harness connector at the K61 Sunroof Control Module.
    2. Test for less than 2 ohms in the low reference circuit end to end.
        - If 2 ohms or greater, repair the open/high resistance in the circuit.
        - If less than 2 ohms, test or replace the K61 Sunroof Control Module.
    - **If less than 10 ohms**
3. Ignition ON.
4. Verify the scan tool Slide Switch parameter is Short to Battery.
    - **If not Short to Battery**
    1. Ignition Off, disconnect the harness connector at the K61 Sunroof Control Module.
    2. Test for infinite resistance between the signal circuit terminal 4 and ground.
    - If less than infinite resistance, repair the short to ground on the circuit.
    - If infinite resistance, replace the K61 Sunroof Control Module.
    - **If Short to Battery**
5. Install a 5 A fused jumper wire between the signal circuit terminal 4 and the low reference circuit terminal 1.

6. Verify the scan tool Slide Switch parameter is Short to Ground.
    - **If not Short to Ground**
    1. Ignition OFF, disconnect the harness connector at the K61 Sunroof Control Module.
    2. Test for less than 1 V between the signal circuit terminal 4 and ground.
        - If 1 V or greater, repair the short to voltage on the circuit.
        - If less than 1 V
    3. Test for less than 2 ohms in the signal circuit end to end.
        - If 2 ohms or greater, repair the open/high resistance in the circuit.
        - If less than 2 ohms, replace the K61 Sunroof Control Module.
    - **If Short to Ground**
7. All OK.

Component Testing

Sunroof Switch

Static Test

1. Ignition OFF, disconnect the harness connector at the S72 Sunroof Switch.
2. Test for 3.3-4.0k ohms between the control terminal 4 and the low reference terminal 1.
    - **If not between 3.3-4.0k ohms**

      Replace the S72 Sunroof Switch.

    - **If between 3.3-4.0k ohms**
3. Test for 390-480 ohms between the control terminal 4 and the low reference terminal 1 while pressing the open switch.
    - **If not between 390-480 ohms**

      Replace the S72 Sunroof Switch.

    - **If between 390-480 ohms**
4. Test for 88-120 ohms between the control terminal 4 and the low reference terminal 1 while pressing the express open switch.
    - **If not between 88-120 ohms**

      Replace the S72 Sunroof Switch.

    - **If between 88-120 ohms**
5. Test for 1.6-2.0k ohms between the control terminal 4 and the low reference terminal 1 while pressing the close switch.
    - **If not between 1.6-2.0k ohms**

Replace the S72 Sunroof Switch.

- **If between 1.6-2.0k ohms**

6. Test for 830-1030 ohms between the control terminal 4 and the low reference terminal 1 while pressing the express close switch.
   - **If not between 830-1030 ohms**

     Replace the S72 Sunroof Switch.

   - **If between 830-1030 ohms**
7. All OK

Repair Instructions

Perform the **Diagnostic Repair Verification** after completing the repair.

- **Sunroof Switch Replacement**
- **Sunroof Module Assembly Replacement**
- **Control Module References** for sunroof control module replacement, programming and setup

DTC B3697

Diagnostic Instructions

- Perform the **Diagnostic System Check - Vehicle** prior to using this diagnostic procedure.
- Review **Strategy Based Diagnosis** for an overview of the diagnostic approach.
- **Diagnostic Procedure Instructions** provides an overview of each diagnostic category.

DTC Descriptors

DTC B3697 00

Sunroof Actuator Malfunction

DTC B3697 39

Sunroof Actuator Internal Malfunction

DTC B3697 42

Sunroof Actuator Calibration Not Programmed

DTC B3697 4B

Sunroof Actuator Calibration Not Learned

Circuit/System Description

The sunroof glass is controlled by its own integrated motor/controller containing the necessary electronics, motor, hall effect position sensors, as well as the interface to the driver control switches. The motor/controller is capable of controlling motion based on control switch activation and serial data message commands from the body control module (BCM).

Conditions for Running the DTC

The ignition is ON.

Conditions for Setting the DTC

B3697 00

The sunroof module has detected and reported via serial data that the sunroof actuator has a malfunction.

B3697 39

The sunroof module has detected and reported via serial data that the sunroof actuator has a internal malfunction.

B3697 42

The sunroof module has detected and reported via serial data that the sunroof actuator is not programmed.

B3697 4B

The sunroof module has detected and reported via serial data that the sunroof actuator calibration is not learned.

Action Taken When the DTC Sets

DTC B3697 is stored in the BCM memory.

Conditions for Clearing the DTC

The BCM no longer detects a malfunction in the sunroof actuator.

Reference Information

Schematic Reference

Sunroof Schematics

Connector End View Reference

COMPONENT CONNECTOR END VIEWS - INDEX

Description and Operation

Sunroof Description and Operation

Electrical Information Reference

- **Circuit Testing**
- **Connector Repairs**
- **Testing for Intermittent Conditions and Poor Connections**
- **Wiring Repairs**

Scan Tool Reference

Control Module References for scan tool information

Circuit/System Verification

1. Ignition ON.
2. Verify DTC B3697 42 or DTC B3697 4B is not set.
    - **If DTC B3697 42 or DTC B3697 4B is set**
    1. Calibrate the K61 Sunroof Control Module. Refer to **Control Module References** .
    2. Verify DTC B3697 42 or DTC B3697 4B does not set while operating the sunroof.
        - If DTC B3697 42 or DTC B3697 4B sets, replace the K61 Sunroof Control Module.
        - If DTC B3697 42 or DTC B3697 4B does not set
    3. All OK.
    - **If DTC B3697 42 or DTC B3697 4B is not set**
3. Verify DTC B3697 00 or DTC B3697 39 is not set
    - If DTC B3697 00 or DTC B3697 39 is set, replace the K61 Sunroof Control Module.
    - If DTC B3697 00 or DTC B3697 39 is not set
4. All OK.

Repair Instructions

Perform the **Diagnostic Repair Verification** after completing the repair.

Control Module References for sunroof control module replacement, programming and setup

DTC B369C

Diagnostic Instructions

- Perform the **Diagnostic System Check - Vehicle** prior to using this diagnostic procedure.
- Review **Strategy Based Diagnosis** for an overview of the diagnostic approach.

- **Diagnostic Procedure Instructions** provides an overview of each diagnostic category.

DTC Descriptors

DTC B369C 02

Sunroof Tilt Position Select Switch Circuit Short to Ground

DTC B369C 05

Sunroof Tilt Position Select Switch Circuit High Voltage/Open

DTC B369C 59

Sunroof Tilt Position Select Switch Circuit Protection Time-Out

Diagnostic Fault Information

Circuit	Short to Ground	Open/High Resistance	Short to Voltage	Signal Performance
Signal	B369C 02	B369C 05	B369C 05	-
Low Reference	-	1	1	-
1. Power Sunroof Tilt Malfunction				

Circuit/System Description

The sunroof tilt switch is connected directly to the sunroof control module and provides detent positions for open, off and close. The sunroof tilt switch completes the circuit between two signals provided by the control module, a reference ground input and a pull-up voltage provided by the analog to digital switch input. The sunroof tilt switch places a different resistor ladder network in the circuit depending on the function selected. The controllers analog to digital switch input reads the resulting voltage range and determines the function.

Conditions for Running the DTC

The ignition is ON.

Conditions for Setting the DTC

B369C 02

The sunroof control module has detected and reported via serial data that the sunroof tilt switch circuit is shorted to ground.

B369C 05

The sunroof control module has detected and reported via serial data that the sunroof tilt select switch circuit is open or shorted to voltage.

B369C 59

The sunroof control module has detected and reported via serial data that the sunroof tilt switch has been the same active position for 20 seconds after the glass has stopped moving in the requested direction due to reaching the end of the allowable motion.

Action Taken When the DTC Sets

DTC B369C is stored in the body control module (BCM) memory.

Conditions for Clearing the DTC

The BCM no longer detects a malfunction in the sunroof tilt switch circuit.

Reference Information

Schematic Reference

Sunroof Schematics

Connector End View Reference

COMPONENT CONNECTOR END VIEWS - INDEX

Description and Operation

Sunroof Description and Operation

Electrical Information Reference

- **Circuit Testing**
- **Connector Repairs**
- **Testing for Intermittent Conditions and Poor Connections**
- **Wiring Repairs**

Scan Tool Reference

Control Module References for scan tool information

Circuit/System Testing

1. Ignition OFF and all vehicle systems OFF, disconnect the harness connector at the S88 Sunroof Tilt Switch. It may take up to 2 min for all vehicle systems to power down.
2. Test for less than 10 ohms between the low reference circuit terminal 1 and ground.
    - **If 10 ohms or greater**
    1. Ignition OFF, disconnect the harness connector at the K61 Sunroof Control Module.

2. Test for less than 2 ohms in the low reference circuit end to end.
    - If 2 ohms or greater, repair the open/high resistance in the circuit.
    - If less than 2 ohms, test or replace the K61 Sunroof Control Module.
- **If less than 10 ohms**

3. Ignition ON.
4. Verify the scan tool Sunroof Tilt Switch parameter is Short to Battery.
    - **If not Short to Battery**
    1. Ignition OFF, disconnect the harness connector at the K61 Sunroof Control Module.
    2. Test for infinite resistance between the signal circuit terminal 4 and ground.
    - If less than infinite resistance, repair the short to ground on the circuit.
    - If infinite resistance, replace the K61 Sunroof Control Module.
    - **If Short to Battery**
5. Install a 5 A fused jumper wire between the signal circuit terminal 4 and the low reference circuit terminal 1.
6. Verify the scan tool Sunroof Tilt Switch parameter is Short to Ground.
    - **If not Short to Ground**
    1. Ignition OFF, disconnect the harness connector at the K61 Sunroof Control Module.
    2. Test for less than 1 V between the signal circuit terminal 4 and ground.
        - If 1 V or greater, repair the short to voltage on the circuit.
        - If less than 1 V
    3. Test for less than 2 ohms in the signal circuit end to end.
        - If 2 ohms or greater, repair the open/high resistance in the circuit.
        - If less than 2 ohms, replace the K61 Sunroof Control Module.
    - **If Short to Ground**
7. All OK.

Component Testing

Sunroof Ventilation Switch

Static Test

1. Ignition OFF, disconnect the harness connector at the S88 Sunroof Tilt Switch.
2. Test for 830-1030 ohms between the control terminal 4 and the low reference terminal 1.
    - **If not between 830-1030 ohms**

      Replace the S88 Sunroof Tilt Switch.

    - **If between 830-1030 ohms**
3. Test for 88-120 ohms between the control terminal 4 and the low reference terminal 1 while pressing the

open switch.

- **If not between 88-120 ohms**

  Replace the S88 Sunroof Tilt Switch.

- **If between 88-120 ohms**

4. Test for 390-480 ohms between the control terminal 4 and the ground terminal 1 while pressing the close switch.
   - **If not between 390-480 ohms**

     Replace the S88 Sunroof Tilt Switch.

   - **If between 390-480 ohms**
5. All OK.

Repair Instructions

Perform the **Diagnostic Repair Verification** after completing the repair.

- **Sunroof Switch Replacement**
- **Sunroof Module Assembly Replacement**
- **Control Module References** for sunroof control module replacement, programming and setup

SYMPTOMS - ROOF

NOTE: Complete the following procedures before using the symptom tables.

1. Perform the **Diagnostic System Check - Vehicle** in order to verify that all of the following conditions are true:
   - There are no DTCs set.
   - The control modules can communicate via the serial data link.
2. Review the system description and operation in order to learn the system functions. Refer to **Sunroof Description and Operation**.

Visual/Physical Inspection

- Inspect for aftermarket devices which may affect the operation of the power sunroof system. Refer to **Checking Aftermarket Accessories** .
- Inspect the accessible system components for obvious damage or for conditions which can cause the symptom.

Intermittent

Faulty electrical connections or wiring may be the cause of intermittent conditions. Refer to **Testing for Intermittent Conditions and Poor Connections** .

Symptom List

Refer to **Power Sunroof Malfunction**.

POWER SUNROOF MALFUNCTION

Diagnostic Instructions

- Perform the **Diagnostic System Check - Vehicle** prior to using this diagnostic procedure.
- Review **Strategy Based Diagnosis** for an overview of the diagnostic approach.
- **Diagnostic Procedure Instructions** provides an overview of each diagnostic category.

Diagnostic Fault Information

Circuit	Short to Ground	Open/High Resistance	Short to Voltage	Signal Performance
B+ Sunroof Control Module	1	1	-	-
Sunroof Control Module Serial Data Bus	1	1	1	-
Sunroof Switch Signal	1	1	1	-
Sunroof Vent Switch Signal	1	1	1	-
Sunroof Vent Switch Low Reference	1	1	1	-
Sunroof Switch Low Reference	1	1	1	-
Sunroof Control Module Ground	-	1	-	-
1. Power Sunroof Malfunction				

Circuit/System Description

The sunroof electrical system uses a master/slave configuration utilizing a serial data based system for communication. The body control module (BCM) is designated as the master, while the sunroof control module is configured as the slave.

As the system master, the BCM uses the serial data communication bus to enable or disable sunroof operation, communicate vehicle information to each controller, and request sunroof movement. The sunroof controller provide system status and diagnostic information to the BCM for diagnostic reporting and operational purposes. The control switches places a different resistor ladder network in the circuit depending on the function selected. The controllers analog to digital switch input reads the resulting voltage range and determines the function

Reference Information

Schematic Reference

Sunroof Schematics

Connector End View Reference

COMPONENT CONNECTOR END VIEWS - INDEX

Description and Operation

Sunroof Description and Operation

Electrical Information Reference

- **Circuit Testing**
- **Connector Repairs**
- **Testing for Intermittent Conditions and Poor Connections**
- **Wiring Repairs**

Scan Tool Reference

Control Module References for scan tool information

Circuit/System Verification

1. Ignition ON.
2. Verify the sunroof opens and closes when pressing the open and close sunroof switch.
    - **If the sunroof does not open or close**

      Refer to Circuit/System Testing below.

    - **If the sunroof opens and closes**
3. Verify the sunroof opens and closes to the vent position when pressing the open and close sunroof vent switch.
    - **If the sunroof does not open or close to the vent position**

      Refer to Circuit/System Testing below.

    - **If the sunroof opens and closes to the vent position**
4. All OK.

Circuit/System Testing

NOTE: Because of the accessibility of the switches, perform the switch component testing before beginning the circuit/system testing.

1. Ignition OFF and all vehicle systems OFF, disconnect the harness connector at the K61 Sunroof Control Module. It may take up to 2 minutes for all vehicle systems to power down.
2. Test for less than 10 ohms between the ground circuit terminal 2 and ground.
    - **If 10 ohms or greater**

1. Ignition OFF.
2. Test for less than 2 ohms in the ground circuit end to end.
    - If 2 ohms or greater, repair the open/high resistance in the circuit.
    - If less than 2 ohms, repair the open/high resistance in the ground connection.

- **If less than 10 ohms**

3. Verify a test lamp illuminates between the B+ circuit terminal 1 and ground.
    - **If test lamp does not illuminate and the circuit fuse is good**

    1. Ignition OFF.
    2. Test for less than 2 ohms in the B+ circuit end to end.
        - If 2 ohms or greater, repair the open/high resistance in the circuit.
        - If less than 2 ohms, verify the fuse is not open and there is voltage at the fuse.

    - **If the test lamp does not illuminate and the circuit fuse is open**

    1. Ignition OFF.
    2. Test for infinite resistance between the B+ circuit and ground.
        - If less than infinite resistance, repair the short to ground on the circuit.
        - If infinite resistance, replace the K61 Sunroof Control Module.

    - **If the test lamp illuminates**

4. Ignition ON.
5. Test for less than 1 V between the signal circuit terminals listed below and ground:
    - Terminal 3 - K61 Sunroof Control Module
    - Terminal 5 - K61 Sunroof Control Module
    - Terminal 6 - K61 Sunroof Control Module
    - **If 1 V or greater**

      Repair the short to voltage on the signal circuit.

    - **If less than 1 V**

6. Ignition OFF.
7. Test for infinite resistance between the signal circuit terminals listed below and ground:
    - Terminal 3 - K61 Sunroof Control Module
    - Terminal 5 - K61 Sunroof Control Module
    - Terminal 6 - K61 Sunroof Control Module
    - **If less than infinite resistance**

      Repair the short to ground on the signal circuit

    - **If infinite resistance**

8. Disconnect the harness connector at the S72 Sunroof Switch and the S88 Sunroof Tilt Switch.
9. Test for less than 5 ohms between the circuit terminals listed below:

- S72 Sunroof Switch terminal 1 and K61 Sunroof Control Module terminal 3
- S72 Sunroof Switch terminal 4 and K61 Sunroof Control Module terminal 5
- S88 Sunroof Tilt Switch terminal 1 and K61 Sunroof Control Module terminal 3
- S88 Sunroof Tilt Switch terminal 4 and K61 Sunroof Control Module terminal 6

- **If greater than 5 ohms**

  Repair the open/high resistance in the circuit.

- **If less than 5 ohms**

10. Test or replace the K61 Sunroof Control Module.

Component Testing

Sunroof Switch

Static Test

1. Ignition OFF, disconnect the harness connector at the S72 Sunroof Switch.
2. Test for 3.3-4.0k ohms between the control terminal 4 and the low reference terminal 1.
   - **If not between 3.3-4.0k ohms**

     Replace the S72 Sunroof Switch.

   - **If between 3.3-4.0k ohms**
3. Test for 390-480 ohms between the control terminal 4 and the low reference terminal 1 while pressing the open switch while pressing the open switch.
   - **If not between 390-480 ohms**

     Replace the S72 Sunroof Switch.

   - **If between 390-480 ohms**
4. Test for 88-107 ohms between the control terminal 4 and the low reference terminal 1 while pressing the express open switch.
   - **If not between 88-107 ohms**

     Replace the S72 Sunroof Switch.

   - **If between 88-107 ohms**
5. Test for 1.6-2.0k ohms between the control terminal 4 and the low reference terminal 1 while pressing the close switch.
   - **If not between 1.6-2.0k ohms**

     Replace the S72 Sunroof Switch.

- **If between 1.6-2.0k ohms**

6. Test for 840-1030 ohms between the control terminal 4 and the low reference terminal 1 while pressing the express close switch.
   - **If not between 840-1030 ohms**

     Replace the S72 Sunroof Switch.

   - **If between 840-1030 ohms**
7. All OK

Sunroof Ventilation Switch

Static Test

1. Ignition OFF, disconnect the harness connector at the S88 Sunroof Tilt Switch.
2. Test for 840-1030 ohms between the control terminal 4 and the low reference terminal 1.
   - **If not between 840-1030 ohms**

     Replace the S88 Sunroof Tilt Switch.

   - **If between 840-1030 ohms**
3. Test for 88-107 ohms between the control terminal 4 and the low reference terminal 1 while pressing the open switch.
   - **If not between 88-107 ohms**

     Replace the S88 Sunroof Tilt Switch.

   - **If between 88-107 ohms**
4. Test for 390-480 ohms between the control terminal 4 and the ground terminal 1 while pressing the close switch.
   - **If not between 390-480 ohms**

     Replace the S88 Sunroof Tilt Switch.

   - **If between 390-480 ohms**
5. All OK

Repair Instructions

Perform the **Diagnostic Repair Verification** after completing the repair.

- **Sunroof Switch Replacement**
- **Sunroof Window Motor Replacement**
- **Control Module References** for sunroof control module replacement, programming and setup

REPAIR INSTRUCTIONS

SUNROOF AIR DEFLECTOR REPLACEMENT

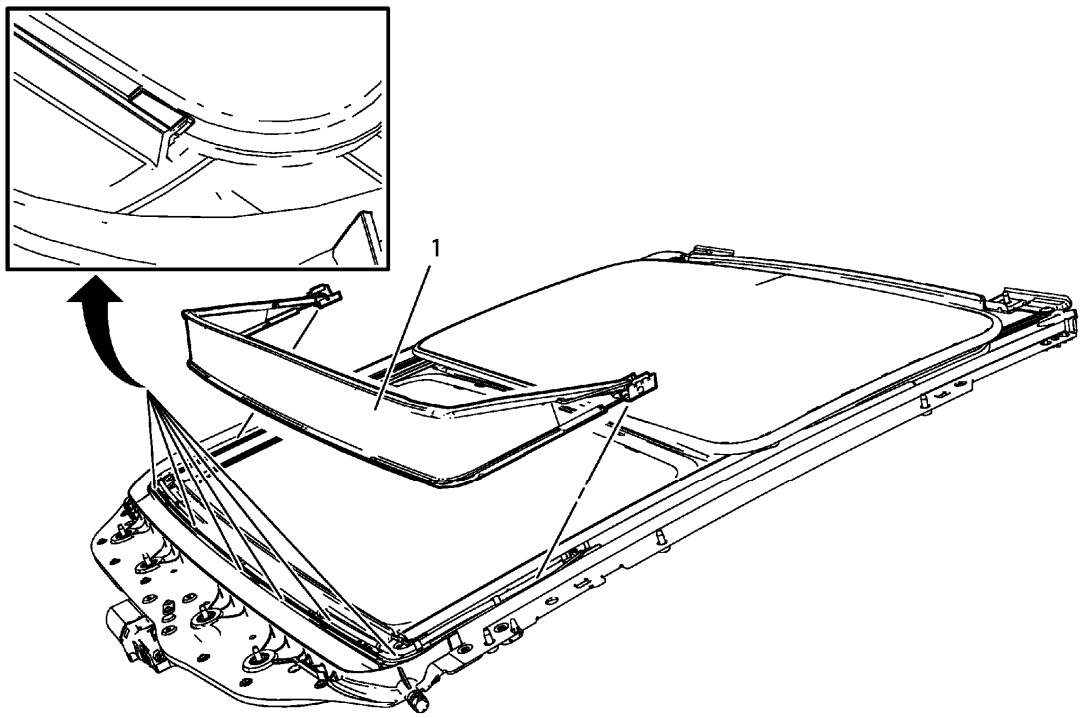

Fig. 3: Sunroof Air Deflector
Courtesy of GENERAL MOTORS COMPANY

Sunroof Air Deflector Replacement

Callout	Component Name
1	Sunroof Air Deflector **TIP:** Cycle the sunshade window to the full rearward position.

SUNROOF AIR DEFLECTOR COVER REPLACEMENT

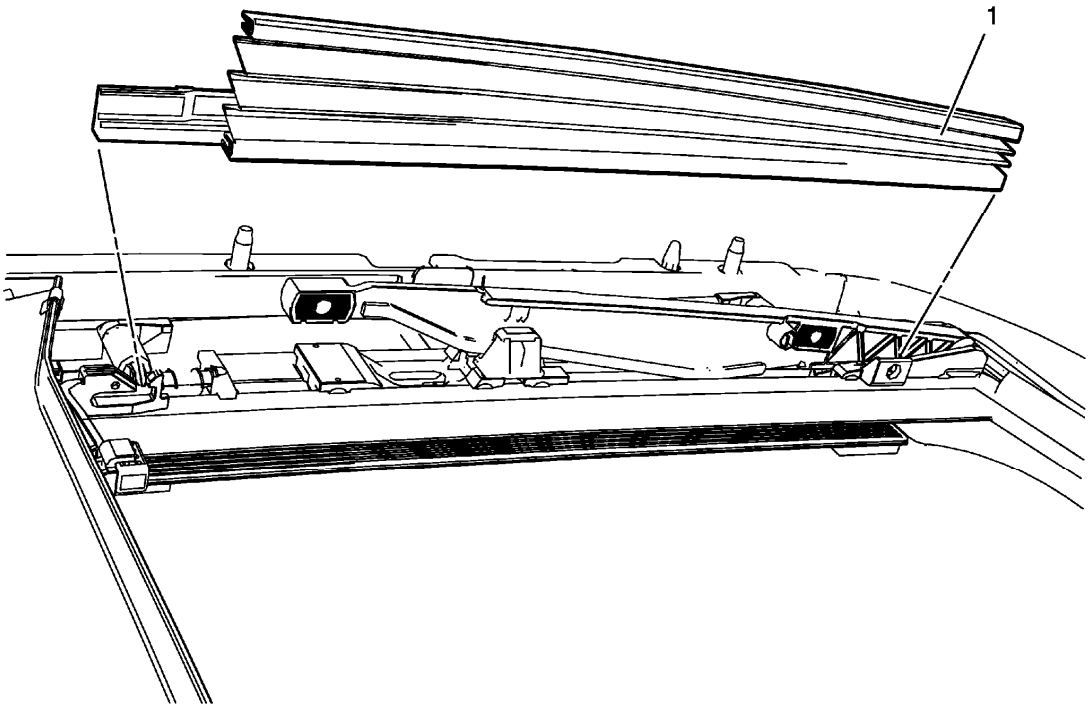

Fig. 4: Sunroof Air Deflector Cover
Courtesy of GENERAL MOTORS COMPANY

Sunroof Air Deflector Cover Replacement

Callout	Component Name
1	Sunroof Air Deflector Cover **Procedure** 1. Cycle the sunshade window to the vent position. 2. Unclip the sunroof air deflector cover out of the guide.

SUNROOF FRAME REPLACEMENT

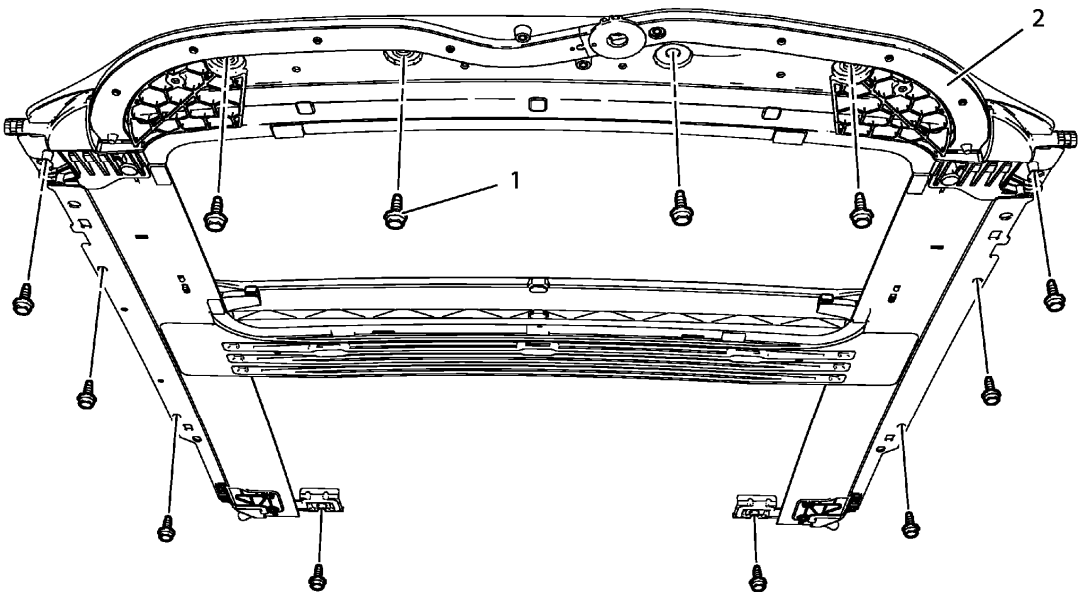

Fig. 5: Sunroof Frame
Courtesy of GENERAL MOTORS COMPANY

Sunroof Frame Replacement

Callout	Component Name
Preliminary Procedures 1. Remove the headlining trim panel. Refer to **Headlining Trim Panel Replacement (without Sunroof)** , **Headlining Trim Panel Replacement (with Sunroof)** . 2. Remove the sunroof window. Refer to **Sunroof Window Replacement**. 3. Remove the sunroof air deflector cover. Refer to **Sunroof Air Deflector Cover Replacement**. 4. Remove the sunroof sunshade. Refer to **Sunroof Sunshade Replacement**. 5. Remove the sunroof window motor. Refer to **Sunroof Window Motor Replacement**. 6. Remove the sunroof air deflector. Refer to **Sunroof Air Deflector Replacement**. 7. Remove the Sunroof Housing Drain Gutter. Refer to **Sunroof Housing Drain Gutter Replacement**. 8. Disconnect the Front and Rear Drain Hose.	
1	Sunroof Module Bolt (Qty: 12) **CAUTION:** **Refer to Fastener Caution .**

	Tighten 9 N.m (80 lb in)
2	Sunroof Frame **Procedure** With the aid of an assistant, lower the sunroof frame and remove the sunroof frame out through the passenger side door.

SUNROOF HOUSING DRAIN GUTTER REPLACEMENT

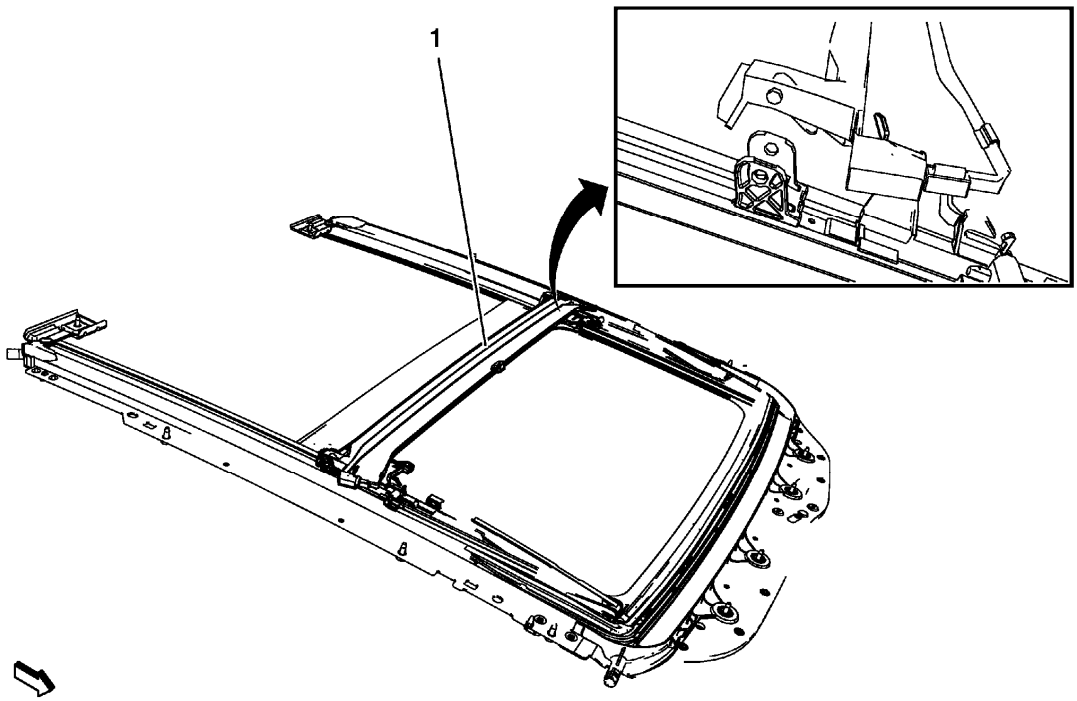

Fig. 6: Sunroof Housing Drain Gutter
Courtesy of GENERAL MOTORS COMPANY

Sunroof Housing Drain Gutter Replacement

Callout	Component Name
Preliminary Procedures 1. Remove the sunroof module assembly. Refer to **Sunroof Module Assembly Replacement**. 2. Cycle the sunroof window to the vent position.	
1	Sunroof Housing Drain Gutter **Procedure** Clip the sunroof housing drain gutter out from guide.

SUNROOF HOUSING FRONT DRAIN HOSE REPLACEMENT

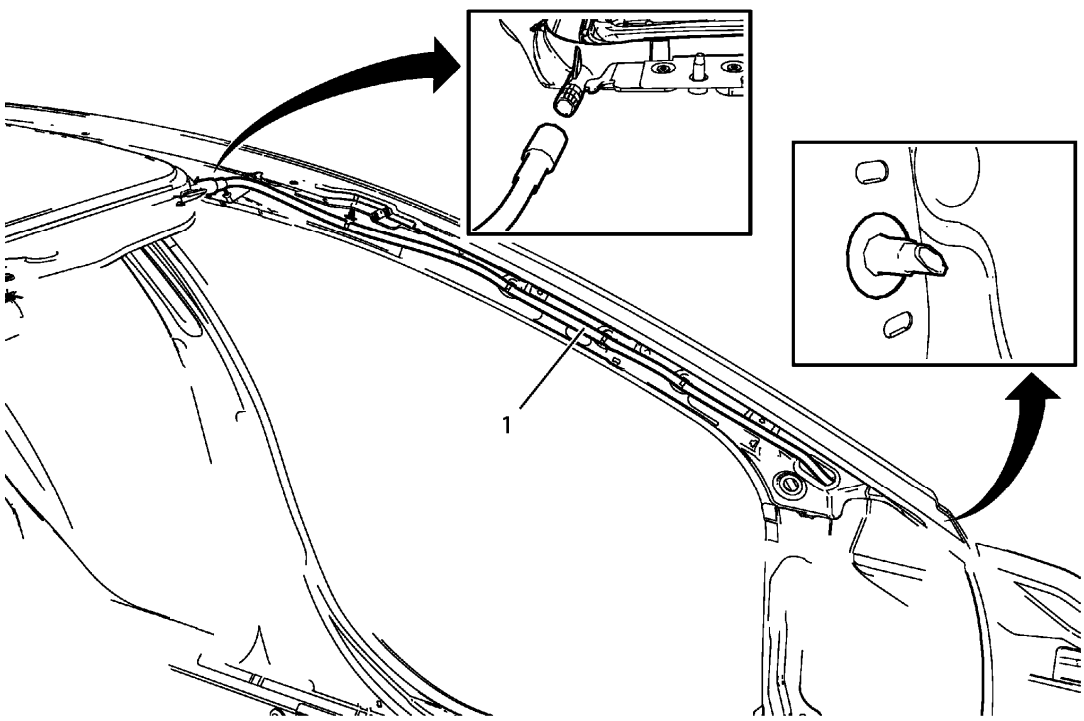

Fig. 7: Sunroof Housing Front Drain Hose
Courtesy of GENERAL MOTORS COMPANY

Sunroof Housing Front Drain Hose Replacement

Callout	Component Name
Preliminary Procedures 1. It is only necessary to lower the headliner. Only perform the steps in the headliner replacement procedure that will lower the headliner enough to gain access to the part. Refer to **Headlining Trim Panel Replacement (without Sunroof)** , **Headlining Trim Panel Replacement (with Sunroof)** . 2. Remove the front wheelhouse liner. Refer to **Front Wheelhouse Liner Replacement** .	
1	Sunroof Housing Front Drain Hose **Procedure** Disengage the sunroof drain hose from the attachment points on the windshield pillar.

SUNROOF HOUSING REAR DRAIN HOSE REPLACEMENT

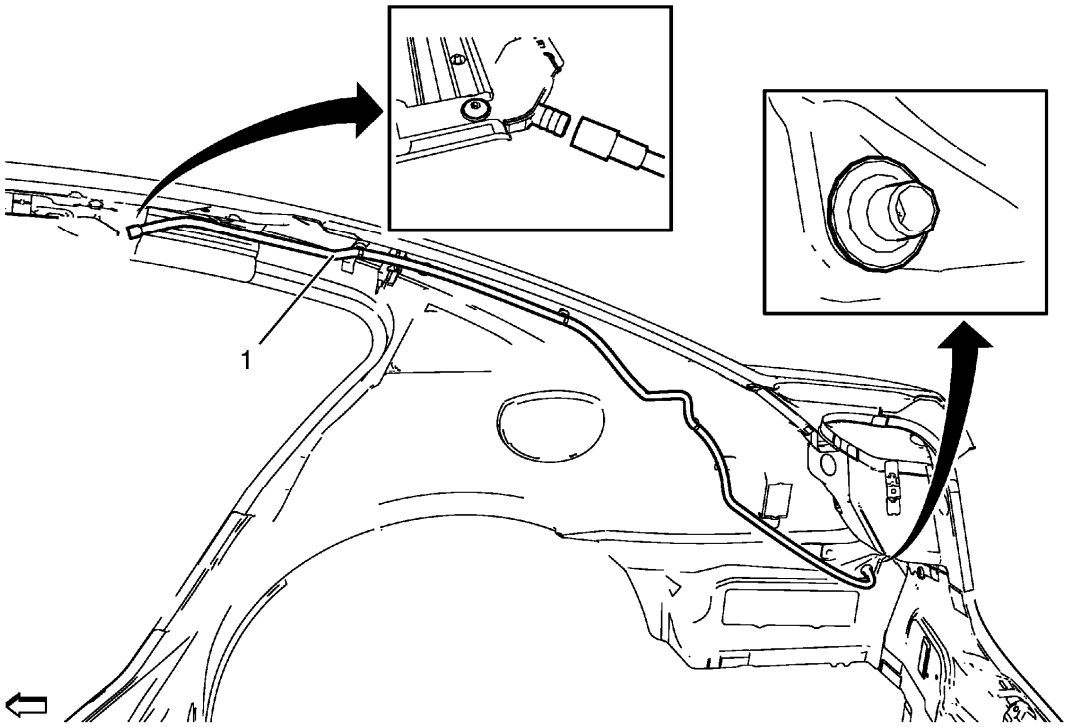

Fig. 8: Sunroof Housing Rear Drain Hose
Courtesy of GENERAL MOTORS COMPANY

Sunroof Housing Rear Drain Hose Replacement

Callout	Component Name
Preliminary Procedures 1. It is only necessary to lower the headliner. Only perform the steps in the headliner replacement procedure that will lower the headliner enough to gain access to the part. Refer to **Headlining Trim Panel Replacement (without Sunroof)** , **Headlining Trim Panel Replacement (with Sunroof)** . 2. Remove the rear compartment side trim panel. Refer to **Rear Compartment Side Trim Replacement - Right Side** , or **Rear Compartment Side Trim Replacement - Left Side** .	
1	Sunroof Housing Rear Drain Hose **Procedure** Disengage the sunroof drain hose from the attachment clips on the roof rail, the C-pillar, and the rear compartment.

SUNROOF MODULE ASSEMBLY REPLACEMENT

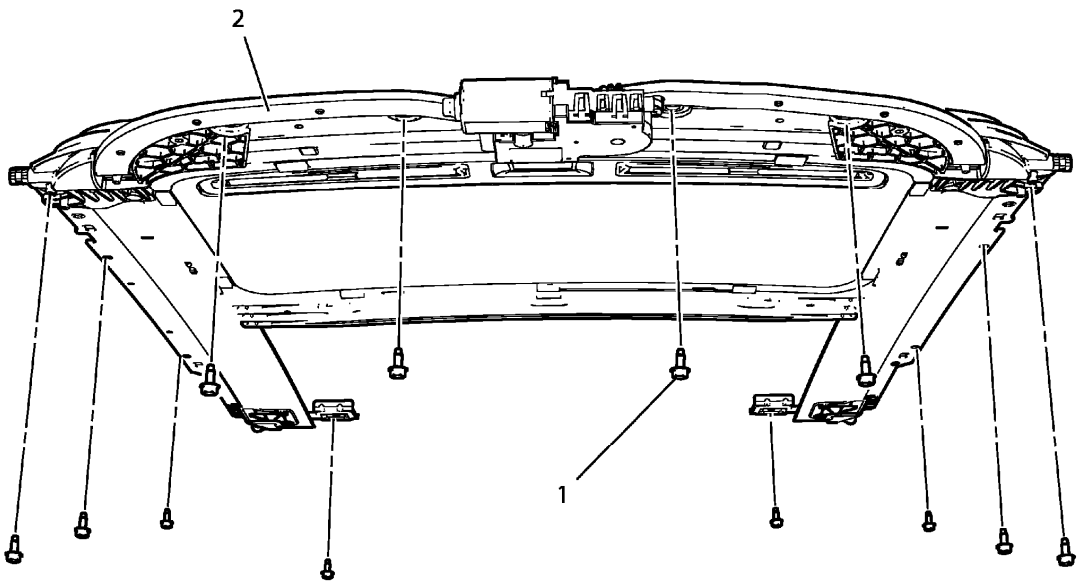

Fig. 9: Sunroof Module assembly
Courtesy of GENERAL MOTORS COMPANY

Sunroof Module Assembly Replacement

Callout	Component Name
Preliminary Procedures Remove the headlining trim panel. Refer to **Headlining Trim Panel Replacement (without Sunroof)** , **Headlining Trim Panel Replacement (with Sunroof)** .	
1	Sunroof Module Bolt (Qty: 12) **CAUTION:** **Refer to Fastener Caution .** **Tighten** 9 N.m (80 lb in)
2	Sunroof Module Assembly **Procedure** A new sunroof module assembly does not include the sunroof window, the motor, the sunshade, or the finishing lace as components. You must install the old components to the new sunroof module assembly.

SUNROOF WINDOW MOTOR REPLACEMENT

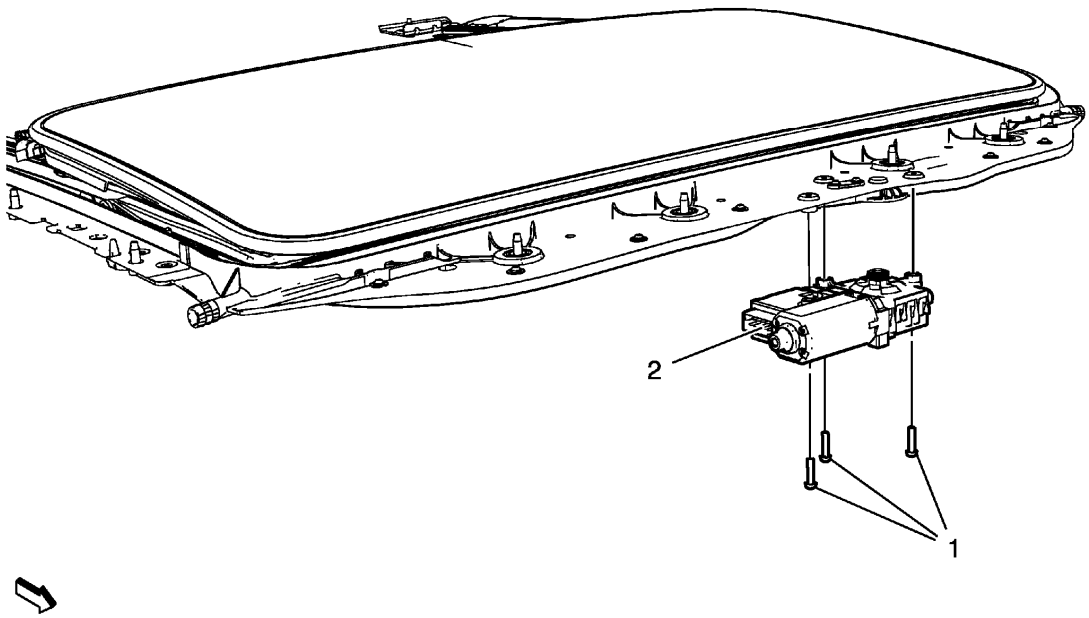

Fig. 10: Sunroof Window Motor
Courtesy of GENERAL MOTORS COMPANY

Sunroof Window Motor Replacement

Callout	Component Name
Preliminary Procedure It is only necessary to lower the headliner. Only perform the steps in the headliner replacement procedure that will lower the headliner enough to gain access to the part. Refer to **Headlining Trim Panel Replacement (without Sunroof)** , **Headlining Trim Panel Replacement (with Sunroof)** .	
1	Sunroof Window Motor Bolt (Qty: 3) **CAUTION:** **Refer to Fastener Caution .** **Tighten** 4 (36 lb in)
2	Sunroof Window Motor **Procedure** 1. Disconnect the electrical connector. 2. After repairs or replacement, initialize the sunroof motor. Refer to **Sunroof Motor/Actuator Initialization/Teach Process**.

	3. Verify the operation of the sunroof before installing the headliner.

SUNROOF MOTOR/ACTUATOR INITIALIZATION/TEACH PROCESS

Perform the Initialization/Teach Process any time a sunroof window motor actuator is installed in the vehicle.

Use only the slide button for the these steps.

"Manual" indicates the first switch detent.

"Express" indicates the second switch detent.

1. Ensure that the electrical harness on the headliner is connected to the sunroof motor.
2. Put the ignition in the RUN position. (CAL file will be automatically downloaded by Body Control housing, BCM).
3. Ensure that the sunroof window is in the fully closed position. This is Not required for a new motor.
4. Press and hold the "Manual Close Switch. After 10 seconds the sunroof window will move to the vent and then slightly back. Do not release the switch until the sunroof window stops moving. A 10 second delay is not required for a new motor.
5. Learn Process:
    1. Open the sunroof window using the express or manual open switch to the full open position then release the switch.
    2. Press and hold "Manual Open Switch. After 10 seconds, the window will move to the close position, vent and then close. Do not release the switch during the movement until the window stops in the fully closed position.

NOTE: The Initialization/Teach Process is not complete if any of the following actions take place before the initialization cycle is done.

6. Verify the operation of the sunroof window.
    1. The slide button is not held as instructed.
    2. The ignition and/or battery power has been removed.
    3. The window panel has not reached the closed position.

The Initialization/Teach Process must be restarted if the procedure is not carried out completely.

SUNROOF SUNSHADE REPLACEMENT

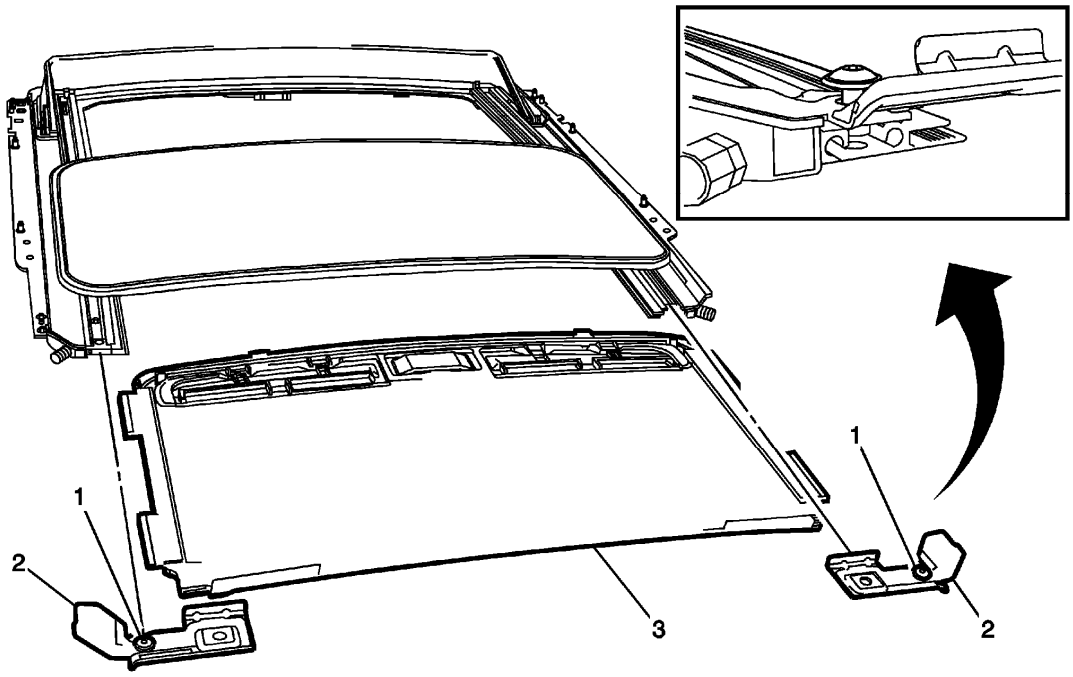

Fig. 11: Sunroof Sunshade
Courtesy of GENERAL MOTORS COMPANY

Sunroof Sunshade Replacement

Callout	Component Name
Preliminary Procedures 1. Remove the headliner. Refer to **Headlining Trim Panel Replacement (without Sunroof)** , **Headlining Trim Panel Replacement (with Sunroof)** . 2. It is only necessary to lower the sunroof module assembly. Only perform the steps in the sunroof module assembly replacement procedure that will lower the sunroof module assembly enough to gain access to the sunroof module bracket screws. Refer to **Sunroof Module Assembly Replacement**.	
1	Sunroof Module Bracket Screw (Qty: 2) **CAUTION:** **Refer to Fastener Caution .** **Tighten** 9 N.m (80 lb in)
2	Sunroof Module Bracket
3	Sunroof Sunshade **Procedure** Push the sunshade assembly down to release from sunshade guide.

SUNROOF WINDOW SEAL REPLACEMENT

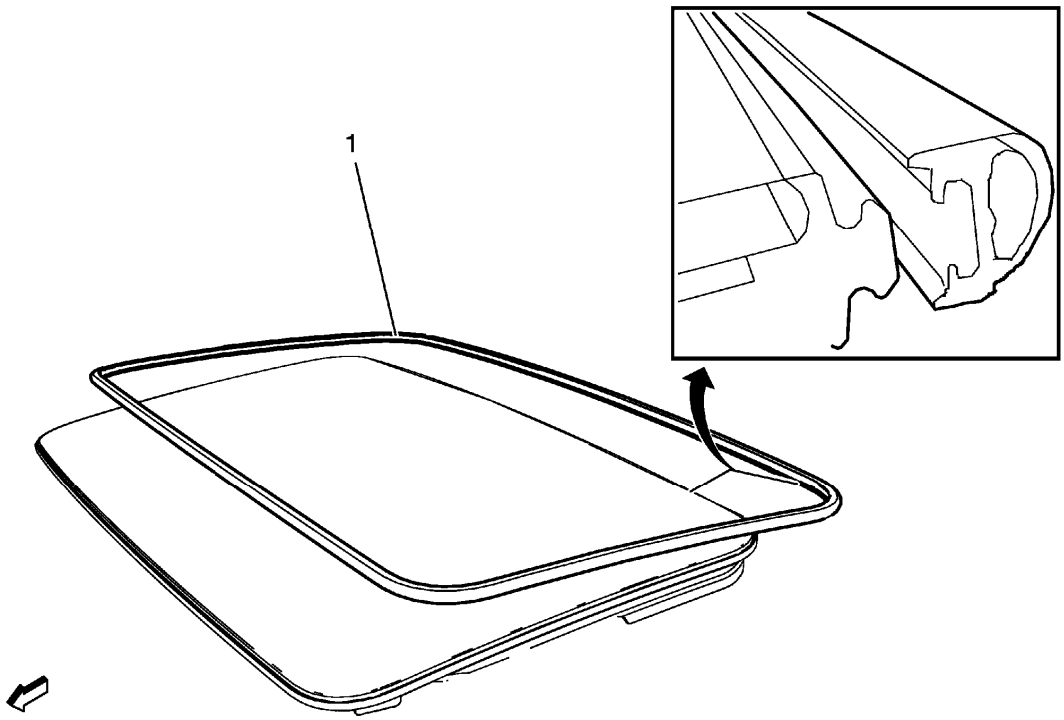

Fig. 12: Sunroof Window Seal
Courtesy of GENERAL MOTORS COMPANY

Sunroof Window Seal Replacement

Callout	Component Name
Preliminary Procedures Remove the sunroof window. Refer to **Sunroof Window Replacement**.	
1	Sunroof Window Seal **Procedure** 1. Wipe the perimeter of the frame area with a clean cloth. 2. Ensure that the seal is properly seated around the entire perimeter of the window frame.

SUNROOF WINDOW SEAL REPLACEMENT - FRONT

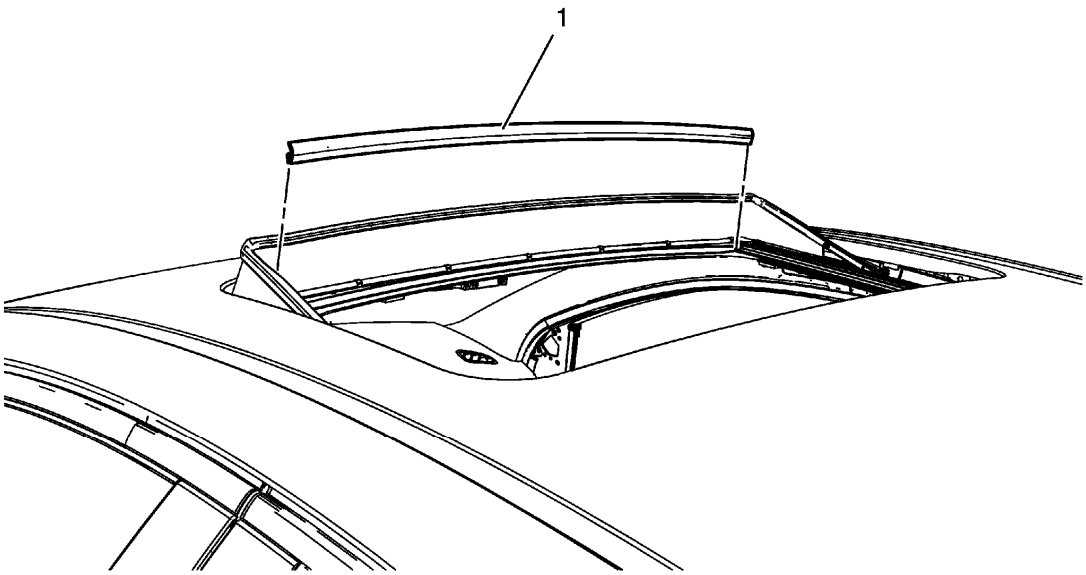

Fig. 13: Sunroof Window Seal - Front
Courtesy of GENERAL MOTORS COMPANY

Sunroof Window Seal Replacement - Front

Callout	Component Name
Preliminary Procedures Open the sunroof until it's in full opening position.	
1	Sunroof Window Seal- Front

SUNROOF SWITCH REPLACEMENT

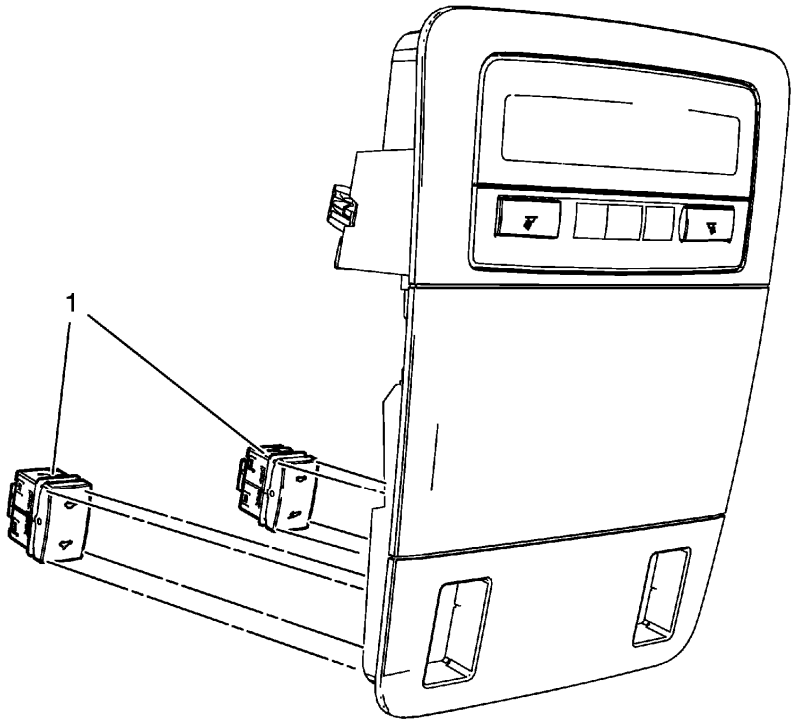

Fig. 14: Sunroof Switch
Courtesy of GENERAL MOTORS COMPANY

Sunroof Switch Replacement

Callout	Component Name
Preliminary Procedures Remove the roof console. Refer to **Roof Console Replacement** .	
1	Sunroof Switch **Procedure** 1. Unsnap the switch from the console. 2. Disconnect the electrical connector.

SUNROOF WINDOW HEIGHT AND OPENING FIT ADJUSTMENT

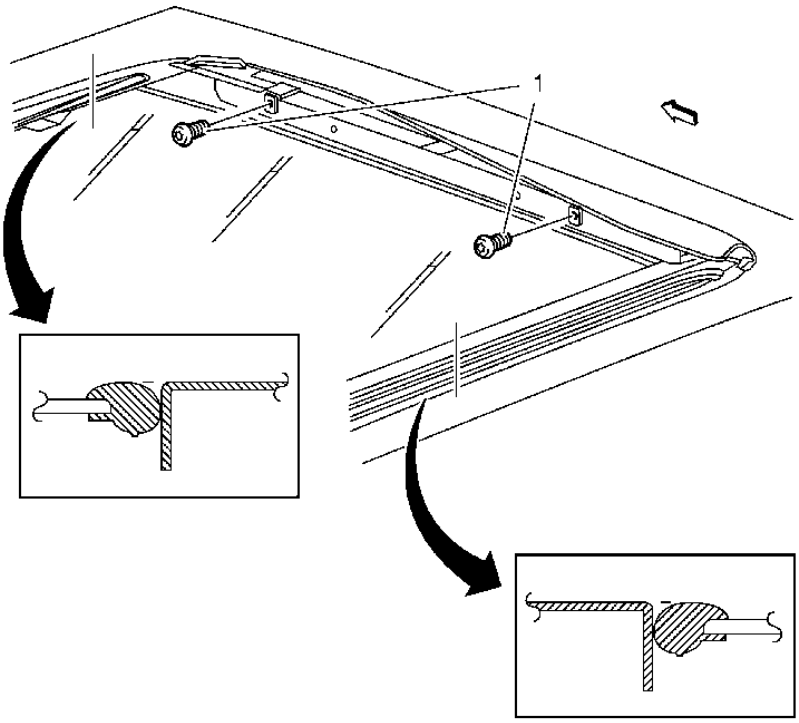

Fig. 15: Properly Adjusting Sunroof Window Height And Opening Fit
Courtesy of GENERAL MOTORS COMPANY

Sunroof Window Height and Opening Fit Adjustment

Callout	Component Name
Preliminary Procedures Remove the sunroof air deflector cover. Refer to **Sunroof Air Deflector Cover Replacement**.	
1	Sunroof Window Fastener (Qty: 4) **CAUTION:** **Refer to Fastener Caution .** **Procedure** 1. Cycle the sunroof window from full open to closed position. 2. Loosen the adjusting screws on the sunroof window. 3. Adjust the front of the sunroof window to window to 0-1 mm (0.00-0.04 in) below the top surface of the roof panel. 4. Adjust the rear center line of the sunroof window to 0-1 mm (0.00-0.04 in) above the top surface of the roof panel. 5. Cycle sunroof window through all positions. 6. Inspect the sunroof window adjustment. Adjust if necessary.

	Tighten 4 N.m (35 lb in)

SUNROOF WINDOW REPLACEMENT

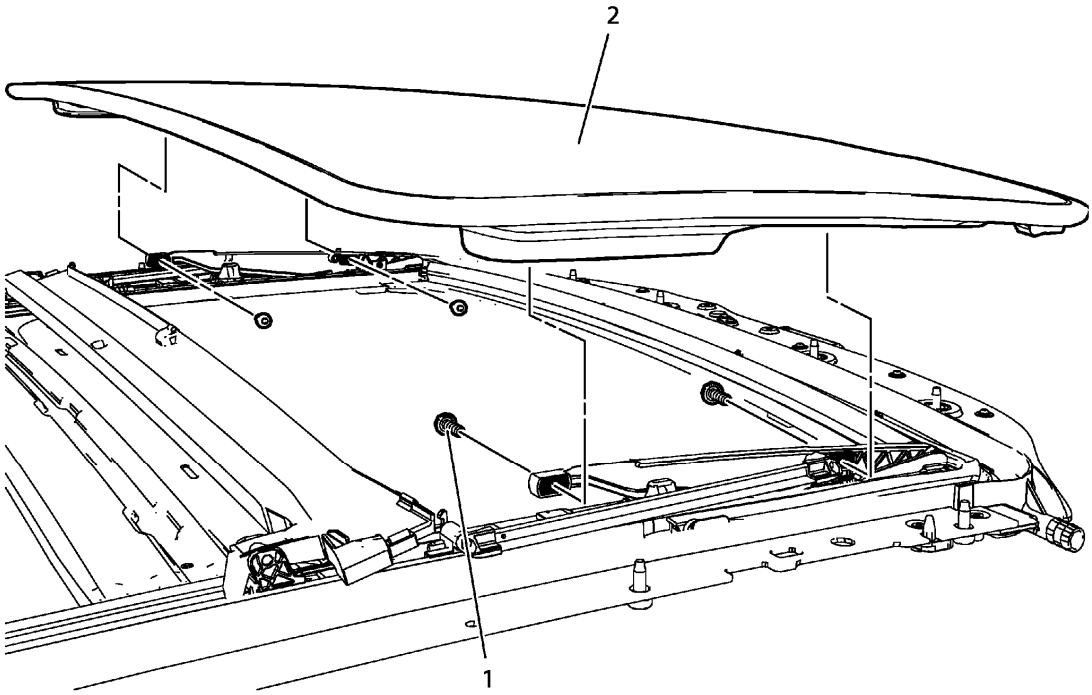

Fig. 16: Sunroof Window
Courtesy of GENERAL MOTORS COMPANY

Sunroof Window Replacement

Callout	Component Name
Preliminary Procedures Remove the sunroof air deflector cover. Refer to **Sunroof Air Deflector Cover Replacement**.	
1	Sunroof Window Bolt (Qty: 4) **CAUTION:** **Refer to Fastener Caution .** **Tighten** 4 N.m (36 lb in)
	Sunroof Window **Procedure**

2	1. Turn the ignition on. 2. Lift up the sunroof window to the vent position. 3. Slide the sunshade to the full rearward position. 4. After the installation adjust the sunroof window. Refer to **Sunroof Window Height and Opening Fit Adjustment**.

DESCRIPTION AND OPERATION

SUNROOF DESCRIPTION AND OPERATION

The tilt/slide sunroof consists of a moving glass panel and a manual sunshade. In the tilt/slide sunroof system the rear of the glass tilts up for venting and slides between the head liner and roof panel as it slides open. The glass is controlled by an integrated motor/controller. The sunshade has a mechanical connection to the glass causing it to open with the glass and keeping it from closing more than the glass.

The electrical portion of the tilt/slide sunroof system consists of:

- Body control module (BCM)
- Sunroof glass control module
- Sunroof control switch assembly
- Vent control switch assembly
- Local interconnected network (LIN-Bus)

The sunroof electrical system uses a master/slave configuration utilizing a LIN-Bus based system for communication. The BCM is designated as the master, while the sunroof control module is configured as the slave.

As the system master, the BCM uses the LIN-Bus communication bus to enable or disable sunroof operation, communicate vehicle information to the sunroof controller, and request sunroof movement. The sunroof controller provides system status and diagnostic information to the BCM for diagnostic reporting and operational purposes.

The sunroof glass is controlled by a integrated motor/controller containing the necessary electronics, motor, hall effect position sensors, as well as the interface to the driver control switches. The motor/controller is capable of controlling motion based on control switch activation and LIN-Bus message commands from the system master.

The operational calibrations for the sunroof integrated motor/controller are loaded over the LIN-Bus communication bus by the sunroof system master, the BCM.

Sunroof Glass and Sunshade Control Switches

The sunroof control switches are connected directly to the controller. The sliding glass switches provide detent positions for open, express open, off, close, and express close. The vent switches provide detent positions for open, off, and close. The control switch completes the circuit between two signals provided by the control module, a reference ground input and a pull-up voltage provided by an analog to digital switch input. The

control switches place a different resistor ladder network in the circuit depending on the function selected. The controller's analog to digital switch input reads the resulting voltage range and determines the function as indicated in the included charts.

System Protection Functions

Normal operation of the sunroof system may be altered by one of the following events.

Obstacle or Blockage Detection

When enabled, obstacle detection is active only while the sunroof opening is approximately 4-200 mm (0.16-7.87 in) when moving in the closing direction. When an obstacle is detected in this range, the motion in the closing direction will stop and the sunroof will reverse direction for a short distance. The reversal shall complete regardless of operating Mode. If the travel is outside the range defined above, the sunroof will try to continue closing until it detects a motor stall condition or the system is at one of it's defined stops.

Motor Stall

If the sunroof is moving in the open or close direction and stops moving for 350 ms while the switch or LIN-Bus command is active, and no obstacle has been detected, the motor shall be turned off to prevent overheating.

Sunroof System Thermal Protection

The sunroof controllers have a thermal protection algorithm to protect the sunroof controller and motor from damage due to overheating conditions resulting from immoderately switch actuations. The thermal protection algorithm will cause any new sunroof open commands to be ignored until the motor is allowed to cool. A number of close requests during an over temperature condition will be allowed. If the thermal protection is triggered during an obstacle detection event, the sunroof reversal shall be finished.

Sunroof Operation

Vent - Open to Vent Position

When the sunroof is closed or in a partial vent position and the sunroof vent open switch becomes active, the sunroof shall begin to 'Express open' to the vent position. sunroof motion shall cease when the Sunroof reaches the vent position or if the sunroof sliding glass switch becomes active.

Vent - Close from Vent

When the sunroof is in the vent position and the sunroof vent switch enters the 'Close' state, the sunroof will begin to express close the sunroof. Motion will continue until the sunroof has reached its fully closed position or if the sunroof sliding glass switch becomes active.

Sliding Class - Normal Open (Non-Express)

When the sunroof is not in a vent position and the sunroof sliding glass switch is held in the 'Open' position, the sunroof will begin opening. Motion will continue until the switch returns to the 'Off' state or the vent switch transitions to any active state.

Sliding Class - Sunroof Express Open

When the sunroof control switch transitions to the 'Express Open' state and the sunroof is not in a vent position, the sunroof will express open until the controller determines the sunroof has reached the comfort stop position or the fully 'Open' position, the switch transitions to another state after first returning to the 'Off' position, or the vent switch transitions to an active state.

Sliding Class - Normal Close (Non-Express)

When the sunroof switch is in the 'Close' state and the sunroof is not in the vent position, the controller will begin moving the sunroof in the close direction. If the vent switch becomes active the motor will be turned off.

Sliding Class - Sunroof Express Close

When the sunroof switch is in the 'Express Close' state and the sunroof is not in a vent position, the sunroof will express close until the controller determines the sunroof has reached the fully closed position, or the switch transitions to another state after first returning to the 'Off ' position. The sunroof motion will cease if the switch transitions back to the 'Close' or 'Express Close' state after returning to the 'Off ' position first or the vent switch transitions to any active state.

WATER MANAGEMENT DESCRIPTION AND OPERATION

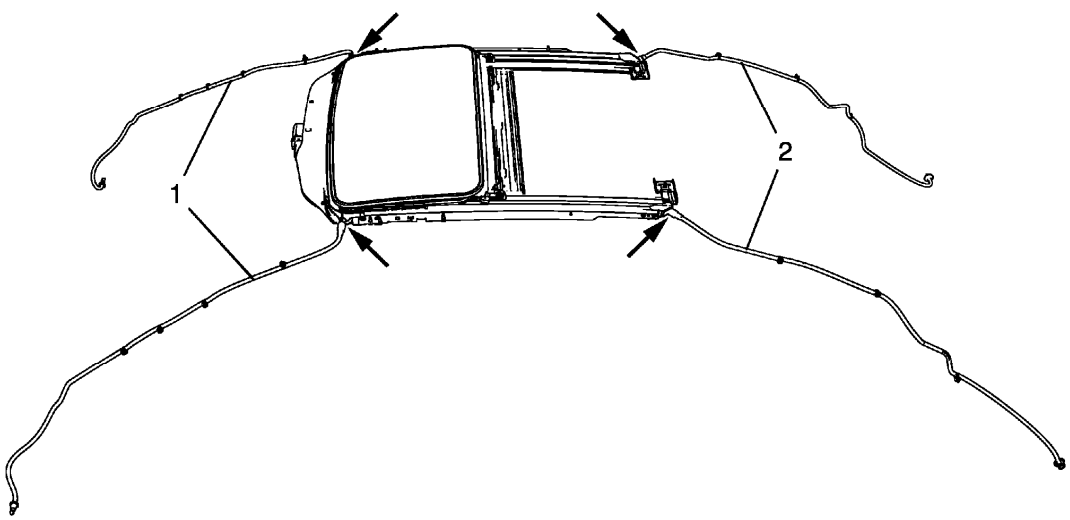

Fig. 17: Sunroof Tray Tubes
Courtesy of GENERAL MOTORS COMPANY

Any water that passes the roof seal is drained from the sunroof tray by 2 tubes in the front (1) and 2 tubes in the

back (2) of the sunroof module assembly that lead from the corners of the tray to the rocker panels of the vehicle. The tray which acts as a framework for the sunroof assembly, has a water channel that encircles the sunroof opening and directs the water to the drain tubes.

In the graphic below the arrows show the water flow direction in the tray which acts as a framework for the sunroof assembly and drains system.

2013 ACCESSORIES & EQUIPMENT

Waterleaks - Cruze

DIAGNOSTIC INFORMATION AND PROCEDURES

WATERLEAK TEST PREPARATION

- GM vehicles are designed to operate under normal environmental conditions.
- The design criteria for sealing materials and components takes into consideration the sealing forces required to withstand the natural elements. These specifications cannot take into consideration any artificial conditions, i.e., high pressure car washes.
- The water leak test procedure has been correlated to the natural elements and will determine the ability of a vehicle to perform under normal operating conditions.
- The first step in diagnosing a leak is determining the conditions under which a leak occurs. If the general leak area can be found, the exact entry point can be isolated using a water hose or an air hose. Some trim panels or components may need to be removed in order to repair the leak.
- If leaks are found around a door, door window, rear compartment lid or liftgate area this does not necessarily indicate a bad weatherstrip. An adjustment to these areas may resolve the condition.

1. **Watertest Stand Assembly**

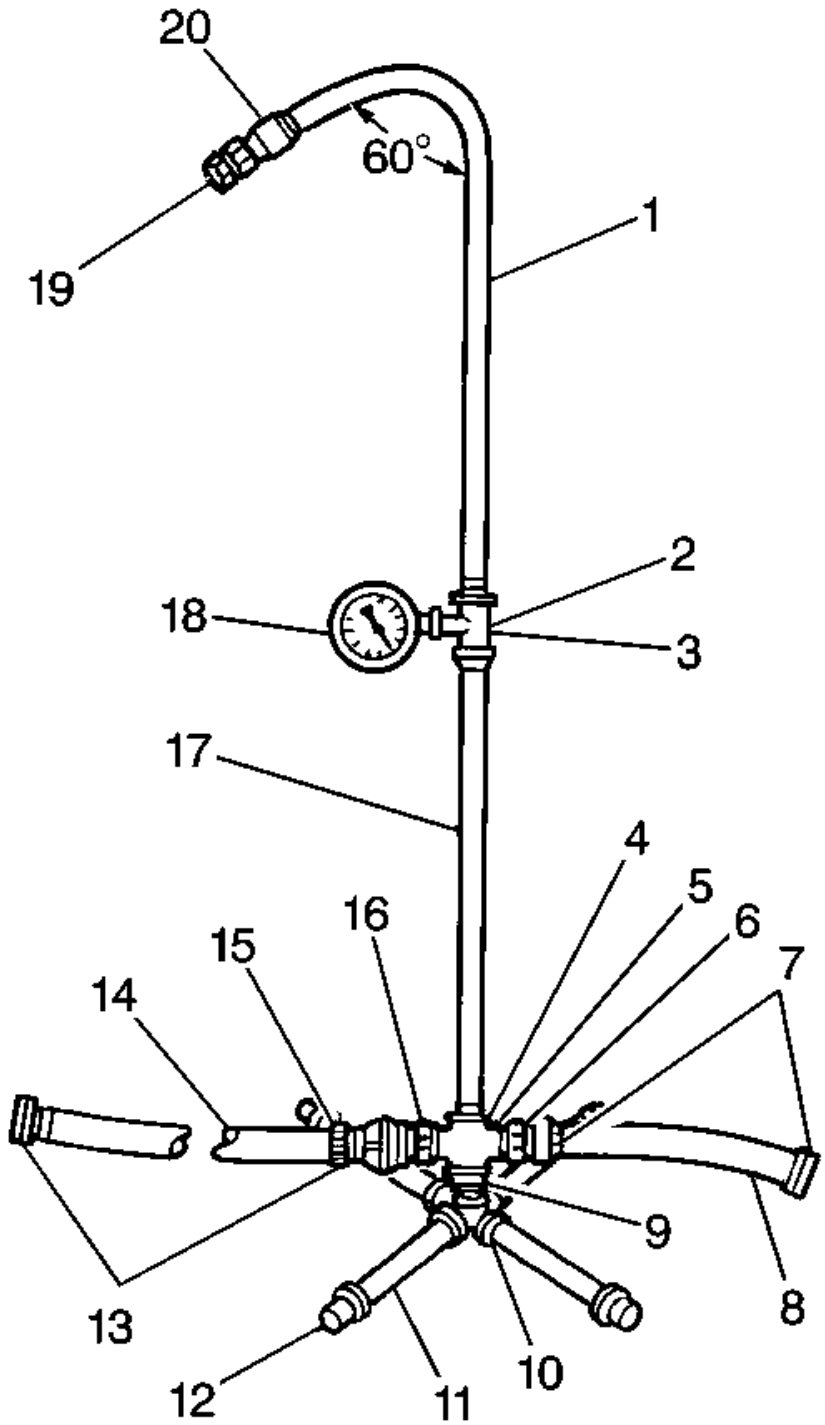

Fig. 1: View Of Watertest Stand Assembly
Courtesy of GENERAL MOTORS COMPANY

Assemble the water test stand as shown.

Callout	Component Name
1	Pipe (0.5 x 36 in)
2	Reducing Tee, Right Stand Only (0.5 x 0.5 x 0.25 in)
3	Coupling, Left Stand Only, (0.5 in)
4	Tee, Left Stand Only (0.5 in)
5	Cross, Right Stand Only (0.5 in)
6	Pipe to Hose Nipple, Right Stand Only (0.5 in)
7	Female Hose Coupling (5/8 in)
8	Input Hose, Right Stand Only (2.0 ft) (5/8 in diameter)
9	Close Nipple (0.5 in)
10	Cross (0.5 in) with Weld-On Cap (0.5 in)
11	Nipple (0.5 x 12 in)
12	Cap (0.5 in)
13	Female Hose Coupling (5/8 in)
14	Cross Hose (12 ft) (5/8 in diameter)
15	Hose Quick

	Connect
16	Pipe to Hose Nipple (0.5 in)
17	Pipe (0.5 x 60 in)
18	Water Pressure Gauge, Right Stand Only
19	Full Jet Spray Nozzle, No. 1/2GG-25 or Equivalent
20	Coupling (0.5 in)

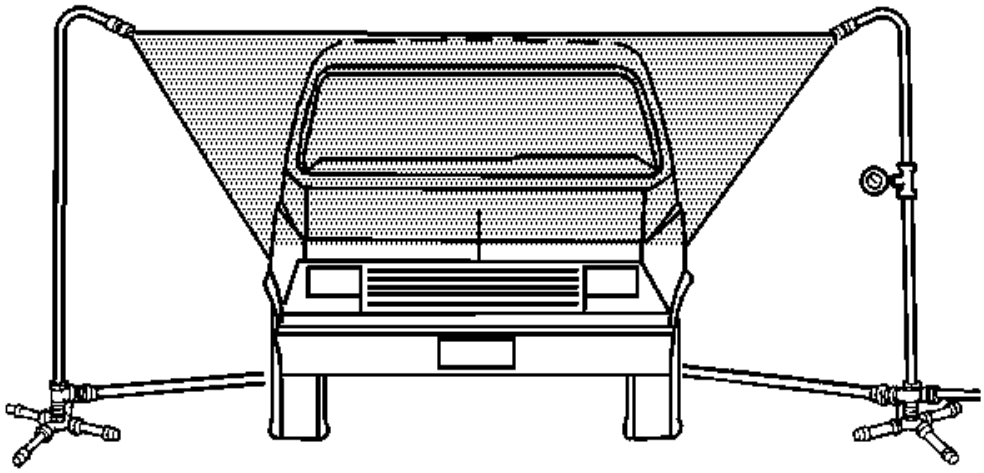

Fig. 2: Illustrating How Water Spray From Stands Should Overlap Vehicle
Courtesy of GENERAL MOTORS COMPANY

2. Position the stands as shown.

   The water spray from the stands should overlap the vehicle as shown.

3. Have an assistant inside of the vehicle during the test in order to locate any leaks.
4. The water pressure at the nozzle should maintain a 155 kPa (22 psi), for at least 4 minutes.

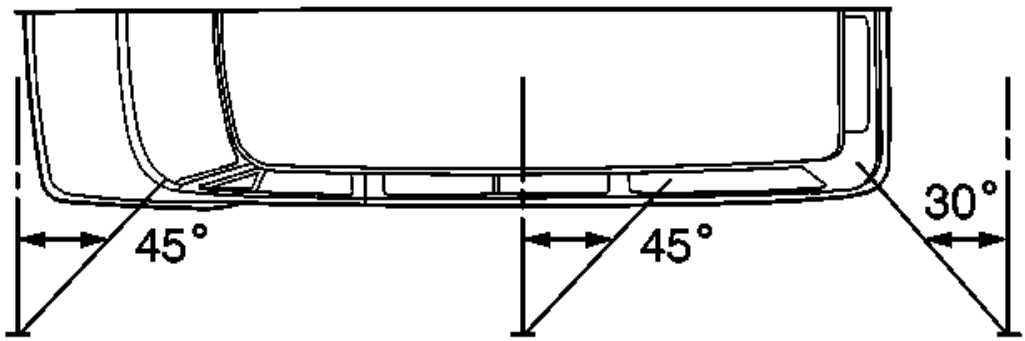

Fig. 3: Identifying Proper Water Spray Angles
Courtesy of GENERAL MOTORS COMPANY

5. In order to check the windshield, aim the water spray 30 degrees down and 45 degrees toward the rear.

   Aim the water towards the corner of the windshield.

6. In order to check the side windows for leaks, position the water stand towards the center of the rear quarter, aiming the water spray 30 degrees down and 45 degrees toward the rear.
7. In order to check the back window, aim the water spray 30 degrees down and 30 degrees toward the front.

WATER HOSE TEST

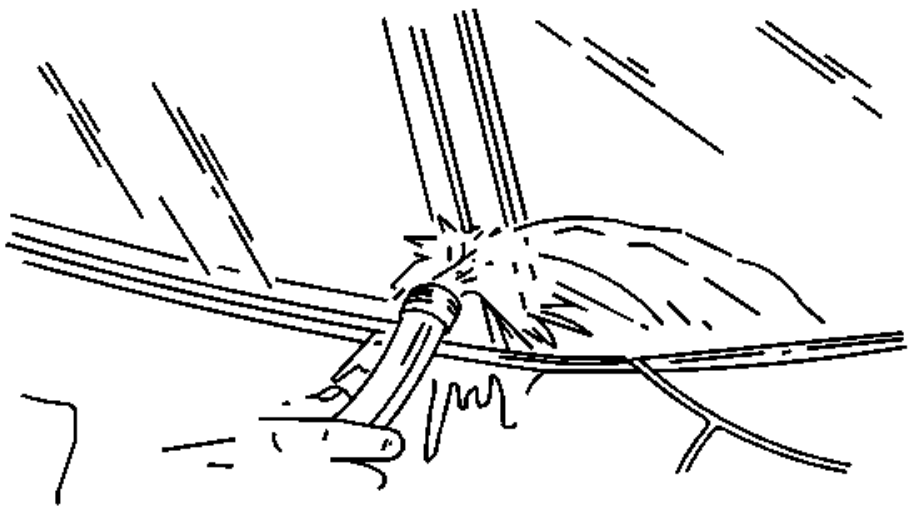

Fig. 4: Performing Water Hose Test
Courtesy of GENERAL MOTORS COMPANY

NOTE: Use a water hose without the nozzle attached.

1. Have an assistant inside of the vehicle in order to locate the leak.
2. Begin testing at the base of the window or the windshield.
3. Slowly move the hose upward and across the top of the vehicle.

AIR HOSE TEST

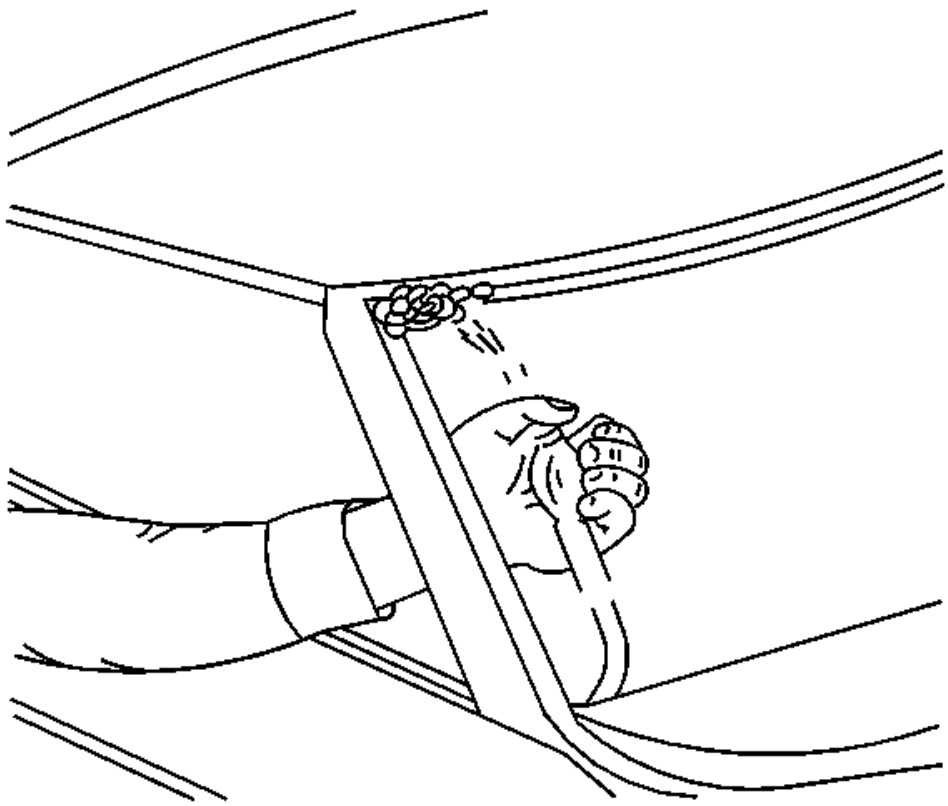

Fig. 5: Performing Air Hose Test
Courtesy of GENERAL MOTORS COMPANY

CAUTION: The air hose test should only be used on fully cured urethane adhesive. Otherwise, damage to the urethane adhesive bead could result in additional leaks.

1. Using a liquid detergent, diluted with water in a spray bottle, spray the window at the edges. Begin at the bottom and gradually move up and across the top.

NOTE: The compressed air should not exceed 205 kPa (30 psi).

2. Have an assistant inside of the vehicle with an air hose.
3. Have the assistant aim the compressed air at the suspected areas.

Bubbles will form in the soap solution at the location of the leak.

REPAIR INSTRUCTIONS

BODY WATERLEAK REPAIR

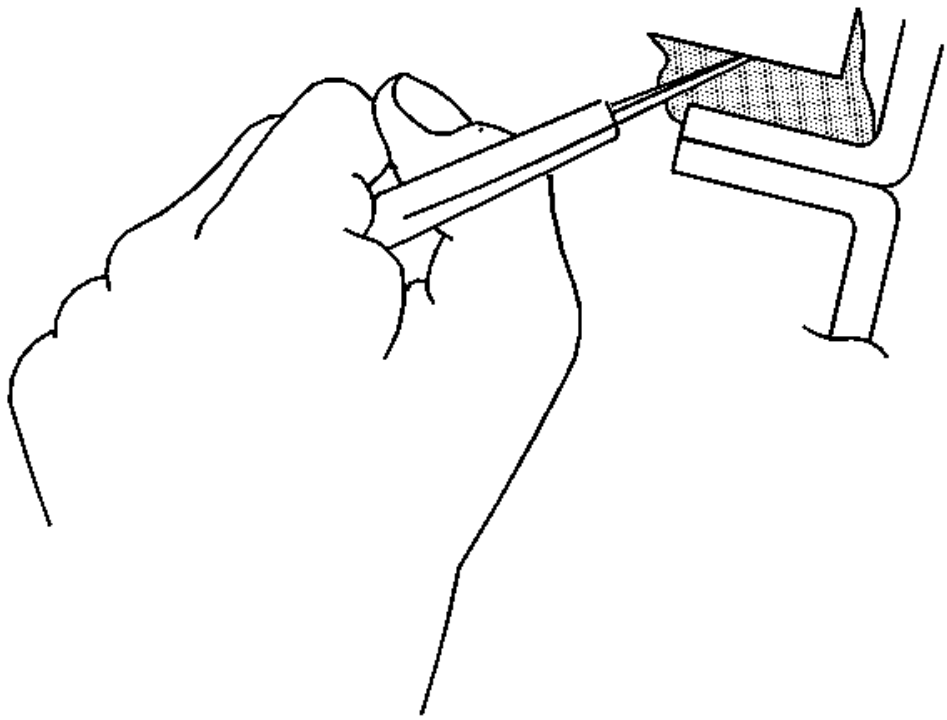

Fig. 6: Cutting Out A Portion Of The Adhesive Caulking (1 Of 2)
Courtesy of GENERAL MOTORS COMPANY

WARNING: If the vehicle interior is exposed to moisture and becomes soaked up to the level of the sensing and diagnostic module (SDM), the SDM and SDM harness connector must be replaced. The SDM could be activated when powered, which could cause airbag deployment and result in personal injury.

Depending on the location of the waterleak, you may have to remove certain interior components in order to repair the leak.

1. If the floor carpet is wet refer to **Floor Carpet Drying** .

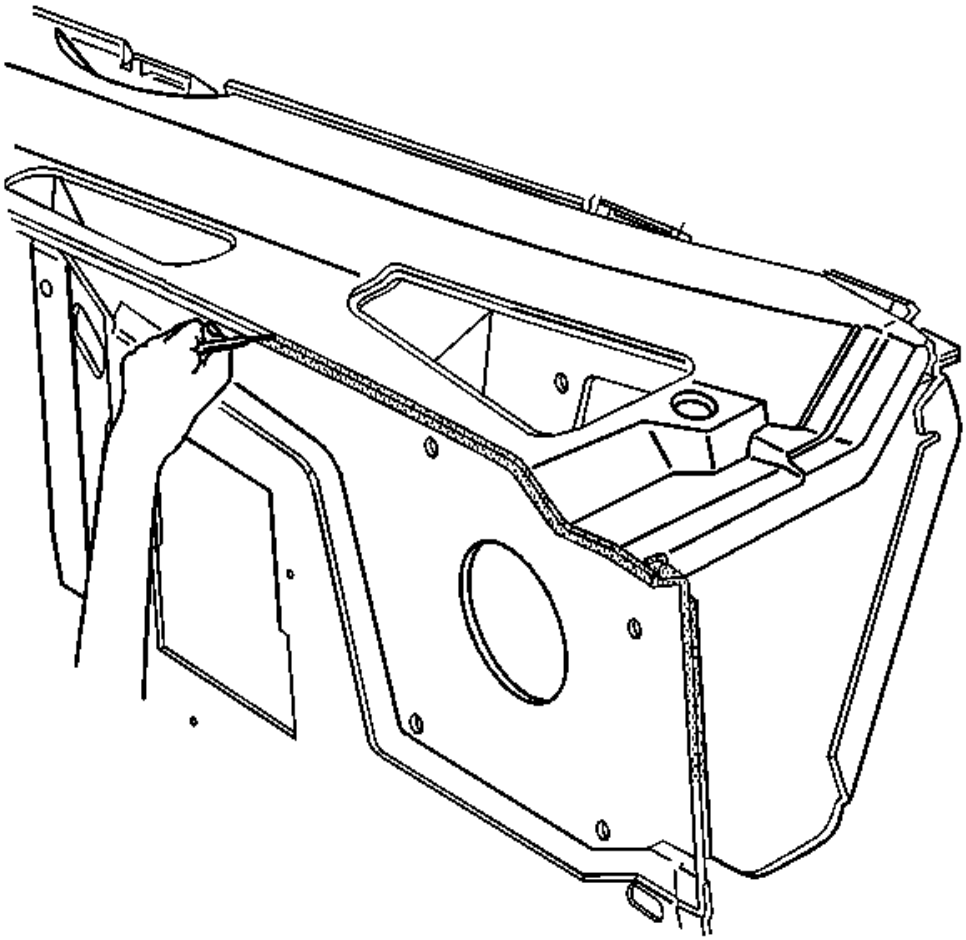

Fig. 7: Cutting Out A Portion Of The Adhesive Caulking (2 Of 2)
Courtesy of GENERAL MOTORS COMPANY

2. Cut out a portion of the adhesive caulking in the leak area from inside or outside of the vehicle.
3. Clean and remove all loose particles of the adhesive old caulking from the area.
4. Apply joint body and seam sealer where the old adhesive caulking was removed.
5. Allow the adhesive caulking to dry for several hours.
6. Test for leaks.
7. Install the trim, if removed.

STATIONARY WINDOW WATERLEAK REPAIR

WARNING: If the vehicle interior is exposed to moisture and becomes soaked up to the level of the sensing and diagnostic module (SDM), the SDM and SDM harness connector must be replaced. The SDM could be activated when powered, which could cause airbag deployment and result in personal injury.

1. If the floor carpet is wet refer to **Floor Carpet Drying** .
2. Remove the trim moldings or the headliner in order to repair the leak, if needed.
3. Determine the source of water entry.
4. If water is leaking at the edge of the windshield, reseal the windshield using a urethane adhesive caulking kit or the equivalent.
5. If water leaks into the vehicle at the sides of the stationary windows, reseal the window using a urethane adhesive caulking kit or the equivalent.

2013 BRAKES

Antilock Brake System - Cruze

SPECIFICATIONS

FASTENER TIGHTENING SPECIFICATIONS

Fastener Tightening Specifications

Application	Specification	
	Metric	English
Brake Pipe Fitting	18 N.m	13 lb ft
Brake Pressure Modulator Valve (BPMV) Bracket Bolt	20 N.m	15 lb ft
Electronic Brake Control Module (EBCM) Bolt	3 N.m	27 lb in
Front Wheel Speed Sensor Bolt	6 N.m	53 lb in
Rear Wheel Speed Sensor Bolt	6 N.m	53 lb in
Traction Control Module to Brake Pressure Module Bolt	10 N.m	89 lb in
Yaw Sensor Nut	9 N.m	80 lb in

SCHEMATIC WIRING DIAGRAMS

ANTILOCK BRAKE SYSTEM WIRING SCHEMATICS

Power, Ground, Serial Data, and Traction Control Wiring Schematics

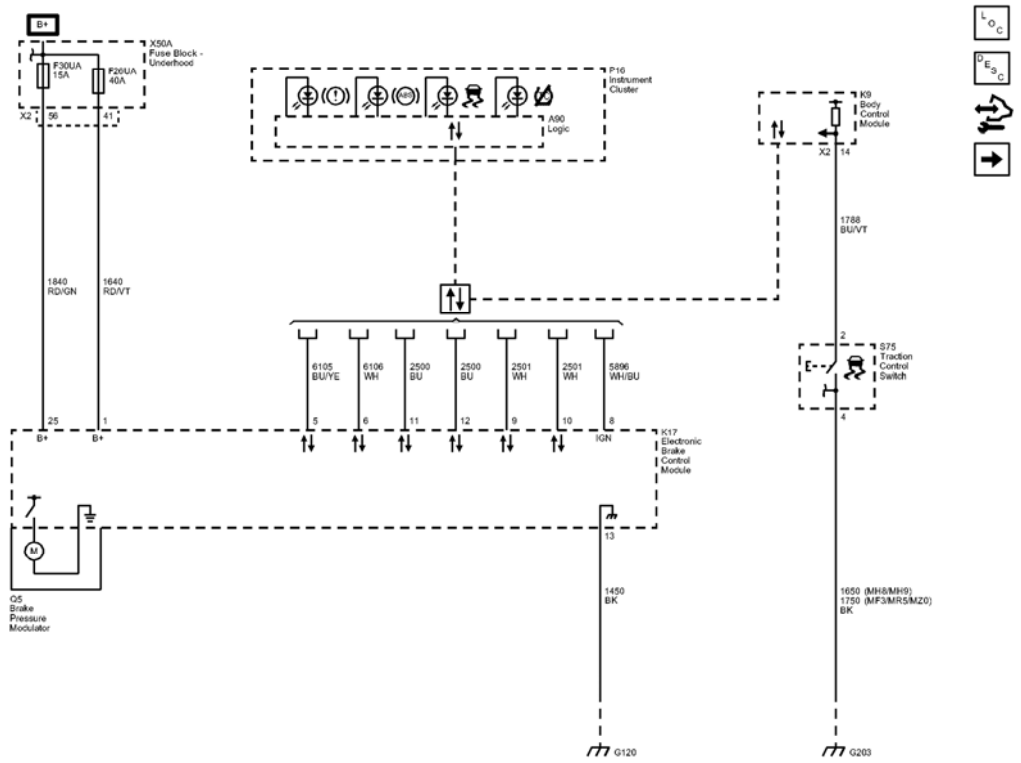

Fig. 1: Power, Ground, Serial Data, and Traction Control Wiring Schematics
Courtesy of GENERAL MOTORS COMPANY

Callout	Component Name
1840	Battery Positive Voltage
1840_RD/GN	1840 RD/GN
CAV_25	25
CAV_56	56
CONN_X2	X2
1640	Battery Positive Voltage
1640_RD/VT	1640 RD/VT
CAV_1	1
CAV_41	41
SD	Serial Data
Data_Communication_Schematics_REF	Data Communication Schematics
6105	High Speed GMLAN Serial Data (+) (2)
6105_BU/YE	6105 BU/YE
CAV_5	5
6106	High Speed GMLAN Serial Data (-) (2)

6106_WH	6106 WH
CAV_6	6
2500	High Speed GMLAN Serial Data (+) (1)
2500_BU	2500 BU
CAV_11	11
2500_BU	2500 BU
CAV_12	12
2501	High Speed GMLAN Serial Data (-) (1)
2501_WH	2501 WH
CAV 9	9
2501_WH	2501 WH
CAV 10	10
5896	Driver Seat Bolster Motor Position Sensor Voltage Reference
5896_WH/BU	5896 WH/BU
CAV_8	8
1750	Ground
1750_BK	1750 BK
CAV_4	4
1650	1650
MH8	TRANSMISSION-AUTO 6 SPD, HMD, X23F
MH9	TRANSMISSION-AUTO 6 SPD, HMD, X24F
1450	Ground
1450 BK	1450 BK
CAV_13	13
1788	Traction Control Switch Signal (1)
1788_BU/VT	1788 BU/VT
CAV_2	2
CAV 14	14
CONN_X2	X2
MF3	TRANSMISSION-MAN 6 SPD, OPEL, 76.5 MM, 4.273 1ST, 2.158 2ND, 1.302 3RD, 0.959 4TH, 0.744 5TH, 0.614 6TH, M32-6 WR
	TRANSMISSION-MAN 6 SPD, OPEL, 76.5 MM, 4.273 1ST,

MR5	2.353 2ND, 1.475 3RD, 1.067 4TH, 0.875 5TH, 0.744 6TH, M32-6 WR
MZ0	TRANSMISSION-MAN 6 SPD, OPEL, 76.5 MM, 3.82 1ST, 0.74 6TH, (M32 WR)
G120	G120
G203	G203
F30UA	F30UA 15A
F26UA	F26UA 40A
P16	
K9	
S75	(FX3)
X50A	
Q5	
A90	Logic
K17	

Wheel Speed Sensors Wiring Schematics

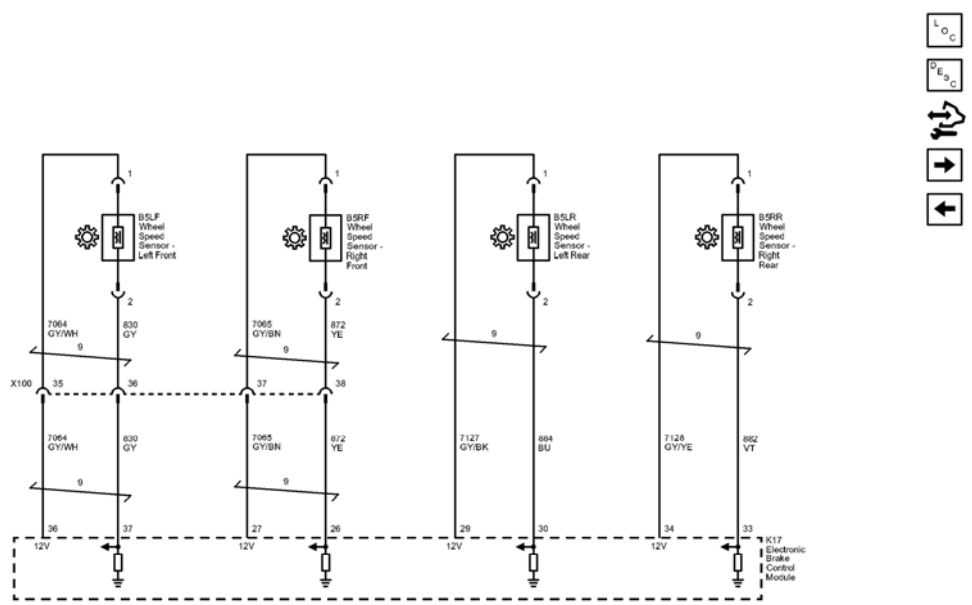

Fig. 2: Wheel Speed Sensors Wiring Schematics
Courtesy of GENERAL MOTORS COMPANY

Callout	Component Name
7064	Wheel Speed Sensor Supply Voltage Left Front
7064_GY/WH	7064 GY/WH
CAV_36	36
830	Wheel Speed Sensor Signal Left Front
830_GY	830 GY
CAV_37	37
7065	Wheel Speed Sensor Supply Voltage Right Front
7065_GY/BN	7065 GY/BN
CAV_27	27
872	Wheel Speed Sensor Signal Right Front
872_YE	872 YE
CAV_1	1
CAV_1	1
CAV_2	2
CAV_2	2
7127	Wheel Speed Sensor Supply Voltage Left Rear
7127_GY/BK	7127 GY/BK
CAV_29	29
884	Wheel Speed Sensor Signal Left Rear
884_BU	884 BU
CAV_30	30
7064_GY/WH	7064 GY/WH
830_GY	830 GY
7065_GY/BN	7065 GY/BN
872_YE	872 YE
CAV_2	2
CAV_1	1
7128	Wheel Speed Sensor Supply Voltage Right Rear
7128_GY/YE	7128 GY/YE
CAV_34	34
882	Wheel Speed Sensor Signal Right Rear
882_VT	882 VT
CAV_33	33
CAV_2	2
CAV_1	1
CAV_26	26
X100	X100
CAV_35	35
CAV_36	36
CAV_37	37

	38
TWIST_9	9
TWIST_9	9
TWIST_9	9
TWIST_9	9
TWIST_9	9
TWIST_9	9
X100	X100
B5LF	
B5RF	
B5LR	
B5RR	
K17	

Stability Control Wiring Schematics

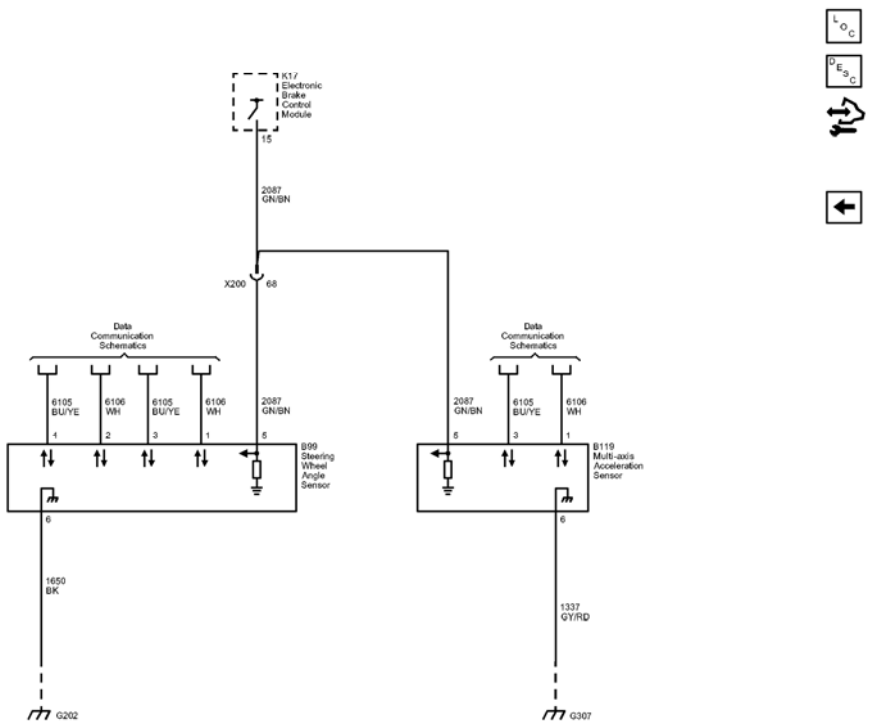

Fig. 3: Stability Control Wiring Schematics
Courtesy of GENERAL MOTORS COMPANY

Callout	Component Name
2087	Combined Vehicle Inertial

	Sensor Supply Voltage
2087_GN/BN	2087 GN/BN
CAV_5	5
CAV_15	15
2087_GN/BN	2087 GN/BN
CAV_5	5
2087_GN/BN	2087 GN/BN
CAV_68	68
6106	High Speed GMLAN Serial Data (-) (2)
6106_WH	6106 WH
CAV_2	2
6105	High Speed GMLAN Serial Data (+) (2)
6105_BU/YE	6105 BU/YE
CAV_3	3
6106_WH	6106 WH
CAV_1	1
6105_BU/YE	6105 BU/YE
CAV_4	4
1650	Ground
1650_BK	1650 BK
CAV_6	6
6105_BU/YE	6105 BU/YE
CAV_3	3
6106_WH	6106 WH
CAV_1	1
1337	Yaw Rate Sensor Volt Reference
1337_GY/RD	1337 GY/RD
CAV_6	6
X200	X200
G202	G202
G307	G307
B119	(FX3)
B99	(FX3)
K17	
Data_Communication_Schematics_REF	Data Communication Schematics
Data_Communication_Schematics_REF	Data Communication Schematics

DIAGNOSTIC INFORMATION AND PROCEDURES

DIAGNOSTIC CODE INDEX

DIAGNOSTIC CODE INDEX

DTC	Description
DTC B2745	DTC B2745 02 Traction Control Switch Circuit Short to Ground
DTC C0035, C0040, C0045, or C0050	DTC C0035 06 Left Front Wheel Speed Sensor Circuit Low Voltage/Open DTC C0035 0F Left Front Wheel Speed Sensor Circuit Signal Erratic DTC C0035 18 Left Front Wheel Speed Sensor Circuit Low Signal Amplitude DTC C0035 5A Left Front Wheel Speed Sensor Circuit Not Plausible DTC C0040 06 Right Front Wheel Speed Sensor Circuit Low Voltage/Open DTC C0040 0F Right Front Wheel Speed Sensor Circuit Signal Erratic DTC C0040 18 Right Front Wheel Speed Sensor Circuit Low Signal Amplitude DTC C0040 5A Right Front Wheel Speed Sensor Circuit Not Plausible DTC C0045 06 Left Rear Wheel Speed Sensor Circuit Low Voltage/Open DTC C0045 0F Rear Wheel Speed Sensor Circuit Signal Erratic DTC C0045 18 Left Rear Wheel Speed Sensor Circuit Low Signal Amplitude DTC C0045 5A Left Rear Wheel Speed Sensor Circuit Not Plausible DTC C0050 06 Right Rear Wheel Speed Sensor Circuit Low Voltage/Open DTC C0050 0F Right Rear Wheel Speed Sensor Circuit Signal Erratic DTC C0050 18 Right Rear Wheel Speed Sensor Circuit Low Signal Amplitude DTC C0050 5A Right Rear Wheel Speed Sensor Circuit Not Plausible
DTC C0110	DTC C0110 00 Pump Motor Circuit Malfunction DTC C0110 04 Pump Motor Circuit Open DTC C0110 61 Pump Motor Stuck
DTC C0131	DTC C0131 00 Traction Control System Pressure Circuit Malfunction DTC C0131 4B Traction Control System Pressure Circuit Calibration Not Learned

	DTC C0131 5A Traction Control System Pressure Circuit Not Plausible
DTC C0161	DTC C0161 5A Antilock Braking System Brake Switch Circuit Not Plausible
DTC C0186, C018B, C0196, C019B, or C0287	DTC C0186 5A Lateral Acceleration Sensor Circuit Not Plausible DTC C0186 71 Lateral Acceleration Sensor Circuit Invalid Data DTC C018B 5A Multi-Axis Acceleration Sensor Signal Not Plausible DTC C0196 00 Yaw Rate Circuit Malfunction DTC C0196 5A Yaw Rate Signal Not Plausible DTC C0196 71 Yaw Rate Signal Invalid Data DTC C019B 5A Yaw Rate Signal Not Plausible DTC C0287 4B Longitudinal Acceleration Sensor Circuit Calibration Not Learned DTC C0287 5A Longitudinal Acceleration Sensor Circuit Not Plausible DTC C0287 71 Longitudinal Acceleration Sensor Circuit Invalid Data
DTC C0280	DTC C0280 54 Stability System Active Too Long High Temperature
DTC C0710	DTC C0710 00 Steering Position Signal Malfunction DTC C0710 42 Steering Position Signal Calibration Not Programmed DTC C0710 71 Steering Position Signal Invalid Data DTC C0710 5A Steering Position Signal Not Plausible
DTC C1207-C1210, C1221-C1228, or C1232-C1235	DTC C1207 00 Left Front Wheel Speed Sensor Circuit High Input DTC C1208 00 Right Front Wheel Speed Sensor Circuit High Input DTC C1209 00 Left Rear Wheel Speed Sensor Circuit High Input DTC C1210 00 Right Rear Wheel Speed Sensor Circuit High Input DTC C1221 00 Left Front Wheel Speed Sensor Circuit Malfunction DTC C1222 00 Right Front Wheel Speed Sensor Circuit Malfunction DTC C1223 00 Left Rear Wheel Speed Sensor Circuit Malfunction DTC C1224 00 Right Rear Wheel Speed Sensor Circuit Malfunction
	DTC C1251 Lateral Acceleration Sensor

DTC C1251	Performance
DTC P0856	DTC P0856 Traction Control Torque Request Circuit

DTC B2745

Diagnostic Instructions

- Perform the **Diagnostic System Check - Vehicle** prior to using this diagnostic procedure.
- Review **Strategy Based Diagnosis** for an overview of the diagnostic approach.
- **Diagnostic Procedure Instructions** provides an overview of each diagnostic category.

DTC Descriptor

DTC B2745 02

Traction Control Switch Circuit Short to Ground

Diagnostic Fault Information

Circuit	Short to Ground	Open/High Resistance	Short to Voltage	Signal Performance
Signal	B2745 02	1	1	-
Ground	-	1	-	-
1. Traction control switch inoperative				

Circuit/System Description

The body control module monitors the traction control switch. When the traction control switch is pressed once, the body control module will request the electronic brake control module via serial data to disable the traction control. The electronic brake control module will request the instrument cluster via serial data to turn the traction control off indicator ON to notify the driver of the deactivation.

When the traction control switch is pressed and held for five seconds, the body control module will request the electronic brake control module to disable the electronic stability control. The electronic brake control module will request the instrument cluster via serial data to turn the traction control off and stability control off indicator ON to notify the driver of the deactivation.

Conditions for Running the DTC

Ignition ON.

Conditions for Setting the DTC

The body control module detects a short to ground on the signal circuit.

Action Taken When the DTC Sets

The body control module ignores the traction control switch signal input.

Conditions for Clearing the DTC

A current DTC clears when the diagnostic runs and passes.

Reference Information

Schematic Reference

Antilock Brake System Schematics

Connector End View Reference

COMPONENT CONNECTOR END VIEWS - INDEX

Description and Operation

ABS Description and Operation

Electrical Information Reference

- **Circuit Testing**
- **Connector Repairs**
- **Testing for Intermittent Conditions and Poor Connections**
- **Wiring Repairs**

Scan Tool Reference

Control Module References for scan tool information

Circuit/System Verification

1. Ignition ON.
2. Verify the scan tool Body Control Module, Traction Control Switch parameter changes between Active and Inactive when pressing and releasing the S75 Traction Control Switch.
    - **If the parameter does not change**

      Refer to Circuit/System Testing below.

    - **If the parameter changes**
3. All OK.

Circuit/System Testing

1. Ignition OFF and all vehicle systems OFF, disconnect the harness connector at the S75 Traction Control Switch. It may take up to 2 minutes for all vehicle systems to power down.
2. Test for less than 10 ohms between the ground circuit terminal 4 and ground.
    - **If 10 ohms or greater**
    1. Ignition OFF.
    2. Test for less than 2 ohms in the ground circuit end to end.
        - If 2 ohms or greater, repair the open/high resistance in the circuit.
        - If less than 2 ohms, repair the open/high resistance in the ground connection.
    - **If less than 10 ohms**
3. Ignition ON
4. Verify the scan tool Body Control Module, Traction Control Switch parameter is Inactive.
    - **If not Inactive**
    1. Ignition OFF, disconnect the X2 harness connector at the K9 Body Control Module.
    2. Test for infinite resistance between the signal circuit terminal 14 and ground.
        - If less than infinite resistance, repair the short to ground on the circuit.
        - If infinite resistance, replace the K9 Body Control Module.
    - **If Inactive**
5. Install a 3 A fused jumper wire between the signal circuit terminal 2 and the ground circuit terminal 4.
6. Verify the scan tool Traction Control Switch parameter is Active.
    - **If not Active**
    1. Ignition OFF, disconnect the X2 harness connector at the K9 Body Control Module, ignition ON.
    2. Test for less than 1 V between the signal circuit and ground.
        - If 1 V or greater, repair the short to voltage on the circuit.
        - If less than 1 V
    3. Test for less than 2 ohms in the signal circuit end to end.
        - If 2 ohms or greater, repair the open/high resistance in the circuit.
        - If less than 2 ohms, replace the K9 Body Control Module.
    - **If Active**
7. Test or replace the S75 Traction Control Switch.

Component Testing

1. Ignition OFF, disconnect the harness connector at the S75 Traction Control Switch.
2. Test for infinite resistance between the signal terminal 2 and the ground terminal 4 with the switch in the open position.
    - **If less than infinite resistance**

      Replace the S75 Traction Control Switch.

    - **If infinite resistance**

3. Test for less than 2 ohms between the signal terminal 2 and the ground terminal 4 with the switch in the closed position.
    - **If 2 ohms or greater**

      Replace the S75 Traction Control Switch.

    - **If less than 2 ohms**
4. All OK.

Repair Instructions

Perform the **Diagnostic Repair Verification** after completing the repair.

- **Instrument Panel Accessory Bezel Replacement**
- **Control Module References** for Body Control Module replacement, programming and setup

DTC C0035, C0040, C0045, OR C0050

Diagnostic Instructions

- Perform the **Diagnostic System Check - Vehicle** prior to using this diagnostic procedure.
- Review **Strategy Based Diagnosis** for an overview of the diagnostic approach.
- **Diagnostic Procedure Instructions** provides an overview of each diagnostic category.

DTC Descriptors

DTC C0035 06

Left Front Wheel Speed Sensor Circuit Low Voltage/Open

DTC C0035 0F

Left Front Wheel Speed Sensor Circuit Signal Erratic

DTC C0035 18

Left Front Wheel Speed Sensor Circuit Low Signal Amplitude

DTC C0035 5A

Left Front Wheel Speed Sensor Circuit Not Plausible

DTC C0040 06

Right Front Wheel Speed Sensor Circuit Low Voltage/Open

DTC C0040 0F

Right Front Wheel Speed Sensor Circuit Signal Erratic

DTC C0040 18

Right Front Wheel Speed Sensor Circuit Low Signal Amplitude

DTC C0040 5A

Right Front Wheel Speed Sensor Circuit Not Plausible

DTC C0045 06

Left Rear Wheel Speed Sensor Circuit Low Voltage/Open

DTC C0045 0F

Rear Wheel Speed Sensor Circuit Signal Erratic

DTC C0045 18

Left Rear Wheel Speed Sensor Circuit Low Signal Amplitude

DTC C0045 5A

Left Rear Wheel Speed Sensor Circuit Not Plausible

DTC C0050 06

Right Rear Wheel Speed Sensor Circuit Low Voltage/Open

DTC C0050 0F

Right Rear Wheel Speed Sensor Circuit Signal Erratic

DTC C0050 18

Right Rear Wheel Speed Sensor Circuit Low Signal Amplitude

DTC C0050 5A

Right Rear Wheel Speed Sensor Circuit Not Plausible

Diagnostic Fault Information

	Short to	**Open/High**	**Short to**	

Circuit	Ground	Resistance	Voltage	Signal Performance
Left Front Wheel Speed Sensor Signal	C0035 06	C0035 06	C0035 06	C0035 0F, C0035 18, C0035 5A
Left Front Wheel Speed Sensor Low Reference	-	C0035 06	-	C0035 0F, C0035 18, C0035 5A
Right Front Wheel Speed Sensor Signal	C0040 06	C0040 06	C0040 06	C0040 0F, C0040 18, C0040 5A
Right Front Wheel Speed Sensor Low Reference	-	C0040 06	-	C0040 0F, C0040 18, C0040 5A
Left Rear Wheel Speed Sensor Signal	C0045 06	C0045 06	C0045 06	C0045 0F, C0045 18, C0045 5A
Left Rear Wheel Speed Sensor Low Reference	-	C0045 06	-	C0045 0F, C0045 18, C0045 5A
Right Rear Wheel Speed Sensor Signal	C0050 06	C0050 06	C0050 06	C0050 0F, C0050 18, C0050 5A
Right Rear Wheel Speed Sensor Low Reference	-	C0050 06	-	C0050 0F, C0050 18, C0050 5A

Component	Condition	DTC Symptom Bytes
Wheel Speed Sensor	• Physical damage • Debris on the wheel speed sensor or the encoder ring • Loose or worn wheel bearing • Loose or improperly mounted sensor • Air gap between the wheel speed sensor and the encoder ring too large • Water intrusion in the wiring harness	0F, 18 or 5A

Circuit/System Description

The wheel speeds are detected by active wheel speed sensors and encoder rings. The encoder ring consists of permanent magnets. Each wheel speed sensor receives ignition voltage through the signal circuit from the electronic brake control module. As the wheel spins, the wheel speed sensor produces square wave signal on the signal circuit to the electronic brake control module. The electronic brake control module uses the frequency of the square wave signal to calculate the actual wheel speed.

Conditions for Running the DTC

C0035 06 - C0050 06

Ignition ON.

C0035 0F - C0050 0F

- Ignition ON.
- Vehicle speed is greater than 35 km/h (22 MPH).

C0035 18 - C0050 18

- Ignition ON.
- Vehicle speed is greater than 10 km/h (6 MPH).

C0035 5A - C0050 5A

- Ignition ON.
- Vehicle speed is greater than 20 km/h (13 MPH).

Conditions for Setting the DTC

C0035 06 - C0050 06

- A short to voltage, is detected on the wheel speed sensor signal circuit.
- A short to ground or an open/high resistance is detected on the wheel speed sensor signal circuit.
- An open/high resistance is detected in the wheel speed sensor low reference circuit.

C0035 0F - C0050 0F

An erratic wheel speed sensor signal is detected.

C0035 18 - C0050 18

A missing wheel speed sensor signal is detected.

C0035 5A - C0050 5A

The difference between the fastest and the slowest wheel speed is greater than 50%.

Action Taken When the DTC Sets

- The ABS indicator turns ON.
- A message may be displayed.
- The traction/stability control indicator turns ON.
- The electronic brake control module disables the ABS, the traction control, and the electronic stability control for the duration of the ignition cycle.

Conditions for Clearing the DTC

- The condition for setting the DTC is no longer present.
- The history DTC will clear after 40 consecutive fault-free drive cycles have occurred.

Diagnostic Aids

- Do not use a magnet to clean the encoder ring.
- Inspect the wheel hub bearing encoder ring for rust or corrosion.
- If two or more wheel speed sensors are inoperative, diagnose each wheel speed sensor individually.
- If any of the symptom codes 0F, 18 or 5A are set, refer to the Diagnostic Fault Information table for possible mechanical faults or conditions.
- If the customer comments that the ABS indicator is ON only during moist environmental conditions (rain, snow, vehicle wash, etc.), inspect the wheel speed sensor wiring for signs of water intrusion.

Reference Information

Schematic Reference

Antilock Brake System Schematics

Connector End View Reference

COMPONENT CONNECTOR END VIEWS - INDEX

Description and Operation

ABS Description and Operation

Electrical Information Reference

- **Circuit Testing**
- **Connector Repairs**
- **Testing for Intermittent Conditions and Poor Connections**
- **Wiring Repairs**

Scan Tool Reference

Control Module References for scan tool information

Circuit/System Verification

1. Test drive the vehicle in a straight line at a speed greater than 40 km/h (25 MPH).
2. Verify all scan tool Wheel Speed Sensor parameters are within 1.6 km/h (1 MPH) of each other.
    - **If any parameter is not within 1.6 km/h (1 MPH) of each other**

      Refer to Circuit/System Testing below

    - **If each parameter is within 1.6 km/h (1 MPH) of each other**
3. All OK.

Circuit/System Testing

NOTE: If any of the symptom codes 0F, 18 or 5A are set, refer to the Diagnostic Fault Information table for possible mechanical faults or conditions.

1. Ignition OFF, disconnect the harness connector at the appropriate B5 Wheel Speed Sensor. It may take up to 2 minutes for all vehicle systems to power down.
2. Test for less than 5 ohms between the low reference circuit terminal 2 and ground.
    - **If 5 ohms or greater**
    1. Ignition OFF, disconnect the harness connector at the K17 Electronic Brake Control Module.
    2. Test for less than 2 ohms in the low reference circuit end to end.
        - If 2 ohms or greater, repair the open/high resistance in the circuit.
        - If less than 2 ohms, replace the K17 Electronic Brake Control Module.
    - **If less than 5 ohms**
3. Ignition ON.
4. Test for greater than 11 V between the signal circuit terminal 1 and ground.
    - **If less than 11 V**
    1. Ignition OFF, disconnect the harness connector at the K17 Electronic Brake Control Module.
    2. Test for infinite resistance between the signal circuit and ground.
        - If less than infinite resistance, repair the short to ground on the circuit.
        - If infinite resistance.
    3. Test for less than 2 ohms in the signal circuit end to end.
        - If 2 ohms or greater, repair the open/high resistance in the circuit.
        - If less than 2 ohms, replace the K17 Electronic Brake Control Module.
    - **If 11 V or greater**
5. Install a 3 A fused jumper wire at the signal circuit terminal 1, ignition ON.
6. Verify the scan tool Wheel Speed Sensor parameter changes while rapidly tapping the fused jumper wire to the low reference circuit terminal 2.
    - **If the parameter does not change**
    1. Ignition OFF, disconnect the harness connector at the K17 Electronic Brake Control Module, ignition ON.
    2. Test for less than 1 V between the signal circuit and ground.
        - If 1 V or greater, repair the short to voltage on the circuit.
        - If less than 1 V
    3. Replace the K17 Electronic Brake Control Module.
    - **If the parameter changes**
7. Test or replace the B5 Wheel Speed Sensor.

Repair Instructions

Perform the **Diagnostic Repair Verification** after completing the repair.

- **Front Wheel Speed Sensor Replacement**
- **Rear Wheel Speed Sensor Replacement (Disc Brake)**, **Rear Wheel Speed Sensor Replacement (Drum Brake)**
- **Control Module References** for Electronic Brake Control Module replacement, programming and setup

DTC C0110

Diagnostic Instructions

- Perform the **Diagnostic System Check - Vehicle** prior to using this diagnostic procedure.
- Review **Strategy Based Diagnosis** for an overview of the diagnostic approach.
- **Diagnostic Procedure Instructions** provides an overview of each diagnostic category.

DTC Descriptors

DTC C0110 00

Pump Motor Circuit Malfunction

DTC C0110 04

Pump Motor Circuit Open

DTC C0110 61

Pump Motor Stuck

Diagnostic Fault Information

Circuit	Short to Ground	Open/High Resistance	Short to Voltage	Signal Performance
B+	C0110 00, C0110 04	C0110 00, C0110 04	-	C0110 61
Ground	-	U0121	-	-

Component	Condition	DTCs
Pump Motor	• Wear • Damage • Lock	C0110 00 or C0110 61

Circuit/System Description

The pump motor is an integral part of the brake pressure modulator, while the pump motor relay is integral to

the electronic brake control module. The pump motor relay is not engaged during normal system operation. When the ABS, and the traction/stability operation is required, the electronic brake control module activates the pump motor relay and turns the pump motor ON.

Conditions for Running the DTC

Ignition ON.

Conditions for Setting the DTC

- A faulty pump motor or pump motor relay is detected.
- A short to ground or an open/high resistance circuit is detected.

Action Taken When the DTC Sets

- The ABS indicator turns ON.
- The traction/stability control indicator turns ON.
- The electronic brake control module disables the ABS, the traction control, and the stability control for the duration of the ignition cycle.

Conditions for Clearing the DTC

- A current DTC clears when the diagnostic runs and passes.
- The electronic brake control module will turn off the indicators and enable the system functions in the next ignition cycle after driving at a speed of greater than 16 km/h (10 MPH) with no faults detected.

Reference Information

Schematic Reference

Antilock Brake System Schematics

Connector End View Reference

COMPONENT CONNECTOR END VIEWS - INDEX

Description and Operation

ABS Description and Operation

Electrical Information Reference

- **Circuit Testing**
- **Connector Repairs**
- **Testing for Intermittent Conditions and Poor Connections**
- **Wiring Repairs**

Scan Tool Reference

Control Module References for scan tool information

Circuit/System Verification

1. Ignition ON.
2. Verify the ABS Pump Motor turns ON and OFF when commanding the ABS Pump Motor Increase and Decrease with a scan tool.
   - **If the pump motor does not turn ON and OFF**

     Refer to Circuit/System Testing below.

   - **If the pump motor turns ON and OFF**
3. All OK.

Circuit/System Testing

1. Ignition OFF and all vehicle systems OFF, disconnect the harness connector at the K17 Electronic Brake Control Module. It may take up to 2 minutes for all vehicle systems to power down.
2. Test for less than 10 ohms between the ground circuit terminal 13 and ground.
   - **If 10 ohms or greater**
   1. Ignition OFF.
   2. Test for less than 2 ohms in the ground circuit end to end.
      - If 2 ohms or greater, repair the open high/resistance in the circuit.
      - If less than 2 ohms, repair open high/resistance in the ground connection.
   - **If less than 10 ohms**
3. Ignition ON.
4. Verify that a test lamp illuminates between the B+ circuit terminal 1 and ground.
   - **If the test lamp does not illuminate and the circuit fuse is good**
   1. Ignition OFF.
   2. Test for less than 2 ohms in the B+ circuit end to end.
      - If 2 ohms or greater, repair the open/high resistance in the circuit.
      - If less than 2 ohms, verify the fuse is not open and there is voltage at the fuse.
   - **If the test lamp does not illuminate and the circuit fuse is open**
   1. Ignition OFF.
   2. Test for infinite resistance between the B+ circuit and ground.
      - If less than infinite resistance, repair the short to ground on the circuit.
      - If infinite resistance, replace the K17 Electronic Brake Control Module.
   - **If the test lamp illuminates**
5. Replace the Q5 Brake Pressure Modulator.

6. Verify the DTC does not set while operating the vehicle within the Conditions for Running the DTC.
   - **If the DTC sets**

     Replace the K17 Electronic Brake Control Module.

   - **If the DTC does not set**
7. All OK.

Repair Instructions

Perform the **Diagnostic Repair Verification** after completing the repair.

- **Brake Pressure Modulator Valve Replacement**
- **Control Module References** for Electronic Brake Control Module replacement, programming and setup

DTC C0131

Diagnostic Instructions

- Perform the **Diagnostic System Check - Vehicle** prior to using this diagnostic procedure.
- Review **Strategy Based Diagnosis** for an overview of the diagnostic approach.
- **Diagnostic Procedure Instructions** provides an overview of each diagnostic category.

DTC Descriptors

DTC C0131 00

Traction Control System Pressure Circuit Malfunction

DTC C0131 4B

Traction Control System Pressure Circuit Calibration Not Learned

DTC C0131 5A

Traction Control System Pressure Circuit Not Plausible

Circuit/System Description

The electronic brake control module monitors the brake pressure sensor which is integral to the brake pressure modulator. The body control module monitors the brake pedal position sensor signal when the brake pedal is applied and sends a serial data message to the electronic brake control module indicating the brake pedal position. The electronic brake control module compares the brake pressure to the brake pedal position and uses this information for vehicle stability control.

Conditions for Running the DTC

Ignition ON.

Conditions for Setting the DTC

C0131 00

The electronic brake control module detects the brake pressure is out of the specified range.

C0131 4B

The electronic brake control module detects the brake pressure sensor is not calibrated.

C0131 5A

- The electronic brake control module detects an invalid or erratic brake pressure.
- The brake pressure is not plausible with the vehicle acceleration or deceleration.
- The brake pressure is not plausible with the brake pedal position sensor signal.

Action Taken When the DTC Sets

- The traction/stability control indicator turns ON.
- The electronic brake control module disables the traction control and stability control for the duration of the ignition cycle.

Conditions for Clearing the DTC

- A current DTC clears when the diagnostic runs and passes.
- The history DTC will clear after 40 consecutive fault-free ignition cycles have occurred.

Diagnostic Aids

- Diagnose all other stop lamp DTCs or Symptoms prior to performing this diagnostic procedure.
- This DTC may set if the electronic brake control module is loosely attached to the hydraulic unit. The fasteners should be checked for proper torque.

Reference Information

Schematic Reference

Antilock Brake System Schematics

Connector End View Reference

COMPONENT CONNECTOR END VIEWS - INDEX

Description and Operation

ABS Description and Operation

Electrical Information Reference

- **Circuit Testing**
- **Connector Repairs**
- **Testing for Intermittent Conditions and Poor Connections**
- **Wiring Repairs**

Scan Tool Reference

Control Module References for scan tool information

Circuit/System Verification

DTC C0131 4B

1. Ignition ON.
2. Verify that DTC C0131 4B is not set.
    - **If the DTC is set**
    1. Perform the **Brake Pressure Modulator Valve Pressure Sensor Calibration**.
    2. Verify the DTC does not set.
        - If the DTC sets, replace the Q5 Brake Pressure Modulator.
        - If the DTC does not set.
    3. All OK.
    - **If the DTC is not set**
3. All OK.

DTC C0131 00 or C0131 5A

1. Ignition ON.
2. Verify that DTCs C0131 00 or C0131 5A are not set.
    - **If either DTC is set**
    1. Replace the Q5 Brake Pressure Modulator.
    2. Ignition ON.
    3. Verify the DTC does not set.
        - If the DTC sets, replace the K17 Electronic Brake Control Module.
        - If the DTC does not set.
    4. All OK.
    - **If the DTCs are not set**
3. All OK.

Repair Instructions

Perform the **Diagnostic Repair Verification** after completing the repair.

- **Brake Pressure Modulator Valve Replacement**
- **Control Module References** for Electronic Brake Control Module replacement, programming and setup

DTC C0161

Diagnostic Instructions

- Perform the **Diagnostic System Check - Vehicle** prior to using this diagnostic procedure.
- Review **Strategy Based Diagnosis** for an overview of the diagnostic approach.
- **Diagnostic Procedure Instructions** provides an overview of each diagnostic category.

DTC Descriptor

DTC C0161 5A

Antilock Braking System Brake Switch Circuit Not Plausible

Circuit/System Description

When the brake pedal is applied, the body control module sends a serial data message to the electronic brake control module in reference to the brake pedal positions. The electronic brake control module compares the correlation between the brake pedal position and the amount of brake pressure it senses from the brake pressure sensor, which is internal to the brake pressure modulator. It uses this information to control the vehicle during an stability event.

Conditions for Running the DTC

Ignition ON.

Conditions for Setting the DTC

- The electronic brake control module detects four accelerations from standstill to a vehicle speed greater 40 km/h (26 MPH) without any brake pedal position signal changes.
- The electronic brake control module detects the vehicle speed is greater than 20 km/h (13 MPH), the brake pedal is applied for six minutes, and brake pressure is less than 15 bar (218 PSI).

Conditions for Clearing the DTC

A current DTC clears when the diagnostic runs and passes.

Action Taken When the DTC Sets

No actions are taken

Diagnostic Aids

This DTC may set if the brake pedal is applied while accelerating.

Reference Information

Schematic Reference

Antilock Brake System Schematics

Connector End View Reference

COMPONENT CONNECTOR END VIEWS - INDEX

Description and Operation

ABS Description and Operation

Electrical Information Reference

- **Circuit Testing**
- **Connector Repairs**
- **Testing for Intermittent Conditions and Poor Connections**
- **Wiring Repairs**

Scan Tool Reference

Control Module References for scan tool information

Circuit/System Verification

1. Ignition ON.
2. Verify DTC C0277 or C0890 is not set.
   - **If either DTC is set**

     Refer to **DTC C0277 or C0890** .

   - **If either DTC is not set**
3. Verify the brake pedal position sensor or the brake pedal is not binding causing residual brake pressure to be detected, while the brake lights operate properly.
   - **If a condition is found**

     Repair or replace the applicable component.

   - **If a condition is not found**

4. Verify the scan tool Electronic Brake Control Module Brake Pedal Position Sensor parameter changes between Active and Inactive while applying and releasing the brake pedal.
    - **If the parameter does not change between Active and Inactive**

      Refer to **Symptoms - Lighting** .

    - **If the parameter changes between Active and Inactive**
5. Refer to Diagnostic Aids, All OK.

DTC C0186, C018B, C0196, C019B, OR C0287

Diagnostic Instructions

- Perform the **Diagnostic System Check - Vehicle** prior to using this diagnostic procedure.
- Review **Strategy Based Diagnosis** for an overview of the diagnostic approach.
- **Diagnostic Procedure Instructions** provides an overview of each diagnostic category.

DTC Descriptors

DTC C0186 5A

Lateral Acceleration Sensor Circuit Not Plausible

DTC C0186 71

Lateral Acceleration Sensor Circuit Invalid Data

DTC C018B 5A

Multi-Axis Acceleration Sensor Signal Not Plausible

DTC C0196 00

Yaw Rate Circuit Malfunction

DTC C0196 5A

Yaw Rate Signal Not Plausible

DTC C0196 71

Yaw Rate Signal Invalid Data

DTC C019B 5A

Yaw Rate Signal Not Plausible

DTC C0287 4B

Longitudinal Acceleration Sensor Circuit Calibration Not Learned

DTC C0287 5A

Longitudinal Acceleration Sensor Circuit Not Plausible

DTC C0287 71

Longitudinal Acceleration Sensor Circuit Invalid Data

Diagnostic Fault Information

Circuit	Short to Ground	Open/High Resistance	Short to Voltage	Signal Performance
12V Reference	U0125, U0126	U0125, U0126	-	-
CAN Bus High Serial Data	U0073, U0100, U0101, U0125, U0126, U0140	U0073, U0100, U0101, U0125, U0126, U0140	U0073, U0100, U0101, U0125, U0126, U0140	C0186 5A, C0186 71, C018B 5A, C0196 00, C0196 5A, C0196 71, C019B 5A, C0287 5A, C0287 71
CAN Bus Low Serial Data	U0073, U0100, U0101, U0125, U0126, U0140	U0073, U0100, U0101, U0125, U0126, U0140	U0073, U0100, U0101, U0125, U0126, U0140	C0186 5A, C0186 71, C018B 5A, C0196 00, C0196 5A, C0196 71, C019B 5A, C0287 5A, C0287 71
Ground	-	U0125	-	-

Circuit/System Description

The yaw rate and lateral acceleration sensors are combined into one multi-axis acceleration sensor module, external to the electronic brake control module. The electronic brake control module supplies a 12 V reference voltage to the multi-axis acceleration sensor module. The multi-axis acceleration sensor module communicates with the electronic brake control module via serial data circuit. The electronic brake control module activates the stability control function depending on multi-axis acceleration sensor module input.

Conditions for Running the DTC

Ignition ON.

Conditions for Setting the DTC

C0186 5A

The lateral acceleration sensor signal is not plausible with the yaw rate sensor signal, steering angle sensor signal and vehicle speed for 0.5-2 s.

C0186 71

The lateral acceleration sensor signal offset is out of specified range.

C018B 5A

The multi-axis acceleration sensor signal is not plausible.

C0196 00

The yaw rate sensor signal is out specified range.

C0196 5A or C019B 5A

The yaw rate sensor signal is not plausible with the lateral acceleration sensor signal, steering angle sensor signal and vehicle speed. for 0.25-2 s.

C0196 71

The yaw rate sensor offset is out of specified range.

C0287 4B

The longitudinal acceleration sensor is not calibrated.

C0287 5A

The longitudinal acceleration sensor signal is not plausible with the vehicle speed.

C0287 71

The longitudinal acceleration sensor offset is out of specified range.

Action Taken When the DTC Sets

- The electronic brake control module disables the stability control for the duration of the ignition cycle.
- The traction control/stability control-active indicator turns ON.

Conditions for Clearing the DTC

- A current DTC clears when the diagnostic runs and passes.
- The electronic brake control module will turn OFF the indicator in the next ignition cycle.

Reference Information

Schematic Reference

Antilock Brake System Schematics

Connector End View Reference

COMPONENT CONNECTOR END VIEWS - INDEX

Description and Operation

ABS Description and Operation

Electrical Information Reference

- **Circuit Testing**
- **Connector Repairs**
- **Testing for Intermittent Conditions and Poor Connections**
- **Wiring Repairs**

Scan Tool Reference

Control Module References for scan tool information

Circuit/System Testing

1. Ignition ON
2. Verify that DTC C0287 4B is not set.
    - **If the DTC is set**

      Perform the **Vehicle Yaw Sensor Learn**.

    - **If the DTC is not set**
3. Verify the B119 Multi-axis Acceleration Sensor is installed correctly.
    - **If loose or incorrect installation**

      Correct the installation of the component.

    - **If installed correctly**
4. Ignition OFF, scan tool disconnected, and all vehicle systems OFF, disconnect the harness connector at the B119 Multi-axis Acceleration Sensor. It may take up to 2 minutes for all vehicle systems to power down.
5. Test for less than 10 ohms between the ground circuit terminal 6 and ground.
    - **If 10 ohms or greater**
    1. Ignition OFF.

2. Test for less than 2 ohms in the ground circuit end to end.
    - If 2 ohms or greater, repair the open/high resistance in the circuit.
    - If less than 2 ohms, repair the open/high resistance in the ground connection.
- **If less than 10 ohms**

6. Ignition ON.
7. Verify a test lamp illuminates between the 12 V reference circuit terminal 5 and ground.
    - **If the test lamp does not illuminate**
    1. Ignition OFF, disconnect the harness connector at the B99 Steering Wheel Angle Sensor and the K17 Electronic Brake Control Module.
    2. Test for infinite resistance between the 12 V reference circuit and ground.
        - If less than infinite resistance, repair the short to ground on the circuit.
        - If infinite resistance
    3. Test for less than 2 ohms in the 12 V reference circuit end to end.
        - If 2 ohms or greater, repair the open/high resistance in the circuit.
        - If less than 2 ohms, replace the K17 Electronic Brake Control Module.
    - **If the test lamp illuminates**
8. Replace the B119 Multi-axis Acceleration Sensor.

Repair Instructions

Perform the **Diagnostic Repair Verification** after completing the repair.

- **Vehicle Yaw Sensor Replacement**
- **Control Module References** for Electronic Brake Control Module replacement, programming and setup.

DTC C0280

Diagnostic Instructions

- Perform the **Diagnostic System Check - Vehicle** prior to using this diagnostic procedure.
- Review **Strategy Based Diagnosis** for an overview of the diagnostic approach.
- **Diagnostic Procedure Instructions** provides an overview of each diagnostic category.

DTC Descriptor

DTC C0280 54

Stability System Active Too Long High Temperature

Circuit/System Description

The solenoid valves are integral parts of the brake pressure modulator. The modulator contains an isolation solenoid valve and a dump solenoid valve for each wheel along with a traction/stability control supply solenoid

valve and isolation solenoid valve for each brake circuit. The solenoid valves are not engaged during normal system operation. When the ABS, traction control or stability control operation is required the electronic brake control module turns the required solenoid valves ON. The electronic brake control module detects an over temperature condition with one or more of the solenoids due to an extended ABS, traction control or stability control event lasting more than fifteen seconds.

Conditions for Running the DTC

Ignition ON

Conditions for Setting the DTC

Stability control is active for more than 15 seconds.

Action Taken When the DTC Sets

- The ABS indicator turns ON.
- A Brakes Overheated message may be displayed.
- The traction/stability control indicator turns ON, if equipped with electronic stability control.
- The electronic brake control module disables the ABS, the traction control system and the electronic stability control system for the duration of the ignition cycle.

Conditions for Clearing the DTC

The condition for setting the DTC is no longer present.

Diagnostic Aids

This DTC may set due to extended operation of the ABS, the traction control or the stability control.

Reference Information

Schematic Reference

Antilock Brake System Schematics

Connector End View Reference

COMPONENT CONNECTOR END VIEWS - INDEX

Description and Operation

ABS Description and Operation

Electrical Information Reference

- **Circuit Testing**

- **Connector Repairs**
- **Testing for Intermittent Conditions and Poor Connections**
- **Wiring Repairs**

Scan Tool Reference

Control Module References for scan tool information

Circuit/System Testing

NOTE: Since most occurrences of this DTC are caused by excessive ABS, traction control or stability control usage, review with the customer the conditions under which the DTC set.

1. Ignition ON.
2. Verify that DTC C0186, C018B, C0196, C019B, C0287, or C0710 is not set.
   - **If any of the DTCs are set**

     Refer to **Diagnostic Trouble Code (DTC) List - Vehicle** .

   - **If none of the DTCs are set**
3. Ignition OFF, allow the Q5 Brake Pressure Modulator to cool down to ambient temperature, ignition ON.
4. Verify that DTC C0280 54 does not set while driving the vehicle under normal braking conditions.
   - **If the DTC is set**

     Replace the K17 Electronic Brake Control Module.

   - **If the DTC is not set**
5. All OK.

Repair Instructions

Perform the **Diagnostic Repair Verification** after completing the repair.

Control Module References for Electronic Brake Control Module replacement, programming and setup

DTC C0710

Diagnostic Instructions

- Perform the **Diagnostic System Check - Vehicle** prior to using this diagnostic procedure.
- Review **Strategy Based Diagnosis** for an overview of the diagnostic approach.
- **Diagnostic Procedure Instructions** provides an overview of each diagnostic category.

DTC Descriptors

DTC C0710 00

Steering Position Signal Malfunction

DTC C0710 42

Steering Position Signal Calibration Not Programmed

DTC C0710 71

Steering Position Signal Invalid Data

DTC C0710 5A

Steering Position Signal Not Plausible

Diagnostic Fault Information

Circuit	Short to Ground	Open/High Resistance	Short to Voltage	Signal Performance
12 V Reference	U0125, U0126	U0125, U0126	-	-
Ground	-	U0125, U0126, C0710 5A	-	-

Circuit/System Description

The steering wheel angle sensor receives a 12 V reference voltage from the electronic brake control module. The electronic brake control module receives serial data inputs from the steering wheel angle sensor identifying the position and direction of the steering wheel rotation. The module utilizes this signal to calculate the driver intended driving direction.

Conditions for Running the DTC

- Ignition ON.
- Vehicle speed is greater than 20 km/h (13 MPH).

Conditions for Setting the DTC

C0710 00

The steering angle signal is invalid.

C0710 42

The steering wheel angle sensor is not calibrated.

C0710 5A

- No steering angle signal
- The steering angle signal is not plausible with the yaw rate signal.
- The steering wheel angle sensor offset is out of the specified range.

Action Taken When the DTC Sets

- The traction/stability control indicator turns ON.
- The electronic brake control module disables the traction control, the stability control and the hill start assist for the duration of the ignition cycle.

Conditions for Clearing the DTC

- The DTC clears the DTC when the diagnostic runs and passes.
- The history DTC will clear after 40 consecutive fault-free ignition cycles have occurred.

Diagnostic Aids

- Improperly mounted or loose steering wheel angle sensor.
- The car should not pull in either direction causing the steering wheel to be off center while driving in a straight line on a level surface.
- Confirm that all tires are of the proper size and that all are matching brands. Check and adjust all tires to the stated cold air pressure as identified on the tire placard. If a mis-sized or non-matching brand tire is present, inform the customer that in order for the vehicle stability enhanced system to function normally, tires need to be a uniform size and rolling diameter.

Reference Information

Schematic Reference

Antilock Brake System Schematics

Connector End View Reference

COMPONENT CONNECTOR END VIEWS - INDEX

Description and Operation

ABS Description and Operation

Electrical Information Reference

- **Circuit Testing**
- **Connector Repairs**
- **Testing for Intermittent Conditions and Poor Connections**

- **Wiring Repairs**

Scan Tool Reference

Control Module References for scan tool information

Circuit/System Verification

1. Ignition ON.
2. Verify the scan tool Steering Wheel Angle parameter value constantly changes from +550 to -550° as the steering wheel is turned through its entire range from left to right.
   - **If the parameter does not change**

     Refer to Circuit/System Testing below.

   - **If the parameter changes**
3. All OK.

Circuit/System Testing

1. Ignition ON.
2. Verify that DTC U0125 or U0126 is not set.
   - **If DTC U0125 or U0126 is set**

     Refer to **Diagnostic Trouble Code (DTC) List - Vehicle** .

   - **If DTC U0125 or U0126 is not set**
3. Verify that DTC C0710 42 or C0710 5A is not set.
   - **If DTC C0710 42 or C0710 5A is set**

     Perform the **Steering Angle Sensor Centering**.

   - **If DTC C0710 42 or C0710 5A is not set**
4. Verify the B99 Steering Wheel Angle Sensor is installed correctly.
   - **If loose or incorrect installation**

     Correct the installation or replace the component.

   - **If correct installation**
5. Ignition OFF and all vehicle systems OFF, disconnect the harness connector at the B99 Steering Wheel Angle Sensor. It may take up to 2 minutes for all vehicle systems to power down.
6. Test for less than 10 ohms between the ground circuit terminal 6 and ground.
   - **If 10 ohms or greater**
     1. Ignition OFF.

2. Test for less than 2 ohms in the ground circuit end to end.
    - If 2 ohms or greater, repair the open/high resistance in the circuit.
    - If less than 2 ohms, repair the open/high resistance in the ground connection.
- **If less than 10 ohms**

7. Ignition ON.
8. Verify a test lamp illuminates between the 12 V reference circuit terminal 5 and ground.
    - **If the test lamp does not illuminate**
    1. Ignition OFF, disconnect the harness connector at the B119 Multi-axis Acceleration Sensor and the K17 Electronic Brake Control Module.
    2. Test for infinite resistance between the 12 V reference circuit and ground.
        - If less than infinite resistance, repair the short to ground on the circuit.
        - If infinite resistance
    3. Test for less than 2 ohms in the 12 V reference circuit end to end.
        - If 2 ohms or greater, repair the open/high resistance in the circuit.
        - If less than 2 ohms, replace the K17 Electronic Brake Control Module.
    - **If the test lamp illuminates**
9. Replace the B99 Steering Wheel Angle Sensor.

Repair Instructions

Perform the **Diagnostic Repair Verification** after completing the repair.

- **Steering Angle Sensor Replacement**
- **Control Module References** for Electronic Brake Control Module replacement, programming and setup

DTC C1207-C1210, C1221-C1228, OR C1232-C1235

Diagnostic Instructions

- Perform the **Diagnostic System Check - Vehicle** prior to using this diagnostic procedure.
- Review **Strategy Based Diagnosis** for an overview of the diagnostic approach.
- **Diagnostic Procedure Instructions** provides an overview of each diagnostic category.

DTC Descriptors

DTC C1207 00

Left Front Wheel Speed Sensor Circuit High Input

DTC C1208 00

Right Front Wheel Speed Sensor Circuit High Input

DTC C1209 00

Left Rear Wheel Speed Sensor Circuit High Input

DTC C1210 00

Right Rear Wheel Speed Sensor Circuit High Input

DTC C1221 00

Left Front Wheel Speed Sensor Circuit Malfunction

DTC C1222 00

Right Front Wheel Speed Sensor Circuit Malfunction

DTC C1223 00

Left Rear Wheel Speed Sensor Circuit Malfunction

DTC C1224 00

Right Rear Wheel Speed Sensor Circuit Malfunction

Circuit/System Description

Each Wheel Speed Sensor receives ignition voltage through the signal high circuit from the Electronic Brake Control Module. Wheel speeds are detected by Active Wheel Speed Sensors and Encoder Rings. The Magnetic Encoder Rings consists of multiple North and South Pole pairs surrounding the outer circumference. When the Encoder Ring rotates and passes by the Wheel Speed Sensor; it generates a sign wave in the Wheel Speed Sensor. The sensor converts the signal to a digital square wave; the square wave values switch between 7mA (Low) and 14mA (High) DC current. As the wheel spins, the module uses the frequency of the square wave signal to calculate the wheel speeds.

Conditions for Running the DTC

Vehicle speed is greater than 12.9 km/h (8 MPH).

Conditions for Setting the DTC

A supervised periodic message indicates the wheel speed serial data has not been received.

Action Taken When the DTC Sets

- The Traction/stability Control indicator turns ON.
- The Electric Brake Control Module disables the traction control, the stability control and the Hill Start Assist for the duration of the ignition cycle.

Conditions for Clearing the DTC

- The DTC clears when the diagnostic runs and passes.
- The history DTC will clear after 40 consecutive fault-free drive cycles have occurred.

Reference Information

Schematic Reference

Antilock Brake System Schematics

Connector End View Reference

COMPONENT CONNECTOR END VIEWS - INDEX

Description and Operation

ABS Description and Operation

Electrical Information Reference

- **Circuit Testing**
- **Connector Repairs**
- **Testing for Intermittent Conditions and Poor Connections**
- **Wiring Repairs**

Scan Tool Reference

Control Module References for scan tool information

Circuit/System Verification

1. Verify DTC C0035, C0040, C0045, or C0050 is not set.
   - **If any of the DTCs are set**

     Refer to **DTC C0035, C0040, C0045, or C0050**.

   - **If none of the DTCs are set**
2. Replace the K17 Electronic Brake Control Module.
3. Verify DTC C1207, C1208, C1209, C1210, C1221, C1222, C1223, or C1224 does not set while operating the vehicle within the Conditions for Running the DTC.
   - **If any of the DTCs are set**

     Replace the module that set the DTC.

- **If none of the DTCs are set**

4. All OK.

Repair Instructions

Perform the **Diagnostic Repair Verification** after completing the repair.

Control Module References for Electronic Brake Control Module or module replacement, programming and setup

DTC C1251

Diagnostic Instructions

- Perform the **Diagnostic System Check - Vehicle** prior to using this diagnostic procedure.
- Review **Strategy Based Diagnosis** for an overview of the diagnostic approach.
- **Diagnostic Procedure Instructions** provides an overview of each diagnostic category.

DTC Descriptors

DTC C1251

Lateral Acceleration Sensor Performance

For symptom byte information refer to **Symptom Byte List** .

Circuit/System Description

The yaw rate, lateral acceleration and longitudinal acceleration sensors are combined into one multi-axis acceleration sensor, external to the electronic brake control module. The electronic brake control module supplies ignition voltage to the multi-axis acceleration sensor. The multi-axis acceleration sensor communicates with the electronic brake control module via serial data. The electronic brake control module activates the stability control function depending on the multi-axis acceleration sensor input. The transmission control module sets this DTC.

Conditions for Running the DTC

Engine running

Conditions for Setting the DTC

The transmission control module detects a fault that prevents it from performing a hill hold start assist function.

Action Taken When the DTC Sets

- The traction/stability control indicator turns ON.
- The electronic brake control module disables the traction control and the stability control for the duration

of the ignition cycle.

Conditions for Clearing the DTC

- The DTC clears when the diagnostic runs and passes.
- The history DTC will clear after 40 consecutive fault-free ignition cycles have occurred.

Reference Information

Schematic Reference

Antilock Brake System Schematics

Connector End View Reference

COMPONENT CONNECTOR END VIEWS - INDEX

Description and Operation

ABS Description and Operation

Electrical Information Reference

- **Circuit Testing**
- **Connector Repairs**
- **Testing for Intermittent Conditions and Poor Connections**
- **Wiring Repairs**

Scan Tool Reference

Control Module References for scan tool information

Circuit/System Verification

1. Ignition ON.
2. Verify that no other DTCs are set except for C1251 is set.
   - **If any other DTCs are set**

     Refer to **Diagnostic Trouble Code (DTC) List - Vehicle** .

   - **If no other DTCs are set**
3. Replace the K71 Transmission Control Module.
4. Verify that DTC C1251 does not set while operating the vehicle within the Conditions for Running the DTC.
   - **If the DTC sets**

Replace the K17 Electronic Brake Control Module.

- **If the DTC does not set**

5. All OK.

Repair Instructions

Perform the **Diagnostic Repair Verification** after completing the repair.

Control Module References for Electronic Brake Control Module or Transmission Control Module replacement, programming and setup

DTC P0856

Diagnostic Instructions

- Perform the **Diagnostic System Check - Vehicle** prior to using this diagnostic procedure.
- Review **Strategy Based Diagnosis** for an overview of the diagnostic approach.
- **Diagnostic Procedure Instructions** provides an overview of each diagnostic category.

DTC Descriptor

DTC P0856

Traction Control Torque Request Circuit

Circuit/System Description

When traction control is active, the electronic brake control module sends a serial data message to the engine control module requesting torque reduction. When certain electronic brake control module DTCs are set, the engine control module will not be able to perform the torque reduction for traction control. A serial data message is sent to the electronic brake control module indicating that traction control is not allowed.

Conditions for Running the DTC

Engine running.

Conditions for Setting the DTC

The engine control module detects a fault that prevents it from performing a traction control function and sends a serial data message to the electronic brake control module indicating that torque reduction is not allowed.

Action Taken When the DTC Sets

- The traction/stability control indicator turns ON.
- The electronic brake control module disables the traction control and stability control for the duration of the ignition cycle.

Conditions for Clearing the DTC

- A current DTC clears when the diagnostic runs and passes.
- The electronic brake control module will turn OFF the indicator in the next ignition cycle.

Reference Information

Schematic Reference

Antilock Brake System Schematics

Connector End View Reference

COMPONENT CONNECTOR END VIEWS - INDEX

Description and Operation

ABS Description and Operation

Electrical Information Reference

- **Circuit Testing**
- **Connector Repairs**
- **Testing for Intermittent Conditions and Poor Connections**
- **Wiring Repairs**

Scan Tool Reference

Control Module References for scan tool information

Circuit/System Testing

1. Verify that no other DTCs are set except for P0856.
    - **If any other DTCs are set**

      Refer to **Diagnostic Trouble Code (DTC) List - Vehicle** .

    - **If only DTC P0856 is set**
2. Replace the K20 Engine Control Module.
3. Verify the DTC does not set while operating the vehicle within the Conditions for Running the DTC.
    - **If DTC sets**

      Replace the K17 Electronic Brake Control Module.

    - **If DTC does not set**

4. All OK.

Repair Instructions

Perform the **Diagnostic Repair Verification** after completing the repair.

Control Module References for Electronic Brake Control Module and Engine Control Module replacement, programming and setup

SYMPTOMS - ANTILOCK BRAKE SYSTEM

NOTE: The following steps must be completed before using the symptom tables.

1. Perform the **Diagnostic System Check - Vehicle** before using the symptom tables in order to verify that all of the following are true:
   - There are no DTCs set.
   - The control modules can communicate via the serial data link.
2. Review the system description and operation in order to familiarize yourself with the system functions. Refer to **ABS Description and Operation**.

Visual/Physical Inspection

- Inspect for aftermarket devices which could affect the operation of the ABS. Refer to **Checking Aftermarket Accessories** .
- Inspect the easily accessible or visible system components, for obvious damage or conditions, which could cause the symptom.

Intermittent

Faulty electrical connections or wiring may be the cause of intermittent conditions. Refer to **Testing for Intermittent Conditions and Poor Connections** .

Symptom List

Refer to a symptom diagnostic procedure from the following list in order to diagnose the symptom:

- **ABS Indicator Malfunction**
- **Brake Warning Indicator Malfunction**
- **Traction Control/Stability Control Indicator Malfunction**

ABS INDICATOR MALFUNCTION

Diagnostic Instructions

- Perform the **Diagnostic System Check - Vehicle** prior to using this diagnostic procedure.

- Review **Strategy Based Diagnosis** for an overview of the diagnostic approach.
- **Diagnostic Procedure Instructions** provides an overview of each diagnostic category.

Circuit/System Description

The instrument cluster turns On the ABS indicator for five seconds after the ignition is ON or when the electronic brake control module detects a fault and sends a serial data message to the instrument cluster commanding the ABS indicator ON.

Reference Information

Schematic Reference

Antilock Brake System Schematics

Connector End View Reference

COMPONENT CONNECTOR END VIEWS - INDEX

Description and Operation

ABS Description and Operation

Electrical Information Reference

- **Circuit Testing**
- **Connector Repairs**
- **Testing for Intermittent Conditions and Poor Connections**
- **Wiring Repairs**

Scan Tool Reference

Control Module References for scan tool information

Circuit/System Verification

1. Ignition ON.
2. Verify the Instrument Cluster ABS Indicator turns On and Off when commanding the All Indicators On and Off with a scan tool.
    - **If the ABS indicator does not turn On and Off**

      Replace the P16 Instrument Cluster.

    - **If the ABS indicator turns On and Off**
3. Verify the ABS Indicator turns Off five seconds after the ignition is turned On.

- **If the ABS indicator does not turn Off**

  Replace the K17 Electronic Brake Control Module.

- **If the ABS indicator turns Off**

4. All OK.

Repair Instructions

Perform the **Diagnostic Repair Verification** after completing the repair.

Control Module References for Electronic Brake Control Module or Instrument Cluster replacement, programming and setup

TRACTION CONTROL/STABILITY CONTROL INDICATOR MALFUNCTION

Diagnostic Instructions

- Perform the **Diagnostic System Check - Vehicle** prior to using this diagnostic procedure.
- Review **Strategy Based Diagnosis** for an overview of the diagnostic approach.
- **Diagnostic Procedure Instructions** provides an overview of each diagnostic category.

Diagnostic Fault Information

Circuit	Short to Ground	Open/High Resistance	Short to Voltage	Signal Performance
Signal	B2745 02	1	1	-
Ground	-	1	-	-
1. Stability Control Switch Malfunction				

Circuit/System Description

The body control module monitors the traction control switch. When the traction control switch is pressed once, the body control module will request the electronic brake control module via serial data to disable the traction control. The electronic brake control module will request the instrument cluster via serial data to turn the traction control off indicator ON to notify the driver of the deactivation.

When the traction control switch is pressed and held for five seconds, the body control module will request the electronic brake control module to disable the electronic stability control. The electronic brake control module will request the instrument cluster via serial data to turn the traction control off and stability control off indicator ON to notify the driver of the deactivation.

Reference Information

Schematic Reference

Antilock Brake System Schematics

Connector End View Reference

COMPONENT CONNECTOR END VIEWS - INDEX

Description and Operation

ABS Description and Operation

Electrical Information Reference

- **Circuit Testing**
- **Connector Repairs**
- **Testing for Intermittent Conditions and Poor Connections**
- **Wiring Repairs**

Scan Tool Reference

Control Module References for scan tool information

Circuit/System Verification

1. Ignition ON.
2. Verify the instrument cluster indicators listed below turn ON and OFF when commanding the All Indicators ON and OFF with a scan tool.
    - Traction/stability Control indicator
    - Traction Control Off indicator
    - Stability Control Off indicator
    - **If any indicator does not turn ON and OFF**

      Replace the P16 Instrument Cluster.

    - **If all indicator turn ON and OFF**
3. Verify the scan tool Body Control Module, Traction Control Switch parameter changes between Active and Inactive when pressing and releasing the S75 Traction Control Switch.
    - **If the parameter does not change**

      Refer to Circuit/System Testing below.

    - **If the parameter changes**
4. All OK.

Circuit/System Testing

NOTE: Circuit/System Verification must be performed before Circuit/System Testing.

1. Ignition OFF and all vehicle systems OFF, disconnect the harness connector at the S75 Traction Control Switch. It may take up to 2 minutes for all vehicle systems to power down.
2. Test for less than 10 ohms between the ground circuit terminal 4 and ground.
    - **If 10 ohms or greater**
    1. Ignition OFF.
    2. Test for less than 2 ohms in the ground circuit end to end.
        - If 2 ohms or greater, repair the open/high resistance in the circuit.
        - If less than 2 ohms, repair the open/high resistance in the ground connection.
    - **If less than 10 ohms**
3. Ignition ON.
4. Verify the scan tool Body Control Module, Traction Control Switch parameter is Inactive.
    - **If not Inactive**
    1. Ignition OFF, disconnect the X2 harness connector at the K9 body control module.
    2. Test for infinite resistance between the signal circuit terminal 14 and ground.
        - If less than infinite resistance, repair the short to ground on the circuit.
        - If infinite resistance, replace the K9 Body Control Module.
    - **If Inactive**
5. Install a 3 A fused jumper wire between the signal circuit terminal 2 and ground.
6. Verify the scan tool Traction Control Switch parameter is Active.
    - **If not Active**
    1. Ignition OFF, disconnect the X2 harness connector at the K9 Body Control Module, ignition ON.
    2. Test for less than 1 V between the signal circuit and ground.
        - If 1 V or greater, repair the short to voltage on the circuit.
        - If less than 1 V
    3. Test for less than 2 ohms in the signal circuit end to end.
        - If 2 ohms or greater, repair the open/high resistance in the circuit.
        - If less than 2 ohms, replace the K9 Body Control Module.
    - **If Active**
7. Test or replace the S75 Traction Control Switch.

Component Testing

1. Ignition OFF, disconnect the harness connector at the S75 Traction Control Switch.
2. Test for infinite resistance between the signal circuit terminal 2 and the ground circuit terminal 4 with the switch in the open position.
    - **If less than infinite resistance**

      Replace the S75 Traction Control Switch.

- **If infinite resistance**

3. Test for less than 2 ohms between the signal circuit terminal 2 and the ground circuit terminal 4 with the switch in the closed position.
   - **If 2 ohms or greater**

     Replace the S75 Traction Control Switch.

   - **If less than 2 ohms**
4. All OK.

Repair Instructions

Perform the **Diagnostic Repair Verification** after completing the repair.

- **Instrument Panel Accessory Bezel Replacement**
- **Instrument Cluster Replacement**
- **Control Module References** for Body Control Module or Instrument Cluster replacement, programming and setup

REPAIR INSTRUCTIONS

ANTILOCK BRAKE SYSTEM AUTOMATED BLEED

WARNING: Refer to Brake Fluid Irritant Warning .

CAUTION: Refer to Brake Fluid Effects on Paint and Electrical Components Caution .

NOTE: Before performing the ABS Automated Bleed Procedure, first perform a pressure bleed of the base brake system. Refer to Hydraulic Brake System Bleeding (Manual Bleeding) , Hydraulic Brake System Bleeding (Pressure Bleeding) . The automated bleed procedure is recommended when one of the following conditions exist:

- **Base brake system bleeding does not achieve the desired pedal height or feel**
- **Extreme loss of brake fluid has occurred**
- **Air ingestion is suspected in the secondary circuits of the brake modulator assembly**

The ABS Automated Bleed Procedure uses a scan tool to cycle the system solenoid valves and run the pump in order to purge any air from the secondary circuits. These circuits are normally closed off, and are only opened

during system initialization at vehicle start up and during ABS operation. The automated bleed procedure opens these secondary circuits and allows any air trapped in these circuits to flow out toward the brake corners.

Performing the Automated Bleed Procedure

CAUTION: The Auto Bleed Procedure may be terminated at any time during the process by pressing the EXIT button. No further Scan Tool prompts pertaining to the Auto Bleed procedure will be given. After exiting the bleed procedure, relieve bleed pressure and disconnect bleed equipment per manufacturers instructions. Failure to properly relieve pressure may result in spilled brake fluid causing damage to components and painted surfaces.

1. Raise and support the vehicle. Refer to **Lifting and Jacking the Vehicle** .
2. Remove all four tire and wheel assemblies. Refer to **Tire and Wheel Removal and Installation** .
3. Inspect the brake system for leaks and visual damage. Repair or replace components as needed.
4. Lower the vehicle.
5. Inspect the battery state of charge. Refer to **Battery Inspection/Test** .
6. Install a scan tool.
7. Turn the ignition ON, with the engine OFF.
8. With the scan tool, establish communications with the ABS system. Select Control Functions. Select Automated Bleed from the Control Functions menu.
9. Raise and support the vehicle. Refer to **Lifting and Jacking the Vehicle** .
10. Following the directions given on the scan tool, pressure bleed the base brake system. Refer to **Hydraulic Brake System Bleeding (Manual Bleeding)** , **Hydraulic Brake System Bleeding (Pressure Bleeding)** .
11. Follow the scan tool directions until the desired brake pedal height is achieved.
12. If the bleed procedure is aborted, a malfunction exists. Perform the following steps before resuming the bleed procedure:
    - If a DTC is detected, refer to **Diagnostic Trouble Code (DTC) List - Vehicle** , and diagnose the appropriate DTC.
    - If the brake pedal feels spongy, perform the conventional brake bleed procedure again. Refer to **Hydraulic Brake System Bleeding (Manual Bleeding)** , **Hydraulic Brake System Bleeding (Pressure Bleeding)** .
13. When the desired pedal height is achieved, press the brake pedal to inspect for firmness.
14. Lower the vehicle.
15. Remove the scan tool.
16. Install the tire and wheel assemblies. Refer to **Tire and Wheel Removal and Installation** .
17. Inspect the brake fluid level. Refer to **Master Cylinder Reservoir Filling** .
18. Road test the vehicle while inspecting that the pedal remains high and firm.

STEERING ANGLE SENSOR REPLACEMENT

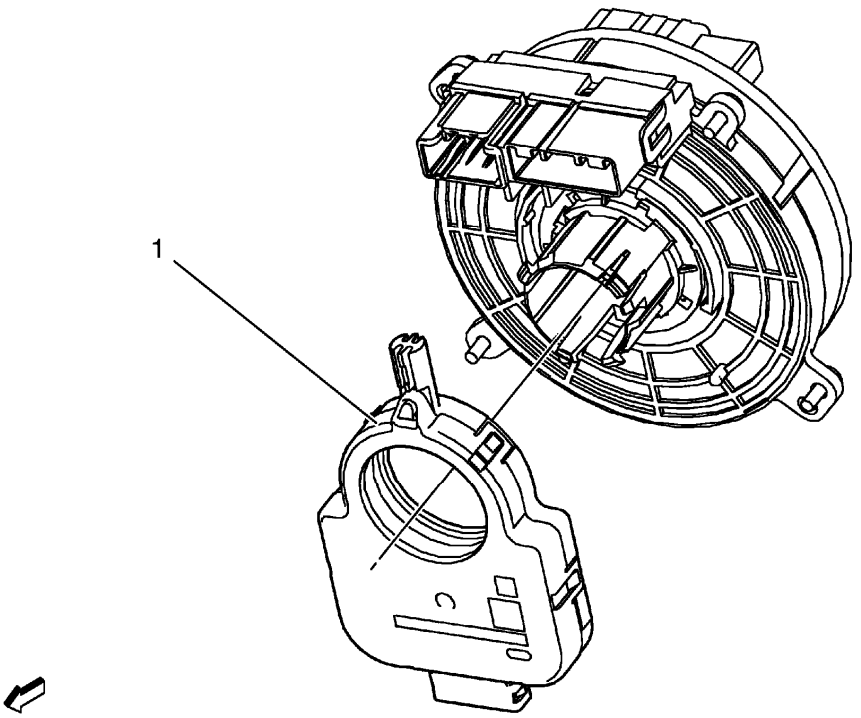

Fig. 4: View Of Steering Wheel Position Sensor
Courtesy of GENERAL MOTORS COMPANY

Steering Angle Sensor Replacement

Callout	Component Name
Preliminary Procedures Remove the steering wheel inflatable restraint module coil. Refer to **Steering Wheel Airbag Coil Replacement** .	
1	Steering Wheel Position Sensor **WARNING:** **Never rotate the steering angle sensor. Rotating the steering angle sensor could limit the operation of the electronic power steering (EPS) system, and result in personal injury.** **Procedure** 1. Press in the clip on the inflatable restraint steering wheel module clock-spring coil to remove the sensor. 2. Calibrate the steering angle sensor. Refer to **Steering Angle Sensor Centering**.

STEERING ANGLE SENSOR CENTERING

WARNING: An inaccurate or not centered steering angle sensor could limit the

operation of the electric power steering (EPS) and result in personal injury.

For vehicles WITHOUT electronic stability control program and INTERNAL Steering Angle Sensor

Refer to the Steering Angle Centering procedure in **Power Steering Control Module Calibration** .

For vehicles WITH electronic stability control program and EXTERNAL Steering Angle Sensor

The external, column mounted, steering angle sensor does not require a centering often. Centering of the external steering angle sensor might be required after certain service procedures are performed. Some of these procedures are as follows:

- Electronic brake control module (EBCM) replacement
- Steering angle sensor replacement
- Steering gear replacement
- Steering column replacement
- Collision or other physical damage

The external steering angle sensor centering procedure can be completed with a scan tool using the following steps:

1. Using the steering wheel, align the front wheels forward.
2. Apply the parking brake, or set the transmission in the P position.
3. Install the scan tool to the data link connector.
4. Ignition ON, engine OFF
5. Select Steering Wheel Angle Sensor Reset in the Steering Wheel Angle Sensor Module Configuration/Reset Functions list.
6. Follow the scan tool directions to complete the learn procedure.
7. Select Steering Wheel Angle Sensor Learn in the Steering Wheel Angle Sensor Module Configuration/Reset Functions list.
8. Follow the scan tool directions to complete the learn procedure.
9. Select Steering Wheel Angle Sensor Learn in the EBCM Configuration/Reset Functions list.
10. Follow the scan tool directions to complete the learn procedure.
11. If the vehicle is equipped with electronic power steering, perform the Software Endstop Learning procedure. Refer to **Power Steering Control Module Calibration** .
12. Clear any DTCs that may be set.

ELECTRONIC BRAKE CONTROL MODULE REPLACEMENT

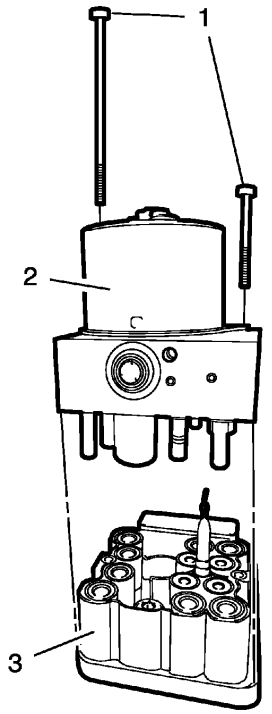

Fig. 5: Electronic Brake Control Module, Modulator Valve & Bolts
Courtesy of GENERAL MOTORS COMPANY

Electronic Brake Control Module Replacement

Callout	Component Name
WARNING: **Refer to Brake Fluid Irritant Warning .** **CAUTION:** **Refer to Brake Fluid Effects on Paint and Electrical Components Caution .** **CAUTION:** **Always connect or disconnect the wiring harness connector from the EBCM/EBTCM with the ignition switch in the OFF position. Failure to observe this precaution could result in damage to the EBCM/EBTCM.** **Preliminary Procedures** 1. Prepare electronic brake control module for replacement. Refer to **Control Module References** . 2. Disconnect the battery. Refer to **Battery Negative Cable Disconnection and Connection** . 3. Remove the BPMV from BPMV bracket. Refer to **Brake Pressure Modulator Valve Replacement**.	
	Electronic Brake Control Module Bolt (Qty: 2)

1	**CAUTION:** **Refer to Fastener Caution .** **Tighten** 3 N.m (26 lb in)
2	Brake Pressure Modulator Valve
3	Electronic Brake Control Module **Procedure** 1. Carefully separate the EBCM from the BPMV, do not pry the components apart. 2. Clean the sealing surface of the BPMV with denatured alcohol and a clean shop cloth and allow to dry. 3. Fill the master cylinder reservoir. 4. Program the EBCM, IF installing a new EBCM. Refer to **Electronic Brake Control Module Programming and Setup** . 5. Bleed the brake system. Refer to **Hydraulic Brake System Bleeding (Manual Bleeding)** , **Hydraulic Brake System Bleeding (Pressure Bleeding)** . 6. Perform the automated brake bleed. Refer to **Antilock Brake System Automated Bleed**. 7. Perform a diagnostic system check. Refer to **Diagnostic System Check - Vehicle** . 8. If equipped, calibrate the brake pedal position sensor. Refer to **Brake Pedal Position Sensor Calibration** . 9. Centering the steering angle sensor. Refer to **Steering Angle Sensor Centering**.

BRAKE PRESSURE MODULATOR VALVE REPLACEMENT

Removal Procedure

WARNING: Refer to Brake Fluid Irritant Warning .

CAUTION: Refer to Brake Fluid Effects on Paint and Electrical Components Caution .

1. Prepare electronic brake control module for replacement. Refer to **Control Module References** .
2. Turn the ignition to the OFF position.

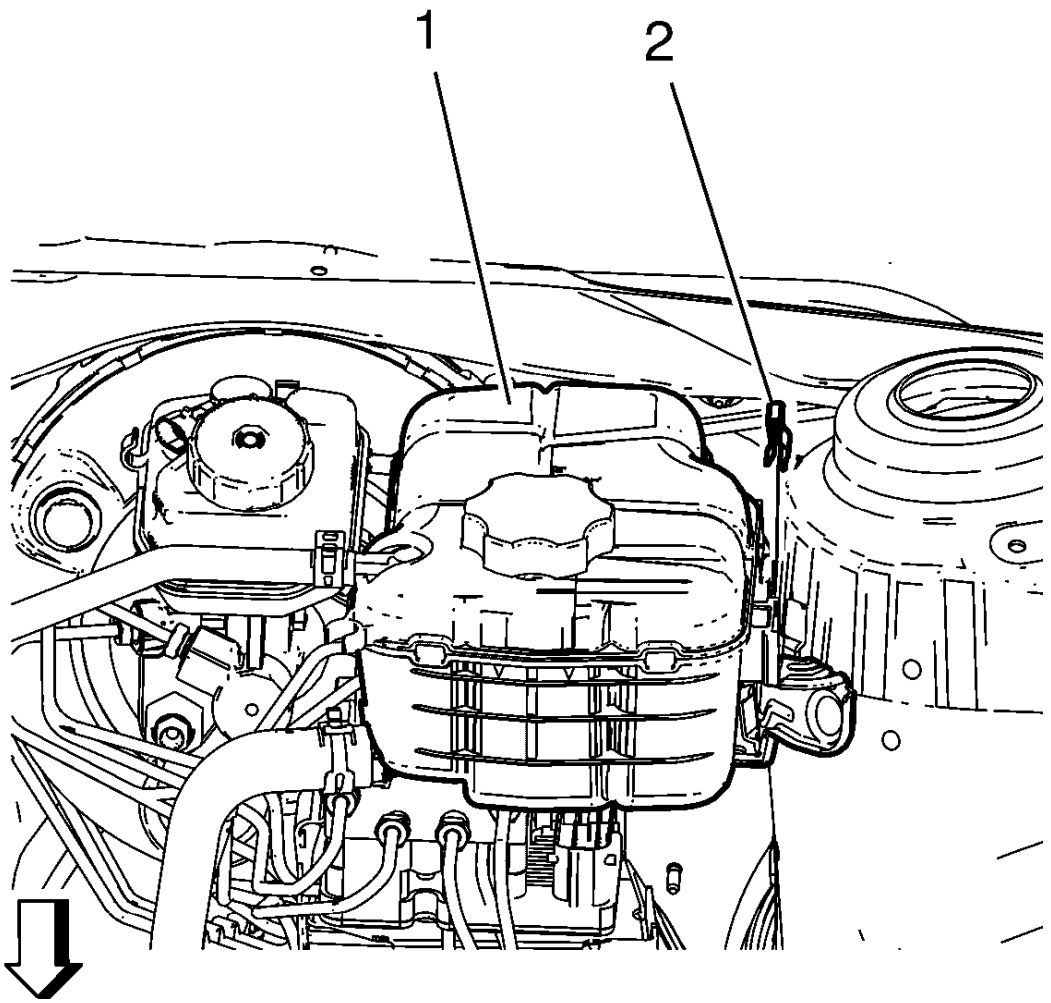

Fig. 6: View Of Radiator Surge Tank And Radiator Surge Tank Clip
Courtesy of GENERAL MOTORS COMPANY

NOTE: Do NOT disconnect engine coolant hoses.

3. Remove the radiator surge tank clip (2).
4. Remove the radiator surge tank (1).

   Position the radiator surge tank (1) aside.

CAUTION: Always connect or disconnect the wiring harness connector from the EBCM/EBTCM with the ignition switch in the OFF position. Failure to observe this precaution could result in damage to the EBCM/EBTCM.

5. Disconnect the electrical connector from the EBCM/EBTCM.

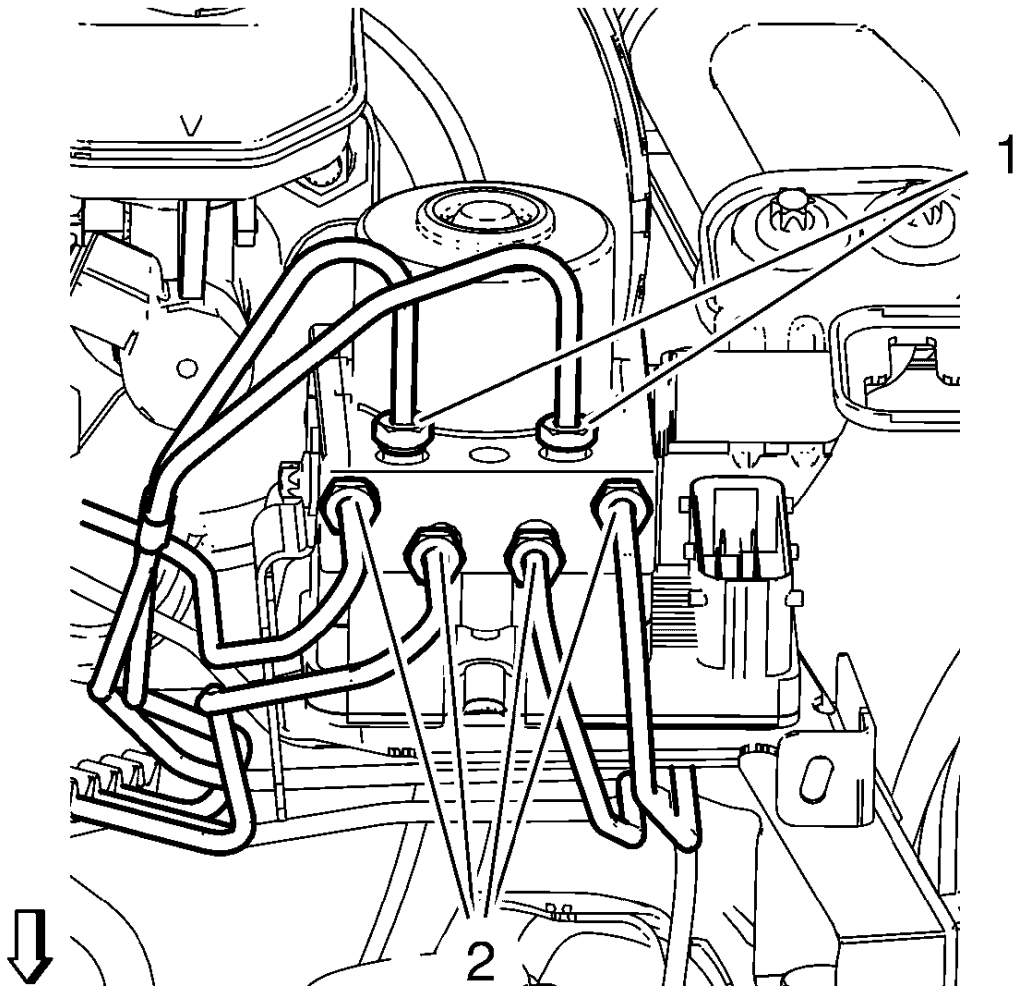

Fig. 7: Brake Pipe Fittings At BPMV
Courtesy of GENERAL MOTORS COMPANY

NOTE: Cap the brake pipe fittings to prevent brake fluid loss and contamination.

6. Remove the 6 brake pipes (1, 2) from the BPMV.

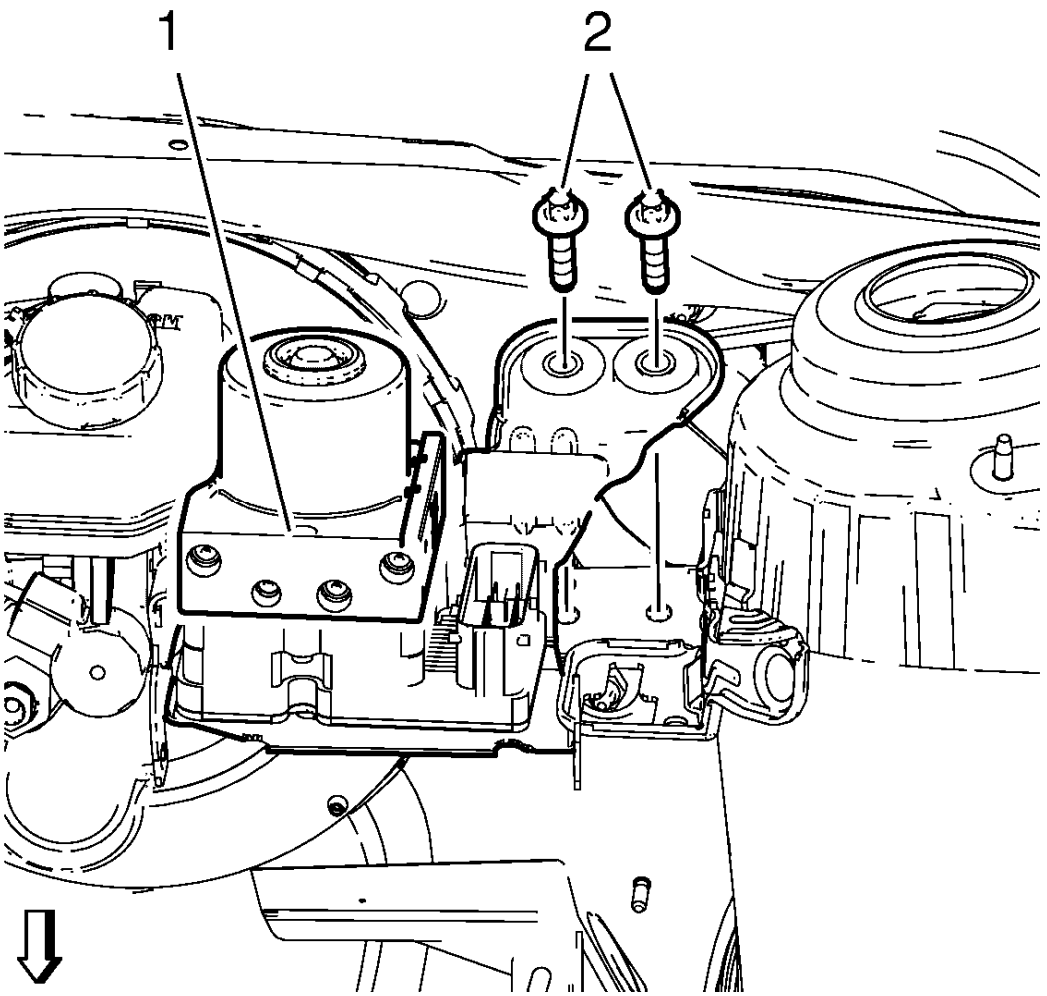

Fig. 8: BPMV and BPMV Bracket Bolts
Courtesy of GENERAL MOTORS COMPANY

7. Remove the 2 BPMV bracket bolts (2).
8. Remove the BPMV bracket assembly (1).

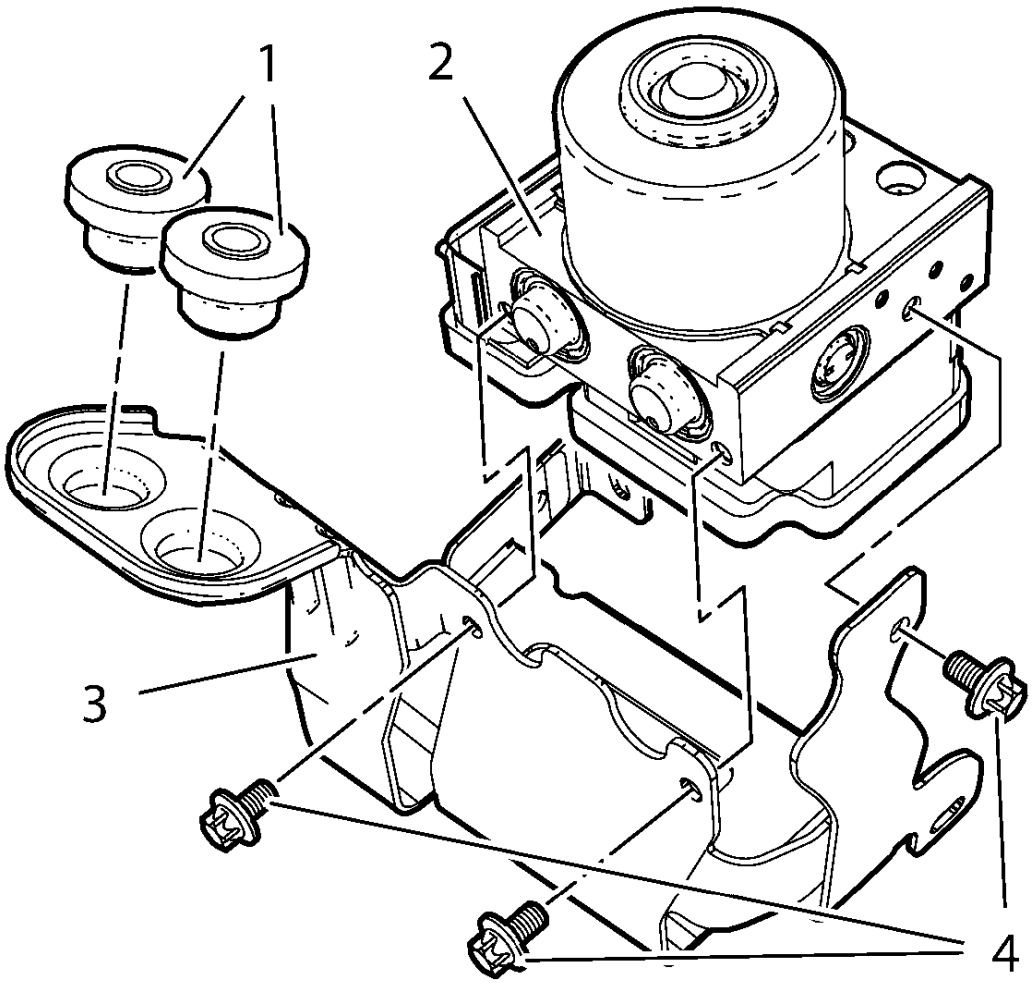

Fig. 9: BPMV and BPMV Bracket Bolts
Courtesy of GENERAL MOTORS COMPANY

9. Remove the 3 BPMV bracket bolts.
10. Remove the BPMV (2).
11. Remove the BPMV insulator (1) from the BPMV bracket (3).

Installation Procedure

WARNING: Refer to Brake Fluid Irritant Warning .

CAUTION: Refer to Brake Fluid Effects on Paint and Electrical Components Caution .

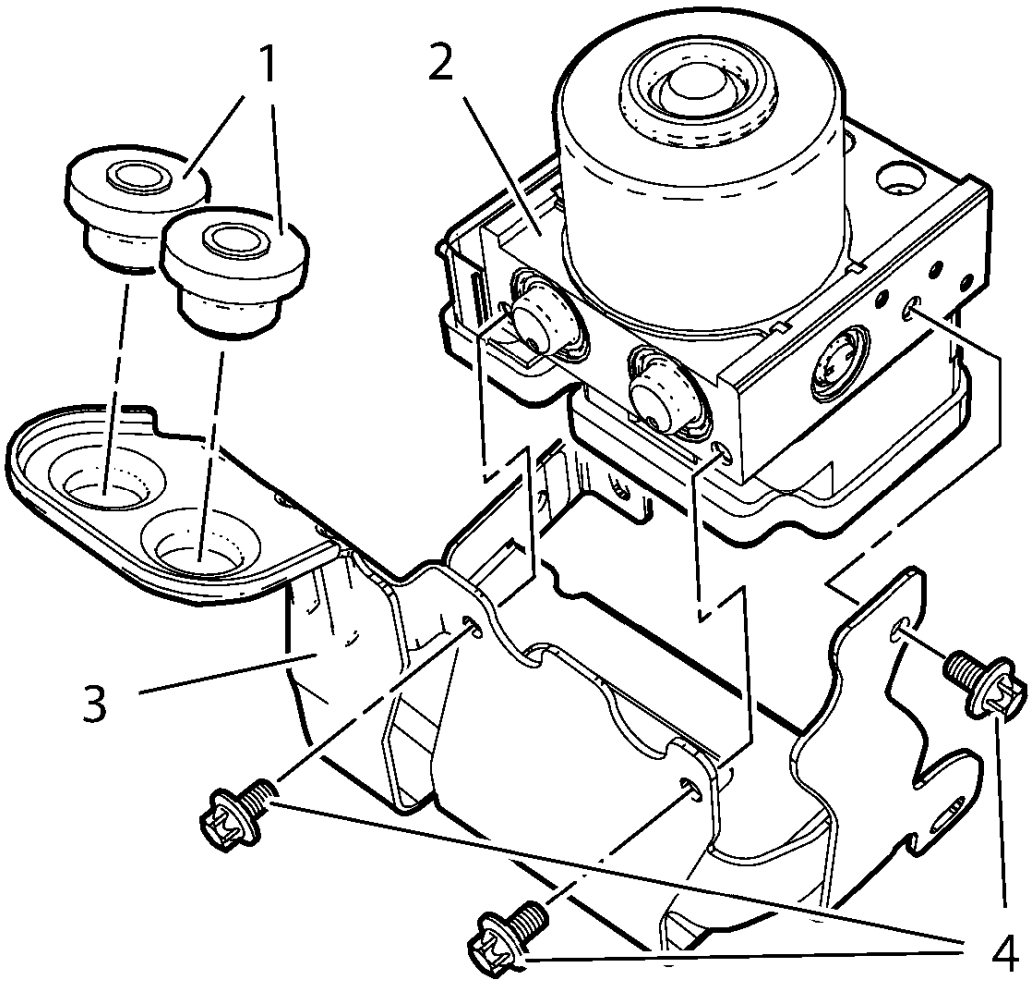

Fig. 10: BPMV and BPMV Bracket Bolts
Courtesy of GENERAL MOTORS COMPANY

1. Install the BPMV insulator (1) to the BPMV bracket (3).
2. Install the BPMV (2).

CAUTION: Refer to Fastener Caution .

3. Install the 3 BPMV bracket bolts (4) and tighten to 10 N.m(89 lb in).

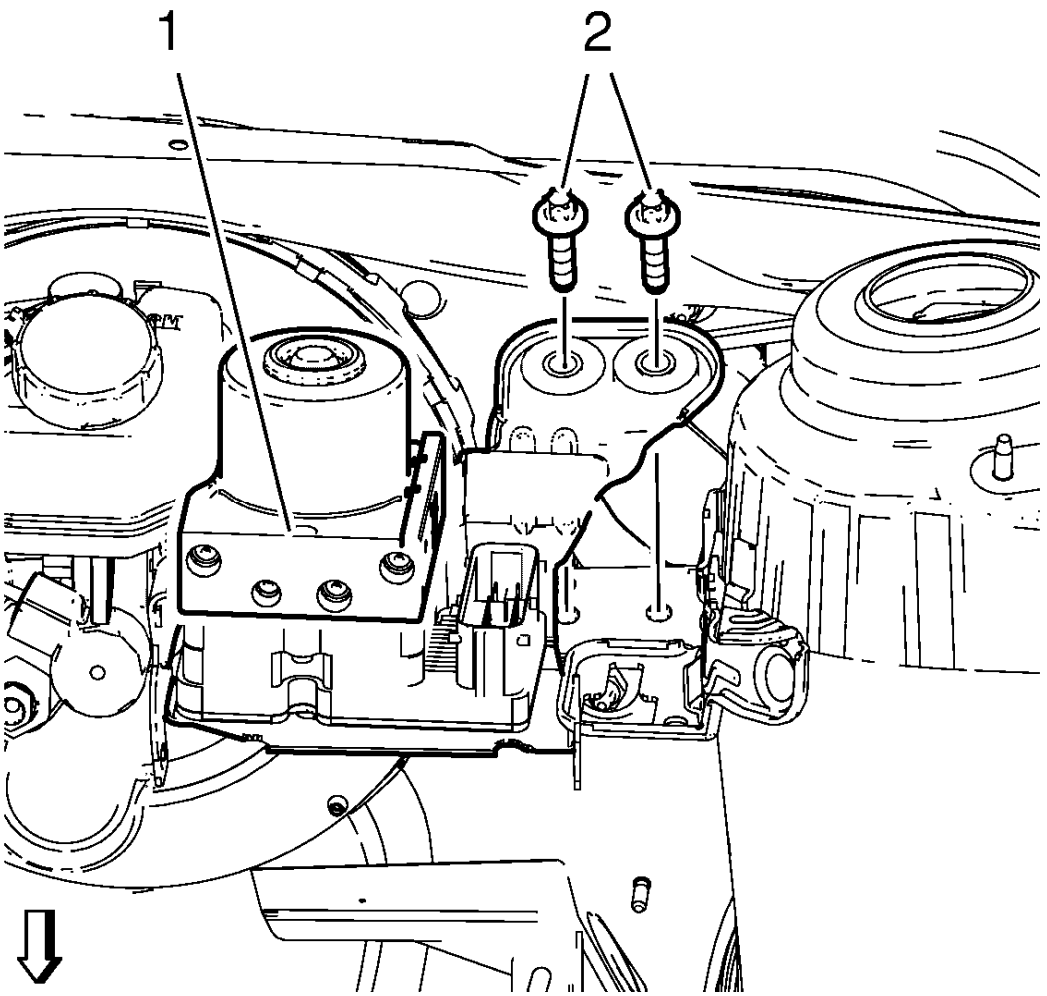

Fig. 11: BPMV and BPMV Bracket Bolts
Courtesy of GENERAL MOTORS COMPANY

4. Install the BPMV bracket assembly (1).
5. Install the 2 BPMV bracket bolts (2) and tighten to 20 N.m(15 lb ft).

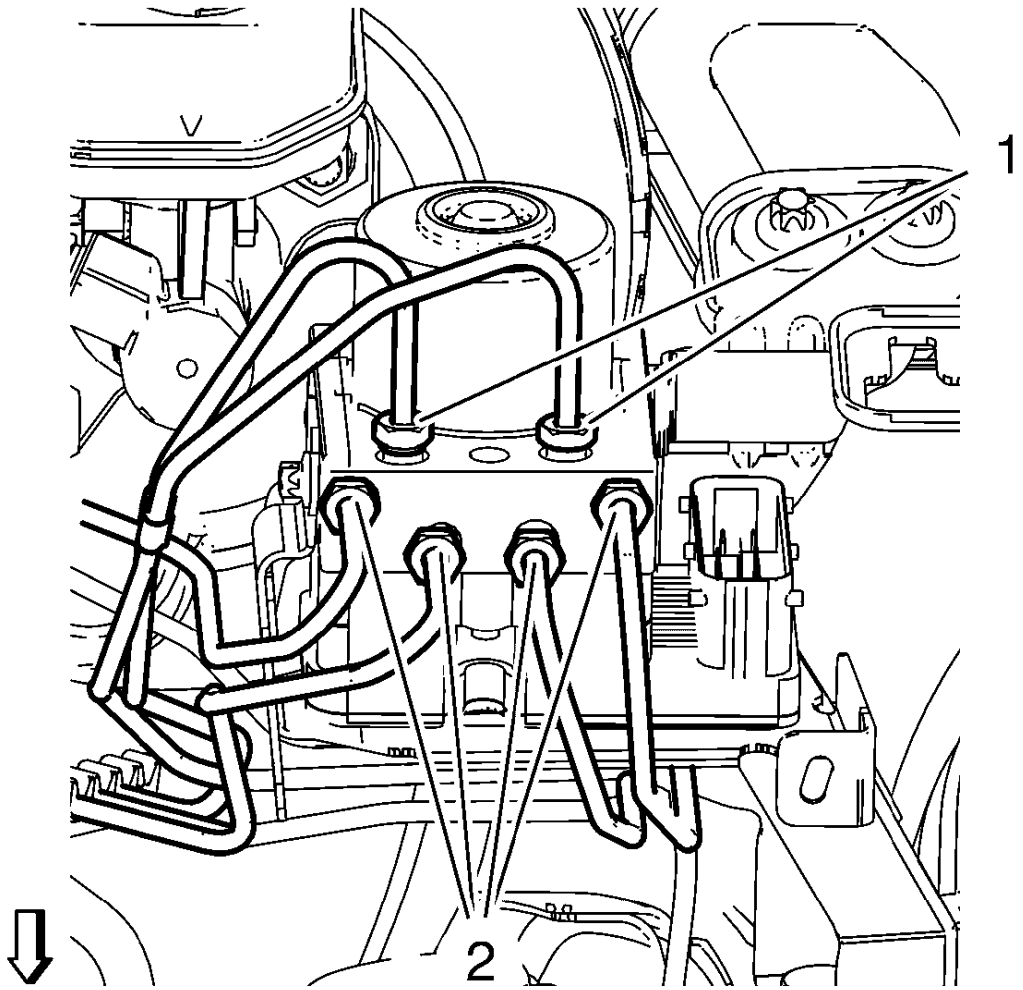

Fig. 12: Brake Pipe Fittings At BPMV
Courtesy of GENERAL MOTORS COMPANY

6. Install the 6 brake pipes (1, 2) to the BPMV and tighten to 18 N.m(14 lb ft).
7. Connect the electrical connector to the EBCM/EBTCM.

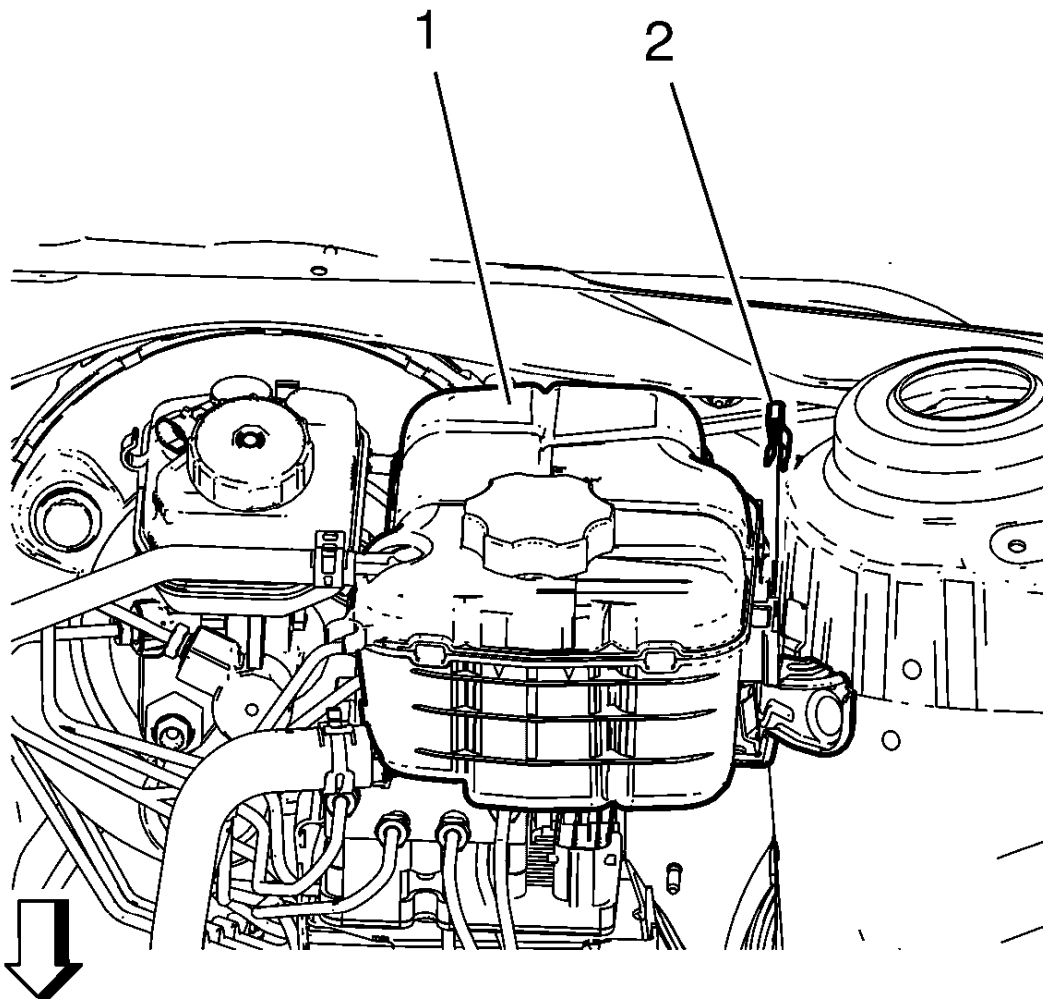

Fig. 13: View Of Radiator Surge Tank And Radiator Surge Tank Clip
Courtesy of GENERAL MOTORS COMPANY

8. Install the radiator surge tank (1).
9. Install the radiator surge tank clip (2).
10. Program the EBCM. Refer to **Electronic Brake Control Module Programming and Setup** .
11. Perform the diagnostic system check - Vehicle. Refer to **Diagnostic System Check - Vehicle** .
12. Calibrate the brake pressure modulator valve pressure sensor. Refer to **Brake Pressure Modulator Valve Pressure Sensor Calibration**.

CAUTION: Only use products that comply with GM specifications and check manufacturer information respectively. We recommend the use of GM genuine products. Instructions must be followed at all times. The use of any type of fluid other than the recommended type of brake fluid, may cause contamination which could result in damage to the internal rubber seals and/or rubber linings of hydraulic brake system

components.

13. Bleed the hydraulic brake system. Refer to **Hydraulic Brake System Bleeding (Manual Bleeding)** , **Hydraulic Brake System Bleeding (Pressure Bleeding)** .
14. Center the steering angle sensor. Refer to **Steering Angle Sensor Centering**.

BRAKE PRESSURE MODULATOR VALVE PRESSURE SENSOR CALIBRATION

The brake pressure sensor does not require calibration often. Calibration of the brake pressure sensor might be required after certain service procedures are performed. Some of these procedures are as follows:

- Electronic brake control module (EBCM) replacement
- Brake pressure modulator valve assembly replacement

The Brake Pressure Sensor Calibration procedure can be completed with a scan tool using the following steps:

1. Apply the parking brake, or set the transmission in the P position.
2. Release the brake pedal.
3. Install the scan tool to the data link connector.
4. Ignition ON, engine OFF
5. Select Brake Pressure Sensor Calibration in the EBCM Configuration/Reset Functions list.
6. Follow the scan tool directions to complete the calibration procedure.
7. Clear any DTCs that may be set.

BRAKE PRESSURE MODULATOR VALVE BRACKET REPLACEMENT

Removal Procedure

WARNING: Refer to Brake Fluid Irritant Warning .

CAUTION: Refer to Brake Fluid Effects on Paint and Electrical Components Caution .

1. Turn the ignition to the OFF position.

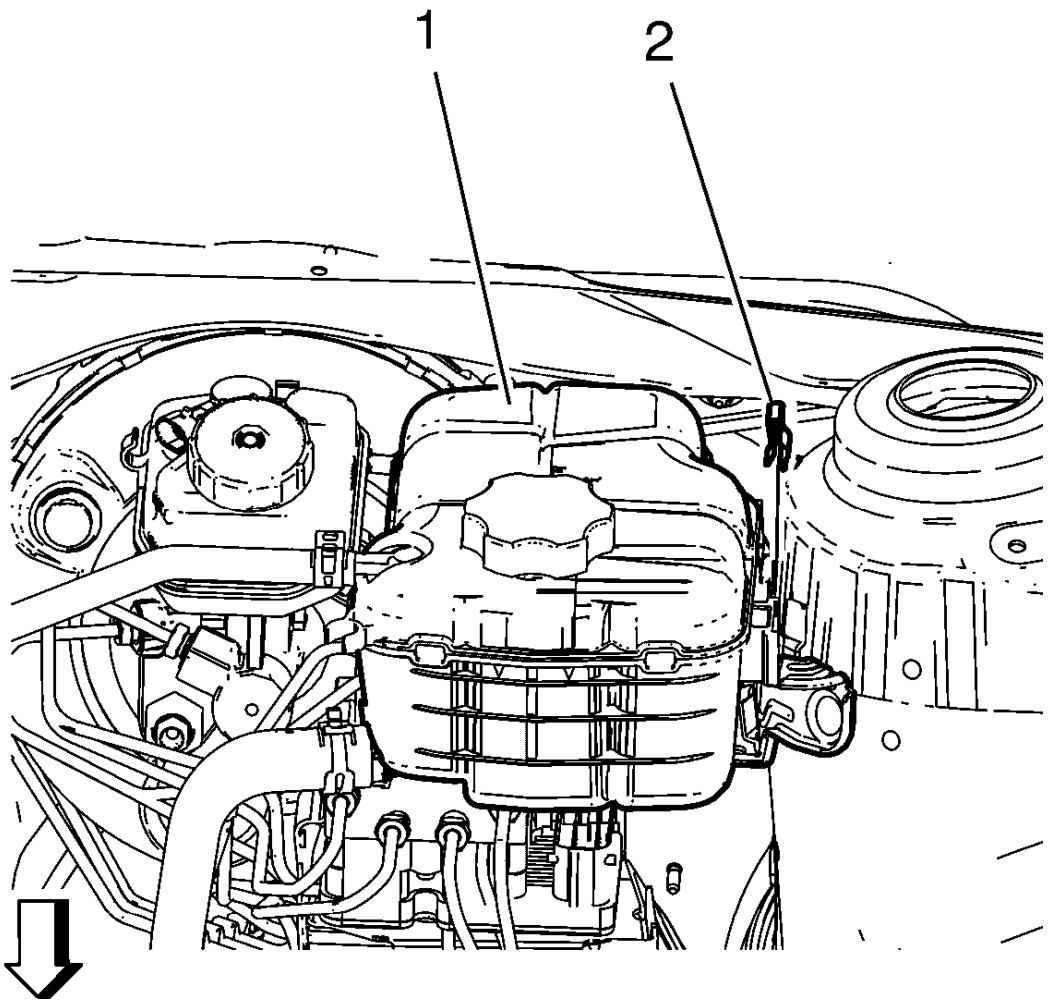

Fig. 14: View Of Radiator Surge Tank And Radiator Surge Tank Clip
Courtesy of GENERAL MOTORS COMPANY

NOTE: Do NOT disconnect engine coolant hoses.

2. Remove the radiator surge tank clip (2).
3. Remove the radiator surge tank (1).

   Position the radiator surge tank (1) aside.

CAUTION: Always connect or disconnect the wiring harness connector from the EBCM/EBTCM with the ignition switch in the OFF position. Failure to observe this precaution could result in damage to the EBCM/EBTCM.

4. Disconnect the electrical connector from the EBCM/EBTCM.

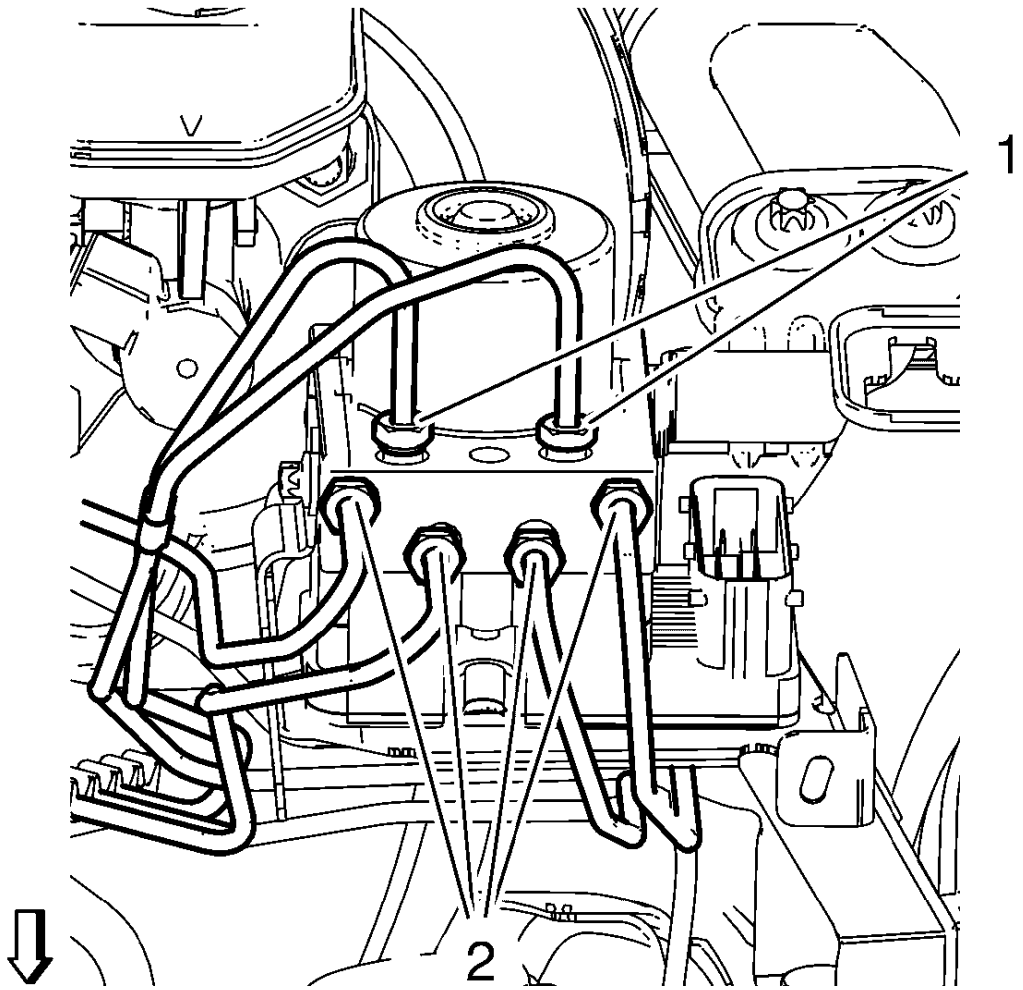

Fig. 15: Brake Pipe Fittings At BPMV
Courtesy of GENERAL MOTORS COMPANY

NOTE: Cap the brake pipe fittings to prevent brake fluid loss and contamination.

5. Remove the 6 brake pipes (1, 2) from the BPMV.

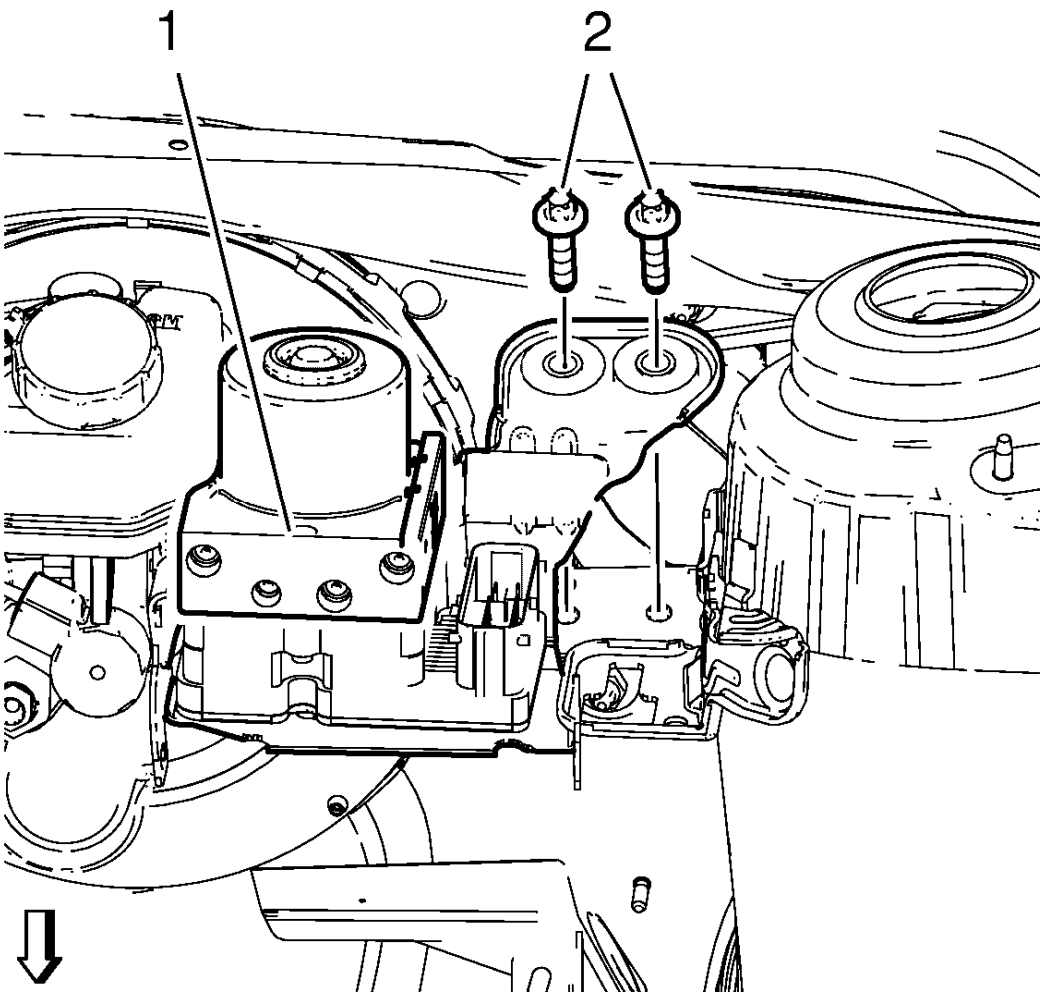

Fig. 16: BPMV and BPMV Bracket Bolts
Courtesy of GENERAL MOTORS COMPANY

6. Remove the 2 BPMV bracket bolts (2).
7. Remove the BPMV bracket assembly (1).

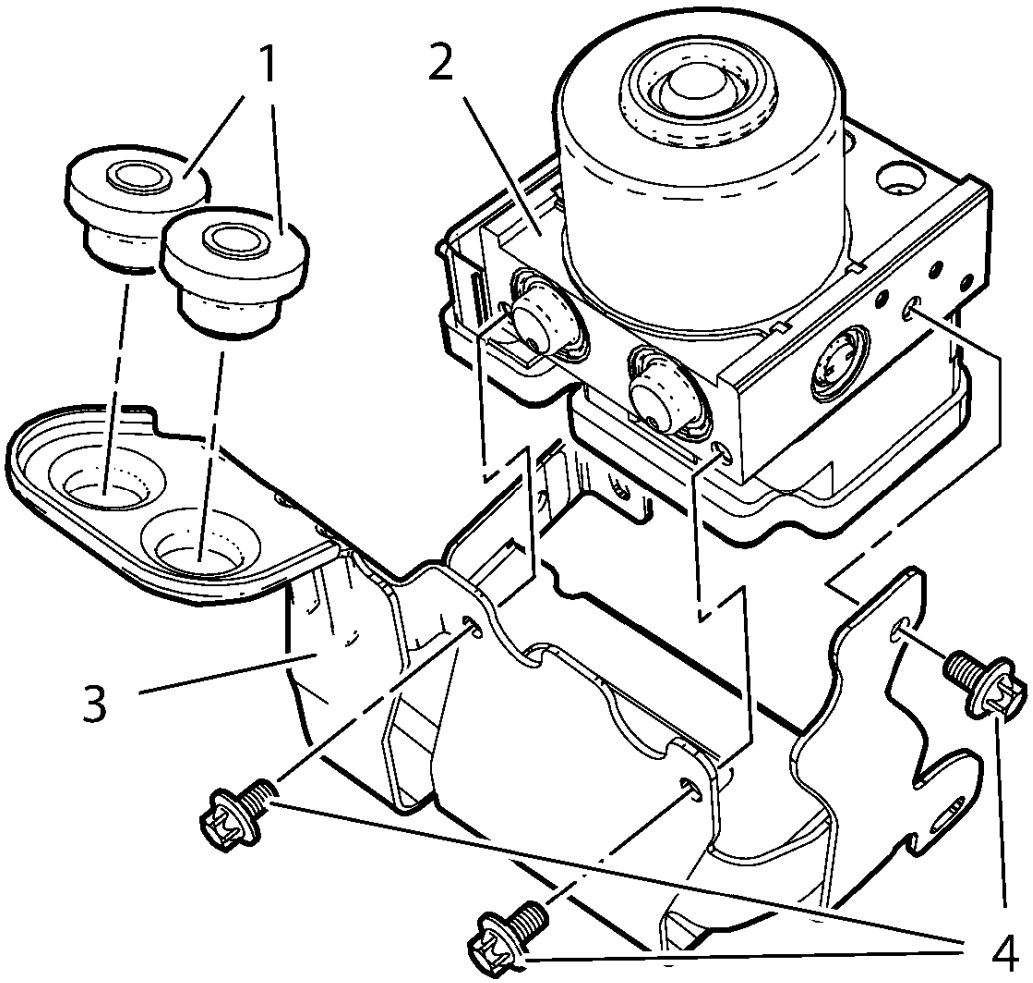

Fig. 17: BPMV and BPMV Bracket Bolts
Courtesy of GENERAL MOTORS COMPANY

8. Remove the 3 BPMV bracket bolts.
9. Remove the BPMV (2).
10. Remove the BPMV insulator (1) from the BPMV bracket (3).

Installation Procedure

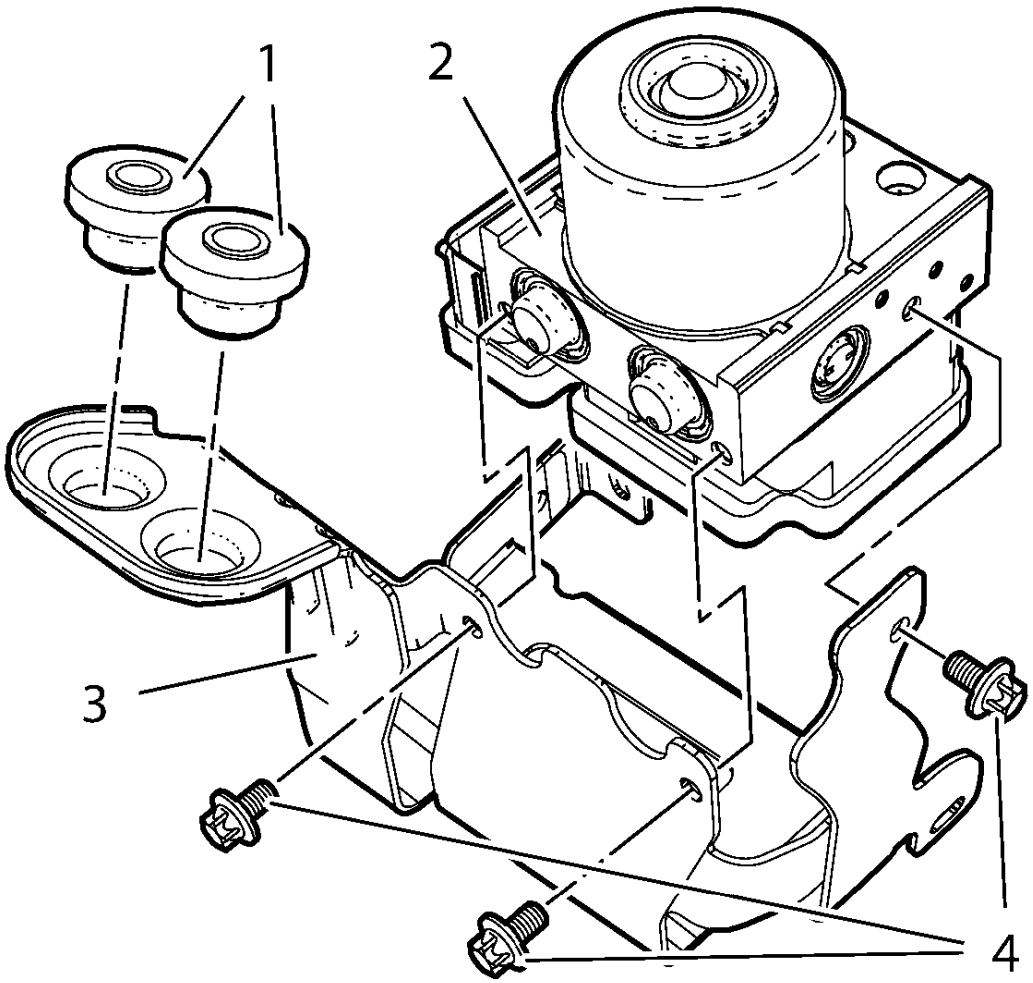

Fig. 18: BPMV and BPMV Bracket Bolts
Courtesy of GENERAL MOTORS COMPANY

1. Install the BPMV insulator (1) to the BPMV bracket (3).
2. Install the BPMV (2).

CAUTION: Refer to Fastener Caution .

3. Install the 3 BPMV bracket bolts (4). Tighten the BPMV bracket bolts 10 N.m (89 lb in).

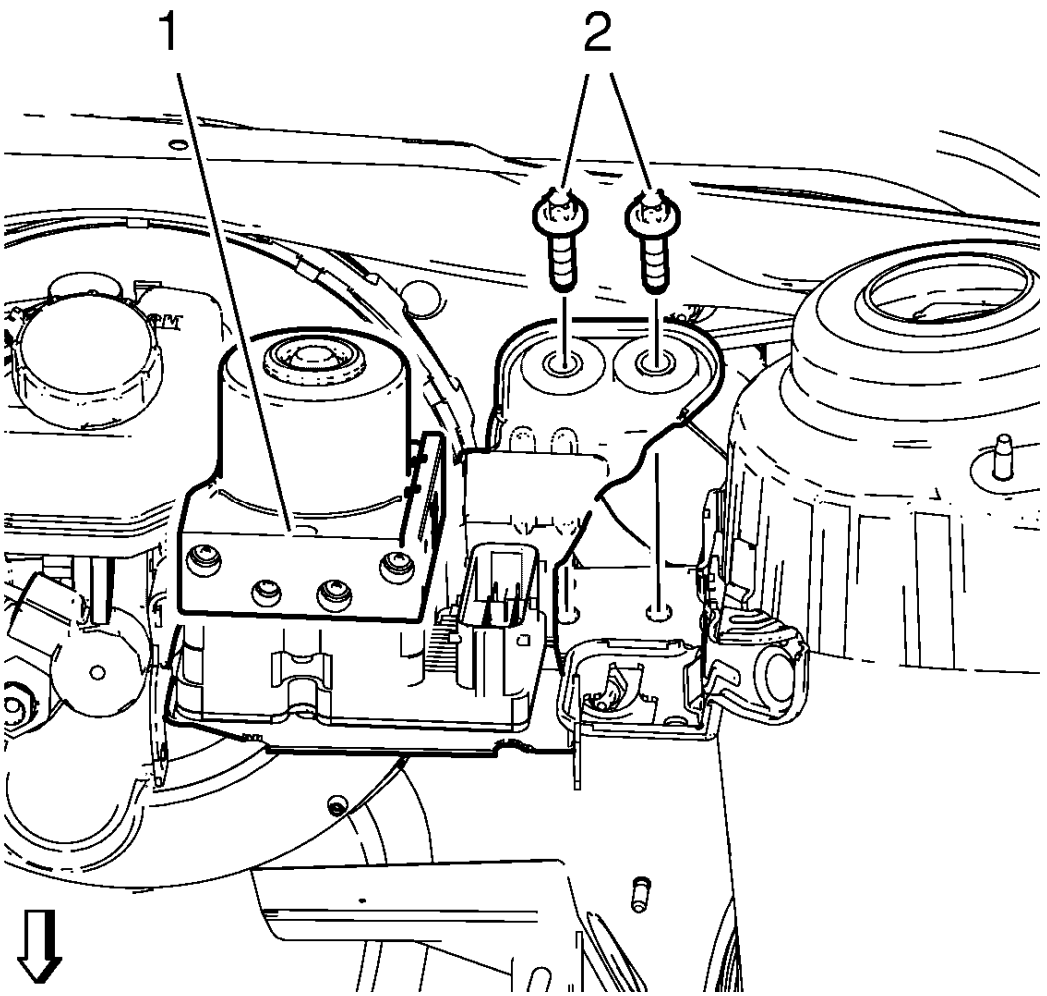

Fig. 19: BPMV and BPMV Bracket Bolts
Courtesy of GENERAL MOTORS COMPANY

4. Install the BPMV bracket assembly (1).
5. Install the 2 BPMV bracket bolts (2) and tighten to 20 N.m (15 lb ft).

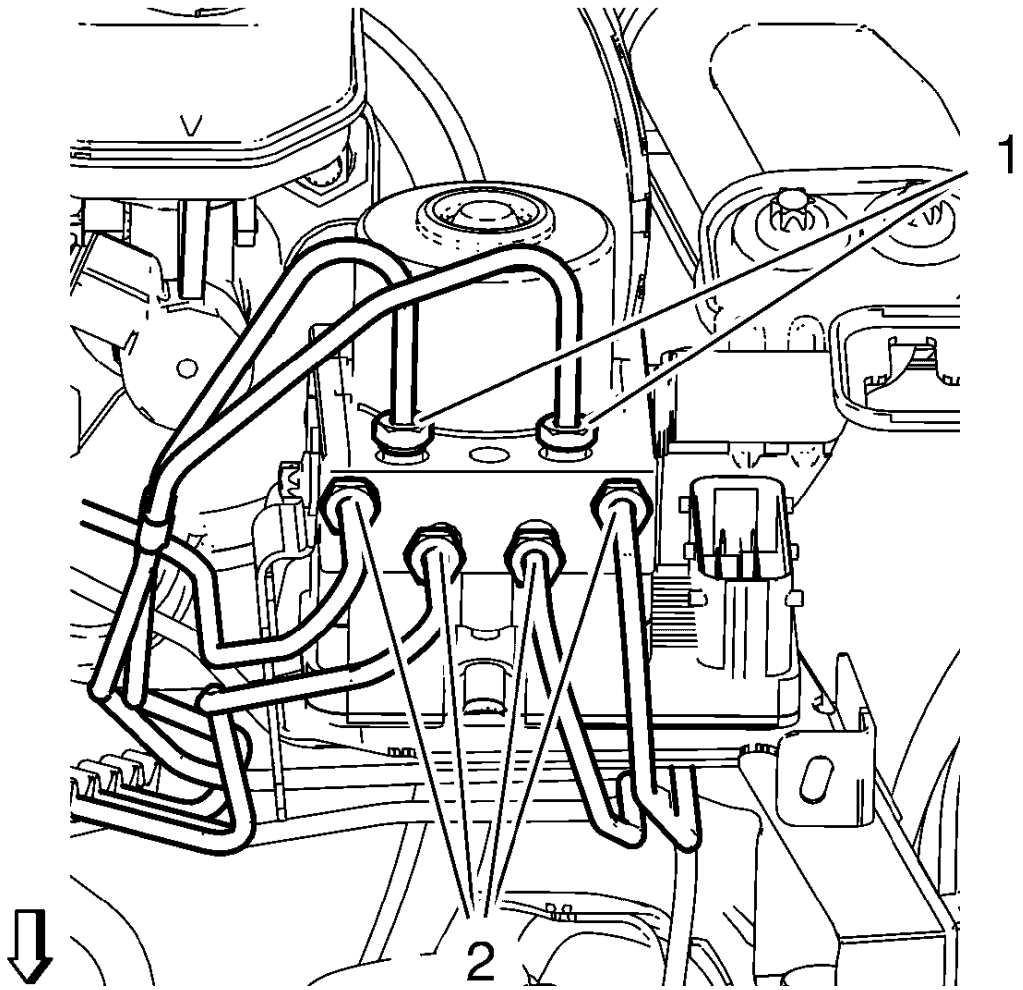

Fig. 20: Brake Pipe Fittings At BPMV
Courtesy of GENERAL MOTORS COMPANY

6. Install the 6 brake pipes (1, 2) to the BPMV and tighten to 18 N.m (14 lb ft).
7. Connect the electrical connector to the EBCM/EBTCM.

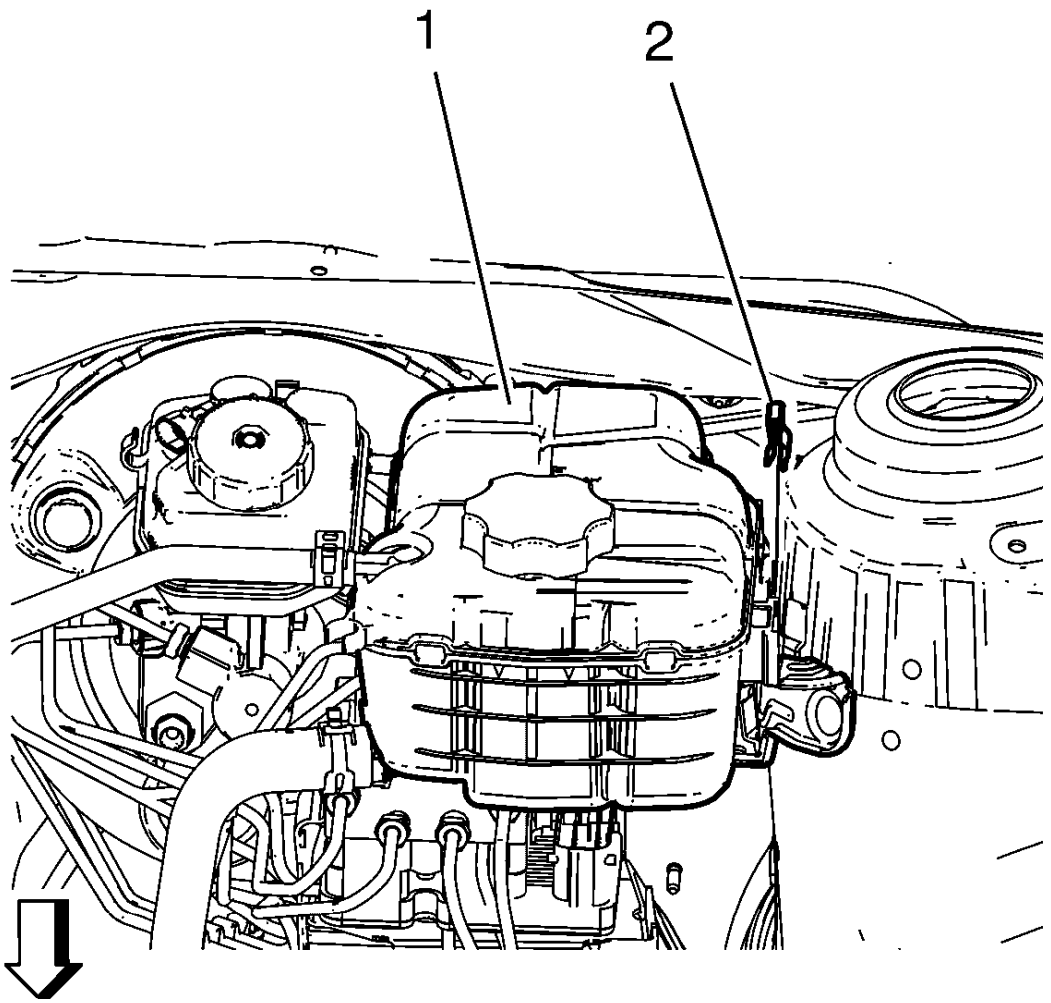

Fig. 21: View Of Radiator Surge Tank And Radiator Surge Tank Clip
Courtesy of GENERAL MOTORS COMPANY

8. Install the radiator surge tank (1).
9. Install the radiator surge tank clip (2).
10. Program the EBCM. Refer to **Electronic Brake Control Module Programming and Setup** .
11. Perform the diagnostic system check - Vehicle. Refer to **Diagnostic System Check - Vehicle** .
12. Calibrate the brake pressure modulator valve pressure sensor. Refer to **Brake Pressure Modulator Valve Pressure Sensor Calibration**.

CAUTION: When adding fluid to the brake master cylinder reservoir, use only GM approved or equivalent DOT-3 brake fluid from a clean, sealed brake fluid container. The use of any type of fluid other than the recommended type of brake fluid may cause contamination which could result in damage to the internal rubber seals and/or rubber linings of hydraulic brake system components.

13. Bleed the hydraulic brake system. Refer to **Hydraulic Brake System Bleeding (Manual Bleeding)** , **Hydraulic Brake System Bleeding (Pressure Bleeding)** .
14. Center the steering angle sensor. Refer to **Steering Angle Sensor Centering**.

FRONT WHEEL SPEED SENSOR REPLACEMENT

Removal Procedure

1. Raise and support the vehicle. Refer to **Lifting and Jacking the Vehicle** .
2. Remove the tire and wheel assembly. Refer to **Tire and Wheel Removal and Installation** .

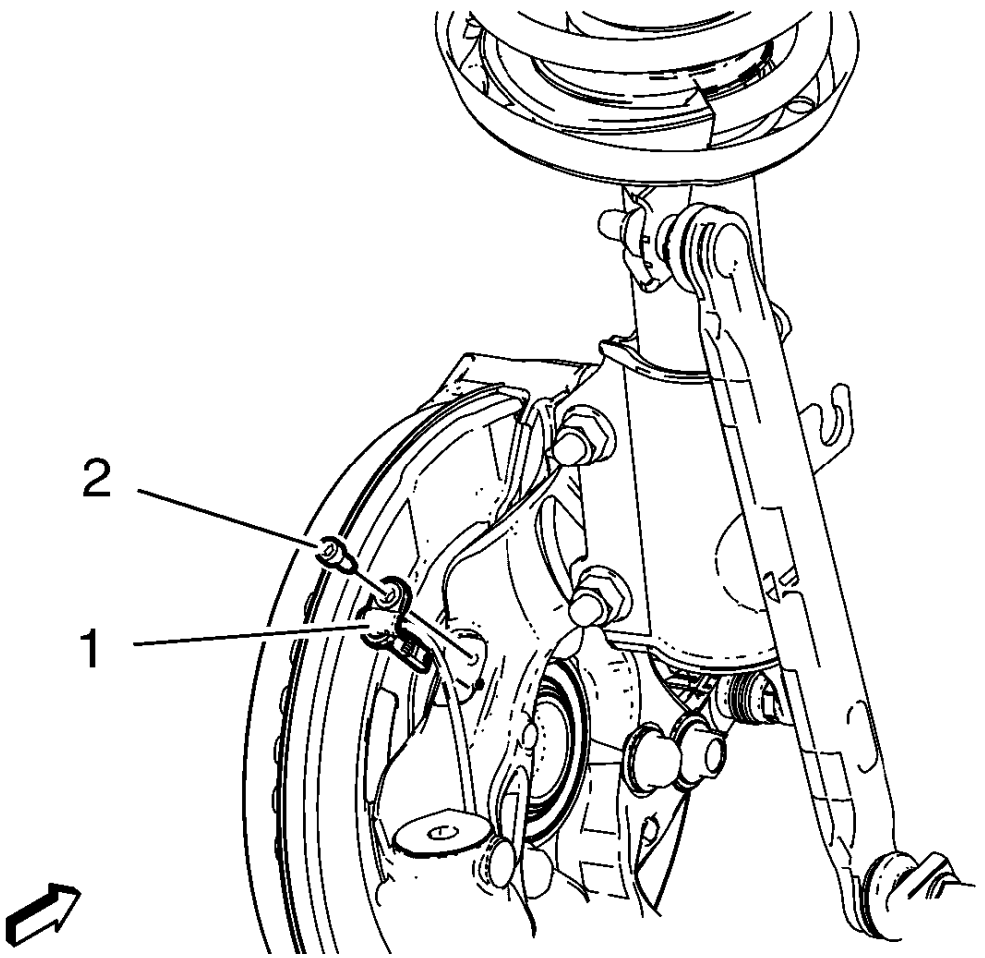

Fig. 22: Wheel Speed Sensor And Wheel Speed Sensor Screw
Courtesy of GENERAL MOTORS COMPANY

3. Remove the wheel speed sensor screw (2) from the steering knuckle.
4. Remove the wheel speed sensor (1).

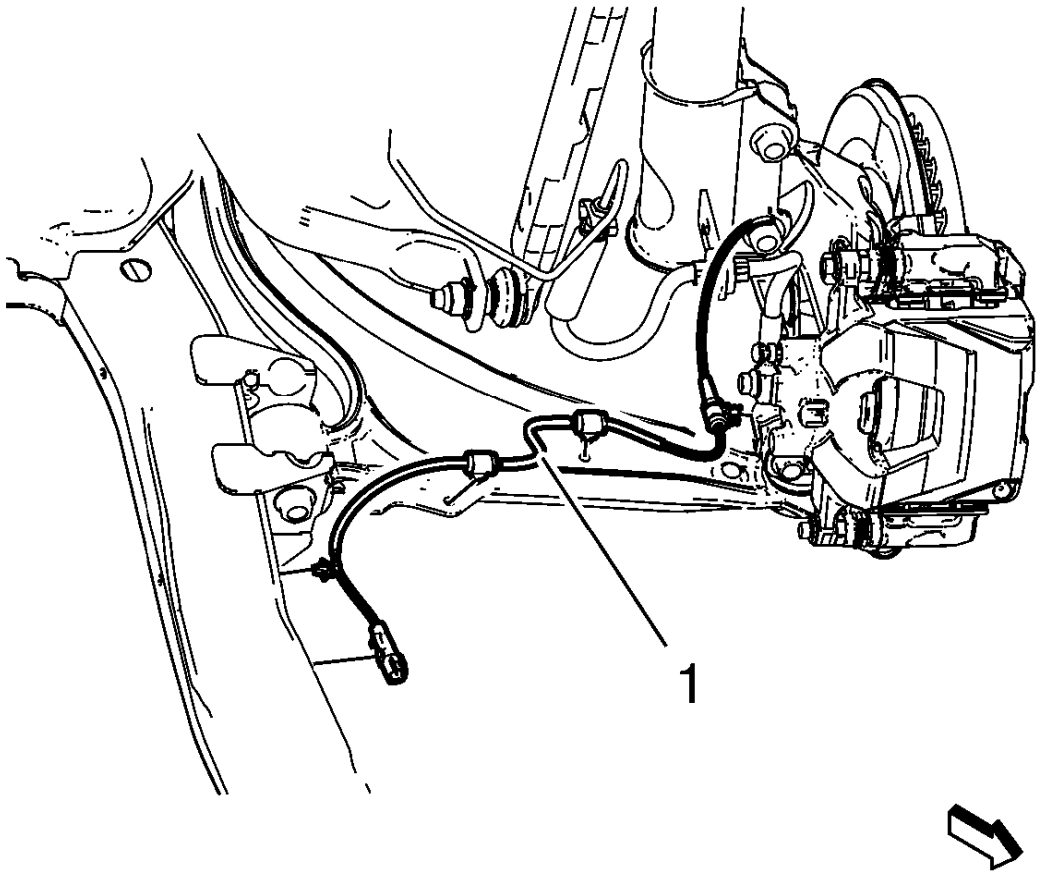

Fig. 23: Wheel Speed Sensor Wiring Harness
Courtesy of GENERAL MOTORS COMPANY

5. Remove the wiring harness retainers from the frame.
6. Disconnect the electrical connector.
7. Remove wheel speed sensor (1) from the vehicle.

Installation Procedure

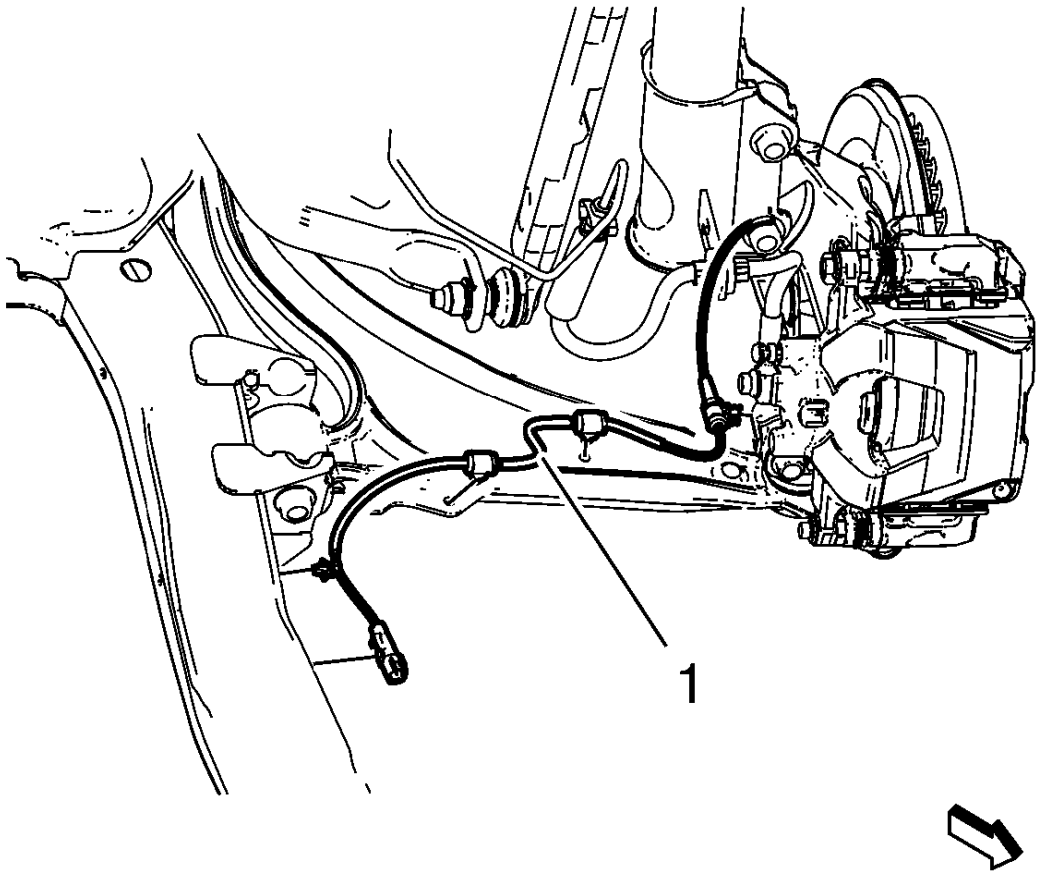

Fig. 24: Wheel Speed Sensor Wiring Harness
Courtesy of GENERAL MOTORS COMPANY

1. Install the wheel speed sensor (1) to the vehicle.
2. Connect the electrical connector.
3. Install the wiring harness retainers to the frame.

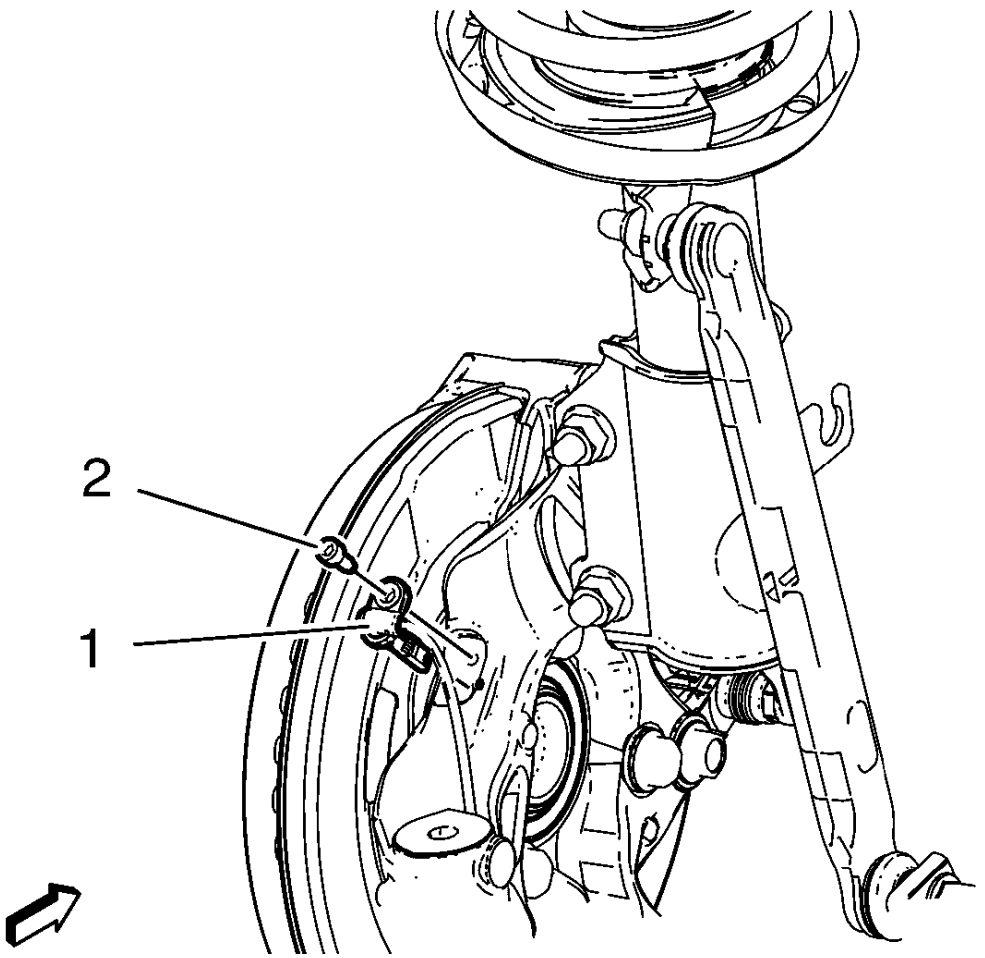

Fig. 25: Wheel Speed Sensor And Wheel Speed Sensor Screw
Courtesy of GENERAL MOTORS COMPANY

4. Install the wheel speed sensor (1) to the steering knuckle.

CAUTION: Refer to Fastener Caution .

5. Install the wheel speed sensor screw (2) and tighten to 6 N.m (53 lb in).
6. Install the tire and wheel assembly. Refer to **Tire and Wheel Removal and Installation** .

REAR WHEEL SPEED SENSOR REPLACEMENT (DISC BRAKE)

Removal Procedure

1. Remove rear wheelhouse panel liner. Refer to **Rear Wheelhouse Liner Replacement** .

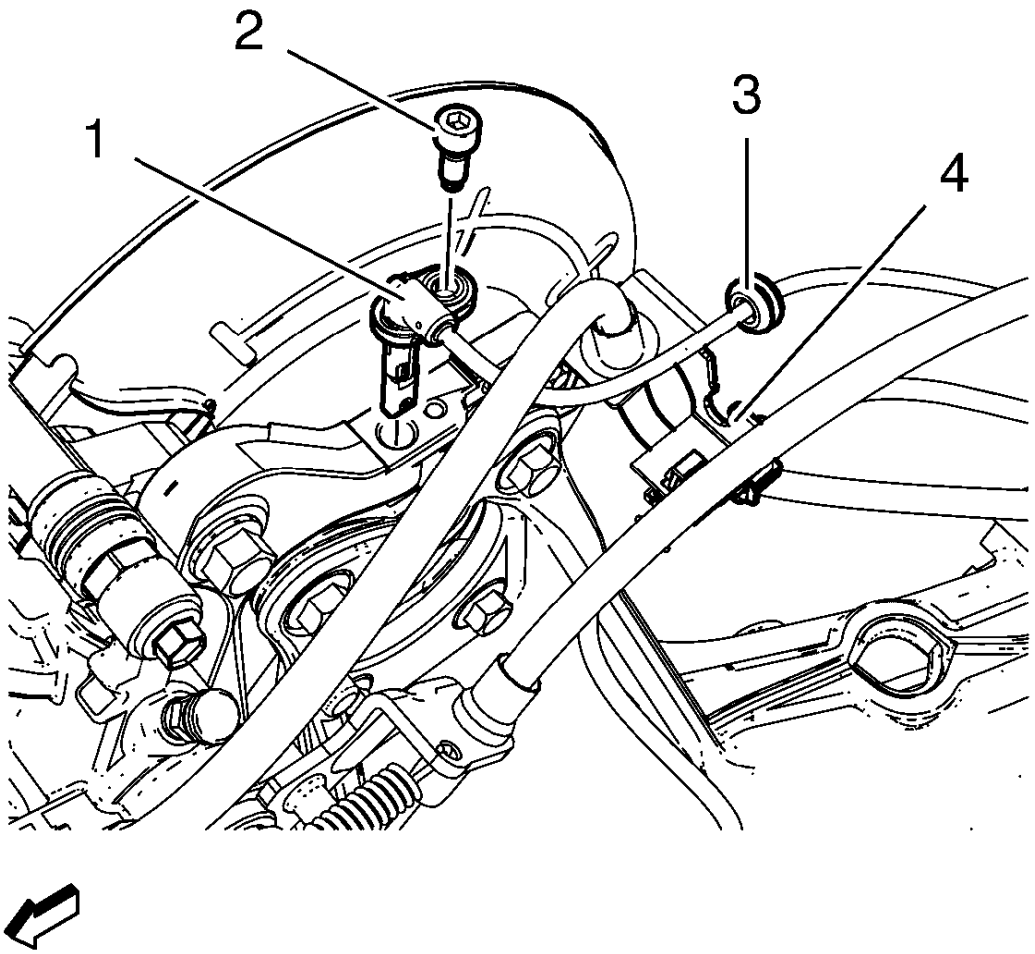

Fig. 26: Wheel Speed Sensor And Wheel Speed Sensor Screw
Courtesy of GENERAL MOTORS COMPANY

2. Remove the wheel speed sensor screw (2) from the steering knuckle.
3. Remove the wheel speed sensor (1).
4. Remove the wiring harness (3) from the bracket (4).

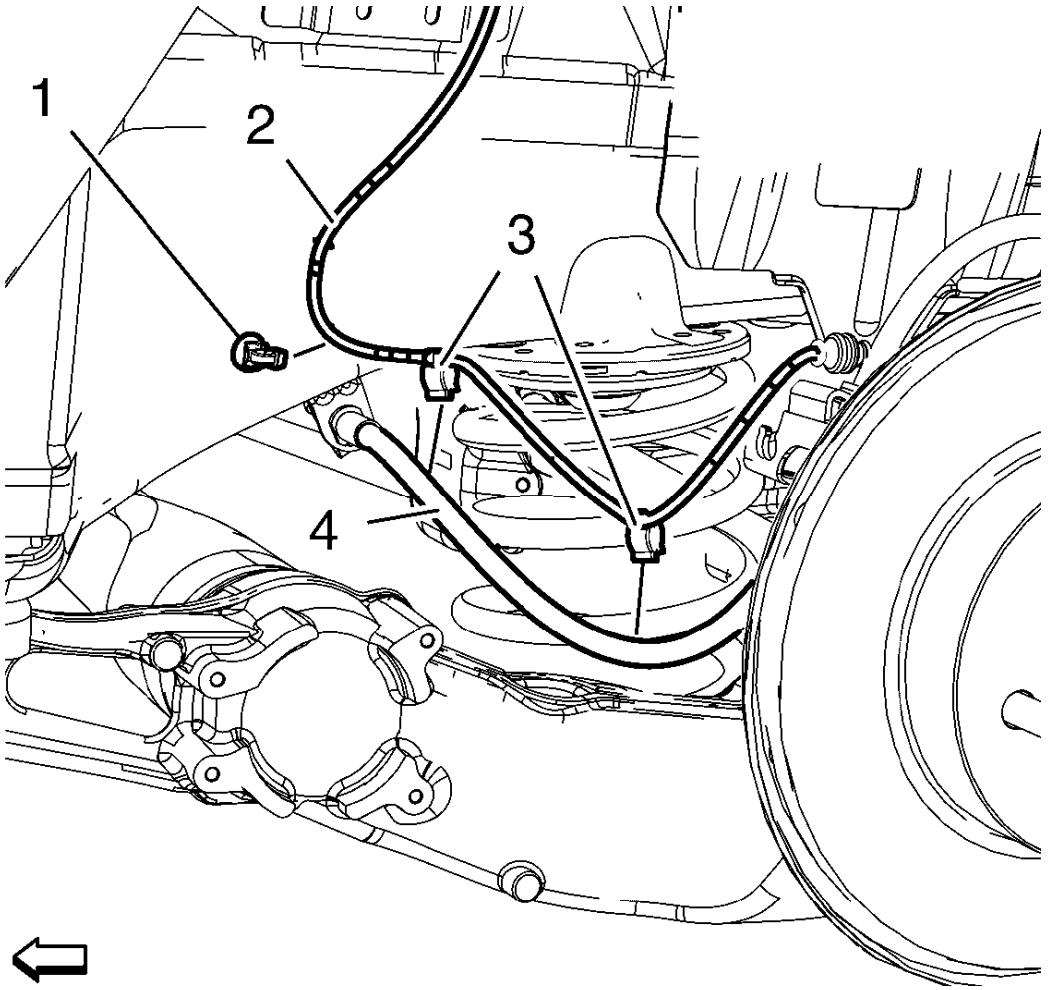

Fig. 27: Wheel Speed Sensor Wiring Harness
Courtesy of GENERAL MOTORS COMPANY

5. Remove the wiring harness (2) retainers (3) from the brake hose (4).
6. Remove the wiring harness (2) from the body retainer (1).
7. Replace the body retainer (1).

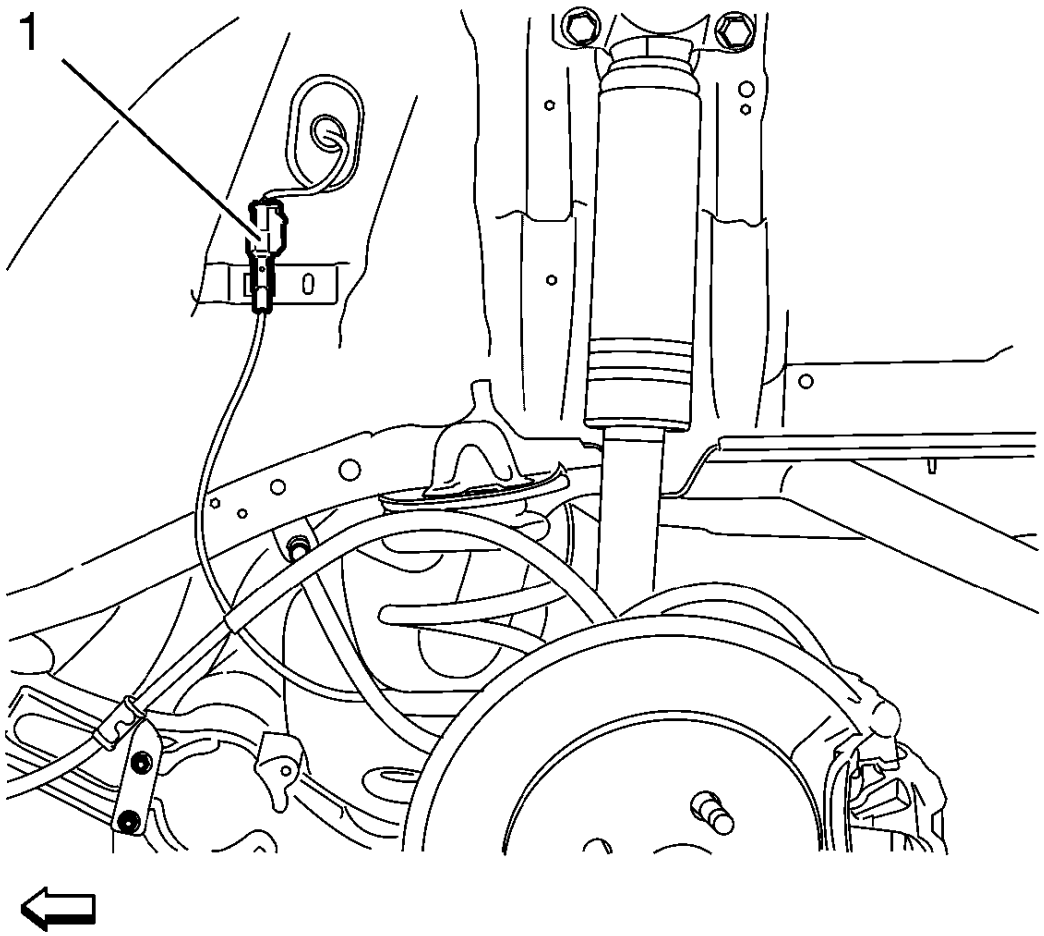

Fig. 28: Wheel Speed Sensor Electrical Connector
Courtesy of GENERAL MOTORS COMPANY

8. Disconnect the electrical connector (1).
9. Remove wheel speed sensor from the vehicle.

Installation Procedure

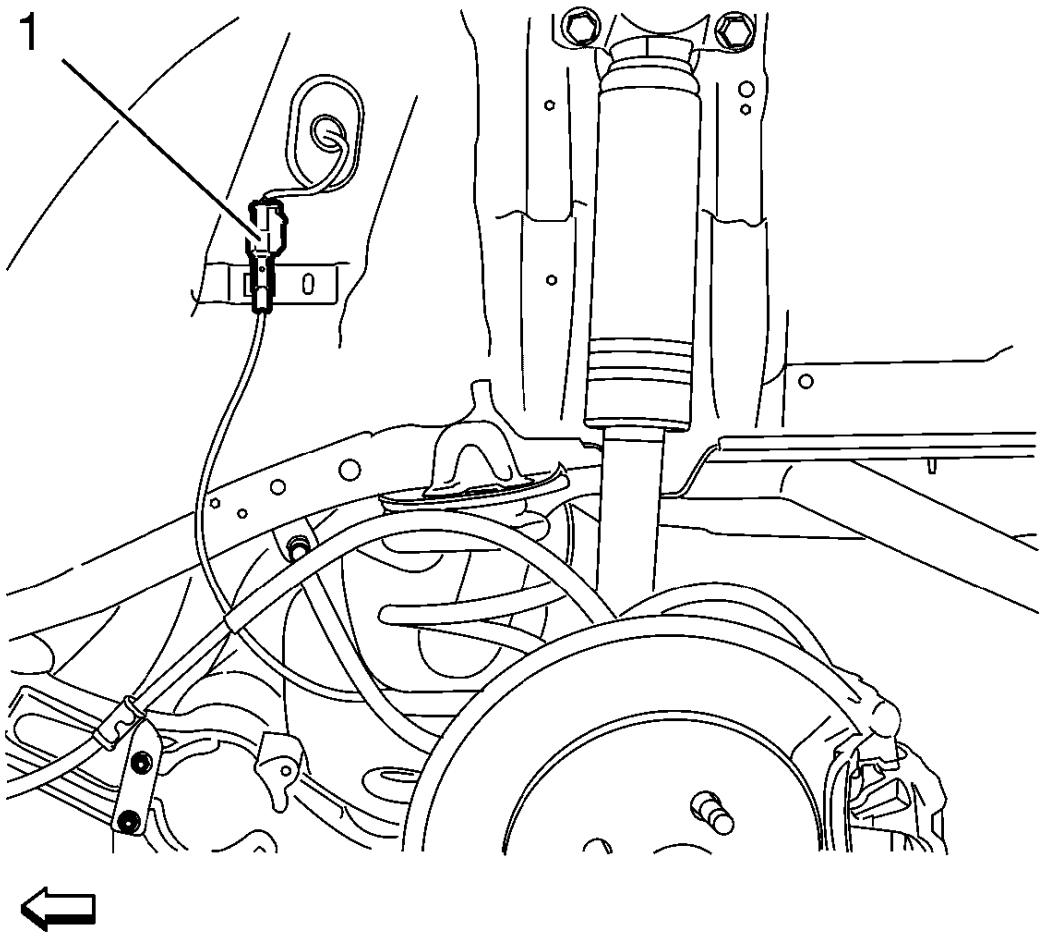

Fig. 29: Wheel Speed Sensor Electrical Connector
Courtesy of GENERAL MOTORS COMPANY

1. Install the wheel speed sensor to the vehicle.
2. Connect the electrical connector (1).

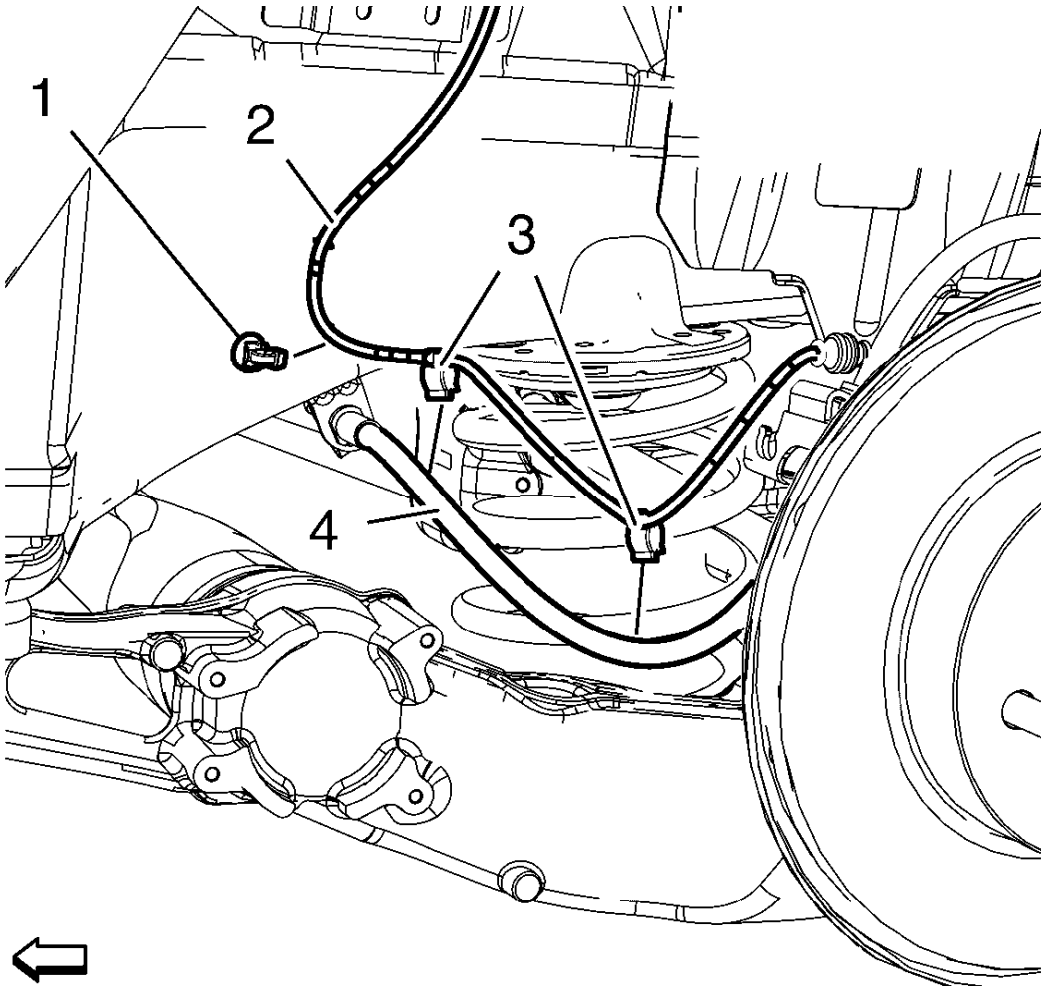

Fig. 30: Wheel Speed Sensor Wiring Harness
Courtesy of GENERAL MOTORS COMPANY

3. Install the wiring harness (2) retainers (3) to the TOP SIDE of brake hose (4), using the marking points of old wiring harness.
4. Install the wiring harness (2) to the NEW body retainer (1).

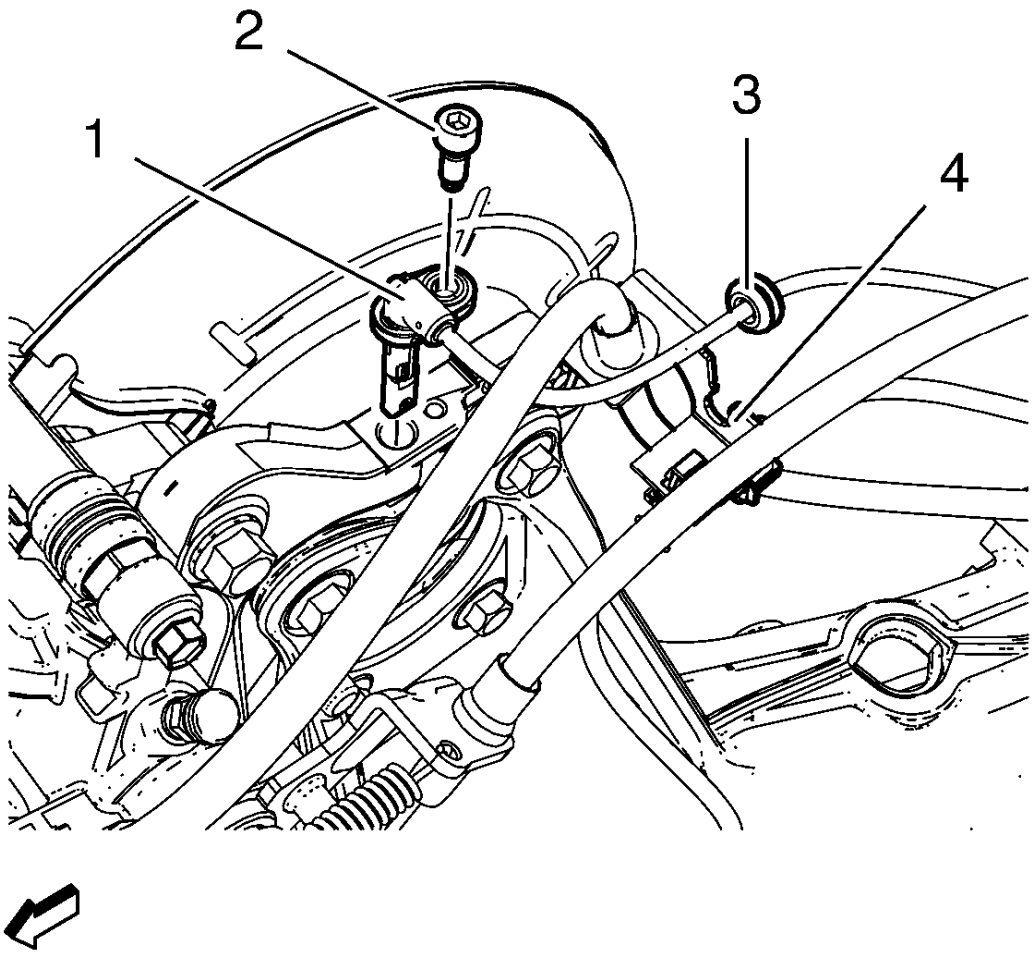

Fig. 31: Wheel Speed Sensor And Wheel Speed Sensor Screw
Courtesy of GENERAL MOTORS COMPANY

5. Install the wheel speed sensor (1) to the steering knuckle.
6. Install the wiring harness (3) at the bracket (4).

CAUTION: Refer to Fastener Caution .

7. Install the wheel speed sensor screw (2) and tighten to 6 N.m (53 lb in).

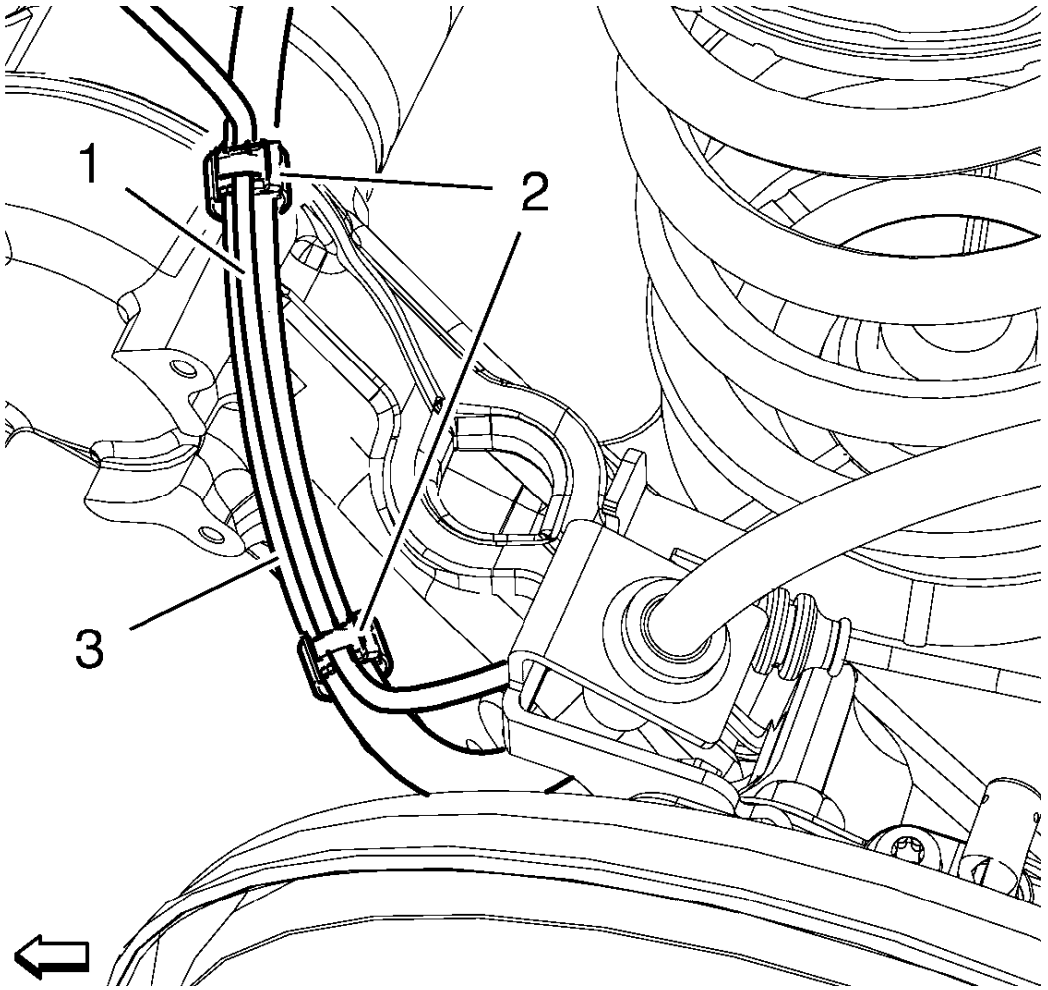

Fig. 32: Wheel Speed Sensor Wiring Harness Retainers
Courtesy of GENERAL MOTORS COMPANY

8. Check the correct installation position of the wiring harness (1). The wiring harness MUST be routed on top of the brake hose. If necessary adjust retainers (2) to the marking positions on the brake hose.
9. Apply tension to the wiring harness (1) between the retainers (2) for the correct routing.
10. Push down the brake hose by hand, to assure the correct installation position.
11. Install the rear wheelhouse panel liner. Refer to **Rear Wheelhouse Liner Replacement** .

REAR WHEEL SPEED SENSOR REPLACEMENT (DRUM BRAKE)

Removal Procedure

1. Remove rear wheelhouse panel liner. Refer to **Rear Wheelhouse Liner Replacement** .
2. Remove the rear brake hose from the wheel cylinder and the rear backing plate. Refer to **Rear Brake Hose Replacement (Drum Brake)** , **Rear Brake Hose Replacement (Disc Brake)**

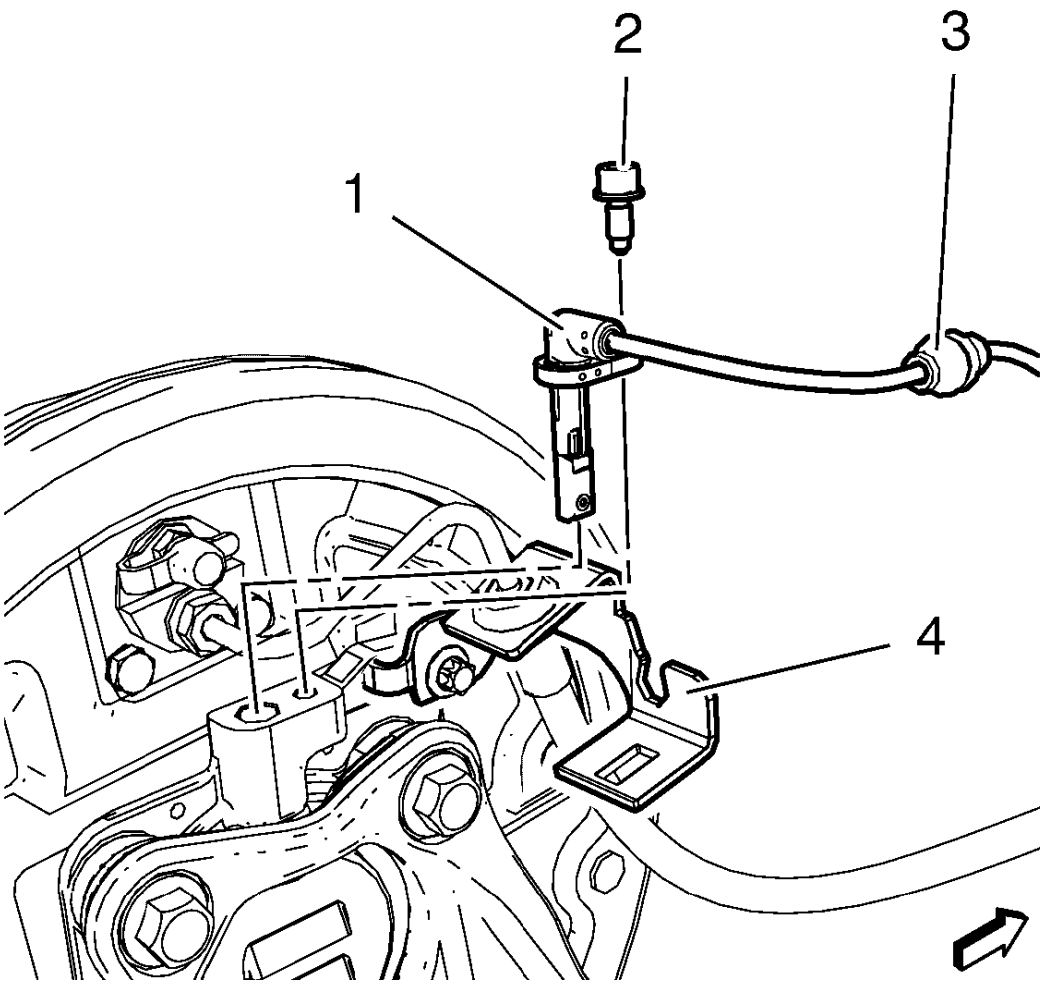

Fig. 33: Wheel Speed Sensor And Wheel Speed Sensor Screw
Courtesy of GENERAL MOTORS COMPANY

3. Remove the wheel speed sensor screw (2) from the steering knuckle.
4. Remove wheel speed sensor (1).
5. Remove wiring harness (3) from bracket (4).

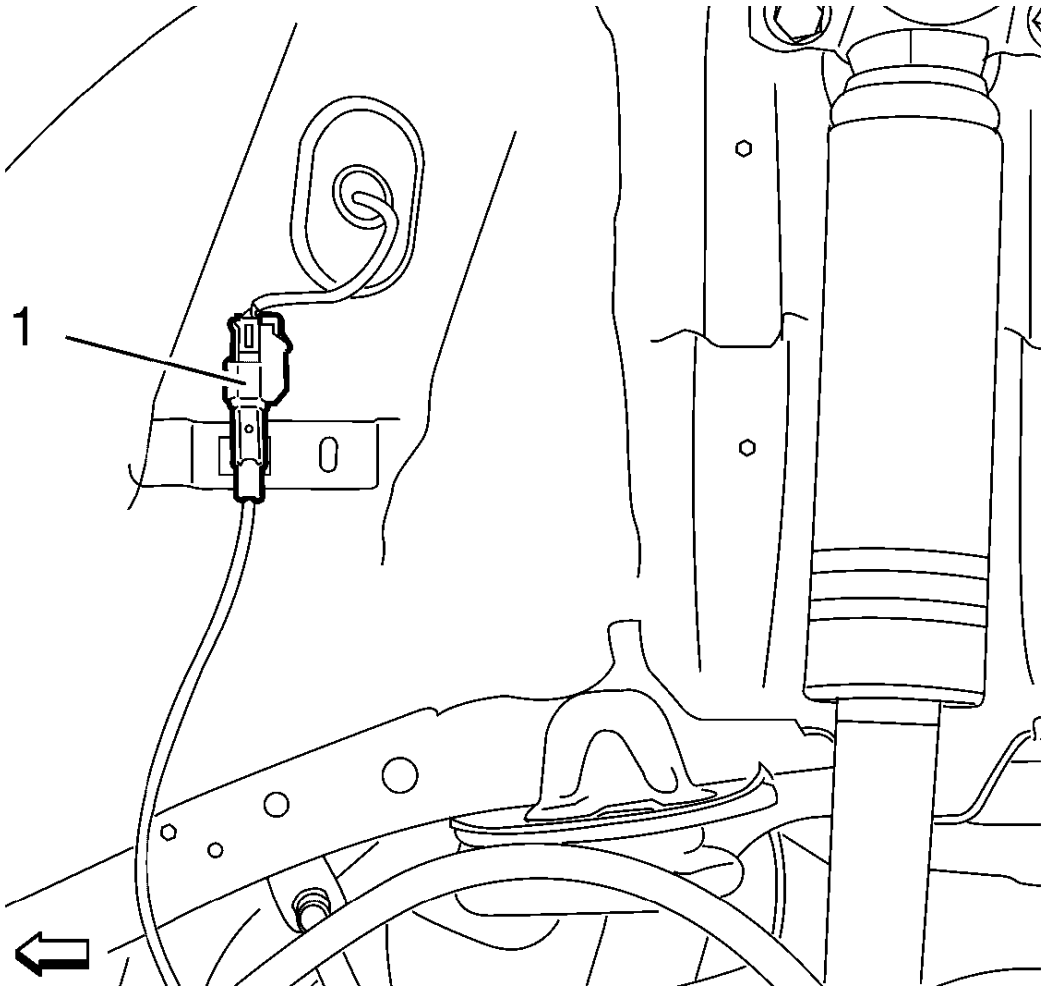

Fig. 34: Wheel Speed Sensor Electrical Connector
Courtesy of GENERAL MOTORS COMPANY

6. Disconnect the electrical connector (1).
7. Remove wheel speed sensor from vehicle.

Installation Procedure

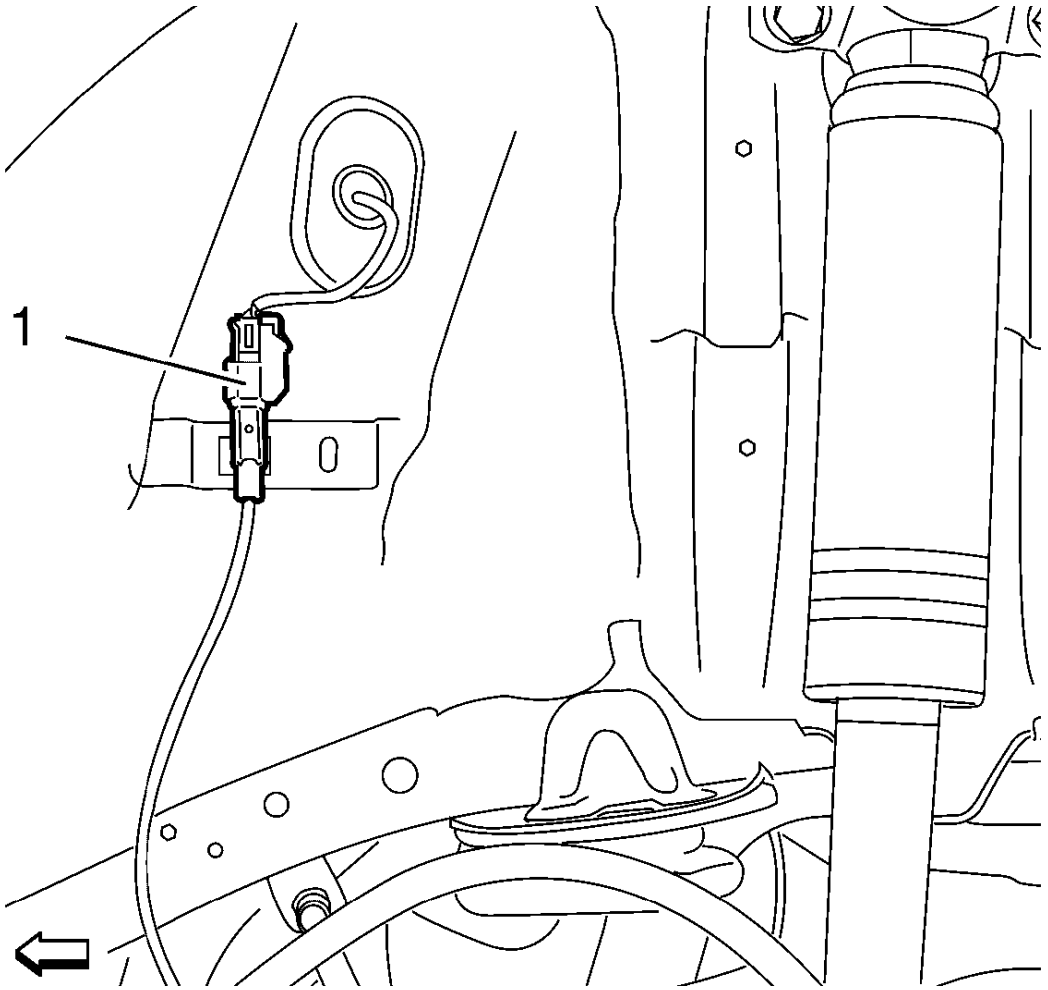

Fig. 35: Wheel Speed Sensor Electrical Connector
Courtesy of GENERAL MOTORS COMPANY

1. Install the wheel speed sensor to the vehicle.
2. Connect the electrical connector (1).

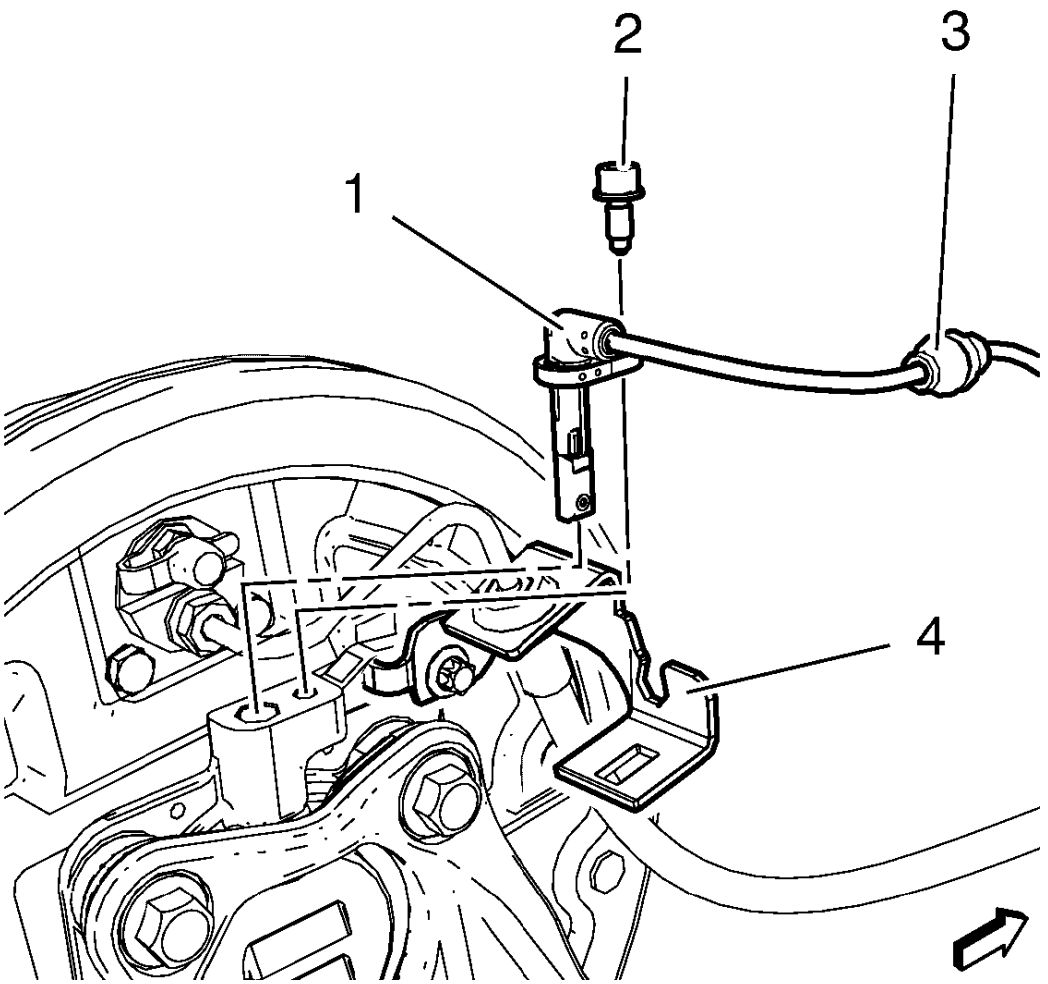

Fig. 36: Wheel Speed Sensor And Wheel Speed Sensor Screw
Courtesy of GENERAL MOTORS COMPANY

3. Install the wheel speed sensor (1) to steering knuckle.
4. Install wiring harness (3) at the bracket (4).

CAUTION: Refer to Fastener Caution .

5. Install the wheel speed sensor screw (2) and tighten to 6 N.m (53 lb in).
6. Install the rear brake hose to the wheel cylinder and the rear backing plate. Refer to **Rear Brake Hose Replacement (Drum Brake)** , **Rear Brake Hose Replacement (Disc Brake)**
7. Install rear wheelhouse panel liner. Refer to **Rear Wheelhouse Liner Replacement** .

VEHICLE YAW SENSOR LEARN

The yaw sensor does not require calibration often. Calibration of the yaw rate sensor might be required after certain service procedures are performed. Some of these procedures are as follows:

- Electronic brake control module (EBCM) replacement
- Multi-axis acceleration sensor replacement

The yaw rate sensor calibration procedure can be completed with a scan tool using the following steps:

1. Place vehicle on a level surface
2. Apply the parking brake, or set the transmission in the P position.
3. Install the scan tool to the data link connector.
4. Ignition ON, engine OFF.
5. Select Yaw Rate Sensor Reset in the Multi-axis Acceleration Sensor Module Configuration/Reset Functions list.
6. Follow the scan tool directions to complete the calibration procedure.
7. Select Yaw Rate Sensor Learn in the Multi-axis Acceleration Sensor Module Configuration/Reset Functions list.
8. Follow the scan tool directions to complete the calibration procedure.
9. Select Yaw Rate Sensor Learn in the EBCM Configuration/Reset Functions list.
10. Follow the scan tool directions to complete the calibration procedure.
11. Clear any DTCs that may be set.

VEHICLE YAW SENSOR REPLACEMENT

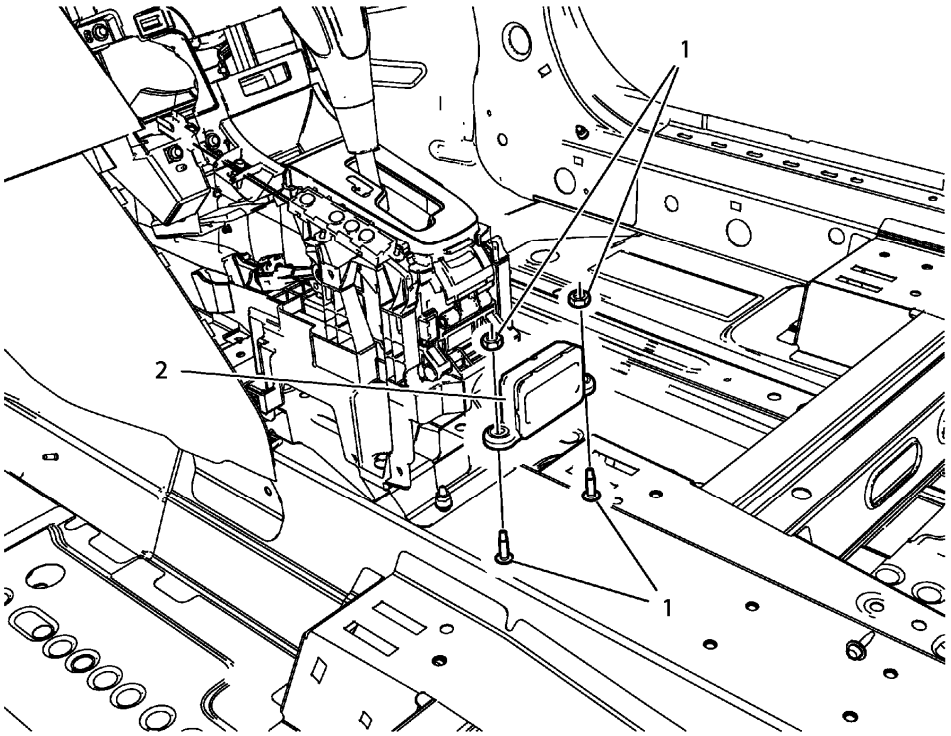

Fig. 37: Vehicle Yaw Sensor
Courtesy of GENERAL MOTORS COMPANY

Vehicle Yaw Sensor Replacement

Callout	Component Name
Preliminary Procedure Remove the front floor console. Refer to **Front Floor Console Replacement** .	
1	Vehicle Yaw Sensor Nut (Qty: 2) **CAUTION:** **Refer to Fastener Caution .** **Tighten** 9 N.m (80 lb in)
2	Vehicle Yaw Sensor **Procedure** 1. Disconnect the electrical connector. 2. After the installation is complete, perform the yaw sensor learn procedure. Refer to **Vehicle Yaw Sensor Learn**

DESCRIPTION AND OPERATION

ABS DESCRIPTION AND OPERATION

This vehicle is equipped with a Continental Teves Mk60/Mk70 brake system. The electronic brake control module (EBCM) and the brake pressure modulator valve assembly are serviced separately. The brake pressure modulator valve assembly uses a 4 circuit configuration to control hydraulic pressure to each wheel independently.

Depending on options, the following vehicle performance enhancement systems are provided.

- Antilock brake system (ABS)
- Traction control
- Stability control
- Dynamic rear proportioning
- Hydraulic brake assist

The following components are involved in the operation of the above systems:

- EBCM - The EBCM controls the system functions and detects failures. It supplies voltage to the solenoid valves and pump motor.
- Brake pressure modulator valve assembly - The brake pressure modulator valve assembly contains the following components:
  - Hydraulic pump with pump motor
  - Four isolation vales
  - Four dump valves
  - Two traction control/stability control supply valves
  - Two traction control/stability control isolation valves
  - Pressure sensor
  - High pressure accumulator
  - Low pressure accumulator
- Multi-axis acceleration sensor - The yaw rate and lateral acceleration sensors are combined into one multi-axis acceleration sensor, external to the EBCM. The EBCM receives serial data message inputs from the yaw rate and lateral acceleration sensor and activates stability control depending on multi-axis acceleration sensor input.
- Steering angle sensor - The EBCM receives serial data message inputs from the steering angle sensor. The steering angle sensor signal is used to calculate the desired yaw rate.
- Traction control switch - Traction control and stability control are manually disabled or enabled by pressing the traction control switch.
- Wheel speed sensors - The EBCM sends a 12 V reference voltage to each wheel speed sensor. As the wheel spins, the wheel speed sensor produces an alternating current square wave signal. The EBCM uses the frequency of the square wave signal to calculate the wheel speed.

Initialization Sequence

The initialization sequence cycles each solenoid valve and the pump motor, as well as the necessary relays, for approximately 30 milliseconds to check component operation. The electronic brake control module sets a DTC if any error is detected. The initialization sequence may be heard and felt while it is taking place, and is considered part of normal system operation. The active test is initiated by the electronic brake control module at the start of the ignition cycle and the speed of the fastest wheel exceeds 8 km/h (5 MPH).

ABS

When wheel slip is detected during a brake application, an ABS event occurs. During ABS braking, hydraulic pressure in the individual wheel circuits is controlled to prevent any wheel from slipping. A separate hydraulic line and specific solenoid valves are provided for each wheel. The ABS can decrease, hold, or increase hydraulic pressure to each wheel. The ABS does not, however, increase hydraulic pressure above the amount which is transmitted by the master cylinder during braking.

During ABS braking, a series of rapid pulsations is felt in the brake pedal. These pulsations are caused by the rapid changes in position of the individual solenoid valves as the EBCM responds to wheel speed sensor inputs and attempts to prevent wheel slip. These pedal pulsations are present only during ABS braking and stop when normal braking is resumed or when the vehicle comes to a stop. A ticking or popping noise may also be heard as the solenoid valves cycle rapidly. During ABS braking on dry pavement, intermittent chirping noises may be heard as the tires approach slipping. These noises and pedal pulsations are considered normal during ABS operation.

Vehicles equipped with ABS may be stopped by applying normal force to the brake pedal. Brake pedal operation during normal braking is no different than that of previous non ABS systems. Maintaining a constant force on the brake pedal provides the shortest stopping distance while maintaining vehicle stability. The typical ABS activation sequence is as follows.

Pressure Hold

The EBCM closes the isolation valve and keeps the dump valve closed in order to isolate the slipping wheel when wheel slip occurs. This holds the pressure steady on the brake so that the hydraulic pressure does not increase or decrease.

Pressure Decrease

If a pressure hold does not correct the wheel slip condition, a pressure decrease occurs. The EBCM decreases the pressure to individual wheels during deceleration when wheel slip occurs. The isolation valve is closed and the dump valve is opened. The excess fluid is stored in the accumulator until the pump can return the fluid to the master cylinder or fluid reservoir.

Pressure Increase

After the wheel slip is corrected, a pressure increase occurs. The EBCM increases the pressure to individual wheels during deceleration in order to reduce the speed of the wheel. The isolation valve is opened and the dump valve is closed. The increased pressure is delivered from the master cylinder.

Traction Control

When drive wheel slip is noted, the EBCM will enter traction control mode.

First, the EBCM requests the engine control module (ECM) to reduce the amount of torque to the drive wheels via a serial data message. The ECM reduces torque to the drive wheels and reports the amount of delivered torque.

If the engine torque reduction does not reduce drive wheel slip, the EBCM will actively apply the brakes on the slipping drive wheel. During traction control braking, hydraulic pressure in each drive wheel circuit is controlled to prevent the drive wheels from slipping. The EBCM commands the pump motor and appropriate solenoid valves ON and OFF to apply brake pressure to the slipping wheel.

Traction control can be manually disabled or enabled by pressing the traction control switch.

Stability Control

Stability control provides added stability during aggressive maneuvers. Yaw rate is the rate of rotation about the vehicle's vertical axis. The stability control is activated when the EBCM determines that the desired yaw rate does not match the actual yaw rate as measured by the yaw rate sensor.

The desired yaw rate is calculated by the EBCM using the following inputs:

- Steering wheel position
- Vehicle speed
- Lateral acceleration

The difference between the desired yaw rate and the actual yaw rate is the yaw rate error, which is a measurement of oversteer or understeer. When a yaw rate error is detected, the EBCM attempts to correct the vehicle's yaw motion by applying brake pressure to one or more of the wheels. The amount of brake pressure which is applied varies, depending on the correction required. The engine torque may be reduced also, if it is necessary to slow the vehicle while maintaining stability.

Stability control activations generally occur in turns during aggressive driving. When braking during stability control activation, the brake pedal may pulsate.

Stability control can be manually disabled or enabled by pressing the traction control switch for 5 s.

Dynamic Rear Proportioning

The dynamic rear proportioning is a control system that replaces the mechanical proportioning valve. Under certain driving conditions the EBCM will reduce the rear wheel brake pressure by commanding the appropriate solenoid valves ON and OFF.

Hydraulic Brake Assist

The hydraulic brake assist function is designed to support the driver in emergency braking situations.

The EBCM receives inputs from the brake pressure sensor. When the EBCM senses an emergency braking

situation, the EBCM will actively increase the brake pressure to a specific maximum.

Driver Information Indicators

Brake Warning Indicator

The instrument cluster turns the brake warning indicator ON when the following occurs:

- The instrument cluster performs the bulb check.
- The EBCM detects a fault and sends a serial data message to the instrument cluster requesting illumination.
- The body control module (BCM) detects that the park brake is engaged. The instrument cluster receives a serial data message from the BCM requesting illumination.

ABS Indicator

The instrument cluster turns the ABS indicator ON when the following occurs:

- The instrument cluster performs the bulb check.
- The EBCM detects a malfunction which disables the ABS and sends a serial data message to the instrument cluster requesting illumination.

Traction Control/Stability Control Active Indicator

The instrument cluster turns the traction control/stability control-active indicator ON when the following occurs:

- The instrument cluster performs the bulb check.
- The ABS system is in traction control or stability control mode.
- The EBCM detects a malfunction which disables the traction control or stability control and sends a serial data message to the instrument cluster requesting illumination.

Traction Control Off Indicator

The instrument cluster turns the traction control off indicator ON when the following occurs:

- The instrument cluster performs the bulb check.
- The driver manually disables the traction control by pressing the traction control switch. The EBCM sends a serial data message to the instrument cluster requesting illumination.

Stability Control Off Indicator

The instrument cluster turns the stability control off indicator ON when the following occurs:

- The instrument cluster performs the bulb check.
- The driver manually disables the stability control by pressing the traction control switch. The EBCM

sends a serial data message to the instrument cluster requesting illumination.

2013 BRAKES

Disc Brakes - Cruze

SPECIFICATIONS

FASTENER TIGHTENING SPECIFICATIONS

Fastener Tightening Specifications

Application	Specification	
	Metric	English
Brake Caliper Bleeder Valve	17 N.m	13 lb ft
Brake Hose and the Brake Hose-To-Caliper Bolt	40 Y	30 lb ft
Brake Pipe Fitting Bolt	18 N.m	13 lb ft
Front Brake Caliper Bracket Bolt	100 N.m + 60-75° (1)	74 lb ft + 60-75° (1)
Front Brake Caliper Guide Pin Bolt	28 N.m	21 lb ft
Rear Brake Caliper Bracket Bolt	100 N.m + 60°-- 75° (1)	74 lb ft + 60°-- 75° (1)
Rear Brake Caliper Guide Pin Bolt	28 N.m	21 lb ft
Vibration Dampener	9 N.m	80 lb in
Vibration Dampener Stud	28 N.m	21 lb ft
Wheel Bearing/Hub Mounting Bolts	50 N.m + 30° (1)	37 lb ft + 30° (1)
Wheel Speed Sensor Bolt	6 N.m	53 lb in
(1) = Use NEW Fastener		

DISC BRAKE COMPONENT SPECIFICATIONS

Disc Brake Component Specifications

Application	Specification	
	Metric	English
Front Brakes		
• Caliper Bore Diameter-Rear (15" Brake System)	40.0 mm	1.574 in
• Rotor Diameter (15" Brake System)	276.0 mm	10.866 in
• Rotor Thickness (15" Brake System)	26 mm	1.024 in
• Rotor Discard Thickness* (15" Brake System)	23 mm	0.905 in
• Rotor Maximum Allowable Assembled Lateral Runout (15" Brake System)	0.1 mm	0.004 in
• Rotor Maximum Allowable Scoring (15" Brake System)	0.4 mm	0.0157 in
• Rotor Minimum Allowable Thickness After Refinish (15" Brake System)	23.2 mm	0.913 in

• Rotor Maximum Allowable Thickness Variation (15" Brake System)	0.006 mm	0.0002 in
• Rotor Thickness New	26.0 mm	1.023 in
• Brake Pad Thickness New without Pad Plate	12.0 mm	0.472 in
• Brake Pad Discard Thickness without Pad Plate	2.0 mm	0.078 in
Rear Brakes		
• Caliper Bore Diameter-Rear (15" Brake System)	38.0 mm	1.50 in
• Rotor Diameter (15" Brake System)	268.0 mm	10.551
• Rotor Thickness (15" Brake System)	12 mm	0.472 in
• Rotor Discard Thickness* (15" Brake System)	10 mm	0.393 in
• Rotor Maximum Allowable Assembled Lateral Runout (15" Brake System)	0.1 mm	0.004 in
• Rotor Maximum Allowable Scoring (15" Brake System)	0.4 mm	0.0157 in
• Rotor Minimum Allowable Thickness After Refinish (15" Brake System)	10.2 mm	0.402 in
• Rotor Maximum Allowable Thickness Variation (15" Brake System)	0.006 mm	0.0002 in
• Rotor Thickness New	12.0 mm	0.472 in
• Brake Pad Thickness New without Pad Plate	10.25 mm	0.403 in
• Brake Pad Discard Thickness without Pad Plate	2.0 mm	0.078 in

ADHESIVES, FLUIDS, LUBRICANTS, AND SEALERS

Adhesives, Fluids, Lubricants, and Sealers

Application	Type of Material	GM Part Number	
		United States	Canada
Hydraulic Brake System	DOT 3 Motor Vehicle Brake Fluid	88863461	88863462

DIAGNOSTIC INFORMATION AND PROCEDURES

BRAKE ROTOR THICKNESS MEASUREMENT

WARNING: Refer to Brake Dust Warning .

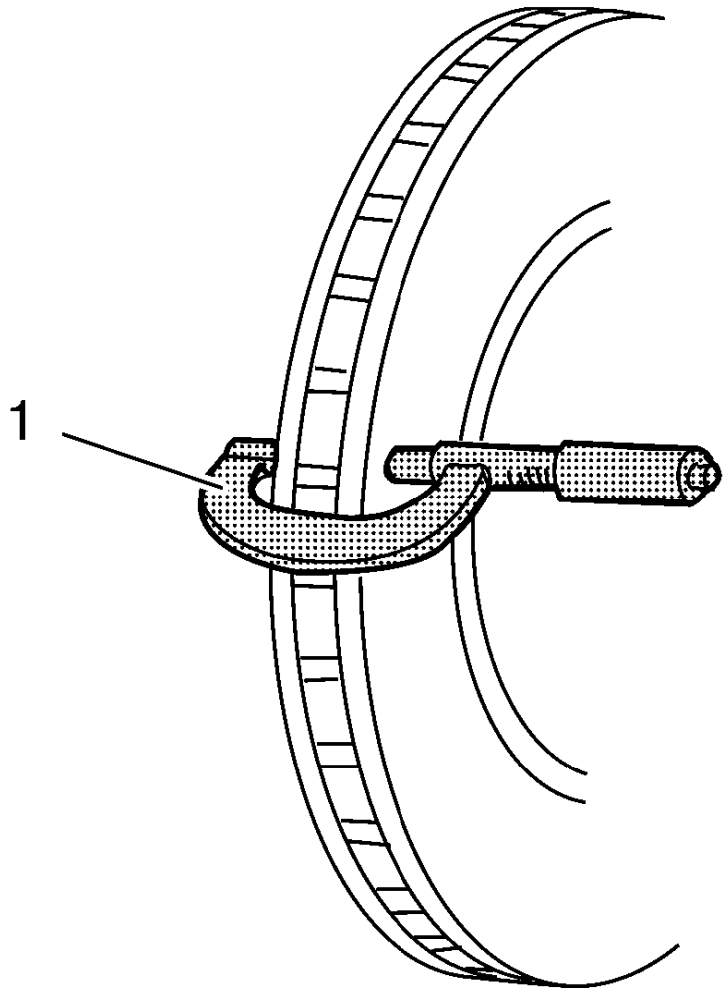

Fig. 1: Measuring Brake Rotor Thickness
Courtesy of GENERAL MOTORS COMPANY

1. If the inboard friction surface of the brake rotor is not accessible, reposition and support the caliper with the brake pads. Refer to **Front Disc Brake Pads Replacement**, and/or **Rear Disc Brake Pads Replacement**, if equipped.
2. Clean the friction surfaces of the brake rotor with denatured alcohol, or an equivalent approved brake cleaner.
3. Using a micrometer (1) calibrated in thousandths-of-a-millimeter, or ten-thousandths-of-an-inch, measure and record the lowest thickness of the brake rotor at 4 or more points, equally spaced around the rotor.

   Ensure that the measurements are only taken within the friction surfaces and that the micrometer is positioned the same distance from the outside edge of the rotor, about 13 mm (0.5 in), for each measurement.

4. Compare the lowest thickness measurement to the disc brake component specifications.
5. If the lowest thickness measurement of the brake rotor is above the minimum allowable thickness after

refinishing specification, the rotor may be able to be refinished, depending upon surface and wear conditions which may be present.

6. If the lowest thickness measurement of the brake rotor is at or below the minimum allowable thickness after refinishing specification, the rotor may not be refinished.
7. If the lowest thickness measurement of the brake rotor is at or below the discard thickness specification, the rotor requires replacement. Refer to **Front Brake Rotor Replacement (J60)**, **Front Brake Rotor Replacement (J67)**, and/or **Rear Brake Rotor Replacement**.

BRAKE ROTOR THICKNESS VARIATION MEASUREMENT

WARNING: Refer to Brake Dust Warning .

NOTE: Any disc brake rotor that exhibits thickness variation exceeding the maximum acceptable level must be refinished or replaced. Thickness variation exceeding the maximum acceptable level can cause brake pulsation.

1. If the inboard friction surface of the brake rotor is not accessible, reposition and support the caliper with the brake pads. Refer to **Front Disc Brake Pads Replacement**, and/or **Rear Disc Brake Pads Replacement**, if equipped.
2. Clean the friction surfaces of the brake rotor with denatured alcohol, or an equivalent approved brake cleaner.

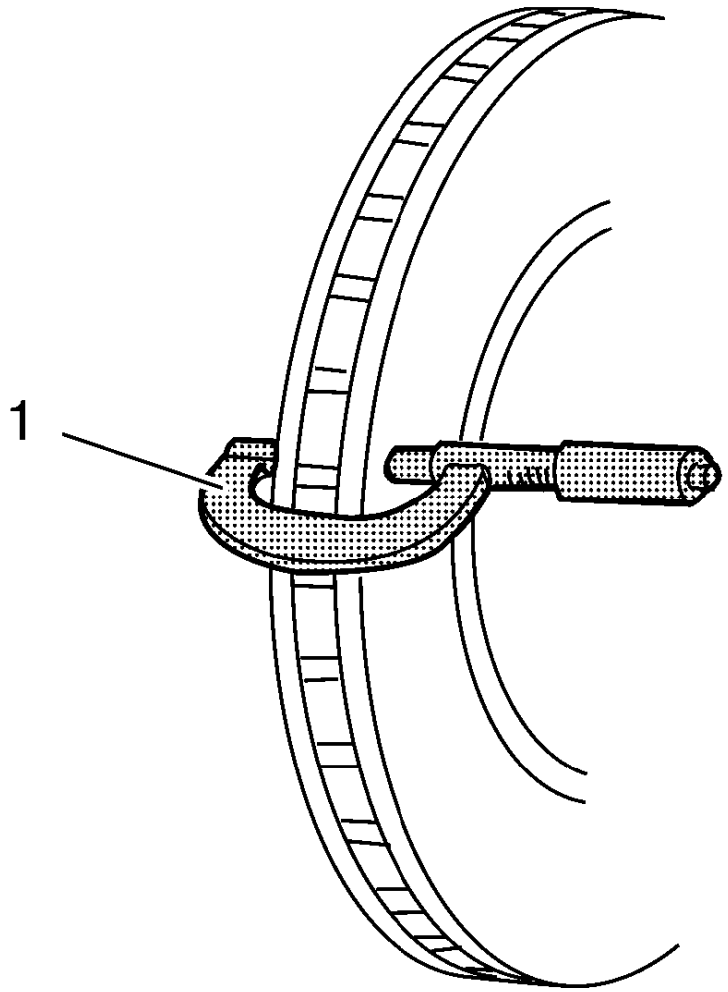

Fig. 2: Measuring Brake Rotor Thickness
Courtesy of GENERAL MOTORS COMPANY

3. Using a micrometer (1) calibrated in thousandths-of-a-millimeter, or ten-thousandths-of-an-inch, measure and record the thickness of the brake rotor at 4 or more points, evenly spaced around the rotor.

   Ensure that the measurements are only taken within the friction surfaces and that the micrometer is positioned the same distance from the outer edge of the rotor, about 13 mm (0.5 in), for each measurement.

4. Calculate the difference between the highest and lowest thickness measurements recorded to obtain the amount of thickness variation.
5. Compare the thickness variation measurement to the disc brake component specifications.

NOTE: Whenever a brake rotor is refinished or replaced, the assembled lateral runout (LRO) of the rotor must be measured to ensure optimum performance of the disc brakes.

6. If the brake rotor thickness variation measurement exceeds the specification, the rotor requires refinishing or replacement. Refer to **Front Brake Rotor Replacement (J60)**, **Front Brake Rotor Replacement (J67)**,, **Rear Brake Rotor Replacement**, or **Brake Rotor Refinishing**.

BRAKE ROTOR SURFACE AND WEAR INSPECTION

WARNING: Refer to Brake Dust Warning .

1. If the inboard friction surface of the brake rotor is not accessible, reposition and support the caliper with the brake pads. Refer to **Front Disc Brake Pads Replacement**, or/and **Rear Disc Brake Pads Replacement**.
2. Clean the friction surfaces of the brake rotor with denatured alcohol, or an equivalent approved brake cleaner.
3. Inspect the friction surfaces of the brake rotor for the following Braking Surface Conditions:
   - Heavy rust and/or pitting.
   - Light surface rust can be removed with an abrasive disc. Heavy surface rust and/or pitting must be removed by refinishing the rotor. Refer to **Brake Rotor Refinishing**.
   - Cracks and/or heat spots.
   - Excessive blueing discoloration.
4. If the friction surfaces of the brake rotor exhibit one or more of the Braking Surface Conditions, the rotor requires refinishing or replacement. Refer to **Front Brake Rotor Replacement (J60)**, **Front Brake Rotor Replacement (J67)**,, **Rear Brake Rotor Replacement**, or **Brake Rotor Refinishing**.

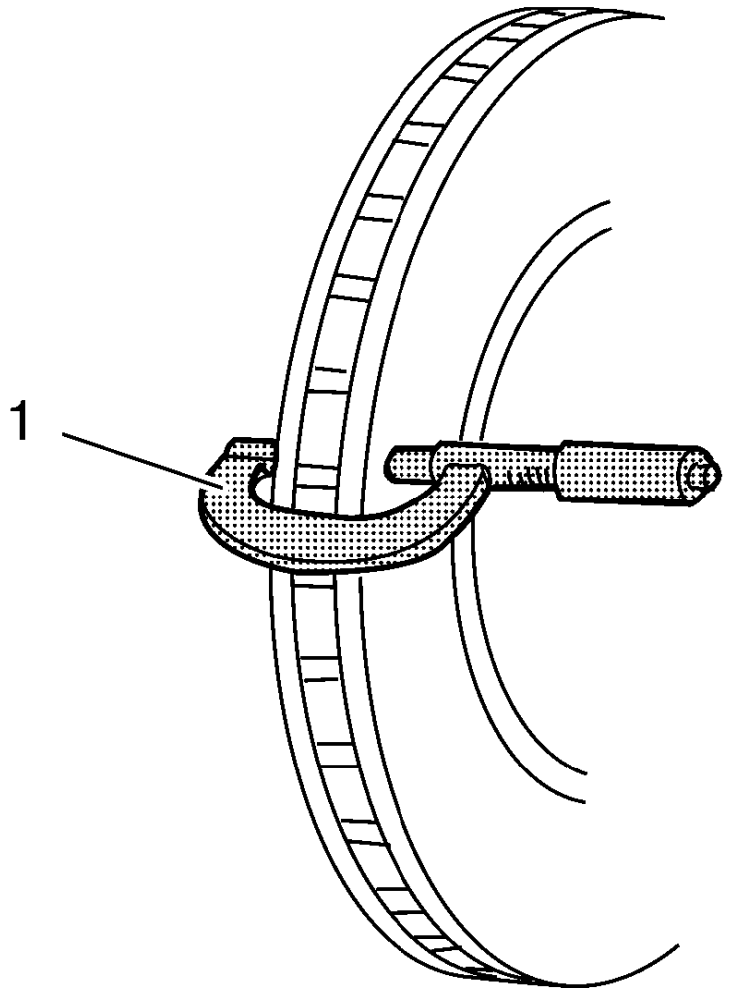

Fig. 3: Measuring Brake Rotor Thickness
Courtesy of GENERAL MOTORS COMPANY

5. Using an appropriate tool (1) for measurement, calibrated in thousandths-of-a-millimeter, or ten-thousandths-of-an-inch, measure and record the scoring depth of any grooves present on the rotor friction surfaces.
6. Compare the groove scoring depth recorded disc brake component Specifications.
7. If the brake rotor scoring depth exceeds the specification, or if an excessive amount of scoring is present, the rotor requires refinishing or replacement. Refer to **Front Brake Rotor Replacement (J60)**, **Front Brake Rotor Replacement (J67)**,, **Rear Brake Rotor Replacement**, or **Brake Rotor Refinishing**.

BRAKE ROTOR ASSEMBLED LATERAL RUNOUT MEASUREMENT

Special Tools

- **CH-41013** Rotor Resurfacing Kit
- **CH-42450-A** Wheel Hub Resurfacing Kit

- **CH-45101** Hub and Wheel Runout Gauge
- **CH-45101-100** Conical Brake Rotor Washers

For equivalent regional tools, refer to **Special Tools**.

WARNING: Refer to Brake Dust Warning .

NOTE:

- **Brake rotor assembled lateral runout (LRO) exceeding the maximum allowable specification can cause thickness variation to develop in the brake rotor over time, usually between 4, 800-11, 300 km (3, 000-7, 000 mi).**
- **Brake rotor thickness variation MUST be checked BEFORE checking for assembled lateral runout (LRO). Thickness variation exceeding the maximum acceptable level can cause brake pulsation. Refer to Brake Rotor Thickness Variation Measurement.**

1. Matchmark the position of the brake rotor to the wheel studs if this has not been done already.

NOTE: Whenever the brake rotor has been separated from the hub/axle flange, any rust or contaminants should be cleaned from the hub/axle flange and the brake rotor mating surfaces. Failure to do this may result in excessive assembled lateral runout (LRO) of the brake rotor, which could lead to brake pulsation.

2. Inspect the mating surface of the hub/axle flange and the brake rotor to ensure that there are no foreign particles, corrosion, rust, or debris remaining. If the wheel hub/axle flange and/or if the brake rotor mating surfaces exhibit these conditions, perform the following steps:
    1. Remove the brake rotor from the vehicle. Refer to **Front Brake Rotor Replacement (J60)**, **Front Brake Rotor Replacement (J67)**, and/or **Rear Brake Rotor Replacement**.
    2. Using the **CH-42450-A** wheel hub resurfacing kit, thoroughly clean any rust or corrosion from the mating surface of the hub/axle flange.
    3. Using the **CH-41013** rotor resurfacing kit, thoroughly clean any rust or corrosion from the mating surface of the brake rotor.
    4. Clean the friction surfaces of the brake rotor with denatured alcohol, or an equivalent approved brake cleaner.
3. Install the rotor to the hub/axle flange using the matchmark made prior to removal.

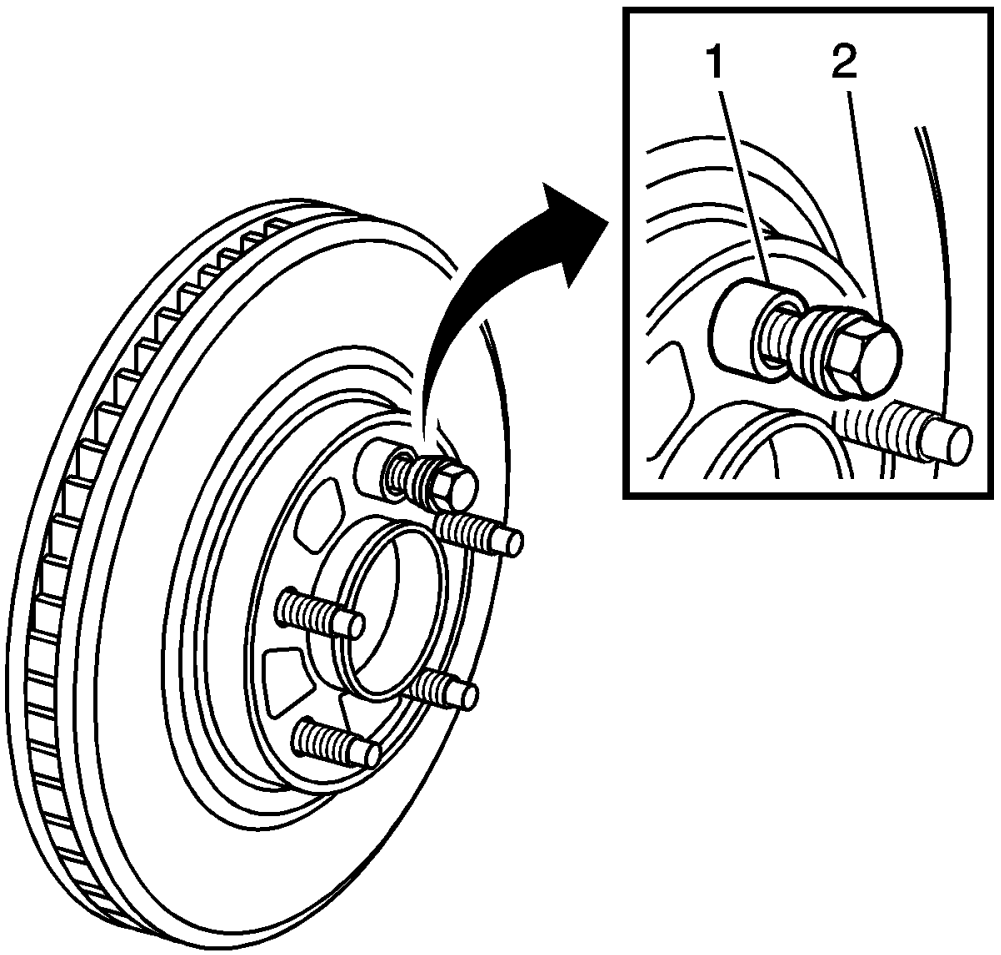

Fig. 4: Identifying Special Tool J 45101-100 & Lug Nut
Courtesy of GENERAL MOTORS COMPANY

4. Hold the rotor firmly in place against the hub/axle flange and install one of th **CH-45101-100** conical brake rotor washers (1), and one lug nut (2) onto the upper-most wheel stud.
5. Continue to hold the rotor secure and tighten the lug nut firmly by hand.

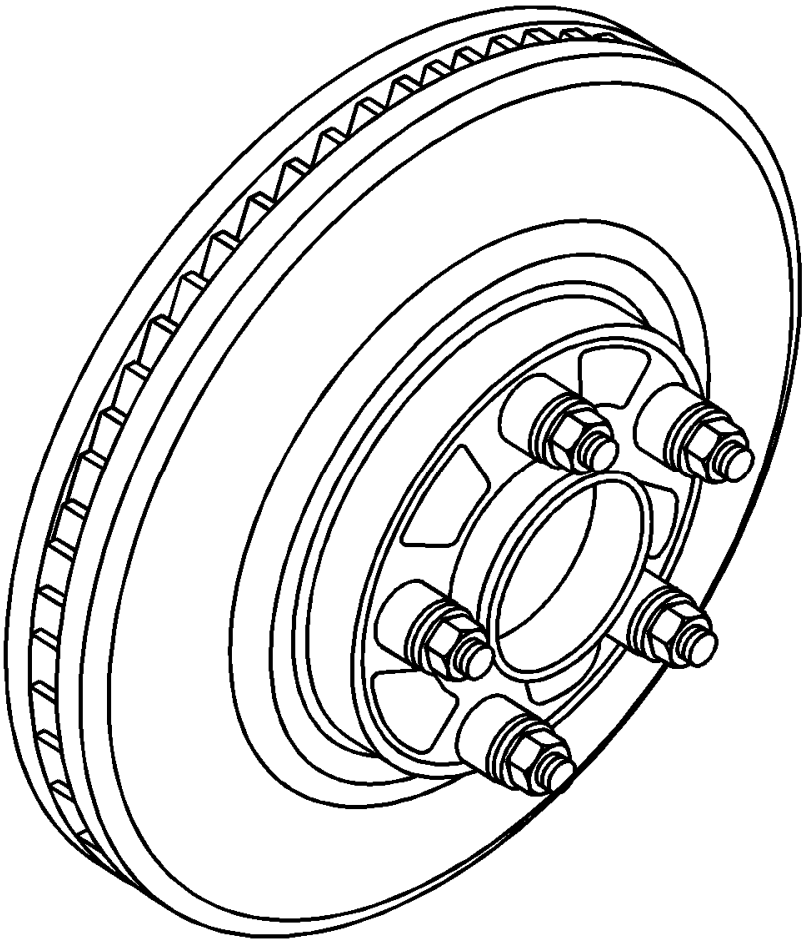

Fig. 5: Identifying All Special Tools J 45101-100s & Lug Nuts
Courtesy of GENERAL MOTORS COMPANY

6. Install the remaining **CH-45101-100** conical brake rotor washers and lug nuts onto the wheel studs and tighten the nuts firmly by hand in a star-pattern.
7. Tighten the lug nuts in a star-pattern to specification. Refer to **Tire and Wheel Removal and Installation** .
8. If the brake rotor has been REFINISHED or REPLACED with a new rotor, proceed to step 14.
9. If the brake rotor meets the following criteria, proceed to step 10.
    - The rotor is within specifications and is being REUSED.
    - The rotor has NOT been refinished.
    - The rotor does NOT exhibit thickness variation exceeding the maximum allowable level.

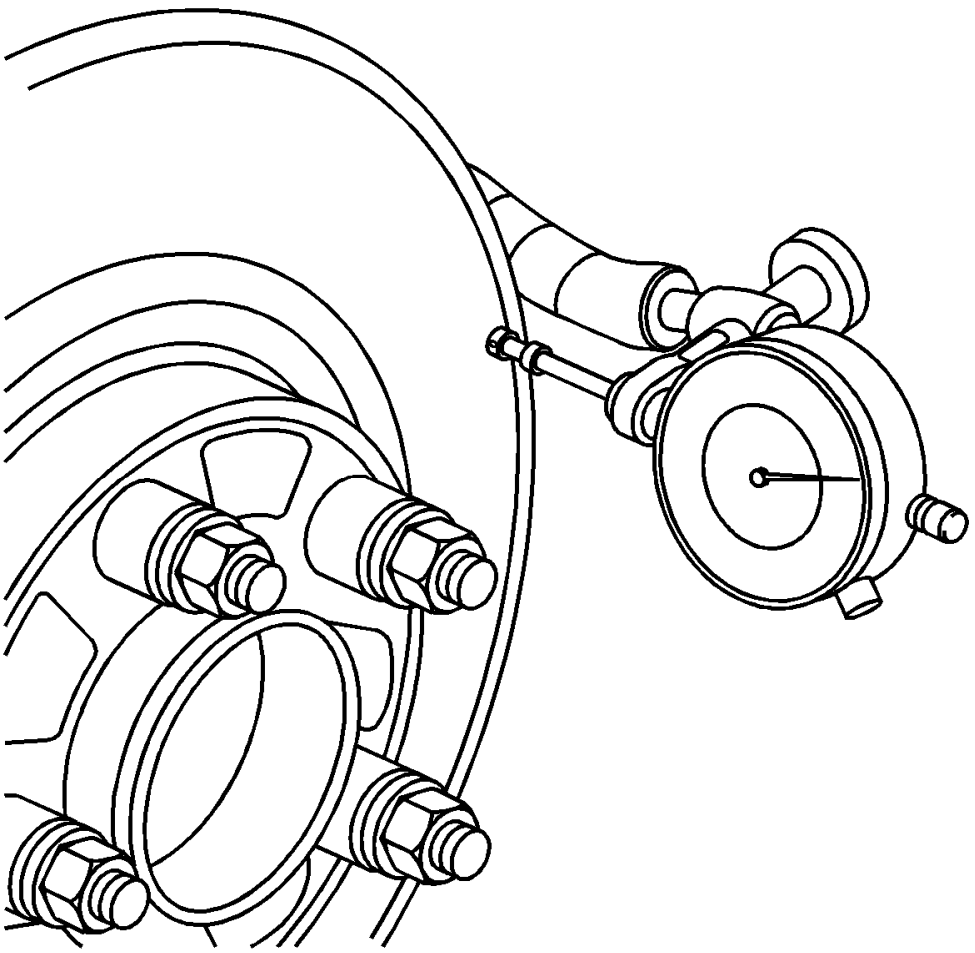

Fig. 6: Using Dial Indicator To Measure Lateral Runout
Courtesy of GENERAL MOTORS COMPANY

10. Mount a dial indicator, **CH-45101** hub and wheel runout gauge, or equivalent, to the steering knuckle and position the indicator button so it contacts the brake rotor friction surface at a 90 degree angle, approximately 13 mm (0.5 in) from the outer edge of the rotor.
11. Measure and record the assembled LRO of the brake rotor.
    1. Rotate the rotor until the lowest reading is displayed on the indicator dial, then set the dial to zero.
    2. Rotate the rotor until the highest reading is displayed on the dial.
    3. Mark the location of the high spot relative to the nearest wheel stud, or studs.
    4. Measure and record the amount of LRO.
12. Compare the brake rotor assembled LRO to the following specification:

Specification

- Front brake rotor maximum allowable assembled lateral runout: 0.05 mm (0.002 in)
- Rear brake rotor maximum allowable assembled lateral runout: 0.05 mm (0.002 in)

13. If the brake rotor assembled LRO is within specifications, proceed to step 18.

    If the brake rotor assembled LRO exceeds the specification, refinish the rotor to ensure true parallelism. Refer to **Brake Rotor Refinishing**. After refinishing the rotor, proceed to step 14.

14. Mount a dial indicator, **CH-45101** hub and wheel runout gauge, or equivalent, to the steering knuckle and position the indicator button so it contacts the brake rotor friction surface at a 90 degree angle, approximately 13 mm (0.5 in) from the outer edge of the rotor.
15. Measure and record the assembled LRO of the brake rotor.
    1. Rotate the rotor until the lowest reading is displayed on the indicator dial, then set the dial to zero.
    2. Rotate the rotor until the highest reading is displayed on the dial.
    3. Mark the location of the high spot relative to the nearest wheel stud, or studs.
    4. Measure and record the amount of LRO.
16. Compare the brake rotor assembled LRO to the following specification:

    Specification

    - Front brake rotor maximum allowable assembled lateral runout: 0.05 mm (0.002 in)
    - Rear brake rotor maximum allowable assembled lateral runout: 0.05 mm (0.002 in)
17. If the brake rotor assembled LRO measurement exceeds the specification, bring the LRO to within specifications. Refer to **Brake Rotor Assembled Lateral Runout Correction**.
18. If the brake rotor assembled LRO measurement is within specification, install the brake caliper and depress the brake pedal several times to secure the rotor in place before removing the **CH-45101-100** conical brake rotor washers and the lug nuts.

BRAKE PAD INSPECTION

Special Tools

CH-230-A Disc Gauge

For equivalent regional tools, refer to **Special Tools**.

WARNING: Refer to Brake Dust Warning .

1. Remove brake pads. Refer to **Front Disc Brake Pads Replacement**, and/or **Rear Disc Brake Pads Replacement**.

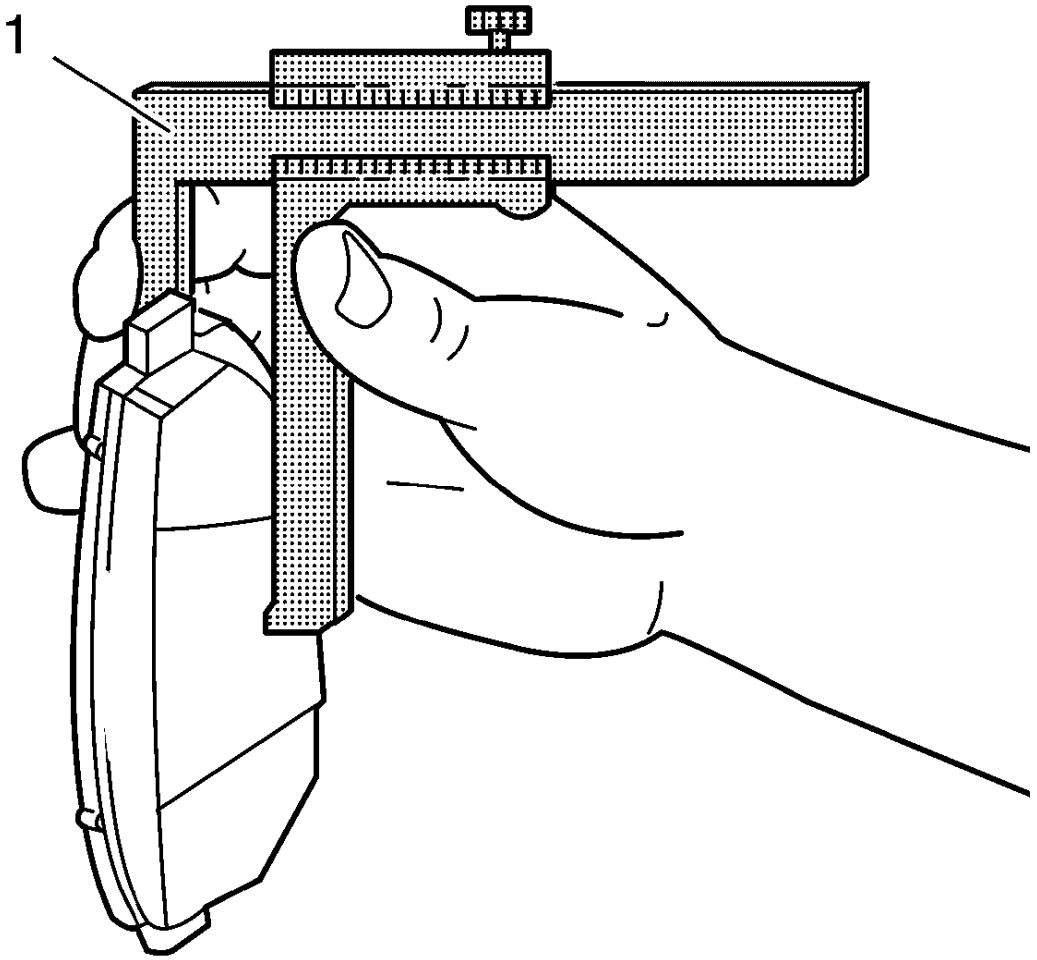

Fig. 7: Measuring Brake Pad Thickness
Courtesy of GENERAL MOTORS COMPANY

2. Measure remaining brake pad thickness at several points, using the **CH-230-A** disc gauge (1).
3. Compare brake pad thickness to disc brake component specifications.

BRAKE CALIPER INSPECTION

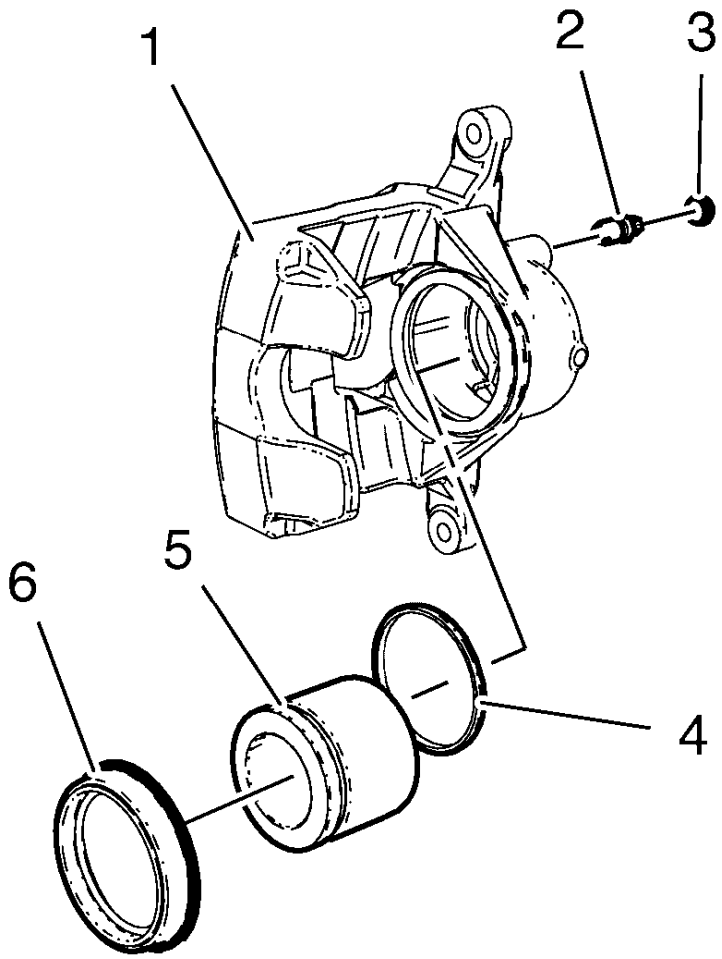

Fig. 8: Exploded View Of Brake Caliper
Courtesy of GENERAL MOTORS COMPANY

1. Inspect the brake caliper housing (1) for cracks, excess wear, and/or damage. If any of these conditions are present, the brake caliper requires replacement.
2. Inspect the caliper piston dust boot seal (6) for cracks, tears, cuts, deterioration and/or improper seating in the caliper body. If any of these conditions are present, the brake caliper requires overhaul or replacement.
3. Renew brake caliper bleeder valve cap (3) if missing.
4. Check for blocked bleeder valve (2).

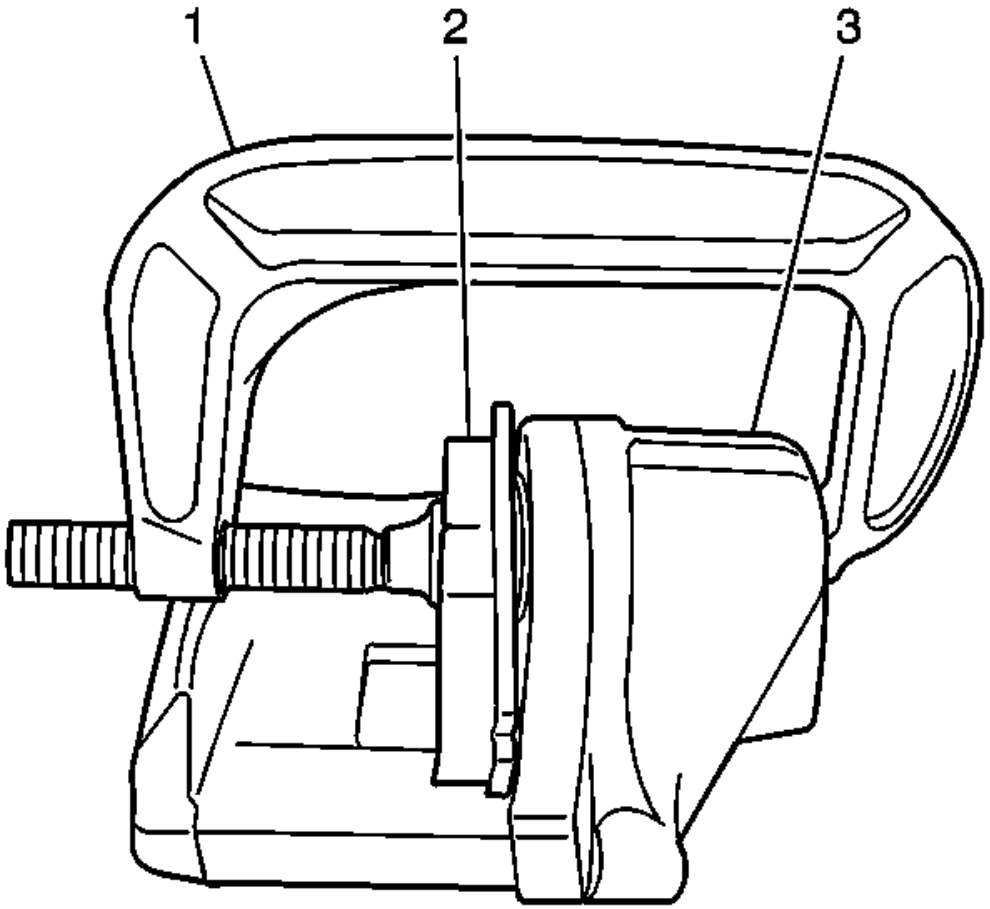

Fig. 9: Compressing Caliper Piston
Courtesy of GENERAL MOTORS COMPANY

5. Inspect for smooth and complete travel of the caliper pistons into the caliper bores:

   The movement of the caliper pistons into the caliper bores should be smooth and even. If the caliper piston is frozen or difficult to bottom, the caliper requires overhaul or replacement.

   Insert a discarded inner brake pad (2) or block of wood in front of the piston. Using a large C-clamp (1) installed over the body of the caliper (3) and against the brake pad or block of wood, slowly bottom the piston in the bore.

FRONT DISC BRAKE MOUNTING AND HARDWARE INSPECTION

WARNING: Refer to Brake Dust Warning .

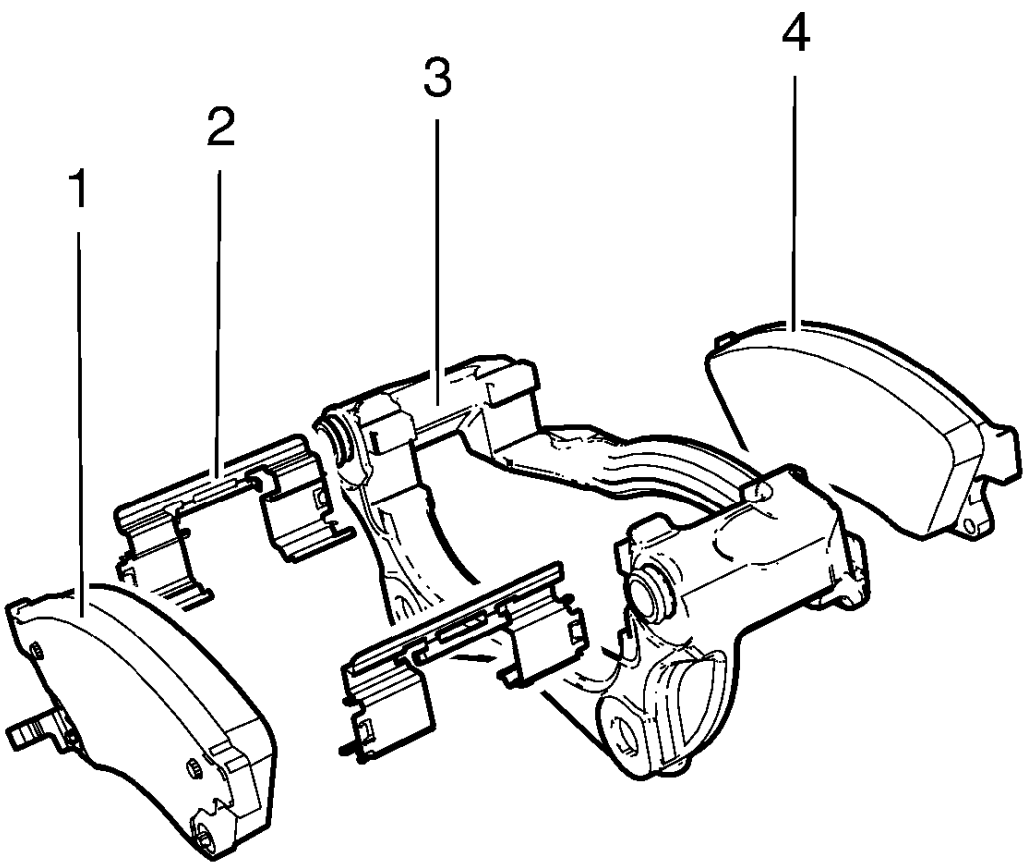

Fig. 10: Exploded View Of Brake Pads And Brake Caliper Mounting Bracket
Courtesy of GENERAL MOTORS COMPANY

1. Inspect the fluid level in the brake master cylinder reservoir.
2. If the brake fluid level is midway between the maximum-full point and the minimum allowable level then no brake fluid needs to be removed from the reservoir before proceeding.
3. If the brake fluid level is higher than midway between the maximum-full point and the minimum allowable level then remove brake fluid to the midway point before proceeding.
4. Raise and support the vehicle. Refer to **Lifting and Jacking the Vehicle** .
5. Remove the tire and wheel assembly. Refer to **Tire and Wheel Removal and Installation** .
6. Grasp the brake caliper housing and try to move the brake caliper housing up/down and forward/reverse in relation to the brake caliper mounting bracket (3). If excessive looseness is observed the brake caliper bracket bushings and/or the brake caliper mounting bolts may need to be replaced. Compress the front caliper pistons
7. Compress the front caliper pistons.
    1. Install a large C-clamp over the top of the caliper housing and against the back of the outboard pad

(1).

2. Slowly tighten the C-clamp until the pistons are pushed completely into the caliper bores.
3. Remove the C-clamp from the caliper.

8. With the pistons compressed into the caliper bores, grasp the brake caliper housing and slide it back and forth on the brake caliper mounting bolts. Check for smooth operation. If the brake caliper housing slide force is high or the brake caliper housing does not slide smoothly, inspect the brake caliper mounting bolts and/or the brake caliper mounting bracket bushings for wear or damage. If wear or damage conditions are found, replacement of the brake caliper mounting bolts and/or the brake caliper mounting bracket bushings is necessary.
9. Remove the brake caliper mounting bolts from the brake caliper mounting bracket and support the brake caliper using heavy mechanics wire. Do Not remove the hydraulic brake hose from the caliper. Refer to **Front Brake Caliper Replacement**.
10. Remove the disc brake pads (1, 2) from the brake caliper mounting bracket (3).
11. Inspect the disc brake pad mounting hardware for the following:
    - Missing mounting hardware.
    - Excessive corrosion.
    - Bent pad retainer spring (2).
    - Looseness at the brake caliper mounting bracket (3).
    - Looseness at the disc brake pads (1, 4).
    - Excessive contaminants in the brake caliper mounting bracket (3) surface and threads.
12. If any of the conditions listed are found, the disc brake pad mounting hardware requires replacement.
13. Ensure the disc brake pads are held firmly in place on the brake caliper mounting bracket, yet slide easily on the mounting hardware without binding.

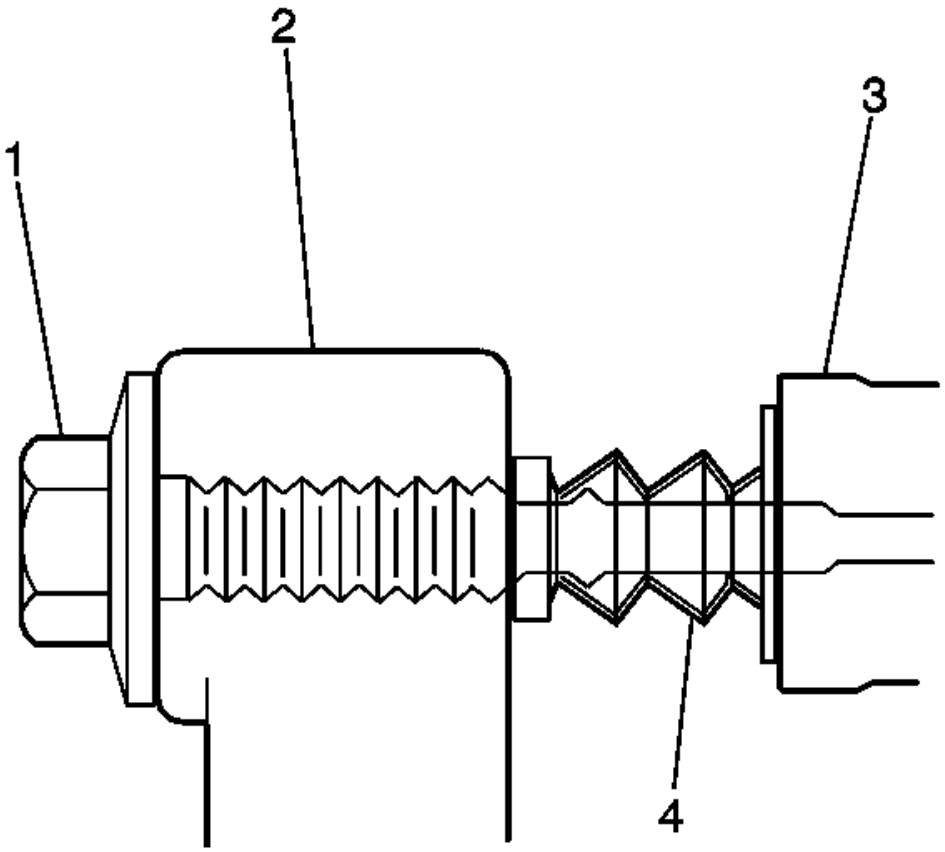

Fig. 11: View Of Caliper, Pin, Boots & Caliper Mounting Bracket
Courtesy of GENERAL MOTORS COMPANY

14. Inspect the brake caliper mounting hardware for the following:
    - Binding
    - Seizing
    - Looseness in the brake caliper mounting bracket (3).
    - Bent or damaged brake caliper mounting bolts (1).
    - Cracked or torn boots (4).
    - Missing boots.
    - Bent or damaged brake caliper mounting bracket (3).
    - Cracked or damaged brake caliper (2).
15. If any of the conditions listed are found then the brake caliper mounting hardware requires replacement.
16. Install the disc brake pads to the brake caliper mounting bracket.
17. Install the disc brake caliper to the brake caliper mounting bracket. Refer to **Front Brake Caliper**

Replacement.

REAR DISC BRAKE MOUNTING AND HARDWARE INSPECTION

WARNING: Refer to Brake Dust Warning .

1. Remove rear brake caliper bracket. Refer to **Rear Brake Caliper Bracket Replacement**.

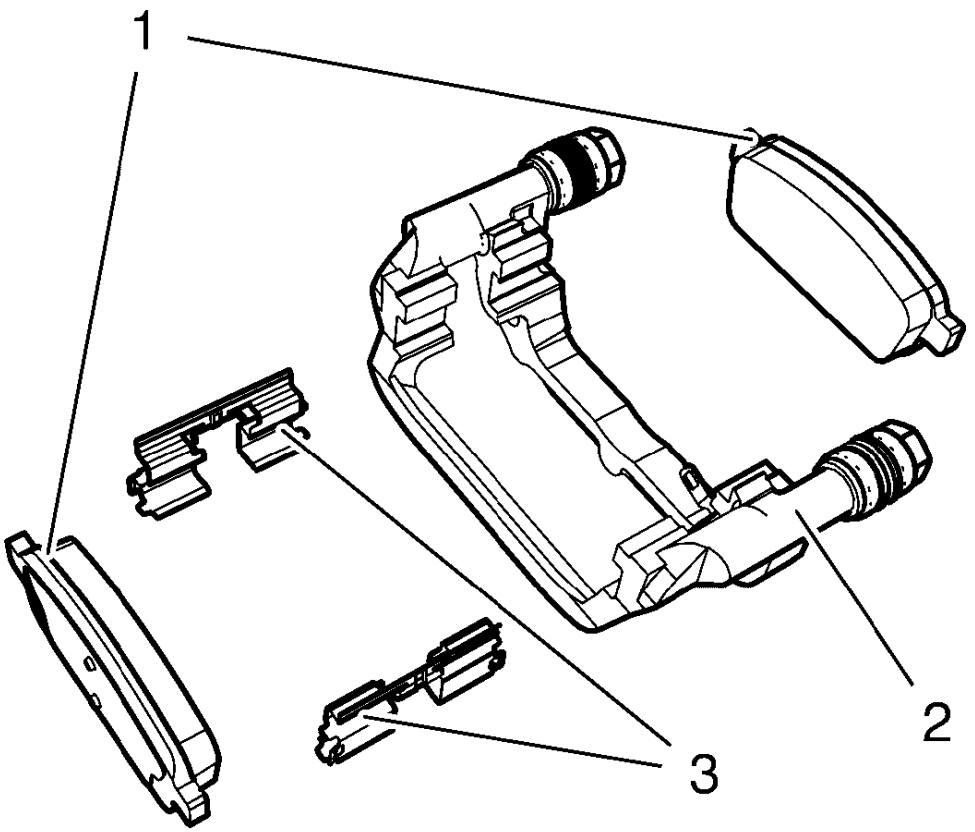

Fig. 12: Exploded View Of Brake Pads And Brake Caliper Mounting Bracket
Courtesy of GENERAL MOTORS COMPANY

2. Remove the disc brake caliper from the caliper mounting bracket (2).
3. Remove the disc brake pads (1) from the caliper mounting bracket (2).
4. Inspect the disc brake pad mounting hardware (3) for the following:
   - Missing mounting hardware.

- Excessive corrosion.
- Bent pad retainer spring.
- Looseness at the brake caliper mounting bracket.
- Looseness at the disc brake pads.
- Excessive contaminants in the brake caliper mounting bracket surface and threads.

5. If any of the conditions listed are found, the disc brake pad mounting hardware requires replacement.
6. Ensure the disc brake pads are held firmly in place on the caliper mounting bracket, yet slide easily on the mounting hardware without binding.
7. Install the disc brake pads to the caliper mounting bracket.
8. Install the disc brake caliper to the mounting bracket.
9. Install rear brake caliper bracket. Refer to **Rear Brake Caliper Bracket Replacement**.

REPAIR INSTRUCTIONS

FRONT DISC BRAKE PADS REPLACEMENT

Removal Procedure

WARNING: Refer to Brake Dust Warning .

WARNING: Refer to Brake Fluid Irritant Warning .

NOTE: Always replace disc brake pads in axle sets.

1. Inspect the fluid level in the brake master cylinder reservoir.
2. If the brake fluid level is midway between the maximum-full point and the minimum allowable level, no brake fluid needs to be removed from the reservoir before proceeding.
3. If the brake fluid level is higher than midway between the maximum-full point and the minimum allowable level, remove brake fluid to the midway point before proceeding.
4. Raise and support the vehicle. Refer to **Lifting and Jacking the Vehicle** .
5. Remove the tire and wheel assembly. Refer to **Tire and Wheel Removal and Installation** .

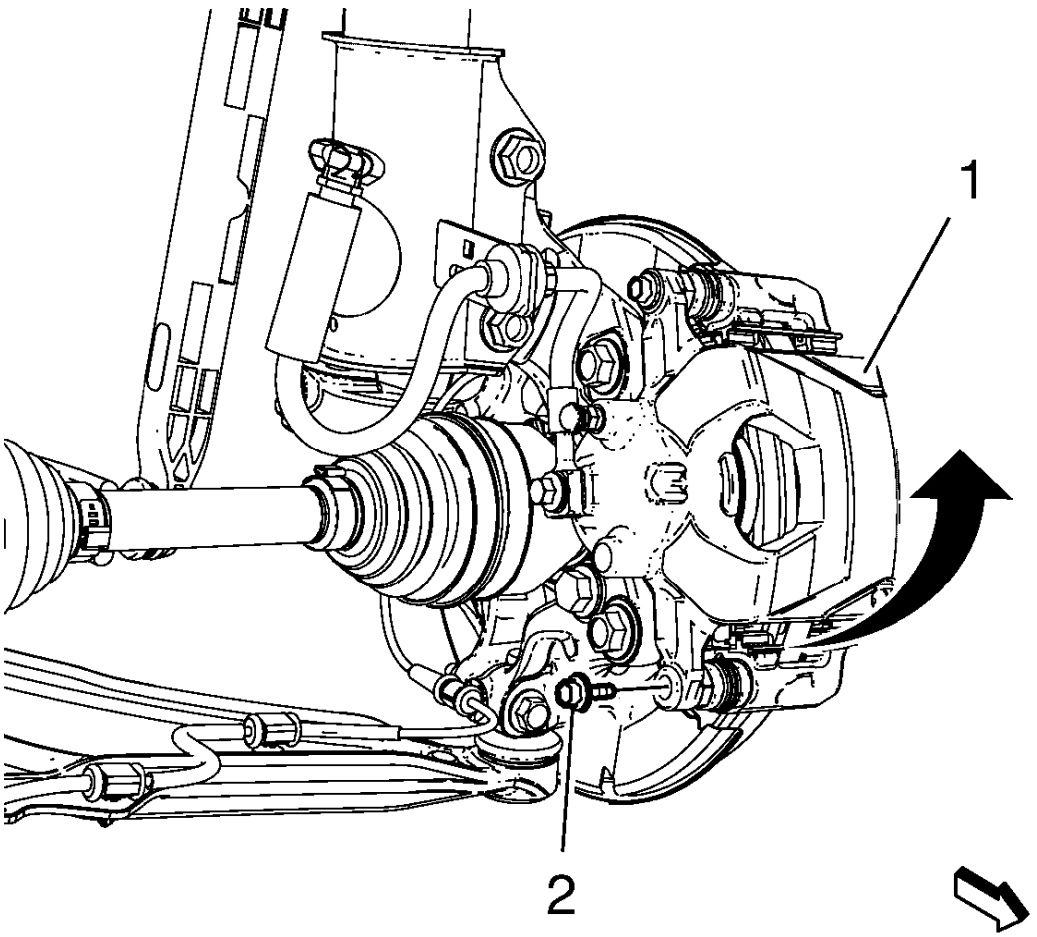

Fig. 13: View Of Brake Caliper And Brake Caliper Guide Pin Bolt
Courtesy of GENERAL MOTORS COMPANY

6. Remove the brake caliper lower guide pin bolt (2).
7. Without disconnecting the hydraulic brake flexible hose, pivot the caliper (1) upward and secure the caliper with heavy mechanics wire, or equivalent.

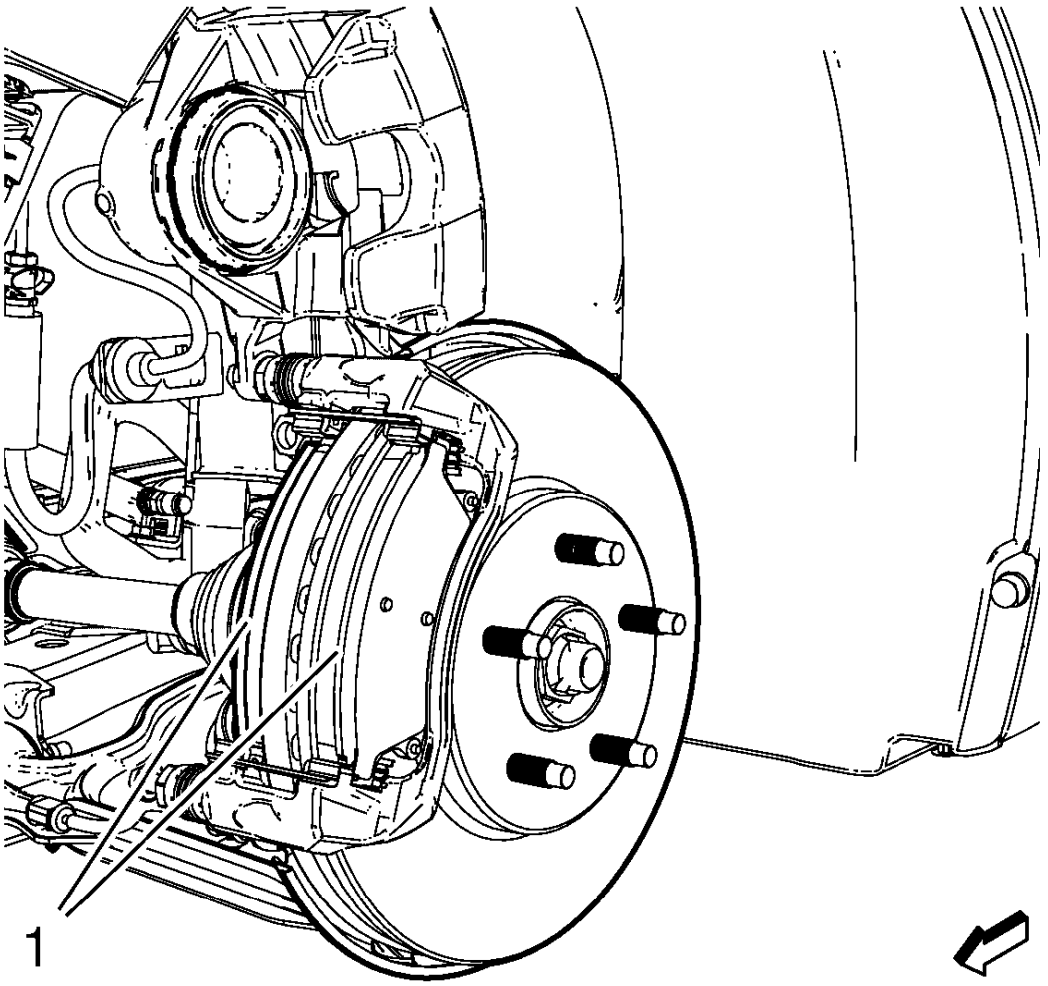

Fig. 14: View of Installed Brake Pads
Courtesy of GENERAL MOTORS COMPANY

8. Remove the brake pads (1) from the caliper mounting bracket.

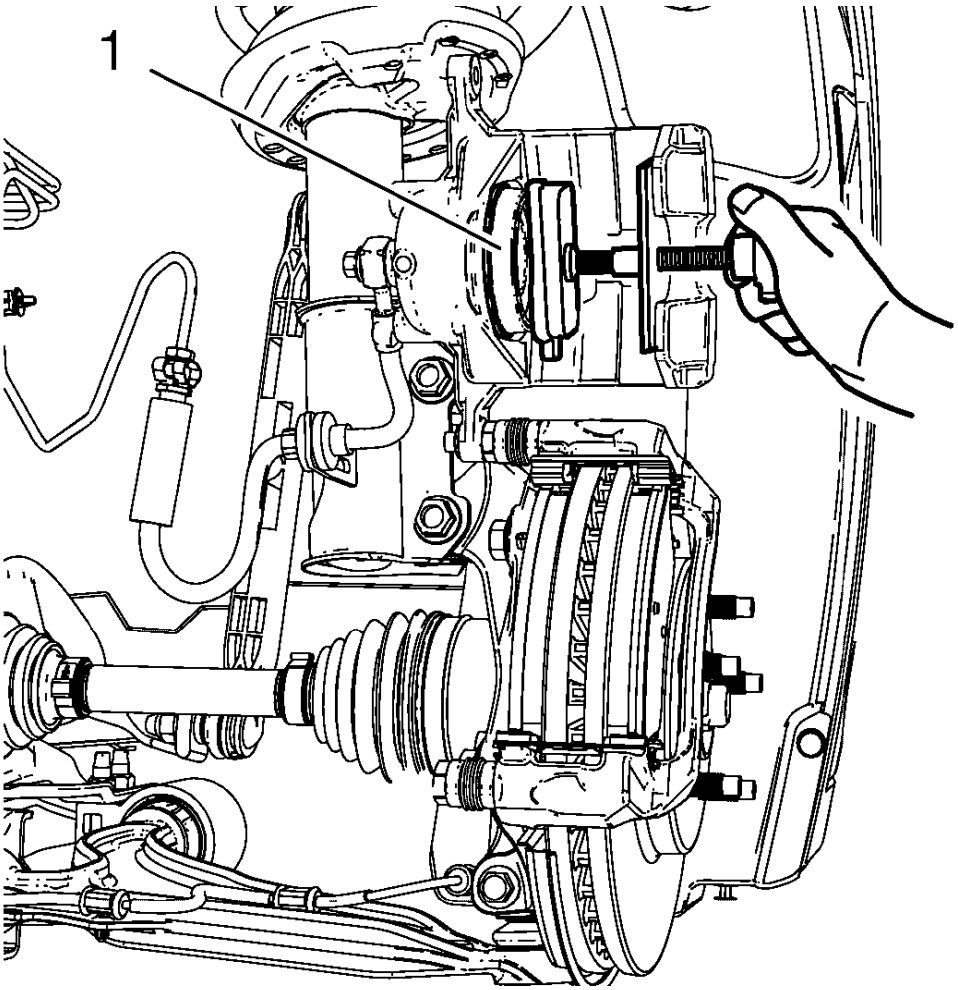

Fig. 15: Pushing Disc Brake Caliper Piston Inward
Courtesy of GENERAL MOTORS COMPANY

9. Push the disc brake caliper piston (1) into the caliper bore using a disc brake piston installation tool.

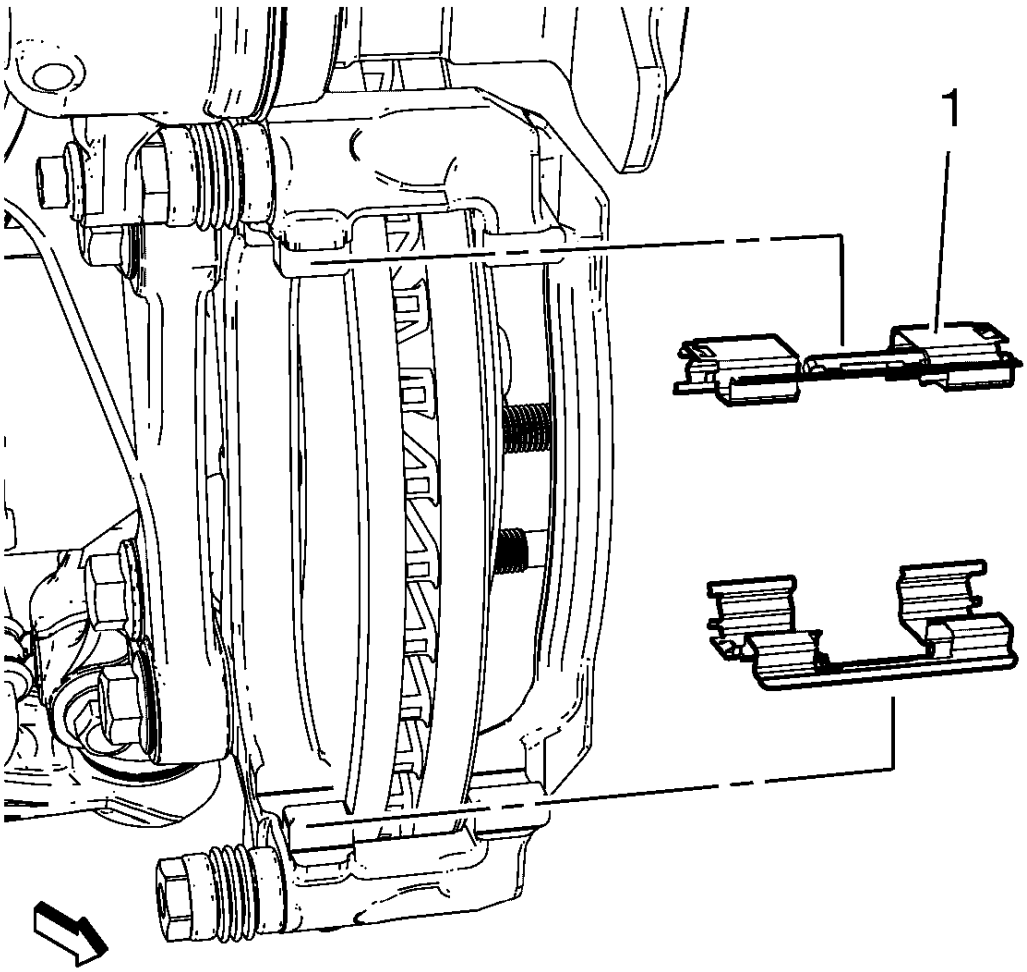

Fig. 16: View Of Brake Pad Retainer Springs
Courtesy of GENERAL MOTORS COMPANY

10. Remove the brake pad retainer springs (1) from the caliper bracket.
11. Thoroughly clean the brake pad hardware mating surfaces of the caliper bracket of any debris and corrosion.
12. Inspect the brake caliper guide pins for freedom of movement and inspect the condition of the guide pin boots. Move the guide pins inboard and outboard within the bracket bores, without disengaging the slides from the boots, and observe for the following:
    - Restricted caliper guide pin movement
    - Looseness in the brake caliper mounting bracket
    - Seized or binding caliper guide pins
    - Split or torn boots
13. If any of the conditions listed are found, the brake caliper guide pins and/or boots require replacement.

Installation Procedure

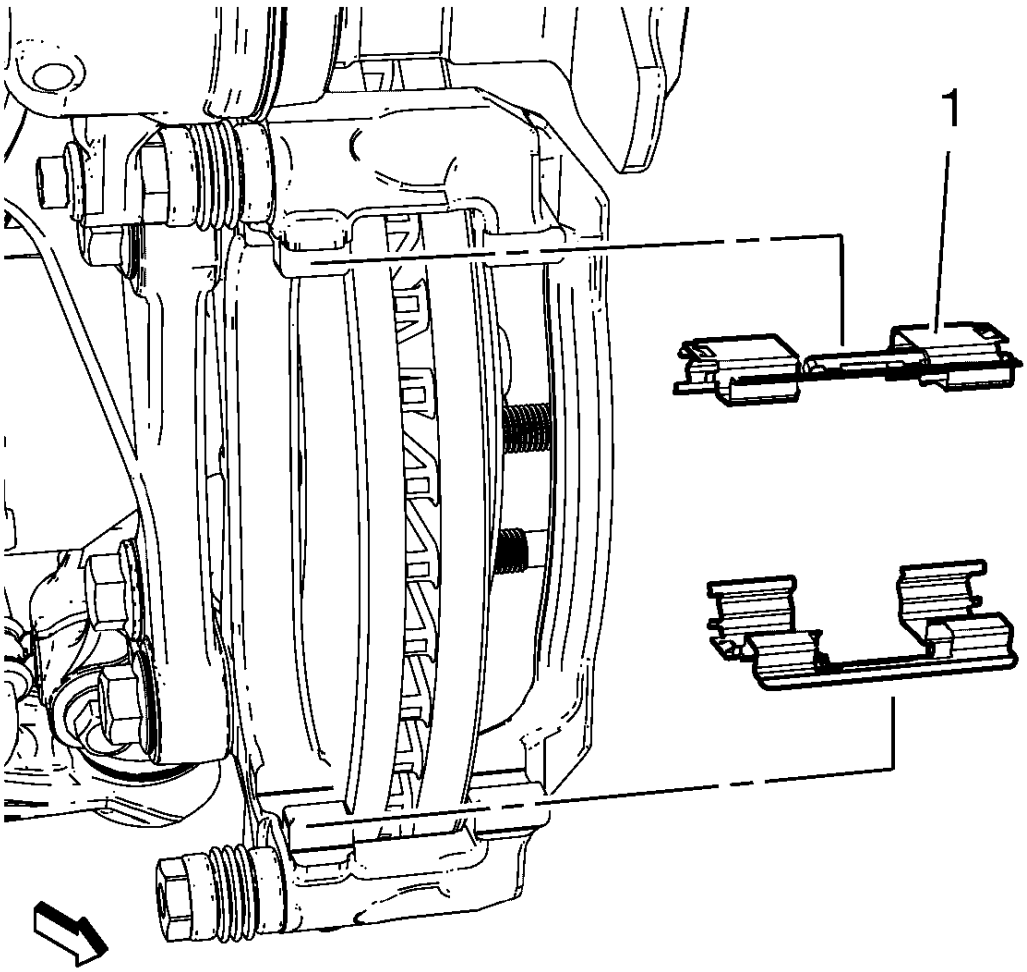

Fig. 17: View Of Brake Pad Retainer Springs
Courtesy of GENERAL MOTORS COMPANY

1. Ensure the brake pad hardware mating surfaces are clean.
2. Install the brake pad retainer springs (1) to the brake caliper bracket.

   Apply a thin coat of high temperature silicone lube to the brake pad retainers.

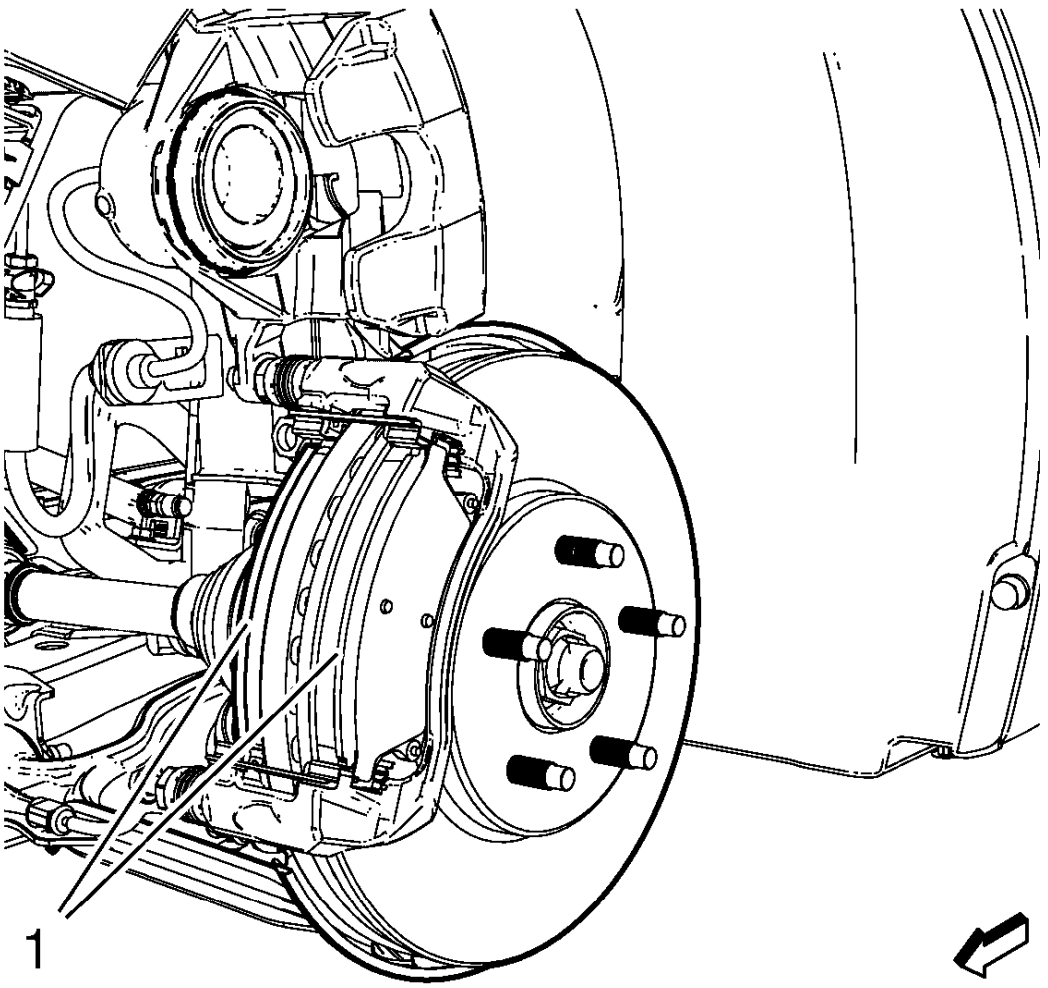

Fig. 18: View of Installed Brake Pads
Courtesy of GENERAL MOTORS COMPANY

NOTE: The wear sensor equipped disc brake pad must be mounted inboard of the rotor with the leading edge of the sensor facing the brake rotor during forward wheel rotation, or at the top of the pad when installed in vehicle position.

3. Install the brake pads (1) to the caliper bracket.
4. Remove the support, and rotate the brake caliper into position over the disc brake pads and to the caliper mounting bracket.

CAUTION: Refer to Fastener Caution .

5. Install the lower brake caliper guide pin bolt and tighten to 28 N.m (21 lb ft).

6. Install the tire and wheel assembly. Refer to **Tire and Wheel Removal and Installation** .
7. Lower the vehicle.
8. With the engine OFF, gradually apply the brake pedal approximately 2/3 of its travel distance.
9. Slowly release the brake pedal.
10. Wait 15 seconds, then gradually apply the brake pedal approximately 2/3 of its travel distance again until a firm brake pedal apply is obtained. This will properly seat the brake caliper pistons and brake pads.
11. Fill the master cylinder auxiliary reservoir to the proper level. Refer to **Master Cylinder Reservoir Filling** .
12. Burnish the brake pads and the brake rotor. Refer to **Brake Pad and Rotor Burnishing**.

REAR DISC BRAKE PADS REPLACEMENT

Removal Procedure

WARNING: Refer to Brake Dust Warning .

WARNING: Refer to Brake Fluid Irritant Warning .

NOTE: Always replace disc brake pads in axle sets.

1. Inspect the fluid level in the brake master cylinder reservoir.
2. If the brake fluid level is midway between the maximum-full point and the minimum allowable level, no brake fluid needs to be removed from the reservoir before proceeding.
3. If the brake fluid level is higher than midway between the maximum-full point and the minimum allowable level, remove brake fluid to the midway point before proceeding.
4. Raise and support the vehicle. Refer to **Lifting and Jacking the Vehicle** .
5. Remove the tire and wheel assembly. Refer to **Tire and Wheel Removal and Installation** .

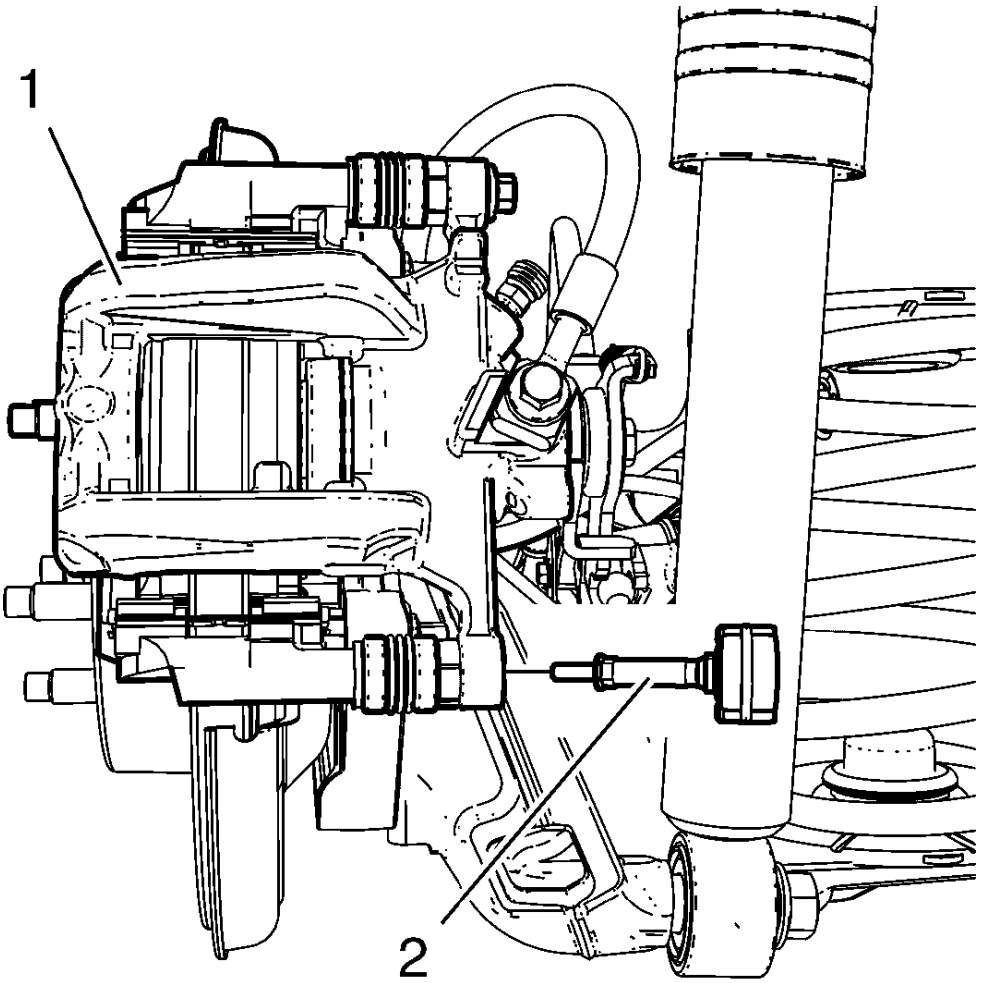

Fig. 19: Brake Caliper Mass Dampener
Courtesy of GENERAL MOTORS COMPANY

6. Remove the brake caliper mass dampener (2).

CAUTION: Support the brake caliper with heavy mechanic wire, or equivalent, whenever it is separated from its mount and the hydraulic flexible brake hose is still connected. Failure to support the caliper in this manner will cause the flexible brake hose to bear the weight of the caliper, which may cause damage to the brake hose and in turn may cause a brake fluid leak.

7. Without disconnecting the hydraulic brake flexible hose, pivot the caliper (1) upward and secure the caliper with heavy mechanics wire, or equivalent.

   Mark the brake caliper piston position to the brake caliper (1).

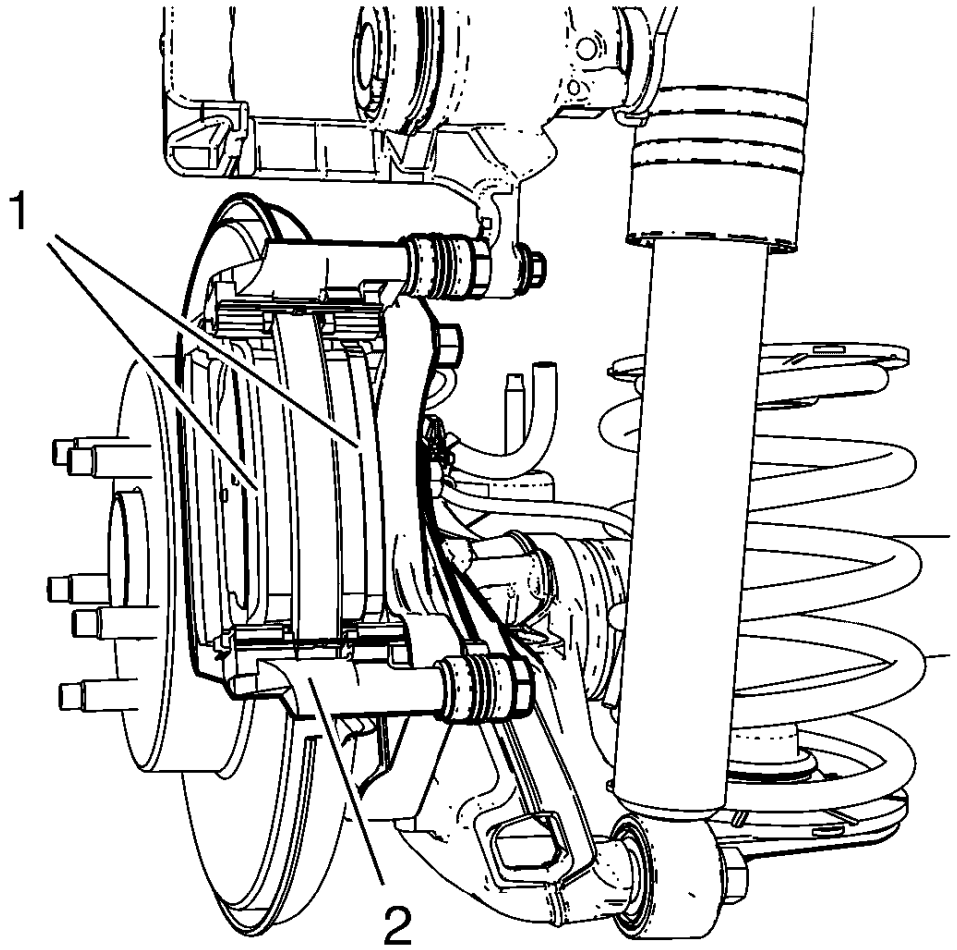

Fig. 20: View Of Installed Brake Pads
Courtesy of GENERAL MOTORS COMPANY

8. Remove the brake pads (1) from the caliper mounting bracket (2).

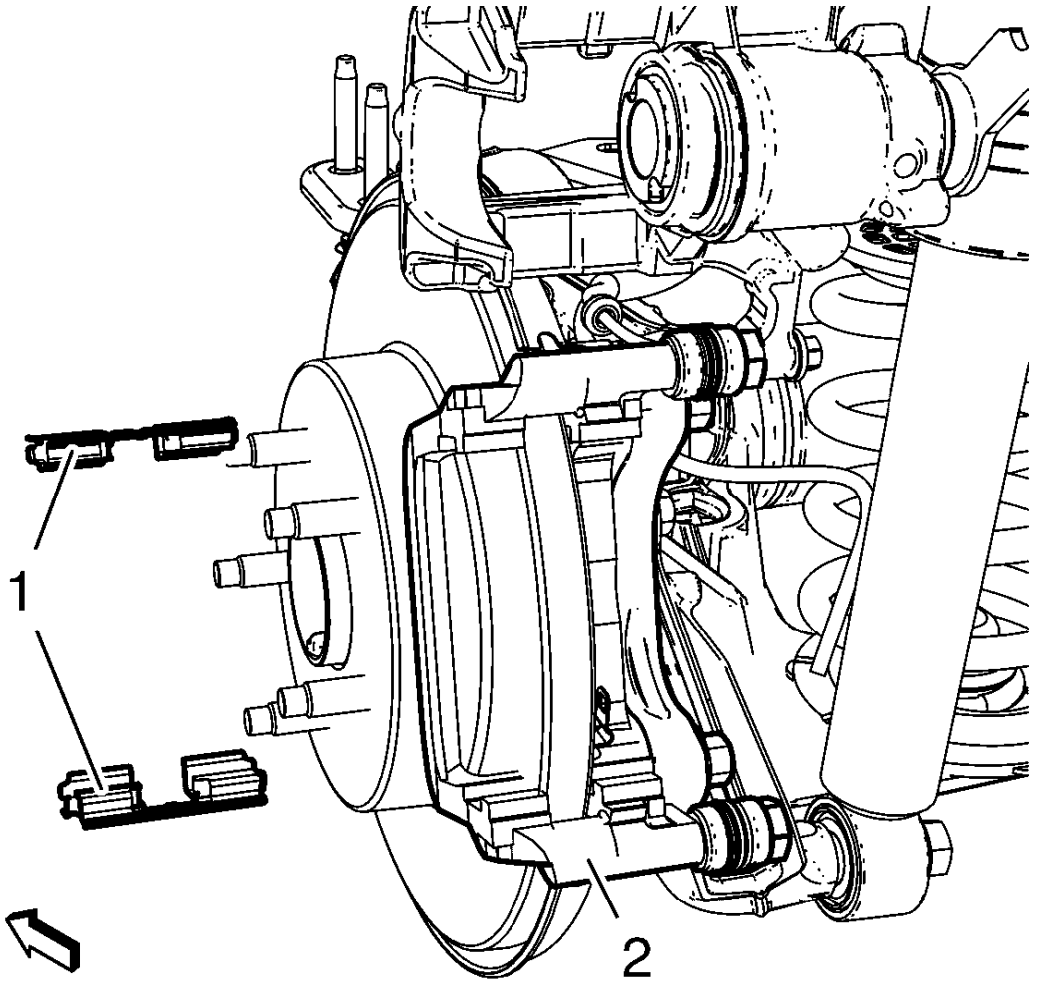

Fig. 21: View Of Brake Pad Retainer Springs
Courtesy of GENERAL MOTORS COMPANY

9. Remove the brake pad retainer springs (1) from the caliper bracket (2).
10. Thoroughly clean the brake pad hardware mating surfaces of the caliper bracket, of any debris and corrosion.
11. Inspect the brake caliper guide pins for freedom of movement, and inspect the condition of the guide pin boots. Move the guide pins inboard and outboard within the bracket bores, without disengaging the slides from the boots, and observe for the following:
    - Restricted caliper guide pin movement
    - Looseness in the brake caliper mounting bracket
    - Seized or binding caliper guide pins
    - Split or torn boots.
12. If any of the conditions listed are found, the brake caliper guide pins and/or boots require replacement.

Installation Procedure

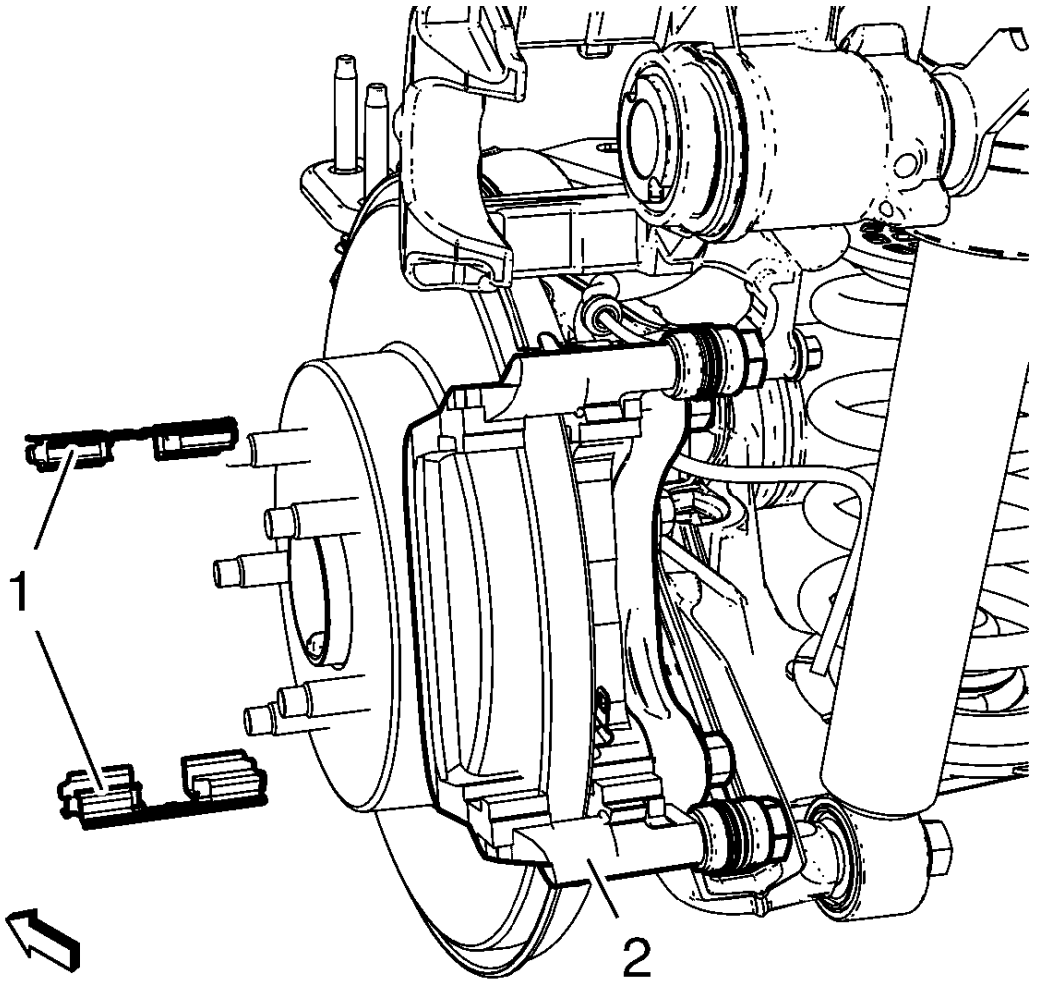

Fig. 22: View Of Brake Pad Retainer Springs
Courtesy of GENERAL MOTORS COMPANY

1. Ensure the brake pad hardware mating surfaces are clean.
2. Install the brake pad retainers springs (1) to the brake caliper bracket (2) and apply a thin coat of high temperature silicone lube to the brake pad retainers.

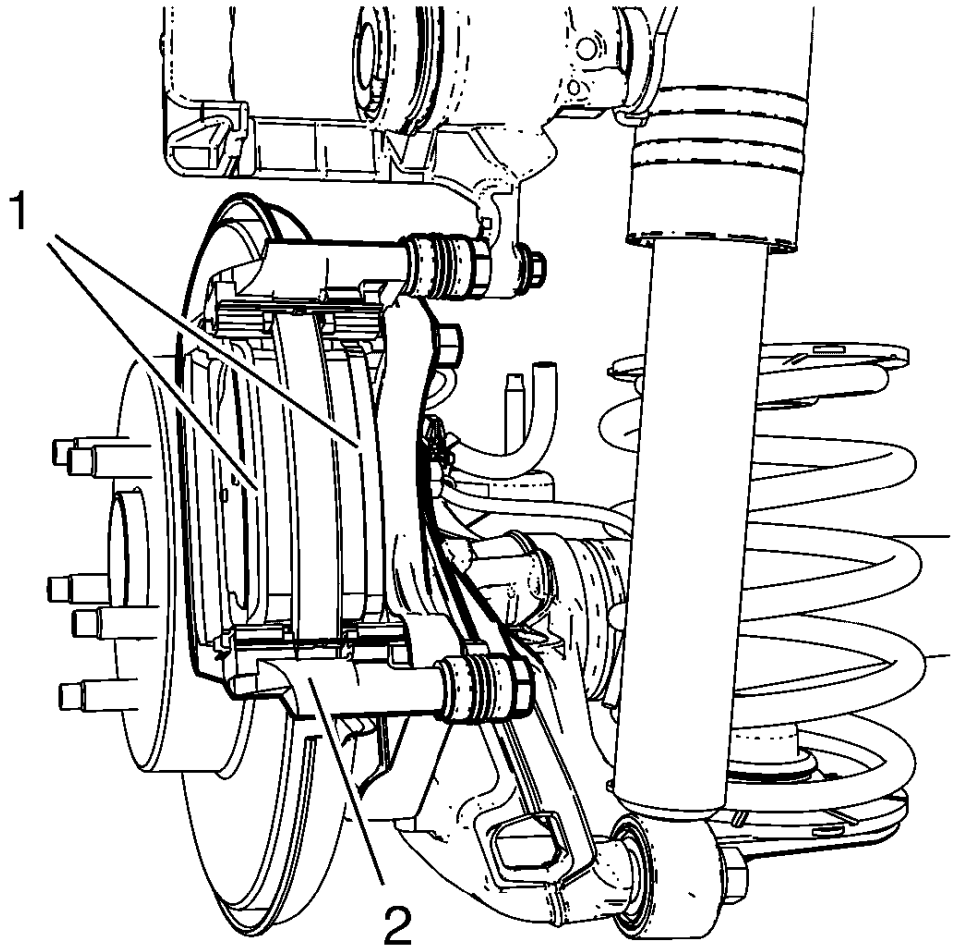

Fig. 23: View Of Installed Brake Pads
Courtesy of GENERAL MOTORS COMPANY

NOTE: The wear sensor equipped disc brake pad must be mounted inboard of the rotor with the leading edge of the sensor facing the brake rotor during forward wheel rotation, or at the top of the pad when installed in vehicle position.

3. Install the brake pads (1) to the caliper bracket (2).

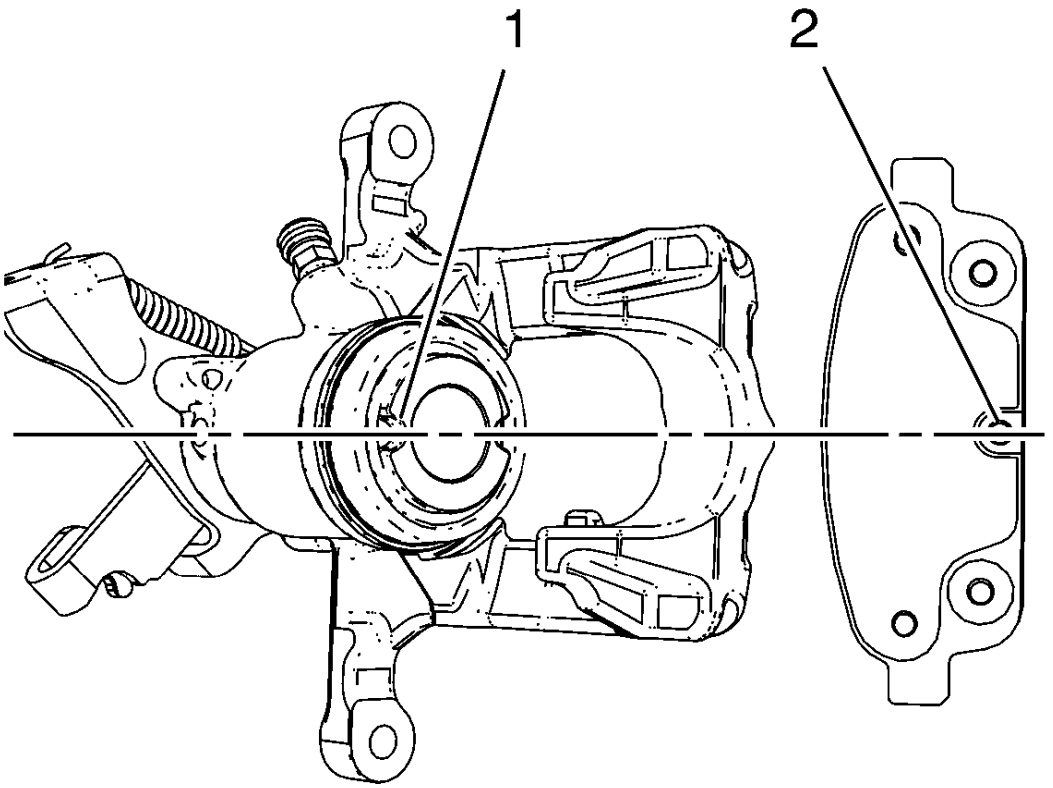

Fig. 24: Brake Caliper Piston And Pin Notch
Courtesy of GENERAL MOTORS COMPANY

4. Rotate the brake caliper piston (1) into the brake caliper bore.
5. Align the notch on the brake caliper piston with the pin (2) on the disc brake pad.

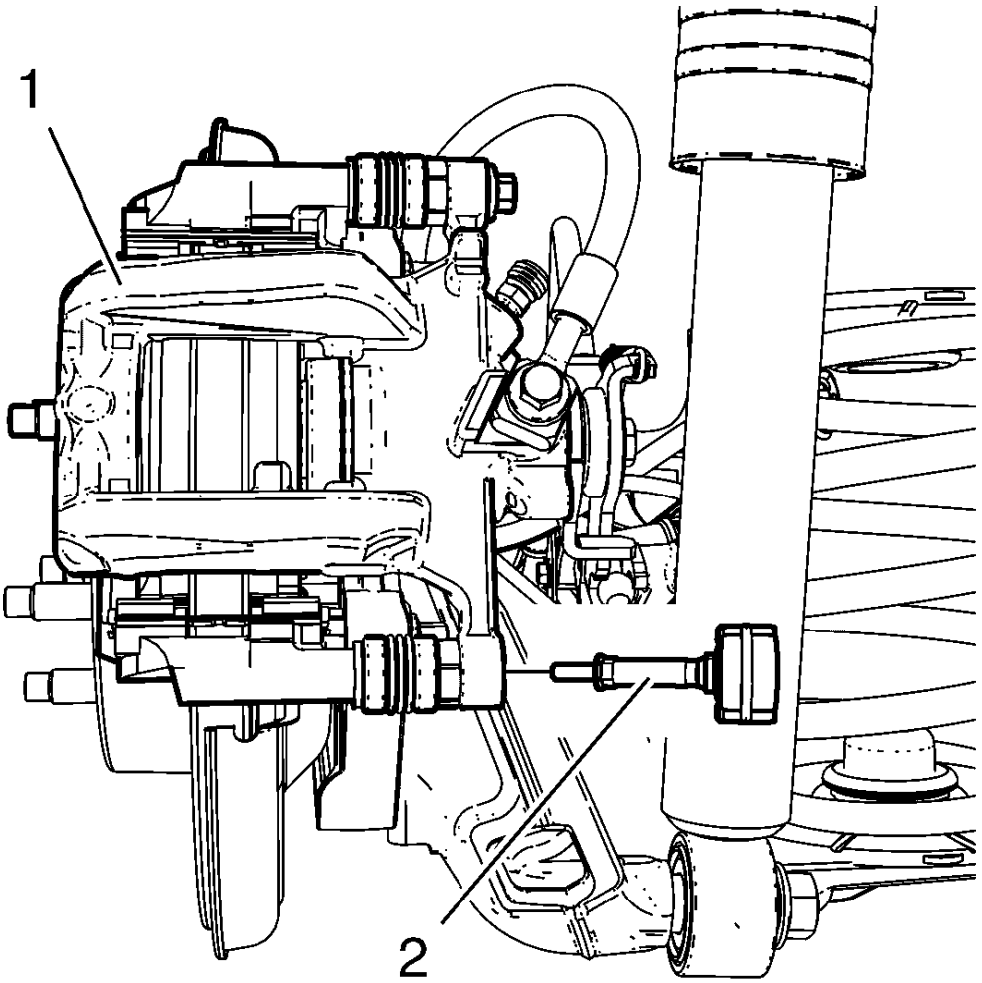

Fig. 25: Brake Caliper Mass Dampener
Courtesy of GENERAL MOTORS COMPANY

6. Remove the support, and rotate the brake caliper (1) into position over the disc brake pads and to the caliper mounting bracket.

CAUTION: Refer to Fastener Caution .

7. Install the lower brake caliper mass dampener (2) and tighten to 28 N.m (21 lb ft).
8. Install the tire and wheel assembly. Refer to **Tire and Wheel Removal and Installation** .
9. Lower the vehicle.
10. With the engine OFF, gradually apply the brake pedal approximately 2/3 of its travel distance.
11. Slowly release the brake pedal.
12. Wait 15 seconds, then gradually apply the brake pedal approximately 2/3 of its travel distance again until

a firm brake pedal apply is obtained. This will properly seat the brake caliper pistons and brake pads.

13. Fill the master cylinder reservoir to the proper level. Refer to **Master Cylinder Reservoir Filling** .
14. Burnish the brake pads and the brake rotor. Refer to **Brake Pad and Rotor Burnishing**

BRAKE PAD AND ROTOR BURNISHING

WARNING: Road test a vehicle under safe conditions and while obeying all traffic laws. Do not attempt any maneuvers that could jeopardize vehicle control. Failure to adhere to these precautions could lead to serious personal injury and vehicle damage.

Burnishing the brake pads and brake rotors is necessary in order to ensure that the braking surfaces are properly prepared after service has been performed on the disc brake system.

This procedure should be performed whenever the disc brake rotors have been refinished or replaced, and/or whenever the disc brake pads have been replaced.

1. Select a smooth road with little or no traffic.
2. Accelerate the vehicle to 48 km/h (30 mph).

NOTE: Use care to avoid overheating the brakes while performing this step.

3. Using moderate to firm pressure, apply the brakes to bring the vehicle to a stop. Do not allow the brakes to lock.
4. Repeat steps 2 and 3 until approximately 20 stops have been completed. Allow sufficient cooling periods between stops in order to properly burnish the brake pads and rotors.

FRONT BRAKE CALIPER REPLACEMENT

Removal Procedure

WARNING: Use of eye goggles is necessary to prevent personal injury.

WARNING: Refer to Brake Dust Warning .

WARNING: Refer to Brake Fluid Irritant Warning .

1. Inspect the fluid level in the brake master cylinder reservoir.
2. If the brake fluid level is midway between the maximum-full point and the minimum allowable level, no brake fluid needs to be removed from the reservoir before proceeding.

3. If the brake fluid level is higher than midway between the maximum-full point and the minimum allowable level, remove brake fluid to the midway point before proceeding.
4. Raise and support the vehicle. Refer to **Lifting and Jacking the Vehicle** .
5. Remove the tire and wheel assembly. Refer to **Tire and Wheel Removal and Installation** .

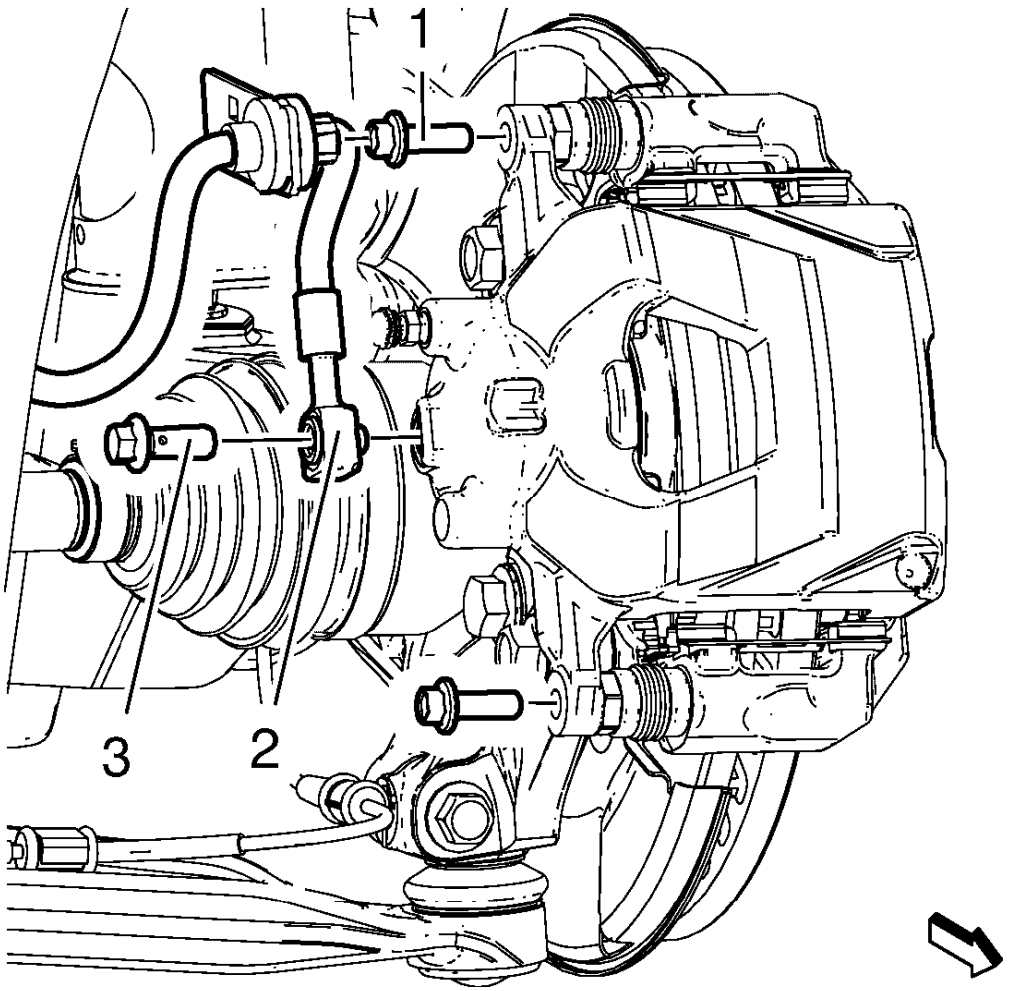

Fig. 26: Caliper Brake Hose And Brake Hose-To-Caliper Bolt
Courtesy of GENERAL MOTORS COMPANY

6. Remove the brake hose-to-caliper bolt (3) from the brake caliper.
7. Remove the brake hose (2) from the brake caliper.

   Remove and discard the copper brake hose washers. These washers may be stuck to the brake caliper and/or the brake hose end.

8. Cap or plug the opening in the brake caliper and the brake hose to prevent fluid loss and contamination.
9. Remove the brake caliper guide pin bolts (1).

10. Remove the brake caliper from the caliper bracket.
11. Inspect the brake caliper guide pins for freedom of movement, and inspect the condition of the guide pin boots. Move the guide pins inboard and outboard within the bracket bores, without disengaging the slides from the boots, and observe for the following:
    - Restricted caliper guide pin movement
    - Looseness in the brake caliper mounting bracket
    - Seized or binding caliper guide pins
    - Split or torn boots
12. If any of the conditions listed are found, the brake caliper guide pins and/or boots require replacement.

Installation Procedure

1. Install the brake caliper to the brake caliper bracket.

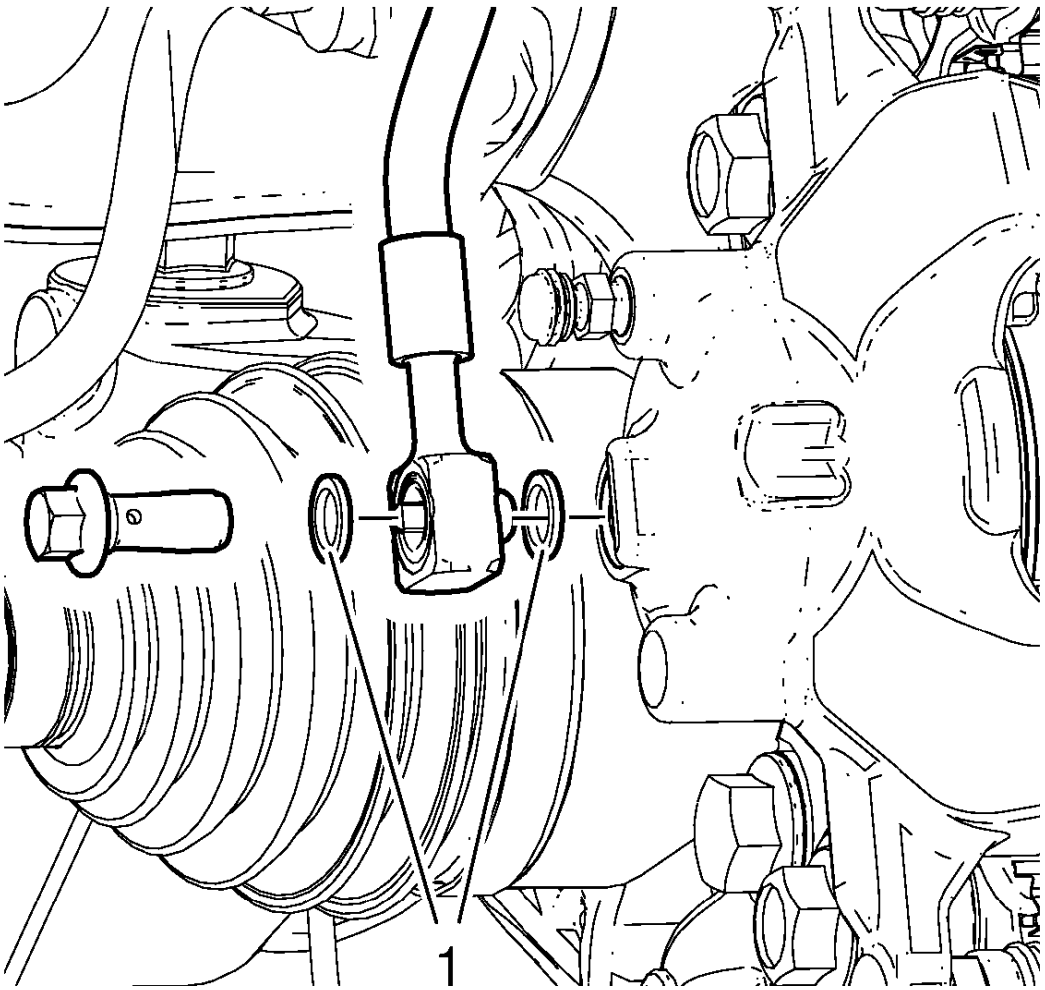

Fig. 27: Caliper Brake Hose And Brake Hose-To-Caliper Bolt
Courtesy of GENERAL MOTORS COMPANY

NOTE: Do not reuse the brake hose washers.

2. Install NEW copper brake hose washers (1) to the brake hose-to-caliper bolt and to the brake hose.

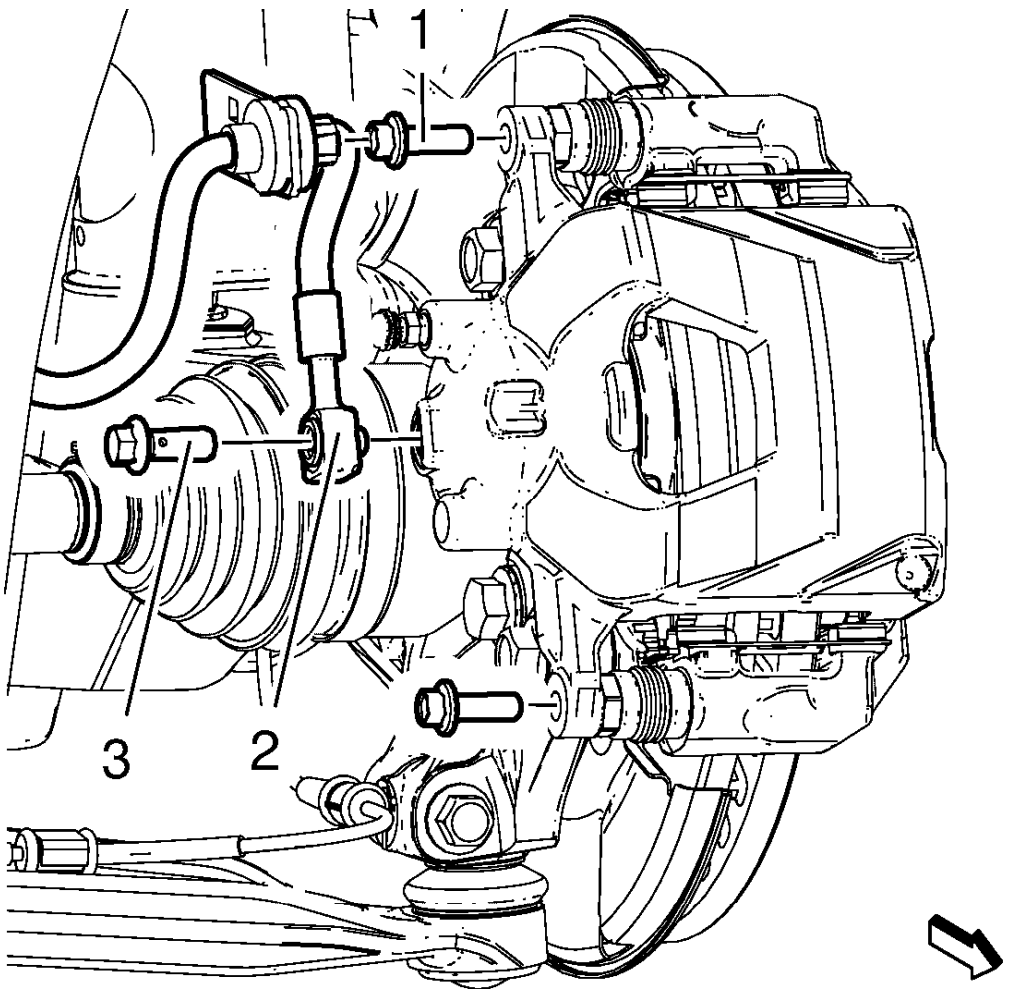

Fig. 28: Caliper Brake Hose And Brake Hose-To-Caliper Bolt
Courtesy of GENERAL MOTORS COMPANY

CAUTION: Refer to Fastener Caution

3. Install the brake caliper guide pin bolts (1) and tighten to 28 N.m (21 lb ft).
4. Remove the caps or plugs from the brake caliper opening and the brake hose.
5. Install the brake hose (2) to the caliper.
6. Install brake hose-to-caliper bolt (3) to the caliper and tighten to 40 N.m (30 lb ft).
7. Bleed the hydraulic brake system. Refer to **Hydraulic Brake System Bleeding (Manual Bleeding)** ,

Hydraulic Brake System Bleeding (Pressure Bleeding) .

8. Install the tire and wheel assembly. Refer to **Tire and Wheel Removal and Installation** .
9. Lower the vehicle.
10. With the engine OFF, gradually apply the brake pedal to approximately 2/3 of its travel distance.
11. Slowly release the brake pedal.
12. Wait 15 seconds, then repeat steps 10 and 11 until a firm brake pedal is obtained. This will properly seat the brake caliper piston and brake pads.

REAR BRAKE CALIPER REPLACEMENT

Removal Procedure

WARNING: Refer to Brake Fluid Irritant Warning .

CAUTION: Refer to Brake Fluid Effects on Paint and Electrical Components Caution .

1. Inspect the fluid level in the brake master cylinder reservoir.
2. If the brake fluid level is midway between the maximum-full point and the minimum allowable level, no brake fluid needs to be removed from the reservoir before proceeding.
3. If the brake fluid level is higher than midway between the maximum-full point and the minimum allowable level, remove brake fluid to the midway point before proceeding.
4. Raise and suitably support the vehicle. Refer to **Lifting and Jacking the Vehicle** .
5. Remove the tire and wheel assembly. Refer to **Tire and Wheel Removal and Installation** .

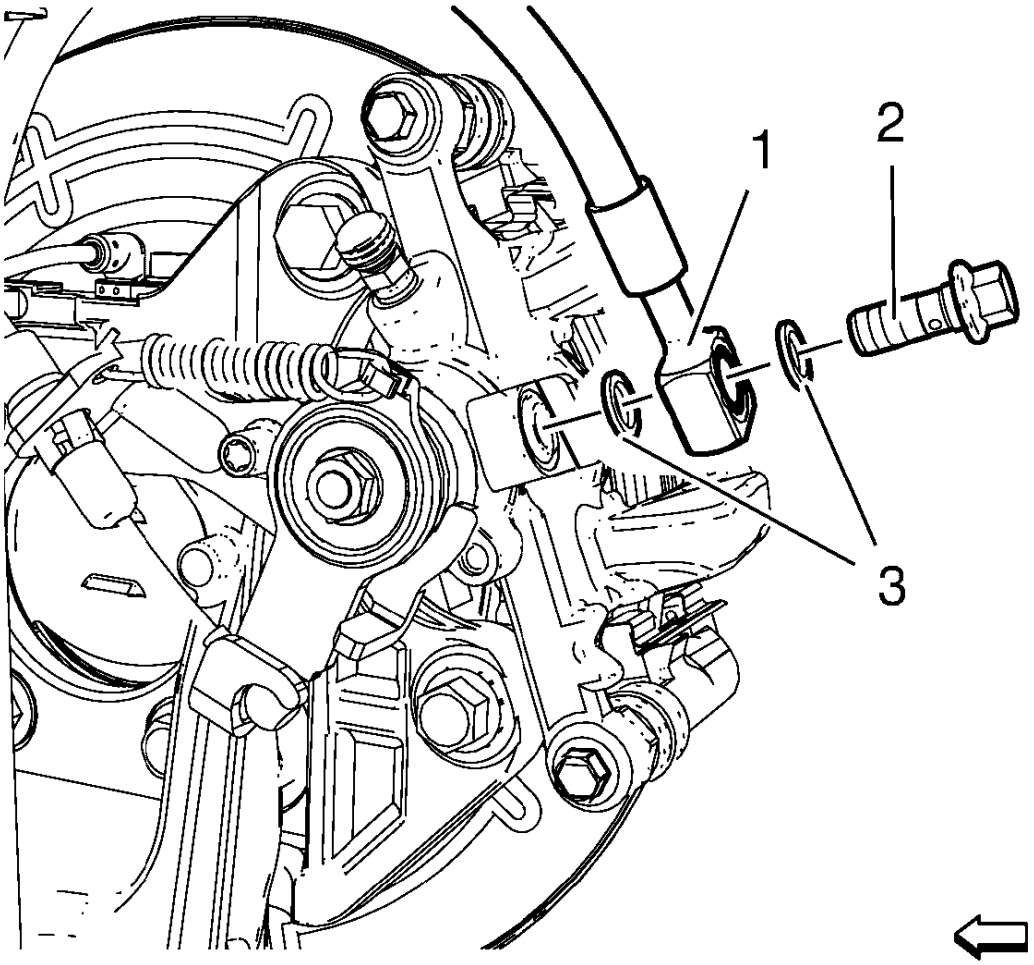

Fig. 29: Brake Hose And Brake Hose-To-Caliper Bolt
Courtesy of GENERAL MOTORS COMPANY

6. Remove the brake hose to caliper bolt (2) from the brake caliper.
7. Remove the brake hose (1) from the brake caliper.
8. Remove and discard the 2 copper brake hose gaskets (3). These gaskets may be stuck to the brake caliper and/or the brake hose end.

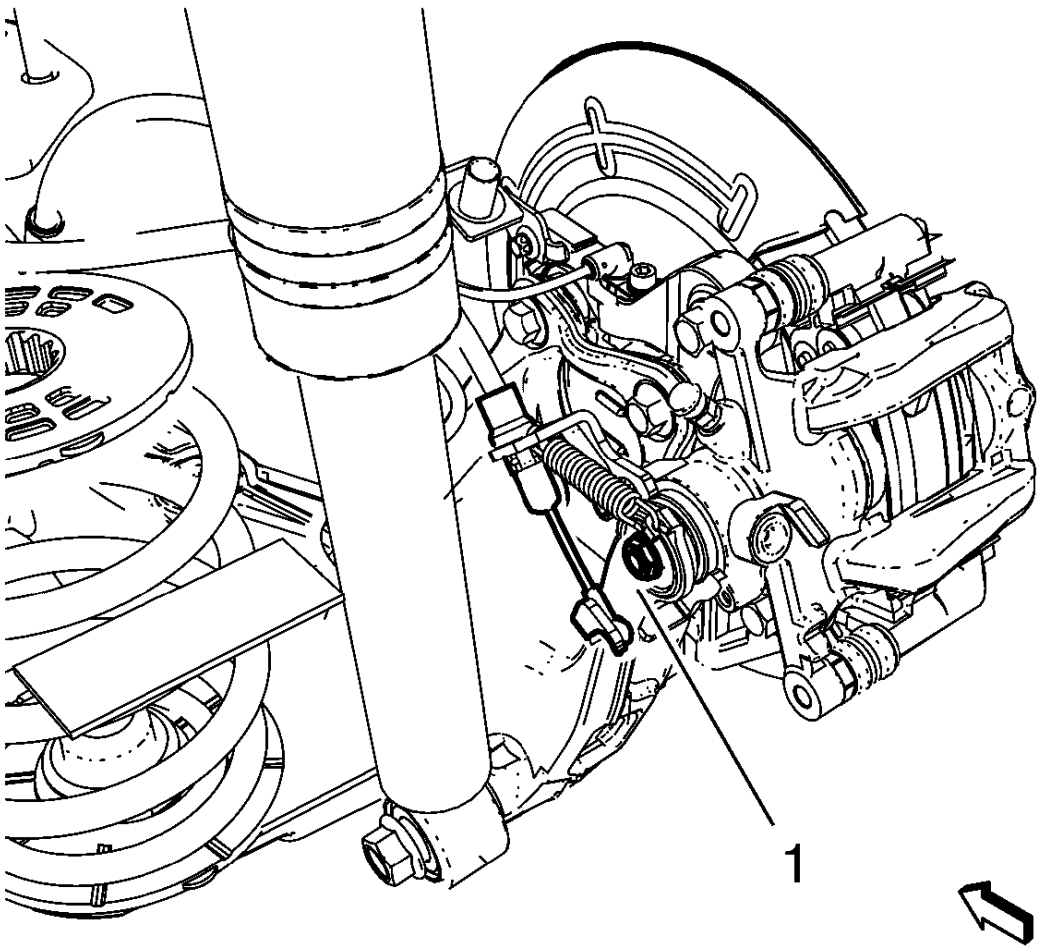

Fig. 30: Rear Parking Brake Lever
Courtesy of GENERAL MOTORS COMPANY

9. Remove the park brake cable from the rear parking brake lever (1).
10. Cap or plug the opening in the brake caliper and the brake hose to prevent fluid loss and contamination.

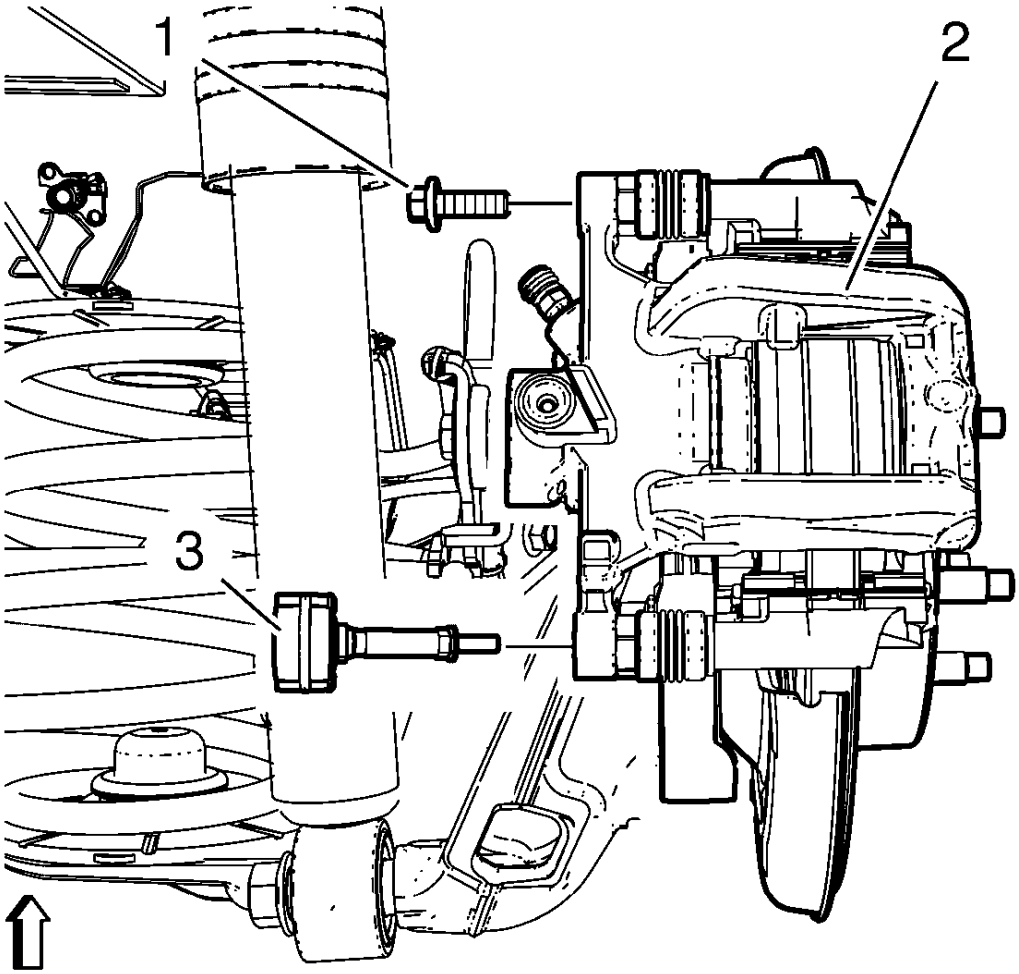

Fig. 31: Brake Caliper Pin Bolt And Brake Caliper Vibration Dampener
Courtesy of GENERAL MOTORS COMPANY

11. Remove the upper brake caliper pin bolt (1).
12. Remove the brake caliper vibration dampener (3).

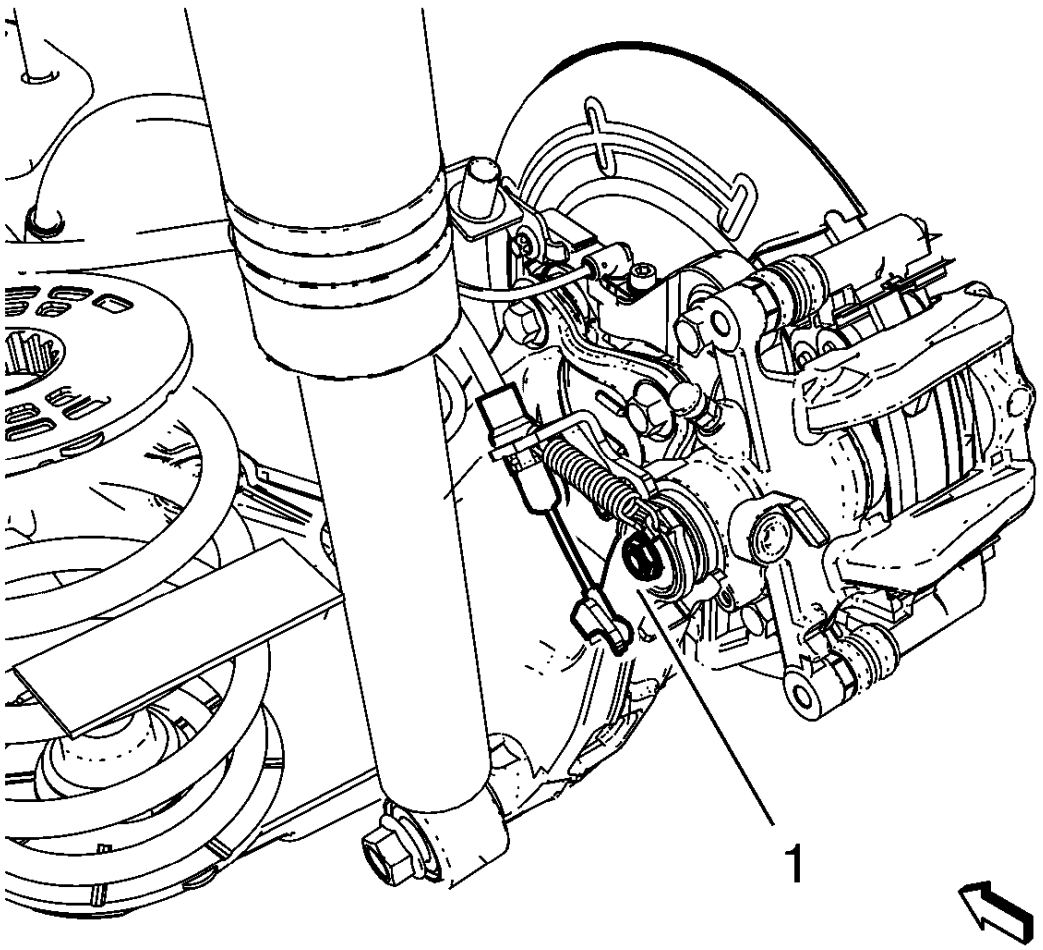

Fig. 32: Rear Parking Brake Lever
Courtesy of GENERAL MOTORS COMPANY

13. Remove the park brake cable from the rear parking brake lever (1).
14. Remove the brake caliper from the brake caliper bracket.

Installation Procedure

1. Inspect the caliper slide boots for cuts, tears, or deterioration. If damaged, replace the slides and boots. Refer to **Rear Brake Caliper Hardware Replacement**.

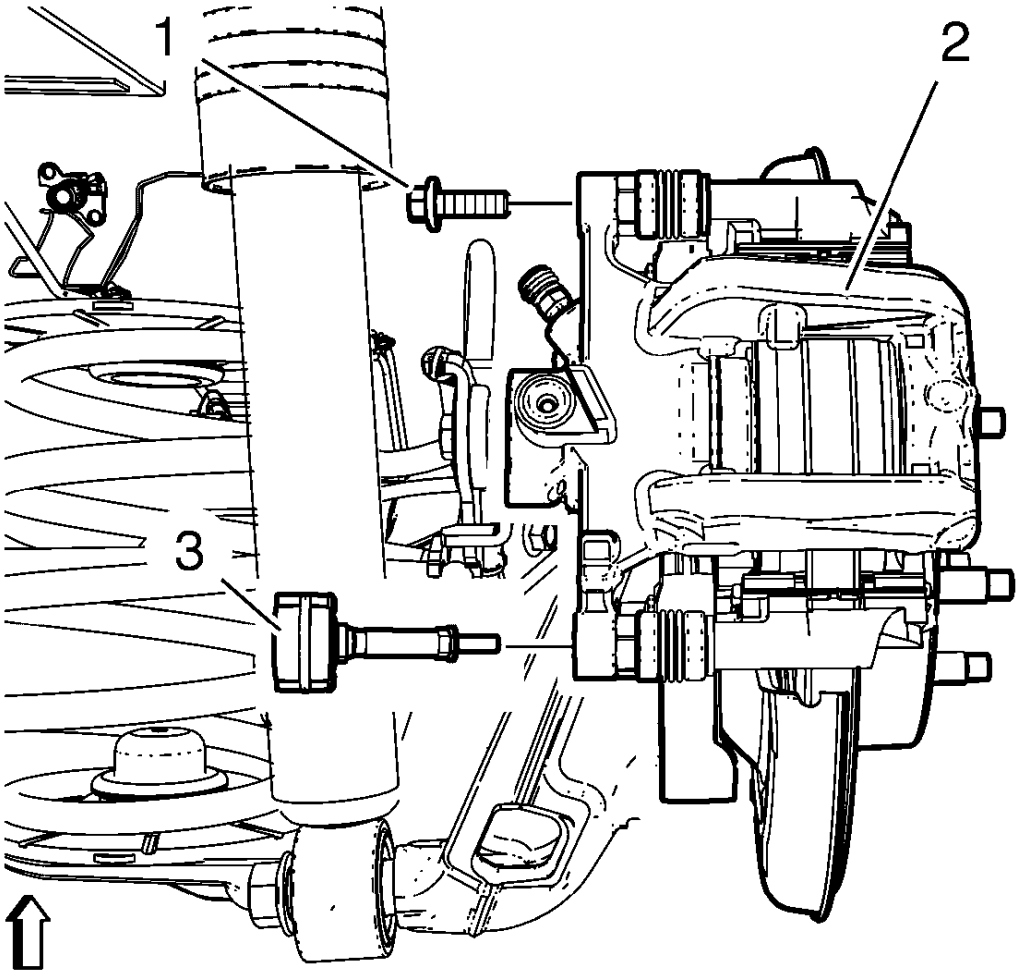

Fig. 33: Brake Caliper Pin Bolt And Brake Caliper Vibration Dampener
Courtesy of GENERAL MOTORS COMPANY

2. Install the brake caliper to the brake caliper bracket.

CAUTION: Refer to Fastener Caution .

3. Install the lower brake caliper pin bolt (1) and tighten to 28 N.m (20 lb ft).
4. Install the brake caliper vibration dampener (3) and tighten to 28 N.m (20 lb ft).

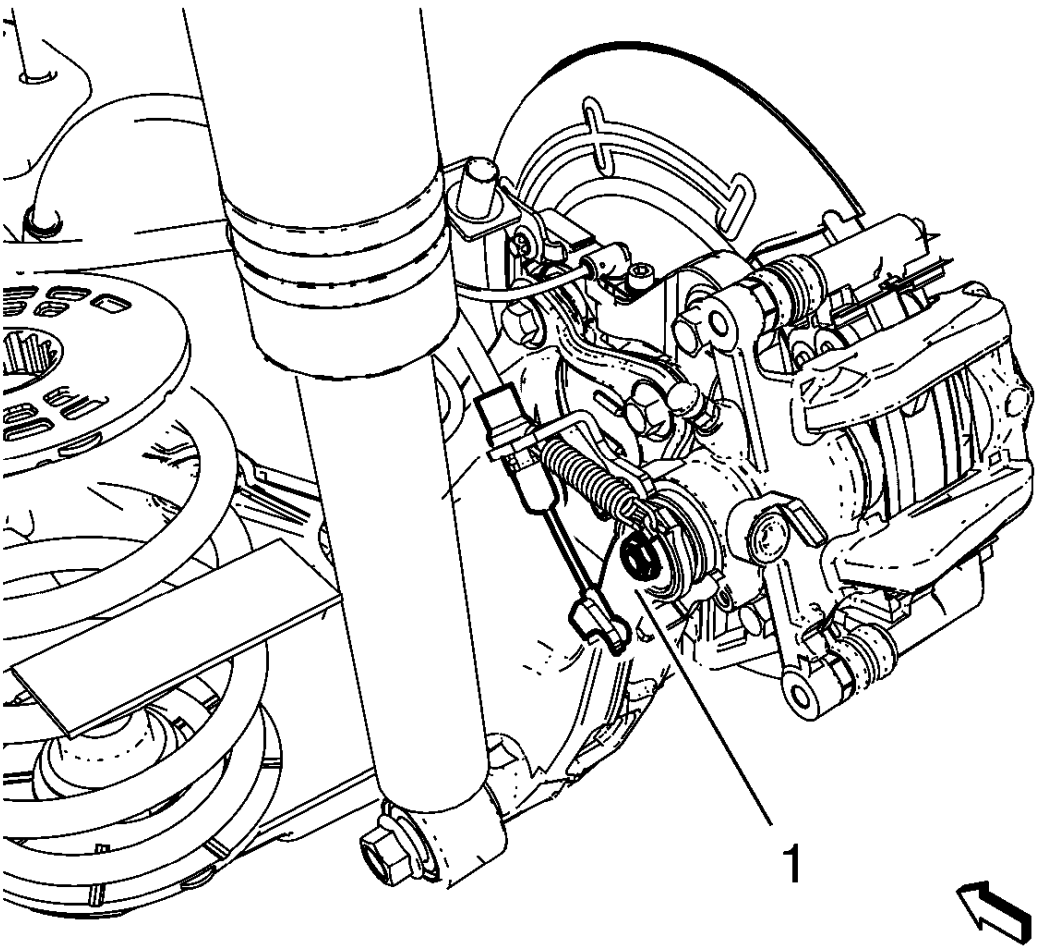

Fig. 34: Rear Parking Brake Lever
Courtesy of GENERAL MOTORS COMPANY

5. Install the park brake cable to the rear parking brake lever (1).

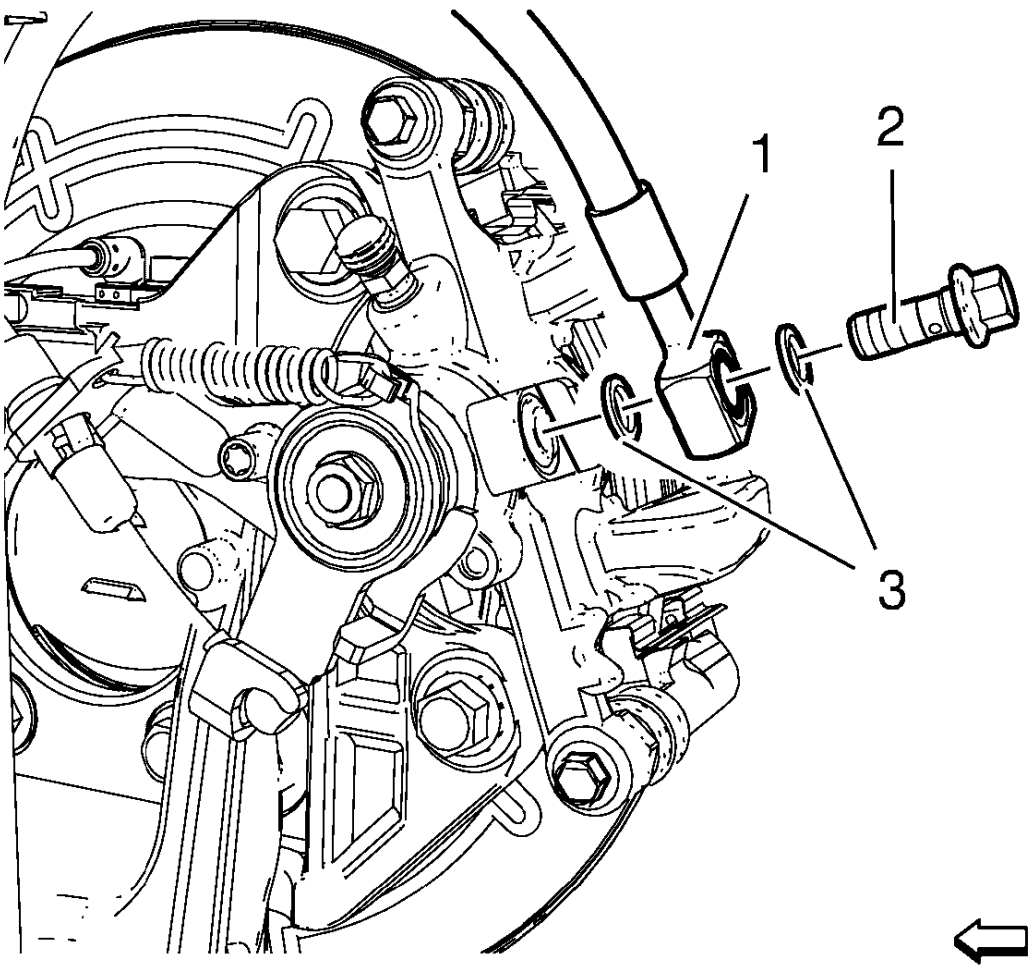

Fig. 35: Brake Hose And Brake Hose-To-Caliper Bolt
Courtesy of GENERAL MOTORS COMPANY

6. Remove the caps or plugs from the brake caliper opening and the brake hose.

NOTE: DO NOT reuse the copper brake hose gaskets.

7. Install NEW copper brake hose gaskets (3) to the brake hose-to-caliper bolt (2) and to the brake hose.
8. Install the brake hose and the brake hose-to-caliper bolt to the brake caliper and tighten the bolt to 40 N.m (30 lb ft).
9. Bleed the hydraulic brake system. Refer to **Hydraulic Brake System Bleeding (Manual Bleeding)** , **Hydraulic Brake System Bleeding (Pressure Bleeding)** .
10. With the engine OFF, gradually apply the brake pedal to approximately 2/3 of its travel distance.
11. Slowly release the brake pedal.
12. Wait 15 seconds, then repeat steps 9 and 10 until a firm brake pedal is obtained. This will properly seat the brake caliper pistons and brake pads.

13. Install the tire and wheel assembly. Refer to **Tire and Wheel Removal and Installation** .
14. Lower the vehicle.
15. Apply and release the park brake lever 4 times.

FRONT BRAKE CALIPER OVERHAUL

Disassembly Procedure

WARNING: Refer to Brake Dust Warning .

WARNING: Refer to Brake Fluid Irritant Warning .

WARNING: Do not place fingers in front of the caliper piston(s) in an attempt to catch or protect it when applying compressed air. The piston(s) can fly out with force and could result in serious bodily injury.

CAUTION: Use clean cloths to pad interior of caliper housing during piston removal. Use just enough air to ease the pistons out of the bores. If the pistons are blown out, even with the padding provided, it may be damaged.

1. Remove the brake caliper from the vehicle. Refer to **Front Brake Caliper Replacement**.

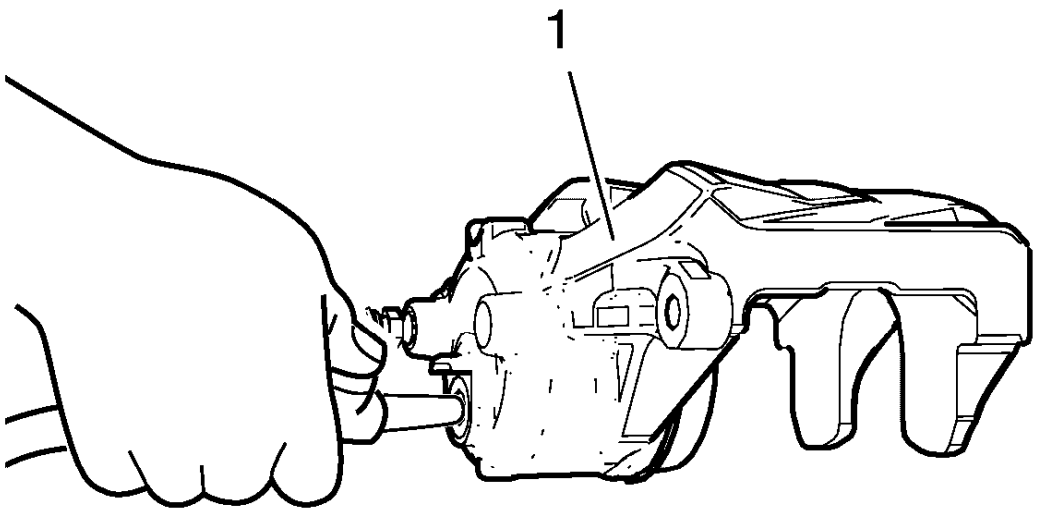

Fig. 36: Using Low Pressure Compressed Air To Remove Brake Caliper Piston
Courtesy of GENERAL MOTORS COMPANY

2. Remove the brake caliper piston from the caliper bore by directing low pressure compressed air into the caliper (1) through the fluid inlet hole.

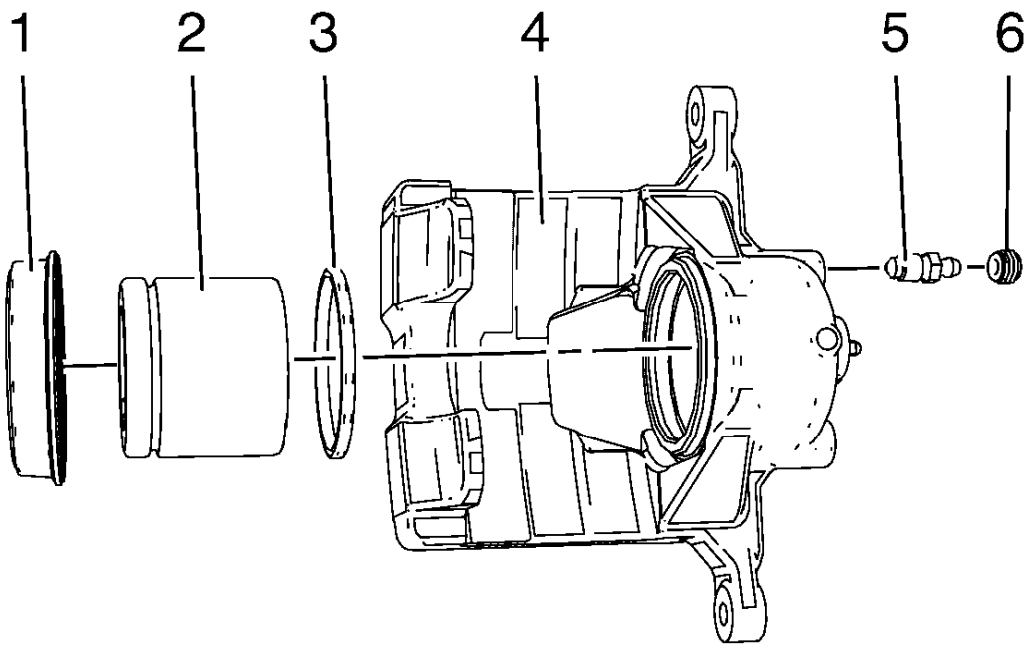

Fig. 37: Exploded View Of Brake Caliper
Courtesy of GENERAL MOTORS COMPANY

3. Remove the piston dust boot seal (1) from the seal counterbore in the caliper (4). Discard the boot seal.
4. Using a small wooden or plastic tool, remove the piston seal (3) from the caliper bore. Discard the piston seal.
5. Remove the bleeder valve cap (6).
6. Remove the bleeder valve (5).

NOTE: Do not use abrasives to clean the brake caliper piston.

7. If cracks, scoring, pitting, excessive rust, and/or excessive corrosion are present in the caliper bore, replace the caliper assembly.
8. If light rust or light corrosion are present in the caliper bore, attempt to remove the imperfection with a fine emery paper. If the imperfection cannot be removed, replace the caliper assembly.
9. Clean the brake caliper piston bore and seal counterbore, and the caliper piston with denatured alcohol, or

equivalent.

10. Dry the caliper piston bore and counterbore, and the piston with non-lubricated, filtered, compressed air.
11. Inspect the caliper piston for cracks, scoring, and/or damage to the plating. Replace the caliper piston if any of these conditions exist.
12. Inspect the caliper mounting holes for cracks, scoring, pitting, rust and/or excessive corrosion. Replace the caliper assembly if any of these conditions exist.

Assembly Procedure

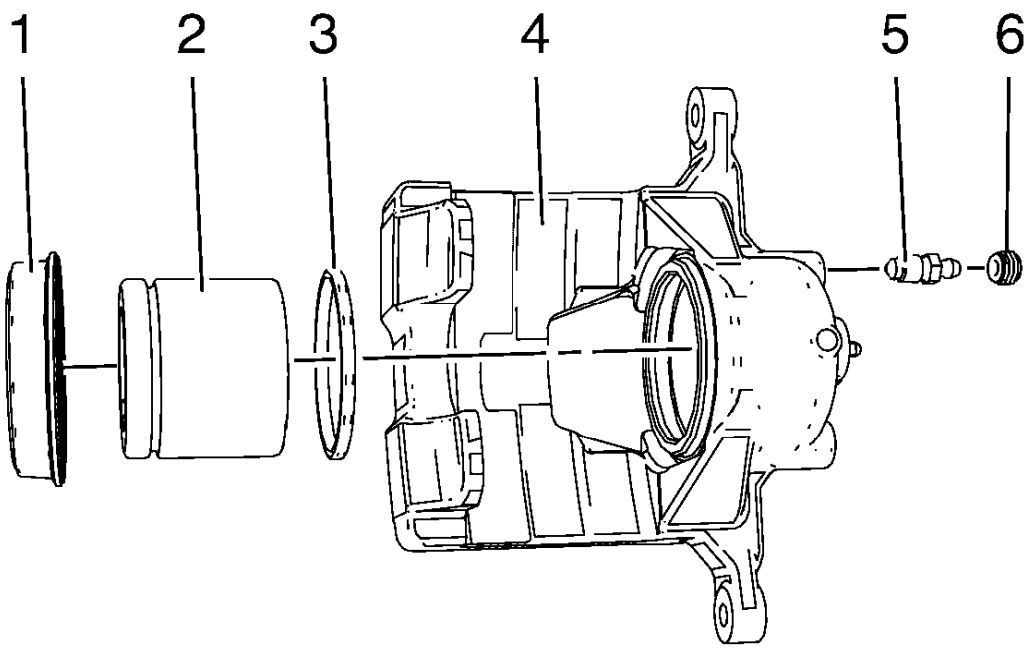

Fig. 38: Exploded View Of Brake Caliper
Courtesy of GENERAL MOTORS COMPANY

1. Lubricate the new piston seal (3) with brake fluid from a clean, sealed brake fluid container. Refer to **Adhesives, Fluids, Lubricants, and Sealers** for the recommended brake fluid.
2. Install the lubricated, new piston seal (3) into the caliper bore.
3. Apply a thin coat of brake fluid from a clean, sealed brake fluid container. Refer to **Adhesives, Fluids,**

Lubricants, and Sealers for the recommended brake fluid.

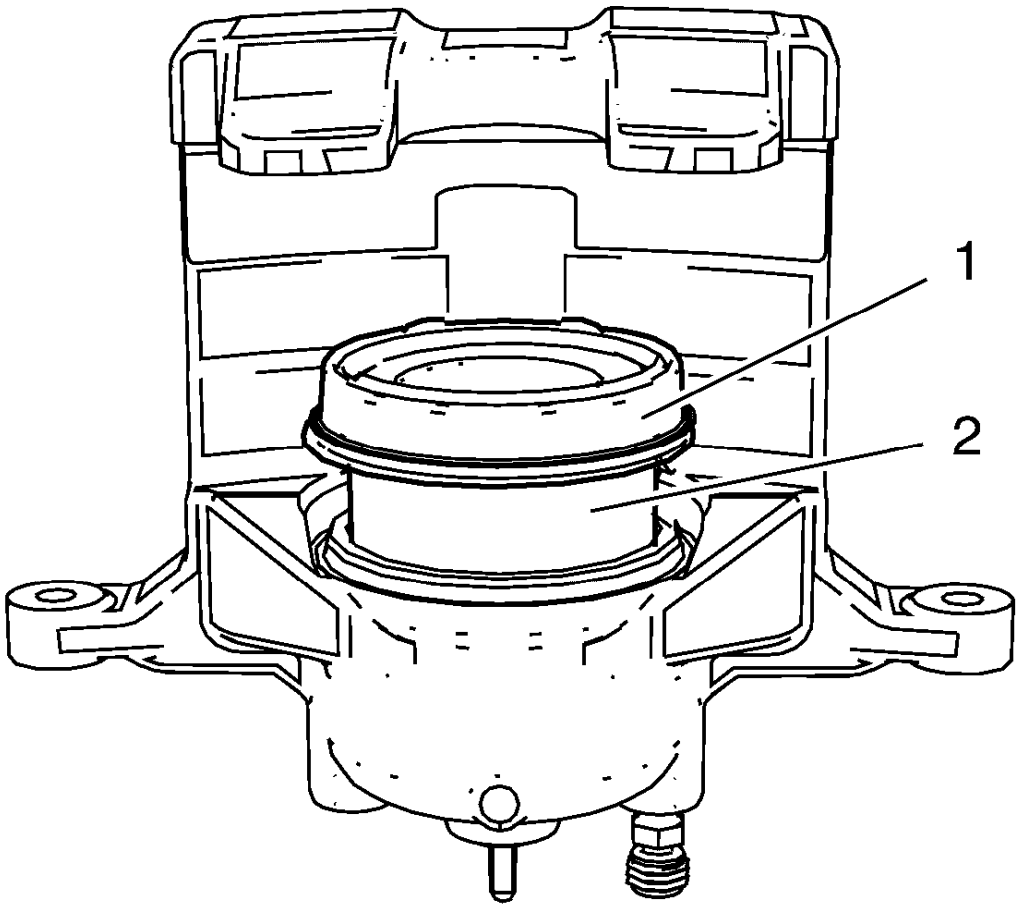

Fig. 39: View Of Caliper Piston And Caliper Piston Dust Boot Seal
Courtesy of GENERAL MOTORS COMPANY

4. Install the bottom half of the caliper piston (2) into the caliper bore.
5. Install the new piston dust boot seal (1) over the caliper piston (2).
6. Compress the caliper piston (2) to the bottom of the caliper bore.
7. Fully seat the piston dust boot seal (1) into caliper counterbore.

CAUTION: Refer to Fastener Caution .

8. Install the bleeder valve to the caliper and tighten the valve to 17 N.m (13 lb ft).
9. Install the bleeder valve cap.

10. Install the brake caliper to the vehicle. Refer to **Front Brake Caliper Replacement**.

REAR BRAKE CALIPER VIBRATION DAMPENER REPLACEMENT

Removal Procedure

1. Raise and suitably support the vehicle. Refer to **Lifting and Jacking the Vehicle** .

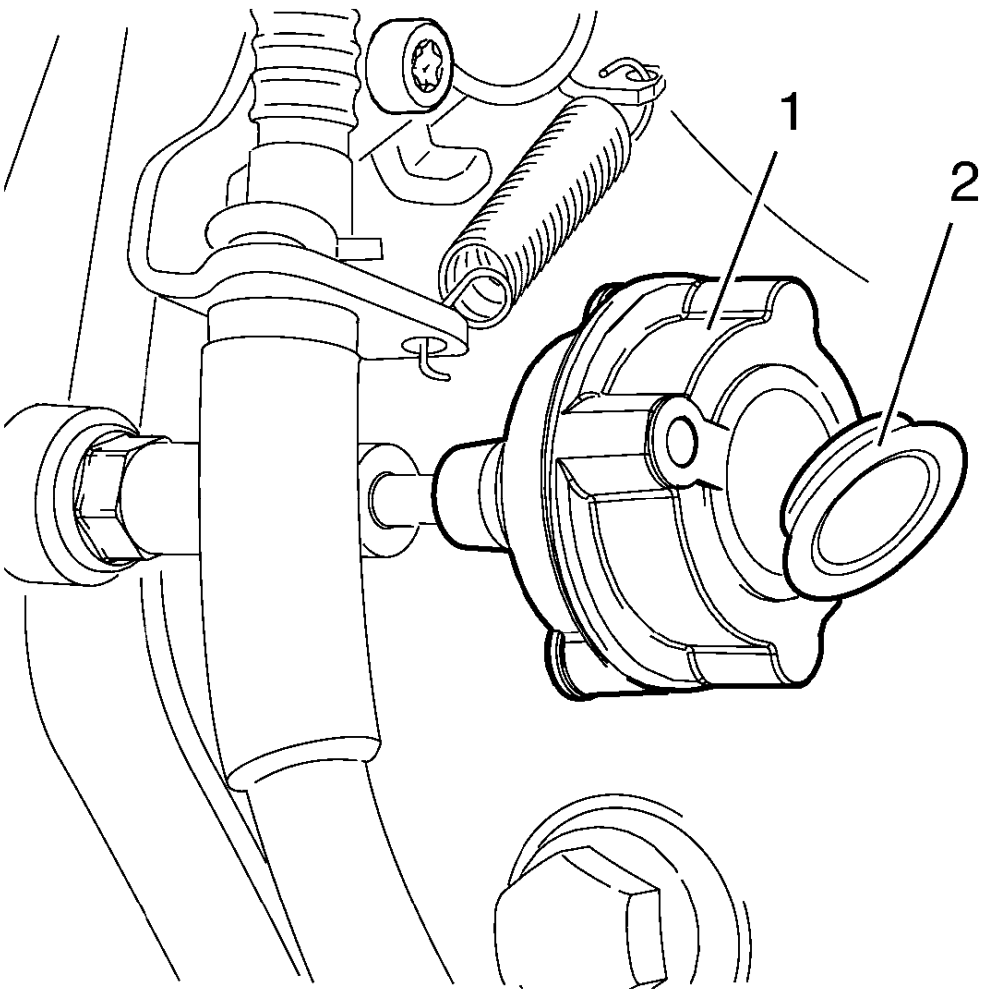

Fig. 40: Brake Caliper Vibration Damper
Courtesy of GENERAL MOTORS COMPANY

2. Open the cap (2) of the brake caliper vibration damper (1), to gain access to the internal torx.

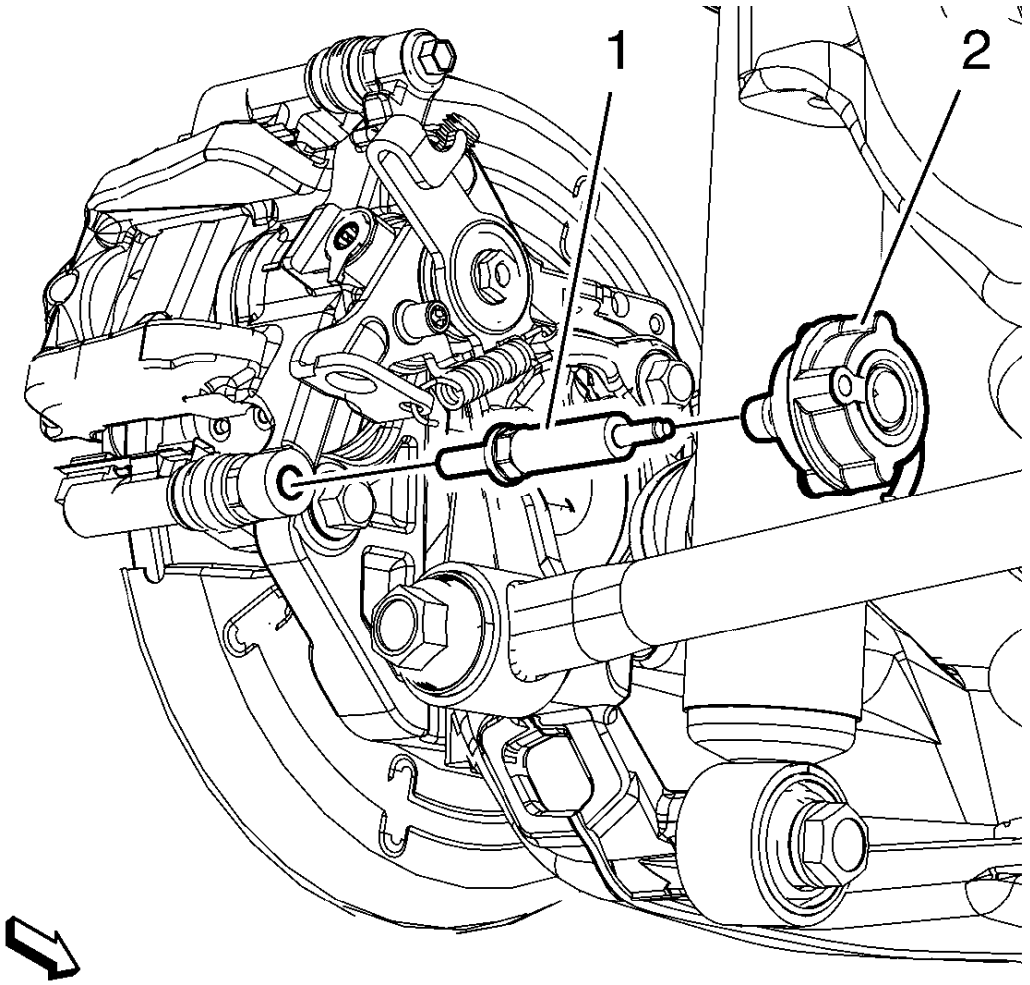

Fig. 41: Brake Caliper Vibration Damper And Brake Caliper Vibration Damper Stud
Courtesy of GENERAL MOTORS COMPANY

3. Remove the brake caliper vibration damper (2) from the brake caliper vibration damper stud (1).

   Hold against internal torx of damper stud (1).

4. Remove the damper stud (1) from the rear brake.

Installation Procedure

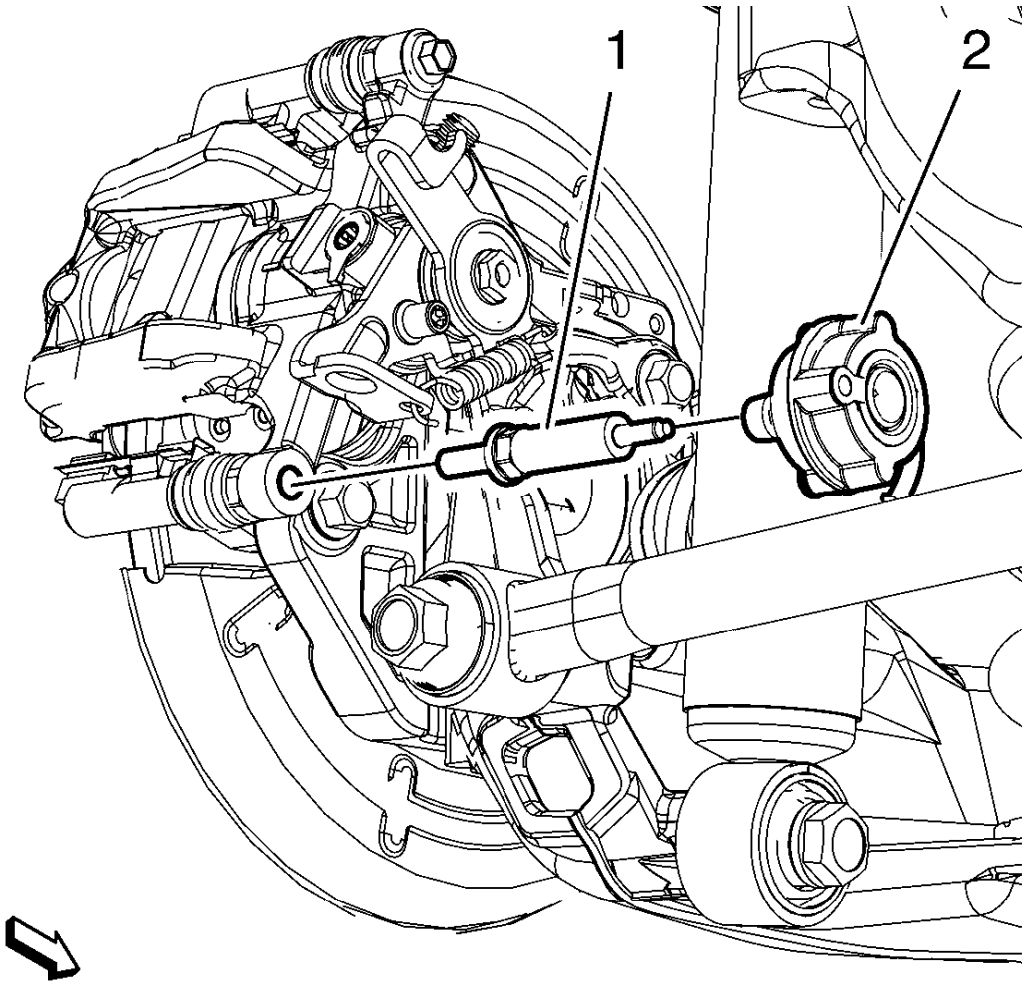

Fig. 42: Brake Caliper Vibration Damper And Brake Caliper Vibration Damper Stud
Courtesy of GENERAL MOTORS COMPANY

CAUTION: Refer to Fastener Caution .

1. Install the damper stud (1) to the rear brake and tighten to 28 N.m (21 lb ft).
2. Attach the brake caliper vibration damper (2) to the stud (1) by turn in 2 threads ONLY.
3. Tighten the brake caliper vibration damper (2) to 9 N.m (80 lb in) with a suitable tool.

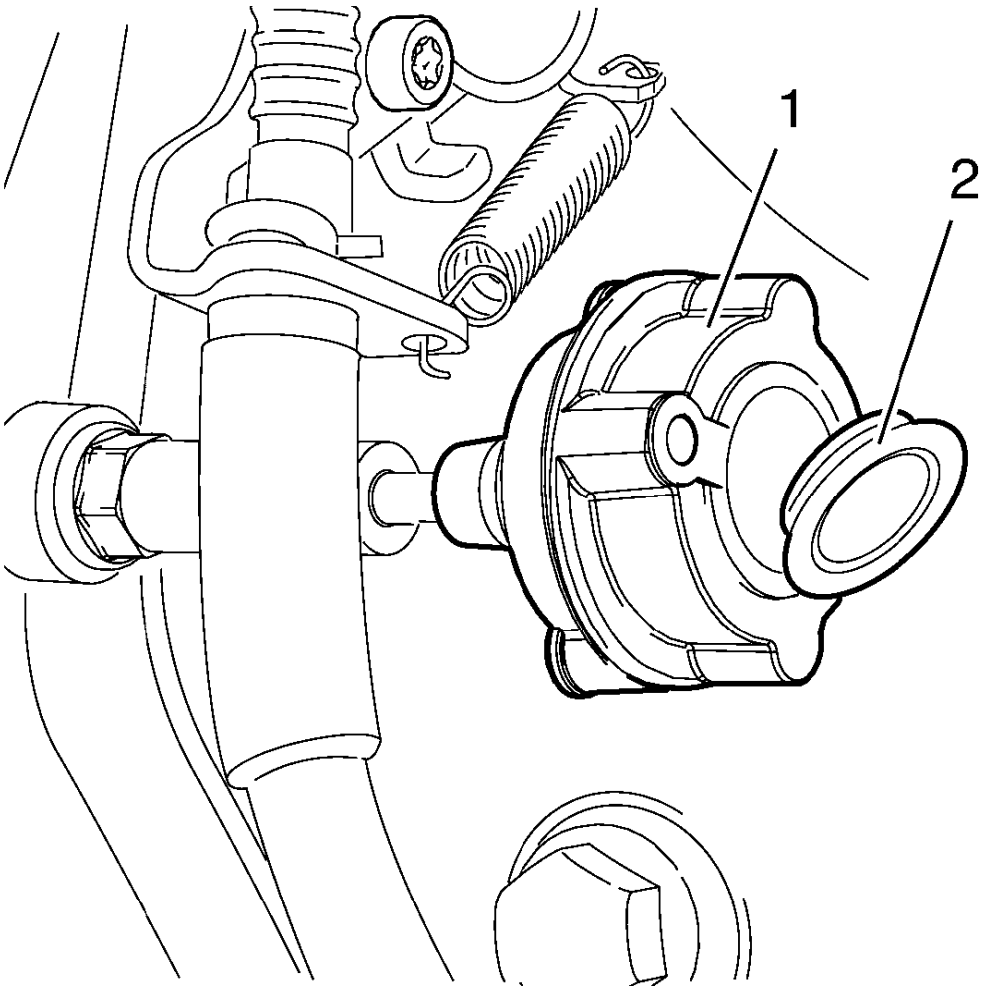

Fig. 43: Brake Caliper Vibration Damper
Courtesy of GENERAL MOTORS COMPANY

4. Close the cap (2) of the brake caliper vibration damper (1).
5. Lower the vehicle.

FRONT BRAKE CALIPER HARDWARE REPLACEMENT

Removal Procedure

WARNING: Refer to Brake Dust Warning .

1. Inspect the fluid level in the brake master cylinder reservoir.
2. If the brake fluid level is midway between the maximum-full point and the minimum allowable level, no brake fluid needs to be removed from the reservoir before proceeding.

3. If the brake fluid level is higher than midway between the maximum-full point and the minimum allowable level, remove brake fluid to the midway point before proceeding.
4. Raise and support the vehicle. Refer to **Lifting and Jacking the Vehicle** .
5. Remove the tire and wheel assembly. Refer to **Tire and Wheel Removal and Installation** .

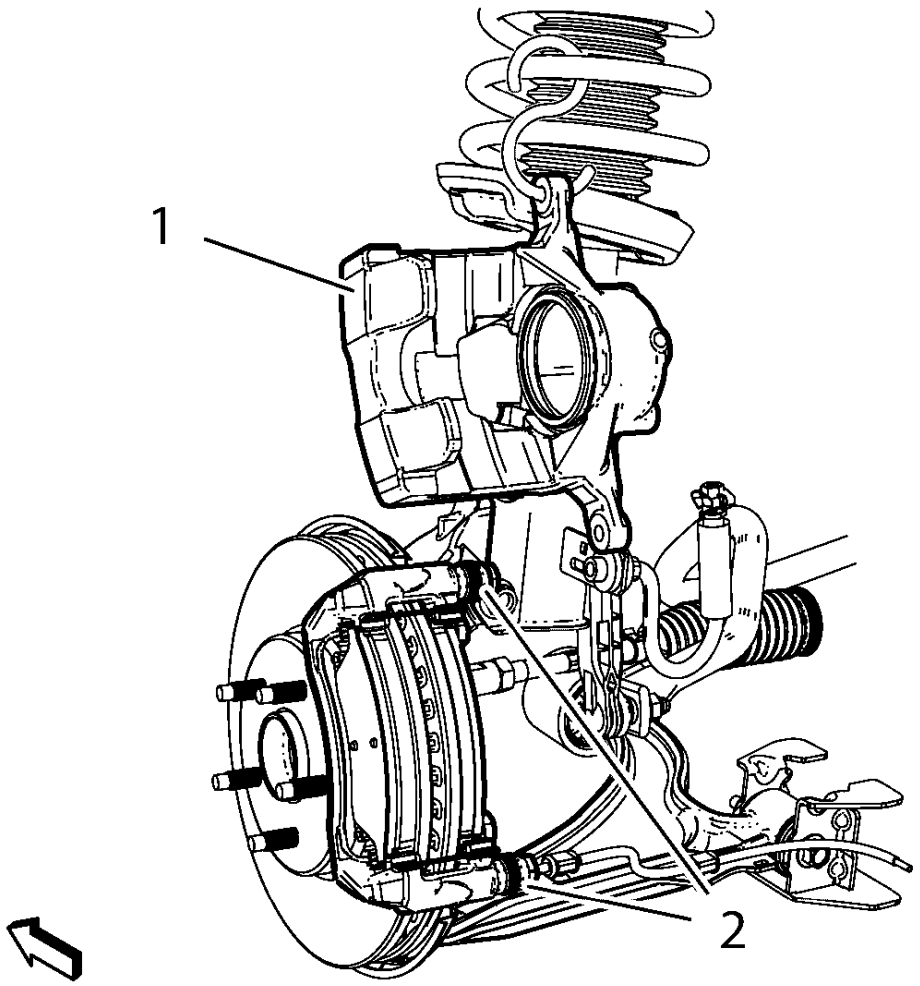

Fig. 44: Brake Caliper Supported With Wire
Courtesy of GENERAL MOTORS COMPANY

6. Remove the brake caliper lower guide pin bolt (2).

CAUTION: Support the brake caliper with heavy mechanic wire, or equivalent, whenever it is separated from its mount and the hydraulic flexible brake hose is still connected. Failure to support the caliper in this manner will cause the flexible brake hose to bear the weight of the caliper, which may cause damage to the brake hose and in turn may cause a brake fluid leak.

7. Without disconnecting the hydraulic brake flexible hose, pivot the caliper (1) upward and secure the caliper with heavy mechanics wire, or equivalent.

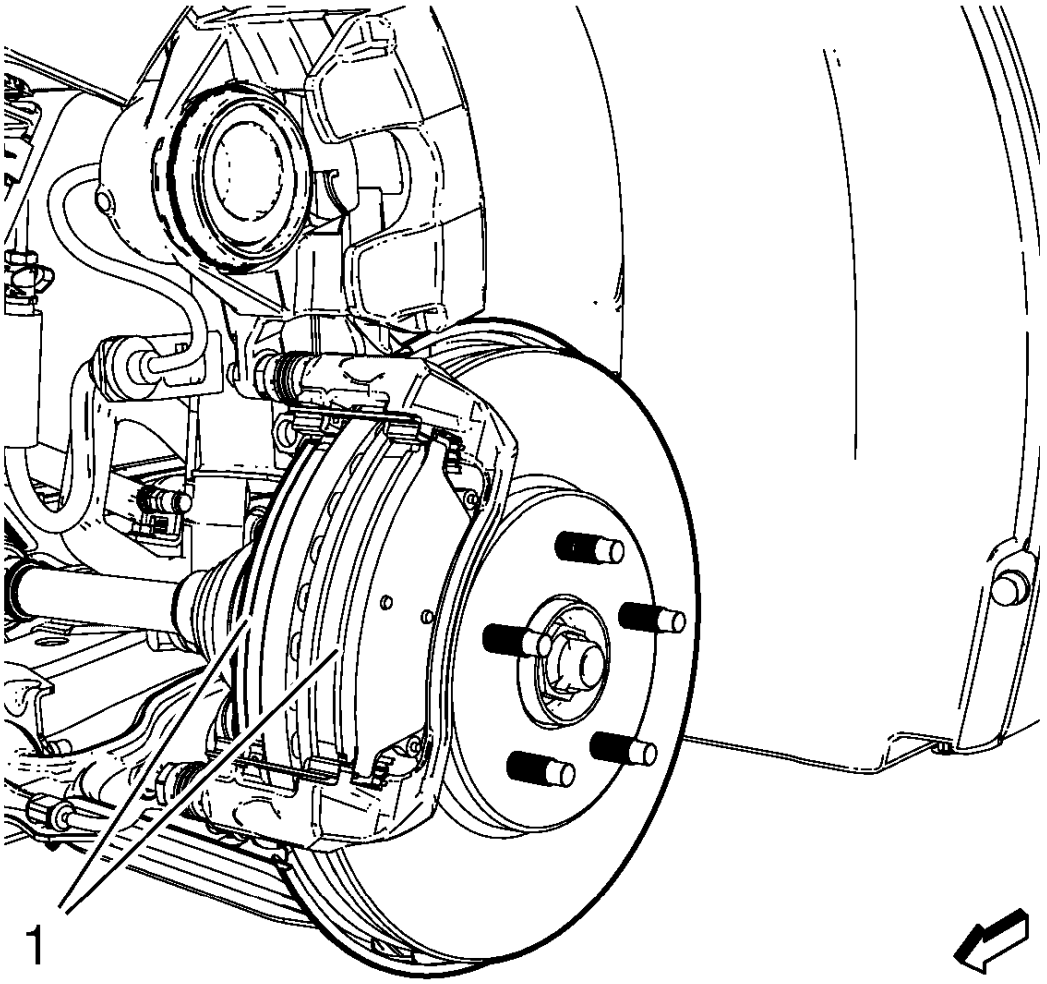

Fig. 45: View of Installed Brake Pads
Courtesy of GENERAL MOTORS COMPANY

8. Remove the brake pads (1) from the caliper mounting bracket

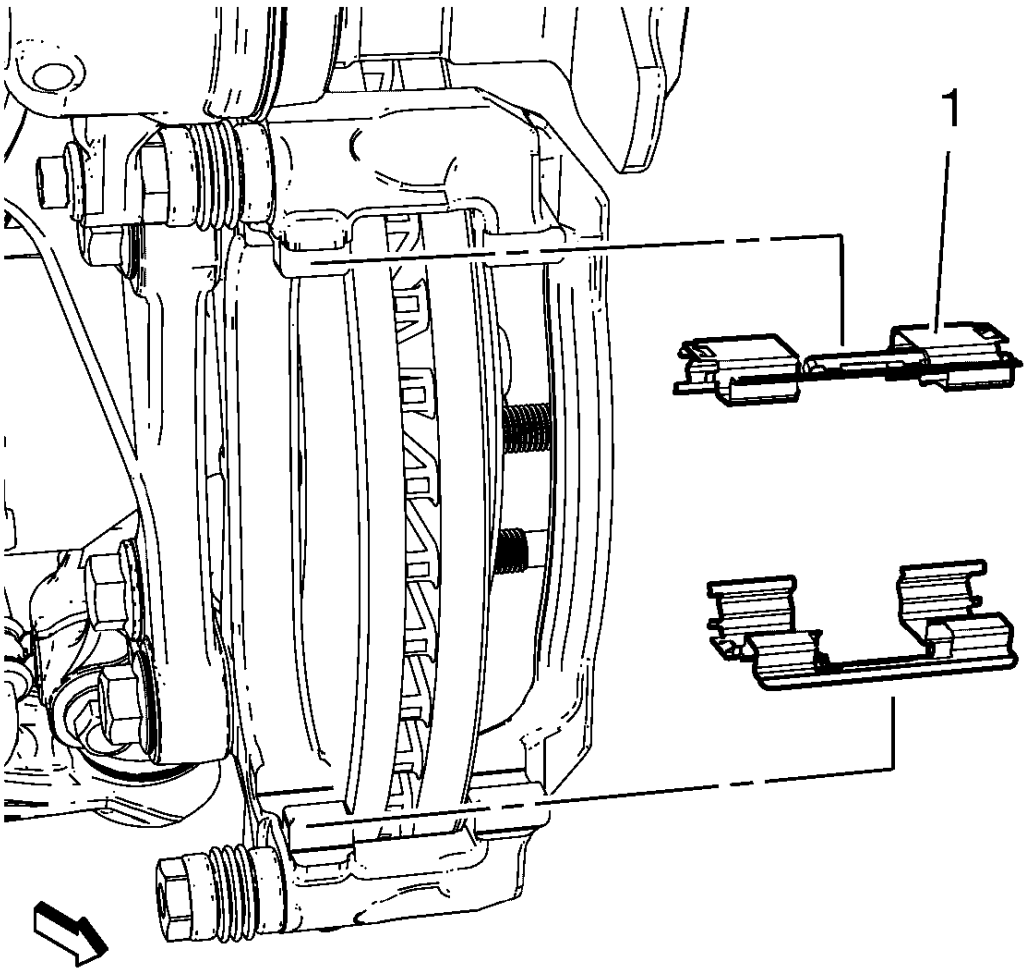

Fig. 46: View Of Brake Pad Retainer Springs
Courtesy of GENERAL MOTORS COMPANY

9. Remove the brake pad retainer springs (1) from the caliper bracket.

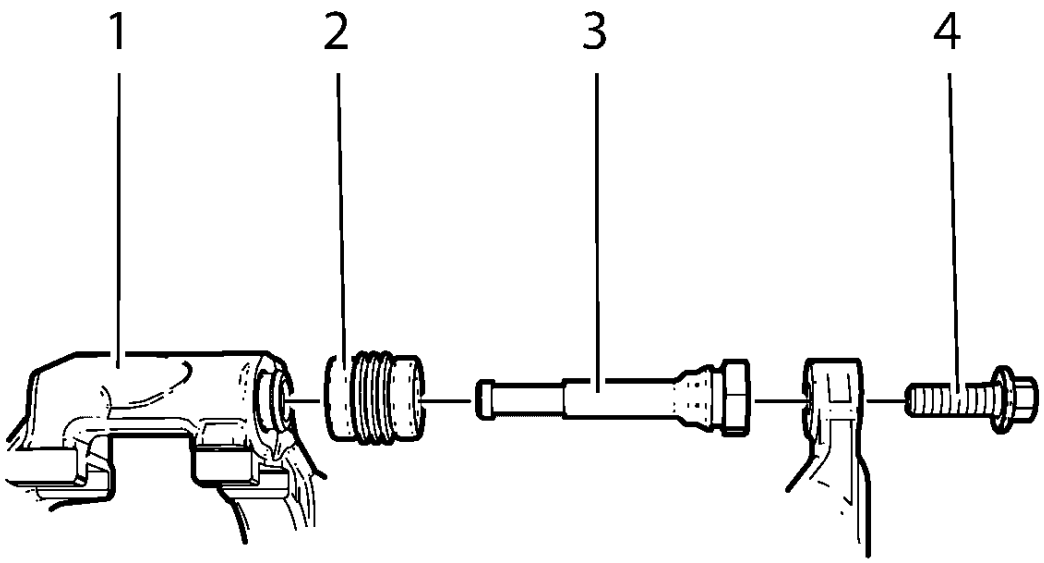

Fig. 47: Brake Caliper Guide Pin, Brake Caliper Pin Boot And Brake Caliper Mounting Bracket
Courtesy of GENERAL MOTORS COMPANY

10. Remove the brake caliper guide pins (3) from the brake caliper mounting bracket (1).
11. Remove the brake caliper pin boots (2) from the brake caliper mounting bracket (1).

Installation Procedure

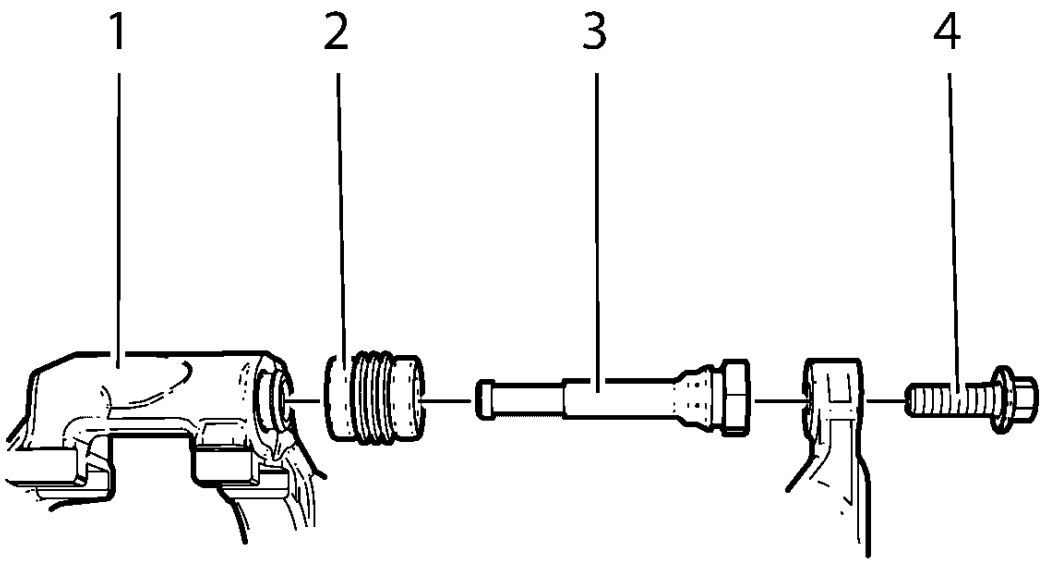

Fig. 48: Brake Caliper Guide Pin, Brake Caliper Pin Boot And Brake Caliper Mounting Bracket
Courtesy of GENERAL MOTORS COMPANY

1. Apply a thin coat of high temperature silicone lube to the brake caliper guide pin boots.
2. Install the brake caliper pin boots (2) into the brake caliper mounting bracket (1). Do not hammer the caliper pin boots into the bracket. Ensure that the caliper pin boots are fully seated in the bracket.
3. Apply a thin coat of high temperature silicone lube to the brake caliper guide pins.
4. Install the brake caliper guide pins (3) to the brake caliper mounting bracket (1).

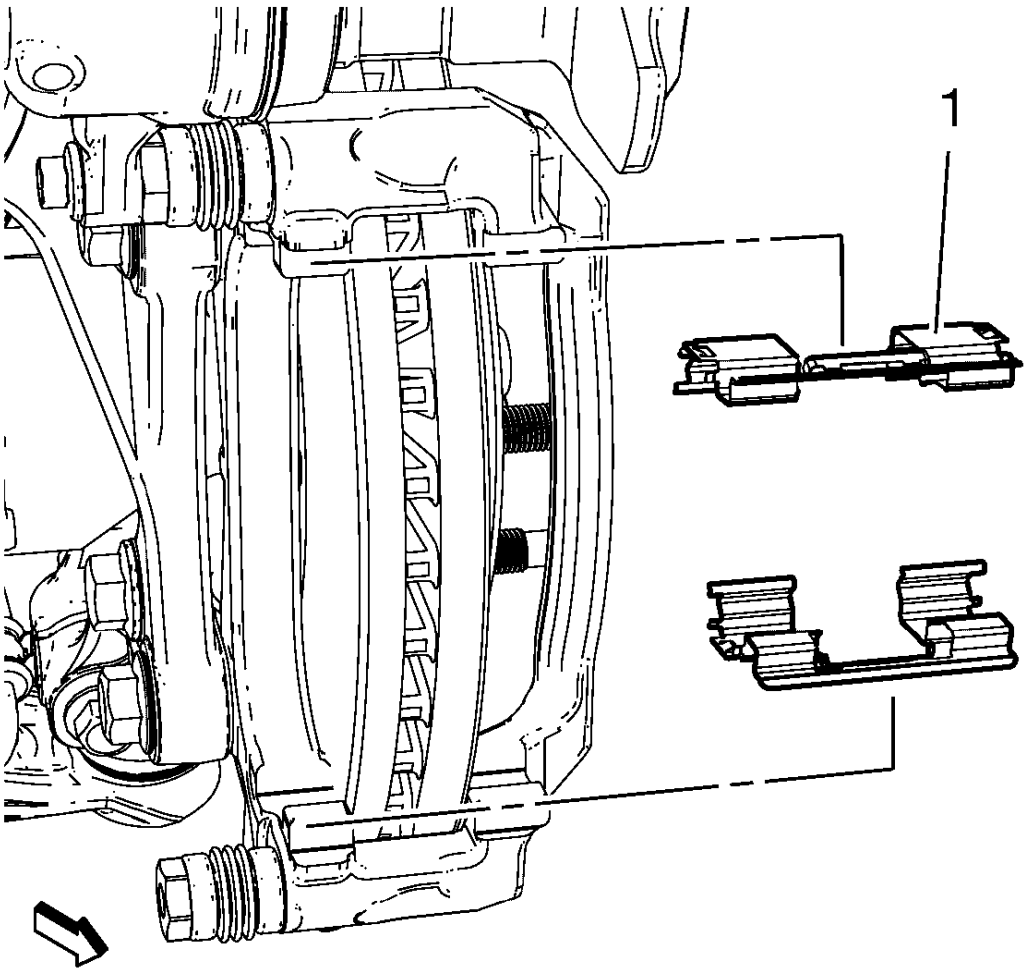

Fig. 49: View Of Brake Pad Retainer Springs
Courtesy of GENERAL MOTORS COMPANY

5. Ensure the brake pad hardware mating surfaces are clean.
6. Install the brake pad retainers (1) to the brake caliper bracket.

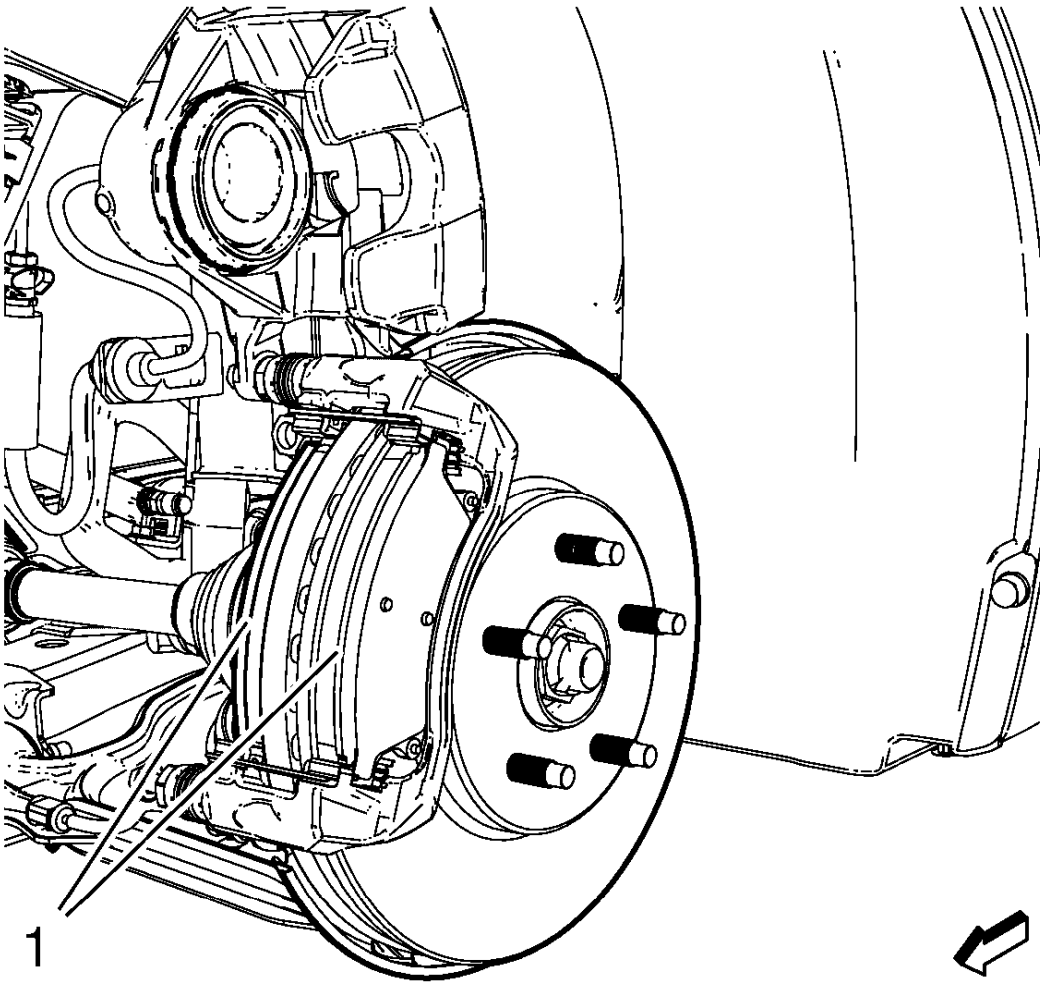

Fig. 50: View of Installed Brake Pads
Courtesy of GENERAL MOTORS COMPANY

NOTE: The wear sensor equipped disc brake pad must be mounted inboard of the rotor with the leading edge of the sensor facing the brake rotor during forward wheel rotation, or at the top of the pad when installed in vehicle position.

7. Install the brake pads (1) to the caliper bracket.

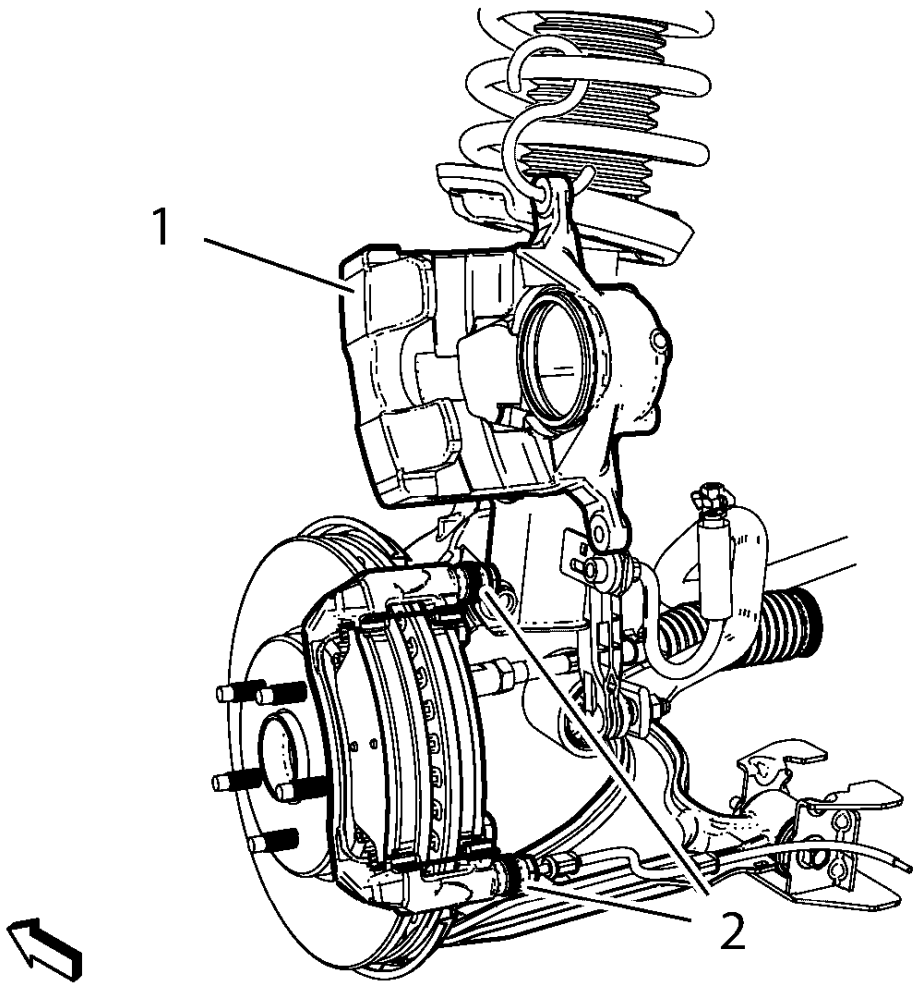

Fig. 51: Brake Caliper Supported With Wire
Courtesy of GENERAL MOTORS COMPANY

8. Remove the support, and rotate the brake caliper (1) into position over the disc brake pads and to the caliper mounting bracket.

CAUTION: Refer to Fastener Caution .

9. Install the lower brake caliper guide pin bolts (2) and tighten to 28 N.m (21 lb ft).
10. Install the tire and wheel assembly. Refer to **Tire and Wheel Removal and Installation** .
11. Lower the vehicle.
12. With the engine OFF, gradually apply the brake pedal approximately 2/3 of its travel distance.
13. Slowly release the brake pedal.
14. Wait 15 seconds, then gradually apply the brake pedal approximately 2/3 of its travel distance again until

a firm brake pedal apply is obtained. This will properly seat the brake caliper pistons and brake pads.

15. Fill the master cylinder auxiliary reservoir to the proper level. Refer to **Master Cylinder Reservoir Filling** .

REAR BRAKE CALIPER HARDWARE REPLACEMENT

Removal Procedure

WARNING: Refer to Brake Dust Warning .

1. Inspect the fluid level in the brake master cylinder reservoir.
2. If the brake fluid level is midway between the maximum-full point and the minimum allowable level, no brake fluid needs to be removed from the reservoir before proceeding.
3. If the brake fluid level is higher than midway between the maximum-full point and the minimum allowable level, remove brake fluid to the midway point before proceeding.
4. Raise and support the vehicle. Refer to **Lifting and Jacking the Vehicle** .
5. Remove the tire and wheel assembly. Refer to **Tire and Wheel Removal and Installation** .
6. Without disconnecting the hydraulic brake system, remove the rear brake caliper. Refer to **Rear Brake Caliper Replacement**.

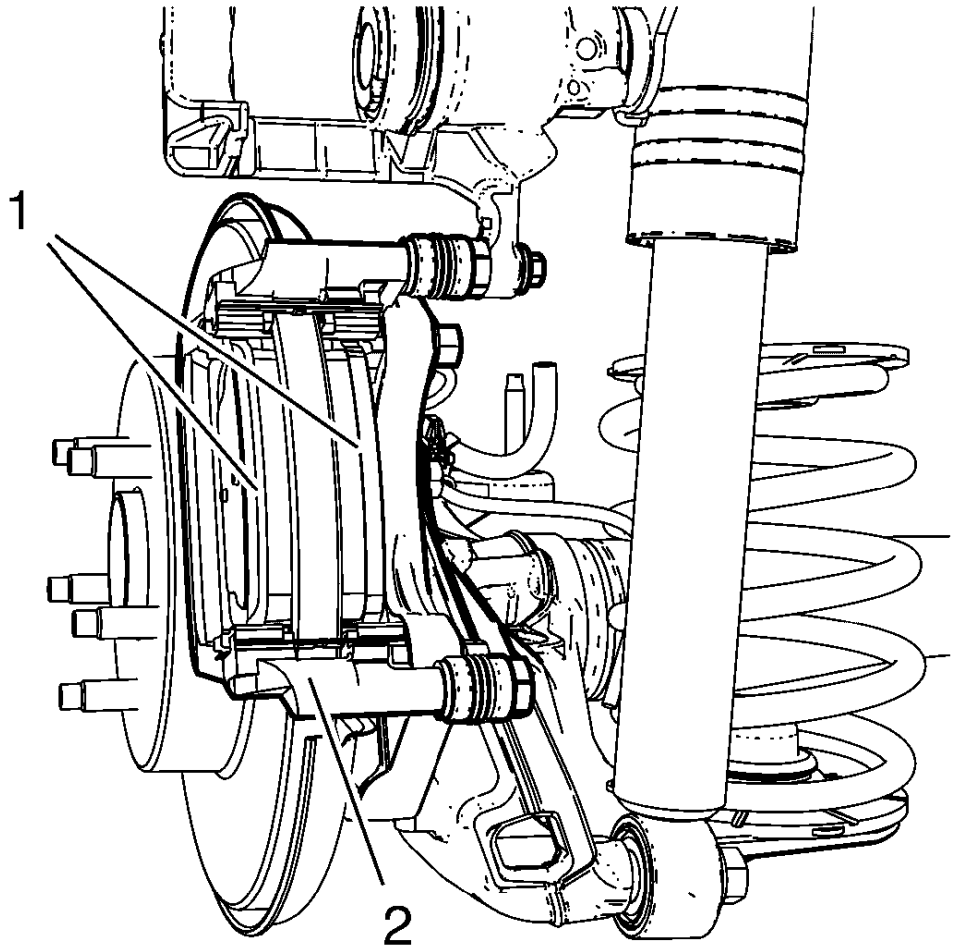

Fig. 52: View Of Installed Brake Pads
Courtesy of GENERAL MOTORS COMPANY

7. Remove the brake pads (1) from the caliper mounting bracket (2).

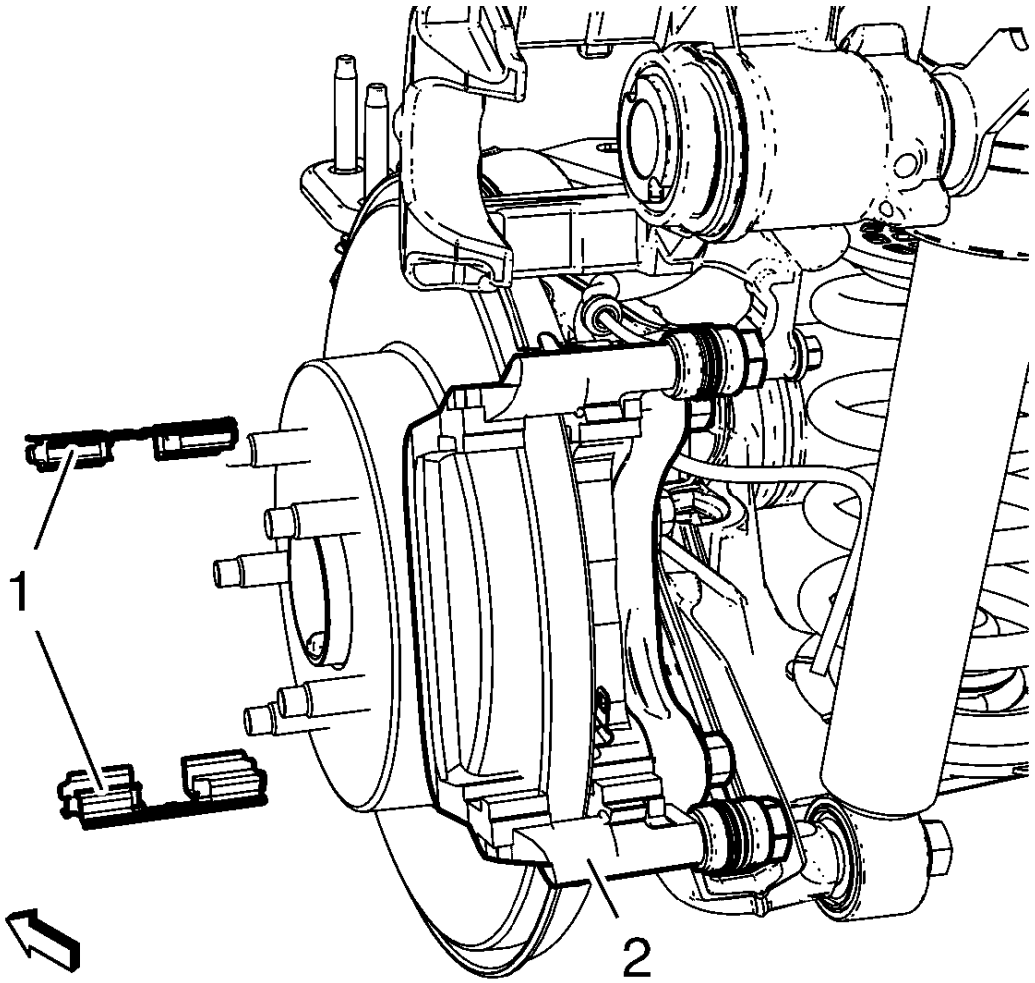

Fig. 53: View Of Brake Pad Retainer Springs
Courtesy of GENERAL MOTORS COMPANY

8. Remove the brake pad retainer springs (1) from the caliper bracket (2).

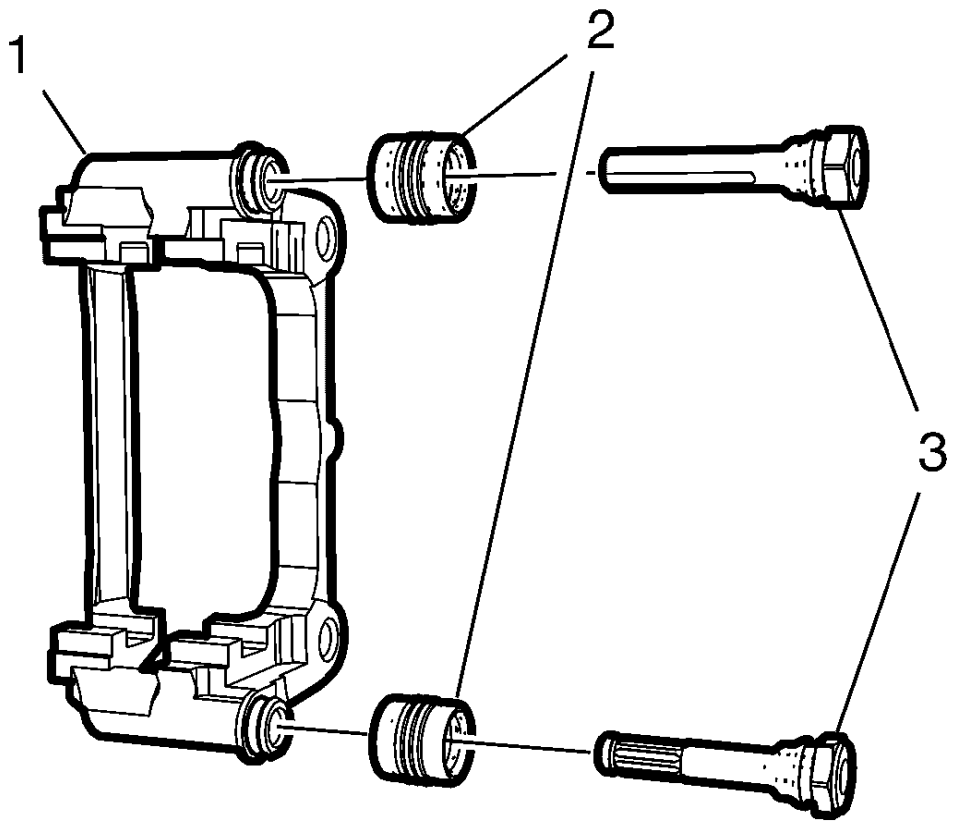

Fig. 54: Brake Caliper Mounting Bracket, Guide Pins And Boots
Courtesy of GENERAL MOTORS COMPANY

9. Remove the brake caliper guide pins (3) from the brake caliper mounting bracket (1).
10. Remove the brake caliper pin boots (2) from the brake caliper mounting bracket (1).

Installation Procedure

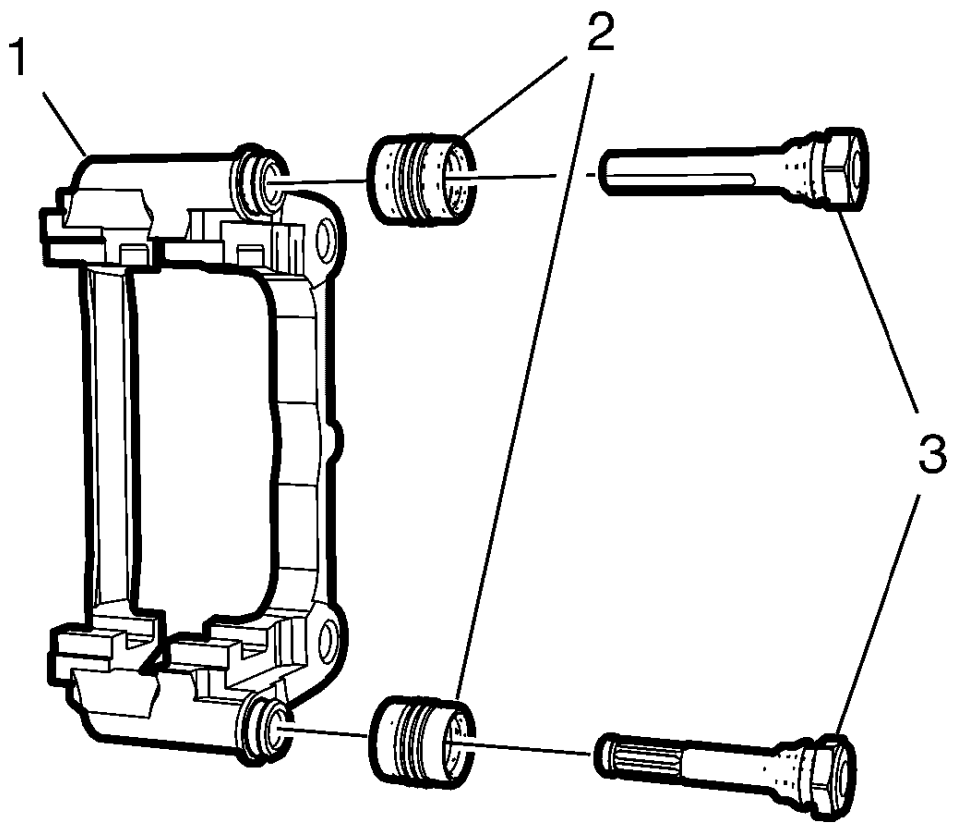

Fig. 55: Brake Caliper Mounting Bracket, Guide Pins And Boots
Courtesy of GENERAL MOTORS COMPANY

1. Apply a thin coat of high temperature silicone lube to the brake caliper guide pin boots.
2. Install the brake caliper pin boots (2) into the brake caliper mounting bracket (1). Do not hammer the caliper pin boots into the bracket. Ensure that the caliper pin boots are fully seated in the bracket.
3. Apply a thin coat of high temperature silicone lube to the brake caliper guide pins.

NOTE: The lower brake caliper guide pin is equipped with a ribbed insert.

4. Install the brake caliper guide pins (3) to the brake caliper mounting bracket (1).

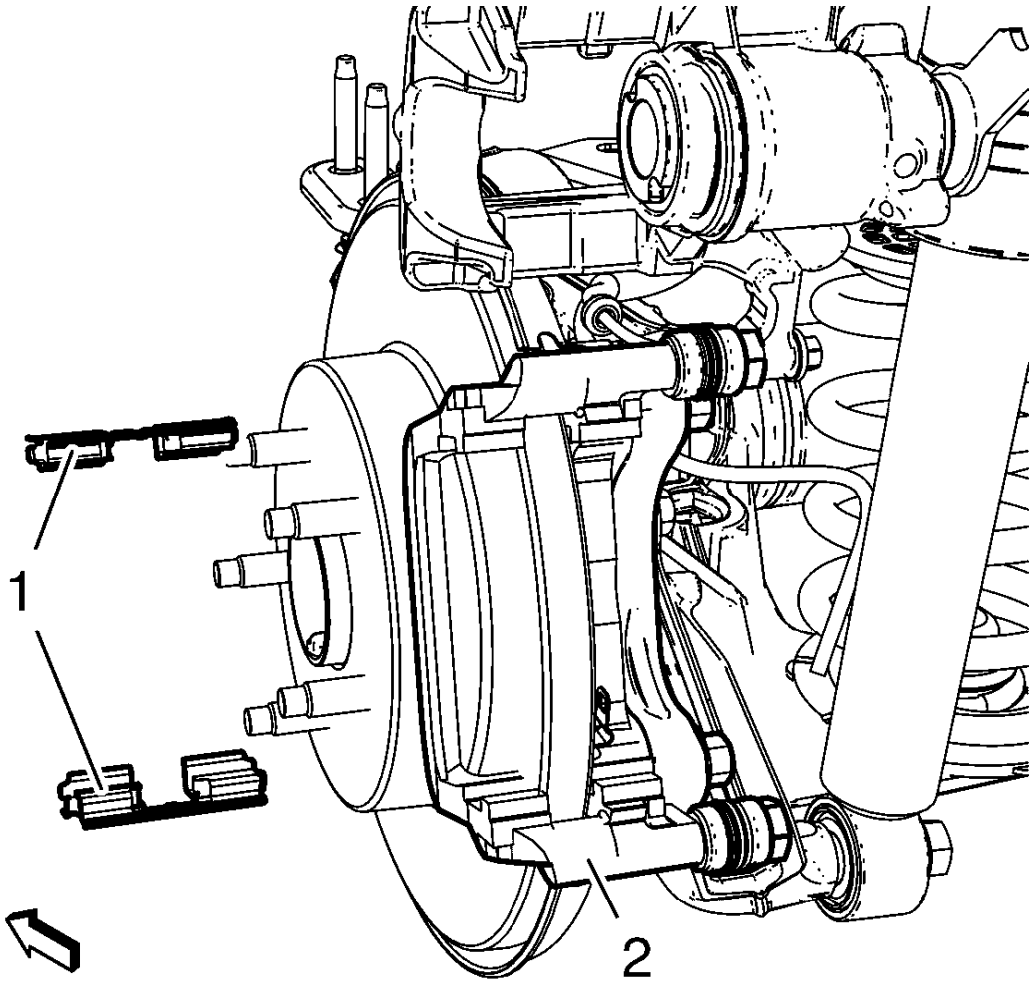

Fig. 56: View Of Brake Pad Retainer Springs
Courtesy of GENERAL MOTORS COMPANY

5. Ensure the brake pad hardware mating surfaces are clean.
6. Install the brake pad retainers (1) to the brake caliper bracket and apply a thin coat of high temperature silicone lube to the brake pad retainers.

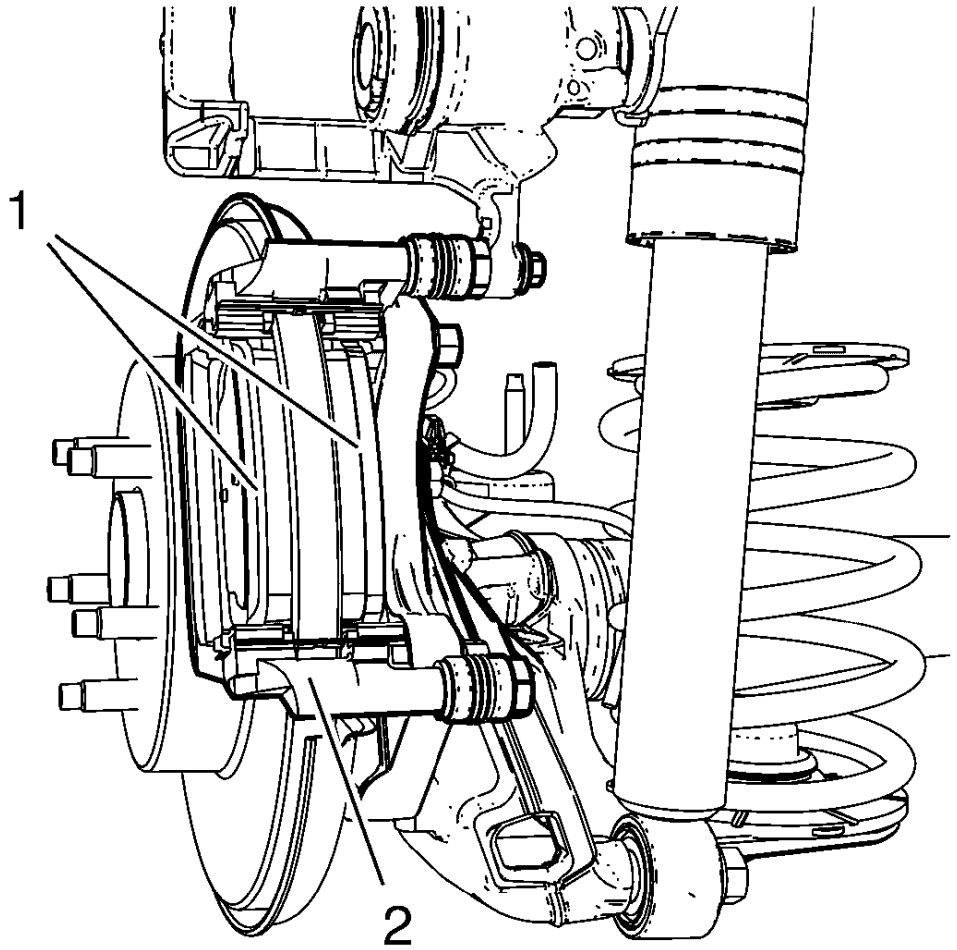

Fig. 57: View Of Installed Brake Pads
Courtesy of GENERAL MOTORS COMPANY

NOTE: **The wear sensor equipped disc brake pad must be mounted inboard of the rotor with the leading edge of the sensor facing the brake rotor during forward wheel rotation, or at the top of the pad when installed in vehicle position.**

7. Install the brake pads (1) to the caliper bracket.
8. Install the rear brake caliper. Refer to **Rear Brake Caliper Replacement**.
9. Install the tire and wheel assembly. Refer to **Tire and Wheel Removal and Installation** .
10. Lower the vehicle.
11. With the engine OFF, gradually apply the brake pedal approximately 2/3 of its travel distance.
12. Slowly release the brake pedal.
13. Wait 15 seconds, then gradually apply the brake pedal approximately 2/3 of its travel distance again until

a firm brake pedal apply is obtained. This will properly seat the brake caliper pistons and brake pads.

14. Fill the master cylinder auxiliary reservoir to the proper level. Refer to **Master Cylinder Reservoir Filling** .

FRONT BRAKE CALIPER BRACKET REPLACEMENT

Removal Procedure

WARNING: Refer to Brake Dust Warning .

1. Inspect the fluid level in the brake master cylinder reservoir.
2. If the brake fluid level is midway between the maximum-full point and the minimum allowable level, no brake fluid needs to be removed from the reservoir before proceeding.
3. If the brake fluid level is higher than midway between the maximum-full point and the minimum allowable level, remove brake fluid to the midway point before proceeding.
4. Raise and support the vehicle. Refer to **Lifting and Jacking the Vehicle** .
5. Remove the tire and wheel assembly. Refer to **Tire and Wheel Removal and Installation** .

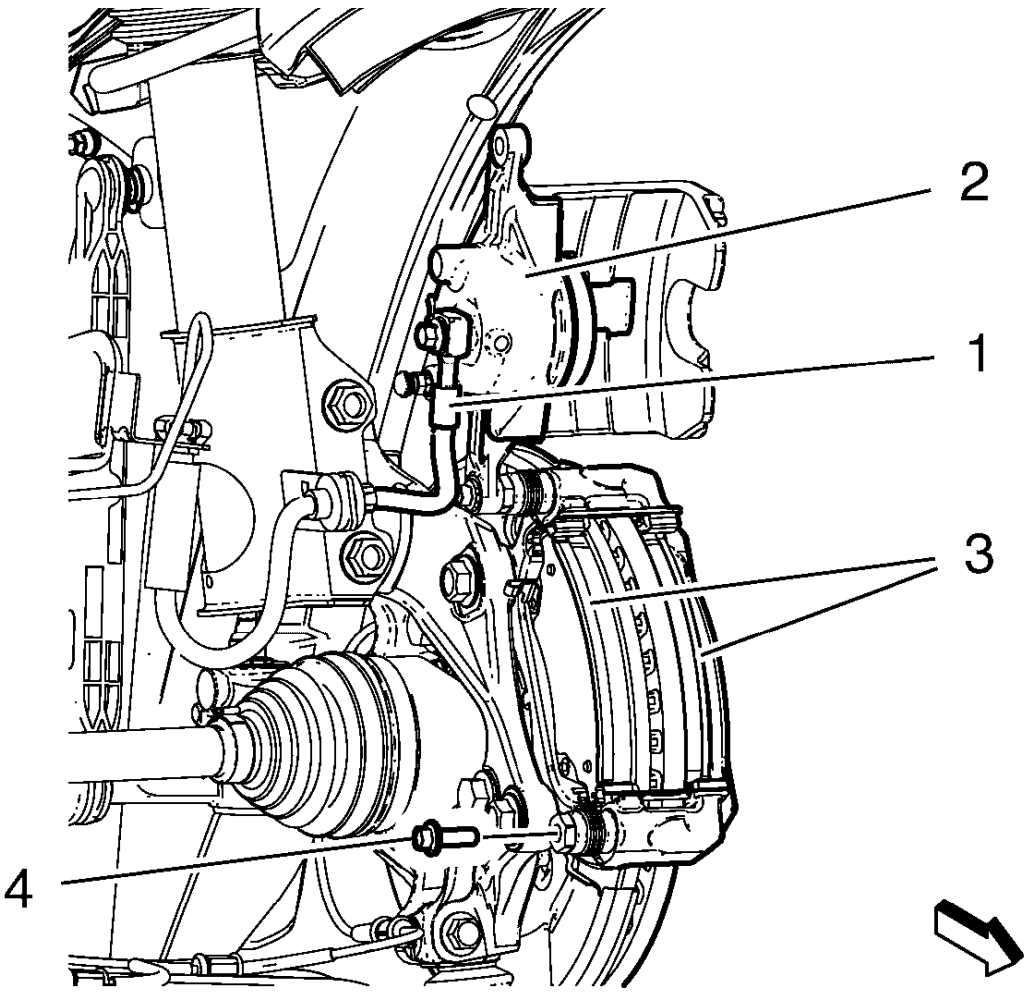

Fig. 58: Brake Caliper, Flex Hose, Brake Pads And Guide Pin Bolt
Courtesy of GENERAL MOTORS COMPANY

6. Remove the lower brake caliper guide pin bolt (4). Do NOT disconnect the hydraulic brake flexible hose (1) from the caliper (2).

CAUTION: Support the brake caliper with heavy mechanic wire, or equivalent, whenever it is separated from its mount and the hydraulic flexible brake hose is still connected. Failure to support the caliper in this manner will cause the flexible brake hose to bear the weight of the caliper, which may cause damage to the brake hose and in turn may cause a brake fluid leak.

7. Without disconnecting the hydraulic brake flexible hose (1), pivot the caliper (2) upward and separate from caliper bracket in direction of arrow.
8. Remove the brake pads (3).

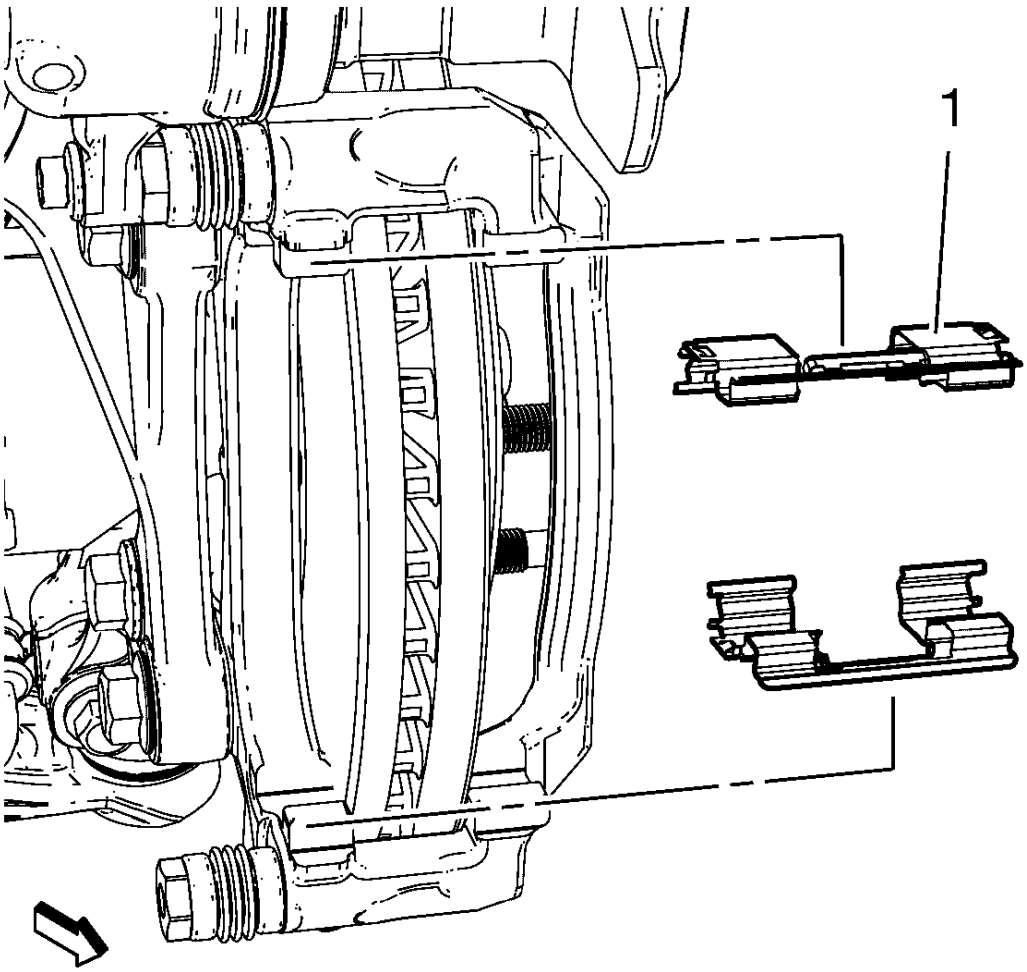

Fig. 59: View Of Brake Pad Retainer Springs
Courtesy of GENERAL MOTORS COMPANY

9. Remove the brake pad retainer springs (1).
10. If reusing the bracket, thoroughly clean the pad hardware mating surfaces of the caliper bracket, of any debris and corrosion.
11. Inspect the brake pad retainer springs (1) for the following:
    - Bent mounting tabs
    - Excessive corrosion
    - Looseness at the brake caliper mounting bracket
    - Looseness at the disc brake pads
12. If any of the conditions listed are found, the disc brake pad retainers require replacement.

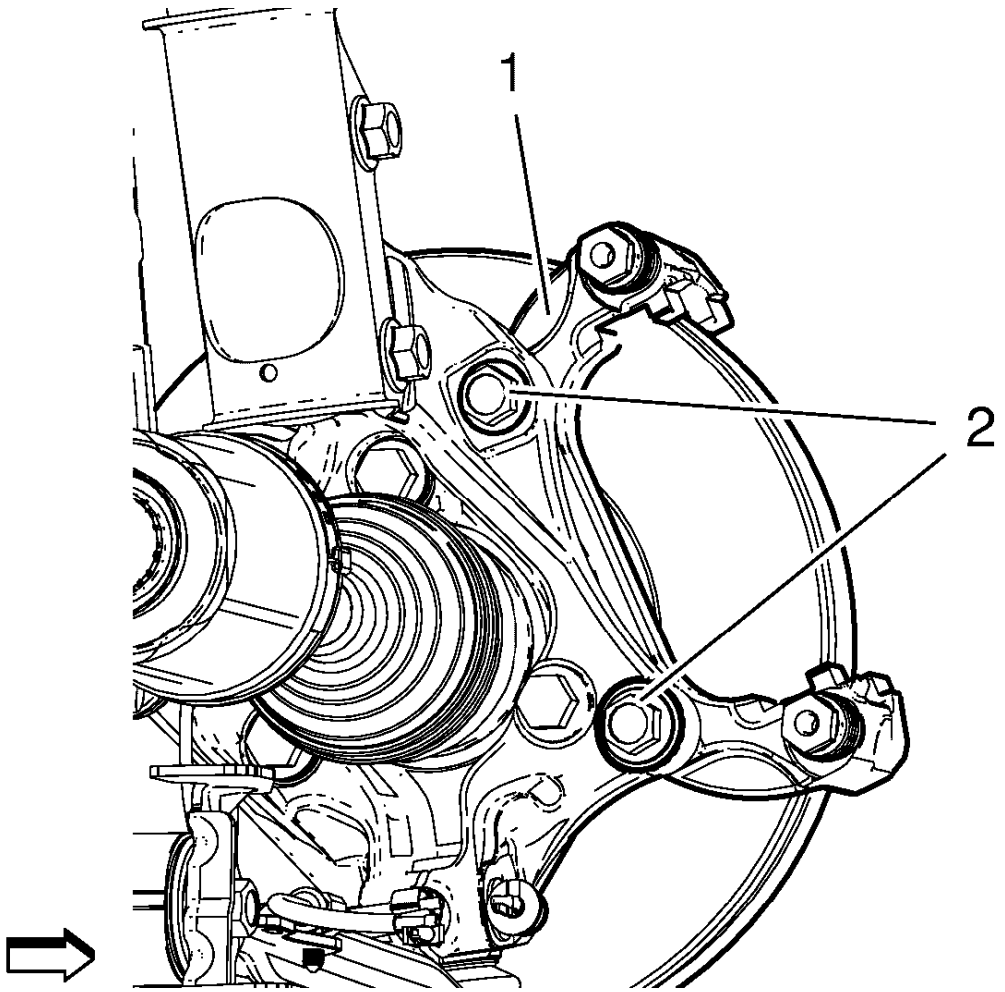

Fig. 60: Brake Caliper Bracket Mounting Bolts
Courtesy of GENERAL MOTORS COMPANY

13. Remove and DISCARD caliper bracket bolts (2).
14. Remove brake caliper bracket (1) from steering knuckle.

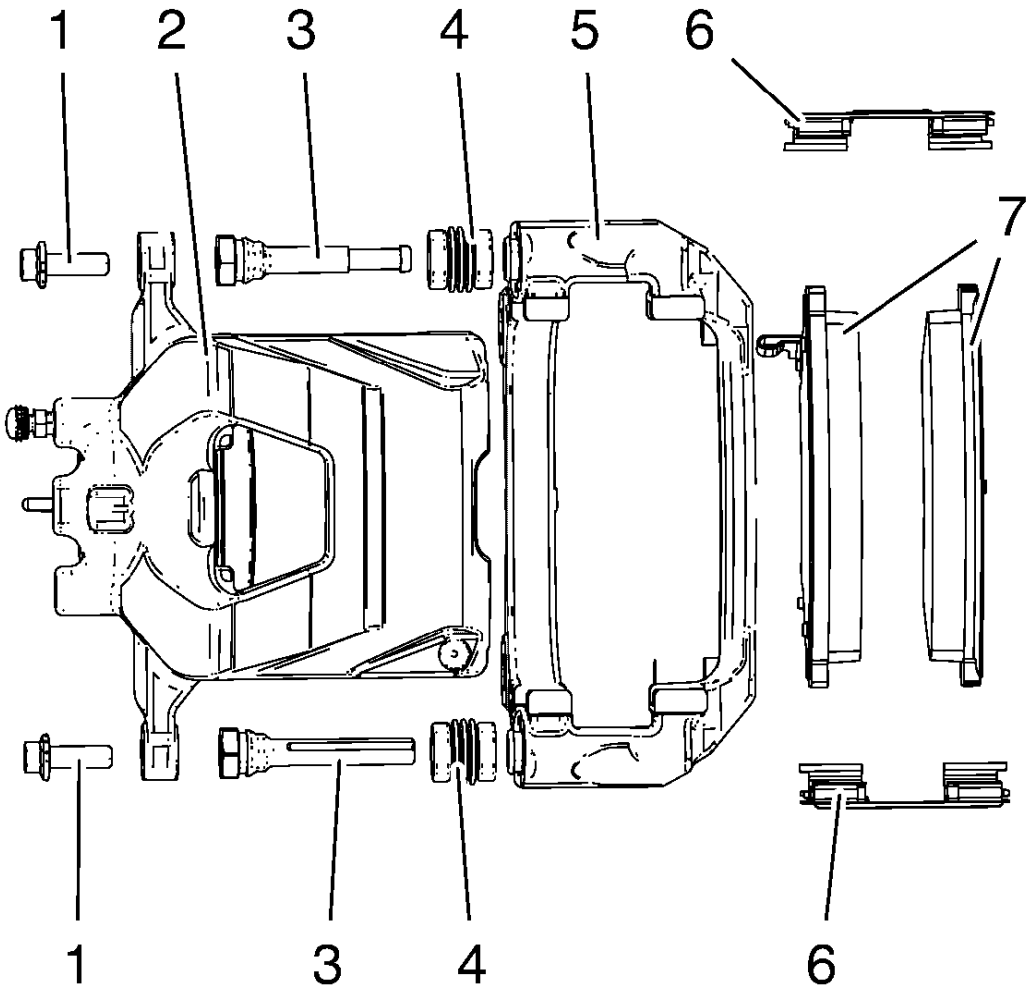

Fig. 61: Brake Caliper And Mounting Hardware
Courtesy of GENERAL MOTORS COMPANY

15. Inspect the caliper bracket (5). If the brake caliper bracket (5) is bent, cracked, or damaged, it requires replacement.
16. Inspect the brake caliper guide pins (3) for freedom of movement, and inspect the condition of the guide pin boots (4). Move the brake caliper guide pins (3) inboard and outboard within the brake caliper bracket (5), without disengaging the slides from the boots (4), and observe for the following:
    - Restricted caliper guide pin movement
    - Looseness in the brake caliper mounting bracket
    - Seized or binding caliper guide pins
    - Split or torn boots
17. If any of the conditions listed are found, the brake caliper guide pins (3) and/or boots (4) require replacement.

Installation Procedure

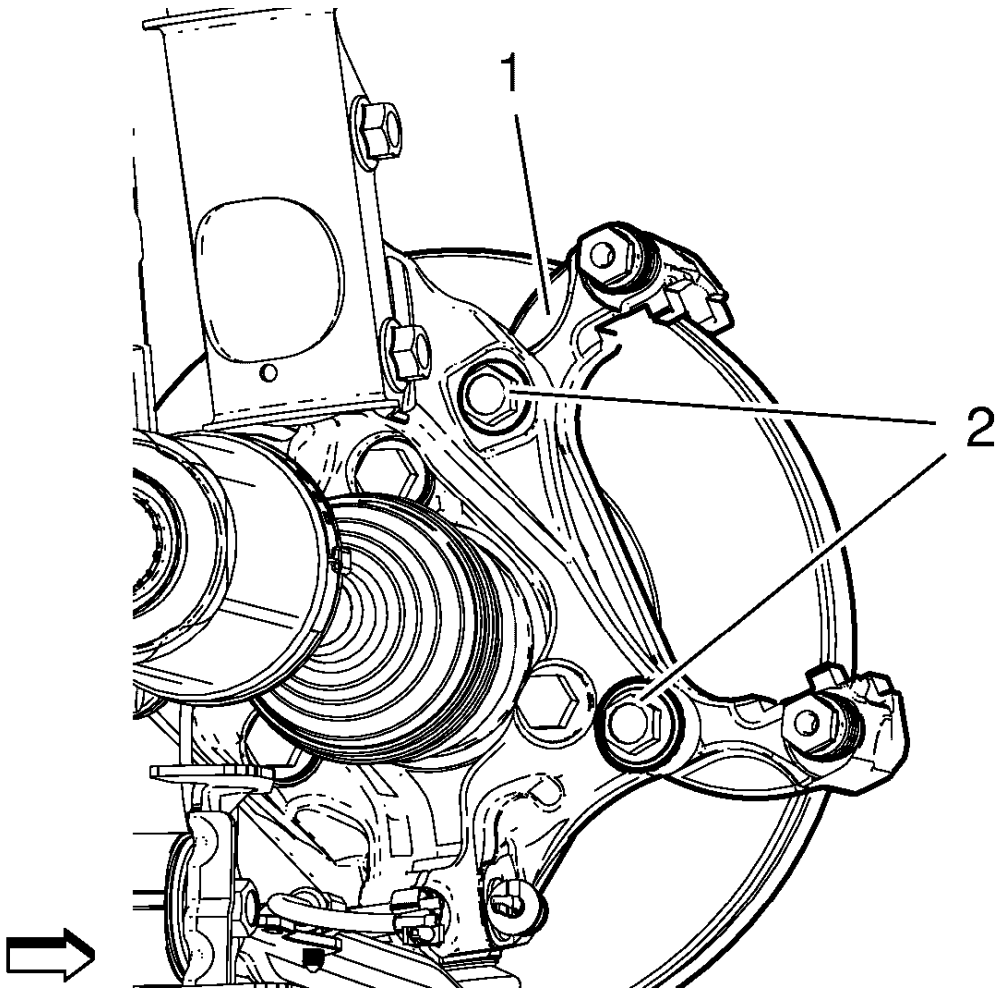

Fig. 62: Brake Caliper Bracket Mounting Bolts
Courtesy of GENERAL MOTORS COMPANY

1. Install the brake caliper bracket (1) to the steering knuckle.

WARNING: Refer to Torque-to-Yield Fastener Warning .

CAUTION: Refer to Fastener Caution .

2. Install the NEW brake caliper bracket bolts (2) and tighten to 100 N.m (74 lb ft) + 60° - 75°

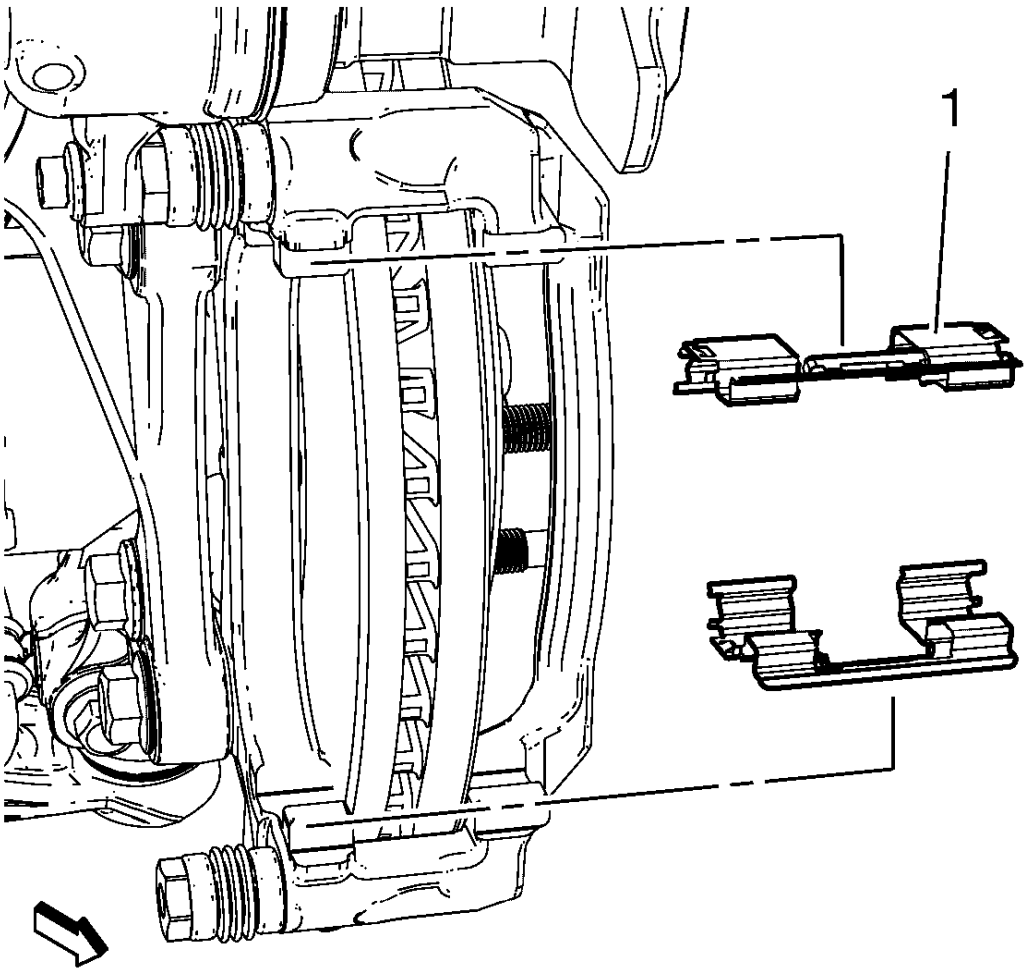

Fig. 63: View Of Brake Pad Retainer Springs
Courtesy of GENERAL MOTORS COMPANY

3. Apply a very thin coating of high temperature silicone brake lubricant to the pad hardware mating surfaces of the caliper bracket only.
4. Install the brake pad retainer springs (1).

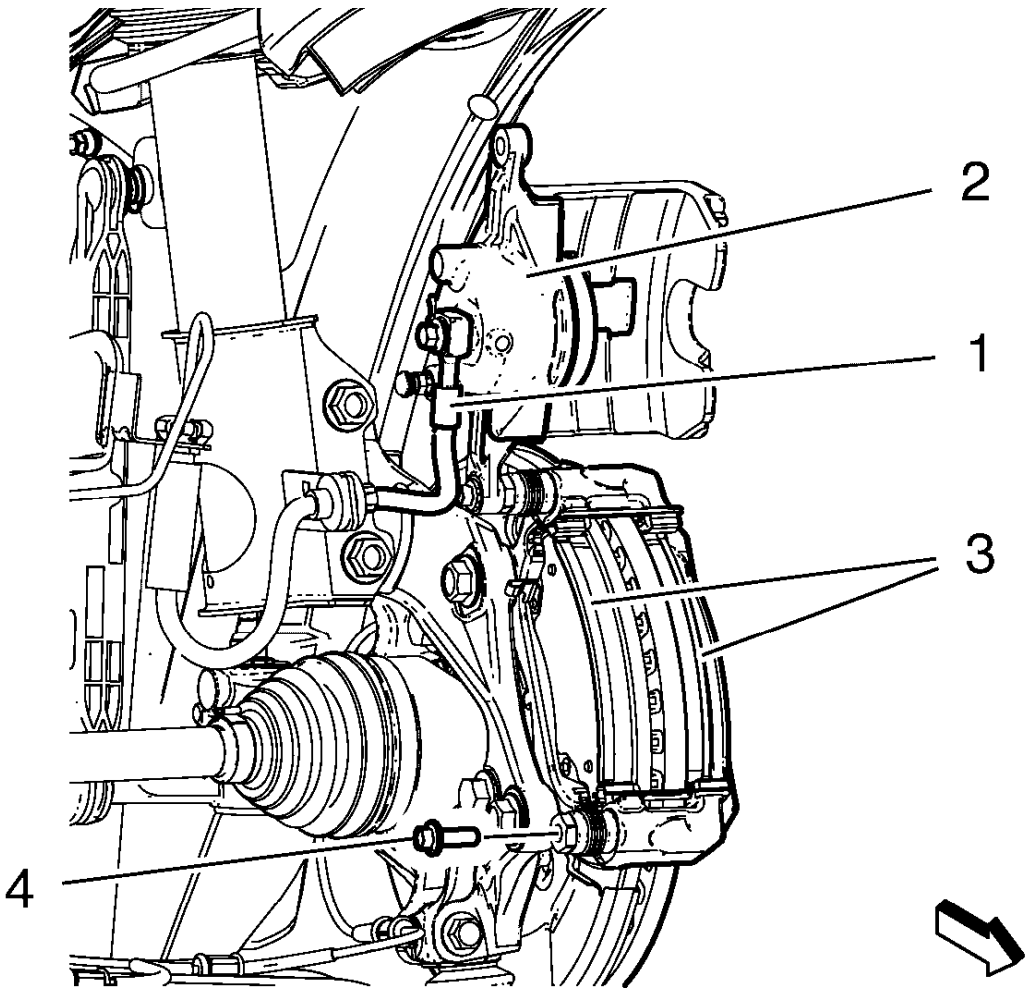

Fig. 64: Brake Caliper, Flex Hose, Brake Pads And Guide Pin Bolt
Courtesy of GENERAL MOTORS COMPANY

NOTE: The wear sensor equipped disc brake pad must be mounted inboard of the rotor with the leading edge of the sensor facing the brake rotor during forward wheel rotation, or at the top of the pad when installed in vehicle position.

5. Install the brake pads (3) to the brake caliper bracket.
6. Remove the support and reposition the brake caliper (2) over the brake pads and to the caliper bracket. Assure that guide pin bolts boots apply firmly.
7. Install guide pin bolts and tighten to 28 N.m (21 lb ft).
8. Install the tire and wheel assembly. Refer to **Tire and Wheel Removal and Installation** .
9. Lower the vehicle.
10. With the engine OFF, gradually apply the brake pedal approximately 2/3 of its travel distance.

11. Slowly release the brake pedal.
12. Wait 15 seconds, then gradually apply the brake pedal approximately 2/3 of its travel distance again until a firm brake pedal apply is obtained. This will properly seat the brake caliper pistons and brake pads.
13. Fill the master cylinder auxiliary reservoir to the proper level. Refer to **Master Cylinder Reservoir Filling** .

REAR BRAKE CALIPER BRACKET REPLACEMENT

Special Tools

EN-45059 Angle Meter

For equivalent regional tools, refer to **Special Tools**.

Removal Procedure

WARNING: Refer to Brake Dust Warning .

1. Raise and suitably support the vehicle. Refer to **Lifting and Jacking the Vehicle** .
2. Remove the tire and wheel assembly. Refer to **Tire and Wheel Removal and Installation** .

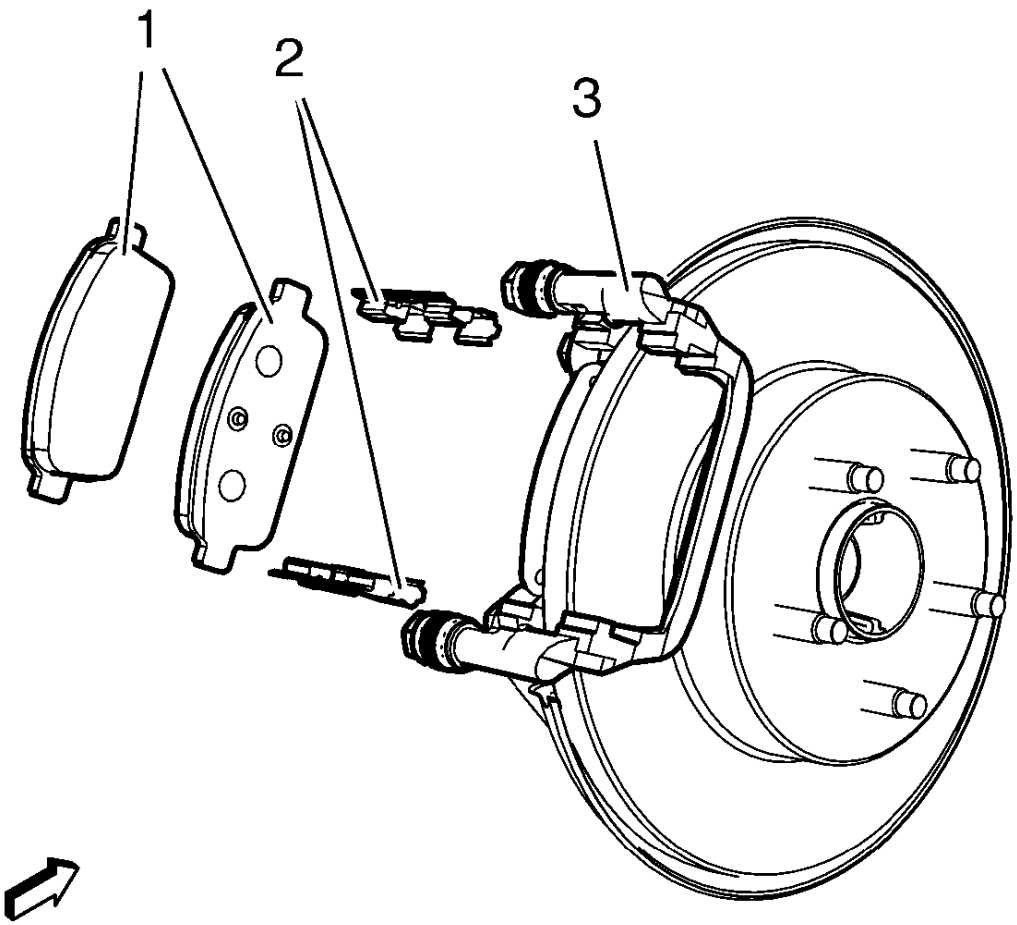

Fig. 65: Brake Caliper Mounting Bracket And Brake Pads
Courtesy of GENERAL MOTORS COMPANY

CAUTION: Support the brake caliper with heavy mechanic wire, or equivalent, whenever it is separated from its mount and the hydraulic flexible brake hose is still connected. Failure to support the caliper in this manner will cause the flexible brake hose to bear the weight of the caliper, which may cause damage to the brake hose and in turn may cause a brake fluid leak.

NOTE: Remove and discard the brake caliper pin bolts.

3. Remove the brake caliper from the brake caliper bracket (3) and support the brake caliper with heavy mechanic's wire, or equivalent. Do NOT disconnect the hydraulic brake flexible hose from the caliper. Refer to **Rear Brake Caliper Replacement**.
4. Remove the brake pads from the brake caliper bracket (3).

5. Remove the brake pad retainers from the brake caliper bracket.

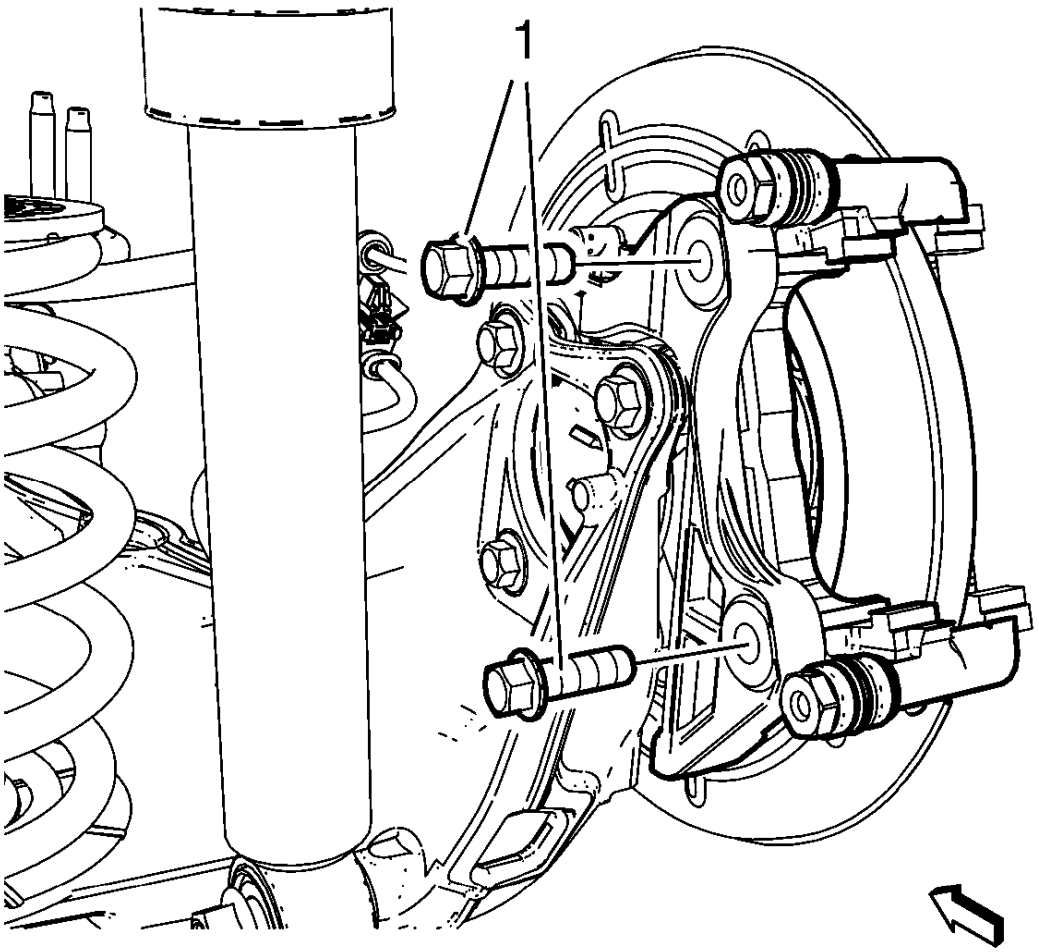

Fig. 66: Brake Caliper Bracket Bolts
Courtesy of GENERAL MOTORS COMPANY

6. Remove and DISCARD the brake caliper bracket bolts (1).
7. Remove the rear brake caliper bracket.
8. Inspect the brake mounting and hardware. Refer to **Rear Brake Caliper Hardware Replacement**.
9. Inspect the brake caliper bracket.
10. Replace the brake caliper bracket if cracked or damaged.

Installation Procedure

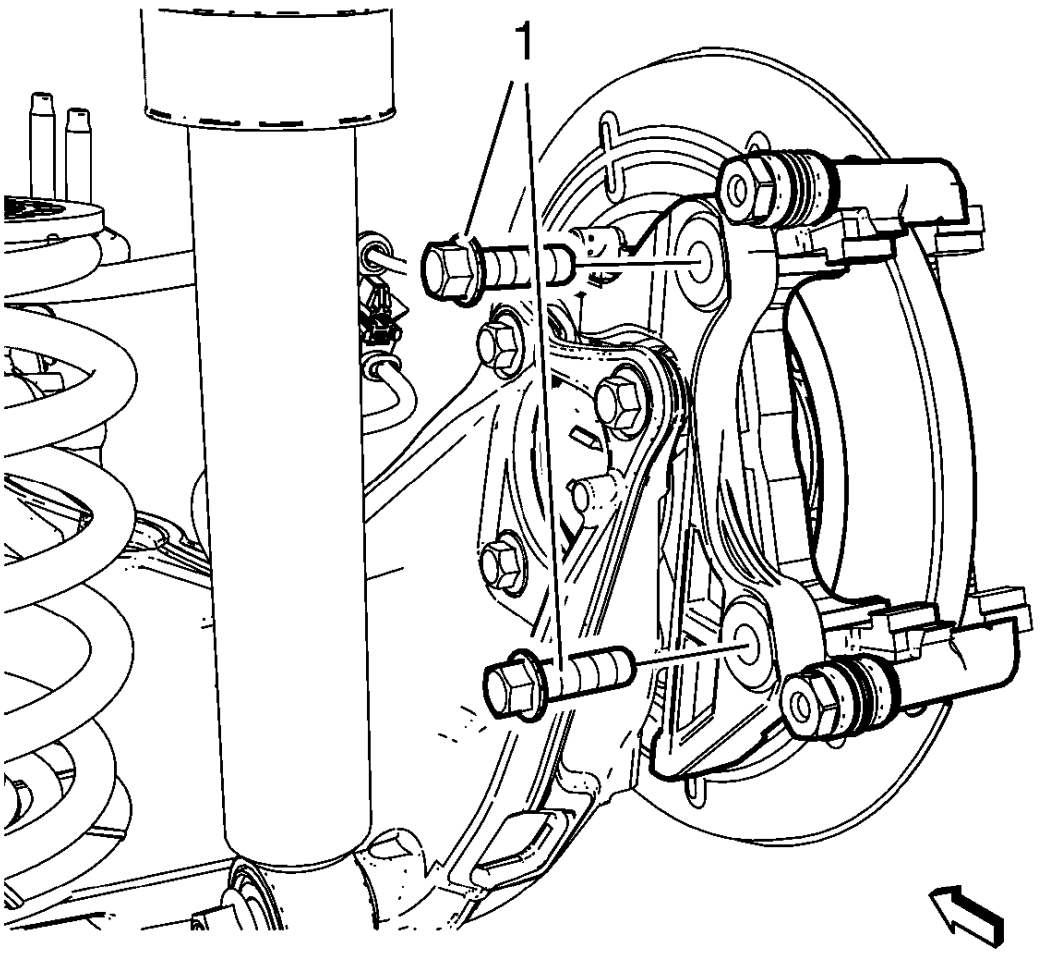

Fig. 67: Brake Caliper Bracket Bolts
Courtesy of GENERAL MOTORS COMPANY

1. Install the brake caliper bracket.

CAUTION: This is a self-retaining fastener joint that does not require thread locking compounds. Do not attempt to clean the threads with a standard tap. If a standard tap is used, damage to the joint threads will occur.

CAUTION: Refer to Fastener Caution .

2. Install the NEW brake caliper mounting bracket bolts (1) and tighten a first pass to 100 N.m (74 lb ft).

WARNING: Refer to Torque-to-Yield Fastener Warning .

3. Tighten the NEW brake caliper mounting bracket bolts (1) a final pass to an additional 60 - 75 degrees, using the **EN-45059** meter.

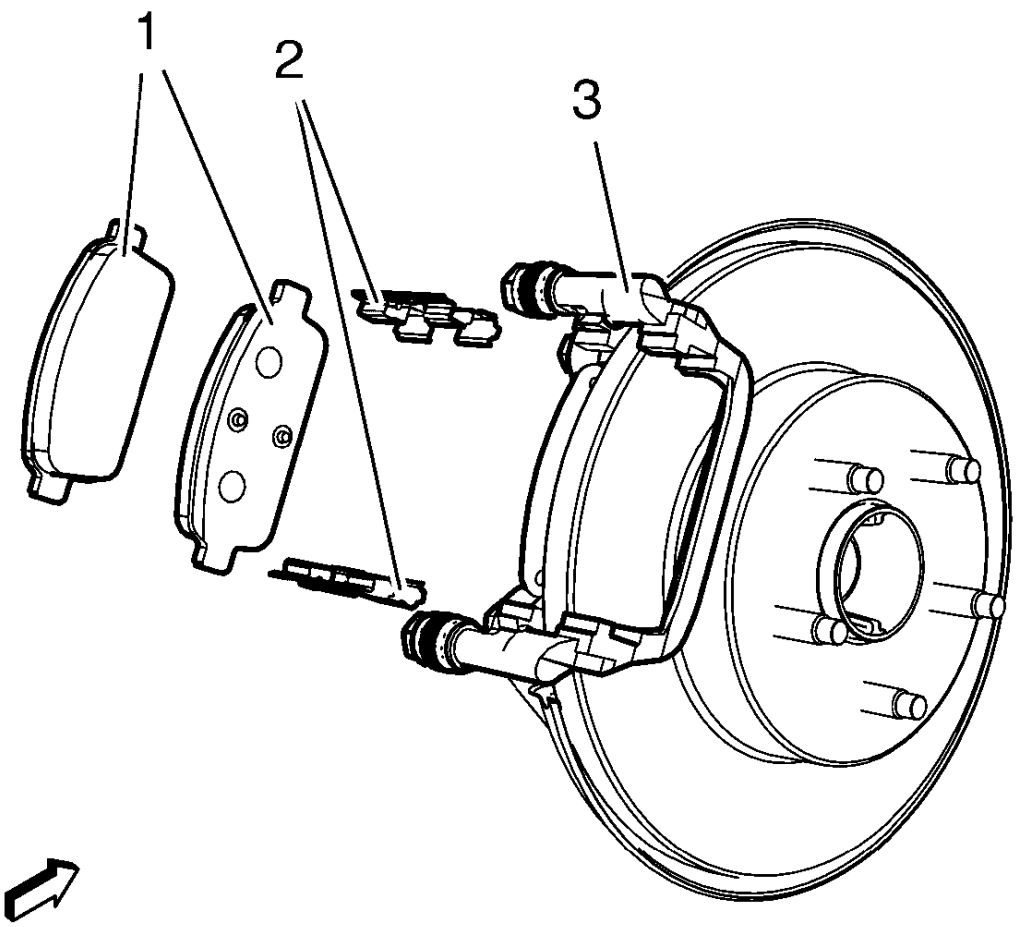

Fig. 68: Brake Caliper Mounting Bracket And Brake Pads
Courtesy of GENERAL MOTORS COMPANY

4. Install the brake pad retainers (2) to the brake caliper bracket (3).
5. Install the brake pads (1) to the brake caliper bracket.
6. Install the brake caliper. Refer to **Rear Brake Caliper Replacement**.
7. Install the rear tire and wheel assembly. Refer to **Tire and Wheel Removal and Installation** .
8. Lower the vehicle.
9. Pump the brake pedal 2-3 times in order to seat the rear disc brake pads to the rotor.

FRONT BRAKE ROTOR REPLACEMENT (J60)

Special Tools

- CH-41013 Rotor Resurfacing Kit
- CH-42450-A Wheel Hub Resurfacing Kit
- EN-45059 Angle Meter

For equivalent regional tools, refer to **Special Tools**.

Removal Procedure

WARNING: Refer to Brake Dust Warning .

1. Raise and support the vehicle. Refer to **Lifting and Jacking the Vehicle** .
2. Remove the tire and wheel assembly. Refer to **Tire and Wheel Removal and Installation** .

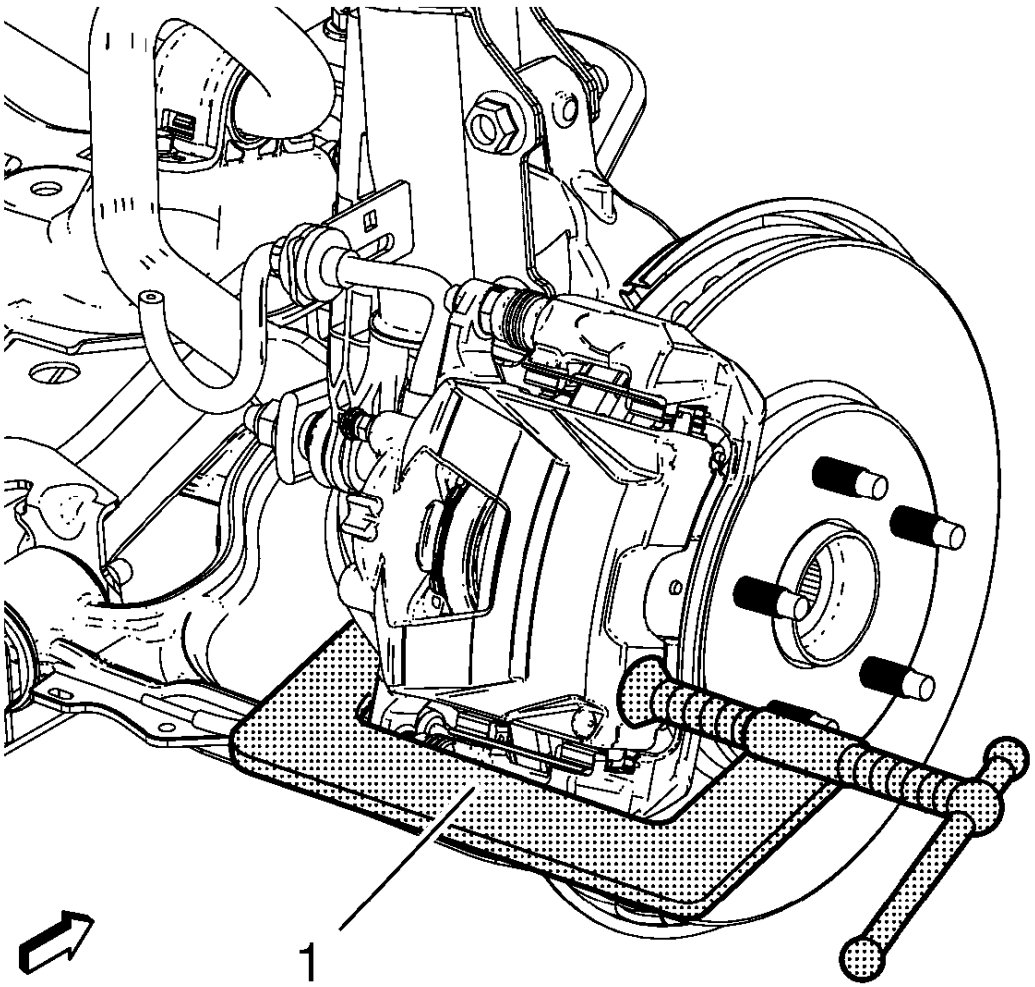

Fig. 69: Compressing Caliper Piston Into Caliper Bore
Courtesy of GENERAL MOTORS COMPANY

3. Install a C-clamp (1) over the body of the brake caliper, with the C-clamp ends against the rear of the caliper body and the outboard disc brake pad.
4. Tighten the C-clamp (1) until the caliper piston is compressed into the caliper piston bore enough, to allow the caliper to slide past the brake rotor.
5. Remove the C-clamp (1).

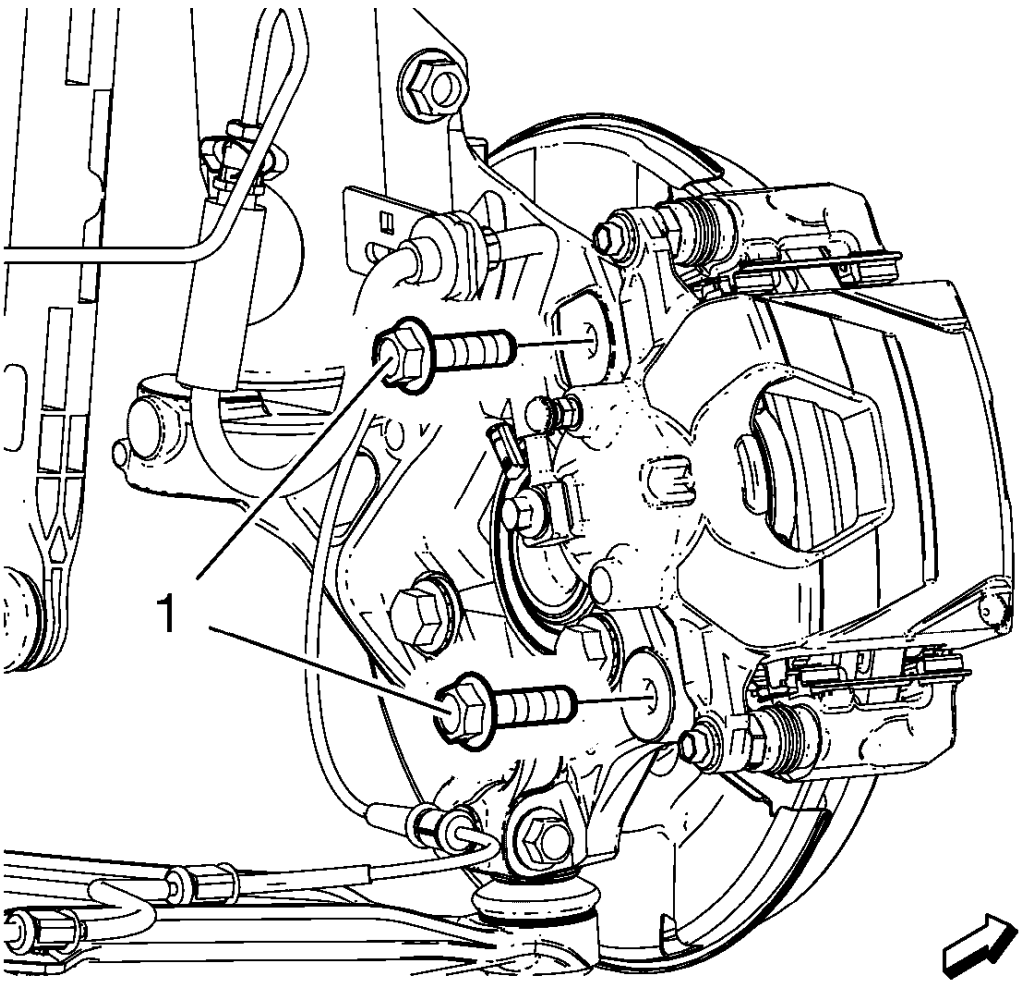

Fig. 70: Brake Caliper Bracket Bolts
Courtesy of GENERAL MOTORS COMPANY

6. Remove and DISCARD the brake caliper bracket bolts (1).

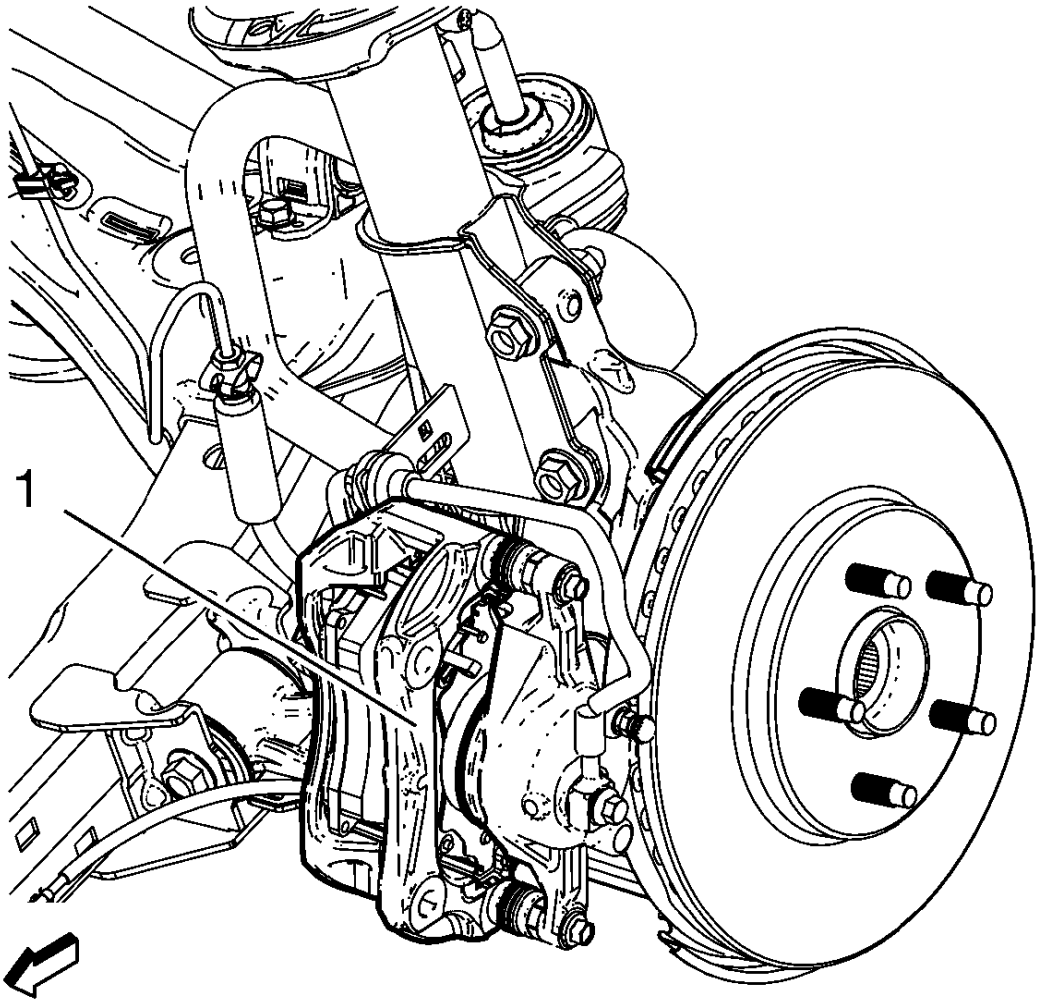

Fig. 71: Brake Caliper And Caliper Mounting Bracket Assembly
Courtesy of GENERAL MOTORS COMPANY

CAUTION: Support the brake caliper with heavy mechanic wire, or equivalent, whenever it is separated from its mount and the hydraulic flexible brake hose is still connected. Failure to support the caliper in this manner will cause the flexible brake hose to bear the weight of the caliper, which may cause damage to the brake hose and in turn may cause a brake fluid leak.

NOTE: Do NOT disconnect the hydraulic brake flexible hose from the caliper.

7. Remove the brake caliper and the caliper mounting bracket as an assembly (1) from the steering knuckle and support the assembly with heavy mechanics wire, or equivalent. Ensure that there is no tension on the hydraulic brake flexible hose.

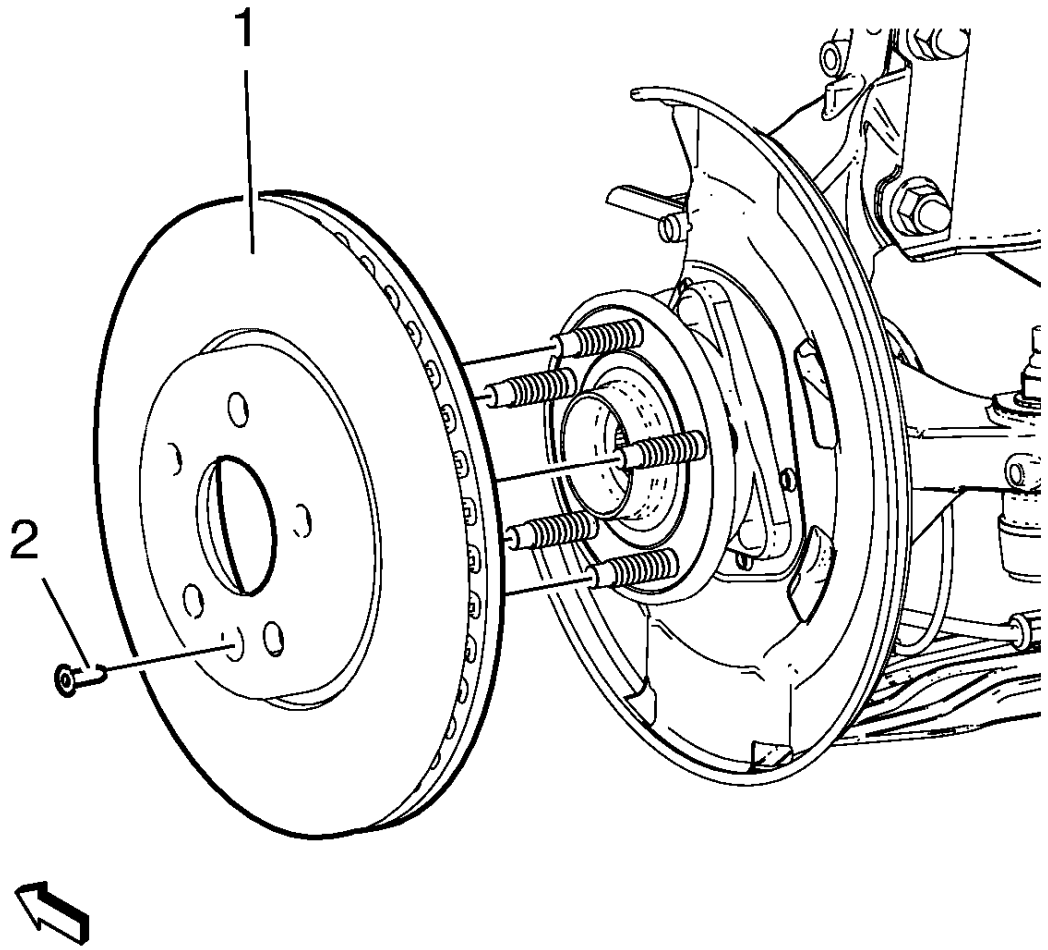

Fig. 72: Brake Rotor And Brake Rotor Retaining Screw
Courtesy of GENERAL MOTORS COMPANY

8. Remove the brake rotor bolt (2).
9. Remove the brake rotor (1) from the wheel hub.

Installation Procedure

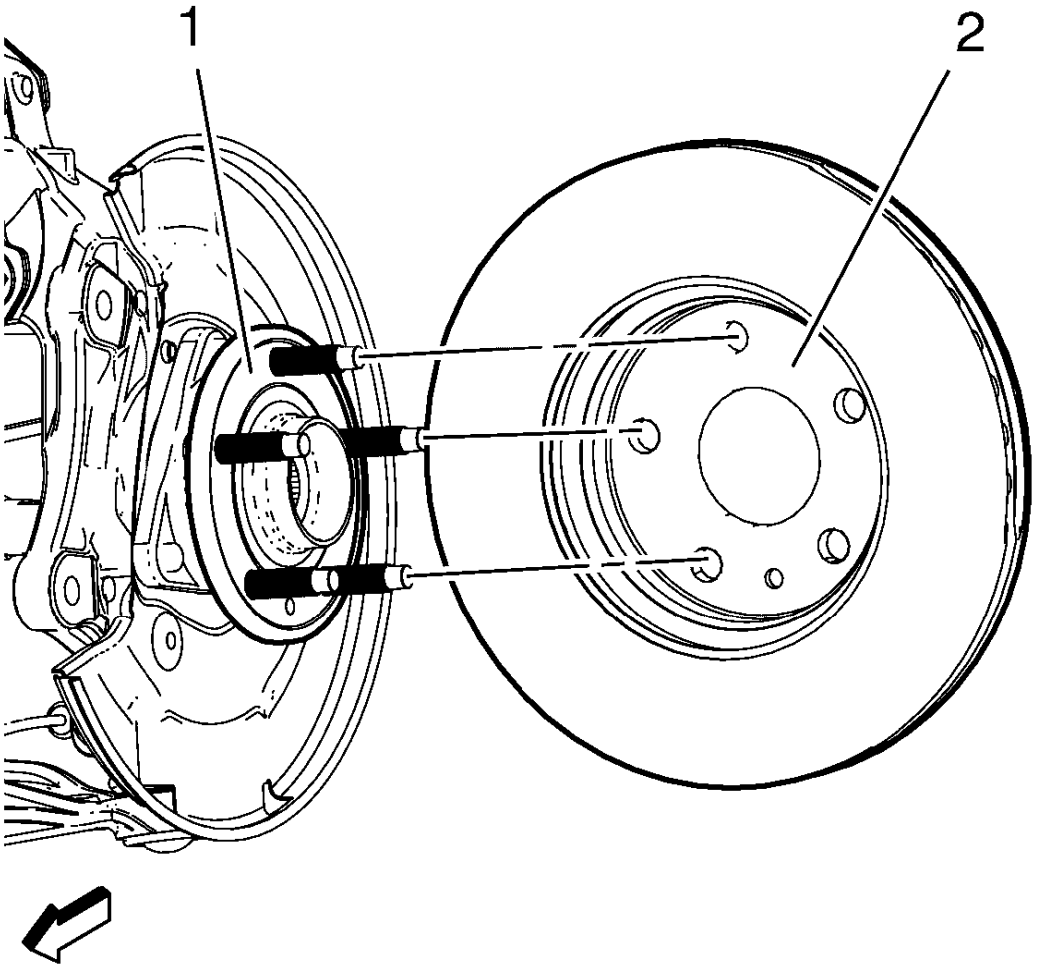

Fig. 73: Inspecting Hub/Axle Flange And Brake Rotor Mounting Surfaces
Courtesy of GENERAL MOTORS COMPANY

NOTE: **Whenever the brake rotor has been separated from the hub/axle flange, any rust or contaminants should be cleaned from the hub/axle flange and the brake rotor mating surfaces. Failure to do this may result in excessive assembled lateral runout (LRO) of the brake rotor, which could lead to brake pulsation.**

1. Using the **CH-42450-A** resurfacer, thoroughly clean any rust or corrosion from the mating surface of the hub/axle flange (1).
2. Using the **CH-41013** resurfacer, thoroughly clean any rust or corrosion from the mating surface and the mounting surface of the brake rotor (2).
3. Inspect the mating surfaces of the hub/axle flange and the rotor to ensure that there are no foreign particles or debris remaining.

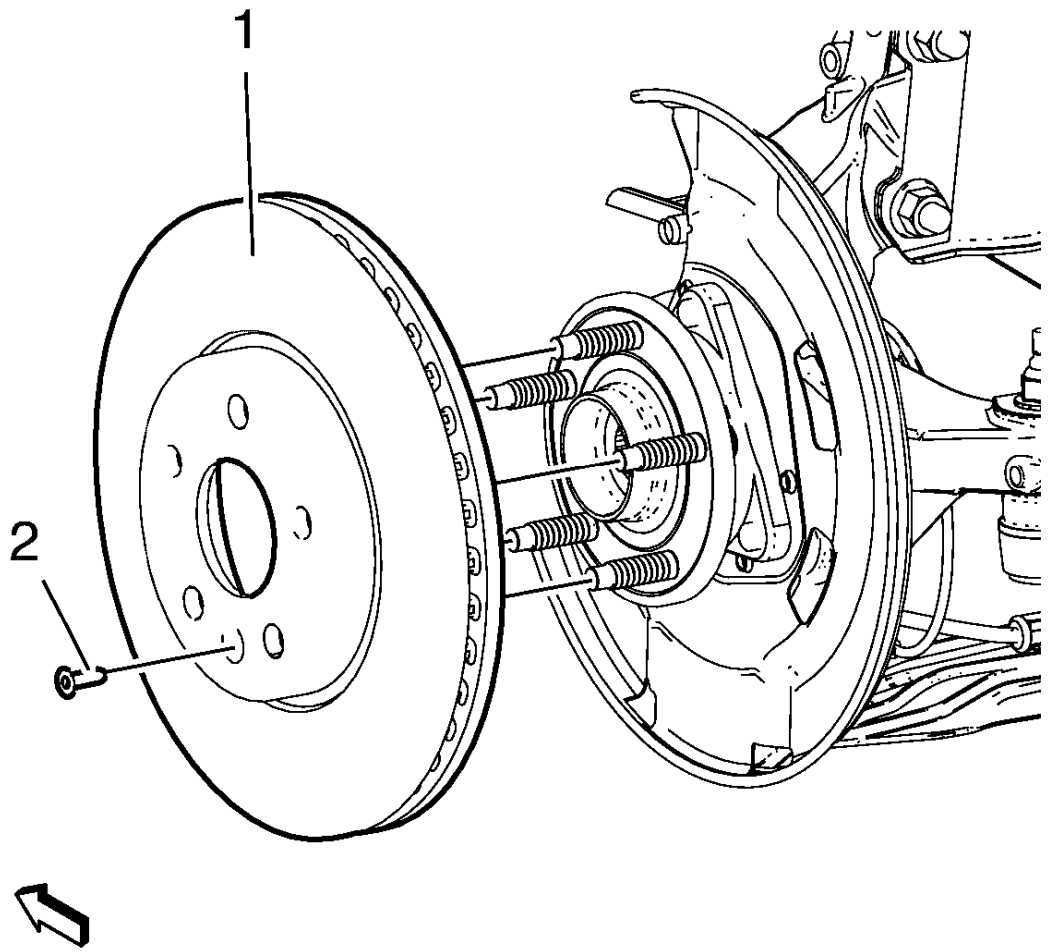

Fig. 74: Brake Rotor And Brake Rotor Retaining Screw
Courtesy of GENERAL MOTORS COMPANY

CAUTION: Refer to Fastener Caution .

4. Install the brake rotor (1) to the hub/axle flange and tighten bolt (2) to 9 N.m (80 lb in).
5. If the brake rotor was removed and installed as a part of a brake system repair, measure the assembled lateral runout of the brake rotor to ensure optimum performance of the disc brake. Refer to **Brake Rotor Assembled Lateral Runout Measurement**.
6. If the brake rotor assembled lateral runout measurement exceeds the specification, bring the lateral runout to within specifications. Refer to **Brake Rotor Assembled Lateral Runout Correction**.
7. Remove the support and install the brake caliper and the brake caliper bracket as an assembly to the steering knuckle.

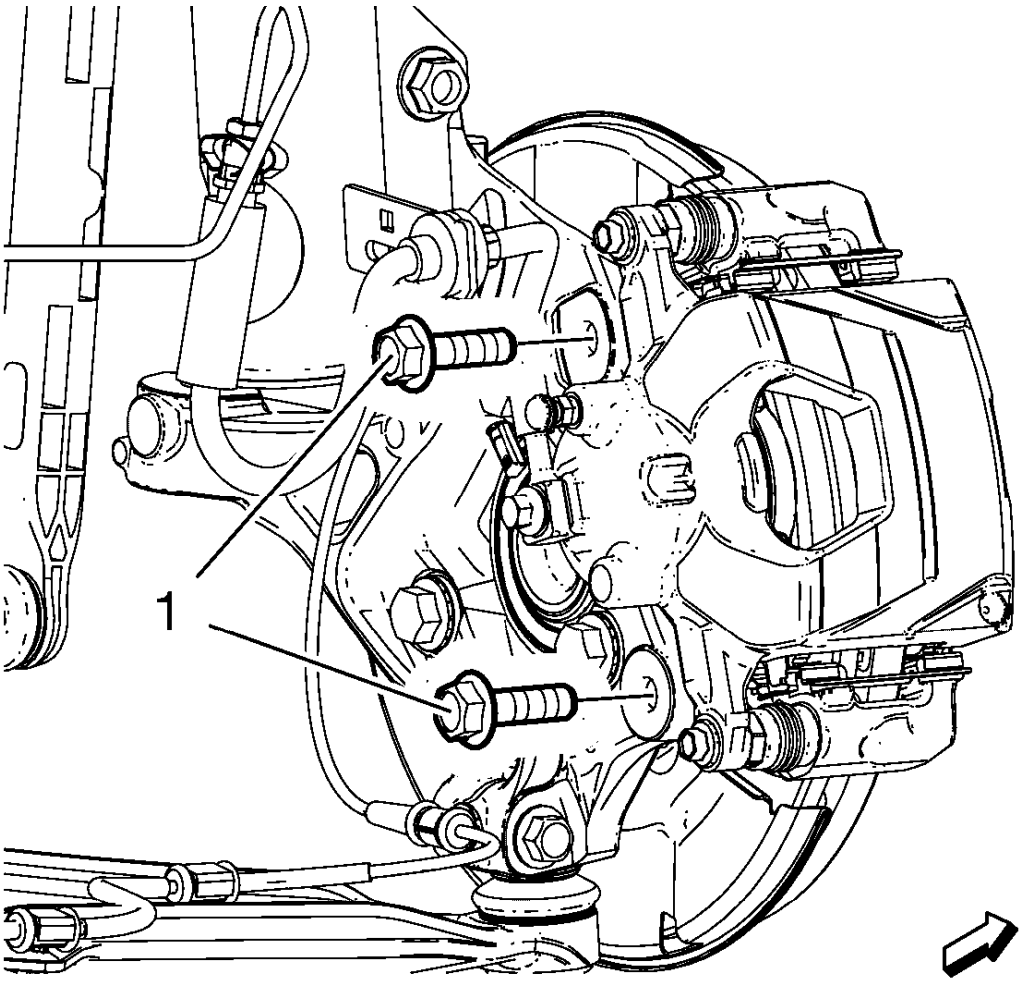

Fig. 75: Brake Caliper Bracket Bolts
Courtesy of GENERAL MOTORS COMPANY

WARNING: Refer to Torque-to-Yield Fastener Warning .

8. Install NEW brake caliper bracket bolts (1) and tighten first pass to 150 N.m (111 lb ft).
9. Tighten the NEW brake caliper bracket bolts in a final pass to an additional 45 to 60 degrees using the **EN-45059** meter.
10. Install the tire and wheel assembly. Refer to **Tire and Wheel Removal and Installation** .

FRONT BRAKE ROTOR REPLACEMENT (J67)

Special Tools

- **CH-41013** Rotor Resurfacing Kit

- **CH-42450-A** Wheel Hub Resurfacing Kit
- **EN-45059** Angle Meter

For equivalent regional tools, refer to **Special Tools**.

Removal Procedure

WARNING: Refer to Brake Dust Warning .

1. Raise and support the vehicle. Refer to **Lifting and Jacking the Vehicle** .
2. Remove the tire and wheel assembly. Refer to **Tire and Wheel Removal and Installation** .

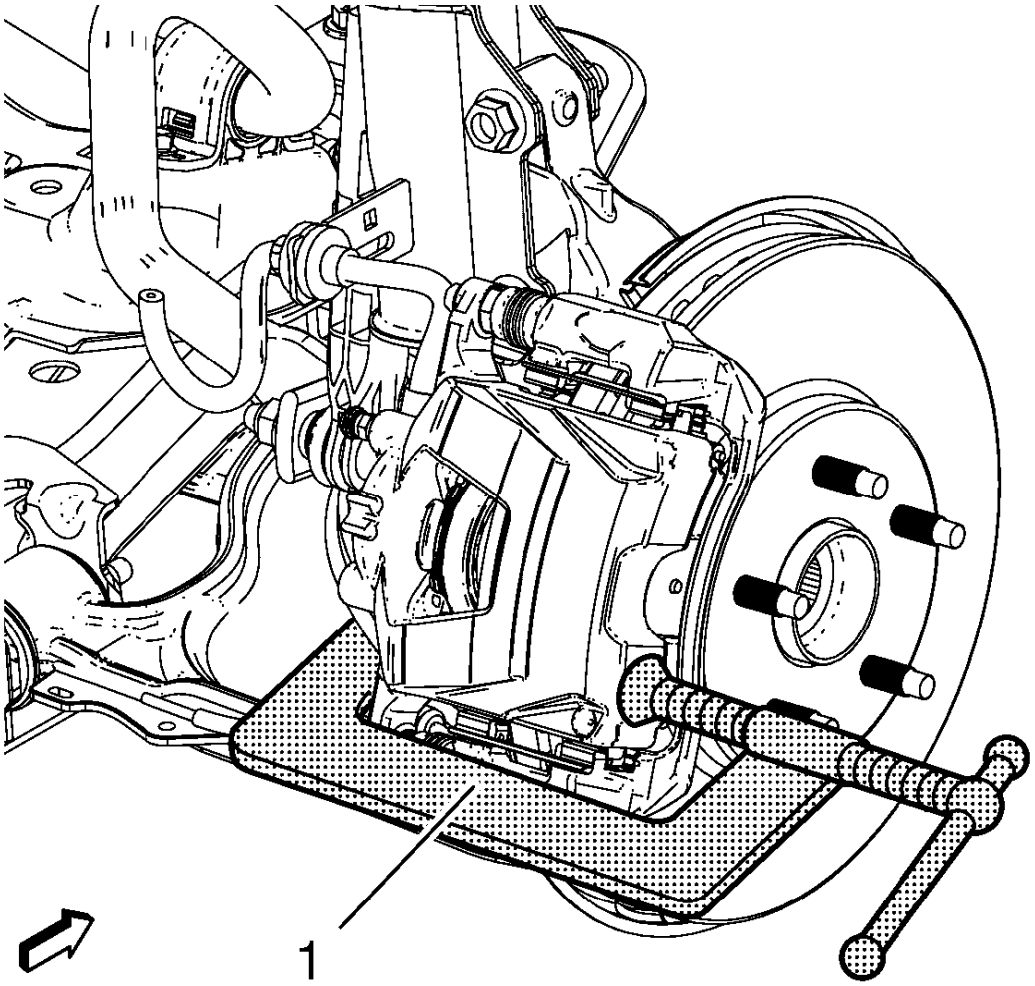

Fig. 76: Compressing Caliper Piston Into Caliper Bore
Courtesy of GENERAL MOTORS COMPANY

3. Install a C-clamp (1) over the body of the brake caliper, with the C-clamp ends against the rear of the caliper body and the outboard disc brake pad.
4. Tighten the C-clamp (1) until the caliper piston is compressed into the caliper bore enough to allow the caliper to slide past the brake rotor.
5. Remove the C-clamp (1).

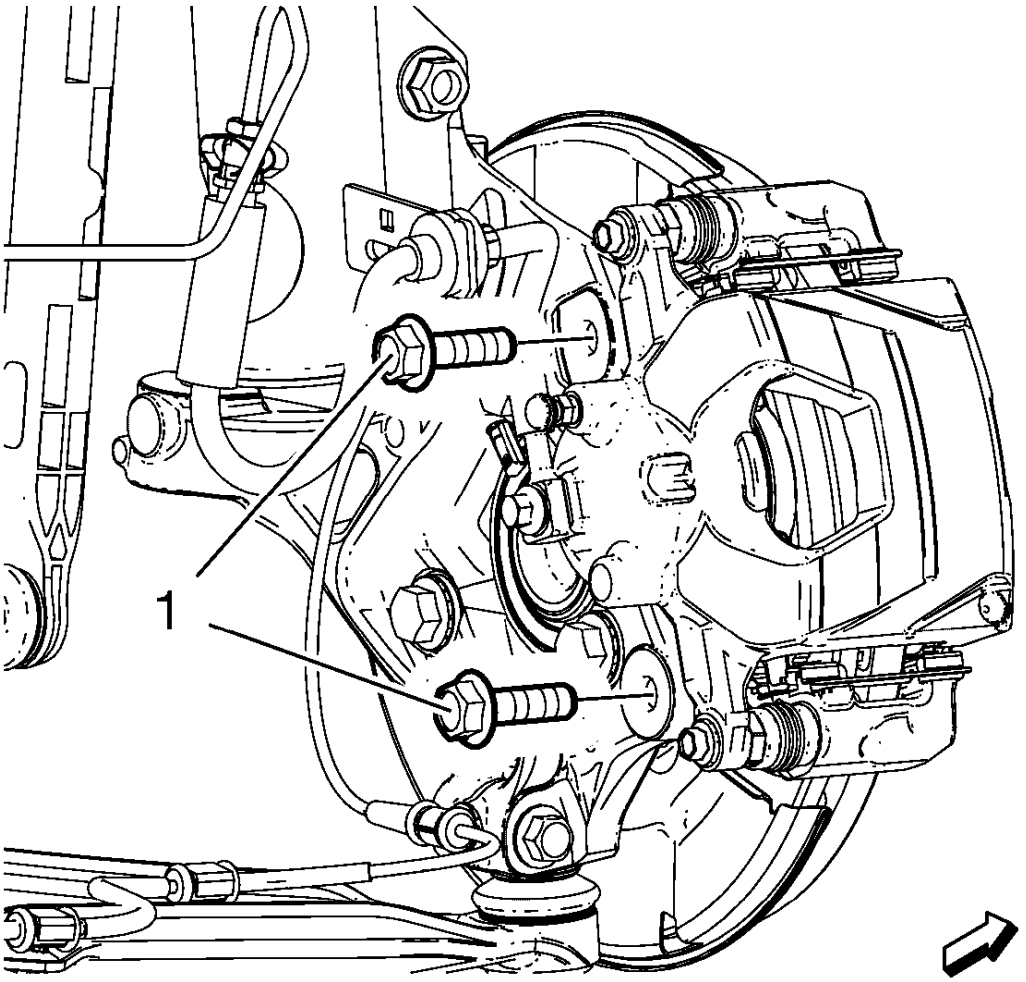

Fig. 77: Brake Caliper Bracket Bolts
Courtesy of GENERAL MOTORS COMPANY

6. Remove and DISCARD the brake caliper bracket bolts (1).

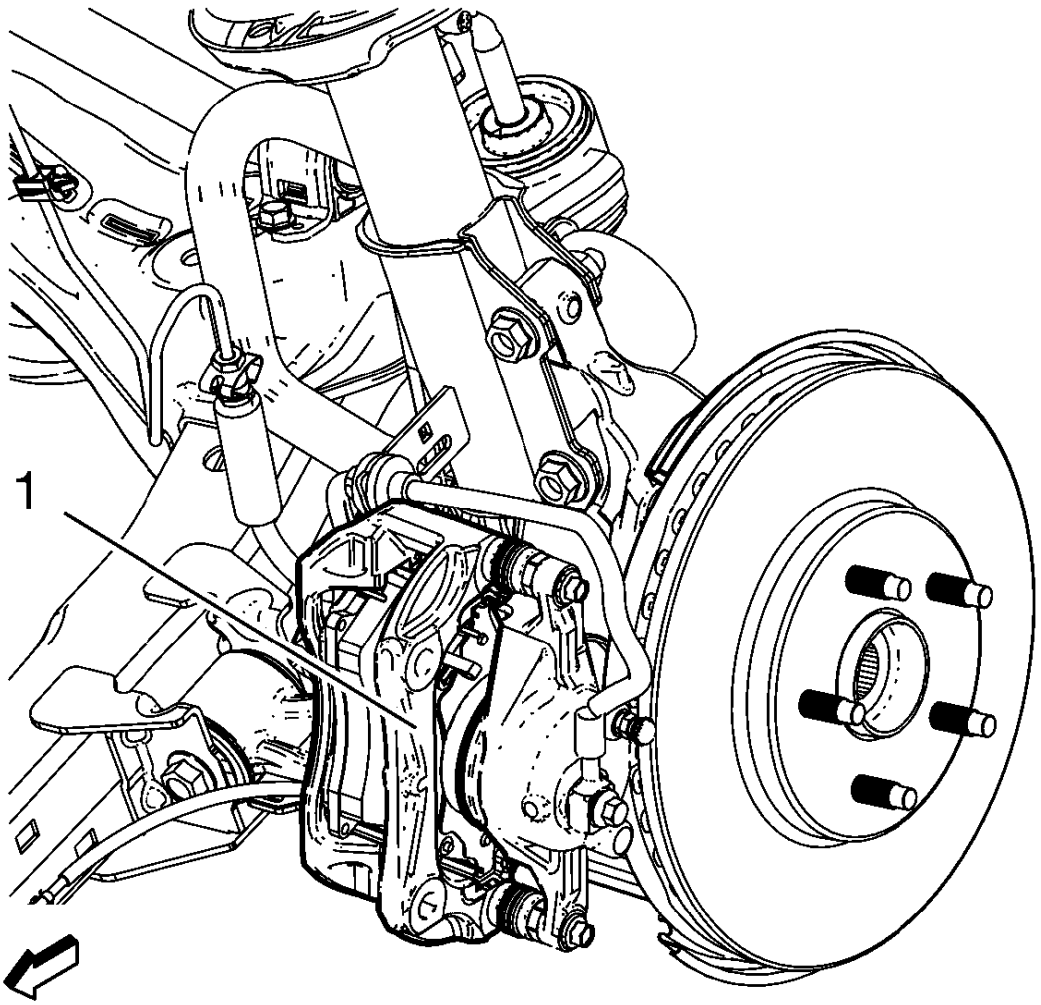

Fig. 78: Brake Caliper And Caliper Mounting Bracket Assembly
Courtesy of GENERAL MOTORS COMPANY

CAUTION: Support the brake caliper with heavy mechanic wire, or equivalent, whenever it is separated from its mount and the hydraulic flexible brake hose is still connected. Failure to support the caliper in this manner will cause the flexible brake hose to bear the weight of the caliper, which may cause damage to the brake hose and in turn may cause a brake fluid leak.

NOTE: Do NOT disconnect the hydraulic brake flexible hose from the caliper.

7. Remove the brake caliper and the caliper mounting bracket as an assembly (1) from the steering knuckle and support the assembly with heavy mechanic's wire, or equivalent. Ensure that there is no tension on the hydraulic brake flexible hose.

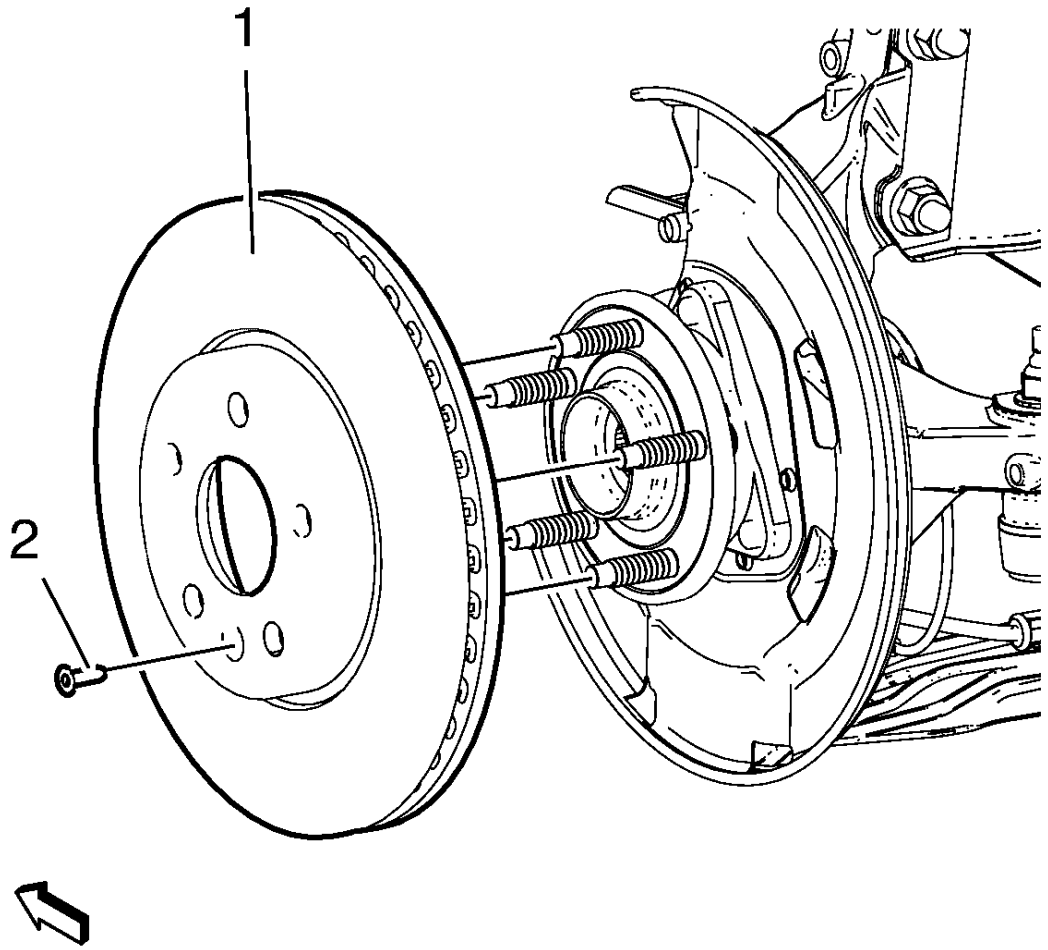

Fig. 79: Brake Rotor And Brake Rotor Retaining Screw
Courtesy of GENERAL MOTORS COMPANY

8. Remove the brake rotor screw (2).
9. Remove the brake rotor (1) from the wheel hub.

Installation Procedure

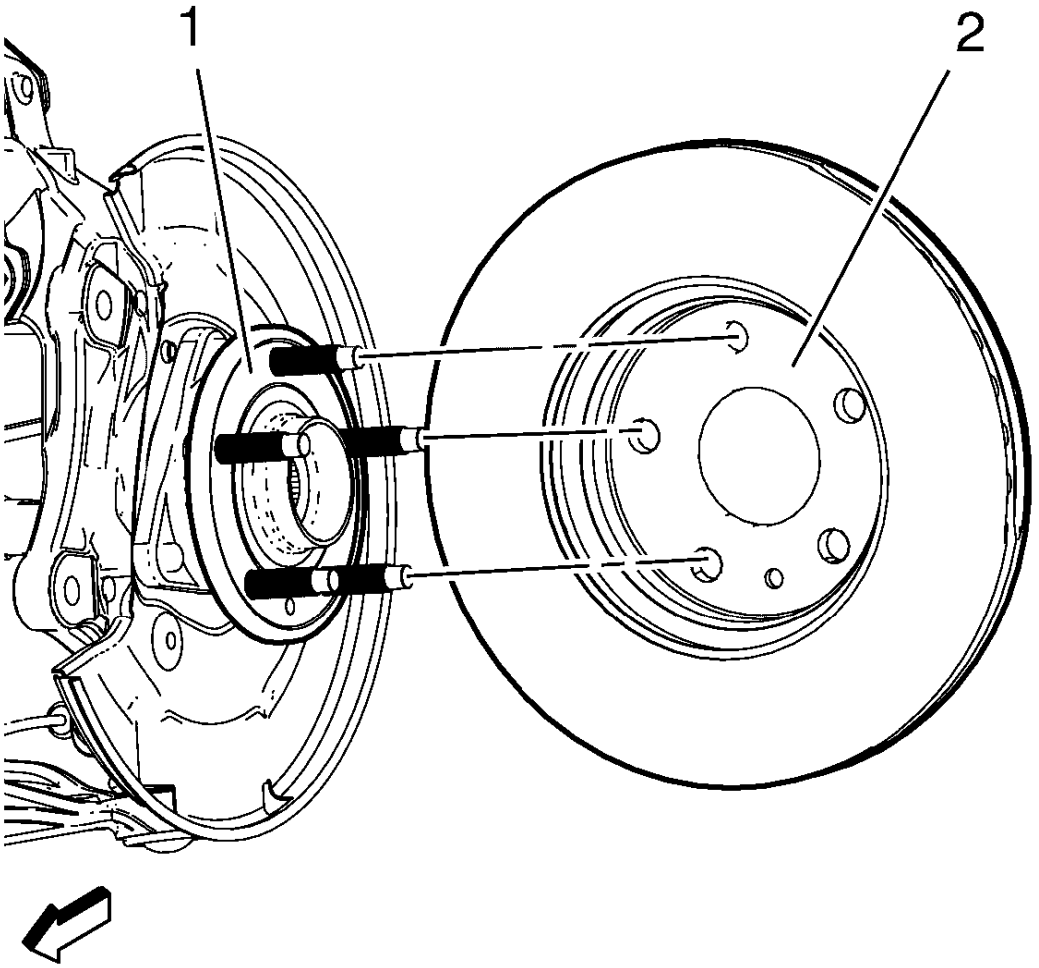

Fig. 80: Inspecting Hub/Axle Flange And Brake Rotor Mounting Surfaces
Courtesy of GENERAL MOTORS COMPANY

NOTE: **Whenever the brake rotor has been separated from the hub/axle flange, any rust or contaminants should be cleaned from the hub/axle flange and the brake rotor mating surfaces. Failure to do this may result in excessive assembled lateral runout (LRO) of the brake rotor, which could lead to brake pulsation.**

1. Using the **CH-42450-A** resurfacer, thoroughly clean any rust or corrosion from the mating surface of the hub/axle flange (1).
2. Using the **CH-41013** resurfacer, thoroughly clean any rust or corrosion from the mating surface and mounting surface of the brake rotor (2).
3. Inspect the mating surfaces of the hub/axle flange and the rotor to ensure that there are no foreign particles or debris remaining.
4. Install the brake rotor to the hub/axle flange. Use the mark made prior to removal to ensure proper

orientation to the flange.

CAUTION: Refer to Fastener Caution .

5. Install the brake rotor screw and tighten to 9 N.m (80 lb in).
6. If the brake rotor was removed and installed as part of a brake system repair, measure the assembled LRO of the brake rotor to ensure optimum performance of the disc brakes. Refer to **Brake Rotor Assembled Lateral Runout Measurement**.
7. Remove the support, and install the brake caliper and the brake caliper bracket as an assembly to the steering knuckle.

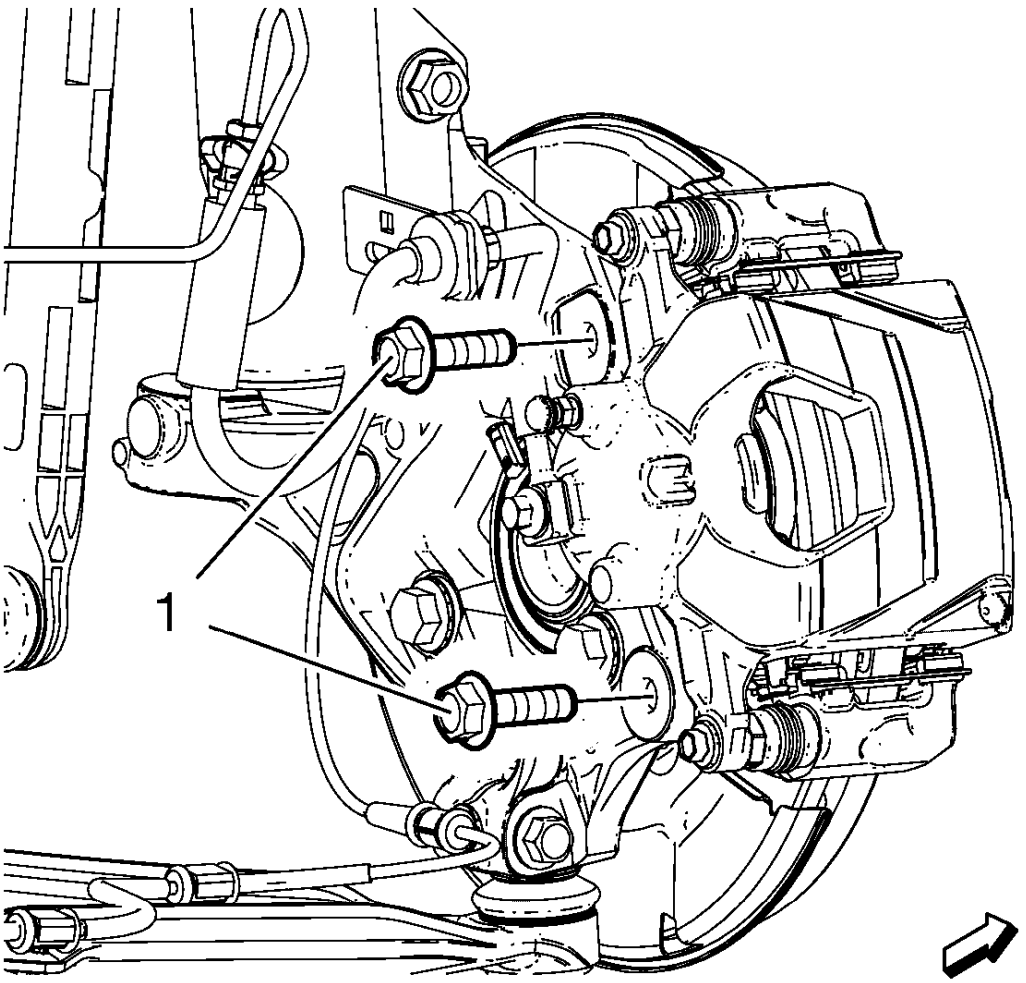

Fig. 81: Brake Caliper Bracket Bolts
Courtesy of GENERAL MOTORS COMPANY

8. Install NEW brake caliper bracket bolts (1) and tighten a first pass to 100 N.m (74 lb ft).

WARNING: Refer to Torque-to-Yield Fastener Warning .

9. Tighten the NEW brake caliper bracket bolts a final pass to an additional 60 - 75 degrees, using the **EN-45059** meter.
10. Install the tire and wheel assembly. Refer to **Tire and Wheel Removal and Installation** .
11. Lower the vehicle.

REAR BRAKE ROTOR REPLACEMENT

Special Tools

- **CH-41013** Rotor Resurfacing Kit
- **CH-42450-A** Wheel Hub Resurfacing Kit

For equivalent regional tools, refer to **Special Tools**.

Removal Procedure

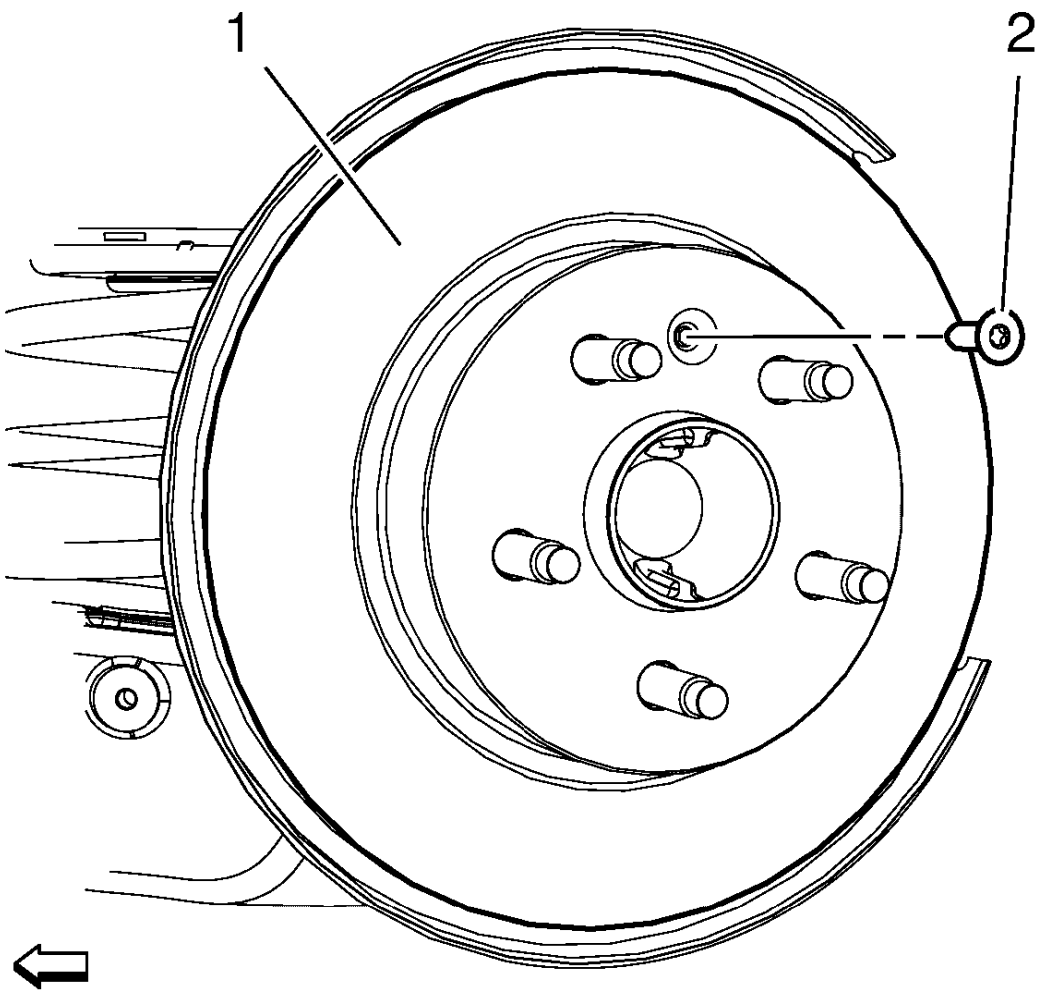

Fig. 82: Brake Rotor And Brake Rotor Retaining Bolt
Courtesy of GENERAL MOTORS COMPANY

WARNING: Refer to Brake Dust Warning .

CAUTION: Support the brake caliper with heavy mechanic wire, or equivalent, whenever it is separated from its mount and the hydraulic flexible brake hose is still connected. Failure to support the caliper in this manner will cause the flexible brake hose to bear the weight of the caliper, which may cause damage to the brake hose and in turn may cause a brake fluid leak.

1. Remove the brake caliper and the caliper mounting bracket as an assembly from the steering knuckle. Refer to **Rear Brake Caliper Bracket Replacement**.
2. Matchmark the position of the brake rotor to the wheel studs.

3. Remove the rear brake rotor bolt (2).
4. Remove rear brake rotor (1) from the wheel hub.

Installation Procedure

1. Using the **CH-42450-A** kit, thoroughly clean any rust or corrosion from the mating surface of the hub/axle flange.
2. Using the **CH-41013** kit, thoroughly clean any rust or corrosion from the mating surface and mounting surface of the brake rotor.
3. Inspect the mating surfaces of the hub/axle flange and the rotor to ensure that there are no foreign particles or debris remaining.

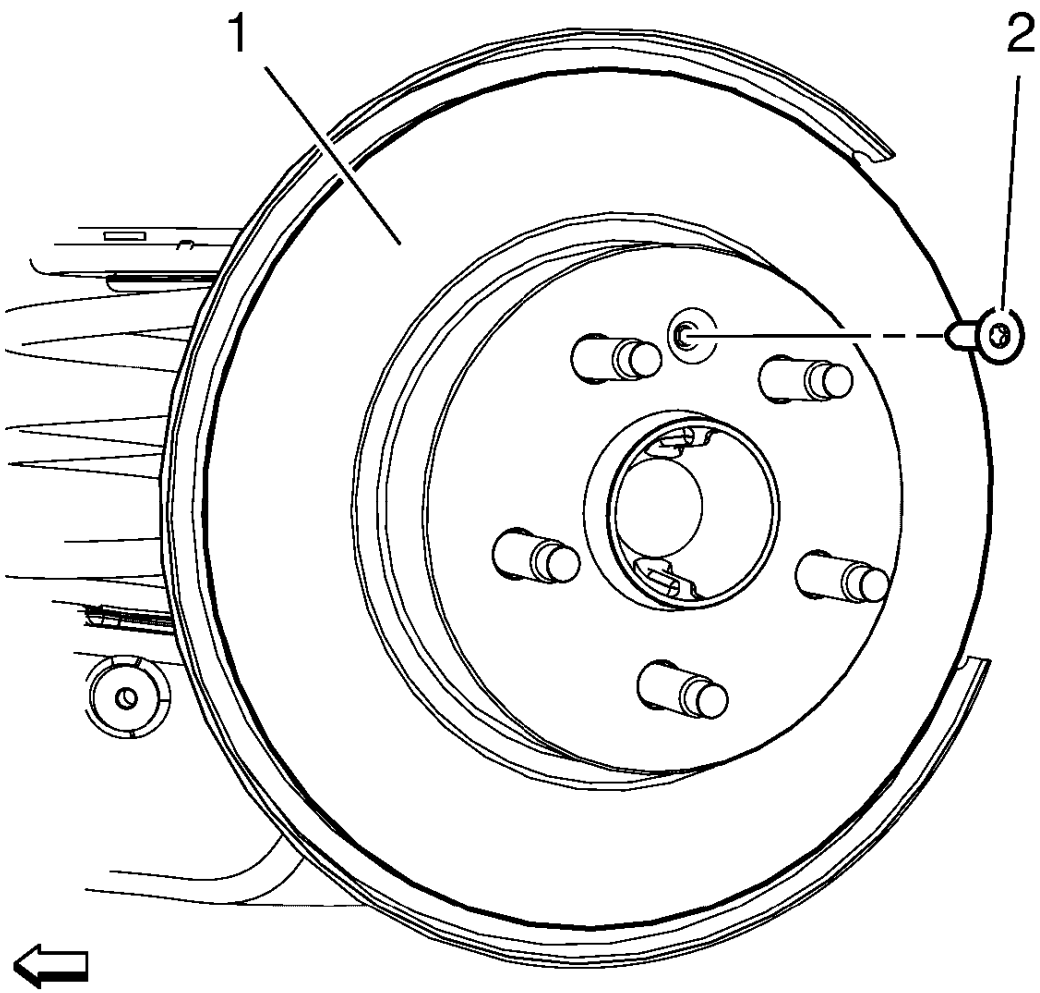

Fig. 83: Brake Rotor And Brake Rotor Retaining Bolt
Courtesy of GENERAL MOTORS COMPANY

4. Install the brake rotor (1) to the hub/axle flange. Use the matchmark made prior to removal for proper

orientation to the flange.

CAUTION: Refer to Fastener Caution .

5. Install rear brake rotor bolt (2) and tighten to 9 N.m (80 lb in).
6. Install the brake caliper and the caliper mounting bracket assembly to the steering knuckle. Refer to **Rear Brake Caliper Bracket Replacement**.
7. If the brake rotor was removed and installed as part of a brake system repair, measure the assembled lateral run out (LRO) of the brake rotor to ensure optimum performance of the disc brakes. Refer to **Brake Rotor Assembled Lateral Runout Measurement**.
8. If the brake rotor assembled LRO measurement exceeds the specification, bring the LRO to within specifications. Refer to **Brake Rotor Assembled Lateral Runout Correction**.

FRONT BRAKE SHIELD REPLACEMENT

Special Tools

EN-45059 Angle Meter

For equivalent regional tools, refer to **Special Tools**.

Removal Procedure

1. Raise and suitably support the vehicle. Refer to **Lifting and Jacking the Vehicle** .
2. Remove the brake rotor. Refer to **Front Brake Rotor Replacement (J60)**, **Front Brake Rotor Replacement (J67)**.

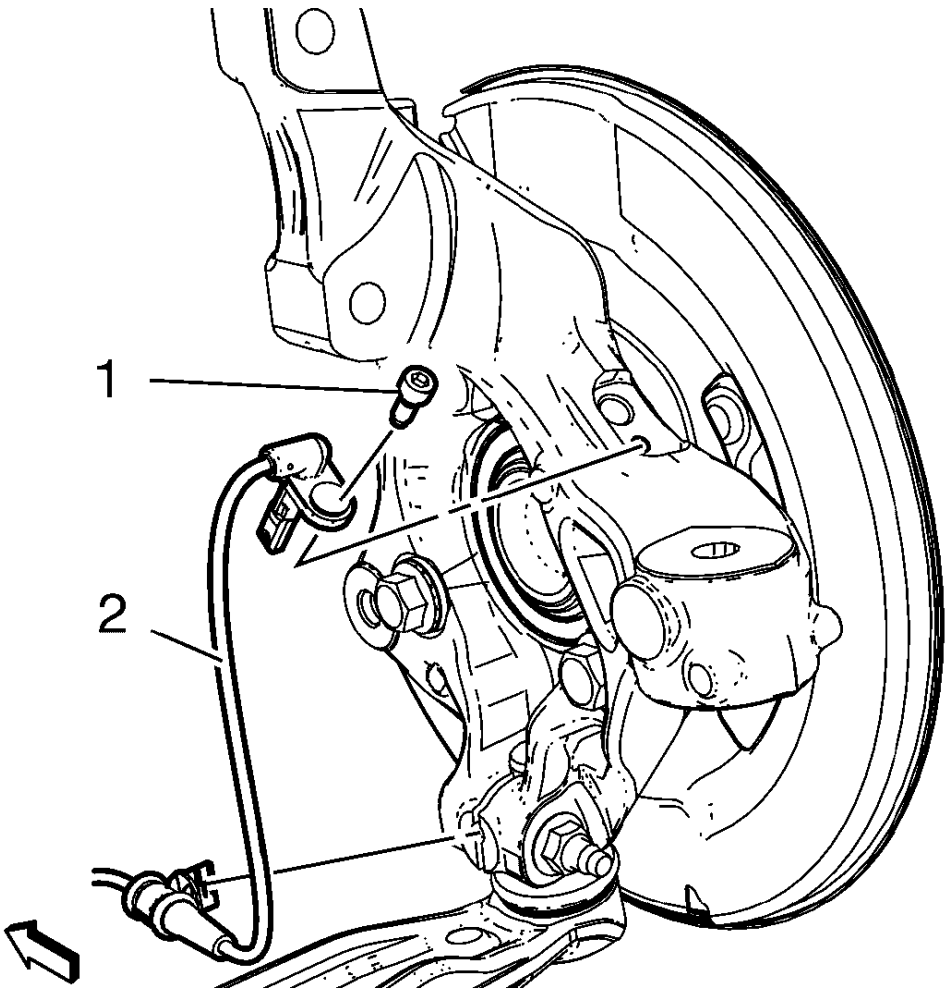

Fig. 84: Wheel Speed Sensor And Wheel Speed Sensor Mounting Bolt
Courtesy of GENERAL MOTORS COMPANY

CAUTION: Support the brake caliper with heavy mechanic wire, or equivalent, whenever it is separated from its mount and the hydraulic flexible brake hose is still connected. Failure to support the caliper in this manner will cause the flexible brake hose to bear the weight of the caliper, which may cause damage to the brake hose and in turn may cause a brake fluid leak.

3. Remove the wheel speed sensor bolt (1).
4. Remove the wheel speed sensor (2).
5. Remove the wheel speed sensor wiring harness from the steering knuckle.
6. Remove and DISCARD the wheel drive shaft from the wheel bearing/hub. Refer to **Front Wheel Drive Shaft Replacement - Right Side** , or **Front Wheel Drive Shaft Replacement - Left Side** .

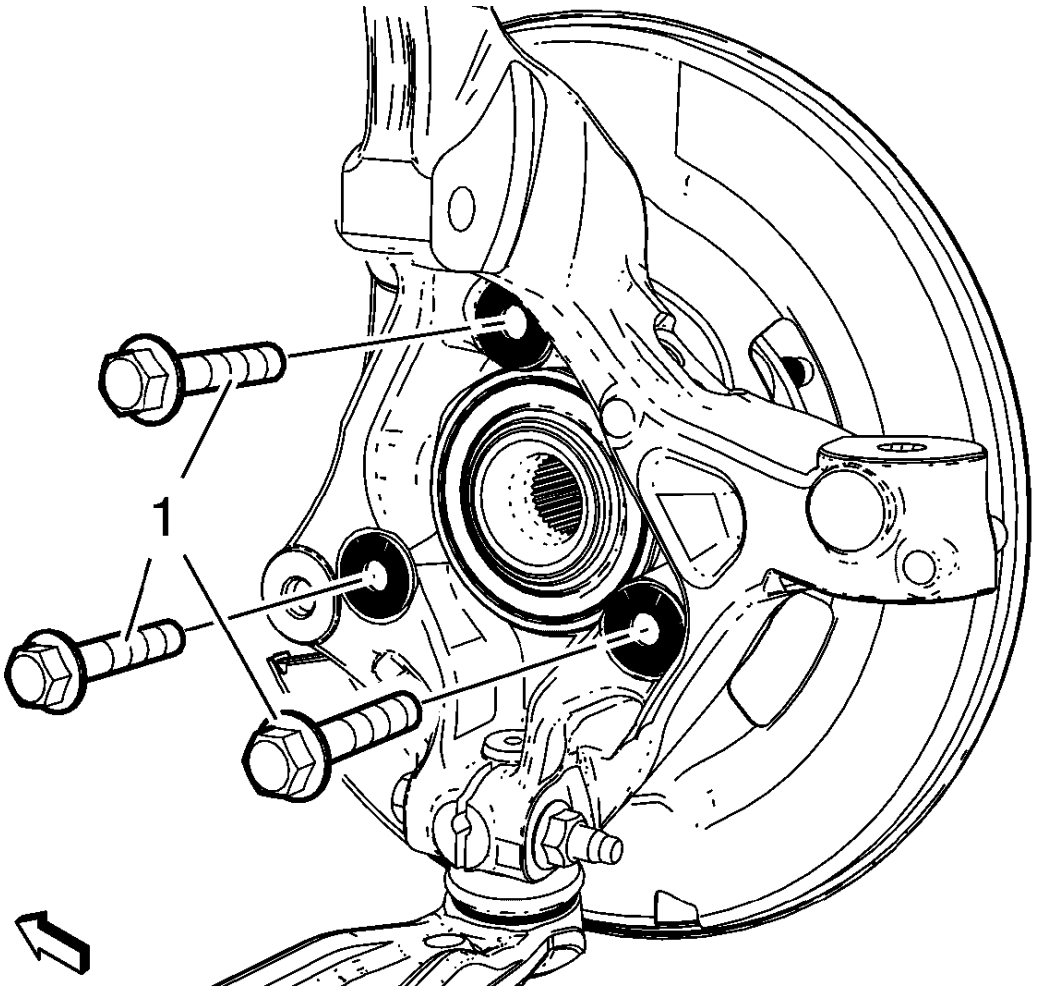

Fig. 85: Wheel Bearing/Hub Mounting Bolts
Courtesy of GENERAL MOTORS COMPANY

7. Remove and DISCARD the wheel bearing/hub mounting bolts (1).

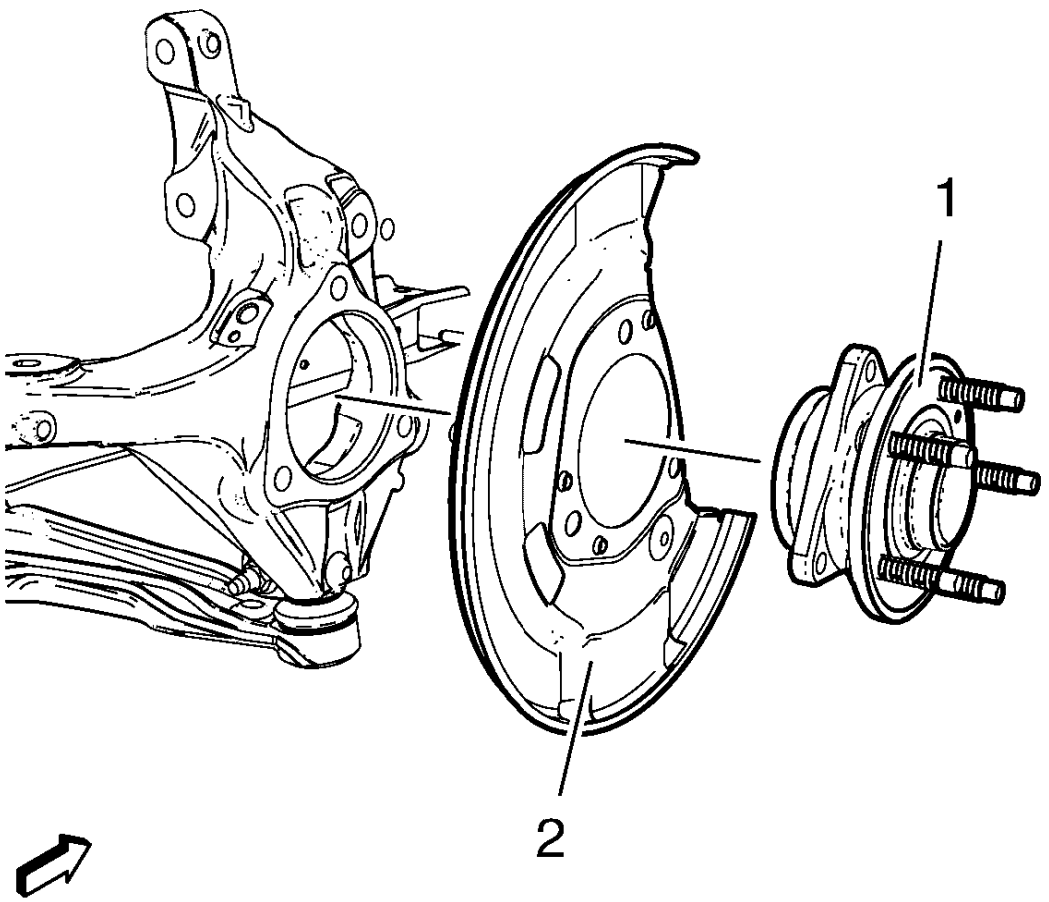

Fig. 86: Wheel Bearing/Hub, Front Brake Shield And Steering Knuckle
Courtesy of GENERAL MOTORS COMPANY

8. Remove the wheel bearing/hub (1) and front brake shield (2) from the steering knuckle.

Installation Procedure

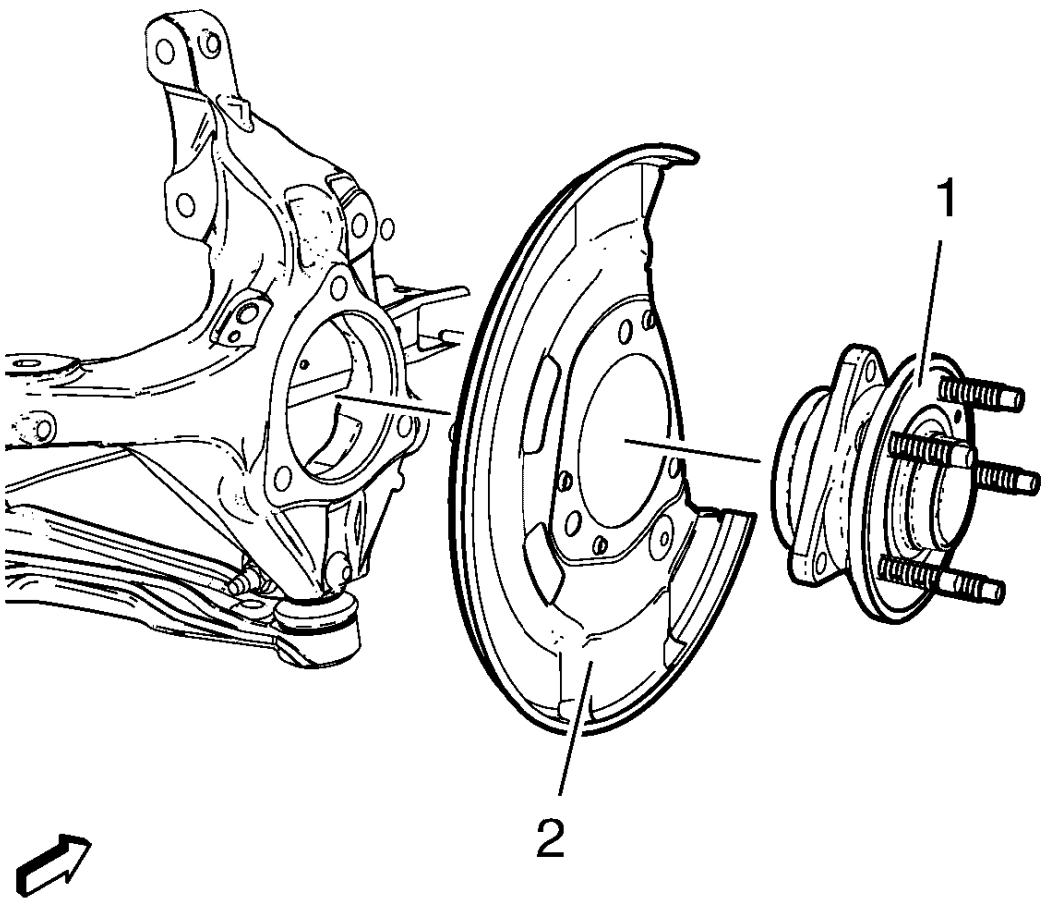

Fig. 87: Wheel Bearing/Hub, Front Brake Shield And Steering Knuckle
Courtesy of GENERAL MOTORS COMPANY

1. Position the front brake shield (2) and wheel bearing/hub assembly (1) in the steering knuckle.

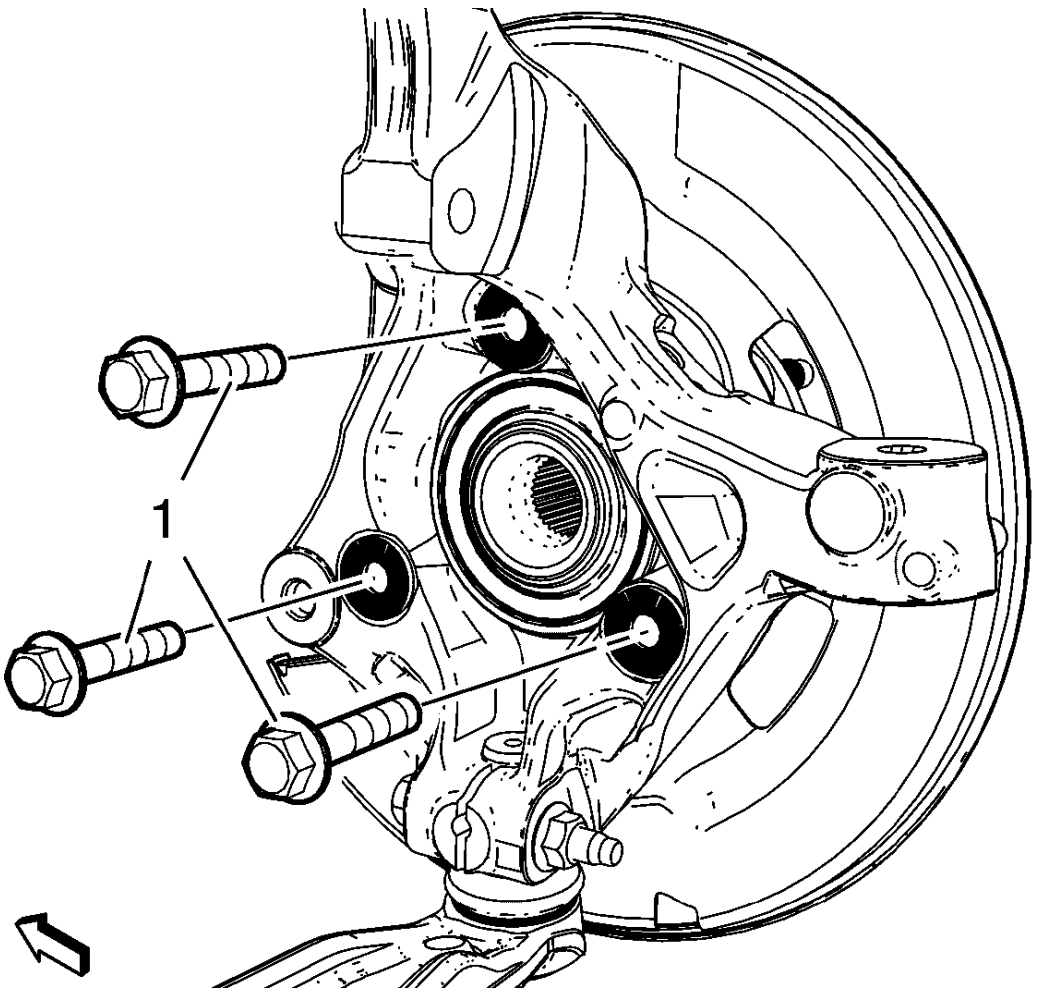

Fig. 88: Wheel Bearing/Hub Mounting Bolts
Courtesy of GENERAL MOTORS COMPANY

CAUTION: This is a self-retaining fastener joint that does not require thread locking compounds. Do not attempt to clean the threads with a standard tap. If a standard tap is used, damage to the joint threads will occur.

CAUTION: Refer to Fastener Caution .

2. Tighten the bearing/hub bolts (1) a first pass to 90 N.m (66 lb ft).

WARNING: Refer to Torque-to-Yield Fastener Warning .

3. Tighten the NEW bearing/hub bolts (1) a final pass to an additional 60 - 75 degrees, using the **EN-45059** meter.

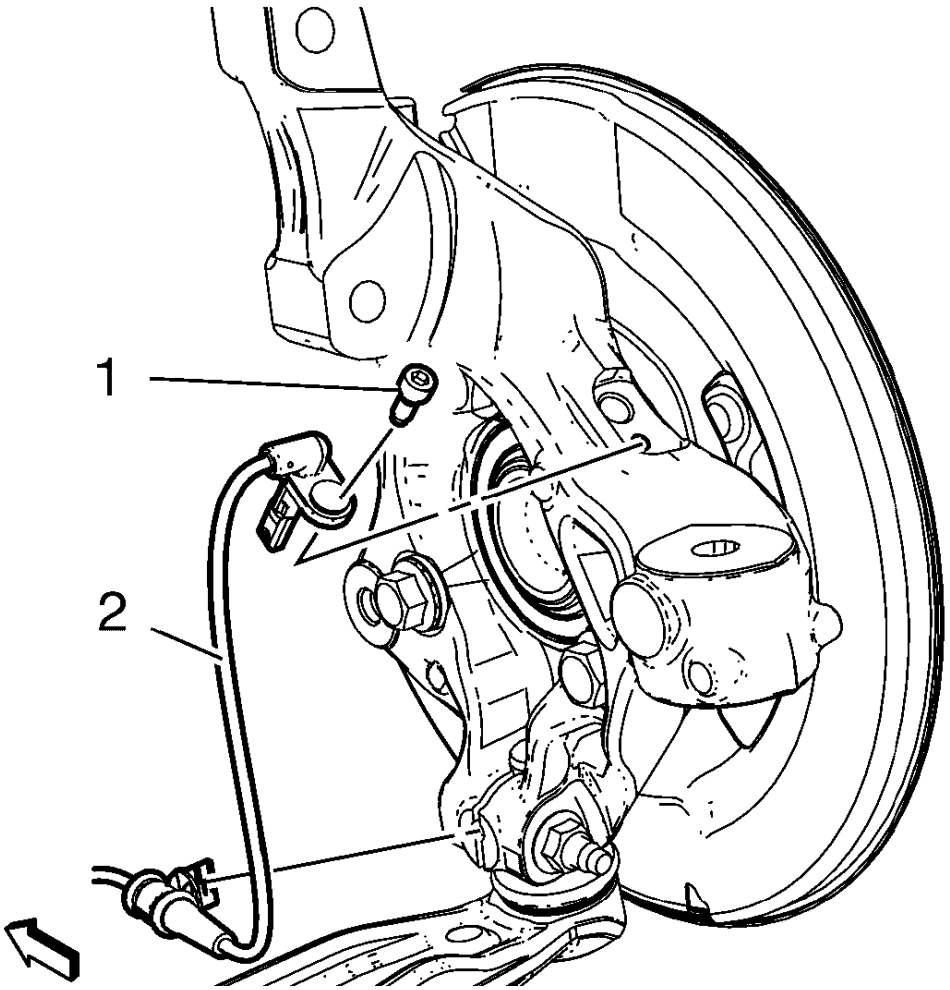

Fig. 89: Wheel Speed Sensor And Wheel Speed Sensor Mounting Bolt
Courtesy of GENERAL MOTORS COMPANY

4. Install the wheel speed sensor wiring harness to the steering knuckle.
5. Install the wheel speed sensor (2).
6. Install the wheel speed sensor bolt (1) and tighten to 6 N.m (53 lb in).
7. Install the brake rotor. Refer to **Front Brake Rotor Replacement (J60)**, **Front Brake Rotor Replacement (J67)**.
8. Install the NEW wheel drive shaft retaining nut and washer. Refer to **Front Wheel Drive Shaft Replacement - Right Side** , or **Front Wheel Drive Shaft Replacement - Left Side** .
9. Remove the support and lower the vehicle.

REAR BRAKE SHIELD REPLACEMENT

Special Tools

EN-45059 Angle Meter

Removal Procedure

1. Raise and suitably support the vehicle. Refer to **Lifting and Jacking the Vehicle** .
2. Remove the tire and wheel assembly. Refer to **Tire and Wheel Removal and Installation** .
3. Remove the brake rotor. Refer to **Rear Brake Rotor Replacement**.

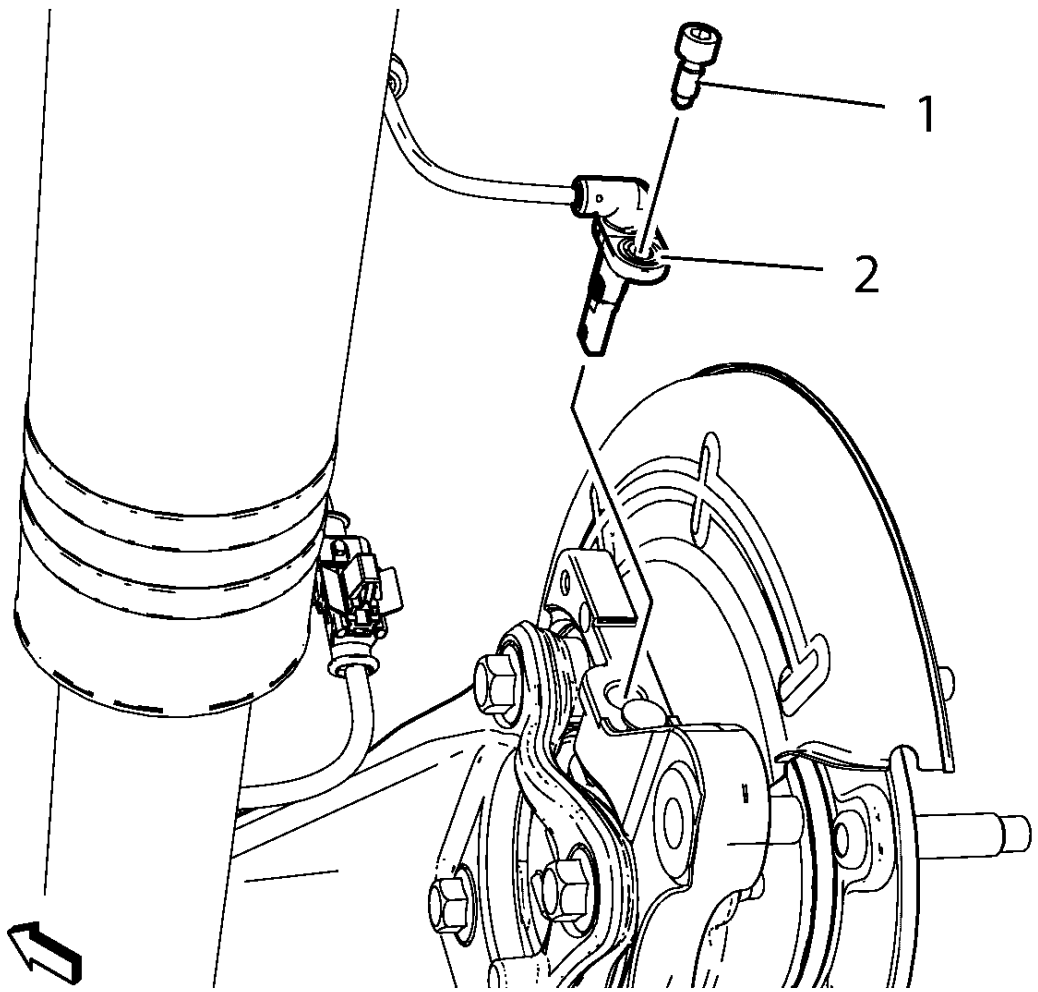

Fig. 90: Wheel Speed Sensor And Wheel Speed Sensor Mounting Bolt
Courtesy of GENERAL MOTORS COMPANY

CAUTION: Support the brake caliper with heavy mechanic wire, or equivalent, whenever it is separated from its mount and the hydraulic flexible brake hose is still connected. Failure to support the caliper in this manner will cause the flexible brake hose to bear the weight of the

caliper, which may cause damage to the brake hose and in turn may cause a brake fluid leak.

4. Remove the wheel speed sensor bolt (1).
5. Remove the wheel speed sensor (2).

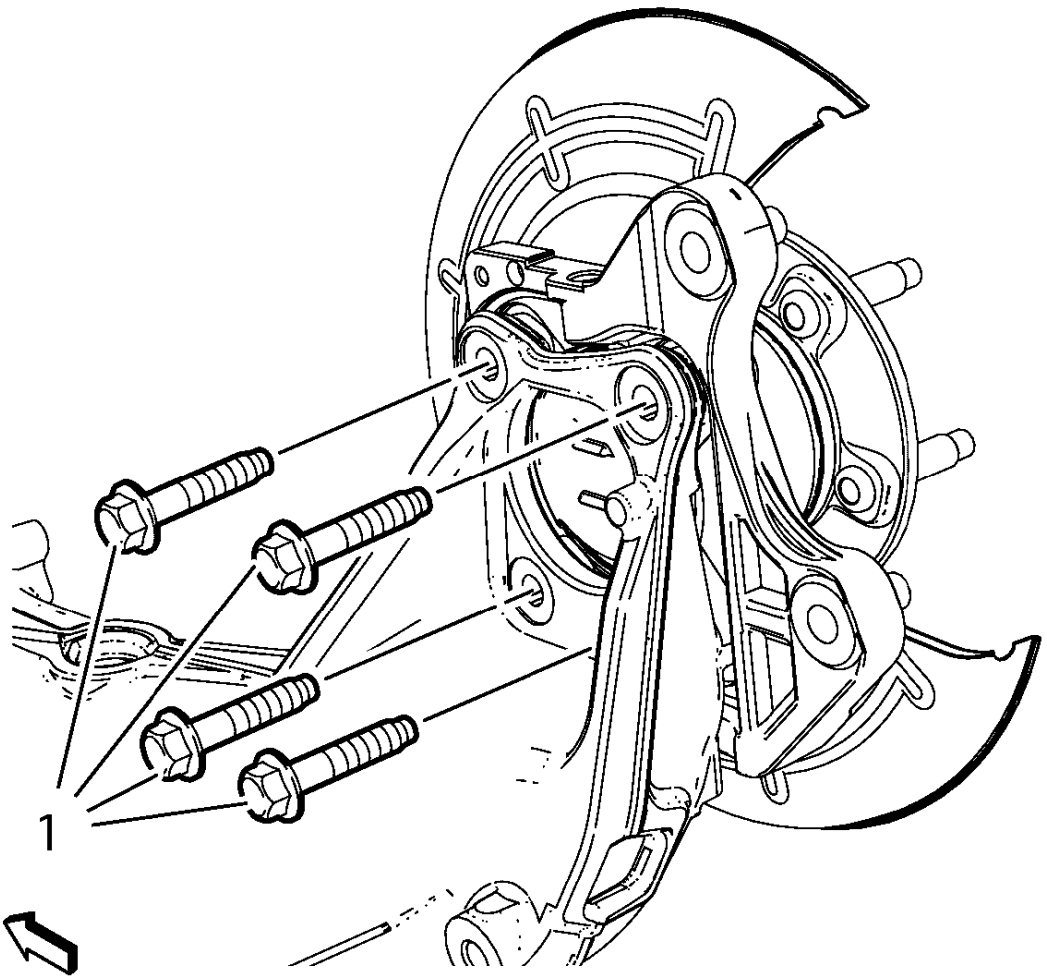

Fig. 91: Wheel Bearing/Hub Mounting Bolts
Courtesy of GENERAL MOTORS COMPANY

6. Remove and DISCARD the wheel bearing/hub mounting bolts (1).

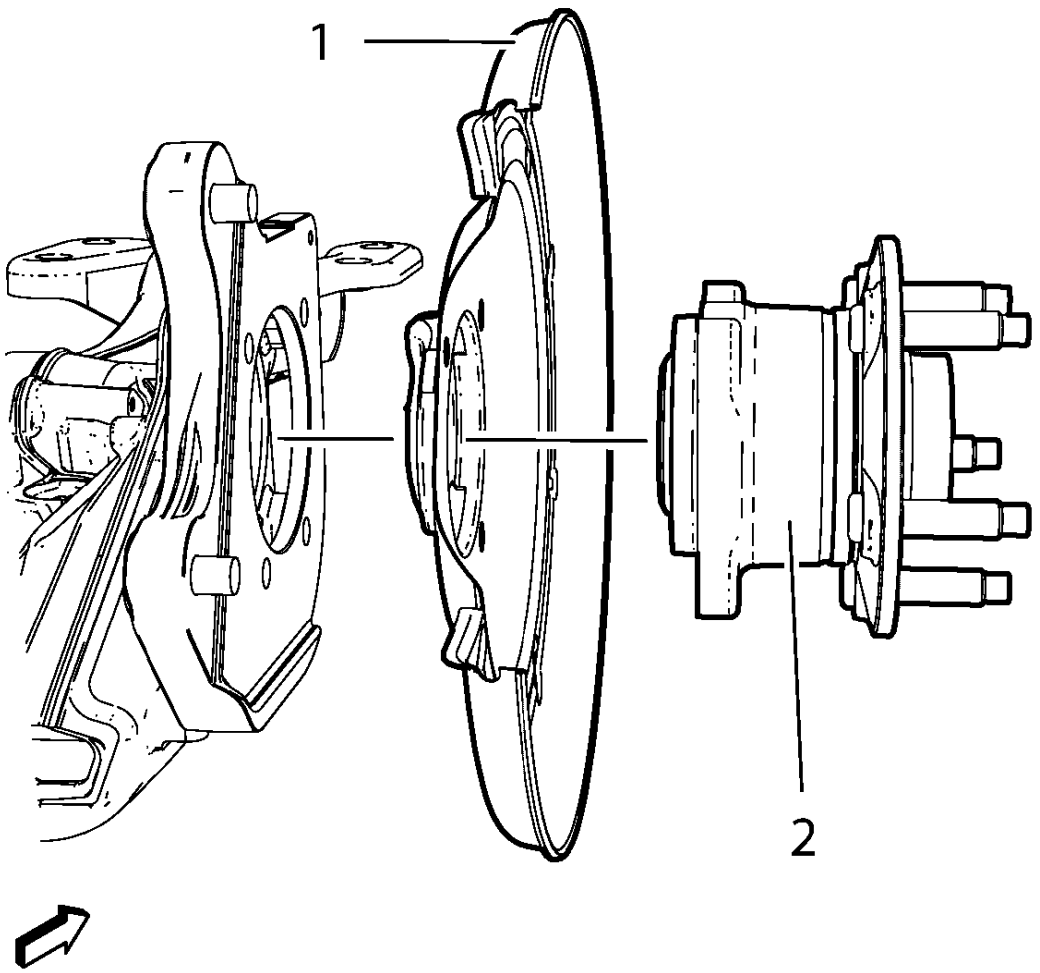

Fig. 92: Wheel Bearing/Hub, Rear Brake Shield And Steering Knuckle
Courtesy of GENERAL MOTORS COMPANY

7. Remove the wheel bearing/hub assembly (2) and rear brake shield (1) from the rear axle assembly.

Installation Procedure

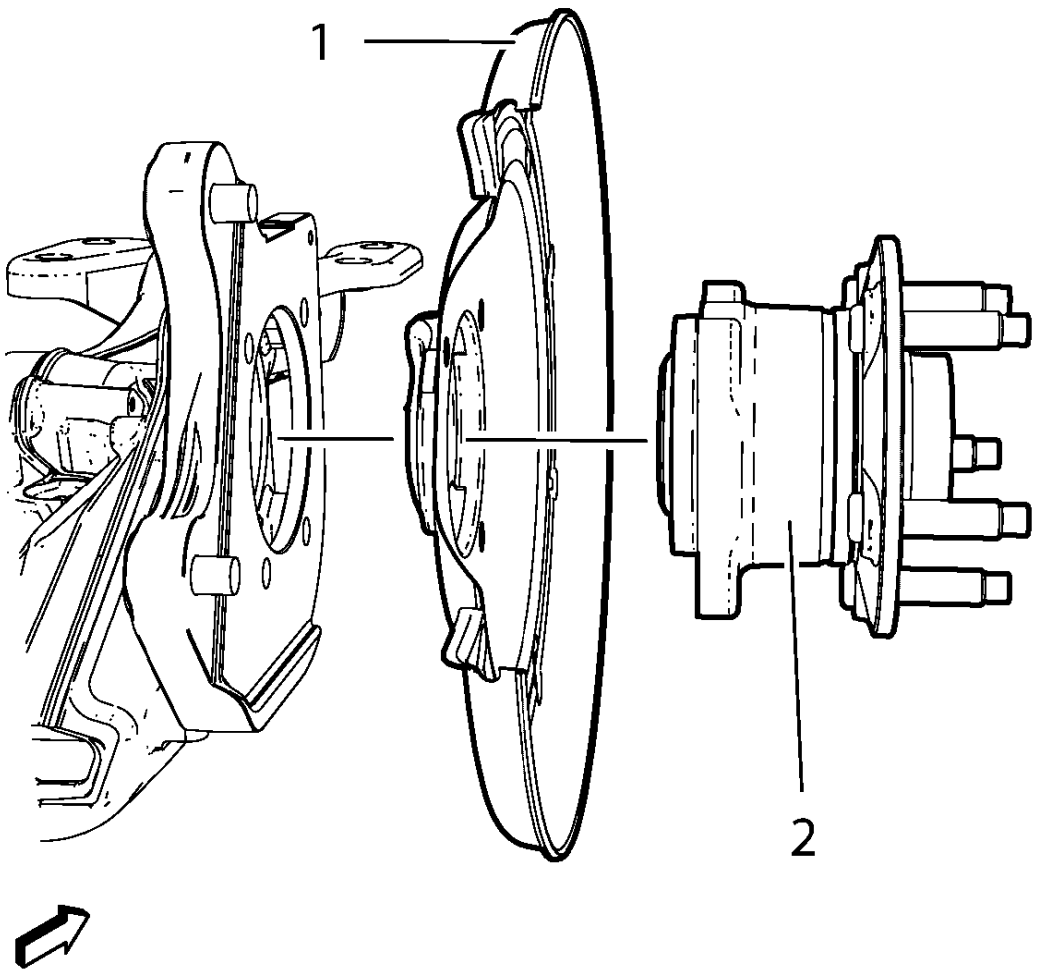

Fig. 93: Wheel Bearing/Hub, Rear Brake Shield And Steering Knuckle
Courtesy of GENERAL MOTORS COMPANY

1. Position the rear brake shield (1) and wheel bearing/hub assembly (2) onto the rear axle assembly.

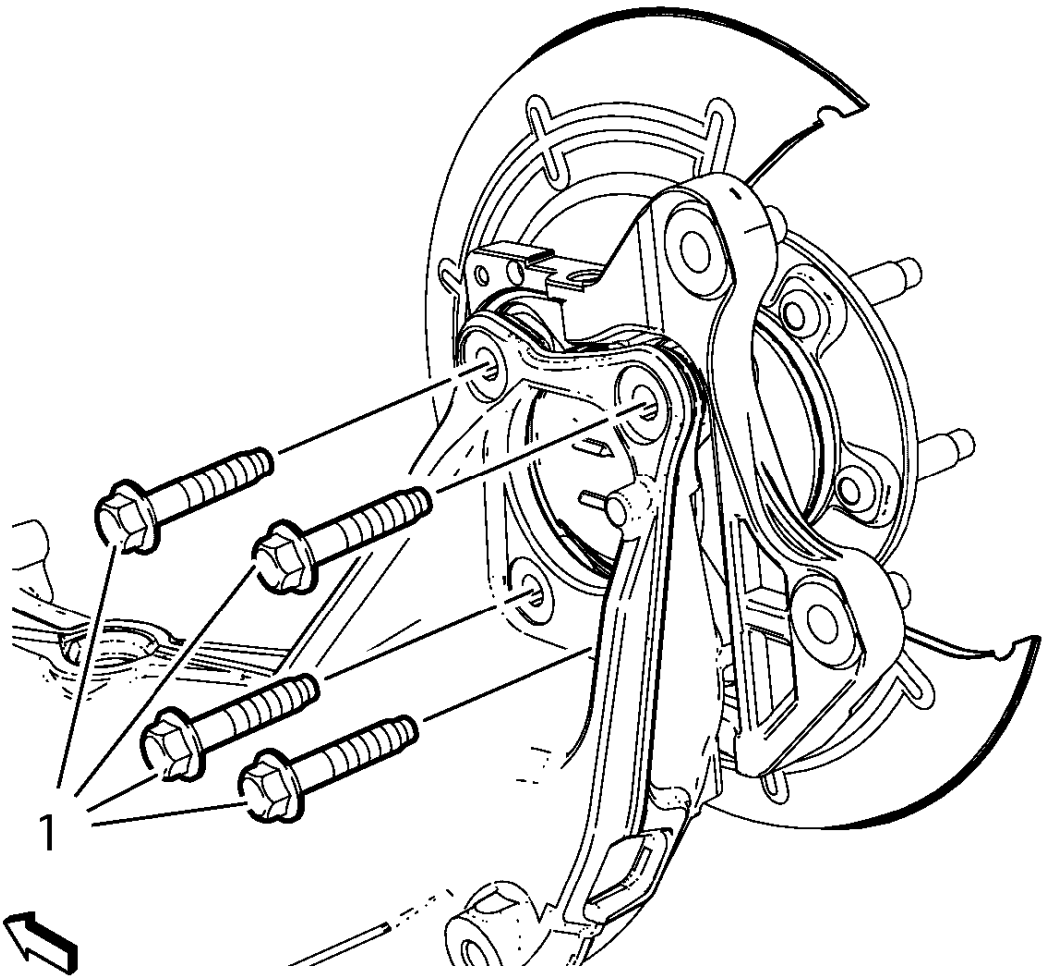

Fig. 94: Wheel Bearing/Hub Mounting Bolts
Courtesy of GENERAL MOTORS COMPANY

CAUTION: Refer to Fastener Caution .

2. Install NEW wheel bearing/hub mounting bolts (1) and tighten a first pass to 50 N.m (37 lb ft).

WARNING: Refer to Torque-to-Yield Fastener Warning .

3. Tighten the NEW wheel bearing/hub mounting bolts (1) a final pass to an additional 30 - 45 degrees, using the **EN-45059** meter.

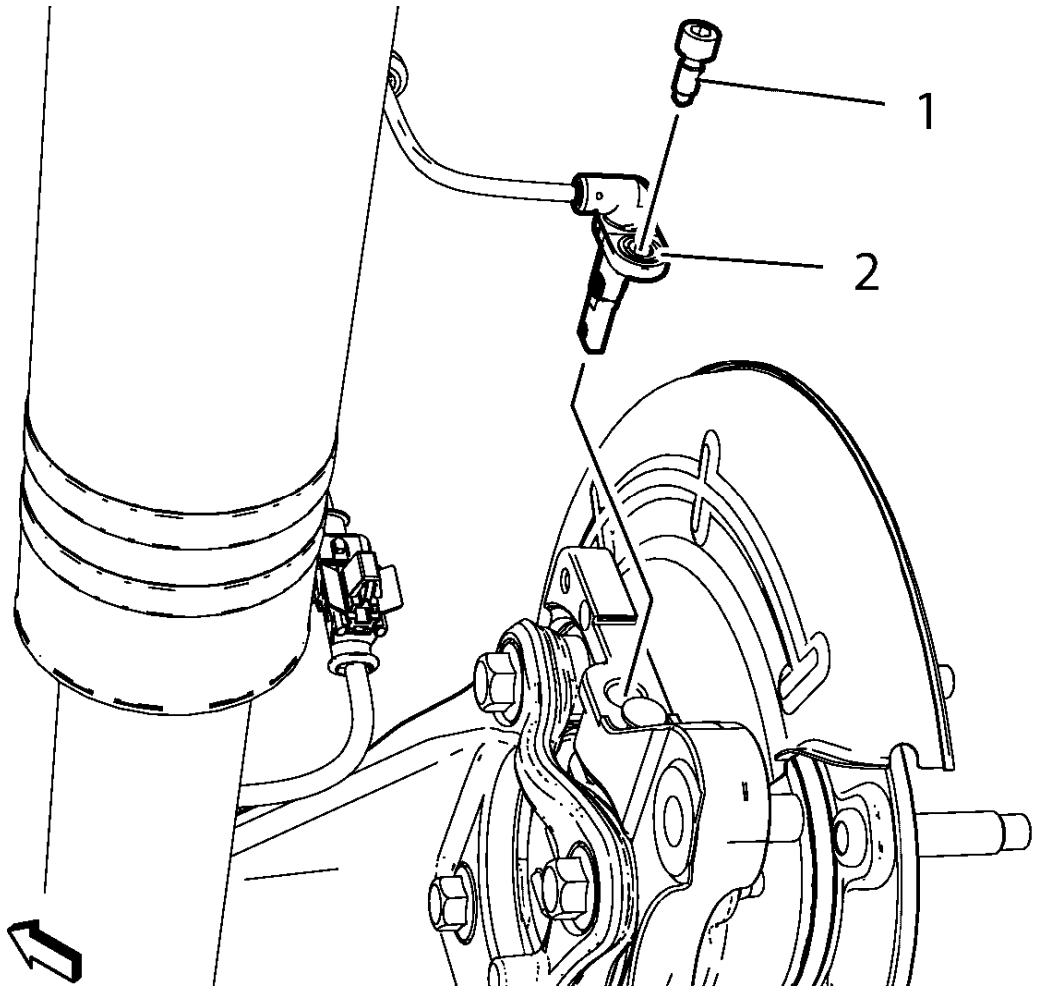

Fig. 95: Wheel Speed Sensor And Wheel Speed Sensor Mounting Bolt
Courtesy of GENERAL MOTORS COMPANY

4. Install the wheel speed sensor (2).
5. Install the wheel speed sensor bolt (1) and tighten to 6 N.m (54 lb in).
6. Install the brake rotor. Refer to **Rear Brake Rotor Replacement**.
7. Install the tire and wheel assembly. Refer to **Tire and Wheel Removal and Installation** .
8. Lower the vehicle.

BRAKE ROTOR ASSEMBLED LATERAL RUNOUT CORRECTION

NOTE:

- **Brake rotor thickness variation MUST be checked BEFORE checking for assembled lateral runout (LRO). Thickness variation exceeding the maximum acceptable level can cause brake pulsation. Refer to Brake Rotor Thickness Variation Measurement.**

- **Brake rotor assembled lateral runout (LRO) exceeding the maximum allowable specification can cause thickness variation to develop in the brake rotor over time, usually between 4 800-11 300 km (3, 000-7, 000 mi). Refer to Brake Rotor Assembled Lateral Runout Measurement.**

Review the following acceptable methods for bringing the brake rotor assembled LRO to within specifications. Determine which method to use for the specific vehicle being repaired.

- The indexing method of correcting assembled LRO is most effective when the LRO specification is only exceeded by a relatively small amount: 0.025-0.127 mm (0.001-0.005 in). Indexing is used to achieve the best possible match of high spots to low spots between related components. Refer to **Brake Rotor Assembled Lateral Runout Correction - Indexing**.
- The correction plate method of correcting assembled LRO involves the addition of a tapered plate between the brake rotor and the hub/axle flange. The correction plate method can be used to correct LRO that exceeds the specification by up to 0.23 mm (0.009 in). Refer to **Brake Rotor Assembled Lateral Runout Correction - Correction Plates**.
- The on-vehicle brake lathe method is used to bring the LRO to within specifications through compensating for LRO while refinishing the brake rotor. Refer to **Brake Rotor Assembled Lateral Runout Correction - On Vehicle Lathe**.

If the assembled LRO cannot be corrected using these methods, then other components must be suspected as causing and/or contributing to the LRO concern.

BRAKE ROTOR ASSEMBLED LATERAL RUNOUT CORRECTION - INDEXING

Special Tools

CH-45101-100 Conical Brake Rotor Washers

For equivalent regional tools, refer to **Special Tools**.

WARNING: Refer to Brake Dust Warning .

NOTE:

- **Brake rotor thickness variation MUST be checked BEFORE checking for assembled lateral runout (LRO). Thickness variation exceeding the maximum acceptable level can cause brake pulsation. Refer to Brake Rotor Thickness Measurement.**
- **Brake rotor assembled LRO exceeding the maximum allowable specification can cause thickness variation to develop in the brake rotor over time, usually between 4, 800-11, 300 km (3, 000-7, 000 mi). Refer to Brake Rotor Assembled Lateral Runout Measurement.**

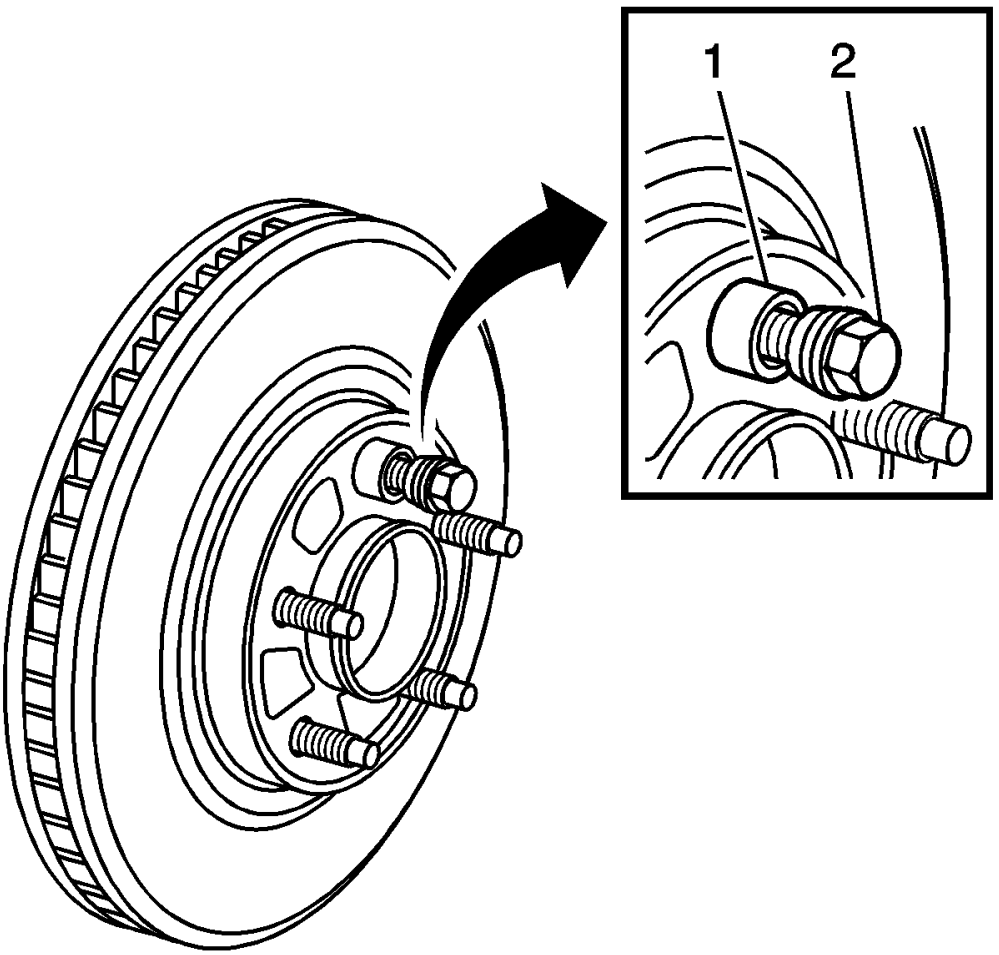

Fig. 96: Identifying Special Tool J 45101-100 & Lug Nut
Courtesy of GENERAL MOTORS COMPANY

1. Remove the **CH-45101-100** washers and the lug nuts that were installed during the assembled LRO measurement procedure.
2. Inspect the mating surface of the hub/axle flange and the brake rotor to ensure that there are no foreign particles or debris remaining.
3. Index the brake rotor in a different orientation to the hub/axle flange.
4. Hold the rotor firmly in place against the hub/axle flange and install one of the **CH-45101-100** washers (1) and one lug nut (2) onto the upper-most wheel stud.
5. Continue to hold the rotor secure and tighten the lug nut firmly by hand.

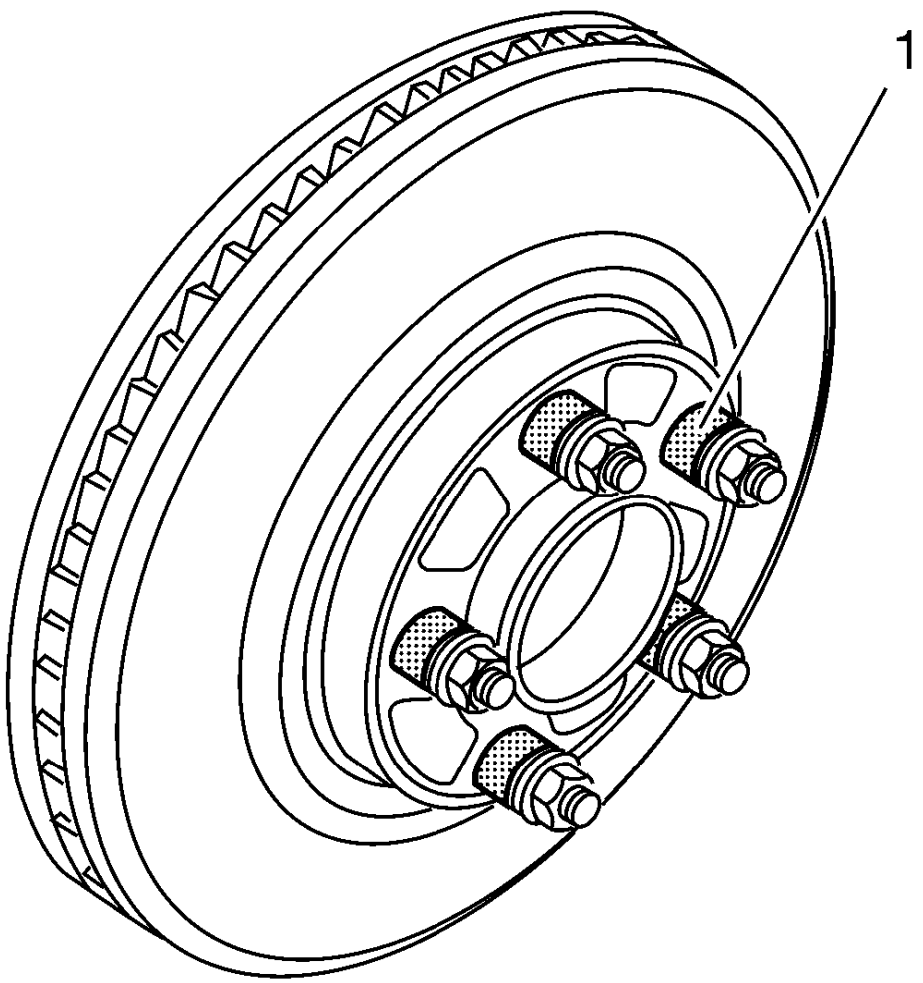

Fig. 97: Tightening Lug Nuts In A Star-Pattern To Secure Rotor
Courtesy of GENERAL MOTORS COMPANY

6. Install the remaining **CH-45101-100** washers (1) and lug nuts onto the wheel studs and tighten the nuts firmly by hand in a star-pattern.
7. Tighten the lug nuts in a star-pattern to specification, in order to properly secure the rotor. Refer to **Tire and Wheel Removal and Installation** .
8. Measure the assembled LRO of the brake rotor. Refer to **Brake Rotor Assembled Lateral Runout Measurement**.
9. Compare the amount of change between this measurement and the original measurement.
10. If this measurement is within specifications, proceed to step 14.
11. If this measurement still exceeds specifications, repeat steps 1-9 until the best assembled LRO measurement is obtained.
12. Matchmark the final location of the rotor to the wheel studs if the orientation is different than it was originally.
13. If the brake rotor assembled LRO measurement still exceeds the maximum allowable specification, refer

to **Brake Rotor Assembled Lateral Runout Correction**.

14. If the brake rotor assembled LRO is within specification, install the brake caliper and depress the brake pedal several times to secure the rotor in place before removing the **CH-45101-100** washers and the lug nuts.

BRAKE ROTOR ASSEMBLED LATERAL RUNOUT CORRECTION - CORRECTION PLATES

Special Tools

CH-45101-100 Conical Brake Rotor Washers

For equivalent regional tools, refer to **Special Tools**.

WARNING: Refer to Brake Dust Warning .

NOTE:

- **Brake rotor thickness variation MUST be checked BEFORE checking for assembled lateral runout (LRO). Thickness variation exceeding the maximum acceptable level can cause brake pulsation. Refer to Brake Rotor Thickness Measurement.**
- **Brake rotor assembled LRO exceeding the maximum allowable specification can cause thickness variation to develop in the brake rotor over time, usually between 4, 800-11, 300 km (3, 000-7, 000 mi). Refer to Brake Rotor Assembled Lateral Runout Measurement.**

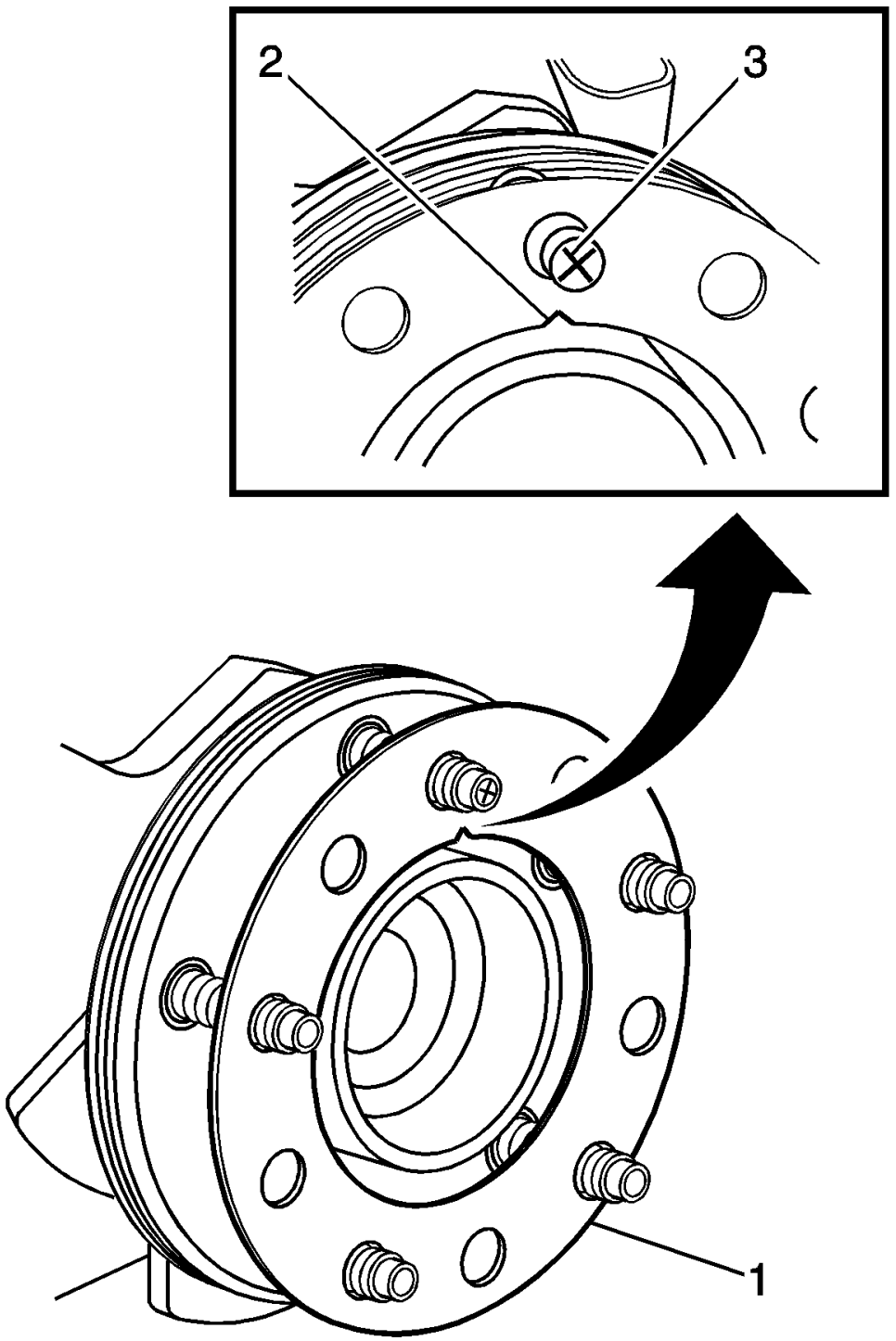

Fig. 98: Identifying Correction Plate, High Spot Mark & V-Shaped Notch
Courtesy of GENERAL MOTORS COMPANY

1. Rotate the brake rotor to position the high spot, identified and marked during the brake rotor assembled

LRO measurement procedure, to face upward.

2. Remove the **CH-45101-100** washers and the lug nuts that were installed during the assembled LRO measurement procedure and/or the indexing correction procedure.
3. Inspect the mounting surface of the hub/axle flange and the brake rotor to ensure that there are no foreign particles or debris remaining.
4. Select the correction plate, following the manufacturer instructions, which has a specification closest to the assembled LRO measurement.

   For example: If the assembled LRO measurement was 0.076 mm (0.003 in), the 0.076 mm (0.003 in) correction plate would be used. If the measurement was 0.127 mm (0.005 in), the 0.152 mm (0.006 in) correction plate would be used.

5. Determine the positioning for the correction plate (1) using the high spot mark (3) made during the brake rotor assembled LRO measurement procedure.

NOTE:

- **Do NOT install used correction plates in an attempt to correct brake rotor assembled LRO.**
- **Do NOT stack up, or install more than one correction plate onto one hub/axle flange location, in an attempt to correct brake rotor assembled LRO.**

6. Install the correction plate (1) onto the hub/axle flange, with the V-shaped notch (2) orientated to align with the high spot mark (3) that was positioned to face upward.

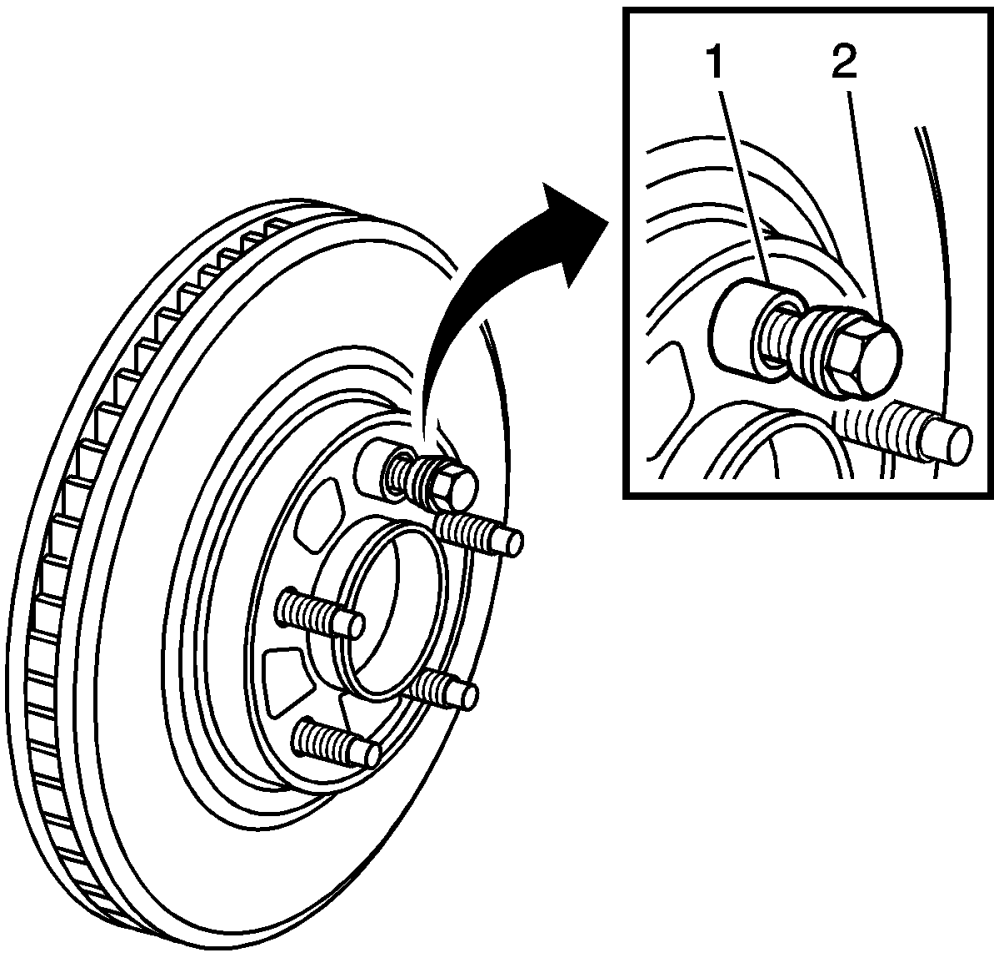

Fig. 99: Identifying Special Tool J 45101-100 & Lug Nut
Courtesy of GENERAL MOTORS COMPANY

7. Install the brake rotor to the hub/axle flange. Use the matchmark made prior to removal for proper orientation to the flange.
8. Hold the rotor firmly in place against the hub/axle flange and install one of the **CH-45101-100** washers (1) and one lug nut (2) onto the upper-most wheel stud.
9. Continue to hold the rotor secure and tighten the lug nut firmly by hand.

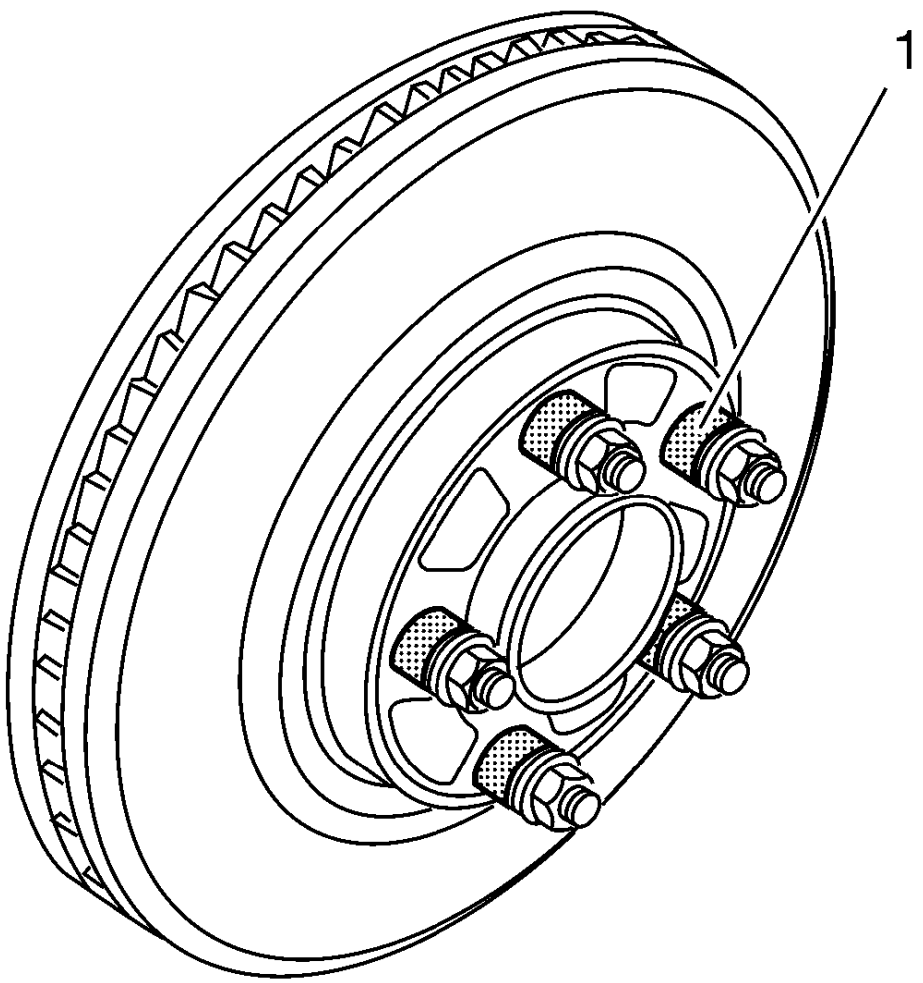

Fig. 100: Tightening Lug Nuts In A Star-Pattern To Secure Rotor
Courtesy of GENERAL MOTORS COMPANY

10. Install the remaining **CH-45101-100** washers (1) and lug nuts onto the wheel studs and tighten the nuts firmly by hand in a star-pattern.
11. Tighten the lug nuts in a star-pattern to specification, in order to properly secure the rotor. Refer to **Tire and Wheel Removal and Installation** .
12. Measure the assembled LRO of the brake rotor. Refer to **Brake Rotor Assembled Lateral Runout Measurement**.
13. If the brake rotor assembled LRO measurement still exceeds the maximum allowable specification, refer to **Brake Rotor Assembled Lateral Runout Correction**.
14. If the brake rotor assembled LRO is within specification, install the brake caliper and depress the brake pedal several times to secure the rotor in place before removing the **CH-45101-100** washers and the lug nuts.

BRAKE ROTOR ASSEMBLED LATERAL RUNOUT CORRECTION - ON VEHICLE LATHE

Special Tools

CH-45101-100 Conical Brake Rotor Washers

For equivalent regional tools, refer to **Special Tools**.

WARNING: Refer to Brake Dust Warning .

NOTE:

- **Brake rotor thickness variation MUST be checked BEFORE checking for assembled lateral runout (LRO). Thickness variation exceeding the maximum acceptable level can cause brake pulsation. Refer to Brake Rotor Thickness Measurement.**
- **Brake rotor assembled LRO exceeding the maximum allowable specification can cause thickness variation to develop in the brake rotor over time, usually between 4, 800-11, 300 km (3, 000-7, 000 mi). Refer to Brake Rotor Assembled Lateral Runout Measurement.**

1. Ensure that the caliper and caliper bracket that are already being supported, are clear from contacting any rotating components, such as the brake rotor.
2. Remove the **CH-45101-100** washers and the lug nuts that were installed during the assembled LRO measurement procedure and/or the indexing correction procedure.
3. Inspect the mounting surface of the hub/axle flange and the brake rotor to ensure that there are no foreign particles or debris remaining.
4. Set up the lathe, following the manufacturer instructions.
5. Refinish the brake rotor, following the brake lathe manufacturer instructions. Refer to **Brake Rotor Refinishing**.
6. After each successive cut, inspect the brake rotor thickness. Refer to **Brake Rotor Thickness Measurement**.
7. If at any time the brake rotor exceeds the minimum allowable thickness after refinish specification, the brake rotor must be replaced. After replacing the rotor, proceed to step 10.
8. After refinishing the brake rotor, use the following procedure in order to obtain the desired non-directional finish:
    1. Follow the brake lathe manufacturer recommended speed setting for applying a non-directional finish.
    2. Using moderate pressure, apply the non-directional finish:
        - If the lathe is equipped with a non-directional finishing tool, apply the finish with 120-grit aluminum oxide sandpaper.
        - If the lathe is not equipped with a non-directional finishing tool, apply the finish with a sanding block and 150-grit aluminum oxide sandpaper.
    3. After applying a non-directional finish, clean each friction surface of the brake rotor with denatured alcohol, or an equivalent approved brake cleaner.
9. Remove the lathe from the vehicle.

10. Measure the assembled LRO of the brake rotor. Refer to **Brake Rotor Assembled Lateral Runout Measurement**.
11. If the brake rotor assembled LRO measurement still exceeds the maximum allowable specification, refer to **Brake Rotor Assembled Lateral Runout Correction**.
12. If the brake rotor assembled LRO is within specification, install the brake caliper and depress the brake pedal several times to secure the rotor in place before removing the **CH-45101-100** washers and the lug nuts.

BRAKE ROTOR REFINISHING

Special Tools

- **CH-41013** Rotor Resurfacing Kit
- **CH-42450-A** Wheel Hub Resurfacing Kit

For equivalent regional tools, refer to **Special Tools**.

WARNING: Refer to Brake Dust Warning .

NOTE:

- **The disc brake rotors do not require refinishing as part of routine brake system service. New disc brake rotors do not require refinishing.**

  Do not refinish disc brake rotors in an attempt to correct the following conditions:

  - **Brake system noise - squeal, growl, groan**
  - **Uneven and/or premature disc brake pad wear**
  - **Superficial or cosmetic corrosion/rust of the disc brake rotor friction surface**
  - **Scoring of the disc brake rotor friction surface less than the maximum allowable specification**
- **Before refinishing a brake rotor, the rotor MUST first be checked for adequate thickness to allow the rotor to be refinished and remain above the minimum allowable thickness after refinish specification. Refer to Brake Rotor Thickness Measurement.**

  Disc brake rotors should only be refinished if they have adequate thickness to be refinished and if one or more of the following conditions exist:

  - **Thickness variation in excess of the maximum allowable specification**
  - **Excessive corrosion/rust and/or pitting**

- **Cracks and/or heat spots**
- **Excessive blueing discoloration**
- **Scoring of the disc brake rotor surface in excess of the maximum allowable specification**

- **Disc brake rotors may need to be refinished as part of the process for correcting brake rotor assembled lateral runout (LRO) that exceeds the maximum allowable specification.**

NOTE: If the vehicle is equipped with cross-drilled rotors, use a lathe with positive rake tooling. This setup requires less cutting pressure, which will result in less vibration, and a better surface finish. Also, use a vibration dampener when cutting. Otherwise, refinish according to the following instructions.

NOTE: Whenever the brake rotor has been separated from the hub/axle flange, clean any rust or contaminants from the hub/axle flange and the brake rotor mating surfaces. Failure to do this may result in increased assembled lateral runout (LRO) of the brake rotor, which could lead to brake pulsation.

1. Using the **CH-42450-A** Wheel Hub Resurfacing Kit, thoroughly clean any rust or corrosion from the mating surface of the hub/axle flange.
2. Using the **CH-41013** Rotor Resurfacing Kit, thoroughly clean any rust or corrosion from the mating surface and mounting surface of the brake rotor.
3. Inspect the mating surfaces of the hub/axle flange and the rotor to ensure that there are no foreign particles or debris remaining.
4. Mount the brake rotor to the brake lathe according to the lathe manufacturer's instructions, ensuring that all mounting attachments and adapters are clean and free of debris.
5. Ensure that any vibration dampening attachments are securely in place.
6. With the brake lathe running, slowly bring in the cutting tools until they just contact the brake rotor friction surfaces.
7. Observe the witness mark on the brake rotor. If the witness mark extends approximately three-quarters or more of the way around the brake rotor friction surface on each side, the brake rotor is properly mounted to the lathe.
8. If the witness mark does not extend three-quarters or more of the way around the brake rotor, re-mount the rotor to the lathe.
9. Following the brake lathe manufacturer's instructions, refinish the brake rotor.
10. After each successive cut, inspect the brake rotor thickness. Refer to **Brake Rotor Thickness Measurement**.
11. If at any time the brake rotor exceeds the minimum allowable thickness after refinish specification, the brake rotor must be replaced.
12. After refinishing the brake rotor, use the following procedure in order to obtain the desired non-directional finish:

1. Follow the brake lathe manufacturer's recommended speed setting for applying a non-directional finish.
2. Using moderate pressure, apply the non-directional finish:
   - If the lathe is equipped with a non-directional finishing tool, apply the finish with 120-grit aluminum oxide sandpaper.
   - If the lathe is not equipped with a non-directional finishing tool, apply the finish with a sanding block and 150-grit aluminum oxide sandpaper.

NOTE: Thoroughly cleaning the brake rotor will prevent the possible transfer of finite metal dust left as a by-product of machining to the brake pad material during the burnishing process, thereby reducing the possibility for brake squeal or other brake noises to occur.

3. After applying a non-directional finish, clean each friction surface of the brake rotor with a solution of mild dish washing detergent and water, or a GM approved brake cleaner and a clean shop towel to remove metal particles remaining from machining. Repeat the cleaning process if necessary to remove all metal particles.

13. Remove the brake rotor from the brake lathe.
14. Measure the assembled LRO of the brake rotor to ensure optimum performance of the disc brakes. Refer to **Brake Rotor Assembled Lateral Runout Measurement**.
15. If the brake rotor assembled LRO measurement exceeds the specification, bring the LRO to within specifications. Refer to **Brake Rotor Assembled Lateral Runout Correction**.

DESCRIPTION AND OPERATION

DISC BRAKE SYSTEM DESCRIPTION AND OPERATION

System Component Description

The disc brake system consists of the following components:

Disc Brake Pads: Applies mechanical output force from the hydraulic brake calipers to friction surfaces of brake rotors.

Disc Brake Rotors: Uses mechanical output force applied to friction surfaces from the disc brake pads to slow speed of tire and wheel assembly rotation.

Disc Brake Pad Hardware: Secures disc brake pads firmly in proper relationship to the hydraulic brake calipers. Enables a sliding motion of brake pads when mechanical output force is applied.

Disc Brake Caliper Hardware: Provides mounting for hydraulic brake caliper and secures the caliper firmly in proper relationship to caliper bracket. Enables a sliding motion of the brake caliper to the brake pads when mechanical output force is applied.

System Operation

Mechanical output force is applied from the hydraulic brake caliper pistons to the inner brake pads. As the pistons press the inner brake pads outward, the caliper housings draw the outer brake pads inward. This allows the output force to be equally distributed. The brake pads apply the output force to the friction surfaces on both sides of the brake rotors, which slows the rotation of the tire and wheel assemblies. The correct function of both the brake pad and brake caliper hardware is essential for even distribution of braking force.

SPECIAL TOOLS AND EQUIPMENT

SPECIAL TOOLS

Illustration	Tool Number/ Description
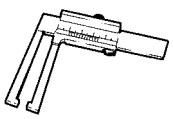	CH-230-A MKM-230-A J-21177-A Disc Gauge
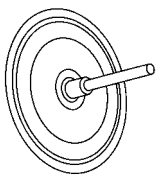	CH-41013 J-41013 Rotor Resurfacing Kit
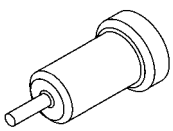	CH-42450-A J-42450-A Wheel Hub Resurfacing Kit
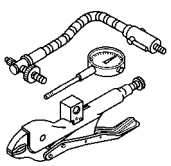	CH-45101 J-45101 Hub and Wheel Runout Gauge
	CH-45101-100 J-45101-100 Conical Brake Rotor Washers
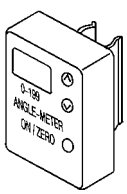	EN-45059 J 45059 Angle Meter

2013 BRAKES

Drum Brakes - Cruze

SPECIFICATIONS

FASTENER TIGHTENING SPECIFICATIONS

Fastener Tightening Specifications

Application	Specification	
	Metric	English
Brake Pipe Fittings	18 N.m	11 lb ft
Drum Brake Mounting Bolt	7 N.m	62 lb in
Wheel Cylinder Mounting Bolts	10 N.m	89 lb ft

DRUM BRAKE COMPONENT SPECIFICATIONS

Drum Brake Component Specifications

Application	Specification	
	Metric	English
Brake Drum Discard Diameter	256 mm	10.078 in
Brake Drum Diameter- New	254 mm	10 in
Brake Drum Maximum Allowable Radial Runout	0.05 mm	0.002 in
Brake Drum Maximum Allowable Scoring	1 mm	0.039 in
Brake Drum Maximum Diameter After Refinish	256 mm	10.078 in
Brake Shoe Lining Minimum Thickness	1.6 mm	0.063 in
Brake Shoe Lining-to-Drum Clearance	0.4-0.9 mm	0.016-0.035 in
Brake Shoe Lining Thickness- New	5.0 mm	0.197 in

ADHESIVES, FLUIDS, LUBRICANTS, AND SEALERS

Adhesives, Fluids, Lubricants, and Sealers

Application	Type of Material	GM Part Number
Rear Backing Plate	Lubricant	Refer to Electronic Parts Catalog

COMPONENT LOCATOR

REAR DRUM BRAKES COMPONENT VIEWS

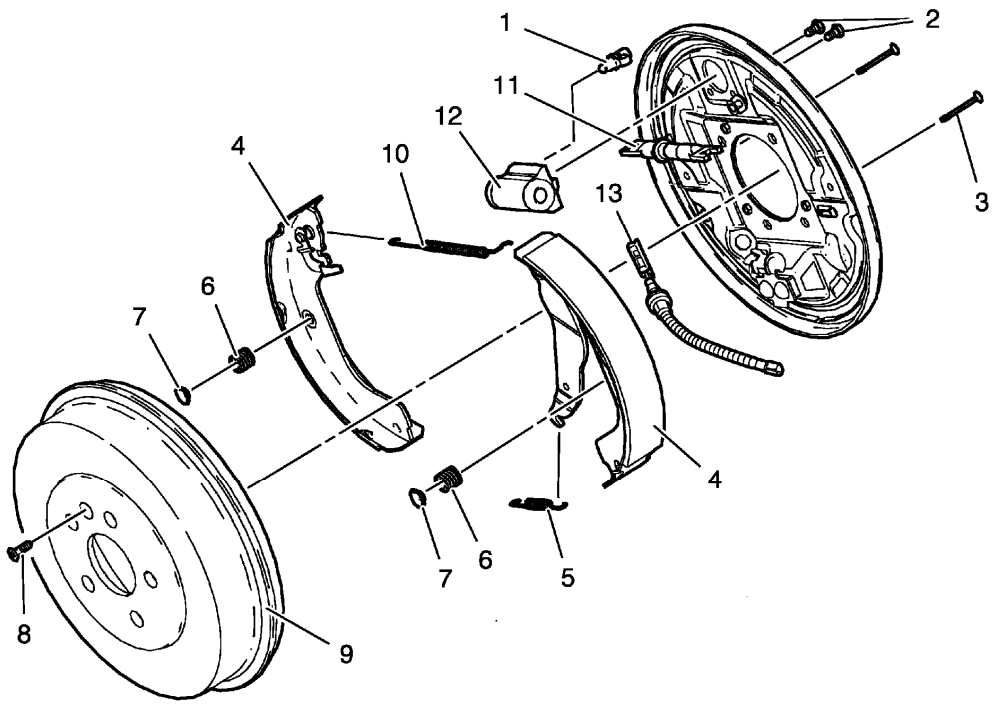

Fig. 1: Exploded View Of Brake Drum Assembly
Courtesy of GENERAL MOTORS COMPANY

Callout	Component Name
1	Wheel Cylinder Bleeder Valve
2	Wheel Cylinder Mounting Bolts
3	Hold Down Spring Pins
4	Brake Shoes
5	Brake Shoe Return Spring
6	Brake Shoe Hold Down Springs
7	Brake Shoe Hold Down Spring Caps
8	Brake Drum Mounting Bolt
9	Brake Drum
10	Adjuster Spring
11	Adjuster Assembly
12	Wheel Cylinder
13	Parking Brake Cable

DIAGNOSTIC INFORMATION AND PROCEDURES

BRAKE DRUM DIAMETER MEASUREMENT

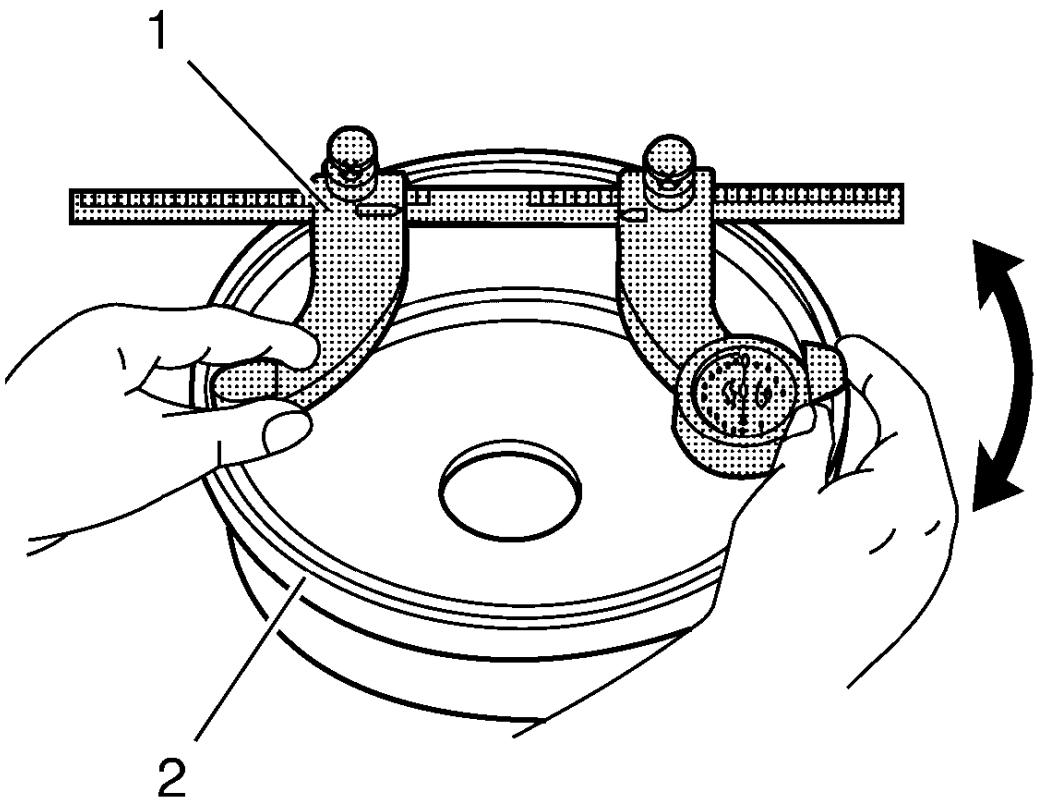

Fig. 2: Measuring Brake Drum Diameter
Courtesy of GENERAL MOTORS COMPANY

WARNING: Refer to Brake Dust Warning .

1. Remove brake drum. Refer to **Brake Drum Replacement**
2. Clean the brake shoe lining contact surface of the brake drum (2) with denatured alcohol or an equivalent approved brake cleaner.
3. Using a brake drum micrometer (1) calibrated in thousandths-of-an-inch, measure and record the largest diameter of the brake drum at four or more points, equally spaced around the drum.

   Ensure the measurements are only taken within the brake shoe lining contact area. The micrometer must be positioned the same distance from the outside edge of the drum for each measurement.

4. Compare the largest diameter measurement recorded to the brake drum component specifications. Refer

to **Drum Brake Component Specifications**.

5. If the largest diameter measurement of the brake drum is less than the maximum allowable inside diameter after refinishing specification; the drum may be refinished, depending upon surface and wear conditions.
6. If the largest diameter measurement of the brake drum is equal to or greater than the maximum allowable diameter after refinishing specification; the drum may not be refinished.
7. If the largest diameter measurement of the brake drum is equal to or greater than the discard diameter specification; the drum requires replacement.
8. Install brake drum. Refer to **Brake Drum Replacement**.

BRAKE DRUM SURFACE AND WEAR INSPECTION

Special Tools

GE 572 Dial Indicator

For equivalent regional tools, refer to **Special Tools**.

WARNING: Refer to Brake Dust Warning .

1. Remove brake drum. Refer to **Brake Drum Replacement**.
2. Inspect the braking surface of the brake drum for the following braking surface conditions:
   - Heavy rust and/or pitting

     Light surface rust can be removed with an abrasive disc; heavy surface rust and/or pitting must be removed by refinishing the drum.

   - Cracks and/or heat spots
   - Excessive blueing discoloration
   - Missing balance weights
   - If the braking surface of the brake drum exhibits one or more of the Braking Surface Conditions listed, the drum requires refinishing or replacement. Refer to **Brake Drum Replacement**, or **Rear Brake Drum Refinishing**.

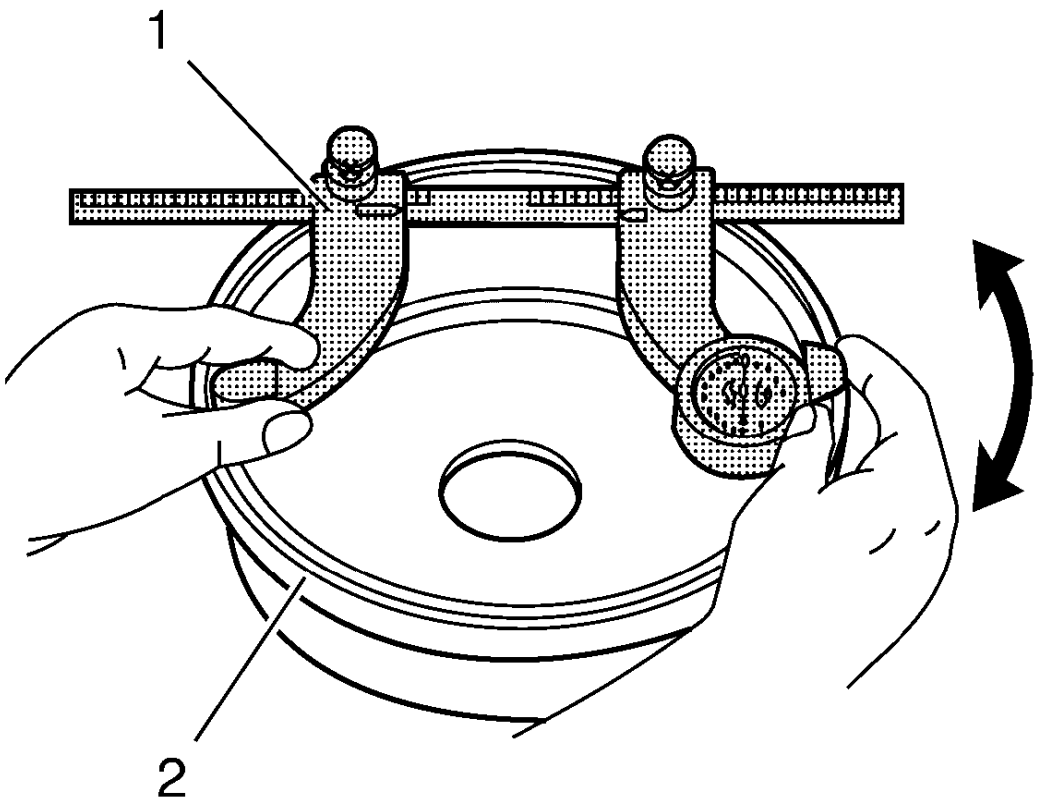

Fig. 3: Measuring Brake Drum Diameter
Courtesy of GENERAL MOTORS COMPANY

3. Using a brake drum micrometer (1) calibrated in thousandths-of-an-inch, measure and record any grooves present on the drum braking surface.

   Ensure that the measurements are only taken within the brake shoe lining contact area.

4. Compare the groove, or scoring depth recorded to brake drum component specification. Refer to **Drum Brake Component Specifications**.
5. If the brake drum scoring depth exceeds the specification, or if an excessive amount of scoring is present, the drum requires refinishing or replacement. Refer to **Brake Drum Replacement**, or **Rear Brake Drum Refinishing**.
6. Mount the brake drum on a brake lathe.

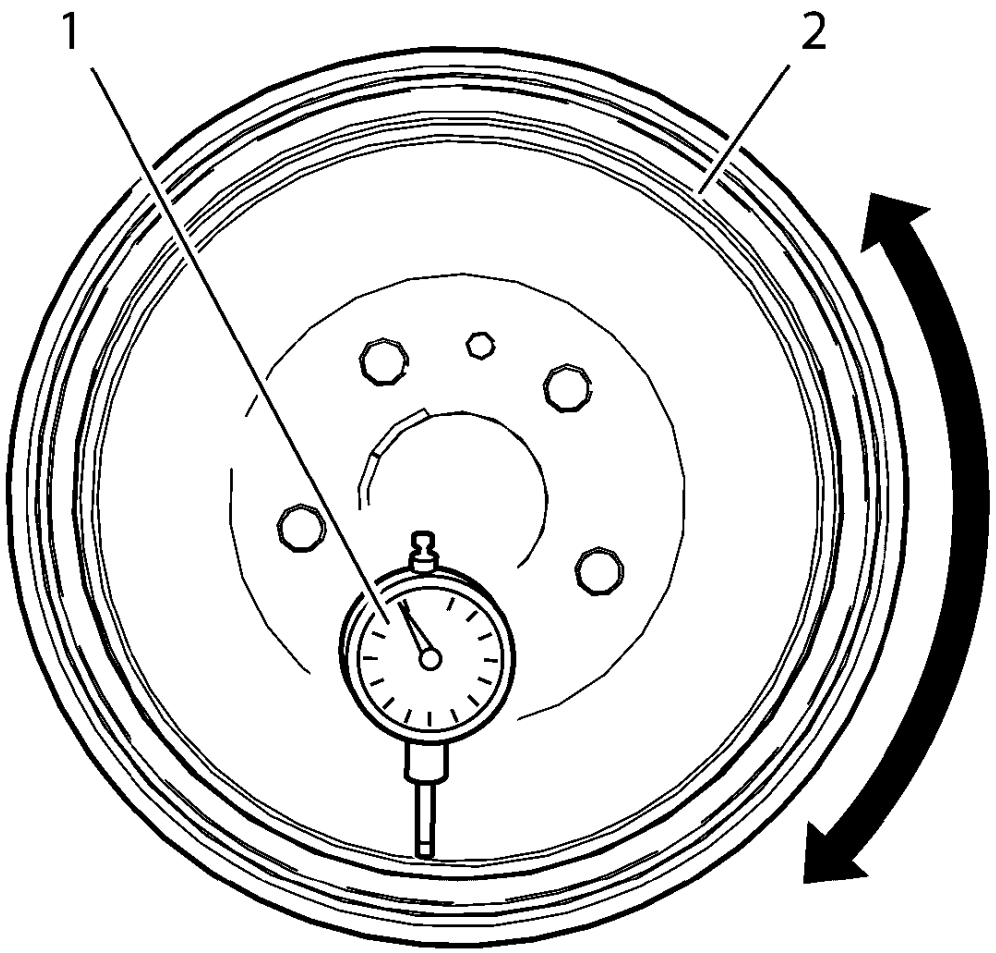

Fig. 4: Measuring Brake Drum Radial Runout
Courtesy of GENERAL MOTORS COMPANY

7. Mount a dial indicator, **GE 572** dial indicator (1) or equivalent, and position the indicator button so it contacts the braking surface of the brake drum (2) at a 90 degree angle, approximately 19 mm (0.75 in) from the outer edge of the drum.
8. Measure and record the radial runout of the brake drum.
    1. Rotate the drum until the lowest reading is displayed on the indicator dial, then zero the dial.
    2. Rotate the drum until the highest reading is displayed on the dial.
    3. Compare the radial runout of the brake drum to the brake drum component specifications. Refer to **Drum Brake Component Specifications**.
    4. If the brake drum radial runout exceeds the specification, the drum requires refinishing or replacement. Refer to **Brake Drum Replacement**, or **Rear Brake Drum Refinishing**.

DRUM BRAKE HARDWARE INSPECTION

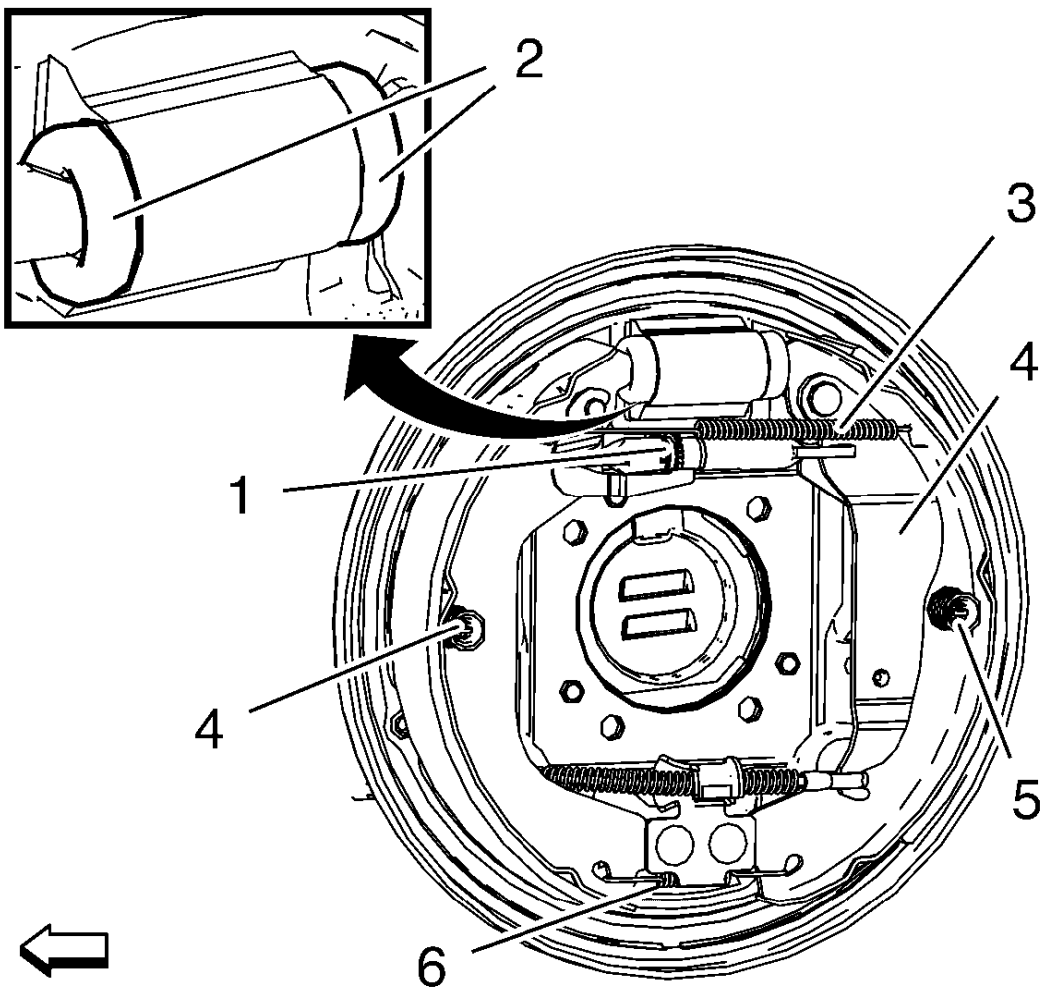

Fig. 5: Identifying Drim Brake Hardware
Courtesy of GENERAL MOTORS COMPANY

WARNING: Refer to Brake Dust Warning .

1. Visually inspect the drum brake system brake shoe springs (3) for the following conditions:
   - The brake shoe springs (3) being bent, damaged, or broken at any point along the spring
   - Excessive corrosion of brake drum components
   - Excessive stretching, twisting, or binding of brake drum components
   - Damages or leakage to the wheel cylinder boots (2)
2. If any of the conditions listed were found the brake shoe springs and/or the wheel cylinder require replacement. Refer to **Brake Shoe Replacement**, and/or **Rear Brake Cylinder Replacement**.

DRUM BRAKE ADJUSTING HARDWARE INSPECTION

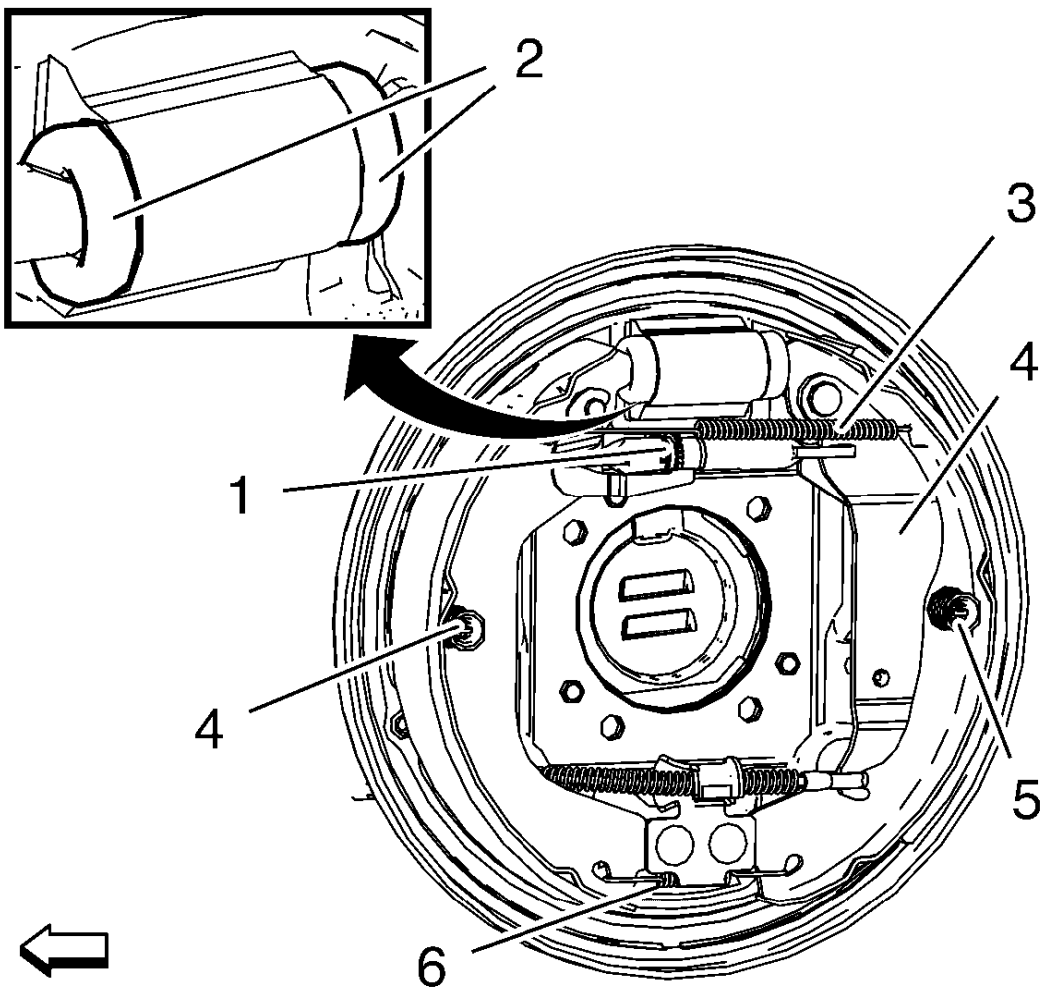

Fig. 6: Identifying Drim Brake Hardware
Courtesy of GENERAL MOTORS COMPANY

WARNING: Refer to Brake Dust Warning .

1. Visually inspect the adjuster actuator spring (3) for the following conditions:
   - The spring being bent, or broken at any point along the spring
   - Excessive corrosion
   - Missing
2. Visually inspect the adjuster assembly (1) for the following conditions:
   - The adjuster being bent, or broken
   - Excessively worn, damaged, or missing teeth
3. Visually inspect the adjuster actuator lever for the following conditions:
   - The lever being bent, or broken

- The lever to adjuster surface being excessively worn
- Broken spring attachment tab
- Missing

4. If any of the conditions listed were found, the affected part, or parts require replacement. Refer to **Drum Brake Hardware Replacement**.

REPAIR INSTRUCTIONS

BRAKE SHOE INSPECTION

Special Tools

CH 230 Disc Gauge

For equivalent regional tools, refer to **Special Tools**.

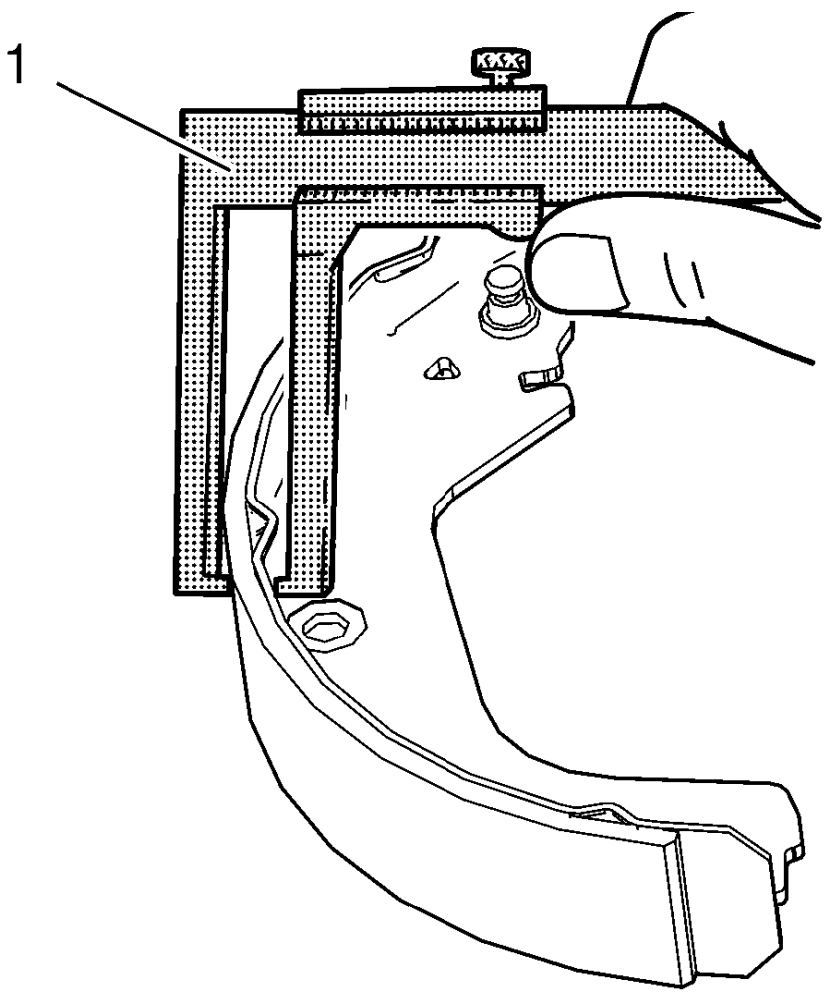

Fig. 7: Measuring Brake Shoe Thickness
Courtesy of GENERAL MOTORS COMPANY

WARNING: Refer to Brake Dust Warning .

1. Measure the brake shoe lining thickness, using the **CH 230** gauge (1).
2. Compare the brake shoe lining thickness recorded to the brake drum component specification. Refer to **Drum Brake Component Specifications**.

NOTE: Replace the shoe and lining assembly in axle sets only.

3. If the brake shoe lining thickness is less than the specification, or if a defect is found, replace the linings. Refer to **Brake Shoe Replacement**.

BRAKE DRUM REPLACEMENT

Special Tools

- **CH-41013** Rotor Resurfacing Kit
- **CH-42450-A** Wheel Hub Resurfacing Kit

For equivalent regional tools, refer to **Special Tools**.

Removal Procedure

WARNING: Refer to Brake Dust Warning .

1. Check to ensure that the park brake is fully released.
2. Raise and support the vehicle. Refer to **Lifting and Jacking the Vehicle** .
3. Remove the rear tire and wheel assembly. Refer to **Tire and Wheel Removal and Installation** .

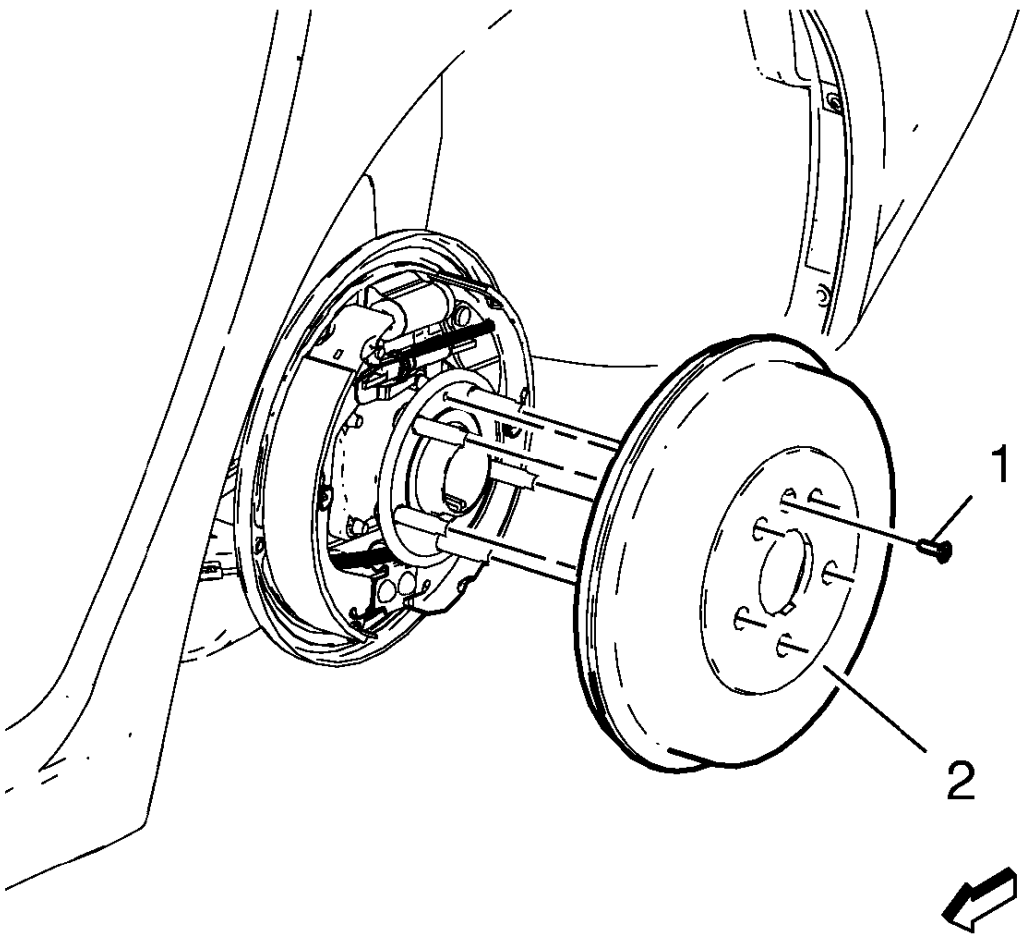

Fig. 8: Brake Drum And Brake Drum Retaining Screw
Courtesy of GENERAL MOTORS COMPANY

4. Remove the brake drum screw (1).
5. Remove the brake drum (2).
6. If the brake drum is to be reinstalled to the vehicle, use the **CH-41013** resurfacer or equivalent to clean any rust or corrosion from the hub/flange mating surface of the brake drum (2).
7. Use the **CH-42450-A** resurfacer or equivalent to clean the wheel hub flange.

Installation Procedure

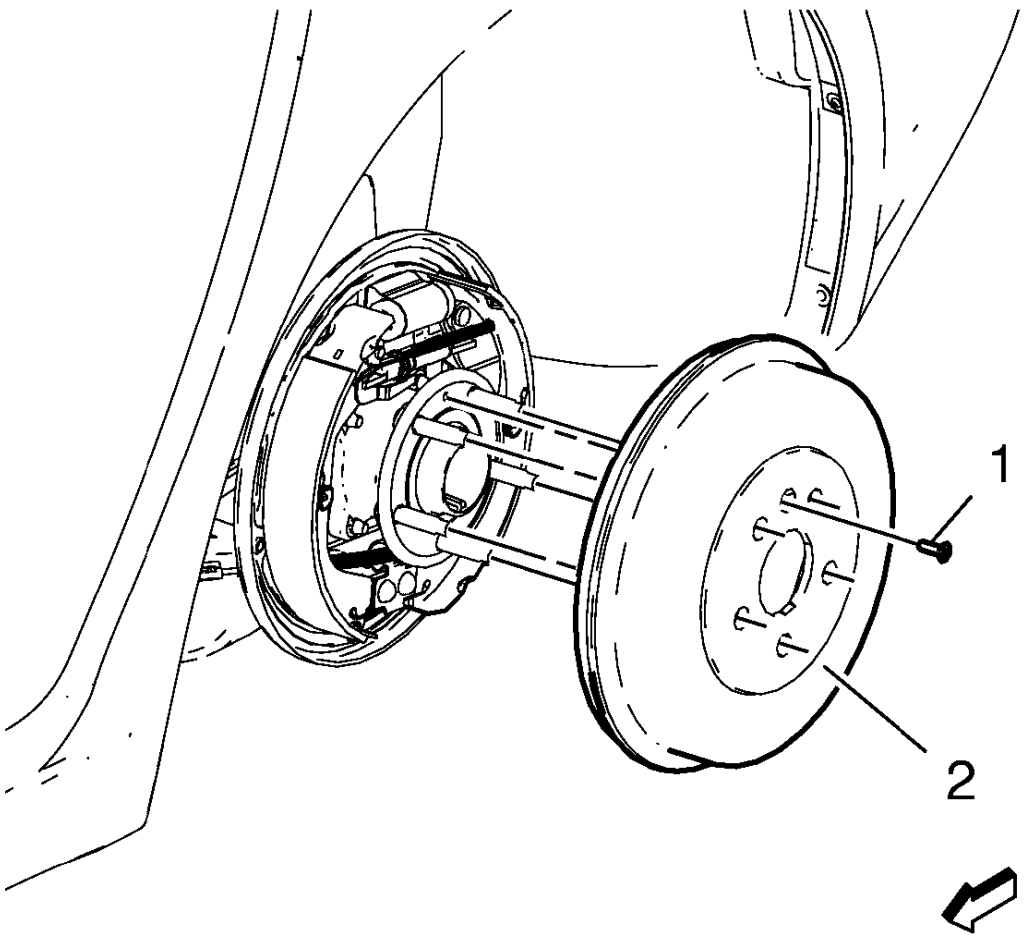

Fig. 9: Brake Drum And Brake Drum Retaining Screw
Courtesy of GENERAL MOTORS COMPANY

1. If installing a new brake drum (2), use denatured alcohol or an equivalent approve brake cleaner and a clean shop towel to remove the protective coating from the friction surface of the drum.
2. Adjust the drum brakes. Refer to **Drum Brake Adjustment**.
3. Install the drum brake.

CAUTION: Refer to Fastener Caution .

4. Install drum brake screw (1) and tighten to 7 N.m (62 lb in).
5. Install the tire and wheel assembly. Refer to **Tire and Wheel Removal and Installation** .
6. Lower the vehicle.
7. Apply the brakes approximately three times in order to seat and center the brake shoes within the drum.

REAR BRAKE DRUM REFINISHING

Special Tools

CH 41013 Resurfacing Kit

For equivalent regional tools, refer to **Special Tools**.

NOTE: Do NOT refinish the brake drums in order to correct any of the following complaints:

- **Brake noise (growl/squeal)**
- **Premature brake lining wear**
- **Cosmetic or superficial corrosion of the drum braking surface**
- **Drum discoloration**

Refinish the brake drums ONLY when one or more of the following conditions exist:

- **Severe scoring of the drum braking surface (groove depth in excess of 1 mm (0.039 in)**
- **Brake pulsation caused by the following:**
  - **Brake drum out of round**
  - **Corrosion or pitting that is deeper than the drum braking surface**

1. Use a micrometer in order to measure the largest diameter of the brake drum. If the largest diameter of the brake drum exceeds the brake drum maximum refinish diameter, do NOT refinish the brake drum. Replace the brake drum.
2. Use the **CH 41013** resurfacer in order to thoroughly clean the rust from the brake drum flange.
3. Refinish the brake drum. Refer to the brake lathe manufacturer's operating instructions.

NOTE: Failure to obtain the best possible braking surface finish may cause the vehicle to stop with difficulty.

4. After machining the brake drum, use 120 grit aluminum oxide sandpaper in order to create a non-directional braking surface.

CAUTION: Improperly tightened wheel bolts or nuts can lead to brake pulsation and rotor damage. In order to avoid expensive brake repairs, evenly tighten the wheel bolts or nuts to the proper torque specification.

5. Clean the braking surfaces with denatured alcohol or with a suitable brake cleaner.

BRAKE SHOE REPLACEMENT

Special Tools

CH 346 Mounting Tool

For equivalent regional tool, refer to **Special Tools**.

Removal Procedure

WARNING: Refer to Brake Dust Warning .

NOTE: Always replace brake shoes in axle sets.

1. Raise and support the vehicle. Refer to **Lifting and Jacking the Vehicle** .
2. Remove the tire and wheel assembly. Refer to **Tire and Wheel Removal and Installation** .
3. Remove the brake drum. Refer to **Brake Drum Replacement**.

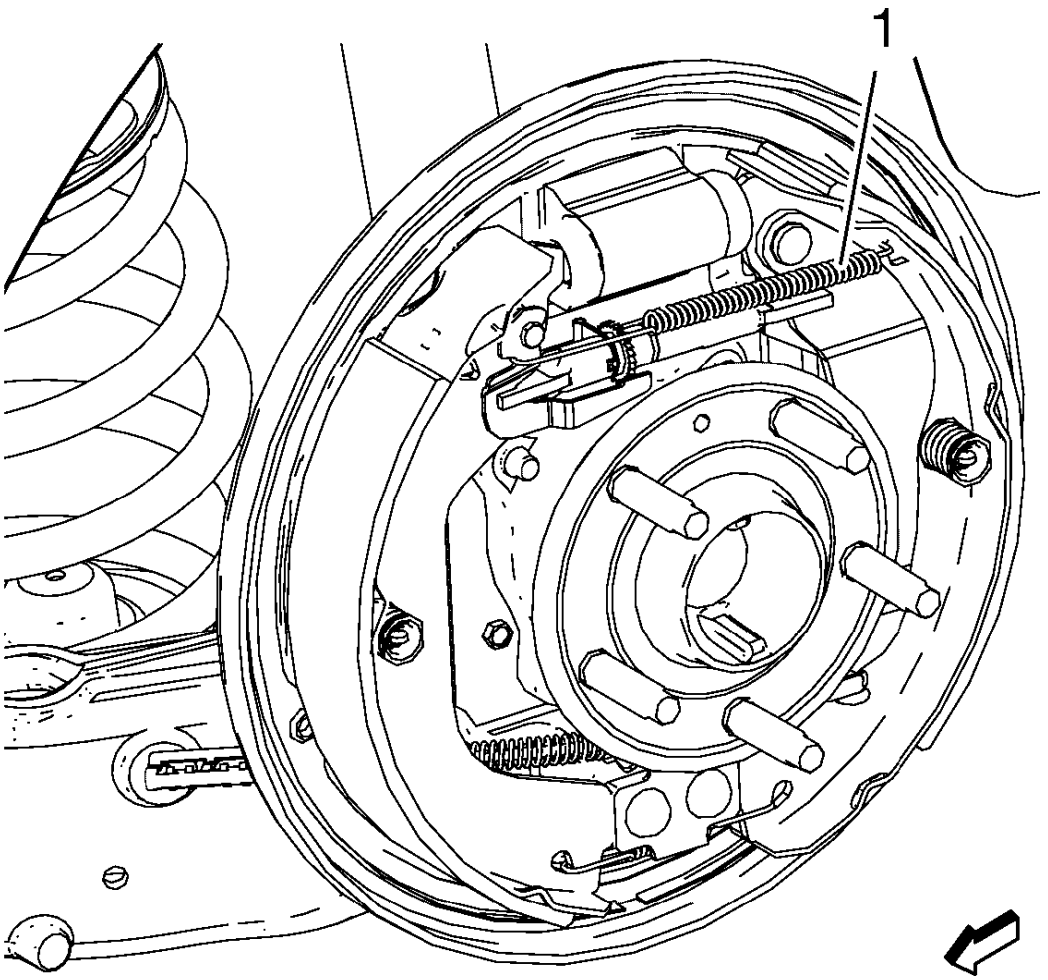

Fig. 10: Identifying Brake Shoe Adjuster Spring
Courtesy of GENERAL MOTORS COMPANY

CAUTION: Do not over stretch the adjuster spring. Damage can occur if the spring is over stretched.

4. Remove the adjuster spring (1). Disengage the adjuster spring hook end from the tab on the adjuster actuator lever, then release the spring from the brake shoe web hole.

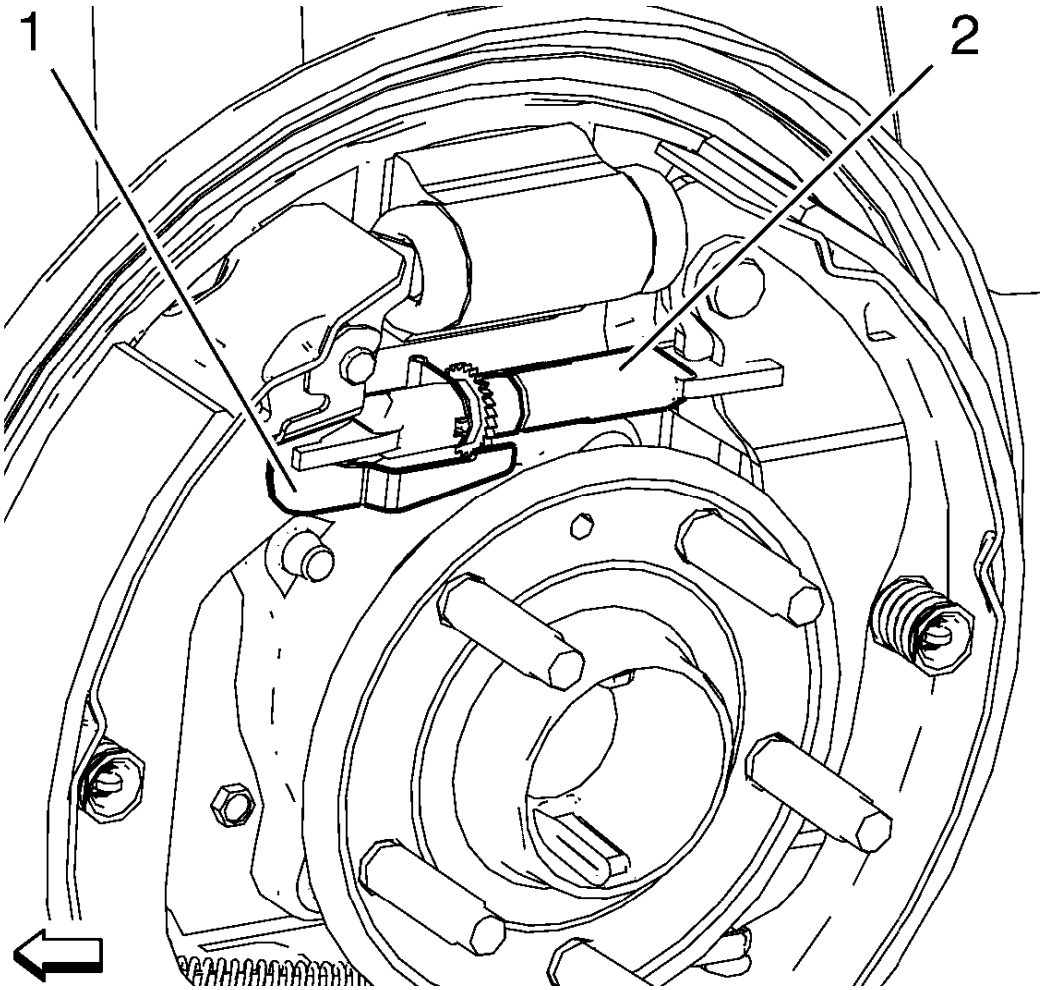

Fig. 11: Drum Brake Adjuster Actuator Lever And Adjuster Assembly
Courtesy of GENERAL MOTORS COMPANY

5. Release the adjuster actuator lever (1) from the adjuster assembly (2).

   Remove the adjuster assembly (2).

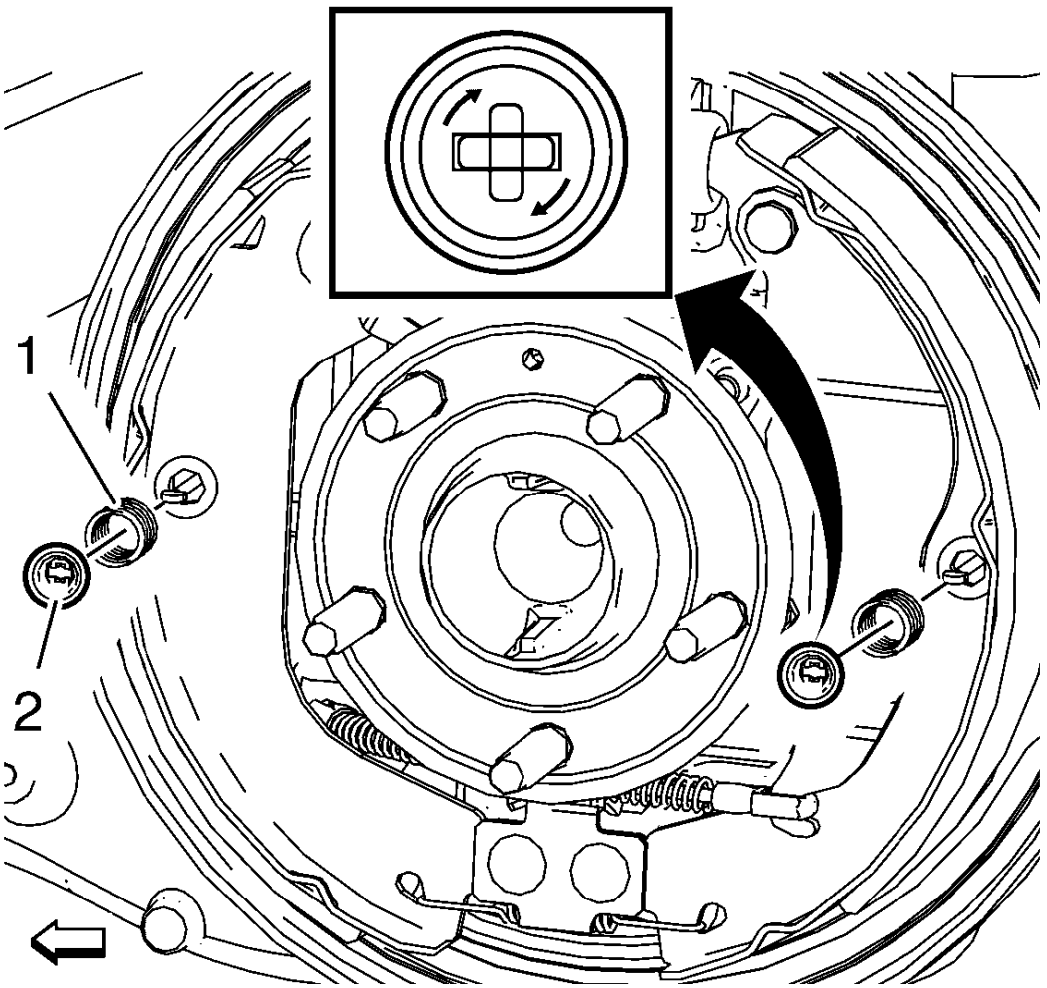

Fig. 12: Brake Shoe Springs
Courtesy of GENERAL MOTORS COMPANY

6. Remove the brake shoe springs (1), using the **CH 346** mounting tool to twist spring caps (2).

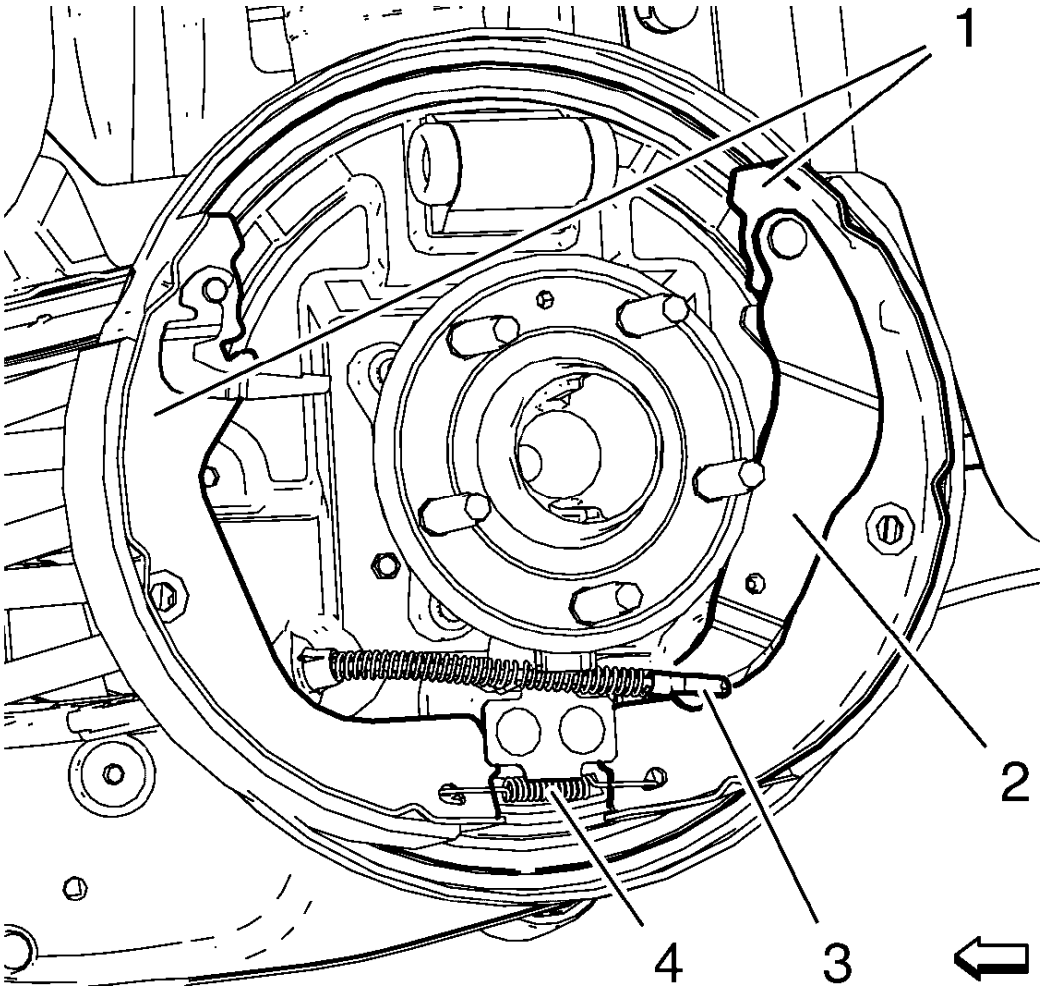

Fig. 13: Drum Brake Components
Courtesy of GENERAL MOTORS COMPANY

7. Remove the brake shoes (1).

   Remove the lower spring (4) from front brake shoe.

8. Remove the parking brake cable (3) from the parking brake lever (2).

Installation Procedure

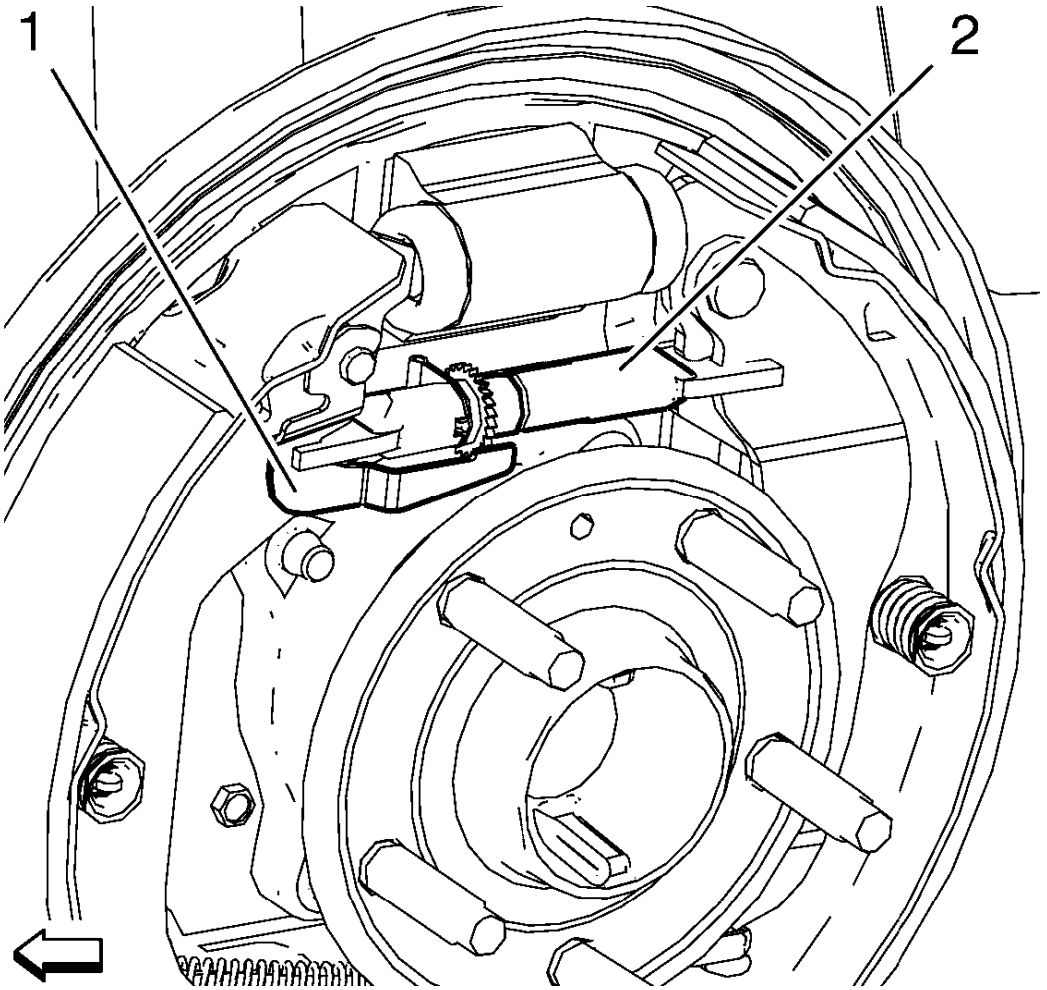

Fig. 14: Drum Brake Adjuster Actuator Lever And Adjuster Assembly
Courtesy of GENERAL MOTORS COMPANY

1. Install the adjuster assembly (2) to the adjuster actuator lever (1).

   Turn in the adjuster as far as possible.

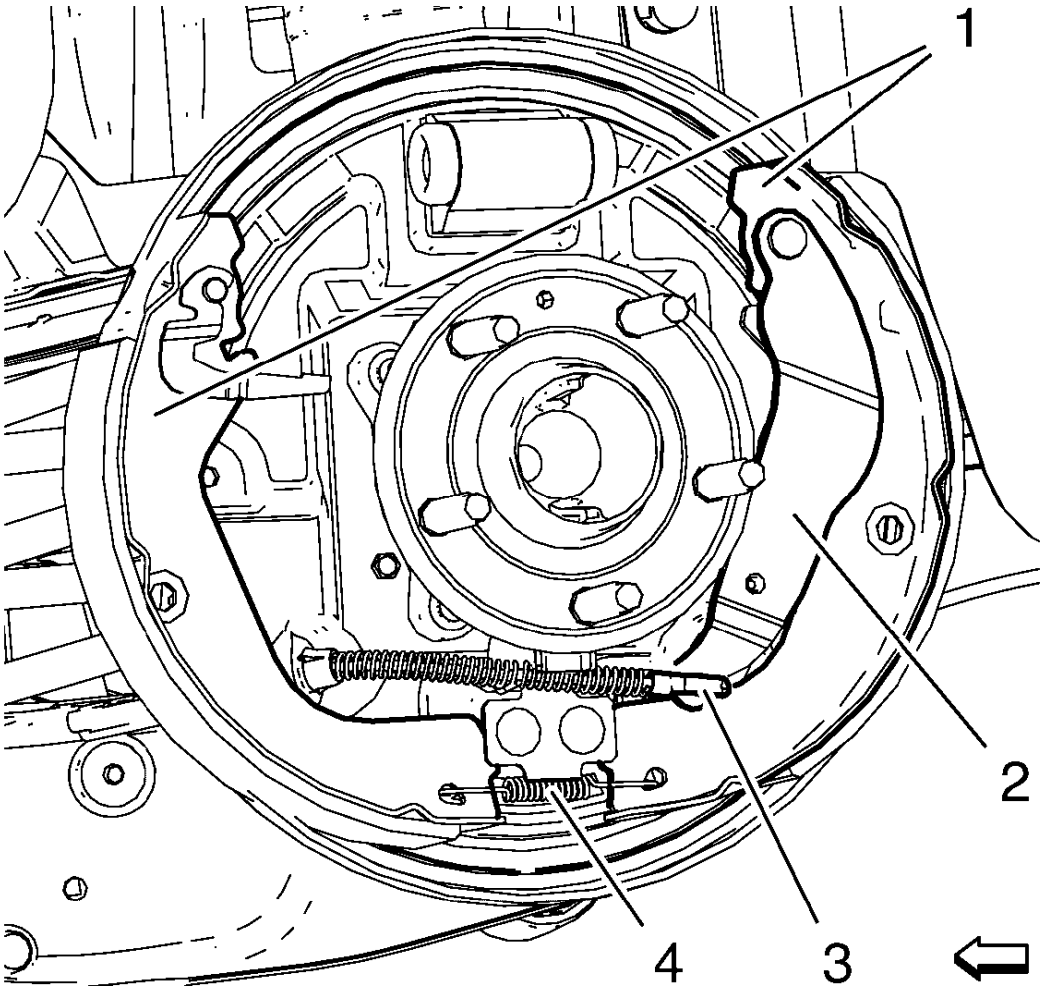

Fig. 15: Drum Brake Components
Courtesy of GENERAL MOTORS COMPANY

2. Install the parking brake cable (3) to the parking brake lever (2).
3. Install the lower spring (4) to front brake shoe.
4. Install the brake shoes (1).
5. Install the brake shoe springs (1), using the **CH 346** mounting tool to twist spring caps.

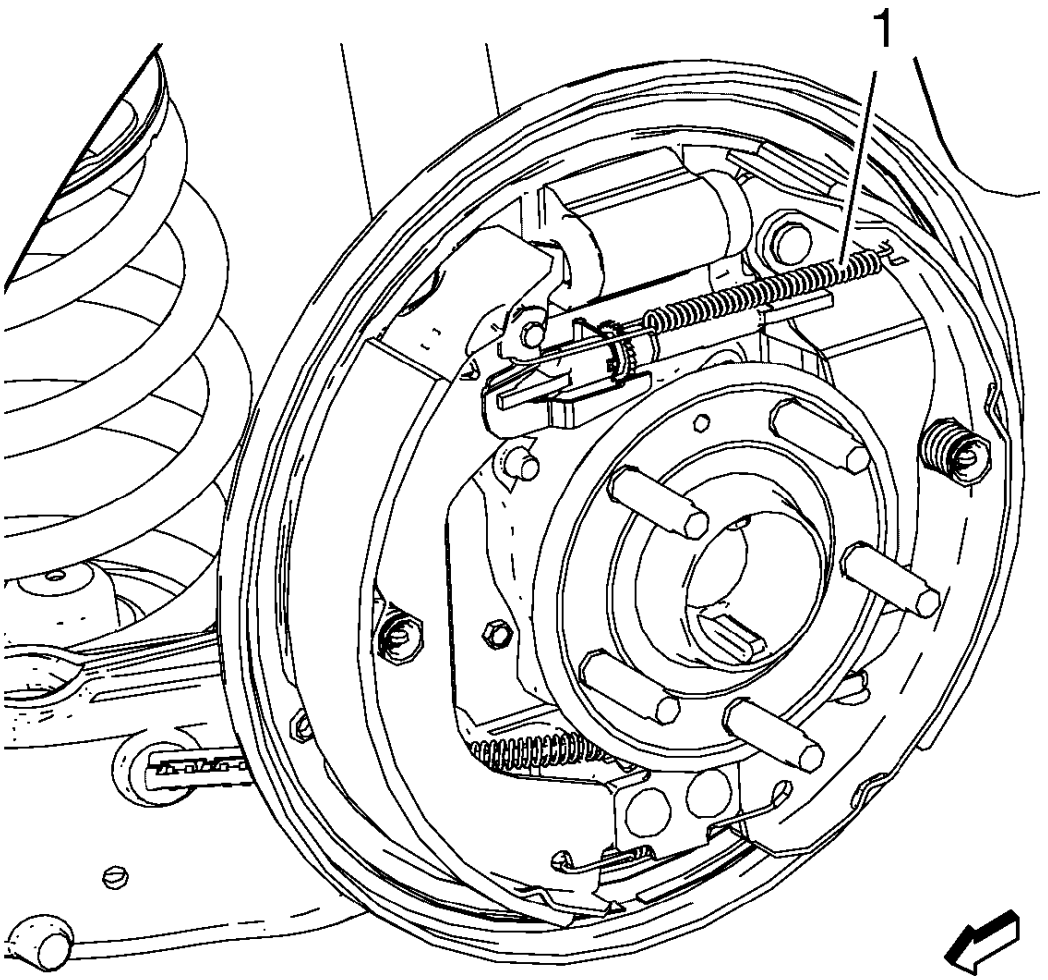

Fig. 16: Identifying Brake Shoe Adjuster Spring
Courtesy of GENERAL MOTORS COMPANY

6. Install the adjuster spring (1). Ensure that the loop end of the spring fully engages the tab on the actuator lever.
7. Install the brake drum. Refer to **Brake Drum Replacement**.
8. Install the tire and wheel assembly. Refer to **Tire and Wheel Removal and Installation**
9. Lower the vehicle.

REAR BRAKE BACKING PLATE REPLACEMENT

Removal Procedure

WARNING: Refer to Brake Dust Warning .

1. Raise and support the vehicle. Refer to **Lifting and Jacking the Vehicle** .
2. Remove the tire and wheel assembly. Refer to **Tire and Wheel Removal and Installation** .
3. Remove the brake drum. Refer to **Brake Drum Replacement**.
4. Remove the brake shoes. Refer to **Brake Shoe Replacement**.
5. Remove the wheel cylinder. Refer to **Rear Brake Cylinder Replacement**.

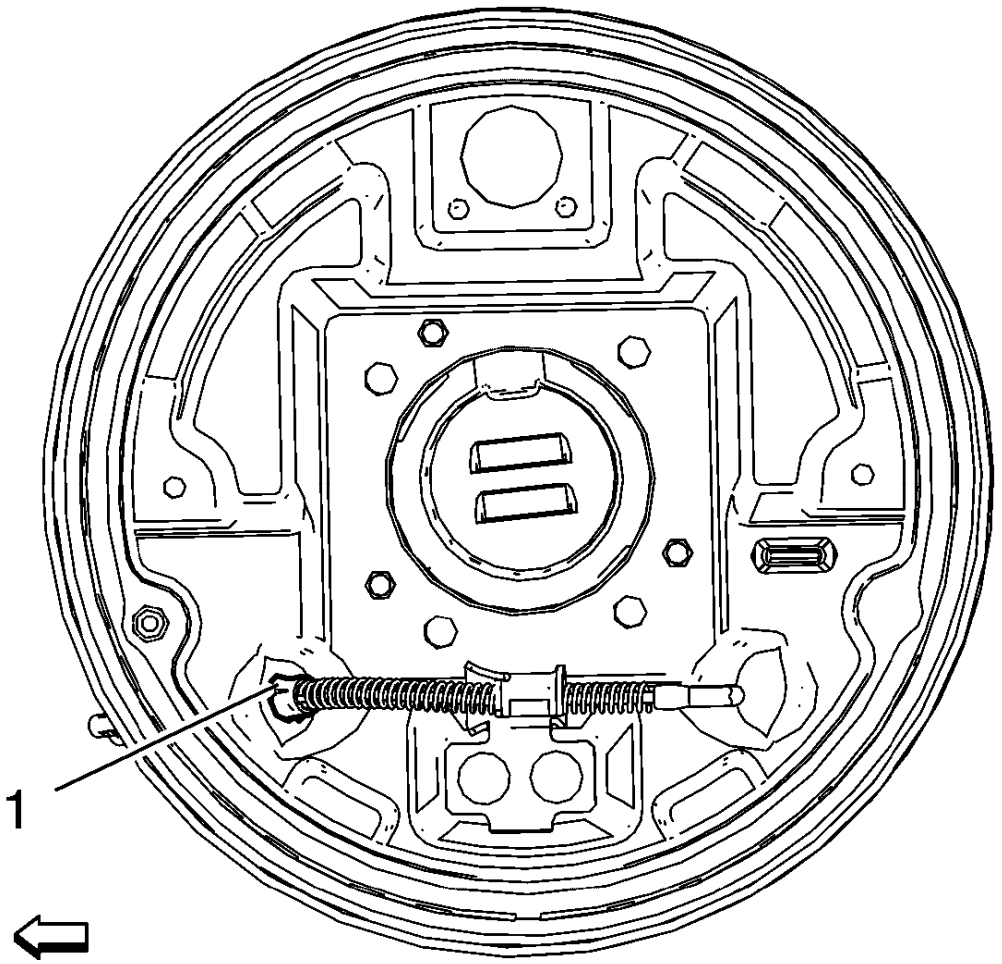

Fig. 17: Park Brake Cable End
Courtesy of GENERAL MOTORS COMPANY

6. Release the rear park brake cable end fitting (1) from the drum brake backing plate.
7. Remove the wheel bearing/hub assembly. Refer to **Rear Wheel Bearing and Hub Replacement (Drum Brake)** , **Rear Wheel Bearing and Hub Replacement (Disc Brake)**

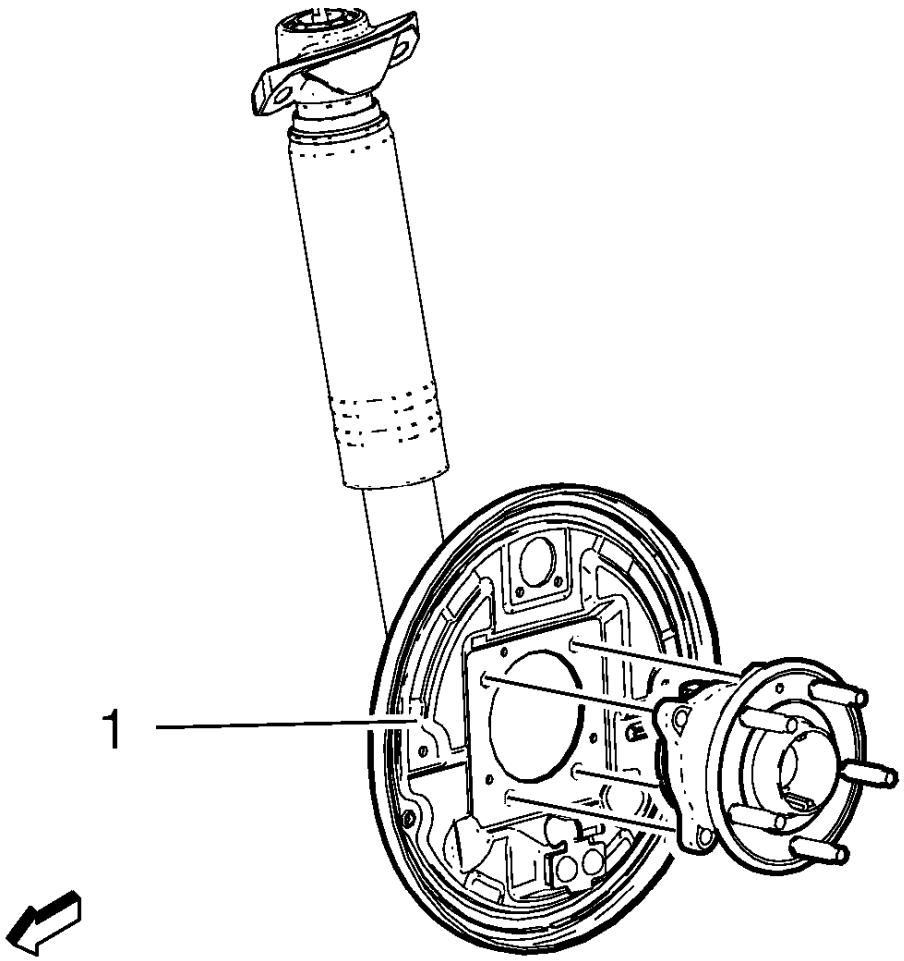

Fig. 18: Brake Backing Plate
Courtesy of GENERAL MOTORS COMPANY

8. Remove the brake backing plate (1).

Installation Procedure

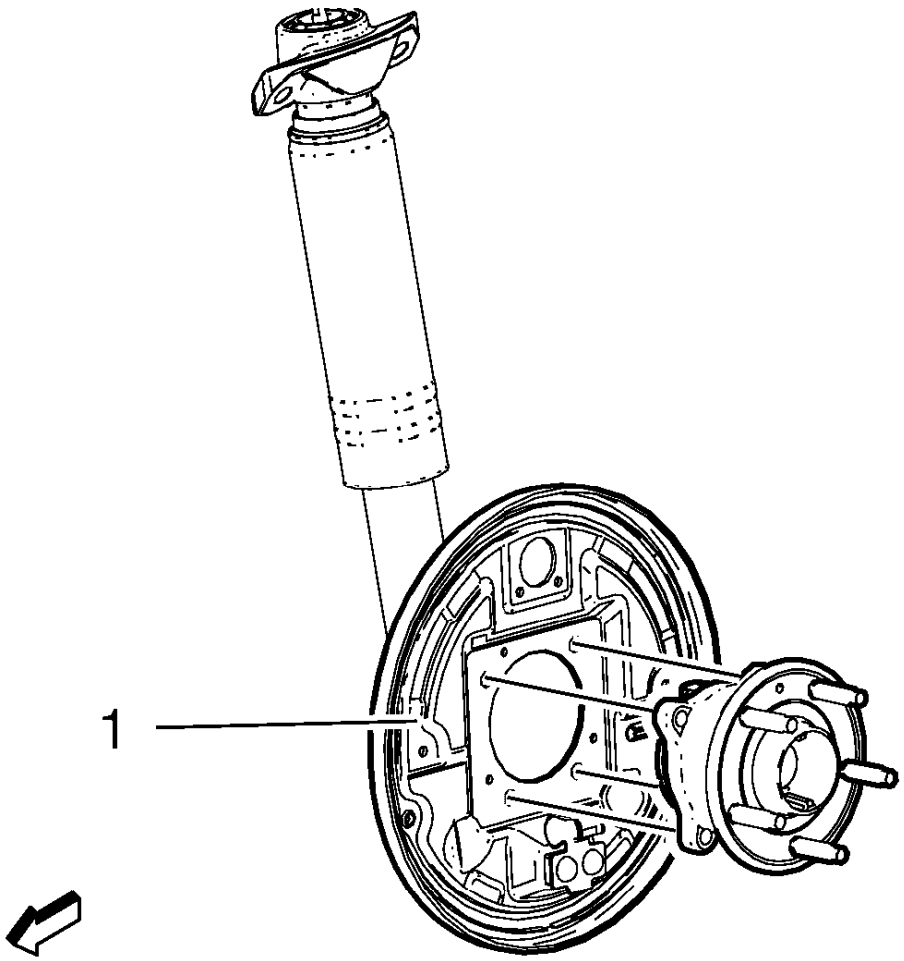

Fig. 19: Brake Backing Plate
Courtesy of GENERAL MOTORS COMPANY

1. Install the brake backing plate (1).
2. Install the wheel bearing/hub assembly. Refer to **Rear Wheel Bearing and Hub Replacement (Drum Brake)** , **Rear Wheel Bearing and Hub Replacement (Disc Brake)**

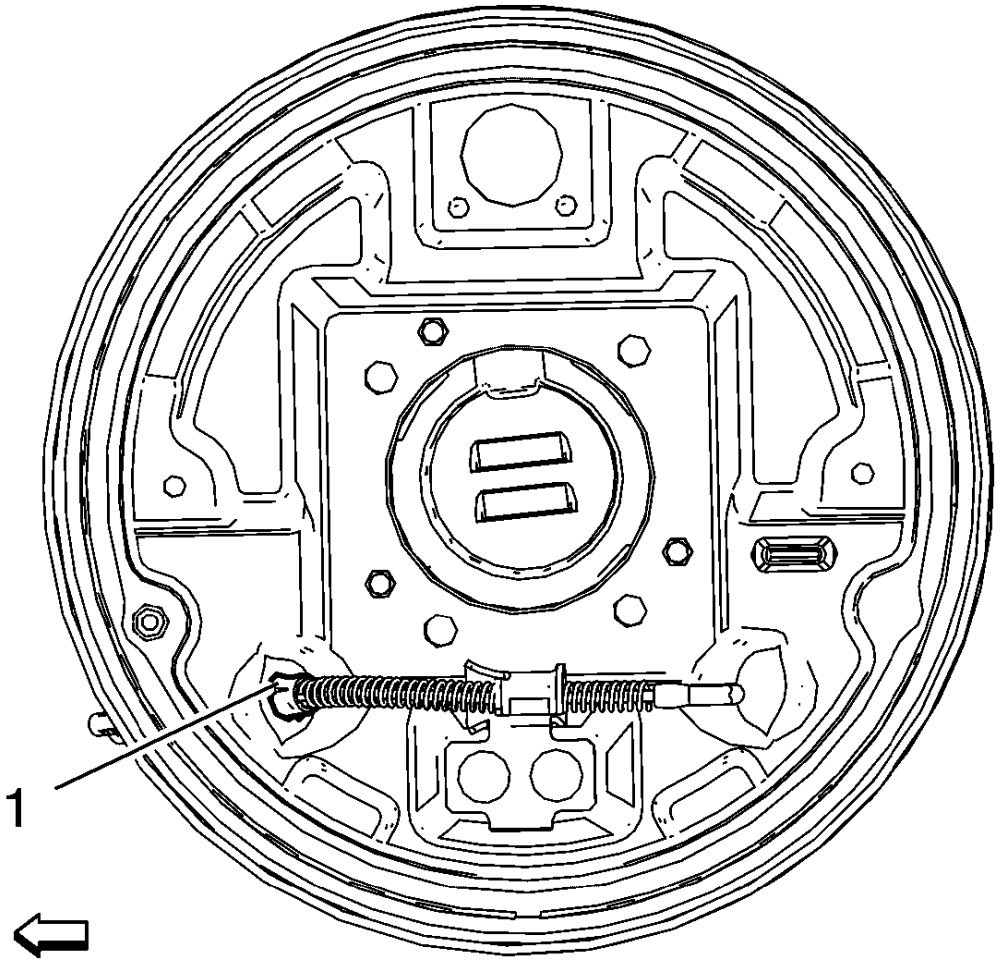

Fig. 20: Park Brake Cable End
Courtesy of GENERAL MOTORS COMPANY

3. Secure the rear park brake cable end fitting (1) to the brake backing plate.
4. Install the wheel cylinder. Refer to **Rear Brake Cylinder Replacement**.
5. Install the brake shoes. Refer to **Brake Shoe Replacement**.
6. Adjust the drum brakes. Refer to **Drum Brake Adjustment**.
7. Install the brake drum. Refer to **Brake Drum Replacement**.
8. Bleed the hydraulic brake system. Refer to **Hydraulic Brake System Bleeding (Manual Bleeding)** , **Hydraulic Brake System Bleeding (Pressure Bleeding)** .
9. Install the tire and wheel assembly. Refer to **Tire and Wheel Removal and Installation** .
10. Lower the vehicle.

DRUM BRAKE HARDWARE REPLACEMENT

Special Tools

CH 346 Mounting Tool

For equivalent regional tool, refer to **Special Tools**.

Removal Procedure

WARNING: Refer to Brake Dust Warning .

1. Raise and support the vehicle. Refer to **Lifting and Jacking the Vehicle** .
2. Remove the tire and wheel assembly. Refer to **Tire and Wheel Removal and Installation** .
3. Remove the brake drum. Refer to **Brake Drum Replacement**.

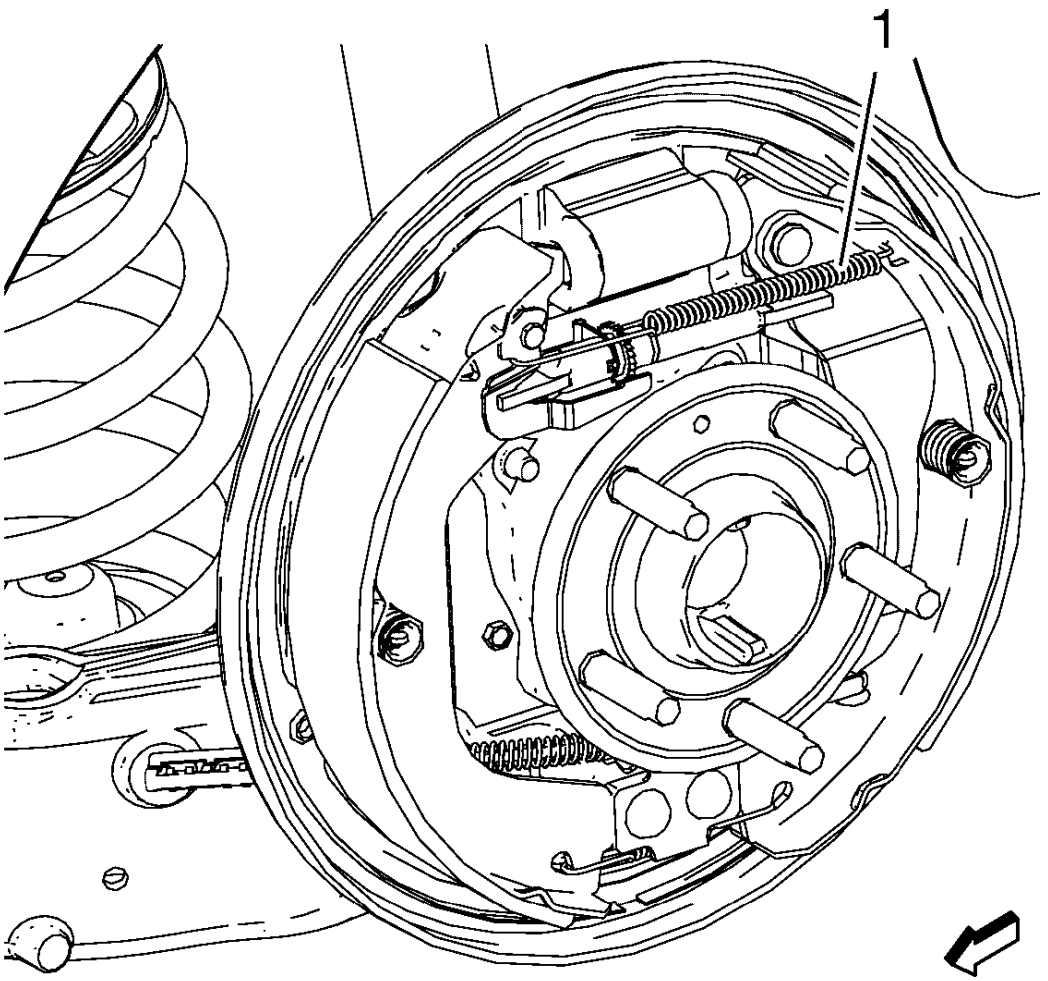

Fig. 21: Identifying Brake Shoe Adjuster Spring
Courtesy of GENERAL MOTORS COMPANY

CAUTION: Do not over stretch the adjuster spring. Damage can occur if the spring is over stretched.

4. Remove the adjuster spring (1). Disengage the adjuster spring hook end from the tab on the adjuster actuator lever, then release the spring from the brake shoe web hole.

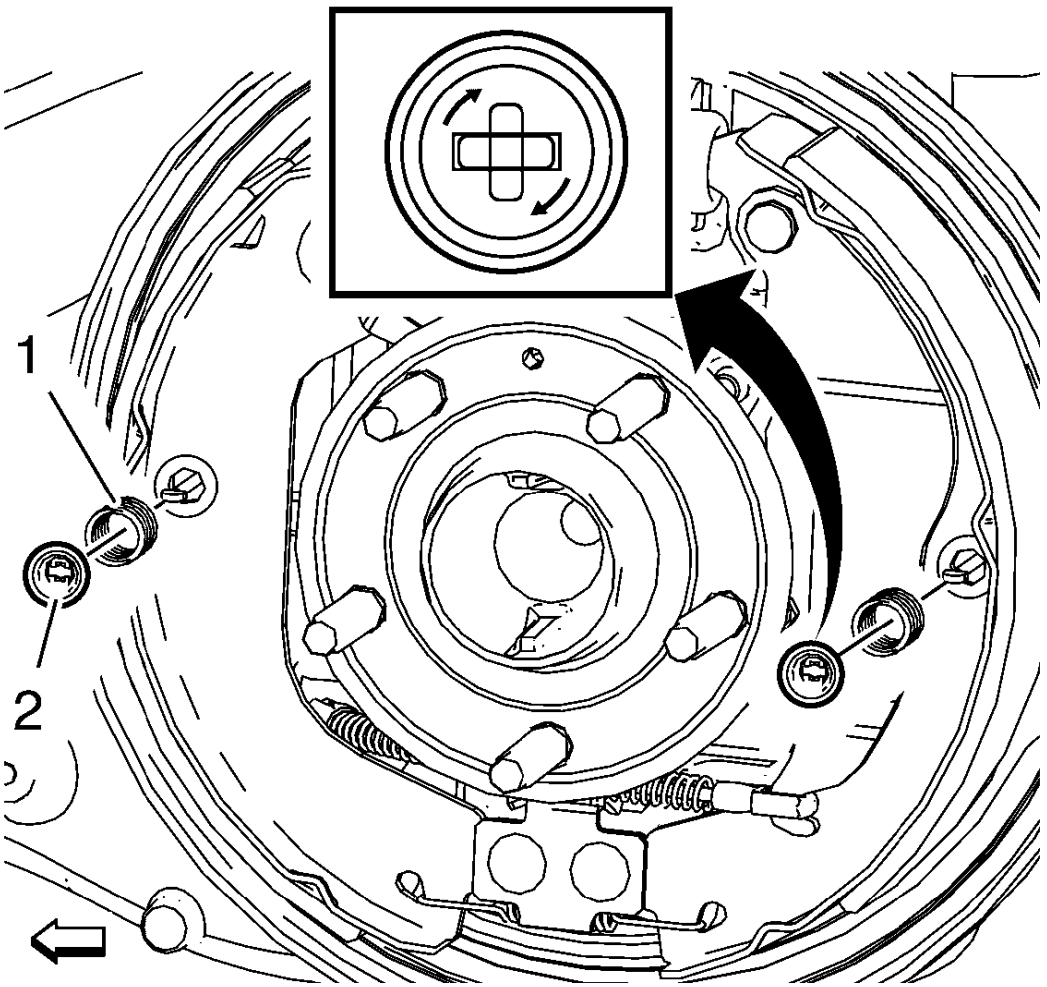

Fig. 22: Brake Shoe Springs
Courtesy of GENERAL MOTORS COMPANY

5. Remove the brake shoe springs (1), using the **CH 346** mounting tool to twist spring caps (2).
6. Remove the lower spring from front brake shoe.

Installation Procedure

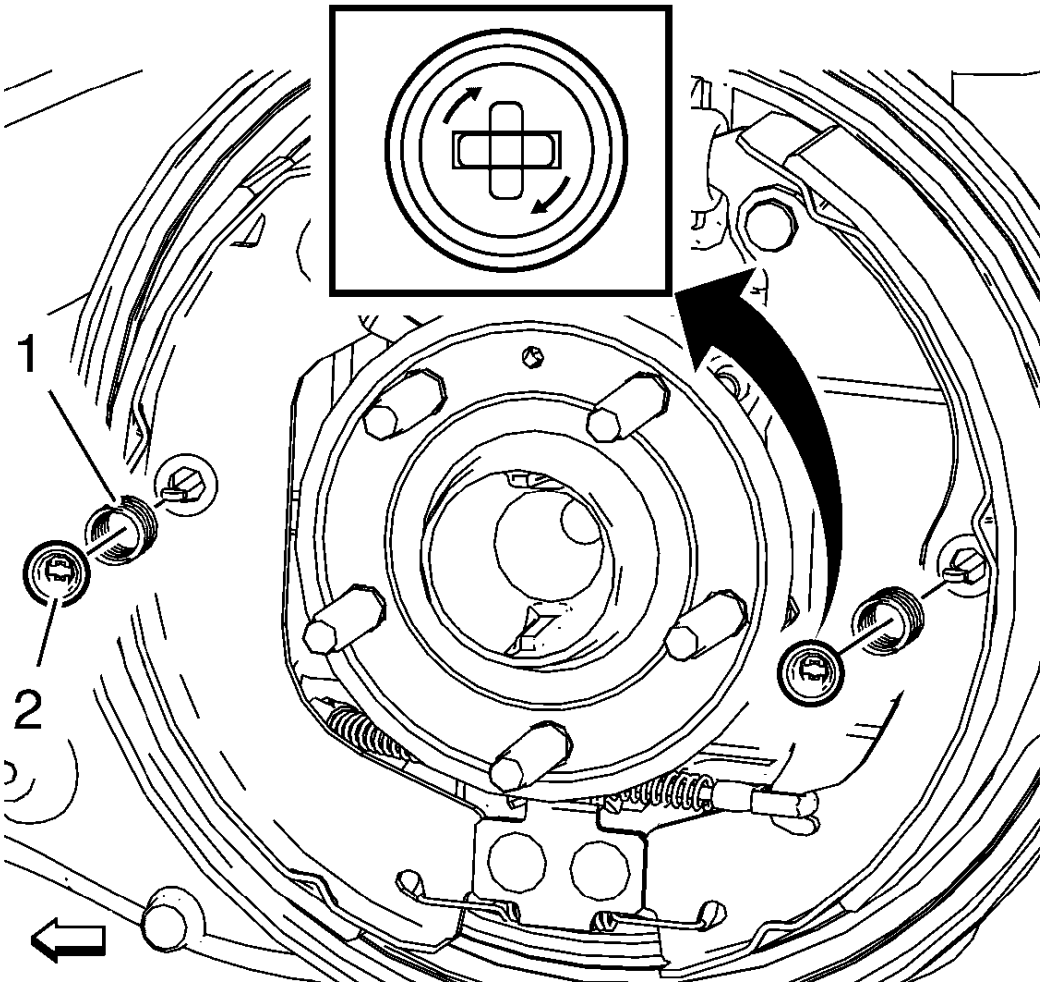

Fig. 23: Brake Shoe Springs
Courtesy of GENERAL MOTORS COMPANY

1. Install the lower spring to front brake shoe.
2. Install the brake shoe springs (1), using the **CH 346** mounting tool to twist spring caps.

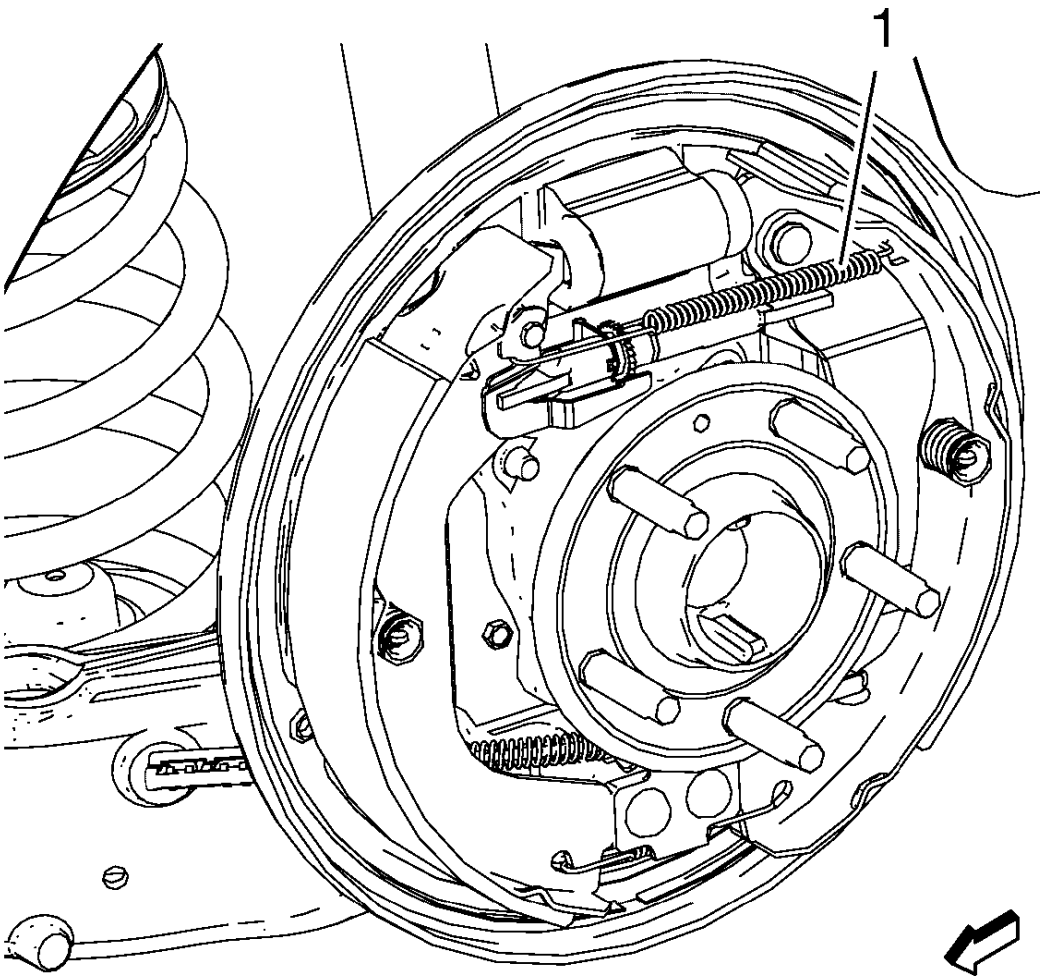

Fig. 24: Identifying Brake Shoe Adjuster Spring
Courtesy of GENERAL MOTORS COMPANY

3. Install the adjuster spring (1). Ensure that the loop end of the spring fully engages the tab on the actuator lever. Ensure that the loop end of the spring fully engages the tab on the actuator lever.
4. Install the brake drum. Refer to **Brake Drum Replacement**.
5. Install the tire and wheel assembly. Refer to **Tire and Wheel Removal and Installation** .
6. Lower the vehicle.

DRUM BRAKE ADJUSTING HARDWARE REPLACEMENT

Removal Procedure

WARNING: Refer to Brake Dust Warning .

1. Raise and support the vehicle. Refer to **Lifting and Jacking the Vehicle** .
2. Remove the tire and wheel assembly. Refer to **Tire and Wheel Removal and Installation** .
3. Remove the brake drum. Refer to **Brake Drum Replacement**.

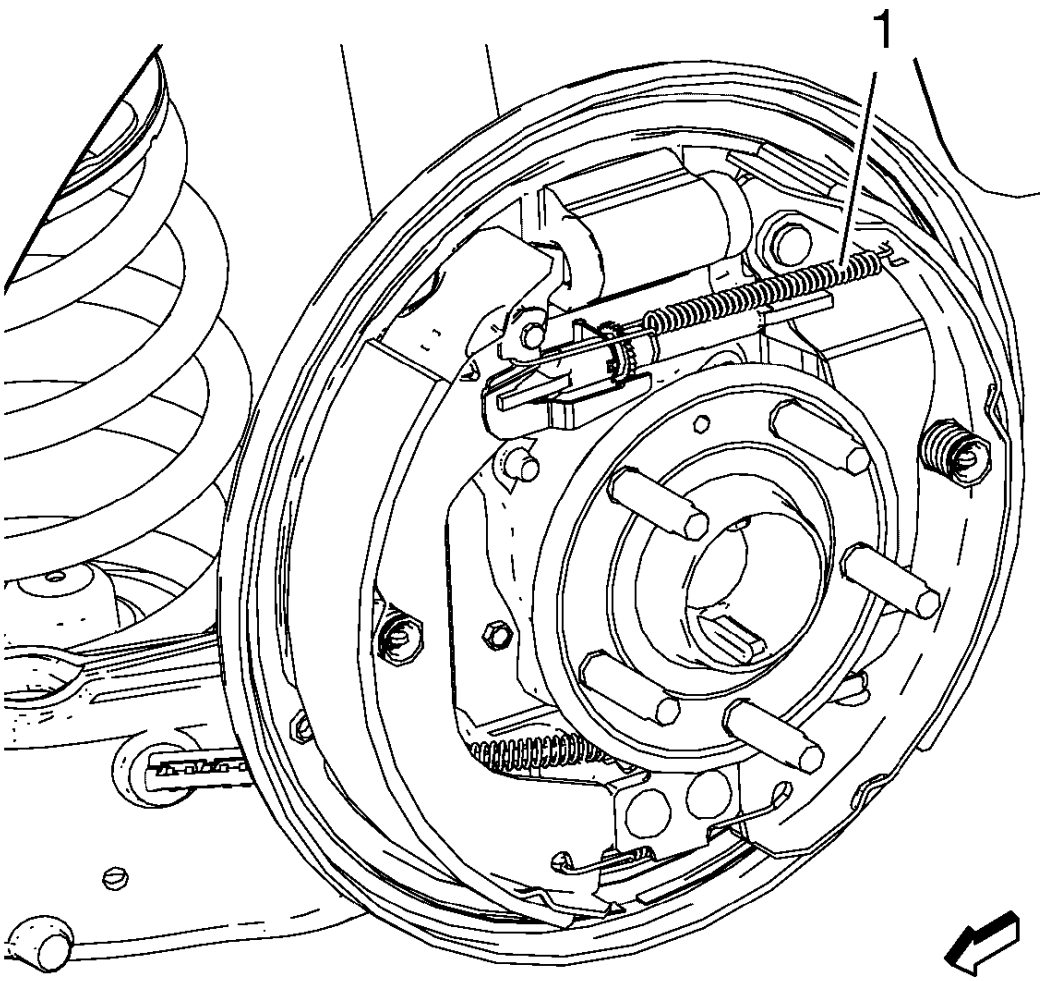

Fig. 25: Identifying Brake Shoe Adjuster Spring
Courtesy of GENERAL MOTORS COMPANY

CAUTION: Do not over stretch the adjuster spring. Damage can occur if the spring is over stretched.

4. Remove the adjuster spring (1). Disengage the adjuster spring hook end from the tab on the adjuster actuator lever, then release the spring from the brake shoe web hole.

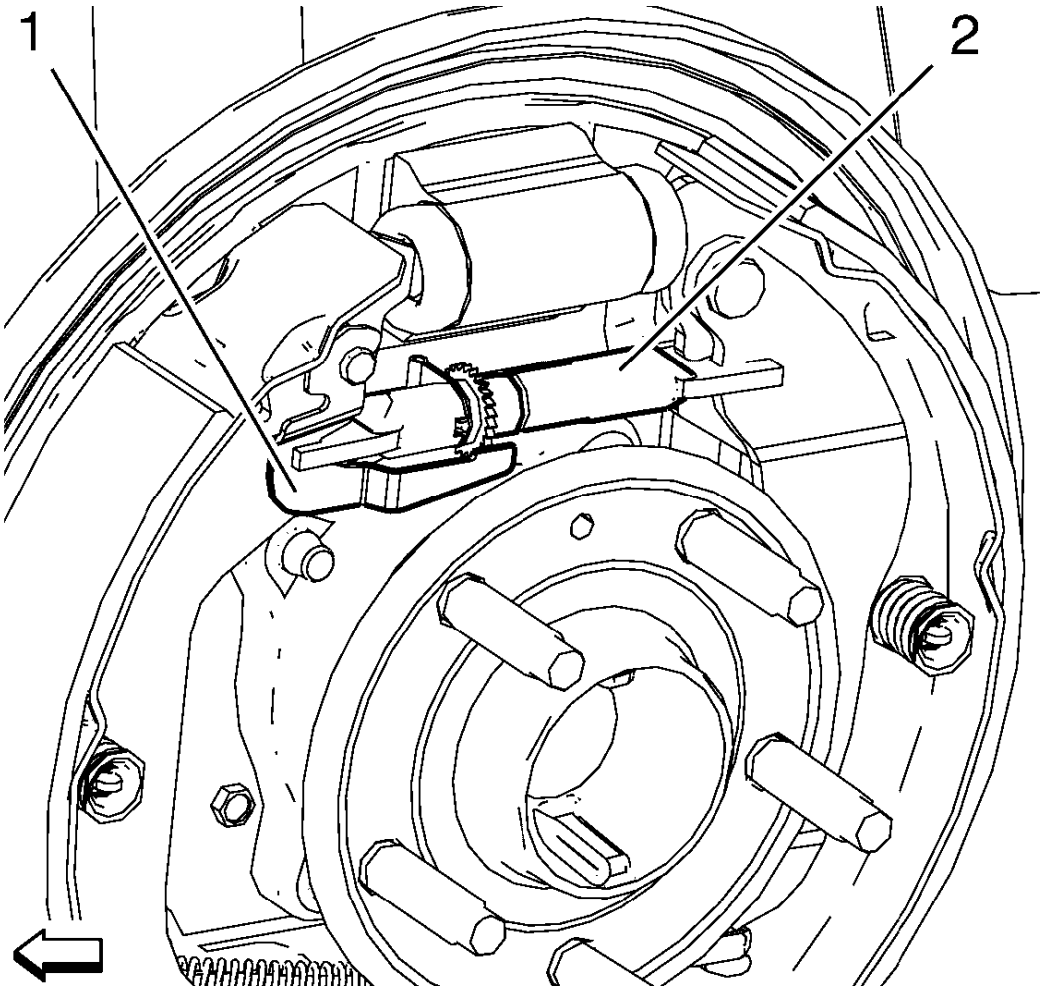

Fig. 26: Drum Brake Adjuster Actuator Lever And Adjuster Assembly
Courtesy of GENERAL MOTORS COMPANY

5. Release the adjuster actuator lever (1) from the adjuster assembly (2).

   Remove the adjuster assembly (2).

6. Remove the adjuster assembly (2) and inspect for the following conditions:
   - Binding or seized threaded adjuster assembly.
   - Damaged or missing adjuster screw teeth.
7. Replace the adjuster assembly if any of the conditions listed are present.

Installation Procedure

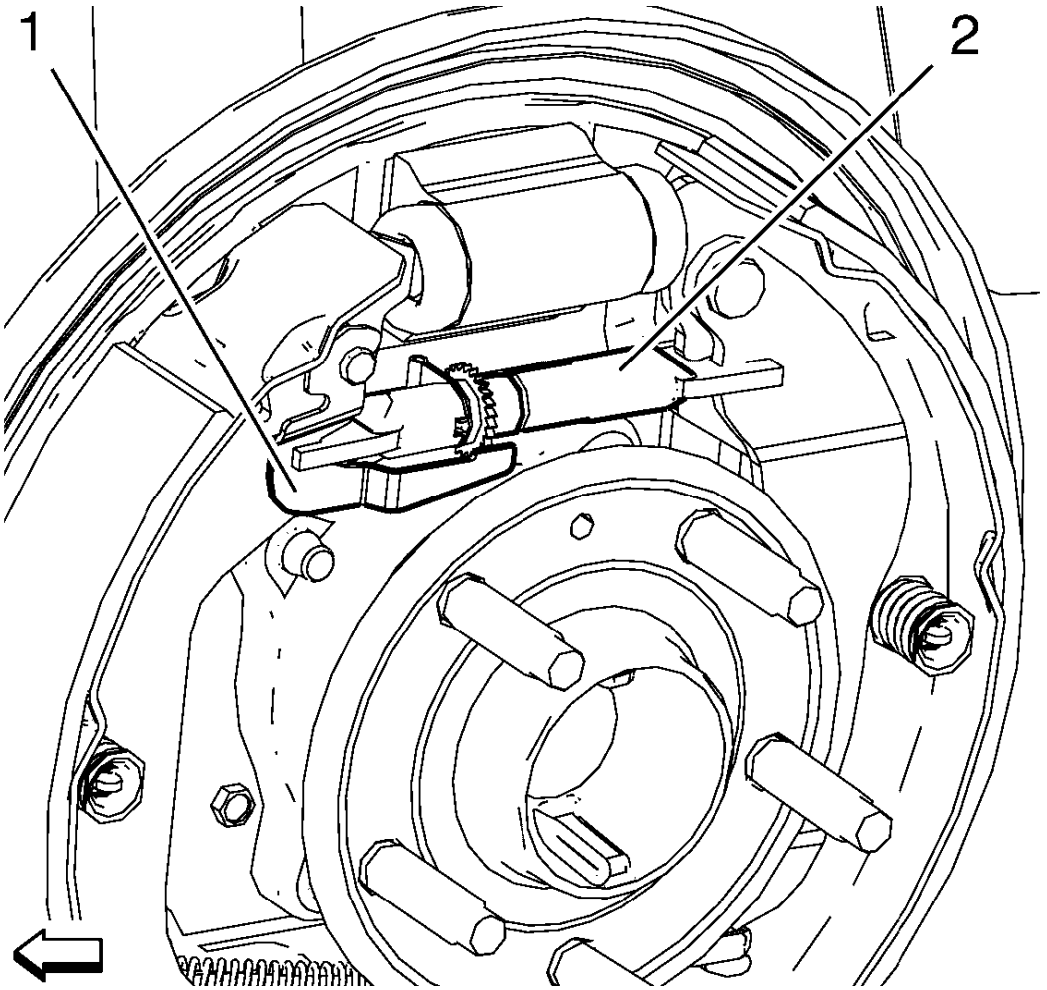

Fig. 27: Drum Brake Adjuster Actuator Lever And Adjuster Assembly
Courtesy of GENERAL MOTORS COMPANY

1. Install the adjuster assembly (2) to the adjuster actuator lever (1).

   Turn in the adjuster as far as possible.

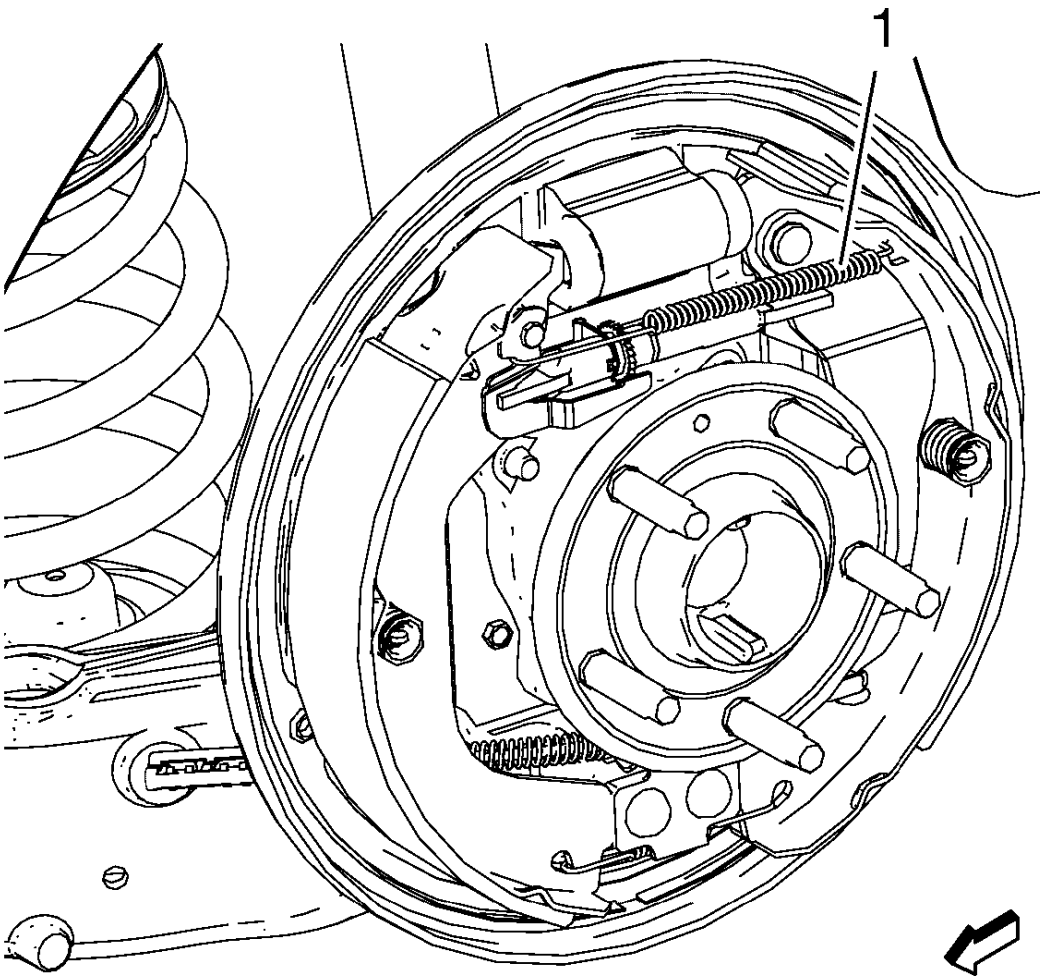

Fig. 28: Identifying Brake Shoe Adjuster Spring
Courtesy of GENERAL MOTORS COMPANY

2. Install the adjuster spring (1). Ensure that the loop end of the spring fully engages the tab on the actuator lever.
3. Install the brake drum. Refer to **Brake Drum Replacement**.
4. Install the tire and wheel assembly. Refer to **Tire and Wheel Removal and Installation** .
5. Lower the vehicle.

REAR BRAKE CYLINDER REPLACEMENT

Removal Procedure

WARNING: Refer to Brake Dust Warning .

WARNING: Refer to Brake Fluid Irritant Warning .

CAUTION: Refer to Brake Fluid Effects on Paint and Electrical Components Caution .

1. Raise and support the vehicle. Refer to **Lifting and Jacking the Vehicle** .
2. Remove the tire and wheel assembly. Refer to **Tire and Wheel Removal and Installation** .
3. Remove the brake drum. Refer to **Brake Drum Replacement**.
4. Remove the brake shoes. Refer to **Brake Shoe Replacement**.
5. Clean any debris and contaminants from around the wheel cylinder.

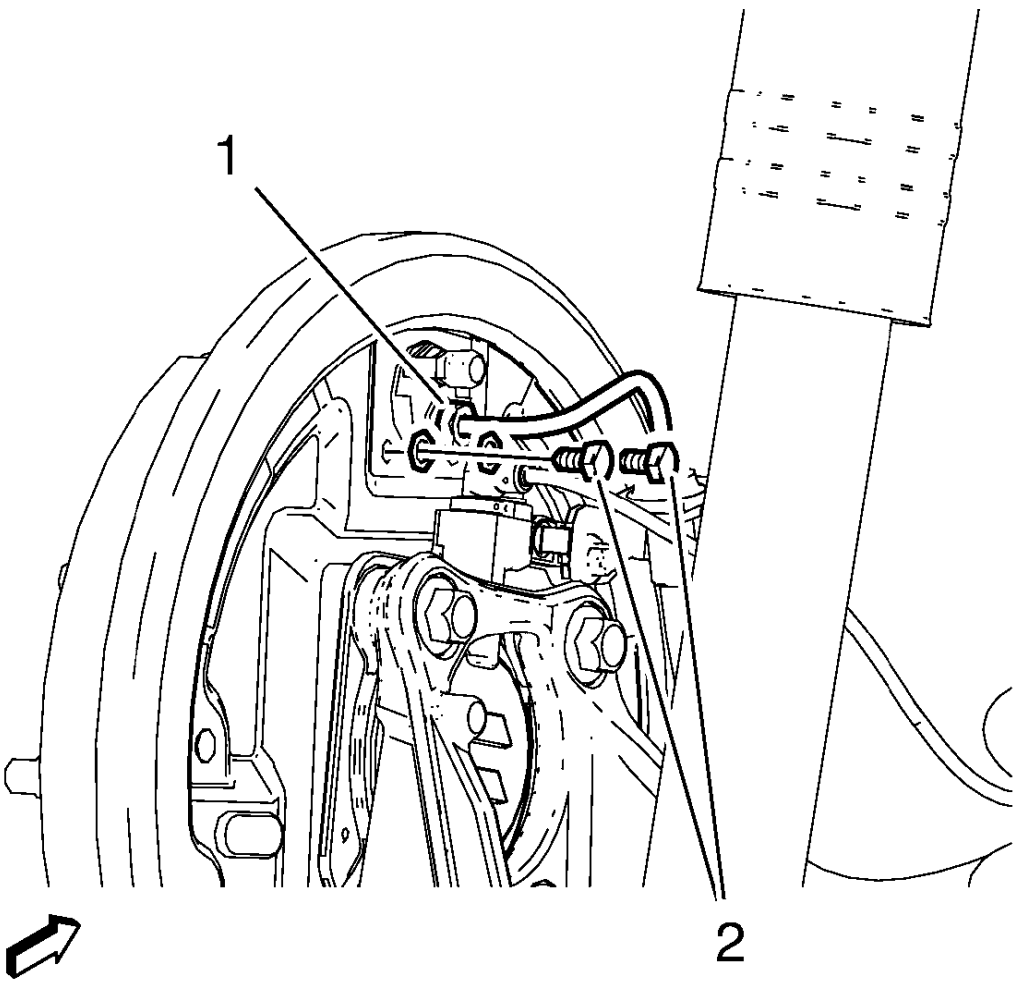

Fig. 29: Brake Pipe Fitting And Wheel Cylinder Mounting Bolts
Courtesy of GENERAL MOTORS COMPANY

6. Disconnect the brake pipe fitting (1) from the wheel cylinder. Cap the exposed brake pipe end to prevent fluid loss.
7. Remove the 2 wheel cylinder mounting bolts (2).

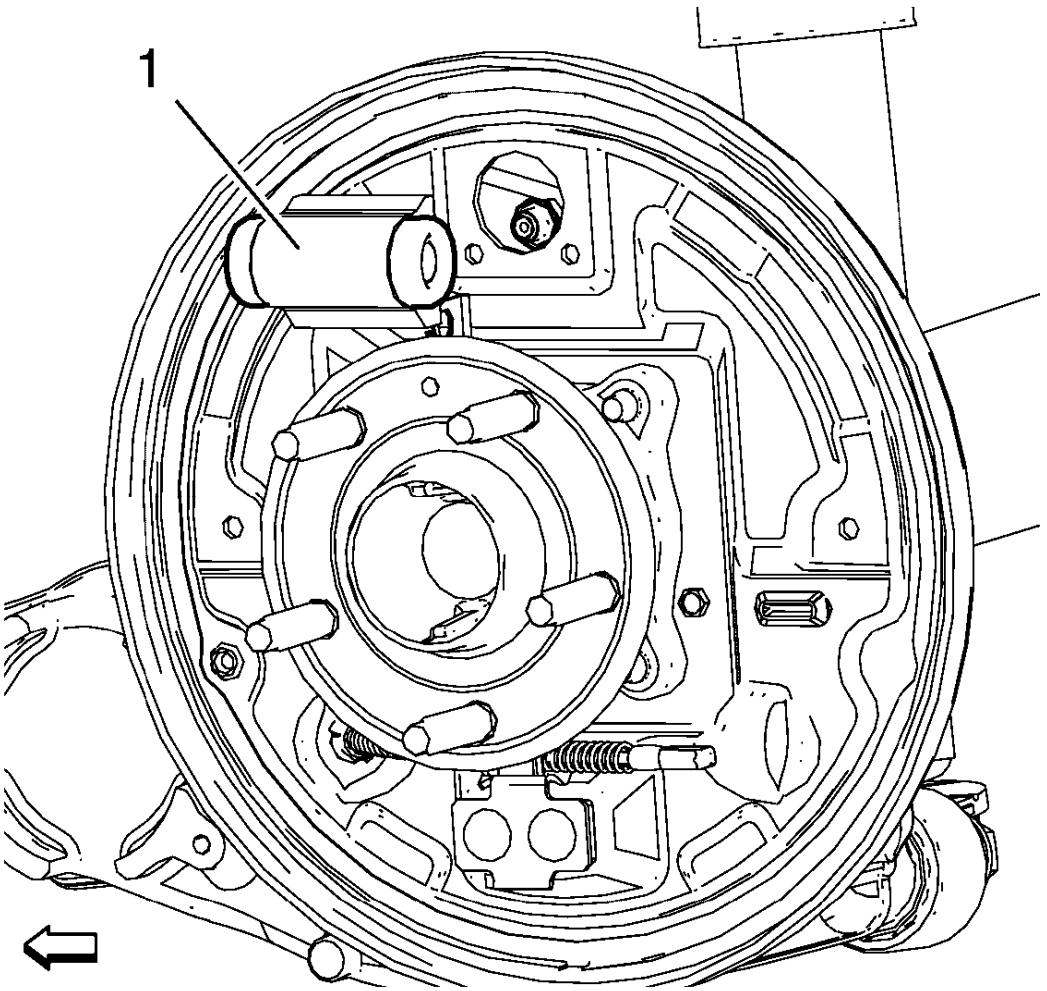

Fig. 30: Wheel Cylinder
Courtesy of GENERAL MOTORS COMPANY

8. Remove the wheel cylinder (1) from the backing plate.

Installation Procedure

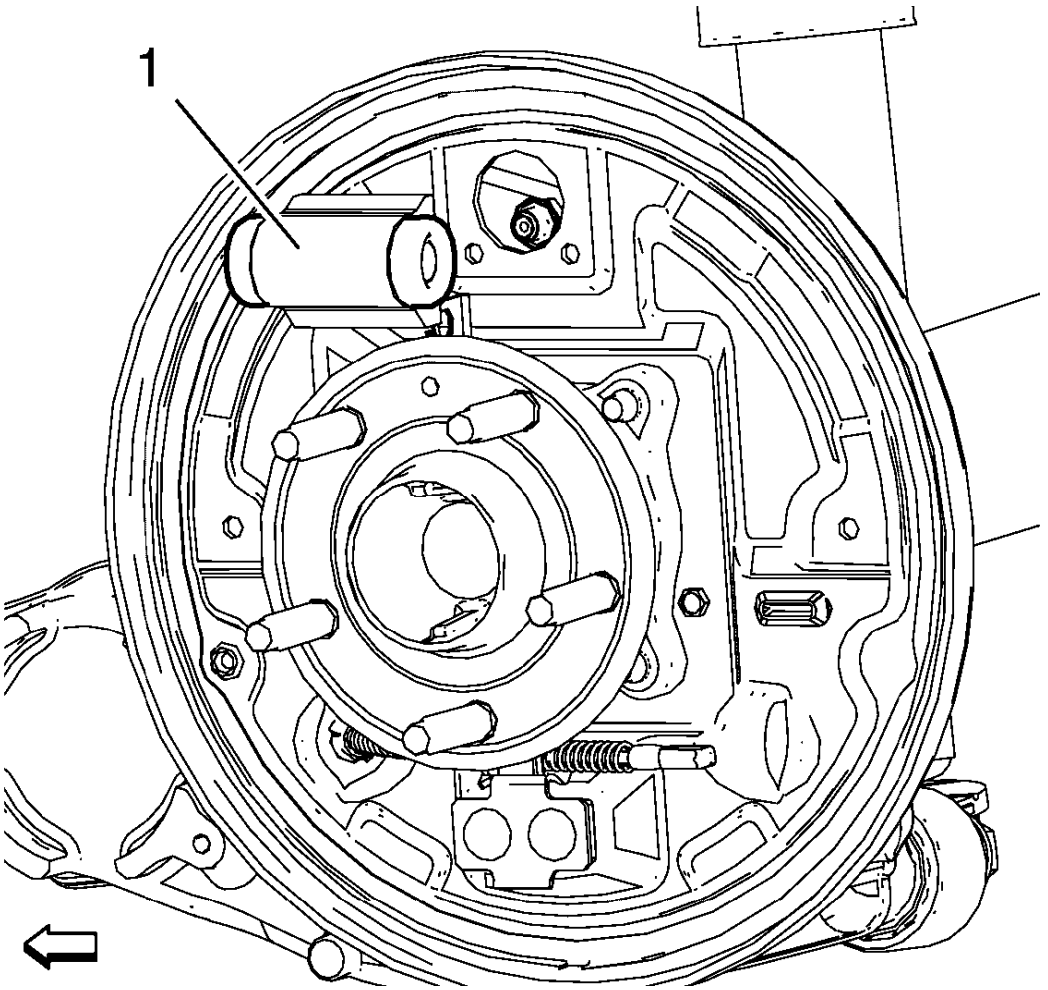

Fig. 31: Wheel Cylinder
Courtesy of GENERAL MOTORS COMPANY

1. Install the wheel cylinder (1) to backing plate.

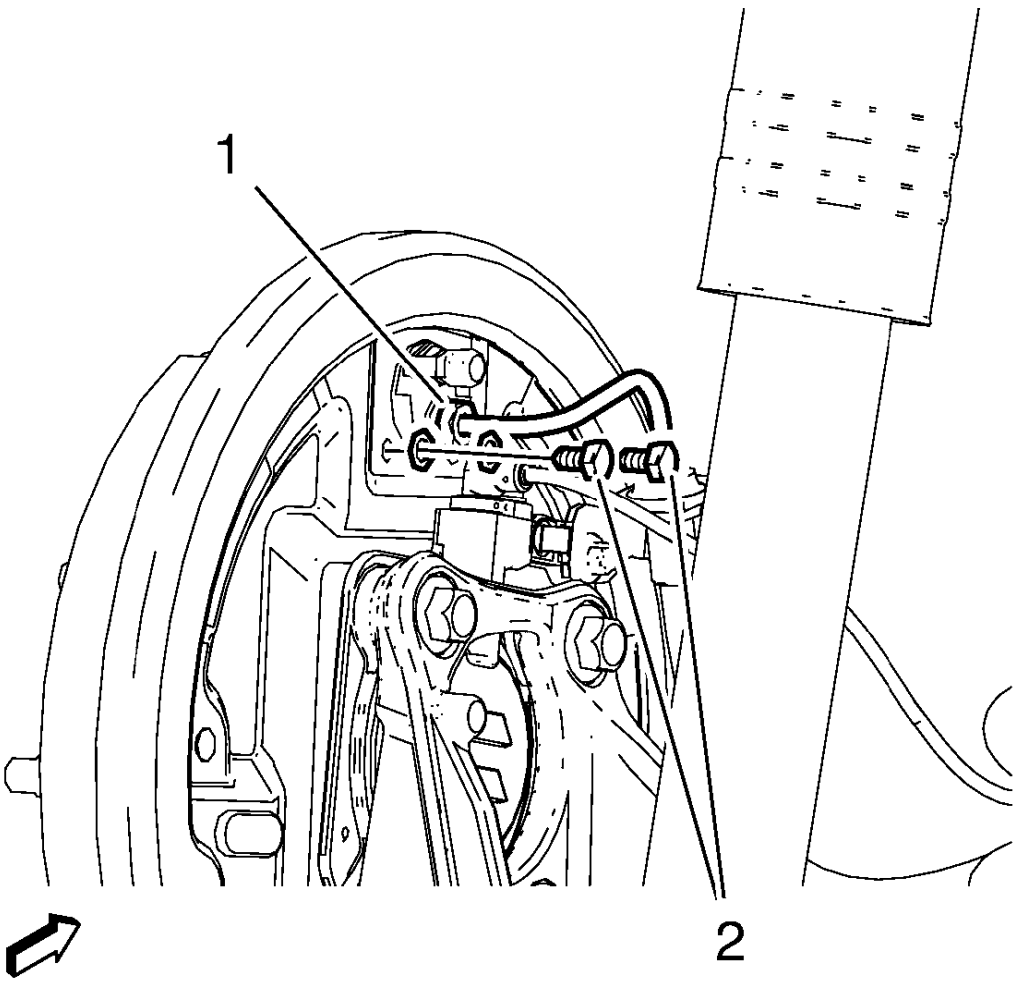

Fig. 32: Brake Pipe Fitting And Wheel Cylinder Mounting Bolts
Courtesy of GENERAL MOTORS COMPANY

CAUTION: Refer to Fastener Caution .

2. Install wheel cylinder mounting bolts (2) and tighten to 10 N.m (89 lb in).
3. Connect the brake pipe fitting (1) at the wheel cylinder and tighten to 18 N.m (14 lb ft).
4. Install the brake shoes. Refer to **Brake Shoe Replacement**.
5. Install the brake drum. Refer to **Brake Drum Replacement**.
6. Bleed the hydraulic brake system. Refer to **Hydraulic Brake System Bleeding (Manual Bleeding)** , **Hydraulic Brake System Bleeding (Pressure Bleeding)** .
7. Install the tire and wheel assembly. Refer to **Tire and Wheel Removal and Installation** .
8. Lower the vehicle.

DRUM BRAKE ADJUSTMENT

Special Tools

CH-21177-A Drum to Brake Shoe Clearance Gauge

For equivalent regional tools, refer to **Special Tools**

WARNING: Refer to Brake Dust Warning .

1. Ensure the park brake lever is in the fully released position.
2. Raise and support the vehicle. Refer to **Lifting and Jacking the Vehicle**
3. Remove the tire and wheel assembly. Refer to **Tire and Wheel Removal and Installation** .
4. Remove the brake drum. Refer to **Brake Drum Replacement**.

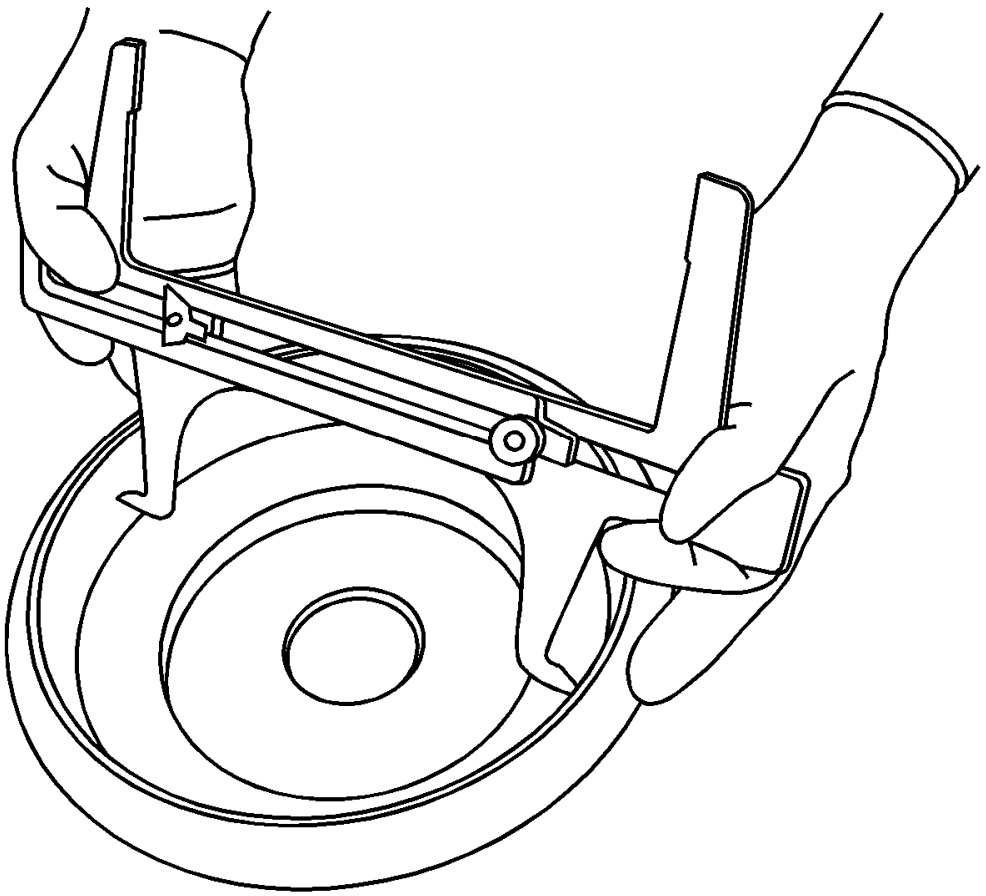

Fig. 33: Installing J 21177-A Inside Brake Drum Diameter

Courtesy of GENERAL MOTORS COMPANY

5. Position the **CH-21177-A** gauge to the widest point of the brake drum inside diameter.
6. Firmly hand tighten the set screw on the **CH-21177-A** gauge.

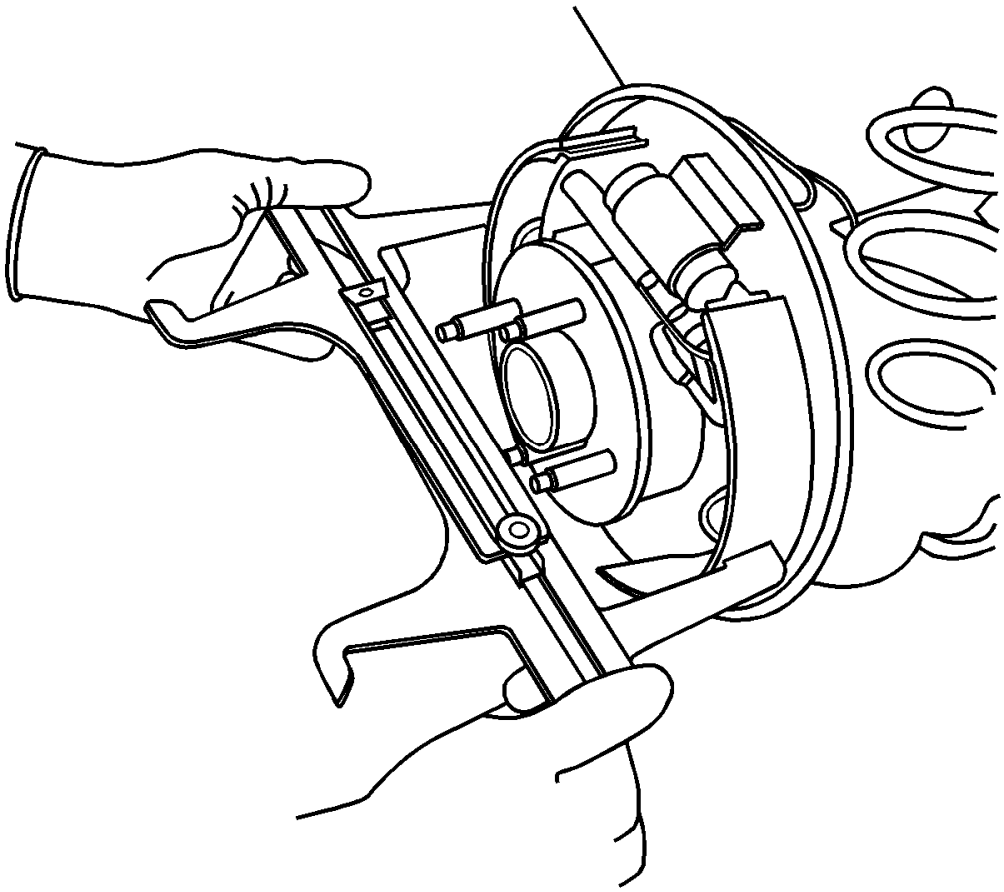

Fig. 34: Positioning J 21177-A Over Brake Shoe Assembly
Courtesy of GENERAL MOTORS COMPANY

7. Remove the **CH-21177-A** gauge from the brake drum and position it over the corresponding brake shoe assembly at its widest point.
8. While holding the **CH-21177-A** gauge in position, insert a proper feeler gauge between one side of the **CH-21177-A** gauge, and the corresponding brake shoe lining.
9. Rotate the brake shoe adjuster screw until the brake shoe linings contact the **CH-21177-A** gauge and the feeler gauge.

Specification

Brake shoe lining-to-drum clearance: 0.4-0.9 mm (0.016-0.035 in)

10. Repeat the above steps for the opposite brake drum and brake shoe assembly.
11. Install the brake drum. Refer to **Brake Drum Replacement**.
12. Install the tire and wheel assembly. Refer to **Tire and Wheel Removal and Installation**
13. Lower vehicle.
14. Apply the brake pedal at least 10 times. Verify the clicking sound of the adjuster assembly is not audible from either brake drum.
15. Adjust the park brake. Refer to **Parking Brake Adjustment (Mechanical Parking Brake)** .
16. Lower the vehicle.

DESCRIPTION AND OPERATION

DRUM BRAKE SYSTEM DESCRIPTION AND OPERATION

System Component Description

The drum brake system consists of the following:

Drum Brake Shoes

Applies mechanical output force, from hydraulic brake wheel cylinders, to friction surface of brake drums.

Brake Drums

Uses mechanical output force applied to friction surface from drum brake shoes to slow speed of tire and wheel assembly rotation.

Drum Brake Hardware

Secures drum brake shoes firmly in proper relationship to hydraulic brake wheel cylinders. Enables sliding motion of brake shoes needed to expand toward friction surface of drums when mechanical output force is applied. Provides return of brake shoes when mechanical output force is relieved.

Drum Brake Adjusting Hardware

Provides automatic adjustment of brake shoes to brake drum friction surface whenever brake apply occurs.

System Operation

Mechanical output force is applied from the hydraulic brake wheel cylinder pistons to the top of the drum brake shoes. The output force is then distributed between the primary and secondary brake shoes as the shoes expand toward the friction surface of the brake drums. The brake shoes apply the output force to the friction surface of the brake drums, which slows the rotation of the tire and wheel assemblies. The proper function of both the drum brake hardware and adjusting hardware is essential to the proper distribution of braking force.

SPECIAL TOOLS AND EQUIPMENT

SPECIAL TOOLS

Illustration	Tool Number/ Description
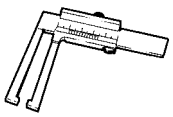	CH-230-A MKM-230-A J-21177-A Disc Gauge
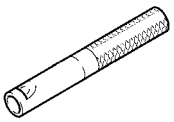	CH-346 KM-346 Mounting Tool
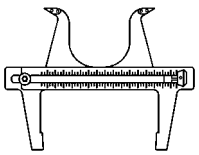	CH-21177 J-21177-A Drum to Brake Shoe Clearance Gauge
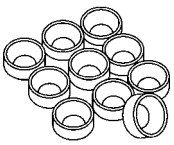	CH-41013 J-41013 Rotor Resurfacing Kit
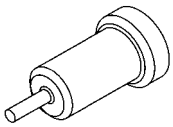	CH-42450-A J-42450-A Wheel Hub Resurfacing Kit
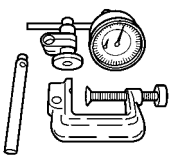	GE-572 MKM-572 GE-7872 J-8001 Dial Indicator

2013 BRAKES

Hydraulic Brakes - Cruze

SPECIFICATIONS

FASTENER TIGHTENING SPECIFICATIONS

Fastener Tightening Specifications

Application	Specification	
	Metric	English
Brake Booster Bolts	19 Y	14 lb ft
Brake Hose-To-Brake Caliper Bolt	40 Y	30 lb ft
Brake Master Cylinder Nut	50 N.m (1)	37 lb ft (1)
Brake Master Cylinder Reservoir Bolt	2.5 N.m	22 lb in
Brake Pedal Bracket Bolt	20 N.m	15 lb ft
Brake Pipe Fitting	18 N.m	13 lb ft
Brake Pressure Modulator Valve Bracket Bolt	20 N.m	15 lb ft
Clutch Master Cylinder Nut	18 Y	13 lb ft
Master Cylinder Primary Brake Pipe Fitting	18 Y	13 lb ft
Rear Brake Hose Bracket Bolt	8 N.m	71 lb in
Power Brake Booster Pump Bolt	7.5 N.m	66 lb in
Power Brake Booster Pump Bracket Bolts	22 N.m	15 lb ft
1 = Use NEW Fastener.		

BRAKE COMPONENT SPECIFICATIONS

Brake Component Specifications

Application	Specification	
	Metric	English
Brake Caliper Bleeder Valve- Front	17 N.m	12 lb ft
Brake Caliper Bleeder Valve- Rear	17 N.m	12 lb ft

BRAKE SYSTEM SPECIFICATIONS

Brake System Specifications

Application	Specification	
	Metric	English
Brake Pedal Travel • Maximum specification with 445 N (100 lb F) of force applied to the brake pedal with the	40 to 55 mm	1.57 to 2.17 in

ignition OFF and the booster power reserve depleted		

ADHESIVES, FLUIDS, LUBRICANTS, AND SEALERS

Adhesives, Fluids, Lubricants, and Sealers

Application	Type of Material	GM Part Number	
		United States	Canada
Hydraulic Brake System	DOT 3 Motor Vehicle Brake Fluid	12377967	89021320

SCHEMATIC WIRING DIAGRAMS

HYDRAULIC BRAKE WIRING SCHEMATICS

Hydraulic Brakes Wiring Schematics

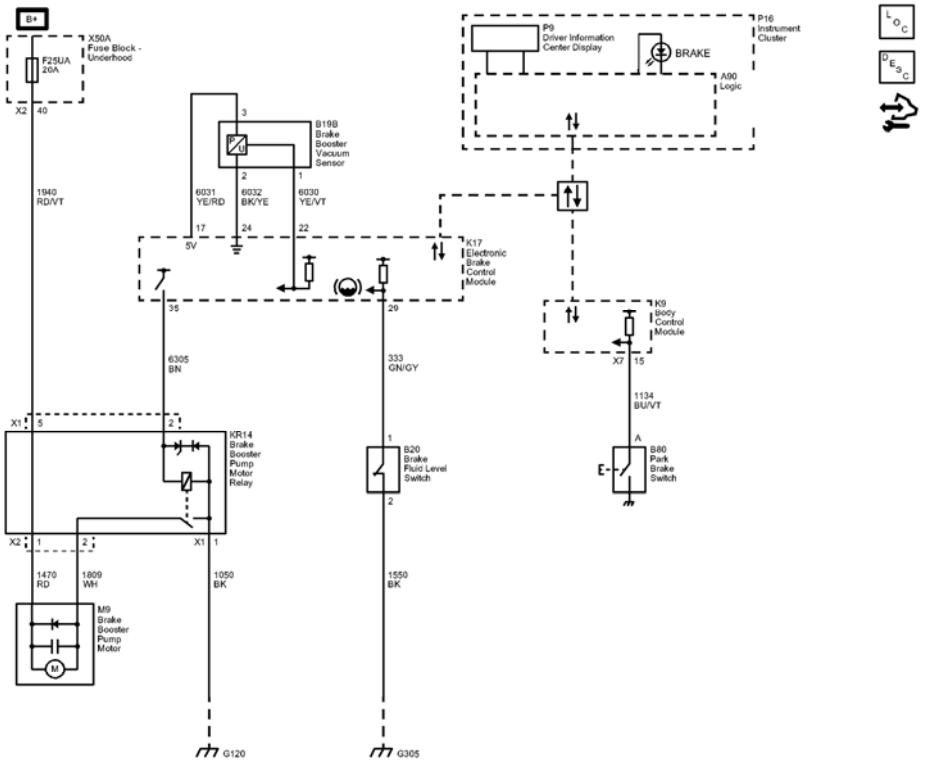

Fig. 1: Hydraulic Brakes Wiring Schematics
Courtesy of GENERAL MOTORS COMPANY

Callout	Component Name
1940	Battery Positive Voltage

1940_RD/VT	1940 RD/VT
CAV_5	5
CONN_X1	X1
CAV_40	40
CONN_X2	X2
6305	Brake Vacuum Switch Signal
6305_BN	6305 BN
CAV_2	2
CAV_35	35
6031	Brake Vacuum Sensor 5 Volt Reference
6031_YE/RD	6031 YE/RD
CAV_3	3
CAV_17	17
6032	Brake Vacuum Sensor Low Reference
6032_BK/YE	6032 BK/YE
CAV_24	24
CAV_2	2
6030	Brake Vacuum Sensor Signal
6030_YE/VT	6030 YE/VT
CAV_22	22
CAV_1	1
1470	Brake Booster Pump Motor Supply Voltage
1470_RD	1470 RD
CAV_1	1
CONN_X2	X2
1809	Brake Booster Vacuum Sensor Signal
1809_WH	1809 WH
CAV_2	2
1050	Ground
1050_BK	1050 BK
CAV_1	1
CONN_X1	X1
1550	Ground
1550_BK	1550 BK
CAV_2	2
333	Brake Fluid Level Sensor Signal
333_GN/GY	333 GN/GY

CAV_1	1
CAV_29	29
1134	Park Brake Switch Signal
1134_BU/VT	1134 BU/VT
CAV_A	A
CAV_15	15
CONN_X7	X7
SD	Serial Data
Data_Communication_Schematics_REF	Data Communication Schematics
G120	G120
G305	G305
F25UA	F25UA 20A
K9	
B80	
X50A	
M9	
KR14	
K17	
B20	
B19B	
P16	
P9	
A90	Logic

DIAGNOSTIC INFORMATION AND PROCEDURES

DIAGNOSTIC CODE INDEX

DIAGNOSTIC CODE INDEX

DTC	Description
DTC C0267	DTC C0267 00 Low Brake Fluid Indicated
DTC C027B	DTC C027B 00 Brake Booster Electric Vacuum Pump
DTC C0299	DTC C0299 5A Brake Booster Large Vacuum Leak Detected Not Plausible
DTC C1100	DTC C1100 00 Brake Booster Vacuum Sensor Circuit Malfunction DTC C1100 01 Brake Booster Vacuum Sensor Circuit Short to Battery DTC C1100 02 Brake Booster Vacuum Sensor Circuit Short to Ground DTC C1100 08 Brake Booster Vacuum Sensor

	Circuit Performance Signal Invalid DTC C1100 09 Brake Booster Vacuum Sensor Circuit Too Fast Transitions

DTC C0267

Diagnostic Instructions

- Perform the **Diagnostic System Check - Vehicle** prior to using this diagnostic procedure.
- Review **Strategy Based Diagnosis** for an overview of the diagnostic approach.
- **Diagnostic Procedure Instructions** provides an overview of each diagnostic category.

DTC Descriptor

DTC C0267 00

Low Brake Fluid Indicated

Diagnostic Fault Information

Circuit	Short to Ground	Open/High Resistance	Short to Voltage	Signal Performance
Signal	-	C0267 00	-	-
Ground	-	C0267 00	-	-

Circuit/System Description

The brake fluid level switch monitors the level of brake fluid in the brake fluid reservoir. When the electronic brake control module sees the brake fluid level switch input open, the DTC is set.

Conditions for Running the DTC

Ignition ON.

Conditions for Setting the DTC

- An open is detected on the brake fluid level signal circuit for 20 s.
- Low brake fluid level is detected for 20 s.

Action Taken When the DTC Sets

- The electronic brake control module disables the traction control and stability control for the duration of the ignition cycle.
- The traction control/stability control-active indicator turns ON.
- The brake warning indicator turns ON.

Conditions for Clearing the DTC

The condition for setting the DTC is no longer present.

Reference Information

Schematic Reference

Hydraulic Brake Schematics

Connector End View Reference

COMPONENT CONNECTOR END VIEWS - INDEX

Description and Operation

Hydraulic Brake System Description and Operation

Electrical Information Reference

- **Circuit Testing**
- **Connector Repairs**
- **Testing for Intermittent Conditions and Poor Connections**
- **Wiring Repairs**

Scan Tool Reference

Control Module References for scan tool information

Circuit/System Verification

1. Verify that the brake fluid has the proper level. The fluid level should be above minimum level.
    - **If low**

      Refer to **Brake Fluid Loss**.

    - **If above minimum level**
2. Ignition ON.
3. Verify the scan tool Brake Fluid Level Sensor parameter is Ok.
    - **If the parameter is Low**

      Refer to Circuit/System Testing below.

    - **If the parameter is Ok**
4. All OK.

Circuit/System Testing

1. Ignition OFF, disconnect the harness connector at the B20 Brake Fluid Level Switch.
2. Test for less than 10 ohms between the ground circuit terminal 2 and ground.
    - **If 10 ohms or greater**
    1. Ignition OFF.
    2. Test for less than 2 ohms in the ground circuit end to end.
        - If 2 ohms or greater, repair the open/high resistance in the circuit.
        - If less than 2 ohms, repair the open/high resistance in the ground connection.
    - **If less than 10 ohms**
3. Ignition ON.
4. Verify the scan tool Brake Fluid Level Sensor parameter is Low.
    - **If the parameter is not Low**
    1. Ignition OFF, disconnect the harness connector at the K17 Electronic Brake Control Module.
    2. Test for infinite resistance between the signal circuit terminal 1 and ground.
        - If less than infinite resistance, repair the short to ground on the circuit.
        - If infinite resistance, replace the K17 Electronic Brake Control Module.
    - **If the parameter is Low**
5. Install a 3 A fused jumper wire between the signal circuit terminal 1 and ground.
6. Verify the scan tool Brake Fluid Level Sensor parameter is Ok.
    - **If the parameter is not Ok**
    1. Ignition OFF, disconnect the harness connector at the K17 Electronic Brake Control Module, ignition ON.
    2. Test for less than 1 V between the signal circuit and ground.
        - If 1 V or greater, repair the short to voltage on the circuit.
        - If less than 1 V.
    3. Test for less than 2 ohms in the signal circuit end to end.
        - If 2 ohms or greater, repair the open/high resistance in the circuit.
        - If less than 2 ohms, replace the K17 Electronic Brake Control Module.
    - **If the parameter is Ok**
7. Test or replace the B20 Brake Fluid Level Switch.

Repair Instructions

Perform the **Diagnostic Repair Verification** after completing the repair.

- **Brake Fluid Level Indicator Switch Replacement**
- **Control Module References** for electronic brake control module replacement, programming and setup

DTC C027B

Diagnostic Instructions

- Perform the **Diagnostic System Check - Vehicle** prior to using this diagnostic procedure.
- Review **Strategy Based Diagnosis** for an overview of the diagnostic approach.
- **Diagnostic Procedure Instructions** provides an overview of each diagnostic category.

DTC Descriptors

DTC C027B 00

Brake Booster Electric Vacuum Pump

Diagnostic Fault Information

Circuit	Short to Ground	Open/High Resistance	Short to Voltage	Signal Performance
Vacuum Pump Relay B+	-	-	-	-
Vacuum Pump Relay Control	C027B 00	C027B 00	C027B 00	-
Vacuum Pump Relay Ground	-	-	-	-

Circuit/System Description

The brake booster vacuum sensor measures the vacuum in the brake booster assembly. The electronic brake control module supplies a 5 V reference and a low reference circuit to the brake booster vacuum sensor. The vacuum sensor supplies a voltage signal in relation to the pressure in the brake booster to the electronic brake control module. When the vacuum within the system becomes weak, the electronic brake control module turns ON the brake booster pump motor by providing battery voltage to the brake booster pump motor relay. The relay activates and supplies ground to the brake booster pump motor.

Conditions for Running the DTC

Ignition ON.

Conditions for Setting the DTC

A short to ground, short to voltage or open/high resistance is detected on the control circuit.

Conditions for Clearing the DTC

The condition for setting the DTC is no longer present.

Reference Information

Schematic Reference

Hydraulic Brake Schematics

Connector End View Reference

COMPONENT CONNECTOR END VIEWS - INDEX

Description and Operation

Brake Assist System Description and Operation

Electrical Information Reference

- **Circuit Testing**
- **Connector Repairs**
- **Testing for Intermittent Conditions and Poor Connections**
- **Wiring Repairs**

Scan Tool Reference

Control Module References for scan tool information

Circuit/System Verification

1. Verify that the brake booster vacuum system has no damage, leakage or incorrect installation.
    - **If damage, leakage or incorrect installation is found**

      Refer to **Brake Assist System Diagnosis**

    - **If no damage, leakage or incorrect installation is found**
2. Ignition ON.
3. Verify the brake booster pump motor turns ON and OFF when commanding the brake booster electric vacuum pump ON and OFF with a scan tool.
    - **If the brake booster pump motor does not turn ON and OFF**

      Refer to Circuit/System Testing below.

    - **If the brake booster pump motor turn ON and OFF**
4. All OK.

Circuit/System Testing

1. Ignition OFF and all vehicle systems OFF, disconnect the X1 harness connector at the KR14 Brake Booster Pump Motor Relay. It may take up to 2 min for all vehicle systems to power down.
2. Test for less than 10 ohms between the ground circuit terminal 1 and ground.
    - **If 10 ohms or greater**

1. Test for less than 2 ohms in the ground circuit end to end.
    - If 2 ohms or greater, repair the open/high resistance in the circuit.
    - If less than 2 ohms, repair the open/high resistance in the ground connection.
- **If less than 10 ohms**

3. Ignition ON.
4. Verify that a test lamp illuminates between the B+ circuit terminal 5 and ground.
    - **If the test lamp does not illuminate and the circuit fuse is good**
    1. Ignition OFF.
    2. Test for less than 2 ohms in the B+ circuit end to end.
        - If 2 ohms or greater, repair the open/high resistance in the circuit.
        - If less than 2 ohms, verify the fuse is not open and there is voltage at the fuse.
    - **If the test lamp does not illuminate and the circuit fuse is open**
    1. Ignition OFF.
    2. Test for infinite resistance between the B+ circuit and ground.
        - If less than infinite resistance, repair the short to ground on the circuit.
        - If infinite resistance, replace the M9 Brake Booster Pump Motor.
    - **If the test lamp illuminates**
5. Connect a test lamp between the control circuit terminal 2 and ground.
6. Verify the test lamp turns ON and OFF when commanding the brake booster electric vacuum pump ON and OFF with a scan tool.
    - **If the test lamp is always OFF**
    1. Ignition OFF, disconnect the harness connector at the K17 Electronic Brake Control Module.
    2. Test for infinite resistance between the control circuit and ground.
        - If less than infinite resistance, repair the short to ground on the circuit.
        - If infinite resistance
    3. Test for less than 2 ohms in the control circuit end to end.
        - If 2 ohms or greater, repair the open/high resistance in the circuit.
        - If less than 2 ohms, replace the K17 Electronic Brake Control Module.
    - **If the test lamp is always ON**
    1. Ignition OFF, disconnect the harness connector at the K17 Electronic Brake Control Module, ignition ON.
    2. Test for less than 1 V between the control circuit and ground.
        - If 1 V or greater, repair the short to voltage on the circuit.
        - If less than 1 V, replace the K17 Electronic Brake Control Module.
    - **If the test lamp turns ON and OFF**
7. Replace the KR14 Brake Booster Pump Motor Relay.

Repair Instructions

Perform the **Diagnostic Repair Verification** after completing the repair.

- **Power Brake Booster Pump Replacement**
- **Control Module References** for electronic brake control module replacement, programming and setup.

DTC C0299

Diagnostic Instructions

- Perform the **Diagnostic System Check - Vehicle** prior to using this diagnostic procedure.
- Review **Strategy Based Diagnosis** for an overview of the diagnostic approach.
- **Diagnostic Procedure Instructions** provides an overview of each diagnostic category.

DTC Descriptor

DTC C0299 5A

Brake Booster Large Vacuum Leak Detected Not Plausible

Circuit/System Description

The brake booster vacuum sensor measures the vacuum in the brake booster assembly. The electronic brake control module supplies a 5 V reference and a low reference circuit to the brake booster vacuum sensor. The vacuum sensor supplies a voltage signal in relation to the pressure in the brake booster to the electronic brake control module.

Conditions for Running the DTC

Engine running.

Conditions for Setting the DTC

The electronic brake control module detected a weak vacuum in the brake booster assembly for 120 s.

Action Taken When the DTC Sets

The DTC is stored in memory.

Conditions for Clearing the DTC

- A current DTC clears when the diagnostic runs and passes.
- The electronic brake control module will turn OFF the indicator in the next ignition cycle.

Reference Information

Schematic Reference

Hydraulic Brake Schematics

Connector End View Reference

COMPONENT CONNECTOR END VIEWS - INDEX

Description and Operation

Brake Assist System Description and Operation

Electrical Information Reference

- **Circuit Testing**
- **Connector Repairs**
- **Testing for Intermittent Conditions and Poor Connections**
- **Wiring Repairs**

Scan Tool Reference

Control Module References

Circuit/System Testing

1. Ignition ON.
2. Verify that DTC C1100 is not set.
   - **If the DTC is set**

     Refer to **DTC C1100**.

   - **If the DTC is not set**
3. Verify that the brake booster vacuum system has no damage, leakage or incorrect installation.
   - **If damage, leakage or incorrect installation is found**

     Refer to **Brake Assist System Diagnosis**.

   - **If the inspection is OK**
4. Replace the B19B Brake Booster Vacuum Sensor.
5. Verify the DTC does not set while operating the vehicle under the Conditions for Running the DTC.
   - **If the DTC sets**

     Replace the K17 Electronic Brake Control Module.

   - **If the DTC does not set**
6. All OK.

Repair Instructions

Perform the **Diagnostic Repair Verification** after completing the repair.

- **Power Brake Booster Vacuum Pipe Replacement (without Electric Pump)**, **Power Brake Booster Vacuum Pipe Replacement (with Electric Pump)** for Brake Booster Vacuum Sensor replacement.
- **Control Module References** for Electronic Brake Control Module replacement, programming and setup

DTC C1100

Diagnostic Instructions

- Perform the **Diagnostic System Check - Vehicle** prior to using this diagnostic procedure.
- Review **Strategy Based Diagnosis** for an overview of the diagnostic approach.
- **Diagnostic Procedure Instructions** provides an overview of each diagnostic category.

DTC Descriptors

DTC C1100 00

Brake Booster Vacuum Sensor Circuit Malfunction

DTC C1100 01

Brake Booster Vacuum Sensor Circuit Short to Battery

DTC C1100 02

Brake Booster Vacuum Sensor Circuit Short to Ground

DTC C1100 08

Brake Booster Vacuum Sensor Circuit Performance Signal Invalid

DTC C1100 09

Brake Booster Vacuum Sensor Circuit Too Fast Transitions

Diagnostic Fault Information

Circuit	Short to Ground	Open/High Resistance	Short to Voltage	Signal Performance
5 V Reference	C1100 02	C1100 00	C1100 01	-
Signal	C1100 00	C1100 00	C1100 00	C1100 08, C1100 09
Low Reference	-	C1100 00	-	-

Circuit/System Description

The brake booster vacuum sensor monitors the pressure in the brake booster. The electronic brake control module supplies a 5 V reference and a low reference circuit to the brake booster vacuum sensor. The vacuum sensor supplies a voltage signal in relation to the pressure in the brake booster to the electronic brake control module.

Conditions for Running the DTC

Ignition ON.

Conditions for Setting the DTC

C1100 00

- A short to ground, short to voltage or open/high resistance is detected on the 5 V reference circuit.
- The electronic brake control module detects an erratic vacuum sensor signal.

C1100 01

A short to voltage is detected on the vacuum sensor signal circuit.

C1100 02

A short to ground is detected on the vacuum sensor signal circuit.

C1100 08, 09

The vacuum sensor signal is not plausible.

Action Taken When the DTC Sets

The brake warning indicator turns ON.

Conditions for Clearing the DTC

- A current DTC clears when the diagnostic runs and passes.
- The electronic control module will turn OFF the indicator in the next ignition cycle.

Reference Information

Schematic Reference

Hydraulic Brake Schematics

Connector End View Reference

COMPONENT CONNECTOR END VIEWS - INDEX

Description and Operation

Brake Assist System Description and Operation

Electrical Information Reference

- **Circuit Testing**
- **Connector Repairs**
- **Testing for Intermittent Conditions and Poor Connections**
- **Wiring Repairs**

Scan Tool Reference

Control Module References for scan tool information

Circuit/System Testing

1. Ignition OFF and all vehicle systems OFF, disconnect the harness connector at the B19B Brake Booster Vacuum Sensor. It may take up to 2 minutes for all vehicle systems to power down.
2. Test for less than 10 ohms between the low reference circuit terminal 2 and ground.
    - **If 10 ohms or greater**
    1. Disconnect the harness connector at the K17 Electronic Brake Control Module.
    2. Test for less than 2 ohms in the low reference circuit end to end.
        - If 2 ohms or greater, repair the open/high resistance in the circuit.
        - If less than 2 ohms, replace the K17 Electronic Brake Control Module.
    - **If less than 10 ohms**
3. Ignition ON.
4. Test for 4.8-5.2 V between the 5 V reference circuit terminal 3 and ground.
    - **If less than 4.8 V**
    1. Ignition OFF, disconnect the harness connector at the K17 Electronic Brake Control Module.
    2. Test for infinite resistance between the 5 V reference circuit and ground.
        - If less than infinite resistance, repair the short to ground on the circuit.
        - If infinite resistance
    3. Test for less than 2 ohms in the 5 V reference circuit end to end.
        - If 2 ohms or greater, repair the open/high resistance in the circuit.
        - If less than 2 ohms, replace the K17 Electronic Brake Control Module.
    - **If greater than 5.2 V**
    1. Ignition OFF, disconnect the harness connector at the K17 Electronic Brake Control Module, ignition ON.

2. Test for less than 1 V between the 5 V reference circuit and ground.
    - If 1 V or greater, repair the short to voltage on the circuit.
    - If less than 1 V, replace the K17 Electronic Brake Control Module.
- **If between 4.8-5.2 V**

5. Ignition OFF, disconnect the harness connector at the K17 Electronic Brake Control Module, Ignition ON.
6. Test for less than 1 V between the B19B Brake Booster Vacuum Sensor signal circuit terminal 1 and ground.
    - **If greater than 1 V**

      Repair the short to voltage on the circuit.

    - **If less than 1 V**
7. Ignition OFF.
8. Test for infinite resistance between the B19B Brake Booster Vacuum Sensor signal circuit terminal 1 and ground.
    - **If less than infinite resistance**

      Repair the short to ground on the circuit.

    - **If infinite resistance**
9. Test for less than 2 ohms in the B19B Brake Booster Vacuum Sensor signal circuit terminal 1 and the K17 Electronic Brake Control Module signal circuit terminal 22.
    - **If 2 ohms or greater**

      Repair the open/high resistance in the circuit.

    - **If less than 2 ohms**
10. Replace the B19B Brake Booster Vacuum Sensor.
11. Verify the DTC does not set while operating the vehicle under Conditions for Running the DTC.
    - **If the DTC sets**

      Replace the K17 Electronic Brake Control Module.

    - **If the DTC does not set**
12. All OK.

Repair Instructions

Perform the **Diagnostic Repair Verification** after completing the repair.

Control Module References for Electronic Brake Control Module replacement, programming and setup.

SYMPTOMS - HYDRAULIC BRAKES

NOTE: The following steps must be completed before using the symptom tables.

1. Perform the **Brake System Vehicle Road Test** before using the hydraulic brake symptom tables in order to duplicate the customers concern.
2. Review the system operation in order to familiarize yourself with the system functions. Refer to the following:
   - **Brake Warning System Description and Operation**
   - **Hydraulic Brake System Description and Operation**
   - **Brake Assist System Description and Operation**

Visual/Physical Inspection

- Inspect for aftermarket devices which could affect the operation of the hydraulic brake system. Refer to **Checking Aftermarket Accessories** .
- Inspect the easily accessible or visible system components, for obvious damage or conditions, which could cause the symptom.

Intermittent

Faulty electrical connections or wiring may be the cause of intermittent conditions. Refer to **Testing for Intermittent Conditions and Poor Connections** .

Symptom List

Refer to a symptom diagnostic procedure from the following list in order to diagnose the symptom:

- **Brake Warning Indicator Malfunction**
- **Brake Pulsation**
- **Brake System Noise**
- **Braking Action Uneven - Front to Rear**
- **Brake Pedal Excessive Travel**
- **Brake Pedal Excessive Effort**
- **Brakes Drag**
- **Brake System Slow Release**
- **Brake Fluid Loss**

BRAKE BOOSTER PUMP MOTOR MALFUNCTION

Diagnostic Instructions

- Perform the **Diagnostic System Check - Vehicle** prior to using this diagnostic procedure.
- Review **Strategy Based Diagnosis** for an overview of the diagnostic approach.

- **Diagnostic Procedure Instructions** provides an overview of each diagnostic category.

Diagnostic Fault Information

Circuit	Short to Ground	Open/High Resistance	Short to Voltage	Signal Performance
Vacuum Pump Relay B+	1	1	-	-
Vacuum Pump Relay Control	C027B 00	C027B 00	C027B 00	-
Vacuum Pump Relay Ground	-	1	-	-
1. Brake Booster Pump Motor Always Off				

Circuit/System Description

The brake booster vacuum sensor measures the vacuum in the brake booster assembly. The electronic brake control module supplies a 5 V reference and a low reference circuit to the brake booster vacuum sensor. The vacuum sensor supplies a voltage signal in relation to the pressure in the brake booster to the electronic brake control module. When the vacuum within the system becomes weak, the electronic brake control module turns ON the brake booster pump motor by providing battery voltage to the brake booster pump motor relay. The relay activates and supplies ground to the brake booster pump motor.

Reference Information

Schematic Reference

Hydraulic Brake Schematics

Connector End View Reference

COMPONENT CONNECTOR END VIEWS - INDEX

Description and Operation

Brake Assist System Description and Operation

Electrical Information Reference

- **Circuit Testing**
- **Connector Repairs**
- **Testing for Intermittent Conditions and Poor Connections**
- **Wiring Repairs**

Scan Tool Reference

Control Module References for scan tool information

Circuit/System Verification

1. Verify that the brake booster vacuum system has no damage, leakage or incorrect installation.
    - **If damage, leakage or incorrect installation is found**

      Refer to **Brake Assist System Diagnosis**

    - **If no damage, leakage or incorrect installation is found**
2. Ignition ON.
3. Verify the brake booster pump motor turns ON and OFF when commanding the brake booster electric vacuum pump ON and OFF with a scan tool.
    - **If the brake booster pump motor does not turn ON and OFF**

      Refer to Circuit/System Testing below.

    - **If the brake booster pump motor turn ON and OFF**
4. All OK.

Circuit/System Testing

1. Ignition OFF and all vehicle systems OFF, disconnect the X1 harness connector at the KR14 Brake Booster Pump Motor Relay. It may take up to 2 minutes for all vehicle systems to power down.
2. Test for less than 10 ohms between the ground circuit terminal 1 and ground.
    - **If 10 ohms or greater**
    1. Test for less than 2 ohms in the ground circuit end to end.
        - If 2 ohms or greater, repair the open/high resistance in the circuit.
        - If less than 2 ohms, repair the open/high resistance in the ground connection.
    - **If less than 10 ohms**
3. Ignition ON.
4. Verify that a test lamp illuminates between the B+ circuit terminal 5 and ground.
    - **If the test lamp does not illuminate and the circuit fuse is good**
    1. Ignition OFF.
    2. Test for less than 2 ohms in the B+ circuit end to end.
        - If 2 ohms or greater, repair the open/high resistance in the circuit.
        - If less than 2 ohms, verify the fuse is not open and there is voltage at the fuse.
    - **If the test lamp does not illuminate and the circuit fuse is open**
    1. Ignition OFF.
    2. Test for infinite resistance between the B+ circuit and ground.
        - If less than infinite resistance, repair the short to ground on the circuit.
        - If infinite resistance, replace the M9 Brake Booster Pump Motor.
    - **If the test lamp illuminates**

5. Connect a test lamp between the control circuit terminal 2 and ground.
6. Verify the test lamp turns ON and OFF when commanding the brake booster electric vacuum pump ON and OFF with a scan tool.
    - **If the test lamp is always OFF**
    1. Ignition OFF, disconnect the harness connector at the K17 Electronic Brake Control Module.
    2. Test for infinite resistance between the control circuit and ground.
        - If less than infinite resistance, repair the short to ground on the circuit.
        - If infinite resistance
    3. Test for less than 2 ohms in the control circuit end to end.
        - If 2 ohms or greater, repair the open/high resistance in the circuit.
        - If less than 2 ohms, replace the K17 Electronic Brake Control Module.
    - **If the test lamp is always ON**
    1. Ignition OFF, disconnect the harness connector at the K17 Electronic Brake Control Module, ignition ON.
    2. Test for less than 1 V between the control circuit and ground.
        - If 1 V or greater, repair the short to voltage on the circuit.
        - If less than 1 V, replace the K17 Electronic Brake Control Module.
    - **If the test lamp turns ON and OFF**
7. Replace the M9 Brake Booster Pump Motor.

Repair Instructions

Perform the **Diagnostic Repair Verification** after completing the repair.

- **Power Brake Booster Pump Replacement**
- **Control Module References** for Electronic Brake Control Module replacement, programming and setup.

BRAKE WARNING INDICATOR MALFUNCTION

Diagnostic Instructions

- Perform the **Diagnostic System Check - Vehicle** prior to using this diagnostic procedure.
- Review **Strategy Based Diagnosis** for an overview of the diagnostic approach.
- **Diagnostic Procedure Instructions** provides an overview of each diagnostic category.

Diagnostic Fault Information

Circuit	Short to Ground	Open/High Resistance	Short to Voltage	Signal Performance
Brake Fluid Level Signal	1	C0267 00	1	-
Park Brake Signal	1	1	1	-
Ground	-	1	-	-

1. Brake Warning Indicator Malfunction

Circuit/System Description

The instrument cluster turns ON the brake warning indicator for 5 s after ignition ON. The body control module monitors the parking brake switch and will request the instrument cluster via serial data to turn the brake warning indicator ON when the parking brake is applied. When the electronic brake control module detects a fault, it sends a serial data message to the instrument cluster commanding the indicator ON.

Reference Information

Schematic Reference

Hydraulic Brake Schematics

Connector End View Reference

COMPONENT CONNECTOR END VIEWS - INDEX

Description and Operation

Hydraulic Brake System Description and Operation

Electrical Information Reference

- **Circuit Testing**
- **Connector Repairs**
- **Testing for Intermittent Conditions and Poor Connections**
- **Wiring Repairs**

Scan Tool Reference

Control Module References for scan tool information

Circuit/System Verification

1. Verify that the brake fluid has the proper level. The fluid level should be above minimum level.
    - **If low**

      Refer to **Brake Fluid Loss**.

    - **If above minimum level**
2. Ignition ON.
3. Verify the scan tool Electronic Brake Control Module, Brake Fluid Level Sensor parameter. The reading should be Ok.

- **If the parameter is Low**

  Refer to Brake Fluid Level Switch Malfunction below.

- **If the parameter is Ok**

4. Verify the scan tool Body Control Module, Park Brake Switch parameter changes between Active and Inactive while applying and releasing the parking brake.
   - **If the parameter does not change**

     Refer to Park Brake Switch Malfunction below.

   - **If the parameter changes**
5. Verify the brake warning indicator turns ON and OFF, when commanding the instrument cluster All Indicators ON and OFF with a scan tool.
   - **If the brake warning indicator does not turn ON and OFF**

     Replace the P16 Instrument Cluster.

   - **If the brake warning indicator turns ON and OFF**
6. All OK.

Circuit/System Testing

NOTE: Circuit/System Verification must be performed before Circuit/System Testing.

Brake Fluid Level Switch Malfunction

1. Ignition OFF, disconnect the harness connector at the B20 Brake Fluid Level Switch.
2. Test for less than 10 ohms between the ground circuit terminal 2 and ground.
   - **If 10 ohms or greater**
   1. Ignition OFF.
   2. Test for less than 2 ohms in the ground circuit end to end.
      - If 2 ohms or greater, repair the open/high resistance in the circuit.
      - If less than 2 ohms, repair the open/high resistance in the ground connection.
   - **If less than 10 ohms**
3. Ignition ON.
4. Verify the scan tool Electronic Brake Control Module, Brake Fluid Level Sensor parameter is Low.
   - **If the parameter is not Low**
   1. Ignition OFF, disconnect the harness connector at the K17 Electronic Brake Control Module.
   2. Test for infinite resistance between the signal circuit terminal 1 and ground.
      - If less than infinite resistance, repair the short to ground on the circuit.
      - If infinite resistance, replace the K17 Electronic Brake Control Module.

- **If the parameter is Low**

5. Install a 3 A fused jumper wire between the signal circuit terminal 1 and ground.
6. Verify the scan tool Electronic Brake Control Module, Brake Fluid Level Sensor parameter is OK.
   - **If the parameter is not OK**
   1. Ignition OFF, disconnect the harness connector at the K17 Electronic Brake Control Module, ignition ON.
   2. Test for less than 1 V between the signal circuit and ground.
      - If 1 V or greater, repair the short to voltage on the circuit.
      - If less than 1 V.
   3. Test for less than 2 ohms in the signal circuit end to end.
      - If 2 ohms or greater, repair the open/high resistance in the circuit.
      - If less than 2 ohms, replace the K17 Electronic Brake Control Module.
   - **If the parameter is Ok**
7. Test or replace the B20 Brake Fluid Level Switch.

Park Brake Switch Malfunction

1. Ignition OFF, disconnect the harness connector at the B80 Park Brake Switch.
2. Verify that the B80 Park Brake Switch has no physical damage or incorrect installation.
   - **If physical damage or incorrect installation is found**

     Test or replace the B80 Park Brake Switch.

   - **If the inspection is OK**
3. Ignition ON.
4. Verify the scan tool Body Control Module, Park Brake Switch parameter is Inactive.
   - **If the parameter is Active**
   1. Ignition OFF, disconnect the harness connector at the K9 Body Control Module.
   2. Test for infinite resistance between the signal circuit terminal A and ground.
      - If less than infinite resistance, repair the short to ground on the circuit.
      - If infinite resistance, replace the K9 Body Control Module.
   - **If the parameter is Inactive**
5. Install a 3 A fused jumper wire between the signal circuit terminal A and ground.
6. Verify the scan tool Body Control Module, Park Brake Switch parameter is Active.
   - **If the parameter is Inactive**
   1. Ignition OFF, disconnect the harness connector at the K9 Body Control Module, ignition ON.
   2. Test for less than 1 V between the signal circuit and ground.
      - If 1 V or greater, repair the short to voltage on the circuit.
      - If less than 1 V.

3. Test for less than 2 ohms in the signal circuit end to end.
    - If 2 ohms or greater, repair the open/high resistance in the circuit.
    - If less than 2 ohms, replace the K9 Body Control Module.
- **If the parameter is Active**

7. Test or replace the B80 Park Brake Switch.

Repair Instructions

Perform the **Diagnostic Repair Verification** after completing the repair.

- **Brake Fluid Level Indicator Switch Replacement**
- **Parking Brake Indicator Switch Replacement**
- **Control Module References** for Control Module replacement, programming and setup.

BRAKE PULSATION

Brake Pulsation

Step	Action	Yes	No
DEFINITION: Fluctuation or pulsation is felt through the brake pedal, steering wheel, seat, floor, and/or in the vehicle ONLY when braking.			
1	Were you sent here from the Hydraulic Brake Symptom table?	Go to **Step 2**	Go to **Symptoms - Hydraulic Brakes**
2	1. Inspect the disc brake system for the following conditions. • Excessive thickness variation of rotor friction surfaces • Excessive assembled lateral runout (LRO) of rotor friction surfaces • Hard spots, heat checks, blueing discoloration of rotor friction surfaces; possibly due to brake drag • Excessive corrosion of rotor friction surfaces; including red, gray or black oxidation • Loose, damaged or missing caliper or lining hardware • Bent or damaged caliper or mounting component • Excessive LRO of wheel hub/axle flange; due to damage and/or loose or excessively worn bearings 2. Adjust, repair or replace components as necessary. Refer to **Disc Brake System**		

	Diagnosis. Did you find and correct a condition?	Go to **Step 4**	Go to **Step 3**
3	1. Inspect the drum brake system, if equipped, for the following conditions. • Out of round or damaged drum • Excessive radial runout of drum friction surface • Hard spots, heat checks, blueing discoloration of drum friction surface; possibly due to brake drag • Bent or damaged drum • Excessive radial runout of wheel hub/axle flange; due to damage and/or loose or excessively worn bearings 2. Adjust, repair or replace components as necessary. Refer to **Drum Brake System Diagnosis**. Did you find and correct a condition?	Go to **Step 4**	Go to **Symptoms - Hydraulic Brakes**
4	1. Install or connect components that were removed or disconnected during diagnosis. 2. Road test the vehicle in order to confirm proper operation. Refer to **Brake System Vehicle Road Test**. Is the condition still present?	Go to **Step 2**	System OK

BRAKE SYSTEM NOISE

Brake System Noise

Step	Action	Yes	No
DEFINITION: Vehicle exhibits abnormal noise when braking; vehicle may exhibit abnormal noise during motion just after brake pedal release.			
1	Were you sent here from the Hydraulic Brake Symptom table?	Go to **Step 2**	Go to **Symptoms - Hydraulic Brakes**
	1. Inspect the disc brake system for the following conditions. • Lining wear indicator contact with rotor • Debris trapped between rotor and splash shield or backing plate; and/or debris trapped between rotor and linings • Contaminated linings		

2	• Aftermarket linings • Glazed linings • Distorted, cracked or damaged linings • Excessively worn linings • Damaged or excessively worn caliper hardware and/or lining hardware • Incorrectly installed, loose or missing caliper hardware and/or lining hardware • Lack of lubrication or excessive corrosion on metal to metal contact surfaces • Bent or damaged splash shield or backing plate • Hard spots, heat checks, blueing discoloration of rotor friction surfaces • Glazed rotor friction surfaces • Bent or damaged caliper or mounting component 2. Adjust, repair or replace components as necessary. Refer to **Disc Brake System Diagnosis**. Did you find and correct a condition?	Go to **Step 10**	Go to **Step 3**
3	1. Inspect the drum brake system, if equipped, for the following conditions. • Glazed linings • Contaminated linings • Aftermarket linings • Distorted, damaged or excessively worn linings • Improper adjustment • Weak or damaged return spring or springs • Weak or damaged hold down spring or springs • Cracked, scored, excessively worn or damaged drum • Out of round or damaged drum • Hard spots, heat checks, blueing discoloration of drum friction surface • Threaded or spiral grooves in drum friction surface • Distorted or damaged backing plate		

	• Lack of lubrication on backing plate • Excessive dust or foreign matter in drum 2. Adjust, repair or replace components as necessary. Refer to **Drum Brake System Diagnosis**. Did you find and correct a condition?	Go to **Step 10**	Go to **Step 4**
4	1. Inspect the brake assist system for the following conditions. • Lack of lubrication or excessively worn pushrod or pedal pivots or pivot bushings • Bent or damaged pedal pushrod, pedal, or pedal bracket • Damaged or improperly operating vacuum booster and/or check valve, if equipped • Low power steering fluid level, if equipped with hydraulic boost • Improperly tensioned, excessively worn or damaged power steering belt, if equipped with hydraulic boost • Restricted return hose from hydraulic booster, if equipped • Improperly operating hydraulic booster, if equipped • Improperly functioning power steering system, if equipped with a hydraulic booster assembly • Contaminated power steering fluid, if equipped with hydraulic boost 2. Adjust, repair or replace components as necessary. Refer to **Brake Assist System Diagnosis**. Did you find and correct a condition?	Go to **Step 10**	Go to **Step 5**
5	1. Inspect the hydraulic brake system for the following conditions. • Improper operation of wheel cylinder pistons, if equipped • Improper operation of caliper pistons • Contaminated brake fluid 2. Adjust, repair or replace components as necessary. Refer to **Hydraulic Brake System Diagnosis**. Did you find and correct a condition?	Go to **Step 10**	Go to **Step 6**

6	Is the vehicle equipped with a drum-in-rotor type of park brake system?	Go to **Step 7**	Go to **Step 9**
7	Ensure the park brake shoes are not adjusted too tightly, possibly causing a noise under certain conditions. Are the park brake shoes adjusted too tightly?	Go to **Step 8**	Go to **Step 9**
8	1. Clean and inspect the park brake shoes for excessive wear and/or damage. 2. Inspect the drum portion of the rotors for excessive wear, blueing discoloration, heat spots, and excessive radial runout. 3. If any of these conditions are present, replace the affected components. 4. Adjust the park brake system. Did you find and correct a condition?	Go to **Step 10**	Go to **Step 9**
9	Inspect the park brake system for proper operation. Refer to **Park Brake System Diagnosis (Drum Brakes)** , **Park Brake System Diagnosis (Disc Brakes)** . Did you find and correct a condition?	Go to **Step 10**	Go to **Symptoms - Hydraulic Brakes**
10	1. Install or connect components that were removed or disconnected during diagnosis. 2. Road test the vehicle in order to confirm proper operation. Refer to **Brake System Vehicle Road Test**. Is the condition still present?	Go to **Step 2**	System OK

BRAKING ACTION UNEVEN - PULLS TO ONE SIDE

Test Description

The numbers below refer to the step numbers on the diagnostic table:

5

Suspension components that are not operating properly may cause a disturbance to the vehicle during application of the brake system.

6

Steering components that are not operating properly may cause a disturbance to the vehicle during application of the brake system.

Braking Action Uneven - Pulls to One Side

Step	Action	Yes	No
DEFINITION: Vehicle pulls to one side only when braking.			
1	Were you sent here from the Hydraulic Brake Symptom table?	Go to **Step 2**	Go to **Symptoms - Hydraulic Brakes**
2	1. Inspect the hydraulic brake system for the following conditions. • Kinked, pinched or damaged brake pipe or flexible brake hose • Sticking or improperly operating caliper piston • Sticking or improperly operating wheel cylinder pistons, if equipped • Brake fluid leak 2. Adjust, repair or replace components as necessary. Refer to **Hydraulic Brake System Diagnosis**. Did you find and correct a condition?	Go to **Step 7**	Go to **Step 3**
3	1. Inspect the disc brake system for the following conditions. • Contaminated linings • Glazed linings • Distorted, cracked or damaged linings on one side • Loose, damaged or missing caliper hardware and/or lining hardware • Incorrect linings on one side • Hard spots, heat checks, blueing discoloration of rotor friction surfaces; possibly due to brake drag • Glazed rotor friction surfaces • Bent or damaged caliper or mounting component 2. Adjust, repair or replace components as necessary. Refer to **Disc Brake System Diagnosis**. Did you find and correct a condition?	Go to **Step 7**	Go to **Step 4**
	1. Inspect the drum brake system, if equipped, for the following conditions. • Improper adjustment or improper adjuster operation • Weak or damaged return spring or springs		

4	• Glazed linings • Contaminated linings • Distorted or damaged linings • Incorrect linings on one side • Excessively worn or damaged drum on one side 2. Adjust, repair or replace components as necessary. Refer to **Drum Brake System Diagnosis**. Did you find and correct a condition?	Go to **Step 7**	Go to **Step 5**
5	1. Inspect the suspension system for the following conditions. • Incorrect tire pressures • Loose suspension component connections • Excessively worn or damaged suspension components 2. Adjust, repair or replace components as necessary. Refer to **Symptoms - Suspension General Diagnosis** . Did you find and correct a condition?	Go to **Step 7**	Go to **Step 6**
6	1. Inspect the steering system for the following conditions. • Loose steering component connections • Excessively worn or damaged steering components 2. Adjust, repair or replace components as necessary. Refer to **Symptoms - Power Steering System** . Did you find and correct a condition?	Go to **Step 7**	Go to **Symptoms - Hydraulic Brakes**
7	1. Install or connect components that were removed or disconnected during diagnosis. 2. Road test the vehicle in order to confirm proper operation. Refer to **Brake System Vehicle Road Test**. Is the condition still present?	Go to **Step 2**	System OK

BRAKING ACTION UNEVEN - FRONT TO REAR

Test Description

The number below refer to the step number on the diagnostic table:

5

Suspension components that are not operating properly may cause a disturbance to the vehicle during application of the brake system.

Braking Action Uneven - Front to Rear

Step	Action	Yes	No
DEFINITION: Braking action or stopping force sensitive or grabbing and/or more pronounced at the front or at the rear axle. Sensitive or grabbing brakes: Excessive brake jump-in force relative to brake pedal input.			
1	Were you sent here from the Hydraulic Brake Symptom table?	Go to **Step 2**	Go to **Symptoms - Hydraulic Brakes**
2	1. Inspect the hydraulic brake system for the following conditions. • Improper operation of wheel cylinder pistons, if equipped • Improper operation of caliper pistons • Kinked, pinched or damaged brake pipe or flexible brake hose • Brake fluid leak • Improperly functioning proportioning valve, if equipped • Improper operation of dynamic rear proportioning (DRP) system, if equipped 2. Adjust, repair or replace components as necessary. Refer to **Hydraulic Brake System Diagnosis**. Did you find and correct a condition?	Go to **Step 7**	Go to **Step 3**
3	1. Inspect the disc brake system for the following conditions. • Contaminated linings • Glazed linings • Distorted, cracked or damaged linings • Excessively worn linings • Aftermarket linings • Damaged or excessively worn caliper hardware and/or lining hardware • Hard spots, heat checks, blueing discoloration of rotor friction surfaces • Glazed rotor friction surfaces		

	2. Adjust, repair or replace components as necessary. Refer to **Disc Brake System Diagnosis**. Did you find and correct a condition?	Go to **Step 7**	Go to **Step 4**
4	1. Inspect the drum brake system, if equipped, for the following conditions. • Contaminated linings • Improper adjustment • Excessively worn or damaged linings • Weak or damaged return spring or springs • Excessively worn or damaged drums • Hard spots, heat checks, blueing discoloration of drum friction surface • Distorted or damaged backing plate 2. Adjust, repair or replace components as necessary. Refer to **Drum Brake System Diagnosis**. Did you find and correct a condition?	Go to **Step 7**	Go to **Step 5**
5	1. Inspect the suspension system for the following conditions. • Loose suspension component connections • Excessively worn or damaged suspension components 2. Adjust, repair or replace components as necessary. Refer to **Symptoms - Suspension General Diagnosis** . Did you find and correct a condition?	Go to **Step 7**	Go to **Step 6**
6	1. Inspect the brake assist system for the following conditions. • Binding, bent or damaged pedal pushrod, pedal, or pedal bracket • Damaged or improperly operating vacuum booster, if equipped • Damaged or improperly operating hydraulic booster, if equipped 2. Adjust, repair or replace components as necessary. Refer to **Brake Assist System Diagnosis**. Did you find and correct a condition?	Go to **Step 7**	Go to **Symptoms - Hydraulic Brakes**
	1. Install or connect components that were removed		

7	or disconnected during diagnosis. 2. Road test the vehicle in order to confirm proper operation. Refer to **Brake System Vehicle Road Test**. Is the condition still present?	Go to **Step 2**	System OK

BRAKE PEDAL EXCESSIVE TRAVEL

Brake Pedal Excessive Travel

Step	Action	Yes	No
DEFINITION: Brake pedal travels further than expected to obtain firm pedal and/or firm pedal cannot be obtained, pedal fades away, or pedal is spongy.			
1	Were you sent here from the Hydraulic Brake Symptom table?	Go to **Step 2**	Go to **Symptoms - Hydraulic Brakes**
2	Inspect the travel and feel of brake pedal applies. Perform the following: 1. Apply the brake pedal several times to fully deplete the power reserve. 2. With power reserve depleted, apply the brake pedal with light, steady pressure and hold for 15 seconds. Observe pedal travel and feel. 3. Apply the brake pedal with light, steady pressure, then without pumping the pedal, reduce pressure and reapply pressure several times. Observe pedal travel and feel for each apply. 4. Apply the brake pedal slowly, then release and apply the pedal quickly. Observe pedal travel and feel for each apply. Did you complete the brake pedal travel and feel inspections?	Go to **Step 3**	-
	1. Inspect the hydraulic brake system for the conditions listed, based on the following symptoms observed during the pedal travel and feel inspections. • Pedal feel was spongy. ○ Air in hydraulic system ○ External brake fluid leaks ○ Soft, weak or damaged hydraulic hoses; expanding under pressure • Pedal fell away and/or traveled to or almost to floor.		

3	○ External brake fluid leaks ○ Poor brake fluid quality; low boiling point ○ Internal brake fluid leaks; improperly functioning master cylinder • Pedal was somewhat firm then dropped slightly, or pedal rose with successive applies, or pedal travel was different between slow and quick applies. ○ Internal brake fluid leaks; improperly functioning master cylinder ○ Poor brake fluid quality; low boiling point ○ Binding wheel cylinder pistons, if equipped • Pedal returned to rest slowly after any of the applies. ○ Internally damaged flexible brake hoses; hindering fluid return ○ Binding caliper pistons ○ Binding wheel cylinder pistons, if equipped ○ Internal brake fluid leaks; improperly functioning master cylinder 2. Repair or replace components as necessary. Refer to **Hydraulic Brake System Diagnosis**. 3. Re-inspect brake pedal apply travel and feel. Did you find and correct a condition?	Go to **Step 9**	Go to **Step 4**
4	1. Inspect the drum brake system, if equipped, for the following conditions: • Improper adjustment or improper adjuster operation • Glazed or excessively worn linings • Cracked, distorted or damaged linings • Cracked, excessively worn, distorted or damaged drums • Bell-mouth or barrel-shaped drum friction surface • Hard spots, heat checks, blueing discoloration of drum friction surface		

	2. Adjust, repair or replace components as necessary. Refer to **Drum Brake System Diagnosis**. 3. Re-inspect brake pedal apply travel and feel. Did you find and correct a condition?	Go to **Step 9**	Go to **Step 5**
5	1. Inspect the disc brake system for the following conditions: • Cracked, excessively worn or damaged linings • Cracked, excessively worn or damaged rotors • Improperly operating, binding or damaged caliper hardware and/or lining hardware • Loose or missing caliper hardware and/or lining hardware • Excessive assembled lateral runout (LRO) of rotor friction surfaces • Bent or damaged caliper or mounting component 2. Adjust, repair or replace components as necessary. Refer to **Disc Brake System Diagnosis**. 3. Re-inspect brake pedal apply travel and feel. Did you find and correct a condition?	Go to **Step 9**	Go to **Step 6**
6	Inspect for proper brake pedal travel. Refer to **Brake Pedal Travel Measurement and Inspection**. Is the brake pedal travel distance within the acceptable limits?	Go to **Step 8**	Go to **Step 7**
7	1. Inspect for worn, missing, misaligned, bent or damaged brake pedal system components. • For the brake pedal pushrod component inspection, refer to **Brake Pedal Pushrod Inspection**. • Inspect the brake pedal bushings for binding, excessive wear and/or damage and inspect the brake pedal for a misaligned, bent, and/or damaged condition. 2. Replace the brake pedal system components that are worn, missing, misaligned, bent or damaged. Did you find and replace any worn, missing, misaligned, bent or damaged brake pedal system components?	Go to **Step 9**	Go to **Step 8**
	1. Inspect the brake assist system for the following conditions:		

8	• Vacuum leaks and/or improperly operating check valve, if equipped with vacuum assist • Power steering fluid leaks, if equipped with hydraulic power assist • Damaged or improperly operating brake booster assembly 2. Adjust, repair or replace components as necessary. Refer to **Brake Assist System Diagnosis**. Did you find and correct a condition?	Go to **Step 9**	Go to **Symptoms - Hydraulic Brakes**
9	1. Install or connect components that were removed or disconnected during diagnosis. 2. Road test the vehicle in order to confirm proper operation. Refer to **Brake System Vehicle Road Test**. Is the condition still present?	Go to **Step 2**	System OK

BRAKE PEDAL EXCESSIVE EFFORT

Brake Pedal Excessive Effort

Step	Action	Yes	No
DEFINITION: Brake pedal requires an increased amount of input from the driver to obtain good braking action and/or stopping distance is increased.			
1	Were you sent here from the Hydraulic Brake Symptom table?	Go to **Step 2**	Go to **Symptoms - Hydraulic Brakes**
2	1. Inspect the brake assist system for the following conditions: • Vacuum leaks, if equipped with vacuum power assist • Power steering fluid leaks, if equipped with hydraulic power assist • Lack of lubrication, binding or excessively worn pushrod or pedal pivots or pivot bushings • Bent or damaged pedal pushrod, pedal, or pedal bracket • Damaged or improperly operating brake booster assembly 2. Adjust, repair or replace components as necessary. Refer to **Brake Assist System Diagnosis**. Did you find and correct a condition?	Go to **Step 6**	Go to **Step 3**

3	1. Inspect the hydraulic brake system for the following conditions: • Binding caliper pistons • Binding wheel cylinder pistons, if equipped • Internally damaged flexible brake hoses; hindering fluid flow • External brake fluid leaks • Kinked or damaged flexible brake hoses and/or pipes • Internal brake fluid leaks; improperly operating master cylinder • Poor brake fluid quality; low boiling point 2. Adjust, repair or replace components as necessary. Refer to **Hydraulic Brake System Diagnosis**. Did you find and correct a condition?	Go to **Step 6**	Go to **Step 4**
4	1. Inspect the disc brake system for the following conditions: • Excessively worn linings • Glazed linings • Cracked, distorted or damaged linings • Contaminated linings • Binding, damaged or excessively worn caliper hardware and/or lining hardware • Lack of lubrication or excessive corrosion on metal to metal contact surfaces • Excessively worn or corroded rotor friction surfaces • Glazed rotor friction surfaces • Hard spots, heat checks, blueing discoloration of rotor friction surfaces 2. Adjust, repair or replace components as necessary. Refer to **Disc Brake System Diagnosis**. Did you find and correct a condition?	Go to **Step 6**	Go to **Step 5**
	1. Inspect the drum brake system, if equipped, for the following conditions: • Excessively worn linings • Improper adjustment or improper adjuster operation • Glazed linings		

5	• Cracked, distorted or damaged linings • Contaminated linings • Out of round or damaged drum • Bell-mouth or barrel-shaped drum friction surface • Hard spots, heat checks, blueing discoloration of drum friction surface • Lack of lubrication on backing plate • Excessive dust or foreign matter in drum 2. Adjust, repair or replace components as necessary. Refer to **Drum Brake System Diagnosis**. Did you find and correct a condition?	Go to **Step 6**	Go to **Symptoms - Hydraulic Brakes**
6	1. Install or connect components that were removed or disconnected during diagnosis. 2. Road test the vehicle in order to confirm proper operation. Refer to **Brake System Vehicle Road Test**. Is the condition still present?	Go to **Step 2**	System OK

BRAKES DRAG

Brakes Drag

Step	Action	Yes	No
DEFINITION: Brake system does not fully release or has delayed release; vehicle motion may be hindered by brake system without applying brakes.			
1	Were you sent here from the Hydraulic Brake Symptom table?	Go to **Step 2**	Go to **Symptoms - Hydraulic Brakes**
2	Is the vehicle equipped with an adjustable stop lamp switch and/or an adjustable cruise control release switch?	Go to **Step 3**	Go to **Step 4**
3	1. Inspect the stop lamp switch for proper adjustment to ensure that the brake pedal is fully releasing. 2. Inspect the cruise control release switch, if equipped, for proper adjustment to ensure that the brake pedal is fully releasing. Did you find and correct a condition?	Go to **Step 15**	Go to **Step 4**
4	Is the vehicle equipped with a drum-in-rotor type of park brake system?	Go to **Step 5**	Go to **Step 7**
5	Ensure the park brake shoes are not adjusted too tightly, possibly causing drag under certain conditions.	Go to **Step**	

	Are the park brake shoes adjusted too tightly?	**6**	Go to **Step 8**
6	1. Clean and inspect the park brake shoes for excessive wear and/or damage. 2. Inspect the drum portion of the rotors for excessive wear, blueing discoloration and heat spots. 3. If any of these conditions are present, replace the affected components. 4. Adjust the park brake system. Did you find and correct a condition?	Go to **Step 15**	Go to **Step 8**
7	1. Inspect the drum brake system, if equipped, for the following conditions: • Improper adjustment • Weak or damaged return spring or springs • Distorted or damaged linings • Out of round or damaged drum • Weak or damaged hold down spring or springs • Lack of lubrication on backing plate • Distorted or damaged backing plate 2. Adjust, repair or replace components as necessary. Refer to **Drum Brake System Diagnosis**. Did you find and correct a condition?	Go to **Step 15**	Go to **Step 8**
8	Inspect the park brake system for proper operation. Refer to **Park Brake System Diagnosis (Drum Brakes)** , **Park Brake System Diagnosis (Disc Brakes)** . Did you find and correct a condition?	Go to **Step 15**	Go to **Step 9**
9	1. Inspect the disc brake system for the following conditions: • Binding, incorrectly installed or missing caliper hardware and/or lining hardware- ensure free movement of linings and of caliper, if equipped with sliding type caliper. • Lack of lubrication or excessive corrosion on metal to metal contact surfaces • Distorted or damaged linings • Damaged or excessively worn caliper hardware and/or lining hardware		

	• Bent or damaged caliper or mounting component 2. Adjust, repair or replace components as necessary. Refer to **Disc Brake System Diagnosis**. Did you find and correct a condition?	Go to **Step 15**	Go to **Step 10**
10	1. Separate the brake booster pushrod from the brake pedal. 2. Inspect the brake corners to determine if the brake drag condition is still present. Do the brake corners still exhibit the brake drag condition?	Go to **Step 12**	Go to **Step 11**
11	1. Inspect the pushrod for improper positioning and/or damage. Correctly position or replace the pushrod if necessary. 2. Inspect the brake pedal assembly for damage and replace if necessary. Did you complete the repair or replacement?	Go to **Step 15**	-
12	1. For vacuum boost systems, disconnect the vacuum check valve from the booster to relieve vacuum reserve. 2. Separate the master cylinder from the brake booster. Do not disconnect any brake pipes. 3. Inspect the brake corners to determine if the brake drag condition is still present. Do the brake corners still exhibit the brake drag condition?	Go to **Step 14**	Go to **Step 13**
13	Replace the brake booster assembly. Did you complete the replacement?	Go to **Step 15**	-
14	1. Inspect the hydraulic brake system for the following conditions: • Improper operation of wheel cylinder pistons, if equipped • Improper operation of caliper pistons • Contaminated brake fluid • Internally damaged flexible brake hoses; hindering brake release • Damaged or improperly operating master cylinder		

	2. Adjust, repair or replace components as necessary. Refer to **Hydraulic Brake System Diagnosis**. Did you find and correct a condition?	Go to **Step 15**	Go to **Symptoms - Hydraulic Brakes**
15	1. Install or connect components that were removed or disconnected during diagnosis. 2. Road test the vehicle in order to confirm proper operation. Refer to **Brake System Vehicle Road Test**. Is the condition still present?	Go to **Step 2**	System OK

BRAKE SYSTEM SLOW RELEASE

Brake System Slow Release

Step	Action	Yes	No
DEFINITION: Brake system releases and returns to rest slowly; vehicle motion is hindered by brake system briefly after release of brake pedal.			
1	Were you sent here from the Hydraulic Brake Symptom table?	Go to **Step 2**	Go to **Symptoms - Hydraulic Brakes**
2	1. Inspect the hydraulic brake system for the following conditions: • Improper operation of wheel cylinder pistons, if equipped • Improper operation of caliper pistons • Internally damaged flexible brake hoses; hindering brake release • Contaminated brake fluid • Damaged or improperly operating master cylinder 2. Adjust, repair or replace components as necessary. Refer to **Hydraulic Brake System Diagnosis**. Did you find and correct a condition?	Go to **Step 6**	Go to **Step 3**
3	1. Inspect the brake assist system for the following conditions: • Binding, bent or damaged pedal pushrod, pedal, or pedal bracket • Damaged or improperly operating vacuum booster, if equipped • Restricted return hose from hydraulic booster, if equipped		

	• Damaged or improperly operating hydraulic booster, if equipped 2. Adjust, repair or replace components as necessary. Refer to **Brake Assist System Diagnosis**. Did you find and correct a condition?	Go to **Step 6**	Go to **Step 4**
4	1. Inspect the drum brake system, if equipped, for the following conditions: • Weak or damaged return spring or springs • Distorted or damaged linings • Out of round or damaged drum • Lack of lubrication on backing plate • Distorted or damaged backing plate 2. Adjust, repair or replace components as necessary. Refer to **Drum Brake System Diagnosis**. Did you find and correct a condition?	Go to **Step 6**	Go to **Step 5**
5	1. Inspect the disc brake system for the following conditions: • Damaged or excessively worn caliper hardware and/or lining hardware • Distorted or damaged linings • Lack of lubrication or excessive corrosion on metal to metal contact surfaces • Bent or damaged caliper or mounting component 2. Adjust, repair or replace components as necessary. Refer to **Disc Brake System Diagnosis**. Did you find and correct a condition?	Go to **Step 6**	Go to **Symptoms - Hydraulic Brakes**
6	1. Install or connect components that were removed or disconnected during diagnosis. 2. Road test the vehicle in order to confirm proper operation. Refer to **Brake System Vehicle Road Test**. Is the condition still present?	Go to **Step 2**	System OK

BRAKE FLUID LOSS

Brake Fluid Loss

Step	Action	Yes	No

DEFINITION: Brake fluid level is low not related to lining wear.

1	Were you sent here from the Hydraulic Brake Symptom table?	Go to **Step 2**	Go to **Symptoms - Hydraulic Brakes**
2	1. Inspect the following hydraulic brake system components for brake fluid leaks: • Flexible brake hose connections; threaded and bolted • Flexible brake hose crimp joints • Brake pipe fittings • Caliper piston seals • Wheel cylinder piston seals, if equipped • Master cylinder reservoir • Master cylinder reservoir low pressure hose, if equipped • Brake pressure modulator valve (BPMV) assembly, if equipped 2. Repair or replace components as necessary. Refer to **Hydraulic Brake System Diagnosis**. Did you find and correct a condition?	Go to **Step 8**	Go to **Step 3**
3	Is the vehicle equipped with a vacuum brake booster?	Go to **Step 4**	Go to **Step 6**
4	1. Disconnect the vacuum check valve from the booster to relieve vacuum reserve. 2. Separate the master cylinder from the vacuum brake booster. Do not disconnect any brake pipes. 3. Inspect the rear of the master cylinder for a brake fluid leak. 4. Inspect for brake fluid in the vacuum brake booster. Did you find a brake fluid leak?	Go to **Step 5**	Go to **Symptoms - Hydraulic Brakes**
5	Replace the brake master cylinder and the vacuum brake booster. Did you complete the replacement?	Go to **Step 8**	-
6	1. Wipe clean the external surface of the master cylinder to hydraulic brake booster area, if equipped. 2. Separate the master cylinder from the hydraulic brake booster, if equipped. Do not disconnect any brake pipes. 3. Inspect the rear of the master cylinder for a brake		

	fluid leak. Did you find a brake fluid leak?	Go to **Step 7**	Go to **Symptoms - Hydraulic Brakes**
7	Replace the brake master cylinder. Did you complete the replacement?	Go to **Step 8**	-
8	1. Install or connect components that were removed or disconnected during diagnosis. 2. Road test the vehicle to confirm proper operation. Refer to **Brake System Vehicle Road Test**. Is the condition still present?	Go to **Step 2**	System OK

DISC BRAKE SYSTEM DIAGNOSIS

Test Description

The numbers below refer to the step numbers on the diagnostic table:

9

Lubricant leaks from non-brake system components may come in contact with and contaminate brake system components.

10

Lubricant leaks from non-brake system components may come in contact with and contaminate brake system components.

12

Disc brake rotor shields/backing plates that come in contact with disc brake rotors may cause brake system noise.

15

Disc brake rotor thickness variation that exceeds the maximum acceptable level can cause brake pulsation.

19

Disc brake rotor thickness variation that exceeds the maximum acceptable level can cause brake pulsation.

22

Disc brake rotor assembled lateral runout (LRO) that exceeds the maximum acceptable level can lead to thickness variation.

Disc Brake System Diagnosis

Step	Action	Yes	No
DEFINITION: This diagnostic table is designed to diagnose ONLY the components of the DISC brake system in order to determine if the DISC brake system is operating properly. You will be directed by the appropriate Symptom table to go to other brake system diagnostic tables as appropriate.			
1	Were you sent here from a Brake Symptom table?	Go to **Step 2**	-
2	Visually inspect the disc brake pads for the following conditions: Refer to **Brake Pad Inspection** . • Lining thickness below specifications • Uneven and/or abnormal wear - edge-to-edge and/or side-to-side • Looseness or damage - including pad hardware • Evidence of contamination from an external substance Did you find any conditions to indicate a concern with any of the front and/or rear disc brake pads?	Go to **Step 3**	Go to **Step 12**
3	Are any of the front and/or rear disc brake pads contaminated?	Go to **Step 8**	Go to **Step 4**
4	Are any of the front and/or rear disc brake pads worn unevenly?	Go to **Step 7**	Go to **Step 5**
5	Are any of the front and/or rear disc brake pads and/or pad hardware loose or damaged?	Go to **Step 7**	Go to **Step 6**
6	1. Remove and inspect the worn disc brake pads for glazing, looseness, heat spots or damage. 2. Replace the worn disc brake pads as a complete axle set. Refer to **Front Disc Brake Pads Replacement** , and/or **Rear Disc Brake Pads Replacement** . Did you complete the inspection and replacement?	Go to **Step 12**	-
	CAUTION: **Support the brake caliper with heavy mechanic wire, or equivalent, whenever it is separated from its mount and the hydraulic flexible brake hose is still connected. Failure to support the caliper in this manner will cause the flexible brake hose to bear the weight of the caliper, which may cause damage to the brake hose and in turn may cause a brake fluid leak.**		

7	**NOTE:** **Do NOT disconnect the hydraulic brake flex hoses from the calipers.** 1. Remove the front and/or rear disc brake calipers, as appropriate, from the mounting brackets and support the calipers. Refer to **Front Brake Caliper Replacement** , and/or **Rear Brake Caliper Replacement** . 2. Inspect the disc brake caliper mounting bracket and the mounting/sliding hardware for the following conditions: Refer to **Front Disc Brake Mounting and Hardware Inspection** , and/or **Rear Disc Brake Mounting and Hardware Inspection** . • Binding or seized hardware • Worn, damaged or missing hardware components • Loose, bent, cracked, or damaged caliper mounting bracket 3. Replace components as required. Refer to the following procedures, as required: • **Front Brake Caliper Bracket Replacement** • **Rear Brake Caliper Bracket Replacement** • **Front Brake Caliper Hardware Replacement** • **Rear Brake Caliper Hardware Replacement** 4. Replace the unevenly-worn, loose or damaged disc brake pads as a complete axle set. Refer to **Front Disc Brake Pads Replacement** , and/or **Rear Disc Brake Pads Replacement** . Did you complete the inspection and replacement?	Go to **Step 12**	-
8	1. Inspect the disc brake calipers, brake hoses and brake pipes for evidence of an external brake fluid leak. 2. Replace any components found to be leaking brake fluid. Refer to the following procedures as required: • **Front Brake Caliper Overhaul** , or **Front Brake Caliper Replacement** • **Rear Brake Caliper Replacement** • **Front Brake Hose Replacement**		

	• **Rear Brake Hose Replacement (Drum Brake)**, **Rear Brake Hose Replacement (Disc Brake)** • **Brake Pipe Replacement** Did you find and correct the source of the leak causing contamination of the pads?	Go to **Step 11**	Go to **Step 9**
9	1. Inspect the wheel drive shaft outer seals for damage and evidence of a grease leak. 2. Replace any wheel drive shaft seal that is found to be leaking grease which may be the source of the contamination to the pads. Refer to **Front Wheel Drive Shaft Outer Joint and Boot Replacement** . Did you find and correct the source of the leak causing contamination of the pads?	Go to **Step 11**	Go to **Step 10**
10	1. Inspect the automatic transmission cooling system lines, if equipped, for damage and evidence of an external fluid leak which may be the source of the contamination to the pads. 2. Inspect the power steering system hoses for damage and evidence of an external fluid leak which may be the source of the contamination to the pads. 3. Replace any components found to be leaking fluid which may be the source of the contamination to the pads. Did you find and correct the source of the leak causing contamination of the pads?	Go to **Step 11**	-
	1. Clean the remaining disc brake system components to remove any traces of the contaminant. **CAUTION:** **Support the brake caliper with heavy mechanic wire, or equivalent, whenever it is separated from its mount and the hydraulic flexible brake hose is still connected. Failure to support the caliper in this manner will cause the flexible brake hose to bear the weight of the caliper, which may cause damage to the brake hose and in turn may cause a brake fluid leak.** **NOTE:** **Do NOT disconnect the hydraulic brake flex hoses from the calipers.**		

11	2. Remove the front and/or rear disc brake calipers, as appropriate, from the mounting brackets and support the calipers. Refer to **Front Brake Caliper Replacement** , and/or **Rear Brake Caliper Replacement** . 3. Inspect the disc brake caliper mounting/sliding hardware for the following conditions: Refer to **Front Disc Brake Mounting and Hardware Inspection** , and/or **Rear Disc Brake Mounting and Hardware Inspection** . • Binding or seized hardware • Distorted, worn, damaged or missing hardware components 4. Replace the caliper mounting/sliding hardware components as required. Refer to **Front Brake Caliper Hardware Replacement** , and/or **Rear Brake Caliper Hardware Replacement** . 5. Replace the contaminated disc brake pads as a complete axle set. Refer to **Front Disc Brake Pads Replacement** , and/or **Rear Disc Brake Pads Replacement** . Did you complete the cleaning, inspection and replacement?	Go to **Step 12**	-
12	Visually inspect each of the rear disc brake rotor shields/backing plates, if equipped, for evidence of contact with the brake rotors. Are any of the brake rotor shields/backing plates contacting the brake rotors?	Go to **Step 13**	Go to **Step 14**
13	Repair or replace the disc brake rotor shields/backing plates as required. Refer to **Rear Wheel Bearing and Hub Replacement (Drum Brake)** , **Rear Wheel Bearing and Hub Replacement (Disc Brake)** . Did you complete the repair or replacement?	Go to **Step 14**	-
14	1. Check the thickness of each of the disc brake rotors. **NOTE:** **Make the following determination AND ANSWER the question INDIVIDUALLY for EACH rotor.** 2. Make a determination for each brake rotor if the rotor can be REFINISHED and REMAIN ABOVE the minimum requirements.		

	Refer to **Brake Rotor Thickness Measurement** .Does the disc brake rotor meet the minimum requirements for REFINISHING?	Go to **Step 15**	Go to **Step 18**
15	**NOTE:** **Perform the following inspection AND ANSWER the question INDIVIDUALLY for EACH rotor.** Inspect each of the disc brake rotors for thickness variation that exceeds the maximum acceptable level. Refer to **Brake Rotor Thickness Variation Measurement** .Does the brake rotor exhibit thickness variation that exceeds the maximum acceptable level?	Go to **Step 17**	Go to **Step 16**
16	1. Inspect each of the disc brake rotors for the following surface and wear conditions: Refer to **Brake Rotor Surface and Wear Inspection** . • Heavy rust and/or pitting • Cracks and/or heat spots • Excessive blueing discoloration • Deep or excessive scoring beyond maximum acceptable level **NOTE:** **Make the following determination AND ANSWER the question INDIVIDUALLY for EACH rotor.** 2. Make a determination for each brake rotor if the rotor requires refinishing based upon the results of the inspection. If the brake rotor exhibits any of the conditions listed previously, it requires refinishing. Does the brake rotor require REFINISHING?	Go to **Step 17**	Go to **Step 22**
17	1. Refinish the brake rotor. Refer to **Brake Rotor Refinishing** . 2. Inspect the brake rotor thickness. Refer to **Brake Rotor Thickness Measurement** . Were you able to REFINISH the brake rotor within the minimum requirements?	Go to **Step 22**	Go to **Step 21**
18	Is the brake rotor at or below the DISCARD requirements?	Go to **Step 21**	Go to **Step 19**

19	**NOTE:** **Perform the following inspection AND ANSWER the question INDIVIDUALLY for EACH rotor.** Inspect each of the disc brake rotors for thickness variation that exceeds the maximum acceptable level. Refer to **Brake Rotor Thickness Variation Measurement** .Does the brake rotor exhibit thickness variation that exceeds the maximum acceptable level?	Go to **Step 21**	Go to **Step 20**
20	1. Inspect each of the disc brake rotors for the following surface and wear conditions: Refer to **Brake Rotor Surface and Wear Inspection** . • Heavy rust and/or pitting • Cracks and/or heat spots • Excessive blueing discoloration • Deep or excessive scoring beyond maximum acceptable level **NOTE:** **Make the following determination AND ANSWER the question INDIVIDUALLY for EACH rotor.** 2. Make a determination for each brake rotor if the rotor requires replacement based upon the results of the inspection. If the brake rotor exhibits any of the conditions listed previously, it requires replacement. Does the brake rotor require REPLACEMENT?	Go to **Step 21**	Go to **Step 22**
21	**NOTE:** **Whenever a brake rotor is replaced, the assembled lateral runout (LRO) of the rotor must be measured to ensure optimum performance of the disc brakes.** Replace the brake rotor. Refer to **Front Brake Rotor Replacement (J60)** , **Front Brake Rotor Replacement (J67)** , or **Rear Brake Rotor Replacement** .Did you complete the replacement?	Go to **Step 24**	-
	NOTE: **Perform the following inspection AND ANSWER the question INDIVIDUALLY for EACH rotor.**		

22	Inspect each of the disc brake rotors for assembled LRO that exceeds the maximum acceptable level. Refer to **Brake Rotor Assembled Lateral Runout Measurement** .Does the brake rotor exhibit assembled LRO that exceeds the maximum acceptable level?	Go to **Step 23**	Go to **Step 24**
23	Correct the LRO for each brake rotor that was determined to have LRO exceeding the maximum acceptable level. Refer to **Brake Rotor Assembled Lateral Runout Correction** . Did you complete the operation?	Go to **Step 24**	-
24	Install or connect components that were removed or disconnected during diagnosis. Did you complete the operation?	Disc Brake System OK Return to Symptom Table	-

DRUM BRAKE SYSTEM DIAGNOSIS

Test Description

The number below refers to the step number on the diagnostic table:

18

Drum brake backing plates that come in contact with brake drums may cause brake system noise.

Drum Brake System Diagnosis

Step	Action	Yes	No
DEFINITION: This diagnostic table is designed to diagnose ONLY the components of the DRUM brake system in order to determine if the DRUM brake system is operating properly. You will be directed by the appropriate Symptom table to go to other brake system diagnostic tables as appropriate.			
1	Were you sent here from a Brake Symptom table?	Go to **Step 2**	-
2	1. Remove the brake drums. Refer to **Brake Drum Replacement** . 2. Inspect the drum brake shoes for the following conditions: • Lining thickness below specifications • Uneven and/or abnormal wear - edge-to-edge and/or side-to-side • Contamination from an external substance • Looseness, damage, glazing, or incorrect lining material Did you find any conditions to indicate a concern with any of the drum brake shoes?	Go to **Step 3**	Go to **Step 7**

3	Are any of the brake shoes contaminated?	Go to **Step 4**	Go to **Step 5**
4	1. Inspect the wheel cylinders for evidence of an external brake fluid leak. 2. Replace any wheel cylinder that is found to be leaking brake fluid. Refer to **Rear Brake Cylinder Replacement** . Did you complete the inspection and replacement?	Go to **Step 6**	-
5	1. Inspect the drum brake hardware for any components which are worn, damaged, discolored due to stress, broken or missing. Refer to **Drum Brake Hardware Inspection** . 2. Replace components as required. Refer to **Drum Brake Hardware Replacement** . 3. Replace the drum brake shoes. Refer to **Brake Shoe Replacement** . Did you complete the inspection and replacement?	Go to **Step 8**	-
6	1. Clean the remaining drum brake system components to remove any traces of the contaminant. 2. Inspect the drum brake hardware for any components which are worn, damaged, discolored due to stress, broken or missing. Refer to **Drum Brake Hardware Inspection** . 3. Replace the drum brake hardware components as required. Refer to **Drum Brake Hardware Replacement** . 4. Replace the contaminated brake shoes. Refer to **Brake Shoe Replacement** . Did you complete the cleaning, inspection and replacement?	Go to **Step 8**	-
7	1. Inspect the drum brake hardware for any components which are worn, damaged, discolored due to stress, broken or missing. Refer to **Drum Brake Hardware Inspection** . 2. Replace components as required. Refer to **Drum Brake Hardware Replacement** . Did you complete the inspection and, if necessary, the replacement?	Go to **Step 8**	-
	1. Check the diameter of each of the brake drums.		

8	**NOTE:** **Make the following determination AND ANSWER the question INDIVIDUALLY for EACH drum.** 2. Make a determination for each brake drum if the drum can be REFINISHED and REMAIN ABOVE the minimum requirements. Refer to **Brake Drum Diameter Measurement** .Does the brake drum meet the minimum requirements for REFINISHING?	Go to **Step 9**	Go to **Step 11**

9	1. Inspect each of the brake drums for the following surface and wear conditions:
	
	Refer to **Brake Drum Surface and Wear Inspection** .
	
	• Braking Surface Conditions
	  ○ Heavy rust and/or pitting
	  ○ Cracks and/or heat spots
	  ○ Excessive blueing discoloration
	  ○ Missing balance weights
	• Braking Surface Wear Conditions
	  ○ Deep or excessive scoring beyond maximum acceptable level
	  ○ Radial runout beyond maximum acceptable level
	
	NOTE:
	Make the following determination AND ANSWER the question INDIVIDUALLY for EACH drum.
	
	2. Make a determination for each brake drum if the drum requires refinishing based upon the results of the inspection.
	
	If the brake drum exhibits any of the following conditions, it requires refinishing.
	
	• Drum exhibits one or more of the Braking Surface Conditions listed previously
	• Drum is beyond the acceptable level in one or more of the Braking Surface Wear Conditions listed previously		

	Does the brake drum require REFINISHING?	Go to **Step 10**	Go to **Step 14**
10	1. Refinish the brake drum. Refer to **Rear Brake Drum Refinishing** . 2. Inspect the brake drum diameter. Refer to **Brake Drum Diameter Measurement** . Were you able to REFINISH the brake drum within the minimum requirements?	Go to **Step 14**	Go to **Step 13**
11	Is the brake drum at or below the DISCARD requirements?	Go to **Step 13**	Go to **Step 12**

12	1. Inspect each of the brake drums for the following surface and wear conditions:
	
	Refer to **Brake Drum Surface and Wear Inspection** .
	
	• Braking Surface Conditions
	  ○ Heavy rust and/or pitting
	  ○ Cracks and/or heat spots
	  ○ Excessive blueing discoloration
	  ○ Missing balance weights
	• Braking Surface Wear Conditions
	  ○ Deep or excessive scoring beyond maximum acceptable level
	  ○ Radial runout beyond maximum acceptable level
	
	NOTE:
	Make the following determination AND ANSWER the question INDIVIDUALLY for EACH drum.
	
	2. Make a determination for each brake drum if the drum requires replacement based upon the results of the inspection.
	
	If a brake drum exhibits any of the following conditions, it requires replacement.
	
	• Drum exhibits one or more of the Braking Surface Conditions listed previously
	• Drum is beyond the acceptable level in one or more of the Braking Surface Wear Conditions listed previously		

	Does the brake drum require REPLACEMENT?	Go to **Step 13**	Go to **Step 14**
13	Replace the brake drum. Refer to **Brake Drum Replacement** . Did you complete the replacement?	Go to **Step 14**	-
14	Inspect the brake shoes for proper adjustment. Refer to **Drum Brake Adjustment** . Are the brake shoes adjusted properly?	Go to **Step 18**	Go to **Step 15**
15	Inspect the components of the brake drum adjustment hardware system for free movement and correct operation. Refer to **Drum Brake Adjusting Hardware Inspection** . Do the drum brake adjusting hardware components operate freely and correctly?	Go to **Step 17**	Go to **Step 16**
16	Replace the drum brake adjusting hardware components as necessary. Refer to **Drum Brake Adjusting Hardware Replacement** . Is the replacement complete?	Go to **Step 17**	-
17	Adjust the drum brake shoes. Refer to **Drum Brake Adjustment** . Were you able to complete the adjustment?	Go to **Step 20**	Return to Symptom Table
18	Inspect the drum brake backing plate for the following: • Excessive wear or rust • Damage and/or evidence of contact with the brake drum Does the drum brake backing plate exhibit any of these conditions?	Go to **Step 19**	Go to **Step 20**
19	Repair or replace the drum brake backing plate as necessary. Refer to **Rear Brake Backing Plate Replacement** . Did you complete the repair or replacement?	Go to **Step 20**	-
20	Install or connect components that were removed or disconnected during diagnosis. Did you complete the operation?	Drum Brake System OK Return to Symptom Table	-

HYDRAULIC BRAKE SYSTEM DIAGNOSIS

Hydraulic Brake System Diagnosis

Step	Action	Yes	No
DEFINITION: This diagnostic table is designed to diagnose ONLY the components of the HYDRAULIC brake system in order to determine if the HYDRAULIC brake system is operating properly. You will be directed by the appropriate Symptom table to go to other brake system diagnostic tables as appropriate.			
1	Were you sent here from a Brake Symptom table?		Go to **Symptoms -**

		Go to **Step 2**	**Hydraulic Brakes**
2	Inspect and adjust the brake fluid level in the brake master cylinder. Refer to **Master Cylinder Reservoir Filling**. Was the brake fluid level low?	Go to **Step 3**	Go to **Step 4**
3	1. Inspect the brake fluid for the following conditions, indicating brake fluid contamination: • Fluid separation, indicating two types of fluid are present ○ Swirled appearance - oil-based substance ○ Layered appearance - silicone-based substance • Fluid discoloration ○ Cloudy appearance - moisture ○ Dark appearance/ suspended particles in fluid - dirt, rust, corrosion, brake dust 2. Inspect the master cylinder reservoir cap diaphragm and the reservoir-to-master cylinder grommets for swelling, indicating fluid contamination. Do any of the above conditions exist?	Go to **Step 5**	Go to **Step 6**
4	1. Inspect the brake fluid for the following conditions, indicating brake fluid contamination: • Fluid separation, indicating two types of fluid are present ○ Swirled appearance - oil-based substance ○ Layered appearance - silicone-based substance • Fluid discoloration ○ Cloudy appearance - moisture ○ Dark appearance/ suspended particles in fluid - dirt, rust, corrosion, brake dust 2. Inspect the master cylinder reservoir cap diaphragm and the reservoir-to-master cylinder grommets for swelling, indicating fluid contamination. Do any of the above conditions exist?	Go to **Step 5**	Go to **Step 12**
	1. Flush the hydraulic brake system. Refer to **Hydraulic Brake System Flushing**.		

5	2. If the brake fluid WAS contaminated with an oil-based or a silicone-based fluid, indicated by fluid separation and/or a swollen master cylinder reservoir cap diaphragm and/or swollen reservoir-to-master cylinder grommets, perform the following steps. Refer to the procedures indicated. 1. Remove ALL of the following components listed. Each component contains internal rubber seals/linings which have been contaminated. 2. Clean out the hydraulic brake pipes using denatured alcohol, or equivalent. 3. Dry the brake pipes using non-lubricated, filtered air. 4. Repair or replace ALL of the following components listed. Each component contains internal rubber seals/linings which have been contaminated. • Replace the brake master cylinder reservoir cap diaphragm. • **Master Cylinder Replacement** • Brake master cylinder reservoir: Clean the brake master cylinder reservoir using denatured alcohol, or equivalent, then dry the reservoir using non-lubricated, filtered air, or if necessary, replace the brake master cylinder reservoir. • **Front Brake Hose Replacement** • **Rear Brake Hose Replacement (Drum Brake)**, **Rear Brake Hose Replacement (Disc Brake)** • **Front Brake Caliper Overhaul** , or **Front Brake Caliper Replacement** • **Rear Brake Caliper Replacement** , if equipped • **Rear Brake Cylinder Replacement** , if equipped • **Brake Pressure Modulator Valve Replacement** 3. If the brake fluid was NOT contaminated with an oil-based fluid, but WAS contaminated with water or dirt, rust, corrosion, and/or brake dust, replace the brake master cylinder reservoir cap diaphragm		-

	which may have allowed moisture or dirt to enter the system. 4. Refill and bleed the hydraulic brake system. Refer to **Hydraulic Brake System Bleeding (Manual Bleeding)**, **Hydraulic Brake System Bleeding (Pressure Bleeding)**. Did you complete the operation and any required repairs and/or replacements?	Go to **Step 9**	
6	1. Inspect the following hydraulic brake system components for external fluid leaks. Repair or replace any of the components found to be leaking brake fluid. Refer to the appropriate procedures: • Brake master cylinder reservoir cap diaphragm • **Master Cylinder Replacement** • **Front Brake Hose Replacement** • **Rear Brake Hose Replacement (Drum Brake)**, **Rear Brake Hose Replacement (Disc Brake)** • **Brake Pipe Replacement** • **Front Brake Caliper Overhaul** , or **Front Brake Caliper Replacement** • **Rear Brake Caliper Replacement** , if equipped • **Rear Brake Cylinder Replacement** , if equipped • **Brake Pressure Modulator Valve Replacement** 2. If you repaired or replaced any of the brake system components listed, bleed the hydraulic brake system. Refer to **Hydraulic Brake System Bleeding (Manual Bleeding)**, **Hydraulic Brake System Bleeding (Pressure Bleeding)**. While bleeding the hydraulic brake system, observe for the following conditions: • The presence of air in the system at a bleeder valve location other than at the repair location, except if the brake master cylinder, and/or the proportioning valve assembly, was replaced • An unrestricted and even flow of brake fluid per axle during the bleeding procedure		

	Did you find and correct a condition?	Go to **Step 7**	Go to **Step 12**
7	Was there air in the system at a bleeder valve location other than at the repair location, except if the brake master cylinder, and/or the proportioning valve assembly, was replaced?	Go to **Step 19**	Go to **Step 8**
8	Was the flow of brake fluid unrestricted and even per axle during the bleeding procedure?	Go to **Step 9**	Go to **Step 10**
9	Inspect the hydraulic function of the brake calipers and/or wheel cylinders, if equipped for proper operation. Refer to **Hydraulic Brake Component Operation Visual Inspection**. Was the hydraulic function of the brake calipers/wheel cylinders operating properly?	Go to **Step 21**	Go to **Step 14**
10	Was the flow of brake fluid restricted or uneven through front axle hydraulic components during the bleeding procedure?	Go to **Step 13**	Go to **Step 11**
11	Was the flow of brake fluid restricted or uneven through rear axle hydraulic components during the bleeding procedure?	Go to **Step 17**	-
12	Inspect the hydraulic function of the brake calipers/wheel cylinders for proper operation. Refer to **Hydraulic Brake Component Operation Visual Inspection**. Was the hydraulic function of the brake calipers/wheel cylinders operating properly?	Go to **Step 15**	Go to **Step 13**
13	Determine if the brake caliper is restricting the flow of brake fluid and/or not operating properly: 1. Raise and support the vehicle. Refer to **Lifting and Jacking the Vehicle** . 2. Remove the tire and wheel assemblies. Refer to **Tire and Wheel Removal and Installation** . 3. Open the suspected caliper bleeder valve. 4. Using a large C-clamp, compress the caliper piston and observe for an unrestricted flow of brake fluid and for free movement of the caliper piston. 5. Close the caliper bleeder valve. Was the flow of brake fluid unrestricted and did the caliper piston move freely?	Go to **Step 17**	Go to **Step 14**
	Repair or replace any brake caliper/wheel cylinder that was not operating properly. Refer to the appropriate procedure. • **Front Brake Caliper Overhaul** , or **Front Brake**		

14	**Caliper Replacement** • **Rear Brake Caliper Replacement** , if equipped • **Rear Brake Cylinder Replacement** , if equipped Did you complete the repair and/or replacement?	Go to **Step 21**	-
15	Bleed the hydraulic brake system to observe for the presence of air in the system and to observe for an unrestricted and even flow of brake fluid per axle during the bleeding procedure. Refer to **Hydraulic Brake System Bleeding (Manual Bleeding)**, **Hydraulic Brake System Bleeding (Pressure Bleeding)**. Was there air in the system?	Go to **Step 19**	Go to **Step 16**
16	Was the flow of brake fluid unrestricted and even per axle during the bleeding procedure?	Go to **Step 21**	Go to **Step 17**
17	1. Inspect the hydraulic brake pipes and flexible brake hoses for signs of a fluid restriction; such as being bent, kinked, pinched or damaged. Refer to **Brake Pipe and Hose Inspection**. 2. Replace any of the hydraulic brake pipes and/or flexible brake hoses found to be bent, kinked, pinched, or damaged. Refer to the following procedures as necessary: • **Front Brake Hose Replacement** • **Rear Brake Hose Replacement (Drum Brake)**, **Rear Brake Hose Replacement (Disc Brake)** • **Brake Pipe Replacement** 3. If none of the hydraulic brake pipes or flexible brake hoses were visibly bent, kinked, pinched, or damaged, replace the hydraulic brake flex hose at the restricted location. Did you find and correct a condition?	Go to **Step 21**	Go to **Step 18**
18	Replace the brake modulator assembly, in order to correct the hydraulic brake dynamic rear proportioning mechanical operation. Refer to **Brake Pressure Modulator Valve Replacement** . Did you complete the replacement?	Go to **Step 21**	-
19	1. Inspect the hydraulic brake system components for brake fluid seepage at a seal and/or fitting location, which may have drawn air into the system. 2. Inspect the hydraulic brake system components for evidence of a recent repair, which may have		

	introduced air into the system. 3. Repair or replace any of the components found to be installed incorrectly or seeping brake fluid. Did you find and correct a condition?	Go to **Step 21**	Go to **Step 20**
20	1. Inspect the brake master cylinder for internal fluid leaks. Refer to **Brake System Internal Leak Test**. 2. Repair or replace the brake master cylinder if it is found to be leaking brake fluid internally. Refer to **Master Cylinder Replacement**. Did you find and correct a condition?	Go to **Step 21**	Return to Symptom Table
21	Install or connect components that were removed or disconnected during diagnosis. Did you complete the operation?	Hydraulic Brake System OK Return to Symptom Table	-

BRAKE ASSIST SYSTEM DIAGNOSIS

Brake Assist System Diagnosis

Step	Action	Yes	No
DEFINITION: This diagnostic table is designed to diagnose ONLY the components of the brake ASSIST system in order to determine if the brake ASSIST system is operating properly. You will be directed by the appropriate Symptom table to go to other brake system diagnostic tables as appropriate.			
1	Were you sent here from a Brake Symptom table?	Go to **Step 3**	Go to **Step 2**
2	Were you sent here directly from an electrical diagnostic to investigate vacuum as a possible concern?	Go to **Step 5**	Go To **Symptoms - Hydraulic Brakes**
3	Inspect for proper brake pedal travel. Refer to **Brake Pedal Travel Measurement and Inspection**. Is the brake pedal travel distance within the acceptable limits?	Go to **Step 5**	Go to **Step 4**
4	1. Inspect for worn, missing, misaligned, bent or damaged brake pedal system components. • For the brake pedal pushrod component inspection, refer to **Brake Pedal Pushrod Inspection**. • Inspect the brake pedal bushings for excessive wear and/or damage and inspect the brake pedal for a misaligned, bent and/or damaged condition.		

	2. Replace the brake pedal system components that are worn, missing, misaligned, bent or damaged. Did you find and replace any worn, missing, misaligned, bent or damaged brake pedal system components?	Go to **Step 5**	Go to **Hydraulic Brake System Diagnosis** to check for internal and external fluid leaks and air in the hydraulic brake system
5	Check the engine vacuum source that supplies vacuum to the vacuum brake booster. Refer to **Brake System Vacuum Source Test**. Is the vacuum reading within the acceptable limits?	Go to **Step 6**	Go to Engine Controls Diagnostics Information to check for vacuum issues, including vacuum pump operation, if equipped
6	Does the condition occur during cold start-up conditions?	Go to **Step 7**	Go to **Step 8**
7	Check engine vacuum, and vacuum pump operation, if equipped, under the same cold start-up conditions. Refer to Engine Controls Diagnostics. Did you find and correct a condition?	Go to **Step 22**	Go to **Step 9**
8	During the vacuum source test, did the vacuum booster check valve operate properly?	Go to **Step 10**	Go to **Step 9**
9	Replace the vacuum booster check valve. Refer to **Power Brake Booster Replacement**. Did you complete the replacement?	Go to **Step 10**	-
10	If equipped with a booster mounted separate vacuum sensor, inspect the vacuum sensor grommet for cracks, cuts, dry-rot, or damage. Does the vacuum sensor grommet exhibit any of the conditions listed?	Go to **Step 11**	Go to **Step 12**
11	Replace the vacuum sensor grommet. Did you complete the replacement?	Go to **Step 12**	-
12	1. If the vehicle is equipped with a vacuum sensor, install a scan tool. 2. Using the Data Display function, determine if brake booster vacuum sensor data is available within either the chassis brake controls area or the powertrain engine controls area. Is vacuum sensor data available through the scan tool?	Go to **Step 13**	Go to **Step 16**
	Perform the vacuum booster leak-down test using a scan tool:		

13	1. Release the brake pedal. 2. Accelerate the engine to approximately 3000 RPM, then release the throttle. Wait 2-3 seconds and repeat once. 3. Turn the ignition OFF. 4. Turn the ignition ON. Do not start the engine. 5. Observe and record the vacuum sensor reading on the scan tool over a period of 60 seconds. **NOTE:** **Vacuum readings will decrease by approximately 2.7 kPa (0.8 Hg) for every 305 m (1000 ft) of elevation above sea level.** 6. Determine the rate of vacuum leak. **Specification** Maximum allowable vacuum leak rate: 10 kPa (3 in Hg) in 60 seconds Was the rate of vacuum leak within the specified allowable range?	Go to **Step 18**	Go to **Step 14**
14	1. Deplete the vacuum reserve by pressing the brake pedal several times, or by removing the vacuum booster check valve. 2. Separate the master cylinder from the vacuum brake booster. Do not disconnect any brake pipes. Refer to **Master Cylinder Replacement**. 3. If equipped with a vacuum seal on the rear of the master cylinder, inspect the seal for damage and correct positioning on the master cylinder. Replace the vacuum seal as necessary. 4. Carefully reinstall the master cylinder to the brake booster. Refer to **Master Cylinder Replacement**. Did you complete the operation?	Go to **Step 15**	-
	Perform the vacuum booster leak-down test		

15	using a scan tool: 1. Release the brake pedal. 2. Accelerate the engine to approximately 3000 RPM, then release the throttle. Wait 2-3 seconds and repeat once. 3. Turn the ignition OFF. 4. Turn the ignition ON. Do not start the engine. 5. Observe and record the vacuum sensor reading on the scan tool over a period of 60 seconds. **NOTE:** **Vacuum readings will decrease by approximately 2.7 kPa (0.8 Hg) for every 305 m (1000 ft) of elevation above sea level.** 6. Determine the rate of vacuum leak. **Specification** Maximum allowable vacuum leak rate: 10 kPa (3 in Hg) in 60 seconds Was the rate of vacuum leak within the specified allowable range?	Go to **Step 22**	Go to **Step 21**
16	1. Separate the master cylinder from the vacuum brake booster. Do not disconnect any brake pipes. Before removing the master cylinder, first deplete the vacuum by removing the check valve or applying the brake pedal several times. Refer to **Master Cylinder Replacement**. 2. If equipped with a vacuum seal on the rear of the master cylinder, inspect the seal for damage and correct positioning on the master cylinder. 3. If equipped with a vacuum seal that is part of the booster, inspect the seal for damage. Does the vacuum seal exhibit any of the conditions listed?	Go to **Step 17**	Go to **Step 18**

17	1. If equipped with a vacuum seal on the rear of the master cylinder, replace the vacuum seal as necessary. Ensure the seal is positioned correctly during installation. 2. If equipped with a vacuum seal that requires replacement and which is part of the booster, the booster assembly must be replaced. 3. Carefully reinstall the master cylinder to the brake booster. Refer to **Master Cylinder Replacement**. Did you complete the replacement?	Go to **Step 18**	-
18	Perform the vacuum boost functional test: 1. If still separated, reinstall the master cylinder to the booster. Refer to **Master Cylinder Replacement**. 2. If the engine was started after reinstalling the master cylinder to the booster, perform the following: With the engine OFF, depress the brake pedal several times to deplete the vacuum reserve. 3. Depress and maintain moderate foot pressure on the brake pedal. 4. Start the engine and observe pedal operation. 5. Observe for audible vacuum leaks. The brake pedal should fall slightly, then hold. Is there an audible vacuum leak coming from the brake pedal area?	Go to **Step 21**	Go to **Step 19**
19	Did the brake pedal fall slightly after the engine was started, then hold?	Go to **Step 20**	Go to **Step 21**
	Perform the vacuum booster leak-down test: 1. Release the brake pedal. 2. Accelerate the engine to approximately 3000 RPM, then release the throttle. Wait		

20	2-3 seconds and repeat once. 3. Turn the ignition OFF. 4. Wait 60 seconds. 5. Depress the brake pedal 2 times to check for vacuum booster available vacuum reserve. Observe pedal effort. • Both pedal applies should be assisted • The amount of assist could diminish slightly with the second apply Were both pedal applies power assisted?	Go to **Step 22**	Go to **Step 21**
21	Replace the power brake booster. Refer to **Power Brake Booster Replacement**. Did you complete the replacement?	Go to **Step 22**	-
22	Install or connect any components that were removed or disconnected during diagnosis. Did you complete the operation?	Brake Assist System OK Return to Symptom Table	-

BRAKE SYSTEM VEHICLE ROAD TEST

Preliminary Inspections

1. Visually inspect easily accessible brake system components for obvious damage and/or leaks which may indicate that the vehicle should not be driven until further inspections have been completed.
2. Inspect the brake master cylinder reservoir fluid level and adjust only if necessary for brake system road testing. Refer to **Master Cylinder Reservoir Filling**.
3. Inspect the tire inflation pressures and adjust as necessary.
4. Inspect the tire tread patterns to ensure that they are the same or very similar, especially per axle.
5. Ensure that the vehicle is not loaded unevenly prior to brake system road testing.

Road Testing Procedure

WARNING: Road test a vehicle under safe conditions and while obeying all traffic laws. Do not attempt any maneuvers that could jeopardize vehicle control. Failure to adhere to these precautions could lead to serious personal injury and vehicle damage.

1. Start the engine and allow it to idle.
2. Check to see if the brake system warning lamp remains illuminated.
3. If the brake system warning lamp remains illuminated, DO NOT proceed to test drive the vehicle until it is diagnosed and repaired. Refer to **Symptoms - Hydraulic Brakes**.

4. Select a smooth, dry, clean and level road or large lot that is as free of traffic and obstacles as possible for brake system low speed road testing.
5. With the transmission in PARK, lightly apply the brake pedal. Observe both the pedal feel and the pedal travel.
6. If the brake pedal apply felt spongy, or the pedal travel was excessive, DO NOT drive the vehicle until it is repaired.
7. If the brake pedal apply did not feel spongy and the pedal travel was not excessive, proceed to step 8.
8. Release and apply the brakes.
9. While continuing to apply the brakes, shift the transmission into DRIVE, release the brakes and allow the engine to idle the vehicle away from the stopped position. Observe for a slow release of the brake system.
10. With the aid of an assistant to observe the vehicle's performance from outside of the vehicle, drive the vehicle at a low speed and lightly apply the brakes while driving past the assistant. Have the assistant observe for brake system noise from the side of the vehicle closest to them, while you observe both the pedal effort and the pedal travel.
11. If the brake pedal apply effort was excessive, or the pedal travel was excessive, DO NOT continue to test drive the vehicle until it is repaired.
12. If the brake pedal apply effort was not excessive and the pedal travel was not excessive, proceed to step 13.
13. Drive the vehicle in the opposite direction, at the same low speed and lightly apply the brakes while driving past the assistant. Have the assistant observe for brake system noise from the side of the vehicle closest to him.
14. Drive the vehicle at a low speed and shift the transmission into NEUTRAL without applying the brakes. Observe for a rapid deceleration in vehicle speed, indicating possible brake drag.
15. Select a smooth, dry, clean and level road that is as free of heavy traffic as possible for brake system moderate speed road testing.
16. Drive the vehicle at a moderate speed. Observe for a pull and/or incorrect tracking of the vehicle without the brakes applied.
17. While continuing to drive the vehicle at a moderate speed, perform several light applies of the brakes. Observe the pedal effort and the pedal travel, observe for brake system noise, pulsation and/or brake drag.
18. If the brake pedal apply effort was excessive, or the pedal travel was excessive, DO NOT continue to test drive the vehicle until it is repaired.
19. If the brake pedal apply effort was not excessive and the pedal travel was not excessive, proceed to step 20.
20. While continuing to drive the vehicle at a moderate speed, perform several moderate applies of the brakes. Observe the pedal effort and the pedal travel, observe for brake system pulsation and/or uneven braking action - either side to side, or front to rear.

    A small amount of vehicle front end dip is expected during a moderate apply of the brakes.

21. If the brake pedal apply effort was excessive, or the pedal travel was excessive, DO NOT continue to test drive the vehicle until it is repaired.

BRAKE PEDAL TRAVEL MEASUREMENT AND INSPECTION

Special Tools

CH-28662 Brake Pedal Effort Gauge

For equivalent regional tools, refer to **Special Tools**.

1. With the ignition OFF and the brakes cool, apply the brakes 3-5 times, or until the brake pedal becomes firm, in order to deplete the brake booster power reserve.
2. Install the **CH-28662** gauge to the brake pedal.

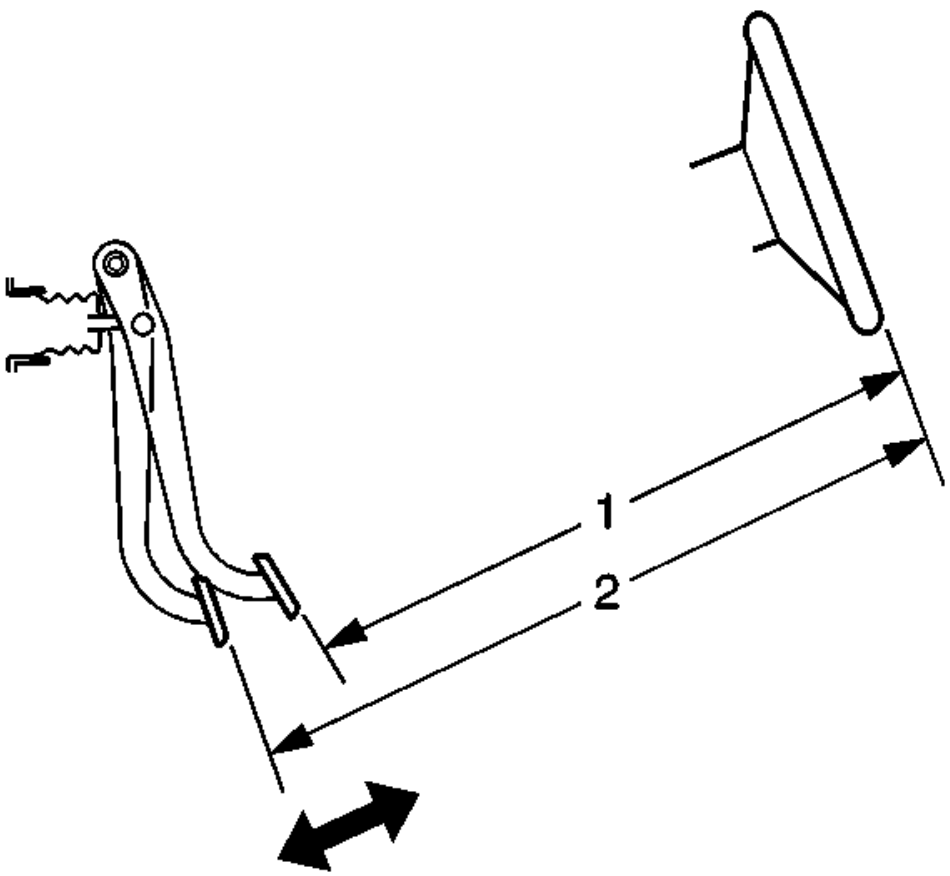

Fig. 2: Measuring Brake Pedal Travel
Courtesy of GENERAL MOTORS COMPANY

3. Measure and record the distance (1) from the brake pedal to the rim of the steering wheel; note the points of measurement.
4. Apply and maintain the brakes with 445 N (100 lb F) of force to the brake pedal, as indicated on the **CH-28662** gauge.
5. While maintaining 445 N (100 lb F) of force to the brake pedal, measure and record the distance (2) from

the same point on the brake pedal to the same point on the rim of the steering wheel.

6. Release the brakes and repeat steps 3 and 4 to obtain a second measurement. After obtaining a second measurement, proceed to step 7.
7. Average the first and second measurements recorded during the two applies of the brakes.
8. Subtract the initial measurement, unapplied (1), from the averaged, applied measurement (2) to obtain the brake pedal travel distance.
9. For the maximum brake pedal travel (measured with the ignition OFF, brake booster power assist depleted, and the brakes cool), refer to **Brake System Specifications**.

BRAKE SYSTEM VACUUM SOURCE TEST

NOTE:

- **Engine temperature, accessory load, and elevation level will affect engine vacuum.**
- **Vacuum readings will decrease by approximately 2.7 kPa (0.8 in Hg) for every 305 m (1000 ft) of elevation above sea level.**

1. Disconnect the engine vacuum hose from the vacuum brake booster check valve.
2. Install a vacuum gauge to the engine vacuum hose.
3. Start the engine and allow the engine to idle until normal operating temperatures are reached.
4. With the vehicle in PARK, the engine idling, and the air conditioning (A/C) system OFF, check to see if the engine vacuum reading is within the specified normal engine vacuum range.

   Specification

   47-68 kPa (14-20 in Hg)

5. Turn the ignition OFF.
6. If the engine vacuum reading was within the specified normal range, proceed to step 10.
7. If the engine vacuum reading was NOT within the specified normal range, inspect the engine vacuum hose for the following conditions:
   - Loose connection to the engine
   - Collapse, deformation or contamination
   - Cracks, cuts, dry-rot
8. If any of these conditions were found with the engine vacuum hose, replace the hose, then repeat steps 2-4.
9. If none of these conditions were found with the engine vacuum hose, then there is an engine vacuum source problem, check the engine vacuum system.
10. Remove the vacuum brake booster check valve from the booster.
11. Install the check valve to the engine vacuum hose.
12. Install the vacuum gauge to the check valve.
13. Start the engine and allow the engine to idle in PARK with the A/C system OFF, until normal operating temperatures are reached.

14. Turn the ignition OFF.
15. Check to see if the engine vacuum reading is maintained within the specified normal engine vacuum range.

    Specification

    47-68 kPa (14-20 in Hg)

16. If the engine vacuum reading is maintained within the specified normal range, proceed to step 18.
17. If the engine vacuum reading is NOT maintained within the specified normal range, replace the brake booster check valve, then repeat steps 11-15.
18. Inspect the brake booster check valve grommet for the following conditions:
    - Loose connection to the vacuum brake booster
    - Deformation or contamination
    - Cracks, cuts, dry-rot
19. If any of these conditions were found with the check valve grommet, replace the grommet.

BRAKE SYSTEM EXTERNAL LEAK INSPECTION

WARNING: Refer to Brake Fluid Irritant Warning .

CAUTION: Refer to Brake Fluid Effects on Paint and Electrical Components Caution .

1. In order to inspect for external brake fluid leaks, first check the fluid level in the master cylinder.

   While a slight brake fluid level drop can be considered a normal condition due to brake lining wear, a very low level may indicate a brake fluid leak in the hydraulic system.

   If the fluid level is abnormally low, adjust the brake fluid level. Refer to **Master Cylinder Reservoir Filling**.

2. Start the engine and allow it to idle.
3. Apply constant, moderate foot pressure to the brake pedal.

   If the brake pedal gradually falls away while under foot pressure, there may be a brake fluid leak.

4. Turn OFF the ignition.
5. Visually inspect the following brake system components for brake fluid leaks, excessive corrosion, and damage. Give particular attention to all brake pipe and flexible hose connections to ensure that there are not any slight brake fluid leaks - even though the brake pedal may feel firm and hold steady:
   - Master cylinder brake pipe fittings

- All brake pipe connections
- Brake pipes
- Brake hoses and connections
- Brake calipers and/or wheel cylinders, if equipped

6. While slight dampness around the master cylinder reservoir can be considered acceptable, brake fluid leaking from any of the brake system components requires immediate attention. If any of these components exhibit signs of brake fluid leakage, repair or replace those components. After the repair or replacement, reinspect the hydraulic brake system to assure proper function.

BRAKE SYSTEM INTERNAL LEAK TEST

WARNING: Refer to Brake Fluid Irritant Warning .

CAUTION: Refer to Brake Fluid Effects on Paint and Electrical Components Caution .

1. Start the engine and allow it to idle.
2. Apply light, steady pressure to the brake pedal. Observe both the brake pedal feel and travel.
3. Release the brakes and turn OFF the ignition.
4. If the brake pedal apply felt spongy, but the brake pedal travel was not excessive, perform the following steps:
    1. Inspect the brake system for external leaks. Refer to **Brake System External Leak Inspection**.
    2. Pressure bleed the brake system in order to purge any air that may be trapped in the system. Refer to **Hydraulic Brake System Bleeding (Manual Bleeding)**, **Hydraulic Brake System Bleeding (Pressure Bleeding)**.

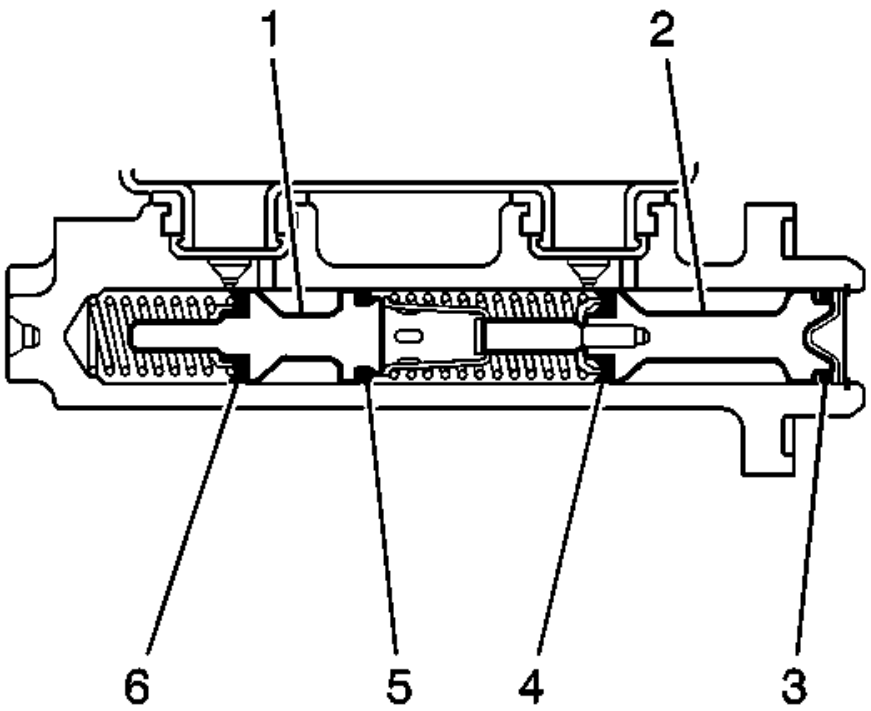

Fig. 3: Identifying Brake Master Cylinder (Cross Sectional View)
Courtesy of GENERAL MOTORS COMPANY

5. If the brake pedal apply did not feel spongy, but the brake pedal travel was excessive, perform the following steps:
    1. Loosen the master cylinder-to-brake power booster mounting nuts.
    2. Carefully pull the master cylinder away from the brake power booster just enough to inspect the mounting surface of the master cylinder.
    3. Inspect the master cylinder mounting surface at the primary piston (2) for brake fluid leaks.
6. If the master cylinder exhibits any leakage around the primary piston (2), then the primary piston primary seal (4) and/or secondary seal (3) is leaking and the master cylinder requires overhaul or replacement.
7. If the master cylinder primary piston (2) does not exhibit any leakage, pressure bleed the brake system. Refer to **Hydraulic Brake System Bleeding (Manual Bleeding)**, **Hydraulic Brake System Bleeding (Pressure Bleeding)**.
8. If the brake pedal apply did not feel spongy, and the brake pedal travel was initially steady and not excessive, but then gradually fell, then the master cylinder requires overhaul or replacement due to an internal leak past the secondary piston (1) from the secondary piston primary seal (6) or secondary seal (5).

9. If the brake pedal apply did not feel spongy, and the brake pedal travel was initially steady and not excessive, then fell slightly, then became steady again, then the brake pressure modulator valve (BPMV) may be leaking internally, and may require replacement.

HYDRAULIC BRAKE COMPONENT OPERATION VISUAL INSPECTION

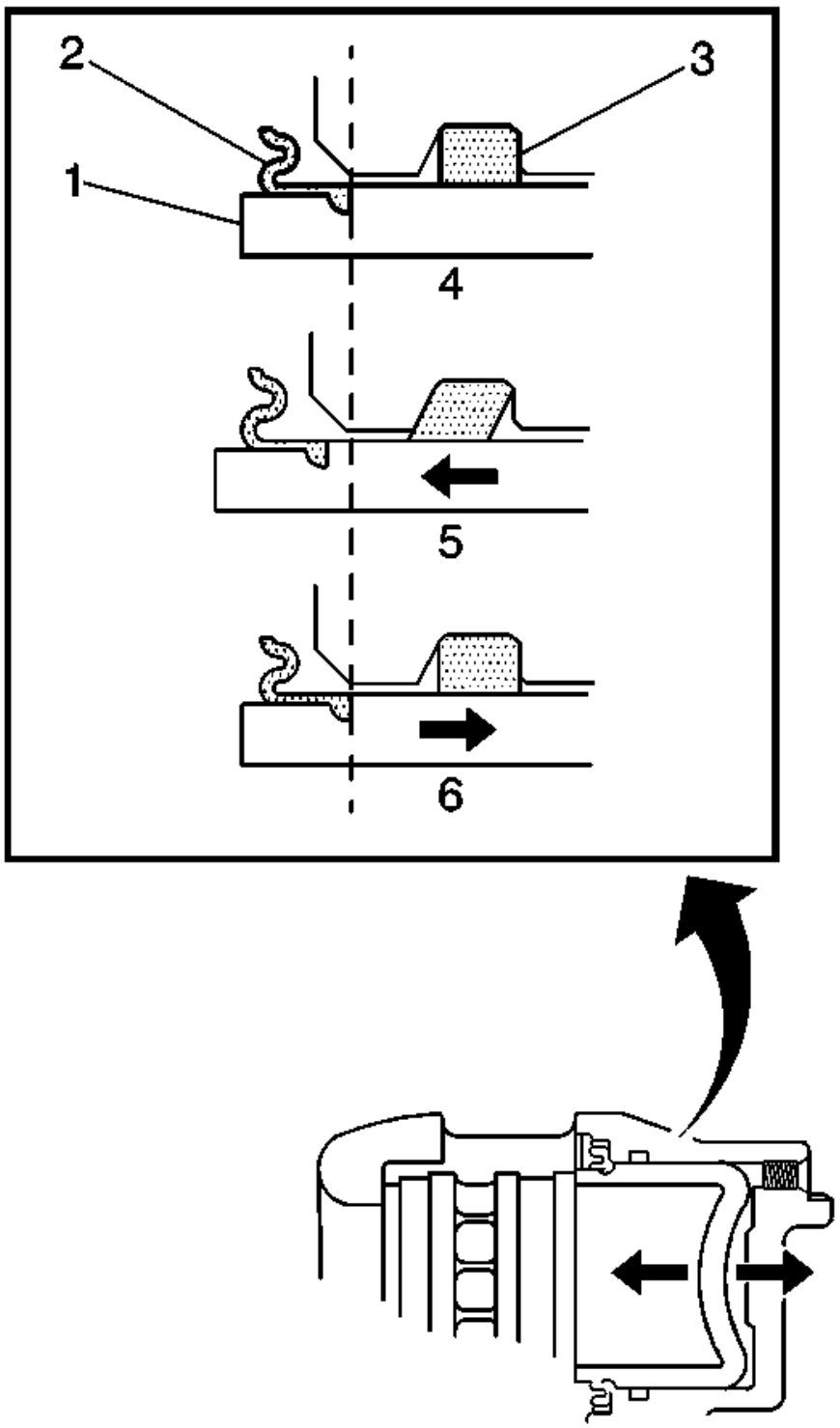

Fig. 4: Identifying Brake Caliper/Pad Inspection Areas
Courtesy of GENERAL MOTORS COMPANY

WARNING: Refer to Brake Fluid Irritant Warning .

CAUTION: Refer to Brake Fluid Effects on Paint and Electrical Components Caution .

1. With the tire and wheel assemblies removed and the brake rotors retained by wheel lug nuts, visually inspect the caliper piston dust boot (2) sealing area to ensure that there are no brake fluid leaks.
2. If any evidence of a brake fluid leak is present, the brake caliper requires overhaul or replacement.
3. While the brake system is at rest (4), observe the position of the caliper piston (1) in relation to the caliper housing.
4. Have an assistant apply and release the brake pedal several times while you observe the operation of the hydraulic brake caliper.
    1. Observe the caliper piston (1) for unrestricted and even movement during each apply of the brake system (5).
    2. Observe the caliper piston (1) for an unrestricted and even return motion during each release of the brake system (6).
5. If the caliper piston (1) did not exhibit unrestricted and even movement during brake system apply and/or release, the piston square seal (3) may be worn or damaged and the caliper may require overhaul or replacement.

BRAKE PIPE AND HOSE INSPECTION

WARNING: Refer to Brake Fluid Irritant Warning .

CAUTION: Refer to Brake Fluid Effects on Paint and Electrical Components Caution .

1. Visually inspect all of the brake pipes for the following conditions:
    - Kinks, improper routing, missing or damaged retainers
    - Leaking fittings, excessive corrosion
2. If any of the brake pipes exhibited any of the conditions listed, then the identified pipe, or pipes, require replacement.
3. Ensure that the vehicle axles are properly supported at ride height in order to maintain the proper relationship of the flexible brake hoses to the chassis.

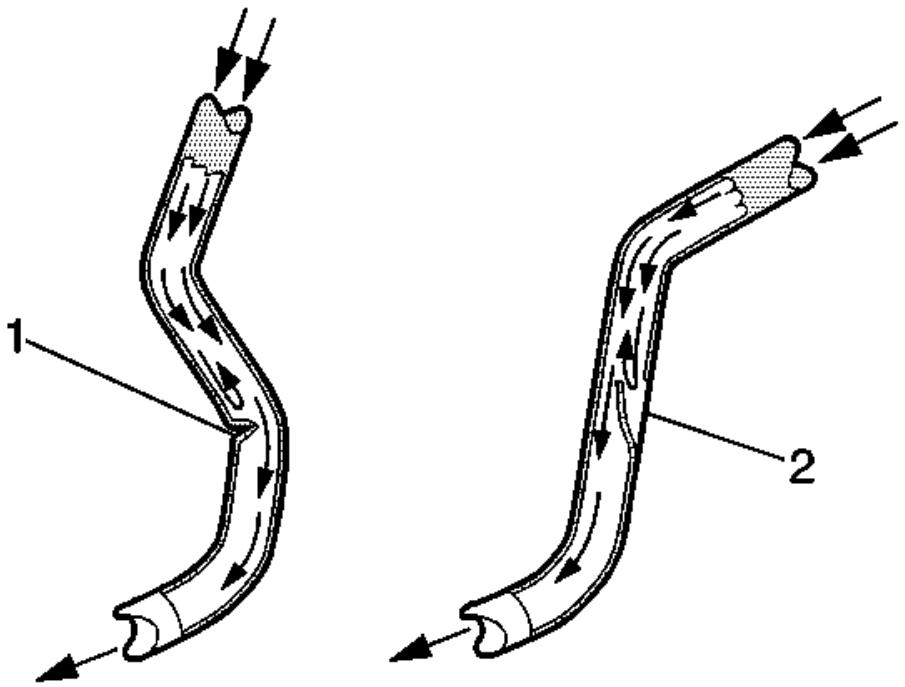

Fig. 5: Identifying Flexible Brake Hose Failure Conditions
Courtesy of GENERAL MOTORS COMPANY

4. Visually inspect all of the flexible brake hoses for the following conditions:
   - Kinks (1), improper routing, twists, chafing, missing or damaged retainers
   - Leaking connections, cracking, dry-rot, blisters, bulges
5. If any of the flexible brake hoses exhibited any of the conditions listed, then the identified flexible brake hose, or hoses require replacement.
6. Squeeze the flexible brake hoses with firm finger pressure to check for soft spots (2), indicating an internal restriction. Check the entire length of each flexible brake hose.
7. If any of the flexible brake hoses were found to have soft spots (2), then the identified flexible brake hose, or hoses require replacement.

BRAKE PEDAL PUSHROD INSPECTION

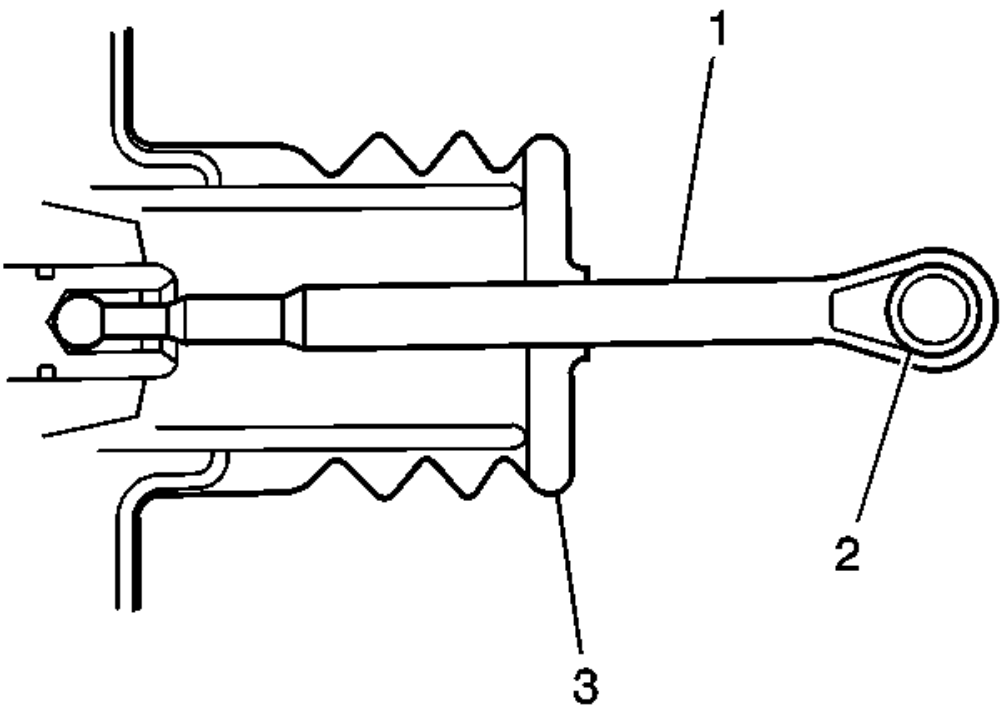

Fig. 6: View of Brake Pedal Pushrod
Courtesy of GENERAL MOTORS COMPANY

1. Disconnect the brake pedal pushrod (1) from the brake pedal.
2. Inspect the brake pedal pushrod eyelet bushing (2), if equipped, for cracks and/or excessive wear.
3. Reposition the pedal pushrod boot (3) toward the front of the vehicle to expose as much of the pedal pushrod (1) as possible.
4. Inspect the brake pedal pushrod (1) for straightness.
5. If the brake pedal pushrod eyelet bushing (2) exhibited cracks and/or excessive wear, then the bushing requires replacement.
6. If the brake pedal pushrod (1) is not straight, then the pushrod requires replacement.
7. Return the pedal pushrod boot (3) to its original position on the pedal pushrod (1).
8. Connect the brake pedal pushrod (1) to the brake pedal.

REPAIR INSTRUCTIONS

MASTER CYLINDER RESERVOIR FILLING

WARNING: Refer to Brake Fluid Irritant Warning .

CAUTION: When adding fluid to the brake master cylinder reservoir, use only GM approved or equivalent DOT-3 brake fluid from a clean, sealed brake fluid container. The use of any type of fluid other than the recommended type of brake fluid may cause contamination which could result in damage to the internal rubber seals and/or rubber linings of hydraulic brake system components.

CAUTION: Refer to Brake Fluid Effects on Paint and Electrical Components Caution .

1. Visually inspect the brake fluid level through the brake master cylinder auxiliary reservoir.
2. If the brake fluid level is at or below the half-full point during routine fluid checks, the brake system should be inspected for wear and possible brake fluid leaks.
3. If the brake fluid level is at or below the half-full point during routine fluid checks, and an inspection of the brake system did not reveal wear or brake fluid leaks, the brake fluid may be topped-off up to the maximum-fill level.
4. If brake system service was just completed, the brake fluid may be topped-off up to the maximum-fill level.
5. If the brake fluid level is above the half-full point, adding brake fluid is not recommended under normal conditions.
6. If brake fluid is to be added to the master cylinder auxiliary reservoir, clean the outside of the reservoir on and around the reservoir cap prior to removing the cap and diaphragm.

MASTER CYLINDER RESERVOIR REPLACEMENT

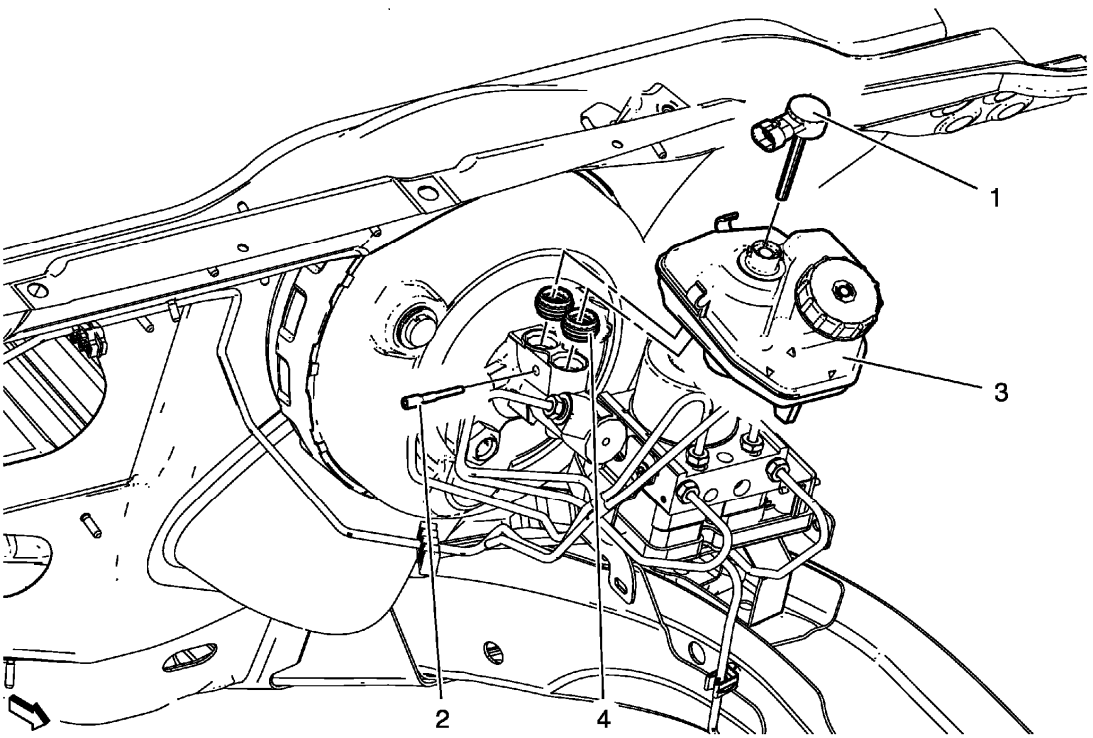

Fig. 7: Master Cylinder Reservoir
Courtesy of GENERAL MOTORS COMPANY

Master Cylinder Reservoir Replacement

Callout	Component Name
WARNING: **Refer to Brake Fluid Irritant Warning .** **CAUTION:** **Refer to Brake Fluid Effects on Paint and Electrical Components Caution .** **Preliminary Procedure** Remove and discard the brake fluid from the master cylinder reservoir.	
1	Brake Fluid Level Indicator Switch **Procedure** 1. Disconnect electrical connector. 2. Rotate level indicator clockwise and remove upwards.
2	Master Cylinder Reservoir Bolt **CAUTION:** **Refer to Fastener Caution .**

	Tighten 2.5 N.m (22 lb in)
3	Master Cylinder Reservoir **Procedure** 1. Inspect the master cylinder for damage and replace, if necessary. 2. Clean the reservoir with denatured alcohol. 3. Dry the reservoir with filtered, non-lubricated compressed air.
4	Master Cylinder Reservoir Seal (Qty: 2) **CAUTION:** **Only use products that comply with GM specifications and check manufacturer information respectively. We recommend the use of GM genuine products. Instructions must be followed at all times. The use of any type of fluid other than the recommended type of brake fluid, may cause contamination which could result in damage to the internal rubber seals and/or rubber linings of hydraulic brake system components.** **Procedure** 1. Lubricate the seals and the reservoir caps with brake fluid. Refer to **Brake Fluid and Brake Fluid Handling** for the recommended brake fluid. 2. Lubricate the seals and the reservoir bayonets with brake fluid. Refer to **Adhesives, Fluids, Lubricants, and Sealers**.

MASTER CYLINDER REPLACEMENT

Removal Procedure

WARNING: Refer to Brake Fluid Irritant Warning .

CAUTION: Refer to Brake Fluid Effects on Paint and Electrical Components Caution .

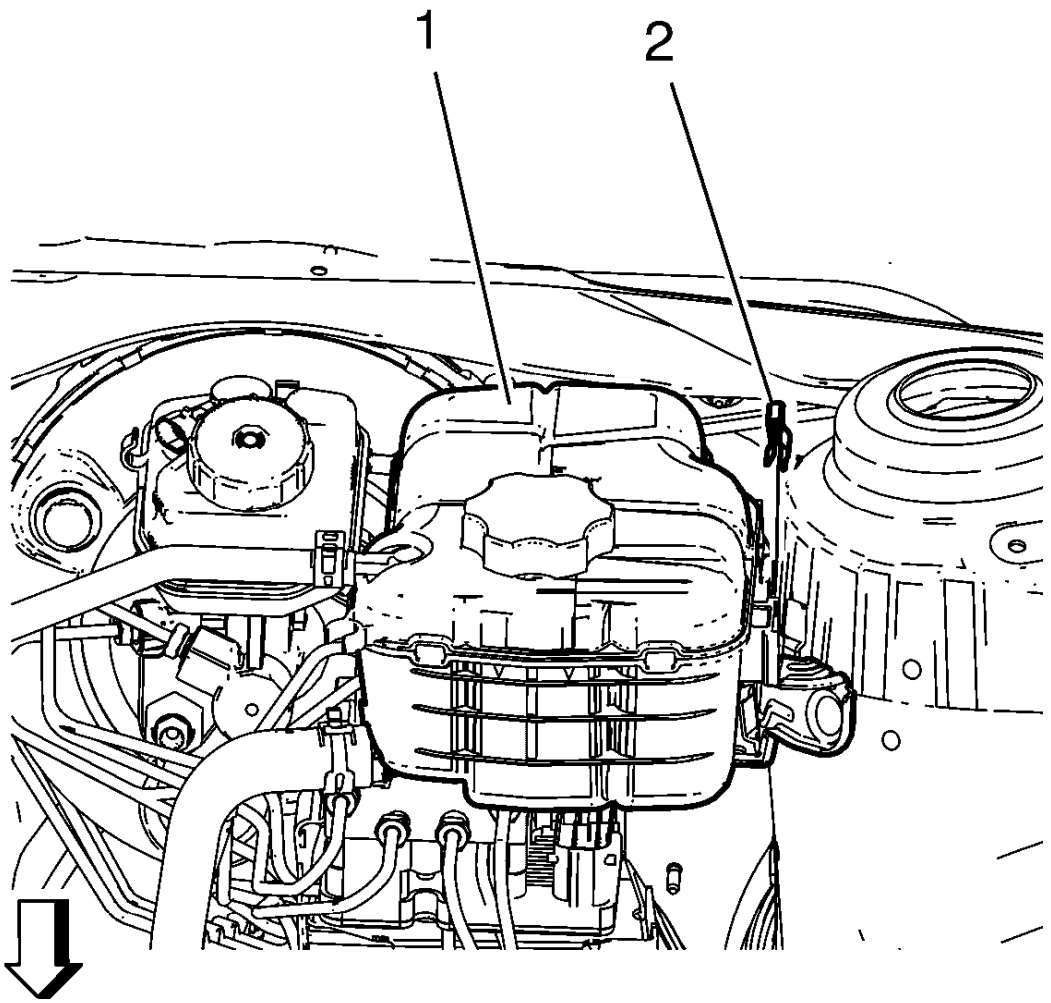

Fig. 8: View Of Radiator Surge Tank And Radiator Surge Tank Clip
Courtesy of GENERAL MOTORS COMPANY

NOTE: Do NOT disconnect engine coolant hoses.

1. Remove the radiator surge tank clip (2).
2. Remove the radiator surge tank (1) and put beside.
3. Disconnect the brake fluid level indicator switch electrical connector and separate from brake fluid reservoir.

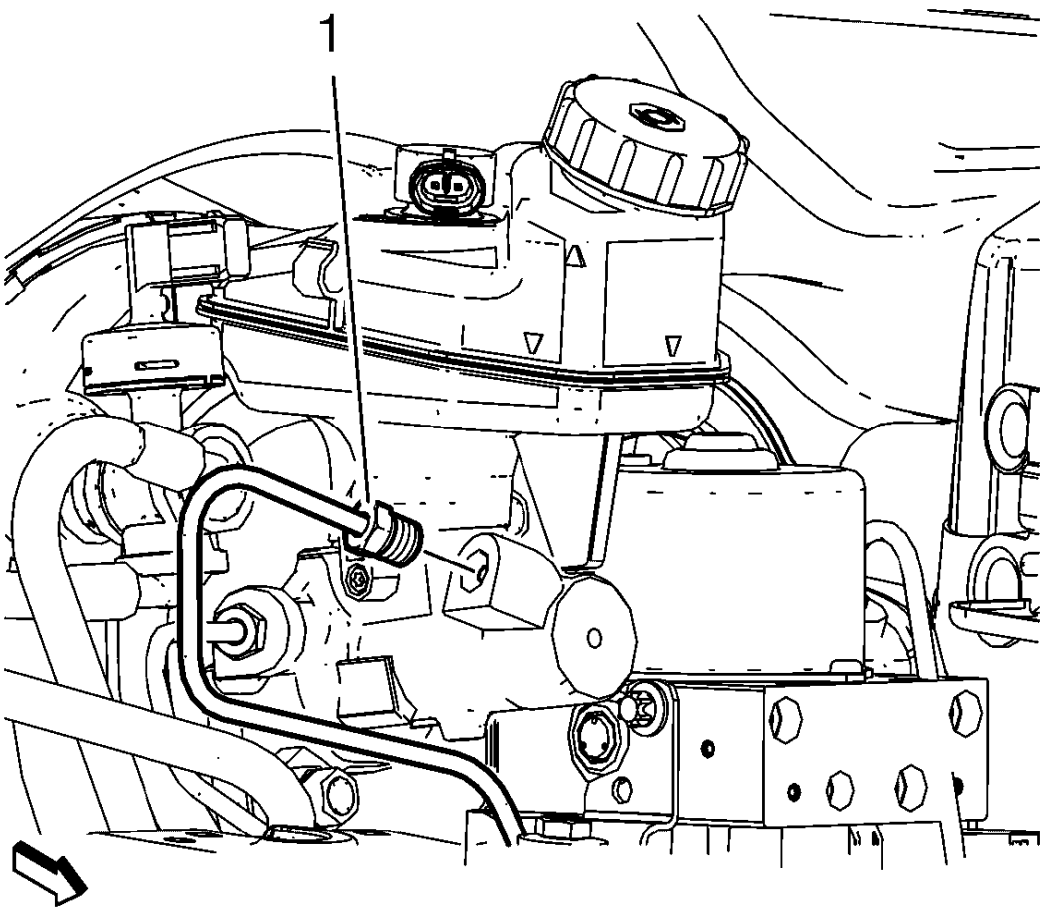

Fig. 9: Master Cylinder Secondary Brake Pipe Fitting
Courtesy of GENERAL MOTORS COMPANY

4. Disconnect the master cylinder secondary brake pipe fitting (1).

   Cap the brake pipe fitting and plug the master cylinder outlet port to prevent brake fluid loss and contamination.

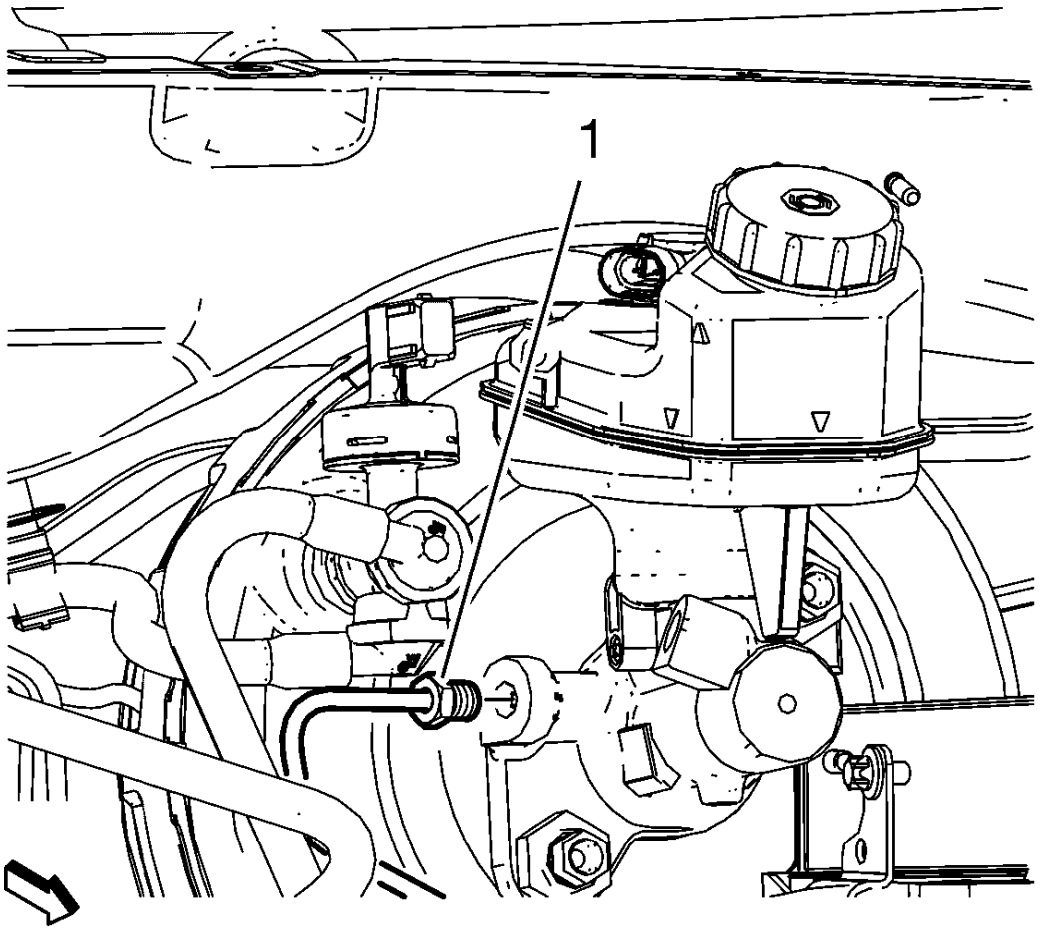

Fig. 10: Master Cylinder Primary Brake Pipe Fitting
Courtesy of GENERAL MOTORS COMPANY

5. Disconnect the master cylinder primary brake pipe fitting (1).

   Cap the brake pipe fitting and plug the master cylinder outlet port to prevent brake fluid loss and contamination.

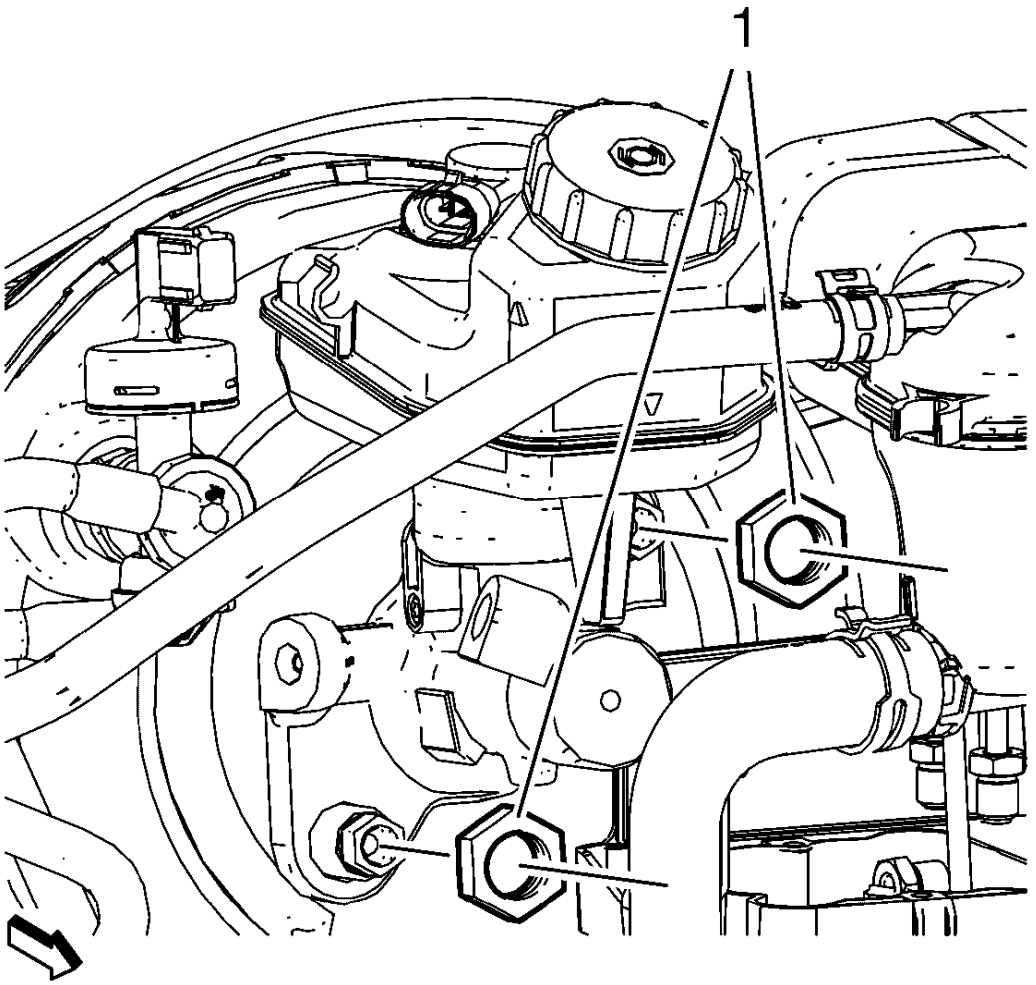

Fig. 11: Master Cylinder Nuts
Courtesy of GENERAL MOTORS COMPANY

6. Remove and DISCARD master cylinder nuts (1).
7. Remove master cylinder with brake fluid reservoir.
8. Inspect the master cylinder to vacuum brake booster seal for damage and replace, if necessary.
9. Remove the master cylinder reservoir, if necessary. Refer to **Master Cylinder Reservoir Replacement**.

Installation Procedure

1. Install the brake fluid reservoir to master cylinder. Refer to **Master Cylinder Reservoir Replacement**.
2. Ensure the master cylinder to vacuum brake booster seal is properly seated on the master cylinder barrel.
3. Perform the master cylinder bench bleeding. Refer to **Master Cylinder Bench Bleeding**.

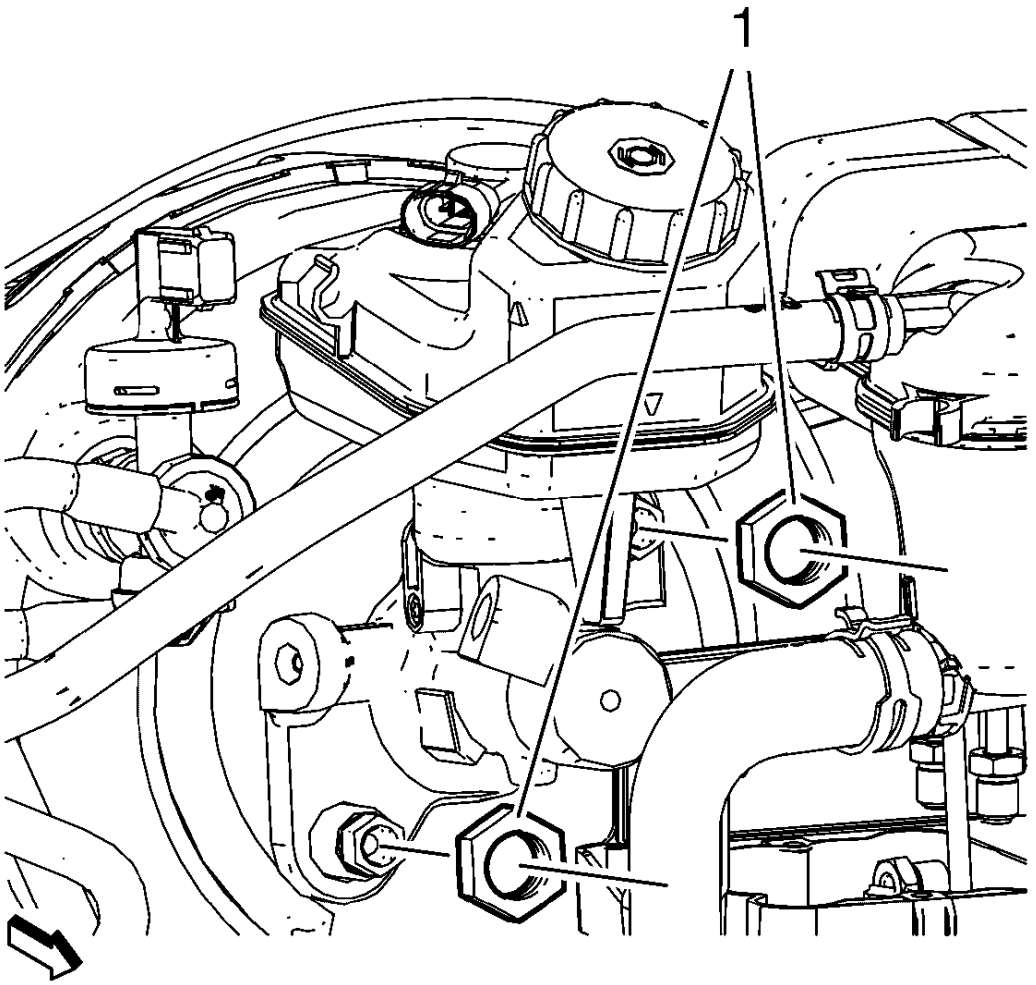

Fig. 12: Master Cylinder Nuts
Courtesy of GENERAL MOTORS COMPANY

4. Install the master cylinder.

WARNING: Refer to Torque-to-Yield Fastener Warning .

CAUTION: Refer to Fastener Caution .

5. Install NEW master cylinder nuts (1) and tighten to 50 N.m (37 lb ft).
6. Install the brake fluid level indicator switch harness to the brake fluid reservoir and connect the electrical connector.

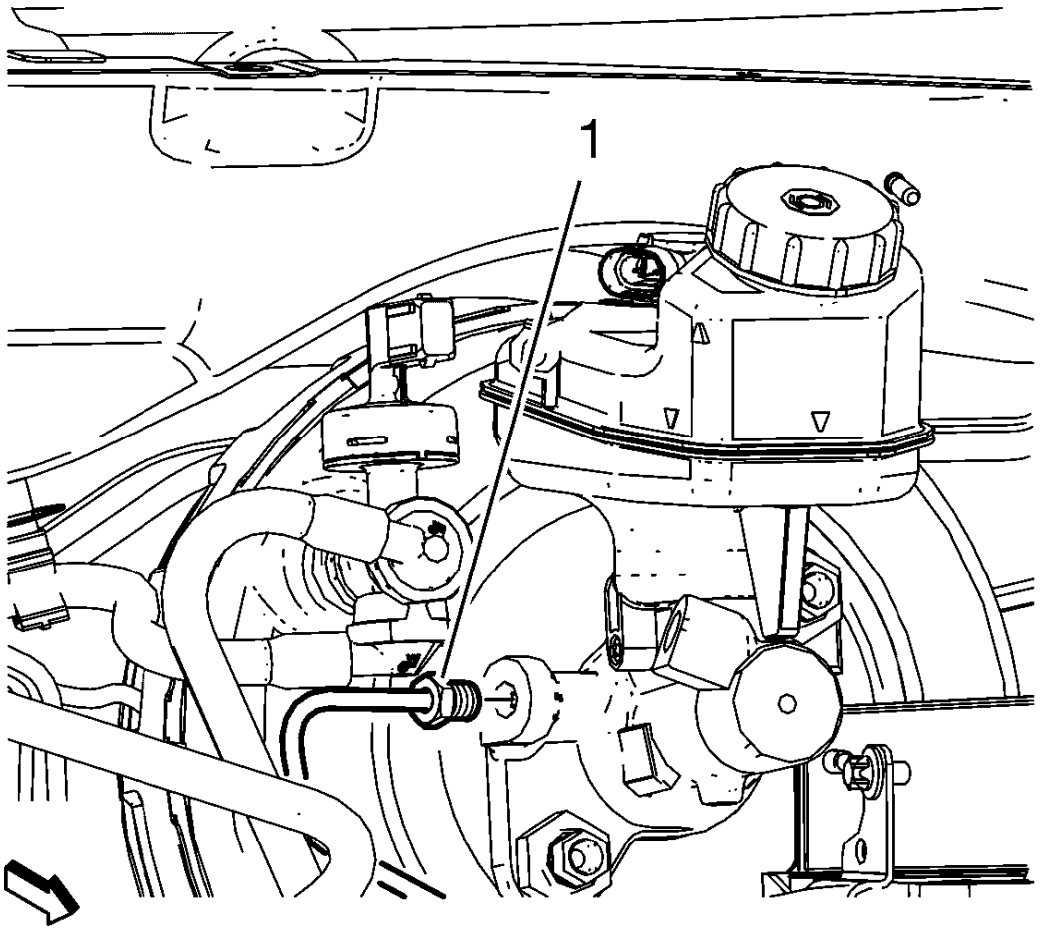

Fig. 13: Master Cylinder Primary Brake Pipe Fitting
Courtesy of GENERAL MOTORS COMPANY

7. Connect the master cylinder primary brake pipe fitting (1) and tighten to 18 N.m (13 lb ft).

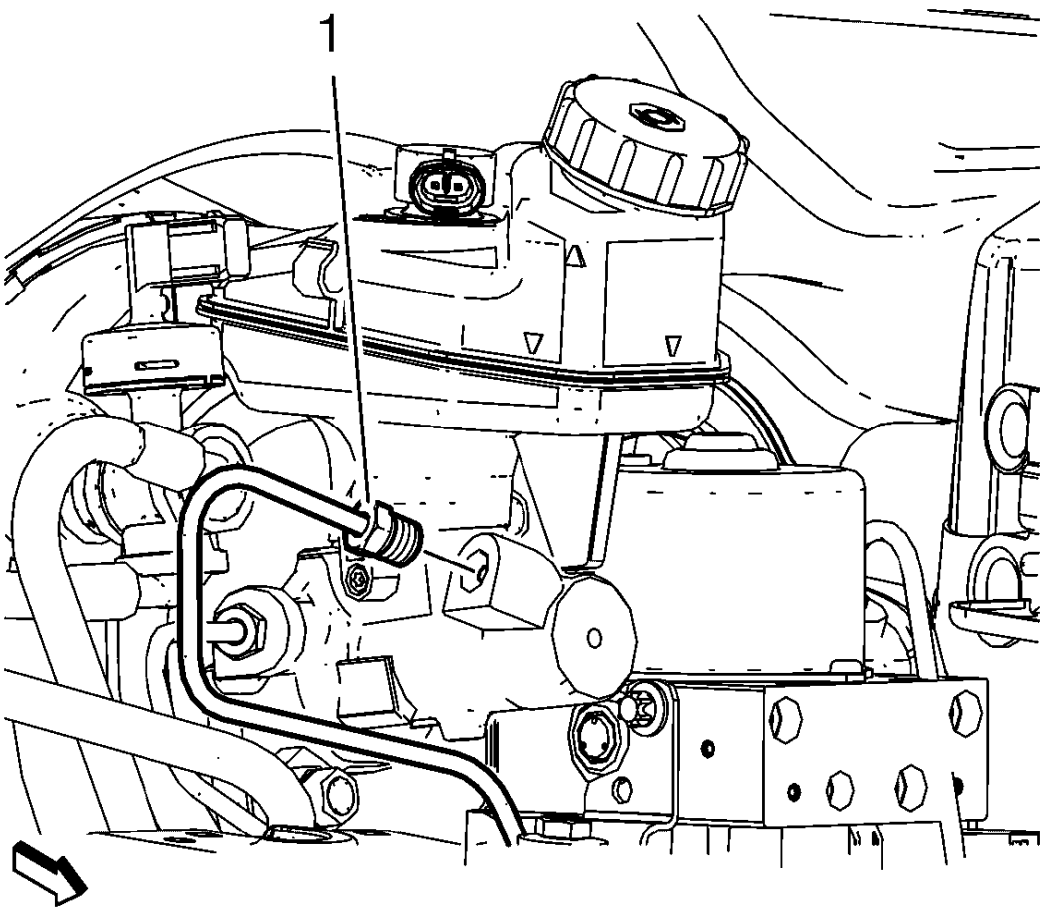

Fig. 14: Master Cylinder Secondary Brake Pipe Fitting
Courtesy of GENERAL MOTORS COMPANY

8. Connect the master cylinder secondary brake pipe fitting (1) and tighten to 18 N.m (13 lb ft).

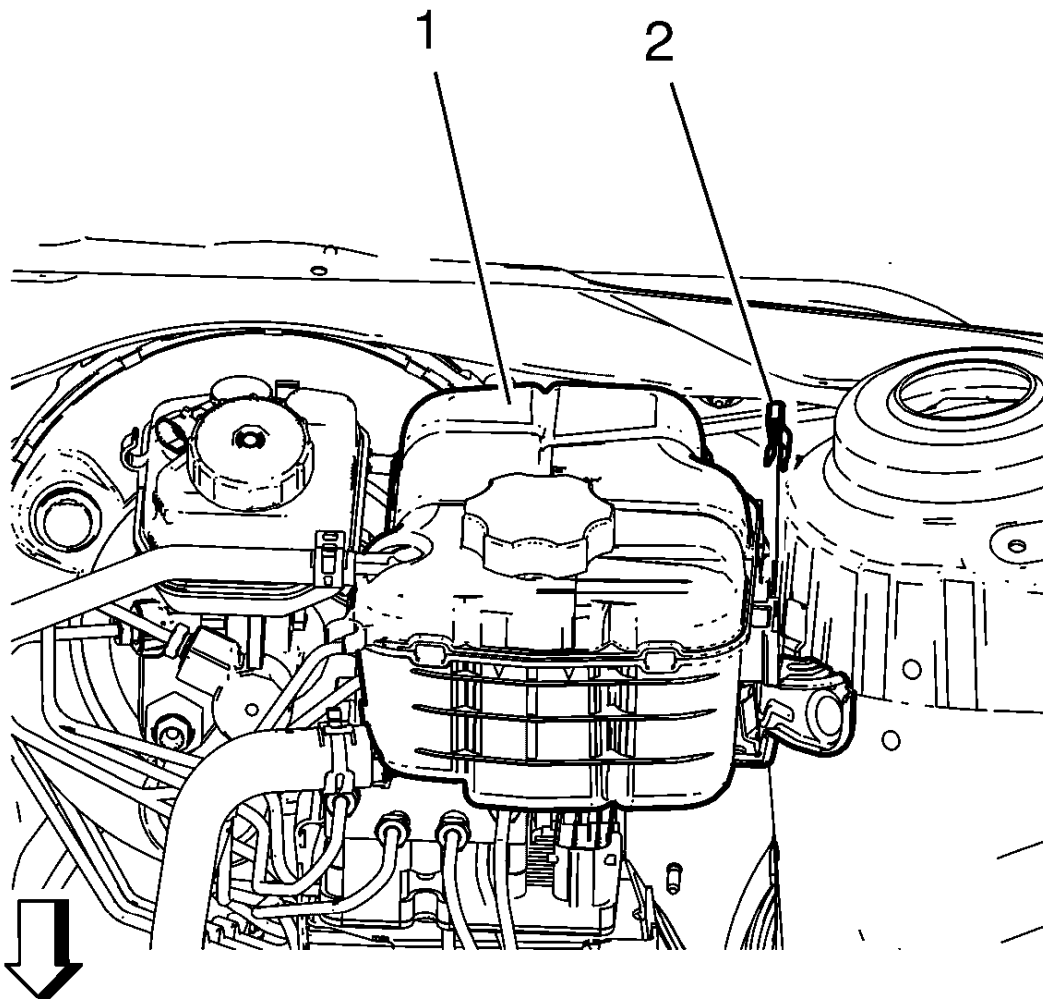

Fig. 15: View Of Radiator Surge Tank And Radiator Surge Tank Clip
Courtesy of GENERAL MOTORS COMPANY

9. Reposition and install the radiator surge tank (1).
10. Install the radiator surge tank clip (2).
11. Bleed the hydraulic brake system. Refer to **Hydraulic Brake System Bleeding (Manual Bleeding)**, **Hydraulic Brake System Bleeding (Pressure Bleeding)**.

MASTER CYLINDER BENCH BLEEDING

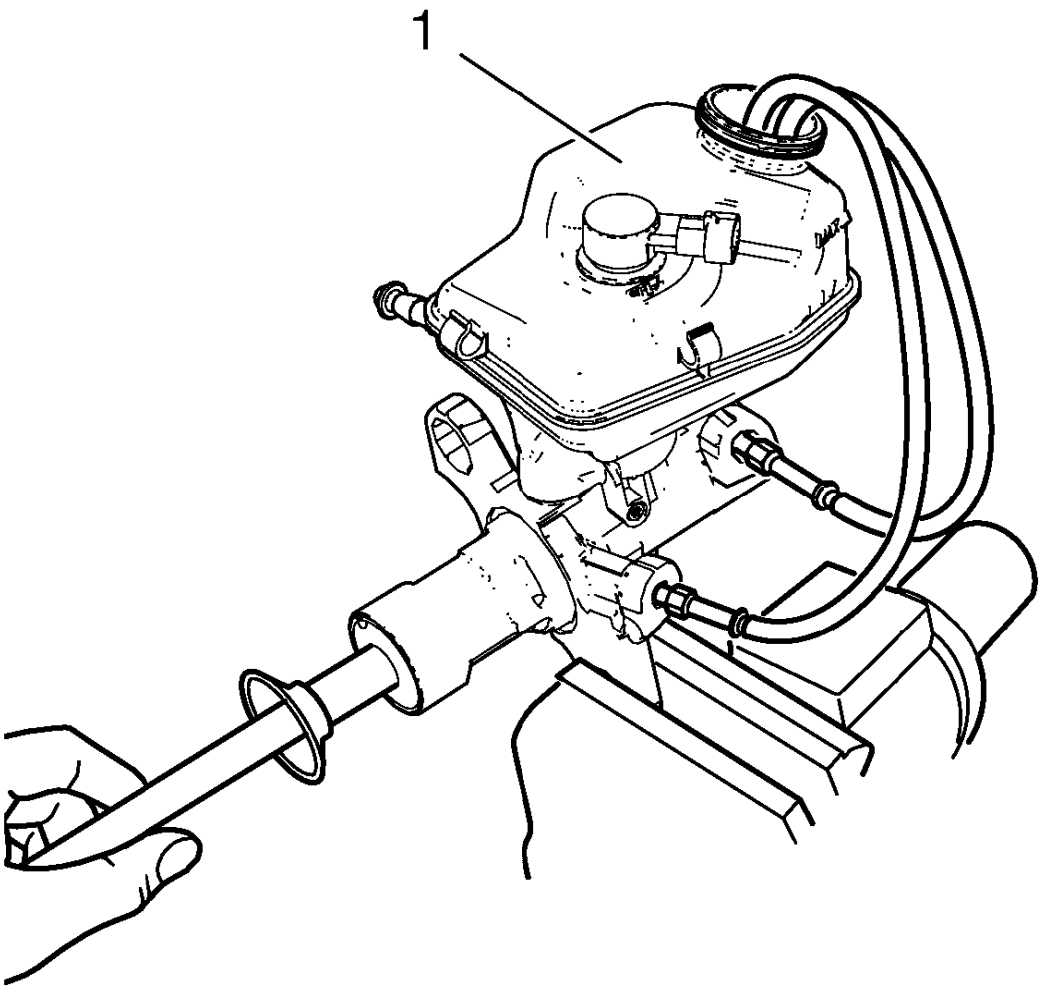

Fig. 16: Master Cylinder Reservoir
Courtesy of GENERAL MOTORS COMPANY

WARNING: Refer to Brake Fluid Irritant Warning .

CAUTION: Refer to Brake Fluid Effects on Paint and Electrical Components Caution .

1. Secure the mounting flange of the brake master cylinder in a bench vise so that the rear of the primary piston is accessible.
2. Remove the master cylinder reservoir cap and diaphragm.
3. Install suitable fittings to the master cylinder ports that match the type of flare seat required and also provide for hose attachment.
4. Install transparent hoses to the fittings installed to the master cylinder ports, then route the hoses into the

master cylinder reservoir (1).

5. Fill the master cylinder reservoir to at least the half-way point with brake fluid. Refer to **Adhesives, Fluids, Lubricants, and Sealers** for the recommended brake fluid.
6. Ensure that the ends of the transparent hoses running into the master cylinder reservoir are fully submerged in the brake fluid.
7. Using a smooth, round-ended tool, depress and release the primary piston as far as it will travel, a depth of about 25 mm (1 in), several times. Observe the flow of fluid coming from the ports.

   As air is bled from the primary and secondary pistons, the effort required to depress the primary piston will increase and the amount of travel will decrease.

8. Continue to depress and release the primary piston until fluid flows freely from the ports with no evidence of air bubbles.
9. Remove the transparent hoses from the master cylinder reservoir (1).
10. Install the master cylinder reservoir cap and diaphragm.
11. Remove the fittings with the transparent hoses from the master cylinder ports. Wrap the master cylinder with a clean shop cloth to prevent brake fluid spills.
12. Remove the master cylinder from the vise.

BRAKE FLUID LEVEL INDICATOR SWITCH REPLACEMENT

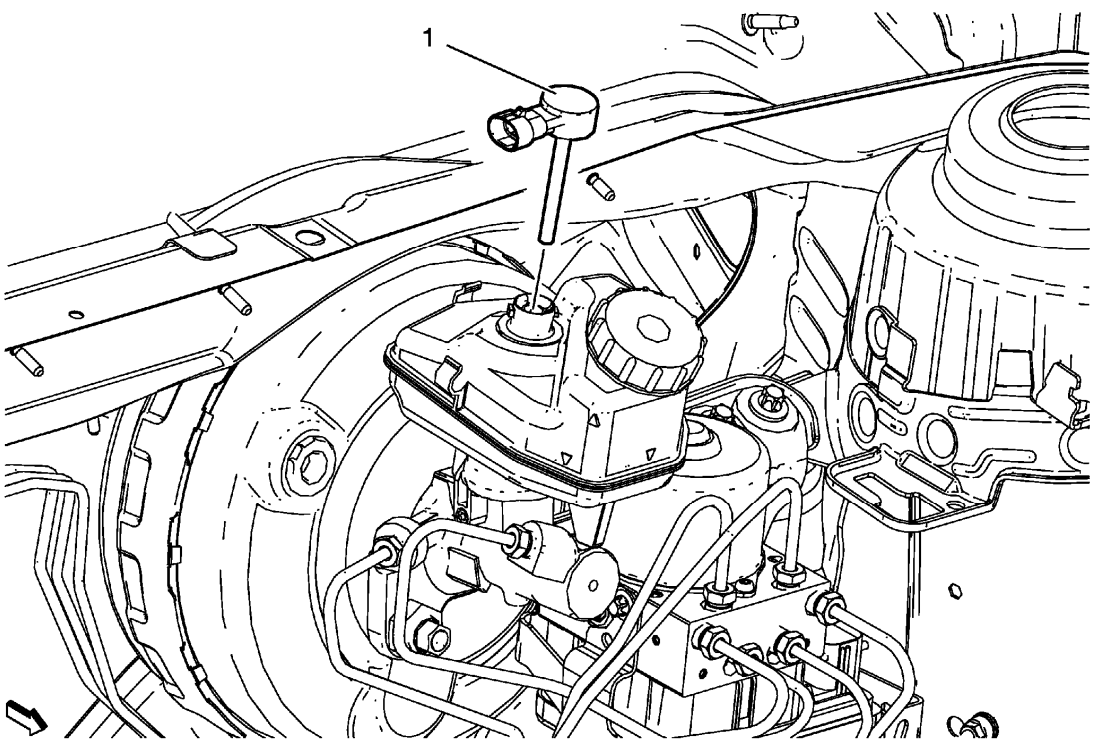

Fig. 17: Brake Fluid Level Indicator Switch
Courtesy of GENERAL MOTORS COMPANY

Brake Fluid Level Indicator Switch Replacement

Callout	Component Name
WARNING: **Refer to Brake Fluid Irritant Warning .** **CAUTION:** **Refer to Brake Fluid Effects on Paint and Electrical Components Caution .** **Preliminary Procedure** Remove and discard the brake fluid from the master cylinder reservoir.	
1	Brake Fluid Level Indicator Switch **Procedure** 1. Disconnect electrical connector. 2. Rotate indicator switch clockwise to remove.

BRAKE, ACCELERATOR, AND CLUTCH PEDAL REPLACEMENT

Special Tools

- **DT-6202-A** Pliers
- **DT-6202-B** Pliers
- **DT-6202-20** Adapter to DT-6202-A
- **DT-50894** Remover

For equivalent regional tools, refer to **Special Tools**.

Removal Procedure

1. Remove the battery. Refer to **Battery Replacement** .
2. Remove the battery tray. Refer to **Battery Tray Replacement** .

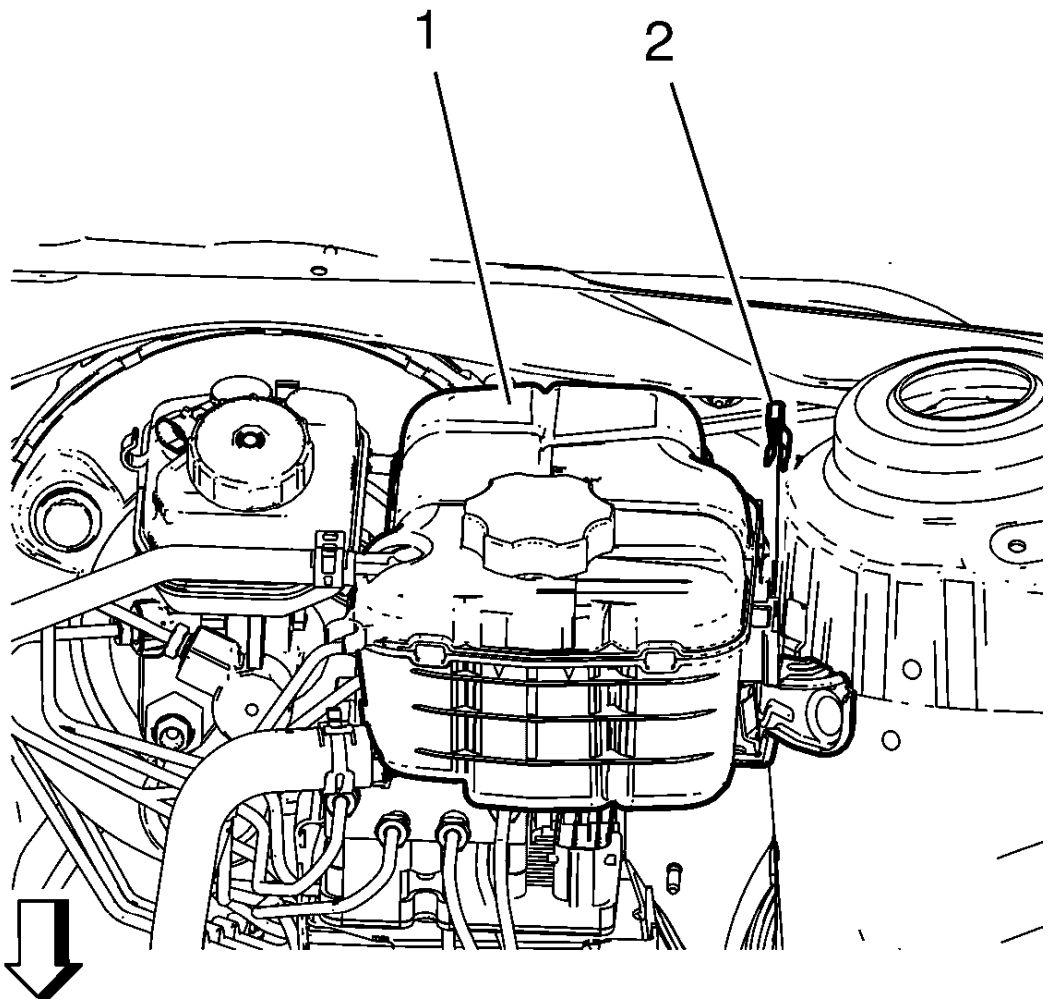

Fig. 18: View Of Radiator Surge Tank And Radiator Surge Tank Clip
Courtesy of GENERAL MOTORS COMPANY

NOTE: Do NOT disconnect the engine coolant hoses.

3. Remove the radiator surge tank clip (2).
4. Remove the radiator surge tank (1).
5. Position the radiator surge tank (1) aside.

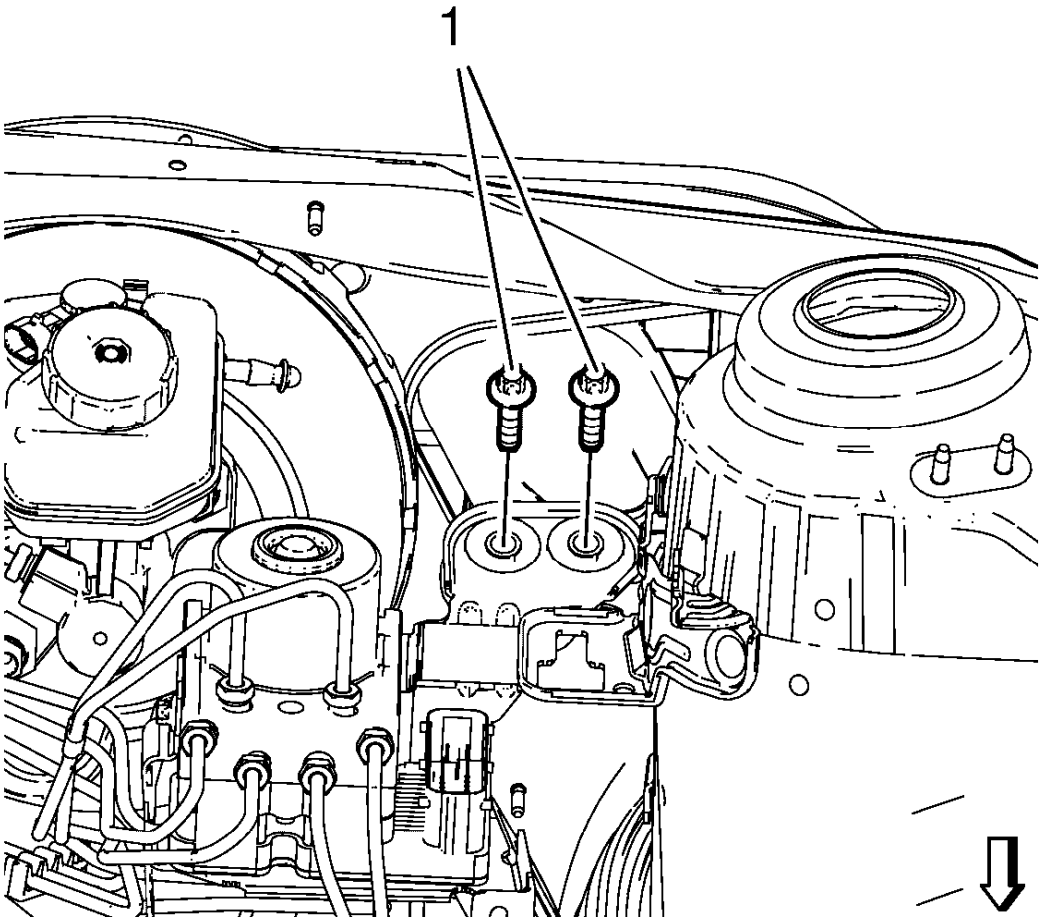

Fig. 19: BPMV Bracket Bolts
Courtesy of GENERAL MOTORS COMPANY

6. Remove the BPMV bracket bolts (1).

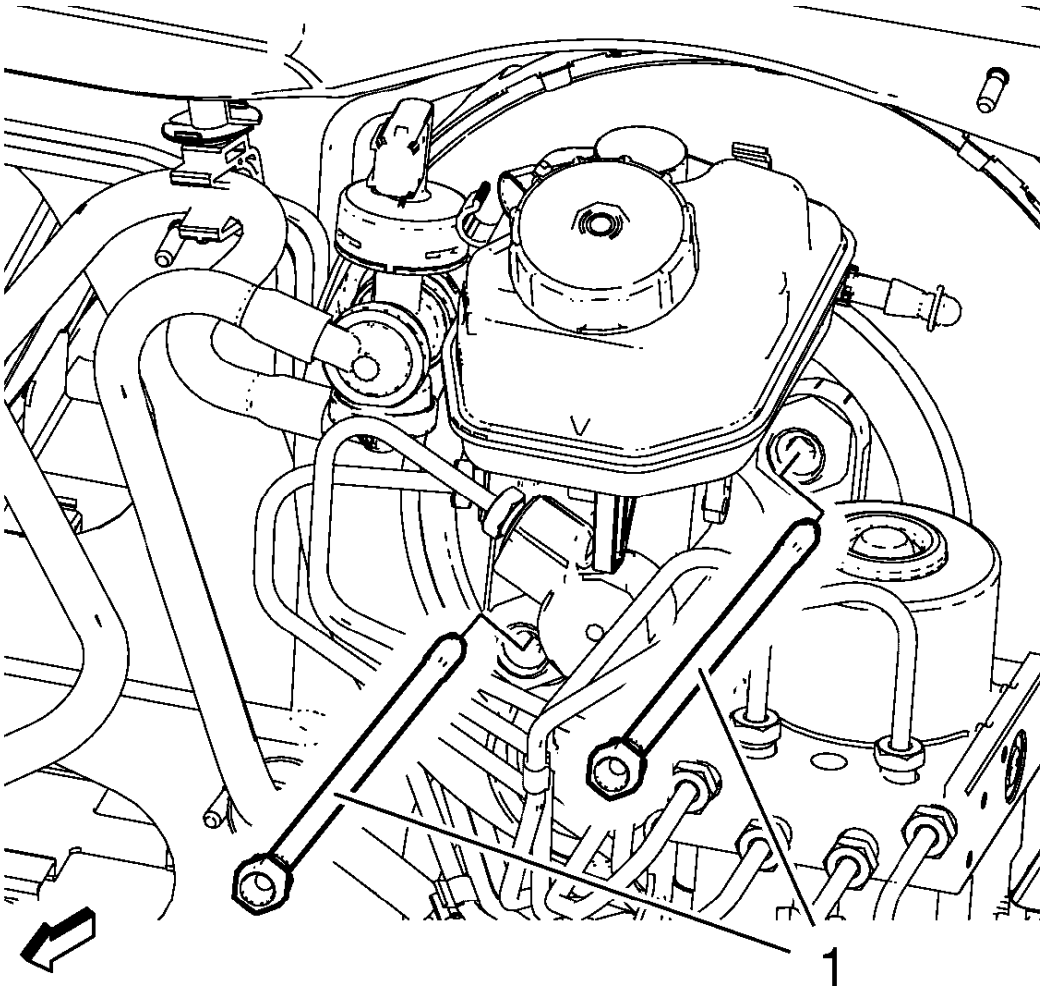

Fig. 20: Brake Booster Bolts
Courtesy of GENERAL MOTORS COMPANY

7. Remove the brake booster bolts (1).

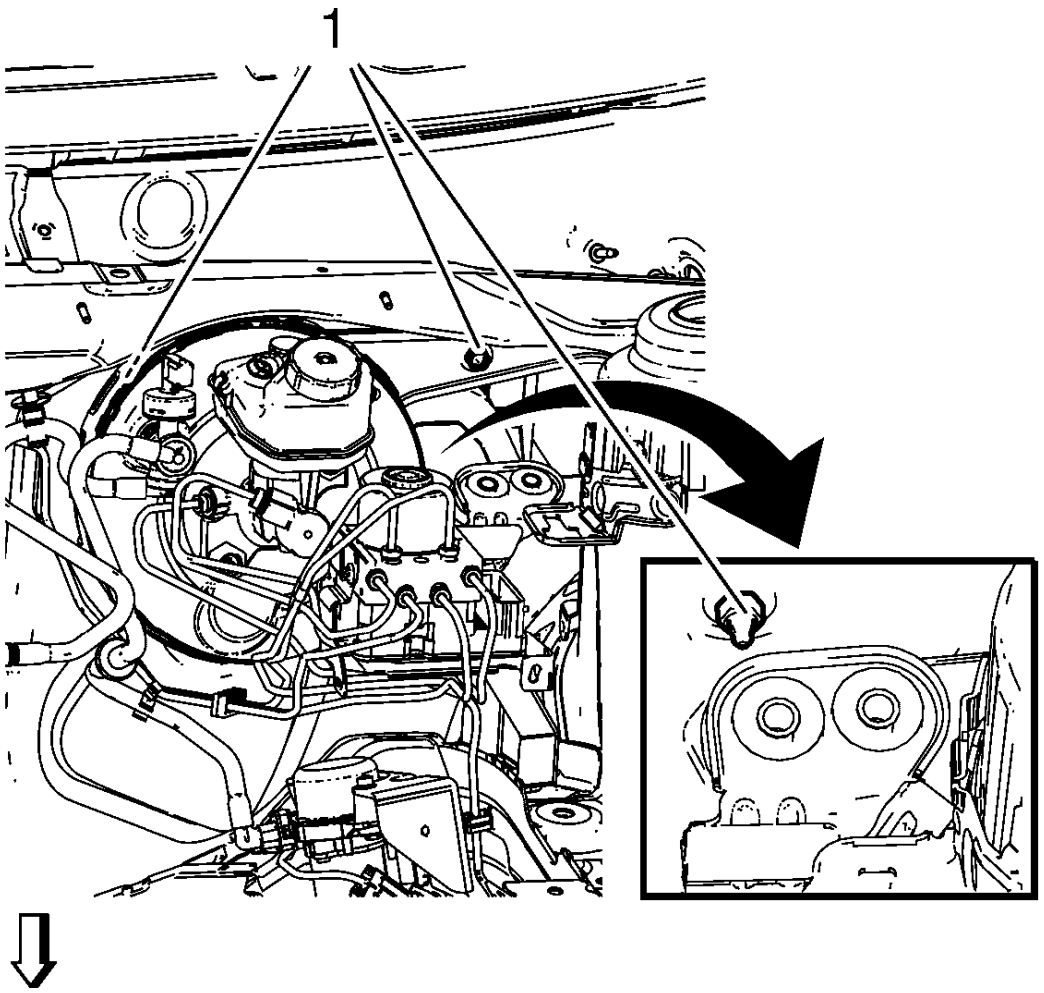

Fig. 21: Identifying Brake Pedal Bracket Nuts
Courtesy of GENERAL MOTORS COMPANY

NOTE:

- **Do NOT open the hydraulic brake system.**
- **Second mechanic is required.**

8. Pull the brake booster and the BPMV assembly forward in order to get an access to the brake pedal bracket nuts (1).
9. Remove the brake pedal bracket nuts (1).
10. Remove the instrument panel lower trim pad cover. Refer to **Instrument Panel Lower Trim Pad Cover Replacement (without Knee Airbag)** , **Instrument Panel Lower Trim Pad Cover Replacement (with Knee Airbag)** .
11. Remove the steering column upper trim cover. Refer to **Steering Column Upper Trim Cover Replacement** .
12. Remove the steering column lower trim cover. Refer to **Steering Column Lower Trim Cover Replacement** .

13. Remove the intermediate steering shaft. Refer to **Intermediate Steering Shaft Replacement** .
14. Remove the steering column. Refer to **Steering Column Replacement** .

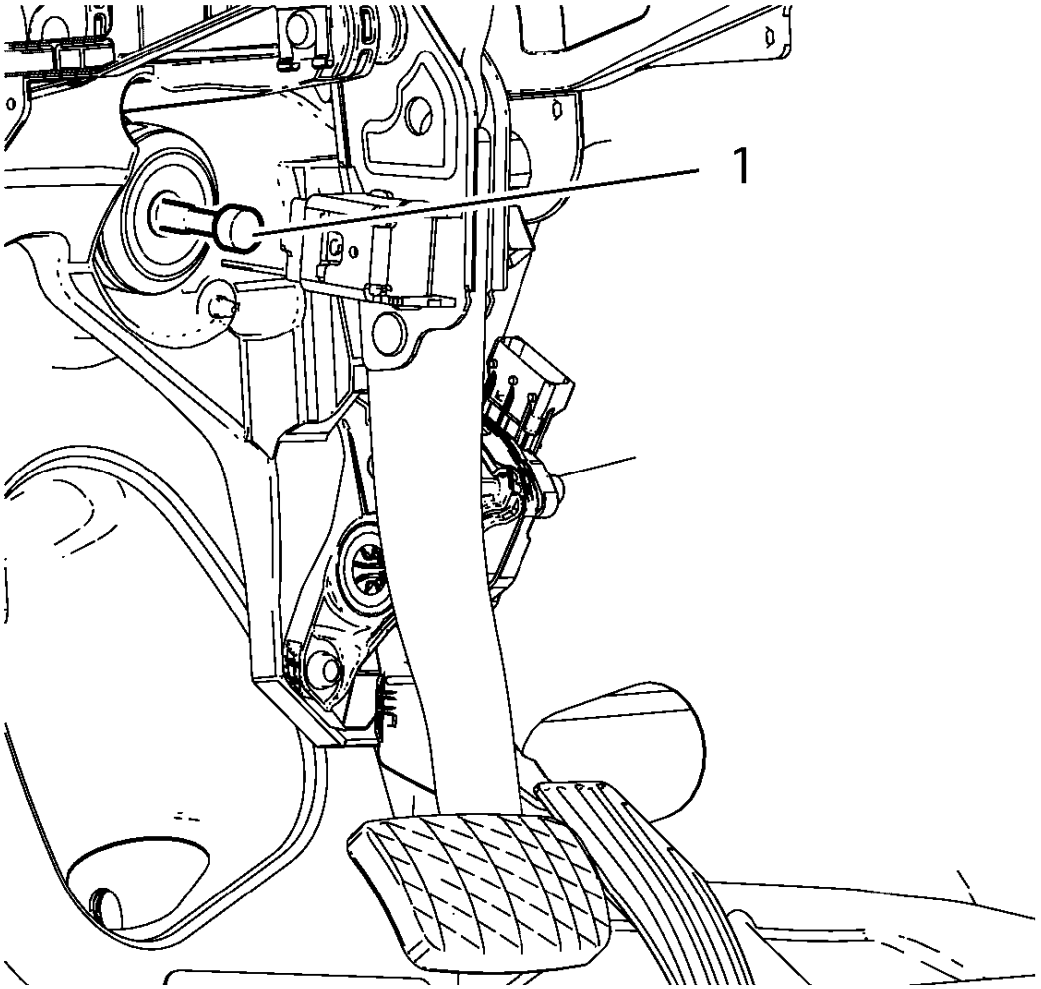

Fig. 22: Brake Pedal Pushrod
Courtesy of GENERAL MOTORS COMPANY

15. Disconnect the brake pedal pushrod (1) from the brake pedal.

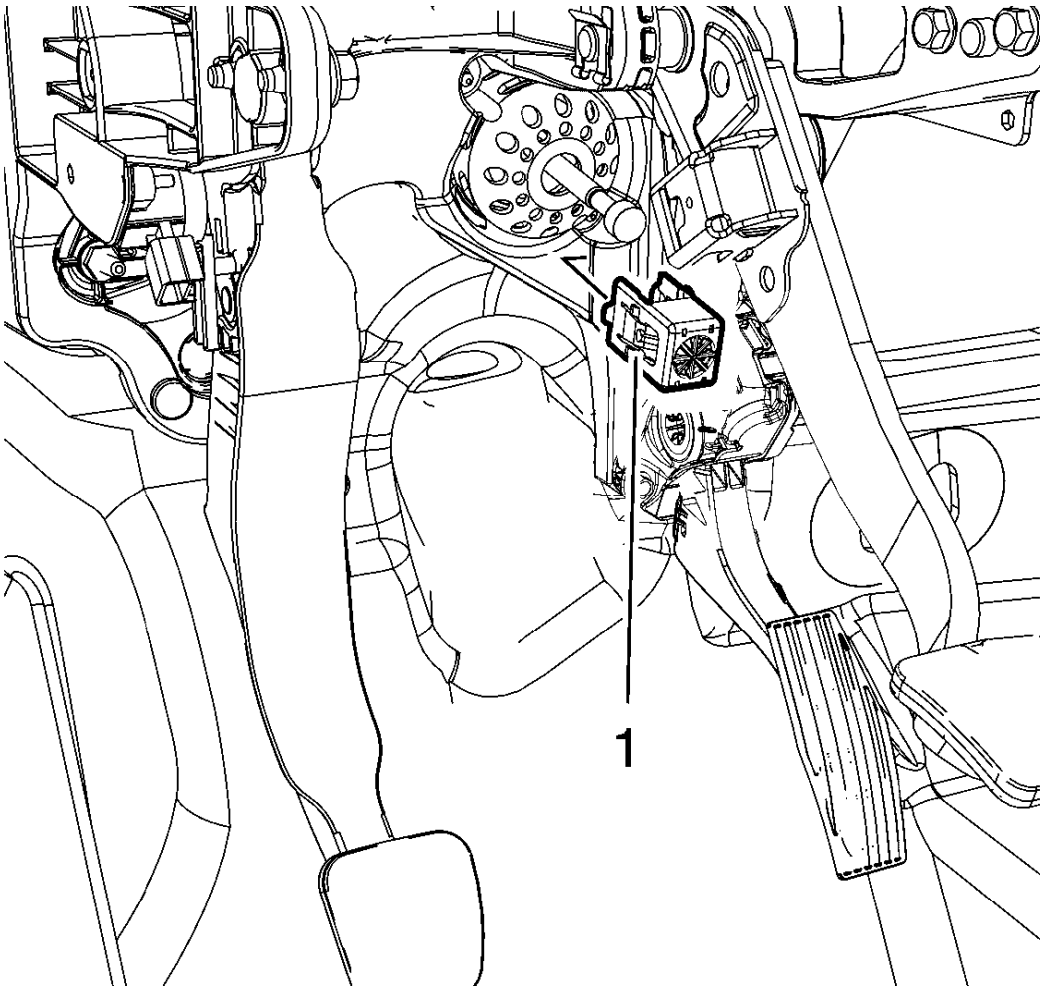

Fig. 23: Click Fit Connector
Courtesy of GENERAL MOTORS COMPANY

16. Replace the click fit connector (1) between the booster pushrod and the brake pedal with new part.
17. Remove the brake pedal position sensor. Refer to **Brake Pedal Position Sensor Replacement** .
18. Remove the accelerator pedal position sensor.
    - For 1.4L LUJ, refer to **Accelerator Pedal Position Sensor Replacement** .
    - For 1.8L LUW, refer to **Accelerator Pedal Position Sensor Replacement** .

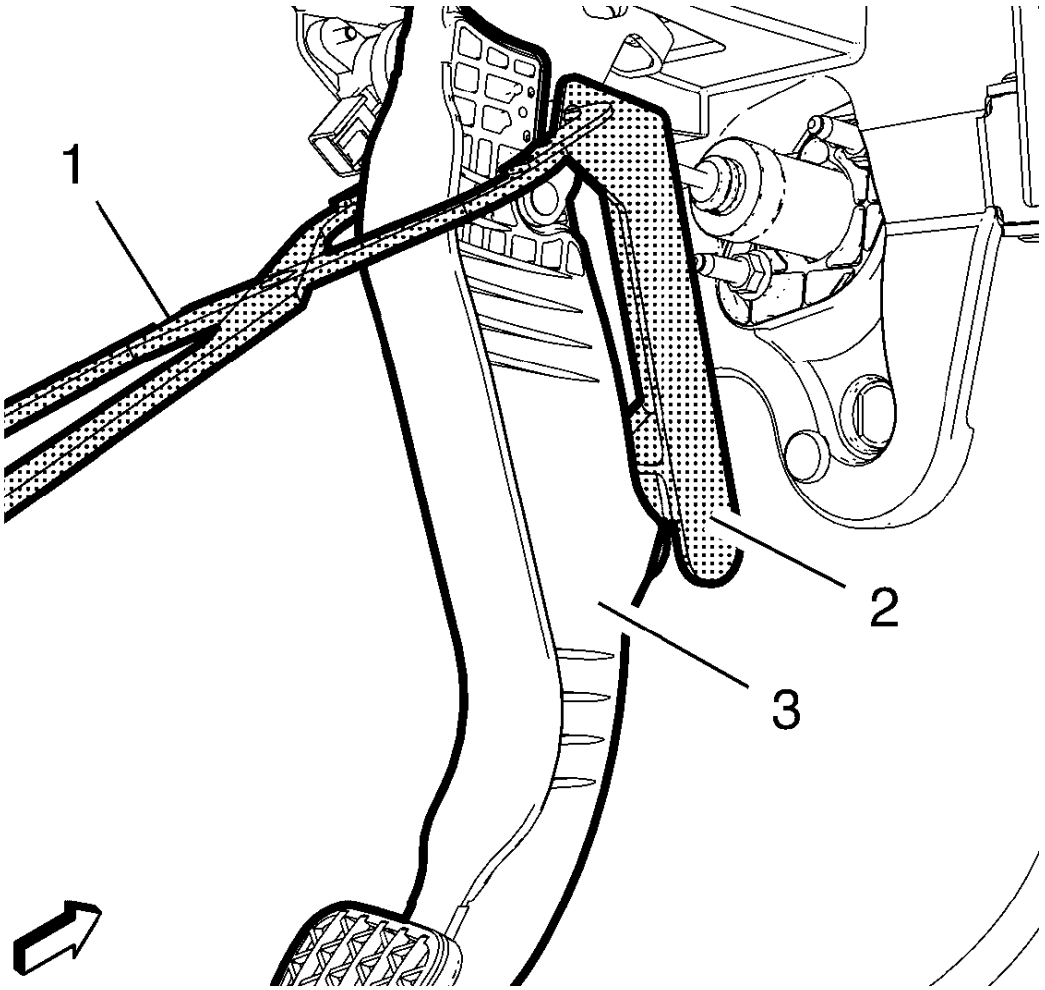

Fig. 24: Clutch Pedal And Push Rod Removal Tools
Courtesy of GENERAL MOTORS COMPANY

19. If equipped, disconnect the clutch master cylinder push rod from the clutch pedal (3), using either the **DT-6202-A** pliers (1) and the **DT-6202-20** adapters in conjunction with the **DT-50894** remover (2), or the **DT-6202-B** pliers (1) in conjunction with the **DT-50894** remover (2).

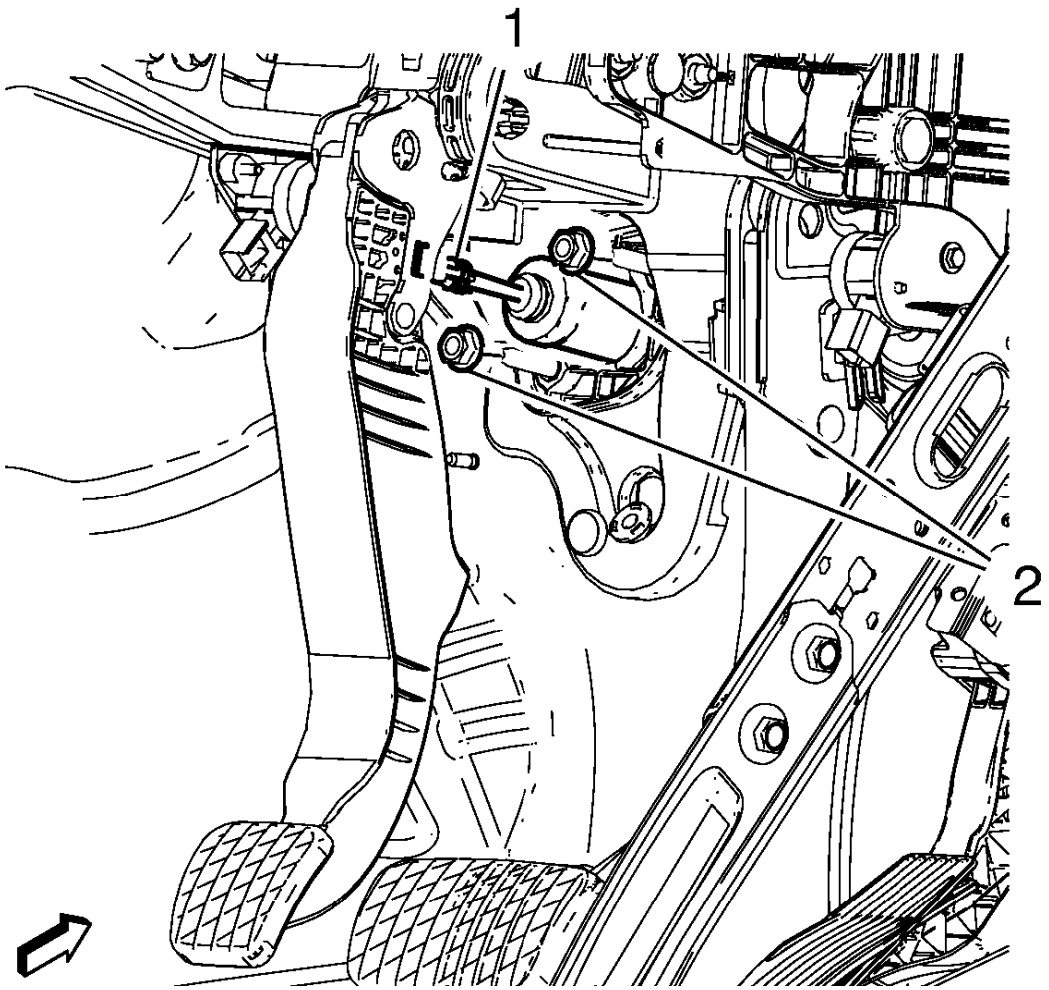

Fig. 25: Clutch Master Cylinder Nuts At Clutch Pedal Bracket
Courtesy of GENERAL MOTORS COMPANY

20. Remove the clutch master cylinder nuts (1) from the pedal bracket, if equipped.

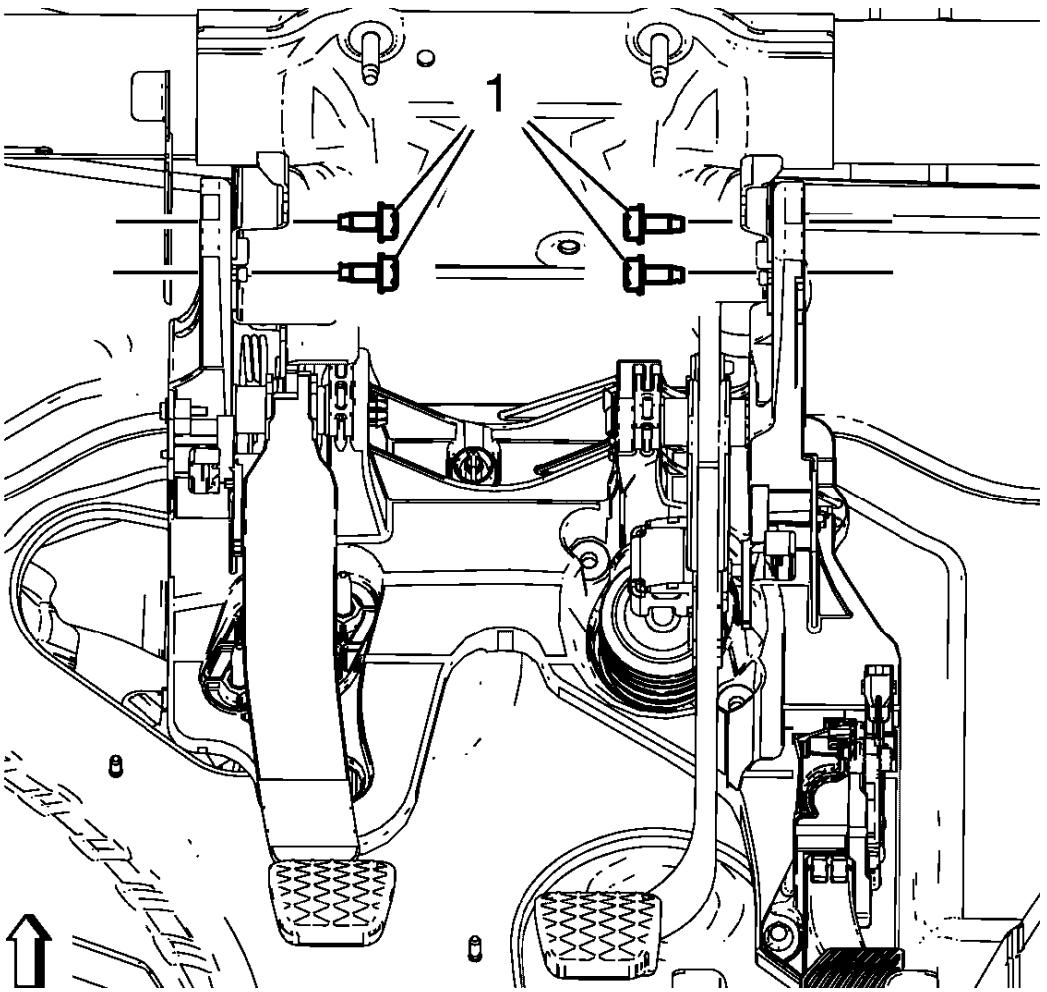

Fig. 26: Clutch Pedal And Brake Pedal Bracket Bolts
Courtesy of GENERAL MOTORS COMPANY

21. Remove the brake pedal bracket bolt (1) from the tie bar.
22. Separate the wiring harness from the pedal bracket.
23. Disconnect the electrical connectors.
24. Remove the brake and accelerator and clutch pedal assembly from the vehicle.
25. Transfer component parts as needed.

Installation Procedure

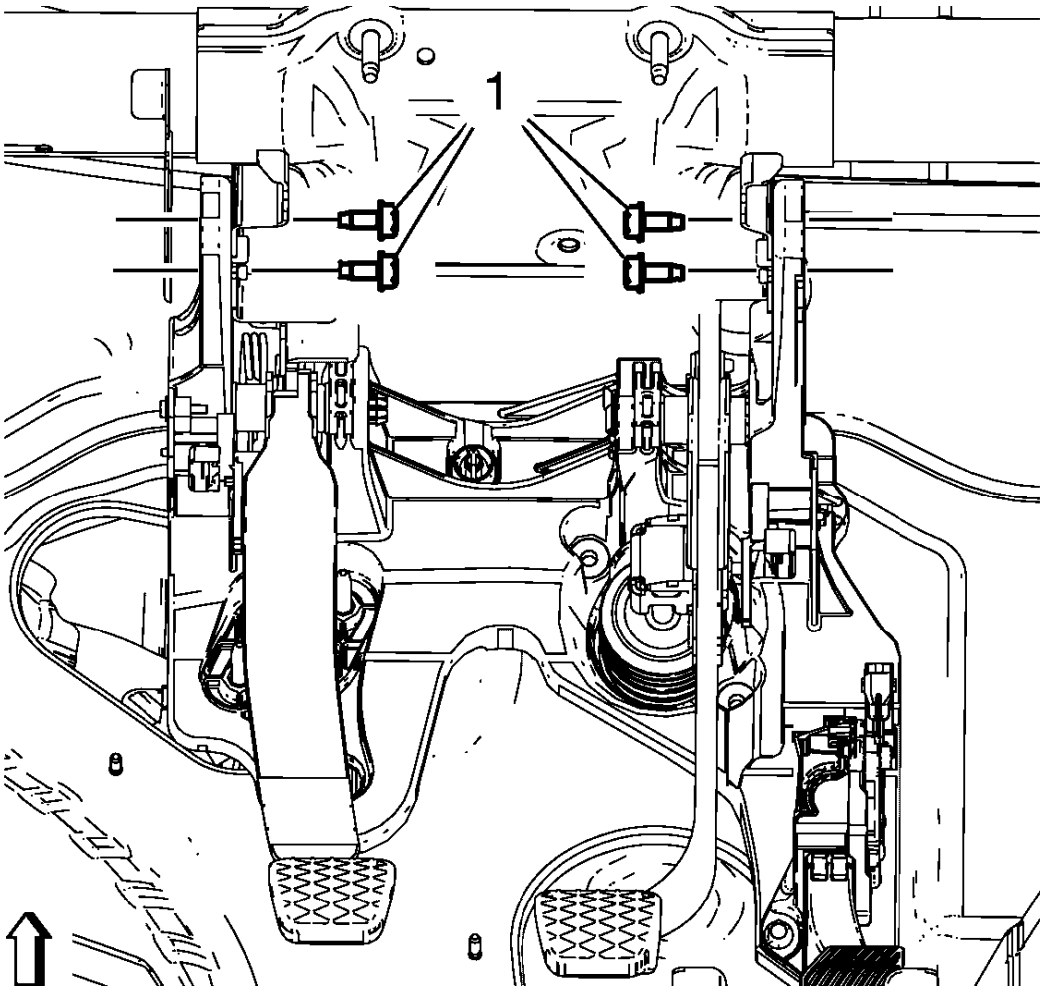

Fig. 27: Clutch Pedal And Brake Pedal Bracket Bolts
Courtesy of GENERAL MOTORS COMPANY

1. Install the brake and accelerator and clutch pedal assembly to the vehicle.
2. Install the wiring harness to the brake pedal bracket.
3. Connect the electrical connectors.

CAUTION: Refer to Fastener Caution .

4. Install the brake pedal bracket bolts and tighten to 20 N.m (15 lb ft).
5. Connect clutch master cylinder pushrod (1) to the clutch pedal, if equipped.

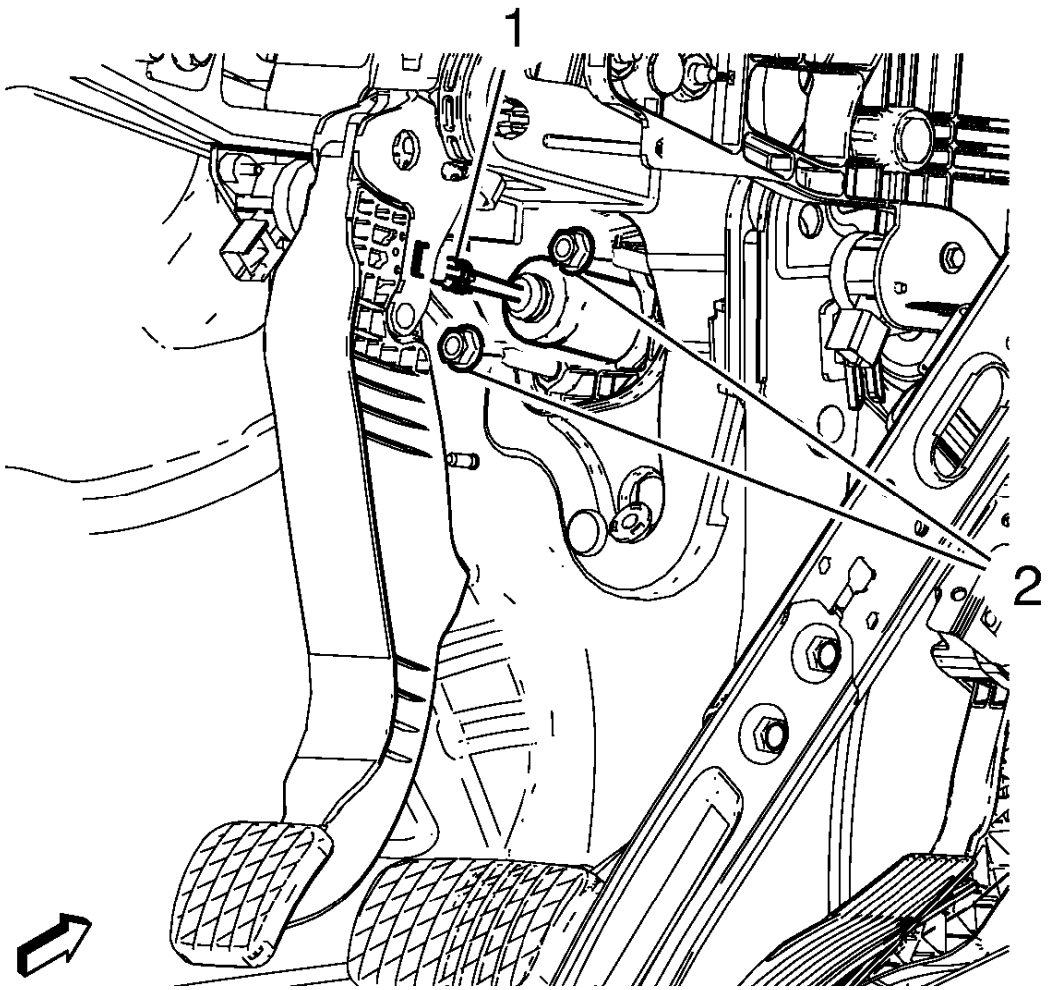

Fig. 28: Clutch Master Cylinder Nuts At Clutch Pedal Bracket
Courtesy of GENERAL MOTORS COMPANY

6. Install the clutch master cylinder nuts (2) to the pedal bracket, if equipped and tighten to 18 N.m (13 lb ft).
7. Install the accelerator pedal position sensor.
   - For 1.4L LUJ, refer to **Accelerator Pedal Position Sensor Replacement** .
   - For 1.8L LUW, refer to **Accelerator Pedal Position Sensor Replacement** .
8. Install the brake pedal position sensor. Refer to **Brake Pedal Position Sensor Replacement** .

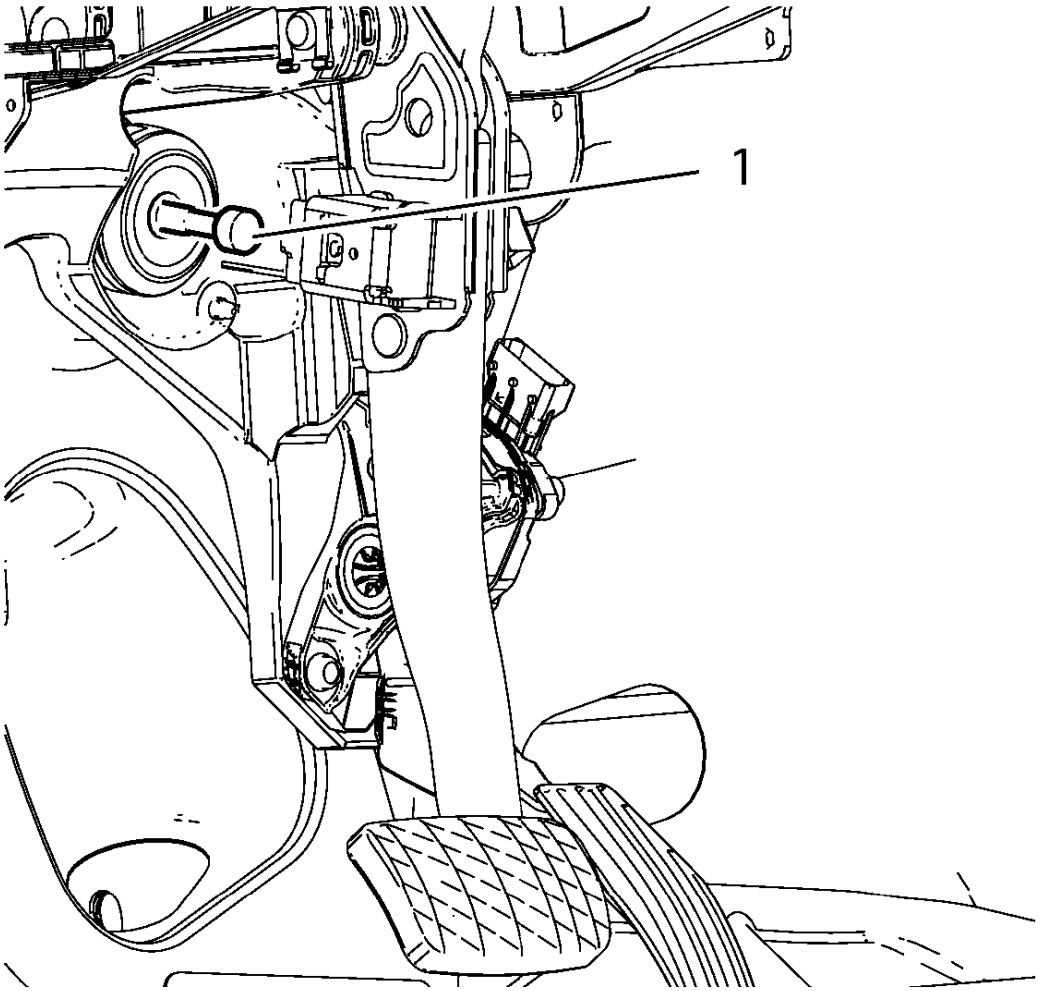

Fig. 29: Brake Pedal Pushrod
Courtesy of GENERAL MOTORS COMPANY

9. Connect the brake pedal pushrod (1) to the brake pedal.
10. Install the steering column. Refer to **Steering Column Replacement** .
11. Install the intermediate steering shaft. Refer to **Intermediate Steering Shaft Replacement** .
12. Install the steering column lower trim cover. Refer to **Steering Column Lower Trim Cover Replacement** .
13. Install the steering column upper trim cover. Refer to **Steering Column Upper Trim Cover Replacement** .
14. Install the instrument panel lower trim pad cover. Refer to **Instrument Panel Lower Trim Pad Cover Replacement (without Knee Airbag)** , **Instrument Panel Lower Trim Pad Cover Replacement (with Knee Airbag)** .

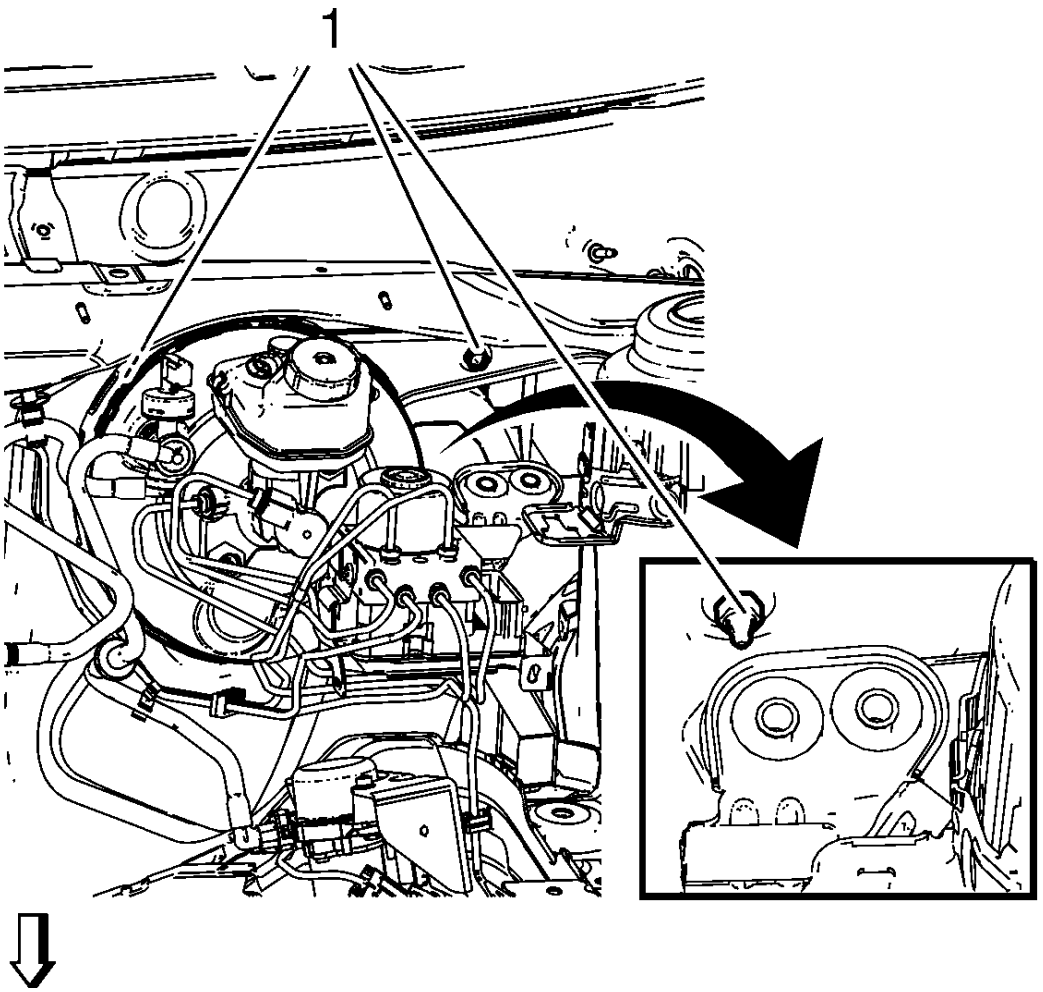

Fig. 30: Identifying Brake Pedal Bracket Nuts
Courtesy of GENERAL MOTORS COMPANY

NOTE:

- **Do NOT open the hydraulic brake system.**
- **Second mechanic is required.**

15. Pull the brake booster and the BPMV assembly forward in order to get an access to the brake pedal bracket nuts (1).
16. Install the pedal bracket nuts (1) and tighten to 20 N.m (15 lb ft).

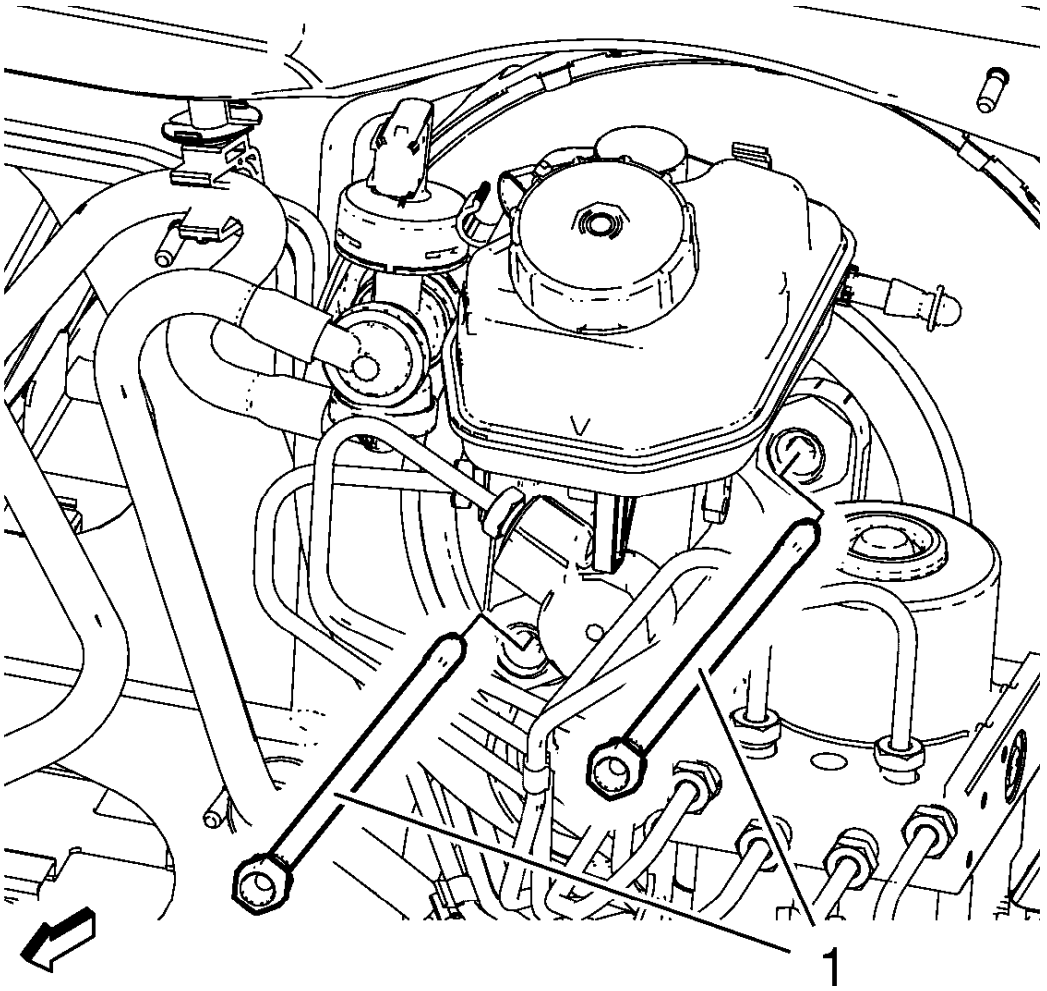

Fig. 31: Brake Booster Bolts
Courtesy of GENERAL MOTORS COMPANY

17. Install the brake booster bolts (1) and tighten to 19 N.m (14 lb ft).

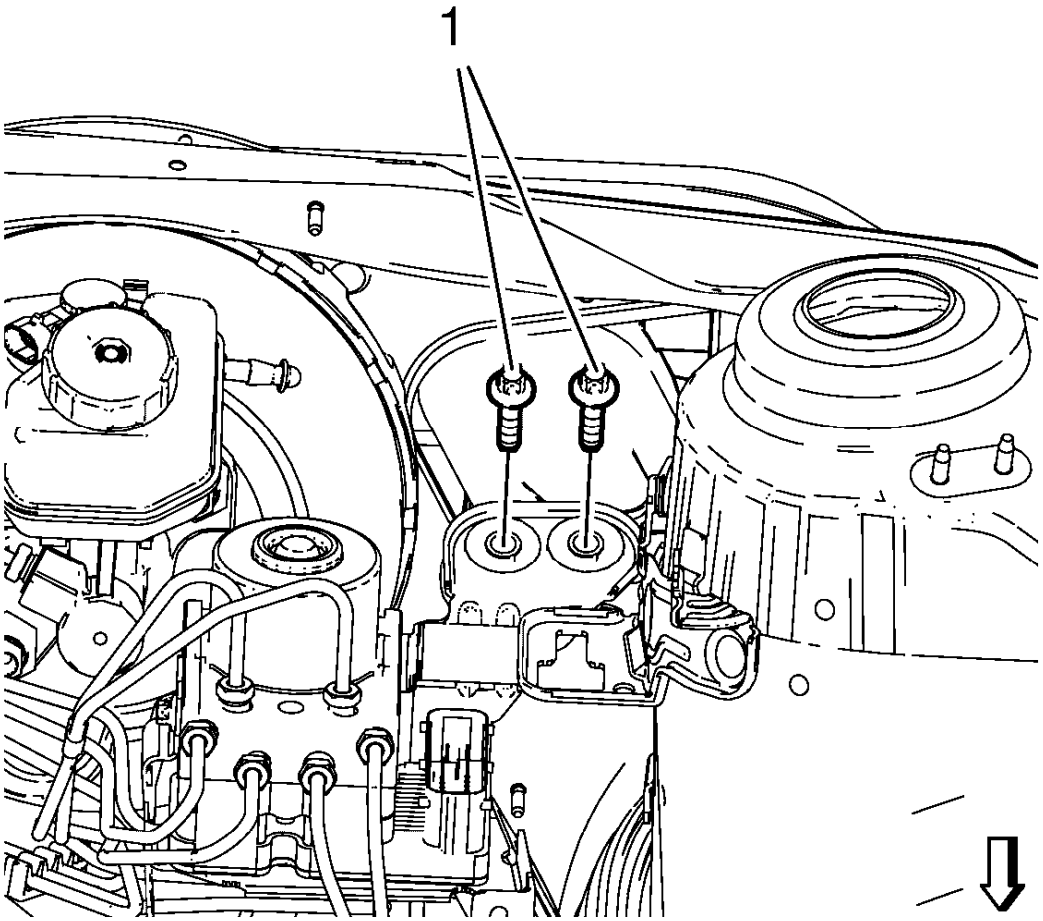

Fig. 32: BPMV Bracket Bolts
Courtesy of GENERAL MOTORS COMPANY

18. Install the BPMV bracket bolts (1) and tighten to 20 N.m (15 lb ft).

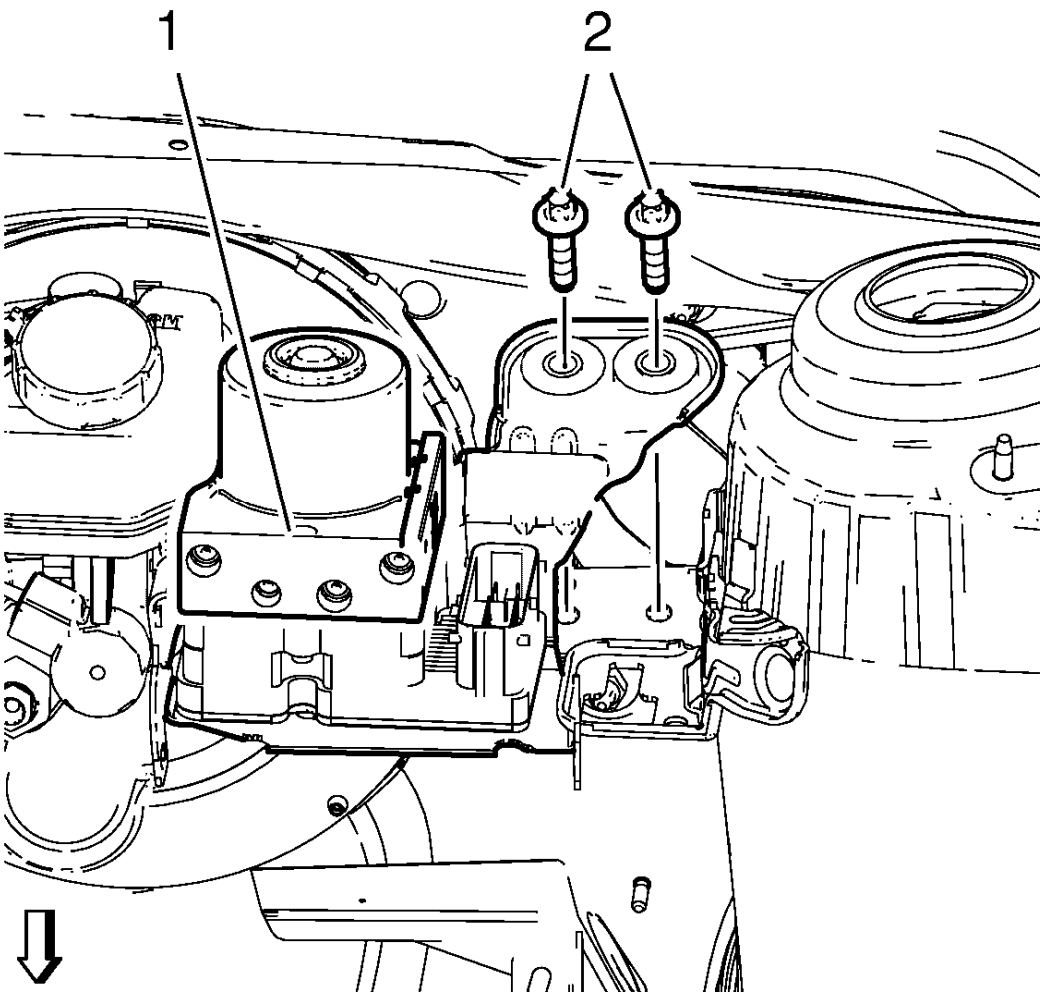

Fig. 33: BPMV and BPMV Bracket Bolts
Courtesy of GENERAL MOTORS COMPANY

19. Install the BPMV bracket assembly (1).
20. Install the BPMV bracket bolts (2) and tighten to 20 N.m (15 lb ft).

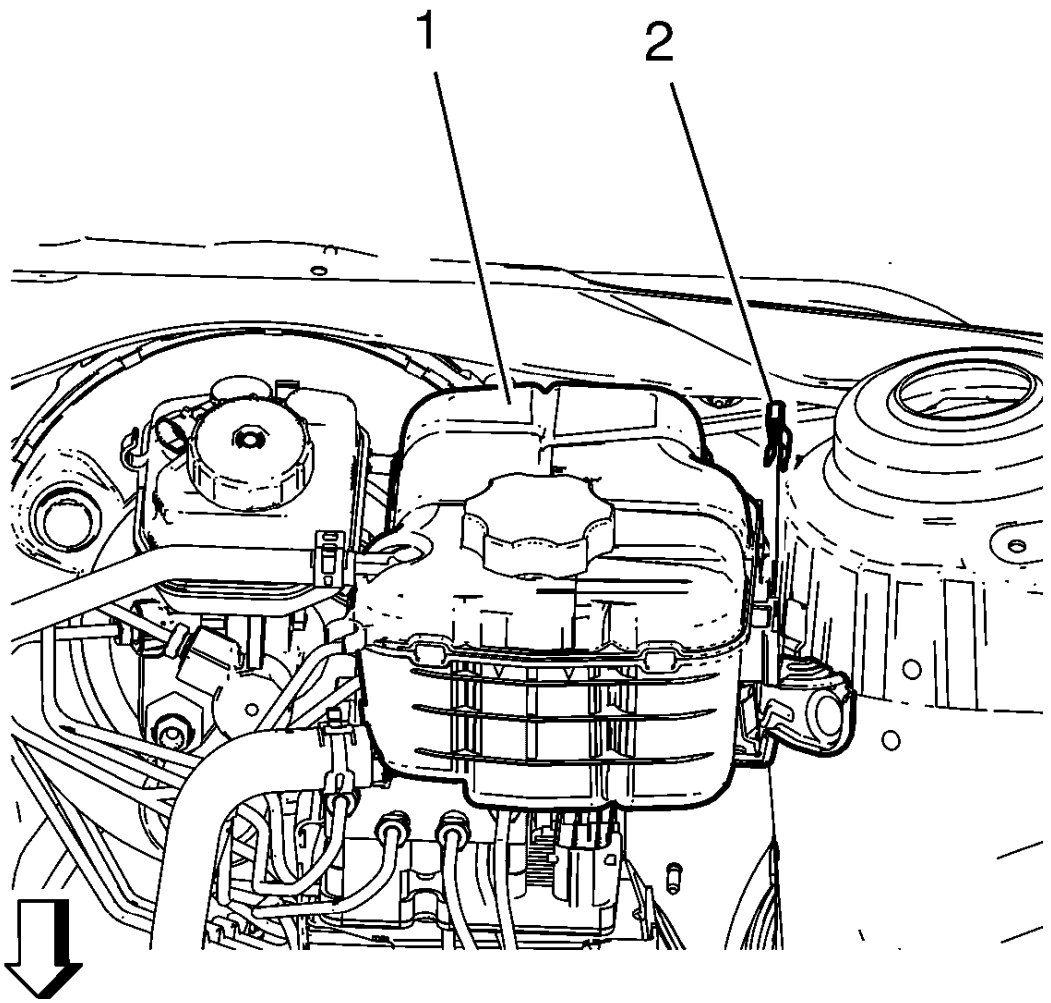

Fig. 34: View Of Radiator Surge Tank And Radiator Surge Tank Clip
Courtesy of GENERAL MOTORS COMPANY

NOTE: Do NOT disconnect the engine coolant hoses.

21. Install the radiator surge tank (1).
22. Install the radiator surge tank clip (2).
23. Install the battery tray. Refer to **Battery Tray Replacement** .
24. Install the battery. Refer to **Battery Replacement** .
25. Calibrate the brake pedal position sensor. Refer to **Brake Pedal Position Sensor Calibration** .

BRAKE PIPE REPLACEMENT

Special Tools

CH-45405 Pipe Flaring Tool Kit

For equivalent regional tools, refer to **Special Tools**.

WARNING: Refer to Brake Fluid Irritant Warning .

WARNING: Always use double walled steel brake pipe when replacing brake pipes. The use of any other pipe is not recommended and may cause brake system failure. Carefully route and retain replacement brake pipes. Always use the correct fasteners and the original location for replacement brake pipes. Failure to properly route and retain brake pipes may cause damage to the brake pipes and cause brake system failure.

CAUTION: Refer to Brake Fluid Effects on Paint and Electrical Components Caution .

NOTE: When servicing the brake pipes, note the following:

- **If sectioning the brake pipe, use replacement pipe of the same type and outside diameter.**
- **Use fittings of the appropriate size and type.**
- **Only create flares of the same type or design as originally equipped on the vehicle.**

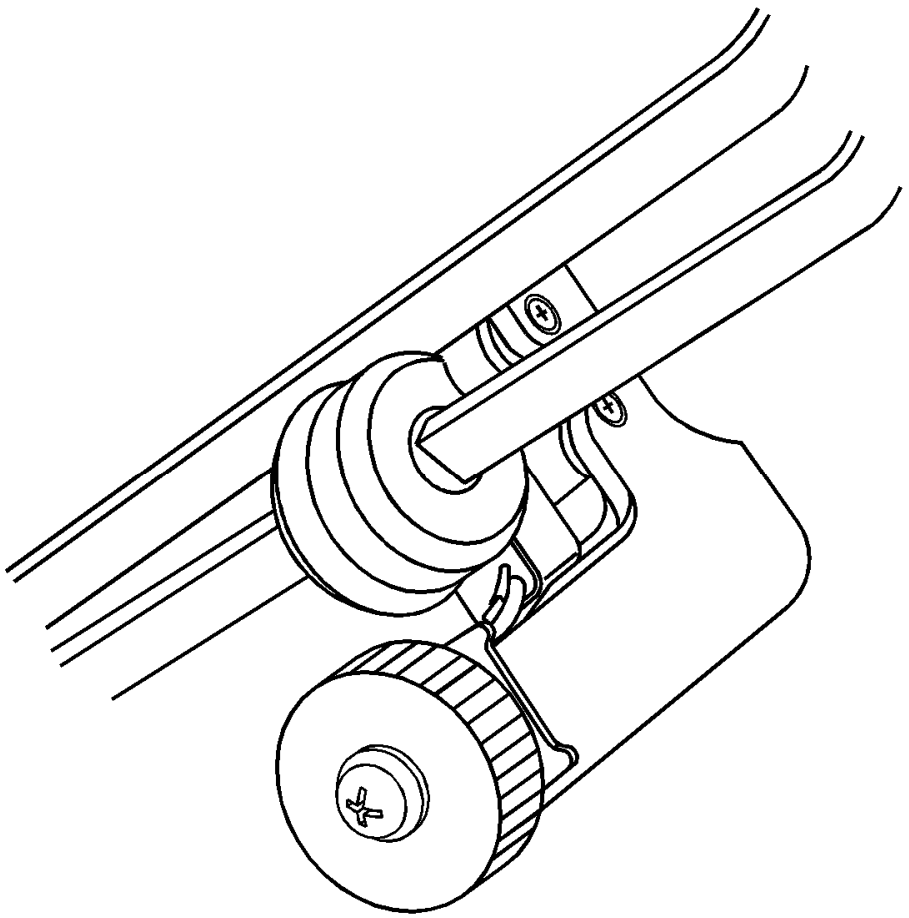

Fig. 35: Sectioning Brake Pipe Using Pipe Cutter
Courtesy of GENERAL MOTORS COMPANY

1. Inspect the area of brake pipe to be repaired or replaced.
2. Release the brake pipe to be replaced from the retainers, as required.
3. Select an appropriate location to section the brake pipe, if necessary.
    - Allow adequate clearance in order to maneuver the **CH-45405** flaring tool.
    - Avoid sectioning the brake pipe at bends or mounting points.
4. Using a string or wire, measure the length of the pipe to be replaced including all pipe bends.
5. Add to the measurement taken the appropriate additional length required for each flare to be created.

Specification

- 6.35 mm (0.250 in) for 4.76 mm (3/16 in) diameter pipe
- 9.50 mm (0.374 in) for 6.35 mm (1/4 in) diameter pipe
- 12.67 mm (0.499 in) for 7.94 mm (5/16 in) diameter pipe

NOTE: Ensure that the brake pipe end to be flared is cut at a square, 90 degreeangle to the pipe length.

6. Using the pipe cutter included in the **CH-45405** flaring tool, carefully cut the brake pipe squarely to the measured length.
7. Remove the sectioned brake pipe from the vehicle.
8. Select the appropriate size of brake pipe and tube nuts, as necessary. The brake pipe outside diameter determines brake pipe size.

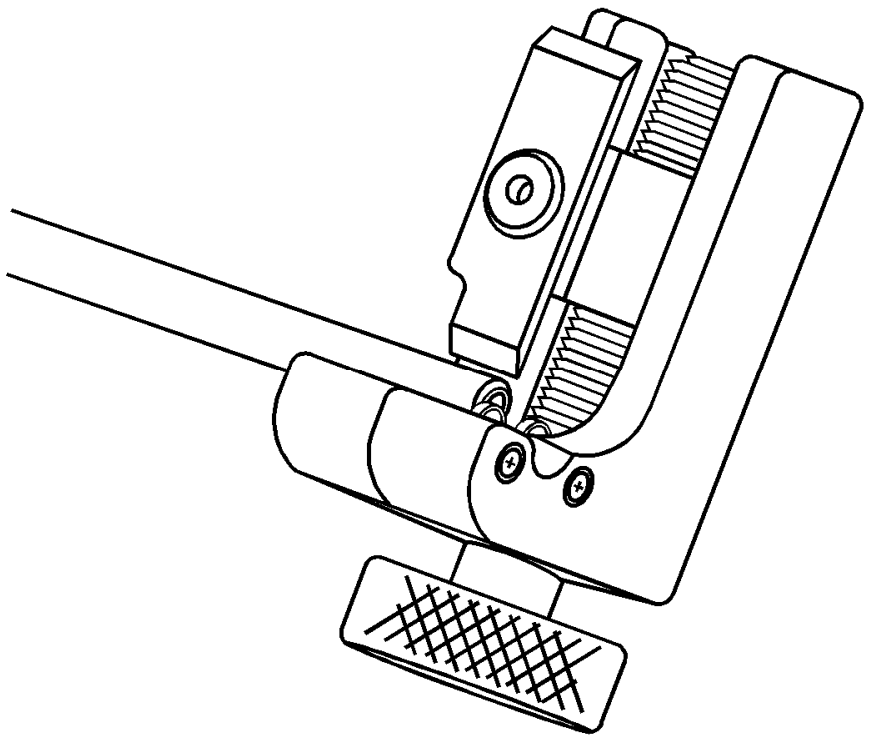

Fig. 36: Stripping Nylon Coating From Brake Pipe Ends
Courtesy of GENERAL MOTORS COMPANY

9. Strip the nylon coating from the brake pipe end to be flared, if necessary.
   - Select the appropriate blade on the coating stripping tool included in the **CH-45405** flaring tool, by unthreading the blade block from the stripping tool and installing the block with the desired blade facing the tool rollers.

     Specification

- 6.35 mm (0.250 in) blade for 4.76 mm (3/16 in) diameter pipe
- 9.50 mm (0.374 in) blade for 6.35 mm (1/4 in) and 7.94 mm (5/16 in) diameter pipe

- Insert the brake pipe end to be flared into the stripping tool to the depth of the ledge on the tool rollers.
- While holding the brake pipe firmly against the stripping tool roller ledges, rotate the thumbwheel of the tool until the blade contacts the brake pipe coated surface.

NOTE: Do not gouge the metal surface of the brake pipe.

- Rotate the stripping tool in a clockwise direction, ensuring that the brake pipe end remains against the tool roller ledges.
- After each successive revolution of the stripping tool, carefully rotate the thumbwheel of the tool clockwise, in order to continue stripping the coating from the brake pipe until the metal pipe surface is exposed.
- Loosen the thumbwheel of the tool and remove the brake pipe.

NOTE: Ensure that all loose remnants of the nylon coating have been removed from the brake pipe.

- Inspect the stripped end of the brake pipe to ensure that the proper amount of coating has been removed.

Specification

- 6.35 mm (0.250 in) for 4.76 mm (3/16 in) diameter pipe
- 9.50 mm (0.374 in) for 6.35 mm (1/4 in) and 7.94 mm (5/16 in) diameter pipe

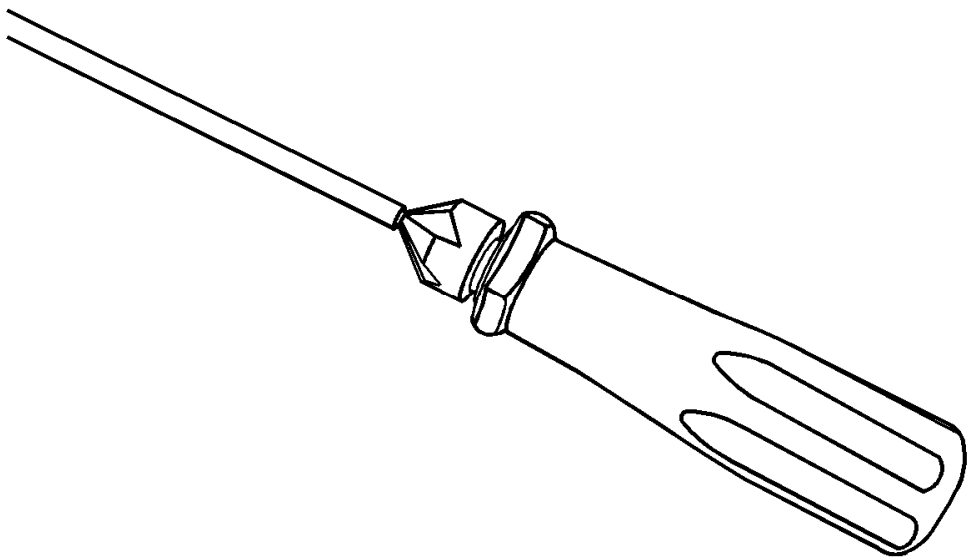

Fig. 37: Chamfering Pipe Using De-Burring Tool
Courtesy of GENERAL MOTORS COMPANY

10. Chamfer the inside and outside diameter of the pipe with the de-burring tool included in the **CH-45405** flaring tool.
11. Install the tube nuts on the brake pipe, noting their orientation.
12. Clean the brake pipe and the **CH-45405** flaring tool of lubricant, contaminants, and debris.

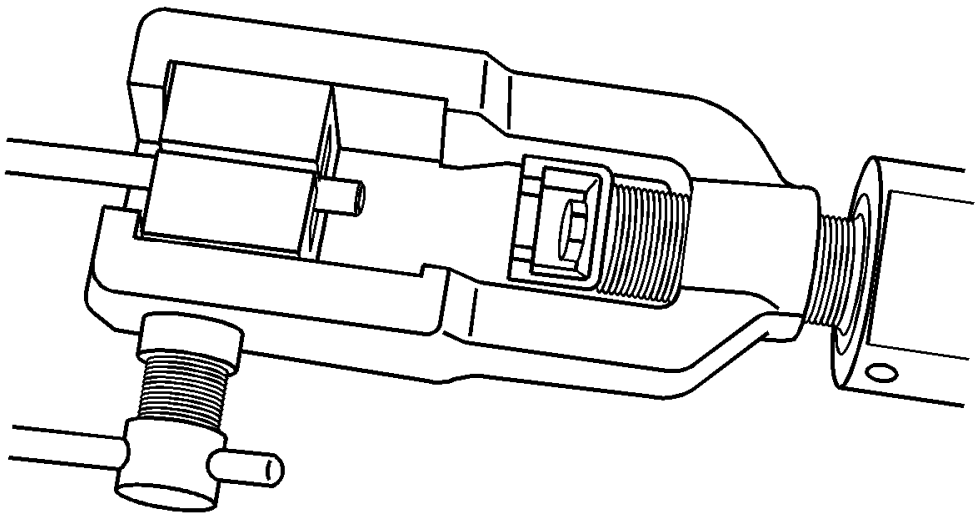

Fig. 38: Die Halves And Die Cage
Courtesy of GENERAL MOTORS COMPANY

13. Loosen the die clamping screw of the **CH-45405** flaring tool.
14. Select the corresponding die set and install the die halves into the die cage with the full, flat face of one die facing the clamping screw, and the counterbores of both dies facing the forming ram.

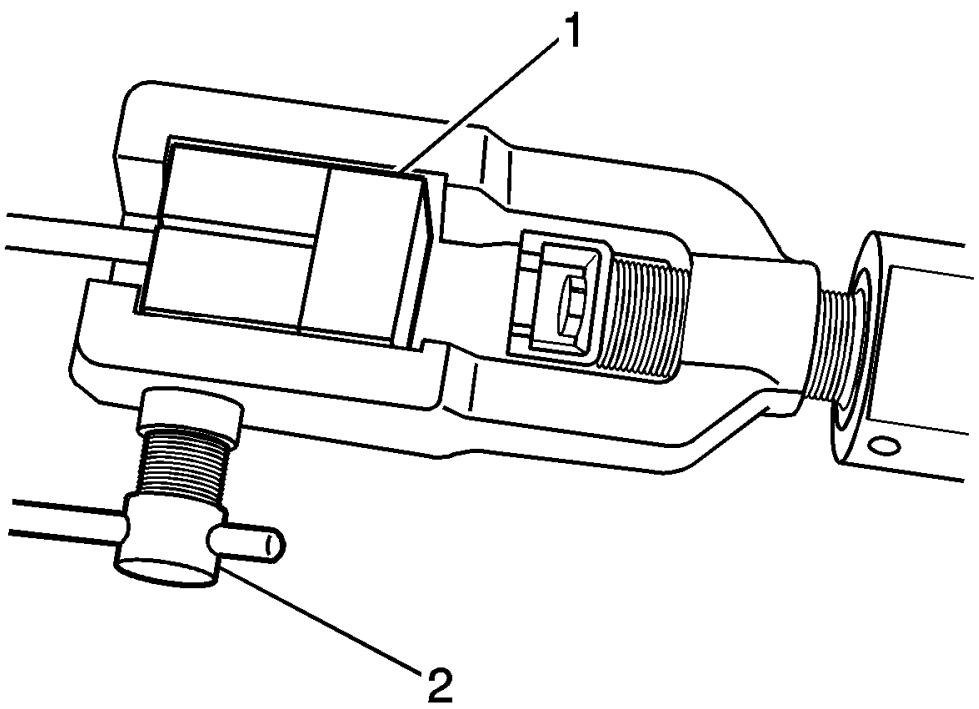

Fig. 39: View Of Clamping Screw & Unused Die
Courtesy of GENERAL MOTORS COMPANY

15. Place the flat face of an unused die (1) against the die halves in the clamping cage and hold firmly against the counterbored face of the dies.
16. Insert the prepared end of the pipe to be flared through the back of the dies until the pipe is seated against the flat surface of the unused die (1).
17. Remove the unused die (1).
18. Ensure that the rear of both dies are seated firmly against the enclosed end of the die cage.
19. Firmly hand tighten the clamping screw (2) against the dies.

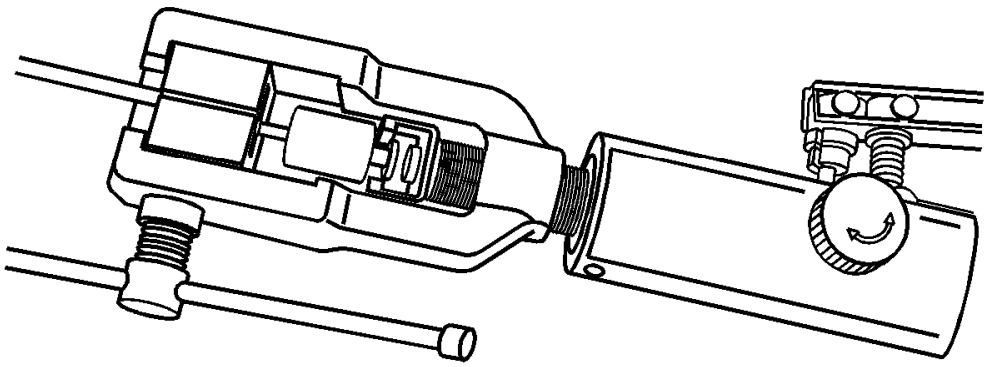

Fig. 40: View Of J 45405 And Die Cage
Courtesy of GENERAL MOTORS COMPANY

20. Select the appropriate forming mandrel and place into the forming ram.
21. Rotate the hydraulic fluid control valve clockwise to the closed position.
22. Rotate the body of the **CH-45405** flaring tool until it bottoms against the die cage.

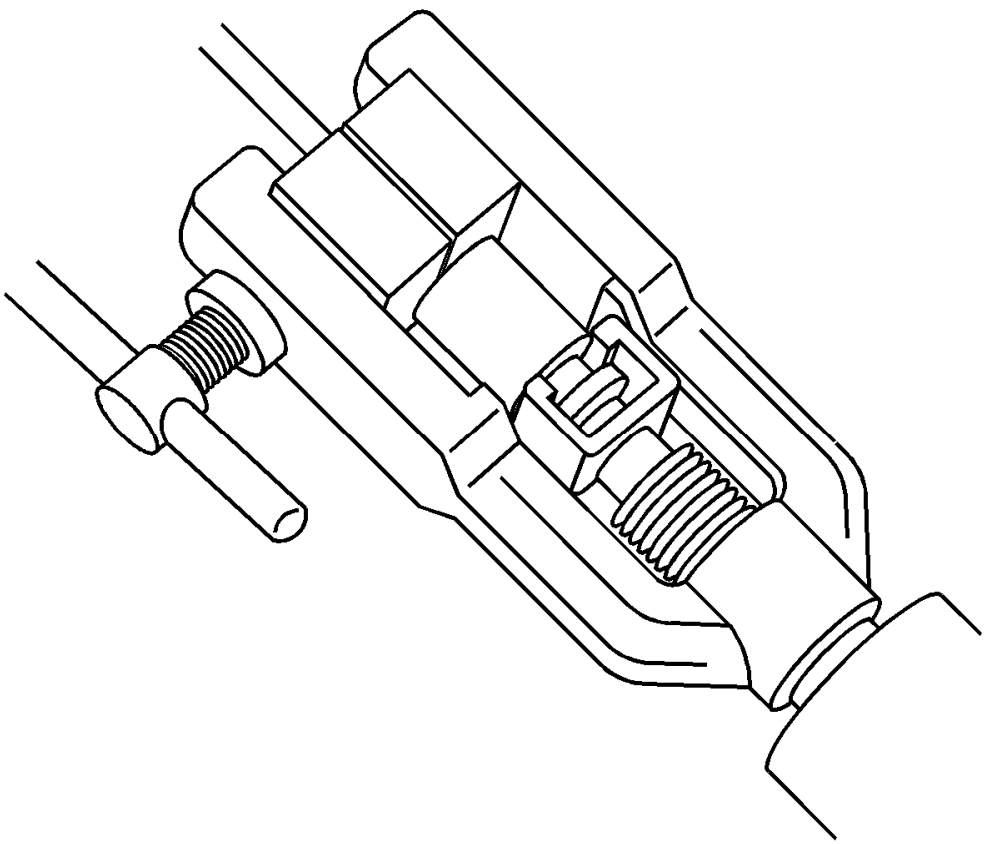

Fig. 41: View Of J 45405
Courtesy of GENERAL MOTORS COMPANY

23. While guiding the forming mandrel into the exposed end of pipe to be flared, operate the lever of the **CH-45405** flaring tool until the forming mandrel bottoms against the clamping dies.
24. Rotate the hydraulic fluid control valve counterclockwise to the open position to allow the hydraulic forming ram to retract.

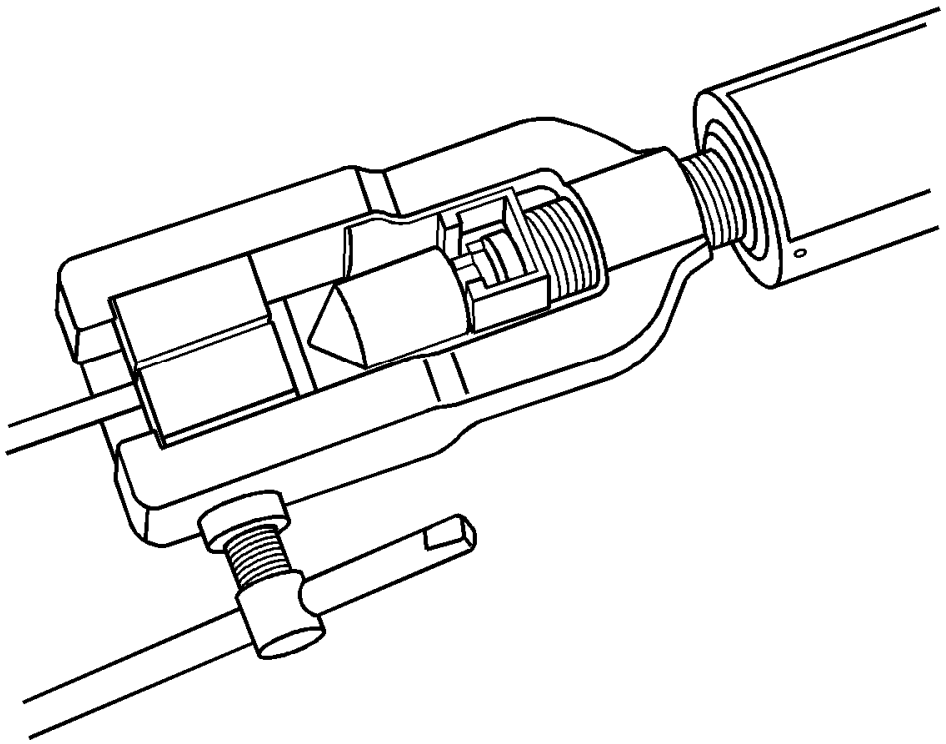

Fig. 42: Using Pipe Flaring Tool
Courtesy of GENERAL MOTORS COMPANY

25. Insert the finishing cone into the forming ram.
26. Rotate the hydraulic fluid control valve clockwise to the closed position.
27. Rotate the body of the **CH-45405** flaring tool until it bottoms against the die cage.
28. While guiding the finishing cone into the exposed end of pipe to be flared, operate the lever of the **CH-45405** flaring tool until the finishing cone bottoms against the dies.
29. Rotate the hydraulic fluid control valve counterclockwise to the open position to allow the hydraulic forming ram to retract.
30. Loosen the die clamping screw and remove the dies and pipe.
31. If necessary, lightly tap the dies until the die halves separate.

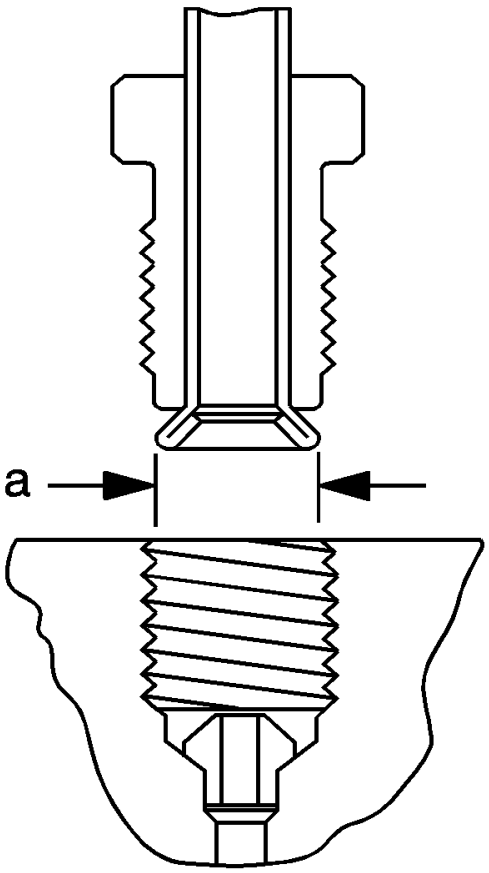

Fig. 43: Identifying Correct Brake Pipe Flare Shape & Diameter
Courtesy of GENERAL MOTORS COMPANY

32. Inspect the brake pipe flare for correct shape and diameter (a).

    Specification

    - 6.74-7.10 mm (0.265-0.279 in) flare diameter for 4.76 mm (3/16 in) diameter pipe
    - 8.57-9.27 mm (0.344-0.358 in) flare diameter for 6.35 mm (1/4 in) diameter pipe
    - 10.42-10.79 mm (0.410-0.425 in) flare diameter for 7.94 mm (5/16 in) diameter pipe

33. If necessary, using the removed section of brake pipe as a template, shape the new pipe with a suitable brake pipe bending tool.

    NOTE: When installing the pipe, maintain a clearance of 19 mm (3/4 in) from all moving or vibrating components.

34. Install the pipe to the vehicle with the appropriate brake pipe unions, as required.
35. If previously released, secure the brake pipe to the retainers.

36. Bleed the hydraulic brake system. Refer to **Hydraulic Brake System Bleeding (Manual Bleeding)**, **Hydraulic Brake System Bleeding (Pressure Bleeding)**.
37. With the aid of an assistant, inspect the brake pipe flares for leaks by starting the engine and applying the brakes.

FRONT BRAKE HOSE REPLACEMENT

Removal Procedure

WARNING: Refer to Brake Fluid Irritant Warning .

CAUTION: Refer to Brake Fluid Effects on Paint and Electrical Components Caution .

1. Raise and support the vehicle. Refer to **Lifting and Jacking the Vehicle** .
2. Remove the tire and wheel assembly. Refer to **Tire and Wheel Removal and Installation** .

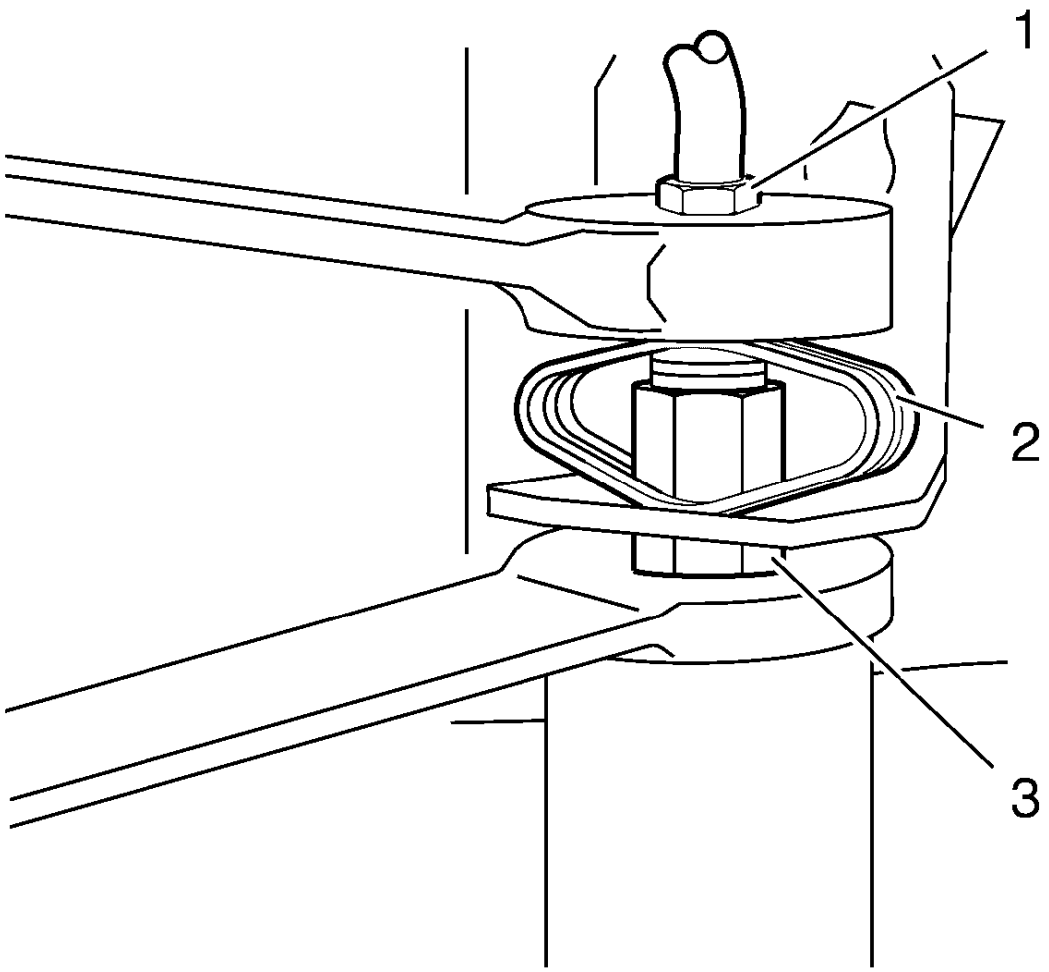

Fig. 44: Brake Pipe Fitting, Brake Hose And Brake Hose Retainer
Courtesy of GENERAL MOTORS COMPANY

3. Clean all dirt and foreign material from the brake hose ends and the brake pipe fitting.
4. Use a flare nut wrench on the brake pipe fitting (1) and a backup wrench on the brake hose (3) under the brake hose retainer (2) as shown.

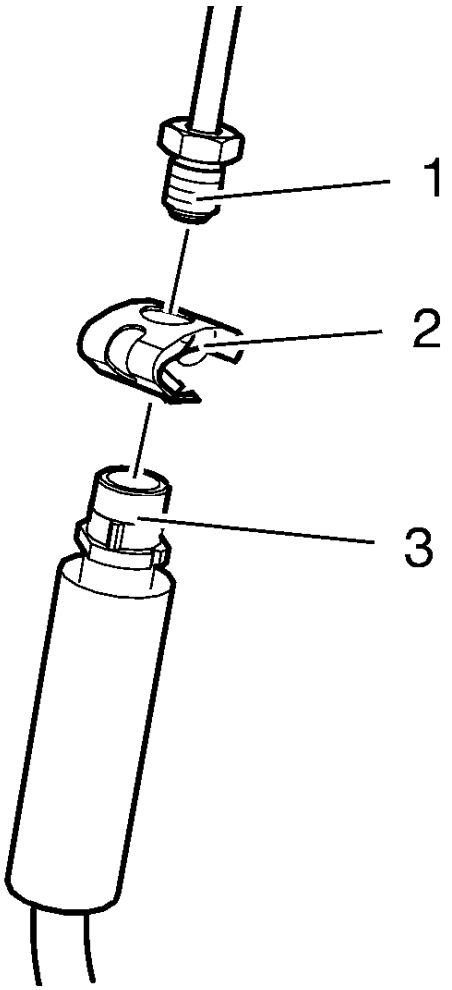

Fig. 45: Brake Pipe Fitting Disconnected From Brake Hose
Courtesy of GENERAL MOTORS COMPANY

5. Disconnect the brake pipe fitting (1) from the brake hose (3). Cap or plug the brake pipe fitting end and the brake hose end to prevent fluid loss and contamination.
6. Remove the brake hose retainer.
7. Remove the brake hose from the strut.
8. Remove the brake hose-to-caliper bolt from the brake caliper.
9. Remove the brake hose (3) from the brake caliper.
10. Remove and discard the 2 copper brake hose gaskets. These gaskets may be stuck to the brake caliper and/or the brake hose end.
11. Cap or plug the opening in the brake caliper and the brake hose to prevent fluid loss and contamination.

Installation Procedure

1. Remove the caps or plugs from the opening in the brake caliper and the brake hose.

NOTE: Install NEW copper brake hose gaskets.

2. Assemble the NEW copper brake hose gaskets and the brake hose bolt to the brake hose.

CAUTION: Refer to Fastener Caution .

3. Install the brake hose-to-brake caliper bolt to the brake caliper and tighten the bolt to 40 N.m (30 lb ft).

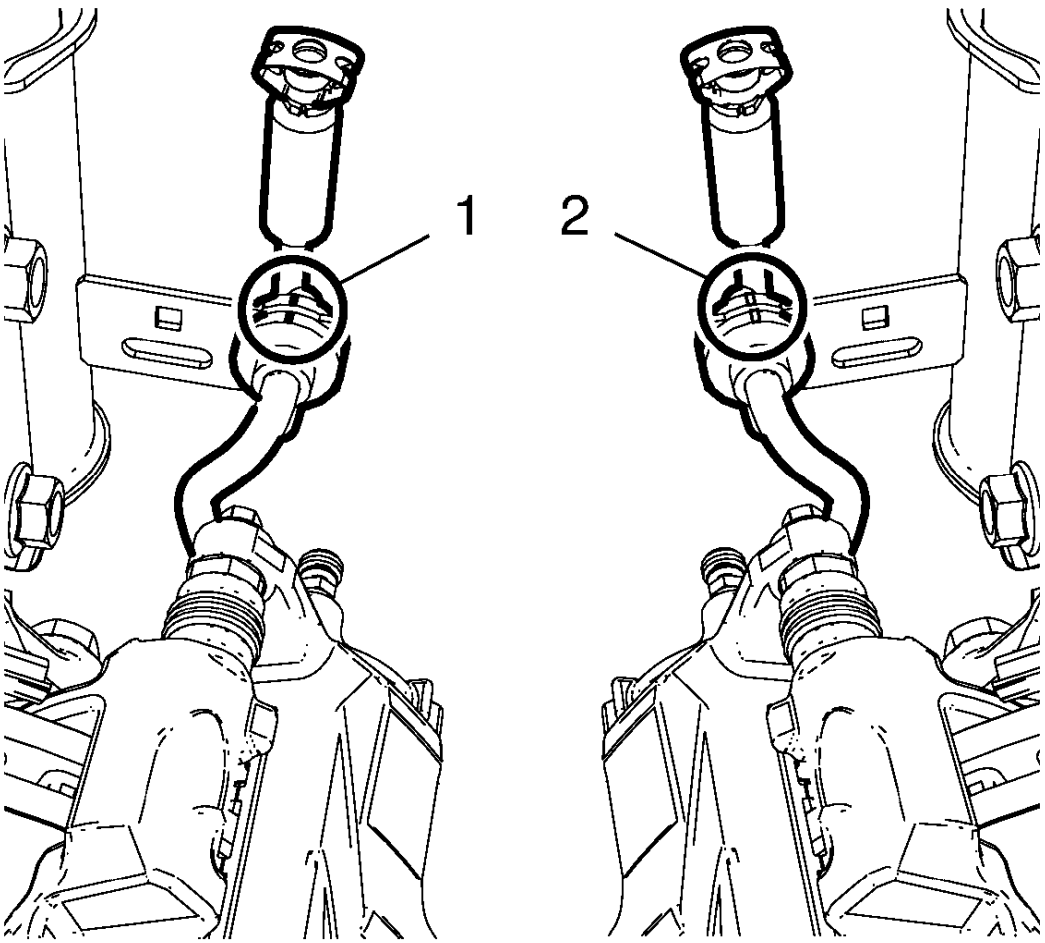

Fig. 46: Brake Hoses And Struts
Courtesy of GENERAL MOTORS COMPANY

NOTE: If replacing the brake hose, compare the old and new brake hose. There is a new version of brake hoses, which has a labeling to differentiate left and right side. The new version has a brake grommet with a flattened side, which has to face to the open side of the brake hose bracket.

4. Install the brake hose to the strut.

   Align the blue marking at the front brake hose grommet with the center of the bracket notch for the right front brake hose.

   Align the white marking at the front brake hose grommet with the center of the bracket notch for the left front brake hose.

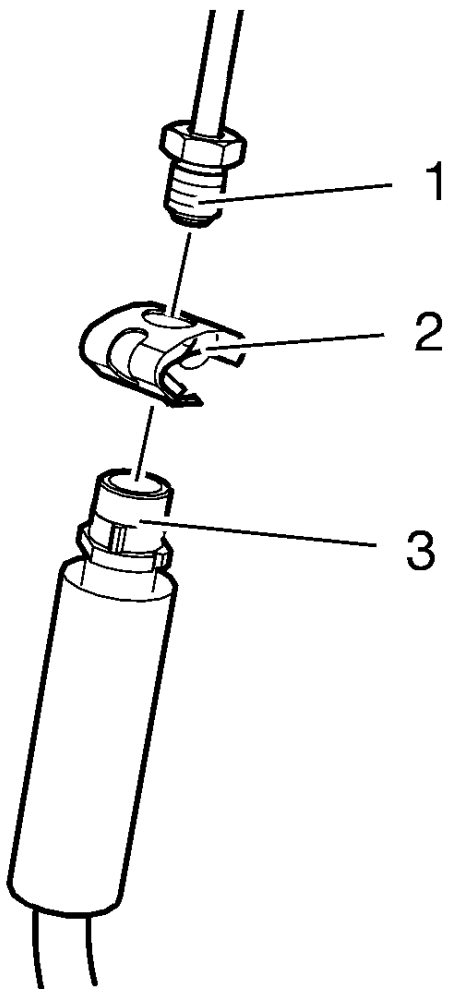

Fig. 47: Brake Pipe Fitting Disconnected From Brake Hose
Courtesy of GENERAL MOTORS COMPANY

5. Remove the caps or plugs from the brake pipe fitting end and the brake hose end.
6. Install the brake hose to the brake hose body bracket.
7. Install the brake hose retainer (2) over the anti-rotation tabs of the brake hose (3).
8. Connect the brake pipe fitting (1) to the brake hose.
9. Use a backup wrench on the brake hose.

10. Tighten the brake pipe fitting to 18 N.m (14 lb ft).
11. Ensure that the hose does not make contact with any part of the suspension. Check the hose in extreme right and extreme left turn conditions. If the hose makes contact, remove the hose and correct the condition.
12. Bleed the hydraulic brake system. Refer to **Hydraulic Brake System Bleeding (Manual Bleeding)**, **Hydraulic Brake System Bleeding (Pressure Bleeding)**.
13. Install the tire and wheel assembly. Refer to **Tire and Wheel Removal and Installation** .
14. Lower the vehicle.

REAR BRAKE HOSE REPLACEMENT (DISC BRAKE)

Removal Procedure

WARNING: Refer to Brake Fluid Irritant Warning .

CAUTION: Refer to Brake Fluid Effects on Paint and Electrical Components Caution .

1. Raise and support the vehicle. Refer to **Lifting and Jacking the Vehicle** .
2. Remove the tire and wheel assembly. Refer to **Tire and Wheel Removal and Installation** .
3. Remove rear wheel speed sensor from brake hose. Refer to **Rear Wheel Speed Sensor Replacement (Disc Brake)** , **Rear Wheel Speed Sensor Replacement (Drum Brake)** .

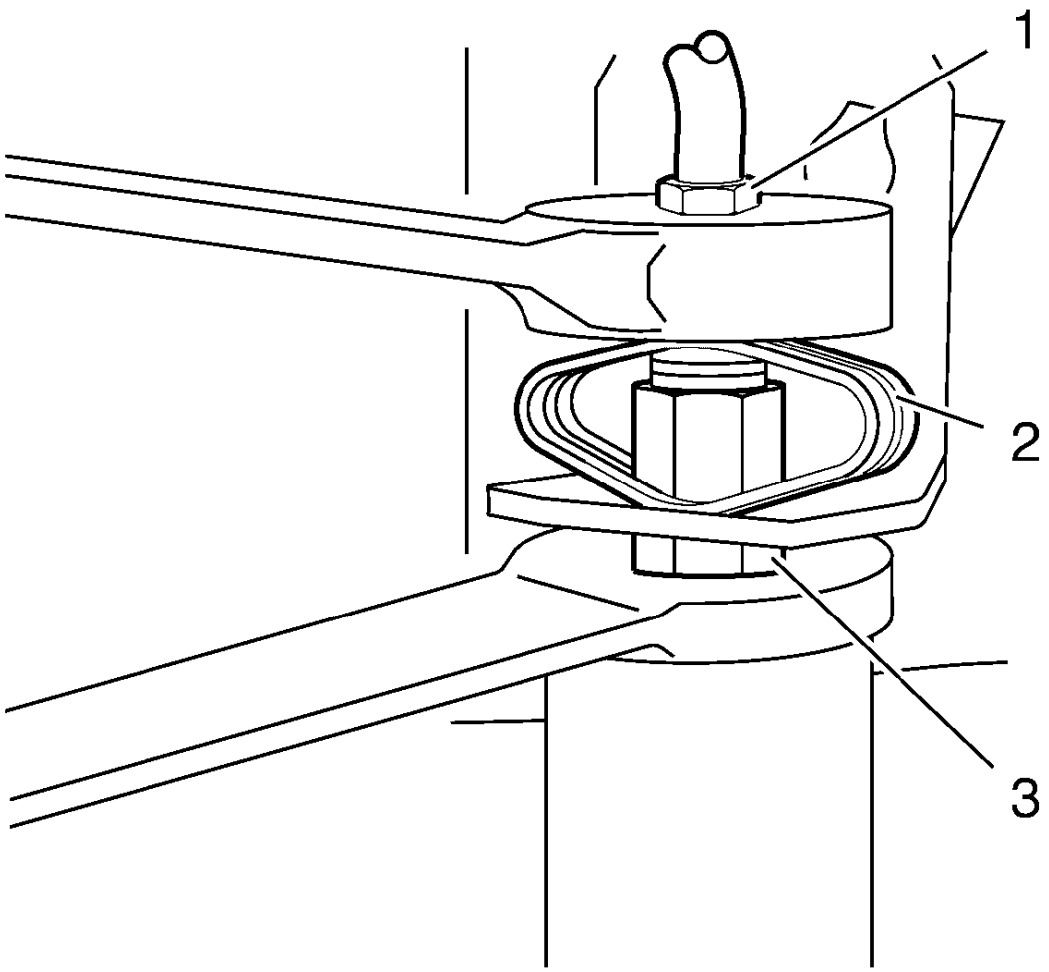

Fig. 48: Brake Pipe Fitting, Brake Hose And Brake Hose Retainer
Courtesy of GENERAL MOTORS COMPANY

4. Clean all dirt and foreign material from the brake hose ends and the brake pipe fitting.
5. Use a flare nut wrench on the brake pipe fitting (1) and a backup wrench on the brake hose (3) under the brake hose retainer (2).

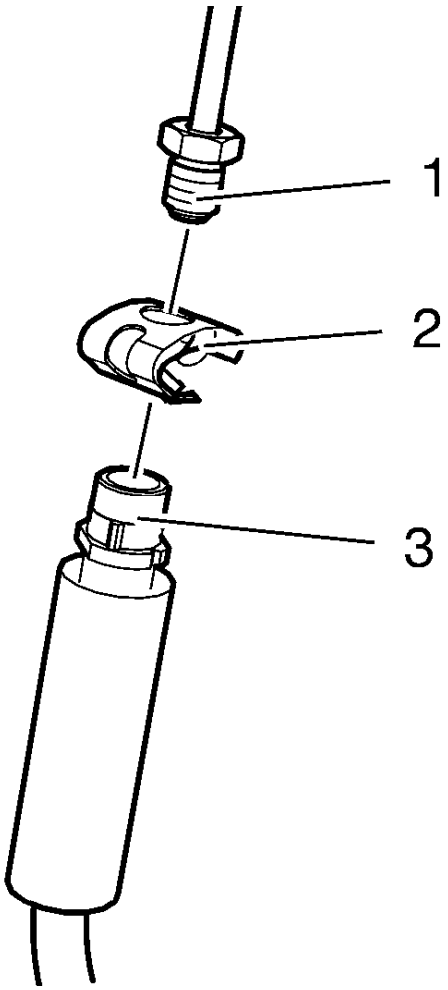

Fig. 49: Brake Pipe Fitting Disconnected From Brake Hose
Courtesy of GENERAL MOTORS COMPANY

6. Disconnect the brake pipe fitting (1) from the brake hose (3). Cap or plug the brake pipe fitting end and the brake hose end to prevent fluid loss and contamination.
7. Remove the brake hose retainer (2).

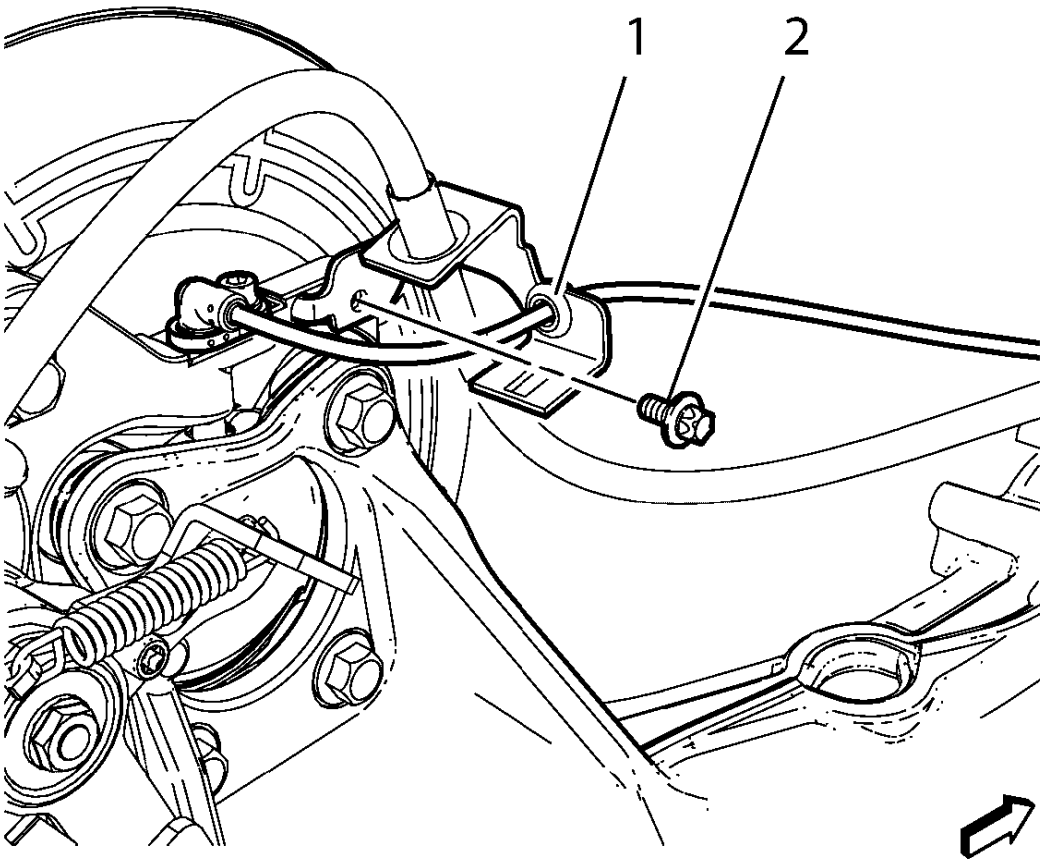

Fig. 50: Brake Hose Bracket
Courtesy of GENERAL MOTORS COMPANY

8. Remove the brake hose bolt (2) attaching the hose to the rear brake caliper bracket.
9. Remove wiring harness (1) from brake hose bracket.

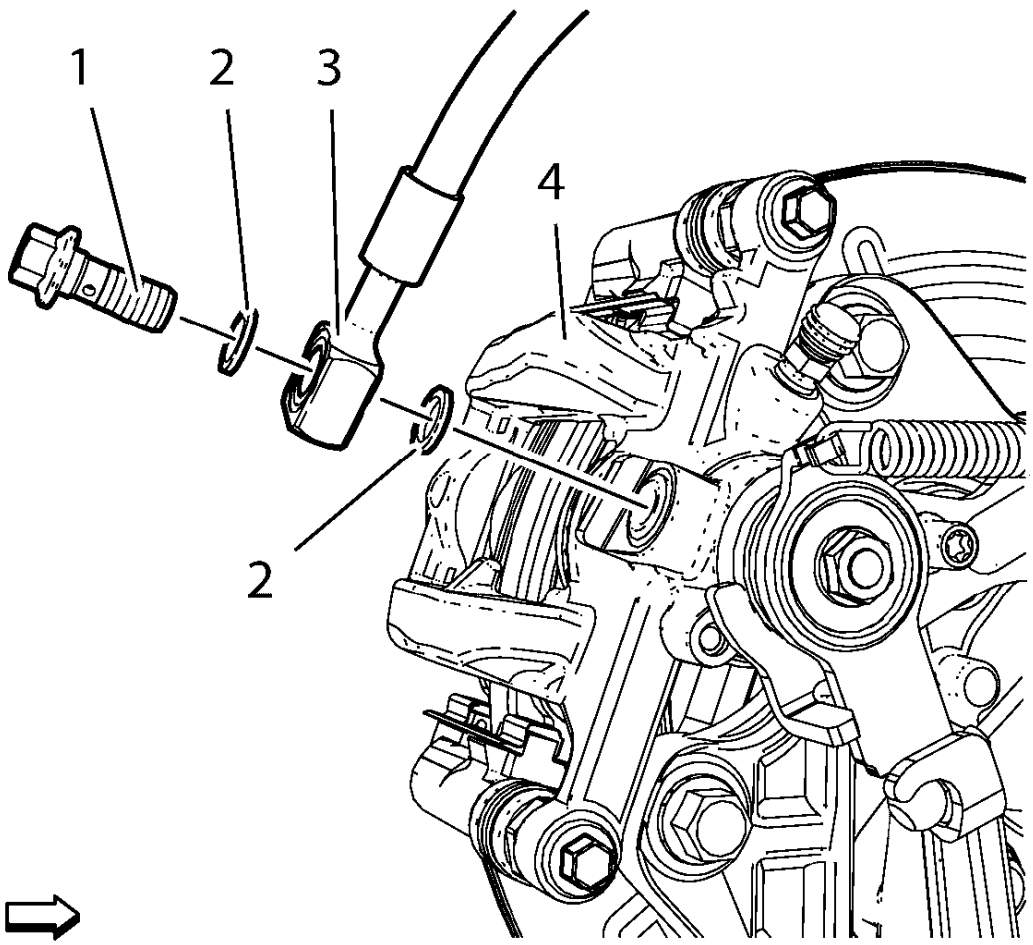

Fig. 51: Brake Hose-To-Caliper Bolt
Courtesy of GENERAL MOTORS COMPANY

10. Remove the brake hose-to-caliper bolt (1) from the brake caliper (4).
11. Remove the brake hose (3) from the brake caliper.
12. Remove and discard the 2 copper brake hose gaskets (2). These gaskets may be stuck to the brake caliper and/or the brake hose end.
13. Cap or plug the opening in the brake caliper and the brake hose to prevent fluid loss and contamination.

Installation Procedure

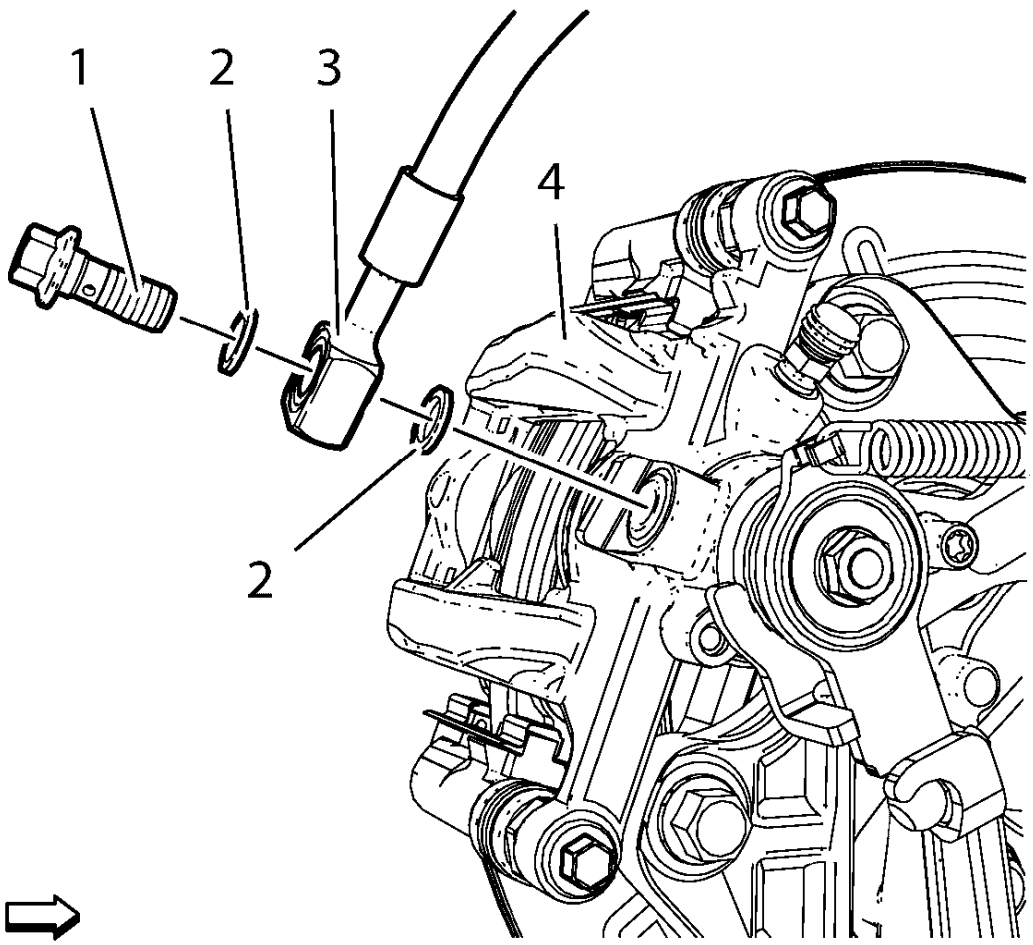

Fig. 52: Brake Hose-To-Caliper Bolt
Courtesy of GENERAL MOTORS COMPANY

1. Remove the caps or plugs from the opening in the brake caliper and the brake hose.

NOTE: Install NEW copper brake hose gaskets.

2. Assemble the NEW copper brake hose gaskets (2), and the brake hose bolt (1), to the brake hose (3).

CAUTION: Refer to Fastener Caution .

3. Install the brake hose-to-brake caliper bolt to the brake caliper (4) and tighten the bolt to 40 N.m (30 lb ft).

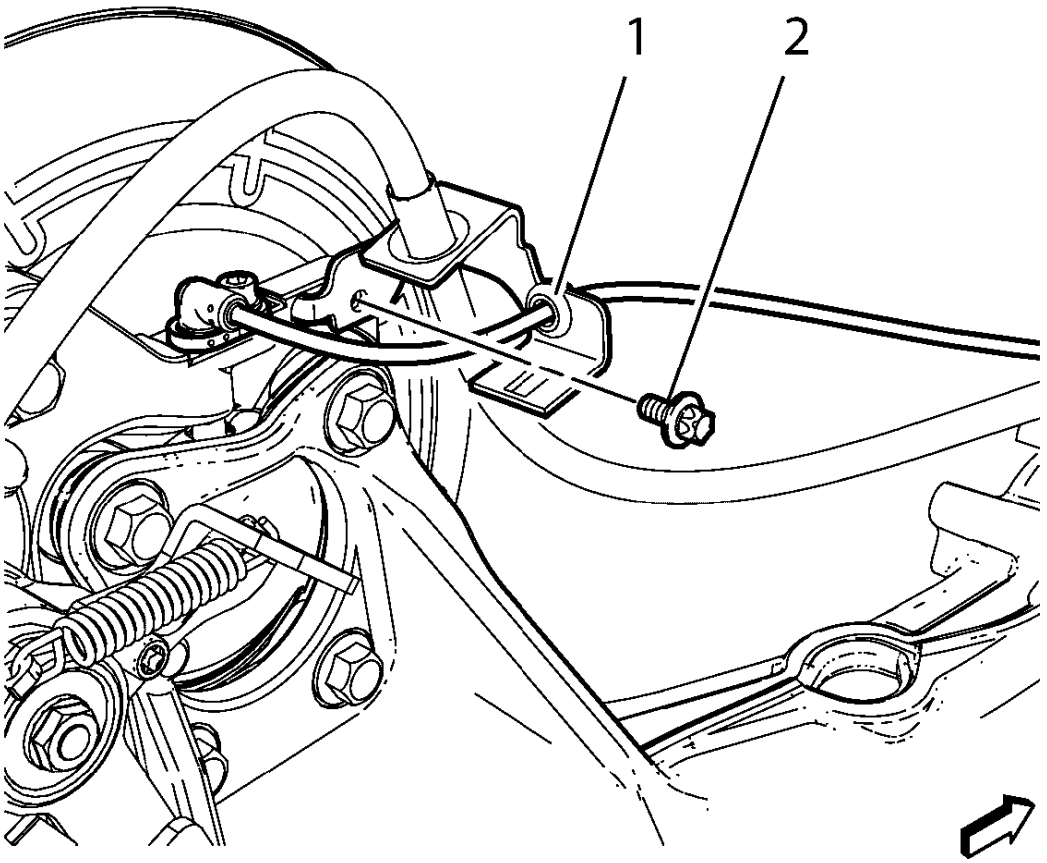

Fig. 53: Brake Hose Bracket
Courtesy of GENERAL MOTORS COMPANY

4. Install the brake hose bolt (2) attaching the hose to the rear brake caliper bracket and tighten the bolt to 9 N.m (80 lb in).
5. Install wiring harness (1) at the brake hose bracket.

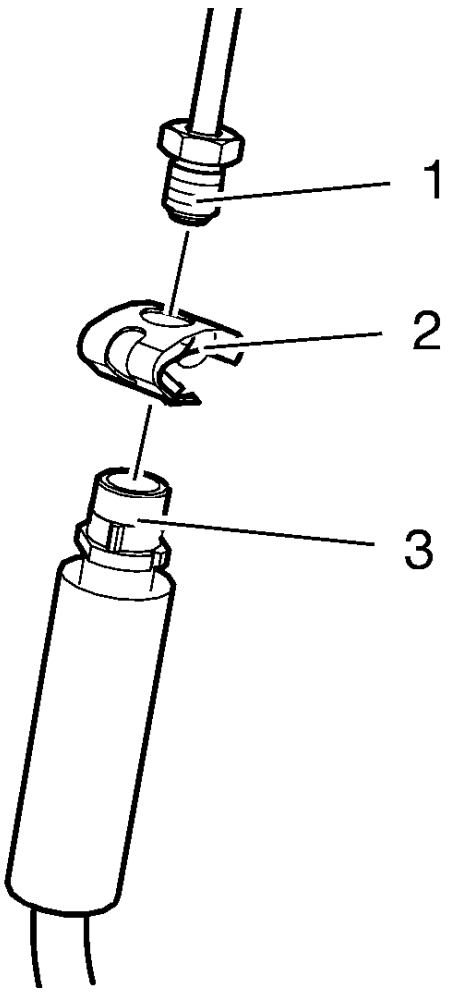

Fig. 54: Brake Pipe Fitting Disconnected From Brake Hose
Courtesy of GENERAL MOTORS COMPANY

6. Remove the caps or plugs from the brake pipe fitting end and the brake hose end.
7. Install the brake hose to the brake hose body bracket.
8. Install the brake hose retainer (2) over the anti-rotation tabs of the brake hose (3).
9. Connect the brake pipe fitting (1) to the brake hose (3).
10. Use a backup wrench on the brake hose (3).
11. Tighten the brake pipe fitting to 18 N.m (13 lb ft).
12. Ensure that the hose does not make contact with any part of the suspension. Check the hose in extreme right and extreme left turn conditions. If the hose makes contact, remove the hose and correct the condition.
13. Install rear wheel speed sensor to brake hose. Refer to **Rear Wheel Speed Sensor Replacement (Disc Brake)** , **Rear Wheel Speed Sensor Replacement (Drum Brake)** .
14. Bleed the hydraulic brake system. Refer to **Hydraulic Brake System Bleeding (Manual Bleeding)**,

Hydraulic Brake System Bleeding (Pressure Bleeding).

15. Install the tire and wheel assembly. Refer to **Tire and Wheel Removal and Installation** .
16. Lower the vehicle.

REAR BRAKE HOSE REPLACEMENT (DRUM BRAKE)

Removal Procedure

WARNING: Refer to Brake Fluid Irritant Warning .

CAUTION: Refer to Brake Fluid Effects on Paint and Electrical Components Caution .

1. Raise and support the vehicle. Refer to **Lifting and Jacking the Vehicle** .
2. Remove the tire and wheel assembly. Refer to **Tire and Wheel Removal and Installation** .
3. Remove rear wheel speed sensor from brake hose. Refer to **Rear Wheel Speed Sensor Replacement (Disc Brake)** , **Rear Wheel Speed Sensor Replacement (Drum Brake)** .

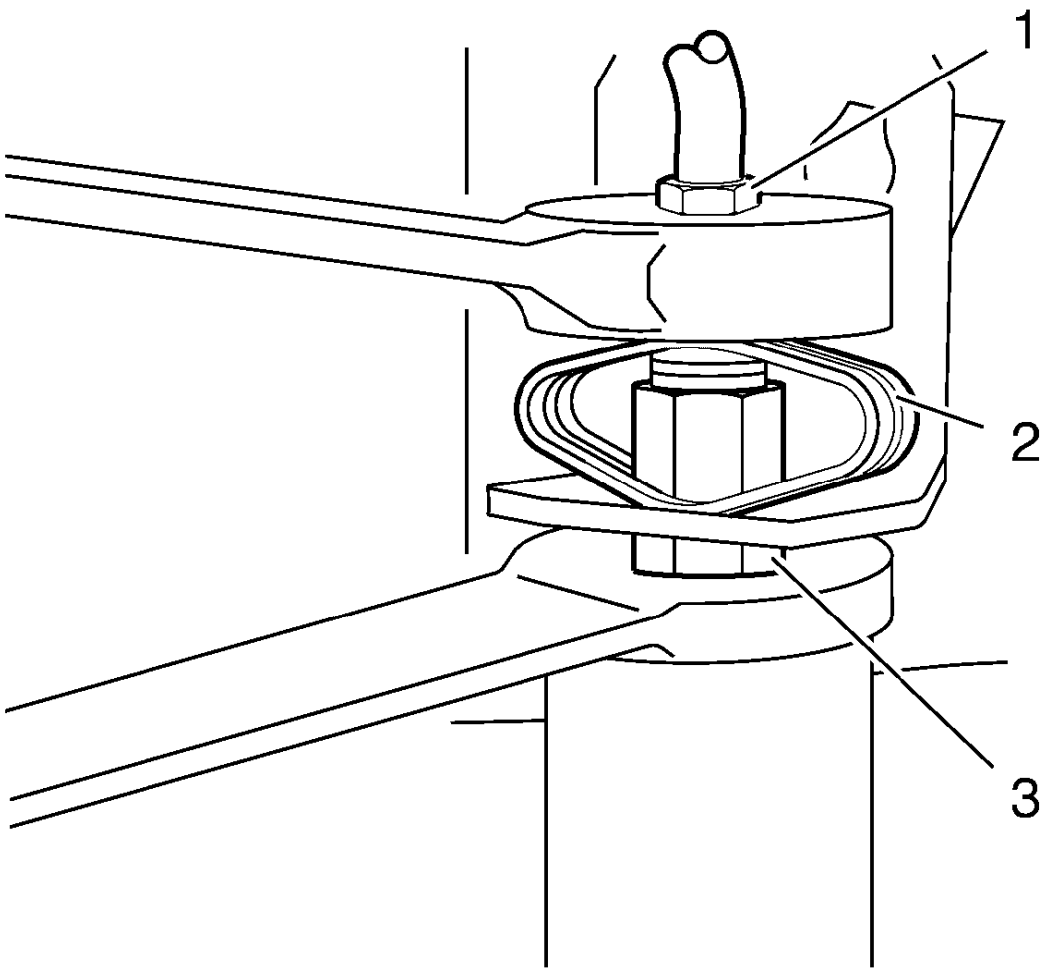

Fig. 55: Brake Pipe Fitting, Brake Hose And Brake Hose Retainer
Courtesy of GENERAL MOTORS COMPANY

4. Clean all dirt and foreign material from the brake hose ends and the brake pipe fitting.
5. Use a flare nut wrench on the brake pipe fitting (1) and a backup wrench on the brake hose (3) under the brake hose retainer (2).

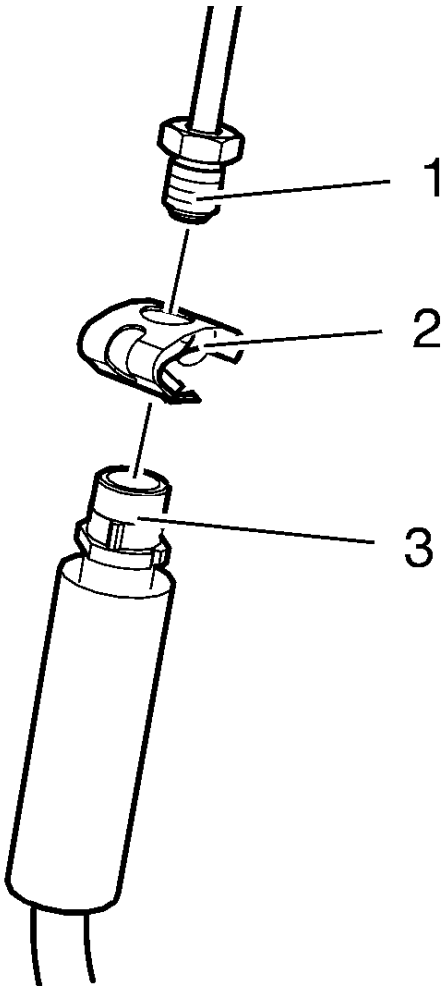

Fig. 56: Brake Pipe Fitting Disconnected From Brake Hose
Courtesy of GENERAL MOTORS COMPANY

6. Disconnect the brake pipe fitting (1) from the brake hose (3). Cap or plug the brake pipe fitting end and the brake hose end to prevent fluid loss and contamination.
7. Remove the brake hose retainer (2).

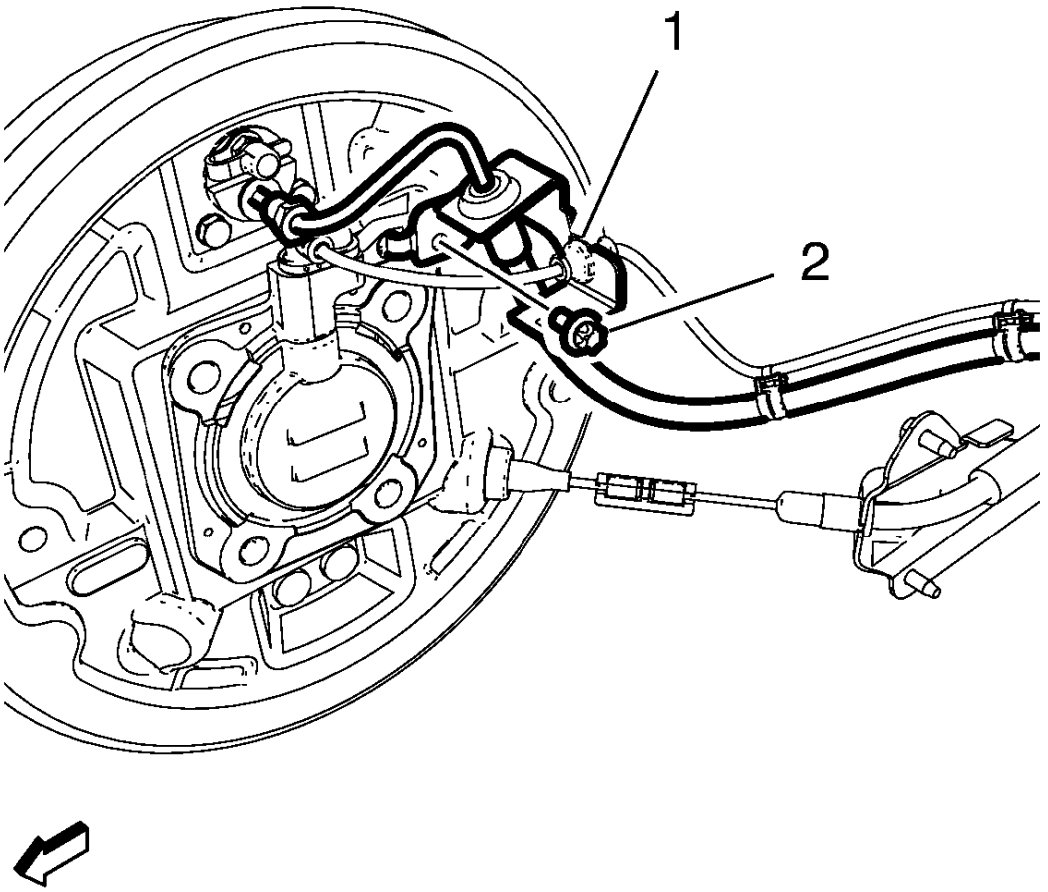

Fig. 57: Brake Hose Bracket And Wiring Harness
Courtesy of GENERAL MOTORS COMPANY

8. Remove the brake hose bolt (2) attaching the hose to the rear backing plate.
9. Remove wiring harness (1) from brake hose bracket.

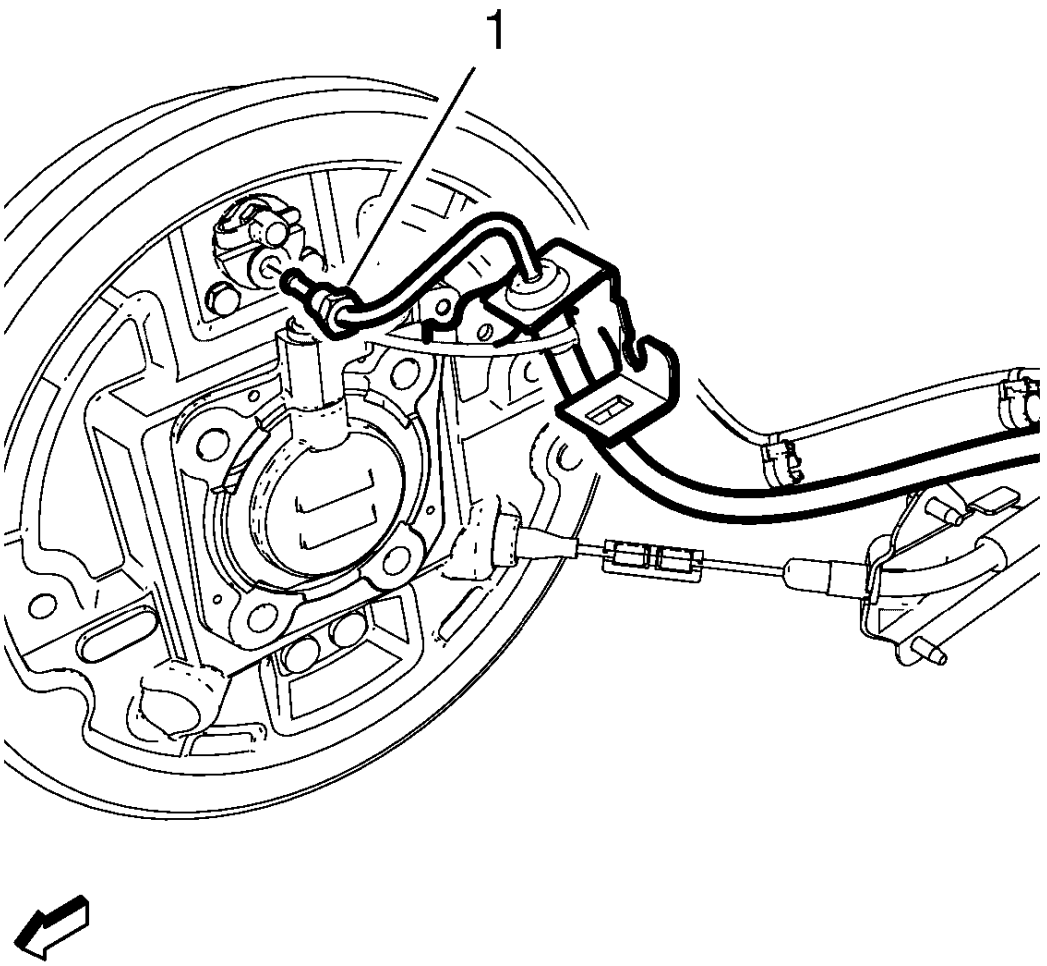

Fig. 58: Brake Hose And Pipe Fitting
Courtesy of GENERAL MOTORS COMPANY

10. Remove the brake hose / pipe fitting (1) from the wheel cylinder and cap the opening to prevent brake fluid contamination.

Installation Procedure

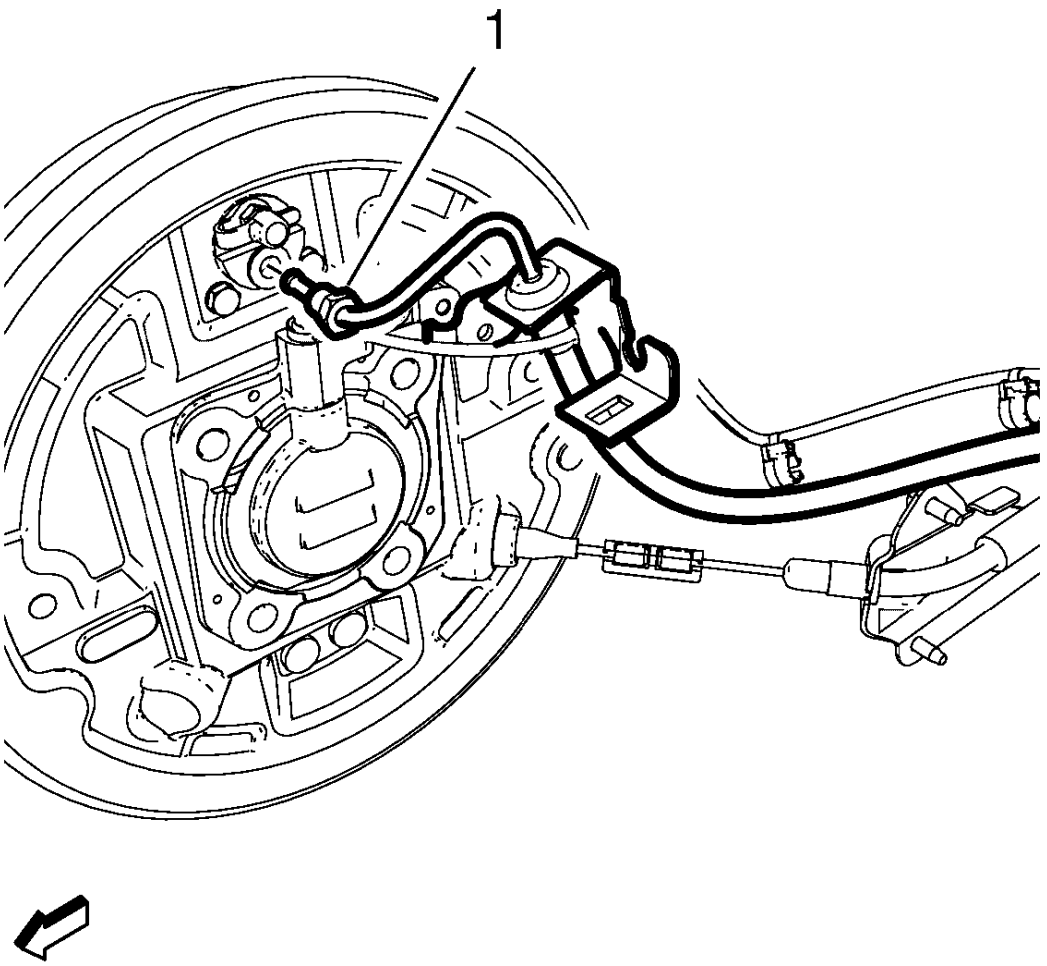

Fig. 59: Brake Hose And Pipe Fitting
Courtesy of GENERAL MOTORS COMPANY

1. Remove the caps or plugs from the opening in the wheel cylinder and the brake hose / pipe fitting.

CAUTION: Refer to Fastener Caution .

2. Install the brake hose / pipe fitting (1) to the wheel cylinder and tighten the brake pipe fitting to 18 N.m (13 lb ft)

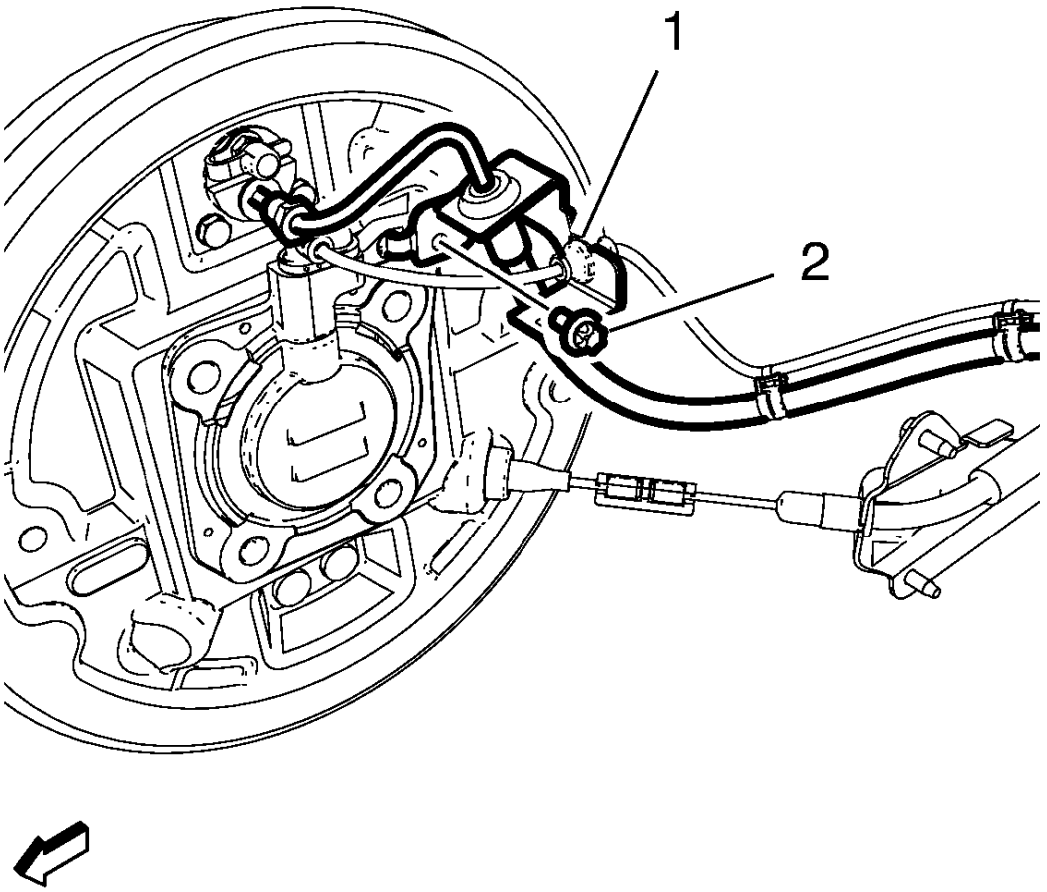

Fig. 60: Brake Hose Bracket And Wiring Harness
Courtesy of GENERAL MOTORS COMPANY

3. Install the brake hose bolt (2) attaching the hose to the rear backing plate and tighten the bolt to 8 N.m (71 lb in).
4. Install wiring harness (1) at the brake hose bracket.

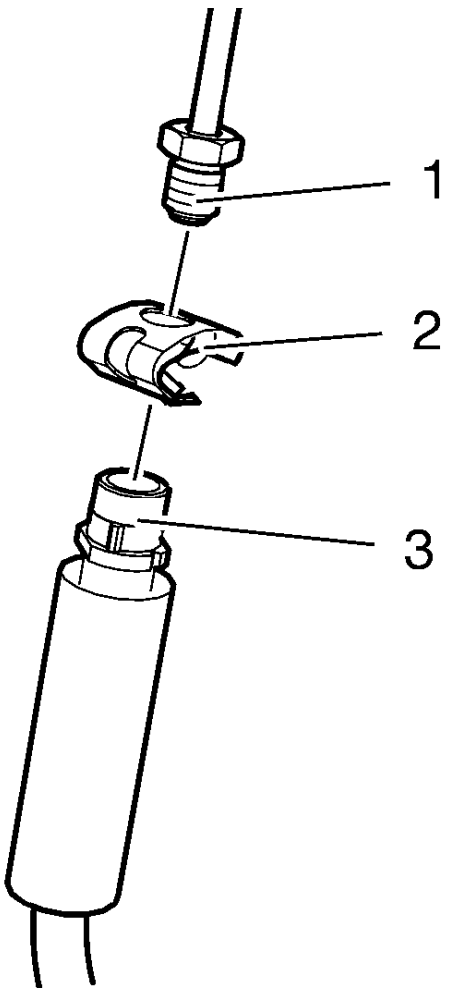

Fig. 61: Brake Pipe Fitting Disconnected From Brake Hose
Courtesy of GENERAL MOTORS COMPANY

5. Remove the caps or plugs from the brake pipe fitting end and the brake hose end.
6. Install the brake hose to the brake hose body bracket.
7. Install the brake hose retainer (2) over the anti-rotation tabs of the brake hose (3).
8. Connect the brake pipe fitting (1) to the brake hose (3).
9. Use a backup wrench on the brake hose (3).
10. Tighten the brake pipe fitting to 18 N.m (13 lb ft).
11. Ensure that the hose does not make contact with any part of the suspension. Check the hose in extreme right and extreme left turn conditions. If the hose makes contact, remove the hose and correct the condition.
12. Install rear wheel speed sensor to brake hose. Refer to **Rear Wheel Speed Sensor Replacement (Disc Brake)** , **Rear Wheel Speed Sensor Replacement (Drum Brake)** .
13. Bleed the hydraulic brake system. Refer to **Hydraulic Brake System Bleeding (Manual Bleeding)**,

Hydraulic Brake System Bleeding (Pressure Bleeding).

14. Install the tire and wheel assembly. Refer to **Tire and Wheel Removal and Installation** .
15. Lower the vehicle.

HYDRAULIC BRAKE SYSTEM BLEEDING (PRESSURE BLEEDING)

WARNING: Refer to Brake Fluid Irritant Warning .

CAUTION: Refer to Brake Fluid Effects on Paint and Electrical Components Caution .

CAUTION: Only use products that comply with GM specifications and check manufacturer information respectively. We recommend the use of GM genuine products. Instructions must be followed at all times. The use of any type of fluid other than the recommended type of brake fluid, may cause contamination which could result in damage to the internal rubber seals and/or rubber linings of hydraulic brake system components.

If hydraulic components were serviced on only one wheel hydraulic circuit, perform the following procedure.

Bleeding a Single Hydraulic Brake Circuit

1. With the ignition OFF and the brakes cool, apply the brakes 3-5 times, or until the brake pedal effort increases significantly, in order to deplete the brake booster power reserve.
2. Place a clean shop cloth beneath the brake master cylinder to catch brake fluid spills.
3. Clean the outside of the reservoir on and around the reservoir cap prior to removing the cap and diaphragm.
4. Fill the brake master cylinder reservoir to the maximum-full level with GM approved brake fluid from a clean, sealed brake fluid container. Refer to **Fluid and Lubricant Recommendations** .

NOTE: The pressure bleeding equipment must be the diaphragm type. The rubber diaphragm between the air supply and the brake fluid prevents air, moisture, oil, and other contaminants from entering the hydraulic system.

5. Following the brake pressure bleeder manufacturer's instructions, fill the brake pressure bleeder with GM approved brake fluid from a clean, sealed brake fluid container.
6. Install the appropriate master cylinder reservoir adapter and connect the brake pressure bleeder.
7. Charge the brake pressure bleeder air tank to 170-200 kPa/1.7-2.0 bar (25-30 psi), or as recommended by the brake pressure bleeder manufacturer's instructions.
8. Open the brake pressure bleeder fluid tank valve to allow pressurized brake fluid to enter the brake hydraulic system.

NOTE: Any brake fluid leaks identified require repair prior to completing this procedure.

9. Wait approximately 30 seconds, then inspect the entire hydraulic brake system for external brake fluid leaks.
10. Install a proper box-end wrench onto the wheel hydraulic circuit bleeder valve which has been serviced.
11. Install a transparent hose over the end of the bleeder valve.
12. Submerge the open end of the transparent hose into a transparent container partially filled with brake fluid from a clean, sealed brake fluid container.
13. Loosen the bleeder valve to purge air from the wheel hydraulic circuit.
14. Allow fluid to flow until air bubbles stop flowing from the bleeder.
15. After all air has been purged from the hydraulic circuit, tighten the bleeder valve and install the dust cap.

NOTE: The brake reservoir may have residual pressure after the bleeding operation is complete. Wrap a clean shop towel around the bleeder adapter and all hose connections before disconnecting the pressure bleeding equipment to prevent brake fluid from contacting and damaging vehicle components and painted surfaces.

16. Close the brake pressure bleeder fluid tank valve then disconnect the brake pressure bleeder from the master cylinder reservoir bleeder adapter.
17. Remove the master cylinder reservoir bleeder adapter from the master cylinder reservoir.
18. Fill the brake master cylinder reservoir to the maximum-fill level with GM approved brake fluid from a clean, sealed brake fluid container.
19. Slowly press and release the brake pedal. Observe the brake pedal feel.
20. If the brake pedal feels spongy, perform the Bleeding the Complete Brake Hydraulic System procedure:
21. Turn the ignition key ON, with the engine OFF. Check to see if the brake system warning lamp remains illuminated.

NOTE: DO NOT allow the vehicle to be driven until it is diagnosed and repaired.

22. If the brake system warning lamp remains illuminated, refer to **Diagnostic Starting Point - Vehicle** .

Bleeding the Complete Brake Hydraulic System

1. With the ignition OFF and the brakes cool, apply the brakes 3-5 times, or until the brake pedal effort increases significantly, in order to deplete the brake booster power reserve.
2. Place a clean shop cloth beneath the brake master cylinder to catch brake fluid spills.
3. Clean the outside of the reservoir on and around the reservoir cap prior to removing the cap and diaphragm.
4. Fill the brake master cylinder reservoir to the maximum-full level with GM approved brake fluid from a clean, sealed brake fluid container. Refer to **Fluid and Lubricant Recommendations** .
5. If the master cylinder was replaced, the master cylinder must be bench bled. Refer to **Master Cylinder**

Bench Bleeding.

6. If the brake pipes have been removed from the master cylinder, the following steps must be performed.
    1. With the rear brake pipe installed securely to the master cylinder, loosen and separate the front brake pipe fitting from the front port of the brake master cylinder.
    2. Allow a small amount of brake fluid to gravity bleed from the open port of the master cylinder. Capture and properly dispose of the brake fluid in an approved container.
    3. Install the front brake pipe fitting to the front port of the brake master cylinder and tighten the fitting.
    4. Have an assistant slowly press the brake pedal fully and maintain steady pressure on the pedal.
    5. Loosen the front brake pipe fitting from the front port of the brake master cylinder to purge air from the master cylinder port.
    6. Tighten the front brake pipe fitting, then have the assistant slowly release the brake pedal.
    7. Wait 15 seconds, then repeat steps 6.4-6.6 until all air is purged from the front brake pipe fitting of the front port of the master cylinder.
    8. After all air is purged from the front port of the brake master cylinder, tighten the front master cylinder brake pipe fitting. Refer to **Fastener Tightening Specifications**.
    9. With the front brake pipe fitting installed securely to the front port of the brake master cylinder, loosen and separate the rear brake pipe fitting from the rear port of the brake master cylinder.
    10. Repeat steps 6.2-6.7 for the rear port of the brake master cylinder.
    11. After all air is purged from the rear port of the brake master cylinder, tighten the rear master cylinder brake pipe fitting. Refer to **Fastener Tightening Specifications**.
    12. Slowly press and release the brake pedal. Observe the brake pedal feel.
    13. If the brake pedal feels spongy, proceed to step 7.
    14. If the brake pedal feels firm, proceed to step 24.
7. If the brake pipes have been removed from the brake pressure modulator valve (BPMV) assembly, if equipped, or the brake proportion valve assembly, if equipped, air must be purged from each port of the respective assembly beginning with the feed pipes from the master cylinder.
    1. Loosen and separate one of the master cylinder brake pipe fittings from the inlet port of the assembly to be bled.
    2. Allow a small amount of brake fluid to gravity bleed from the open port of the assembly. Capture and properly dispose of the brake fluid in an approved container.
    3. Install the brake pipe fitting and to the inlet port of the assembly and tighten securely.
    4. Have an assistant slowly press the brake pedal fully and maintain steady pressure on the pedal.
    5. Loosen the same brake pipe fitting to purge air from the open port of the assembly.
    6. Tighten the brake pipe fitting, then have the assistant slowly release the brake pedal.
    7. Wait 15 seconds, then repeat steps 7.4-7.6 until all air is purged from the brake pipe fitting of the assembly.
    8. Repeat steps 7.1-7.7 for all of the remaining ports of the assembly.
    9. After bleeding each port of the assembly, tighten all of the brake pipe fittings on the assembly. Refer to **Fastener Tightening Specifications**.
    10. Fill the master cylinder reservoir to the maximum-full level with GM approved brake fluid from a

clean, sealed brake fluid container.

11. Slowly press and release the brake pedal. Observe the brake pedal feel.
12. If the brake pedal feels spongy, proceed to step 8.
13. If the brake pedal feels firm, proceed to step 24.

NOTE: The pressure bleeding equipment must be the diaphragm type. The rubber diaphragm between the air supply and the brake fluid prevents air, moisture, oil, and other contaminants from entering the hydraulic system.

8. Following the brake pressure bleeder manufacturer's instructions, fill the brake pressure bleeder with GM approved brake fluid from a clean, sealed brake fluid container.
9. Install the appropriate master cylinder reservoir adapter and connect the brake pressure bleeder.
10. Charge the brake pressure bleeder air tank to 170-200 kPa/1.7-2.0 bar (25-30 psi), or as recommended by the brake pressure bleeder manufacturer's instructions.
11. Open the brake pressure bleeder fluid tank valve to allow pressurized brake fluid to enter the brake hydraulic system.

NOTE: Any brake fluid leaks identified require repair prior to completing this procedure.

12. Wait approximately 30 seconds, then inspect the entire hydraulic brake system for external brake fluid leaks.
13. Install a proper box-end wrench onto the RIGHT REAR wheel hydraulic circuit bleeder valve.
14. Install a transparent hose over the end of the bleeder valve.
15. Submerge the open end of the transparent hose into a transparent container partially filled with GM approved brake fluid from a clean, sealed brake fluid container.
16. Have an assistant slowly press the brake pedal fully and maintain steady pressure on the brake pedal.
17. Loosen the bleeder valve to purge air from the wheel hydraulic circuit.
18. Tighten the bleeder valve, then have the assistant slowly release the brake pedal.
19. Wait 15 seconds, then repeat steps 11-13 until all air is purged from the wheel hydraulic circuit.
20. Tighten the RIGHT REAR hydraulic wheel circuit bleeder valve securely.
21. Install a proper box-end wrench onto the LEFT REAR wheel hydraulic circuit bleeder valve, then repeat steps 9-14.
22. Install a proper box-end wrench onto the RIGHT FRONT wheel hydraulic circuit bleeder valve, then repeat steps 9-14.
23. Install a proper box-end wrench onto the LEFT FRONT wheel hydraulic circuit bleeder valve, then repeat steps 9-14.
24. After completing the final wheel hydraulic circuit bleeding procedure, tighten all of the wheel hydraulic circuit bleeder valves and install the bleeder valve dust caps.
25. Close the brake pressure bleeder fluid tank valve.

NOTE: The brake reservoir may have residual pressure after the bleeding

operation is complete. Wrap a clean shop towel around the bleeder adapter and all hose connections before disconnecting the pressure bleeding equipment to prevent brake fluid from contacting and damaging vehicle components and painted surfaces.

26. Remove the brake pressure bleeding equipment from the vehicle.
27. Fill the brake master cylinder reservoir to the maximum-full level with GM approved brake fluid from a clean, sealed brake fluid container. Refer to **Fluid and Lubricant Recommendations** .
28. Slowly press and release the brake pedal. Observe the brake pedal feel.
29. If the brake pedal feels spongy, perform the following procedure.
    1. If equipped with antilock brakes, install a scan tool and perform the **Antilock Brake System Automated Bleed** to remove air which may be trapped in the BPMV.
    2. Inspect the hydraulic brake system for external leaks. Refer to **Brake System External Leak Inspection**.
    3. Repeat the Bleeding the Complete Brake Hydraulic System procedure.
30. If the brake pedal still feels spongy, pressure bleed the hydraulic brake system. Refer to **Hydraulic Brake System Bleeding (Manual Bleeding)**, **Hydraulic Brake System Bleeding (Pressure Bleeding)**.
31. Turn the ignition switch ON with the engine OFF. Check to see if the brake system warning lamp remains illuminated.

NOTE: DO NOT allow the vehicle to be driven until the brake system is diagnosed and repaired.

32. If the brake system warning lamp remains illuminated, refer to **Diagnostic Starting Point - Vehicle** .

HYDRAULIC BRAKE SYSTEM BLEEDING (MANUAL BLEEDING)

WARNING: Refer to Brake Fluid Irritant Warning .

CAUTION: Refer to Brake Fluid Effects on Paint and Electrical Components Caution .

CAUTION: Only use products that comply with GM specifications and check manufacturer information respectively. We recommend the use of GM genuine products. Instructions must be followed at all times. The use of any type of fluid other than the recommended type of brake fluid, may cause contamination which could result in damage to the internal rubber seals and/or rubber linings of hydraulic brake system components.

If hydraulic components were serviced on only one wheel hydraulic circuit, perform the following procedure.

Bleeding a Single Hydraulic Brake Circuit

1. With the ignition OFF and the brakes cool, apply the brakes 3-5 times, or until the brake pedal effort increases significantly, in order to deplete the brake booster power reserve.
2. Place a clean shop cloth beneath the brake master cylinder to catch brake fluid spills.
3. Clean the outside of the reservoir on and around the reservoir cap prior to removing the cap and diaphragm.
4. Fill the brake master cylinder reservoir to the maximum-full level with GM approved brake fluid from a clean, sealed brake fluid container. Add brake fluid as needed to ensure that the brake master cylinder reservoir remains at least half-full throughout the bleed procedure. The reservoir cap must be installed at all times except when filling the reservoir. Refer to **Fluid and Lubricant Recommendations** .
5. Install a proper box-end wrench onto the wheel hydraulic circuit bleeder valve which has been serviced.
6. Install a transparent hose over the end of the bleeder valve.
7. Submerge the open end of the transparent hose into a transparent container partially filled with brake fluid from a clean, sealed brake fluid container.
8. Have an assistant slowly press the brake pedal fully and maintain steady pressure on the pedal.
9. Loosen the bleeder valve to purge air from the wheel hydraulic circuit.
10. Tighten the bleeder valve, then have the assistant slowly release the brake pedal.
11. Wait 15 seconds, then repeat steps 8-10 until all air is purged from the wheel hydraulic circuit.
12. After all air has been purged from the hydraulic circuit, tighten the bleeder valve and install the dust cap.
13. Fill the brake master cylinder reservoir to the maximum-fill level with GM approved brake fluid from a clean, sealed brake fluid container.
14. Slowly press and release the brake pedal. Observe the brake pedal feel.
15. If the brake pedal feels spongy, perform the Bleeding the Complete Brake Hydraulic System procedure:
16. Turn the ignition key ON, with the engine OFF. Check to see if the brake system warning lamp remains illuminated.

NOTE: DO NOT allow the vehicle to be driven until it is diagnosed and repaired.

17. If the brake system warning lamp remains illuminated, refer to **Diagnostic Starting Point - Vehicle** .

Bleeding the Complete Brake Hydraulic System

1. With the ignition OFF and the brakes cool, apply the brakes 3-5 times, or until the brake pedal effort increases significantly, in order to deplete the brake booster power reserve.
2. Place a clean shop cloth beneath the brake master cylinder to catch brake fluid spills.
3. Clean the outside of the reservoir on and around the reservoir cap prior to removing the cap and diaphragm.
4. Fill the brake master cylinder reservoir to the maximum-full level with GM approved brake fluid from a clean, sealed brake fluid container. Add brake fluid as needed to ensure that the brake master cylinder reservoir remains at least half-full throughout the bleed procedure. The reservoir cap must be installed at all times except when filling the reservoir. Refer to **Fluid and Lubricant Recommendations** .
5. If the master cylinder was replaced, the master cylinder must be bench bled. Refer to **Master Cylinder Bench Bleeding**.

6. If the brake pipes have been removed from the master cylinder, the following steps must be performed.
    1. With the rear brake pipe installed securely to the master cylinder, loosen and separate the front brake pipe fitting from the front port of the brake master cylinder.
    2. Allow a small amount of brake fluid to gravity bleed from the open port of the master cylinder. Capture and properly dispose of the brake fluid in an approved container.
    3. Install the front brake pipe fitting to the front port of the brake master cylinder and tighten the fitting. Refer to **Fastener Tightening Specifications**.
    4. Have an assistant slowly press the brake pedal fully and maintain steady pressure on the pedal.
    5. Loosen the front brake pipe fitting from the front port of the brake master cylinder to purge air from the master cylinder port.
    6. Tighten the front brake pipe fitting, then have the assistant slowly release the brake pedal.
    7. Wait 15 seconds, then repeat steps 6.4-6.6 until all air is purged from the front brake pipe fitting of the front port of the master cylinder.
    8. After all air is purged from the front port of the brake master cylinder, tighten the front master cylinder brake pipe fitting. Refer to **Fastener Tightening Specifications**.
    9. With the front brake pipe fitting installed securely to the front port of the brake master cylinder, loosen and separate the rear brake pipe fitting from the rear port of the brake master cylinder.
    10. Repeat steps 6.2-6.7 for the rear port of the brake master cylinder.
    11. After all air is purged from the rear port of the brake master cylinder, tighten the rear master cylinder brake pipe fitting. Refer to **Fastener Tightening Specifications**.
    12. Slowly press and release the brake pedal. Observe the brake pedal feel.
    13. If the brake pedal feels spongy, proceed to step 7.
    14. If the brake pedal feels firm, proceed to step 24.
7. If the brake pipes have been removed from the brake pressure modulator valve (BPMV) assembly, if equipped, or the brake proportion valve assembly, if equipped, air must be purged from each port of the respective assembly beginning with the feed pipes from the master cylinder.
    1. Loosen and separate one of the master cylinder brake pipe fittings from the inlet port of the assembly to be bled.
    2. Allow a small amount of brake fluid to gravity bleed from the open port of the assembly. Capture and properly dispose of the brake fluid in an approved container.
    3. Install the brake pipe fitting and to the inlet port of the assembly and tighten securely.
    4. Have an assistant slowly press the brake pedal fully and maintain steady pressure on the pedal.
    5. Loosen the same brake pipe fitting to purge air from the open port of the assembly.
    6. Tighten the brake pipe fitting, then have the assistant slowly release the brake pedal.
    7. Wait 15 seconds, then repeat steps 7.4-7.6 until all air is purged from the brake pipe fitting of the assembly.
    8. Repeat steps 7.1-7.7 for all of the remaining ports of the assembly.
    9. After bleeding each port of the assembly, tighten all of the brake pipe fittings on the assembly. Refer to **Fastener Tightening Specifications**.
    10. Fill the master cylinder reservoir to the maximum-full level with GM approved brake fluid from a clean, sealed brake fluid container.

11. Slowly press and release the brake pedal. Observe the brake pedal feel.
12. If the brake pedal feels spongy, proceed to step 8.
13. If the brake pedal feels firm, proceed to step 24.

8. Install a proper box-end wrench onto the RIGHT REAR wheel hydraulic circuit bleeder valve.
9. Install a transparent hose over the end of the bleeder valve.
10. Submerge the open end of the transparent hose into a transparent container partially filled with GM approved brake fluid from a clean, sealed brake fluid container.
11. Have an assistant slowly press the brake pedal fully and maintain steady pressure on the brake pedal.
12. Loosen the bleeder valve to purge air from the wheel hydraulic circuit.
13. Tighten the bleeder valve, then have the assistant slowly release the brake pedal.
14. Wait 15 seconds, then repeat steps 11-13 until all air is purged from the wheel hydraulic circuit.
15. Tighten the RIGHT REAR hydraulic wheel circuit bleeder valve securely.
16. Install a proper box-end wrench onto the LEFT REAR wheel hydraulic circuit bleeder valve, then repeat steps 9-14..
17. Install a proper box-end wrench onto the RIGHT FRONT wheel hydraulic circuit bleeder valve, then repeat steps 9-14..
18. Install a proper box-end wrench onto the LEFT FRONT wheel hydraulic circuit bleeder valve, then repeat steps 9-14..
19. After completing the final wheel hydraulic circuit bleeding procedure, tighten all of the wheel hydraulic circuit bleeder valves and install the bleeder valve dust caps.
20. Fill the master cylinder reservoir to the maximum-full level with GM approved brake fluid from a clean, sealed brake fluid container.
21. Slowly press and release the brake pedal. Observe the brake pedal feel.
22. If the brake pedal feels spongy, perform the following procedure.
    1. If equipped with antilock brakes, install a scan tool and perform the **Antilock Brake System Automated Bleed** to remove air which may be trapped in the BPMV.
    2. Inspect the hydraulic brake system for external leaks. Refer to **Brake System External Leak Inspection**.
    3. Repeat the Bleeding the Complete Brake Hydraulic System procedure.
23. If the brake pedal still feels spongy, pressure bleed the hydraulic brake system. Refer to **Hydraulic Brake System Bleeding (Manual Bleeding)**, **Hydraulic Brake System Bleeding (Pressure Bleeding)**
24. Turn the ignition switch ON with the engine OFF. Check to see if the brake system warning lamp remains illuminated.

NOTE: DO NOT allow the vehicle to be driven until the brake system is diagnosed and repaired.

25. If the brake system warning lamp remains illuminated, refer to **Diagnostic Starting Point - Vehicle** .

HYDRAULIC BRAKE SYSTEM FLUSHING

CAUTION: Only use products that comply with GM specifications and check manufacturer information respectively. We recommend the use of GM genuine products. Instructions must be followed at all times. The use of any type of fluid other than the recommended type of brake fluid, may cause contamination which could result in damage to the internal rubber seals and/or rubber linings of hydraulic brake system components.

1. Inspect the brake fluid for the following conditions, indicating brake fluid contamination:
   - Fluid separation, indicating two types of fluid are present; a substance other than the recommended brake fluid has been introduced into the brake hydraulic system:
     - Swirled appearance-oil-based substance
     - Layered appearance-silicone-based substance
   - Fluid discoloration, indicating the presence of moisture or particles that have been introduced into the brake hydraulic system:
     - Cloudy appearance-moisture
     - Dark appearance/suspended particles in fluid-dirt, rust, corrosion, brake dust
2. Inspect the master cylinder reservoir cap diaphragm and the reservoir-to-master cylinder grommets for swelling, indicating brake fluid contamination.
3. If the brake fluid WAS contaminated with an oil-based or a silicone-based substance, indicated by fluid separation and/or a swollen master cylinder reservoir cap diaphragm and/or swollen reservoir-to-master cylinder grommets, perform the following:
   1. Remove ALL of the following components listed from the vehicle. Each component contains internal rubber seals/linings which have been contaminated by the contaminated brake fluid in the brake hydraulic system.

      Refer to the procedures indicated:

      - **Master Cylinder Replacement**
      - **Front Brake Hose Replacement**
      - **Rear Brake Hose Replacement (Drum Brake)**, **Rear Brake Hose Replacement (Disc Brake)**
      - **Front Brake Caliper Replacement**
      - **Rear Brake Caliper Replacement**
      - **Brake Pressure Modulator Valve Replacement**
      - **Hydraulic Brake System Bleeding (Manual Bleeding)**, **Hydraulic Brake System Bleeding (Pressure Bleeding)**
   2. Clean out all the hydraulic brake pipes using denatured alcohol, or equivalent.
   3. Dry the brake pipes using non-lubricated, filtered air.
   4. Repair or replace ALL of the following components listed and install them to the vehicle. Each component contains internal rubber seals/linings which have been contaminated by the contaminated brake fluid in the brake hydraulic system.

      Refer to the procedures indicated:

- **Master Cylinder Replacement** ; also perform the following:
- Clean the brake master cylinder reservoir using denatured alcohol, or equivalent, then dry the reservoir using non-lubricated, filtered air. Inspect the reservoir for cracks and/or damage and replace if necessary. Refer to **Master Cylinder Reservoir Replacement**.
- Replace the brake master cylinder reservoir cap diaphragm.
- **Front Brake Hose Replacement**
- **Rear Brake Hose Replacement (Drum Brake)**, **Rear Brake Hose Replacement (Disc Brake)**
- **Front Brake Caliper Overhaul** , or **Front Brake Caliper Replacement**
- **Rear Brake Caliper Replacement**

4. If the brake fluid was NOT contaminated with an oil-based or a silicone-based substance, but WAS contaminated with water or dirt, rust, corrosion, and/or brake dust, replace the brake master cylinder reservoir cap diaphragm. The diaphragm may have allowed the moisture or particles to enter the hydraulic system.
5. Fill the brake master cylinder reservoir to the maximum-fill level with GM recommended brake fluid. Refer to **Adhesives, Fluids, Lubricants, and Sealers** for the recommended brake fluid.
6. Pressure bleed the hydraulic brake system. Begin the procedure with the pressure bleeder reservoir filled to the maximum-fill level with the correct brake fluid as indicated. Refer to **Hydraulic Brake System Bleeding (Manual Bleeding)**, **Hydraulic Brake System Bleeding (Pressure Bleeding)**.

POWER BRAKE BOOSTER VACUUM PIPE REPLACEMENT (WITHOUT ELECTRIC PUMP)

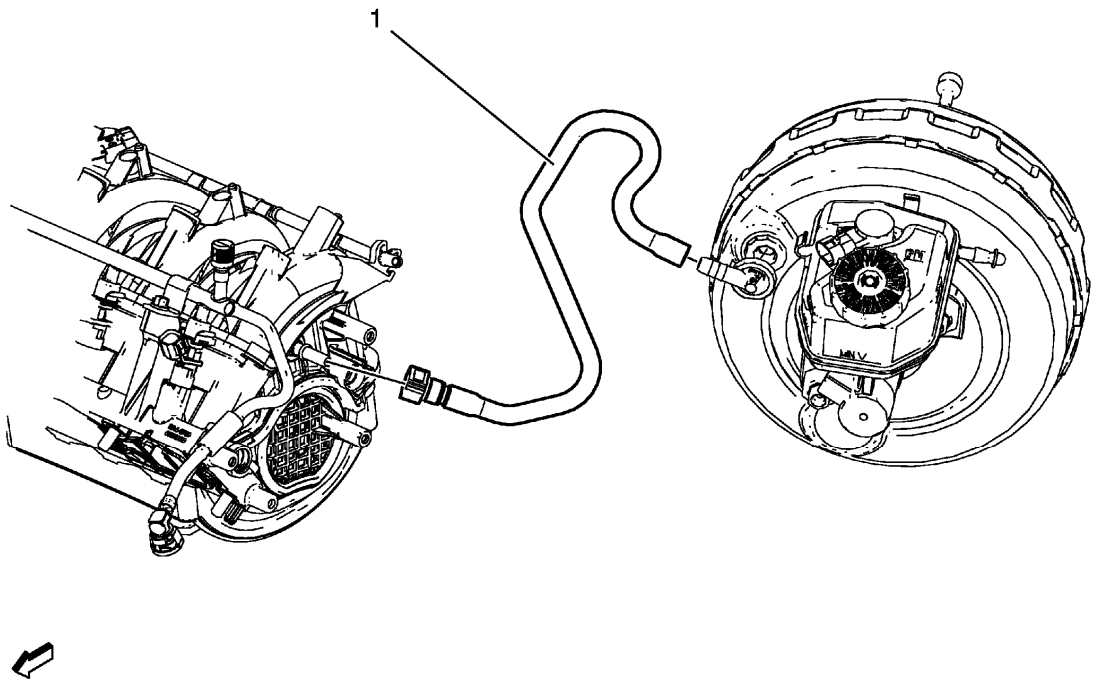

Fig. 62: Power Brake Booster Vacuum Pipe

Courtesy of GENERAL MOTORS COMPANY

Power Brake Booster Vacuum Pipe Replacement (without Electric Pump)

Callout	Component Name
1	Power Brake Booster Vacuum Pipe **Procedure** 1. Disconnect quick fitting from inlet exhaust. 2. Disconnect vacuum pipe from power brake booster.

POWER BRAKE BOOSTER VACUUM PIPE REPLACEMENT (WITH ELECTRIC PUMP)

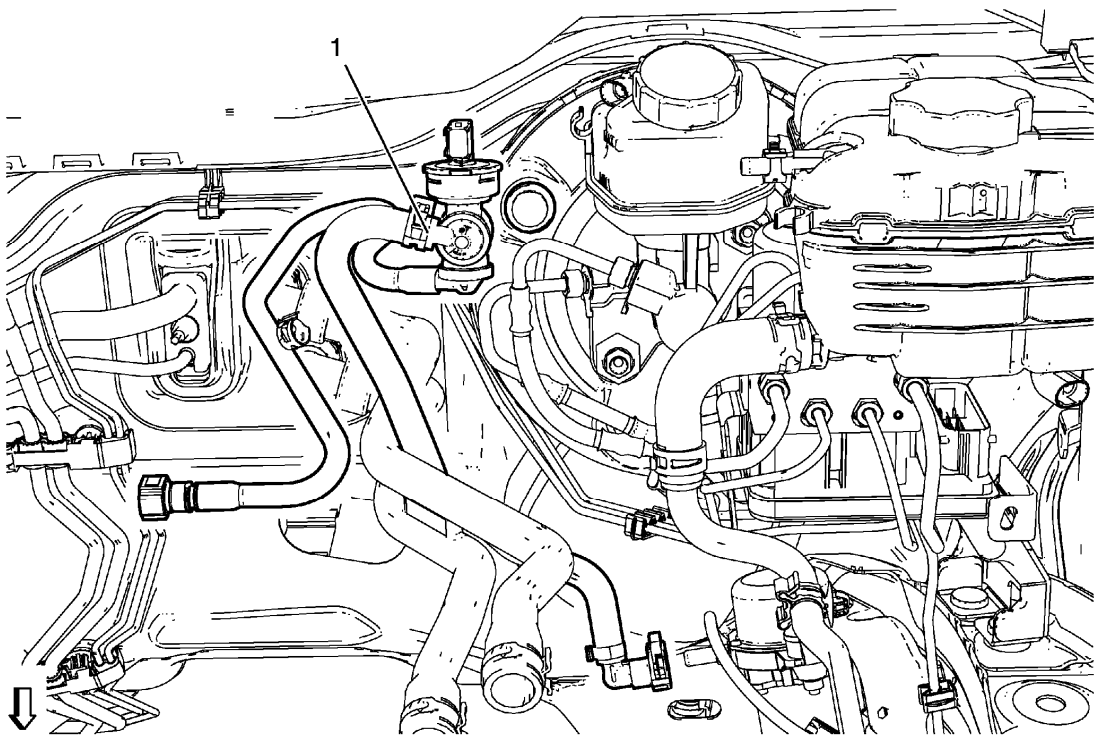

Fig. 63: Power Brake Booster Vacuum Pipe (With Electric Pump)
Courtesy of GENERAL MOTORS COMPANY

Power Brake Booster Vacuum Pipe Replacement (with Electric Pump)

Callout	Component Name
1	Power Brake Booster Vacuum Pipe **Procedure** 1. Disconnect quick fitting from intake manifold. 2. Disconnect wiring harness plug.

	3. Disconnect vacuum pipe from power brake booster. 4. Disconnect vacuum pipe from power brake booster pump.

POWER BRAKE BOOSTER REPLACEMENT

Removal Procedure

WARNING: Refer to Brake Fluid Irritant Warning .

CAUTION: Refer to Brake Fluid Effects on Paint and Electrical Components Caution .

1. Turn the ignition to the OFF position.

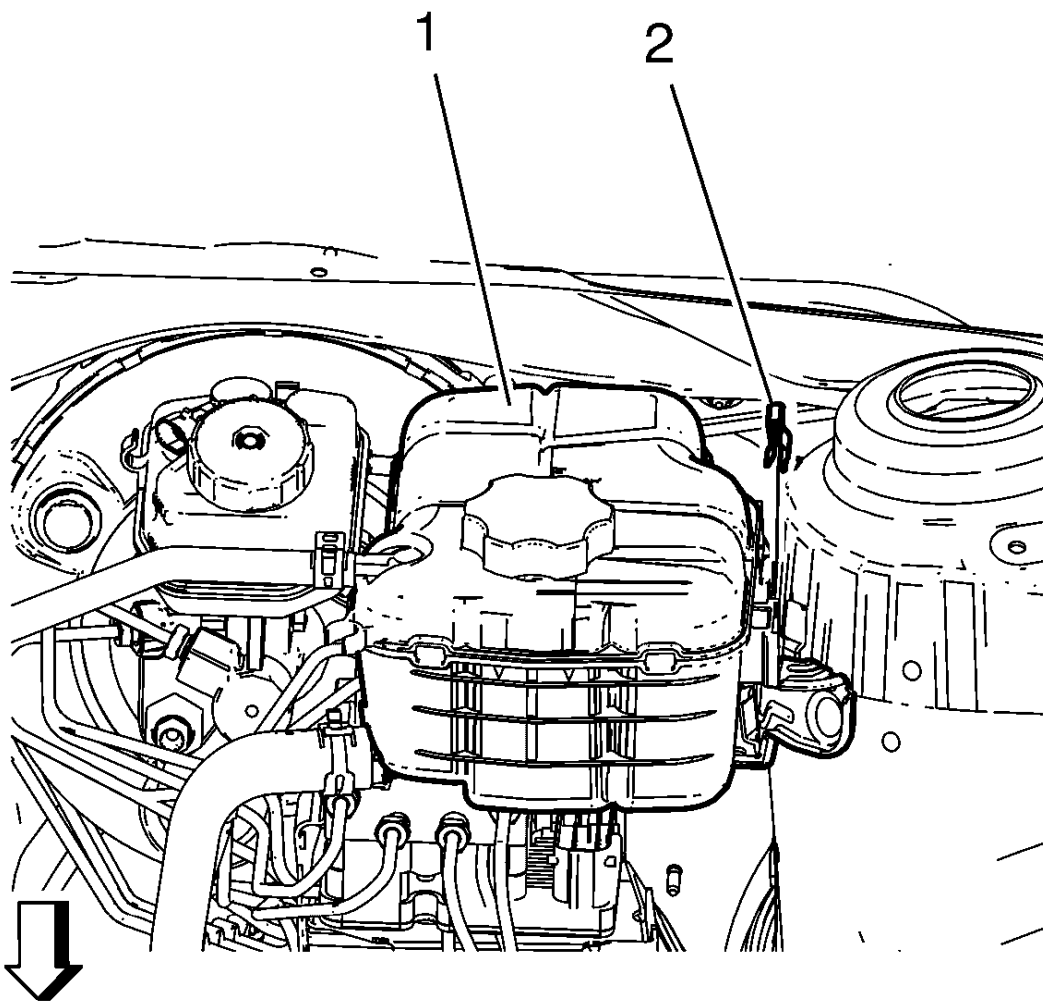

Fig. 64: View Of Radiator Surge Tank And Radiator Surge Tank Clip
Courtesy of GENERAL MOTORS COMPANY

NOTE: Do NOT disconnect engine coolant hoses.

2. Remove the radiator surge tank clip (2).
3. Remove the radiator surge tank (1).

Position the radiator surge tank (1) aside.

CAUTION: Always connect or disconnect the wiring harness connector from the EBCM/EBTCM with the ignition switch in the OFF position. Failure to observe this precaution could result in damage to the EBCM/EBTCM.

4. Disconnect the electrical connector from the EBCM/EBTCM.

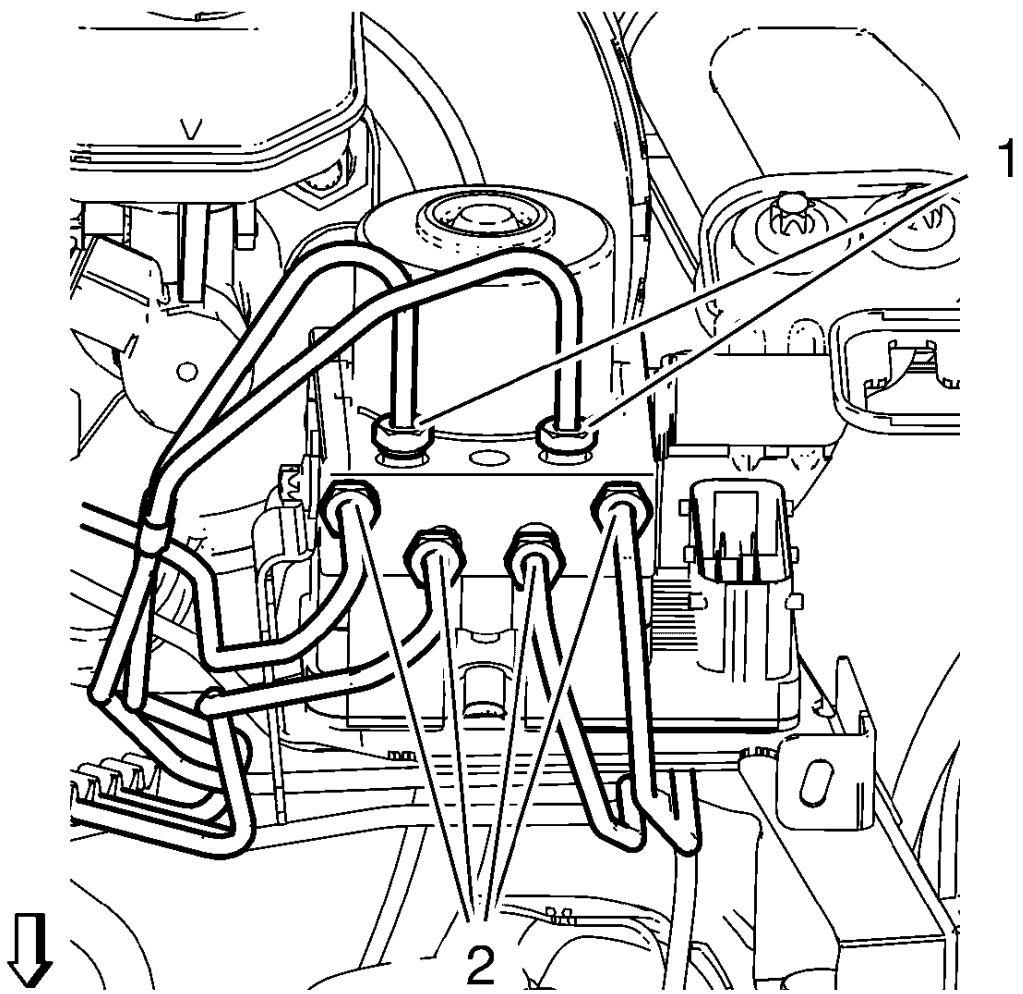

Fig. 65: Brake Pipe Fittings At BPMV
Courtesy of GENERAL MOTORS COMPANY

NOTE: Cap the brake pipe fittings to prevent brake fluid loss and contamination.

5. Remove the 6 brake pipes (1, 2) from the BPMV.

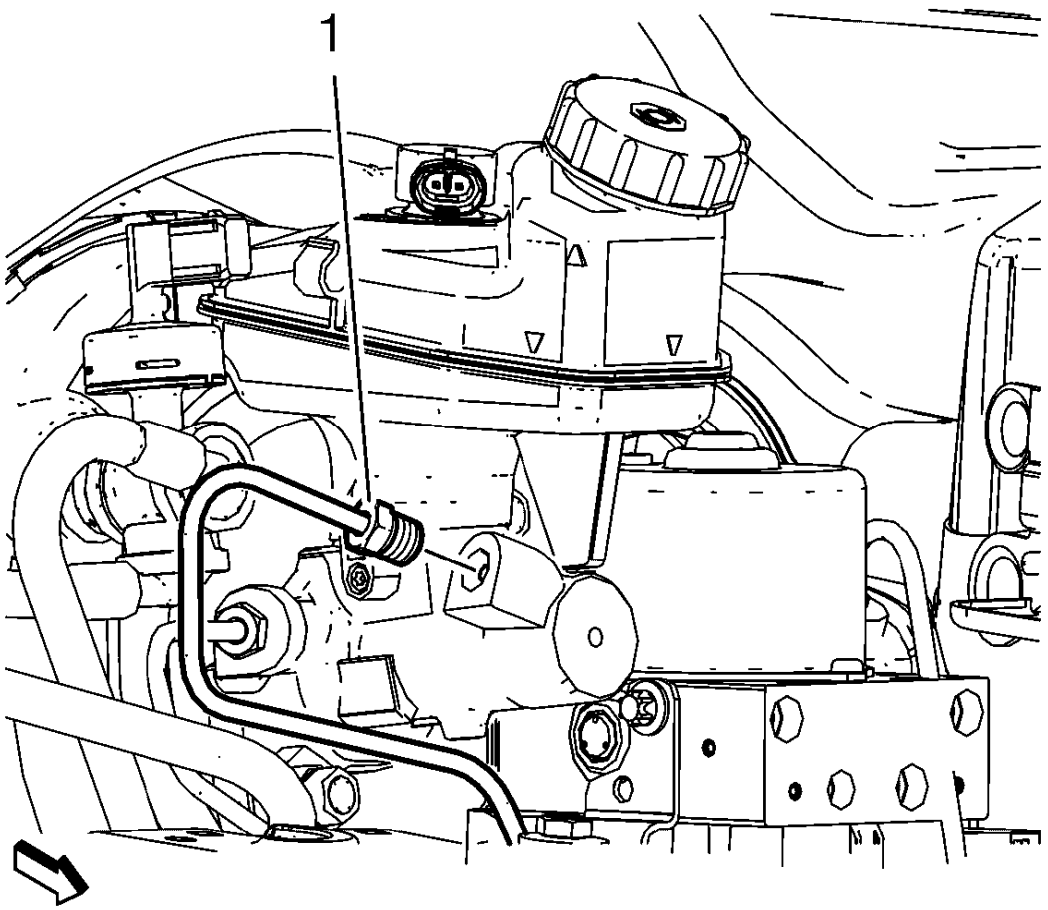

Fig. 66: Master Cylinder Secondary Brake Pipe Fitting
Courtesy of GENERAL MOTORS COMPANY

NOTE: Cap the brake pipe fittings to prevent brake fluid loss and contamination.

6. Disconnect the master cylinder secondary brake pipe fitting (1).

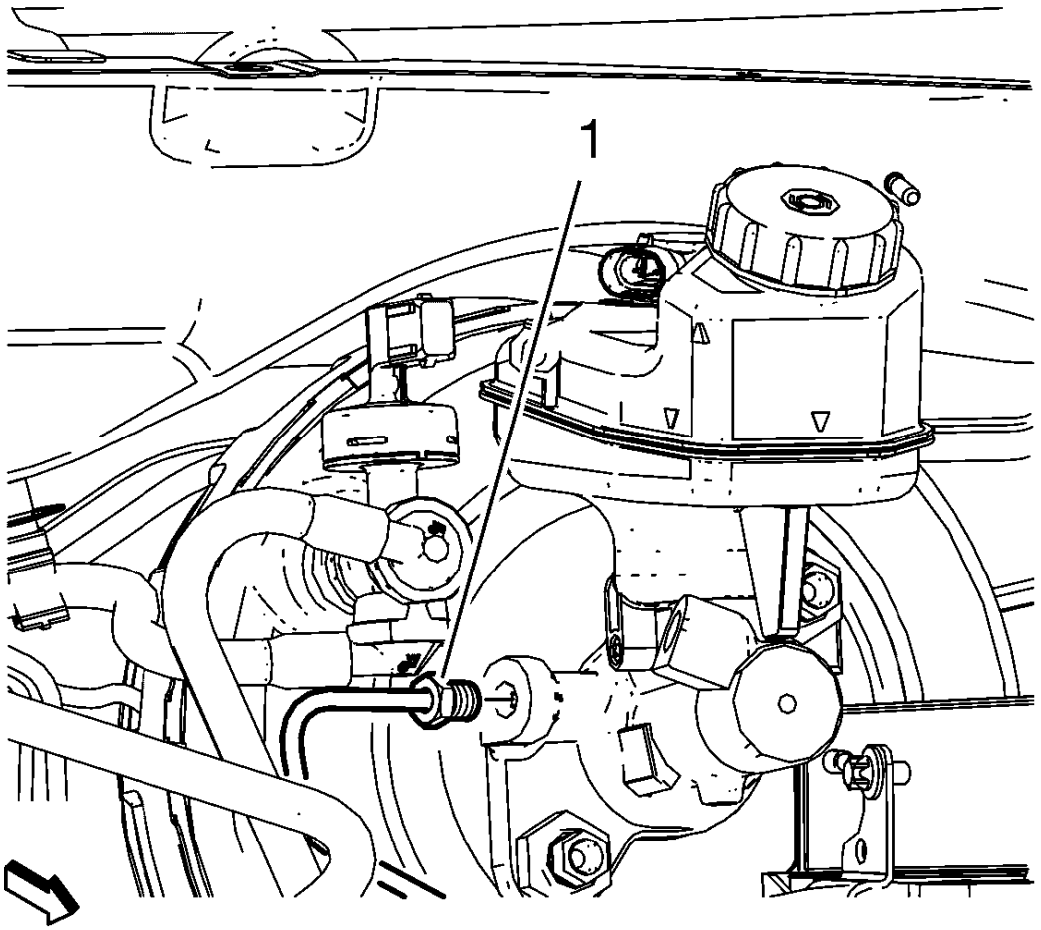

Fig. 67: Master Cylinder Primary Brake Pipe Fitting
Courtesy of GENERAL MOTORS COMPANY

NOTE: Cap the brake pipe fittings to prevent brake fluid loss and contamination.

7. Disconnect the master cylinder primary brake pipe fitting (1).

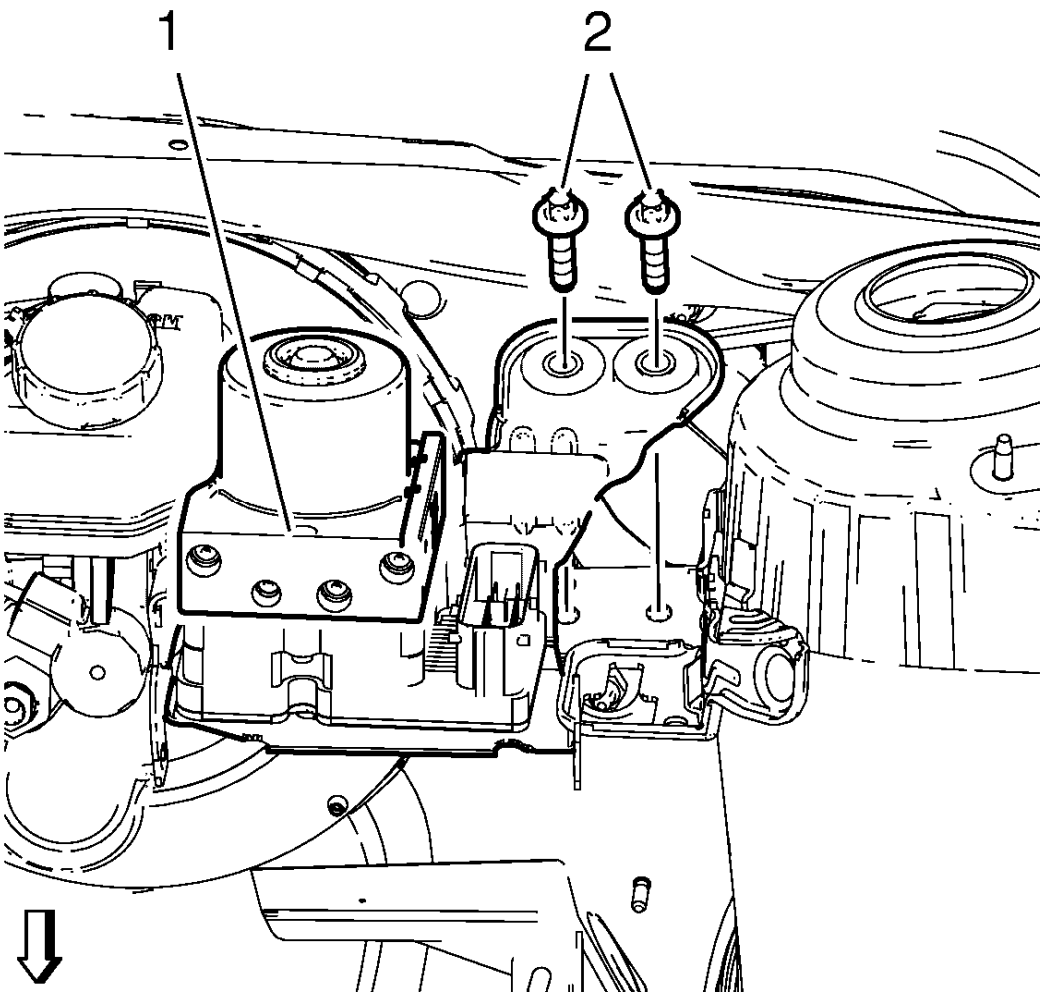

Fig. 68: BPMV and BPMV Bracket Bolts
Courtesy of GENERAL MOTORS COMPANY

8. Remove the BPMV bracket bolts (2).
9. Remove the BPMV bracket assembly (1).
10. Remove the brake master cylinder assembly from the booster. Refer to **Master Cylinder Replacement**.

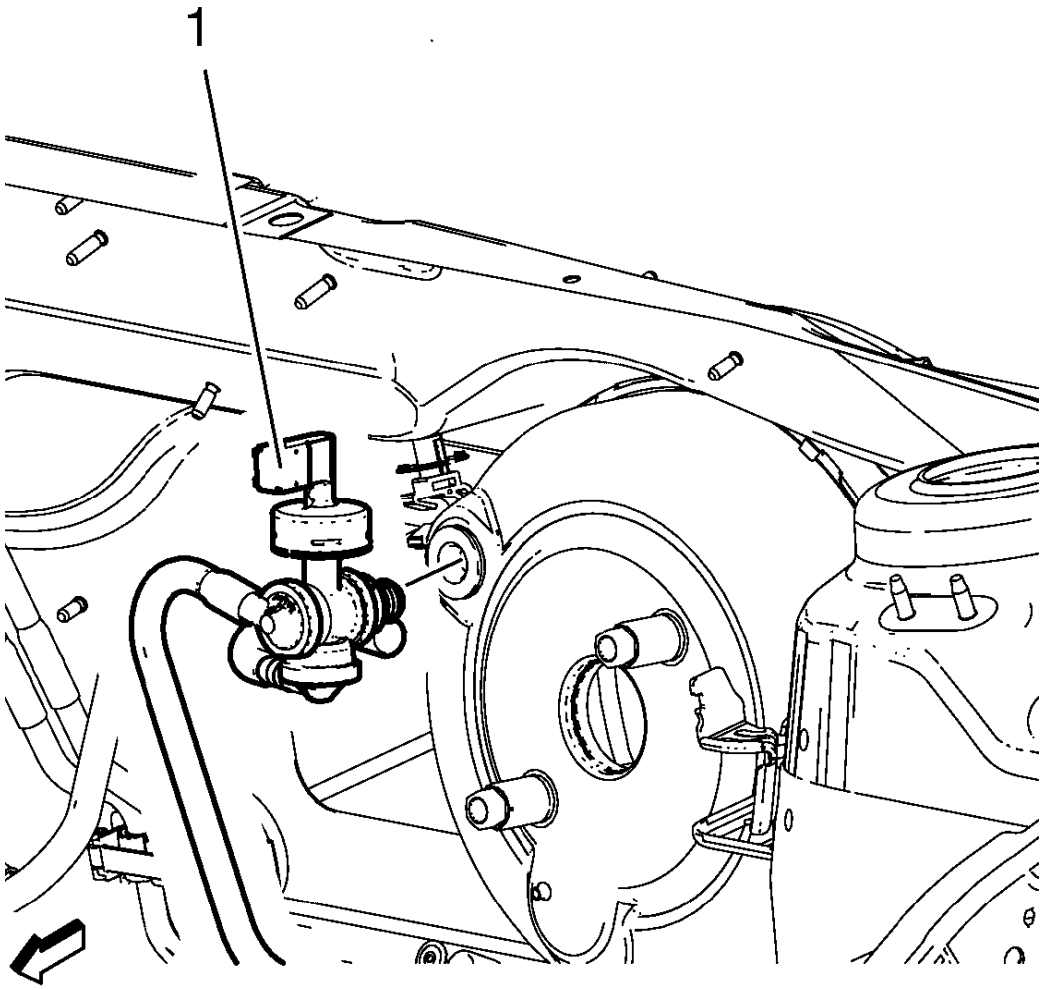

Fig. 69: Brake Booster Vacuum Pipe
Courtesy of GENERAL MOTORS COMPANY

11. Remove the booster vacuum pipe (1) from the booster.

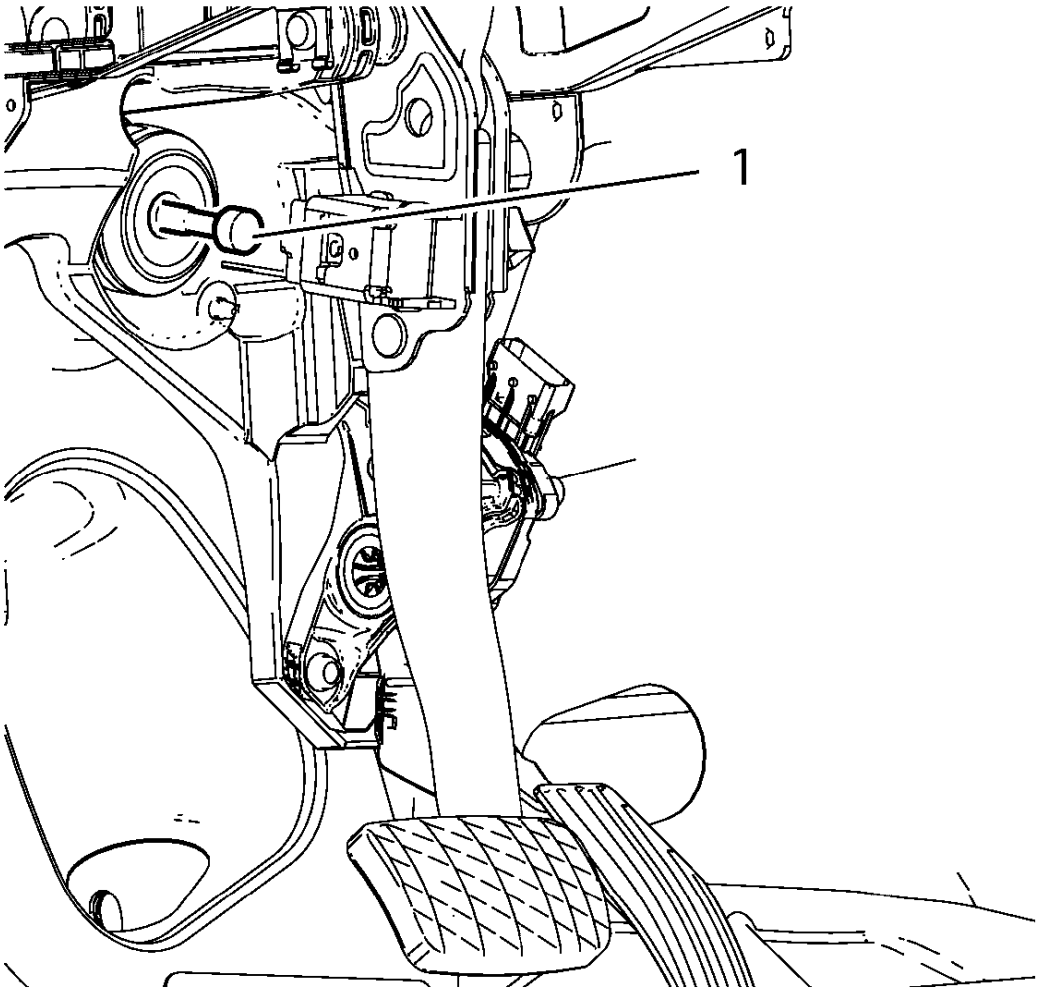

Fig. 70: Brake Pedal Pushrod
Courtesy of GENERAL MOTORS COMPANY

12. Disconnect the brake pedal pushrod (1) from the brake pedal.
13. Replace the click fit connector between booster pushrod and brake pedal with a new part.

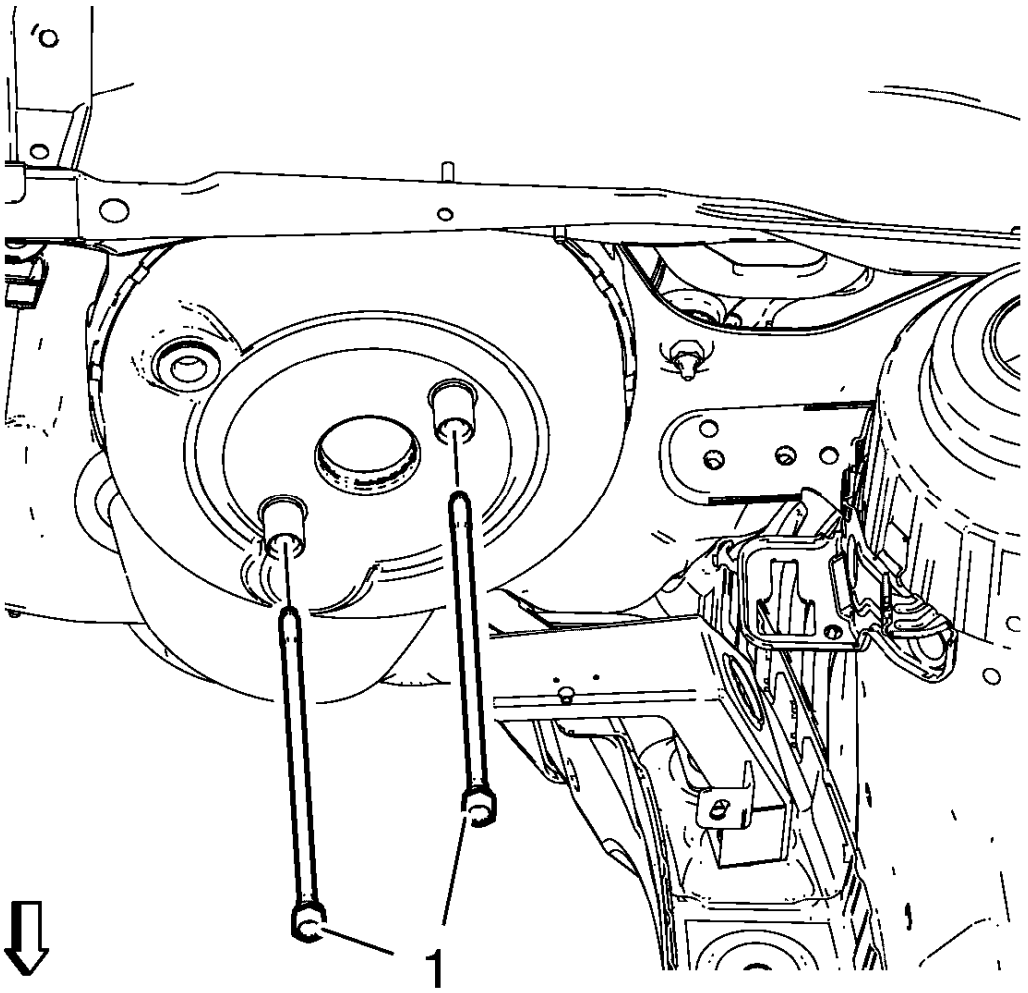

Fig. 71: Brake Booster Bolts
Courtesy of GENERAL MOTORS COMPANY

14. Remove the brake booster bolts (1).
15. Remove the booster from the vehicle.

Installation Procedure

WARNING: Refer to Brake Fluid Irritant Warning .

CAUTION: Refer to Brake Fluid Effects on Paint and Electrical Components Caution .

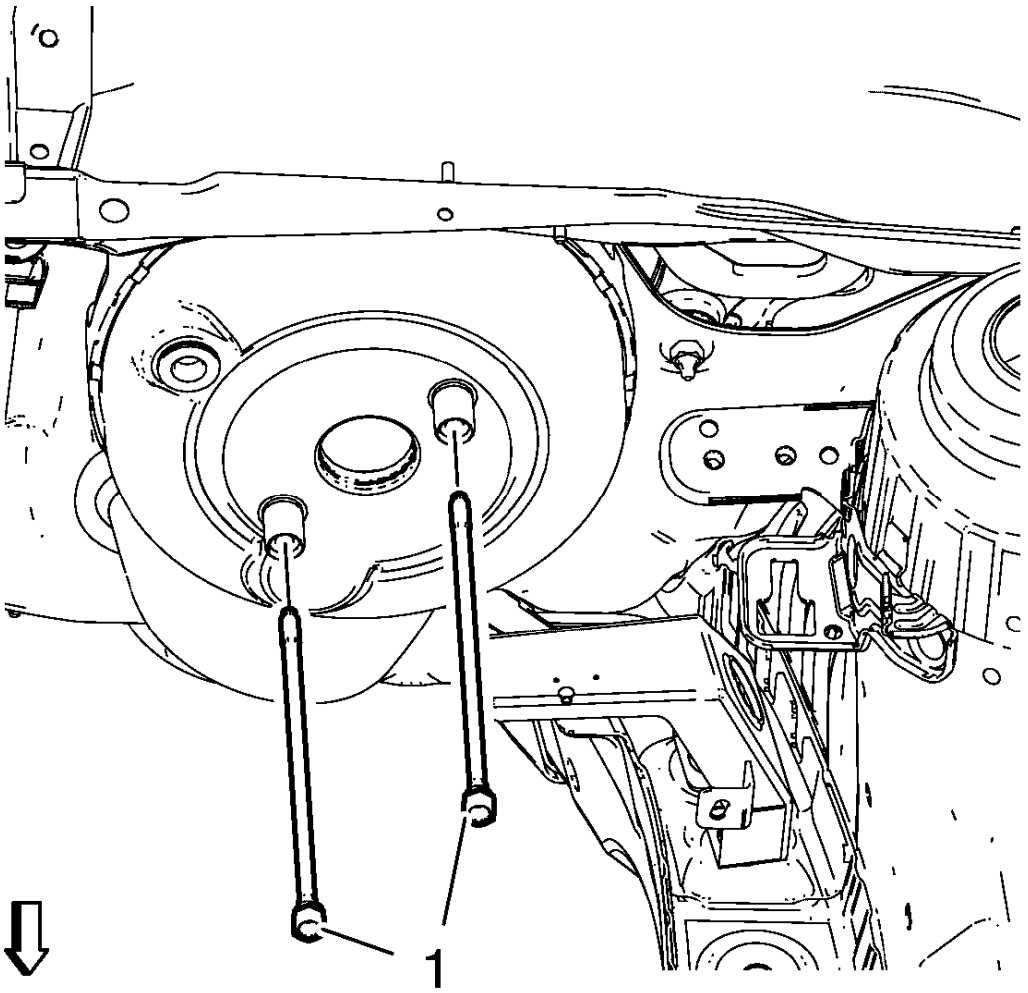

Fig. 72: Brake Booster Bolts
Courtesy of GENERAL MOTORS COMPANY

1. Install the booster to the vehicle.

CAUTION: Refer to Fastener Caution .

2. Install the brake booster bolts (1) and tighten to 19 N.m (15 lb ft).

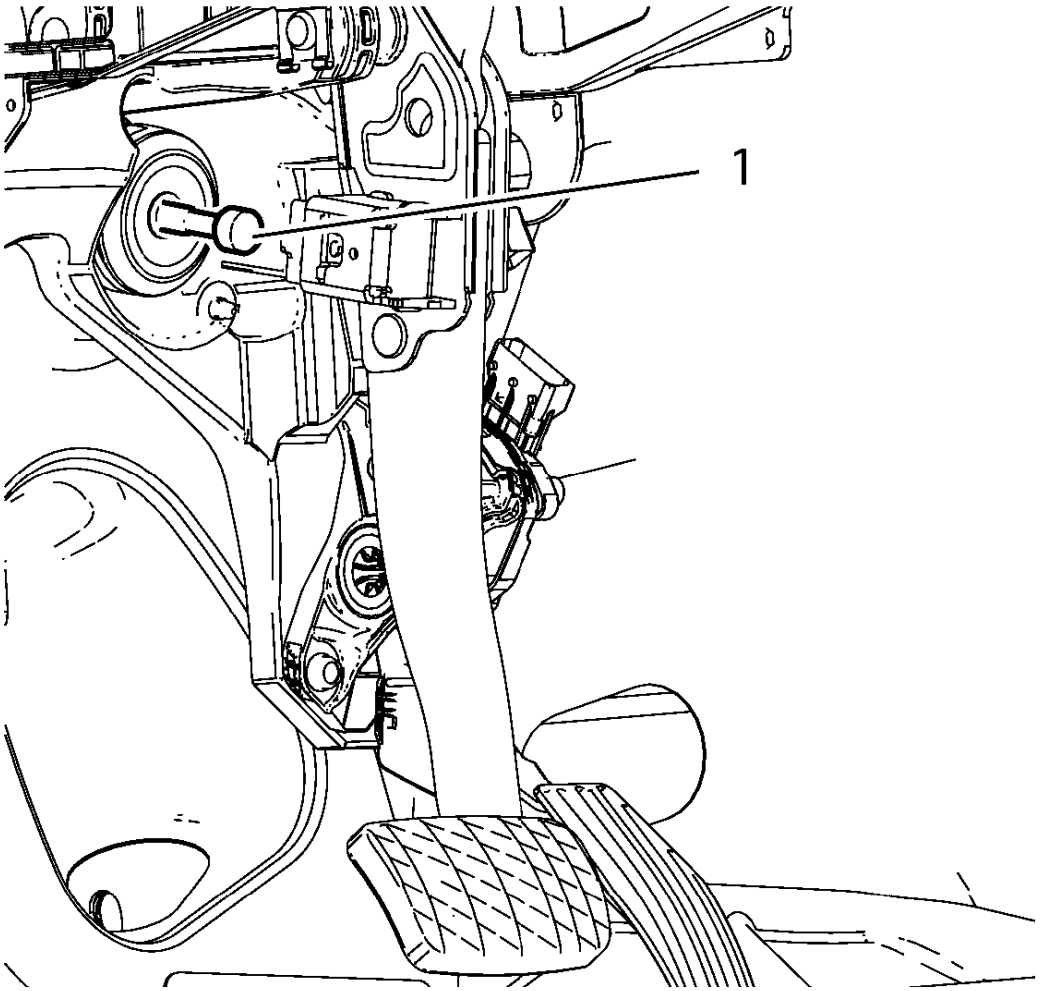

Fig. 73: Brake Pedal Pushrod
Courtesy of GENERAL MOTORS COMPANY

3. Connect the brake pedal pushrod (1) to the brake pedal.

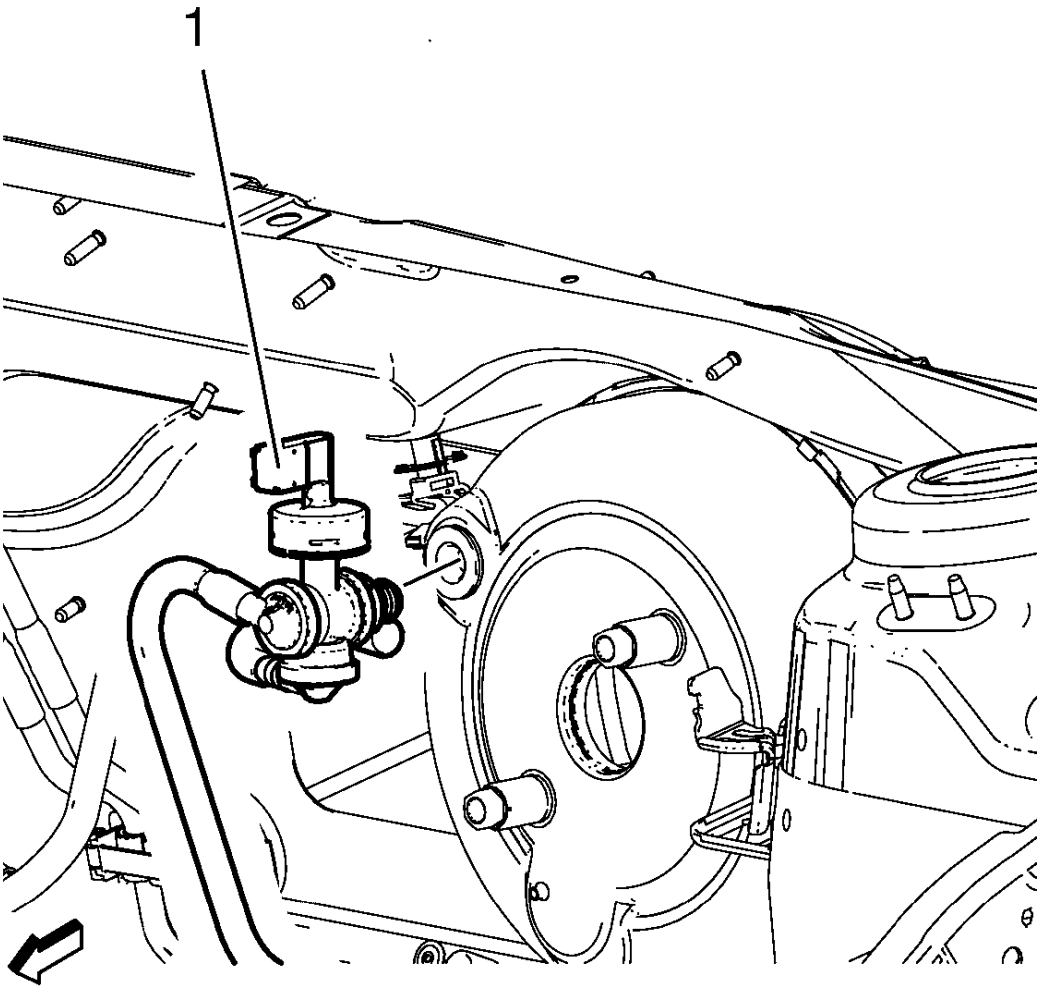

Fig. 74: Brake Booster Vacuum Pipe
Courtesy of GENERAL MOTORS COMPANY

4. Install the booster vacuum pipe (1) to the booster.
5. Install the master cylinder assembly to the booster. Refer to **Master Cylinder Replacement**.

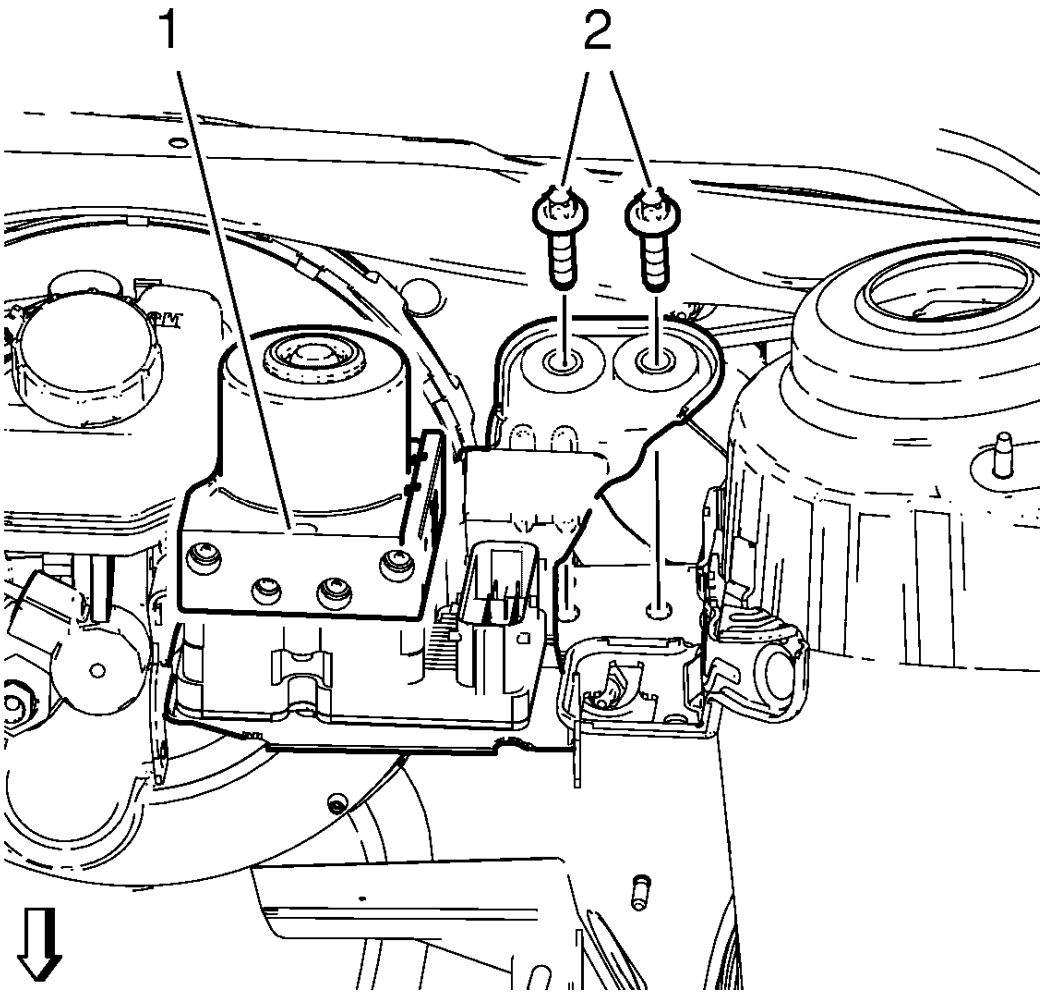

Fig. 75: BPMV and BPMV Bracket Bolts
Courtesy of GENERAL MOTORS COMPANY

6. Install the BPMV bracket assembly (1).
7. Install the BPMV bracket bolts (2) and tighten to 20 N.m (15 lb ft).

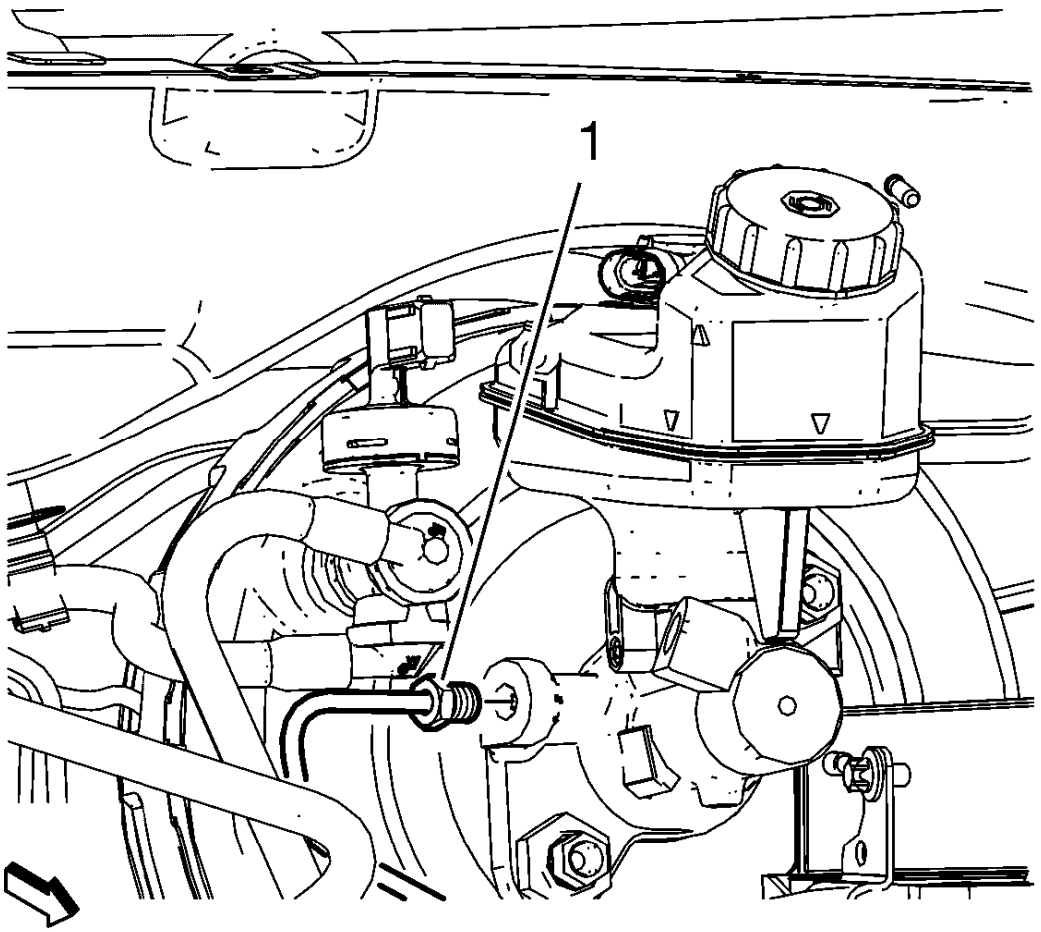

Fig. 76: Master Cylinder Primary Brake Pipe Fitting
Courtesy of GENERAL MOTORS COMPANY

8. Connect the master cylinder primary brake pipe fitting (1) and tighten to 18 N.m (14 lb ft).

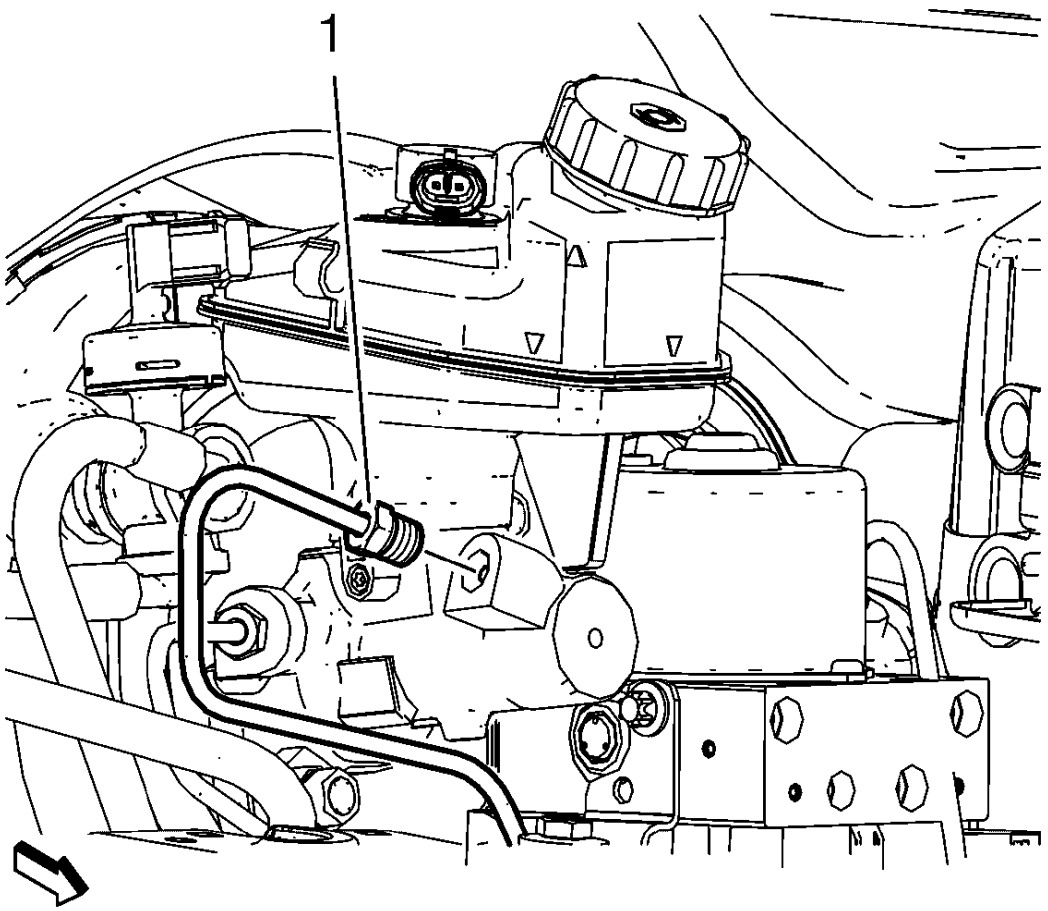

Fig. 77: Master Cylinder Secondary Brake Pipe Fitting
Courtesy of GENERAL MOTORS COMPANY

9. Connect the master cylinder primary brake pipe fitting (1) and tighten to 18 N.m (14 lb ft).

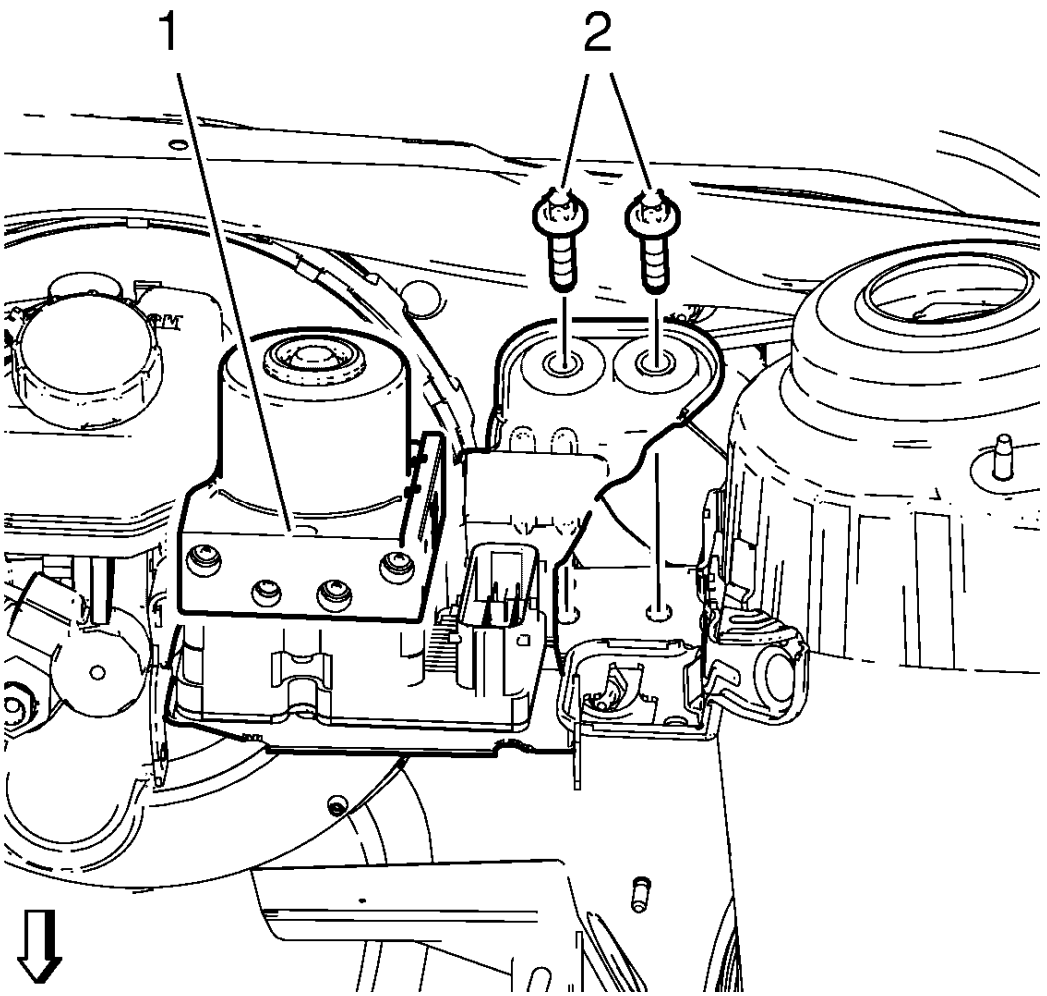

Fig. 78: BPMV and BPMV Bracket Bolts
Courtesy of GENERAL MOTORS COMPANY

NOTE: Cap the brake pipe fittings to prevent brake fluid loss and contamination.

10. Install the 6 brake pipes (1, 2) to the BPMV and tighten to 18 N.m (14 lb ft).
11. Connect the electrical connector with to the EBCM/EBTCM.

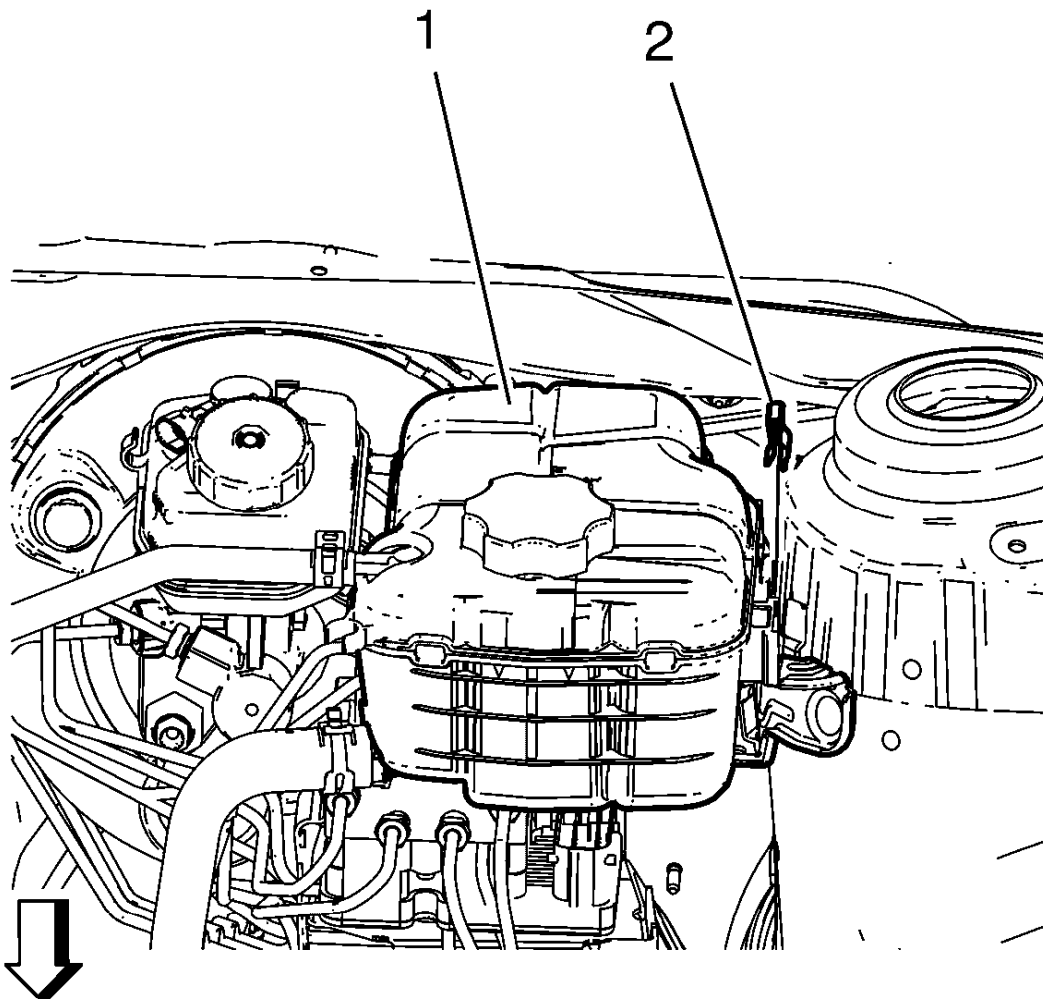

Fig. 79: View Of Radiator Surge Tank And Radiator Surge Tank Clip
Courtesy of GENERAL MOTORS COMPANY

12. Install the radiator surge tank (1).
13. Install the radiator surge tank clip (2).
14. Bleed the hydraulic brake system. Refer to **Hydraulic Brake System Bleeding (Manual Bleeding)**, **Hydraulic Brake System Bleeding (Pressure Bleeding)**.

POWER BRAKE BOOSTER PUMP REPLACEMENT

Removal Procedure

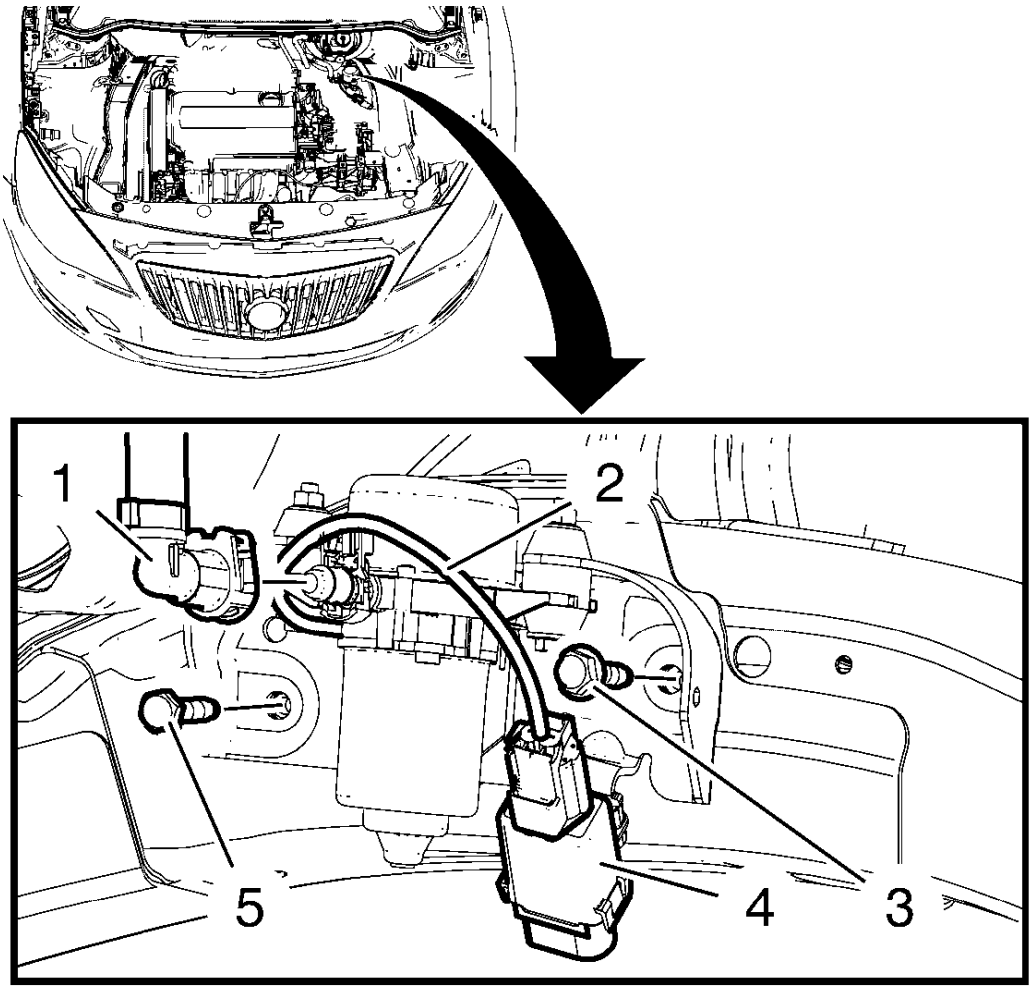

Fig. 80: Brake Booster Vacuum Pump
Courtesy of GENERAL MOTORS COMPANY

1. Disconnect electrical connector (4).
2. Disconnect the vacuum hose quick fitting (1) from power brake booster vacuum pump (2).
3. Remove the bolts (3, 5).
4. Remove the power brake booster vacuum pump (2) with bracket from the vehicle.

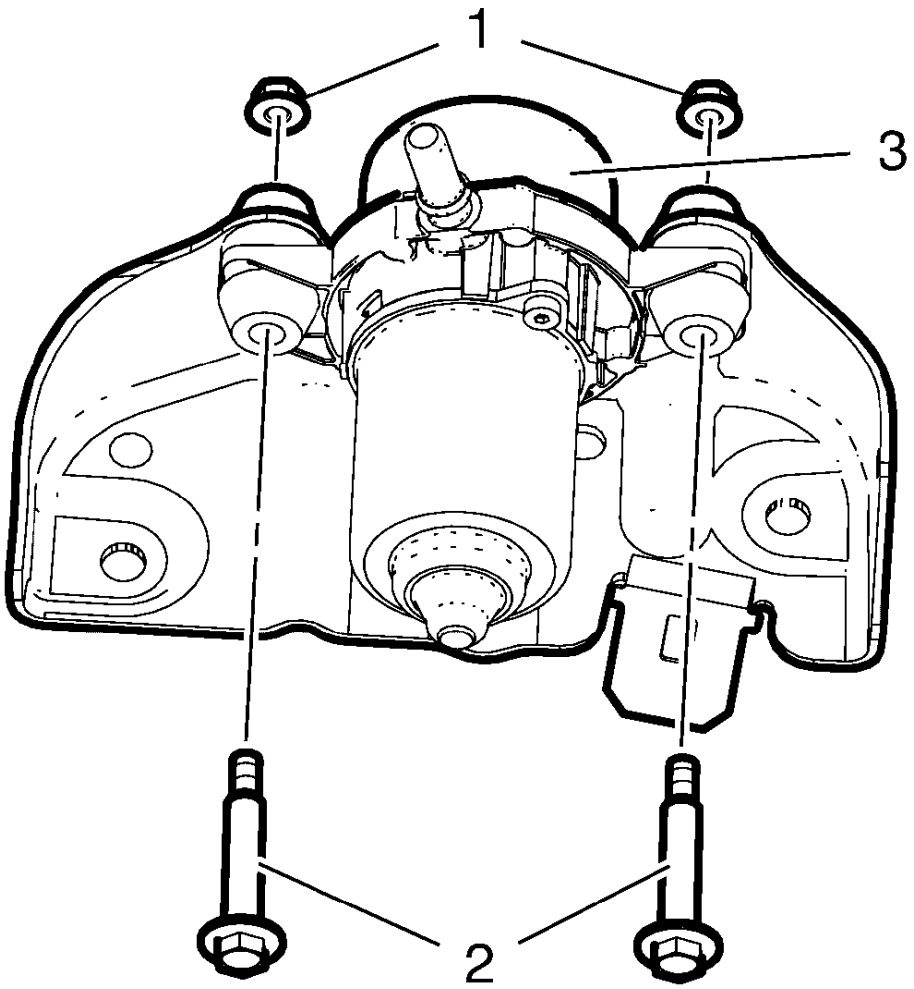

Fig. 81: Pump Screws And Nuts
Courtesy of GENERAL MOTORS COMPANY

5. Remove pump screws and nuts (1, 2) from the power brake booster pump (3).

Installation Procedure

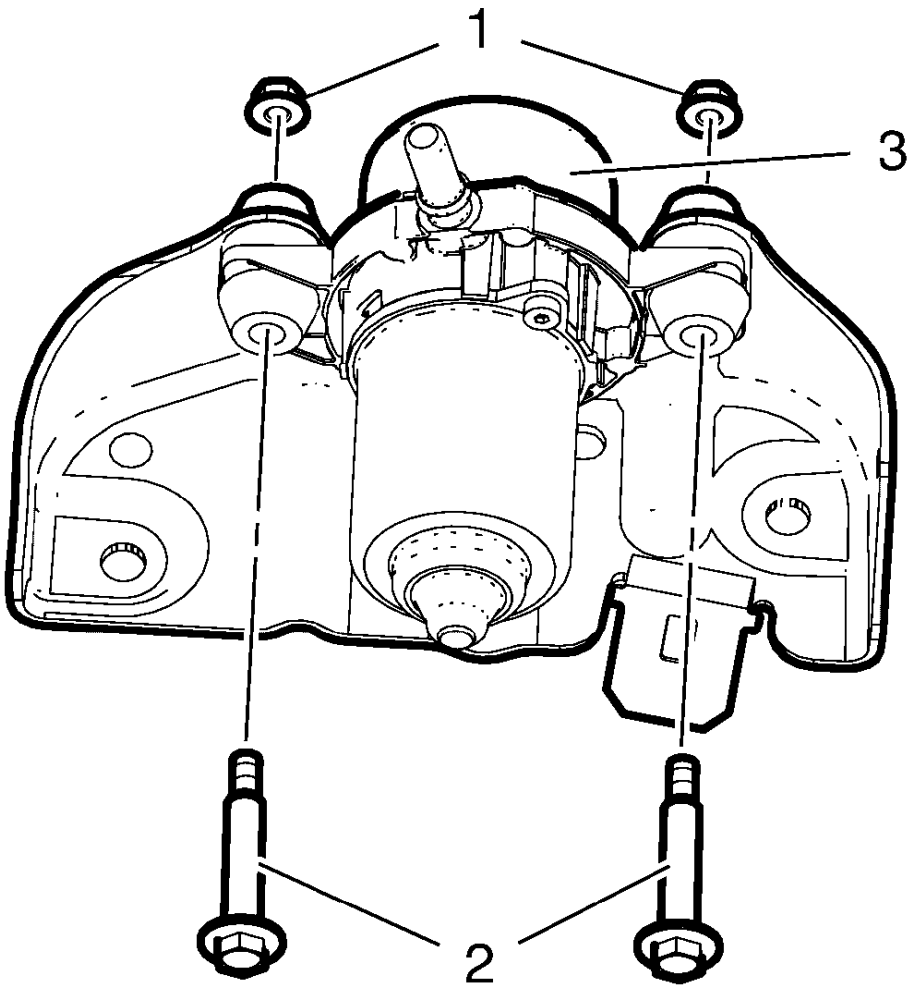

Fig. 82: Pump Screws And Nuts
Courtesy of GENERAL MOTORS COMPANY

CAUTION: Refer to Fastener Caution

1. Install the pump screws and nuts (1, 2) to the power brake booster pump (3) and tighten to 7.5 N.m (66 lb in).

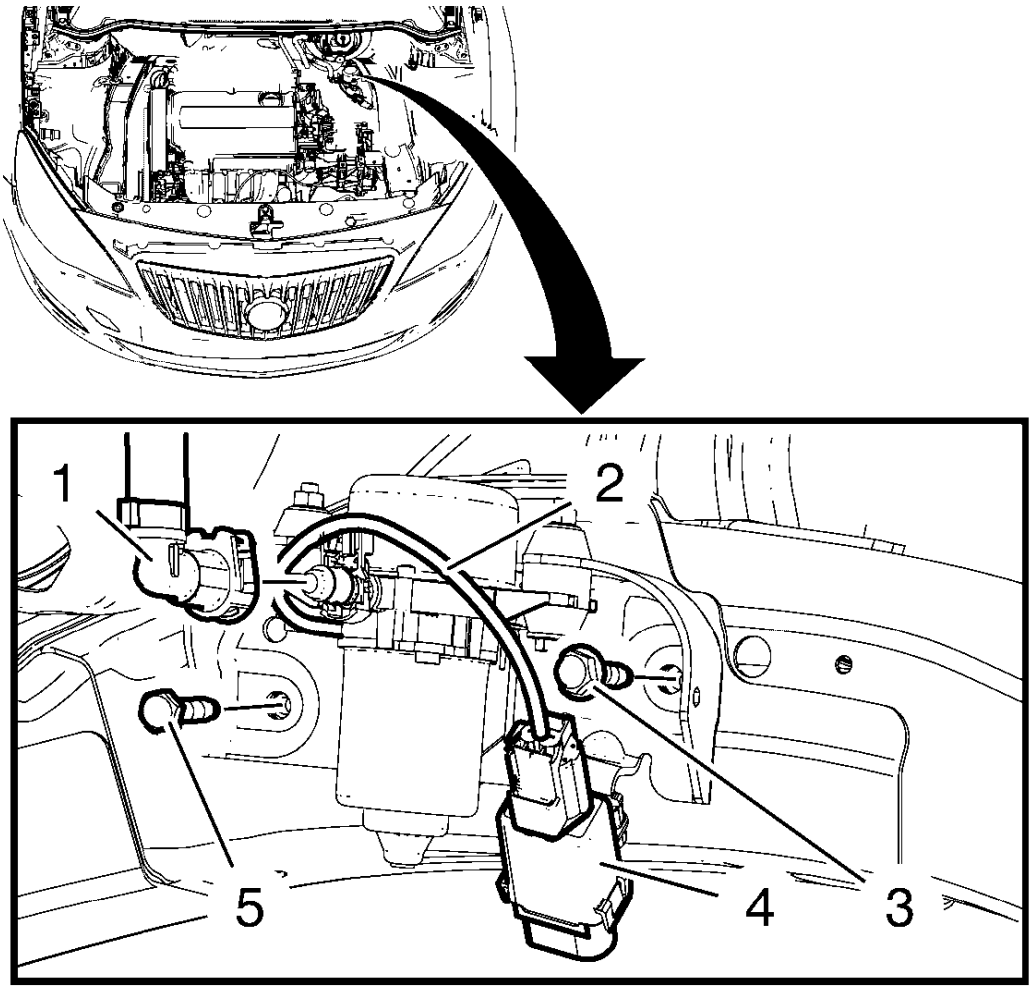

Fig. 83: Brake Booster Vacuum Pump
Courtesy of GENERAL MOTORS COMPANY

2. Disconnect electrical connector (4).
3. Remove the power brake booster vacuum pump (2) with bracket from the vehicle.
4. Install the bolts (3, 5) and tighten to 20 N.m (15 lb ft).
5. Connect the vacuum hose quick fitting (1) to the power brake booster vacuum pump (2).
6. Connect the electrical connector (4).

DESCRIPTION AND OPERATION

BRAKE ASSIST SYSTEM DESCRIPTION AND OPERATION

System Component Description

The brake assist system consists of the following:

Brake Pedal

Receives, multiplies and transfers brake system input force from driver.

Brake Pedal Pushrod

Transfers multiplied input force received from brake pedal to brake booster.

Vacuum Brake Booster

Uses source vacuum to decrease effort required by driver when applying brake system input force.
At rest, source vacuum is applied to both sides of the vacuum diaphragm for single boosters, or to both sides of each of the diaphragms for tandem boosters. Return springs maintain the booster in a rest position.
When brake system input force is applied, vacuum to the rear of the diaphragm(s) is cut off, and air at atmospheric pressure is admitted in its place. This provides a decrease in brake pedal effort required.
When input force is removed, vacuum again replaces atmospheric pressure within the booster.

Vacuum Source

Supplies force used by vacuum brake booster to decrease brake pedal effort.
The primary source for vacuum is typically the vehicle's internal combustion engine. Some vehicles may use a vacuum pump to ensure and adequate supply of vacuum under various operating conditions, such as during cold start-up, heavy throttle, and high altitude.

Vacuum Pump Relay

Vehicles equipped with a vacuum pump will typically be equipped with a relay used to provide voltage to the vacuum pump motor, when commanded by the powertrain controller.

Vacuum Monitoring System

Provides a feedback voltage signal relative to the amount of vacuum available for the vacuum power brake booster.
This typically consists of a vacuum sensor mounted either into the power vacuum brake booster, integrated with the vacuum check valve, or in-line within the vacuum hose. The sensor feedback is typically monitored by the powertrain control module(s).

Vacuum Source Control

If equipped with a system to monitor available levels of vacuum for the brake assist system, the powertrain control module(s) typically perform the primary monitoring function.
The powertrain controller will typically monitor the feedback signal of a vacuum sensor, as it relates to available vacuum at the vacuum power brake booster. The powertrain controller uses the information to make sure available vacuum remains above predetermined levels. If additional vacuum is required, the powertrain controller may reactivate engine cylinders, if equipped, or command a vacuum pump ON, if equipped, and/or may alter the operation of various other engine controls and devices, as necessary.

Vacuum Source Delivery System

Enables delivery and retention of source vacuum for vacuum brake booster.
This typically consists of a vacuum check valve and a vacuum hose or pipe. If a vacuum pump is used, additional check valves may be used.

System Operation

Brake system input force from the driver is multiplied by the brake pedal and transferred by the pedal pushrod to the hydraulic brake master cylinder. Effort required to apply the brake system is reduced by the operation of the vacuum brake booster.

When brake system force is applied, vacuum to the rear of the diaphragm(s) is cut off, and air at atmospheric pressure is admitted in its place. The vacuum acts to pull the diaphragm(s) forward, while the atmospheric pressure acts to push from behind. As a result, the amount of effort required by the driver is reduced. When input force is removed, vacuum again replaces atmospheric pressure within the vacuum power brake booster to help return the booster to rest. Return springs maintain the system in a rest position.

If the vehicle is equipped with a vacuum monitoring system, the powertrain control module(s) typically will alter powertrain functions and/or command the vacuum pump ON, if equipped, to provide for the vacuum needs of the brake assist system, as operating conditions warrant.

BRAKE BOOSTER VACUUM ASSIST DESCRIPTION AND OPERATION

In order to assure that vacuum is available to the vacuum brake booster, the car can contain a vacuum pump either in addition to the normal intake manifold vacuum source or as stand-alone. The pump provides negative pressure when the engine cannot properly accommodate the requirement, e.g. cold start, heavy throttle, high altitude and turbo pressure.

Mechanical

The mechanical vacuum pump is driven by a camshaft. The pump delivers maximum vacuum irrespective of engine RPM. This means that the pump, in certain situations, delivers more negative pressure than the system uses.

Electrical

A low vacuum switch controls the 12 V to the relay coil in the brake vacuum assist pump. When more vacuum is needed the vacuum switch closes. The relay coil closes the relay contact and connects the electric motor to ground. The electric motor is fed with 12 V. When sufficient vacuum is reached the switch opens and the pump stops.

A venturi is connected between the intake manifold and the vacuum brake booster, amplifying the vacuum. This reduces the on-time for the pump. To prevent air flowing in the wrong direction check valves are used.

BRAKE FLUID AND BRAKE FLUID HANDLING

WARNING: Brake fluid may irritate eyes and skin. In case of contact, take the

following actions:

- **Eye contact-rinse thoroughly with water.**
- **Skin contact-wash with soap and water.**
- **If ingested-consult a physician immediately.**

CAUTION: Only use products that comply with GM specifications and check manufacturer information respectively. We recommend the use of GM genuine products. Instructions must be followed at all times. The use of any type of fluid other than the recommended type of brake fluid, may cause contamination which could result in damage to the internal rubber seals and/or rubber linings of hydraulic brake system components.

CAUTION: Brake fluid will damage electrical connections and painted surfaces. Use shop cloths, suitable containers, and fender covers to prevent brake fluid from contacting these areas. Always re-seal and wipe off brake fluid containers to prevent spills.

CAUTION: Avoid spilling brake fluid on any of the vehicle's painted surfaces, wiring, cables or electrical connectors. Brake fluid will damage paint and electrical connections. If any fluid is spilled on the vehicle, immediately flush the area with water to minimize the potential for damage.

CAUTION: Power steering fluid, engine oil, brake fluid, or any mineral based fluids cannot be mixed. If brake seals contact power steering fluid or steering seals contact brake fluid, seal damage will result.

NOTE:

- **Do not reuse the brake fluid collected during the hydraulic brake system bleeding.**
- **Always store brake fluid in a closed container.**
- **Reseal brake fluid containers immediately after use.**
- **Do not use brake fluid left in an open container.**
- **Do not use brake fluid left in an improperly sealed container.**
- **Do not use the following fluids in the hydraulic brake system:**
  - **Power steering fluid**
  - **Automatic transmission fluid**
  - **DOT 5 silicone hydraulic brake fluid**

BRAKE WARNING SYSTEM DESCRIPTION AND OPERATION

Brake Warning Indicator

The instrument cluster turns the brake warning indicator ON when the following occurs:

- The instrument cluster performs the bulb check. The brake warning indicator illuminates for 5 s.
- When the Electronic Brake Control Module (EBCM) detects low brake fluid level it sets DTC C0267 and sends a serial data message to the instrument cluster, which will illuminate the red brake indicator.
- The Body Control Module (BCM) detects that the parking brake is engaged. The instrument cluster receives a serial data message from the BCM requesting illumination.

Driver Information Center Messages

When the Electronic Brake Control Module (EBCM) detects low brake fluid level it sets DTC C0267 and sends a serial data message to the Driver Information Center, which will display Brake Fluid Low message.

HYDRAULIC BRAKE SYSTEM DESCRIPTION AND OPERATION

System Component Description

The hydraulic brake system consists of the following:

Hydraulic Brake Master Cylinder Fluid Reservoir

Contains supply of brake fluid for the hydraulic brake system.

Hydraulic Brake Master Cylinder

Converts mechanical input force into hydraulic output pressure.
Hydraulic output pressure is distributed from the master cylinder through two hydraulic circuits, supplying diagonally-opposed wheel apply circuits.

Hydraulic Brake Pressure Balance Control System

Regulates brake fluid pressure delivered to hydraulic brake wheel circuits, in order to control the distribution of braking force.
Pressure balance control is achieved through dynamic rear proportioning (DRP), which is a function of the ABS modulator. Refer to **ABS Description and Operation** for specific information on the operation of DRP.

Hydraulic Brake Pipes and Flexible Brake Hoses

Carries brake fluid to and from hydraulic brake system components.

Hydraulic Brake Wheel Apply Components

Converts hydraulic input pressure into mechanical output force.

System Operation

Mechanical force is converted into hydraulic pressure by the master cylinder, regulated to meet braking system demands by the pressure balance control system, and delivered to the hydraulic brake wheel circuits by the

pipes and flexible hoses. The wheel apply components then convert the hydraulic pressure back into mechanical force which presses linings against rotating brake system components.

SPECIAL TOOLS AND EQUIPMENT

SPECIAL TOOLS

Illustration	Tool Number/ Description
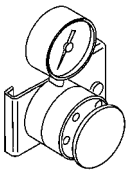	CH-28662 J-28662 Brake Pedal Effort Gauge
	CH-29532-A J-29532-A Brake Pressure Bleeder
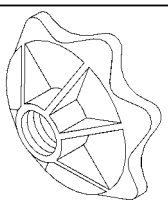	CH-35798 J-35798 Brake Bleeder Adapter
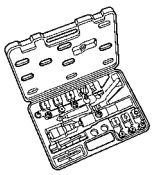	CH-45405 J-45405 Pipe Flaring Tool Kit
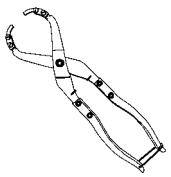	DT-6202-A Pliers
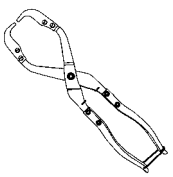	DT-6202-B Pliers
	DT-6202-20 Adapter to DT-6202-A

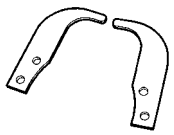	
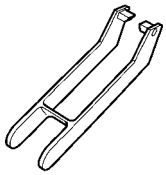	DT-50894 Remover

2013 BRAKES

Park Brake - Cruze

SPECIFICATIONS

FASTENER TIGHTENING SPECIFICATIONS

Fastener Tightening Specifications

Application	Specification	
	Metric	English
Park Brake Cable Guide Bolt	22 N.m	16 lb ft
Parking Brake Cable Casing Retainer Bolt	22 N.m	16 lb ft
Parking Brake Indicator Switch Bolt	2.5 Y	23 lb in
Parking Brake Lever Nut	9 N.m	80 lb in

DIAGNOSTIC INFORMATION AND PROCEDURES

SYMPTOMS - PARK BRAKE

NOTE: Review the system operation in order to familiarize yourself with the system functions.

Refer to **Park Brake System Diagnosis (Drum Brakes)**, **Park Brake System Diagnosis (Disc Brakes)**.

Visual/Physical Inspection

1. Inspect for aftermarket devices which could affect the operation of the park brake system.
2. Inspect the easily accessible or visible system components for obvious damage or conditions which could cause the symptom.

PARK BRAKE WILL NOT HOLD OR RELEASE (DISC BRAKE)

Park Brake Will Not Hold or Release (Disc Brake)

Step	Action	Yes	No
1	Were you sent here from the Park Brake Symptom table?	Go to **Step 2**	Go to **Symptoms - Park Brake**
2	Inspect the disc brake system for proper operation. Refer to **Disc Brake System Diagnosis** . Did you find and correct a condition?	Go to **Step 5**	Go to **Step 3**
3	Inspect the park brake system for proper operation. Refer to **Park Brake System Diagnosis (Drum Brakes)**, **Park Brake System Diagnosis (Disc Brakes)**.		

	Did you find and correct a condition?	Go to **Step 5**	Go to **Step 4**
4	Inspect the hydraulic brake system for proper operation. Refer to **Hydraulic Brake System Diagnosis** . Did you find and correct a condition?	Go to **Step 5**	Go to **Symptoms - Park Brake**
5	Road test the vehicle in order to confirm proper operation. Refer to **Brake System Vehicle Road Test** . Is the condition still present?	Go to **Step 2**	System OK

PARK BRAKE WILL NOT HOLD OR RELEASE (DRUM BRAKE)

Park Brake Will Not Hold or Release (Drum Brake)

Step	Action	Yes	No
1	Were you sent here from the Park Brake Symptom Table?	Go to **Step 2**	Go to **Symptoms - Park Brake**
2	Inspect the park brake system for proper operation. Refer to **Park Brake System Diagnosis (Drum Brakes)**, **Park Brake System Diagnosis (Disc Brakes)**. Did you find and correct a condition?	Go to **Step 6**	Go to **Step 3**
3	Inspect the drum brake system for proper operation. Refer to **Drum Brake System Diagnosis** . Did you find and correct a condition?	Go to **Step 6**	Go to **Step 4**
4	Inspect the disc brake system for proper operation. Refer to **Disc Brake System Diagnosis** . Did you find and correct a condition?	Go to **Step 6**	Go to **Step 5**
5	Inspect the hydraulic brake system for proper operation. Refer to **Hydraulic Brake System Diagnosis** . Did you find and correct a condition?	Go to **Step 6**	Go to **Symptoms - Park Brake**
6	Road test the vehicle in order to confirm proper operation. Refer to **Brake System Vehicle Road Test** . Is the condition still present?	Go to **Step 2**	System OK

PARK BRAKE SYSTEM DIAGNOSIS (DISC BRAKES)

Park Brake System Diagnosis (Disc Brakes)

Step	Action	Yes	No
DEFINITION: This diagnostic table is designed to diagnose ONLY the mechanical components of the PARK brake system in order to determine if the PARK brake system is operating properly. You will be directed by the appropriate Symptom table to go to other brake system diagnostic tables as appropriate.			

1	Were you sent here from a Hydraulic Brake Symptom table?	Go to **Step 4**	Go to **Step 2**
2	Were you sent here from a Park Brake Symptom table?	Go to **Step 4**	Go to **Step 3**
3	Is the symptom related to the ability of the park brake system to hold and/or release?	Go to **Symptoms - Park Brake**	Go to **Symptoms - Hydraulic Brakes**
4	1. Raise and support the vehicle with the rear axle supported by jack stands. Refer to **Lifting and Jacking the Vehicle** . 2. With the park brake RELEASED, attempt to rotate the rear wheels to check the rear brakes for a significant amount of drag. Do the rear brakes have a significant amount of drag?	Go to **Step 8**	Go to **Step 5**
5	1. Apply the park brake. 2. Attempt to rotate the rear wheels to check the rear brakes for a significant amount of drag. Do the rear brakes have a significant amount of drag?	Go to **Step 13**	Go to **Step 6**
6	Visually inspect the park brake cable connections and the cables that are accessible on the UNDERSIDE of the vehicle for disconnections and/or damage. Were any of the park brake cables disconnected and/or damaged?	Go to **Step 7**	Go to **Step 8**
7	Reconnect or replace the park brake cables as necessary. Refer to **Parking Brake Cable Replacement (Mechanical Parking Brake)**. Did you complete the repair and/or replacement?	Go to **Step 13**	-
	1. Disconnect the rear park brake cables from the equalizer and from the brake caliper piston apply levers. Refer to **Parking Brake Cable Replacement (Mechanical Parking Brake)**. 2. Have an assistant apply and maintain the caliper piston apply lever to apply the caliper piston.		

8	3. Attempt to rotate the rear wheels to check the rear brakes for a significant amount of drag. 4. Release the caliper piston apply lever. 5. Repeat steps 2, 3, and 4 for the other side of the vehicle. 6. Rotate the rear wheels to check the brake for a significant reduction of drag. Did the brake calipers apply and release properly?	Go to **Step 10**	Go to **Step 9**
9	Replace the appropriate rear brake caliper. Refer to **Rear Brake Caliper Replacement** . Did you complete the replacement?	Go to **Step 13**	-
10	With the aid of an assistant, apply and release the parking brake while observing the cables for free movement. Did the park brake cables move freely?	Go to **Step 12**	Go to **Step 11**
11	Replace any of the park brake cables inspected that do not have free movement. Refer to **Parking Brake Cable Replacement (Mechanical Parking Brake)**. Did you complete the replacement?	Go to **Step 13**	-
12	Inspect the park brake pedal assembly for proper operation and replace if necessary. Refer to **Parking Brake Lever Replacement**. Did you complete the replacement?	Go to **Step 13**	-
13	Install or connect any components that were removed or disconnected during diagnosis. Did you complete the operation?	Park Brake System OK Go to **Symptoms - Park Brake**	-

PARK BRAKE SYSTEM DIAGNOSIS (DRUM BRAKES)

Park Brake System Diagnosis (Drum Brakes)

Step	Action	Yes	No
DEFINITION: This diagnostic table is designed to diagnose ONLY the components of the PARK brake system in order to determine if the PARK brake system is operating properly. You will be directed by the appropriate Symptom table to go to other brake system diagnostic tables as appropriate.			
1	Were you sent here from a Hydraulic Brake		

	Symptom table?	Go to **Step 4**	Go to **Step 2**
2	Were you sent here from a Park Brake Symptom table?	Go to **Step 4**	Go to **Step 3**
3	Is the symptom related to the ability of the park brake system to hold and/or release?	Go to **Symptoms - Park Brake**	Go to **Symptoms - Hydraulic Brakes**
4	1. Raise and support the vehicle with the rear axle supported by jack stands. Refer to **Lifting and Jacking the Vehicle** . 2. With the park brake RELEASED, attempt to rotate the rear wheels to check the rear brakes for a significant amount of drag. Do the rear brakes have a significant amount of drag?	Go to **Step 9**	Go to **Step 5**
5	1. Apply the park brake. 2. Attempt to rotate the rear wheels to check the rear brakes for a significant amount of drag. Did the rear brakes exhibit a significant reduction in the amount of drag?	Go to **Step 6**	Go to **Step 7**
6	1. Release the park brake. 2. Rotate the rear wheels to check the rear brakes for a significant reduction in the amount of drag. Did the rear brakes exhibit a significant reduction in the amount of drag?	Go to **Step 16**	Go to **Step 9**
7	1. Remove the brake drums. Refer to **Brake Drum Replacement** . 2. Visually check the park brake cable connections and the cables that are accessible on the UNDERSIDE of the vehicle for disconnections and/or damage. Were any or the park brake cables disconnected and/or damaged?	Go to **Step 8**	-
8	Reconnect or replace the park brake cables as necessary. Refer to **Parking Brake Cable Replacement (Mechanical Parking Brake)**. Did you complete the repair?	Go to **Step 11**	-

9	**CAUTION:** **Do not depress the brake pedal with the brake rotors and/or the brake drums removed, or with the brake calipers repositioned away from the brake rotors, or damage to the brake system may result.** 1. Remove the brake drums. Refer to **Brake Drum Replacement** . 2. Inspect the park brake hardware for loose, damaged, broken or missing components. 3. Check the drum brake adjusters for a condition. Does the park brake hardware and/or the park brake adjusters require replacement?	Go to **Step 10**	Go to **Step 11**
10	1. Replace park brake hardware components as necessary. Refer to **Brake Shoe Replacement** . 2. Replace the drum brake adjusting hardware as necessary. Refer to **Drum Brake Adjusting Hardware Replacement** . Did you complete the replacement?	Go to **Step 11**	-
11	Have an assistant apply and release the park brake, while you observe the park brake cables for free movement. Did the park brake cables move freely?	Go to **Step 12**	Go to **Step 13**
12	1. Apply the park brake. 2. Attempt to rotate the rear wheels to check the rear brakes for a significant amount of drag. 3. Release the park brake. 4. Rotate the rear wheels to check the rear brakes for a significant reduction of drag. Did the park brake apply and release properly?	Go to **Step 18**	Return to Symptom Table
	1. Remove the brake drums. Refer to **Brake Drum Replacement** . 2. Disconnect the park brake cable		

13	connections that are accessible on the UNDERSIDE of the vehicle one at a time and check each cable for free movement. Do any of the park brake cables accessible on the underside of the vehicle require replacement?	Go to **Step 14**	Go to **Step 15**
14	Replace any of the park brake cables that do not have free movement - not releasing properly. Refer to **Parking Brake Cable Replacement (Mechanical Parking Brake)**. Did you complete the replacement?	Go to **Step 17**	Return to Symptom Table
15	Replace the park brake lever assembly - not releasing properly. Refer to **Parking Brake Lever Replacement**. Did you complete the replacement?	Go to **Step 17**	-
16	1. Remove the brake drums. Refer to **Brake Drum Replacement** . 2. Check the drum brake adjusters for a seized condition. 3. Replace the drum brake adjusting hardware as necessary. Refer to **Drum Brake Adjusting Hardware Replacement** . Did you find and correct a condition?	Go to **Step 17**	-
17	1. Apply the park brake. 2. Attempt to rotate the rear wheels to check the rear brakes for a significant amount of drag. 3. Release the park brake. 4. Rotate the rear wheels to check the rear brakes for a significant reduction of drag. Did the park brake apply and release properly?	Go to **Step 18**	Return to Symptom Table
18	Install or connect any components that were removed or disconnected during diagnosis. Did you complete the operation?	Park Brake System OK Return to Symptom Table	Return to Symptom Table

REPAIR INSTRUCTIONS

PARKING BRAKE LEVER REPLACEMENT

Removal Procedure

1. Remove the front floor console. Refer to **Front Floor Console Replacement** .

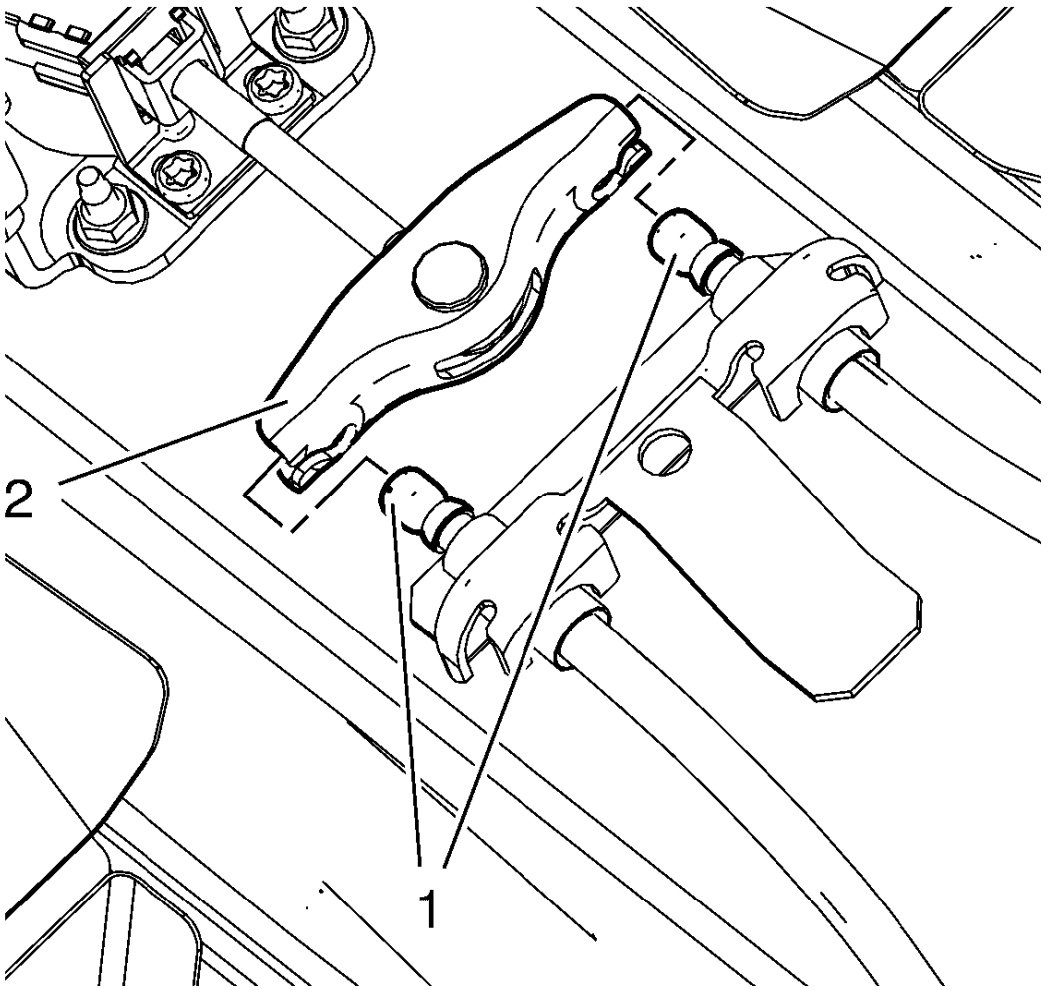

Fig. 1: Parking Brake Cable And Parking Brake Lever
Courtesy of GENERAL MOTORS COMPANY

2. Unhook the parking brake cable (1) from the parking brake lever (2).
3. Remove the parking brake indicator switch. Refer to **Parking Brake Indicator Switch Replacement**.

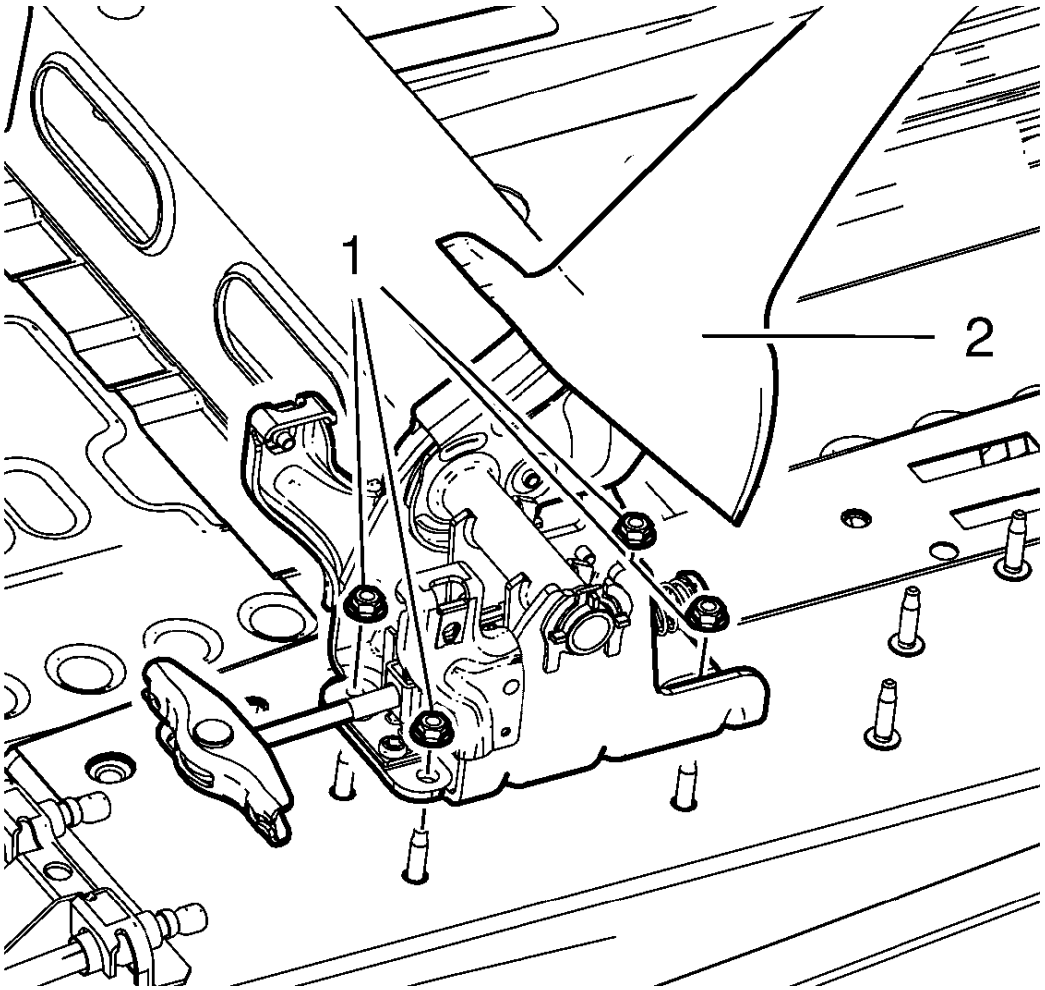

Fig. 2: Parking Brake Lever Nuts
Courtesy of GENERAL MOTORS COMPANY

4. Remove the parking brake lever nut (1).
5. Remove the parking brake lever (2).

Installation Procedure

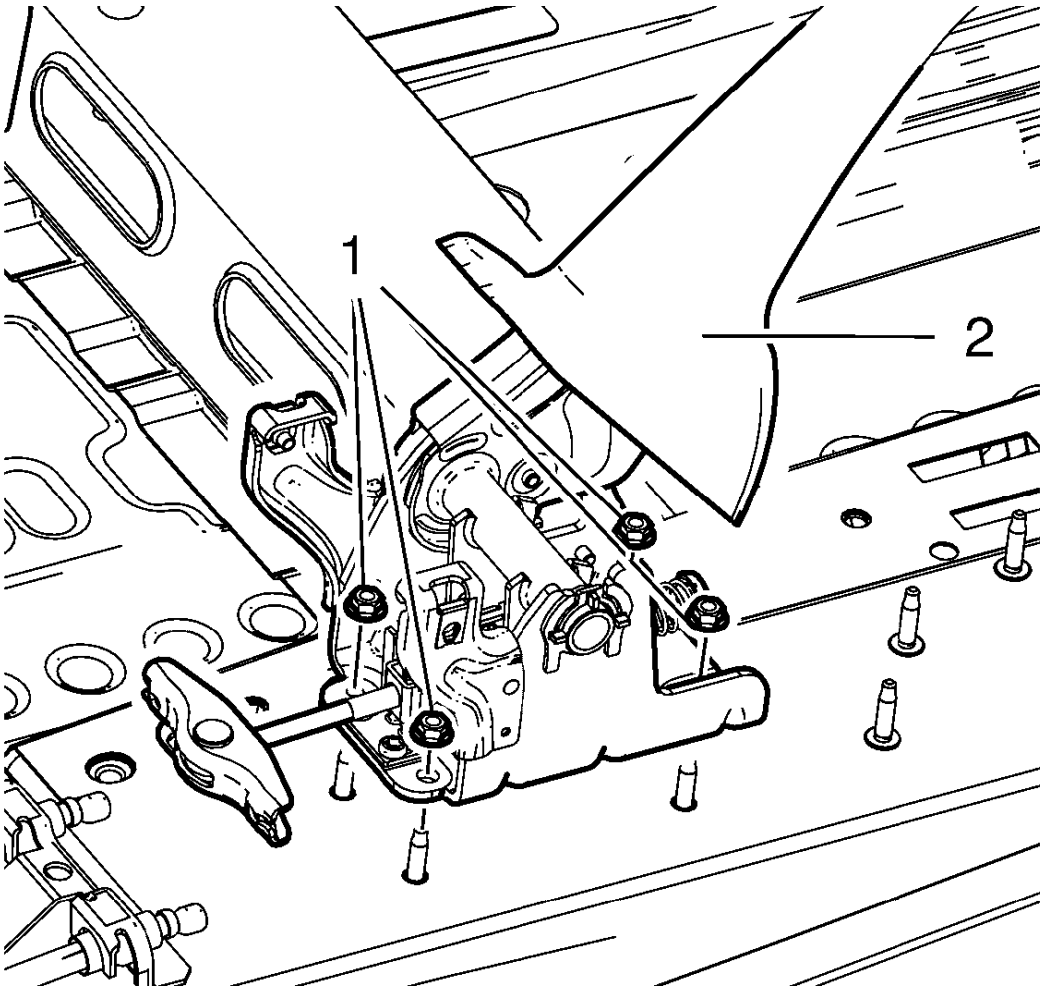

Fig. 3: Parking Brake Lever Nuts
Courtesy of GENERAL MOTORS COMPANY

1. Install the parking brake lever (2).

CAUTION: Refer to Fastener Caution .

2. Install the parking brake lever nut (1) and tighten to 9 N.m (80 lb in).
3. Install the parking brake indicator switch. Refer to **Parking Brake Indicator Switch Replacement**.

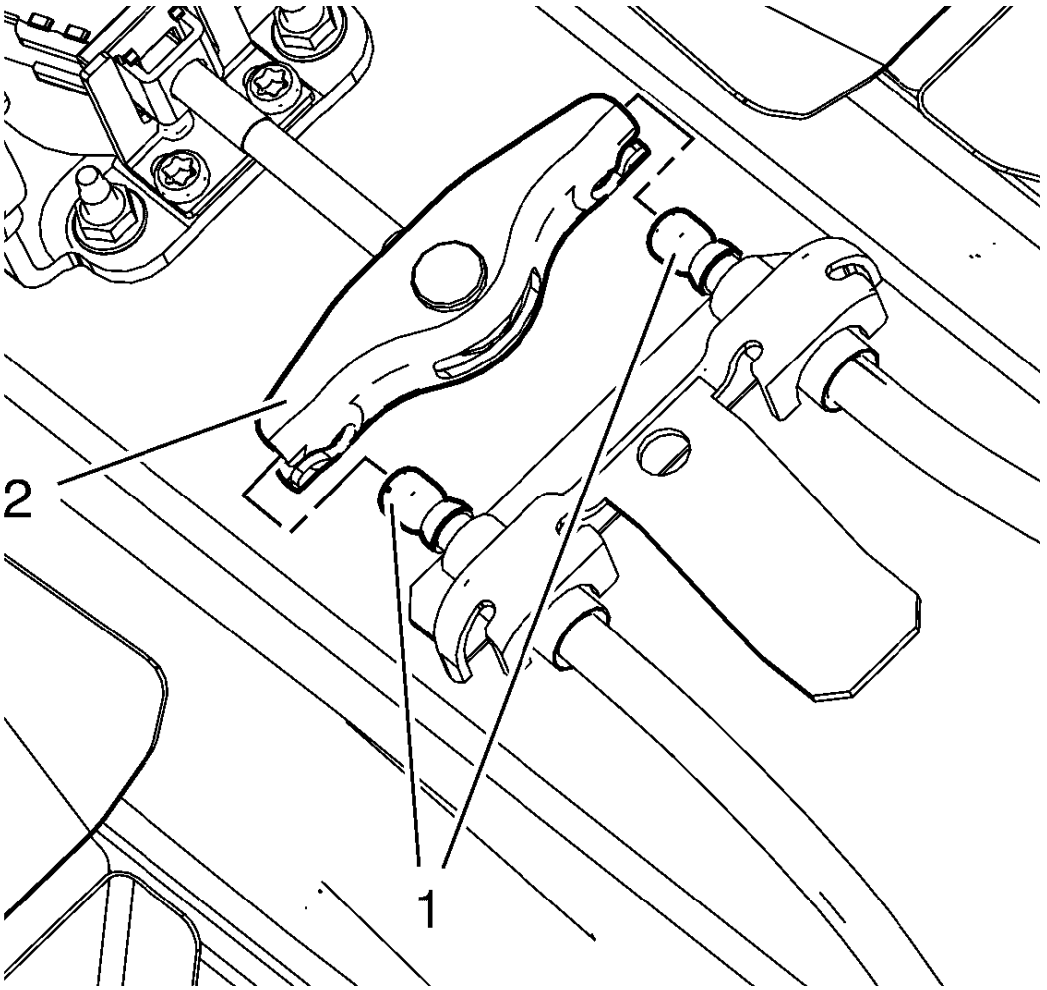

Fig. 4: Parking Brake Cable And Parking Brake Lever
Courtesy of GENERAL MOTORS COMPANY

4. Hook in the parking brake cable (1) to the parking brake lever (2).
5. Remove the transit support (1).
6. Install the front floor console. Refer to **Front Floor Console Replacement** .

PARKING BRAKE LEVER BOOT REPLACEMENT

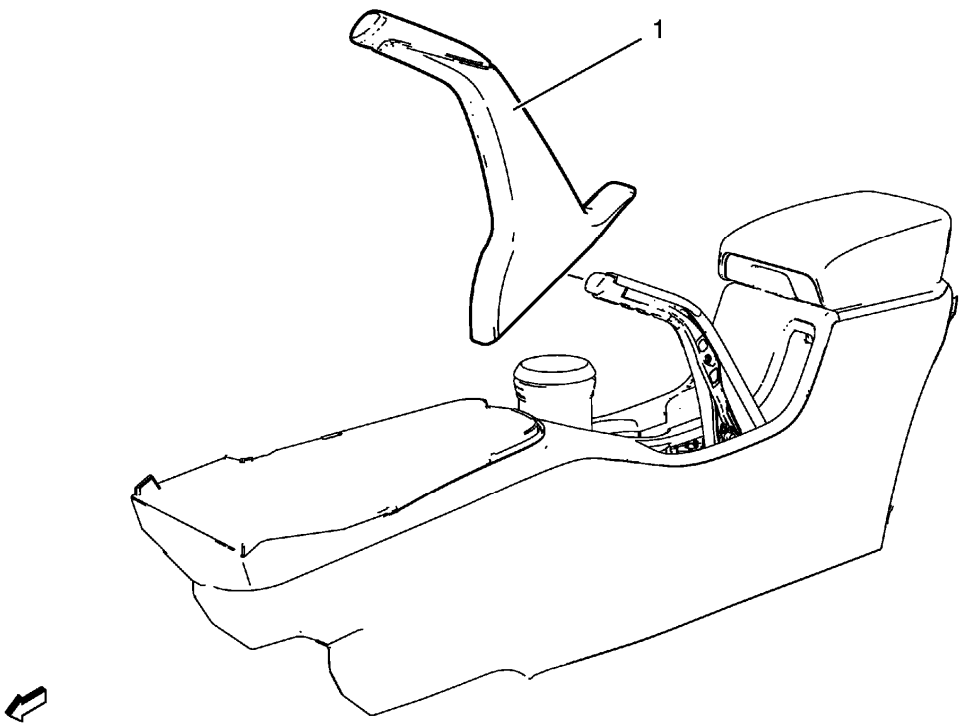

Fig. 5: Parking Brake Lever Boot
Courtesy of GENERAL MOTORS COMPANY

Parking Brake Lever Boot Replacement

Callout	Component Name
1	Parking Brake Lever Boot **Procedure** 1. Pull down boot. 2. Apply bead of adhesive to upper surface of parking brake lever (arrow). 3. Install parking brake lever boot carefully.

PARKING BRAKE INDICATOR SWITCH REPLACEMENT

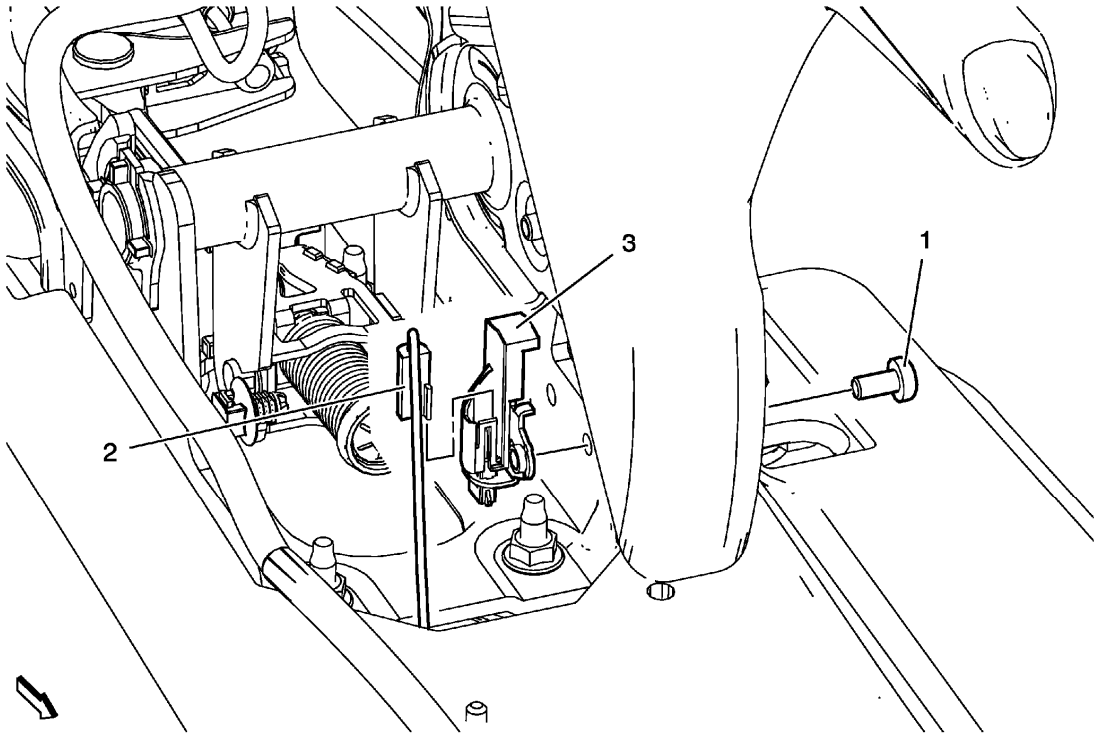

Fig. 6: Parking Brake Indicator Switch
Courtesy of GENERAL MOTORS COMPANY

Parking Brake Indicator Switch Replacement

Callout	Component Name
Preliminary Procedure Remove the front floor console. Refer to **Front Floor Console Replacement** .	
1	Parking Brake Indicator Switch Bolt **CAUTION:** **Refer to Fastener Caution .** **Tighten** 2.5 N.m (22 lb in)
2	Wiring Harness Connector Parking Brake Indicator Switch
3	Parking Brake Indicator Switch

PARKING BRAKE CABLE REPLACEMENT (MECHANICAL PARKING BRAKE)

WARNING: Refer to Brake Dust Warning .

Removal Procedure

1. Remove the front floor console. Refer to **Front Floor Console Replacement** .
2. Remove the rear seat cushion. Refer to **Rear Seat Cushion Removal and Installation** .
3. Remove the center pillar lower garnish molding. Refer to **Center Pillar Lower Garnish Molding Replacement** .

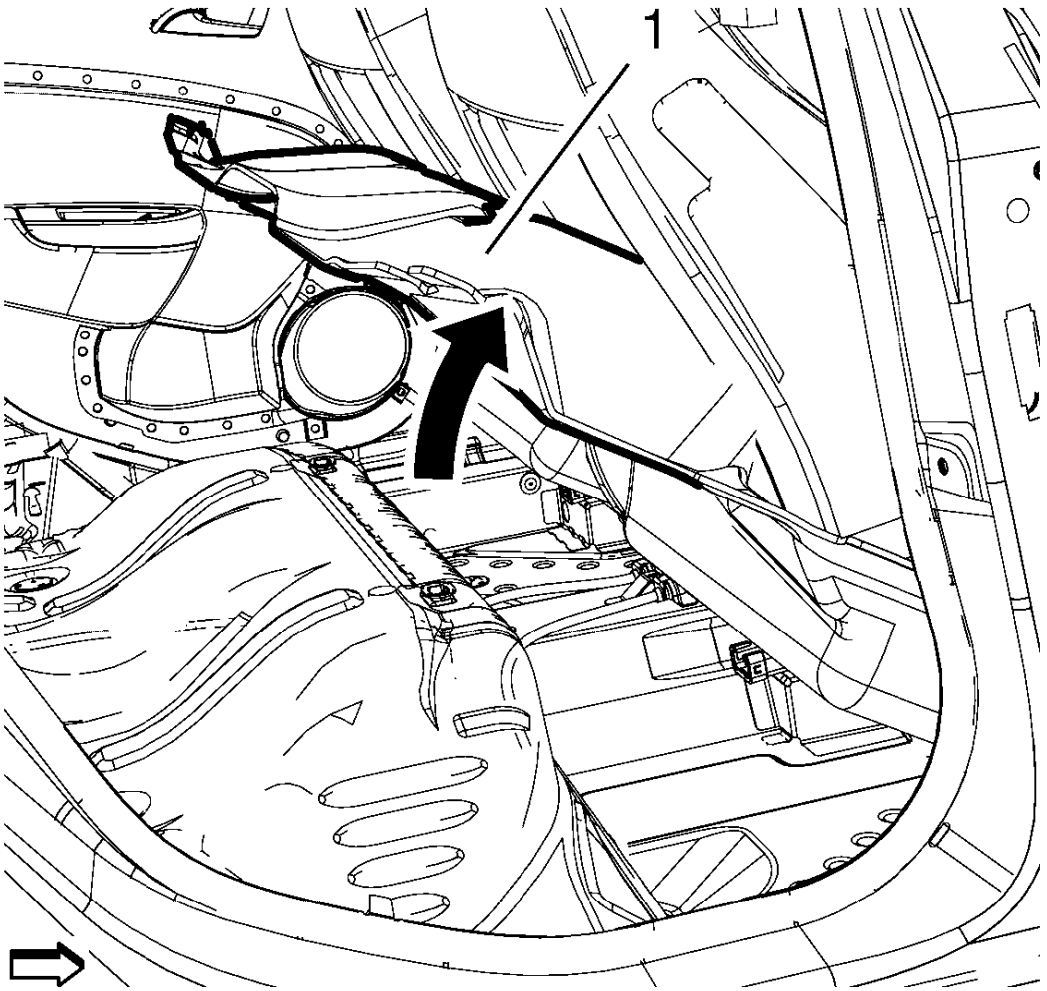

Fig. 7: Rear Floor Carpet
Courtesy of GENERAL MOTORS COMPANY

4. Partially remove the rear floor carpet (1).

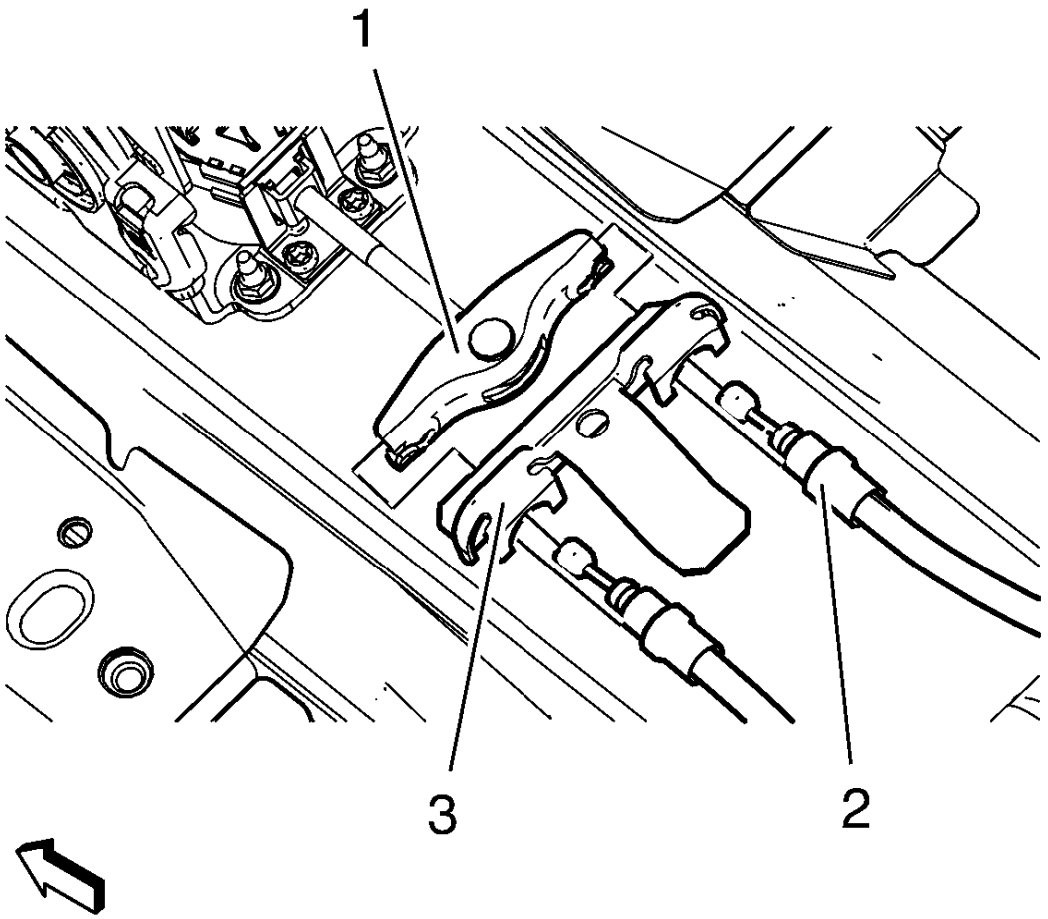

Fig. 8: Parking Brake Cable And Parking Brake Cable Bracket
Courtesy of GENERAL MOTORS COMPANY

5. Remove the parking brake cable (2) from the parking brake lever (1).
6. Remove the parking brake cable (2) from the parking brake cable bracket (3).

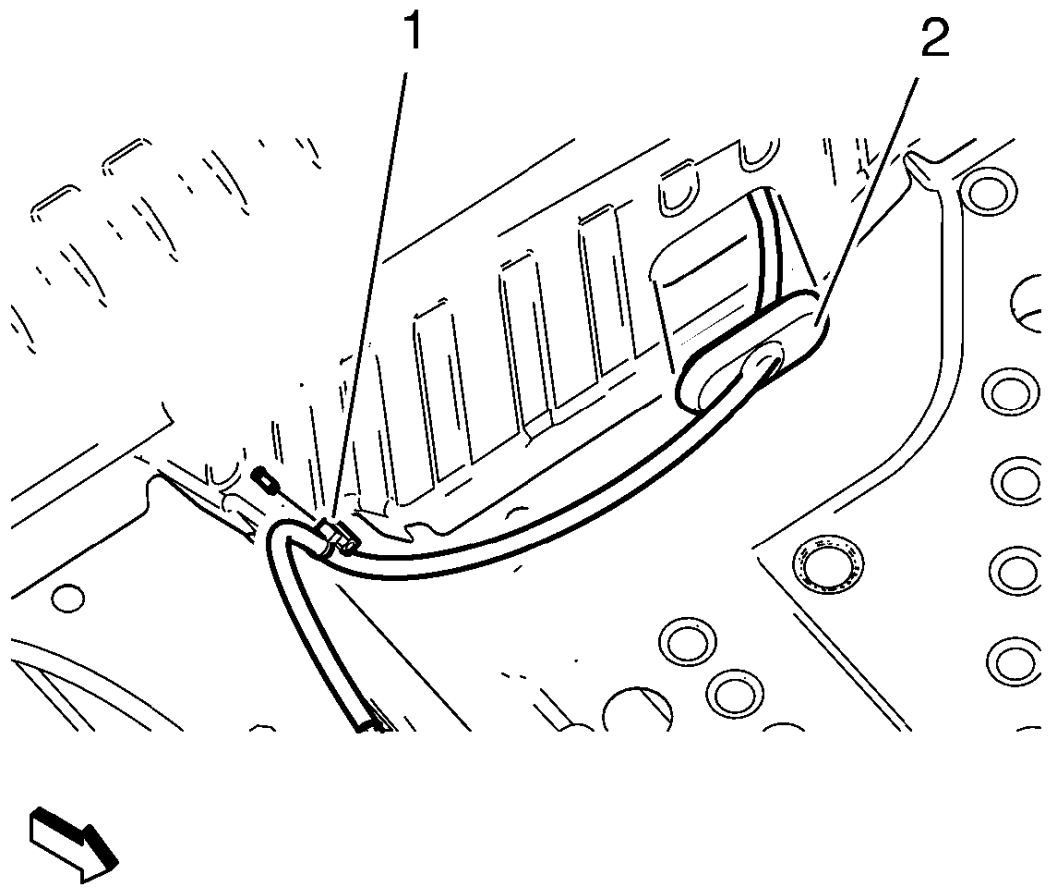

Fig. 9: Parking Brake Cable Clip
Courtesy of GENERAL MOTORS COMPANY

7. Remove the parking brake cable clip (1).
8. Remove the parking brake cable grommet (2).

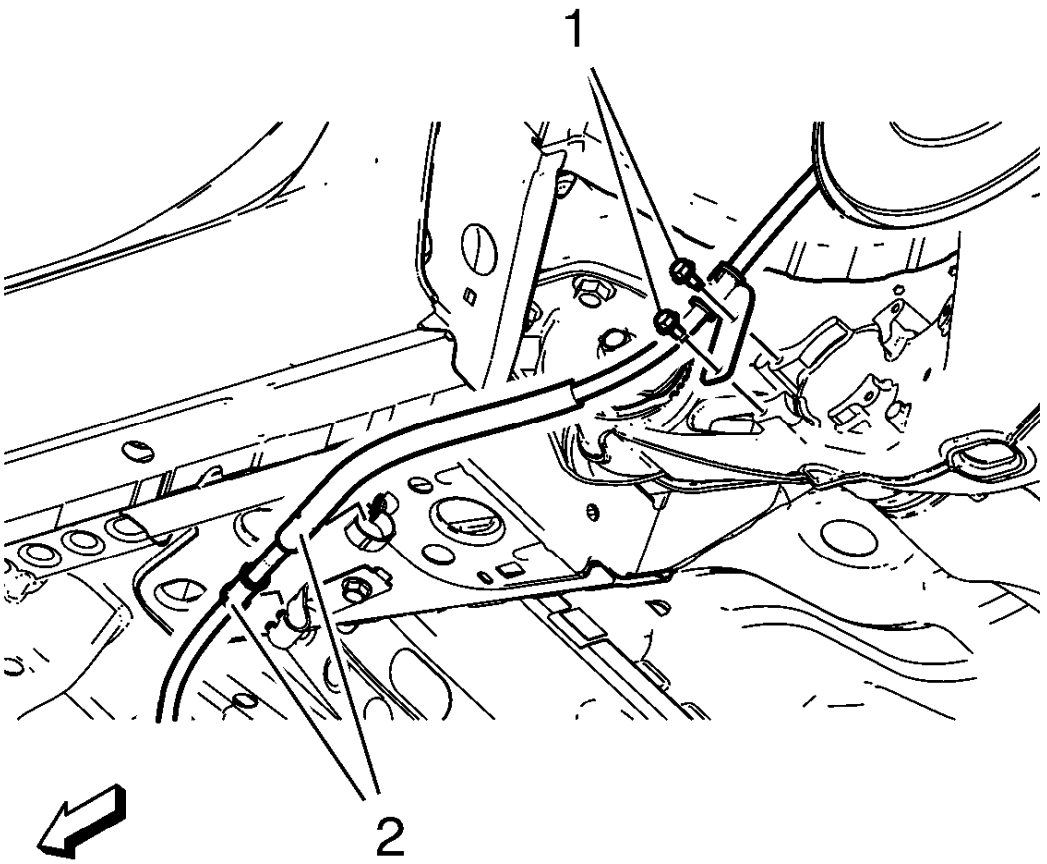

Fig. 10: Parking Brake Cable Casing Retainer Bolt
Courtesy of GENERAL MOTORS COMPANY

9. Remove the parking brake cable casing retainer bolt (1).
10. Unclip the parking brake cable.

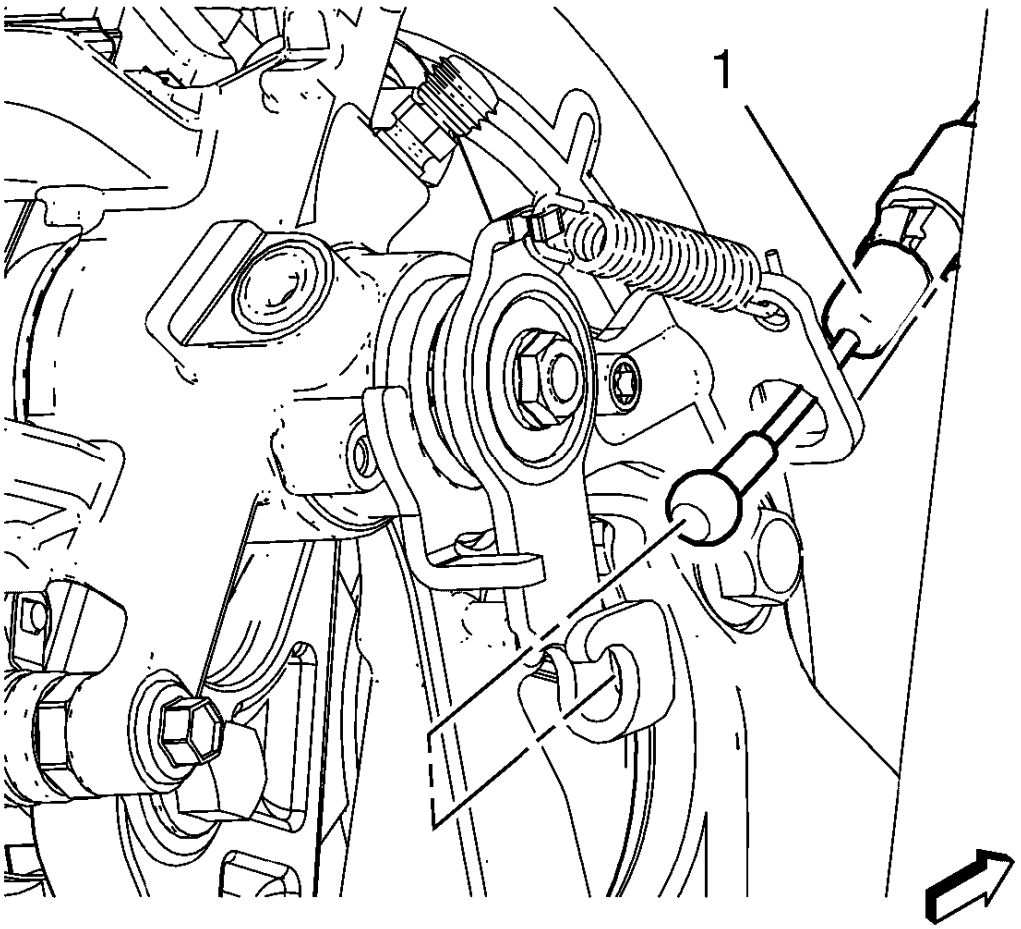

Fig. 11: Parking Brake Cable At Rear Brake Caliper
Courtesy of GENERAL MOTORS COMPANY

11. Remove the parking brake cable (1) from the rear brake caliper.

Installation Procedure

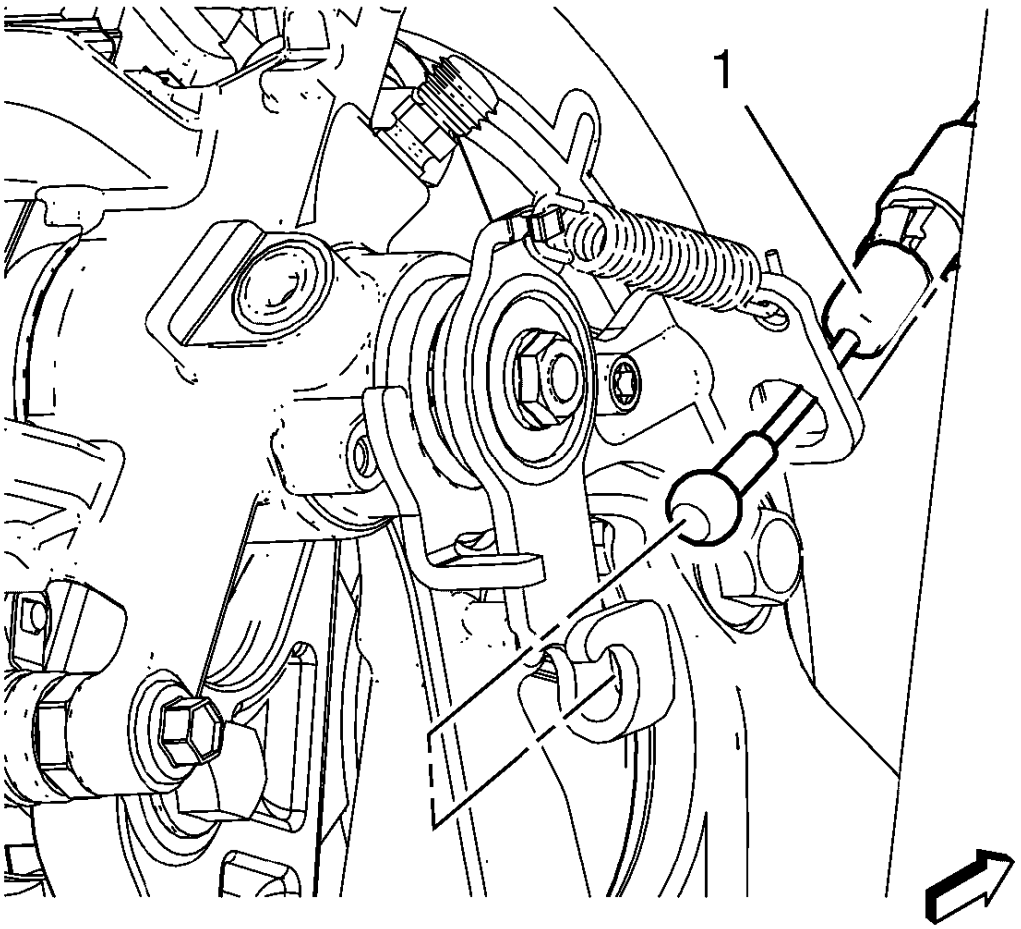

Fig. 12: Parking Brake Cable At Rear Brake Caliper
Courtesy of GENERAL MOTORS COMPANY

1. Install the parking brake cable (1) to the rear brake caliper.

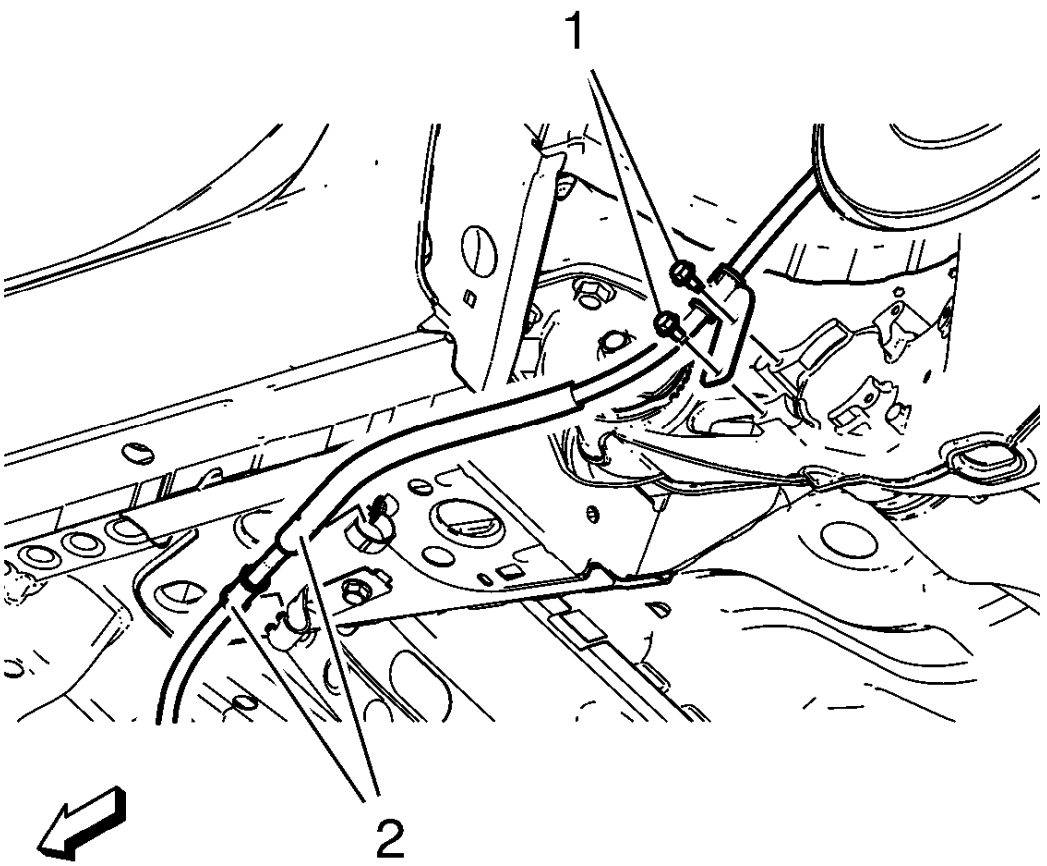

Fig. 13: Parking Brake Cable Casing Retainer Bolt
Courtesy of GENERAL MOTORS COMPANY

2. Clip in the parking brake cable (2).

CAUTION: Refer to Fastener Caution .

3. Install the parking brake cable casing retainer bolt (1) and tighten to 22 N.m (16 lb ft).

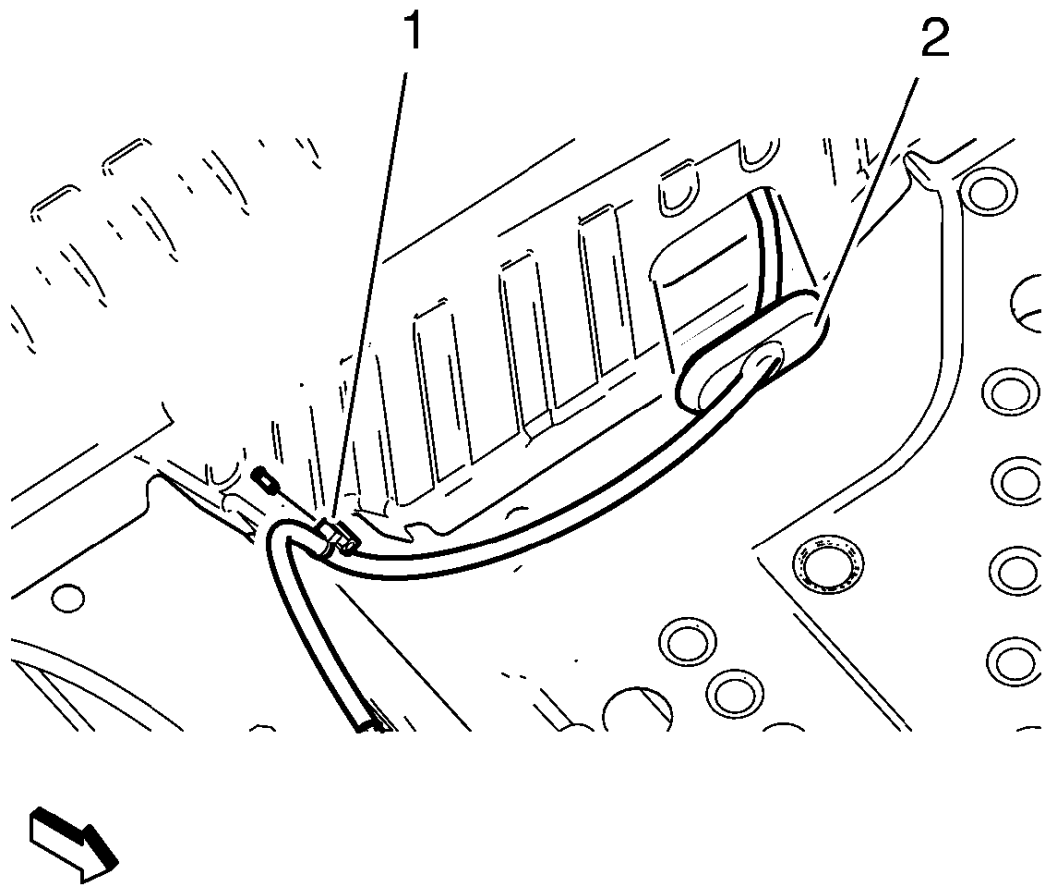

Fig. 14: Parking Brake Cable Clip
Courtesy of GENERAL MOTORS COMPANY

4. Install the parking brake cable grommet (2).
5. Install the parking brake cable clip (1).

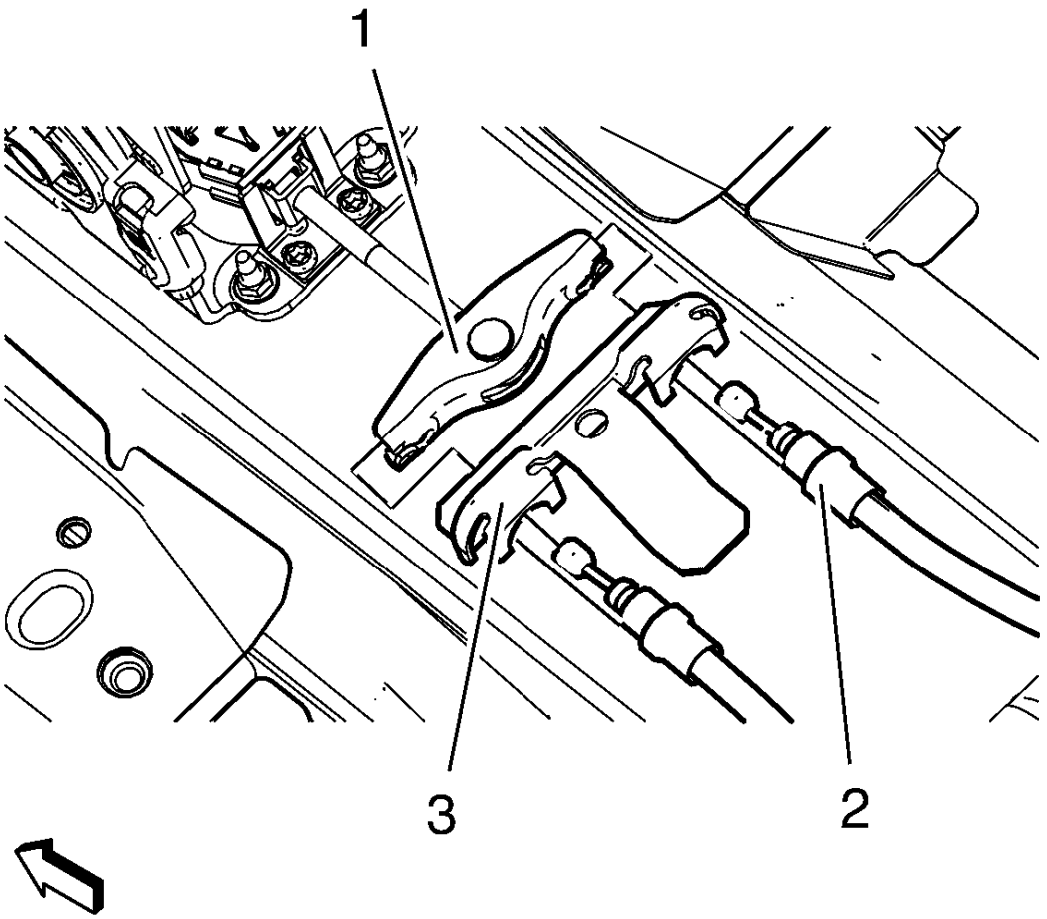

Fig. 15: Parking Brake Cable And Parking Brake Cable Bracket
Courtesy of GENERAL MOTORS COMPANY

6. Install the parking brake cable (2) to the parking brake cable bracket (3).
7. Install in the parking brake cable (2) to the parking brake lever (1).

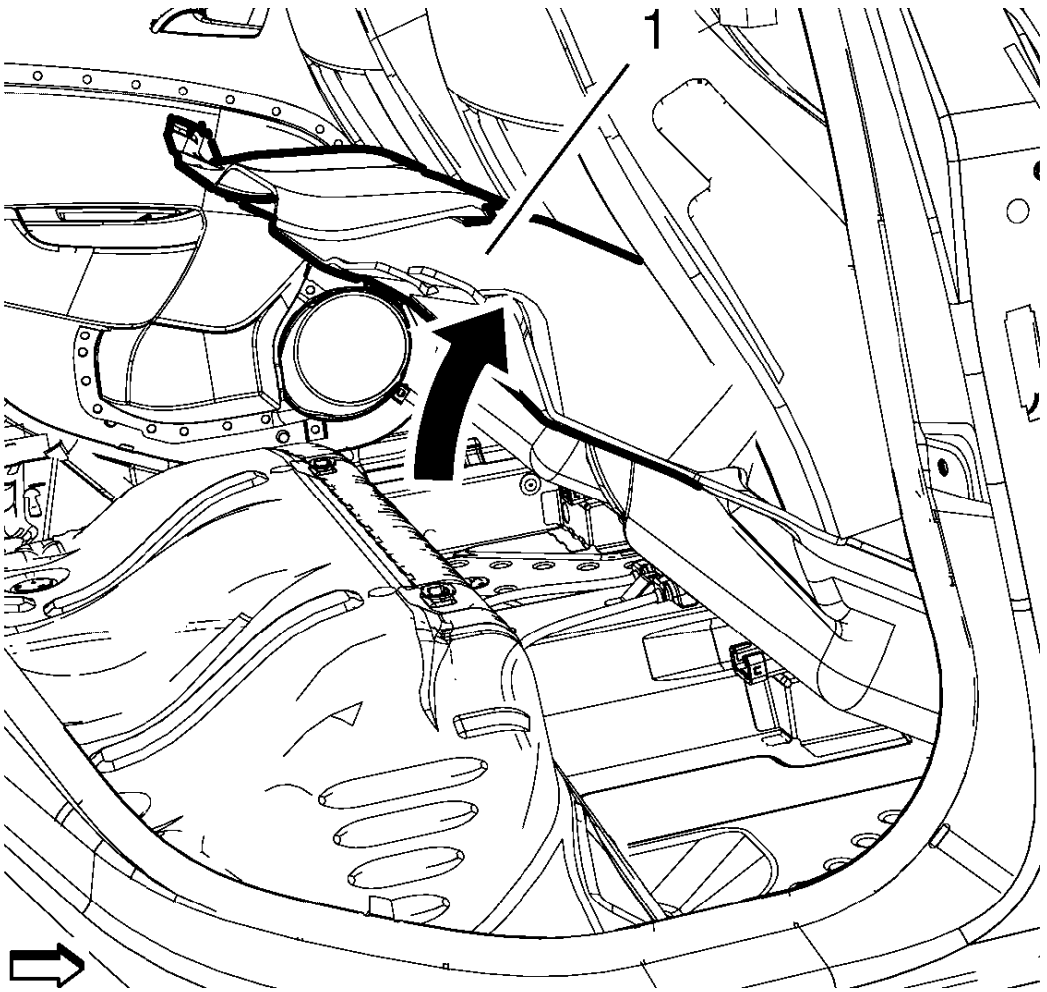

Fig. 16: Rear Floor Carpet
Courtesy of GENERAL MOTORS COMPANY

8. Install the rear floor carpet (1).
9. Install the center pillar lower garnish molding. Refer to **Center Pillar Lower Garnish Molding Replacement** .
10. Install the rear seat cushion. Refer to **Rear Seat Cushion Removal and Installation** .
11. Install the front floor console. Refer to **Front Floor Console Replacement** .

PARKING BRAKE REAR CABLE REPLACEMENT

Removal Procedure

1. Raise and support the vehicle. Refer to **Lifting and Jacking the Vehicle** .
2. Remove the rear tire and wheel assembly. Refer to **Tire and Wheel Removal and Installation** .

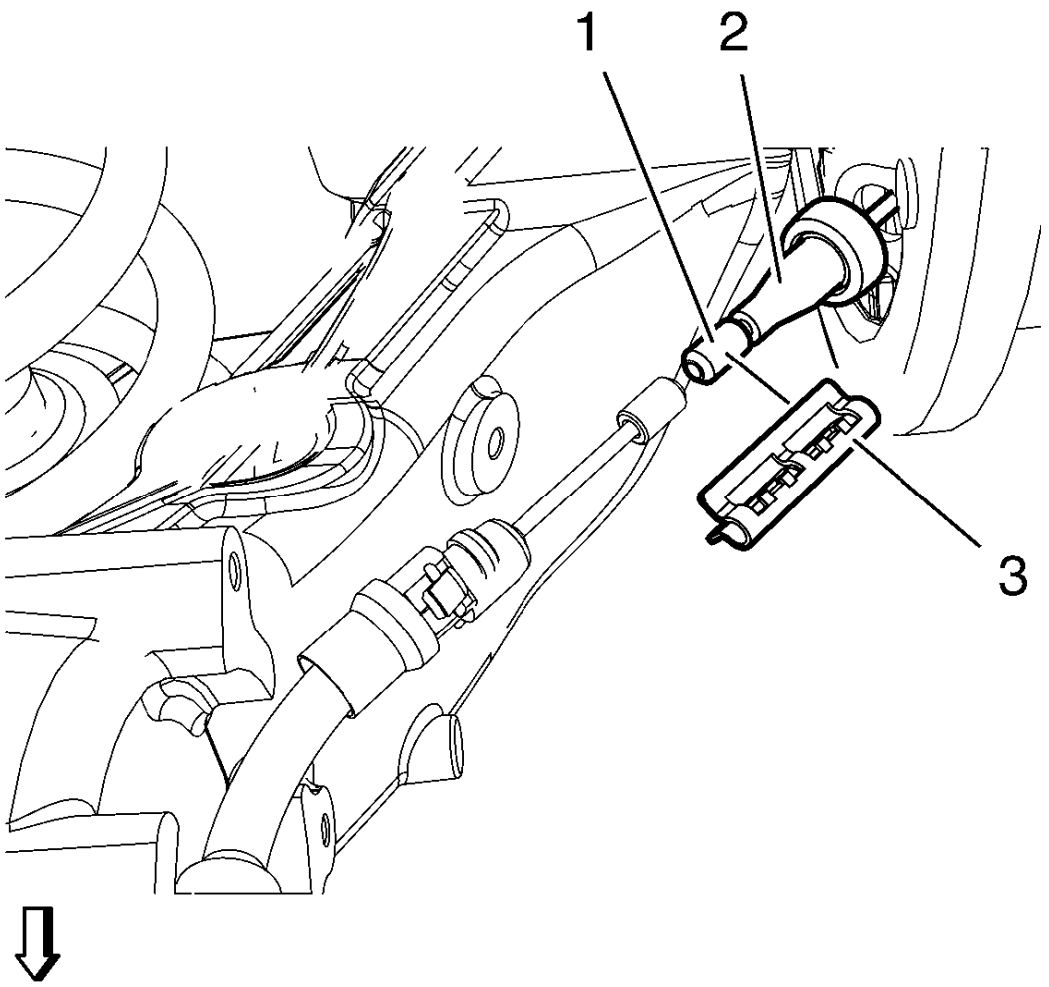

Fig. 17: Parking Brake Cable And Parking Brake Cable Retainer
Courtesy of GENERAL MOTORS COMPANY

3. Remove rear parking brake cable (1) from retainer (3).
4. Remove rear parking brake cable grommet (2) from rear backing plate.
5. Remove brake drum. Refer to **Brake Drum Replacement** .

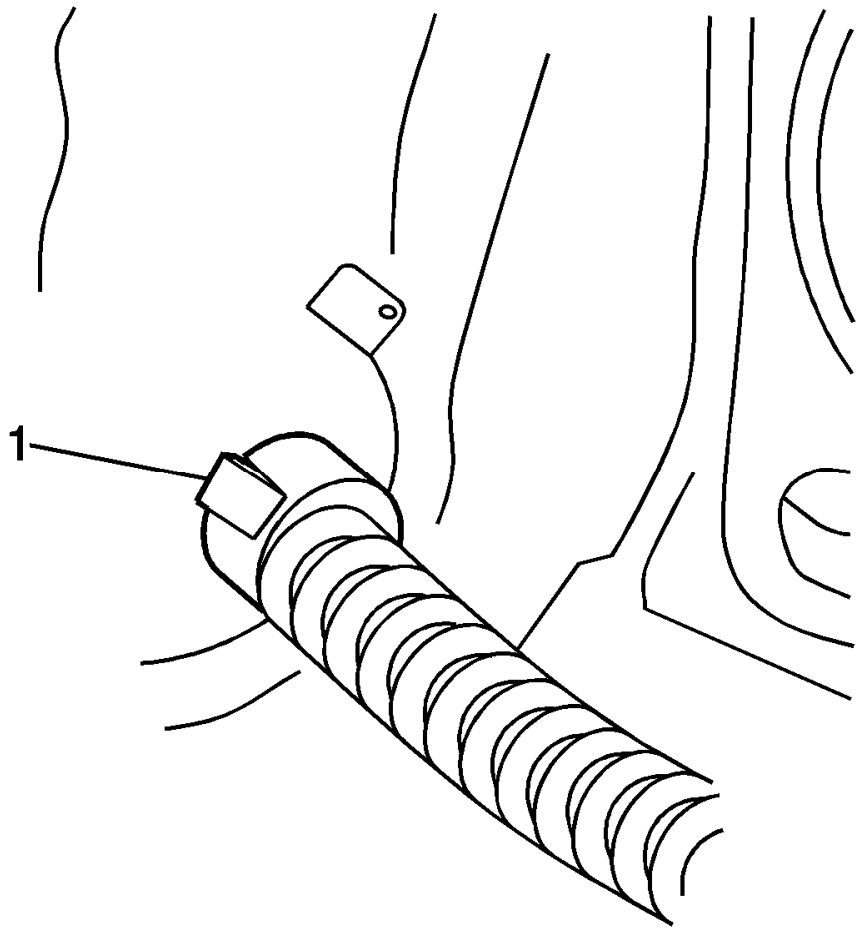

Fig. 18: View Of Rear Park Brake Cable End Fitting
Courtesy of GENERAL MOTORS COMPANY

6. Using a flat-bladed screwdriver, depress the visible retaining tab (1) on the park brake cable fitting, then tilt the released side of the cable end back into the backing plate.
7. Rotate the park brake cable to expose the other retaining tab.

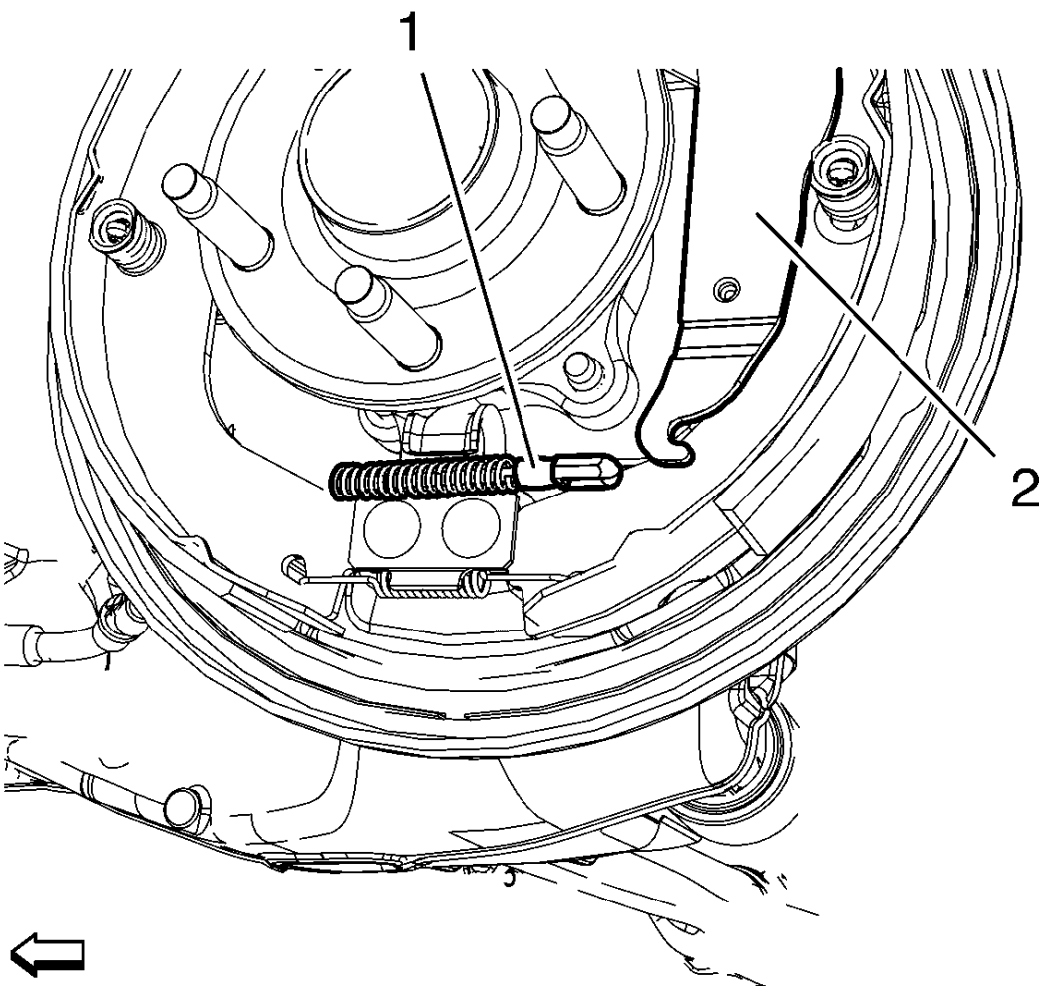

Fig. 19: Parking Brake Cable And Parking Brake Lever
Courtesy of GENERAL MOTORS COMPANY

8. Release rear parking brake cable (1) from parking brake lever (2), using a suitable tool.
9. Remove the rear parking brake cable (1) back through the opening in the backing plate.

Installation Procedure

1. Insert the park brake cable through the opening in the backing plate. Only install the cable return spring to just rearward of the spring positioning tab on the backing plate.

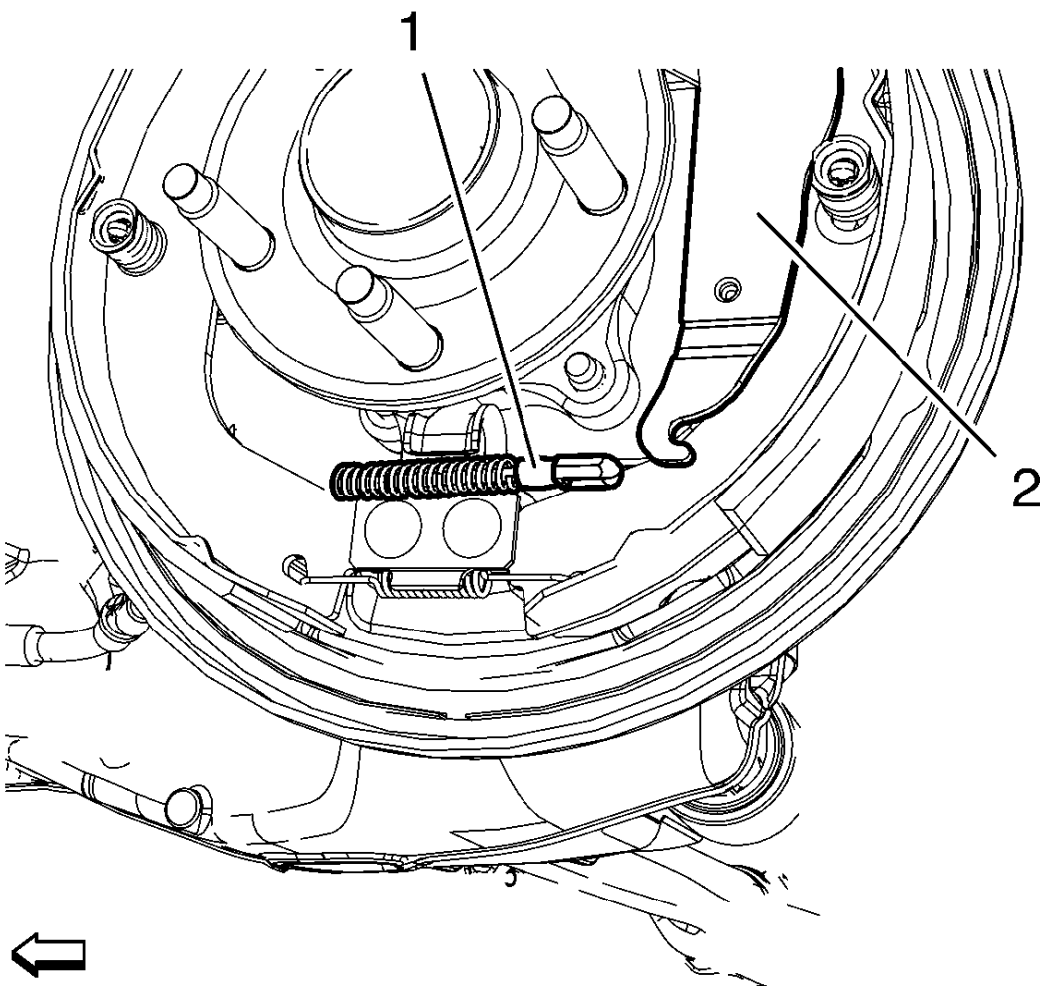

Fig. 20: Parking Brake Cable And Parking Brake Lever
Courtesy of GENERAL MOTORS COMPANY

2. Push the rear parking brake cable (1) toward the rear of the vehicle, along the outside of the trailing brake shoe, until the cable end is positioned just past the slot on the parking brake lever (2).
3. While holding the rear parking brake cable (1) in position from front to rear, move the cable end to the back of the parking brake lever (2).
4. Press the rear parking brake cable (1) into the slot on the lever (2), then pull the cable toward the front of the vehicle to secure the cable end to the slot.
5. While continuing to pull the cable away from the lever, insert a flat-bladed screwdriver into the opening on the lever to prevent the cable from lifting out of the slot on the lever.
6. Move the cable return spring through the opening in the backing plate.

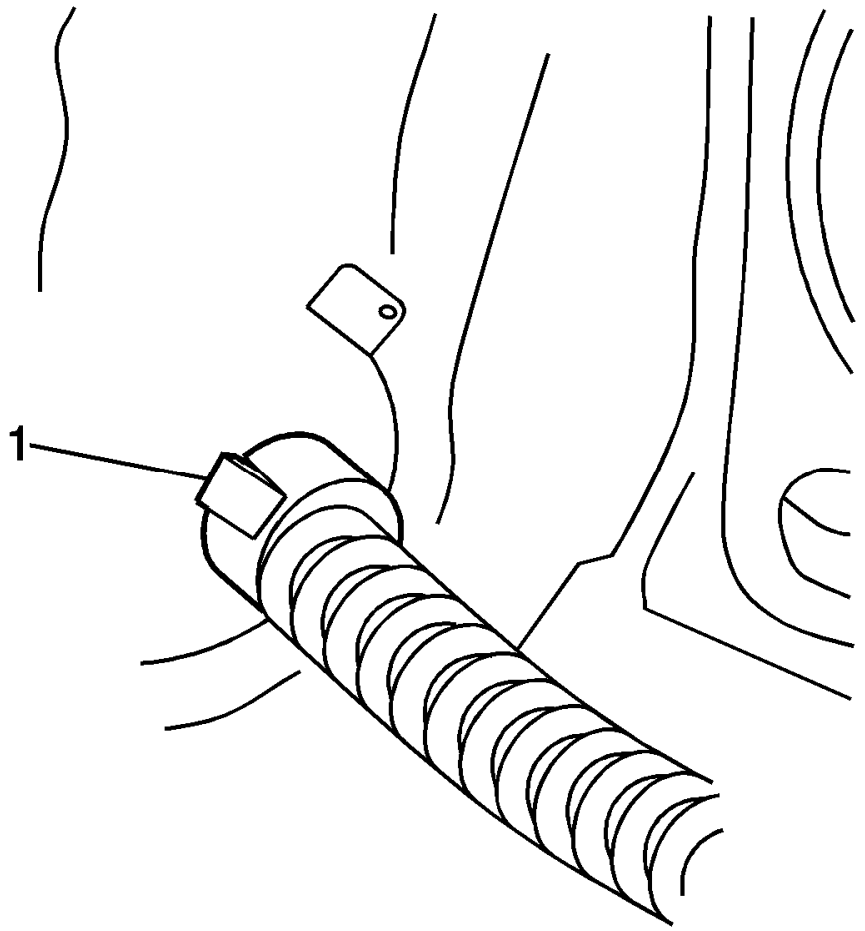

Fig. 21: View Of Rear Park Brake Cable End Fitting
Courtesy of GENERAL MOTORS COMPANY

7. Secure the cable fitting to the backing plate. Attempt to pull the park brake cable free of the backing plate, to ensure that the retaining tabs (1) on the fitting are properly secured.

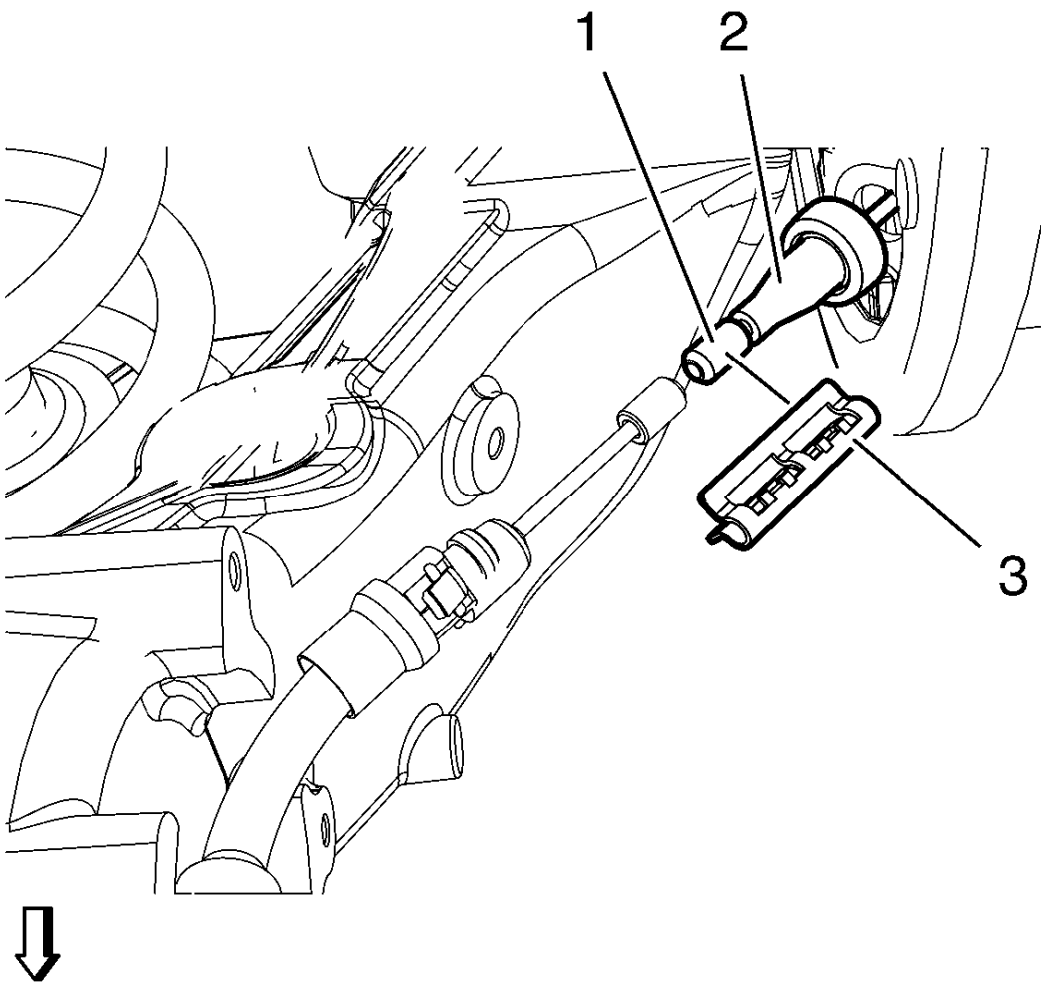

Fig. 22: Parking Brake Cable And Parking Brake Cable Retainer
Courtesy of GENERAL MOTORS COMPANY

8. Install rear parking brake cable (1) to retainer (3).
9. Install rear parking brake cable grommet (2) onto rear backing plate.
10. Install brake drum. Refer to **Brake Drum Replacement** .
11. Adjust the rear drum brakes. Refer to **Drum Brake Adjustment** .
12. Install the rear tire and wheel assembly. Refer to **Tire and Wheel Removal and Installation**
13. Lower the vehicle.

PARKING BRAKE ADJUSTMENT (MECHANICAL PARKING BRAKE)

WARNING: Refer to Brake Dust Warning .

NOTE: This vehicle utilizes a self-tensioning, or self-adjusting park brake cable system. The park brake system does not require adjustment under normal operating conditions. The tension on the park brake cables can be disabled and enabled when necessary during service of the disc or drum brake and/or the park brake system.

1. Apply and fully release the park brake several times. Verify that the park brake lever releases completely.
2. Turn ON the ignition. Verify the red BRAKE warning lamp is not illuminated.
3. If the red BRAKE warning lamp is illuminated, verify the following:
   - The park brake lever is in the fully released position and against the stop.
   - There is no slack in the park brake cables.
4. If the red BRAKE warning lamp remained illuminated and there were no other visible causes, refer to **Symptoms - Hydraulic Brakes** .
5. Turn OFF the ignition.
6. Raise and support the vehicle. Refer to **Lifting and Jacking the Vehicle** .
7. With the park brake lever fully released, check the park brake levers on the rear calipers (only necessary on vehicles equipped with disc brakes on the rear axle). The levers should be against the stops on the caliper housings. If the levers are not against the stops, binding may exist.
8. Fully apply and release the park brake lever 3-5 times in order for the cable tensioner to take up any slack in the park brake cables.
9. Fully apply the park brake lever, a firm lever should be obtained by depressing the lever less than one full stroke.
10. Attempt to rotate the rear tire and wheel assemblies. There should be no rotation forward or rearward.
11. Fully release the park brake lever.
12. Verify the park brake is released by rotating the rear tire and wheel assemblies. The rear tire and wheel assemblies should rotate freely and exhibit no brake drag.
13. Lower the vehicle.

DESCRIPTION AND OPERATION

PARK BRAKE SYSTEM DESCRIPTION AND OPERATION

Park Brake Cables

NOTE: Plastic coated park brake cables do not need periodic lubrication.

Coated park brake cables are used to reduce apply effort and increase corrosion protection. The cables are coated with plastic material which slides against nylon seals inside the conduit end fittings.

System Operation- Disc Brakes

Park brake apply input force is received by the park brake lever assembly being applied. The input force is multiplied by the lever assembly, transferred and evenly distributed, through the park brake cables and the park

brake cable equalizer, to the left and right park brake apply levers. The park brake apply levers multiply and transfer the apply input force to in turn apply the disc brake caliper pistons which compress the brake pads against the friction surface of the brake rotors in order to prevent the rotation of the rear tire and wheel assemblies. The park brake lever assembly releases an applied park brake system when it is released and returned to the at-rest position.

System Operation- Drum Brakes

Park brake apply input force is received by the park brake lever assembly being applied. The input force is multiplied by the lever assembly, transferred and evenly distributed, through the park brake cables and the park brake cable equalizer, to the left and right park brake apply levers. The park brake apply levers multiply and transfer the apply input force to the drum brake actuators/adjusters which expand the drum brake shoes toward the friction surface of the brake drum in order to prevent the rotation of the rear tire and wheel assemblies. The park brake lever assembly releases an applied park brake system when it is released and returned to the at-rest position.

Self Adjusting Park Brake System

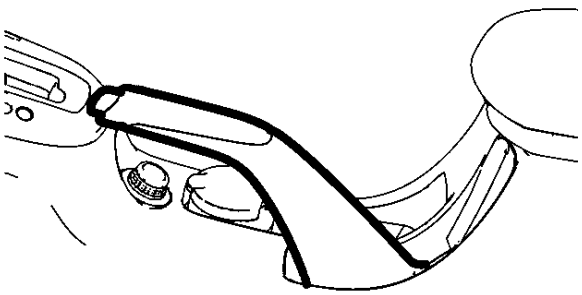

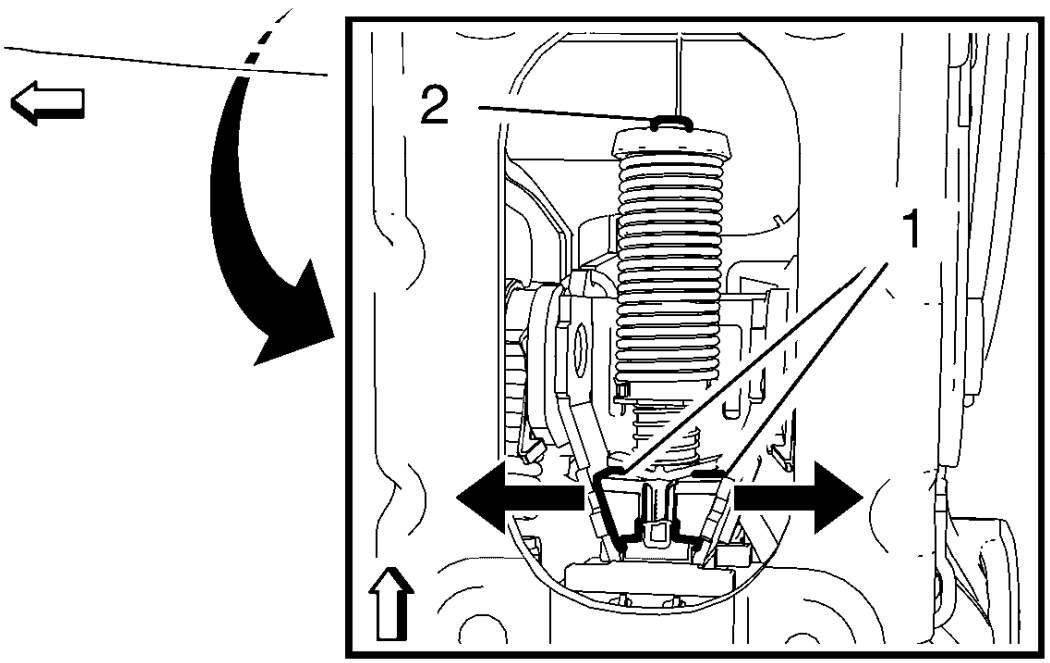

Fig. 23: Park Brake Jaws Pushed Apart In Released Position
Courtesy of GENERAL MOTORS COMPANY

If park brake is released, the jaws (1) are pushed apart (arrows) and will be retained by a locking mechanism. Thus the conduit (2) is disengaged. Now the conduit can move free in longitudinal direction during regular driving and braking.

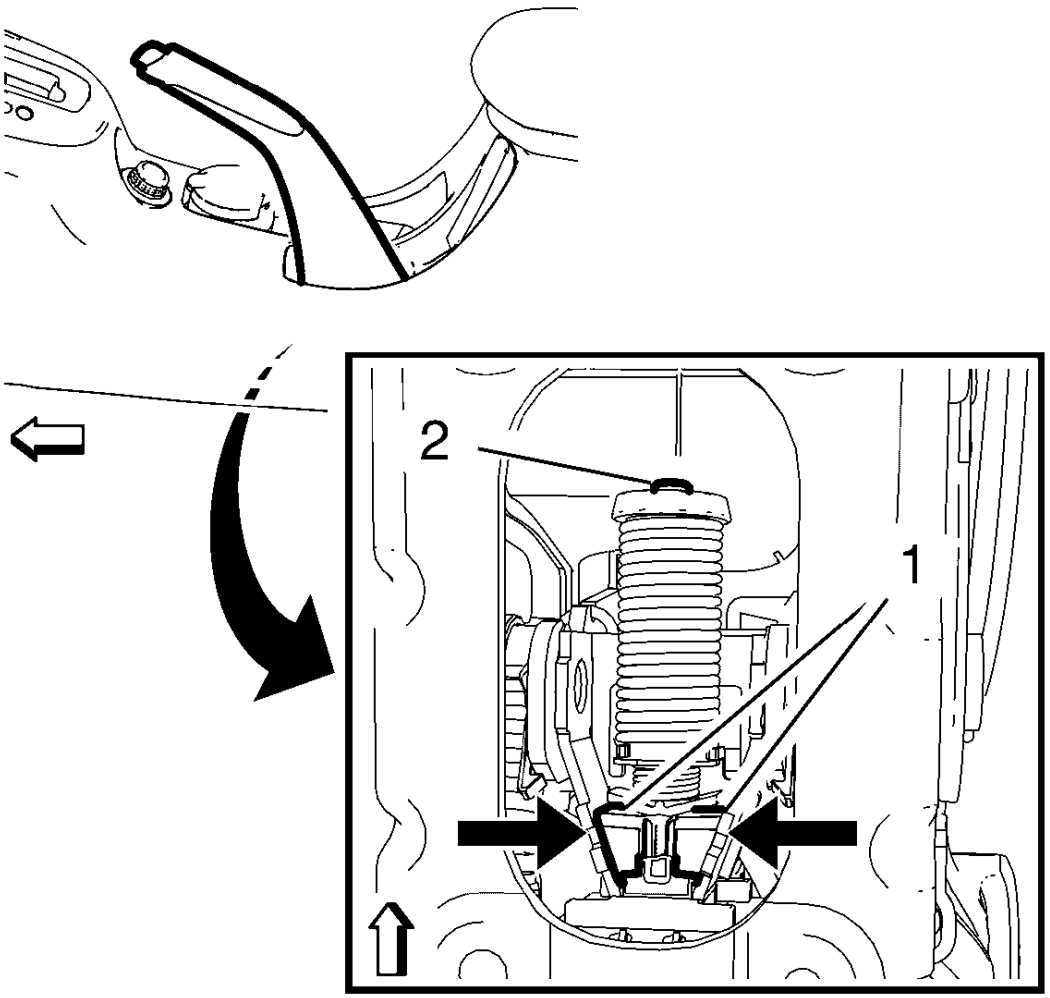

Fig. 24: Park Brake Jaws In Applied Position
Courtesy of GENERAL MOTORS COMPANY

During engagement of park brake, the conduit (2) slides back to the limiting arrest given through the brake pads. The jaws (1) are pushed back (arrows) and clamp the conduit (2).

Fading through wearing process is prevented because the conduit will be clamped at any position.

2013 DRIVELINE/AXLE

Wheel Drive Shafts - Cruze

SPECIFICATIONS

FASTENER TIGHTENING SPECIFICATIONS

Fastener Tightening Specifications

Application	Specification	
	Metric	English
Front Wheel Drive Intermediate Shaft Bearing Bolt	22 N.m	16 lb ft
Intermediate Shaft Bracket Bolt	58 N.m	43 lb ft
Retaining Clamp	25 N.m	18 lb ft
Wheel Drive Shaft Nut (1)		
• First Pass	150 N.m	111 lb ft
• Release	45 Degrees	
• Third Pass	250 N.m	184 lb ft
1 = Use NEW Fastener.		

ADHESIVES, FLUIDS, LUBRICANTS, AND SEALERS

Adhesives, Fluids, Lubricants, and Sealers

Application	Type of Material	GM Part Number	
		United States	Canada
Wheel Drive Shaft Inner and Outer Joint	Grease	1051344	993037

DIAGNOSTIC INFORMATION AND PROCEDURES

SYMPTOMS - WHEEL DRIVE SHAFTS

NOTE: Complete the following steps prior to beginning the wheel drive shaft diagnosis.

1. Perform the **Vibration Analysis - Road Testing** in order to effectively diagnose the concern.
2. Review the system operation in order to become familiar with the system function. Refer to **Wheel Drive Shafts Description and Operation**.

Visual/Physical Inspection

- Inspect for aftermarket equipment and modifications which could affect the operation of the wheel drive shafts or other rotating components.
- Inspect the easily accessible or visible system components for obvious damage or conditions which could

cause the symptom.

- Thoroughly inspect the entire wheel drive shaft for visible damage, leaking joint seals, and missing seal clamps.
- Inspect the wheel drive shaft seals for cuts, tears, or other damage which may allow the loss of lubricant and the entry of contaminates.

Symptom List

After performing the Visual/Physical Inspection and no visual signs of damage or other interference impairing the wheel drive shaft function is apparent, it may be necessary to remove the wheel drive shaft from the vehicle and manipulate the joints manually. Any binding or otherwise impeded movement of the joints may indicate damage which could contribute to the concern. Refer to the following:

- **Click Noise In Turns**
- **Clunk When Accelerating from Coast**
- **Clunk Noise When Accelerating During Turns**

CLICK NOISE IN TURNS

A click noise occuring during turns may be caused by a worn or damaged wheel drive shaft outer joint. This may be more apparent while simultaneously turning and accelerating. This click is caused by wear and/or damage to the constant velocity joint bearings and/or races. Commonly, this damage or wear is caused by the loss of lubricating grease from the constant velocity joint and the entry of foreign material or contaminates.

Carefully inspect the wheel drive shaft seals for cuts, tears or other damage which may allow the lubricating grease to escape. The loss of this grease will cause damage to the wheel drive shaft constant velocity joint in a very short period of time.

If inspection reveals no visual evidence of wear or damage, it may be necessary to remove the wheel drive shaft from the vehicle and manipulate the outer joint manually. Any binding or impeded movement of the joint may indicate damage which could contribute to the concern.

CLUNK WHEN ACCELERATING FROM COAST

A clunk noise occurring when accelerating from coast or a standing start may be caused by a worn or damaged wheel drive shaft inner joint. The common cause of wheel drive shaft inner joint damage is the loss of lubricating grease and/or the presence of foreign material and contaminates in the joint. This usually occurs as a result of a torn or damaged inner joint seal.

Carefully inspect the wheel drive shaft seal for cuts, tears or other damage that may allow the loss of the lubricating grease and/or the entry of contaminates.

If inspection reveals no visual evidence of wear or damage, it may be necessary to remove the wheel drive shaft from the vehicle and manipulate the inner joint manually. Do not allow the joint to separate from the wheel drive shaft bar. Any binding or impeded movement of the joint may indicate damage which could contribute to the concern.

CLUNK NOISE WHEN ACCELERATING DURING TURNS

A clunk noise that occurs while accelerating during turns may be caused by wear and/or damage to the inboard and the outboard joints in combination. The loss of lubricant and/or the presence of contaminates can cause damage to the internal components of the joints.

Carefully inspect the joint seals for cuts, tears or other damage. Joint seals that are damaged may allow lubricant leakage and the entry of contaminates.

If inspection reveals no visual evidence of wear or damage, it may be necessary to remove the wheel drive shaft from the vehicle and manipulate the joints manually. Do not allow the joints to separate from the wheel drive shaft bar. Any binding or impeded movement of the joints may indicate damage which could contribute to the concern.

SHUDDER OR VIBRATION DURING ACCELERATION

In order to diagnose a shudder or vibration during acceleration, refer to **Symptoms - Vibration Diagnosis and Correction** .

REPAIR INSTRUCTIONS

FRONT WHEEL DRIVE INTERMEDIATE SHAFT REPLACEMENT

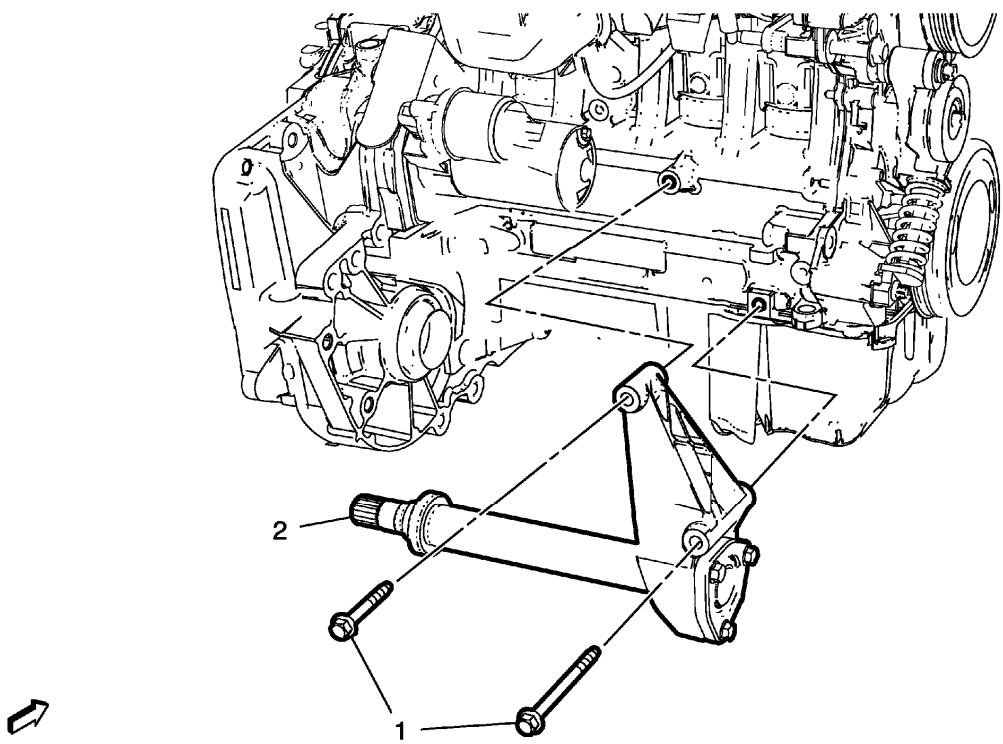

Fig. 1: Front Wheel Drive Intermediate Shaft
Courtesy of GENERAL MOTORS COMPANY

Front Wheel Drive Intermediate Shaft Replacement

Callout	Component Name
Preliminary Procedures Remove the wheel drive shaft. Refer to **Front Wheel Drive Shaft Replacement - Right Side**.	
1	Intermediate Shaft Bracket Bolt (Qty: 3) **CAUTION:** **Refer to Fastener Caution .** **Tighten** 58 N.m (43 lb ft)
2	Front Wheel Drive Intermediate Shaft and Bracket Assembly **Procedure** 1. Remove and DISCARD the O-ring. DO NOT re-use, replace with NEW only. 2. The **DT-6332** protector must be installed into the differential output shaft seal prior installation the intermediate shaft. 3. For vehicles with automatic transmission, check transmission fluid level. Refer to **Transmission Fluid Drain and Fill** . 4. For vehicles with manual transmission, check transmission fluid level. Refer to **Transmission Fluid Drain and Fill** . **Special Tools** **DT-6332** Seal Protector For equivalent regional tools, refer to **Special Tools**.

FRONT WHEEL DRIVE SHAFT REPLACEMENT - LEFT SIDE

Special Tools

- **CH-313** Slide Hammer
- **CH-6003** Axle Shaft Remover
- **DT-6332** Seal Protector
- **DT-29794** Axle Shaft Remover Extension
- **CH-49400** Hub Spindle Remover

For equivalent regional tools, refer to **Special Tools**.

Removal Procedure

WARNING: To prevent personal injury and/or component damage, do not allow the weight of the vehicle to load the front wheels, or attempt to operate the vehicle, when the wheel drive shaft(s) or wheel drive shaft nut(s) are removed. To do so may cause the inner bearing race to separate, resulting in damage to brake and suspension components and loss of vehicle control.

CAUTION: Wheel drive shaft boots, seals and clamps should be protected from sharp objects any time service is performed on or near the wheel drive shaft(s). Damage to the boot(s), the seal(s) or the clamp(s) may cause lubricant to leak from the joint and lead to increased noise and possible failure of the wheel drive shaft.

1. Raise and suitably support the vehicle. Refer to **Lifting and Jacking the Vehicle** .
2. Remove the tire and wheel assembly. Refer to **Tire and Wheel Removal and Installation** .
3. Drain the transmission.
   - For vehicles with manual transmission, refer to **Transmission Fluid Drain and Fill** .
   - For vehicles with automatic transmission, refer to **Transmission Fluid Drain and Fill** .

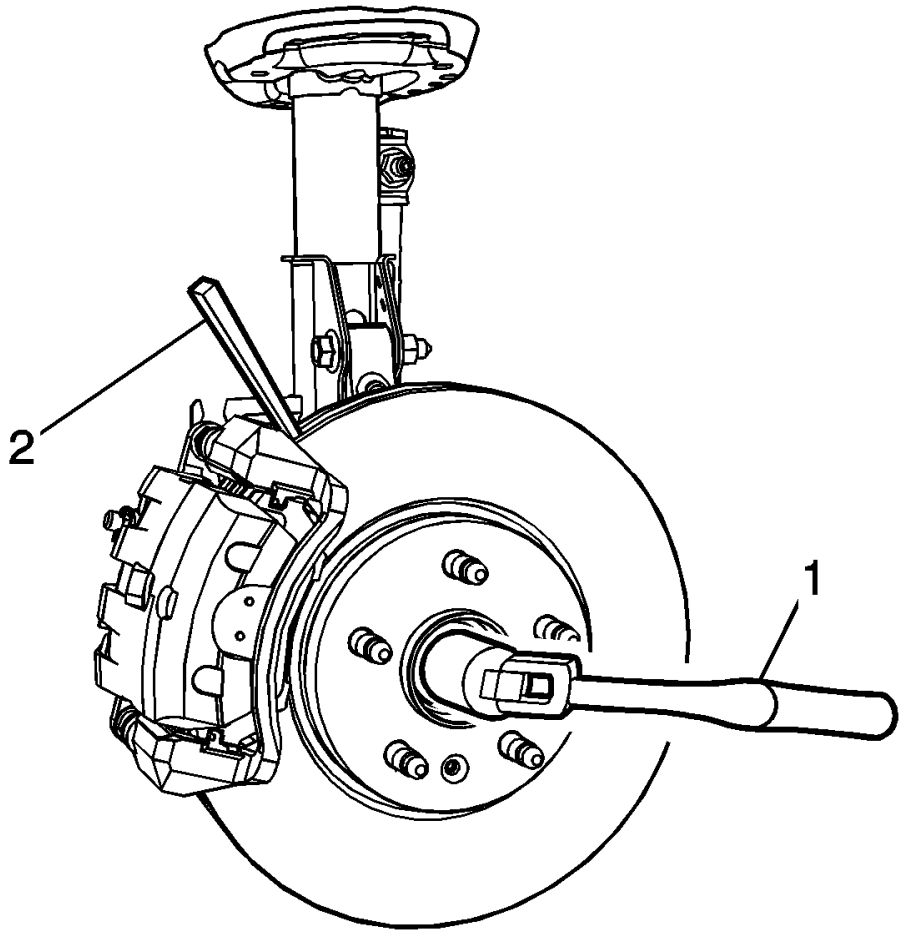

Fig. 2: Breaker Bar And Punch Or Drift Tools
Courtesy of GENERAL MOTORS COMPANY

4. Insert a drift or punch (2) in the cooling fins of the brake rotor.
5. Rotate the brake rotor until the drift or punch contacts the brake caliper mounting bracket.
6. Using a breaker bar (1), loosen the wheel drive shaft nut.

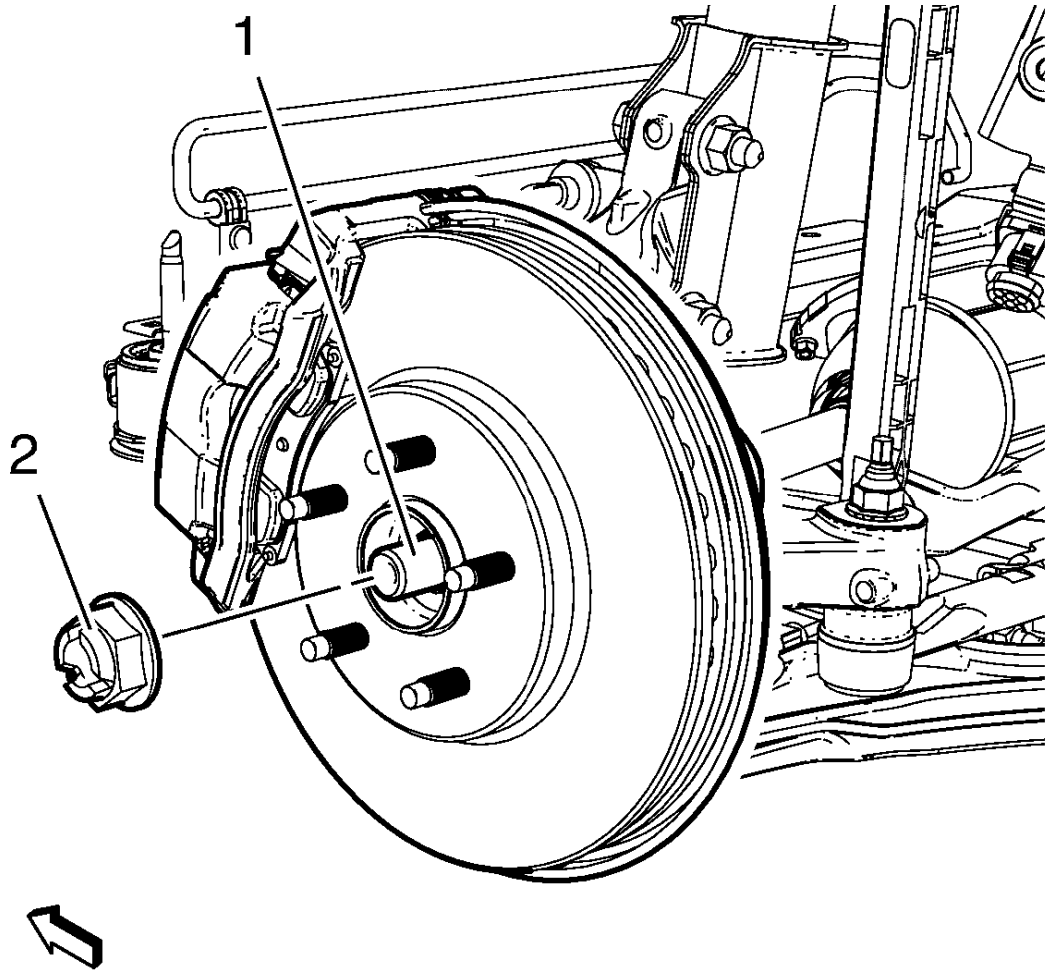

Fig. 3: Wheel Drive Shaft And Nut
Courtesy of GENERAL MOTORS COMPANY

7. Remove and DISCARD the wheel drive shaft nut (2) from the wheel drive shaft (1).

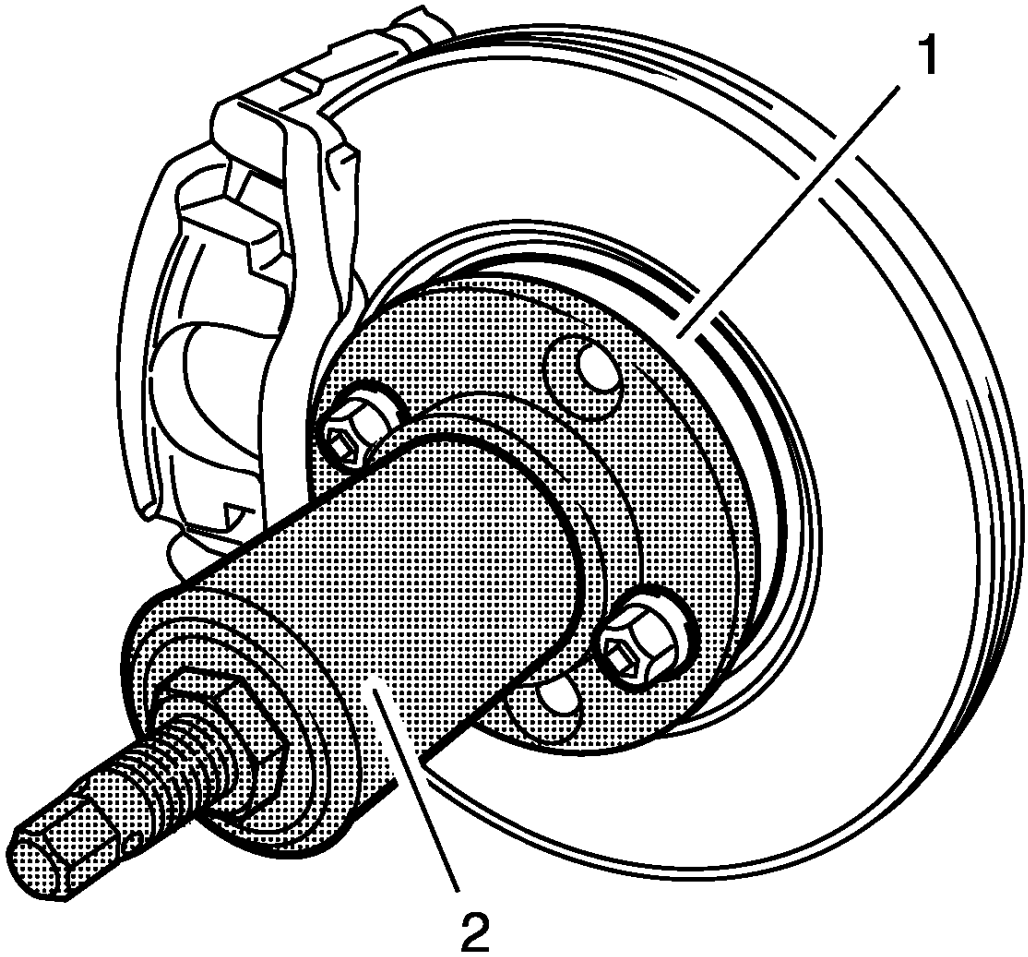

Fig. 4: Special Tool And Wheel Bearing/Hub Assembly
Courtesy of GENERAL MOTORS COMPANY

NOTE: Do not hit the end of the wheel drive shaft with a hammer to separate it from the wheel bearing/hub. Damage to the wheel bearing hub and/or wheel drive shaft may result.

8. Using the **CH-49400** remover (2) or equivalent, separate the brake rotor and wheel bearing/hub assembly (1).
9. Remove the outer tie rod assembly from the steering knuckle. Refer to **Steering Linkage Outer Tie Rod Replacement** .
10. Remove the ball joint from the steering knuckle. Refer to **Lower Control Arm Replacement** .

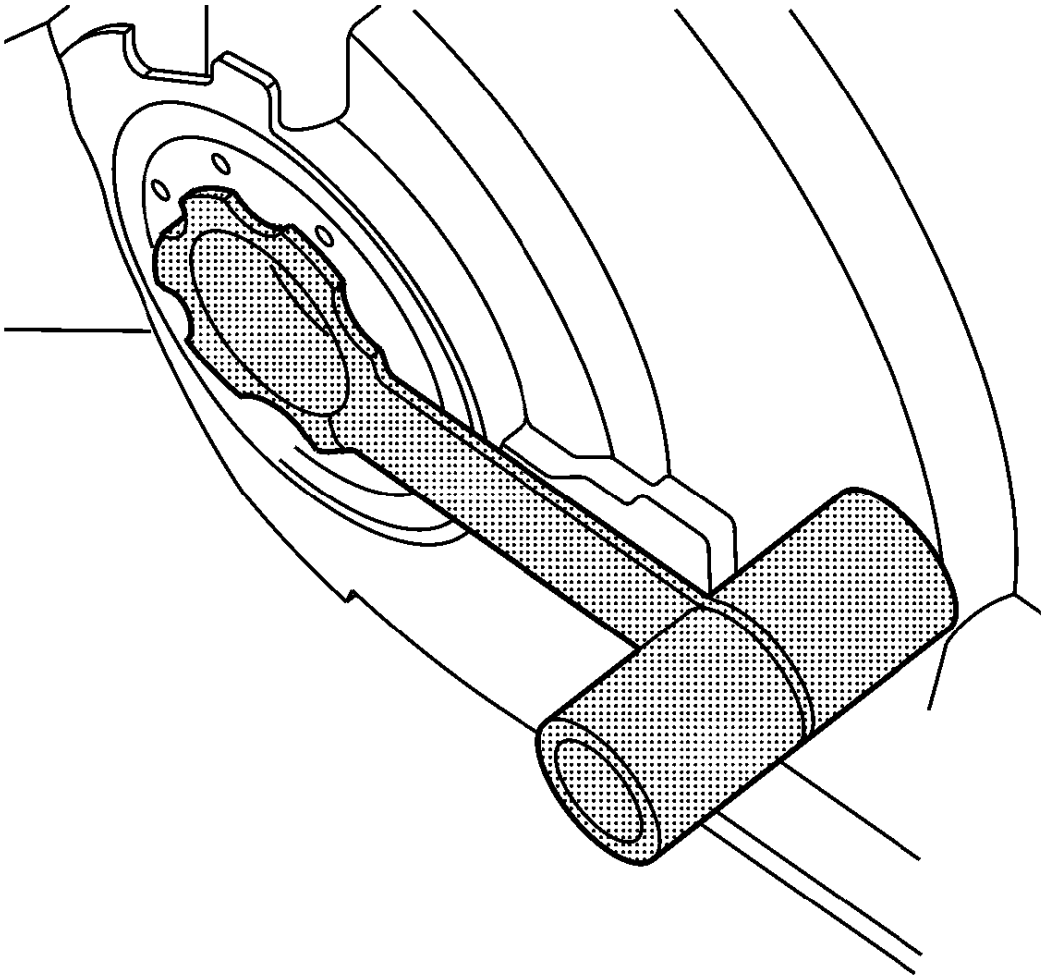

Fig. 5: Seal Protector
Courtesy of GENERAL MOTORS COMPANY

CAUTION: Wheel drive shaft seal protector must be installed into the differential output shaft seal prior to removing and installing the wheel drive shaft. Failure to install the wheel drive shaft seal protector as indicated may cause the splines of the wheel drive shaft to cut the differential output seal.

11. Install the **DT-6332** protector into the differential output shaft seal.

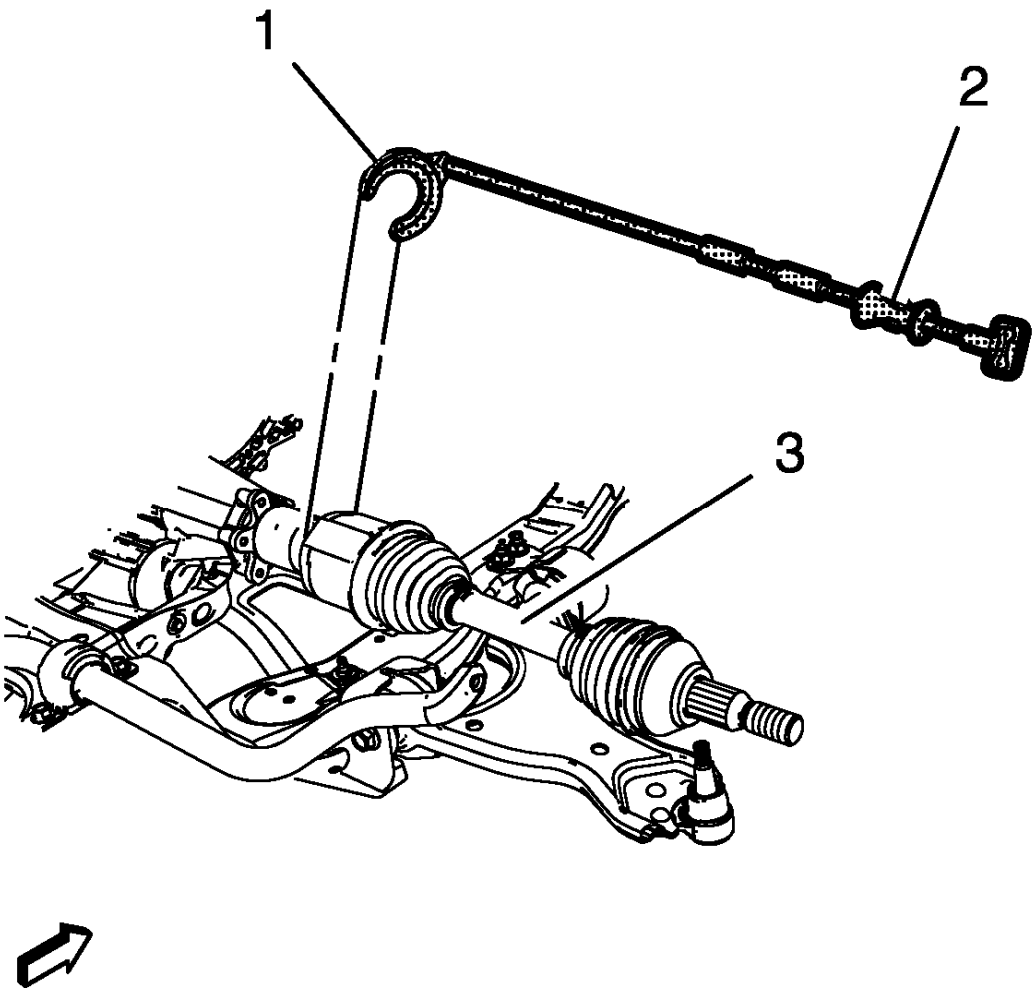

Fig. 6: Special Tools And Wheel Drive Shaft
Courtesy of GENERAL MOTORS COMPANY

12. Using the **CH-313** hammer (2) with **CH-6003** remover (1) along with **DT-29794** extension and remove the wheel drive shaft (3) from the vehicle.

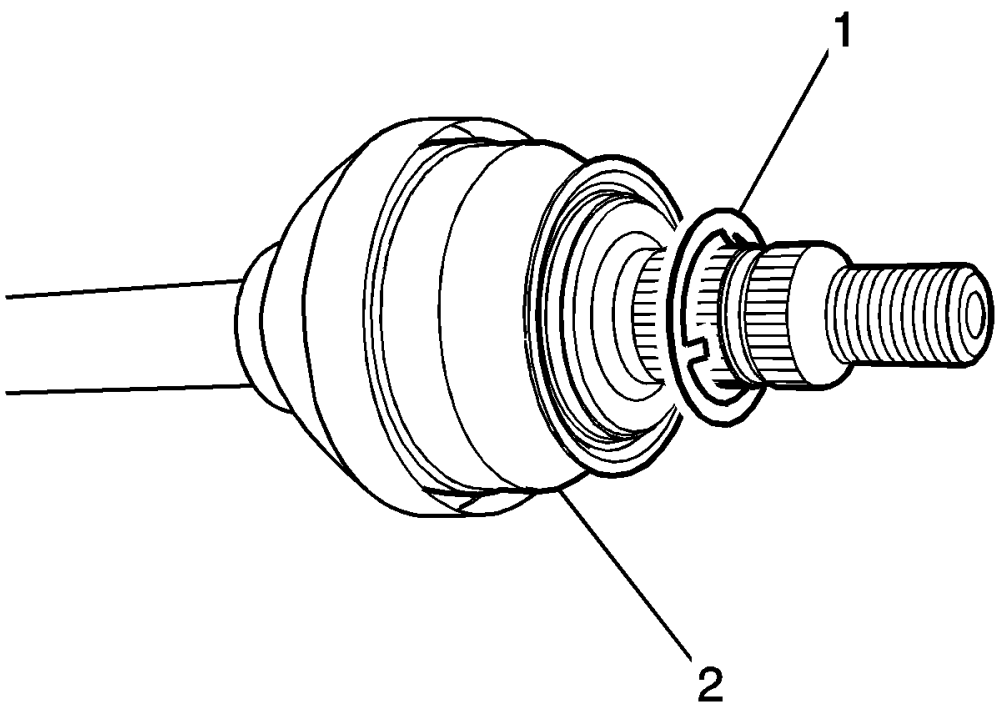

Fig. 7: Wheel Drive Shaft & Washer
Courtesy of GENERAL MOTORS COMPANY

NOTE: If there is no washer on the wheel drive shaft, install a NEW washer.

13. Remove and discard the washer (1) from the wheel drive shaft (2). DO NOT re-use the washer, replace with NEW only.

Installation Procedure

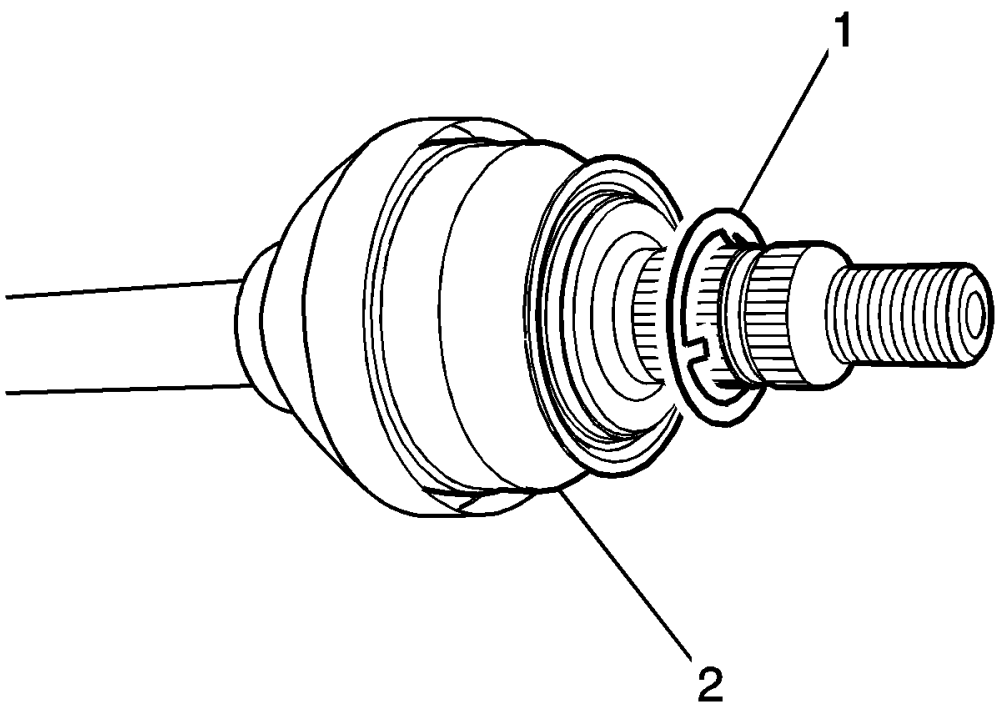

Fig. 8: Wheel Drive Shaft & Washer
Courtesy of GENERAL MOTORS COMPANY

1. Install a NEW washer (1) to the wheel drive shaft (2).

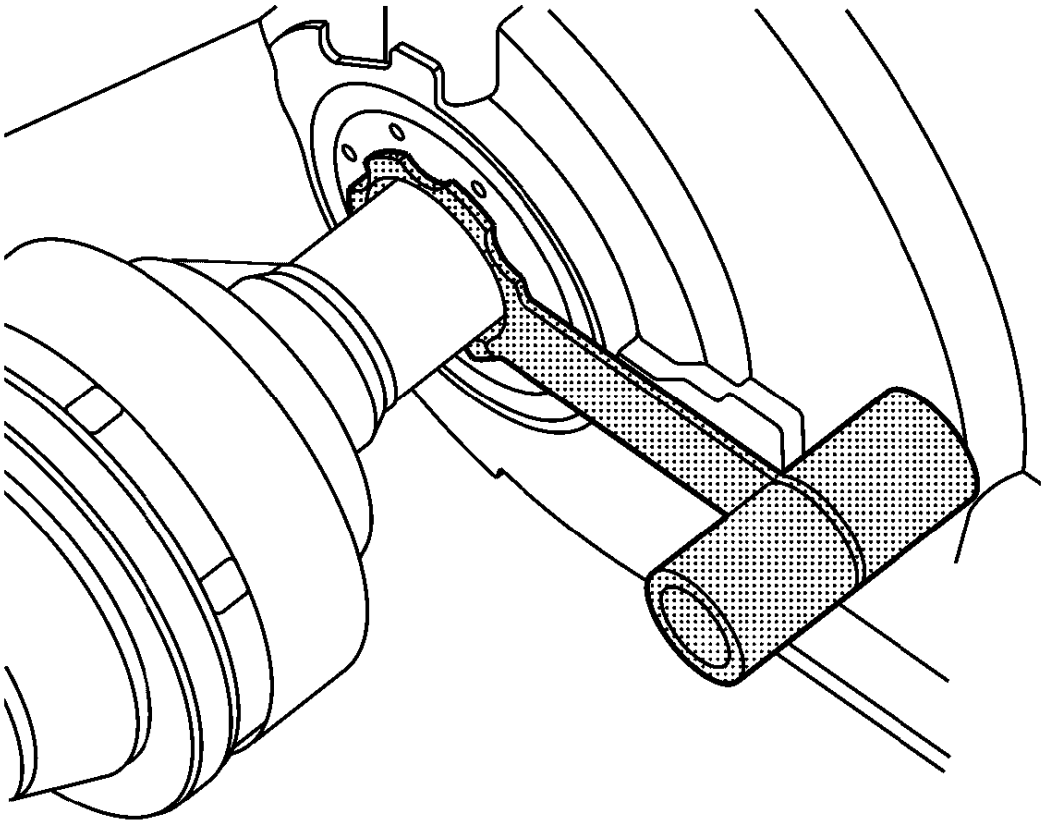

Fig. 9: Output Shaft Protector Tool
Courtesy of GENERAL MOTORS COMPANY

NOTE: In order to prevent lubricant leaks, use care when installing the wheel drive shaft to the differential. Do not damage the oil seal. Replace the oil seal if it becomes nicked, distorted, or otherwise damaged.

2. Carefully install the wheel drive shaft into the differential until the splines are past the **DT-6332** protector.

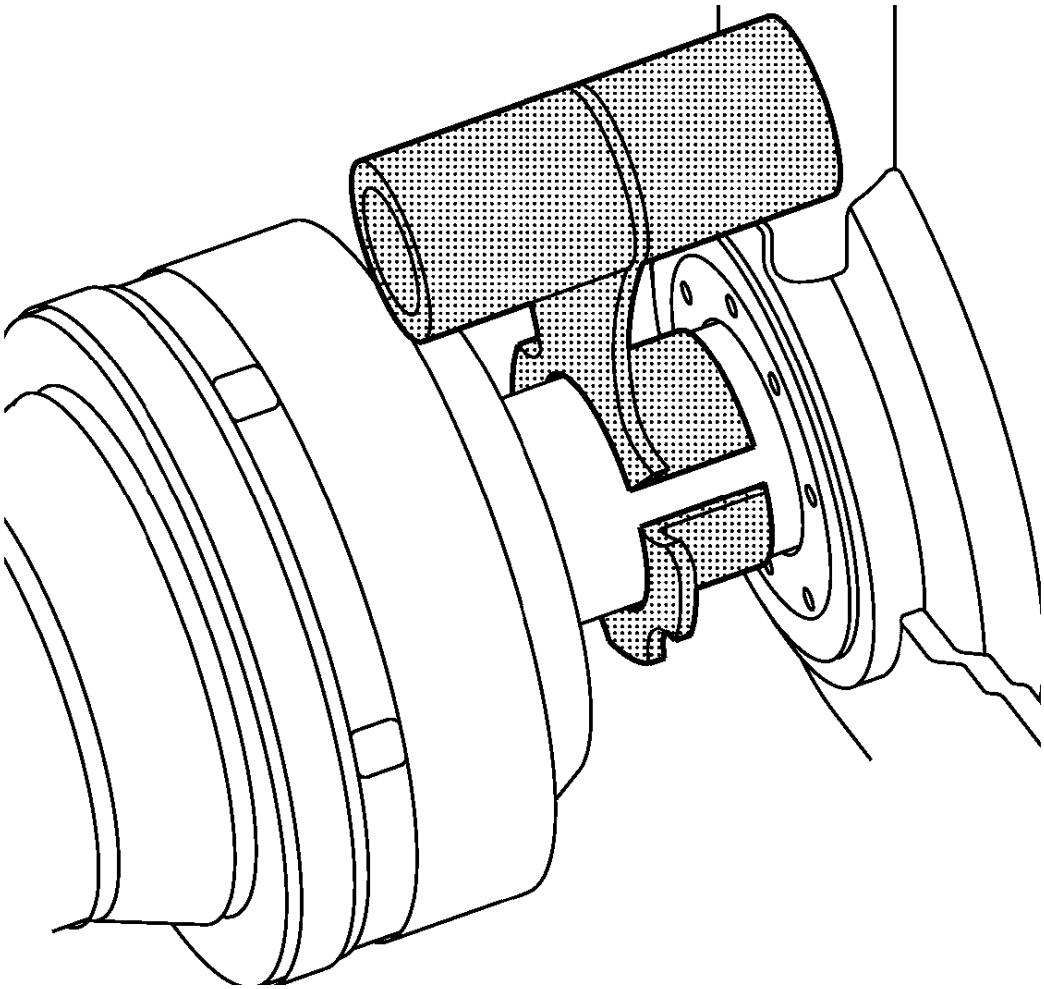

Fig. 10: Special Output Shaft Protector Tool
Courtesy of GENERAL MOTORS COMPANY

3. Remove the **DT-6332** protector from the differential output shaft seal.
4. Install the wheel drive shaft into the differential until the retaining ring is fully seated.
5. Confirm that the front wheel drive shaft retaining ring is properly seated by holding the inner housing and pull the inner housing outward
6. Install the front wheel drive shaft into the front wheel bearing/hub.
7. Install the ball joint to the steering knuckle. Refer to **Lower Control Arm Replacement** .
8. Install the outer tie rod assembly at the steering knuckle. Refer to **Steering Linkage Outer Tie Rod Replacement** .

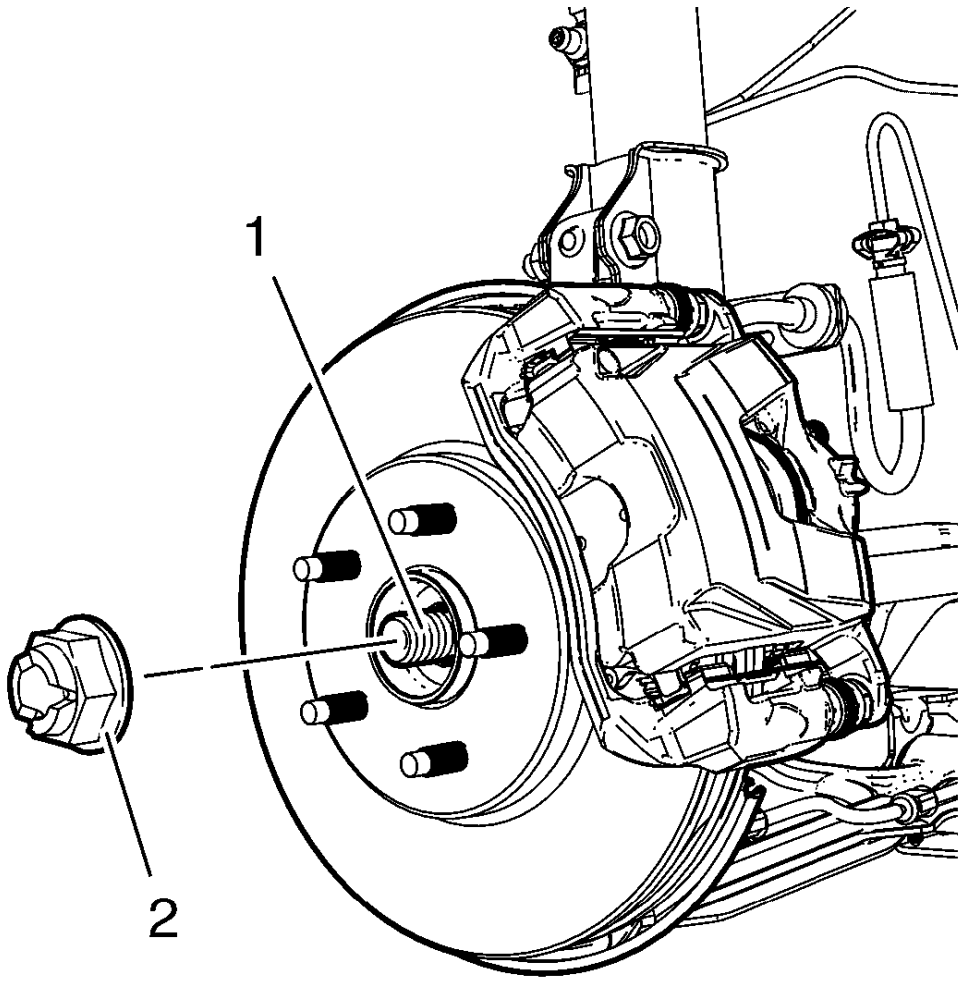

Fig. 11: Wheel Drive Shaft And Nut
Courtesy of GENERAL MOTORS COMPANY

WARNING: Refer to Torque-to-Yield Fastener Warning .

CAUTION: Refer to Fastener Caution .

9. Install the NEW wheel drive shaft nut (2) to the wheel drive shaft (1) tighten in 3 passes.

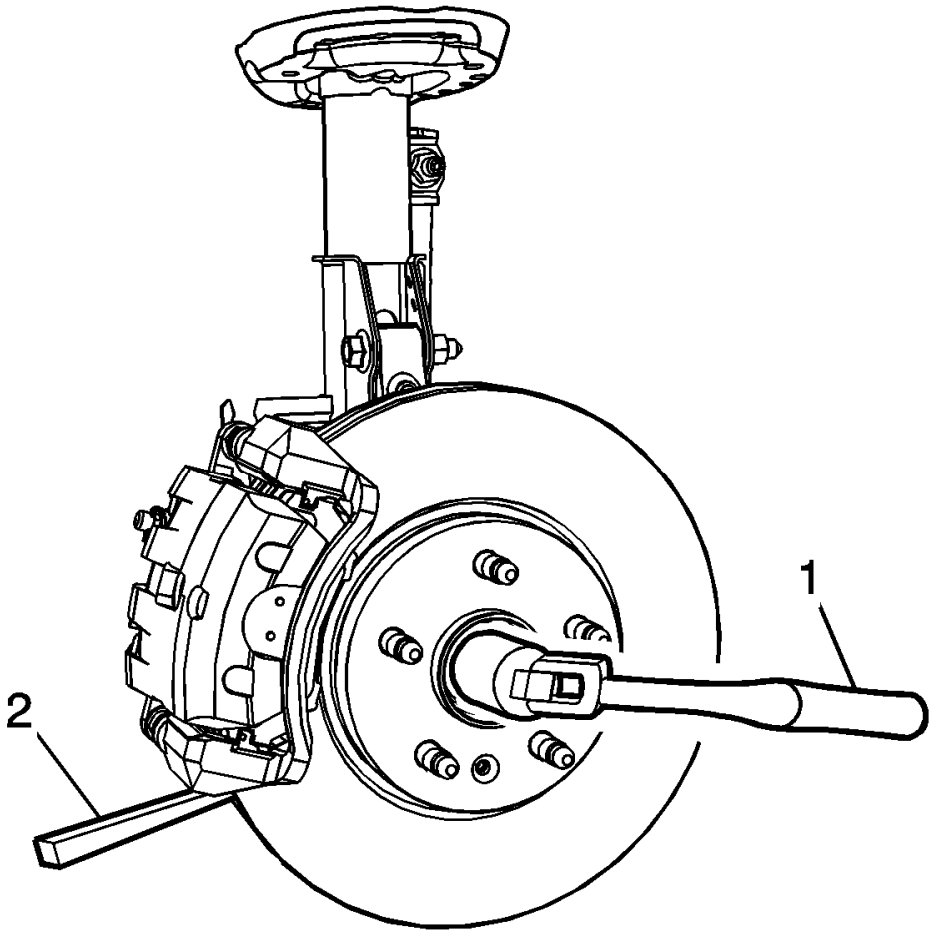

Fig. 12: Tightening Wheel Drive Shaft Nut
Courtesy of GENERAL MOTORS COMPANY

10. Insert a drift or punch (2) in the cooling fins of the brake rotor.
11. Rotate the brake rotor until the drift or punch contacts the brake caliper mounting bracket.
12. Using a torque wrench (1) and the appropriate size socket, tighten the wheel drive shaft nut to 150 N.m (111 lb ft).
13. Release the wheel drive shaft nut (2) trough 45 degrees.
14. Retighten the wheel drive shaft nut (2) to 250 N.m (185 lb ft).
15. Install the tire and wheel assembly. Refer to **Tire and Wheel Removal and Installation** .
16. Lower the vehicle.
17. Refill the transmission.
    - For vehicles with manual transmission, refer to **Transmission Fluid Drain and Fill** .
    - For vehicles with automatic transmission, refer to **Transmission Fluid Drain and Fill** .

FRONT WHEEL DRIVE SHAFT REPLACEMENT - RIGHT SIDE

Special Tools

- **CH-313** Slide Hammer
- **CH-6003** Axle Shaft Remover
- **DT-6332** Seal Protector
- **DT-29794** Axle Shaft Remover Extension
- **CH-49400** Hub Spindle Remover

For equivalent regional tools, refer to **Special Tools**.

Removal Procedure

WARNING: To prevent personal injury and/or component damage, do not allow the weight of the vehicle to load the front wheels, or attempt to operate the vehicle, when the wheel drive shaft(s) or wheel drive shaft nut(s) are removed. To do so may cause the inner bearing race to separate, resulting in damage to brake and suspension components and loss of vehicle control.

CAUTION: Wheel drive shaft boots, seals and clamps should be protected from sharp objects any time service is performed on or near the wheel drive shaft(s). Damage to the boot(s), the seal(s) or the clamp(s) may cause lubricant to leak from the joint and lead to increased noise and possible failure of the wheel drive shaft.

1. Raise and suitably support the vehicle. Refer to **Lifting and Jacking the Vehicle** .
2. Remove the tire and wheel assembly. Refer to **Tire and Wheel Removal and Installation** .
3. Drain the transmission.
    - For vehicles with manual transmission, refer to **Transmission Fluid Drain and Fill** .
    - For vehicles with automatic transmission, refer to **Transmission Fluid Drain and Fill** .

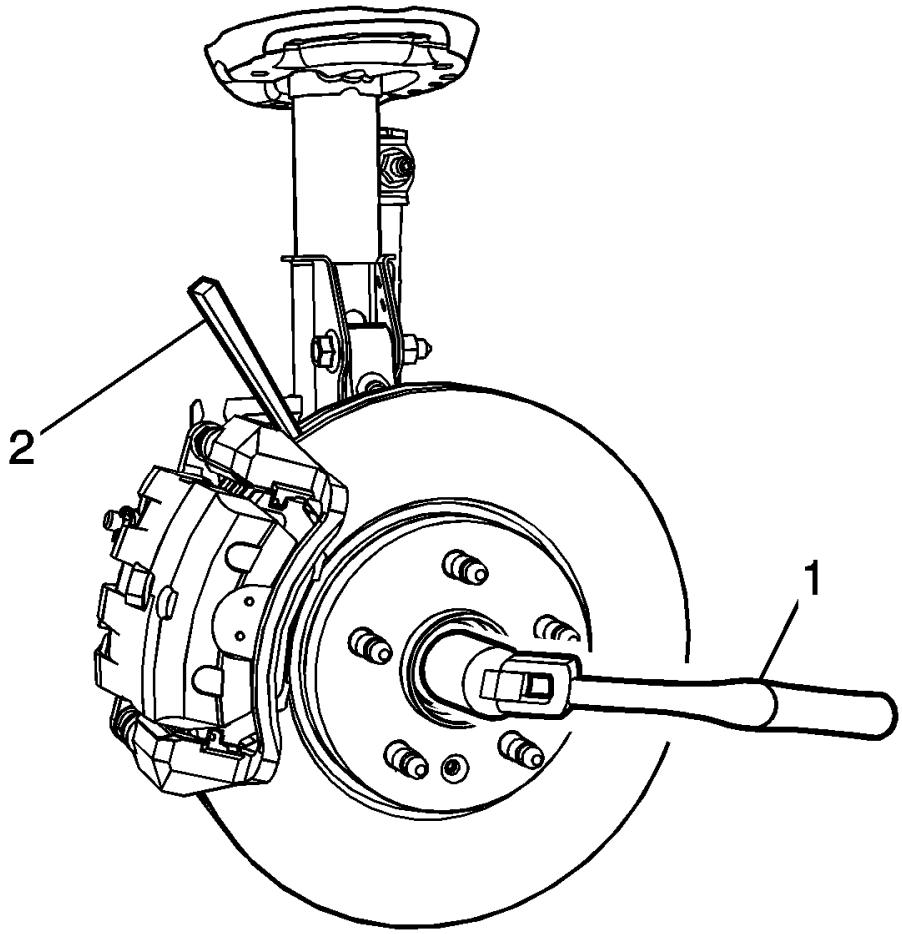

Fig. 13: Breaker Bar And Punch Or Drift Tools
Courtesy of GENERAL MOTORS COMPANY

4. Insert a drift or punch (2) in the cooling fins of the brake rotor.
5. Rotate the brake rotor until the drift or punch contacts the brake caliper mounting bracket.
6. Using a breaker bar (1), loosen the wheel drive shaft nut.

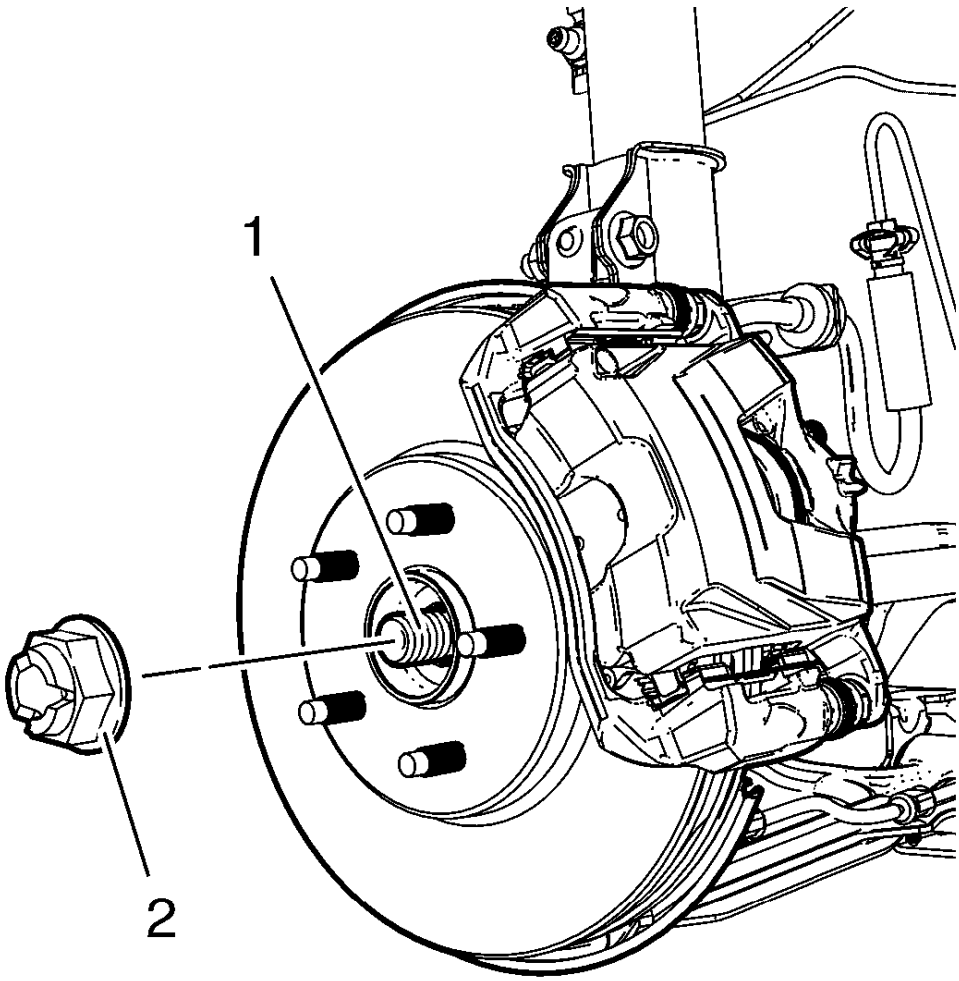

Fig. 14: Wheel Drive Shaft And Nut
Courtesy of GENERAL MOTORS COMPANY

7. Remove and DISCARD the wheel drive shaft nut (2) from the wheel drive shaft (1).

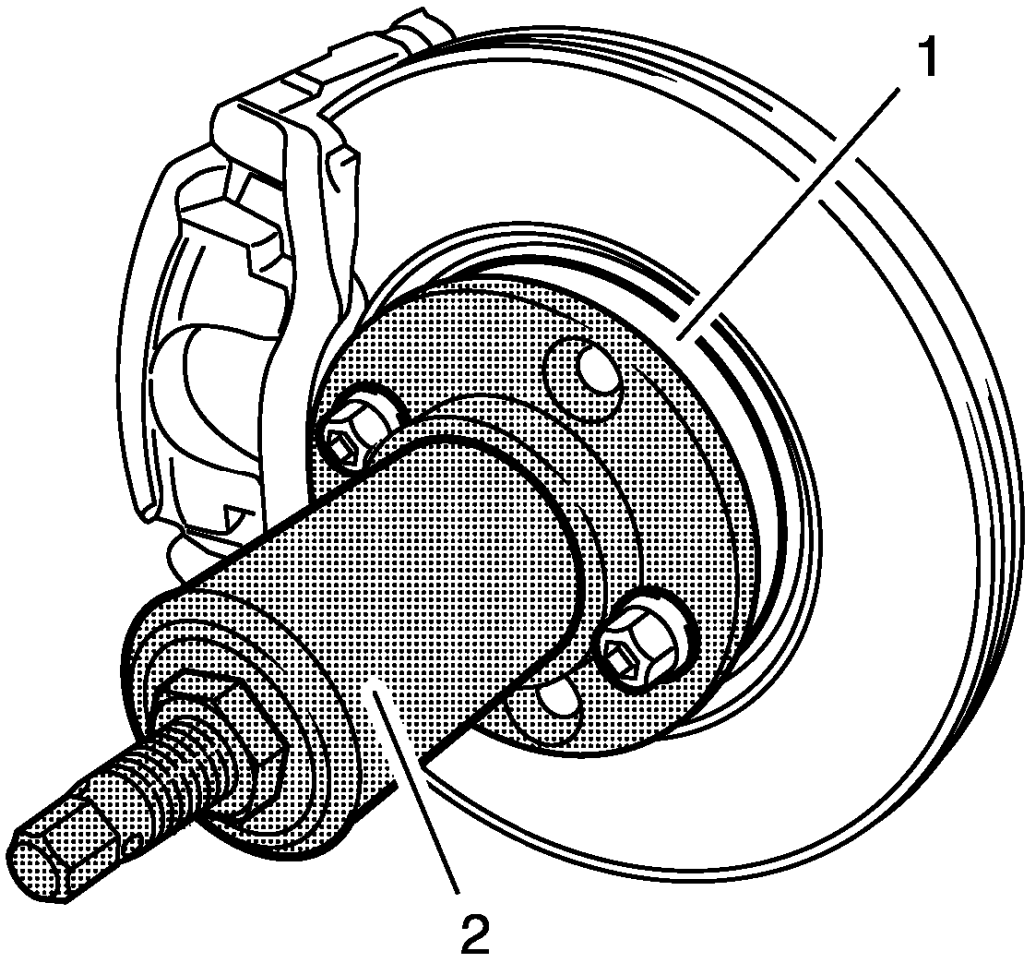

Fig. 15: Special Tool And Wheel Bearing/Hub Assembly
Courtesy of GENERAL MOTORS COMPANY

CAUTION: Support the brake caliper with heavy mechanic wire, or equivalent, whenever it is separated from its mount and the hydraulic flexible brake hose is still connected. Failure to support the caliper in this manner will cause the flexible brake hose to bear the weight of the caliper, which may cause damage to the brake hose and in turn may cause a brake fluid leak.

NOTE: Do not hit the end of the wheel drive shaft with a hammer to separate it from the wheel bearing/hub. Damage to the wheel bearing hub and/or wheel drive shaft may result.

8. Using the **CH-49400** remover (2) or equivalent, separate the brake rotor and wheel bearing/hub assembly (1).

9. Remove the outer tie rod assembly from the steering knuckle. Refer to **Steering Linkage Outer Tie Rod Replacement** .
10. Remove the ball joint from the steering knuckle. Refer to **Lower Control Arm Replacement** .

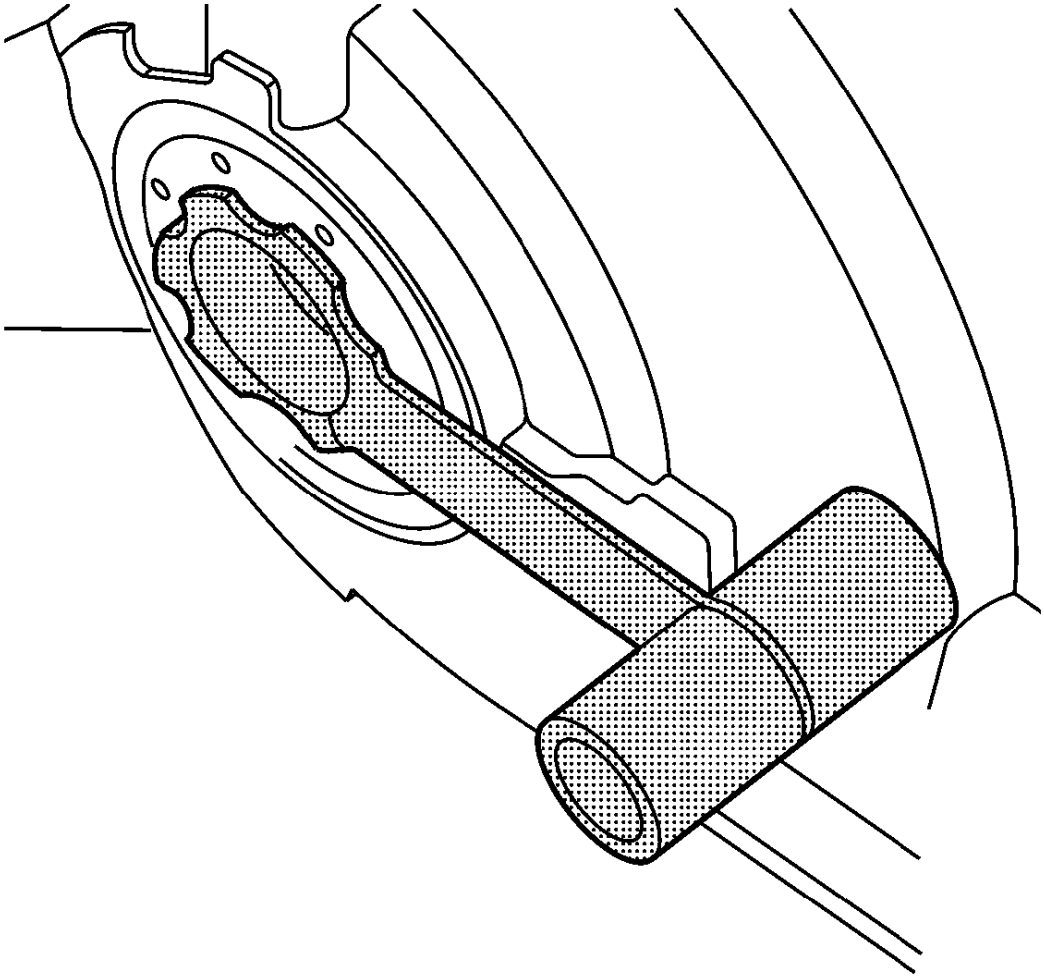

Fig. 16: Seal Protector
Courtesy of GENERAL MOTORS COMPANY

CAUTION: Wheel drive shaft seal protector must be installed into the differential output shaft seal prior to removing and installing the wheel drive shaft. Failure to install the wheel drive shaft seal protector as indicated may cause the splines of the wheel drive shaft to cut the differential output seal.

11. Install the **DT-6332** protector into the differential output shaft seal.

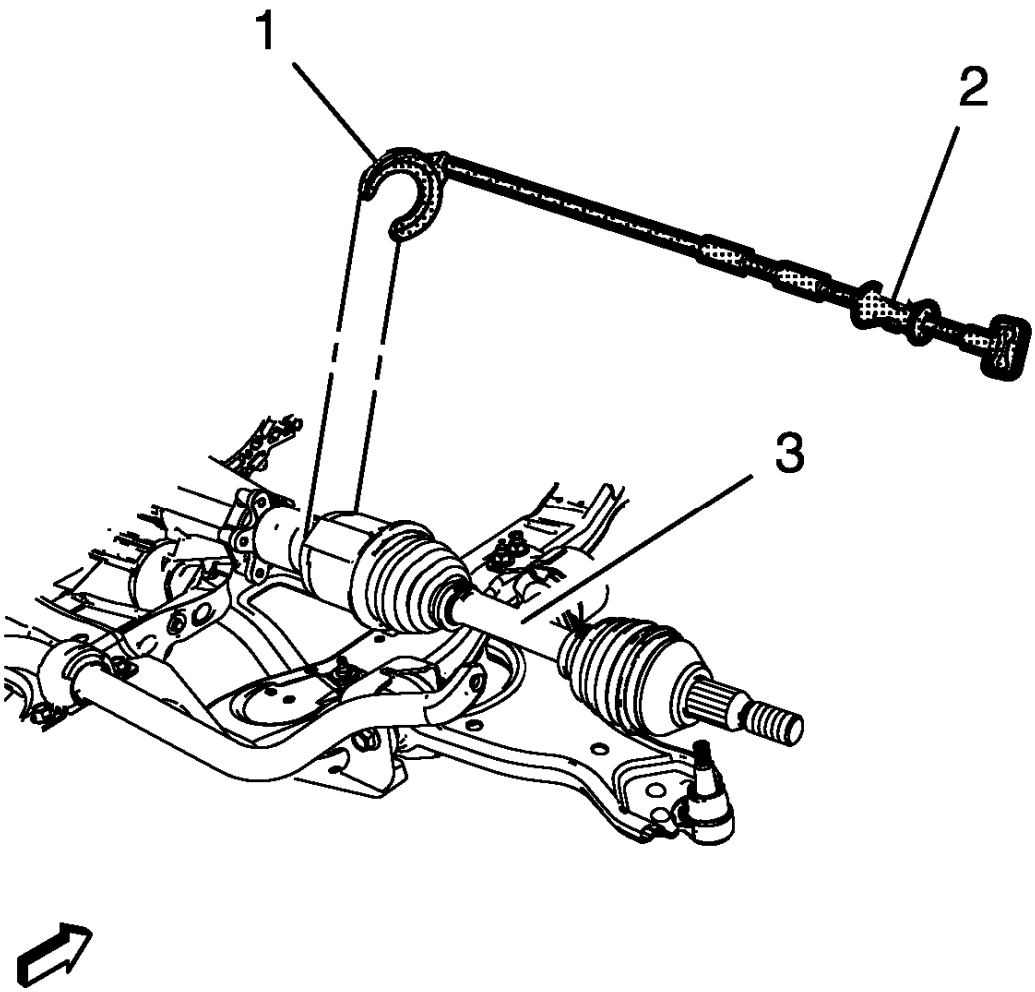

Fig. 17: Special Tools And Wheel Drive Shaft
Courtesy of GENERAL MOTORS COMPANY

12. Using the **CH-313** hammer (2) with **CH-6003** remover (1) along with **DT-29794** extension and remove the wheel drive shaft (3) from the vehicle.

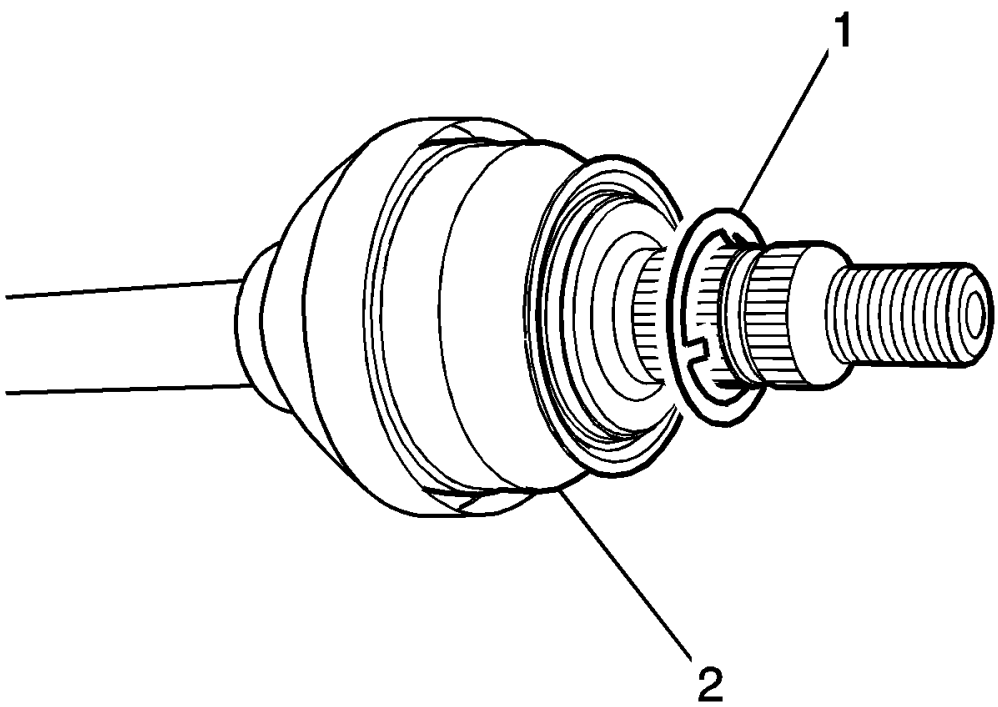

Fig. 18: Wheel Drive Shaft & Washer
Courtesy of GENERAL MOTORS COMPANY

NOTE: If there is no washer on the wheel drive shaft, install a NEW washer.

13. Remove and discard the washer (1) from the wheel drive shaft (2). DO NOT re-use the washer, replace with NEW only.

Installation Procedure

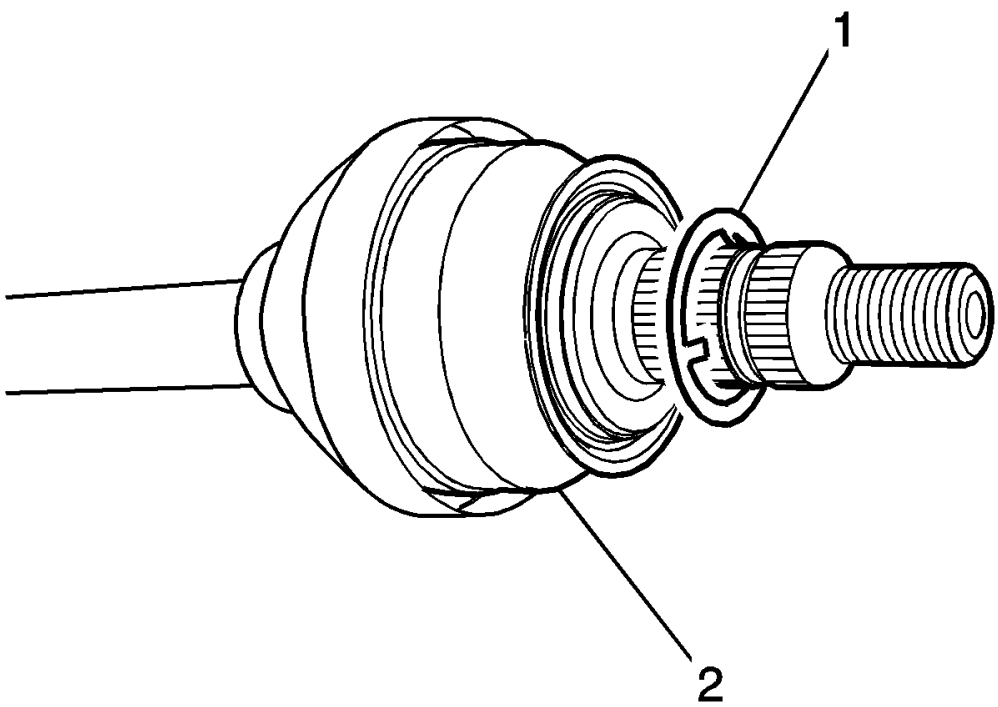

Fig. 19: Wheel Drive Shaft & Washer
Courtesy of GENERAL MOTORS COMPANY

1. Install a NEW washer (1) to the wheel drive shaft (2).

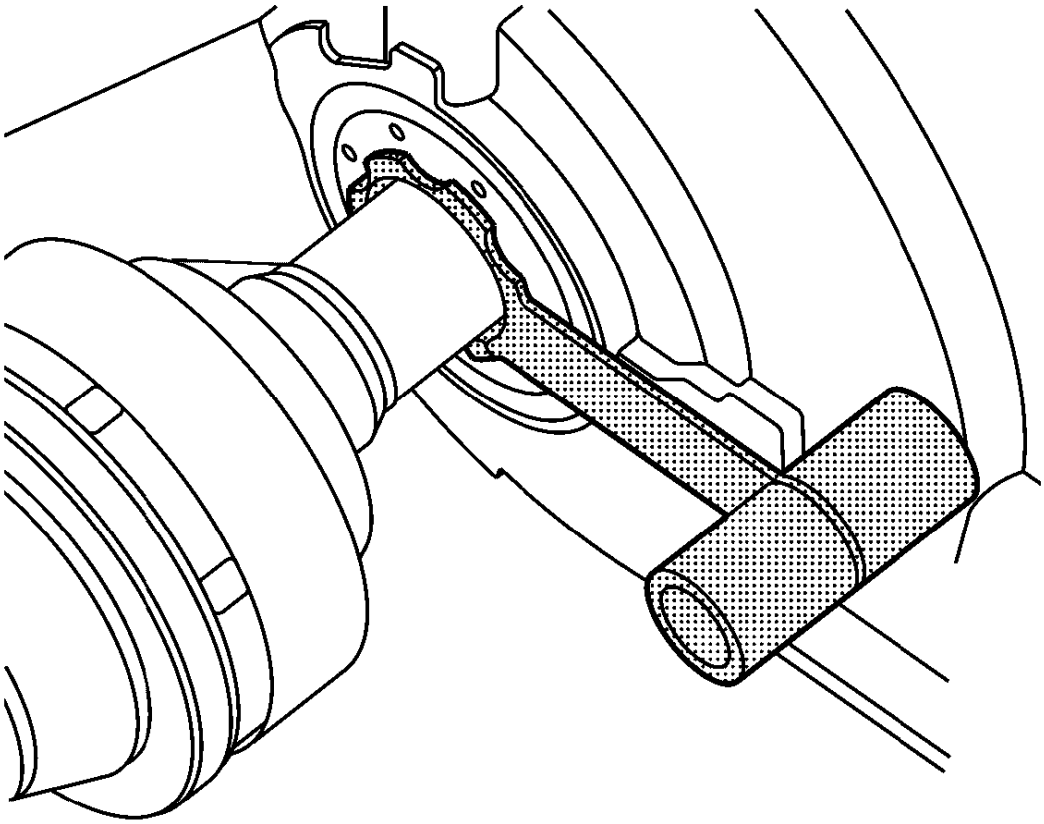

Fig. 20: Output Shaft Protector Tool
Courtesy of GENERAL MOTORS COMPANY

NOTE: In order to prevent lubricant leaks, use care when installing the wheel drive shaft to the differential. Do not damage the oil seal. Replace the oil seal if it becomes nicked, distorted, or otherwise damaged.

2. Carefully install the wheel drive shaft into the differential until the splines are past the **DT-6332** protector.

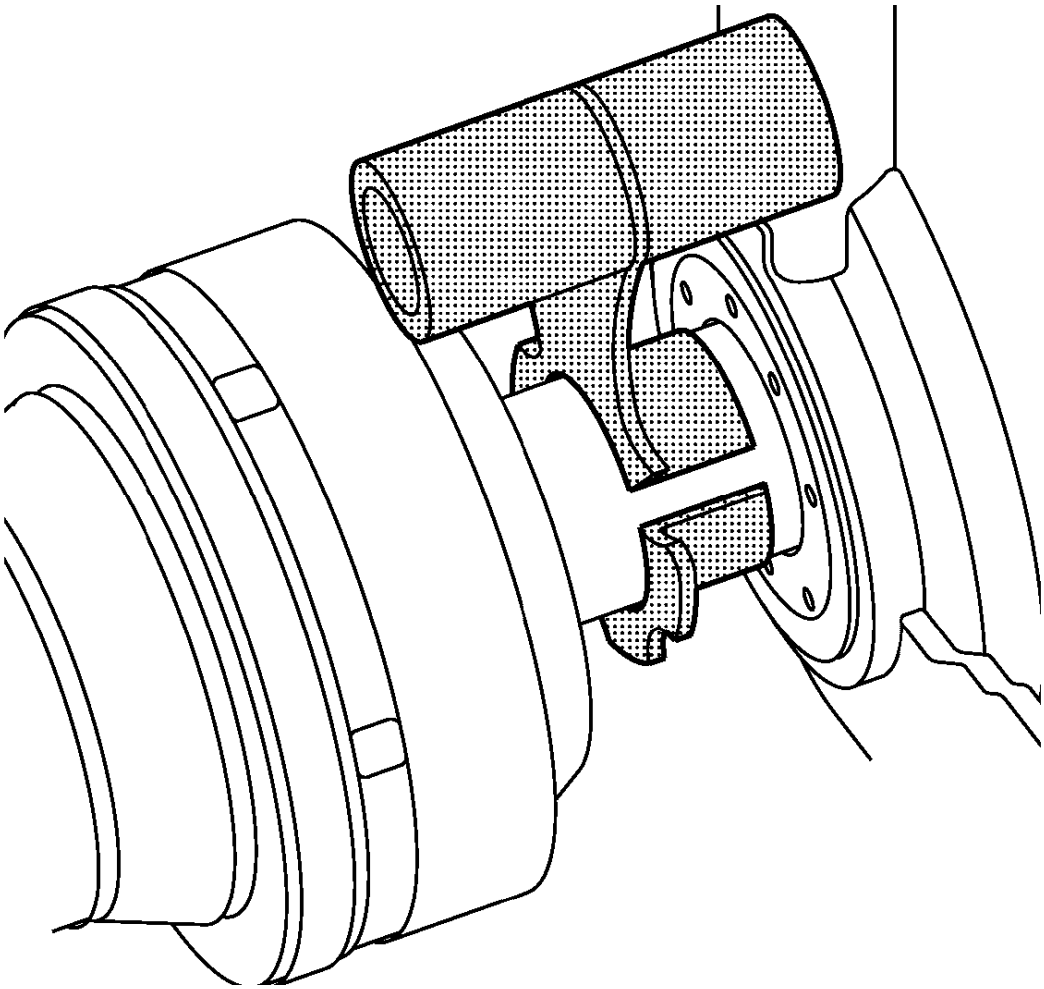

Fig. 21: Special Output Shaft Protector Tool
Courtesy of GENERAL MOTORS COMPANY

3. Remove the **DT-6332** protector from the differential output shaft seal.
4. Install the wheel drive shaft into the differential until the retaining ring is fully seated.
5. Confirm that the front wheel drive shaft retaining ring is properly seated by holding the inner housing and pull the inner housing outward.
6. Install the front wheel drive shaft into the front wheel bearing/hub.
7. Install the ball joint to the steering knuckle. Refer to **Lower Control Arm Replacement** .
8. Install the outer tie rod assembly at the steering knuckle. Refer to **Steering Linkage Outer Tie Rod Replacement** .

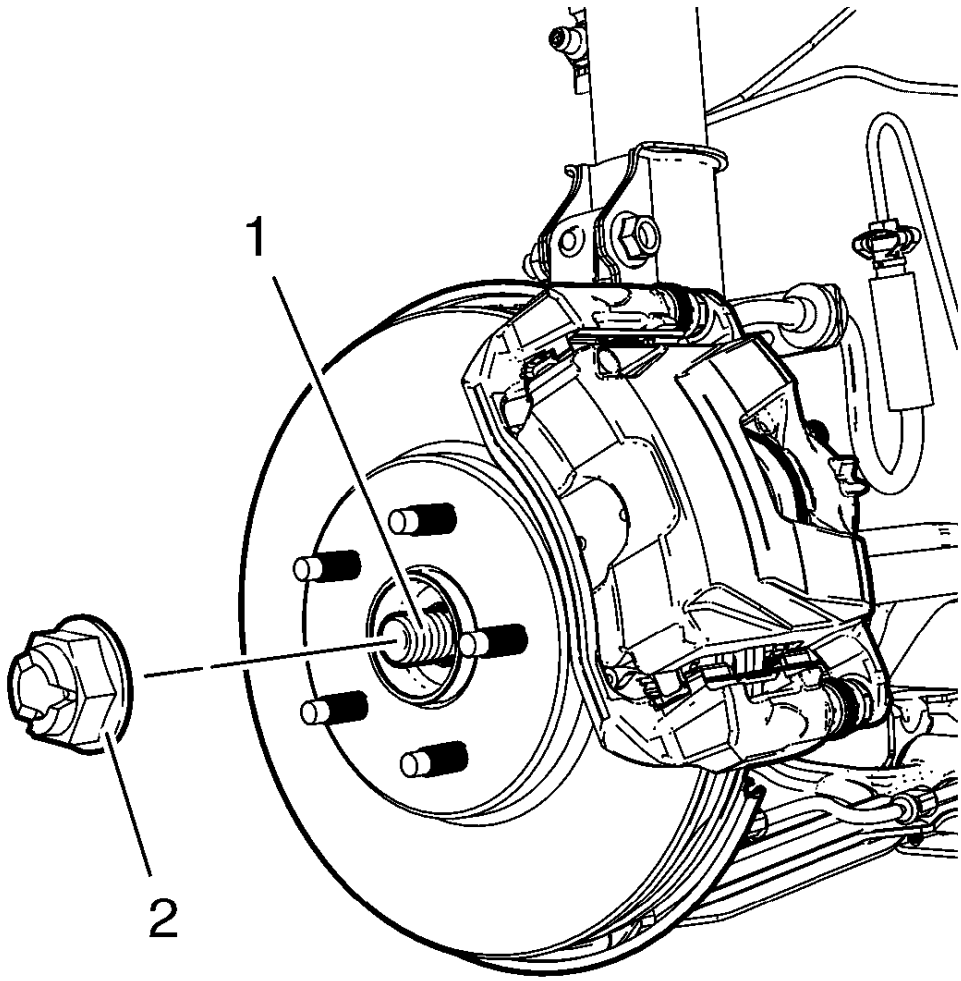

Fig. 22: Wheel Drive Shaft And Nut
Courtesy of GENERAL MOTORS COMPANY

WARNING: Refer to Torque-to-Yield Fastener Warning .

CAUTION: Refer to Fastener Caution .

9. Install the NEW wheel drive shaft nut (2) to the wheel drive shaft (1) tighten in 3 passes.

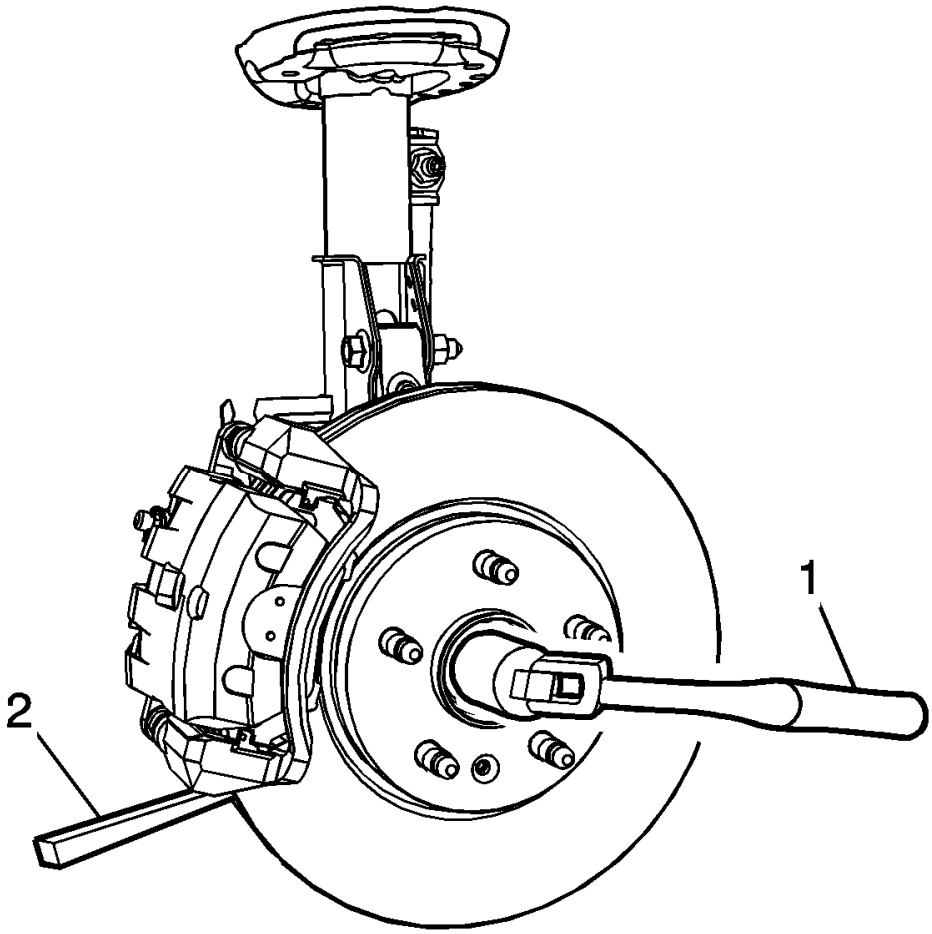

Fig. 23: Tightening Wheel Drive Shaft Nut
Courtesy of GENERAL MOTORS COMPANY

10. Insert a drift or punch (2) in the cooling fins of the brake rotor.
11. Rotate the brake rotor until the drift or punch contacts the brake caliper mounting bracket.
12. Using a torque wrench (1) and the appropriate size socket, tighten the wheel drive shaft nut to 150 N.m (111 lb ft).
13. Release the wheel drive shaft nut (2) trough 45 degrees.
14. Retighten the wheel drive shaft nut (2) to 250 N.m (185 lb ft).
15. Install the tire and wheel assembly. Refer to **Tire and Wheel Removal and Installation** .
16. Lower the vehicle.
17. Refill the transmission.
    - For vehicles with manual transmission, refer to **Transmission Fluid Drain and Fill** .
    - For vehicles with automatic transmission, refer to **Transmission Fluid Drain and Fill** .

FRONT WHEEL DRIVE SHAFT INNER JOINT AND BOOT REPLACEMENT

Special Tools

- **CH-804** Tensioner
- **GE-396** Snap Ring Pliers

For equivalent regional tools, refer to **Special Tools**.

Removal Procedure

1. Remove the left or right wheel drive shaft, refer to **Front Wheel Drive Shaft Replacement - Left Side**, or **Front Wheel Drive Shaft Replacement - Right Side**

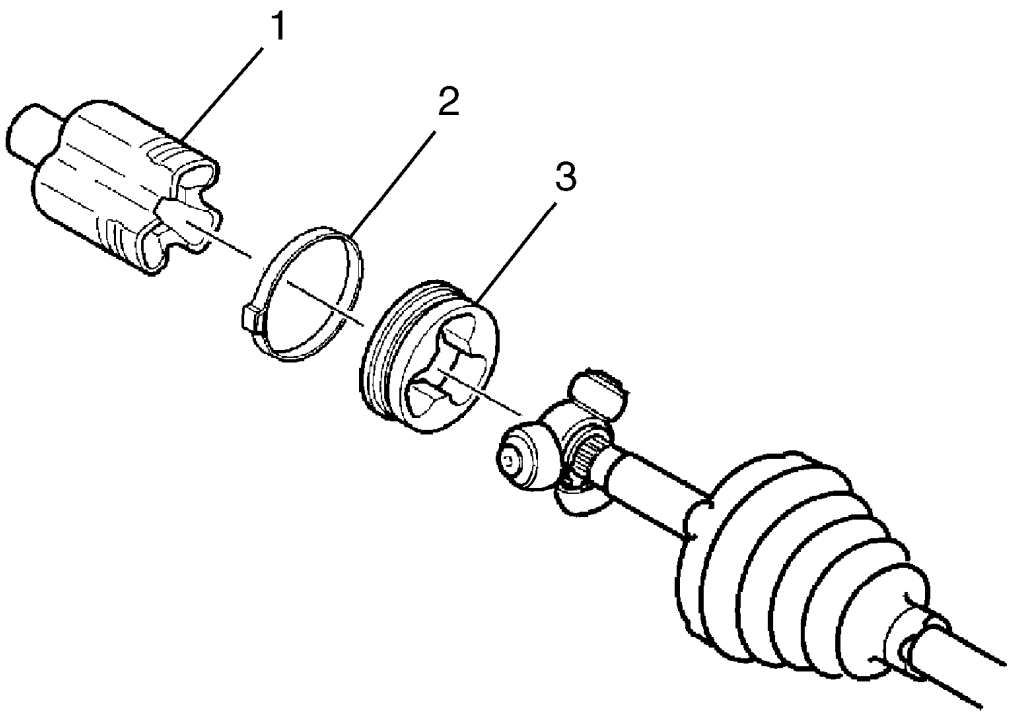

Fig. 24: Wheel Drive Shaft Inner Joint Components
Courtesy of GENERAL MOTORS COMPANY

CAUTION: Do not cut through the wheel drive shaft inboard or outboard boot

during service. Cutting through the boot may damage the sealing surface of the housing and the tripot or the constant velocity joint bushing. Damage to the sealing surface may lead to water and dirt intrusion and premature wear of the constant velocity joint.

2. If equipped with a small swage ring, use a hand grinder to cut through the swage ring, taking care not to damage the halfshaft bar, in order to remove the swage ring. Otherwise, remove the small seal retaining clamp with a side cutter. Discard the retaining clamp.
3. Remove the large seal retaining clamp (2) from the tripot joint with side cutters. Discard the large seal retaining clamp.
4. Separate the inboard seal from the trilobal tripot bushing (3) at the large diameter.
5. Slide the seal away from the joint along the halfshaft bar.

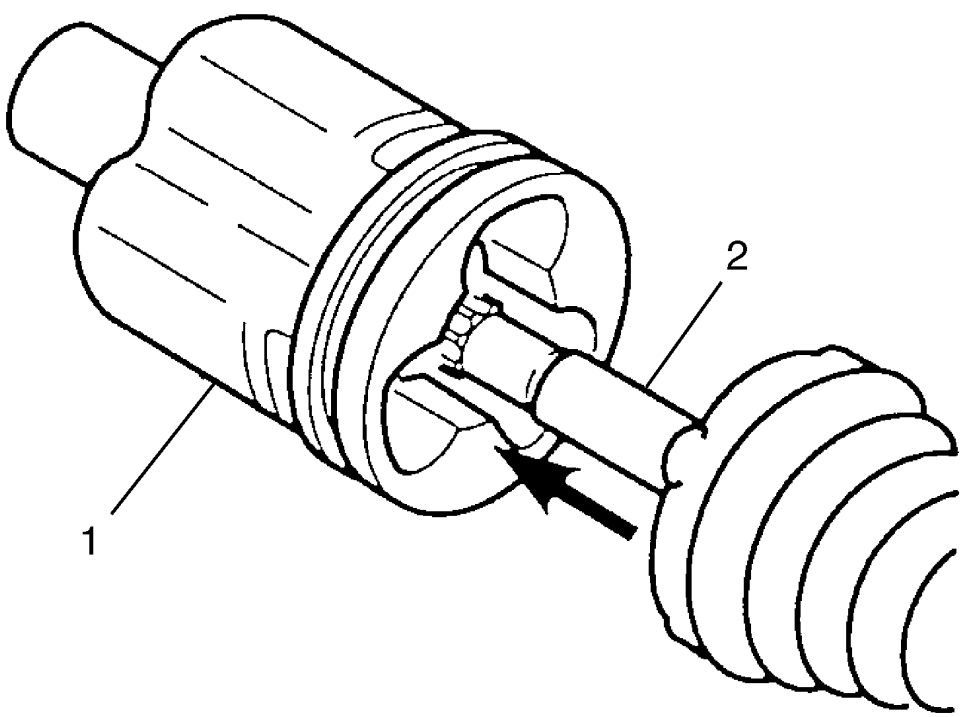

Fig. 25: View Of Housing, Tripot Joint Spider & Halfshaft Bar
Courtesy of GENERAL MOTORS COMPANY

6. Remove the housing (1) from the tripot joint spider and the halfshaft bar (2).

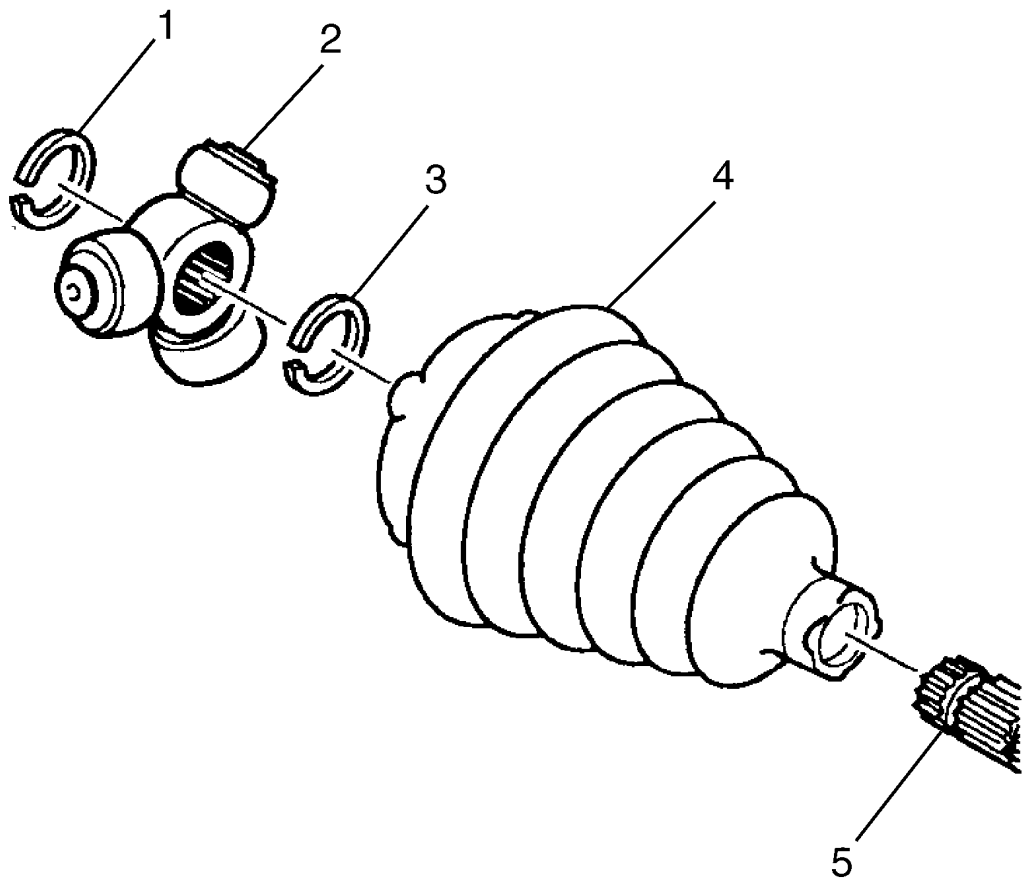

Fig. 26: View Of Spider Assembly, Rings & Tripot Boot
Courtesy of GENERAL MOTORS COMPANY

7. Remove the spacer ring (1), spider assembly (2), spacer ring (3) (if equipped) using **GE-396** pliers, and tripot boot (4). DISCARD the boot and rings.
8. Clean the halfshaft bar (5). Use a wire brush in order to remove any rust in the boot mounting area (grooves).
9. Inspect the needle rollers, needle bearings, and trunnion. Check the tripot housing for unusual wear, cracks, or other damage. Replace any damaged parts with the appropriate kit.

Installation Procedure

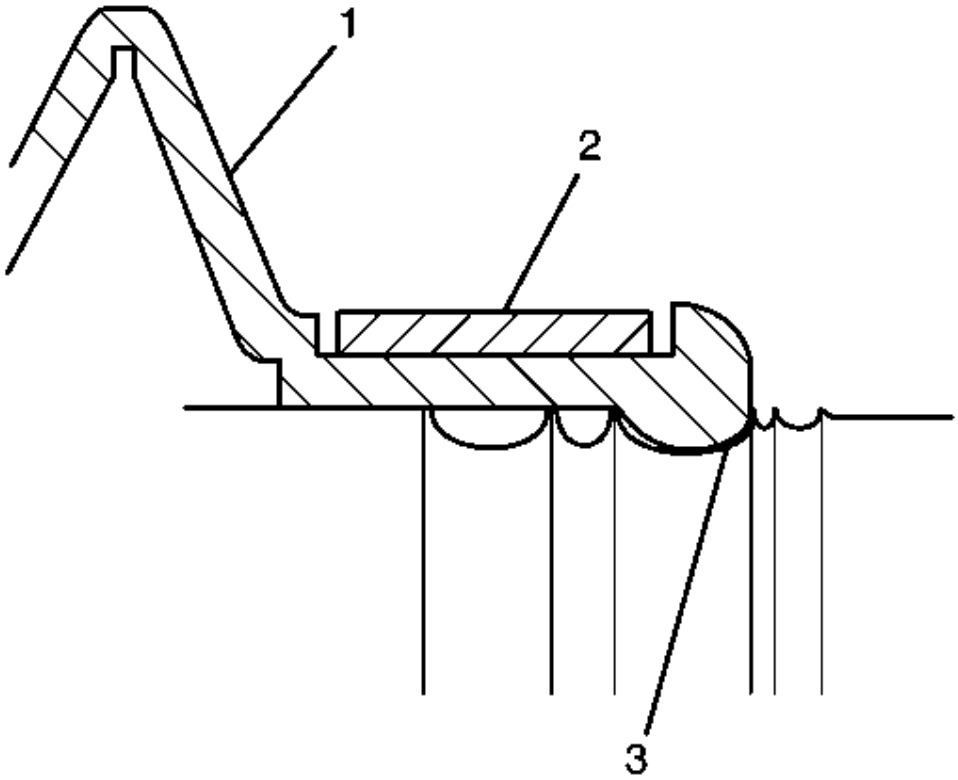

Fig. 27: View Of Outboard Seal, Seal Groove & Eared Clamp
Courtesy of GENERAL MOTORS COMPANY

NOTE: Place a towel in the vise before inserting the halfshaft.

1. Mount the halfshaft into a vise.
2. Place the new small eared clamp (2) onto the small end of the joint seal (1). Slide the joint seal (1) and the eared clamp (2) onto the halfshaft bar.
3. Position the small end of the joint seal (1) into the joint seal groove (3) on the halfshaft bar.

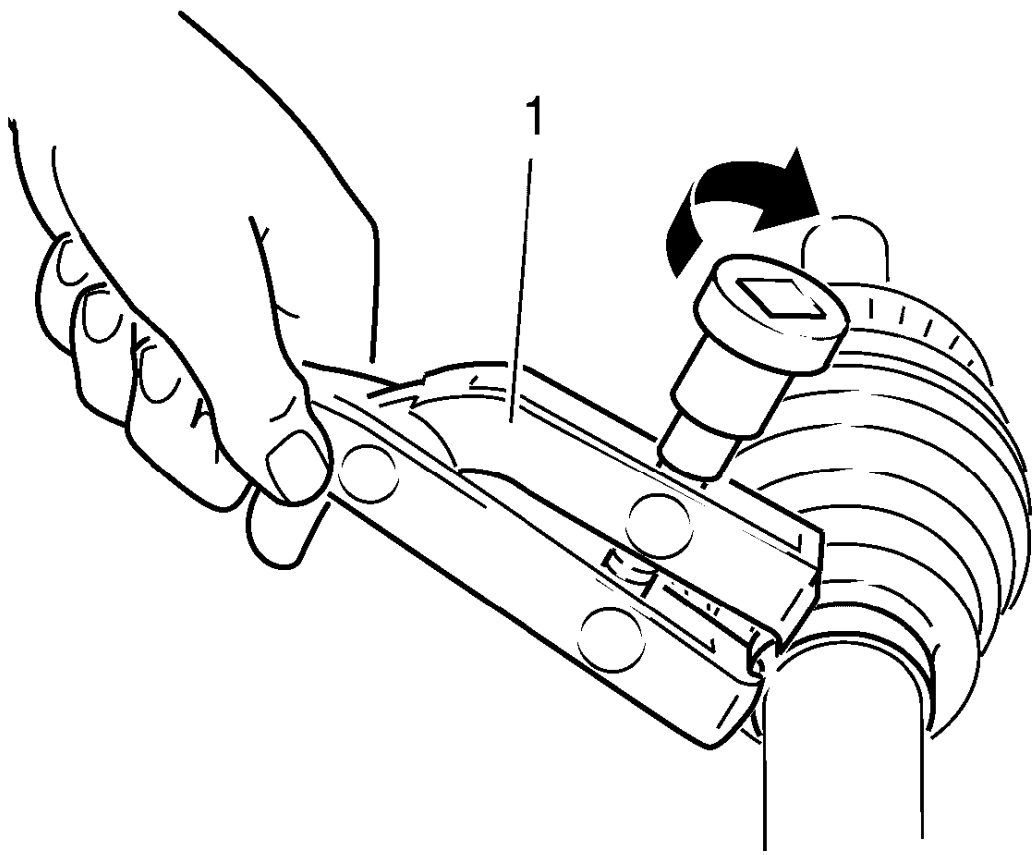

Fig. 28: Identifying Clamp And Special Tool CH-804
Courtesy of GENERAL MOTORS COMPANY

4. Crimp the eared clamp (1) using the **CH-804** tensioner (1), and a torque wrench. Tighten the eared clamp to 25 N.m (19 lb ft).

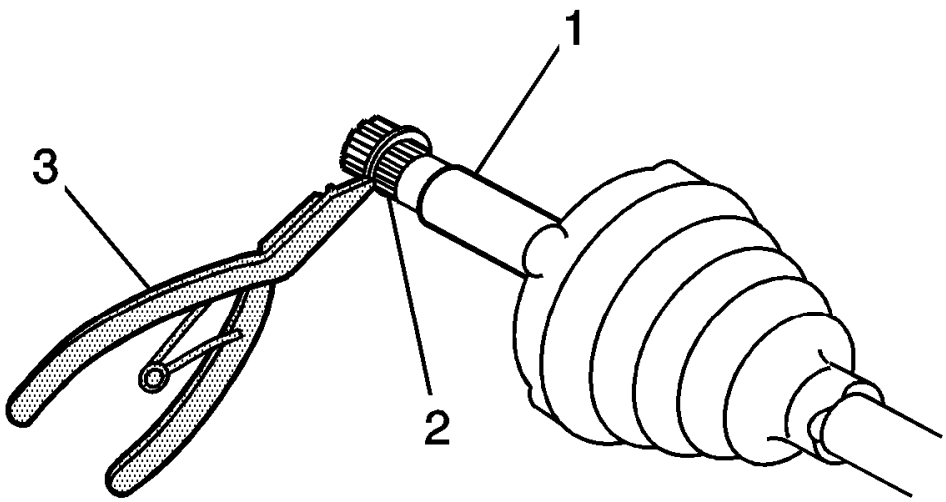

Fig. 29: View Of Spacer Ring
Courtesy of GENERAL MOTORS COMPANY

5. Install the spacer ring (2) into the groove of the halfshaft bar using

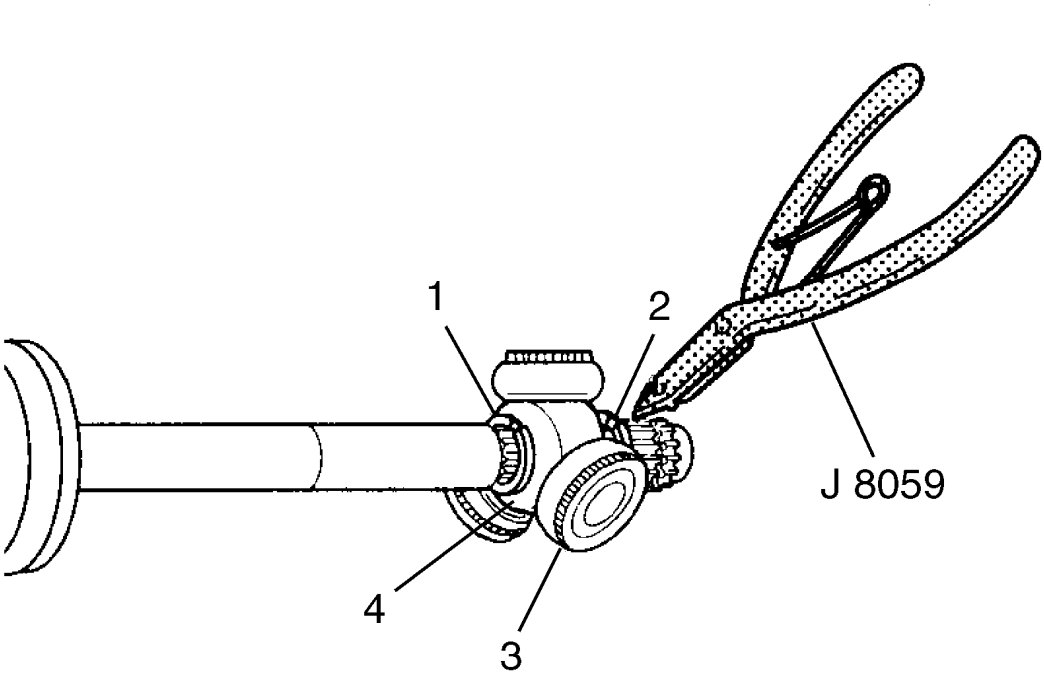

Fig. 30: Spider Assembly & Spacer Rings
Courtesy of GENERAL MOTORS COMPANY

6. Slide the tripot joint spider assembly (4) as far as it will go on the halfshaft bar.
7. Install the spacer ring (2) into the groove of the halfshaft bar, using **GE-396** pliers.

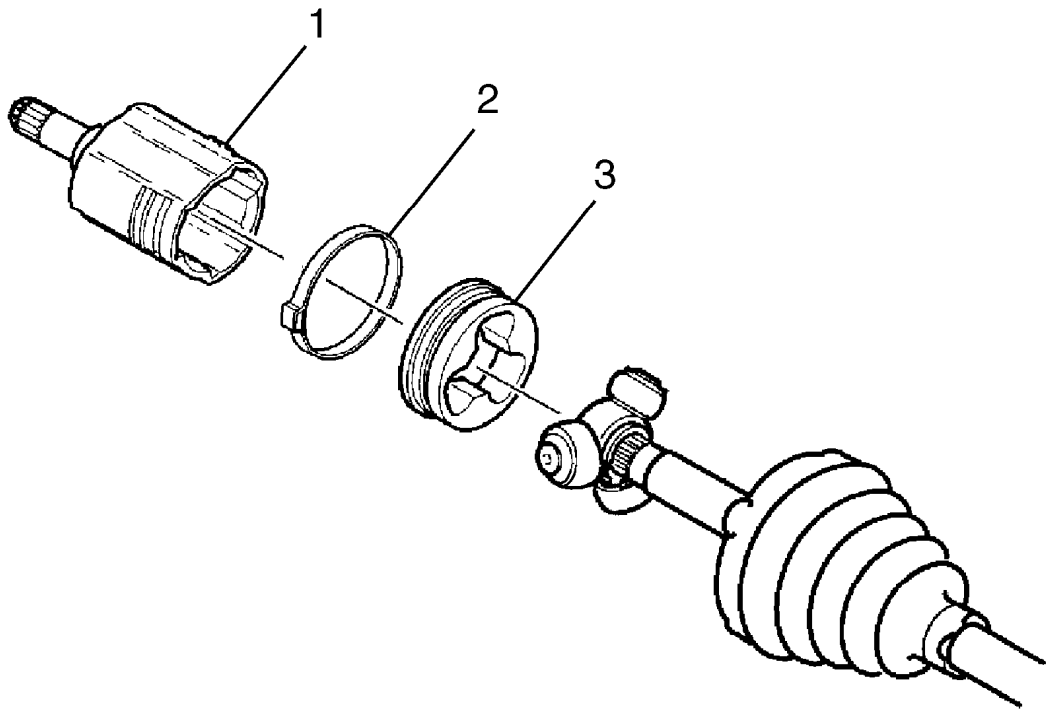

Fig. 31: Seal Retaining Clamp, Tripot Bushing & Housing
Courtesy of GENERAL MOTORS COMPANY

8. Place approximately 150 grams of the lubricant on the boot and the remaining half of the tripod housing. Refer to **Adhesives, Fluids, Lubricants, and Sealers**.

NOTE: Ensure the trilobal tripot bushing (3) is flush with the face of the housing (1).

9. Install the trilobal tripot bushing (3) to housing (1).
10. Position the larger new seal retaining clamp (2) on the halfshaft inboard seal.
11. Slide the housing (1) over the tripot joint spider assembly on the halfshaft bar.

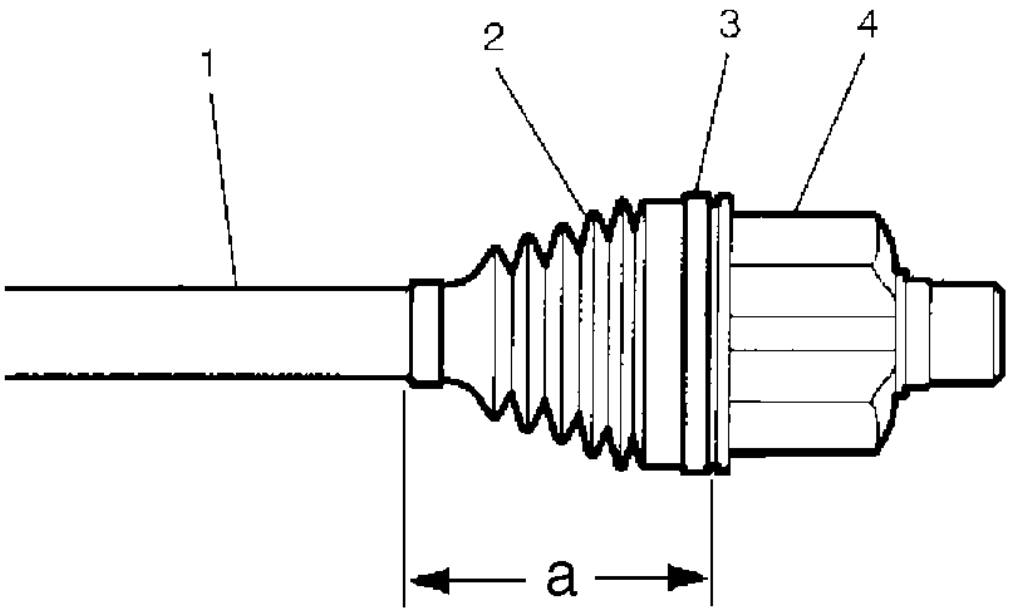

Fig. 32: Identifying Axle Shaft/CV Joint Assembly Compontents And Installed Boot Measurement Dimension
Courtesy of GENERAL MOTORS COMPANY

12. Slide the large diameter of the halfshaft inboard seal (2), with larger clamp (3) in place, over the outside of the trilobal tripot bushing and locate the lip of the seal in the groove.
13. Position the joint assembly at the proper vehicle dimension, a = 106 mm (4.00 in).
14. Carefully insert a thin flat blunt tool, no sharp edges, between the large seal opening and the trilobal tripot bushing in order to equalize the pressure. Remove the tool.

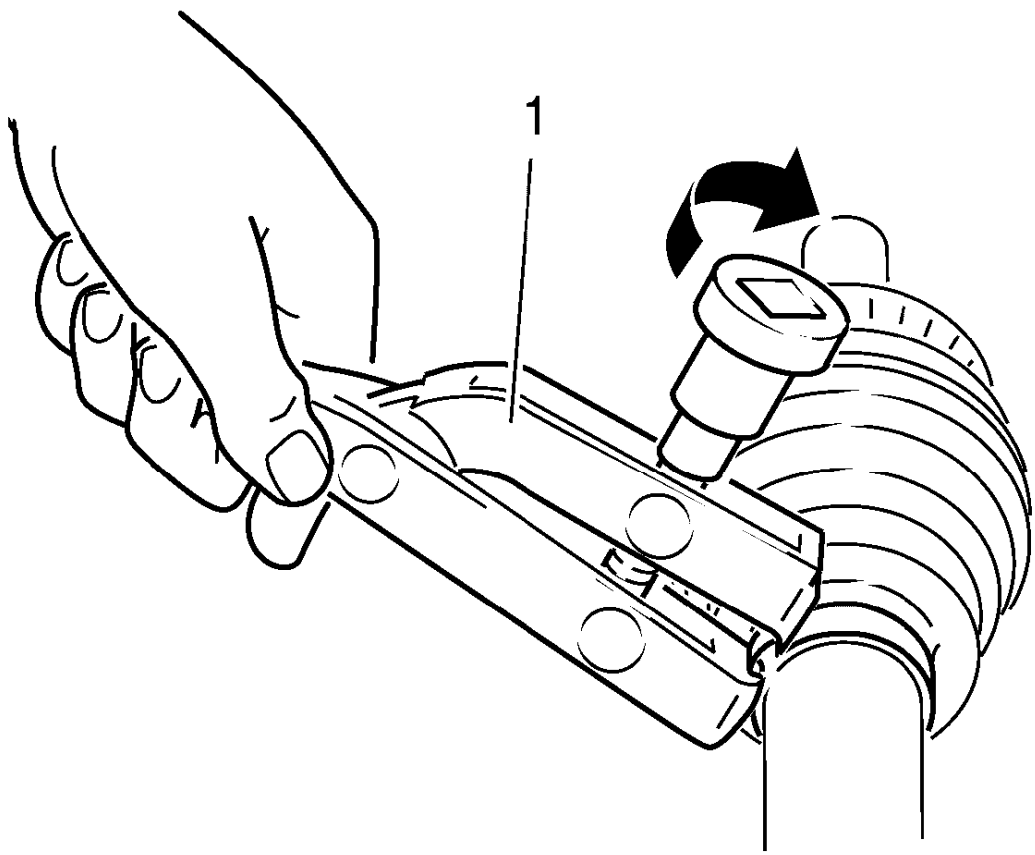

Fig. 33: Identifying Clamp And Special Tool CH-804
Courtesy of GENERAL MOTORS COMPANY

15. Crimp the eared clamp (1) using the **CH-804** tensioner (1), and a torque wrench. Tighten the eared clamp to 25 N.m (19 lb ft).
16. Fully stroke the joint several times to disperse the grease.
17. Install the left or right wheel drive shaft, refer to **Front Wheel Drive Shaft Replacement - Left Side**, or **Front Wheel Drive Shaft Replacement - Right Side**.

FRONT WHEEL DRIVE SHAFT OUTER JOINT AND BOOT REPLACEMENT

Special Tools

- **GE-396** Snap Ring Pliers
- **CH-804** Tensioner

For equivalent regional tools, refer to **Special Tools**.

Removal Procedure

1. Remove the left or right wheel drive shaft, refer to **Front Wheel Drive Shaft Replacement - Left Side**, or **Front Wheel Drive Shaft Replacement - Right Side**.

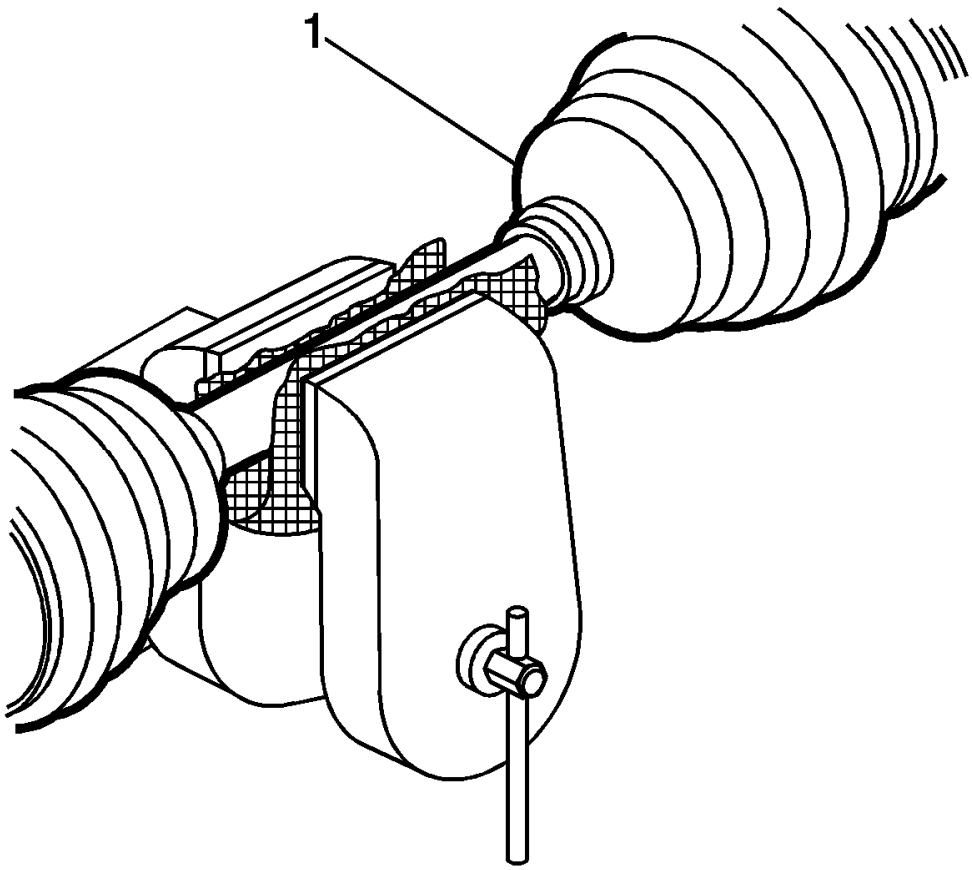

Fig. 34: View Of Front Wheel Drive Shaft Inner Joint
Courtesy of GENERAL MOTORS COMPANY

2. Clamp the drive axle shaft in a soft jawed vice.

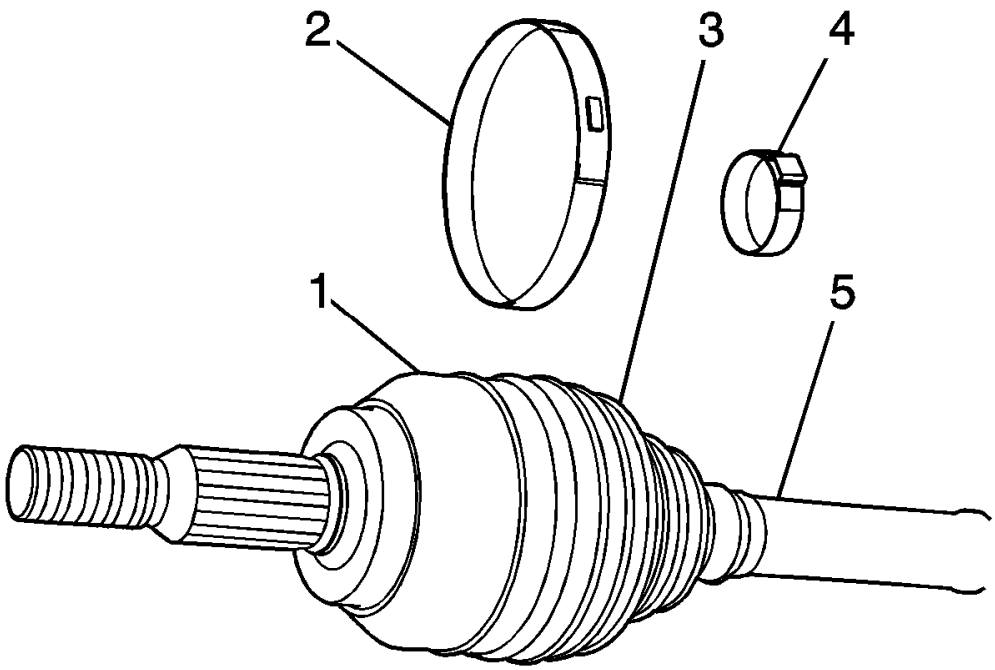

Fig. 35: Identifying Boot Clamps
Courtesy of GENERAL MOTORS COMPANY

CAUTION: Do not cut through the wheel drive shaft inboard or outboard boot during service. Cutting through the boot may damage the sealing surface of the housing and the tripot or the constant velocity joint bushing. Damage to the sealing surface may lead to water and dirt intrusion and premature wear of the constant velocity joint.

3. Use a flat-bladed tool, remove the boot clamp (2) from the constant velocity (CV) joint (1) and the boot (3).
4. Using a pair of side cutters, remove and discard the boot clamp (4) from the boot (3) and the wheel drive shaft (5). Replace with NEW clamps.

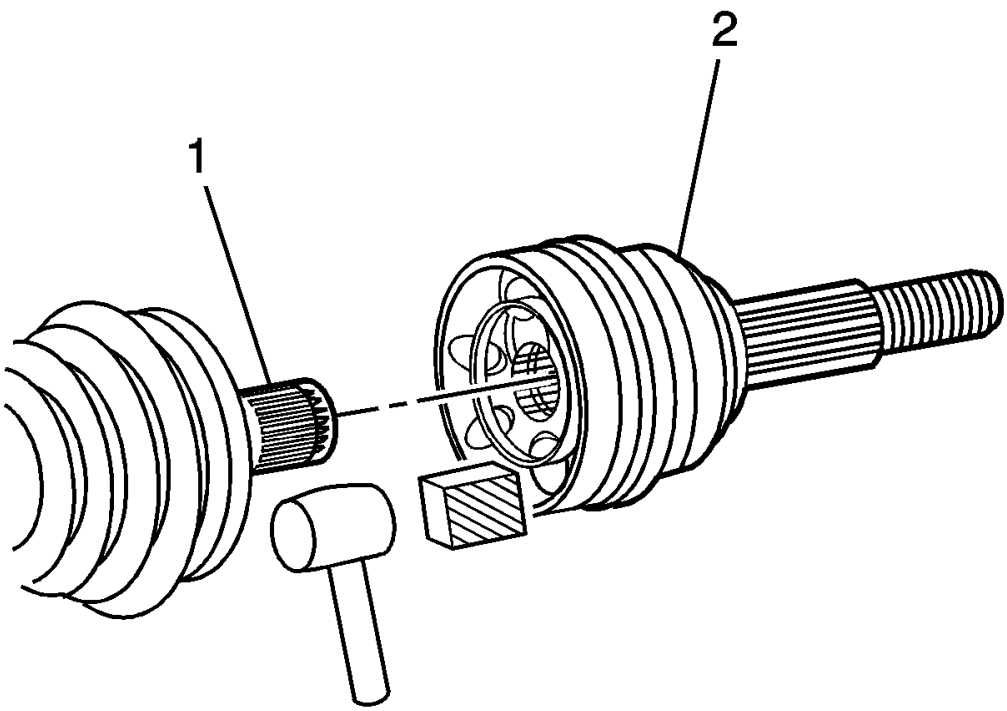

Fig. 36: Separating CV Joint From Axle Shaft
Courtesy of GENERAL MOTORS COMPANY

5. Using a block of wood and a hammer, remove the CV joint (2) from the wheel drive shaft (1).

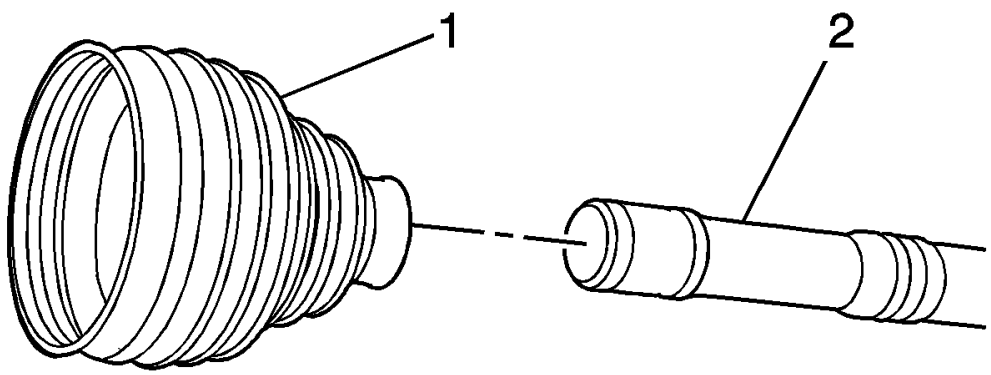

Fig. 37: Identifying Clamp & Wheel Drive Shaft
Courtesy of GENERAL MOTORS COMPANY

6. Remove the boot (1) from the wheel drive shaft (2).
7. Inspect the outer CV joint for damage and wear. Refer to **Wheel Drive Shaft Outer Joint Inspection**.

Installation Procedure

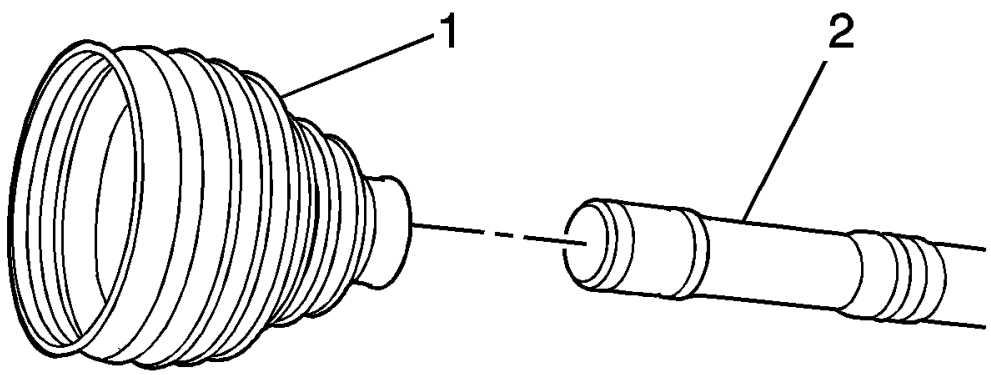

Fig. 38: Identifying Clamp & Wheel Drive Shaft
Courtesy of GENERAL MOTORS COMPANY

NOTE: Position the inner boot clamp on the wheel drive shaft prior the boot assemble.

1. Position the boot (1) on the wheel drive shaft (2).

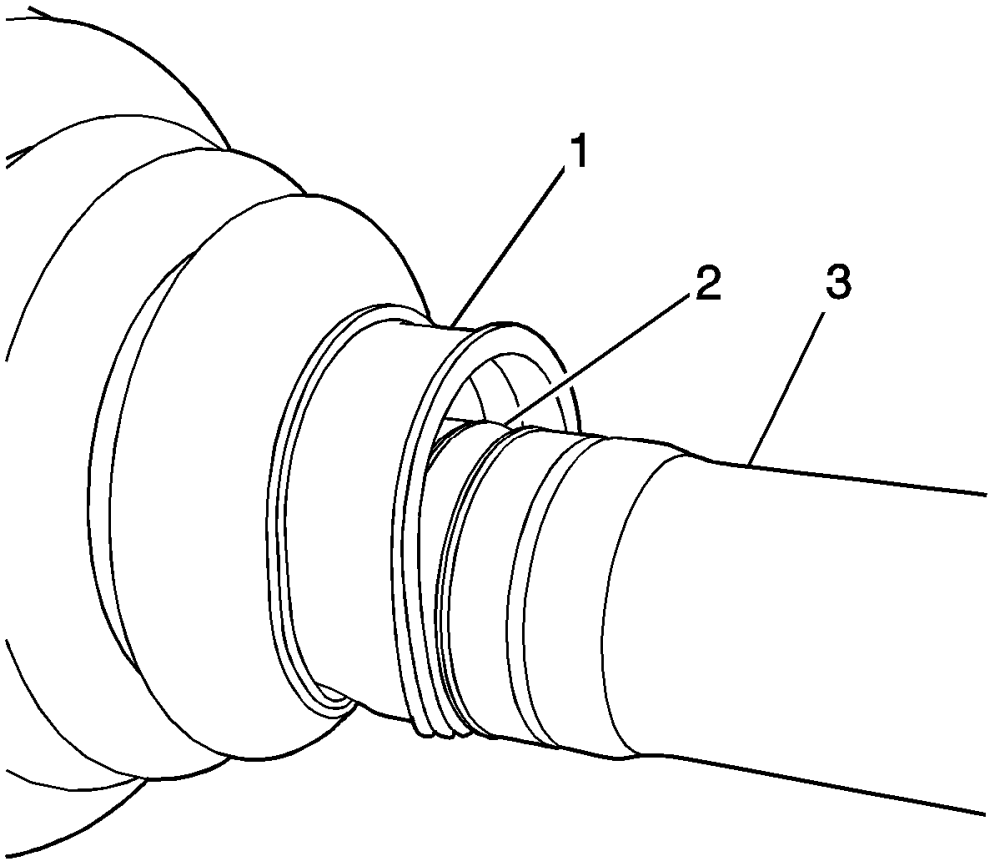

Fig. 39: Identifying Groove In Wheel Drive Shaft
Courtesy of GENERAL MOTORS COMPANY

2. Ensure that the boot (1) is properly seated in the groove (2) in the wheel drive shaft (3).

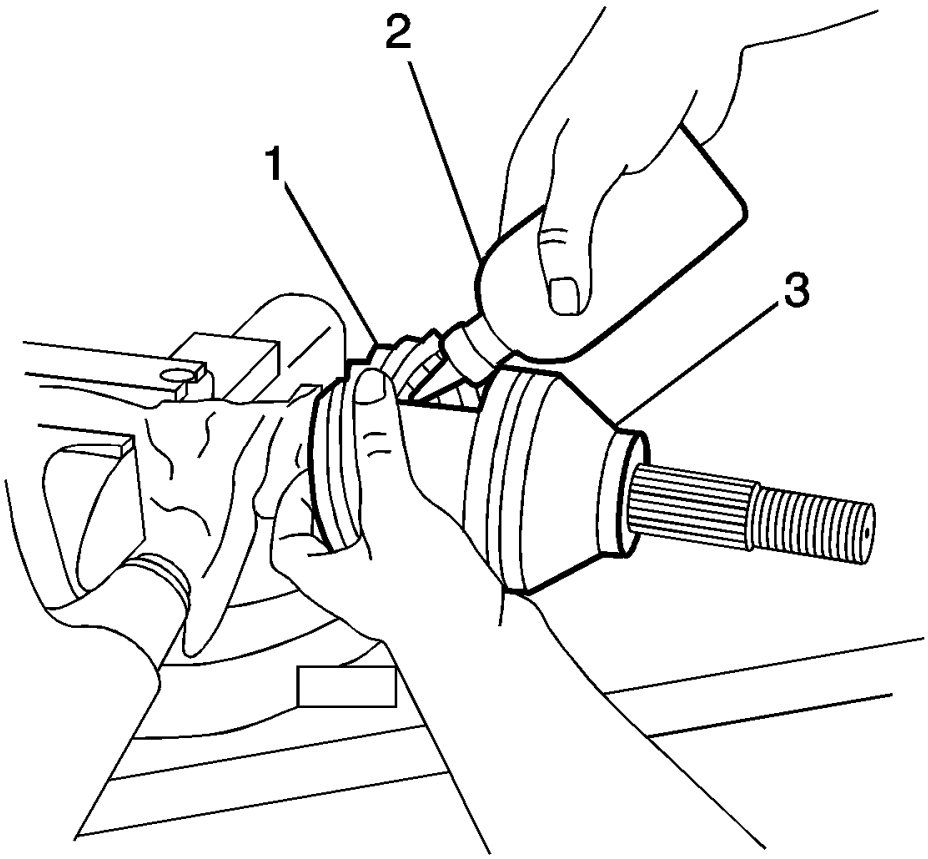

Fig. 40: Lubricating Boot Of Tripot Housing
Courtesy of GENERAL MOTORS COMPANY

3. Place approximately 160 grams of lubricant (2) inside the outboard boot (1) and pack the CV joint (3) with the remaining lubricant. Refer to **Adhesives, Fluids, Lubricants, and Sealers**.

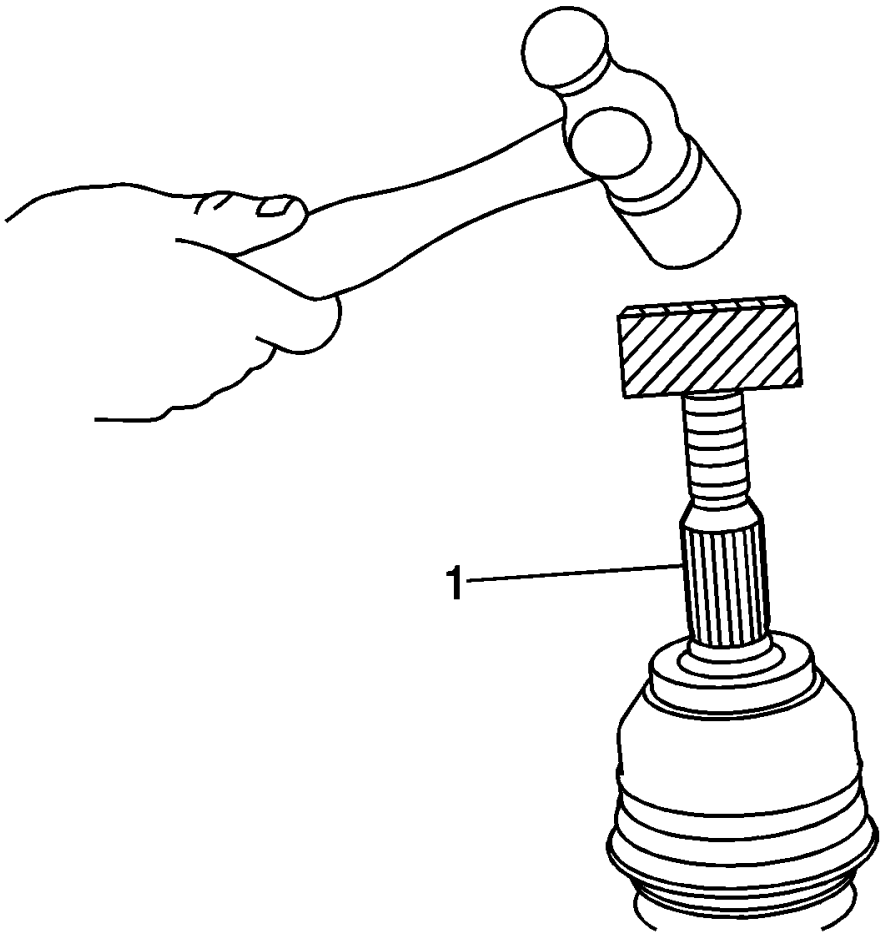

Fig. 41: Installing CV Joint
Courtesy of GENERAL MOTORS COMPANY

4. Using a block of wood and a hammer, install the CV joint on the wheel drive shaft (1).

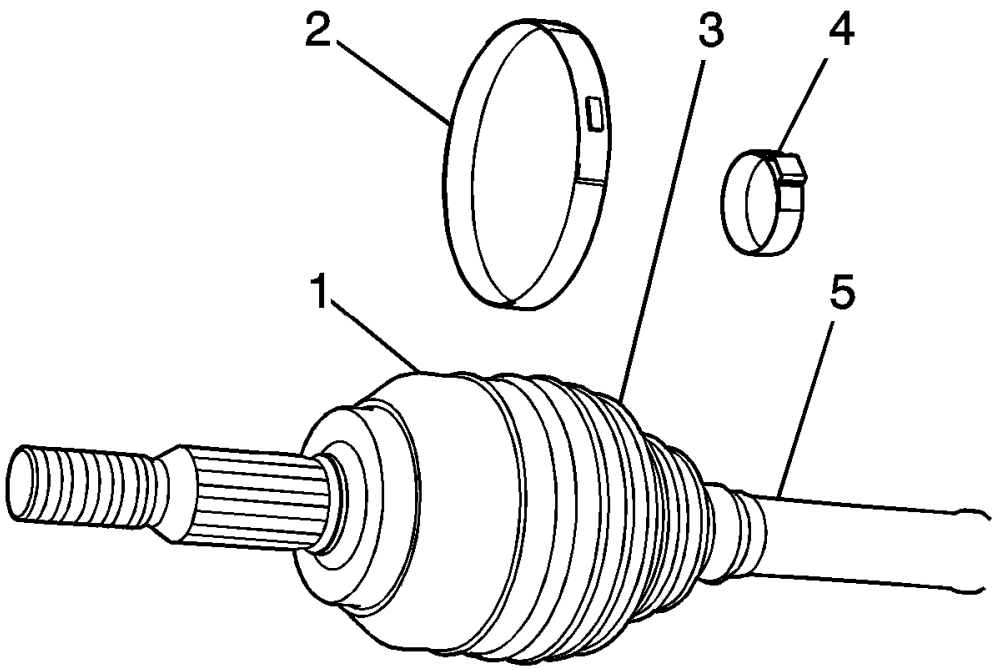

Fig. 42: Identifying Boot Clamps
Courtesy of GENERAL MOTORS COMPANY

5. Install the boot clamp (4) on the boot (3) and the wheel drive shaft (5).
6. Install the boot clamp (2) on the boot (3) and the CV joint housing (1).

CAUTION: Refer to Fastener Caution .

7. Crimp the eared clamp using the **CH-804** tensioner (1), and a torque wrench. Tighten the eared clamp to 25 N.m (19 lb ft).
8. Remove the wheel drive shaft from the bench vise.
9. Move the CV joint in a circular motion 4 to 5 times to distribute the lubricant.
10. Install the left or right wheel drive shaft, refer to **Front Wheel Drive Shaft Replacement - Left Side**, or **Front Wheel Drive Shaft Replacement - Right Side**.

WHEEL DRIVE SHAFT OUTER JOINT INSPECTION

Disassembly Procedure

1. Remove the outer constant velocity (CV) joint and boot from the wheel drive shaft. Refer to **Front Wheel Drive Shaft Outer Joint and Boot Replacement**.
2. Remove any lubricant from the CV joint.

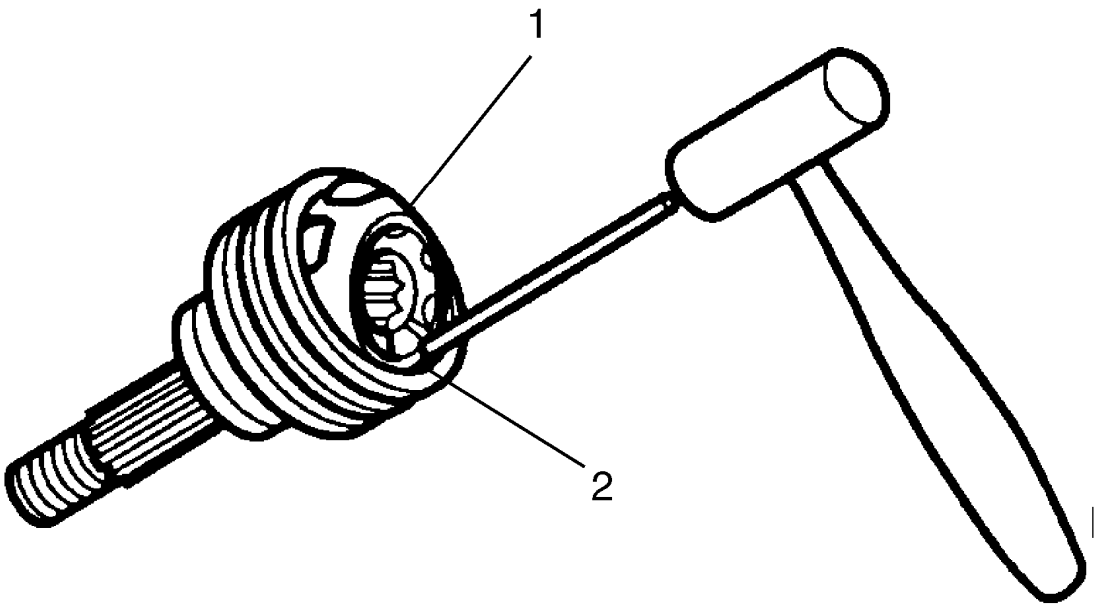

Fig. 43: Taping Gently On Brass Drift With A Hammer In Order To Tilt Cage
Courtesy of GENERAL MOTORS COMPANY

NOTE: Position the cage and the inner race so they are level.

3. Install the outer CV joint assembly in a soft jawed vise.

NOTE: The following procedure will have to be repeated until all the ball bearing are removed form the cage.

4. Using a brass drift (1), gentle tap the cage until the ball bearing can be removed from the cage.

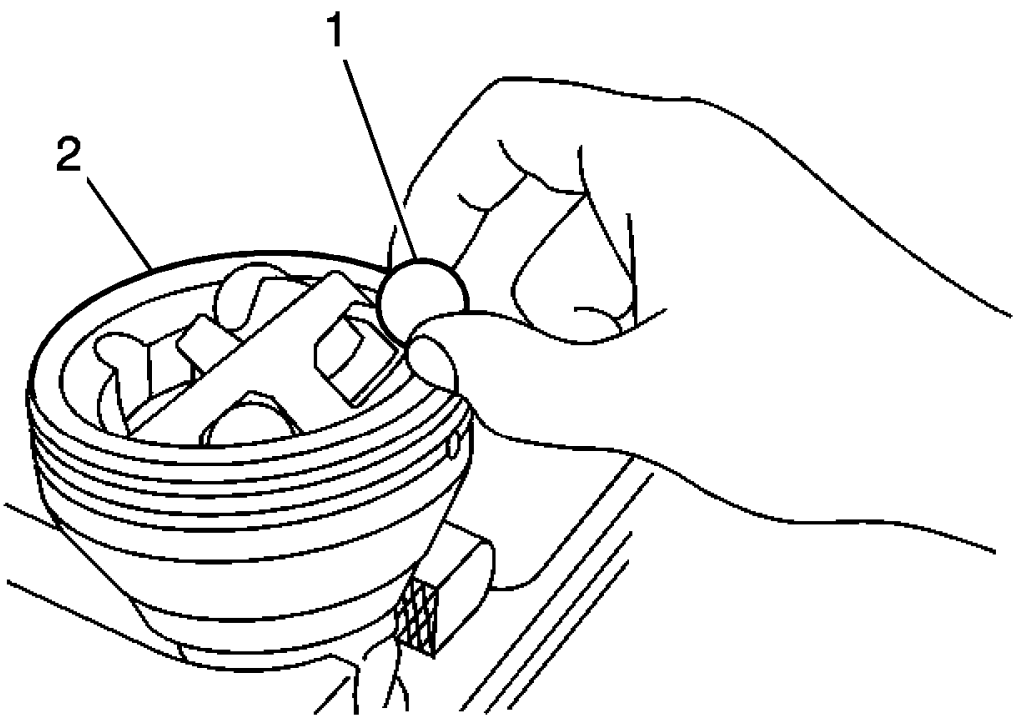

Fig. 44: Ball Bearing & CV Joint
Courtesy of GENERAL MOTORS COMPANY

5. Using a small screwdriver, remove the ball bearings (1) from the CV joint (2).

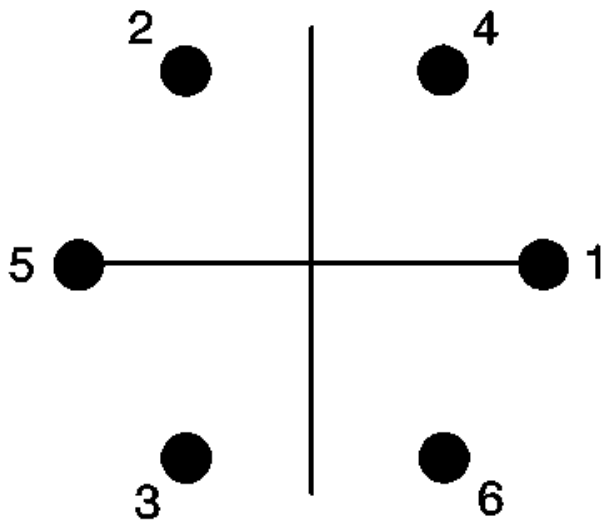

Fig. 45: View Of Ball Removal/Installation Sequence
Courtesy of GENERAL MOTORS COMPANY

6. Remove the ball bearings from the CV joint in sequence.

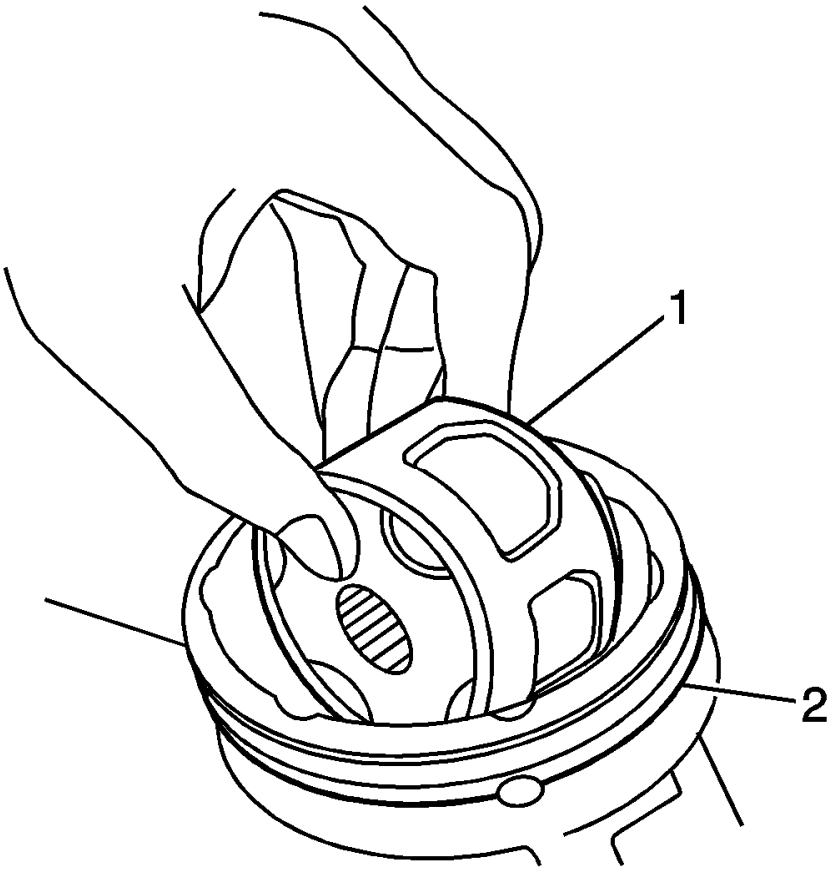

Fig. 46: Positioning Cage & Inner Race 90 Degrees To Centerline Of Outer Race
Courtesy of GENERAL MOTORS COMPANY

NOTE: Position the cage so that the larger radius corners of the cage windows are facing up.

7. Position the cage (1) at a 90 degrees to the centerline of the outer race (2).
8. Align the cage windows with the lands of the outer race (2).
9. Lift and remove the cage (1) and the inner race from the outer race (2).

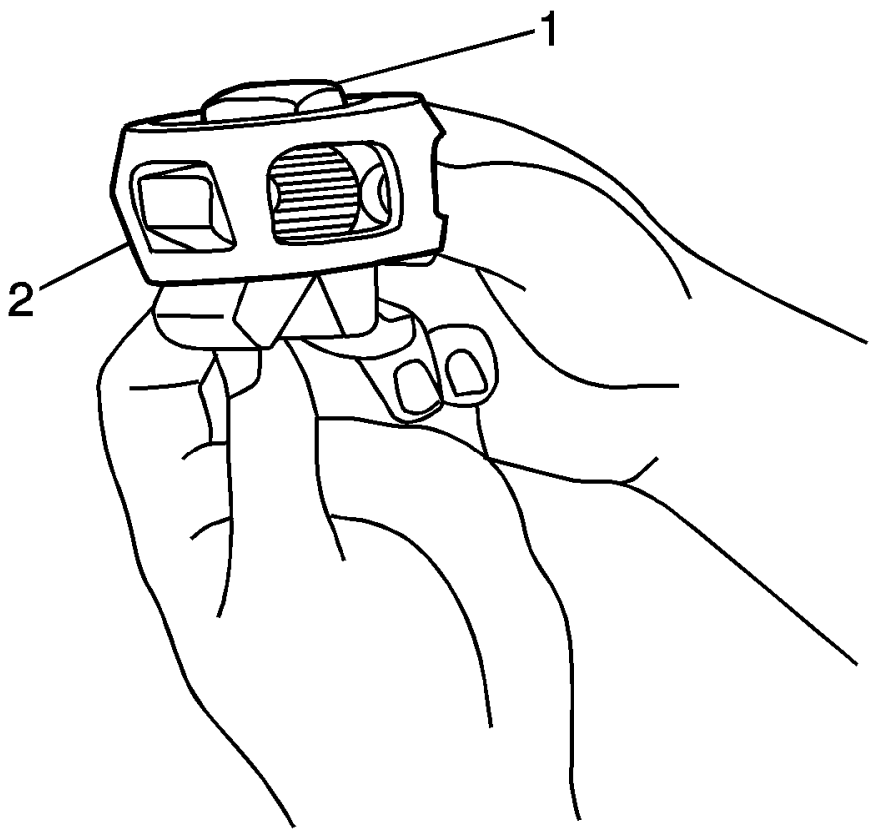

Fig. 47: Positioning Cage So Larger Radius Corners Of Cage Windows Are Up
Courtesy of GENERAL MOTORS COMPANY

10. Position the cage (2) and the inner race (1) so that the larger radius corners of the cage windows are up.
11. Rotate the inner race (1) 90 degrees to the center line of the cage (2).
12. Align the lands of the inner race (1) with the windows of the cage (2).
13. Move the inner race (1) land into the cage window (2).
14. Rotate the inner race (1) down and remove it from the cage (2).
15. Clean the following items thoroughly with the proper cleaning solvent:
    - The inner race
    - The outer race
    - The cage
    - The ball bearings
    - The exposed end of the wheel drive shaft

NOTE: The internal parts of the CV joint are NOT SERVICED separately. The outer

CV joint is serviced as an assembly.

16. If any of the above items are found to have excessive wear or are damaged, replace the outer CV joint as an assembly.

Assembly Procedure

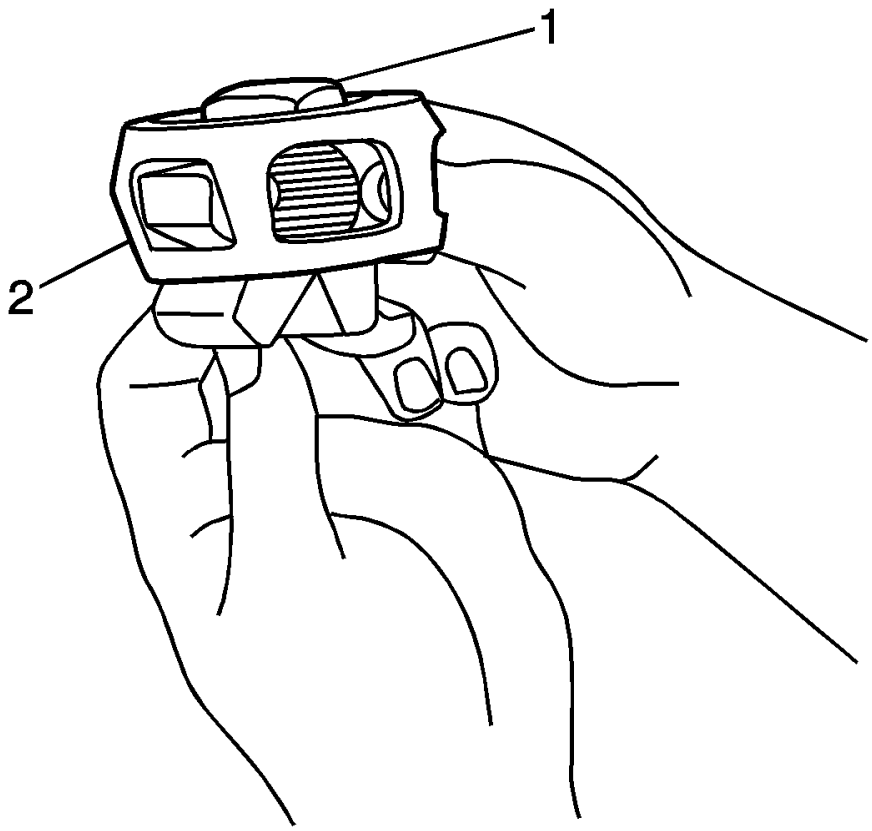

Fig. 48: Positioning Cage So Larger Radius Corners Of Cage Windows Are Up
Courtesy of GENERAL MOTORS COMPANY

1. Position the cage (2) so that the larger radius corners of the cage windows are up.
2. Position the inner race (1) 90 degrees to the centerline of the cage (2).
3. Insert the inner race (1) through the bottom of the cage (2).
4. Align the lands of the inner race (1) with the windows of the cage (2).
5. Move the inner race (1) land into the cage window (2).
6. Rotate the inner race (1) down and remove it from the cage (2).
7. Rotate the inner race (1) within the cage (2) so that the grooved surface of the inner race (1) is facing up.

8. Align the inner race (1) ball bearing tracks with the cage (2) windows.

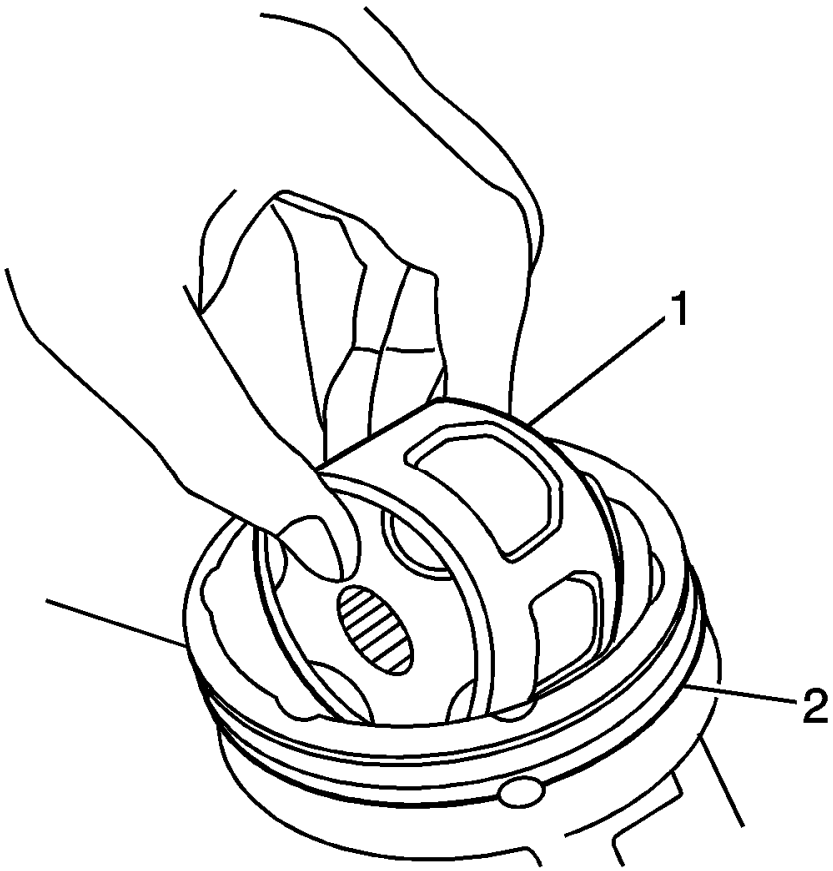

Fig. 49: Positioning Cage & Inner Race 90 Degrees To Centerline Of Outer Race
Courtesy of GENERAL MOTORS COMPANY

9. Wrap a clean shop towel around the CV joint outer race splined shaft.
10. Place the outer race (2) vertically in a bench vise.
11. Position the cage (1) and the inner race at a 90 degrees to the centerline of the outer race (2).
12. With the inner race and the cage (1) assembly in a vertical position, insert the cage and the inner race into the outer race (2).

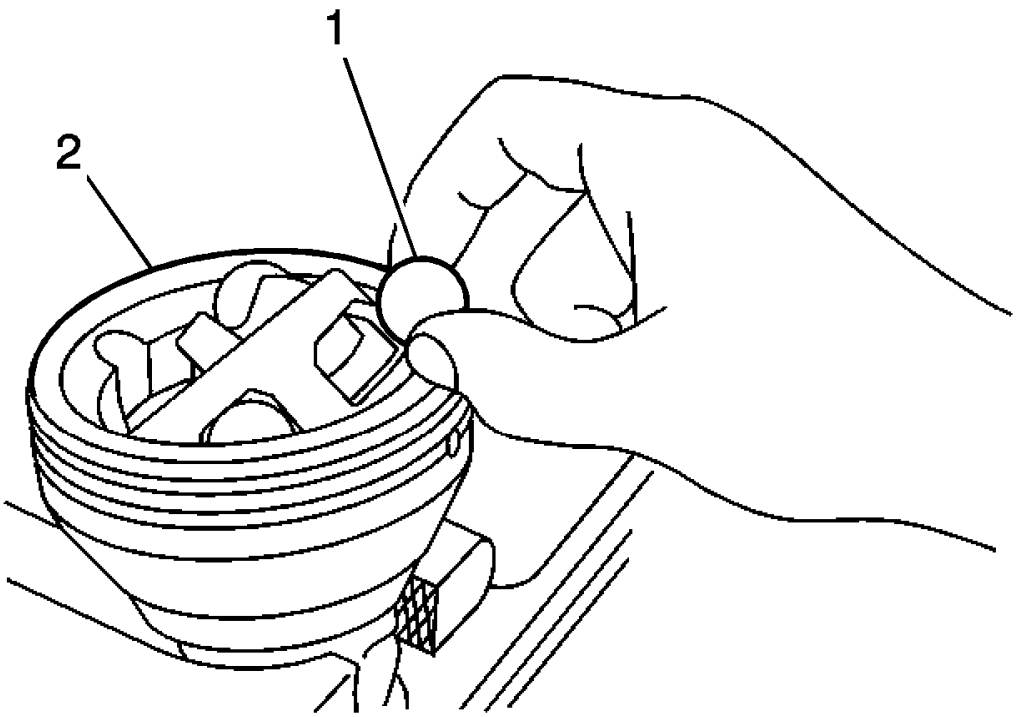

Fig. 50: Ball Bearing & CV Joint
Courtesy of GENERAL MOTORS COMPANY

NOTE: The larger radius corners of the cage windows should be positioned up and the grooved surface of the inner race should be visible.

13. Position the cage (2) and the inner race so that they are level in the vise.
14. Rotate the appropriate component(s), and align the cage windows and the inner race ball bearing (1) tracks with the outer race ball bearing tracks.
15. Position a cage window and the inner race ball bearing track for the ball bearing installation.

NOTE: When performing the following procedure, the opposing cage (2) window and the inner ball bearing (1) track will be accessible for the ball bearing installation.

16. Press down on the cage following one of the outer race ball bearing (1) tracks.
17. Install the ball bearing through the cage window onto the inner race ball bearing (1) track.

NOTE: The following service procedure will have to be performed after each ball bearing (1) has been installed.

18. After the first ball bearing (1) has been installed, use a brass drift and a hammer and gently tap the cage in order to drive the cage and the inner race down completely in the outer race.

NOTE: After the ball bearing (1) has been installed, there should be NO GAP between the ball bearing and the inner race.

19. Position the cage and the inner race so that they are level.
20. Using a plastic hammer, lightly tap the ball bearing (1) into place.

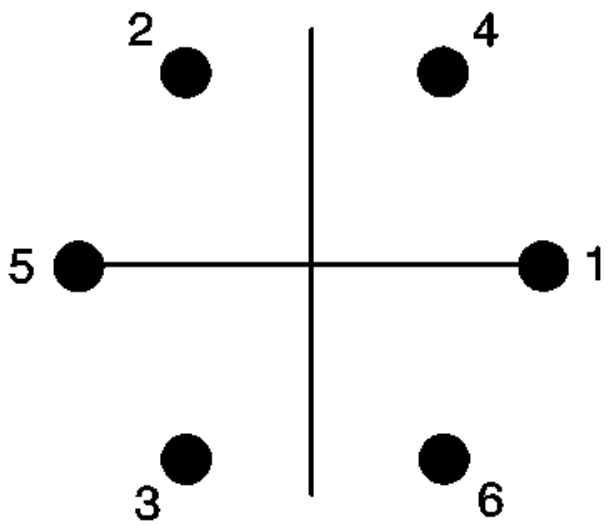

Fig. 51: View Of Ball Removal/Installation Sequence
Courtesy of GENERAL MOTORS COMPANY

21. Install the ball bearings in sequence.
22. Repeat steps 18 thru 20 until all the ball bearings are installed.

23. Install the outer CV joint and boot on the wheel drive shaft. Refer to **Front Wheel Drive Shaft Outer Joint and Boot Replacement**.

DESCRIPTION AND OPERATION

WHEEL DRIVE SHAFTS DESCRIPTION AND OPERATION

Front wheel drive axles are flexible assemblies.

Front wheel drive axles consist of the following components:

- A front wheel drive shaft tripot joint (inner joint)
- A front wheel drive shaft constant velocity joint (outer joint)
- A front wheel drive shaft

  The front wheel drive shaft connects the front wheel drive shaft tripot joint and the front wheel drive shaft constant velocity joint.

The front wheel drive shaft tripot joint is completely flexible. The front wheel drive shaft tripot joint can move in and out.

The front wheel drive shaft constant velocity joint is flexible, but the front wheel drive shaft constant velocity joint cannot move in and out.

Boots (Seals) And Clamps

The front wheel drive shaft constant velocity joint and the front wheel drive shaft tripot joint boots (seals) in the front wheel drive axle are made of a thermoplastic material.

The clamps in the front wheel drive axle are made of stainless steel.

The boot (seal) provides the following functions:

- Protection of the internal parts of the front wheel drive shaft constant velocity joint and the front wheel drive shaft tripot joint

  The boot (seal) protects the grease from the following sources of damage:

  - Harmful atmospheric conditions, such as extreme temperatures or ozone gas
  - Foreign material, such as dirt or water
- Allows angular movement and the axial movement of the front wheel drive shaft tripot joint
- Allows angular movement of the front wheel drive shaft constant velocity joint

NOTE: Protect the boots (seals) from sharp tools and from the sharp edges of the surrounding components.

Any damage to the boots (seals) or the clamps will result in leakage. Leakage will allow water to leak into the front wheel drive shaft tripot joint and the front wheel drive shaft constant velocity joints. Leakage will also allow grease to leak out of the front wheel drive shaft tripot joints and the front wheel drive shaft constant velocity joints.

Leakage may cause noisy front wheel drive axle operation and eventual failure of the internal components.

The clamps provide a leak proof connection for the front wheel drive shaft tripot joint and the front wheel drive shaft constant velocity joint at the following locations:

- The housing
- The front wheel drive shaft

The thermoplastic material performs well under normal conditions and normal operation. However, the material is not strong enough to withstand the following conditions:

- Abusive handling
- Damage from sharp objects, such as sharp tools or any sharp edges of the surrounding components in the vehicle

Front Wheel Drive Shaft Tripot Joint (Inner Joint)

The front wheel drive shaft tri-pot joint is made with the tripot design without an over-extension limitation retainer.

The joint is constructed as follows for vehicles that are equipped with an automatic transmission:

- The left front wheel drive axle has a female spline. The female spline installs over a stub shaft that protrudes from the transaxle.
- The right front wheel drive axle has a male spline. The right front wheel drive axle uses barrel type snap rings in order to interlock with the transaxle gears.

Front Wheel Drive Shaft Constant Velocity Joint (Outer Joint)

The front wheel drive shaft constant velocity joint is made with the Rzeppa joint design.

The shaft end (which mates with the knuckle/hub) has a helical spline. The helical spline ensures a tight, press-type fit.

This design prevents end play between the hub bearing and the front wheel drive axle.

SPECIAL TOOLS AND EQUIPMENT

SPECIAL TOOLS

Illustration	Tool Number / Description
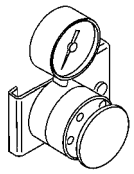	GE-313 KM-313 J-2619-01 J-6125-1B Slide Hammer
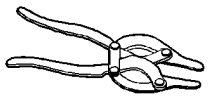	GE-396 GE-8059 J-8059 Snap Ring Pliers
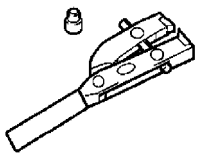	CH-804 KM-804 J-35566 J-35910 J-42572, or equivalent Boot Clamp Pliers
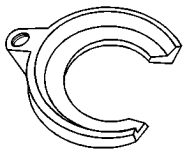	CH-6003 KM-6003 J-42943 Axle Shaft Remover
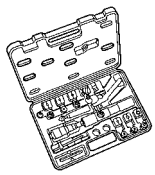	DT-6332 KM-6332 J-44396 J-44394-A Seal Protector
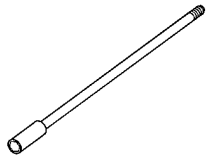	DT-29794 J 29794 Axle Shaft Remover Extension
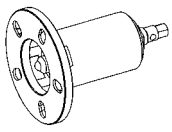	CH-49400 J-42129 J-45859 Hub Spindle Remover

2013 ELECTRICAL

Power Outlets - Cruze

SCHEMATIC WIRING DIAGRAMS

CIGAR LIGHTER/POWER OUTLET WIRING SCHEMATICS

Cigar Lighter and Power Outlet

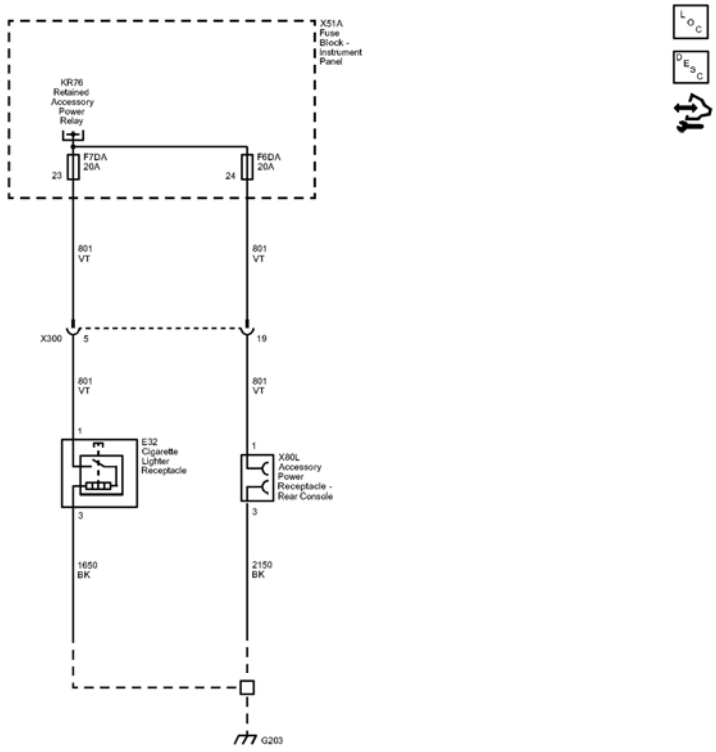

Fig. 1: Cigar Lighter/Power Outlet Wiring Schematics
Courtesy of GENERAL MOTORS COMPANY

Callout	Component Name
801	Retained Accessory Power Fuse Supply Voltage
CAV_1	1
CAV 1	1
801_VT	801 VT
801_VT	801 VT
801_VT	801 VT
801_VT	801 VT
2150	Ground

2150_BK	2150 BK
CAV_3	3
1650	Ground
1650_BK	1650 BK
CAV_3	3
CAV_23	23
CAV_24	24
X300	X300
CAV_5	5
CAV_19	19
F7DA	F7DA 20A
F6DA	F6DA 20A
X300	X300
X80L	
E32	
KR76	
X51A	

DIAGNOSTIC INFORMATION AND PROCEDURES

SYMPTOMS - POWER OUTLETS

Diagnostic Instructions

- Perform the **Diagnostic System Check - Vehicle** prior to using this diagnostic procedure.
- Review **Strategy Based Diagnosis** for an overview of the diagnostic approach.
- **Diagnostic Procedure Instructions** provides an overview of each diagnostic category.

Visual/Physical Inspection

- Inspect for aftermarket devices which can affect the operation of the power outlets. Refer to **Checking Aftermarket Accessories**
- Inspect the accessible system components or the visible system components for obvious damage or for obvious conditions which can cause the symptom.

Intermittent

Electrical connections or wiring may be the cause of intermittent conditions. Refer to **Testing for Intermittent Conditions and Poor Connections**

Symptom List

Refer to **Power Outlet Receptacle Malfunction** in order to diagnose the system.

POWER OUTLET RECEPTACLE MALFUNCTION

Diagnostic Instructions

- Perform the **Diagnostic System Check - Vehicle** prior to using this diagnostic procedure.
- Review **Strategy Based Diagnosis** for an overview of the diagnostic approach.
- **Diagnostic Procedure Instructions** provides an overview of each diagnostic category.

Diagnostic Fault Information

Circuit	Short to Ground	Open/High Resistance	Short to Voltage	Signal Performance
Ignition	1	1	-	-
Ground	-	1	-	-
1. Accessory Power Receptacle Malfunction				

Circuit/System Description

The vehicle is fitted with a 12 V accessory power receptacle. The accessory power outlets are controlled by an ignition operated relay. The accessory power receptacle is operational when the ignition is turned to either the On or the Accessories positions.

Diagnostic Aids

It may be helpful to discuss with the customer the usage of any device that may have drawn too much current and caused an open fuse.

Reference Information

Schematic Reference

Cigar Lighter/Power Outlet Schematics

Connector End View Reference

COMPONENT CONNECTOR END VIEWS - INDEX

Description and Operation

Power Outlets Description and Operation

Electrical Information Reference

- **Circuit Testing**
- **Connector Repairs**
- **Testing for Intermittent Conditions and Poor Connections**

- **Wiring Repairs**

Circuit/System Verification

1. Ignition ON, connect an appropriate device to the X80 Accessory Power Receptacle.
2. Verify the device is powered by the X80 Accessory Power Receptacle.
    - **If the device is not powered**

      Refer to Circuit/System Testing below.

    - **If the device is powered**
3. All OK.

Circuit/System Testing

1. Ignition OFF, disconnect the harness connector at the appropriate X80 Accessory Power Receptacle or E32 Cigarette Lighter Receptacle.
2. Test for less than 10 ohms between the ground circuit terminal C and ground.
    - **If greater than 10 ohms**
    1. Ignition OFF.
    2. Test for less than 2 ohms in the ground circuit end to end.
        - If 2 ohms or greater, repair the open/high resistance in the circuit.
        - If less than 2 ohms, repair the open/high resistance in the ground connection.
    - **If less than 10 ohms**
3. Ignition ON.
4. Verify that a test lamp illuminates between the control circuit terminal A and ground.
    - **If the test lamp does not illuminate and the circuit fuse is good**
    1. Ignition OFF.
    2. Test for less than 2 ohms in the control circuit end to end.
        - If greater than 2 ohms, repair the open/high resistance in the circuit.
        - If less than 2 ohms, verify the fuse is not open and there is voltage at the fuse. Refer to **Retained Accessory Power Malfunction** .
    - **If the test lamp does not illuminate and the circuit fuse is open**
    1. Ignition OFF.
    2. Test for infinite resistance between the control circuit terminal A and ground.
        - If less than infinite resistance, repair the short to ground on the circuit.
        - If infinite resistance, replace the appropriate X80 Accessory Power Receptacle.
    - **If the test lamp illuminates**
5. Replace the appropriate X80 Accessory Power Receptacle or E32 Cigarette Lighter Receptacle.

Repair Instructions

Perform the **Diagnostic Repair Verification** after completing the repair.

Accessory Power Receptacle Replacement

REPAIR INSTRUCTIONS

ACCESSORY POWER RECEPTACLE RETAINER REPLACEMENT

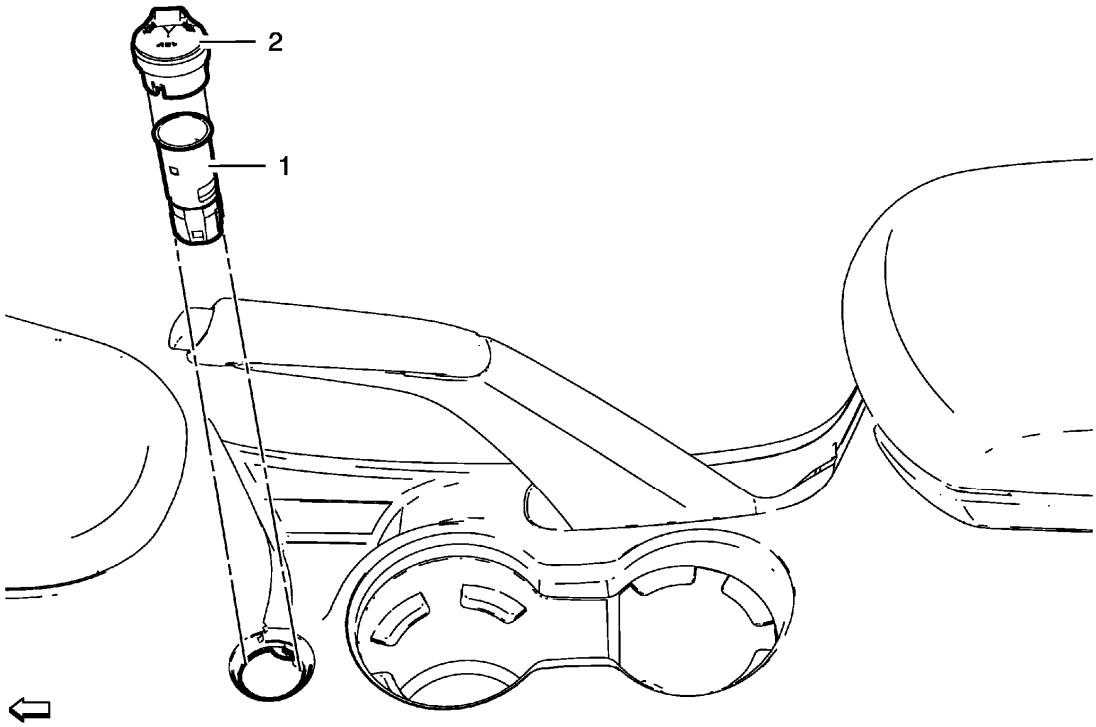

Fig. 2: Identifying Accessory Power Receptacle Retainers
Courtesy of GENERAL MOTORS COMPANY

Accessory Power Receptacle Retainer Replacement

Callout	Component Name
Preliminary Procedures Disconnect the negative battery cable. Refer to **Battery Negative Cable Disconnection and Connection** . **Special Tools** **BO-48871** Accessory Power Receptacle Remover Fro equivalent regional tools, refer to **Special Tools**.	
1	Accessory Power Receptacle Retainer **Procedure** Disconnect electrical connector.
2	Accessory Power Receptacle Retainer

ACCESSORY POWER RECEPTACLE REPLACEMENT

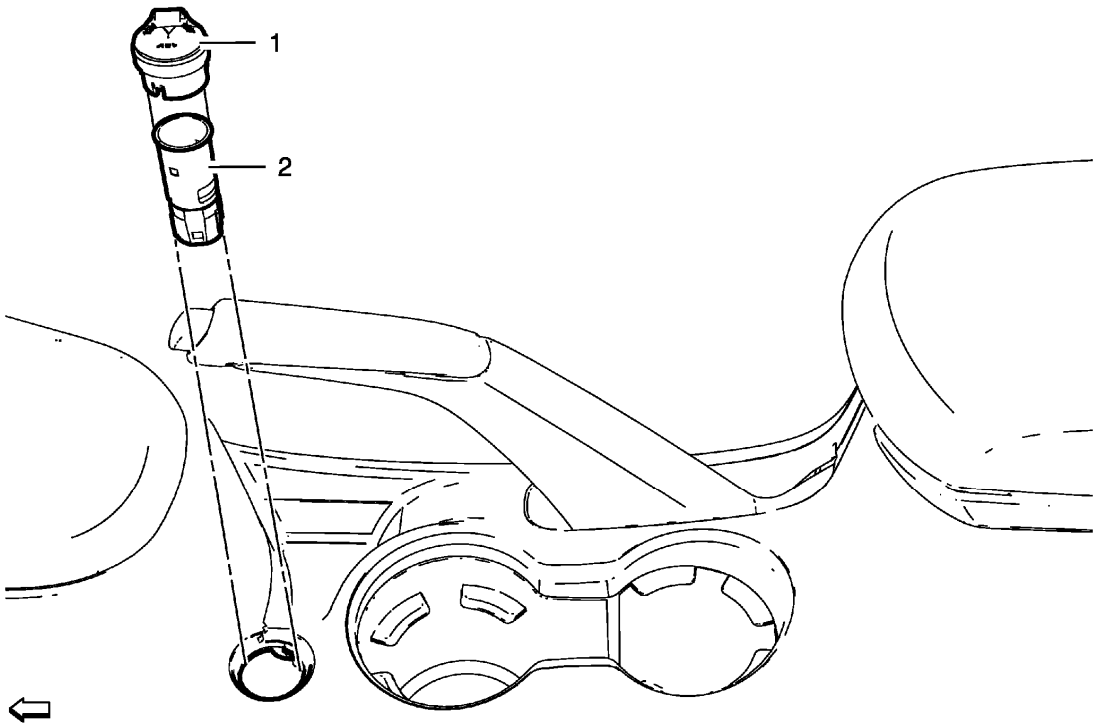

Fig. 3: Identifying Accessory Power Receptacle And Retainer
Courtesy of GENERAL MOTORS COMPANY

Accessory Power Receptacle Replacement

Callout	Component Name
Preliminary Procedures Disconnect the negative battery cable. Refer to **Battery Negative Cable Disconnection and Connection** . **Special Tools** **BO-48871** Accessory Power Receptacle Remover For equivalent regional tools, refer to **Special Tools**	
1	Accessory Power Receptacle Retainer
2	Accessory Power Receptacle **Procedure** Disconnect electrical connector.

DESCRIPTION AND OPERATION

POWER OUTLETS DESCRIPTION AND OPERATION

12 Volt Power Outlet Receptacle Description and Operation

The 12 V accessory power receptacles are supplied with power by the accessory relay.

The vehicle is fitted with a cigarette lighter and/or with a 12 V accessory power receptacle. The cigarette lighter

and accessory power outlets are controlled by an ignition operated relay. The accessory power receptacle and cigarette lighter are operational when the ignition is turned to either the On or the Accessories positions. To operate the cigarette lighter, press in the lighter knob. When the element is hot, the lighter automatically pops out and is ready for use.

110 Volt Power Outlet Receptacle System Description

The alternating current (AC) accessory power outlet system consists of the accessory DC/AC power inverter module and the accessory power receptacle - 110 V AC. The accessory DC/AC power inverter module converts 12 V direct current (DC) battery power to 110 V at 60 Hertz (Hz) AC power to operate AC powered devices. The accessory DC/AC power inverter module provides up to 150 watts of power. The accessory power receptacle - 110 V AC provides the usual connection for AC powered devices.

110 Volt Power Outlet Receptacle System Operation

The accessory DC/AC power inverter module receives fuse protected battery voltage and is connected to the 12 V electrical system ground. The accessory power receptacle - 110 V AC has an internal switch, that detects when an AC powered device is plugged into the outlet. When the ignition is ON, and an AC powered device is plugged into the accessory power receptacle - 110 V AC, the normally open switch in the accessory power receptacle - 110 V AC, closes. When the accessory DC/AC power inverter module detects the voltage from the accessory power receptacle - 110 V AC switch, the inverter module begins to supply 110 V AC to the accessory power receptacle - 110 V AC after a 1.5 s delay. The accessory AC power system is protected against circuit overload and circuit shorts to ground.

110 Volt Power Outlet Receptacle Isolation Fault Protection

The accessory DC/AC power inverter module contains a ground fault circuit interrupter (GFCI). GFCI monitors the 110 V circuit for a short to vehicle chassis ground. If a 110 V AC short to ground is detected, the accessory DC/AC power inverter module will turn OFF. The module remains OFF, until the AC powered device is unplugged from the outlet, and then plugged into the outlet after a 3 s delay.

110 Volt Power Outlet Receptacle Overload Shutdown

The accessory DC/AC power inverter module will turn OFF if the current in the 110 V circuit is greater than 3.8 A for 1 s, or 2.5 A for 10 s. The module will turn ON again, when the AC powered device is unplugged from the outlet, and then plugged into the outlet after a 3 s delay.

110 Volt Power Outlet Receptacle Internal Shutdown

The accessory DC/AC power inverter module will turn OFF if the B+ supply voltage is greater than 16.5 V or less than 11 V. The module will also turn OFF if the device temperature is greater than 85°C (185°F). The module will turn ON again, after the shutdown condition is corrected, and the AC powered device is unplugged from the outlet, and then plugged into the outlet.

SPECIAL TOOLS AND EQUIPMENT

SPECIAL TOOLS

Illustration	Tool Number/ Description
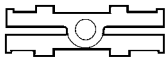	BO-48871 J-42059 Accessory Power Receptacle Remover

2013 ELECTRICAL

Wiring Systems and Power Management - Component Locator - Door Component Views - Cruze

DOOR COMPONENT VIEWS

DRIVER DOOR COMPONENTS

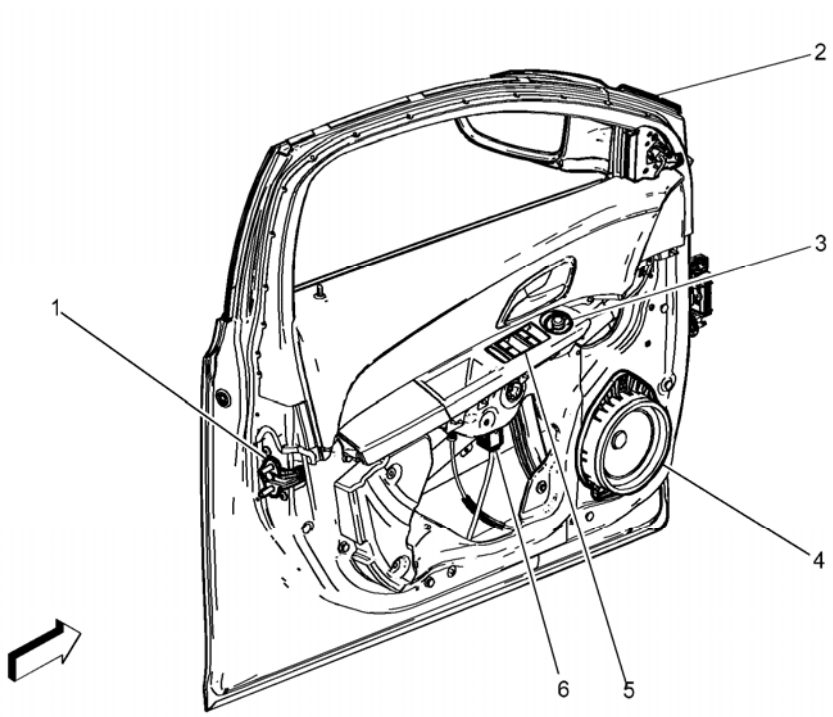

Fig. 1: Driver Door Components
Courtesy of GENERAL MOTORS COMPANY

Items
1: A23D Door Latch Assembly - Driver **A23D Door Latch Assembly - Driver**
2: A9A Outside Rearview Mirror - Driver **A9A Outside Rearview Mirror - Driver**
3: S52 Outside Rearview Mirror Switch **S52 Outside Rearview Mirror Switch**
4: P19AG Speaker - Left Front Door **P19AG Speaker - Left Front Door**
5: S79D Window Switch - Driver **S79D Window Switch - Driver (AEC)** **S79D Window Switch - Driver (AXG)**
6: M74D Window Motor - Driver **M74D Window Motor - Driver (AEC)** **M74D Window Motor - Driver (AXG)**

PASSENGER DOOR COMPONENTS

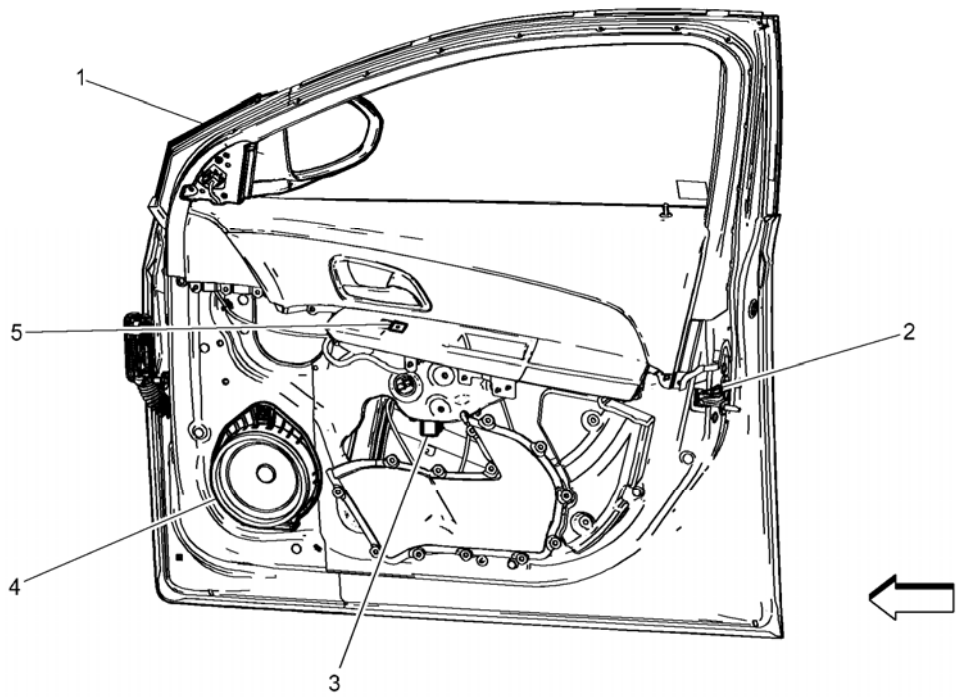

Fig. 2: Passenger Door Components
Courtesy of GENERAL MOTORS COMPANY

Items
1: A9B Outside Rearview Mirror - Passenger **A9B Outside Rearview Mirror - Passenger**
2: A23P Door Latch Assembly - Passenger **A23P Door Latch Assembly - Passenger**
3: M74P Window Motor - Passenger **M74P Window Motor - Passenger**
4: P19AH Speaker - Right Front Door **P19AH Speaker - Right Front Door**
5: S79P Window Switch - Passenger **S79P Window Switch - Passenger**

LEFT REAR DOOR COMPONENTS

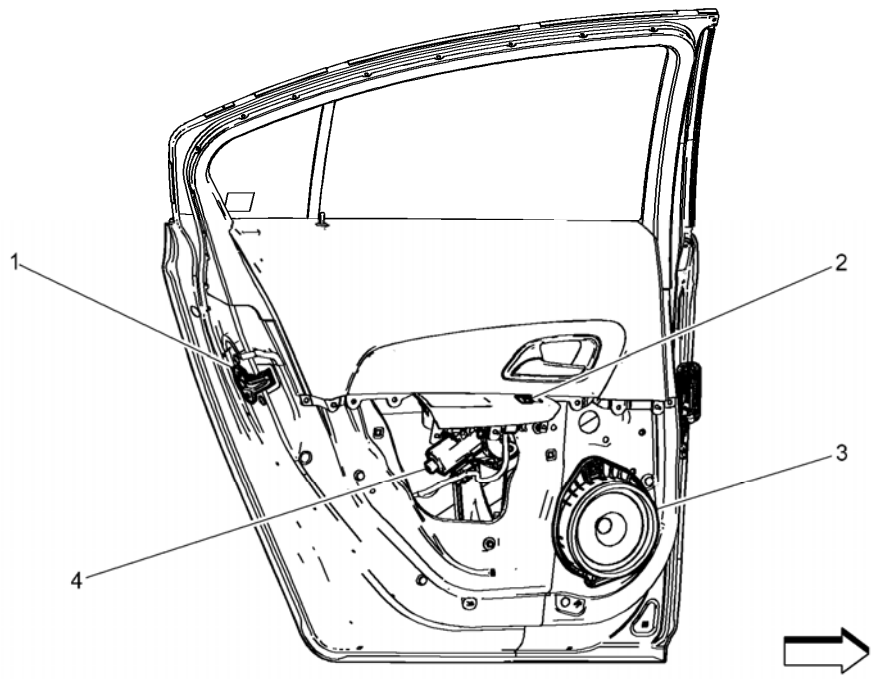

Fig. 3: Left Rear Door Components
Courtesy of GENERAL MOTORS COMPANY

Items
1: A23LR Door Latch Assembly - Left Rear **A23LR Door Latch Assembly - Left Rear**
2: S79LR Window Switch - Left Rear **S79LR Window Switch - Left Rear**
3: P19AL Speaker - Left Rear Door **P19AL Speaker - Left Rear Door**
4: M74LR Window Motor - Left Rear **M74LR Window Motor - Left Rear**

RIGHT REAR DOOR COMPONENTS

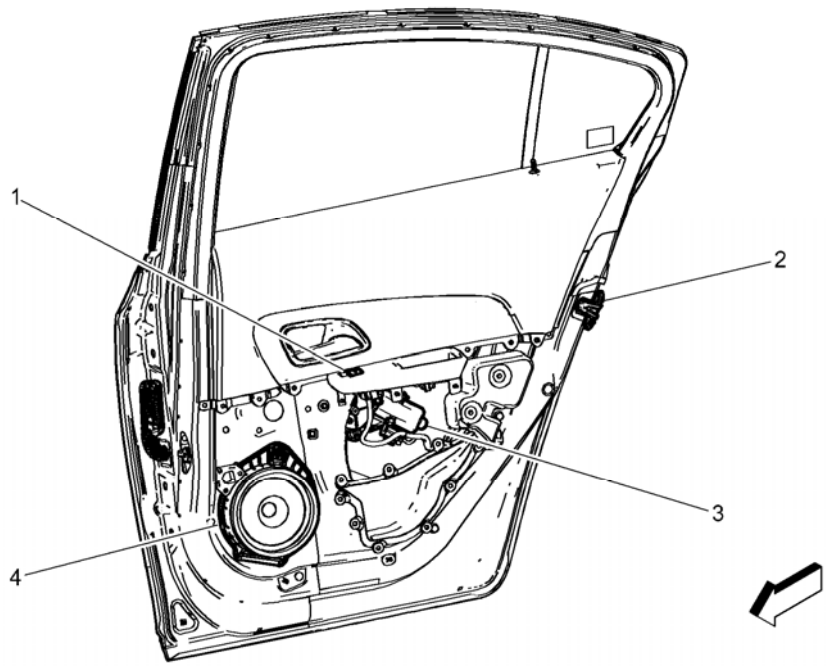

Fig. 4: Right Rear Door Components
Courtesy of GENERAL MOTORS COMPANY

Items
1: S79RR Window Switch - Right Rear **S79RR Window Switch - Right Rear**
2: A23RR Door Latch Assembly - Right Rear **A23RR Door Latch Assembly - Right Rear**
3: M74RR Window Motor - Right Rear **M74RR Window Motor - Right Rear**
4: P19AM Speaker - Right Rear Door **P19AM Speaker - Right Rear Door**

2013 ELECTRICAL

Wiring Systems and Power Management - Component Locator - Electrical Center Identification Views - Cruze

ELECTRICAL CENTER IDENTIFICATION VIEWS

X50A FUSE BLOCK - UNDERHOOD LABEL

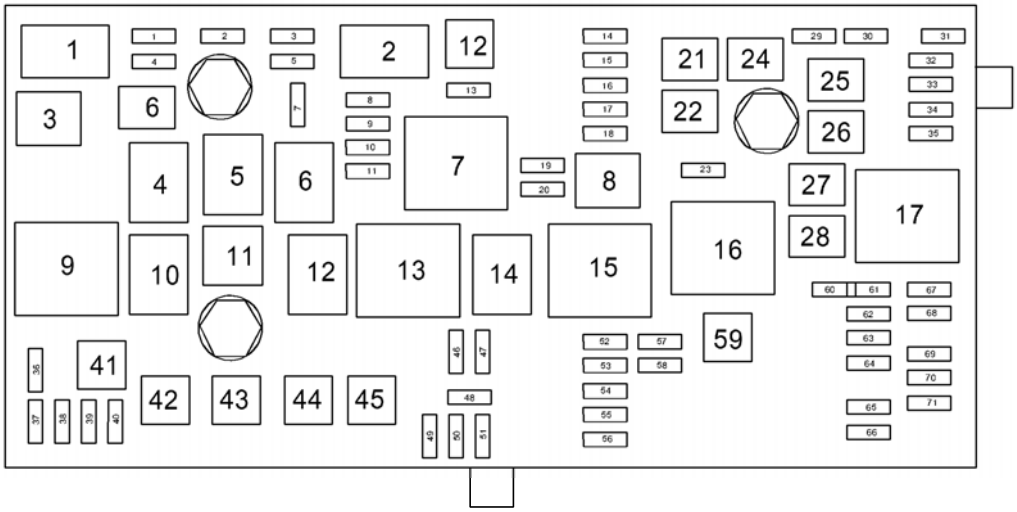

Fig. 1: X50A Fuse Block - Underhood Label
Courtesy of GENERAL MOTORS COMPANY

X50A FUSE BLOCK - UNDERHOOD TOP VIEW

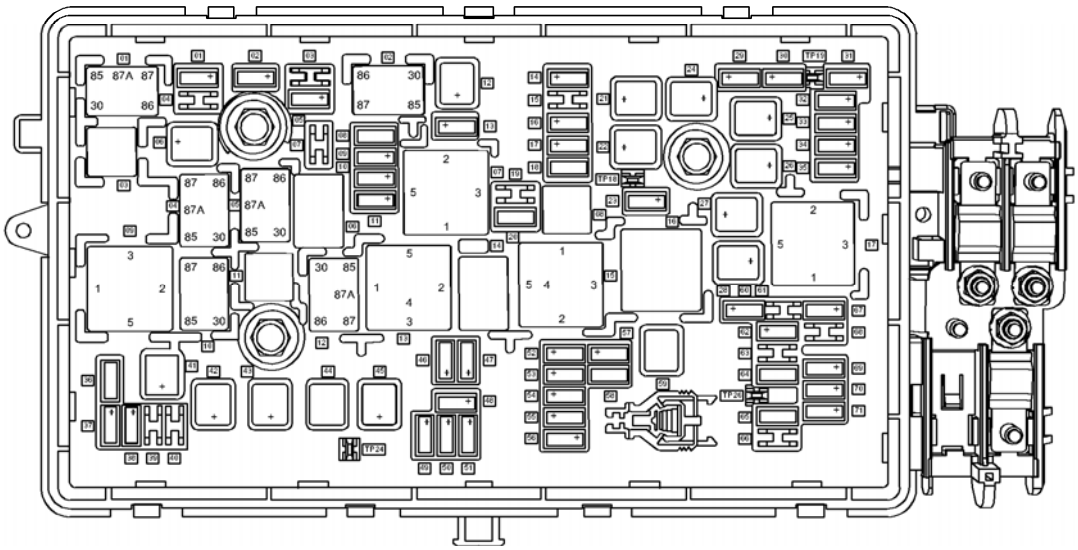

Fig. 2: X50A Fuse Block - Underhood Top View
Courtesy of GENERAL MOTORS COMPANY

X50A Fuse Block - Underhood Usage

No.	Device Label Name	Device Assigned Name	Rating	Description
F1UA: 1	**F1UA:** -	**F1UA:** F1UA Fuse	**F1UA:** 15A	**F1UA:** Q8 Control Solenoid Valve Assembly (MH8)
F2UA: 2	**F2UA:** -	**F2UA:** F2UA Fuse	**F2UA:** 15A	**F2UA:** K20 Engine Control Module
F3UA: 3	**F3UA:** -	**F3UA:** F3UA Fuse	**F3UA:** -	**F3UA:** Not Used
F4UA: 4	**F4UA:** -	**F4UA:** F4UA Fuse	**F4UA:** 10A	**F4UA:** Q13 Evaporative Emission Vent Solenoid Valve
F5UA: 5	**F5UA:** -	**F5UA:** F5UA Fuse	**F5UA:** 15A	**F5UA:** K20 Engine Control Module, Q8 Control Solenoid Valve Assembly

				(MH8)
F6UA: 6	**F6UA:** -	**F6UA:** F6UA Fuse	**F6UA:** 30A	**F6UA:** KR12B Windshield Wiper Relay, KR12C Windshield Wiper Speed Control Relay
F7UA: 7	**F7UA:** -	**F7UA:** F7UA Fuse	**F7UA:** -	**F7UA:** Not Used
F8UA: 8	**F8UA:** -	**F8UA:** F8UA Fuse	**F8UA:** 15A	**F8UA:** Not Used
F9UA: 9	**F9UA:** -	**F9UA:** F9UA Fuse	**F9UA:** 15A	**F9UA:** Q17A Fuel Injector 1, Q17B Fuel Injector 2, Q17C Fuel Injector 3, Q17D Fuel injector 4, T8 Ignition Coil
F10UA: 10	**F10UA:** -	**F10UA:** F10UA Fuse	**F10UA:** 15A	**F10UA:** K20 Engine Control Module
F11UA: 11	**F11UA:** -	**F11UA:** F11UA Fuse	**F11UA:** 10A	**F11UA:** B75B Mass Air Flow/Intake Air Temperature Sensor
F12UA: 12	**F12UA:** -	**F12UA:** F12UA Fuse	**F12UA:** 30A	**F12UA:** KR27 Starter Motor Relay
F13UA: 13	**F13UA:** -	**F13UA:** F13UA Fuse	**F13UA:** 7.5A	**F13UA:** Not Used
F14UA: 14	**F14UA:** -	**F14UA:** F14UA Fuse	**F14UA:** -	**F14UA:** Not Used
F15UA: 15	**F15UA:** -	**F15UA:** F15UA Fuse	**F15UA:** -	**F15UA:** Not Used
F16UA: 16	**F16UA:** -	**F16UA:** F16UA Fuse	**F16UA:** 7.5A	**F16UA:** B108 Air Quality Sensor (C68), M96 Active Grille Air Shutter Actuator (Y8X)
F17UA: 17	**F17UA:** -	**F17UA:** F17UA Fuse	**F17UA:** 5A	**F17UA:** K36 Inflatable Restraint Sensing and Diagnostic Module
F18UA: 18	**F18UA:** -	**F18UA:** F18UA Fuse	**F18UA:** 10A	**F18UA:** K27 Fuel Pump Control Module
F19UA: 19	**F19UA:** -	**F19UA:** F19UA Fuse	**F19UA:** -	**F19UA:** Not Used
F20UA: 20	**F20UA:** -	**F20UA:** F20UA Fuse	**F20UA:** -	**F20UA:** Not Used
F21UA: 21	**F21UA:** -	**F21UA:** F21UA Fuse	**F21UA:** 30A	**F21UA:** S79LR Window Switch - Left Rear, S79RR Window Switch - Right Rear
F22UA: 22	**F22UA:** -	**F22UA:** F22UA Fuse	**F22UA:** -	**F22UA:** Not Used
F23UA: 23	**F23UA:** -	**F23UA:** F23UA Fuse	**F23UA:** -	**F23UA:** Not Used
F24UA: 24	**F24UA:** -	**F24UA:** F24UA Fuse	**F24UA:** 30A	**F24UA:** M74D Window Motor - Driver (AXG), S79D Window Switch - Driver (AEC), S79P Window Switch - Passenger
F25UA: 25	**F25UA:** -	**F25UA:** F25UA Fuse	**F25UA:** -	**F25UA:** M9 Brake Booster Pump Motor

F26UA: 26	**F26UA:** -	**F26UA:** F26UA Fuse	**F26UA:** 40A	**F26UA:** K17 Electronic Brake Control Module
F27UA: 27	**F27UA:** -	**F27UA:** F27UA Fuse	**F27UA:** -	**F27UA:** Not Used
F28UA: 28	**F28UA:** -	**F28UA:** F28UA Fuse	**F28UA:** 40A	**F28UA:** E18 Rear Defogger Grid
F29UA: 29	**F29UA:** -	**F29UA:** F29UA Fuse	**F29UA:** -	**F29UA:** Not Used
F30UA: 30	**F30UA:** -	**F30UA:** F30UA Fuse	**F30UA:** 15A	**F30UA:** K17 Electronic Brake Control Module
F31UA: 31	**F31UA:** -	**F31UA:** F31UA Fuse	**F31UA:** 20A	**F31UA:** Body Control Module
F32UA: 32	**F32UA:** -	**F32UA:** F32UA Fuse	**F32UA:** 20A	**F32UA:** K9 Body Control Module
F33UA: 33	**F33UA:** -	**F33UA:** F33UA Fuse	**F33UA:** 30A	**F33UA:** K29 Seat Heating Control Module (KA1)
F34UA: 34	**F34UA:** -	**F34UA:** F34UA Fuse	**F34UA:** 25A	**F34UA:** K61 Sunroof Control Module (CF5)
F35UA: 35	**F35UA:** -	**F35UA:** F35UA Fuse	**F35UA:** 30A	**F35UA:** T3 Audio Amplifier (UQA)
F36UA: 36	**F36UA:** -	**F36UA:** F36UA Fuse	**F36UA:** -	**F36UA:** Not Used
F37UA: 37	**F37UA:** -	**F37UA:** F37UA Fuse	**F37UA:** 10A	**F37UA:** E13R Headlamp - Right
F38UA: 38	**F38UA:** -	**F38UA:** F38UA Fuse	**F38UA:** 10A	**F38UA:** E13L Headlamp - Left
F39UA: 39	**F39UA:** -	**F39UA:** F39UA Fuse	**F39UA:** -	**F39UA:** Not Used
F40UA: 40	**F40UA:** -	**F40UA:** F40UA Fuse	**F40UA:** -	**F40UA:** Not Used
F41UA: 41	**F41UA:** -	**F41UA:** F41UA Fuse	**F41UA:** -	**F41UA:** Not Used
F42UA: 42	**F42UA:** -	**F42UA:** F42UA Fuse	**F42UA:** 30A	**F42UA:** KR20P Cooling Fan Medium Speed Relay, KR20C Cooling Fan Low Speed Relay
F43UA: 43	**F43UA:** -	**F43UA:** F43UA Fuse	**F43UA:** -	**F43UA:** Not Used
F44UA: 44	**F44UA:** -	**F44UA:** F44UA Fuse	**F44UA:** -	**F44UA:** Not Used
F45UA: 45	**F45UA:** -	**F45UA:** F45UA Fuse	**F45UA:** 40A/60A	**F45UA:** KR20D Cooling Fan High Speed Relay
F46UA: 46	**F46UA:** -	**F46UA:** F46UA Fuse	**F46UA:** 10A	**F46UA:** KR20C Cooling Fan Low Speed Relay, KR20E Cooling Fan Speed Control Relay, KR20F Cooling Fan Relay
				F47UA: B52A Heated Oxygen Sensor 1, B52B Heated Oxygen Sensor 2, E41 Engine Coolant Thermostat Heater, Q12

F47UA: 47	**F47UA:** -	**F47UA:** F47UA Fuse	**F47UA:** 10A	Evaporative Emission Purge Solenoid Valve, Q22 Intake Manifold Tuning Solenoid valve (LUW), Q40 turbocharger Bypass Solenoid Valve (LUJ), Q42 Turbocharger Wastegate Solenoid Valve (LUJ)
F48UA: 48	**F48UA:** -	**F48UA:** F48UA Fuse	**F48UA:** 15A	**F48UA:** E29LF Fog Lamp - Left Front (T3U), E29RF Fog Lamp - Right Front (T3U)
F49UA: 49	**F49UA:** -	**F49UA:** F49UA Fuse	**F49UA:** -	**F49UA:** Not Used
F50UA: 50	**F50UA:** -	**F50UA:** F50UA Fuse	**F50UA:** -	**F50UA:** Not Used
F51UA: 51	**F51UA:** -	**F51UA:** F51UA Fuse	**F51UA:** 15A	**F51UA:** P12 Horn
F52UA: 52	**F52UA:** -	**F52UA:** F52UA Fuse	**F52UA:** 5A	**F52UA:** P16 Instrument Cluster
F53UA: 53	**F53UA:** -	**F53UA:** F53UA Fuse	**F53UA:** 10A	**F53UA:** A10 Inside Rearview Mirror (DD8)
F54UA: 54	**F54UA:** -	**F54UA:** F54UA Fuse	**F54UA:** 5A	**F54UA:** K33 HVAC Control Module, P14 Passenger Air Bag Disable Indicator
F55UA: 55	**F55UA:** -	**F55UA:** F55UA Fuse	**F55UA:** 7.5A	**F55UA:** S52 Outside Rearview Mirror Switch, S79D Window Switch - Driver (AXG)
F56UA: 56	**F56UA:** -	**F56UA:** F56UA Fuse	**F56UA:** 15A	**F56UA:** G24 Windshield Washer Pump
F57UA: 57	**F57UA:** -	**F57UA:** F57UA Fuse	**F57UA:** 15A	**F57UA:** K60 Steering Column Lock Control Module (ULS)
F58UA: 58	**F58UA:** -	**F58UA:** F58UA Fuse	**F58UA:** -	**F58UA:** Not Used
F59UA: 59	**F59UA:** -	**F59UA:** F59UA Fuse	**F59UA:** -	**F59UA:** Not Used
F60UA: 60	**F60UA:** -	**F60UA:** F60UA Fuse	**F60UA:** 7.5A	**F60UA:** A9A Outside Rearview Mirror - Driver (DWE), A9B Outside Rearview Mirror - Passenger (DWE)
F61UA: 61	**F61UA:** -	**F61UA:** F61UA Fuse	**F61UA:** -	**F61UA:** Not Used
F62UA: 62	**F62UA:** -	**F62UA:** F62UA Fuse	**F62UA:** 10A	**F62UA:** KR29 A/C Compressor Clutch Relay (LUW)
F63UA: 63	**F63UA:** -	**F63UA:** F63UA Fuse	**F63UA:** -	**F63UA:** Not Used
F64UA: 64	**F64UA:** -	**F64UA:** F64UA Fuse	**F64UA:** 5A	**F64UA:** K85 Passenger Presence Detection Module

F65UA: 65	**F65UA:** -	**F65UA:** F65UA Fuse	**F65UA:** -	**F65UA:** Not Used
F66UA: 66	**F66UA:** -	**F66UA:** F66UA Fuse	**F66UA:** -	**F66UA:** Not Used
F67UA: 67	**F67UA:** -	**F67UA:** F67UA Fuse	**F67UA:** 20A	**F67UA:** K27 Fuel Pump Control Module
F68UA: 68	**F68UA:** -	**F68UA:** F68UA Fuse	**F68UA:** -	**F68UA:** Not Used
F69UA: 69	**F69UA:** -	**F69UA:** F69UA Fuse	**F69UA:** 5A	**F69UA:** K9 Body Control Module
F70UA: 70	**F70UA:** -	**F70UA:** F70UA Fuse	**F70UA:** -	**F70UA:** Not Used
F71UA: 71	**F71UA:** -	**F71UA:** F71UA Fuse	**F71UA:** -	**F71UA:** Not Used
Relays				
KR29: 1	**KR29:** -	**KR29:** KR29 A/C Compressor Clutch Relay	**KR29:** -	**KR29:** Q2 A/C Compressor Clutch (LUW)
KR27: 2	**KR27:** -	**KR27:** KR27 Starter Relay	**KR27:** -	**KR27:** M64 Starter Motor
KR20F: 3	**KR20F:** -	**KR20F:** KR20F Cooling Fan Relay	**KR20F:** -	**KR20F:** KR20F Cooling Fan Relay
KR12C: 4	**KR12C:** -	**KR12C:** KR12C Windshield Wiper Speed Control Relay	**KR12C:** -	**KR12C:** M75 Windshield Wiper Motor
KR12B: 5	**KR12B:** -	**KR12B:** KR12B Windshield Wiper Relay	**KR12B:** -	**KR12B:** KR12C Windshield Wiper Speed Control Relay, M75 Windshield Wiper Motor
6	-	-	-	Not Used
KR75: 7	**KR75:** -	**KR75:** KR75 Engine Controls Ignition Relay	**KR75:** -	**KR75:** F9UA Fuse, F10UA Fuse, F11UA Fuse, F46UA Fuse, F47UA Fuse, KR20P Cooling Fan Medium Speed Relay, KR29 A/C Compressor Clutch Relay (LUW)
8	-	-	-	Not Used
KR20P: 9	**KR20P:** -	**KR20P:** KR20P Cooling Fan Medium Speed Relay	**KR20P:** -	**KR20P:** Cooling Fan Medium Speed Relay
KR20C: 10	**KR20C:** -	**KR20C:** KR20C Cooling Fan Low Speed Relay	**KR20C:** -	**KR20C:** Cooling Fan Low Speed Relay
11	-	-	-	Not Used
KR20E: 12	**KR20E:** -	**KR20E:** KR20E Cooling Fan Speed Control Relay	**KR20E:** -	**KR20E:** KR20E Cooling Fan Speed Control Relay
KR20D: 13	**KR20D:** -	**KR20D:** KR20D Cooling Fan High	**KR20D:** -	**KR20D:** Cooling Fan High

		Speed Relay		Speed Relay
14	-	-	-	Not Used
KR73: 15	**KR73:** -	**KR73:** KR73 Ignition Main Relay	**KR73:** -	**KR73:** F5UA Fuse, F13UA Fuse, F16UA Fuse, F17UA Fuse, F18UA Fuse, F52UA Fuse, F53UA Fuse, F54UA Fuse, F57UA Fuse
16	-	-	-	Not Used
KR5: 17	**KR5:** -	**KR5:** KR5 Rear Window Defogger Relay	**KR5:** -	**KR5:** F28UA Fuse
NOTE: **Relays listed below are non-serviceable Printed Circuit Board (PCB) relays and are internal to the block**				
-	-	KR3 Horn Relay	-	F51UA Fuse
-	-	KR114 Door Lock Security Relay	-	A23D Door Latch Assembly - Driver, A23P Door Latch Assembly - Passenger, A23LR Door Latch Assembly - Left Rear, A23RR Door Latch Assembly - Right Rear
-	-	KR46 Front Fog Lamp Relay	-	F48UA Fuse
-	-	KR48 Headlamp High Beam Relay	-	F37UA Fuse, F38UA Fuse
-	-	KR11 Windshield Washer Pump Relay	-	F56UA Fuse

X50A FUSE BLOCK - UNDERHOOD BOTTOM VIEW

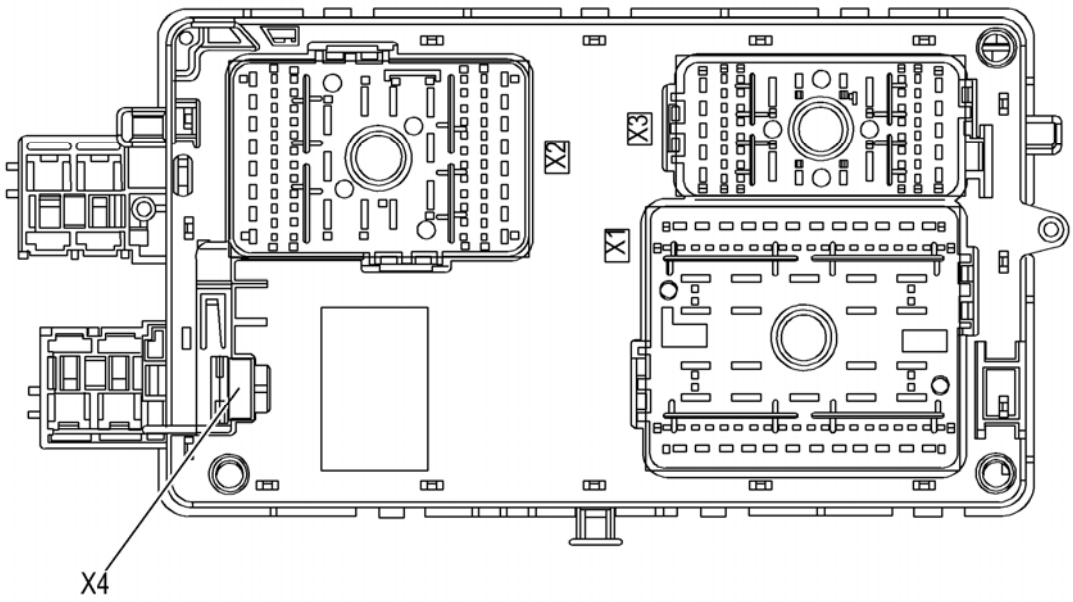

Fig. 3: X50A Fuse Block - Underhood Bottom View
Courtesy of GENERAL MOTORS COMPANY

X50A FUSE BLOCK - UNDERHOOD X1

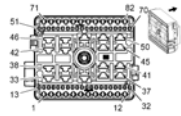

Connector Part Information

- Harness Type: Forward Lamp
- OEM Connector: 13732286
- Service Connector: 13580740
- Description: 82-Way F DSQ 1.5 2.8 Metri-Pack 800 Series (BK)

Terminal Part Information

Terminal Type ID	Terminated Lead	Diagnostic Test Probe	Terminal Removal Tool	Service Terminal	Tray	Core Crimp	Insulation Crimp
I	13575760	J-35616-35 (VT)	J-38125-36	2-964284-1	25	E	A
II	13578869	J-35616-14 (GN)	J-38125-560	962943-5	16	E	A

III	13575718	J-35616-44 (YE)	J-38125-558	12110127	19	F	G
IV	13579931	J-35616-2A (GY)	J-38125-560	965914-1	32	K	K
V	13575491	J-35616-35 (VT)	J-38125-36	4-965999-1	25	4	A

X50A Fuse Block - Underhood X1

Pin	Size	Color	Circuit	Function	Terminal Type ID	Option
1-10	-	-	-	Not Occupied	-	-
11: 11	**11:** 1	**11:** BN/GY	**11:** 29	**11:** Horn Control	**11:** I	**11:** -
12	-	-	-	Not Occupied	-	-
13: 13	**13:** 1.5	**13:** WH	**13:** 311	**13:** Right Headlamp High Beam Control	**13:** II	**13:** -
14: 14	**14:** 1.5	**14:** WH	**14:** 711	**14:** Left Headlamp High Beam Control	**14:** II	**14:** -
15-19	-	-	-	Not Occupied	-	-
20: 20	**20:** 0.5	**20:** RD/WH	**20:** 999	**20:** Cooling Fan Motor Supply Voltage (4)	**20:** II	**20:** -
21-29	-	-	-	Not Occupied	-	-
30: 30	**30:** 1	**30:** GY/VT	**30:** 228	**30:** Windshield Washer Pump Control	**30:** II	**30:** -
31: 31	**31:** 0.75	**31:** VT/BN	**31:** 34	**31:** Front Fog Lamp Control	**31:** II	**31:** -
32-33	-	-	-	Not Occupied	-	-
34: 34	**34:** 2.5	**34:** WH/BK	**34:** 2366	**34:** Cooling Fan Control Relay Speed Signal	**34:** -	**34:** -
35-42	-	-	-	Not Occupied	-	-
43: 43	**43:** 2.5	**43:** WH/BK	**43:** 2366	**43:** Cooling Fan Control Relay Speed Signal	**43:** III	**43:** -
44-45	-	-	-	Not Occupied	-	-
46: 46	**46:** 4	**46:** GY	**46:** 532	**46:** Cooling Fan Motor Control (2)	**46:** III	**46:** -
47: 47	**47:** 2.5	**47:** WH/D-BU	**47:** 409	**47:** Cooling Fan Motor Control (1)	**47:** III	**47:** -
48-49	-	-	-	Not Occupied	-	-
50: 50	**50:** 4	**50:** YE	**50:** 5358	**50:** Cooling Fan Motor Control (3)	**50:** III	**50:** -
51-52	-	-	-	Not Occupied	-	-
53: 53	**53:** 0.5	**53:** BN/RD	**53:** 2700	**53:** A/C Pressure Sensor 5 Volt Reference	**53:** II	**53:** -
54: 54	**54:** 0.5	**54:** BK/D-BU	**54:** 6813	**54:** Coolant Temperature	**54:** II	**54:** -

				Sensor 2 Low Reference		
55: 55	**55:** 0.5	**55:** BK/BN	**55:** 5514	**55:** A/C Refrigerant Pressure Sensor Low Reference	**55:** II	**55:** -
56: 56	**56:** 0.5	**56:** D-GN/VT	**56:** 2032	**56:** Coolant Temperature Sensor Signal	**56:** II	**56:** -
57: 57	**57:** 0.5	**57:** D-GN	**57:** 380	**57:** A/C Refrigerant Pressure Sensor Signal	**57:** II	**57:** -
58-64	-	-	-	Not Occupied	-	-
65: 65	**65:** 0.5	**65:** VT/D-GN	**65:** 1339	**65:** Run/Crank Ignition 1 Voltage	**65:** II **65:** IV	**65:** C68
66: 66	**66:** 0.5	**66:** RD/WH	**66:** 999	**66:** Cooling Fan Motor Supply Voltage (4)	**66:** -	**66:** -
67: 67	**67:** 0.5	**67:** D-GN	**67:** 7625	**67:** Cooling Fan Motor Supply Voltage (4)	**67:** II	**67:** -
68: 68	**68:** 0.5	**68:** D-GN	**68:** 7625	**68:** Cooling Fan Motor Supply Voltage (4)	**68:** -	**68:** -
69-70	-	-	-	Not Occupied	-	-
71: 71	**71:** 2.5	**71:** BK	**71:** 1150	**71:** Ground	**71:** V	**71:** -
72: 72	**72:** 2.5	**72:** WH	**72:** 92	**72:** Windshield Wiper Motor High Speed Control	**72:** V	**72:** -
73: 73	**73:** 2.5	**73:** YE/BN	**73:** 95	**73:** Windshield Wiper Motor Low Speed Control	**73:** V	**73:** -
74: 74	**74:** 2.5	**74:** BK	**74:** 50	**74:** Ground	**74:** V	**74:** -
75-82	-	-	-	Not Occupied	-	-

X50A FUSE BLOCK - UNDERHOOD X2

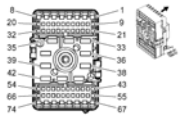

Connector Part Information

- Harness Type: Body
- OEM Connector: 13732284
- Service: 13576544
- Description: 74-Way F 1.5/2.8 DSQ Metri-Pack 800 Series (BK)

Terminal Part Information

Terminal Type ID	Terminated Lead	Diagnostic Test Probe	Terminal Removal Tool	Service Terminal	Tray	Core Crimp	Insulation Crimp
		J-35616-35					

I	13575760	(VT)	J-38125-36	2-964284-1	25	E	A
II	13575718	J-35616-44 (YE)	J-38125-558	12110127	19	F	G
III	13578869	J-35616-14 (GN)	J-38125-560	962943-5	16	E	A
IV	13575491	J-35616-35 (VT)	J-38125-36	4-965999-1	25	4	A

X50A Fuse Block - Underhood X2

Pin	Size	Color	Circuit	Function	Terminal Type ID	Option
1-3	-	-	-	Not Occupied	-	-
4: 4	**4:** 0.75	**4:** GY	**4:** 295	**4:** Door Lock Actuator Lock Control SAE	**4:** I	**4:** -
5: 5	**5:** 0.75	**5:** WH/D-BU	**5:** 3266	**5:** Child Security Lock Motor Unlock Control SAE	**5:** I	**5:** -
6-9	-	-	-	Not Occupied	-	-
10: 10	**10:** 0.5	**10:** BN/D-GN	**10:** 59	**10:** A/C Compressor Clutch Control	**10:** -	**10:** -
11	-	-	-	Not Occupied	-	-
12: 12	**12:** 0.75	**12:** GY/D-GN	**12:** 3271	**12:** Door Lock Control (2)	**12:** III	**12:** SAE
13: 13	**13:** 0.75	**13:** VT/YE	**13:** 3267	**13:** Child Security Lock Relay Control	**13:** III	**13:** SAE
14: 14	**14:** 0.5	**14:** VT/D-GN	**14:** 3039	**14:** Ignition Voltage	**14:** III	**14:** -
15: 15	**15:** 0.5	**15:** VT/BK	**15:** 739	**15:** Ignition Voltage	**15:** III	**15:** -
16	-	-	-	Not Occupied	-	-
17: 17	**17:** 0.5	**17:** BN/VT	**17:** 1594	**17:** Ignition 3 Relay Control	**17:** III	**17:** -
18	-	-	-	Not Occupied	-	-
19: 19	**19:** 0.5	**19:** BN/WH	**19:** 1317	**19:** Fog Lamp Relay Control	**19:** III	**19:** -
20	-	-	-	Not Occupied	-	-
21: 21	**21:** 0.5	**21:** D-BU/BN	**21:** 7573	**21:** Electric Variable Displacement Supply	**21:** III	**21:** -
22: 22	**22:** 0.5	**22:** GY	**22:** 91	**22:** Windshield Wiper Motor Relay Coil Control	**22:** III	**22:** -
23: 23	**23:** 0.5	**23:** RD/GY	**23:** 2840	**23:** Battery Positive Voltage	**23:** III	**23:** -
24	-	-	-	Not Occupied	-	-
25: 25	**25:** 0.5	**25:** BN/WH	**25:** 28	**25:** Horn Relay Control	**25:** III	**25:** -
26: 26	**26:** 0.5	**26:** VT/WH	**26:** 239	**26:** Ignition Voltage	**26:** III	**26:** -
27	-	-	-	Not Occupied	-	-

28: 28	**28:** 0.5 **28:** 0.5	**28:** RD/D-GN **28:** RD/GY	**28:** 1540 **28:** 2840	**28:** Battery Positive Voltage **28:** Battery Positive Voltage	**28:** III	**28:** DWY or DWE
29: 29	**29:** 0.5	**29:** VT/WH	**29:** 239	**29:** Ignition Voltage	**29:** III	**29:** -
30	-	-	-	Not Occupied	-	-
31: 31	**31:** 0.5	**31:** VT/WH	**31:** 2839	**31:** Ignition Voltage	**31:** III	**31:** DD8
32	-	-	-	Not Occupied	-	-
33: 33	**33:** 4	**33:** RD/BN	**33:** 2940	**33:** Battery Positive Voltage	**33:** II	**33:** AEQ
34-35	-	-	-	Not Occupied	-	-
36: 36	**36:** 4	**36:** RD/D-GN	**36:** 1540	**36:** Battery Positive Voltage	**36:** II	**36:** -
37-38	-	-	-	Not Occupied	-	-
39: 39	**39:** 4	**39:** BN/VT	**39:** 293	**39:** Rear Defog Element Control	**39:** II	**39:** -
40: 40	**40:** 2.5	**40:** RD/VT	**40:** 1940	**40:** Battery Positive Voltage	**40:** II	**40:** -
41: 41	**41:** 4	**41:** RD/VT	**41:** 1640	**41:** Battery Positive Voltage	**41:** II	**41:** -
42-55	-	-	-	Not Occupied	-	-
56: 56	**56:** 1	**56:** RD/D-GN	**56:** 1840	**56:** Battery Positive Voltage	**56:** III	**56:** -
57	-	-	-	Not Occupied	-	-
58: 58	**58:** 0.5	**58:** BN/VT	**58:** 1969	**58:** Headlamp High Beam Relay Control	**58:** III	**58:** -
59	-	-	-	Not Occupied	-	-
60: 60	**60:** 0.5	**60:** BN/GY	**60:** 2268	**60:** Windshield Washer Relay Control	**60:** III	**60:** -
61: 61	**61:** 0.5	**61:** BN/VT	**61:** 193	**61:** Rear Defog Relay Control	**61:** III	**61:** -
62: 62	**62:** 0.5	**62:** BN/YE	**62:** 2267	**62:** Mirror Heating Element Control	**62:** III	**62:** -
63: 63	**63:** 0.5	**63:** RD/GY	**63:** 402	**63:** Battery Positive Voltage	**63:** III	**63:** -
64-66	-	-	-	Not Occupied	-	-
67: 67	**67:** 1.5	**67:** RD/WH	**67:** 2740	**67:** Battery Positive Voltage	**67:** IV	**67:** -
68: 68	**68:** 1.5	**68:** RD/VT	**68:** 2640	**68:** Battery Positive Voltage	**68:** IV	**68:** -
69: 69	**69:** 2.5	**69:** RD/WH	**69:** 2040	**69:** Battery Positive Voltage	**69:** IV	**69:** -
70: 70	**70:** 2.5	**70:** RD/WH	**70:** 140	**70:** Battery Positive Voltage	**70:** IV	**70:** -

71: 71	**71:** 2.5	**71:** RD/WH	**71:** 1040	**71:** Battery Positive Voltage	**71:** IV	**71:** UQG
72: 72	**72:** 0.5	**72:** RD/BN	**72:** 1440	**72:** Battery Positive Voltage	**72:** I	**72:** -
73: 73	**73:** 0.5	**73:** D-BU/BN	**73:** 7573	**73:** Electric Variable Displacement Supply	**73:** -	**73:** -
74: 74	**74:** 2.5	**74:** RD/GY	**74:** 1740	**74:** Battery Positive Voltage	**74:** IV	**74:** -

X50A FUSE BLOCK - UNDERHOOD X3 (LUV)

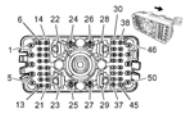

Connector Part Information

- Harness Type: Engine
- OEM Connector: 13262029
- Service Connector: 13505902
- Description: 50-Way F DSQ 1.5 2.8 Metri-Pack 800 Series (BK)

Terminal Part Information

Terminal Type ID	Terminated Lead	Diagnostic Test Probe	Terminal Removal Tool	Service Terminal	Tray	Core Crimp	Insulation Crimp
I	13575860	J-35616-14 (GN)	J-38125-560	Not Available	Not Available	Not Available	Not Available
II	13578869	J-35616-14 (GN)	J-38125-560	962943-5	16	E	A
III	13575860	J-35616-35 (VT)	J-38125-36	2-964284-1	25	E	A

X50A Fuse Block - Underhood X3 (LUV)

Pin	Size	Color	Circuit	Function	Terminal Type ID	Option
1: 1	**1:** 2.5	**1:** RD/D-BU	**1:** 5290	**1:** Powertrain Main Relay Fused Supply (1)	**1:** I	**1:** -
2: 2	**2:** 1	**2:** RD/D-BU	**2:** 5291	**2:** Powertrain Main Relay Fused Supply (2)	**2:** I	**2:** -
3-4	-	-	-	Not Occupied	-	-
5: 5	**5:** 2.5	**5:** YE	**5:** 6	**5:** Starter Solenoid Crank Voltage	**5:** I	**5:** -
6: 6	**6:** 1	**6:** RD/WH	**6:** 5293	**6:** Powertrain Main Relay	**6:** II	**6:** -

				Fused Supply (4)		
7: 7	**7:** 0.75	**7:** VT/BN	**7:** 5294	**7:** Powertrain Main Relay Fused Supply (5)	**7:** II	**7:** -
8	-	-	-	Not Occupied	-	-
9: 9	**9:** 0.5	**9:** BK	**9:** 150	**9:** Ground	**9:** II	**9:** -
10	-	-	-	Not Occupied	-	-
11: 11	**11:** 0.5	**11:** YE/BK	**11:** 625	**11:** Starter Enable Relay Control	**11:** II	**11:** -
12-14	-	-	-	Not Occupied	-	-
15: 15	**15:** 0.5	**15:** BN/YE	**15:** 473	**15:** High Speed Cooling Fan Relay Control	**15:** II	**15:** -
16	-	-	-	Not Occupied	-	-
17: 17	**17:** 0.5	**17:** YE	**17:** 5991	**17:** Powertrain Relay Coil Control	**17:** II	**17:** -
18-19	-	-	-	Not Occupied	-	-
20: 20	**20:** 0.75	**20:** VT/D-BU	**20:** 139	**20:** Run/Crank Ignition 1 Voltage	**20:** II	**20:** -
21: 21	**21:** 0.5	**21:** BK	**21:** 150	**21:** Ground	**21:** II	**21:** -
22-26	-	-	-	Not Occupied	-	-
27: 27	**27:** 0.75	**27:** RD/WH	**27:** 140	**27:** Battery Positive Voltage	**27:** III	**27:** -
28-29	-	-	-	Not Occupied	-	-
30: 30	**30:** 0.5	**30:** BK/L-BU	**30:** 6813	**30:** Coolant Temperature Sensor #2 Low Reference	**30:** II	**30:** -
31: 31	**31:** 0.5	**31:** YE/BK	**31:** 3000	**31:** Coolant Temperature Sensor #2 Signal	**31:** II	**31:** -
32: 32	**32:** 0.5	**32:** L-GN	**32:** 380	**32:** A/C Refrigerant Pressure Sensor Signal	**32:** II	**32:** -
33	-	-	-	Not Occupied	-	-
34: 34	**34:** 0.75	**34:** WH/YE	**34:** 459	**34:** A/C Compressor Clutch Relay Control	**34:** II	**34:** -
35: 35	**35:** 0.75	**35:** D-BU	**35:** 5372	**35:** Canister Valve Solenoid	**35:** II	**35:** -
36	-	-	-	Not Occupied	-	-
37: 37	**37:** 0.75	**37:** RD/WH	**37:** 340	**37:** Battery Positive Voltage	**37:** -	**37:** MH8
38: 38	**38:** 0.5	**38:** BN/RD	**38:** 2700	**38:** A/C Pressure Sensor 5V Reference	**38:** II	**38:** -
39: 39	**39:** 0.5	**39:** BK/BN	**39:** 5514	**39:** A/C Refrigerant Pressure Sensor Low Reference	**39:** II	**39:** -
40-45	-	-	-	Not Occupied	-	-
46: 46	**46:** 0.5	**46:** BN/YE	**46:** 473	**46:** High Speed Cooling	**46:** III	**46:** -

				Fan Relay Control		
47-48	-	-	-	Not Occupied	-	-
49: 49	**49:** 0.5	**49:** L-GN/VT	**49:** 335	**49:** Low Speed Cooling Fan Relay Control	**49:** III	**49:** -
50: 50	**50:** 1	**50:** BN/D-GN	**50:** 59	**50:** A/C Compressor Clutch Supply Voltage	**50:** III	**50:** -

X50A FUSE BLOCK - UNDERHOOD X3 (LUW/LWE)

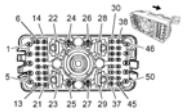

Connector Part Information

- Harness Type: Engine
- OEM Connector: 13262029
- Service Connector: 13505902
- Description: 50-Way F DSQ 1.5 2.8 Metri-Pack 800 Series (BK)

Terminal Part Information

Terminal Type ID	Terminated Lead	Diagnostic Test Probe	Terminal Removal Tool	Service Terminal	Tray	Core Crimp	Insulation Crimp
I	13575860	J-35616-35 (VT)	J-38125-36	2-964284-1	25	E	A
II	13578869	J-35616-14 (GN)	J-38125-560	962943-5	16	E	A
III	13578869	J-35616-14 (GN)	J-38125-560	962943-5	16	E	A

X50A Fuse Block - Underhood X3 (LUW/LWE)

Pin	Size	Color	Circuit	Function	Terminal Type ID	Option
1: 1	**1:** 0.75	**1:** VT/L-BU	**1:** 5290	**1:** Powertrain Main Relay Fused Supply (1)	**1:** I	**1:** -
2: 2	**2:** 1.5	**2:** VT/L-BU	**2:** 5291	**2:** Powertrain Main Relay Fused Supply (2)	**2:** I	**2:** -
3-4	-	-	-	Not Occupied	-	-
5: 5	**5:** 2.5	**5:** BK/RD	**5:** 6	**5:** Starter Solenoid Crank Voltage	**5:** I	**5:** -
6: 6	**6:** 1.5	**6:** VT/L-BU	**6:** 5293	**6:** Powertrain Main Relay Fused Supply (4)	**6:** II	**6:** -
				7: Powertrain Main Relay		

7: 7	**7:** 0.75	**7:** VT/D-BU	**7:** 5294	Fused Supply (5)	**7:** III	**7:** -
8	-	-	-	Not Occupied	-	-
9: 9	**9:** 0.5	**9:** BK	**9:** 150	**9:** Ground	**9:** III	**9:** -
10	-	-	-	Not Occupied	-	-
11: 11	**11:** 0.5	**11:** YE/BK	**11:** 625	**11:** Starter Enable Relay Control	**11:** III	**11:** -
12	-	-	-	Not Occupied	-	-
13: 13	**13:** 0.5	**13:** D-GN/GY	**13:** 465	**13:** Fuel Pump Primary Relay Control	**13:** III	**13:** -
14	-	-	-	Not Occupied	-	-
15: 15	**15:** 0.5	**15:** BN/YE	**15:** 335	**15:** Low Speed Cooling Fan Relay Control	**15:** III	**15:** -
16	-	-	-	Not Occupied	-	-
17: 17	**17:** 0.5	**17:** YE	**17:** 5991	**17:** Powertrain Relay Coil Control	**17:** III	**17:** -
18-19	-	-	-	Not Occupied	-	-
20: 20	**20:** 0.75	**20:** VT/GY	**20:** 139	**20:** Run/Crank Ignition 1 Voltage	**20:** I	**20:** -
21: 21	**21:** 0.5	**21:** BK	**21:** 150	**21:** Ground	**21:** III	**21:** -
22-26	-	-	-	Not Occupied	-	-
27: 27	**27:** 0.75	**27:** RD/WH	**27:** 140	**27:** Battery Positive Voltage	**27:** I	**27:** -
28-29	-	-	-	Not Occupied	-	-
30: 30	**30:** 0.5	**30:** BK/L-BU	**30:** 6813	**30:** Coolant Temperature Sensor #2 Low Reference	**30:** III	**30:** -
31: 31	**31:** 0.5	**31:** YE/BK	**31:** 3000	**31:** Coolant Temperature Sensor #2 Signal	**31:** III	**31:** -
32: 32	**32:** 0.5	**32:** L-GN	**32:** 380	**32:** A/C Refrigerant Pressure Sensor Signal	**32:** III	**32:** -
33	-	-	-	Not Occupied	-	-
34: 34	**34:** 0.5	**34:** WH/GY	**34:** 459	**34:** A/C Compressor Clutch Relay Control	**34:** III	**34:** -
35: 35	**35:** 0.75	**35:** L-BU	**35:** 5372	**35:** Canister Valve Solenoid	**35:** III	**35:** -
36	-	-	-	Not Occupied	-	-
37: 37	**37:** 0.75	**37:** RD/WH	**37:** 1840	**37:** Battery Positive Voltage	**37:** III	**37:** MH8
38: 38	**38:** 0.5	**38:** BN/RD	**38:** 2700	**38:** A/C Pressure Sensor 5V Reference	**38:** III	**38:** -
39: 39	**39:** 0.5	**39:** BK/BN	**39:** 5514	**39:** A/C Refrigerant Pressure Sensor Low Reference	**39:** III	**39:** -
40-45	-	-	-	Not Occupied	-	-

46: 46	**46:** 0.5	**46:** BN/YE	**46:** 473	**46:** High Speed Cooling Fan Relay Control	**46:** I	**46:** -
47-48	-	-	-	Not Occupied	-	-
49: 49	**49:** 0.5	**49:** GY/VT	**49:** 335	**49:** Low Speed Cooling Fan Relay Control	**49:** I	**49:** -
50	-	-	-	Not Occupied	-	-

X50A FUSE BLOCK - UNDERHOOD X4

Connector Part Information

- Harness Type: Fuse Block - Underhood
- OEM Connector: Not Available
- Service Connector: Service by Harness - See Part Catalog
- Description: Ring Terminal

Terminal Part Information

Terminal Type ID	Terminated Lead	Diagnostic Test Probe	Terminal Removal Tool	Service Terminal	Tray	Core Crimp	Insulation Crimp
I	Not Available	No Tool Required	Tool Required	Not Available	Not Available	Not Available	Not Available

X50A Fuse Block - Underhood X4

Pin	Size	Color	Circuit	Function	Terminal Type ID	Option
1: 1	**1:** 35	**1:** RD/WH	**1:** 4042	**1:** Battery Positive Voltage	**1:** I	**1:** -

X50D FUSE BLOCK - BATTERY TOP VIEW

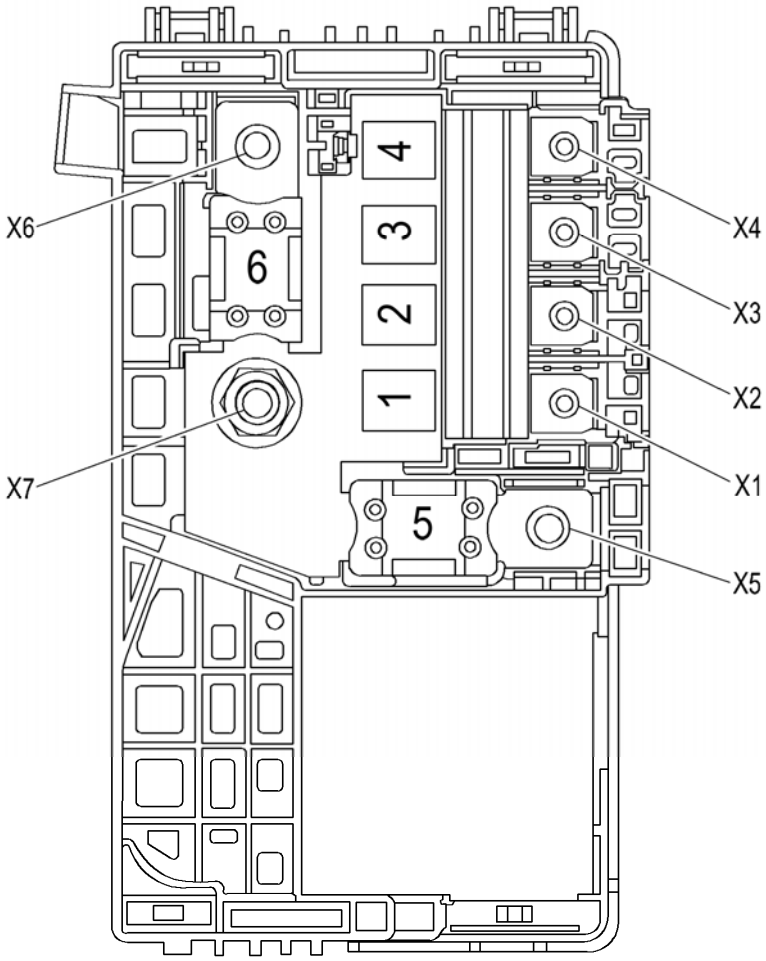

Fig. 4: X50D Fuse Block - Battery Top View
Courtesy of GENERAL MOTORS COMPANY

X50D Fuse Block - Battery Usage

No.	Device Label Name	Device Assigned Name	Rating	Description
F1UD: 1	**F1UD:** -	**F1UD:** F1UD Fuse	**F1UD:** 100A	**F1UD:** X51 Fuse Block - Instrument Panel
F2UD: 2	**F2UD:** -	**F2UD:** F2UD Fuse	**F2UD:** 100A	**F2UD:** X51 Fuse Block - Instrument Panel
F3UD: 3	**F3UD:** -	**F3UD:** F3UD Fuse	**F3UD:** 80A	**F3UD:** K43 Power Steering Control Module
F4UD: 4	**F4UD:** -	**F4UD:** F4UD Fuse	**F4UD:** -	**F4UD:** Not Used
F5UD: 5	**F5UD:** -	**F5UD:** F5UD Fuse	**F5UD:** 250A	**F5UD:** Fuse Block - Underhood
F6UD: 6	**F6UD:** -	**F6UD:** F6UD Fuse	**F6UD:** 250A	**F6UD:** M64 Starter Motor, G13 Generator

X50D FUSE BLOCK - BATTERY X1

Connector Part Information

- Harness Type: Body
- OEM Connector: Not Available
- Service Connector: Service by Harness - See Part Catalog
- Description: Ring Terminal

Terminal Part Information

Terminal Type ID	Terminated Lead	Diagnostic Test Probe	Terminal Removal Tool	Service Terminal	Tray	Core Crimp	Insulation Crimp
I	Not Available	No Tool Required	Tool Required	Not Available	Not Available	Not Available	Not Available

X50D Fuse Block - Battery X1

Pin	Size	Color	Circuit	Function	Terminal Type ID	Option
1: 1	**1:** 10	**1:** RD/GN	**1:** 5140	**1:** Battery Positive Voltage	**1:** I	**1:** -

X50D FUSE BLOCK - BATTERY X2

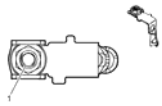

Connector Part Information

- Harness Type: Body
- OEM Connector: 13605717
- Service Connector: Service by Harness - See Part Catalog
- Description: Ring Terminal

Terminal Part Information

Terminal Type ID	Terminated Lead	Diagnostic Test Probe	Terminal Removal Tool	Service Terminal	Tray	Core Crimp	Insulation Crimp
I	Not Available	No Tool Required	Tool Required	Not Available	Not Available	Not Available	Not Available

X50D Fuse Block - Battery X2

					Terminal Type	

Pin	Size	Color	Circuit	Function	ID	Option
A: A	**A:** 10	**A:** RD/YE	**A:** 5040	**A:** Battery Positive Voltage	**A:** I	**A:** -

X50D FUSE BLOCK - BATTERY X3

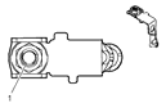

Connector Part Information

- Harness Type: Power Steering
- OEM Connector: 13605716
- Service Connector: Service by Harness - See Part Catalog
- Description: Ring Terminal

Terminal Part Information

Terminal Type ID	Terminated Lead	Diagnostic Test Probe	Terminal Removal Tool	Service Terminal	Tray	Core Crimp	Insulation Crimp
I	Not Available	No Tool Required	Tool Required	Not Available	Not Available	Not Available	Not Available

X50D Fuse Block - Battery X3

Pin	Size	Color	Circuit	Function	Terminal Type ID	Option
A: A	**A:** 10	**A:** RD/WH	**A:** 140	**A:** Battery Positive Voltage	**A:** I	**A:** -

X50D FUSE BLOCK - BATTERY X5

Connector Part Information

- Harness Type: Fuse Block - Underhood
- OEM Connector: Not Available
- Service Connector: Service by Harness - See Part Catalog
- Description: Ring Terminal

Terminal Part Information

Terminal Type ID	Terminated Lead	Diagnostic Test Probe	Terminal Removal Tool	Service Terminal	Tray	Core Crimp	Insulation Crimp
I	Not	No Tool	Tool	Not	Not	Not	Not

	Available	Required	Required	Available	Available	Available	Available

X50D Fuse Block - Battery X5

Pin	Size	Color	Circuit	Function	Terminal Type ID	Option
1: 1	**1:** 10	**1:** RD/WH	**1:** 4042	**1:** Battery Positive Voltage	**1:** I	**1:** -

X50D FUSE BLOCK - BATTERY X6

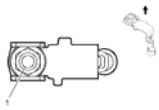

Connector Part Information

- Harness Type: Battery Positive
- OEM Connector: 13605714
- Service Connector: Service by Harness - See Part Catalog
- Description: Ring Terminal

Terminal Part Information

Terminal Type ID	Terminated Lead	Diagnostic Test Probe	Terminal Removal Tool	Service Terminal	Tray	Core Crimp	Insulation Crimp
I	Not Available	No Tool Required	Tool Required	Not Available	Not Available	Not Available	Not Available

X50D Fuse Block - Battery X6

Pin	Size	Color	Circuit	Function	Terminal Type ID	Option
A: A	**A:** 20	**A:** RD	**A:** 2	**A:** Battery Positive Voltage	**A:** I	**A:** -

X50D FUSE BLOCK - BATTERY X7

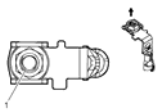

Connector Part Information

- Harness Type: Battery
- OEM Connector: 13278091
- Service Connector: Service by Harness - See Part Catalog
- Description: Ring Terminal

Terminal Part Information

Terminal Type ID	Terminated Lead	Diagnostic Test Probe	Terminal Removal Tool	Service Terminal	Tray	Core Crimp	Insulation Crimp
I	Not Available	No Tool Required	Tool Required	Not Available	Not Available	Not Available	Not Available

X50D Fuse Block - Battery X7

Pin	Size	Color	Circuit	Function	Terminal Type ID	Option
1: 1	**1:** 10	**1:** RD/GN	**1:** 40	**1:** Battery Positive Voltage	**1:** I	**1:** -

X51A FUSE BLOCK - INSTRUMENT PANEL TOP VIEW FUSES

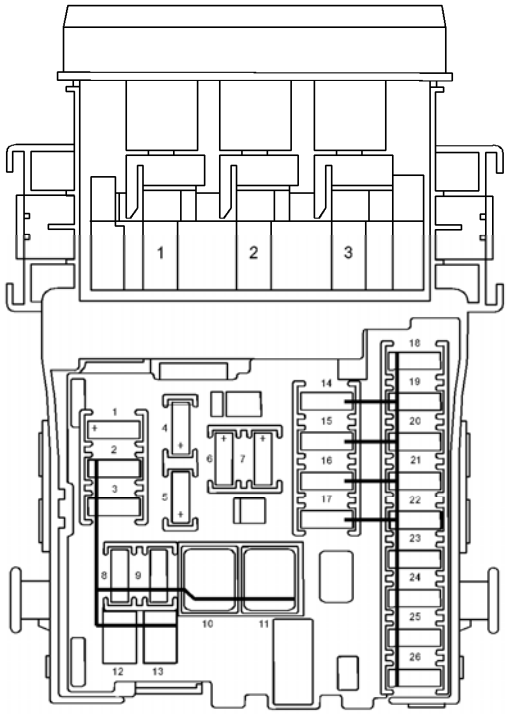

Fig. 5: X51A Fuse Block -- Instrument Panel Top View Fuses
Courtesy of GENERAL MOTORS COMPANY

X51A Fuse Block - Instrument Panel Fuse Usage

No.	Device Label Name	Device Assigned Name	Rating	Description
F1DA: 1	**F1DA:** -	**F1DA:** F1DA Fuse	**F1DA:** 10A	**F1DA:** K73 Telematics Communication Interface Control Module (UE1)
F2DA: 2	**F2DA:** -	**F2DA:** F2DA Fuse	**F2DA:** -	**F2DA:** Not Used

F3DA: 3	**F3DA:** -	**F3DA:** F3DA Fuse	**F3DA:** 25A	**F3DA:** K9 Body Control Module
F4DA: 4	**F4DA:** -	**F4DA:** F4DA Fuse	**F4DA:** 20A	**F4DA:** A11 Radio
F5DA: 5	**F5DA:** -	**F5DA:** F5DA Fuse	**F5DA:** 7.5A	**F5DA:** A22 Radio Controls, K41 Parking Assist Control Module (UD7), P17 Info Display Module, T11 Multimedia Player Interface Module (KTA)
F6DA: 6	**F6DA:** -	**F6DA:** F6DA Fuse	**F6DA:** 20A	**F6DA:** E32 Cigarette Lighter Receptacle
F7DA: 7	**F7DA:** -	**F7DA:** F7DA Fuse	**F7DA:** 20A	**F7DA:** X80L Accessory Power Receptacle - Rear Console
F8DA: 8	**F8DA:** -	**F8DA:** F8DA Fuse	**F8DA:** 30A	**F8DA:** K9 Body Control Module
F9DA: 9	**F9DA:** -	**F9DA:** F9DA Fuse	**F9DA:** 30A	**F9DA:** K9 Body Control Module
F10DA: 10	**F10DA:** -	**F10DA:** F10DA Fuse	**F10DA:** 30A	**F10DA:** K9 Body Control Module
F11DA: 11	**F11DA:** -	**F11DA:** F11DA Fuse	**F11DA:** 40A	**F11DA:** K8 Blower Motor Control Module
F12DA: 12	**F12DA:** -	**F12DA:** F12DA Fuse	**F12DA:** -	**F12DA:** Not Used
F13DA: 13	**F13DA:** -	**F13DA:** F13DA Fuse	**F13DA:** 25A	**F13DA:** S64D Seat Adjuster Switch - Driver (ADS)
F14DA: 14	**F14DA:** -	**F14DA:** F14DA Fuse	**F14DA:** 7.5A	**F14DA:** X84 Data Link Connector
F15DA: 15	**F15DA:** -	**F15DA:** F15DA Fuse	**F15DA:** 10A	**F15DA:** K36 Inflatable Restraint Sensing and Diagnostic Module
F16DA: 16	**F16DA:** -	**F16DA:** F16DA Fuse	**F16DA:** 10A	**F16DA:** KR95B Rear Compartment Lid Release Relay
F17DA: 17	**F17DA:** -	**F17DA:** F17DA Fuse	**F17DA:** 15A	**F17DA:** K33 HVAC Control Module, S34 HVAC Controls Switch Assembly
F18DA: 18	**F18DA:** -	**F18DA:** F18DA Fuse	**F18DA:** -	**F18DA:** Not Used
F19DA: 19	**F19DA:** -	**F19DA:** F19DA Fuse	**F19DA:** -	**F19DA:** Not Used
F20DA: 20	**F20DA:** -	**F20DA:** F20DA Fuse	**F20DA:** -	**F20DA:** Not Used
F21DA: 21	**F21DA:** -	**F21DA:** F21DA Fuse	**F21DA:** 15A	**F21DA:** P16 Instrument Cluster
		F22DA: F22DA		

F22DA: 22	**F22DA:** -	Fuse	**F22DA:** 2A	**F22DA:** S39 Ignition Switch
F23DA: 23	**F23DA:** -	**F23DA:** F23DA Fuse	**F23DA:** 20A	**F23DA:** K9 Body Control Module
F24DA: 24	**F24DA:** -	**F24DA:** F24DA Fuse	**F24DA:** 20A	**F24DA:** K9 Body Control Module
F25DA: 25	**F25DA:** -	**F25DA:** F25DA Fuse	**F25DA:** 20A	**F25DA:** K60 Steering Column Lock Control Module (ULS)
F26DA: 26	**F26DA:** -	**F26DA:** F26DA Fuse	**F26DA:** -	**F26DA:** Not Used

X51A FUSE BLOCK - INSTRUMENT PANEL TOP VIEW RELAYS

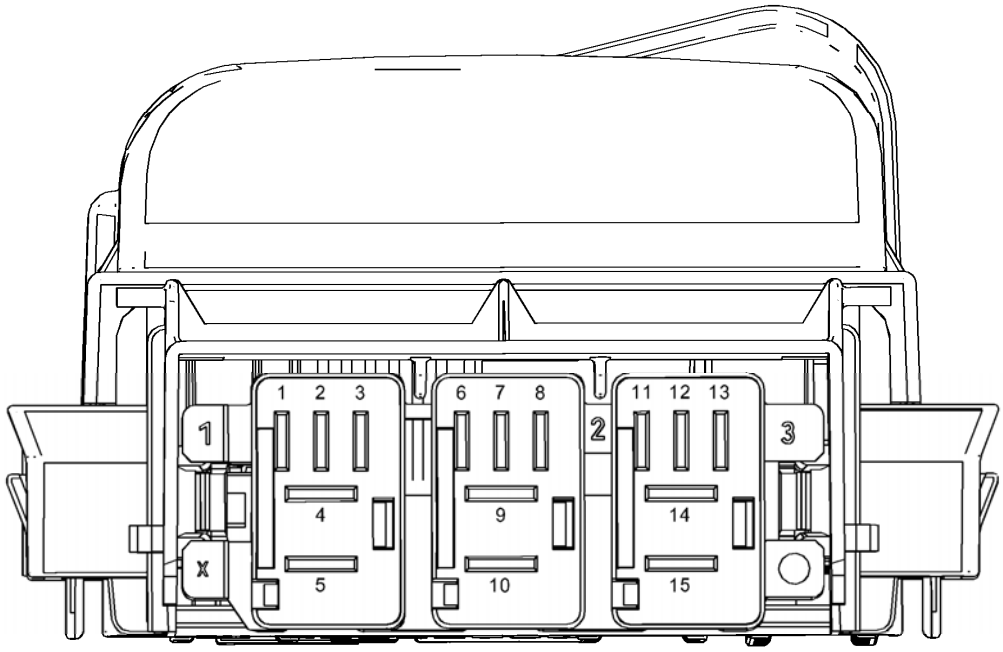

Fig. 6: X51A Fuse Block -- Instrument Panel Top View Relays (except CZ2)
Courtesy of GENERAL MOTORS COMPANY

X51A Fuse Block - Instrument Panel Relay Usage

	Device Label	Device Assigned		

No.	Name	Name	Rating	Description
KR95B: 1	**KR95B:** -	**KR95B:** KR95B Rear Compartment Lid Unlatch Relay	**KR95B:** -	**KR95B:** M40 Rear Compartment Lid Unlatch
KR104A: 2	**KR104A:** -	**KR104A:** KR104A Battery Saver Relay 1	**KR104A:** -	**KR104A:** F1DA Fuse, F4DA Fuse, F5DA Fuse
KR76: 3	**KR76:** -	**KR76:** KR76 Retained Accessory Power Relay	**KR76:** -	**KR76:** F6DA Fuse, F7DA Fuse

X51A FUSE BLOCK - INSTRUMENT PANEL BOTTOM VIEW FUSES

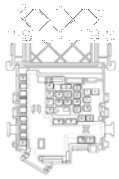

Connector Part Information

- Harness Type: Instrument Panel
- OEM Connector: 13595188
- Service Connector: Service by Harness - See Part Catalog
- Description: 26-Way Fuse Block (GY)

Terminal Part Information

Terminal Type ID	Terminated Lead	Diagnostic Test Probe	Terminal Removal Tool	Service Terminal	Tray	Core Crimp	Insulation Crimp
I	13575780	J-35616-35 (VT)	J-38125-38	2-964284-1	25	E	A
II	13575781	J-35616-35 (VT)	J-38125-38	4-965999-1	25	4	A
III	13575730	J-35616-42 (RD)	J-38125-11A	15396853	23	Not Available	Not Available
IV	13327178	J-35616-43 (RD)	J-38125-11A	15343823	19	G/F/G	G/F/G
V	13575770	J-35616-43 (RD)	J-38125-11A	15343823	19	G/F/G	G/F/G

X51A Fuse Block - Instrument Panel Bottom View Fuses

Pin	Size	Color	Circuit	Function	Terminal Type ID	Option
16: 16	**16:** 0.5	**16:** RD/L-GN	**16:** 3140	**16:** Battery Positive Voltage	**16:** I	**16:** -
				17: Battery Positive		

17: 17	**17:** 0.5	**17:** RD/D-BU	**17:** 840	Voltage	**17:** I	**17:** -
18: 18	**18:** 1.5	**18:** RD/D-GN	**18:** 40	**18:** Battery Positive Voltage	**18:** II	**18:** -
19: 19	**19:** 6	**19:** RD/D-GN	**19:** 3140	**19:** Battery Positive Voltage	**19:** III	**19:** -
20: 20	**20:** 0.5	**20:** RD/D-BU	**20:** 540	**20:** Battery Positive Voltage	**20:** I	**20:** -
21	-	-	-	Not Occupied	-	-
22: 22	**22:** 2.5	**22:** RD/D-GN	**22:** 3140	**22:** Battery Positive Voltage	**22:** II	**22:** -
23: 23	**23:** 1	**23:** VT	**23:** 801	**23:** Retained Accessory Power Fuse Supply Voltage	**23:** I	**23:** -
24: 24	**24:** 1	**24:** VT	**24:** 801	**24:** Retained Accessory Power Fuse Supply Voltage	**24:** I	**24:** -
25: 25	**25:** 0.75	**25:** RD/YE	**25:** 3040	**25:** Battery Positive Voltage	**25:** I	**25:** -
26: 26	**26:** 1.5	**26:** RD/D-BU	**26:** 2540	**26:** Battery Positive Voltage	**26:** II	**26:** -
27: 27	**27:** 1.5	**27:** RD/L-GN	**27:** 3140	**27:** Battery Positive Voltage	**27:** II	**27:** -
28: 28	**28:** 0.5	**28:** RD/L-GN	**28:** 3140	**28:** Battery Positive Voltage	**28:** I	**28:** -
29: 29	**29:** 1	**29:** D-BU/WH	**29:** 6128	**29:** Rear Closure Unlatch Motor Unlatch Control	**29:** I	**29:** -
30: 30	**30:** 1	**30:** D-BU/WH	**30:** 6128	**30:** Rear Closure Unlatch Motor Unlatch Control	**30:** I	**30:** -
31: 31	**31:** 0.5	**31:** RD/D-BU	**31:** 5240	**31:** Battery Positive Voltage	**31:** I	**31:** -
32: 32	**32:** 0.75 **32:** 0.75	**32:** RD/YE **32:** RD/YE	**32:** 240 **32:** 240	**32:** Battery Positive Voltage **32:** Battery Positive Voltage	**32:** II	**32:** -
33: 33	**33:** 2.5	**33:** RD/YE	**33:** 2340	**33:** Battery Positive Voltage	**33:** II	**33:** -
34: 34	**34:** 2.5	**34:** RD/D-GN	**34:** 2440	**34:** Battery Positive Voltage	**34:** II	**34:** -
35: 35	**35:** 2.5	**35:** RD/GY	**35:** 2840	**35:** Battery Positive Voltage	**35:** IV	**35:** -
36: 36	**36:** 4	**36:** RD/BN	**36:** 440	**36:** Battery Positive Voltage	**36:** V	**36:** -
37	-	-	-	Not Occupied	-	-
38: 38	**38:** 1.5	**38:** RD/BN	**38:** 702	**38:** Battery Positive	**38:** II	**38:** -

				Voltage		
39-41	-	-	-	Not Occupied	-	-
42: 42	**42:** 0.75	**42:** RD/WH	**42:** 140	**42:** Battery Positive Voltage	**42:** I	**42:** -
43: 43	**43:** 0.5	**43:** RD/VT	**43:** 340	**43:** Battery Positive Voltage	**43:** I	**43:** -
44: 44	**44:** 1.5	**44:** RD/GY	**44:** 2140	**44:** Battery Positive Voltage	**44:** II	**44:** -
45: 45	**45:** 1.5	**45:** RD/BN	**45:** 2240	**45:** Battery Positive Voltage	**45:** II	**45:** -
46-47	-	-	-	Not Occupied	-	-

X51A FUSE BLOCK - INSTRUMENT PANEL BOTTOM VIEW RELAYS

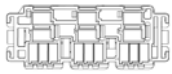

Connector Part Information

- Harness Type: Instrument Panel
- OEM Connector: 13595183
- Service Connector: Service by Component Assembly - See Part Catalog
- Description: 15-Way Relay Block (BK)

Terminal Part Information

Terminal Type ID	Terminated Lead	Diagnostic Test Probe	Terminal Removal Tool	Service Terminal	Tray	Core Crimp	Insulation Crimp
I	13327158	J-35616-42 (RD)	J-38125-11A	15344769	23	A	B
II	13327158	J-35616-42 (RD)	J-38125-11A	15344769	23	F	B

X51A Fuse Block - Instrument Panel Bottom View Relays

Pin	Size	Color	Circuit	Function	Terminal Type ID	Option
1: 1	**1:** 0.5	**1:** BK	**1:** 1650	**1:** Ground	**1:** I	**1:** -
2: 2	**2:** 0.5	**2:** BK	**2:** 1650	**2:** Ground	**2:** I	**2:** -
3: 3	**3:** 0.5	**3:** GY/YE	**3:** 6188	**3:** Lift Glass/Trunk Motor Release Control	**3:** I	**3:** -
4: 4	**4:** 0.5	**4:** RD/D-BU	**4:** 5240	**4:** Battery Positive Voltage	**4:** I	**4:** -
5: 5	**5:** 0.5	**5:** D-BU/YE	**5:** 6795	**5:** Lift Glass/Trunk Motor Release Control 2	**5:** I	**5:** -
				6: Technology		

6: 6	**6:** 0.5	**6:** L-GN/BK	**6:** 5103	Identification	**6:** I	**6:** -
7: 7	**7:** 0.5	**7:** BK	**7:** 1650	**7:** Ground	**7:** I	**7:** -
8: 8	**8:** 0.5	**8:** YE	**8:** 7546	**8:** Logistics Relay Control	**8:** I	**8:** -
9: 9	**9:** 2.5	**9:** RD/D-GN	**9:** 3140	**9:** Battery Positive Voltage	**9:** II	**9:** -
10: 10	**10:** 2.5	**10:** RD/D-GN	**10:** 3140	**10:** Battery Positive Voltage	**10:** II	**10:** -
11: 11	**11:** 0.5	**11:** VT/BK	**11:** 3	**11:** Run/Crank Ignition 1 Voltage	**11:** I	**11:** -
12	-	-	-	Not Occupied	-	-
13: 13	**13:** 0.5	**13:** BK	**13:** 1650	**13:** Ground	**13:** I	**13:** -
14: 14	**14:** 1 **14:** 1	**14:** D-BU/WH **14:** D-BU/WH	**14:** 6128 **14:** 6128	**14:** Rear Closure Unlatch Motor Unlatch Control **14:** Rear Closure Unlatch Motor Unlatch Control	**14:** II	**14:** -
15: 15	**15:** 2.5	**15:** RD/D-GN	**15:** 3140	**15:** Battery Positive Voltage	**15:** II	**15:** -

2013 ELECTRICAL

Wiring Systems and Power Management - Component Locator - Front of Vehicle/Engine Compartment Component Views - Cruze

FRONT OF VEHICLE/ENGINE COMPARTMENT COMPONENT VIEWS

FRONT OF VEHICLE COMPONENTS

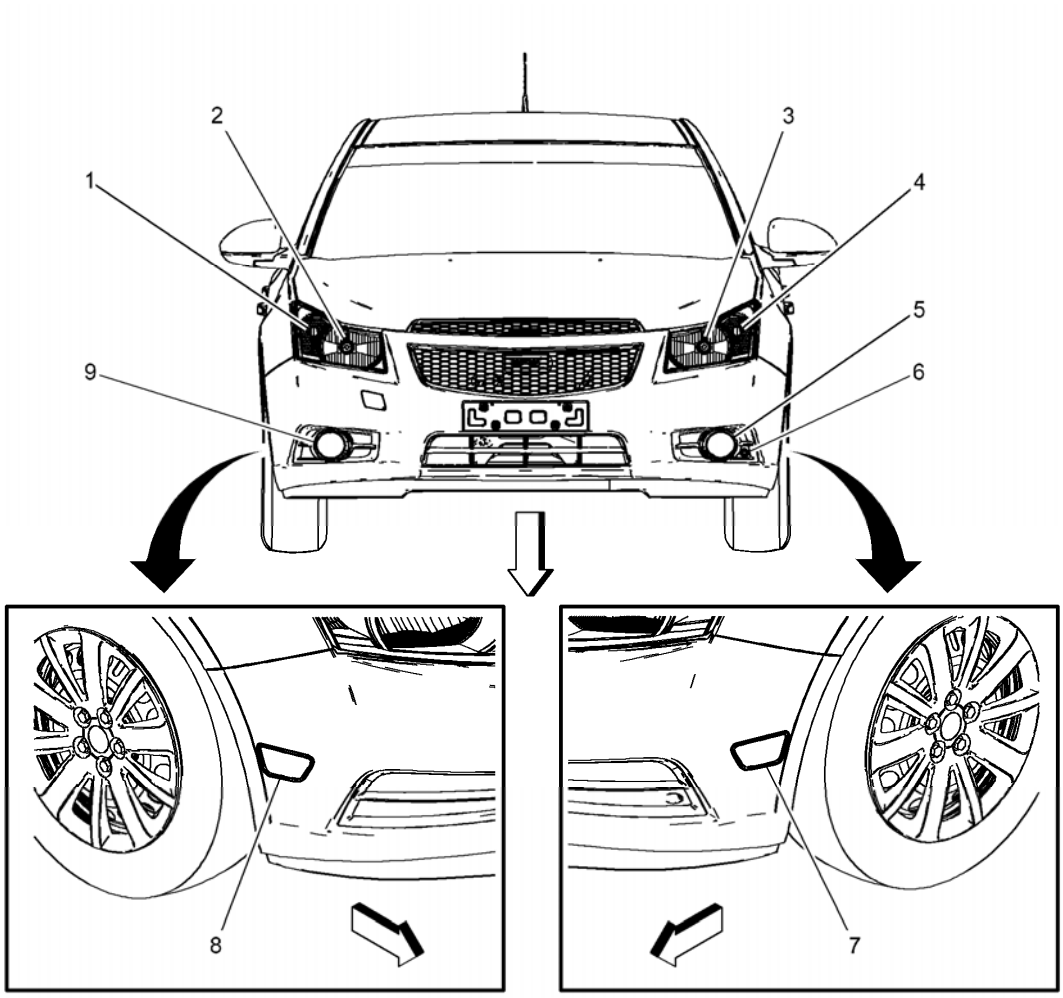

Fig. 1: Front Of Vehicle
Courtesy of GENERAL MOTORS COMPANY

Items
1: E4P Park/Turn Signal Lamp - Right **E4P Park/Turn Signal Lamp - Right**
2: E13R Headlamp - Right **E13R Headlamp - Right**
3: E13L Headlamp - Left **E13L Headlamp - Left**
4: E4N Park/Turn Signal Lamp - Left **E4N Park/Turn Signal Lamp - Left**

5: E29LF Fog Lamp - Left Front (T3U) **E29LF Fog Lamp - Left Front (T3U)**
6: B9 Ambient Air Temperature Sensor **B9 Ambient Air Temperature Sensor**
7: E2LF Side Marker Lamp - Left Front **E2LF Side Marker Lamp - Left Front**
8: E2RF Side Marker Lamp - Right Front **E2RF Side Marker Lamp - Right Front**
9: E29RF Fog Lamp - Right Front (T3U) **E29RF Fog Lamp - Right Front (T3U)**

BEHIND THE FRONT BUMPER FASCIA COMPONENTS (Y8X)

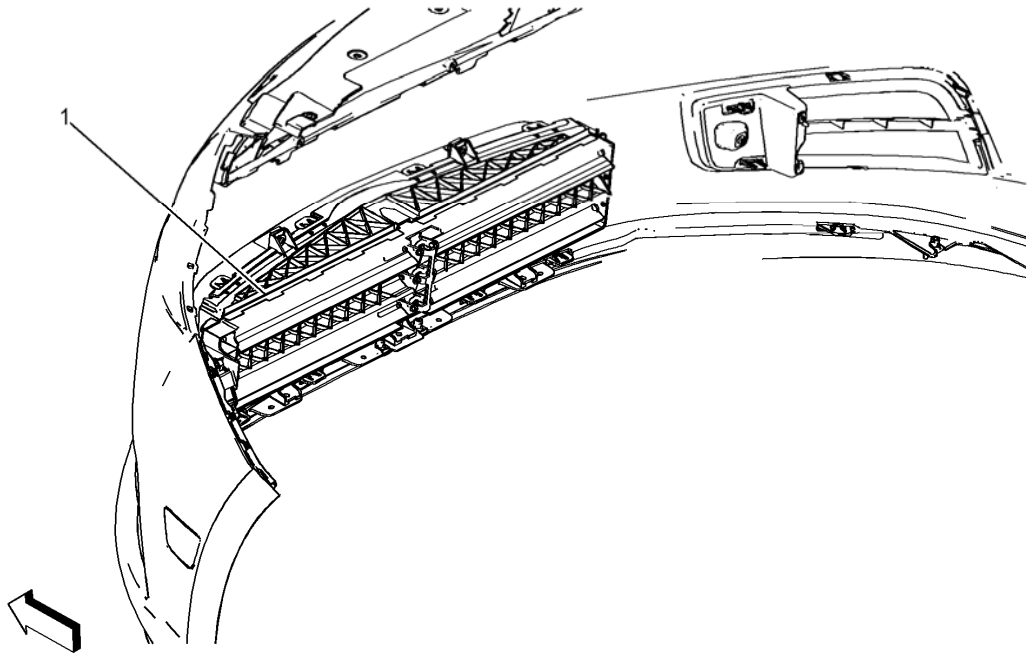

Fig. 2: Behind Front Bumper Fascia (Y8X)
Courtesy of GENERAL MOTORS COMPANY

Items
1: M96 Active Grille Air Shutter Actuator (Y8K) **M96 Active Grille Air Shutter Actuator (Y8X)**

FRONT OF ENGINE COMPARTMENT COMPONENTS

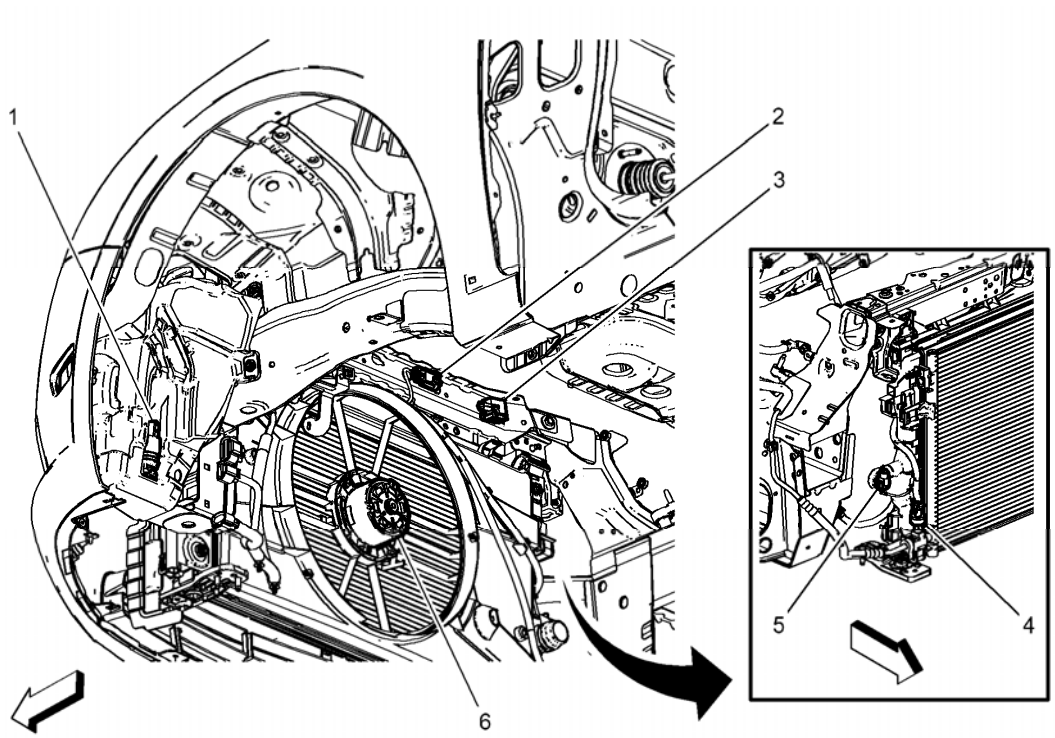

Fig. 3: Front Of Engine Compartment
Courtesy of GENERAL MOTORS COMPANY

Items
1: G24 Windshield Washer Pump **G24 Windshield Washer Pump**
2: B55 Hood Ajar Switch **B55 Hood Ajar Switch**
3: B59R Front Impact Sensor - Right **B59R Front Impact Sensor - Right**
4: B1 A/C Refrigerant Pressure Sensor **B1 A/C Refrigerant Pressure Sensor**
5: B34B Engine Coolant Temperature Sensor 2 **B34B Engine Coolant Temperature Sensor 2**
6: G10 Cooling Fan Motor **G10 Cooling Fan Motor**

LEFT SIDE OF ENGINE COMPARTMENT COMPONENTS

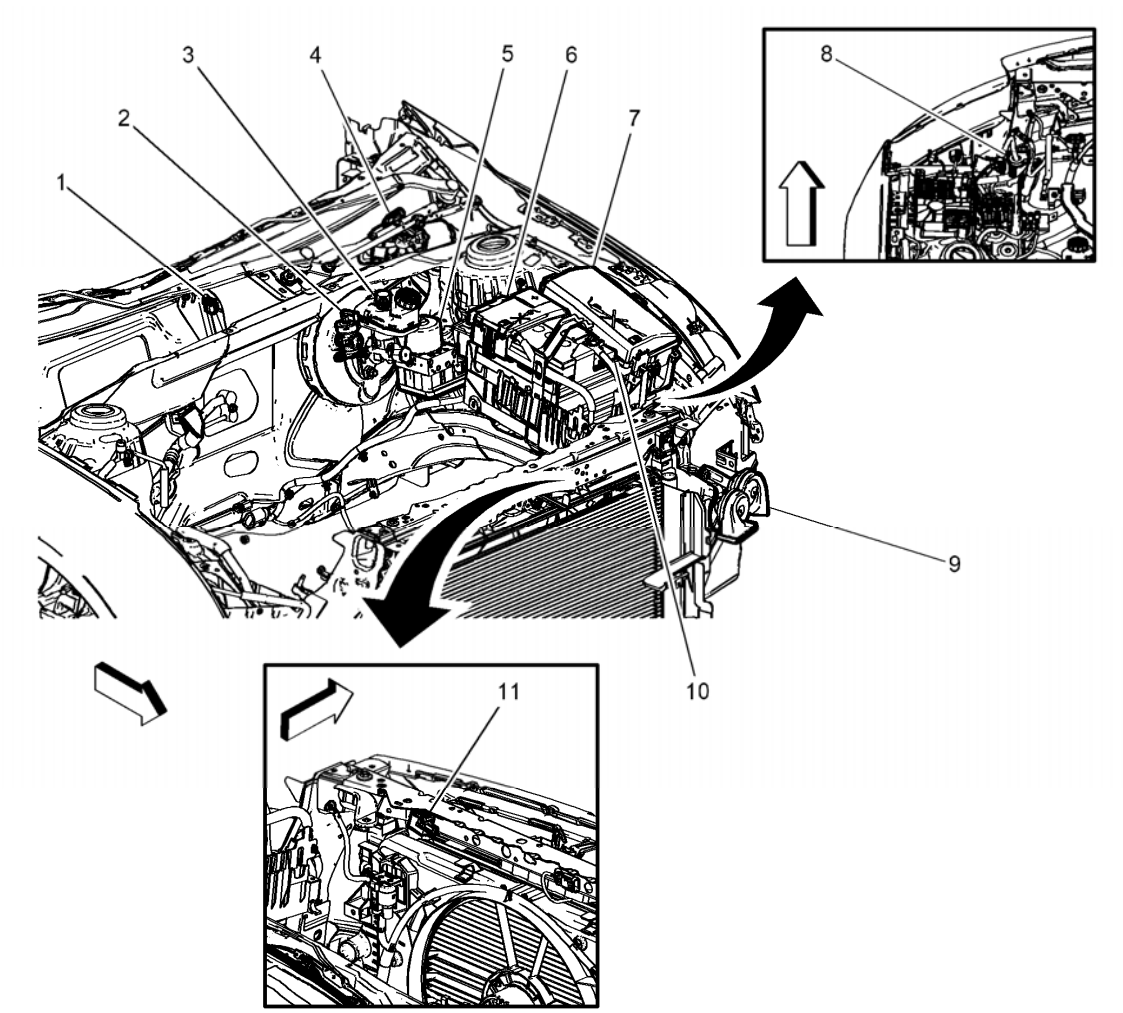

Fig. 4: Left Side Of Engine Compartment
Courtesy of GENERAL MOTORS COMPANY

Items

1: B108 Air Quality Sensor (C68) **B108 Air Quality Sensor (C68)**
2: B19B Brake Booster Vacuum Sensor **B19B Brake Booster Vacuum Sensor**
3: B20 Brake Fluid Level Switch **B20 Brake Fluid Level Switch**
4: M75 Windshield Wiper Motor **M75 Windshield Wiper Motor**
5: K17 Electronic Brake Control Module **K17 Electronic Brake Control Module**
6: X50D Fuse Block - Battery **X50D Fuse Block - Battery X1** **X50D Fuse Block - Battery X2** **X50D Fuse Block - Battery X3** **X50D Fuse Block - Battery X5** **X50D Fuse Block - Battery X6** **X50D Fuse Block - Battery X7**
7: X50A Fuse Block - Underhood **X50A Fuse Block - Underhood X1** **X50A Fuse Block - Underhood X2** **X50A Fuse Block - Underhood X3 (LUV)** **X50A Fuse Block - Underhood X3 (LUW/LWE)** **X50A Fuse Block - Underhood X4**
8: B18 Battery Current Sensor **B18 Battery Current Sensor**
9: P12 Horn **P12 Horn**

10: C1 Battery
11: B59L Front Impact Sensor - Left **B59L Front Impact Sensor - Left**

LOWER REAR OF ENGINE COMPARTMENT COMPONENTS

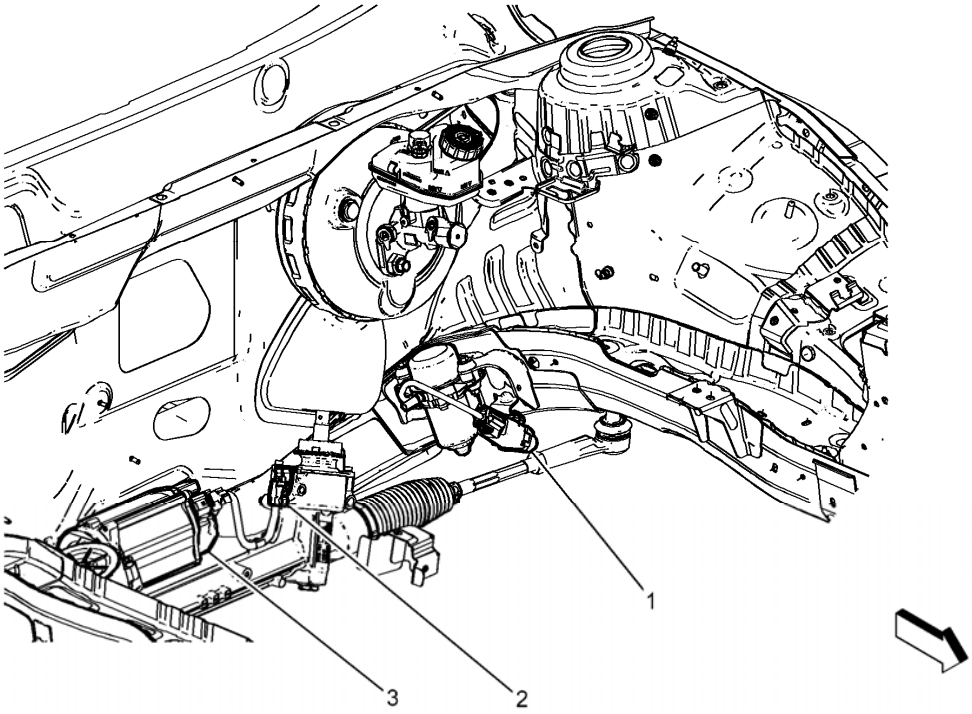

Fig. 5: Lower Rear Of Engine Compartment
Courtesy of GENERAL MOTORS COMPANY

Items
1: M9 Brake Booster Pump Motor
2: B137 Power Steering Shaft Torque Sensor (NJ1)
3: K43 Power Steering Control Module **K43 Power Steering Control Module X1** **K43 Power Steering Control Module X2**

2013 ELECTRICAL

Wiring Systems and Power Management - Component Locator - Ground Views - Cruze

GROUND VIEWS

G100, G101, G103, G104, G105, G120, AND G121

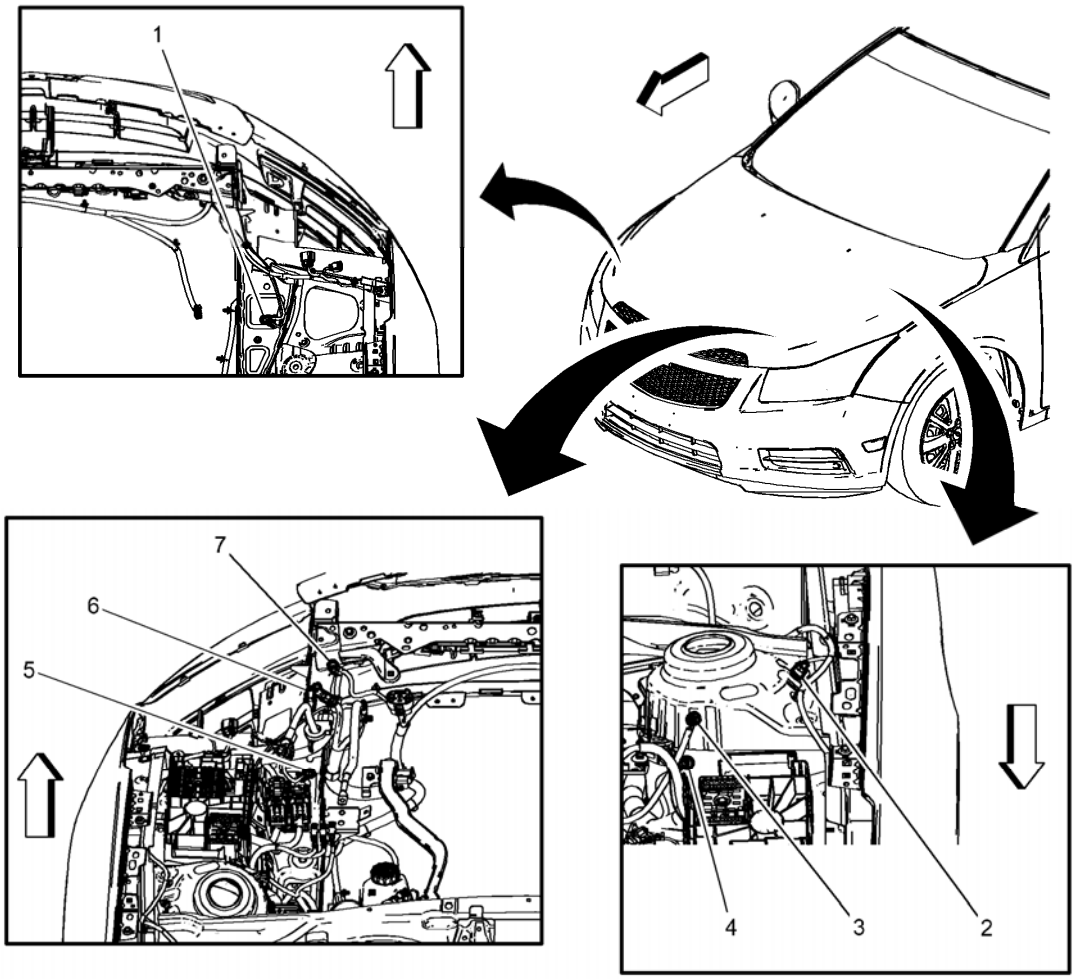

Fig. 1: G100, G101, G103, G104, G105, G120 And G121 Ground Locations
Courtesy of GENERAL MOTORS COMPANY

Items
1: G104
2: G103
3: G121
4: G120
5: G101

6: G100 **7:** G105

G102

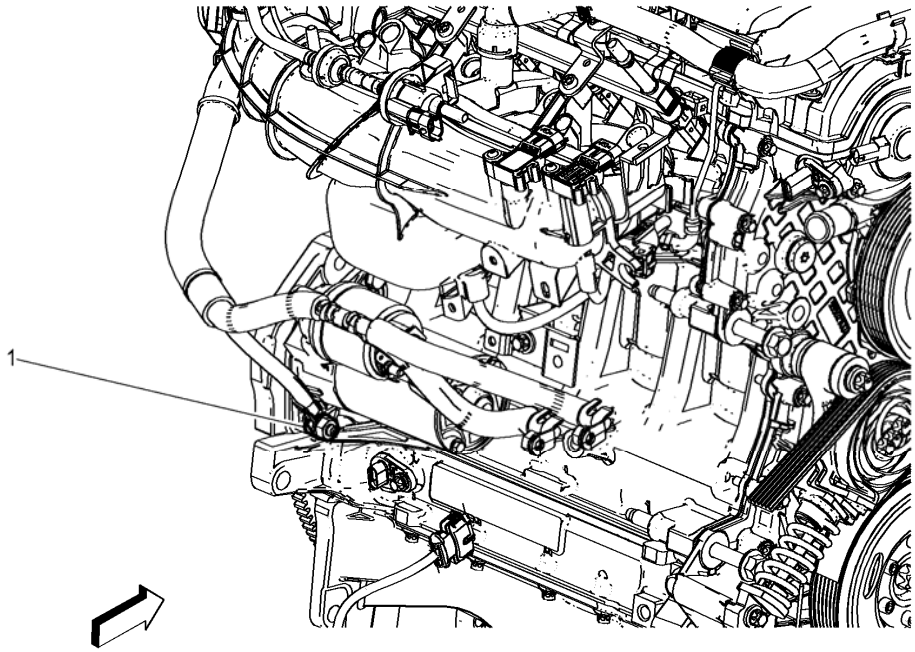

Fig. 2: G102 Ground Location
Courtesy of GENERAL MOTORS COMPANY

Items
1: G102

G112 (LUW/LWE)

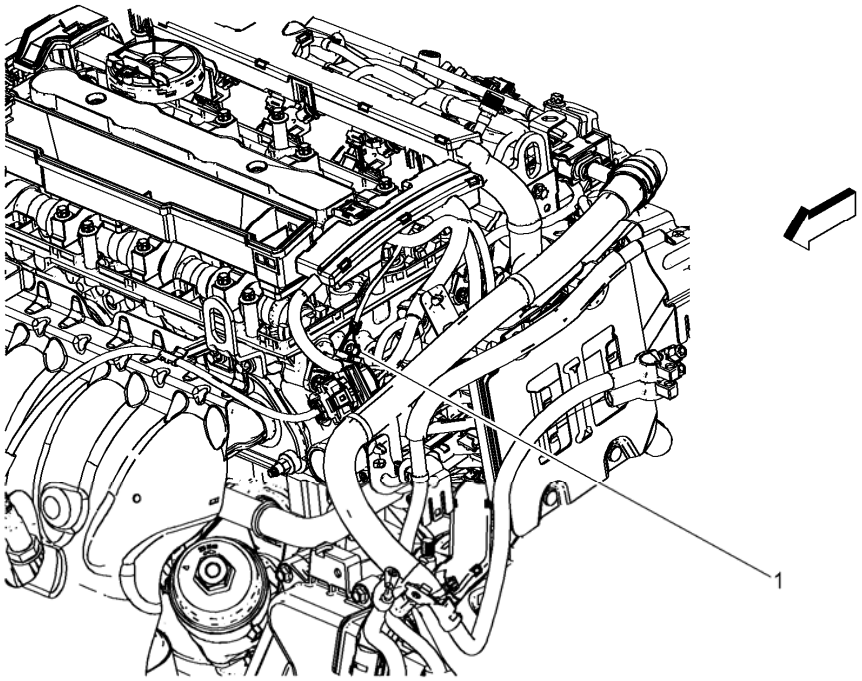

Fig. 3: G112 Ground Location (LUW)
Courtesy of GENERAL MOTORS COMPANY

Items
1: G112

G114 (LUV)

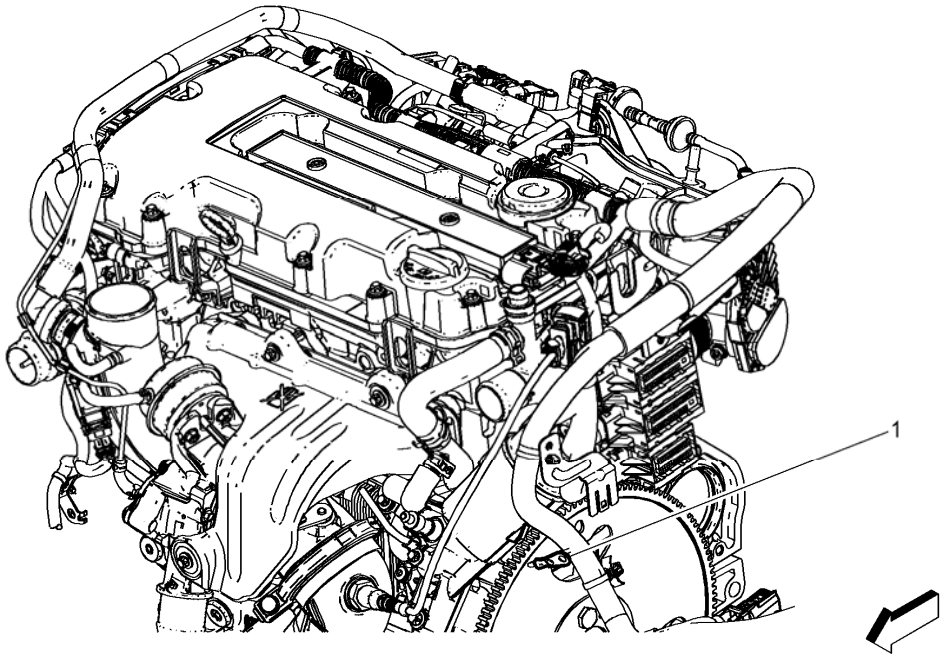

Fig. 4: G112 And G114 Ground Locations (LUJ)
Courtesy of GENERAL MOTORS COMPANY

Items
1: G114

G114 (LUW/LWE)

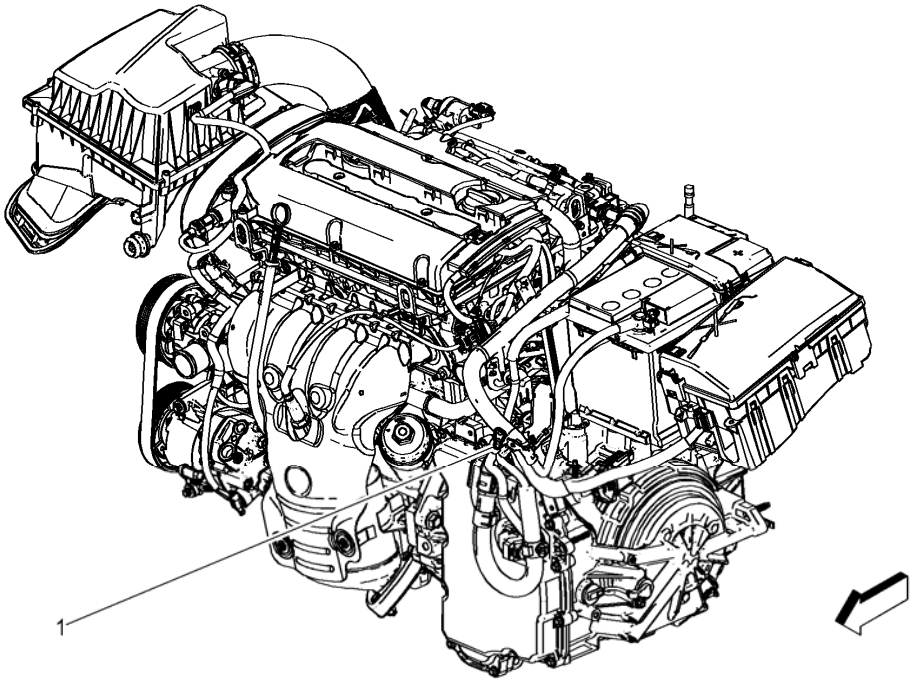

Fig. 5: G114 Ground Location (LUW)
Courtesy of GENERAL MOTORS COMPANY

Items
1: G114

G201

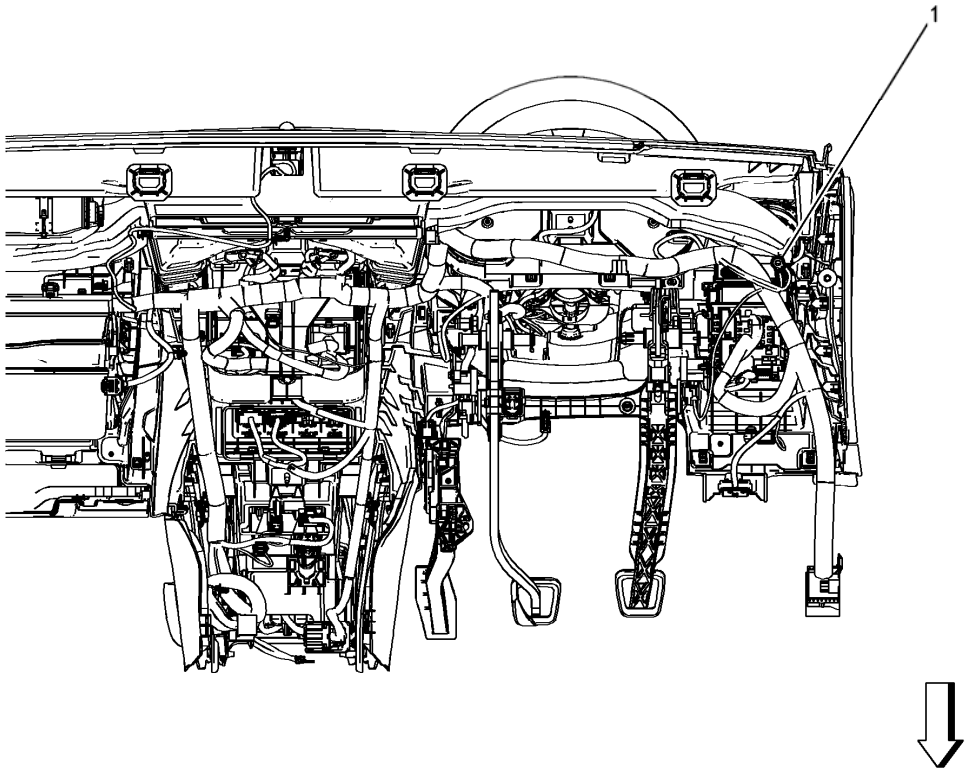

Fig. 6: Identifying Behind the Left Side of the I/P Components
Courtesy of GENERAL MOTORS COMPANY

Items
1: G201

G202 AND G203

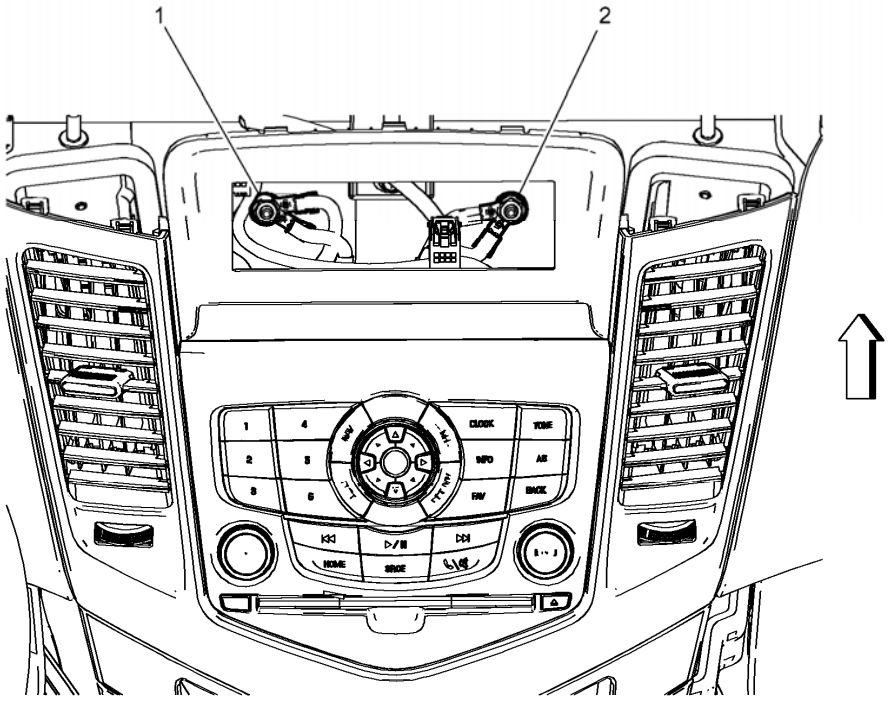

Fig. 7: G202 And G203 Ground Locations
Courtesy of GENERAL MOTORS COMPANY

Items
1: G202
2: G203

G204

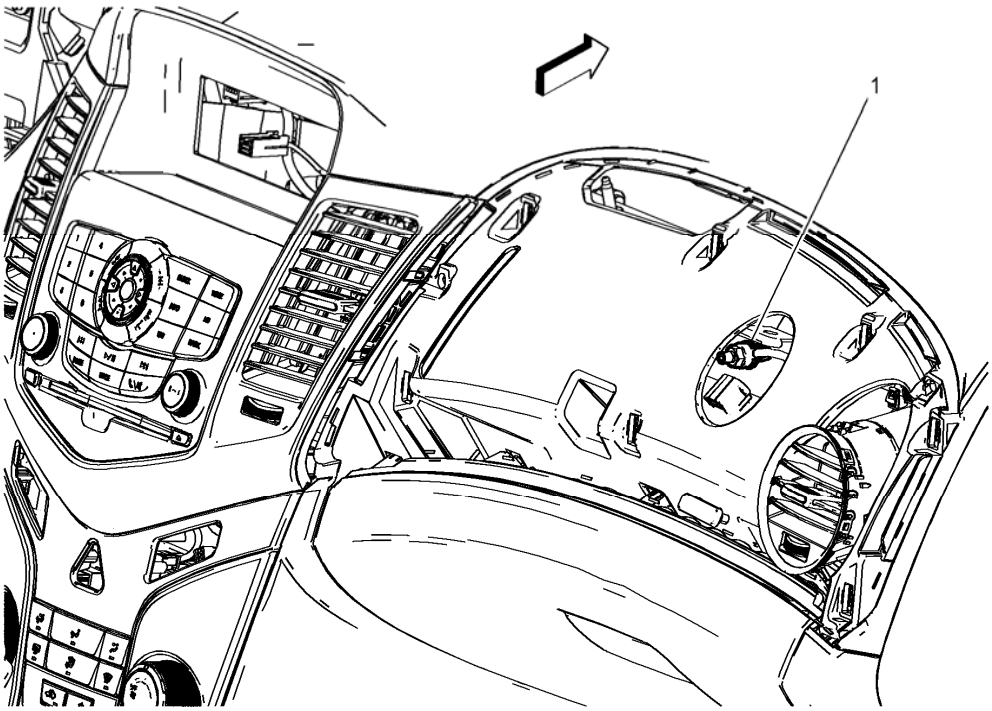

Fig. 8: G204 Ground Location
Courtesy of GENERAL MOTORS COMPANY

Items
1: G204

G301

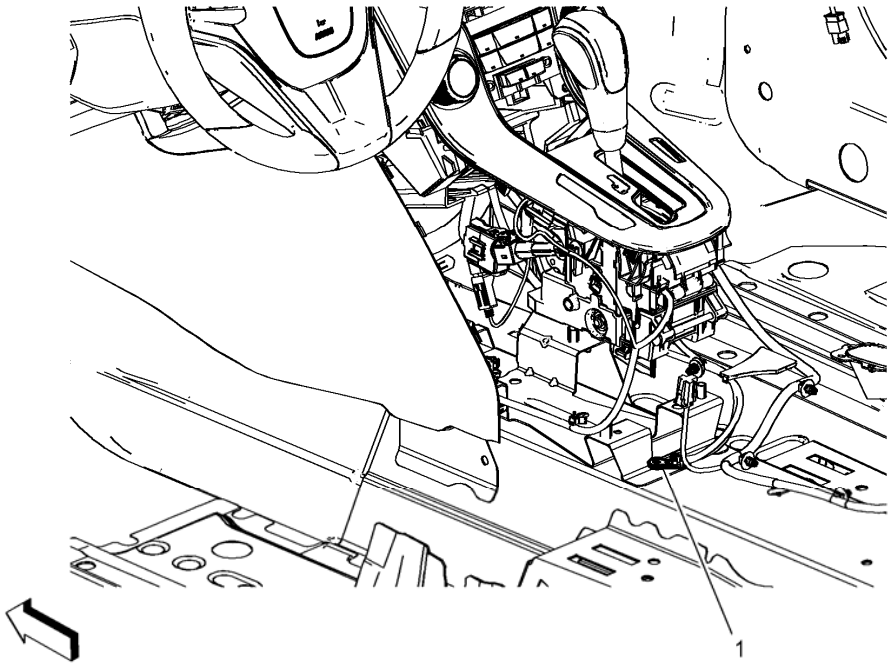

Fig. 9: G301 Ground Location
Courtesy of GENERAL MOTORS COMPANY

Items
1: G301

G305, G307, G308, AND G400

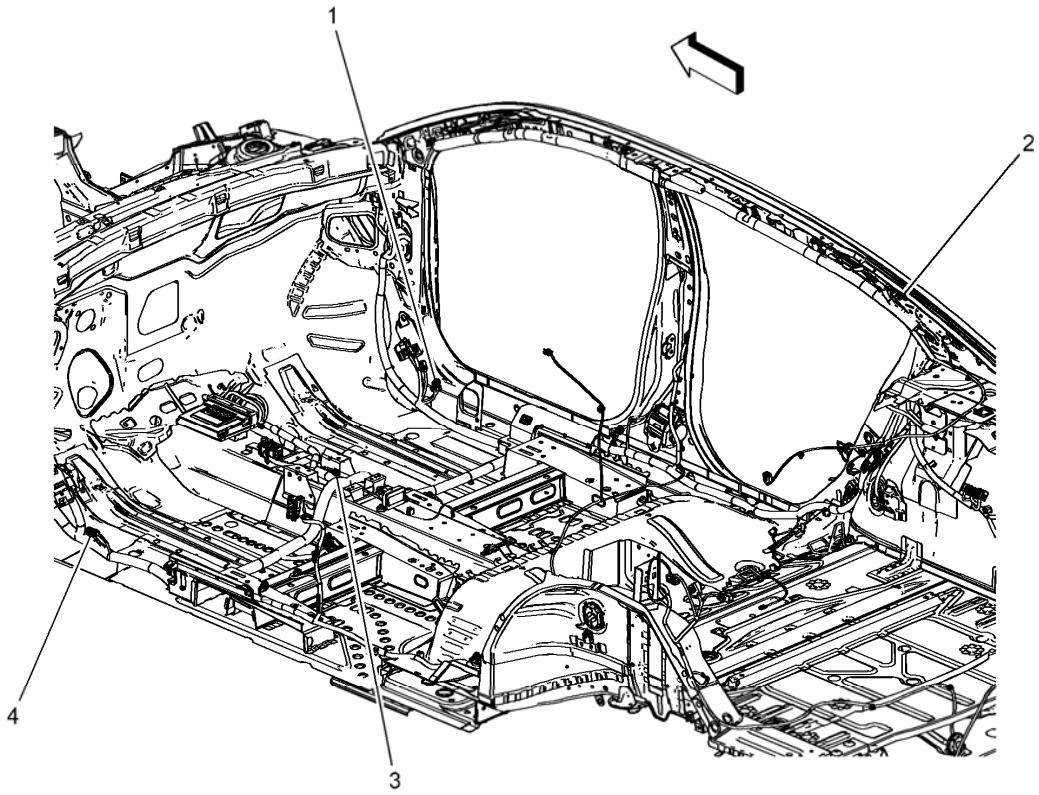

Fig. 10: G305, G307, And G308 And G400 Ground Locations (Notchback)
Courtesy of GENERAL MOTORS COMPANY

Items
1: G308
2: G400
3: G307
4: G305

G309

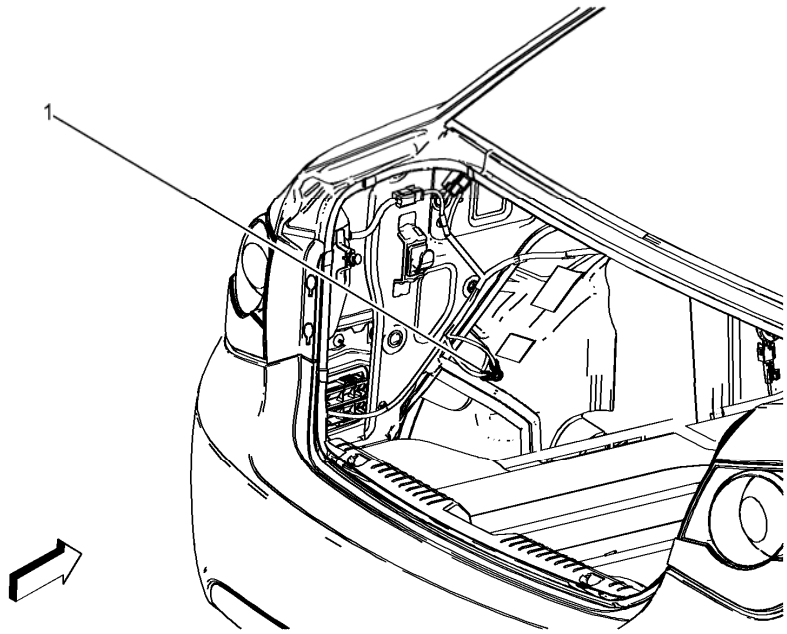

Fig. 11: G309 Ground Locations (Notchback)
Courtesy of GENERAL MOTORS COMPANY

Items
1: G309

G402

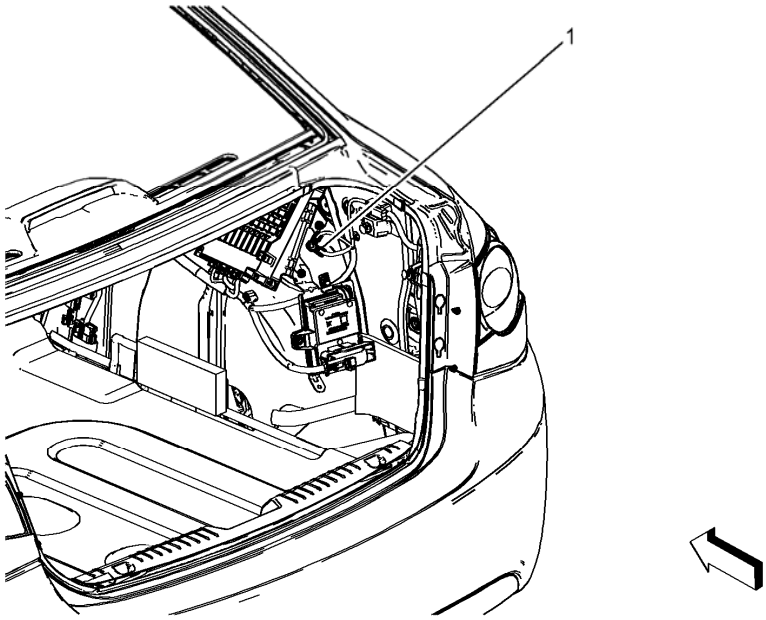

Fig. 12: G402 Ground Locations (Notchback)
Courtesy of GENERAL MOTORS COMPANY

Items
1: G402

2013 ELECTRICAL

Wiring Systems and Power Management - Component Locator - Instrument Panel/Center Console Component Views - Cruze

INSTRUMENT PANEL/CENTER CONSOLE COMPONENT VIEWS

BEHIND THE INSTRUMENT PANEL COMPONENTS

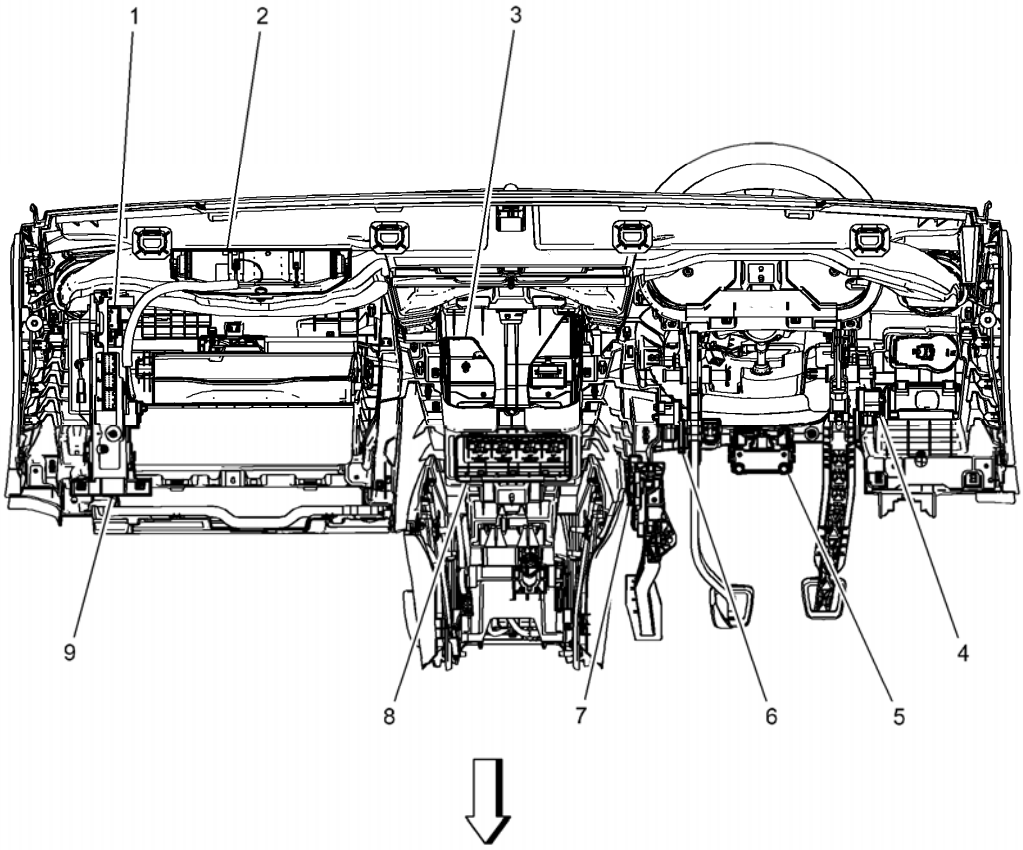

Fig. 1: Instrument Panel Components (Behind)
Courtesy of GENERAL MOTORS COMPANY

Items
1: T15 Navigation Antenna Signal Splitter (UE1 and UYS)
2: F101 Passenger Instrument Panel Air Bag **F101 Passenger Instrument Panel Air Bag X1** **F101 Passenger Instrument Panel Air Bag X2**
3: A11 Radio **A11 Radio X1** **A11 Radio X2 (UDN)** **A11 Radio X3 (UEW)**

4: B25B Clutch Pedal Position Sensor (MF3 or MZ0) **B25B Clutch Pedal Position Sensor (MF3 or MZ0)**
5: K60 Steering Column Lock Module (ULS) **K60 Steering Column Lock Control Module (ULS)**
6: B22 Brake Pedal Position Sensor **B22 Brake Pedal Position Sensor (MF3 or MZ0)** **B22 Brake Pedal Position Sensor (MH8)**
7: B107 Accelerator Pedal Position Sensor **B107 Accelerator Pedal Position Sensor**
8: K33 HVAC Control Module **K33 HVAC Control Module X1** **K33 HVAC Control Module X2** **K33 HVAC Control Module X3**
9: K73 Telematics Communication Interface Control Module (UE1) **K73 Telematics Communications Interface Control Module X1 (UE1)** **K73 Telematics Communications Interface Control Module X2 (UE1)**

INSTRUMENT PANEL AND CENTER CONSOLE COMPONENTS

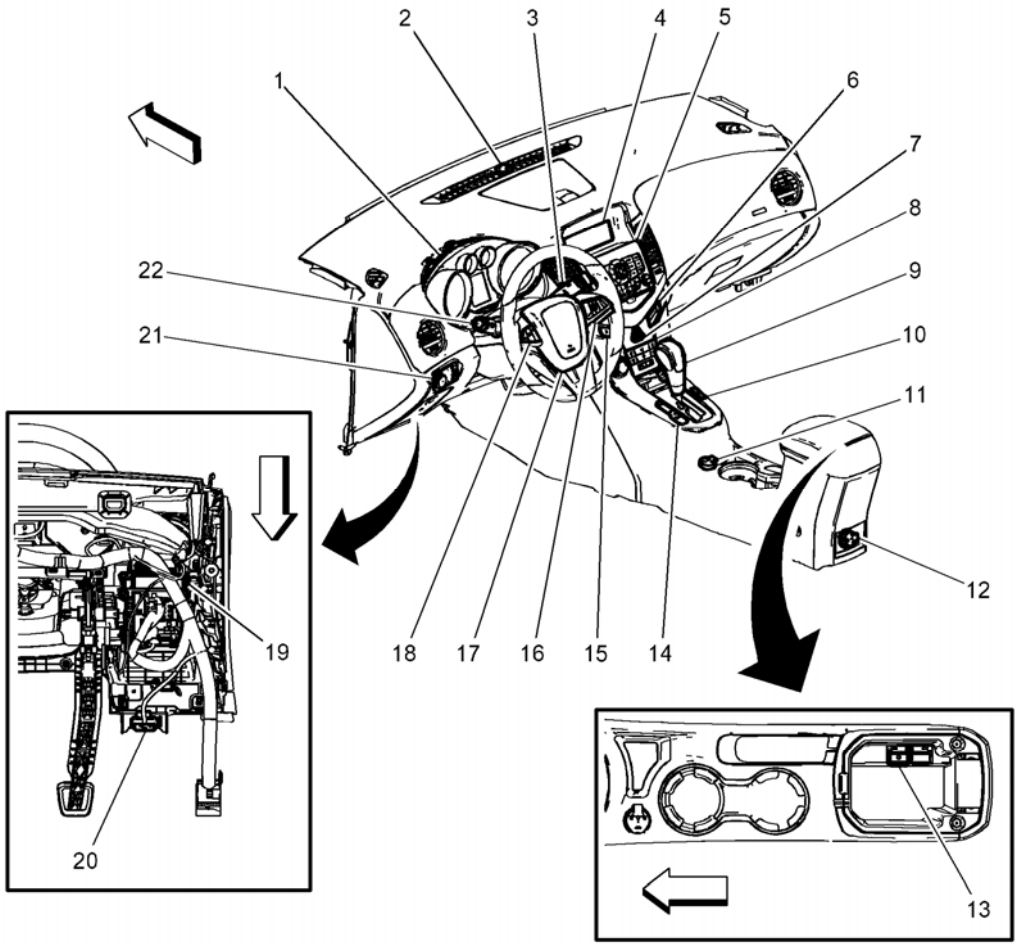

Fig. 2: Instrument Panel and Center Console Components
Courtesy of GENERAL MOTORS COMPANY

Items

1: P16 Instrument Cluster **P16 Instrument Cluster**
2: B10B Ambient Light/Sunload Sensor **B10B Ambient Light/Sunload Sensor**
3: S82 Windshield Wiper/Washer Switch **S82 Windshield Wiper/Washer Switch**
4: P17 Info Display Module **P17 Info Display Module (UAG)** **P17 Info Display Module X1 (UHQ)** **P17 Info Display Module X2 (UHQ)**
5: A22 Radio Controls **A22 Radio Controls (UEW)** **A22 Radio Controls (UYC or UYE)**
6: P14 Passenger Air Bag Disable Indicator **P14 Passenger Air Bag Disable Indicator**
7: S26 Hazard Warning Switch **S26 Hazard Lamps Switch**
8: A26 HVAC Controls **A26 HVAC Controls**
9: S3 Transmission Shift Lever (MH8/MH9) **S3 Transmission Shift Lever (MH8)**
10: S75 Traction Control Switch (FX3) **S75 Traction Control Switch (FX3)**
11: E32 Cigarette Lighter Receptacle **E32 Cigarette Lighter Receptacle**
12: X80L Accessory Power Receptacle - Rear Console **X80L Accessory Power Receptacle - Rear Console**
13: X83 Auxiliary Audio Input **X83 Auxiliary Audio Input**
14: P2 Transmission Shift Lever Position Indicator (MH8/MH9) **P2 Transmission Shift Lever Position Indicator (MH8)**
15: S13D Door Lock Switch - Driver **S13D Door Lock Switch - Driver**
16: S70R Steering Wheel Controls Switch - Right (W1Y) **S70R Steering Wheel Controls Switch - Right (W1Y)**
17: F107 Steering Wheel Air Bag **F107 Steering Wheel Air Bag X1** **F107 Steering Wheel Air Bag X2 (Early Production)**
18: S70L Steering Wheel Controls Switch - Left (K34) **S70L Steering Wheel Controls Switch - Left (K34)**
19: X51A Fuse Block - Instrument Panel
20: X84 Data Link Connector **X84 Data Link Connector**
21: S30 Headlamp Switch **S30 Headlamp Switch**
22: S78 Turn Signal/Multifunction Switch **S78 Turn Signal/Multi-Function Switch**

INTERIOR HVAC COMPONENTS

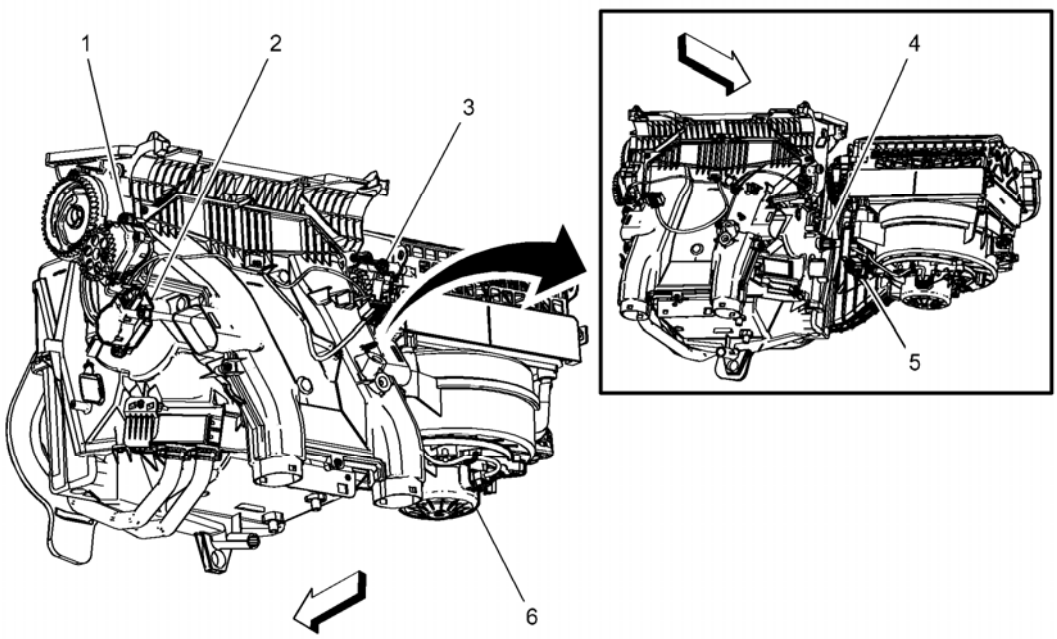

Fig. 3: Interior HVAC Components
Courtesy of GENERAL MOTORS COMPANY

Items
1: M37 Mode Door Actuator **M37 Mode Door Actuator**
2: M6 Air Temperature Door Actuator **M6 Air Temperature Door Actuator**
3: M46 Air Recirculation Door Actuator **M46 Air Recirculation Door Actuator**
4: B39 A/C Evaporator Temperature Sensor **B39 A/C Evaporator Temperature Sensor**
5: K8 Blower Motor Control Module **K8 Blower Motor Control Module X1** **K8 Blower Motor Control Module X2**
6: M8 Blower Motor **M8 Blower Motor**

2013 ELECTRICAL

Wiring Systems and Power Management - Component Locator - Luggage Compartment/Rear of Vehicle Component Views - Cruze

LUGGAGE COMPARTMENT/REAR OF VEHICLE COMPONENT VIEWS

LUGGAGE COMPARTMENT COMPONENTS (NOTCHBACK)

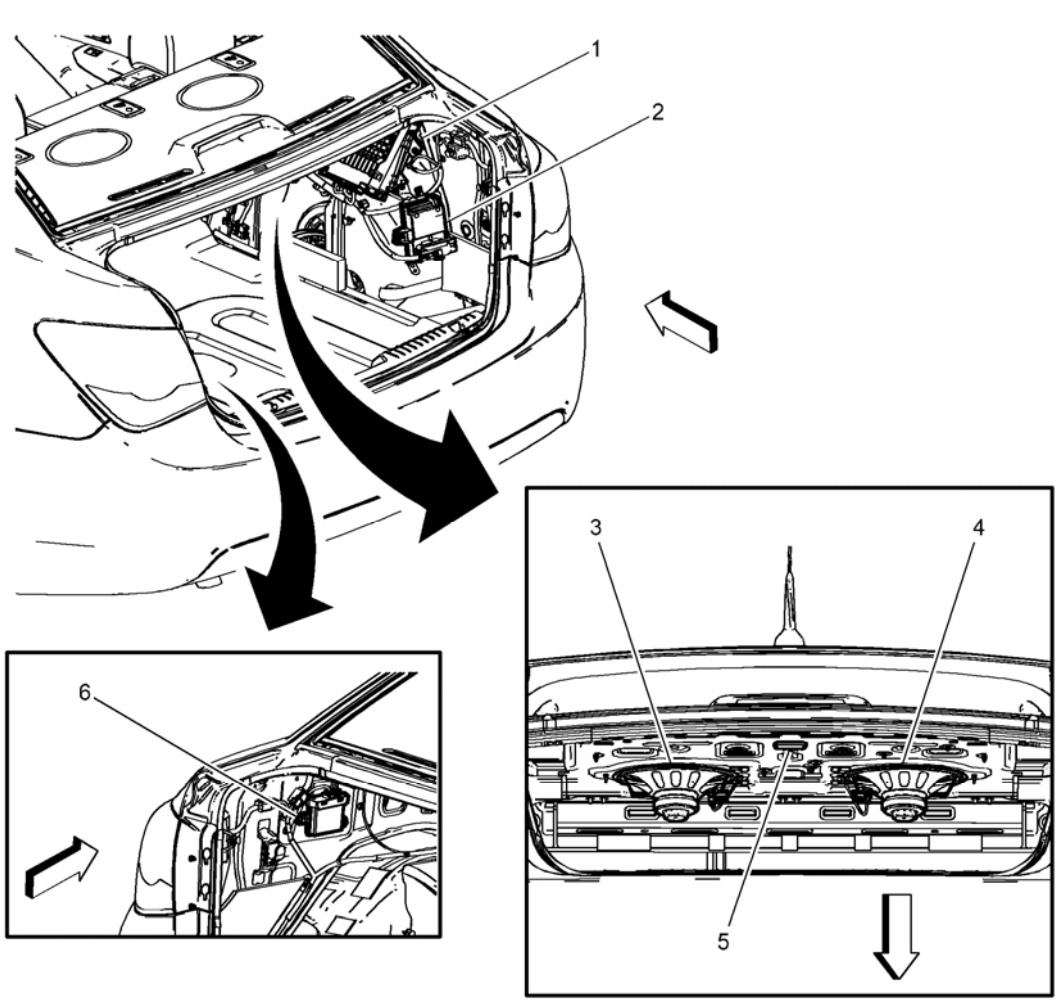

Fig. 1: Luggage Compartment Components
Courtesy of GENERAL MOTORS COMPANY

Items
1: T3 Audio Amplifier (UQA) **T3 Audio Amplifier X1 (UQA)** **T3 Audio Amplifier X2 (UQA)** **T3 Audio Amplifier X3 (UQA)**
2: K27 Fuel Pump Control Module **K27 Fuel Pump Control Module**
3: P19N Speaker - Left Subwoofer **P19N Speaker - Left Subwoofer**

4: P19AA Speaker - Right Subwoofer **P19AA Speaker - Right Subwoofer**
5: E8S Rear Compartment Courtesy Lamp **E8S Rear Compartment Courtesy Lamp**
6: K41R Rear Parking Assist Control Module (UD7) **K41R Rear Parking Assist Control Module X1 (UD7)** **K41R Rear Parking Assist Control Module X2 (UD7)**

REAR COMPARTMENT LID COMPONENTS

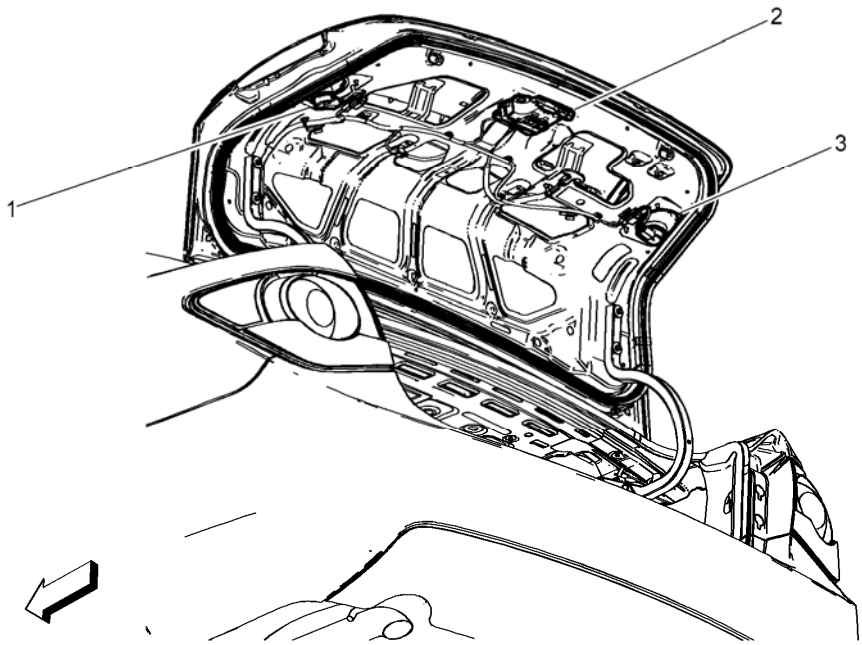

Fig. 2: Rear Compartment Lid
Courtesy of GENERAL MOTORS COMPANY

Items
1: E5E Tail Lamp - Left **E5E Tail Lamp - Left**
2: M40 Rear Compartment Lid Latch **M40 Rear Compartment Lid Latch**
3: E5F Tail Lamp - Right **E5F Tail Lamp - Right**

REAR OF VEHICLE COMPONENTS

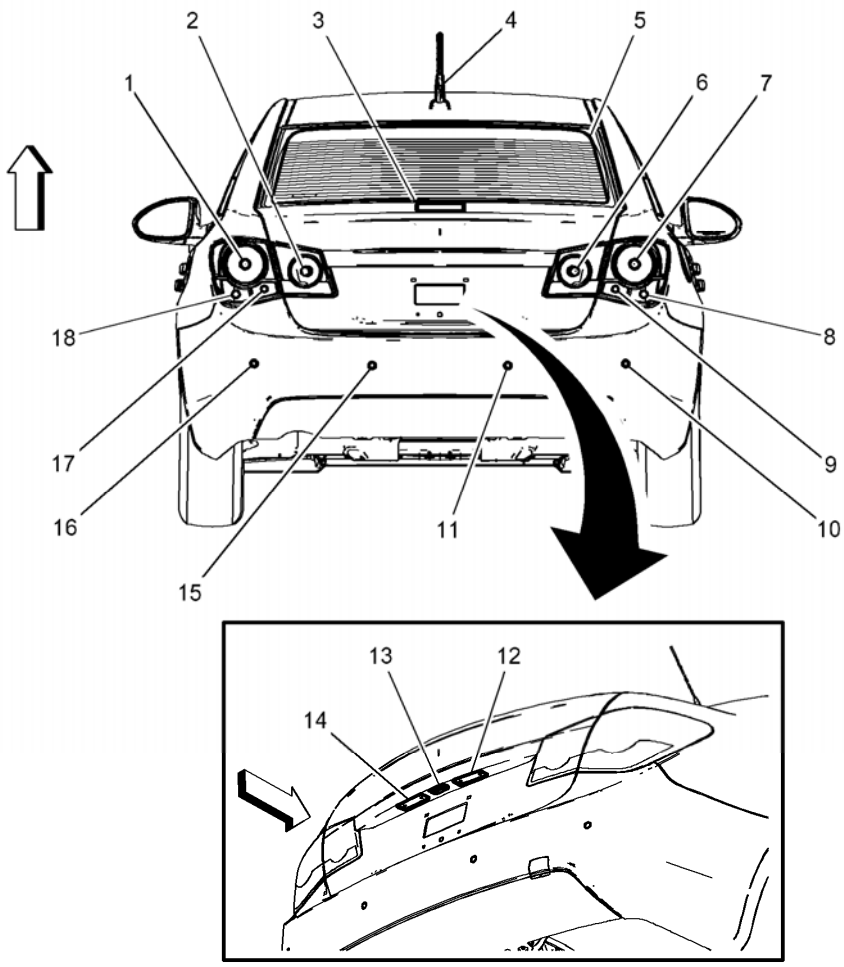

Fig. 3: Rear Of Vehicle Components (Notchback)
Courtesy of GENERAL MOTORS COMPANY

Items
1: E5AA Tail/Stop Lamp - Left **E5AA Tail/Stop Lamp - Left**
2: E5E Tail Lamp - Left **E5E Tail Lamp - Left**
3: E6 Center High Mounted Stop Lamp **E6 Center High Mounted Stop Lamp**
4: T4G Cellular Phone, Navigation and Digital Radio Antenna
5: E18 Rear Defogger Grid **E18 Rear Defogger X1** **E18 Rear Defogger X2**
6: E5F Tail Lamp - Right **E5F Tail Lamp - Right**
7: E5AB Tail/Stop Lamp - Right **E5AB Tail/Stop Lamp - Right**
8: E4RR Turn Signal Lamp - Right Rear **E4RR Turn Signal Lamp - Right Rear**
9: E5B Backup Lamp - Right **E5B Backup Lamp - Right**
10: B78H Rear Object Sensor - Right Outer (UD7) **B78H Rear Object Sensor - Right Outer (UD7)**
11: B78F Rear Object Sensor - Right Middle (UD7) **B78F Rear Object Sensor - Right Middle (UD7)**
12: E7R License Plate Lamp - Right **E7R License Plate Lamp - Right**
13: S58A Rear Compartment Lid Unlatch Switch - Exterior

14: E7L License Plate Lamp - Left **E7L License Plate Lamp - Left**
15: B78E Rear Object Sensor - Left Middle (UD7) **B78E Rear Object Sensor - Left Middle (UD7)**
16: B78G Rear Object Sensor - Left Outer (UD7) **B78G Rear Object Sensor - Left Outer (UD7)**
17: E5A Backup Lamp - Left **E5A Backup Lamp - Left**
18: E4LR Turn Signal Lamp - Left Rear **E4LR Turn Signal Lamp - Left Rear**

2013 ELECTRICAL

Wiring Systems and Power Management - Component Locator - Master Electrical Component List - Cruze

MASTER ELECTRICAL COMPONENT LIST

Master Electrical Component List

Code	Name	Option	Location	Locator View	Connector End View
A3L	Sunshade - Left	D6I	In the passenger compartment, on the left sunshade	**Headliner Components**	**A3L Sunshade - Left (D61)**
A3R	Sunshade - Right	D6I	In the passenger compartment, on the right sunshade	**Headliner Components**	**A3R Sunshade - Right (D6I)**
A7	Fuel Pump and Level Sensor Assembly	-	Under the vehicle, at the top of the fuel tank, next to the fuel tank pressure sensor	**Fuel Tank Components**	**A7 Fuel Pump and Level Sensor Assembly**
A9A	Outside Rearview Mirror - Driver	-	Outside the vehicle, at the front of the driver door	**Driver Door Components**	**A9A Outside Rearview Mirror - Driver**
A9B	Outside Rearview Mirror - Passenger	-	Outside the vehicle, at the front of the passenger door	**Passenger Door Components**	**A9B Outside Rearview Mirror - Passenger**
A10	Inside Rearview Mirror	DD8	In the passenger compartment, at the top center of the windshield	**Headliner Components**	**A10 Inside Rearview Mirror**
A11	Radio	-	In the passenger compartment, in the middle of the instrument panel, behind the radio	**Behind the Instrument Panel Components**	• **A11 Radio X1** • **A11 Radio X2 (UDN)** • **A11 Radio X3 (UEW)**

			controls		
A22	Radio Controls	-	In the passenger compartment, in the center of the instrument panel	**Instrument Panel and Center Console Components**	• **A22 Radio Controls (UYC or UYE)** • **A22 Radio Controls (UEW)**
A23D	Door Latch Assembly - Driver	-	In the passenger compartment, at the middle rear of the driver door	**Driver Door Components**	**A23D Door Latch Assembly - Driver**
A23LR	Door Latch Assembly - Left Rear	-	In the passenger compartment, at the middle rear of the left rear door	**Left Rear Door Components**	**A23LR Door Latch Assembly - Left Rear**
A23RR	Door Latch Assembly - Right Rear	-	In the passenger compartment, at the middle rear of the right rear door	**Right Rear Door Components**	**A23RR Door Latch Assembly - Right Rear**
A23P	Door Latch Assembly - Passenger	-	In the passenger compartment, at the middle rear of the passenger door	**Passenger Door Components**	**A23P Door Latch Assembly - Passenger**
A24D	Door Handle Assembly - Driver Exterior	-	-	-	-
A24P	Door Handle Assembly - Passenger Exterior	-	-	-	-
A26	HVAC Controls	-	In the passenger compartment, in the lower center of the instrument panel	**Instrument Panel and Center Console Components**	**A26 HVAC Controls**
			In the front of the engine		

B1	A/C Refrigerant Pressure Sensor	-	compartment, on the right side of the radiator, in the A/C line	**Front of Engine Compartment Components**	**B1 A/C Refrigerant Pressure Sensor**
B5LF	Wheel Speed Sensor - Left Front	-	Outside the vehicle, part of the left front hub assembly	**Underbody Components**	**B5LF Wheel Speed Sensor - Left Front**
B5LR	Wheel Speed Sensor - Left Rear	-	Outside the vehicle, part of the left rear hub assembly	**Underbody Components**	**B5LR Wheel Speed Sensor - Left Rear**
B5RF	Wheel Speed Sensor - Right Front	-	Outside the vehicle, part of the right front hub assembly	**Underbody Components**	**B5RF Wheel Speed Sensor - Right Front**
B5RR	Wheel Speed Sensor - Right Rear	-	Outside the vehicle, part of the right rear hub assembly	**Underbody Components**	**B5RR Wheel Speed Sensor - Right Rear**
B7D	Air Temperature Sensor - Duct Left Lower	C68	In the passenger compartment, behind the instrument panel, on the lower left side of the HVAC module	-	-
B7H	Air Temperature Sensor - Duct Left Upper	C68	In the passenger compartment, behind the instrument panel, on the upper left side of the HVAC module	-	**B7H Air Temperature Sensor - Duct Left Upper (C68)**
B9	Ambient Air Temperature Sensor	-	Left front of the vehicle, behind the bumper fascia	**Front of Vehicle Components**	**B9 Ambient Air Temperature Sensor**
	Ambient		In the passenger compartment, at the top	**Instrument Panel**	

B10B	Light/Sunload Sensor	-	center of the instrument panel, in the defroster deflector	**and Center Console Components**	**B10B Ambient Light/Sunload Sensor**
B12A	Transmission Fluid Pressure Switch	MH8/MH9	In the engine compartment, internal to the transmission assembly	-	-
B13	Transmission Fluid Temperature Sensor	MH8/MH9	In the engine compartment, internal to the transmission assembly	-	-
B14A	Transmission Output Shaft Speed Sensor	MH8/MH9	In the engine compartment, internal to the transmission assembly	**Automatic Transmission Electronic Components (MH8)**	-
B14C	Transmission Input Shaft Speed Sensor	MH8/MH9	In the engine compartment, internal to the transmission assembly	**Automatic Transmission Electronic Components (MH8)**	-
B15	Transmission Internal Mode Switch	MH8/MH9	In the engine compartment, mounted inside the transmission, around shift shaft	**Automatic Transmission Electronic Components (MH8)**	-
B16	Backup Lamp Switch	MF3 or MZ0	Left side of engine compartment, lower rear of engine block, above the transmission	**Transmission Components (MF3 or MZ0)**	**B16 Backup Lamp Switch (MF3 or MZ0)**
B18	Battery Current Sensor	-	In the engine compartment, near the battery, on the negative battery cable	**Left Side of Engine Compartment Components**	**B18 Battery Current Sensor**
			At the rear of the engine		

B19B	Brake Booster Vacuum Sensor	-	compartment, right of the brake fluid reservoir	**Left Side of Engine Compartment Components**	**B19B Brake Booster Vacuum Sensor**
B20	Brake Fluid Level Switch	-	At the rear of the engine compartment, on the brake fluid reservoir	**Left Side of Engine Compartment Components**	**B20 Brake Fluid Level Switch**
B22	Brake Pedal Position Sensor	-	In the passenger compartment, on the brake pedal assembly	**Behind the Instrument Panel Components**	• **B22 Brake Pedal Position Sensor (MF3 or MZ0)** • **B22 Brake Pedal Position Sensor (MH8)**
B23E	Camshaft Position Sensor - Exhaust	LUV	In the engine compartment, at the front right side of the engine	**Right Front of the Engine Components (LUV)**	**B23E Camshaft Position Sensor - Exhaust (LUV)**
B23E	Camshaft Position Sensor - Exhaust	LUW/LWE	In the engine compartment, at the upper left side of the engine	**Left Front of the Engine Components (LUW/LWE)**	**B23E Camshaft Position Sensor - Exhaust (LUW/LWE)**
B23F	Camshaft Position Sensor - Intake	LUV	In the engine compartment, at the rear right side of the engine	**Right Rear of the Engine Components (LUV)**	**B23F Camshaft Position Sensor - Intake (LUV)**
B23F	Camshaft Position Sensor - Intake	LUW/LWE	In the engine compartment, at the upper left side of the engine	**Left Front of the Engine Components (LUW/LWE)**	**B23F Camshaft Position Sensor - Intake (LUW/LWE)**
B24	Cellular Phone Microphone	UE1	In the passenger compartment, near the inside rearview mirror, in the overhead console	**Headliner Components**	**B24 Cellular Phone Microphone (UE1)**
B25B	Clutch Pedal Position Sensor	MF3 or MZ0	In the passenger compartment,	**Behind the Instrument Panel**	**B25B Clutch Pedal Position Sensor (MF3**

			on the clutch pedal assembly	**Components**	**or MZ0)**
B26	Crankshaft Position Sensor	LUV	In the engine compartment, at the lower left rear of the engine	**Right Rear of the Engine Components (LUV)**	**B26 Crankshaft Position Sensor (LUV)**
B26	Crankshaft Position Sensor	LUW/LWE	In the engine compartment, at the upper left rear of the engine	**Top of the Engine Components (LUW/LWE)**	**B26 Crankshaft Position Sensor (LUW/LWE)**
B27D	Door Handle Switch - Driver Exterior	-	In the driver door, rear middle, mounted to inside of outer panel	-	-
B27P	Door Handle Switch - Passenger Exterior	-	In the passenger door, rear middle, mounted to inside of outer panel	-	-
B27LR	Door Handle Switch - Left Rear Exterior	-	In the left rear door, rear middle, mounted to inside of outer panel	-	-
B27RR	Door Handle Switch - Right Rear Exterior	-	In the right rear door, rear middle, mounted to inside of outer panel	-	-
B34A	Engine Coolant Temperature Sensor 1	-	In the engine compartment, at the top left front of engine, in the thermostat housing	• **Left Rear of the Engine Components (LUV)** • **Left Front of the Engine Components (LUW/LWE)**	• **B34A Engine Coolant Temperature Sensor 1 (LUV)** • **B34A Engine Coolant Temperature Sensor 1 (LUW/LWE)**
			In the front of		

B34B	Engine Coolant Temperature Sensor 2	-	the engine compartment, on the right side of the radiator	**Front of Engine Compartment Components**	**B34B Engine Coolant Temperature Sensor 2**
B37	Engine Oil Pressure Switch	LUV	In the engine compartment, at the front left side of the engine	**Right Front of the Engine Components (LUV)**	**B37 Engine Oil Pressure Switch**
B37	Engine Oil Pressure Switch	LUW/LWE	In the engine compartment, at the front right side of the engine	**Right Front of the Engine Components (LUW/LWE)**	**B37 Engine Oil Pressure Switch**
B39	A/C Evaporator Temperature Sensor	-	In the passenger compartment, part of HVAC module, behind the instrument panel	**Interior HVAC Components**	**B39 A/C Evaporator Temperature Sensor**
B46	Fuel Level Sensor	-	On the vehicle underbody, below rear seats, part of fuel pump and level sensor assembly, mounted in fuel tank	-	-
B47	Fuel Pressure Sensor	-	On the vehicle underbody, on the fuel line, below the right rear seat	**Fuel Tank Components**	**B47 Fuel Pressure Sensor**
B52A	Heated Oxygen Sensor 1	-	In the engine compartment, at the left front of the engine	• **Right Front of the Engine Components (LUV)** • **Top of the Engine Components (LUW/LWE)**	• **B52A Heated Oxygen Sensor 1 (LUV)** • **B52A Heated Oxygen Sensor 1 (LUW/LWE)**
				• **Right Rear of the Engine**	

				Components (LUV) • **Right Rear of the Engine Components (LUW/LWE)**	
B52B	Heated Oxygen Sensor 2	-	In the engine compartment, rear of the engine, on the exhaust pipe		**B52B Heated Oxygen Sensor 2**
B55	Hood Ajar Switch	-	In the front of the engine compartment, on the hood latch	**Front of Engine Compartment Components**	**B55 Hood Ajar Switch**
B59L	Front Impact Sensor - Left	-	At the front of the engine compartment, on the left side of the radiator support	**Left Side of Engine Compartment Components**	**B59L Front Impact Sensor - Left**
B59R	Front Impact Sensor - Right	-	At the front of the engine compartment, on the right side of the radiator support	**Front of Engine Compartment Components**	**B59R Front Impact Sensor - Right**
B60	Passenger Presence Sensor	-	In the passenger compartment, in the passenger front seat cushion, under the upholstery	-	-
B63LF	Side Impact Sensor - Left Front	-	In the passenger compartment, at the bottom of the left B-pillar	**Left Side of Passenger Compartment Components**	**B63LF Side Impact Sensor - Left Front**
B63LR	Side Impact Sensor - Left Rear	-	In the passenger compartment, at the bottom of the left C-pillar	**Left Side of Passenger Compartment Components**	**B63LR Side Impact Sensor - Left Rear**
B63RF	Side Impact Sensor - Right Front	-	In the passenger compartment, at the bottom of the right B-	**Right Side of Passenger Compartment Components**	**B63RF Side Impact Sensor - Right Front**

			pillar		
B63RR	Side Impact Sensor - Right Rear	-	In the passenger compartment, at the bottom of the right C-pillar	**Right Side of Passenger Compartment Components**	**B63RR Side Impact Sensor - Right Rear**
B68	Knock Sensor	-	In the engine compartment, at the center rear of the engine	• **Left Rear of the Engine Components (LUV)** • **Right Rear of the Engine Components (LUW/LWE)**	• **B68 Knock Sensor (LUV)** • **B68 Knock Sensor (LUW/LWE)**
B74	Manifold Absolute Pressure Sensor	LUV	In the engine compartment, at the upper right rear of the engine	**Right Rear of the Engine Components (LUV)**	**B74 Manifold Absolute Pressure Sensor (LUV)**
B74	Manifold Absolute Pressure Sensor	LUW/LWE	In the engine compartment, on the front center of the intake manifold	**Top of the Engine Components (LUW/LWE)**	**B74 Manifold Absolute Pressure Sensor (LUW/LWE)**
B75C	Multifunction Intake Air Sensor	-	Right side of the engine compartment, in the air intake duct	**Top of the Engine Components (LUW/LWE)**	**B75C Multifunction Air Intake Sensor**
B78E	Rear Object Sensor - Left Middle	UD7	At the rear of the vehicle, in the left center of rear bumper fascia	**Rear of Vehicle Components**	**B78E Rear Object Sensor - Left Middle (UD7)**
B78F	Rear Object Sensor - Right Middle	UD7	At the rear of the vehicle, in the right center of rear bumper fascia	**Rear of Vehicle Components**	**B78F Rear Object Sensor - Right Middle (UD7)**
B78G	Rear Object Sensor - Left Outer	UD7	At the rear of the vehicle, in the left of rear bumper fascia	**Rear of Vehicle Components**	**B78G Rear Object Sensor - Left Outer (UD7)**
	Rear Object Sensor -		At the rear of the vehicle, in	**Rear of Vehicle**	**B78H Rear Object**

B78H	Right Outer	UD7	the right of rear bumper fascia	**Components**	**Sensor - Right Outer (UD7)**
B80	Park Brake Switch	-	In the passenger compartment, under the rear of the center console	-	**B80 Park Brake Switch**
B81B	Park Position Switch	MH8/MH9	In the passenger compartment, center near front, part of transmission shift lever	-	-
B87	Rearview Camera	UVC	At the rear of vehicle, mounted to rear compartment lid trim above license plate	-	**B87 Rearview Camera (UVC)**
B88D	Seat Belt Switch - Driver	-	In the passenger compartment, part of the driver seat belt buckle	**Driver Seat Components (2 of 2)**	**B88D Seat Belt Switch - Driver**
B88P	Seat Belt Switch - Passenger	-	In the passenger compartment, part of the front passenger seat belt buckle	**Passenger Seat Components (2 of 2)**	**B88P Seat Belt Switch - Passenger**
B99	Steering Wheel Angle Sensor	FX3	In the passenger compartment, near the top of the steering column, below the SIR coil	-	**B99 Steering Wheel Angle Sensor (FX3)**
B107	Accelerator Pedal Position Sensor	-	In the passenger compartment, attached to the top of the accelerator pedal assembly	**Behind the Instrument Panel Components**	**B107 Accelerator Pedal Position Sensor**

B108	Air Quality Sensor	C68	In the engine compartment, under the cowl panel, at the base of the windshield	**Left Side of Engine Compartment Components**	**B108 Air Quality Sensor (C68)**
B111B	Intake Manifold Pressure and Air Temperature Sensor	LUV	In the engine compartment, at the left front of the engine, on the air inlet duct	**Left Rear of the Engine Components (LUV)**	**B111B Turbocharger Boost/Intake Air Temperature (LUV)**
B115	Vehicle Speed Sensor	MF3 or MZ0	In the engine compartment, at the front of the transmission	**Transmission Components (MF3 or MZ0)**	**B115 Vehicle Speed Sensor (MF3 or MZ0)**
B119	Multi-axis Acceleration Sensor	FX3	In the passenger compartment, under the center console	**Right Side of Passenger Compartment Components**	**B119 Multi-Axis Acceleration Sensor (FX3)**
B137	Power Steering Shaft Torque Sensor	NJ1	Under the vehicle, on the power steering rack assembly, part of the power steering control module	**Lower Rear of Engine Compartment Components**	-
B150	Fuel Tank Pressure Sensor	-	Under the vehicle, at the top of the fuel tank, next to the fuel pump assembly	**Fuel Tank Components**	**B150 Fuel Tank Pressure Sensor**
B153D	Seat Belt Buckle - Driver	-	In the passenger compartment, to the inside of the driver seat	-	-
B153P	Seat Belt Buckle - Passenger	-	In the passenger compartment, to the inside of the passenger seat	-	-
			In the engine		

B157	Secondary Air Injection Pressure B Sensor	-	compartment, right rear of the engine upper position	-	-
B160	Windshield Temperature and Inside Moisture Sensor	C68	In the passenger compartment, at the top center of the windshield	-	**B160 Winshield Temperature and Inside Moisture Sensor (C68)**
B210D	Door Handle Touch Sensor - Driver Exterior	-	On the driver door, part of exterior door handle	-	-
B210P	Door Handle Touch Sensor - Passenger Exterior	-	On the passenger door, part of exterior door handle	-	-
B218L	Side Object Sensor Module - Left	UFT	At the rear of the vehicle, mounted to the fascia, left side	-	-
B218R	Side Object Sensor Module - Right	UFT	At the rear of the vehicle, mounted to the fascia, right side	-	-
C1	Battery	-	In the engine compartment, on the left side, near the underhood fuse block	**Left Side of Engine Compartment Components**	-
E2LF	Side Marker Lamp - Left Front	-	Outside the vehicle, on the left front side of the bumper fascia	**Front of Vehicle Components**	**E2LF Side Marker Lamp - Left Front**
E2LR	Side Marker Lamp - Left Rear	-	Rear of vehicle, on the left side, part of tail lamp assembly	-	-
E2RF	Side Marker Lamp - Right Front	-	Outside the vehicle, on the right front side of the bumper	**Front of Vehicle Components**	**E2RF Side Marker Lamp - Right Front**

			fascia		
E2RR	Side Marker Lamp - Right Rear	-	Rear of vehicle, on the right side, part of tail lamp assembly	-	-
E4LR	Turn Signal Lamp - Left Rear	-	Outside the vehicle, at the left rear corner, part of the left tail lamp assembly	**Rear of Vehicle Components**	**E4LR Turn Signal Lamp - Left Rear**
E4N	Park/Turn Signal Lamp - Left	-	Outside the vehicle, at the left front corner of the vehicle, in the left headlamp assembly	**Front of Vehicle Components**	**E4N Park/Turn Signal Lamp - Left**
E4P	Park/Turn Signal Lamp - Right	-	Outside the vehicle, at the right front corner of the vehicle, in the right headlamp assembly	**Front of Vehicle Components**	**E4P Park/Turn Signal Lamp - Right**
E4RR	Turn Signal Lamp - Right Rear	-	Outside the vehicle, at the right rear corner, part of the right tail lamp assembly	**Rear of Vehicle Components**	**E4RR Turn Signal Lamp - Right Rear**
E5A	Backup Lamp - Left	-	Outside the vehicle, at the left rear corner, part of the left tail lamp assembly	**Rear of Vehicle Components**	**E5A Backup Lamp - Left**
E5AA	Tail/Stop Lamp - Left	-	Outside the vehicle, at the left rear corner, part of the left tail lamp assembly	**Rear of Vehicle Components**	**E5AA Tail/Stop Lamp - Left**
E5AB	Tail/Stop Lamp - Right	-	Outside the vehicle, at the right rear corner, part of	**Rear of Vehicle Components**	**E5AB Tail/Stop Lamp - Right**

			the right tail lamp assembly		
E5B	Backup Lamp - Right	-	Outside the vehicle, at the right rear corner, part of the right tail lamp assembly	**Rear of Vehicle Components**	**E5B Backup Lamp - Right**
E5E	Tail Lamp - Left	-	Outside the vehicle, in the rear compartment lid, part of the left inner tail lamp assembly	**Rear Compartment Lid Components**	**E5E Tail Lamp - Left**
E5F	Tail Lamp - Right	-	Outside the vehicle, in the rear compartment lid, part of the right inner tail lamp assembly	**Rear Compartment Lid Components**	**E5F Tail Lamp - Right**
E6	Center High Mounted Stop Lamp	-	In the passenger compartment, at the top center of the rear window	**Rear of Vehicle Components**	**E6 Center High Mounted Stop Lamp**
E7L	License Plate Lamp - Left	-	At the rear of the vehicle, in the center of the rear compartment lid	**Rear of Vehicle Components**	**E7L License Plate Lamp - Left**
E7R	License Plate Lamp - Right	-	At the rear of the vehicle, in the center of the rear compartment lid	**Rear of Vehicle Components**	**E7R License Plate Lamp - Right**
E8S	Rear Compartment Courtesy Lamp	-	In the rear compartment, in the center of the rear window shelf	**Luggage Compartment Components (Notchback)**	**E8S Rear Compartment Courtesy Lamp**
E13L	Headlamp - Left	-	At the left front corner of the	**Front of Vehicle**	**E13L Headlamp - Left**

			vehicle	**Components**	
E13R	Headlamp - Right	-	At the right front corner of the vehicle	**Front of Vehicle Components**	**E13R Headlamp - Right**
E14A	Seat Heating Element - Driver Back	KA1	In the passenger compartment, in the driver seat back	**Driver Seat Components (2 of 2)**	**E14A Seat Heating Element - Driver Back (KA1)**
E14B	Seat Heating Element - Driver Cushion	KA1	In the passenger compartment, part of the driver seat cushion	**Driver Seat Components (2 of 2)**	**E14B Seat Heating Element - Driver Cushion (KA1)**
E14C	Seat Heating Element - Passenger Back	KA1	In the front passenger compartment, in the passenger seat back	**Passenger Seat Components (2 of 2)**	**E14C Seat Heating Element - Passenger Back (KA1)**
E14D	Seat Heating Element - Passenger Cushion	KA1	In the front passenger compartment, part of the passenger seat cushion	**Passenger Seat Components (2 of 2)**	**E14D Seat Heating Element - Passenger Cushion (KA1)**
E18	Rear Defogger Grid	-	In the passenger compartment, on the inside of the rear window	**Rear of Vehicle Components**	• **E18 Rear Defogger X1** • **E18 Rear Defogger X2**
E27	Instrument Panel Compartment Lamp	-	In the passenger compartment, inside the instrument panel compartment	-	**E27 Instrument Panel Compartment Lamp**
E29LF	Fog Lamp - Left Front	T3U	Outside the vehicle, at the left front corner, below the left headlamp assembly	**Front of Vehicle Components**	**E29LF Fog Lamp - Left Front (T3U)**

E29RF	Fog Lamp - Right Front	T3U	Outside the vehicle, at the right front corner, below the right headlamp assembly	**Front of Vehicle Components**	**E29RF Fog Lamp - Right Front (T3U)**
E32	Cigarette Lighter - Receptacle	-	In the passenger compartment, in the center console, rear of the shifter	**Instrument Panel and Center Console Components**	**E32 Cigarette Lighter Receptacle**
E37F	Dome/Reading Lamps - Front	-	In the passenger compartment, at the front of the headliner, in the overhead console	**Headliner Components**	**E37F Dome/Reading Lamps - Front**
E37M	Dome/Reading Lamps - Middle	-	In the passenger compartment, in the middle of the headliner	**Headliner Components**	**E37M Dome/Reading Lamps - Middle**
E41	Engine Coolant Thermostat Heater	-	In the engine compartment, top left front of engine, in the thermostat housing	**Left Front of the Engine Components (LUW/LWE)**	• **E41 Engine Coolant Thermostat Heater (LUV)** • **E41 Engine Coolant Thermostat Heater (LUW/LWE)**
F101	Passenger Instrument Panel Air Bag	-	In the passenger compartment, at the top of the passenger side of the instrument panel	**Behind the Instrument Panel Components**	• **F101 Passenger Instrument Panel Air Bag X1** • **F101 Passenger Instrument Panel Air Bag X2**
F105L	Roof Rail Air Bag - Left	-	In the passenger compartment, along the left	**Left Side of Passenger Compartment**	**F105L Roof Rail Air Bag - Left**

			roof rail	**Components**	
F105R	Roof Rail Air Bag - Right	-	In the passenger compartment, along the right roof rail	**Right Side of Passenger Compartment Components**	**F105R Roof Rail Air Bag - Right**
F106D	Seat Air Bag - Driver	-	In the passenger compartment, on the left side of the driver seat back	**Driver Seat Components (1 of 2)**	**F106D Seat Air Bag - Driver**
F106LR	Seat Air Bag - Left Rear	-	In the passenger compartment, on the left side of the rear seat back	**Rear Seat Components**	**F106LR Seat Air Bag - Left Rear**
F106P	Seat Air Bag - Passenger	-	In the passenger compartment, on the right side of the passenger seat back	**Passenger Seat Components (1 of 2)**	**F106P Seat Air Bag - Passenger**
F106RR	Seat Air Bag - Right Rear	-	In the passenger compartment, on the right side of the rear seat back	**Rear Seat Components**	**F106RR Seat Air Bag - Right Rear**
F107	Steering Wheel Air Bag	-	In the passenger compartment, in the center of the steering wheel	**Instrument Panel and Center Console Components**	• **F107 Steering Wheel Air Bag X1** • **F107 Steering Wheel Air Bag X2 (Early Production)**
F112D	Seat Belt Retractor Pretensioner - Driver	-	In the passenger compartment, at the base of the left B-pillar	**Left Side of Passenger Compartment Components**	**F112D Seat Belt Retractor Pretensioner - Driver**
F112P	Seat Belt Retractor Pretensioner -	-	In the passenger compartment,	**Right Side of Passenger**	**F112P Seat Belt Retractor Pretensioner**

	Passenger		at the base of the right B-pillar	**Compartment Components**	**- Passenger**
F113D	Seat Belt Anchor Pretensioner - Driver	-	In the passenger compartment, on the lower outside of the driver seat, mounted to the seat rack	**Driver Seat Components (1 of 2)**	**F113D Seat Belt Anchor Prestensioner - Driver**
F113P	Seat Belt Anchor Pretensioner - Passenger	-	In the passenger compartment, on the lower outside of the passenger seat, mounted to the seat rack	**Passenger Seat Components (1 of 2)**	**F113P Seat Belt Anchor Pretensioner - Passenger**
F114D	Knee Air Bag - Driver	-	In the passenger compartment, at the bottom of the driver side of the instrument panel	-	**F114D Knee Air Bag - Driver**
F114P	Knee Air Bag - Passenger	-	In the passenger compartment, at the bottom of the passenger side of the instrument panel	-	**F114P Knee Air Bag - Passenger**
G1	A/C Compressor	-	In the engine compartment, on the right front of the engine	-	-
G10	Cooling Fan Motor	-	At the front of the engine compartment, rear of the radiator	**Front of Engine Compartment Components**	**G10 Cooling Fan Motor**
G12	Fuel Pump	-	Under the rear of the vehicle,	**Fuel Tank**	-

			in the fuel tank	**Components**	
G13	Generator	-	In the engine compartment, at the lower right rear side of the engine	• **Right Rear of the Engine Components (LUV)** • **Right Rear of the Engine Components (LUW/LWE)**	**G13 Generator X2**
G21	Secondary Air Injection Pump	-	In the engine compartment, on the right front of the engine, above the water pump	-	-
G24	Windshield Washer Pump	-	In the engine compartment, below the left headlamp assembly, attached to the washer fluid reservoir	**Front of Engine Compartment Components**	**G24 Windshield Washer Pump**
K8	Blower Motor Control Module	-	In the passenger compartment, behind the passenger side of the instrument panel, on the HVAC module	**Interior HVAC Components**	• **K8 Blower Motor Control Module X1** • **K8 Blower Motor Control Module X2**
K9	Body Control Module	-	In the passenger compartment, at the bottom center of the instrument panel	**Right Side of Passenger Compartment Components**	• **K9 Body Control Module X1** • **K9 Body Control Module X2** • **K9 Body Control Module X3** • **K9 Body Control Module X4** • **K9 Body Control Module X5** • **K9 Body Control Module X6** • **K9 Body Control**

					Module X7
K17	Electronic Brake Control Module	-	In the engine compartment, under the radiator surge tank	**Left Side of Engine Compartment Components**	**K17 Electronic Brake Control Module**
K20	Engine Control Module	-	In the engine compartment, near the battery	**Top of the Engine Components (LUW/LWE)**	• **K20 Engine Control Module X1 (LUV)** • **K20 Engine Control Module X1 (LUW/LWE)** • **K20 Engine Control Module X2 (LUV)** • **K20 Engine Control Module X2 (LUW/LWE)** • **K20 Engine Control Module X3 (LUV)**
K27	Fuel Pump Control Module	-	In the luggage compartment, on the rear of the right rear wheel well	**Luggage Compartment Components (Notchback)**	**K27 Fuel Pump Control Module**
K29	Seat Heating Control Module	KA1	In the passenger compartment, under the front of the driver seat	**Driver Seat Components (1 of 2)**	• **K29 Seat Heating Control Module X1 (KA1)** • **K29 Seat Heating Control Module X2 (KA1)** • **K29 Seat Heating Control Module X3 (KA1)**
K33	HVAC Control Module	-	In the passenger compartment, in the center of the instrument panel, behind	**Behind the Instrument Panel Components**	• **K33 HVAC Control Module X1** • **K33 HVAC Control Module X2**

			the HVAC controls		• **K33 HVAC Control Module X3**
K35	Ignition Coil Module	-	In the engine compartment, at the top of the engine	**Left Rear of the Engine Components (LUV)**	**K35 Ignition Coil Module**
K36	Inflatable Restraint Sensing and Diagnostic Module	-	In the passenger compartment, under the front of the center console	**Right Side of Passenger Compartment Components**	• **K36 Inflatable Restraint Sensing and Diagnostic Module X1** • **K36 Inflatable Restraint Sensing and Diagnostic Module X2**
K41R	Rear Parking Assist Control Module	UD7	In the luggage compartment, on the rear of the left rear wheel well	**Luggage Compartment Components (Notchback)**	• **K41R Rear Parking Assist Control Module X1 (UD7)** • **K41R Rear Parking Assist Control Module X2 (UD7)**
K43	Power Steering Control Module	-	Under the vehicle, on the power steering rack assembly	**Lower Rear of Engine Compartment Components**	• **K43 Power Steering Control Module X1** • **K43 Power Steering Control Module X2**
K60	Steering Column Lock Module	ULS	In the passenger compartment, behind and below the steering wheel	**Behind the Instrument Panel Components**	**K60 Steering Column Lock Control Module (ULS)**
K61	Sunroof Control Module	CF5	In the passenger compartment, at the front of the headliner, part of the sunroof module assembly	-	**K61 Sunroof Control Module (CF5)**

K71	Transmission Control Module	MH8/MH9	In the engine compartment, mounted to the valve body inside the transmission, part of the control solenoid valve assembly	-	-
K73	Telematics Communication Interface Control Module	UE1	In the passenger compartment, behind the passenger side of the instrument panel	**Behind the Instrument Panel Components**	• **K73 Telematics Communications Interface Control Module X1 (UE1)** • **K73 Telematics Communications Interface Control Module X2 (UE1)**
K77	Remote Control Door Lock Receiver	-	In the passenger compartment, above the front center of the headliner	**Headliner Components**	**K77 Remote Control Door Lock Receiver**
K84	Keyless Entry Control Module	ATH	In the passenger compartment, at the right front A-pillar trim panel	-	• **K84 Keyless Entry Control Module X1 (ATH)** • **K84 Keyless Entry Control Module X2 (ATH)** • **K84 Keyless Entry Control Module X4 (ATH)**
K85	Passenger Presence Detection Module	-	In the passenger compartment, under the front of the front passenger seat cushion	**Passenger Seat Components (1 of 2)**	• **K85 Passenger Presence Detection Module X1** • **K85 Passenger Presence Detection**

					Module X2
K89	Immobilizer Control Module	-	In the passenger compartment, on the driver side, near the ignition cylinder	-	**K89 Immobilizer Control Module**
KR14	Brake Booster Pump Motor Relay	-	In the left rear of the engine compartment, near the brake booster	-	• **KR14 Brake Booster Pump Relay X1** • **KR14 Brake Booster Pump Relay X2**
M6	Air Temperature Door Actuator	-	In the passenger compartment, behind the instrument panel, part of HVAC module	**Interior HVAC Components**	**M6 Air Temperature Door Actuator**
M7	Transmission Shift Lock Control Solenoid Actuator	MH8/MH9	In the center of the passenger compartment, in the floor console, part of the transmission shift lever	-	-
M8	Blower Motor	-	In the passenger compartment, behind the passenger side of the instrument panel	**Interior HVAC Components**	**M8 Blower Motor**
M9	Brake Booster Pump Motor	-	In the left rear of the engine compartment, near the brake booster	**Lower Rear of Engine Compartment Components**	-
			In the passenger compartment, behind the left		

M37	Mode Door Actuator	-	side of the instrument panel, on the upper left side of the HVAC module	**Interior HVAC Components**	**M37 Mode Door Actuator**
M38	Power Steering Motor	-	In the vehicle underbody, below rear of engine compartment, mounted to steering gear	-	-
M40	Rear Compartment Lid Latch	-	At the rear of the vehicle, in the bottom center of the rear compartment	**Rear Compartment Lid Components**	**M40 Rear Compartment Lid Latch**
M46	Air Recirculation Door Actuator	-	In the passenger compartment, behind the instrument panel, part of HVAC module	**Interior HVAC Components**	**M46 Air Recirculation Door Actuator**
M50D	Seat Front Vertical Motor - Driver	ADS	In the passenger compartment, under the front of the driver seat, next to the right seat track	**Driver Seat Components (1 of 2)**	**M50D Seat Front Vertical Motor - Driver (ADS)**
M51D	Seat Horizontal Motor - Driver	ADS	In the passenger compartment, under the center of the driver seat, between the seat tracks	**Driver Seat Components (1 of 2)**	**M51D Seat Horizontal Motor - Driver (ADS)**
M55D	Seat Rear Vertical Motor - Driver	ADS	In the passenger compartment, under the front of the driver seat, next to the	**Driver Seat Components (1 of 2)**	**M55D Seat Rear Vertical Motor - Driver (ADS)**

			left seat track		
M64	Starter Motor	-	In the engine compartment, lower left rear of the engine	• **Right Rear of the Engine Components (LUV)** • **Right Rear of the Engine Components (LUW/LWE)**	-
M74D	Window Motor - Driver	AEC	In the passenger compartment, behind the driver door trim panel, at the bottom center of the door	**Driver Door Components**	**M74D Window Motor - Driver (AEC)**
M74D	Window Motor - Driver	AXG	In the passenger compartment, behind the driver door trim panel, at the bottom center of the door	**Driver Door Components**	**M74D Window Motor - Driver (AXG)**
M74LR	Window Motor - Left Rear	-	In the passenger compartment, center of the left rear door, behind the door trim panel	**Left Rear Door Components**	**M74LR Window Motor - Left Rear**
M74P	Window Motor - Passenger	-	In the passenger compartment, behind the front passenger door trim panel, at the bottom center of the door	**Passenger Door Components**	**M74P Window Motor - Passenger**
	Window Motor -		In the passenger compartment,	**Right Rear Door**	**M74RR Window**

M74RR	Right Rear	-	center of the right rear door, behind the door trim panel	**Components**	**Motor - Right Rear**
M75	Windshield Wiper Motor	-	At the left rear of the engine compartment, near the windshield	**Left Side of Engine Compartment Components**	**M75 Windshield Wiper Motor**
M93	Key Capture Solenoid Actuator	MH8/MH9	In the passenger compartment, on the steering column, near the ignition switch	-	**M93 Ignition Cylinder Lock Control Solenoid Actuator (MH8)**
M96	Active Grille Air Shutter Actuator	Y8K	Outside the vehicle, near the left front corner of the vehicle, behind the fascia	**Behind the Front Bumper Fascia Components (Y8X)**	**M96 Active Grille Air Shutter Actuator (Y8X)**
P2	Transmission Shift Lever Position Indicator	MH8/MH9	In the passenger compartment, behind and below the center of the instrument panel	**Instrument Panel and Center Console Components**	**P2 Transmission Shift Lever Position Indicator (MH8)**
P9	Driver Information Center Display	-	In the passenger compartment, in the center of the instrument cluster	-	-
P12	Horn	-	In the left front of the engine compartment, mounted on the frame rail	**Left Side of Engine Compartment Components**	**P12 Horn**
P14	Passenger Air Bag Disable Indicator	-	In the passenger compartment, in the center of the instrument panel	**Instrument Panel and Center Console Components**	**P14 Passenger Air Bag Disable Indicator**

P16	Instrument Cluster	-	In the passenger compartment, at the top of the driver side of the instrument panel, above the steering column	**Instrument Panel and Center Console Components**	**P16 Instrument Cluster**
P17	Info Display Module	-	In the passenger compartment, at the top center of the instrument panel, above the radio controls	**Instrument Panel and Center Console Components**	• **P17 Info Display Module (UAG)** • **P17 Info Display Module X1 (UHQ)** • **P17 Info Display Module X2 (UHQ)**
P19AA	Speaker - Right Subwoofer	-	In the luggage compartment, at the top right side	**Luggage Compartment Components (Notchback)**	**P19AA Speaker - Right Subwoofer**
P19AG	Speaker - Left Front Door	-	In the passenger compartment, at the front of the left front door, behind the door trim panel	**Driver Door Components**	**P19AG Speaker - Left Front Door**
P19AH	Speaker - Right Front Door	-	In the passenger compartment, at the front of the right front door, behind the door trim panel	**Passenger Door Components**	**P19AH Speaker - Right Front Door**
P19AL	Speaker - Left Rear Door	-	In the passenger compartment, in the lower left rear door, behind the door panel	**Left Rear Door Components**	**P19AL Speaker - Left Rear Door**
			In the passenger		

P19AM	Speaker - Right Rear Door	-	compartment, in the lower right rear door panel	**Right Rear Door Components**	**P19AM Speaker - Right Rear Door**
P19B	Speaker - Center Instrument Panel	UQA	In the passenger compartment, in the center of the instrument panel upper dash pad	-	**P19B Speaker - Center Instrument Panel (UQA)**
P19H	Speaker - Left Front Tweeter	-	In the passenger compartment, at the base of the left A-pillar	**Left Side of Passenger Compartment Components**	**P19H Speaker - Left Front Tweeter**
P19N	Speaker - Left Subwoofer	-	In the luggage compartment, at the top left side	**Luggage Compartment Components (Notchback)**	**P19N Speaker - Left Subwoofer**
P19V	Speaker - Right Front Tweeter	-	In the passenger compartment, at the base of the right A-pillar	**Right Side of Passenger Compartment Components**	**P19V Speaker - Right Front Tweeter**
Q2	A/C Compressor Clutch	-	In the engine compartment, attached to front of A/C compressor	-	-
Q5	Brake Pressure Modulator	-	In the engine compartment, under the radiator surge tank, attached to the brake control module	-	-
Q6E	Camshaft Position Actuator Solenoid Valve - Exhaust	-	In the engine compartment, at the front right side of the engine	• **Right Front of the Engine Components (LUV)** • **Top of the Engine Components**	• **Q6E Camshaft Position Actuator Solenoid Valve - Exhaust (LUV)** • **Q6E Camshaft Position Actuator**

				(LUW/LWE)	**Solenoid Valve - Exhaust (LUW/LWE)**
Q6F	Camshaft Position Actuator Solenoid Valve - Intake	-	In the engine compartment, at the rear right side of the engine	• **Right Rear of the Engine Components (LUV)** • **Top of the Engine Components (LUW/LWE)**	• **Q6F Camshaft Position Actuator Solenoid Valve - Intake (LUV)** • **Q6F Camshaft Position Actuator Solenoid Valve - Intake (LUW/LWE)**
Q8	Control Solenoid Valve Assembly	MH8/MH9	In the engine compartment, at the front of the transmission	**Left Front of the Engine Components (LUW/LWE)**	• **Q8 Control Solenoid Valve Assembly X1 (MH8)** • **Q8 Control Solenoid Valve Assembly X2 (MH8)** • **Q8 Control Solenoid Valve Assembly X3 (MH8)** • **Q8 Control Solenoid Valve Assembly X4 (MH8)**
Q12	Evaporative Emission Purge Solenoid Valve	-	In the engine compartment, at the top middle rear of the engine	• **Right Rear of the Engine Components (LUV)** • **Top of the Engine Components (LUW/LWE)**	• **Q12 Evaporative Emission Purge Solenoid Valve (LUV)** • **Q12 Evaporative Emission Purge Solenoid Valve (LUW/LWE)**
Q13	Evaporative Emission Vent Solenoid Valve	-	Under the vehicle, at the top right side of the fuel tank	**Fuel Tank Components**	**Q13 Evaporative Emission Vent Solenoid Valve**
			In the engine compartment,	• **Right Rear of the Engine Components**	• **Q17A Fuel**

Q17A	Fuel Injector 1	-	at the top rear of the engine, at the cylinder 1 intake port	**(LUV)** • **Top of the Engine Components (LUW/LWE)**	**Injector 1 (LUV)** • **Q17A Fuel Injector 1 (LUW/LWE)**
Q17B	Fuel Injector 2	-	In the engine compartment, at the top rear of the engine, at the cylinder 2 intake port	• **Right Rear of the Engine Components (LUV)** • **Top of the Engine Components (LUW/LWE)**	• **Q17B Fuel Injector 2 (LUV)** • **Q17B Fuel Injector 2 (LUW/LWE)**
Q17C	Fuel Injector 3	-	In the engine compartment, at the top rear of the engine, at the cylinder 3 intake port	• **Right Rear of the Engine Components (LUV)** • **Top of the Engine Components (LUW/LWE)**	• **Q17C Fuel Injector 3 (LUV)** • **Q17C Fuel Injector 3 (LUW/LWE)**
Q17D	Fuel Injector 4	-	In the engine compartment, at the top rear of the engine, at the cylinder 4 intake port	• **Right Rear of the Engine Components (LUV)** • **Top of the Engine Components (LUW/LWE)**	• **Q17D Fuel Injector 4 (LUV)** • **Q17D Fuel Injector 4 (LUW/LWE)**
Q22	Intake Manifold Tuning Solenoid Valve	LUW/LWE	In the engine compartment, on the left side of the engine block, under the intake manifold	**Right Rear of the Engine Components (LUW/LWE)**	**Q22 Intake Manifold Tuning Solenoid Valve (LUW/LWE)**
Q27A	Pressure Control Solenoid Valve 1	MH8/MH9	In the engine compartment, internal to the transmission assembly	-	-
Q27B	Pressure Control Solenoid Valve 2	MH8/MH9	In the engine compartment, internal to the transmission	-	-

			assembly		
Q27C	Pressure Control Solenoid Valve 3	MH8/MH9	In the engine compartment, internal to the transmission assembly	-	-
Q27D	Pressure Control Solenoid Valve 4	MH8/MH9	In the engine compartment, internal to the transmission assembly	-	-
Q27E	Pressure Control Solenoid Valve 5	MH8/MH9	In the engine compartment, internal to the transmission assembly	-	-
Q29	Secondary Air Injection Solenoid Valve	-	In the engine compartment, on the left side of the engine, on the left front corner of the cylinder head	-	-
Q32A	Shift Solenoid Valve 1	MH8/MH9	In the engine compartment, internal to the transmission assembly	-	-
Q38	Throttle Body	LUV	In the engine compartment, at the left rear of the engine	**Left Rear of the Engine Components (LUV)**	**Q38 Throttle Body**
Q38	Throttle Body	LUW/LWE	In the engine compartment, at the right rear of the engine	**Top of the Engine Components (LUW/LWE)**	**Q38 Throttle Body**
Q39A	Torque Converter Clutch Pressure Control Solenoid Valve	MH8/MH9	In the engine compartment, internal to the transmission assembly	-	-
Q40	Turbocharger Bypass Solenoid Valve	LUV	In the engine compartment, at the right rear of the engine	-	**Q40 Turbocharger Bypass Solenoid Valve (LUV)**
			In the engine		

Q42	Turbocharger Wastegate Solenoid Valve	LUV	compartment, at the right front of the engine, above the A/C compressor	**Right Front of the Engine Components (LUV)**	**Q42 Turbocharger Wastegate Solenoid Valve (LUV)**
Q46	A/C Compressor Solenoid Valve	-	At the front of the engine compartment, part of the compressor assembly	• **Right Front of the Engine Components (LUV)** • **Right Front of the Engine Components (LUW/LWE)**	**Q46 A/C Compressor Solenoid Valve**
S2	Transmission Manual Shift Switch	MH8/MH9	In the passenger compartment, part of the transmission shift lever	-	**S2 Transmission Manual Shift Switch (MH8)**
S3	Transmission Shift Lever	MH8/MH9	In the passenger compartment, under the center console, part of the automatic transmission shift lever assembly	**Instrument Panel and Center Console Components**	**S3 Transmission Shift Lever (MH8)**
S13D	Door Lock Switch - Driver	-	In the passenger compartment, in the center of the instrument panel	**Instrument Panel and Center Console Components**	**S13D Door Lock Switch - Driver**
S26	Hazard Warning Switch	-	In the passenger compartment, in the center of the instrument panel	**Instrument Panel and Center Console Components**	**S26 Hazard Lamps Switch**
S30	Headlamp Switch	-	In the passenger compartment, on the left side	**Instrument Panel and Center Console**	**S30 Headlamp Switch**

			of the steering column	**Components**	
S33	Horn Switch	-	In the passenger compartment, in the center of the steering wheel, behind the driver side air bag	-	-
S38	Ignition Mode Switch	BTM	In the passenger compartment, behind the steering wheel, on the right side of the steering column	-	**S38 Igntion Mode Switch (BTM)**
S39	Ignition Switch	without BTM	In the passenger compartment, behind the steering wheel, on the right side of the steering column	-	**S39 Ignition Switch**
S52	Outside Rearview Mirror Switch	-	In the passenger compartment, on the driver door trim panel	**Driver Door Components**	**S52 Outside Rearview Mirror Switch**
S58A	Rear Compartment Lid Unlatch Switch - Exterior	-	At the rear of the vehicle, in the center of the rear compartment lid, between the license plate lamps	**Rear of Vehicle Components**	-
S64D	Seat Adjuster Switch - Driver	ADS	In the passenger compartment, mounted to the outboard side of the driver	**Driver Seat Components (1 of 2)**	**S64D Seat Adjuster Switch - Driver (ADS)**

			seat cushion		
S70L	Steering Wheel Controls Switch - Left	K34	In the passenger compartment, on the left side of the steering wheel	**Instrument Panel and Center Console Components**	**S70L Steering Wheel Controls Switch - Left (K34)**
S70R	Steering Wheel Controls Switch - Right	W1Y	In the passenger compartment, on the right side of the steering wheel	**Instrument Panel and Center Console Components**	**S70R Steering Wheel Controls Switch - Right (W1Y)**
S72	Sunroof Switch	CF5	In the passenger compartment, at the front of the headliner, in the overhead console	-	**S72 Sunroof Switch (CF5)**
S75	Traction Control Switch	FX3	In the passenger compartment, on the center console trim plate, right side of the shifter	**Instrument Panel and Center Console Components**	**S75 Traction Control Switch (FX3)**
S78	Turn Signal/Multifunction Switch	-	In the passenger compartment, on the left side of the steering column	**Instrument Panel and Center Console Components**	**S78 Turn Signal/Multi-Function Switch**
S79D	Window Switch - Driver	AEC	In the passenger compartment, behind the driver door trim panel, center of the door	**Driver Door Components**	**S79D Window Switch - Driver (AEC)**
S79D	Window Switch - Driver	AXG	In the passenger compartment, on the driver door trim panel, center of	**Driver Door Components**	**S79D Window Switch - Driver (AXG)**

			the door		
S79LR	Window Switch - Left Rear	-	In the passenger compartment, at the center of the left rear door, on the door trim panel	**Left Rear Door Components**	**S79LR Window Switch - Left Rear**
S79P	Window Switch - Passenger	-	In the passenger compartment, on the passenger door trim panel, center of the door	**Passenger Door Components**	**S79P Window Switch - Passenger**
S79RR	Window Switch - Right Rear	-	In the passenger compartment, at the center of the right rear door, on the door trim panel	**Right Rear Door Components**	**S79RR Window Switch - Right Rear**
S82	Windshield Wiper/Washer Switch	-	In the passenger compartment, on the right side of the steering column	**Instrument Panel and Center Console Components**	**S82 Windshield Wiper/Washer Switch**
S88	Sunroof Tilt Switch	CF5	In the passenger compartment, at the front of the headliner, in the overhead console	-	**S88 Sunroof Tilt Switch (CF5)**
T3	Audio Amplifier	UQA	In the luggage compartment, mounted on the right rear wheel well	**Luggage Compartment Components (Notchback)**	• **T3 Audio Amplifier X1 (UQA)** • **T3 Audio Amplifier X2 (UQA)** • **T3 Audio Amplifier X3 (UQA)**

T4G	Cellular Phone, Navigation, and Digital Radio Antenna	-	Outside the vehicle, at the rear center of the roof	**Rear of Vehicle Components**	-
T4S	Wireless Communication Antenna - Bluetooth	UPF	In the passenger compartment, in the instrument panel, attached to the telematics communication interface module	-	-
T10E	Keyless Entry Antenna - Rear Compartment	ATH	In the rear compartment, in the center of the metal floor pan near the seatback	-	**T10E Keyless Entry Antenna - Rear Compartment (ATH)**
T10G	Keyless Entry Antenna - Rear Fascia	ATH	On the vehicle exterior, behind the rear fascia	-	**T10G Keyless Entry Antenna - Rear Fascia (ATH)**
T10J	Keyless Entry Antenna - Center Console Front	ATH	In the passenger compartment, in the lower instrument panel near the front of the console	-	**T10J Keyless Entry Antenna - Center Console Front (ATH)**
T10K	Keyless Entry Antenna - Center Console Rear	ATH	In the passenger compartment, in the rear end of the console	-	**T10K Keyless Entry Antenna - Center Console Rear (ATH)**
T10M	Keyless Entry Antenna - Driver Door Handle	ATH	On the vehicle exterior, inside the driver door handle	-	**T10M Keyless Entry Antenna - Driver Door Handle (ATH)**
T10N	Keyless Entry Antenna - Passenger Door Handle	ATH	On the vehicle exterior, inside the passenger door handle	-	**T10N Keyless Entry Antenna - Passenger Door Handle (ATH)**
			In the passenger		

T11	Multimedia Player Interface Module	KTA	compartment, behind the center of the instrument panel, below the HVAC controls	-	**T11 Multimedia Player Interface Module (KTA)**
T12	Automatic Transmission Assembly	MH8/MH9	In the engine compartment, toward the left side, attached to the engine	-	-
T15	Navigation Antenna Signal Splitter	UE1 and UYS	In the passenger compartment, near the bottom of the right front A-pillar	**Behind the Instrument Panel Components**	-
W7	Blunt Cut - Shield	-	On Instrument panel harness near X200 connector	-	-
X50A	Fuse Block - Underhood	-	In the left front of the engine compartment, behind the headlamp assembly	**Left Side of Engine Compartment Components**	**Electrical Center Identification Views**
X50D	Fuse Block - Battery	-	In the left side of the engine compartment, on top of the battery	**Left Side of Engine Compartment Components**	**Electrical Center Identification Views**
X51A	Fuse Block - Instrument Panel	-	In the passenger compartment, to the left of the steering column, under the left instrument panel knee bolster	**Instrument Panel and Center Console Components**	**Electrical Center Identification Views**
X80L	Accessory Power Receptacle - Rear	-	In the passenger compartment, at the rear of	**Instrument Panel and Center Console**	**X80L Accessory Power Receptacle - Rear**

	Console		the center console	**Components**	**Console**
X83	Auxiliary Audio Input	-	In the passenger compartment, in the center console storage compartment	**Instrument Panel and Center Console Components**	**X83 Auxiliary Audio Input**
X84	Data Link Connector	-	In the passenger compartment, at the bottom of the driver side of the instrument panel	**Instrument Panel and Center Console Components**	**X84 Data Link Connector**
X85	Steering Wheel Air Bag Coil	-	In the passenger compartment, behind the steering wheel	-	• **X85 Steering Wheel Air Bag Coil X1** • **X85 Steering Wheel Air Bag Coil X2** • **X85 Steering Wheel Air Bag Coil X3**
X100	Body Harness to Forward Lamp Harness (40 cavities)	-	In the left front of the engine compartment, under the front of the battery tray	**Forward Lamp Harness Routing**	**X100 Body Harness to Forward Lamp Harness**
X102	Engine Cooling Harness to Forward Lamp Harness (4 cavities)	-	In the left front of the engine compartment, on the lower left side of the cooling fan assembly	**Forward Lamp Harness Routing**	**X102 Engine Cooling Harness to Forward Lamp Harness**
X104	Engine Cooling Harness to Forward Lamp Harness (5 cavities)	-	In the left front of the engine compartment, on the lower left side of the cooling fan assembly	**Forward Lamp Harness Routing**	**X104 Engine Cooling Harness to Forward Lamp Harness**
			In the engine		

X105	Engine Harness to Fuel Injectors Harness (7 cavities)	LUW/LWE	compartment, left side of engine	**Engine Harness Routing - Right Rear (LUW/LWE)**	**X105 Engine Harness to Fuel Injectors Harness (LUW/LWE)**
X114	Power Steering Harness to Forward Lamp Harness (12 cavities)	-	In the left front of the engine compartment, on the lower left side of the cooling fan assembly	**Forward Lamp Harness Routing**	**X114 Power Steering Harness to Forward Lamp Harness**
X190	Body Harness to Engine Harness (40 cavities)	-	In the left front of the engine compartment, under the front of the battery tray	**Engine Harness Routing - Left Front (LUW/LWE)**	**X190 Body Harness to Engine Harness**
X200	Instrument Panel Harness to Body Harness (102 cavities)	-	In the passenger compartment, near the bottom of the left front A-pillar	**Passenger Compartment Harness Routing**	**X200 Instrument Panel Harness to Body Harness**
X203	Instrument Panel Harness to Passenger Instrument Panel Air Bag Harness (5 cavities)	-	In the passenger compartment, behind instrument panel compartment	**Instrument Panel Harness Routing**	**X203 Instrument Panel Harness to Passenger Instrument Panel Air Bag Harness**
X205	Instrument Panel Harness to Body Harness (12 cavities)	UQA	In the passenger compartment, near the bottom of the right front A-pillar	**Passenger Compartment Harness Routing**	**X205 Instrument Panel Harness to Body Harness (UQA)**
X206	Instrument Panel Harness to Body Harness (2 cavities - COAX)	-	In the passenger compartment, near the bottom of the right front A-pillar	**Passenger Compartment Harness Routing**	-
X207	Instrument Panel Harness to Body Harness (2 cavities - COAX)	-	In the passenger compartment, near the bottom of the right front A-pillar	**Passenger Compartment Harness Routing**	-

X210	Headliner Harness to Body Harness (20 cavities)	-	In the passenger compartment, at the right front A-pillar	**Passenger Compartment Harness Routing**	**X210 Headliner Harness to Body Harness**
X211	Headliner Harness to Body Harness (20 cavities)	-	In the passenger compartment, at the right front A-pillar	**Passenger Compartment Harness Routing**	**X211 Headliner Harness to Body Harness**
X212	Instrument Panel Harness to HVAC Harness (2 cavities)	C68	In the passenger compartment, behind the center of the instrument panel	-	**X212 Instrument Panel Harness to HVAC Harness (C68)**
X300	Console Harness to Instrument Panel Harness (22 cavities)	-	In the passenger compartment, under the center of instrument panel, in front of the shifter	**Center Console Harness Routing**	**X300 Console Harness to Instrument Panel Harness**
X301	Console Harness to Instrument Panel Harness (5 cavities - USB)	-	In the passenger compartment, under the center of instrument panel, in front of the shifter	**Center Console Harness Routing**	-
X310	Body Harness to Driver Seat Harness (20 cavities)	-	In the passenger compartment, under the right side of the driver seat	**Driver Seat Harness Routing**	**X310 Body Harness to Driver Seat Harness**
X320	Body Harness to Passenger Seat Harness (20 cavities)	-	In the passenger compartment, under the left side of the passenger seat	**Passenger Seat Harness Routing**	**X320 Body Harness to Passenger Seat Harness**
			In the passenger		

X335	Body Harness to Curtain Air Bag Jumper Harness (2 cavities)	-	compartment, above the headliner, between the left B-pillar and C-pillar	-	**X335 Body Harness to Curtain Air Bag Harness**
X345	Body Harness to Curtain Air Bag Jumper Harness (2 cavities)	-	In the passenger compartment, above the headliner, between the right B-pillar and C-pillar	**Passenger Compartment Harness Routing**	**X345 Body Harness to Curtain Air Bag Harness**
X401	Fuel Tank Harness to Body Harness (16 cavities)	-	Under the vehicle, at the front of the right rear wheel well	**Body Harness Routing - Under the Rear of the Vehicle**	**X401 Fuel Tank Harness to Body Harness**
X402	Rear Object Sensor Harness to Body Harness (12 cavities)	UD7	At the rear of the vehicle, behind the inner left side of the rear fascia	**Body Harness Routing - Under the Rear of the Vehicle**	**X402 Rear Object Sensor Harness to Body Harness (UD7)**
X410	Left Tail Lamp Harness to Body Harness (8 cavities)	-	In the luggage compartment, near the left tail lamp, behind the trim panel	**Body Harness Routing - Left Side of the Luggage Compartment**	**X410 Left Tail Lamp Harness to Body Harness**
X420	Right Tail Lamp Harness to Body Harness (8 cavities)	-	In the luggage compartment, near the right tail lamp, behind the trim panel	**Body Harness Routing - Right Side of the Luggage Compartment**	**X420 Right Tail Lamp Harness to Body Harness**
X500	Driver Door Harness to Body Harness (41 cavities)	-	In the passenger compartment, at the left front A-pillar	**Driver Door Harness Routing**	**X500 Driver Door Harness to Body Harness**
X600	Passenger Door Harness to Body Harness (41 cavities)	-	In the passenger compartment, at the right front A-pillar	**Passenger Door Harness Routing**	**X600 Passenger Door Harness to Body Harness**
			In the		

X700	Left Rear Door Harness to Body Harness (20 cavities)	-	passenger compartment, in the left B-pillar	**Left Rear Door Harness Routing**	**X700 Left Rear Door Harness to Body Harness**
X800	Right Rear Door Harness to Body Harness (20 cavities)	-	In the passenger compartment, in the right B-pillar	**Right Rear Door Harness Routing**	**X800 Right Rear Door Harness to Body Harness**
X900	Rear Compartment Lid Harness to Body Harness (22 cavities)	-	In the luggage compartment, on the left side, behind the trim panel	**Body Harness Routing - Left Side of the Luggage Compartment**	**X900 Rear Compartment Lid Harness to Body Harness**
X910	Left Inner Tail Lamp Jumper Harness to Rear Compartment Lid Harness (2 cavities)	-	In the luggage compartment, near the left inner tail lamp, behind the trim panel	**Rear Compartment Lid Harness Routing**	**X910 Left Inner Tail Lamp Harness to Rear Compartment Lid Harness**
X915	License Plate Lamp Harness to Rear Compartment Lid Harness (4 cavities)	(-UVC)	At the rear of the vehicle, in the right center of the rear compartment lid	**Rear Compartment Lid Harness Routing**	**X915 License Lamp Harness to Rear Compartment Lid Harness (-UVC)**
X915	License Plate Lamp Harness to Rear Compartment Lid Harness (10 cavities)	(UVC)	At the rear of the vehicle, in the right center of the rear compartment lid	**Rear Compartment Lid Harness Routing**	**X915 License Lamp Harness to Rear Compartment Lid Harness (UVC)**
X920	Right Inner Tail Lamp Jumper Harness to Rear Compartment Lid Harness (2 cavities)	-	In the luggage compartment, near the right inner tail lamp, behind the trim panel	**Rear Compartment Lid Harness Routing**	**X920 Right Inner Tail Lamp Harness to Rear Compartment Lid Harness**
G100	Battery (-) Harness	-	In the engine compartment, on the left side, forward of the battery	**G100, G101, G103, G104, G105, G120, and G121**	-
G101	Forward Lamp Harness	-	In the engine compartment, on the left side, forward of the	**G100, G101, G103, G104, G105, G120, and G121**	-

			battery		
G102	Battery (+) Harness	-	In the engine compartment, on the lower rear of the engine, near the starter assembly	**G102**	-
G103	Forward Lamp Harness	-	In the left rear of the engine compartment, near the strut tower	**G100, G101, G103, G104, G105, G120, and G121**	-
G104	Forward Lamp Harness	-	In the right front of the engine compartment, near the right engine mount	**G100, G101, G103, G104, G105, G120, and G121**	-
G105	Engine Cooling Harness	-	In the engine compartment, on the left side, forward of the battery	**G100, G101, G103, G104, G105, G120, and G121**	-
G112	Engine Harness	-	In the engine compartment, top left side of the engine, above the thermostat housing	**G112 (LUW/LWE)**	-
G114	Engine Harness	LUV	In the engine compartment, on the left side, forward of the battery	**G114 (LUV)**	-
G114	Engine Harness	LUW/LWE	In the engine compartment, on the left side, forward of the battery	**G114 (LUW/LWE)**	-
G120	Body Harness	-	In the left rear of the engine compartment, near the strut tower	**G100, G101, G103, G104, G105, G120, and G121**	-

G121	Power Steering Harness	-	In the left rear of the engine compartment, near the strut tower	**G100, G101, G103, G104, G105, G120, and G121**	-
G201	Instrument Panel Harness	-	In the passenger compartment, behind the left side of the instrument panel	**G201**	-
G202	Instrument Panel Harness	-	In the passenger compartment, behind the center of the instrument panel	**G202 and G203**	-
G203	Instrument Panel Harness	-	In the passenger compartment, behind the center of the instrument panel	**G202 and G203**	-
G204	Instrument Panel Harness	-	In the passenger compartment, behind the center of the instrument panel	**G204**	-
G301	Body Harness	-	In the passenger compartment, below the center console	**G301**	-
G305	Body Harness	-	In the passenger compartment, near the bottom of the left front A-pillar	**G305, G307, G308, and G400**	-
G307	Body Harness	-	In the passenger compartment,	**G305, G307, G308,**	-

			under the center console	**and G400**	
G308	Body Harness	-	In the passenger compartment, near the bottom of the right front A-pillar	**G305, G307, G308, and G400**	-
G309	Body Harness	-	In the luggage compartment, on the rear of the left rear wheel well	**G309**	-
G400	Body Harness	-	In the passenger compartment, on the right D-pillar	**G305, G307, G308, and G400**	-
G402	Body Harness	-	In the luggage compartment, on the right rear wheel well, above the fuel pump control module	**G402**	-
J101	Forward Lamp Harness	-	In the forward lamp harness, toward the left front, approximately 7 cm (2.76 in) from the breakout for X114	-	-
J102	Forward Lamp Harness	-	In the forward lamp harness, approximately 17 cm (6.7 in) from the breakout for the hood ajar switch	-	-
J108	Fuel Injector Harness	LUW/LWE	In the fuel injector harness, approximately 5 cm (1.97 in)	**Engine Harness Routing - Right**	-

			from the breakout for fuel injector 4	**Rear (LUW/LWE)**	
J111	Engine Harness	LUV	In the engine harness, approximately 9 cm (3.54 in) from the throttle body breakout	**Engine Harness Routing - Left Front (LUV)**	-
J111	Engine Harness	LUW/LWE	In the engine harness, approximately 18.5 cm (7.28 in) from the breakout for the camshaft position actuator solenoid valve - intake	**Engine Harness Routing - Right Rear (LUW/LWE)**	-
J112	Engine Harness	LUV	In the engine harness, approximately 30 cm (1.18 in) from the breakout for the engine control module connectors	**Engine Harness Routing - Left Front (LUV)**	-
J114	Engine Harness	LUV	In the engine harness approximately 9 cm (3.54 in) from the throttle body breakout	**Engine Harness Routing - Left Front (LUV)**	-
J114	Engine Harness	LUWLWE	In the engine harness, approximately 24 cm (9.45 in) from the breakout for the camshaft position actuator solenoid valve	**Engine Harness Routing - Right Rear (LUW/LWE)**	-

			- intake		
J116	Forward Lamp Harness	T3U	In the forward lamp harness, approximately 5 cm (1.97 in) from the main bundle in the breakout for the underhood fuse block	**Forward Lamp Harness Routing**	-
J119	Engine Harness	LUV with MH8	In the engine harness approximately 0.5 cm (0.19 in) from the oil pressure switch breakout	**Engine Harness Routing - Left Front (LUV)**	-
J119	Engine Harness	LUW or LWE with MH9	In the engine harness, approximately 3 cm (1.18 in) from the breakout for the camshaft position actuator solenoid valve - intake	**Engine Harness Routing - Right Rear (LUW/LWE)**	-
J122	Engine Harness	LUW or LWE with MH9	In the engine harness, approximately 10 cm (3.98 in) from the breakout for the intake manifold tuning solenoid valve	**Engine Harness Routing - Right Rear (LUW/LWE)**	-
J123	Engine Harness	LUW/LWE	In the engine harness, in the breakout for the underhood fuse block	-	-
			In the engine harness, approximately 9 cm (3.5 in)	**Engine Harness**	

J127	Engine Harness	LUV	from the breakout for the engine control module	**Routing - Left Front (LUV)**	-
J127	Engine Harness	LUW/LWE	In the engine harness, approximately 6 cm (2.4 in) from the breakout for G114	**Engine Harness Routing - Right Rear (LUW/LWE)**	-
J128	Body Harness	-	In the body harness approximately 8.0 cm (4.33 in) from the body control module ground	-	-
J132	Engine Harness	LUV	In the engine harness approximately 2 cm (.79 in) from the fuse block underhood breakout	**Engine Harness Routing - Left Front (LUV)**	-
J132	Engine Harness	LUW/LWE	In the engine harness, approximately 12.5 cm (4.92 in) from the breakout for the camshaft position actuator solenoid valve - intake	**Engine Harness Routing - Right Rear (LUW/LWE)**	-
J144	Engine Harness	LUV with MH8	In the engine harness approximately 8 cm (4.33 in) from the engine control module breakout	**Engine Harness Routing - Left Front (LUV)**	-
			In the engine harness, approximately		

J144	Engine Harness	LUW or LWE with MH9	22.5 cm (8.86 in) from the breakout for the camshaft position actuator solenoid valve - intake	**Engine Harness Routing - Right Rear (LUW/LWE)**	-
J200	Instrument Panel Harness	-	In the instrument panel harness, approximately 9 cm (3.54 in) from the breakout for the center speaker	**Instrument Panel Harness Routing**	-
J201	Instrument Panel Harness	-	In the instrument panel harness, in the breakout to the instrument panel fuse block, approximately 10 cm (3.93 in.) from the main harness	**Instrument Panel Harness Routing**	-
J202	Instrument Panel Harness	-	In the instrument panel harness, approximately 23 cm (9.06 in) from the breakout for the USB connector and the traction control switch	**Instrument Panel Harness Routing**	-
J203	Instrument Panel Harness	-	In the instrument panel harness, approximately 10 cm (3.94 in) from the breakout for	**Instrument Panel Harness Routing**	-

			the instrument panel cluster		
J204	Instrument Panel Harness	-	In the instrument panel harness, approximately 3 cm (1.18 in) from the main breakout for center speaker	**Instrument Panel Harness Routing**	-
J206	Instrument Panel Harness	-	In the instrument panel harness, in the breakout to the relay section of the instrument panel fuse block	**Instrument Panel Harness Routing**	-
J207	Instrument Panel Harness	-	In the instrument panel harness, in the breakout to the relay section of the instrument panel fuse block	**Instrument Panel Harness Routing**	-
J209	Instrument Panel Harness	-	In the steering column breakout, approximately 4 cm (1.57 in) from the main harness	**Instrument Panel Harness Routing**	-
J211	Instrument Panel Harness	-	In the instrument panel harness, approximately 6 cm (2.36 in) from the breakout for the hazard switch and air bag display	**Instrument Panel Harness Routing**	-
			In the instrument		

J212	Instrument Panel Harness	-	panel harness, approximately 6 cm (2.36 in) from the breakout for the shift lever	**Center Console Harness Routing**	-
J213	Instrument Panel Harness	-	In the instrument panel harness, approximately 15 cm (5.91 in) from the instrument cluster breakout	**Instrument Panel Harness Routing**	-
J214	Instrument Panel Harness	-	In the instrument panel harness, approximately 4 cm (1.57 in) from the breakout for the radio controls	**Instrument Panel Harness Routing**	-
J271	HVAC Harness	-	In the HVAC harness, behind and below the center of the instrument panel	-	-
J272	HVAC Harness	-	In the HVAC harness, behind and below the center of the instrument panel	-	-
J300	Body Harness	-	In the body harness, approximately 7.5 cm (2.95 in) from the G303 breakout	-	-
J301	Body Harness	-	In the body harness, approximately 8 cm (3.14 in) from the X225	**Passenger Compartment Harness Routing**	-

			breakout		
J302	Body Harness	-	In the body harness, approximately 17 cm (6.69 in) from the right main bundle, toward the center console	**Passenger Compartment Harness Routing**	-
J303	Body Harness	-	In the body harness, approximately 15 cm (5.90 in) from the X500 breakout	**Passenger Compartment Harness Routing**	-
J305	Body Harness	-	In the body harness, approximately 25 cm (9.84 in) from the right main bundle	**Passenger Compartment Harness Routing**	-
J307	Body Harness	-	In the body harness, approximately 16 cm (6.29 in) from the park brake switch breakout	**Passenger Compartment Harness Routing**	-
J308	Body Harness	-	In the body harness, approximately 22 cm (8.66 in) from the right main bundle, near the right front side impact sensor breakout	**Passenger Compartment Harness Routing**	-
J311	Body Harness	-	In the body harness, approximately 7 cm (2.75 in) from the G301 breakout	**Passenger Compartment Harness Routing**	-
			In the body harness, approximately	**Body Harness**	

J312	Body Harness	Y8X	9 cm (3.54 in) from the right rear wheel speed sensor breakout	**Routing - Right Side of the Luggage Compartment**	-
J313	Body Harness	-	In the body harness, approximately 17 cm (6.69 in) from the left main bundle towards X320 breakout	**Passenger Compartment Harness Routing**	-
J314	Body Harness	-	In the body harness, approximately 21 cm (8.26 in) from the G301 breakout	**Passenger Compartment Harness Routing**	-
J315	Body Harness	-	In the body harness, approximately 6.5 cm (2.55 in) from the left front side impact sensor breakout	**Passenger Compartment Harness Routing**	-
J316	Body Harness	-	In the body harness, approximately 7 cm (2.75 in) from the X500 breakout	**Passenger Compartment Harness Routing**	-
J317	Passenger Seat Harness	-	In the passenger seat harness, in the breakout to X315	**Passenger Seat Harness Routing**	-
J319	Body Harness	-	In the body harness, approximately 6.5 cm (2.55 in) from the X225 breakout	**Passenger Compartment Harness Routing**	-
			In the headliner harness, approximately		

J332	Headliner Harness	-	33 cm (13 in) from the breakout for the left sunshade	**Headliner Harness Routing**	-
J333	Headliner Harness	CF5	In the headliner harness, approximately 8.5 cm (3.35 in) from the breakout for the sunroof control module	**Headliner Harness Routing**	-
J334	Headliner Harness	-	In the headliner harness, approximately 5 cm (1.97 in) from the breakout for the sunroof control module	**Headliner Harness Routing**	-
J401	Body Harness	-	In the body harness, approximately 14.0 cm (5.51 in) from the parking assist control module breakout	**Body Harness Routing - Left Side of the Luggage Compartment**	-
J402	Body Harness	-	In the body harness, approximately 8.0 cm (3.14 in) from the parking assist control module breakout	**Body Harness Routing - Left Side of the Luggage Compartment**	-
J404	Body Harness	-	In the body harness, approximately 13 cm (5.12 in) into the breakout for the fuel pump control module	**Body Harness Routing - Right Side of the Luggage Compartment**	-
			In the rear object sensor		

J498	Rear Object Sensor Harness	UD7	harness, approximately 10 cm (3.94 in) from the breakout for X402	-	-
J499	Rear Object Sensor Harness	UD7	In the rear object sensor harness, approximately 8 cm (3.15 in) from the breakout to the right middle rear object sensor	-	-
J501	Driver Door Harness	AXG	Inside the driver door harness, approximately 9 cm (3.54 in) into the breakout for driver outside rearview mirror	**Driver Door Harness Routing**	-
J502	Driver Door Harness	-	Inside the driver door harness, approximately 10.5 cm (4.13 in) from the breakout for driver window motor	**Driver Door Harness Routing**	-
J605	Passenger Door Harness	-	Inside the passenger door harness, approximately 9 cm (3.54 in) into the main breakout for the passenger window switch	**Passenger Door Harness Routing**	-
	Left Rear Door		Inside the right rear door harness, approximately		

J701	Harness	-	20.5 cm (8.07 in) from the breakout for the left rear window switch	-	-
J702	Left Rear Door Harness	-	Inside the left rear door harness, approximately 5 cm (1.97 in) from the breakout for the left rear window switch	**Left Rear Door Harness Routing**	-
J704	Left Rear Door Harness	-	Inside the left rear door harness, approximately 2 cm (.78 in) from the breakout for the left rear window switch	**Left Rear Door Harness Routing**	-
J801	Right Rear Door Harness	-	Inside the right rear door harness, approximately 20.5 cm (8.07 in) from the breakout for the right rear window switch	**Right Rear Door Harness Routing**	-
J803	Right Rear Door Harness	-	Inside the right rear door harness, approximately 27.5 cm (10.83 in) from the breakout for the right rear window switch	**Right Rear Door Harness Routing**	-
J901	License Lamp Harness	-	In the license lamp harness, at the takeout for the exterior rear compartment	**Rear Compartment Lid Harness Routing**	-

			lid unlatch switch		
J902	License Lamp Harness	-	In the license lamp harness, at the takeout for the exterior rear compartment lid unlatch switch	-	-
J903	Rear Compartment Lid Harness	-	In the rear compartment lid harness, approximately 39 cm (15.35 in) from the breakout for the left tail lamp	**Rear Compartment Lid Harness Routing**	-

2013 ELECTRICAL

Wiring Systems and Power Management - Component Locator - Passenger Compartment/Roof Component Views - Cruze

PASSENGER COMPARTMENT/ROOF COMPONENT VIEWS

LEFT SIDE OF PASSENGER COMPARTMENT COMPONENTS

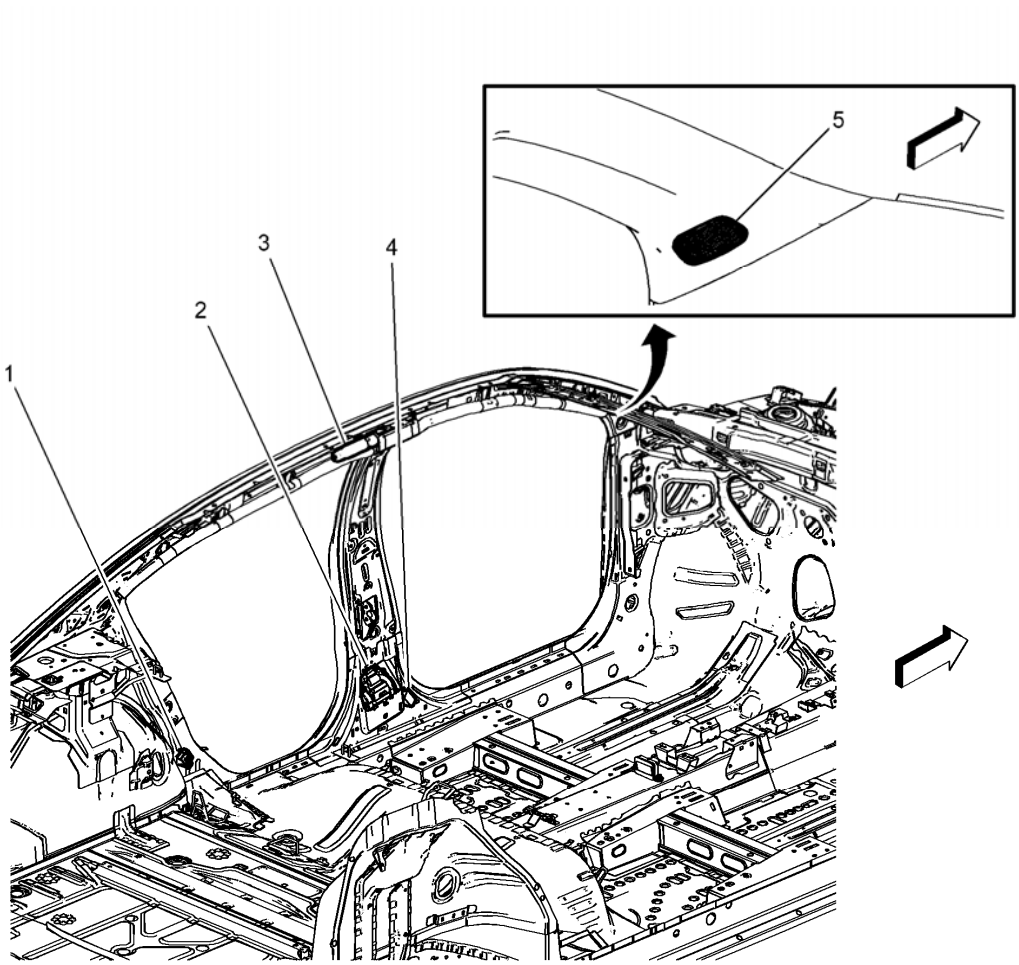

Fig. 1: Left Side Of Passenger Compartment Components
Courtesy of GENERAL MOTORS COMPANY

Items
1: B63LR Side Impact Sensor - Left Rear **B63LR Side Impact Sensor - Left Rear**
2: F112D Seat Belt Retractor Pretensioner - Driver **F112D Seat Belt Retractor Pretensioner - Driver**
3: F105L Roof Rail Air Bag - Left **F105L Roof Rail Air Bag - Left**
4: B63LF Side Impact Sensor - Left Front **B63LF Side Impact Sensor - Left Front**

5: P19H Speaker - Left Front Tweeter **P19H Speaker - Left Front Tweeter**

RIGHT SIDE OF PASSENGER COMPARTMENT COMPONENTS

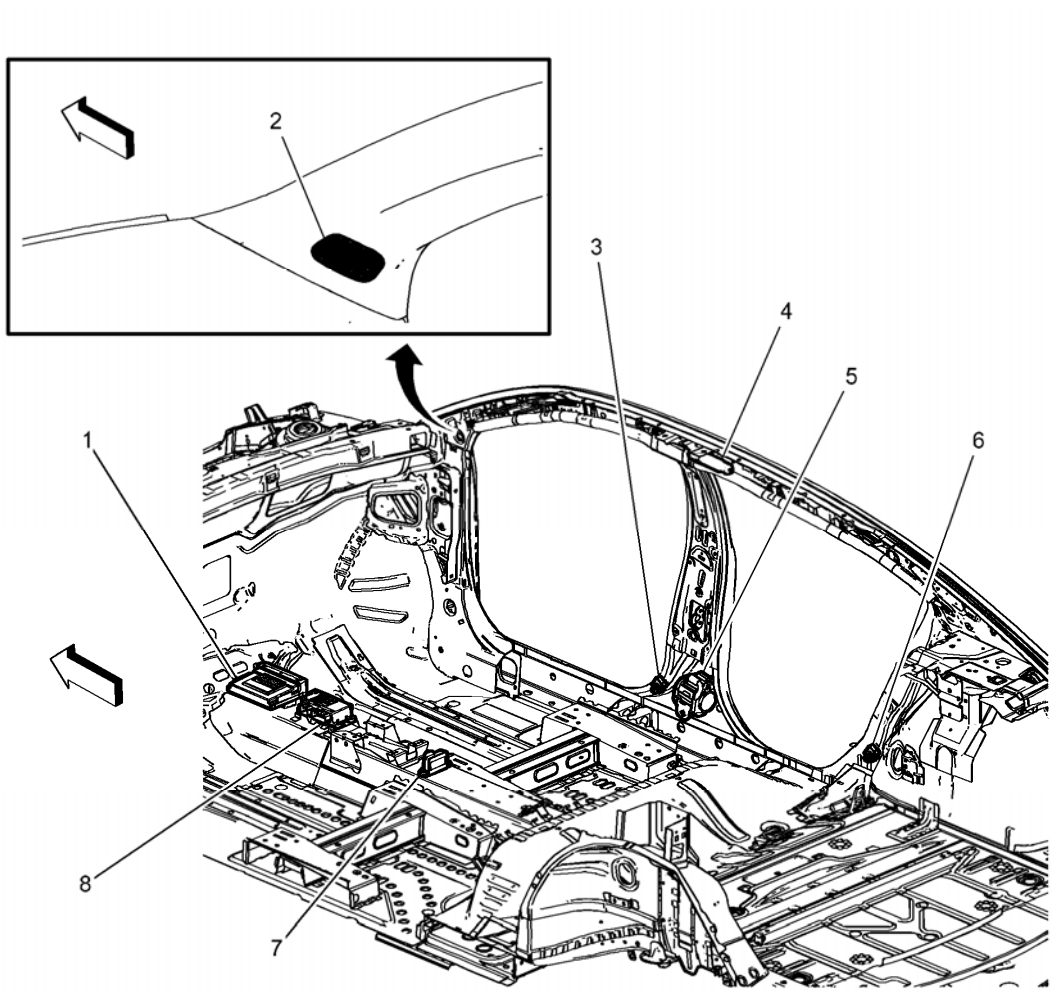

Fig. 2: Right Side Of Passenger Compartment Components
Courtesy of GENERAL MOTORS COMPANY

Items

1: K9 Body Control Module **K9 Body Control Module X1** **K9 Body Control Module X2** **K9 Body Control Module X3** **K9 Body Control Module X4** **K9 Body Control Module X5** **K9 Body Control Module X6** **K9 Body Control Module X7**
2: P19V Speaker - Right Front Tweeter **P19V Speaker - Right Front Tweeter**
3: B63RF Side Impact Sensor - Right Front **B63RF Side Impact Sensor - Right Front**
4: F105R Roof Rail Air Bag - Right **F105R Roof Rail Air Bag - Right**
5: F112P Seat Belt Retractor Pretensioner - Passenger **F112P Seat Belt Retractor Pretensioner - Passenger**
6: B63RR Side Impact Sensor - Right Rear **B63RR Side Impact Sensor - Right Rear**

7: B119 Multi-axis Acceleration Sensor (FX3) **B119 Multi-Axis Acceleration Sensor (FX3)**
8: K36 Inflatable Restraint Sensing and Diagnostic Module **K36 Inflatable Restraint Sensing and Diagnostic Module X1** **K36 Inflatable Restraint Sensing and Diagnostic Module X2**

HEADLINER COMPONENTS

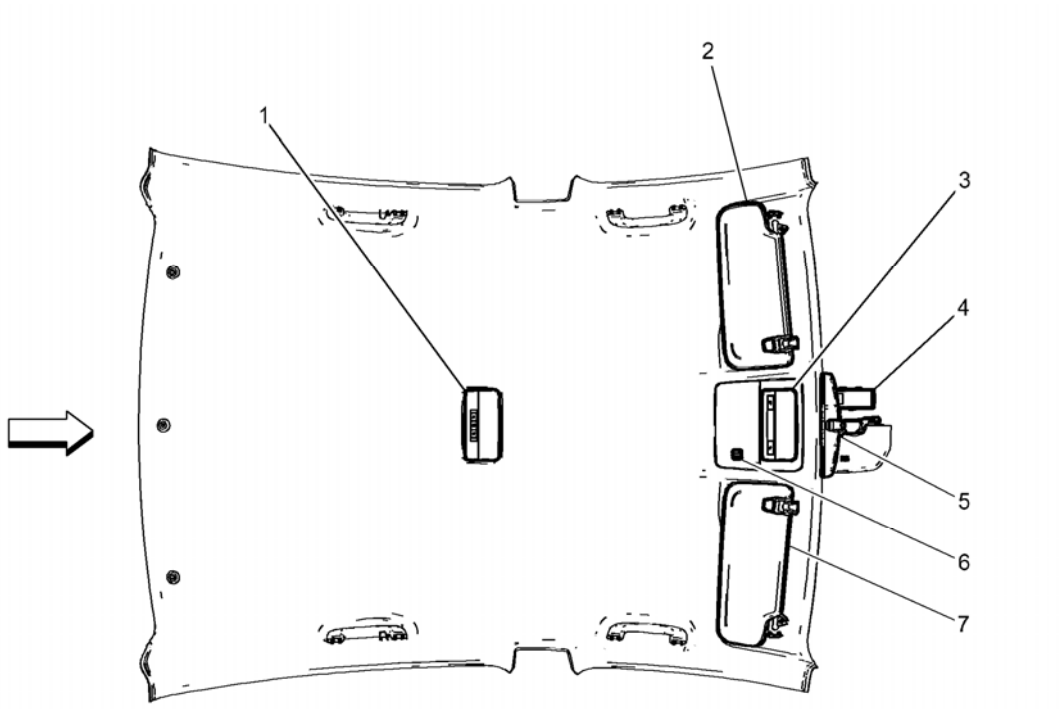

Fig. 3: Headliner Components
Courtesy of GENERAL MOTORS COMPANY

Items
1: E37M Dome/Reading Lamps - Middle **E37M Dome/Reading Lamps - Middle**
2: A3R Sunshade - Right (D6I) **A3R Sunshade - Right (D6I)**
3: E37F Dome/Reading Lamps - Front **E37F Dome/Reading Lamps - Front**
4: K77 Remote Control Door Lock Receiver **K77 Remote Control Door Lock Receiver**
5: A10 Inside Rearview Mirror (DD8) **A10 Inside Rearview Mirror**
6: B24 Cellular Phone Microphone (UE1) **B24 Cellular Phone Microphone (UE1)**
7: A3L Sunshade - Left (D6I) **A3L Sunshade - Left (D61)**

DRIVER SEAT COMPONENTS (1 OF 2)

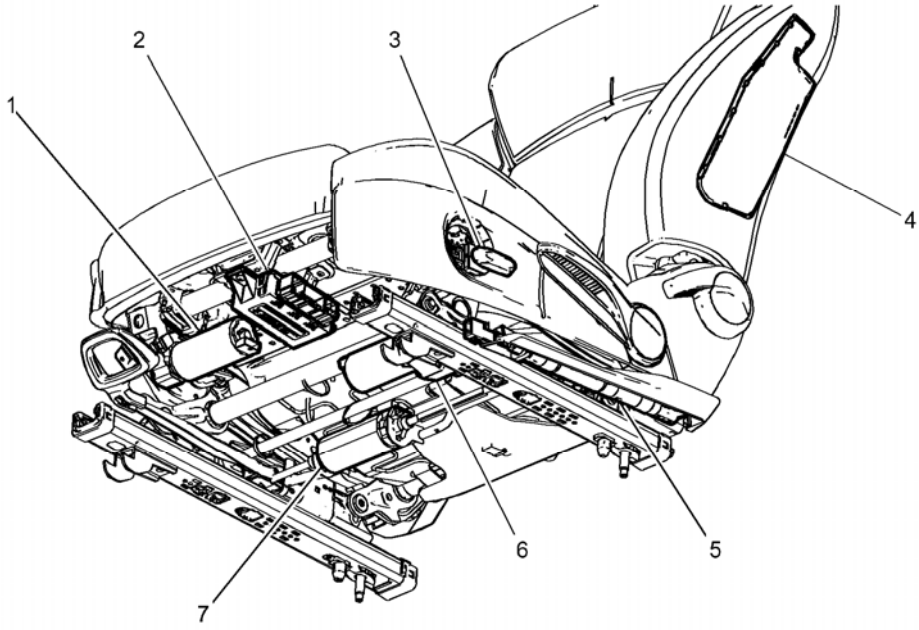

Fig. 4: Driver Seat Components (1 of 2)
Courtesy of GENERAL MOTORS COMPANY

Items
1: M50D Seat Front Vertical Motor - Driver (ADS) **M50D Seat Front Vertical Motor - Driver (ADS)**
2: K29 Seat Heating Control Module (KA1) **K29 Seat Heating Control Module X1 (KA1)** **K29 Seat Heating Control Module X2 (KA1)** **K29 Seat Heating Control Module X3 (KA1)**
3: S64D Seat Adjuster Switch - Driver (ADS) **S64D Seat Adjuster Switch - Driver (ADS)**
4: F106D Seat Side Air Bag - Driver **F106D Seat Air Bag - Driver**
5: F113D Seat Belt Anchor Pretensioner - Driver **F113D Seat Belt Anchor Prestensioner - Driver**
6: M55D Seat Rear Vertical Motor - Driver (ADS) **M55D Seat Rear Vertical Motor - Driver (ADS)**
7: M51D Seat Horizontal Motor - Driver (ADS) **M51D Seat Horizontal Motor - Driver (ADS)**

DRIVER SEAT COMPONENTS (2 OF 2)

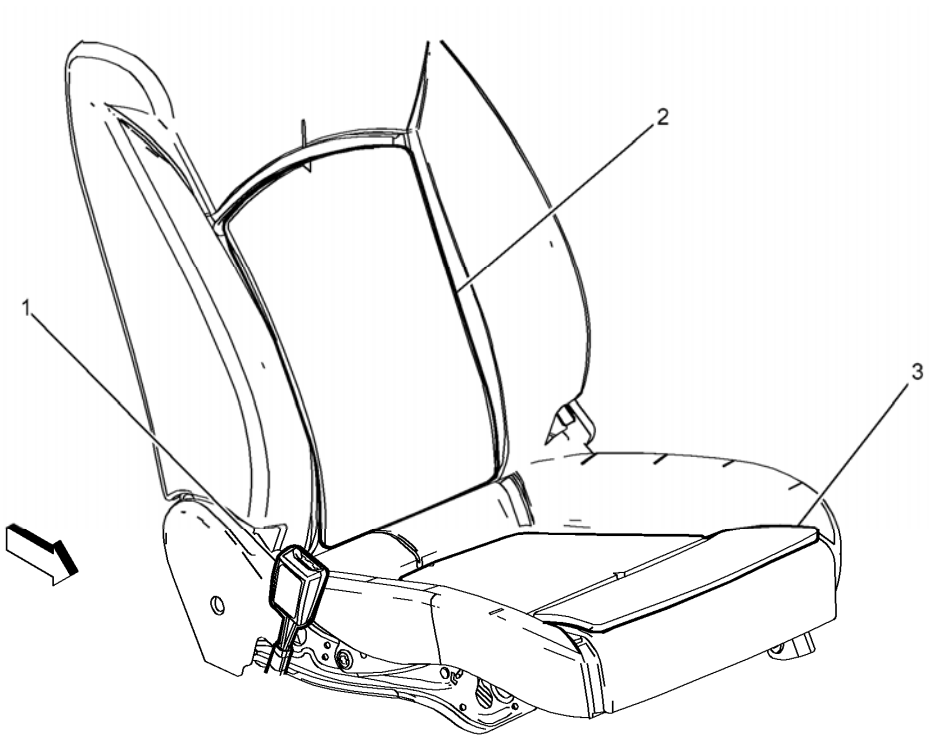

Fig. 5: Driver Seat Components (2 Of 2)
Courtesy of GENERAL MOTORS COMPANY

Items
1: B88D Seat Belt Switch - Driver **B88D Seat Belt Switch - Driver**
2: E14A Seat Heating Element - Driver Back (KA1) **E14A Seat Heating Element - Driver Back (KA1)**
3: E14B Seat Heating Element - Driver Cushion (KA1) **E14B Seat Heating Element - Driver Cushion (KA1)**

PASSENGER SEAT COMPONENTS (1 OF 2)

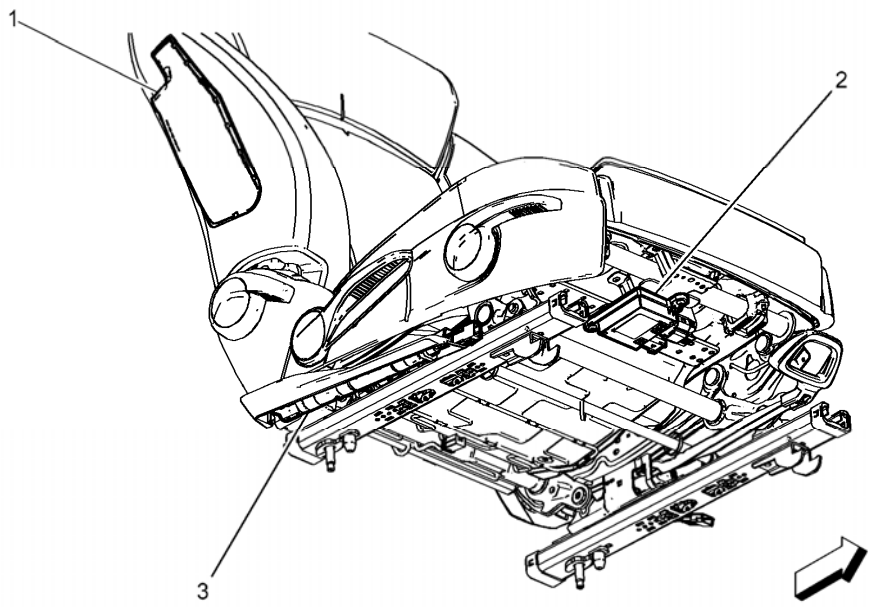

Fig. 6: Passenger Seat Components (1 Of 2)
Courtesy of GENERAL MOTORS COMPANY

Items
1: F106P Seat Side Air Bag - Passenger **F106P Seat Air Bag - Passenger**
2: K85 Passenger Presence Module **K85 Passenger Presence Detection Module X1** **K85 Passenger Presence Detection Module X2**
3: F113P Seat Belt Anchor Pretensioner - Passenger **F113P Seat Belt Anchor Pretensioner - Passenger**

PASSENGER SEAT COMPONENTS (2 OF 2)

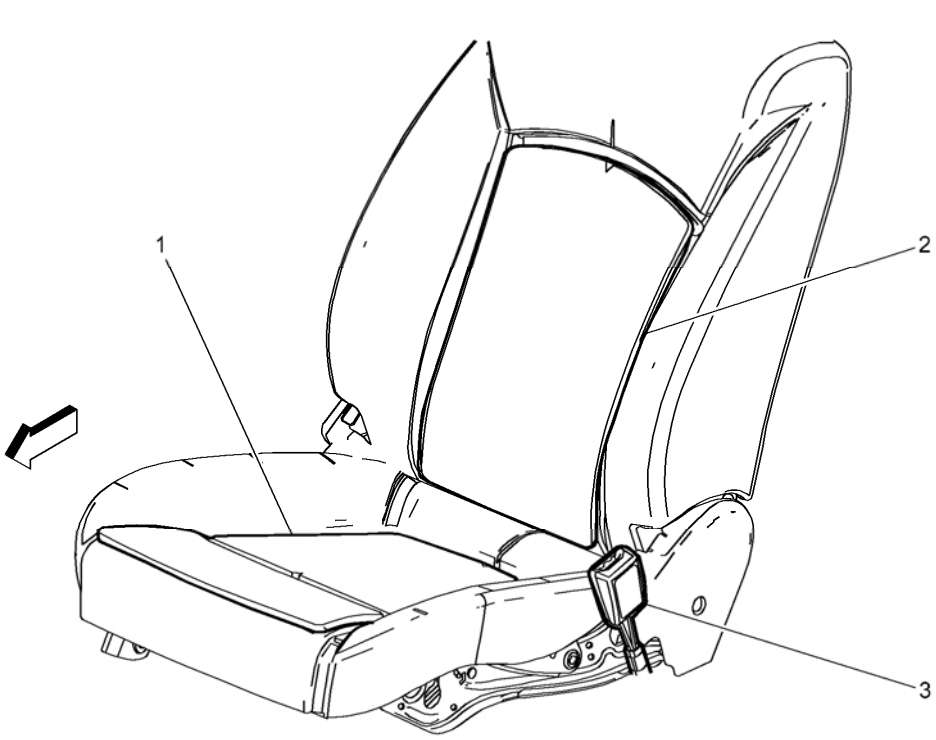

Fig. 7: Passenger Seat Components (2 Of 2)
Courtesy of GENERAL MOTORS COMPANY

Items
1: E14D Seat Heating Element - Passenger Cushion (KA1) **E14D Seat Heating Element - Passenger Cushion (KA1)**
2: E14C Seat Heating Element - Passenger Back (KA1) **E14C Seat Heating Element - Passenger Back (KA1)**
3: B88P Seat Belt Switch - Passenger **B88P Seat Belt Switch - Passenger**

REAR SEAT COMPONENTS

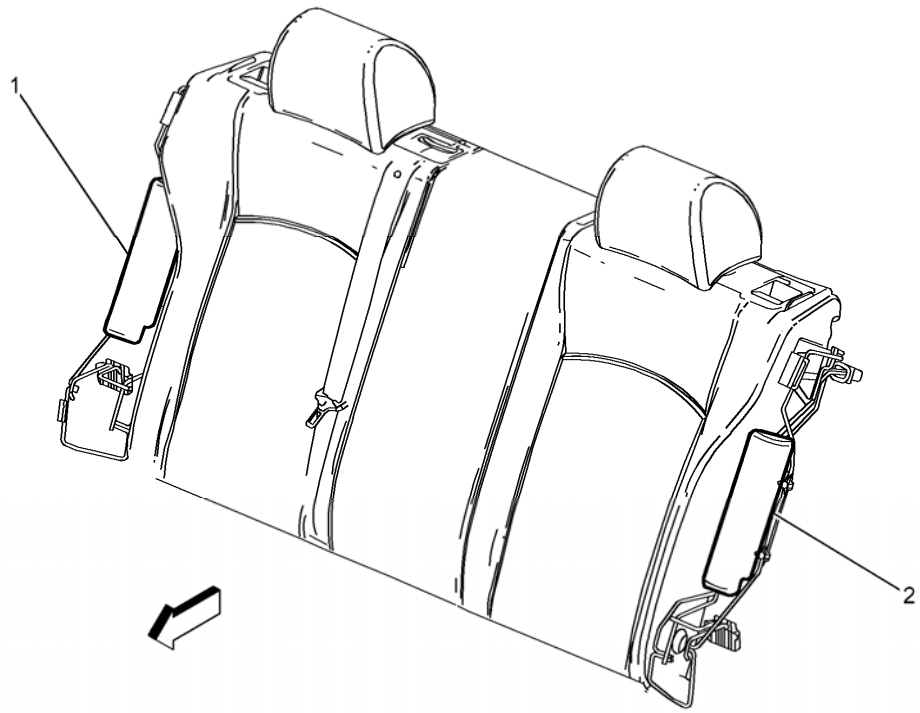

Fig. 8: Rear Seat Components
Courtesy of GENERAL MOTORS COMPANY

Items
1: F106RR Seat Side Air Bag - Right Rear **F106RR Seat Air Bag - Right Rear**
2: F106LR Seat Side Air Bag - Left Rear **F106LR Seat Air Bag - Left Rear**

2013 ELECTRICAL

Wiring Systems and Power Management - Component Locator - Powertrain Component Views - Cruze

POWERTRAIN COMPONENT VIEWS

TOP OF THE ENGINE COMPONENTS (LUW/LWE)

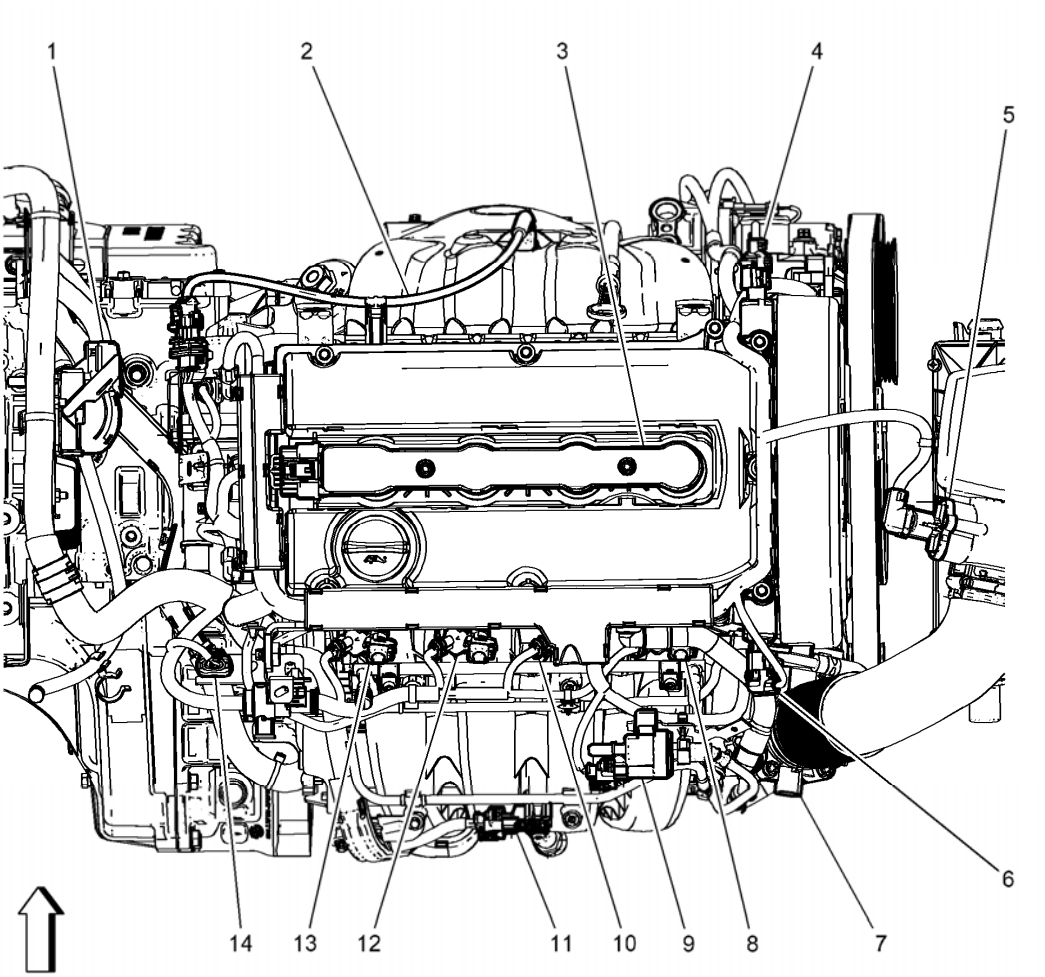

Fig. 1: Top Of Engine Components (LUW)
Courtesy of GENERAL MOTORS COMPANY

Items
1: K20 Engine Control Module **K20 Engine Control Module X1 (LUV)** **K20 Engine Control Module X1 (LUW/LWE)** **K20 Engine Control Module X2 (LUV)** **K20 Engine Control Module X2 (LUW/LWE)** **K20 Engine Control Module X3 (LUV)**
2: B52A Heated Oxygen Sensor 1 **B52A Heated Oxygen Sensor 1 (LUV)** **B52A Heated Oxygen Sensor 1 (LUW/LWE)**

3: K35 Ignition Coil Module **K35 Ignition Coil Module**
4: Q6E Camshaft Position Actuator Solenoid Valve - Exhaust **Q6E Camshaft Position Actuator Solenoid Valve - Exhaust (LUV)** **Q6E Camshaft Position Actuator Solenoid Valve - Exhaust (LUW/LWE)**
5: B75C Multifunction Intake Air Sensor **B75C Multifunction Air Intake Sensor**
6: Q6F Camshaft Position Actuator Solenoid Valve - Intake **Q6F Camshaft Position Actuator Solenoid Valve - Intake (LUV)** **Q6F Camshaft Position Actuator Solenoid Valve - Intake (LUW/LWE)**
7: Q38 Throttle Body **Q38 Throttle Body**
8: Q17A Fuel Injector 1 **Q17A Fuel Injector 1 (LUV)** **Q17A Fuel Injector 1 (LUW/LWE)**
9: Q12 Evaporative Emission Purge Solenoid Valve **Q12 Evaporative Emission Purge Solenoid Valve (LUV)** **Q12 Evaporative Emission Purge Solenoid Valve (LUW/LWE)**
10: Q17B Fuel Injector 2 **Q17B Fuel Injector 2 (LUV)** **Q17B Fuel Injector 2 (LUW/LWE)**
11: B74 Manifold Absolute Pressure Sensor **B74 Manifold Absolute Pressure Sensor (LUV)** **B74 Manifold Absolute Pressure Sensor (LUW/LWE)**
12: Q17C Fuel Injector 3 **Q17C Fuel Injector 3 (LUV)** **Q17C Fuel Injector 3 (LUW/LWE)**
13: Q17D Fuel Injector 4 **Q17D Fuel Injector 4 (LUV)** **Q17D Fuel Injector 4 (LUW/LWE)**
14: B26 Crankshaft Position Sensor **B26 Crankshaft Position Sensor (LUV)** **B26 Crankshaft Position Sensor (LUW/LWE)**

LEFT FRONT OF THE ENGINE COMPONENTS (LUW/LWE)

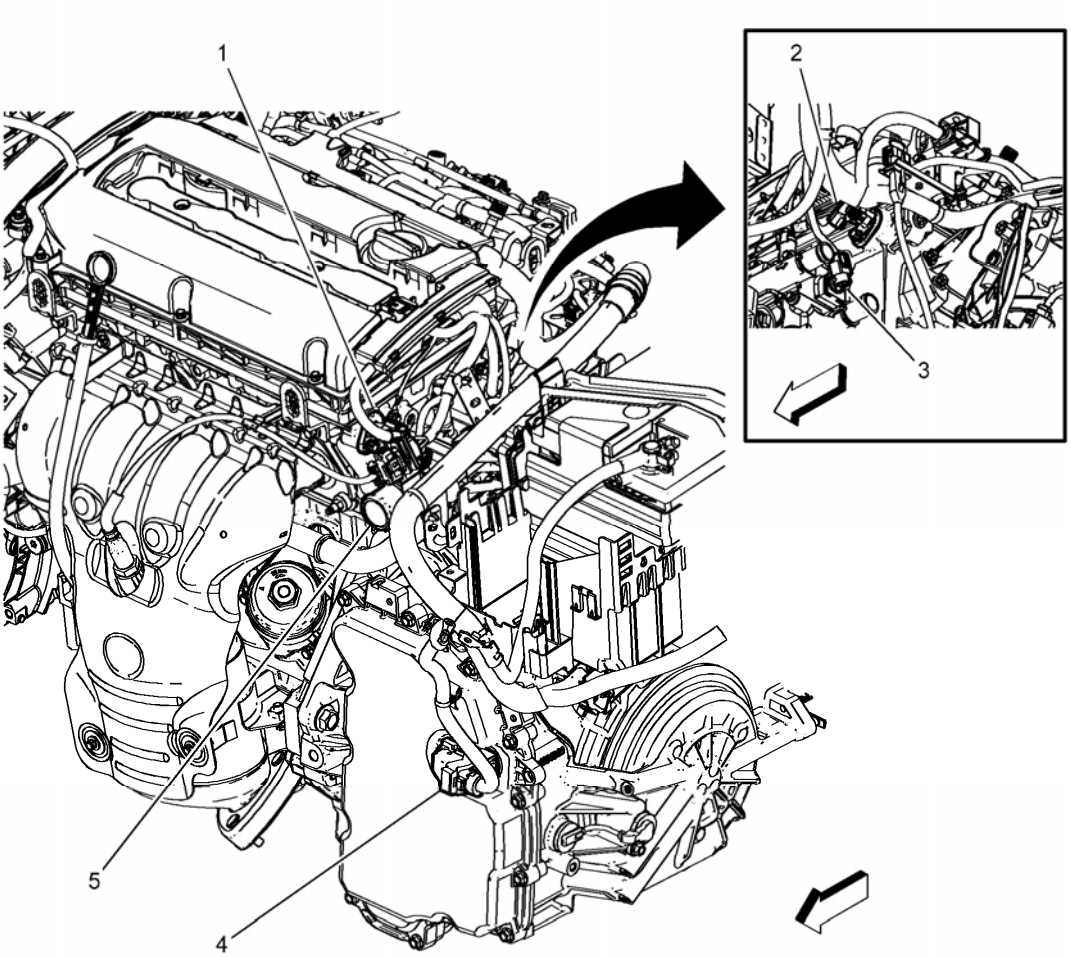

Fig. 2: Left Front Of Engine Components (LUW)
Courtesy of GENERAL MOTORS COMPANY

Items
1: B23E Camshaft Position Sensor - Exhaust **B23E Camshaft Position Sensor - Exhaust (LUV)** **B23E Camshaft Position Sensor - Exhaust (LUW/LWE)**
2: B23F Camshaft Position Sensor - Intake **B23F Camshaft Position Sensor - Intake (LUV)** **B23F Camshaft Position Sensor - Intake (LUW/LWE)**
3: B34A Engine Coolant Temperature Sensor 1 **B34A Engine Coolant Temperature Sensor 1 (LUV)** **B34A Engine Coolant Temperature Sensor 1 (LUW/LWE)**
4: Q8 Control Solenoid Valve Assembly (MH8/MH9) **Q8 Control Solenoid Valve Assembly X1 (MH8)** **Q8 Control Solenoid Valve Assembly X2 (MH8)** **Q8 Control Solenoid Valve Assembly X3 (MH8)** **Q8 Control Solenoid Valve Assembly X4 (MH8)**
5: E41 Engine Coolant Thermostat Heater **E41 Engine Coolant Thermostat Heater (LUV)** **E41 Engine Coolant Thermostat Heater (LUW/LWE)**

RIGHT FRONT OF THE ENGINE COMPONENTS (LUW/LWE)

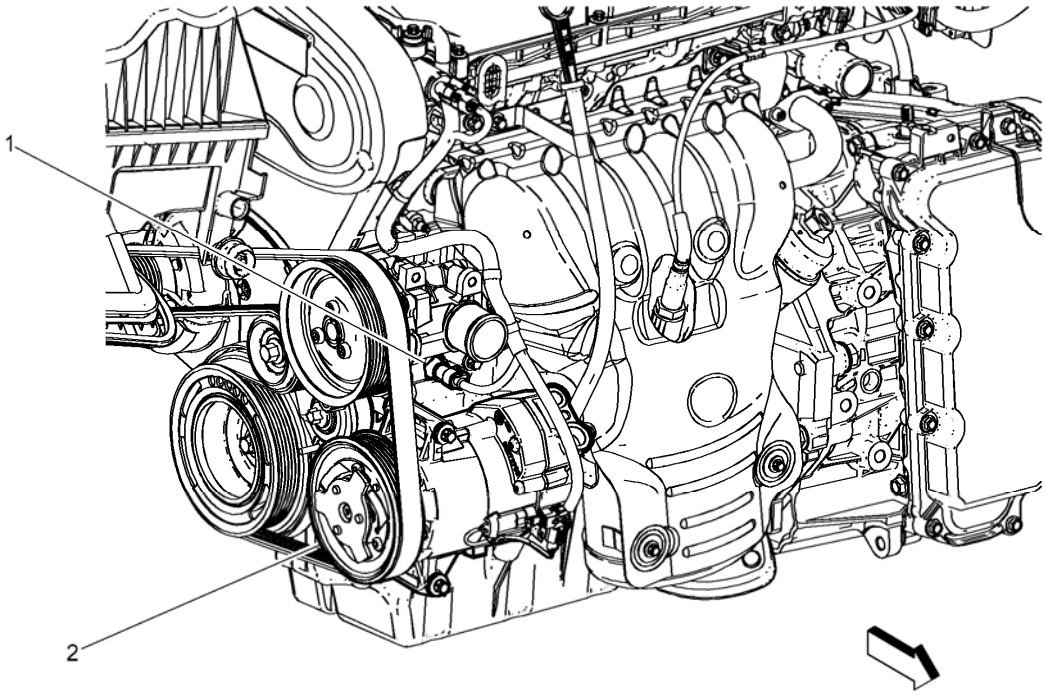

Fig. 3: Right Front Of Engine Components (LUW)
Courtesy of GENERAL MOTORS COMPANY

Items
1: B37 Engine Oil Pressure Switch **B37 Engine Oil Pressure Switch**
2: Q46 A/C Compressor Solenoid Valve **Q46 A/C Compressor Solenoid Valve**

RIGHT REAR OF THE ENGINE COMPONENTS (LUW/LWE)

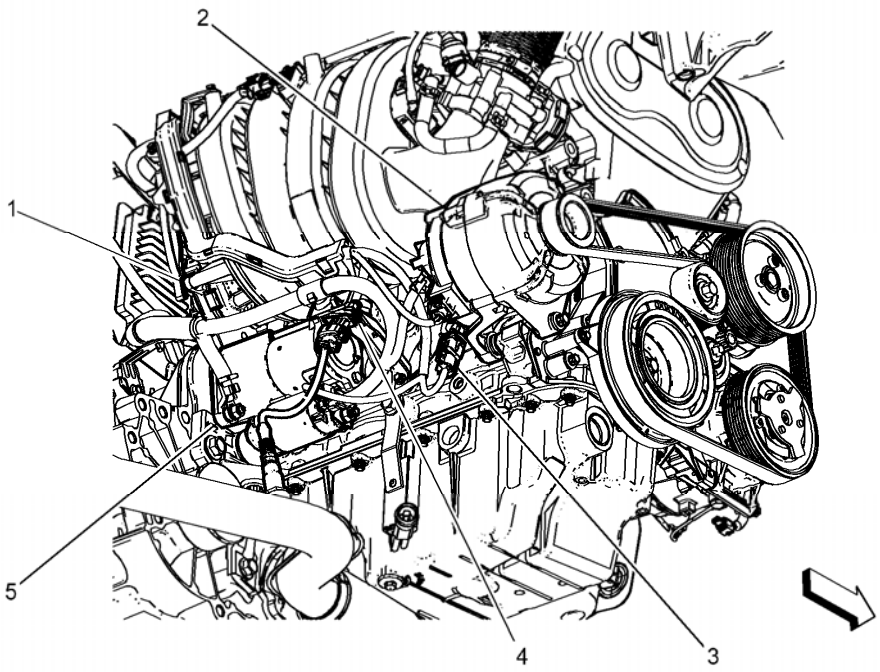

Fig. 4: Right Rear Of Engine Components (LUW)
Courtesy of GENERAL MOTORS COMPANY

Items
1: Q22 Intake Manifold Tuning Solenoid Valve (LUW/LWE) **Q22 Intake Manifold Tuning Solenoid Valve (LUW/LWE)**
2: G13 Generator **G13 Generator X2**
3: B68 Knock Sensor **B68 Knock Sensor (LUV)** **B68 Knock Sensor (LUW/LWE)**
4: B52B Heated Oxygen Sensor 2 **B52B Heated Oxygen Sensor 2**
5: M64 Starter Motor

LEFT REAR OF THE ENGINE COMPONENTS (LUV)

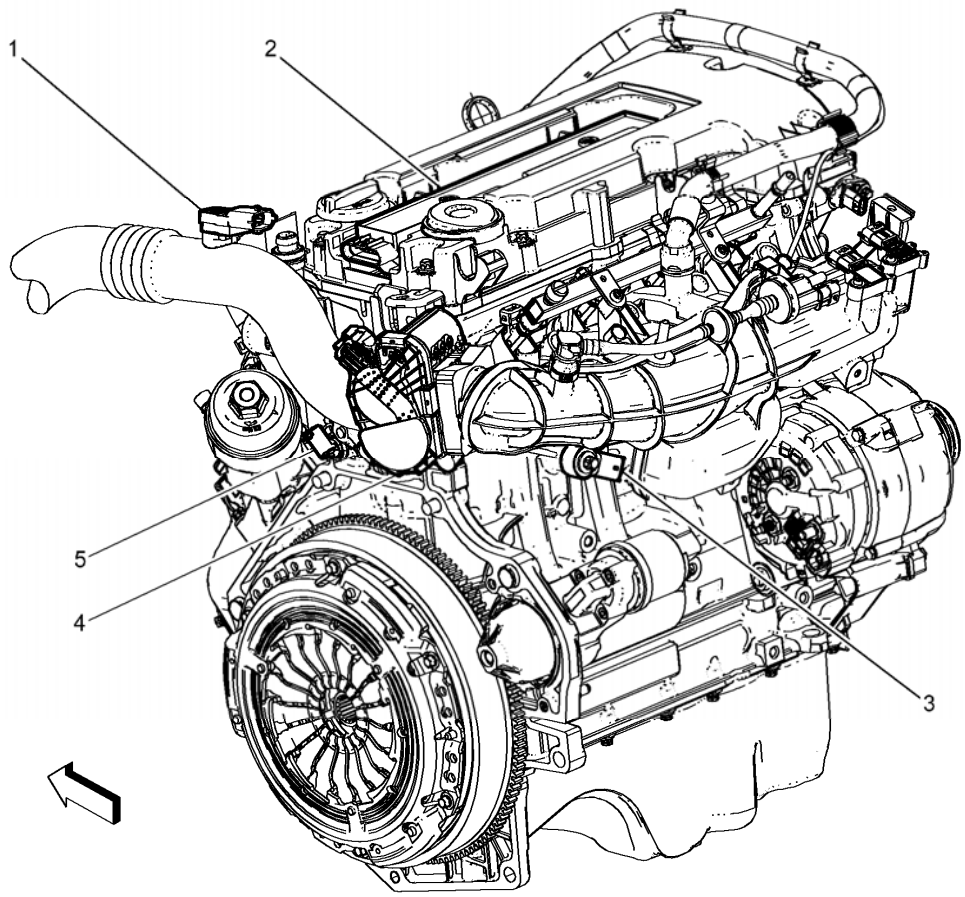

Fig. 5: Left Rear of the Engine Components (LUV)
Courtesy of GENERAL MOTORS COMPANY

Items
1: B111B Turbocharger Boost/Intake Air Temperature Sensor (LUV) **B111B Turbocharger Boost/Intake Air Temperature (LUV)**
2: K35 Ignition Coil Module **K35 Ignition Coil Module**
3: B68 Knock Sensor **B68 Knock Sensor (LUV)** **B68 Knock Sensor (LUW/LWE)**
4: Q38 Throttle Body **Q38 Throttle Body**
5: B34A Engine Coolant Temperature Sensor 1 **B34A Engine Coolant Temperature Sensor 1 (LUV)** **B34A Engine Coolant Temperature Sensor 1 (LUW/LWE)**

RIGHT FRONT OF THE ENGINE COMPONENTS (LUV)

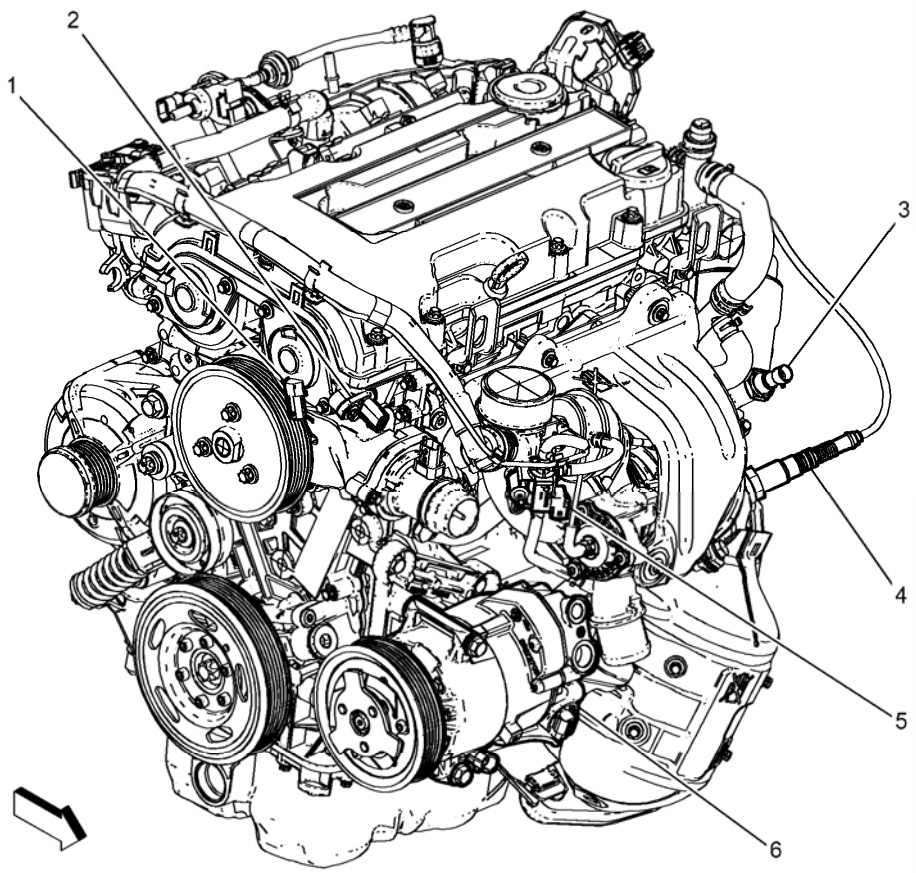

Fig. 6: Identifying Engine Components - Right Front (LUJ)
Courtesy of GENERAL MOTORS COMPANY

Items
1: Q6E Camshaft Position Actuator Solenoid Valve - Exhaust **Q6E Camshaft Position Actuator Solenoid Valve - Exhaust (LUV)** **Q6E Camshaft Position Actuator Solenoid Valve - Exhaust (LUW/LWE)**
2: B23E Camshaft Position Sensor - Exhaust **B23E Camshaft Position Sensor - Exhaust (LUV)** **B23E Camshaft Position Sensor - Exhaust (LUW/LWE)**
3: B37 Engine Oil Pressure Switch **B37 Engine Oil Pressure Switch**
4: B52A Heated Oxygen Sensor 1 **B52A Heated Oxygen Sensor 1 (LUV)** **B52A Heated Oxygen Sensor 1 (LUW/LWE)**
5: Q42 Turbocharger Wastegate Solenoid Valve (LUV) **Q42 Turbocharger Wastegate Solenoid Valve (LUV)**
6: Q46 A/C Compressor Solenoid Valve **Q46 A/C Compressor Solenoid Valve**

RIGHT REAR OF THE ENGINE COMPONENTS (LUV)

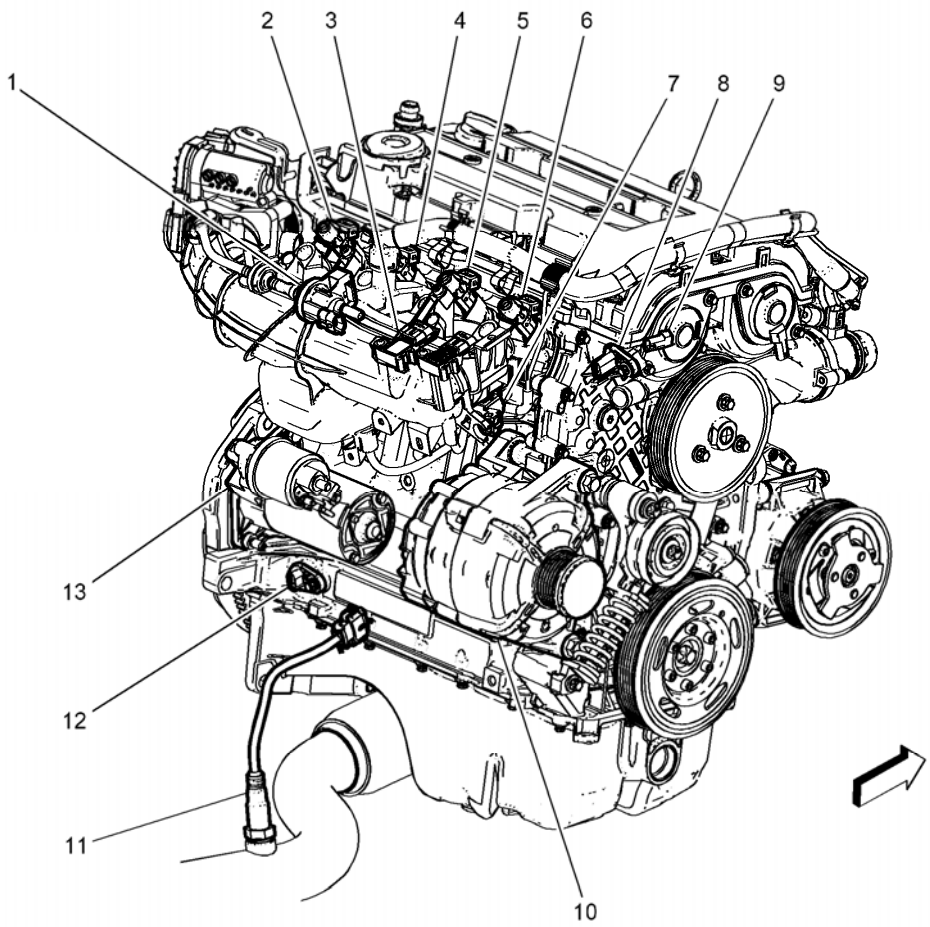

Fig. 7: Right Rear of the Engine Components (LUV)
Courtesy of GENERAL MOTORS COMPANY

Items

1: Q12 Evaporative Emission Purge Solenoid Valve **Q12 Evaporative Emission Purge Solenoid Valve (LUV)** **Q12 Evaporative Emission Purge Solenoid Valve (LUW/LWE)**
2: Q17D Fuel Injector 4 **Q17D Fuel Injector 4 (LUV)** **Q17D Fuel Injector 4 (LUW/LWE)**
3: B74 Manifold Absolute Pressure Sensor **B74 Manifold Absolute Pressure Sensor (LUV)** **B74 Manifold Absolute Pressure Sensor (LUW/LWE)**
4: Q17C Fuel Injector 3 **Q17C Fuel Injector 3 (LUV)** **Q17C Fuel Injector 3 (LUW/LWE)**
5: Q17B Fuel Injector 2 **Q17B Fuel Injector 2 (LUV)** **Q17B Fuel Injector 2 (LUW/LWE)**
6: Q17A Fuel Injector 1 **Q17A Fuel Injector 1 (LUV)** **Q17A Fuel Injector 1 (LUW/LWE)**
7: Q42 Turbocharger Wastegate Solenoid Valve (LUV) **Q42 Turbocharger Wastegate Solenoid Valve (LUV)**
8: B23F Camshaft Position Sensor - Intake **B23F Camshaft Position Sensor - Intake (LUV)** **B23F Camshaft Position Sensor - Intake (LUW/LWE)**

9: Q6F Camshaft Position Actuator Solenoid Valve - Intake **Q6F Camshaft Position Actuator Solenoid**

Valve - Intake (LUV) **Q6F Camshaft Position Actuator Solenoid Valve - Intake (LUW/LWE)**
10: G13 Generator **G13 Generator X2**
11: B52B Heated Oxygen Sensor 2 **B52B Heated Oxygen Sensor 2**
12: B26 Crankshaft Position Sensor **B26 Crankshaft Position Sensor (LUV)** **B26 Crankshaft Position Sensor (LUW/LWE)**
13: M64 Starter Motor

TRANSMISSION COMPONENTS (MF3 OR MZ0)

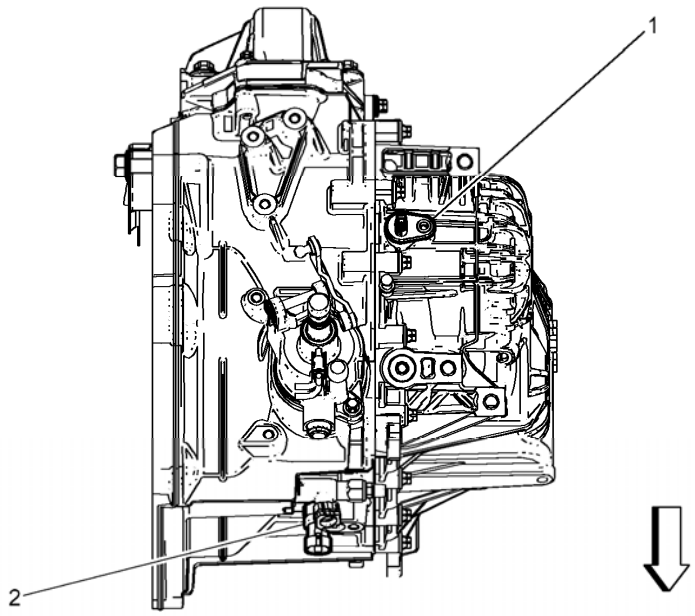

Fig. 8: Transmission Components (MF3 Or MZ0)
Courtesy of GENERAL MOTORS COMPANY

Items
1: B115 Vehicle Speed Sensor (MF3 or MZ0) **B115 Vehicle Speed Sensor (MF3 or MZ0)**
2: B16 Backup Lamp Switch (MF3 or MZ0) **B16 Backup Lamp Switch (MF3 or MZ0)**

AUTOMATIC TRANSMISSION ELECTRONIC COMPONENTS (MH8)

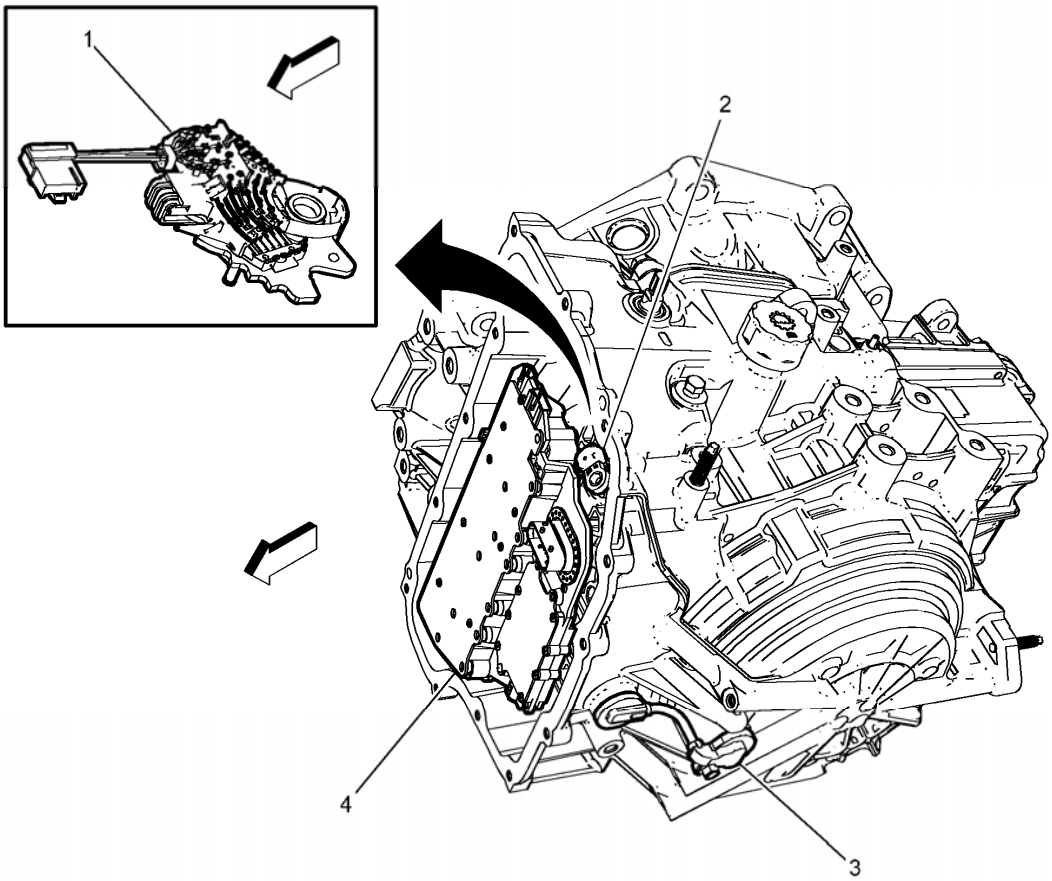

Fig. 9: Automatic Transmission Electronic Components (MH7, MH8 Or MH9)
Courtesy of GENERAL MOTORS COMPANY

Items
1: B15 Transmission Internal Mode Switch (MH8/MH9)
2: B14A Transmission Output Shaft Speed Sensor (MH8/MH9)
3: B14C Transmission Input Shaft Speed Sensor (MH8/MH9)
4: Q8 Control Solenoid Valve Assembly (MH8/MH9) **Q8 Control Solenoid Valve Assembly X1 (MH8) Q8 Control Solenoid Valve Assembly X2 (MH8) Q8 Control Solenoid Valve Assembly X3 (MH8) Q8 Control Solenoid Valve Assembly X4 (MH8)**

2013 ELECTRICAL

Wiring Systems and Power Management - Component Locator - Wheels/Vehicle Underbody Component Views - Cruze

WHEELS/VEHICLE UNDERBODY COMPONENT VIEWS

UNDERBODY COMPONENTS

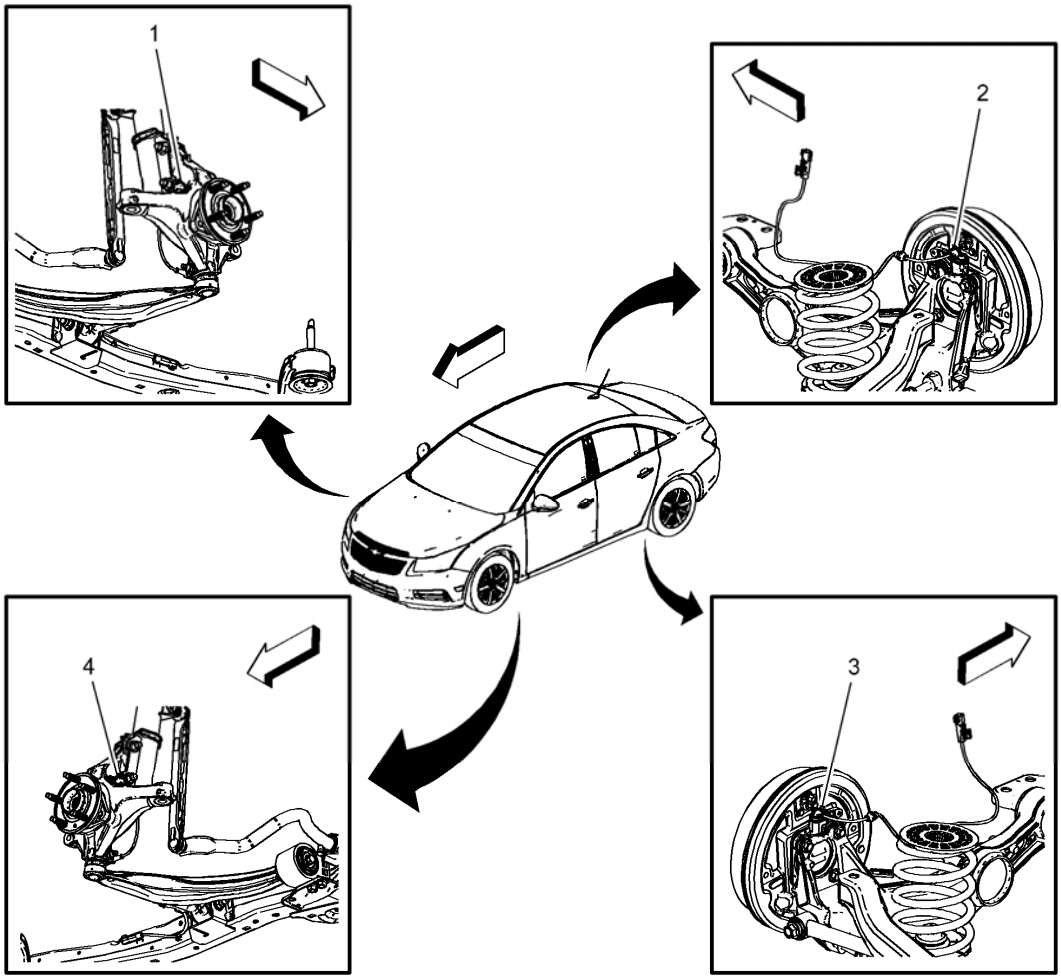

Fig. 1: Underbody Components
Courtesy of GENERAL MOTORS COMPANY

Items
1: B5RF Wheel Speed Sensor - Right Front **B5RF Wheel Speed Sensor - Right Front**
2: B5RR Wheel Speed Sensor - Right Rear **B5RR Wheel Speed Sensor - Right Rear**
3: B5LR Wheel Speed Sensor - Left Rear **B5LR Wheel Speed Sensor - Left Rear**
4: B5LF Wheel Speed Sensor - Left Front **B5LF Wheel Speed Sensor - Left Front**

FUEL TANK COMPONENTS

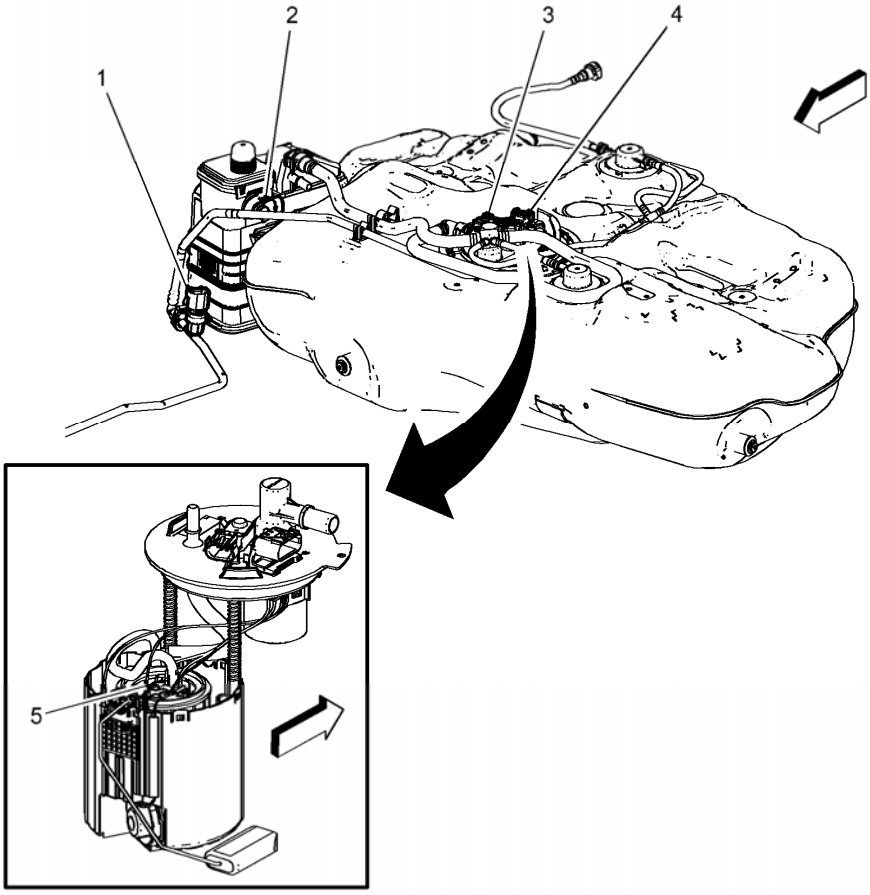

Fig. 2: Fuel Tank Components
Courtesy of GENERAL MOTORS COMPANY

Items
1: B47 Fuel Pressure Sensor **B47 Fuel Pressure Sensor**
2: Q13 Evaporative Emission Vent Solenoid Valve **Q13 Evaporative Emission Vent Solenoid Valve**
3: A7 Fuel Pump and Level Sensor Assembly **A7 Fuel Pump and Level Sensor Assembly**
4: B150 Fuel Tank Pressure Sensor **B150 Fuel Tank Pressure Sensor**
5: G12 Fuel Pump

2013 ELECTRICAL

Wiring Systems and Power Management - Component Locator - Component Connector End Views - Cruze

COMPONENT CONNECTOR END VIEWS

A3L SUNSHADE - LEFT (D61)

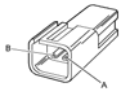

Connector Part Information

- Harness Type: Headliner
- OEM Connector: 12047663
- Service Connector: 13584278
- Description: 2-Way M Metri-Pack 150 Series (BK)

Terminal Part Information

Terminal Type ID	Terminated Lead	Diagnostic Test Probe	Terminal Removal Tool	Service Terminal	Tray	Core Crimp	Insulation Crimp
I	13575462	J-35616-3 (GY)	J-38125-12A	12047581	2	E	C

A3L Sunshade - Left (D61)

Pin	Size	Color	Circuit	Function	Terminal Type ID	Option
A: A	**A:** 1	**A:** WH/BN	**A:** 6815	**A:** Inadvertent Power Control	**A:** I	**A:** -
B: B	**B:** 0.5	**B:** BK	**B:** 1550	**B:** Ground	**B:** I	**B:** -

A3R SUNSHADE - RIGHT (D6I)

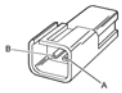

Connector Part Information

- Harness Type: Headliner
- OEM Connector: 12047663
- Service Connector: 13584278

- Description: 2-Way M Metri-Pack 150 Series (BK)

Terminal Part Information

Terminal Type ID	Terminated Lead	Diagnostic Test Probe	Terminal Removal Tool	Service Terminal	Tray	Core Crimp	Insulation Crimp
I	13575462	J-35616-3 (GY)	J-38125-12A	12047581	2	E	C

A3R Sunshade - Right (D6I)

Pin	Size	Color	Circuit	Function	Terminal Type ID	Option
A: A	**A:** 1	**A:** WH/BN	**A:** 6815	**A:** Inadvertent Power Control	**A:** I	**A:** -
B: B	**B:** 0.5	**B:** BK	**B:** 1550	**B:** Ground	**B:** I	**B:** -

A7 FUEL PUMP AND LEVEL SENSOR ASSEMBLY

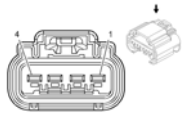

Connector Part Information

- Harness Type: Fuel Tank
- OEM Connector: 88988992
- Service Connector: 13585475
- Description: 4-Way F GT 280 Series, Sealed (NA)

Terminal Part Information

Terminal Type ID	Terminated Lead	Diagnostic Test Probe	Terminal Removal Tool	Service Terminal	Tray	Core Crimp	Insulation Crimp
I	13575392	J-35616-4A (PU)	J-38125-553	15304720	19	4	5
II	13576356	J-35616-4A (PU)	J-38125-553	15304719	19	E	5

A7 Fuel Pump and Level Sensor Assembly

Pin	Size	Color	Circuit	Function	Terminal Type ID	Option
1: 1	**1:** 2.5	**1:** GY	**1:** 120	**1:** Fuel Pump Control	**1:** I	**1:** -
2: 2	**2:** 2.5	**2:** BK/D-GN	**2:** 1580	**2:** Low Reference	**2:** I	**2:** -
				3: Fuel Level Sensor Low		

3: 3	**3:** 0.5	**3:** BK/D-GN	**3:** 6281	Reference	**3:** II	**3:** -
4: 4	**4:** 0.5	**4:** D-BU/VT	**4:** 1589	**4:** Primary Fuel Level Sensor Signal	**4:** II	**4:** -

A9A OUTSIDE REARVIEW MIRROR - DRIVER

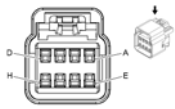

Connector Part Information

- Harness Type: Driver Door
- OEM Connector: 15332145
- Service Connector: 15306407
- Description: 8-Way F GT 150 Series, Sealed (BK)

Terminal Part Information

Terminal Type ID	Terminated Lead	Diagnostic Test Probe	Terminal Removal Tool	Service Terminal	Tray	Core Crimp	Insulation Crimp
I	13575735	J-35616-2A (GY)	J-38125-553	12191812	19	E	C

A9A Outside Rearview Mirror - Driver

Pin	Size	Color	Circuit	Function	Terminal Type ID	Option
A: A	**A:** 0.5	**A:** YE/BN	**A:** 3391	**A:** Driver Mirror Motor Common Control	**A:** I	**A:** -
B: B	**B:** 0.5	**B:** VT/D-BU	**B:** 3390	**B:** Driver Mirror Motor Up (+) Down (-) Control	**B:** I	**B:** -
C: C	**C:** 0.5	**C:** BN/BK	**C:** 3389	**C:** Driver Mirror Motor Right (+) Left (-) Control	**C:** I	**C:** -
D-E	-	-	-	Not Occupied	-	-
F: F	**F:** 0.5	**F:** BN/YE	**F:** 2267	**F:** Mirror Heating Element Control	**F:** I	**F:** -
G: G	**G:** 0.5	**G:** BK	**G:** 1550	**G:** Ground	**G:** I	**G:** -
H	-	-	-	Not Occupied	-	-

A9B OUTSIDE REARVIEW MIRROR - PASSENGER

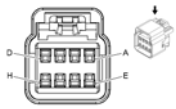

Connector Part Information

- Harness Type: Passenger Door
- OEM Connector: 15332145
- Service Connector: 15306407
- Description: 8-Way F GT 150 Series (BK)

Terminal Part Information

Terminal Type ID	Terminated Lead	Diagnostic Test Probe	Terminal Removal Tool	Service Terminal	Tray	Core Crimp	Insulation Crimp
I	13575735	J-35616-2A (GY)	J-38125-553	12191812	19	E	C

A9B Outside Rearview Mirror - Passenger

Pin	Size	Color	Circuit	Function	Terminal Type ID	Option
A: A	**A:** 0.5	**A:** WH	**A:** 3398	**A:** Co-Driver Mirror Motor Common Control	**A:** I	**A:** -
B: B	**B:** 0.5	**B:** YE/VT	**B:** 3397	**B:** Co-Driver Mirror Motor Up (+) Down (-) Control	**B:** I	**B:** -
C: C	**C:** 0.5	**C:** D-GN/BK	**C:** 3396	**C:** Co-Driver Mirror Motor Right (+) Left (-) Control	**C:** I	**C:** -
D-E	-	-	-	Not Occupied	-	-
F: F	**F:** 0.5	**F:** BN/YE	**F:** 2267	**F:** Mirror Heating Element Control	**F:** I	**F:** -
G: G	**G:** 0.5	**G:** BK	**G:** 2050	**G:** Ground	**G:** I	**G:** -
H	-	-	-	Not Occupied	-	-

A10 INSIDE REARVIEW MIRROR

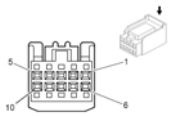

Connector Part Information

- Harness Type: Headliner
- OEM Connector: 13641322
- Service Connector: 13577390

- Description: 10-Way F Kaizen 0.64 Series (BK)

Terminal Part Information

Terminal Type ID	Terminated Lead	Diagnostic Test Probe	Terminal Removal Tool	Service Terminal	Tray	Core Crimp	Insulation Crimp
I	13575866	J-35616-64B (L-BU)	J-38125-215A	SAIT-A03T-M064	14	P	P

A10 Inside Rearview Mirror

Pin	Size	Color	Circuit	Function	Terminal Type ID	Option
1: 1	**1:** 0.35	**1:** D-GN/WH	**1:** 1324	**1:** Backup Lamp Control	**1:** I	**1:** DD8
2: 2	**2:** 0.5	**2:** VT/WH	**2:** 2839	**2:** Ignition Voltage	**2:** I	**2:** DD8
3: 3	**3:** 0.5	**3:** D-GN/WH	**3:** 2514	**3:** Keypad Signal	**3:** I	**3:** UE1
4: 4	**4:** 0.5	**4:** D-GN/BK	**4:** 2515	**4:** Keypad Control	**4:** I	**4:** UE1
5: 5	**5:** 0.5	**5:** BK	**5:** 1550	**5:** Ground	**5:** I	**5:** -
6: 6	**6:** 0.5	**6:** YE/VT	**6:** 2516	**6:** Keypad Green LED Signal	**6:** I	**6:** UE1
7: 7	**7:** 0.5	**7:** BN/WH	**7:** 2517	**7:** Keypad Red LED Signal	**7:** I	**7:** UE1
8-10	-	-	-	Not Occupied	-	-

A11 RADIO X1

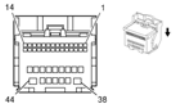

Connector Part Information

- Harness Type: Instrument Panel
- OEM Connector: 13589609
- Service Connector: 88988902
- Description: 44-Way F GT 150/280 64 Series (BK)

Terminal Part Information

Terminal Type ID	Terminated Lead	Diagnostic Test Probe	Terminal Removal Tool	Service Terminal	Tray	Core Crimp	Insulation Crimp
I	13575866	J-35616-64B (L-BU)	J-38125-215A	SAIT-A03T-M064	14	P	P
II	13575735	J-35616-2A (GY)	J-38125-553	12191812	19	E	C

III	13575735	J-35616-2A (GY)	J-38125-553	12191812	19	C	A
IV	13575753	J-35616-4A (PU)	J-38125-553	15304713	19	2	A

A11 Radio X1

Pin	Size	Color	Circuit	Function	Terminal Type ID	Option
1	-	-	-	Not Occupied	-	-
2: 2	**2:** 0.35	**2:** YE	**2:** 7459	**2:** Integrated Center Stack Serial Data Low	**2:** I	**2:** -
3: 3	**3:** 0.35	**3:** BARE	**3:** 7460	**3:** Integrated Center Stack Serial Data Shield	**3:** I	**3:** -
4-5	-	-	-	Not Occupied	-	-
6: 6	**6:** 0.5	**6:** BK/YE	**6:** 659	**6:** Low Reference	**6:** I	**6:** UE1
7-9	-	-	-	Not Occupied	-	-
10: 10	**10:** 0.35 **10:** 0.35	**10:** D-GN **10:** BN	**10:** 5841 **10:** 3378	**10:** Right Auxiliary Audio Signal (2) **10:** Right Auxiliary Audio Signal (3)	**10:** I	**10:** Without KTA **10:** KTA
11: 11	**11:** 0.35	**11:** L-BU	**11:** 2060	**11:** Auxiliary Detection Signal	**11:** I	**11:** Without KTA
12	-	-	-	Not Occupied	-	-
13: 13	**13:** 0.35	**13:** GY/L-GN	**13:** 3291	**13:** Integrated Center Stack Wake Up Signal	**13:** I	**13:** -
14: 14	**14:** 0.5	**14:** L-GN	**14:** 5060	**14:** Low Speed GMLAN Serial Data	**14:** I	**14:** -
15	-	-	-	Not Occupied	-	-
16: 16	**16:** 0.35	**16:** VT	**16:** 7458	**16:** Center Integrated Center Stack Serial Data High	**16:** I	**16:** -
17: 17	**17:** 0.35	**17:** BARE	**17:** 5842	**17:** Auxiliary Audio Screen (2)	**17:** I	**17:** Without KTA
18-19	-	-	-	Not Occupied	-	-
20: 20	**20:** 0.5	**20:** YE	**20:** 658	**20:** Cellular Telephone Voice Signal	**20:** I	**20:** UE1
21-22	-	-	-	Not Occupied	-	-
23: 23	**23:** 0.35 **23:** 0.35	**23:** VT **23:** D-GN	**23:** 5843 **23:** 3376	**23:** Auxiliary Audio Common Signal **23:** Auxiliary Audio Common Signal (3)	**23:** I	**23:** Without KTA **23:** KTA
24: 24	**24:** 0.35 **24:**	**24:** GY **24:** VT	**24:** 5839 **24:** 3377	**24:** Left Auxiliary Audio Signal (2) **24:** Left Auxiliary Audio	**24:** I	**24:** Without KTA **24:** KTA

	0.35			Signal (3)		
25-26	-	-	-	Not Occupied	-	-
27: 27	**27:** 0.35	**27:** VT	**27:** 3290	**27:** Integrated Center Stack Reset Signal	**27:** I	**27:** -
28	-	-	-	Not Occupied	-	-
29: 29	**29:** 0.35	**29:** BARE	**29:** 2011	**29:** Left Front Audio Drain Wire	**29:** II	**29:** KTA
30: 30	**30:** 0.35	**30:** BARE	**30:** 2099	**30:** Left Rear Audio Drain Wire	**30:** II	**30:** KTA
31: 31	**31:** 0.35 **31:** 0.75	**31:** L-BU/OG **31:** YE/BK	**31:** 1546 **31:** 117	**31:** Front Low Level Audio (-) **31:** Right Front Speaker Signal (-) (1)	**31:** II **31:** III	**31:** UQA **31:** Without UQA
32: 32	**32:** 0.35 **32:** 0.75	**32:** OG/D-BU **32:** BN/D-BU	**32:** 1947 **32:** 118	**32:** Left Front Low Level Audio (-) **32:** Left Front Speaker Signal (-) (1)	**32:** II **32:** III	**32:** UQA **32:** without UQA
33: 33	**33:** 0.35 **33:** 0.75	**33:** L-BU/BK **33:** D-BU/BK	**33:** 1946 **33:** 115	**33:** Right Rear Low Level Audio (-) **33:** Right Rear Speaker Signal (-)	**33:** II **33:** III	**33:** UQA **33:** Without UQA
34: 34	**34:** 0.3 **34:** 0.75	**34:** OG/VT **34:** D-GN/BK	**34:** 1999 **34:** 116	**34:** Left Rear Low Level Audio (-) **34:** Left Rear Speaker Signal (-)	**34:** II **34:** III	**34:** UQA **34:** Without UQA
35-36	-	-	-	Not Occupied	-	-
37: 37	**37:** 0.5	**37:** VT/D-BU	**37:** 6978	**37:** Amplifier Control	**37:** I **37:** II	**37:** UQA
38: 38	**38:** 1.5	**38:** BK	**38:** 1750	**38:** Ground	**38:** IV	**38:** -
39: 39	**39:** 0.35 **39:** 0.75	**39:** YE **39:** YE	**39:** 512 **39:** 200	**39:** Right Front Low Level Audio Signal **39:** Right Front Speaker (+) (1)	**39:** II **39:** III	**39:** UQA **39:** WIthout UQA
40: 40	**40:** 0.35 **40:** 0.75	**40:** D-BU **40:** D-BU	**40:** 511 **40:** 201	**40:** Left Front Low Level Audio Signal **40:** Left Front Speaker (+) (1)	**40:** II **40:** III	**40:** UQA **40:** Without UQA
41: 41	**41:** 0.35 **41:** 0.75	**41:** BN/WH **41:** WH	**41:** 546 **41:** 46	**41:** Right Rear Low Level Audio Signal **41:** Right Rear Speaker (+)	**41:** II **41:** III	**41:** UQA **41:** Without UQA
42: 42	**42:** 0.35 **42:** 0.75	**42:** L-GN/BK **42:** D-GN	**42:** 599 **42:** 199	**42:** Left Rear Low Level Audio Signal **42:** Left Rear Speaker (+)	**42:** II **42:** III	**42:** UQA **42:** Without UQA

43: 43	**43:** 0.5 **43:** 0.35	**43:** D-GN/YE **43:** D-GN/YE	**43:** 7066 **43:** 7066	**43:** Entertainment Remote Enable Signal **43:** Entertainment Remote Enable Signal	**43:** II **43:** III	**43:** UYS **43:** UQA
44: 44	**44:** 1.5	**44:** RD/D-GN	**44:** 40	**44:** Battery Positive Voltage	**44:** IV	**44:** -

A11 RADIO X2 (UDN)

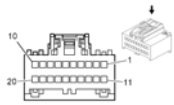

Connector Part Information

- Harness Type: Instrument Panel
- OEM Connector: 15491304
- Service Connector: 15126710
- Description: 20-Way F USCAR 64 Series (GY)

Terminal Part Information

Terminal Type ID	Terminated Lead	Diagnostic Test Probe	Terminal Removal Tool	Service Terminal	Tray	Core Crimp	Insulation Crimp
I	13575866	J-35616-64B (L-BU)	J-38125-215A	SAIT-A03T-M064	14	P	P

A11 Radio X2 (UDN)

Pin	Size	Color	Circuit	Function	Terminal Type ID	Option
1-5	-	-	-	Not Occupied	-	-
6: 6	**6:** 0.5	**6:** BK/GY	**6:** 5152	**6:** Low Reference	**6:** I	**6:** -
7-9	-	-	-	Not Occupied	-	-
10: 10	**10:** 0.5	**10:** BN/L-GN	**10:** 3364	**10:** Navigation Display Reset Signal	**10:** I	**10:** -
11-13	-	-	-	Not Occupied	-	-
14: 14	**14:** 0.35	**14:** GY/VT	**14:** 3363	**14:** Navigation Display Dimming Control	**14:** I	**14:** -
15	-	-	-	Not Occupied	-	-
16: 16	**16:** 0.5	**16:** GY/YE	**16:** 5149	**16:** Voice Recognition Audio Signal	**16:** I	**16:** -
17-19	-	-	-	Not Occupied	-	-
20: 20	**20:** 0.5	**20:** GY	**20:** 1903	**20:** AAS Wheel Speed Sensor Signal Left Front	**20:** I	**20:** -

A11 RADIO X3 (UEW)

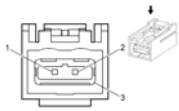

Connector Part Information

- Harness Type: Instrument Panel TWINAX
- OEM Connector: 13649293
- Service Connector: Service by Cable Assembly - See Parts Catalog
- Description: 3-Way F Sealed (L-BU)

Terminal Part Information

Terminal Type ID	Terminated Lead	Diagnostic Test Probe	Terminal Removal Tool
I	Service by Cable Assembly - See Parts Catalog	No Tool Required	No Tool Required

A11 Radio X3 (UEW)

Pin	Size	Color	Circuit	Function	Terminal Type ID	Option
1: 1-3	**1:** -	**1:** TWINAX	**1:** -	**1:** Navigation Display Signal	**1:** I	**1:** -

A22 RADIO CONTROLS (UYC OR UYE)

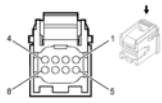

Connector Part Information

- Harness Type: Instrument Panel
- OEM Connector: 15406142
- Service Connector: 13337949
- Description: 8-Way F Micro 64 Series (GY)

Terminal Part Information

Terminal Type ID	Terminated Lead	Diagnostic Test Probe	Terminal Removal Tool	Service Terminal	Tray	Core Crimp	Insulation Crimp
I	13582245	J-35616-64B (L-BU)	J-38125-21	15359541	4	M	M

A22 Radio Controls (UYC or UYE)

Pin	Size	Color	Circuit	Function	Terminal Type ID	Option
1: 1	**1:** 0.5	**1:** RD/L-GN	**1:** 3140	**1:** Battery Positive Voltage	**1:** I	**1:** -
2: 2	**2:** 0.5	**2:** BK	**2:** 1650	**2:** Ground	**2:** I	**2:** -
3	-	-	-	Not Occupied	-	-
4: 4	**4:** 0.5	**4:** L-GN/L-BU	**4:** 7532	**4:** Linear Interconnect Network Bus 10	**4:** I	**4:** -
5-8	-	-	-	Not Occupied	-	-

A22 RADIO CONTROLS (UEW)

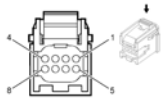

Connector Part Information

- Harness Type: Instrument Panel
- OEM Connector: 15406142
- Service Connector: 13337949
- Description: 8-Way F Micro 64 Series (GY)

Terminal Part Information

Terminal Type ID	Terminated Lead	Diagnostic Test Probe	Terminal Removal Tool	Service Terminal	Tray	Core Crimp	Insulation Crimp
I	13575867	J-35616-64B (L-BU)	J-38125-21	15359541	4	M	M

A22 Radio Controls (UEW)

Pin	Size	Color	Circuit	Function	Terminal Type ID	Option
1: 1	**1:** 0.5	**1:** RD/L-GN	**1:** 3140	**1:** Battery Positive Voltage	**1:** I	**1:** -
2: 2	**2:** 0.5	**2:** BK	**2:** 1750	**2:** Ground	**2:** I	**2:** -
3	-	-	-	Not Occupied	-	-
4: 4	**4:** 0.35	**4:** VT	**4:** 7458	**4:** Center Integrated Center Stack Serial Data High	**4:** I	**4:** -
5: 5	**5:** 0.35	**5:** YE	**5:** 7459	**5:** Integrated Center Stack Serial Data Low	**5:** I	**5:** -
6: 6	**6:** 0.35	**6:** BARE	**6:** 7460	**6:** Integrated Center Stack Serial Data Shield	**6:** I	**6:** -

7: 7	**7:** 0.35	**7:** GY/L-GN	**7:** 3291	**7:** Integrated Center Stack Wake Up Signal	**7:** I	**7:** -
8: 8	**8:** 0.35	**8:** VT	**8:** 3290	**8:** Integrated Center Stack Reset Signal	**8:** I	**8:** -

A23D DOOR LATCH ASSEMBLY - DRIVER

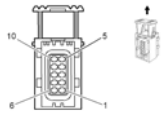

Connector Part Information

- Harness Type: Driver Door
- OEM Connector: 10768367
- Service Connector: 88952463
- Description: 10-Way F Sealed (BK)

Terminal Part Information

Terminal Type ID	Terminated Lead	Diagnostic Test Probe	Terminal Removal Tool	Service Terminal	Tray	Core Crimp	Insulation Crimp
I	13575366	J-35616-14 (GN)	J-38125-560	964274-2	16	E	1

A23D Door Latch Assembly - Driver

Pin	Size	Color	Circuit	Function	Terminal Type ID	Option
1	-	-	-	Not Occupied	-	-
2: 2	**2:** 0.75	**2:** BN/YE	**2:** 294	**2:** Door Lock Actuator Unlock Control	**2:** I	**2:** -
3: 3	**3:** 0.75	**3:** GY	**3:** 5911	**3:** Door Lock Actuator Lock Control 2	**3:** I	**3:** -
4: 4	**4:** 0.5	**4:** WH/VT	**4:** 3270	**4:** Driver Door Lock Motor Status Control	**4:** I	**4:** -
5	-	-	-	Not Occupied	-	-
6: 6	**6:** 0.5	**6:** GY	**6:** 745	**6:** Left Front Door Ajar Switch Signal	**6:** I	**6:** -
7	-	-	-	Not Occupied	-	-
8: 8	**8:** 0.75	**8:** BK	**8:** 1550	**8:** Ground	**8:** I	**8:** -
9-10	-	-	-	Not Occupied	-	-

A23LR DOOR LATCH ASSEMBLY - LEFT REAR

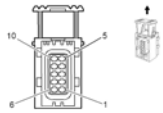

Connector Part Information

- Harness Type: Left Rear Door
- OEM Connector: 10768367
- Service Connector: 88952463
- Description: 10-Way F Sealed (BK)

Terminal Part Information

Terminal Type ID	Terminated Lead	Diagnostic Test Probe	Terminal Removal Tool	Service Terminal	Tray	Core Crimp	Insulation Crimp
I	13575366	J-35616-14 (GN)	J-38125-560	964274-2	16	E	1

A23LR Door Latch Assembly - Left Rear

Pin	Size	Color	Circuit	Function	Terminal Type ID	Option
1	-	-	-	Not Occupied	-	-
2: 2	**2:** 0.75	**2:** BN/YE	**2:** 294	**2:** Door Lock Actuator Unlock Control	**2:** I	**2:** -
3: 3	**3:** 0.75	**3:** GY	**3:** 295	**3:** Door Lock Actuator Lock Control	**3:** I	**3:** -
4: 4	**4:** 0.75	**4:** BN/YE	**4:** 294	**4:** Door Lock Actuator Unlock Control	**4:** I	**4:** -
5	-	-	-	Not Occupied	-	-
6: 6	**6:** 0.5	**6:** GY	**6:** 747	**6:** Left Rear Door Ajar Switch Signal	**6:** I	**6:** -
7: 7	**7:** 0.75	**7:** WH/D-BU	**7:** 3266	**7:** Child Security Lock Motor Unlock Control	**7:** I	**7:** -
8: 8	**8:** 0.75	**8:** BK	**8:** 2350	**8:** Ground	**8:** I	**8:** -
9: 9	**9:** 0.5	**9:** BN/WH	**9:** 3269	**9:** Child Security Lock Motor Status Signal Left Rear	**9:** I	**9:** -
10	-	-	-	Not Occupied	-	-

A23P DOOR LATCH ASSEMBLY - PASSENGER

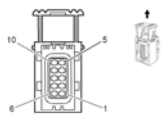

Connector Part Information

- Harness Type: Passenger Door
- OEM Connector: 10768367
- Service Connector: 88952463
- Description: 10-Way F Sealed (BK)

Terminal Part Information

Terminal Type ID	Terminated Lead	Diagnostic Test Probe	Terminal Removal Tool	Service Terminal	Tray	Core Crimp	Insulation Crimp
I	13575366	J-35616-14 (GN)	J-38125-560	964274-2	16	E	1

A23P Door Latch Assembly - Passenger

Pin	Size	Color	Circuit	Function	Terminal Type ID	Option
1: 1	**1:** 0.5	**1:** GY	**1:** 746	**1:** Right Front Door Ajar Switch Signal	**1:** I	**1:** -
2	-	-	-	Not Occupied	-	-
3: 3	**3:** 0.75	**3:** BK	**3:** 2050	**3:** Ground	**3:** I	**3:** -
4-6	-	-	-	Not Occupied	-	-
7: 7	**7:** 0.75	**7:** BN/YE	**7:** 294	**7:** Door Lock Actuator Unlock Control	**7:** I	**7:** -
8: 8	**8:** 0.75	**8:** GY	**8:** 295	**8:** Door Lock Actuator Lock Control	**8:** I	**8:** -
9-10	-	-	-	Not Occupied	-	-

A23RR DOOR LATCH ASSEMBLY - RIGHT REAR

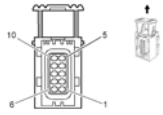

Connector Part Information

- Harness Type: Right Rear Door
- OEM Connector: 10768367
- Service Connector: 88952463
- Description: 10-Way F Sealed (BK)

Terminal Part Information

Terminal	Terminated	Diagnostic	Terminal	Service		Core	Insulation

Type ID	Lead	Test Probe	Removal Tool	Terminal	Tray	Crimp	Crimp
I	13575366	J-35616-14 (GN)	J-38125-560	964274-2	16	E	1

A23RR Door Latch Assembly - Right Rear

Pin	Size	Color	Circuit	Function	Terminal Type ID	Option
1: 1	**1:** 0.5	**1:** GY	**1:** 748	**1:** Right Rear Door Ajar Switch Signal	**1:** I	**1:** -
2: 2	**2:** 0.75	**2:** WH/D-BU	**2:** 3266	**2:** Child Security Lock Motor Unlock Control	**2:** I	**2:** -
3: 3	**3:** 0.75	**3:** BK	**3:** 2050	**3:** Ground	**3:** I	**3:** -
4: 4	**4:** 0.5	**4:** GY/BK	**4:** 3268	**4:** Child Security Lock Motor Status Signal Right Rear	**4:** I	**4:** -
5-6	-	-	-	Not Occupied	-	-
7: 7	**7:** 0.75	**7:** BN/YE	**7:** 294	**7:** Door Lock Actuator Unlock Control	**7:** I	**7:** -
8: 8	**8:** 0.75	**8:** GY	**8:** 295	**8:** Door Lock Actuator Lock Control	**8:** I	**8:** -
9: 9	**9:** 0.75	**9:** BN/YE	**9:** 294	**9:** Door Lock Actuator Unlock Control	**9:** I	**9:** -
10	-	-	-	Not Occupied	-	-

B1 A/C REFRIGERANT PRESSURE SENSOR

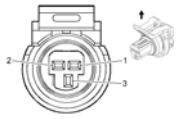

Connector Part Information

- Harness Type: Engine Cooling
- OEM Connector: 13532244
- Service Connector: 88988301
- Description: 3-Way F GT 150 Series, Sealed (BK)

Terminal Part Information

Terminal Type ID	Terminated Lead	Diagnostic Test Probe	Terminal Removal Tool	Service Terminal	Tray	Core Crimp	Insulation Crimp
I	13575400	J-35616-2A (GY)	J-38125-553	15326267	19	E	4

B1 A/C Refrigerant Pressure Sensor

Pin	Size	Color	Circuit	Function	Terminal Type ID	Option
1: 1	**1:** 0.5	**1:** BK/BN	**1:** 5514	**1:** A/C Refrigerant Pressure Sensor Low Reference	**1:** I	**1:** -
2: 2	**2:** 0.5	**2:** BN/RD	**2:** 2700	**2:** A/C Pressure Sensor 5 Volt Reference	**2:** I	**2:** -
3: 3	**3:** 0.5	**3:** D-GN	**3:** 380	**3:** A/C Refrigerant Pressure Sensor Signal	**3:** I	**3:** -

B5LF WHEEL SPEED SENSOR - LEFT FRONT

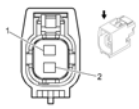

Connector Part Information

- Harness Type: Forward Lamp
- OEM Connector: 13612509
- Service Connector: 13586115
- Description: 2-Way F GT 150 Series, Sealed (BK)

Terminal Part Information

Terminal Type ID	Terminated Lead	Diagnostic Test Probe	Terminal Removal Tool	Service Terminal	Tray	Core Crimp	Insulation Crimp
I	13575412	J-35616-2A (GY)	J-38125-553	12191819	8	E	1

B5LF Wheel Speed Sensor - Left Front

Pin	Size	Color	Circuit	Function	Terminal Type ID	Option
1: 1	**1:** 0.5	**1:** GY/WH	**1:** 7064	**1:** Wheel Speed Sensor Control Left Front	**1:** I	**1:** -
2: 2	**2:** 0.5	**2:** GY	**2:** 830	**2:** Wheel Speed Sensor Signal Left Front	**2:** I	**2:** -

B5LR WHEEL SPEED SENSOR - LEFT REAR

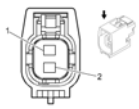

Connector Part Information

- Harness Type: Body Harness
- OEM Connector: 13612509
- Service Connector: 13586115
- Description: 2-Way F GT 150 Series, Sealed (BK)

Terminal Part Information

Terminal Type ID	Terminated Lead	Diagnostic Test Probe	Terminal Removal Tool	Service Terminal	Tray	Core Crimp	Insulation Crimp
I	13575412	J-35616-2A (GY)	J-38125-553	12191819	8	E	1

B5LR Wheel Speed Sensor - Left Rear

Pin	Size	Color	Circuit	Function	Terminal Type ID	Option
1: 1	**1:** 0.5	**1:** GY/BK	**1:** 7127	**1:** Wheel Speed Sensor Control Left Rear	**1:** I	**1:** -
2: 2	**2:** 0.5	**2:** D-BU	**2:** 884	**2:** Wheel Speed Sensor Signal Left Rear	**2:** I	**2:** -

B5RF WHEEL SPEED SENSOR - RIGHT FRONT

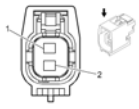

Connector Part Information

- Harness Type: Forward Lamp
- OEM Connector: 13612509
- Service Connector: 13586115
- Description: 2-Way F GT 150 Series, Sealed (BK)

Terminal Part Information

Terminal Type ID	Terminated Lead	Diagnostic Test Probe	Terminal Removal Tool	Service Terminal	Tray	Core Crimp	Insulation Crimp
I	13575412	J-35616-2A (GY)	J-38125-553	12191819	8	E	1

B5RF Wheel Speed Sensor - Right Front

Pin	Size	Color	Circuit	Function	Terminal Type ID	Option

1: 1	**1:** 0.5	**1:** GY/BN	**1:** 7065	**1:** Wheel Speed Sensor Control Right Front	**1:** I	**1:** -
2: 2	**2:** 0.5	**2:** YE	**2:** 872	**2:** Wheel Speed Sensor Signal Right Front	**2:** I	**2:** -

B5RR WHEEL SPEED SENSOR - RIGHT REAR

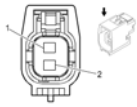

Connector Part Information

- Harness Type: Body Harness
- OEM Connector: 13612509
- Service Connector: 13586115
- Description: 2-Way F GT 150 Series, Sealed (BK)

Terminal Part Information

Terminal Type ID	Terminated Lead	Diagnostic Test Probe	Terminal Removal Tool	Service Terminal	Tray	Core Crimp	Insulation Crimp
I	13575412	J-35616-2A (GY)	J-38125-553	12191819	8	E	1

B5RR Wheel Speed Sensor - Right Rear

Pin	Size	Color	Circuit	Function	Terminal Type ID	Option
1: 1	**1:** 0.5	**1:** GY/YE	**1:** 7128	**1:** Wheel Speed Sensor Control Right Rear	**1:** I	**1:** -
2: 2	**2:** 0.5	**2:** VT	**2:** 882	**2:** Wheel Speed Sensor Signal Right Rear	**2:** I	**2:** -

B7D AIR TEMPERATURE SENSOR - DUCT LEFT LOWER (C68)

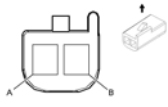

Connector Part Information

- Harness Type: HVAC
- OEM Connector: 12047662
- Service Connector: 12085535

- Description: 2-Way F Metri-Pack 150 Series (BK)

Terminal Part Information

Terminal Type ID	Terminated Lead	Diagnostic Test Probe	Terminal Removal Tool	Service Terminal	Tray	Core Crimp	Insulation Crimp
I	Service by Harness - See Part Catalog	J-35616-14 (GN)	J-38125-12A	15326030	2	E	C

B7D Air Temperature Sensor - Duct Left Lower (C68)

Pin	Size	Color	Circuit	Function	Terminal Type ID	Option
A: A	**A:** 0.5	**A:** D-BU	**A:** 404	**A:** Lower Air Temperature Sensor Signal	**A:** I	**A:** -
B: B	**B:** 0.5	**B:** BK	**B:** 407	**B:** Sensor Low Reference	**B:** I	**B:** -

B7H AIR TEMPERATURE SENSOR - DUCT LEFT UPPER (C68)

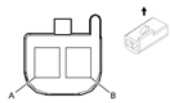

Connector Part Information

- Harness Type: HVAC
- OEM Connector: 12047662
- Service Connector: 12085535
- Description: 2-Way F Metri-Pack 150 Series (BK)

Terminal Part Information

Terminal Type ID	Terminated Lead	Diagnostic Test Probe	Terminal Removal Tool	Service Terminal	Tray	Core Crimp	Insulation Crimp
I	Service by Harness - See Part Catalog	J-35616-14 (GN)	J-38125-12A	15326030	2	E	C

B7H Air Temperature Sensor - Duct Left Upper (C68)

Pin	Size	Color	Circuit	Function	Terminal Type ID	Option
A: A	**A:** BK/GY	**A:** BK/GY	**A:** 516	**A:** Upper Left Air Temperature Sensor Signal	**A:** I	**A:** -

B: B	**B:** BK	**B:** BK	**B:** 720	**B:** Sensor Low Reference	**B:** I	**B:** -

B9 AMBIENT AIR TEMPERATURE SENSOR

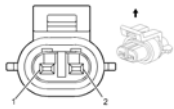

Connector Part Information

- Harness Type: Forward Lamp
- OEM Connector: 15336195
- Service Connector: 88988136
- Description: 2-Way F GT 150 Series, Sealed (BK)

Terminal Part Information

Terminal Type ID	Terminated Lead	Diagnostic Test Probe	Terminal Removal Tool	Service Terminal	Tray	Core Crimp	Insulation Crimp
I	13575414	J-35616-2A (GY)	J-38125-553	12191819	8	E	1

B9 Ambient Air Temperature Sensor

Pin	Size	Color	Circuit	Function	Terminal Type ID	Option
1: 1	**1:** 0.5	**1:** D-BU/GY	**1:** 636	**1:** Outside Ambient Air Temperature Sensor Signal	**1:** I	**1:** -
2: 2	**2:** 0.5	**2:** BK/D-BU	**2:** 61	**2:** Outside Ambient Temperature Sensor Low Reference	**2:** I	**2:** -

B10B AMBIENT LIGHT/SUNLOAD SENSOR

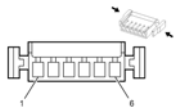

Connector Part Information

- Harness Type: Instrument Panel
- OEM Connector: 13726957
- Service Connector: 13576539
- Description: 6-Way F 0.64 Micro Quadlok Series (BK)

Terminal Part Information

Terminal Type ID	Terminated Lead	Diagnostic Test Probe	Terminal Removal Tool	Service Terminal	Tray	Core Crimp	Insulation Crimp
I	13575737	J-35616-64B (L-BU)	J-38125-12A	928999-5	15	H	H

B10B Ambient Light/Sunload Sensor

Pin	Size	Color	Circuit	Function	Terminal Type ID	Option
1: 1	**1:** 0.35	**1:** GY	**1:** 728	**1:** Security Indicator Control	**1:** I	**1:** -
2: 2	**2:** 0.35	**2:** GY	**2:** 590	**2:** Solar Sensor Driver Signal	**2:** I	**2:** C68
3: 3	**3:** 0.35	**3:** D-BU/WH	**3:** 734	**3:** Inside Air Temperature Sensor Signal	**3:** I	**3:** C68
4: 4	**4:** 0.35	**4:** D-BU	**4:** 1120	**4:** Solar Sensor Pulsed Supply Voltage	**4:** I	**4:** C68
5: 5	**5:** 0.35	**5:** WH/L-BU	**5:** 278	**5:** Ambient Light Sensor Signal	**5:** I	**5:** -
6: 6	**6:** 0.35 **6:** 0.35	**6:** BK/L-BU **6:** BK	**6:** 7566 **6:** 1650	**6:** Humidity/Windscreen Temp Sensor Low Reference **6:** Ground	**6:** I	**6:** C68 **6:** Without C68

B16 BACKUP LAMP SWITCH (MF3 OR MZ0)

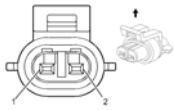

Connector Part Information

- Harness Type: Engine
- OEM Connector: 90565978
- Service Connector: 88988136
- Description: 2-Way F Metri-Pack 150 Series, Sealed (BK)

Terminal Part Information

Terminal Type ID	Terminated Lead	Diagnostic Test Probe	Terminal Removal Tool	Service Terminal	Tray	Core Crimp	Insulation Crimp
I	13575414	J-35616-2A (GY)	J-38125-553	12191819	8	E	1

B16 Backup Lamp Switch (MF3 or MZ0)

Pin	Size	Color	Circuit	Function	Terminal Type	Option

					ID	
1: 1	**1:** 0.5	**1:** GN/WH	**1:** 5007	**1:** Engine Reverse Gear Switch Signal	**1:** I	**1:** -
2: 2	**2:** 0.5	**2:** BK	**2:** 150	**2:** Ground	**2:** I	**2:** -

B18 BATTERY CURRENT SENSOR

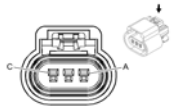

Connector Part Information

- Harness Type: Body
- OEM Connector: 13519047
- Service Connector: 13580871
- Description: 3-Way F GT 150 Series, Sealed (BK)

Terminal Part Information

Terminal Type ID	Terminated Lead	Diagnostic Test Probe	Terminal Removal Tool	Service Terminal	Tray	Core Crimp	Insulation Crimp
I	13578912	J-35616-2A (GY)	J-38125-553	12191819	8	E	1

B18 Battery Current Sensor

Pin	Size	Color	Circuit	Function	Terminal Type ID	Option
A: A	**A:** 0.5	**A:** D-BU/VT	**A:** 5076	**A:** Current Sensor Supply Voltage	**A:** I	**A:** -
B: B	**B:** 0.5	**B:** BK/VT	**B:** 5077	**B:** Current Sensor Low Reference	**B:** I	**B:** -
C: C	**C:** 0.5	**C:** WH/YE	**C:** 5075	**C:** Current Sensor Signal	**C:** I	**C:** -

B19B BRAKE BOOSTER VACUUM SENSOR

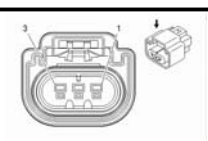

Connector Part Information

- Harness Type: Body
- OEM Connector: 13511996

- Service Connector: Pending
- Description: 3-Way F 150 GT Series, Sealed (GY)

Terminal Part Information

Terminal Type ID	Terminated Lead	Diagnostic Test Probe	Terminal Removal Tool	Service Terminal	Tray	Core Crimp	Insulation Crimp
I	Pending	Pending	Pending	Pending	Pending	Pending	Pending

B19B Brake Booster Vacuum Sensor

Pin	Size	Color	Circuit	Function	Terminal Type ID	Option
1: 1	**1:** 0.5	**1:** YE/VT	**1:** 6030	**1:** Brake Vacuum Sensor Signal	**1:** I	**1:** -
2: 2	**2:** 0.5	**2:** BK/YE	**2:** 6032	**2:** Brake Vacuum Sensor Low Reference	**2:** I	**2:** -
3: 3	**3:** 0.5	**3:** YE/RD	**3:** 6031	**3:** Brake Vacuum Sensor 5 Volt Reference	**3:** I	**3:** -

B20 BRAKE FLUID LEVEL SWITCH

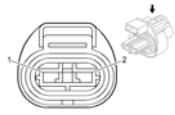

Connector Part Information

- Harness Type: Body
- OEM Connector: 13548106
- Service Connector: 13314083
- Description: 2-Way F 1.2 Timer Series, Sealed (BK)

Terminal Part Information

Terminal Type ID	Terminated Lead	Diagnostic Test Probe	Terminal Removal Tool	Service Terminal	Tray	Core Crimp	Insulation Crimp
I	13578874	J-35616-14 (GN)	J-38125-560	964274-2	16	E	1

B20 Brake Fluid Level Switch

Pin	Size	Color	Circuit	Function	Terminal Type ID	Option
1: 1	**1:** 0.5	**1:** D-GN/GY	**1:** 333	**1:** Brake Fluid Level Sensor Signal	**1:** I	**1:** -

2: 2	**2:** 0.5	**2:** BK	**2:** 1550	**2:** Ground	**2:** I	**2:** -

B22 BRAKE PEDAL POSITION SENSOR (MF3 OR MZ0)

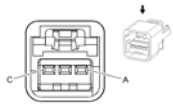

Connector Part Information

- Harness Type: Instrument Panel
- OEM Connector: 15332132
- Service Connector: 88953364
- Description: 3-Way F GT 150 Series (BK)

Terminal Part Information

Terminal Type ID	Terminated Lead	Diagnostic Test Probe	Terminal Removal Tool	Service Terminal	Tray	Core Crimp	Insulation Crimp
I	13575735	J-35616-2A (GY)	J-38125-553	12191812	19	E	C

B22 Brake Pedal Position Sensor (MF3 or MZ0)

Pin	Size	Color	Circuit	Function	Terminal Type ID	Option
A: A	**A:** 0.5	**A:** BK/BN	**A:** 5360	**A:** Brake Apply Sensor Low Reference	**A:** I	**A:** -
B: B	**B:** 0.5	**B:** D-BU/YE	**B:** 5361	**B:** Brake Apply Sensor Signal	**B:** I	**B:** -
C: C	**C:** 0.5	**C:** WH	**C:** 5359	**C:** Brake Apply Sensor Supply Voltage	**C:** I	**C:** -

B22 BRAKE PEDAL POSITION SENSOR (MH8)

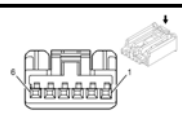

Connector Part Information

- Harness Type: Instrument Panel
- OEM Connector: 13595476
- Service Connector: 19167753
- Description: 6-Way F AIT II Series (BK)

Terminal Part Information

Terminal Type ID	Terminated Lead	Diagnostic Test Probe	Terminal Removal Tool	Service Terminal	Tray	Core Crimp	Insulation Crimp
I	13575867	J-35616-64B (L-BU)	J-38125-215A	SAIT-A03T-M064	14	P	P

B22 Brake Pedal Position Sensor (MH8)

Pin	Size	Color	Circuit	Function	Terminal Type ID	Option
1: 1	**1:** 0.5	**1:** WH	**1:** 5359	**1:** Brake Apply Sensor Supply Voltage	**1:** I	**1:** -
2: 2	**2:** 0.5	**2:** BK/BN	**2:** 5360	**2:** Low Reference	**2:** I	**2:** -
3: 3	**3:** 0.5	**3:** D-BU/YE	**3:** 5361	**3:** Brake Apply Sensor Signal	**3:** I	**3:** -
4: 4	**4:** 0.5	**4:** D-BU/YE	**4:** 5361	**4:** Brake Apply Sensor Signal	**4:** I	**4:** -
5: 5	**5:** 0.5	**5:** WH	**5:** 5359	**5:** Brake Apply Sensor Supply Voltage	**5:** I	**5:** -
6: 6	**6:** 0.5	**6:** BK/BN	**6:** 5360	**6:** Low Reference	**6:** I	**6:** -

B23E CAMSHAFT POSITION SENSOR - EXHAUST (LUV)

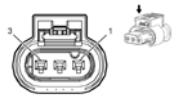

Connector Part Information

- Harness Type: Engine
- OEM Connector: 13276381
- Service Connector: 13337975
- Description: 3-Way F MLK 1.2 Series, Sealed (BK)

Terminal Part Information

Terminal Type ID	Terminated Lead	Diagnostic Test Probe	Terminal Removal Tool	Service Terminal	Tray	Core Crimp	Insulation Crimp
I	Pending	Pending	Pending	Not Available	Not Available	Not Available	Not Available

B23E Camshaft Position Sensor - Exhaust (LUV)

Pin	Size	Color	Circuit	Function	Terminal Type ID	Option

1: 1	**1:** 0.5	**1:** GY/YE	**1:** 6457	**1:** Camshaft CAM X Supply Voltage	**1:** I	**1:** -
2: 2	**2:** 0.5	**2:** BK/GY	**2:** 6267	**2:** Camshaft CAM X Ground	**2:** I	**2:** -
3: 3	**3:** 0.5	**3:** VT/BK	**3:** 6264	**3:** Camshaft CAM X Signal	**3:** I	**3:** -

B23E CAMSHAFT POSITION SENSOR - EXHAUST (LUW/LWE)

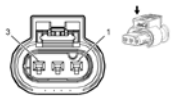

Connector Part Information

- Harness Type: Engine
- OEM Connector: 13276381
- Service Connector: 13337975
- Description: 3-Way F MLK 1.2 Series, Sealed (BK)

Terminal Part Information

Terminal Type ID	Terminated Lead	Diagnostic Test Probe	Terminal Removal Tool	Service Terminal	Tray	Core Crimp	Insulation Crimp
I	Pending	Pending	Pending	Not Available	Not Available	Not Available	Not Available

B23E Camshaft Position Sensor - Exhaust (LUW/LWE)

Pin	Size	Color	Circuit	Function	Terminal Type ID	Option
1: 1	**1:** 0.5	**1:** GY/YE	**1:** 5297	**1:** Camshaft Position Exhaust Sensor Supply Voltage (1)	**1:** I	**1:** -
2: 2	**2:** 0.5	**2:** BK/GY	**2:** 5296	**2:** Low Reference	**2:** I	**2:** -
3: 3	**3:** 0.5	**3:** VT/BK	**3:** 5273	**3:** Camshaft Position Exhaust Sensor (1)	**3:** I	**3:** -

B23F CAMSHAFT POSITION SENSOR - INTAKE (LUV)

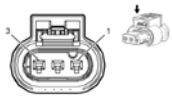

Connector Part Information

- Harness Type: Engine

- OEM Connector: 13276381
- Service Connector: 13337975
- Description: 3-Way F MLK 1.2 Series, Sealed (BK)

Terminal Part Information

Terminal Type ID	Terminated Lead	Diagnostic Test Probe	Terminal Removal Tool	Service Terminal	Tray	Core Crimp	Insulation Crimp
I	13575575	J-35616-64B (L-BU)	J-38125-213	33467-0005	23	J	J

B23F Camshaft Position Sensor - Intake (LUV)

Pin	Size	Color	Circuit	Function	Terminal Type ID	Option
1: 1	**1:** 0.5	**1:** GY/D-BU	**1:** 5300	**1:** Camshaft Position Intake Sensor Supply Voltage (1)	**1:** I	**1:** -
2: 2	**2:** 0.5	**2:** BK/D-GN	**2:** 5301	**2:** Camshaft Position Intake Sensor Low Reference (1)	**2:** I	**2:** -
3: 3	**3:** 0.5	**3:** YE/VT	**3:** 5275	**3:** Camshaft Position Intake Sensor (1)	**3:** I	**3:** -

B23F CAMSHAFT POSITION SENSOR - INTAKE (LUW/LWE)

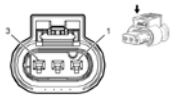

Connector Part Information

- Harness Type: Engine
- OEM Connector: 13276380
- Service Connector: 13581087
- Description: 3-Way F, Sealed (BK)

Terminal Part Information

Terminal Type ID	Terminated Lead	Diagnostic Test Probe	Terminal Removal Tool	Service Terminal	Tray	Core Crimp	Insulation Crimp
I	Pending	Pending	Pending	Not Available	Not Available	Not Available	Not Available

B23F Camshaft Position Sensor - Intake (LUW/LWE)

Pin	Size	Color	Circuit	Function	Terminal Type ID	Option

1: 1	**1:** 0.5	**1:** GY/D-BU	**1:** 5300	**1:** Camshaft Position Intake Sensor Supply Voltage (1)	**1:** I	**1:** -
2: 2	**2:** 0.5	**2:** BK/L-GN	**2:** 5301	**2:** Camshaft Position Intake Sensor Low Reference (1)	**2:** I	**2:** -
3: 3	**3:** 0.5	**3:** YE/VT	**3:** 5275	**3:** Camshaft Position Intake Sensor (1)	**3:** I	**3:** -

B24 CELLULAR PHONE MICROPHONE (UE1)

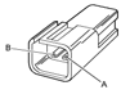

Connector Part Information

- Harness Type: Headliner
- OEM Connector: 12047663
- Service Connector: 13584278
- Description: 2-Way M Metri-Pack 150 Series (BK)

Terminal Part Information

Terminal Type ID	Terminated Lead	Diagnostic Test Probe	Terminal Removal Tool	Service Terminal	Tray	Core Crimp	Insulation Crimp
I	13575462	J-35616-3 (GY)	J-38125-12A	12047581	2	E	C

B24 Cellular Phone Microphone (UE1)

Pin	Size	Color	Circuit	Function	Terminal Type ID	Option
A: A	**A:** 0.5	**A:** BARE	**A:** 5193	**A:** Microphone Low Signal	**A:** I	**A:** -
B: B	**B:** 0.5	**B:** YE	**B:** 5191	**B:** Microphone High Signal	**B:** I	**B:** -

B25B CLUTCH PEDAL POSITION SENSOR (MF3 OR MZ0)

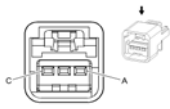

Connector Part Information

- Harness Type: Instrument Panel
- OEM Connector: 15332132
- Service Connector: 88953364

- Description: 3-Way F GT 150 Series (BK)

Terminal Part Information

Terminal Type ID	Terminated Lead	Diagnostic Test Probe	Terminal Removal Tool	Service Terminal	Tray	Core Crimp	Insulation Crimp
I	13575735	J-35616-2A (GY)	J-38125-553	12191812	19	E	C

B25B Clutch Pedal Position Sensor (MF3 or MZ0)

Pin	Size	Color	Circuit	Function	Terminal Type ID	Option
A: A	**A:** 0.5	**A:** BK/GY	**A:** 6110	**A:** Clutch Apply Sensor Low Reference	**A:** I	**A:** -
B: B	**B:** 0.5	**B:** YE	**B:** 6111	**B:** Clutch Apply Sensor Signal	**B:** I	**B:** -
C: C	**C:** 0.5	**C:** GY/RD	**C:** 6109	**C:** Clutch Apply Sensor Voltage Reference	**C:** I	**C:** -

B26 CRANKSHAFT POSITION SENSOR (LUV)

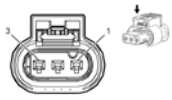

Connector Part Information

- Harness Type: Engine
- OEM Connector: 55564249
- Service Connector: 13574937
- Description: 3-Way F MLK 1.2 Series, Sealed (BK)

Terminal Part Information

Terminal Type ID	Terminated Lead	Diagnostic Test Probe	Terminal Removal Tool	Service Terminal	Tray	Core Crimp	Insulation Crimp
I	13575812	J-35616-64B (L-BU)	J-38125-213	33467-0005	23	J	J

B26 Crankshaft Position Sensor (LUV)

Pin	Size	Color	Circuit	Function	Terminal Type ID	Option
1: 1	**1:** 0.5	**1:** VT/L-BU	**1:** 6270	**1:** Crankshaft 60X Sensor Voltage	**1:** I	**1:** -

2: 2	**2:** 0.5	**2:** BK/VT	**2:** 6272	**2:** Low Reference	**2:** I	**2:** -
3: 3	**3:** 0.5	**3:** L-GN	**3:** 6271	**3:** Crankshaft 60X Sensor Signal	**3:** I	**3:** -

B26 CRANKSHAFT POSITION SENSOR (LUW/LWE)

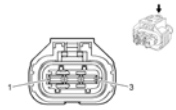

Connector Part Information

- Harness Type: Engine
- OEM Connector: 13140564
- Service Connector: 13585845
- Description: 3-Way F (BK)

Terminal Part Information

Terminal Type ID	Terminated Lead	Diagnostic Test Probe	Terminal Removal Tool	Service Terminal	Tray	Core Crimp	Insulation Crimp
I	13575415	J-35616-35 (VT)	J-38125-36	4-964286-1	16	E	1

B26 Crankshaft Position Sensor (LUW/LWE)

Pin	Size	Color	Circuit	Function	Terminal Type ID	Option
1: 1	**1:** 0.5	**1:** GN	**1:** 6271	**1:** Crankshaft 60X Sensor Signal	**1:** I	**1:** -
2: 2	**2:** 0.5	**2:** BK/VT	**2:** 6272	**2:** Low Reference	**2:** I	**2:** -
3: 3	**3:** 0.5	**3:** VT/BU	**3:** 6270	**3:** Crankshaft 60X Sensor Voltage	**3:** I	**3:** -

B34A ENGINE COOLANT TEMPERATURE SENSOR 1 (LUV)

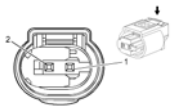

Connector Part Information

- Harness Type: Engine
- OEM Connector: 24461693
- Service Connector: 13576533

- Description: 2-Way F 0.64 MQS Series, Sealed (BK)

Terminal Part Information

Terminal Type ID	Terminated Lead	Diagnostic Test Probe	Terminal Removal Tool	Service Terminal	Tray	Core Crimp	Insulation Crimp
I	13576394	J-35616-64B (L-BU)	J-38125-12A	962885-5	15	7	7

B34A Engine Coolant Temperature Sensor 1 (LUV)

Pin	Size	Color	Circuit	Function	Terminal Type ID	Option
1: 1	**1:** 0.75	**1:** D-BU	**1:** 410	**1:** Engine Coolant Temperature Sensor Signal	**1:** I	**1:** -
2: 2	**2:** 0.75	**2:** BK/BU	**2:** 2761	**2:** Coolant Temperature Sensor Low Reference	**2:** I	**2:** -

B34A ENGINE COOLANT TEMPERATURE SENSOR 1 (LUW/LWE)

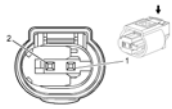

Connector Part Information

- Harness Type: Engine
- OEM Connector: 24461693
- Service Connector: 13576533
- Description: 2-Way F 0.64 MQS Series, Sealed (BK)

Terminal Part Information

Terminal Type ID	Terminated Lead	Diagnostic Test Probe	Terminal Removal Tool	Service Terminal	Tray	Core Crimp	Insulation Crimp
I	13576394	J-35616-64B (L-BU)	J-38125-12A	962885-5	15	6	6

B34A Engine Coolant Temperature Sensor 1 (LUW/LWE)

Pin	Size	Color	Circuit	Function	Terminal Type ID	Option
1: 1	**1:** 0.5	**1:** L-GN/VT	**1:** 2032	**1:** Coolant Temperature Sensor Signal	**1:** I	**1:** -
2: 2	**2:** 0.5	**2:** BK/BN	**2:** 2761	**2:** Coolant Temperature Sensor Low Reference	**2:** I	**2:** -

B34B ENGINE COOLANT TEMPERATURE SENSOR 2

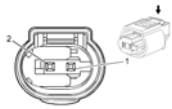

Connector Part Information

- Harness Type: Engine Cooling
- OEM Connector: 15365708
- Service Connector: 13576533
- Description: 2-Way F MQS Series, Sealed (BK)

Terminal Part Information

Terminal Type ID	Terminated Lead	Diagnostic Test Probe	Terminal Removal Tool	Service Terminal	Tray	Core Crimp	Insulation Crimp
I	15376394	J-35616-64B (L-BU)	J-38125-12A	962885-5	15	6	6

B34B Engine Coolant Temperature Sensor 2

Pin	Size	Color	Circuit	Function	Terminal Type ID	Option
1: 1	**1:** 0.5	**1:** BK/D-BU	**1:** 6813	**1:** Coolant Temperature Sensor 2 Low Reference	**1:** I	**1:** -
2: 2	**2:** 0.5	**2:** D-GN/VT	**2:** 2032	**2:** Coolant Temperature Sensor Signal	**2:** I	**2:** -

B37 ENGINE OIL PRESSURE SWITCH

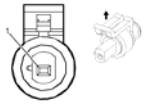

Connector Part Information

- Harness Type: Engine
- OEM Connector: 55566738
- Service Connector: 13355789
- Description: 1-Way F DCS2 Series, Sealed (BK)

Terminal Part Information

Terminal Type ID	Terminated Lead	Diagnostic Test Probe	Terminal Removal	Service Terminal	Tray	Core Crimp	Insulation Crimp

			Tool				
I	13575400	J-35616-2A (GY)	J-38125-553	15326267	19	E	4

B37 Engine Oil Pressure Switch

Pin	Size	Color	Circuit	Function	Terminal Type ID	Option
1: 1	**1:** 0.5	**1:** YE/BU	**1:** 231	**1:** Oil Pressure Switch Signal	**1:** I	**1:** -

B39 A/C EVAPORATOR TEMPERATURE SENSOR

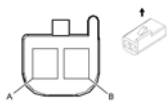

Connector Part Information

- Harness Type: HVAC
- OEM Connector: 12047662
- Service Connector: 12085535
- Description: 2-Way F Metri-Pack 150 Series (BK)

Terminal Part Information

Terminal Type ID	Terminated Lead	Diagnostic Test Probe	Terminal Removal Tool	Service Terminal	Tray	Core Crimp	Insulation Crimp
I	Service by Harness - See Part Catalog	J-35616-14 (GN)	J-38125-12A	15326030	2	E	C

B39 A/C Evaporator Temperature Sensor

Pin	Size	Color	Circuit	Function	Terminal Type ID	Option
A: A	**A:** BK/GY	**A:** BK/GY	**A:** 6137	**A:** EVAP Core Temperature Sensor Signal	**A:** I	**A:** -
B: B	**B:** BK	**B:** BK	**B:** 720	**B:** Sensor Low Reference	**B:** I	**B:** -

B47 FUEL PRESSURE SENSOR

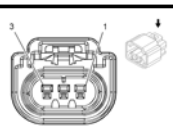

Connector Part Information

- Harness Type: Fuel Tank
- OEM Connector: 19115173
- Service Connector: 19168035
- Description: 3-Way F GT 150 Series Sealed (BK)

Terminal Part Information

Terminal Type ID	Terminated Lead	Diagnostic Test Probe	Terminal Removal Tool	Service Terminal	Tray	Core Crimp	Insulation Crimp
I	13575412	J-35616-2A (GY)	J-38125-553	12191819	8	E	1

B47 Fuel Pressure Sensor

Pin	Size	Color	Circuit	Function	Terminal Type ID	Option
1: 1	**1:** 0.5	**1:** D-BU/BN	**1:** 7446	**1:** Fuel Line Pressure Sensor Signal	**1:** I	**1:** -
2: 2	**2:** 0.5	**2:** BK/YE	**2:** 7447	**2:** Low Reference	**2:** I	**2:** -
3: 3	**3:** 0.5	**3:** BN/RD	**3:** 7445	**3:** 5-Volt Reference	**3:** I	**3:** -

B52A HEATED OXYGEN SENSOR 1 (LUV)

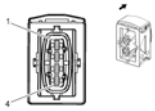

Connector Part Information

- Harness Type: Engine
- OEM Connector: 13140566
- Service Connector: 13355749
- Description: 4-Way F 2.8 Timer Series, Sealed (BK)

Terminal Part Information

Terminal Type ID	Terminated Lead	Diagnostic Test Probe	Terminal Removal Tool	Service Terminal	Tray	Core Crimp	Insulation Crimp
I	13581346	J-35616-35 (VT)	J-38125-36	4-964286-1	16	E	1

B52A Heated Oxygen Sensor 1 (LUV)

Pin	Size	Color	Circuit	Function	Terminal Type ID	Option
1: 1	**1:** 0.75	**1:** RD/WH	**1:** 5293	**1:** Powertrain Main Relay Fused Supply (4)	**1:** I	**1:** -
2: 2	**2:** 0.75	**2:** GY/WH	**2:** 3113	**2:** Heated Oxygen Sensor Heater Low Control Bank 1 Sensor (1)	**2:** I	**2:** -
3: 3	**3:** 0.5	**3:** BK/GN	**3:** 1664	**3:** Heated Oxygen Sensor Low Signal Bank 1 Sensor (1)	**3:** I	**3:** -
4: 4	**4:** 0.5	**4:** GN	**4:** 1665	**4:** Heated Oxygen Sensor High Signal Bank 1 Sensor (1)	**4:** I	**4:** -

B52A HEATED OXYGEN SENSOR 1 (LUW/LWE)

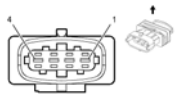

Connector Part Information

- Harness Type: Engine
- OEM Connector: 13122327
- Service Connector: 88952839
- Description: 4-Way M 2.8 Series, Sealed (BK)

Terminal Part Information

Terminal Type ID	Terminated Lead	Diagnostic Test Probe	Terminal Removal Tool	Service Terminal	Tray	Core Crimp	Insulation Crimp
I	13582181	J-35616-5 (PU)	J-38125-36	1-962915-3	15	E	1

B52A Heated Oxygen Sensor 1 (LUW/LWE)

Pin	Size	Color	Circuit	Function	Terminal Type ID	Option
1: 1	**1:** 0.75	**1:** VT/BU	**1:** 5293	**1:** Powertrain Main Relay Fused Supply (4)	**1:** I	**1:** -
2: 2	**2:** 0.75	**2:** GY/WH	**2:** 3113	**2:** Heated Oxygen Sensor Heater Low Control Bank 1 Sensor (1)	**2:** I	**2:** -
3: 3	**3:** 0.5	**3:** YE/BN	**3:** 1664	**3:** Heated Oxygen Sensor Low Signal Bank 1 Sensor (1)	**3:** I	**3:** -

4: 4	**4:** 0.5	**4:** GN	**4:** 1665	**4:** Heated Oxygen Sensor High Signal Bank 1 Sensor (1)	**4:** I	**4:** -

B52B HEATED OXYGEN SENSOR 2

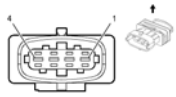

Connector Part Information

- Harness Type: Engine
- OEM Connector: 13122327
- Service Connector: 88952839
- Description: 4-Way M 2.8 Series, Sealed (BK)

Terminal Part Information

Terminal Type ID	Terminated Lead	Diagnostic Test Probe	Terminal Removal Tool	Service Terminal	Tray	Core Crimp	Insulation Crimp
I	13575350	J-35616-5 (PU)	J-38125-36	1-962915-3	15	E	1

B52B Heated Oxygen Sensor 2

Pin	Size	Color	Circuit	Function	Terminal Type ID	Option
1: 1	**1:** 0.75	**1:** VT/BU	**1:** 5293	**1:** Powertrain Main Relay Fused Supply (4)	**1:** I	**1:** -
2: 2	**2:** 0.75	**2:** L-GN/VT	**2:** 1423	**2:** Heated Oxygen Sensor Heater Low Control Bank 1 Sensor (2)	**2:** I	**2:** -
3: 3	**3:** 0.5	**3:** YE/WH	**3:** 1669	**3:** Heated Oxygen Sensor Low Signal Bank 1 Sensor (2)	**3:** I	**3:** -
4: 4	**4:** 0.5	**4:** L-GN	**4:** 1668	**4:** Heated Oxygen Sensor High Signal Bank 1 Sensor (2)	**4:** I	**4:** -

B55 HOOD AJAR SWITCH

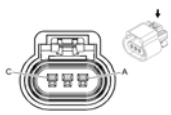

Connector Part Information

- Harness Type: Forward Lamp
- OEM Connector: 13519047
- Service Connector: 13580871
- Description: 3-Way F GT 150 Series, Sealed (BK)

Terminal Part Information

Terminal Type ID	Terminated Lead	Diagnostic Test Probe	Terminal Removal Tool	Service Terminal	Tray	Core Crimp	Insulation Crimp
I	13575412	J-35616-2A (GY)	J-38125-553	12191819	8	E	1

B55 Hood Ajar Switch

Pin	Size	Color	Circuit	Function	Terminal Type ID	Option
A	-	-	-	Not Occupied	-	-
B: B	**B:** 0.5	**B:** BN/D-GN	**B:** 109	**B:** Hood Ajar Switch Signal	**B:** I	**B:** -
C: C	**C:** 0.5	**C:** BK	**C:** 1350	**C:** Ground	**C:** I	**C:** -

B59L FRONT IMPACT SENSOR - LEFT

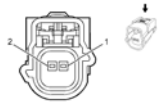

Connector Part Information

- Harness Type: Forward Lamp
- OEM Connector: 13610095
- Service Connector: 13585852
- Description: 2-Way F Kaizen 0.64 Series, Sealed (D-GY)

Terminal Part Information

Terminal Type ID	Terminated Lead	Diagnostic Test Probe	Terminal Removal Tool	Service Terminal	Tray	Core Crimp	Insulation Crimp
I	Service by Connector Assembly - 13314084	J-35616-64B (L-BU)	N/A	N	A	N	A

B59L Front Impact Sensor - Left

Pin	Size	Color	Circuit	Function	Terminal Type ID	Option
1: 1	**1:** 0.5	**1:** OG/YE	**1:** 354	**1:** Left Front Discriminating Sensor Signal	**1:** I	**1:** -
2: 2	**2:** 0.5	**2:** BK/OG	**2:** 5045	**2:** Left Front Discriminating Sensor Low Reference	**2:** I	**2:** -

B59R FRONT IMPACT SENSOR - RIGHT

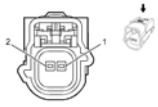

Connector Part Information

- Harness Type: Forward Lamp
- OEM Connector: 13610095
- Service Connector: 13585852
- Description: 2-Way F Kaizen 0.64 Series, Sealed (D-GY)

Terminal Part Information

Terminal Type ID	Terminated Lead	Diagnostic Test Probe	Terminal Removal Tool	Service Terminal	Tray	Core Crimp	Insulation Crimp
I	Service by Connector Assembly - 13314084	J-35616-64B (L-BU)	N/A	N	A	N	A

B59R Front Impact Sensor - Right

Pin	Size	Color	Circuit	Function	Terminal Type ID	Option
1: 1	**1:** 0.5	**1:** OG/D-GN	**1:** 1409	**1:** Right Front Discriminating Sensor Signal	**1:** I	**1:** -
2: 2	**2:** 0.5	**2:** BK/OG	**2:** 5600	**2:** Right Front Discriminating Sensor Low Reference	**2:** I	**2:** -

B63LF SIDE IMPACT SENSOR - LEFT FRONT

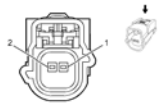

Connector Part Information

- Harness Type: Body
- OEM Connector: 13610095
- Service Connector: 13585852
- Description: 2-Way F Kaizen 0.64 Series, Sealed (D-GY)

Terminal Part Information

Terminal Type ID	Terminated Lead	Diagnostic Test Probe	Terminal Removal Tool	Service Terminal	Tray	Core Crimp	Insulation Crimp
I	Service by Connector Assembly - 13314084	J-35616-64B (L-BU)	N/A	N	A	N	A

B63LF Side Impact Sensor - Left Front

Pin	Size	Color	Circuit	Function	Terminal Type ID	Option
1: 1	**1:** 0.5	**1:** OG/D-GN	**1:** 2132	**1:** Left Front Side Impact Sensing Module Signal	**1:** I	**1:** -
2: 2	**2:** 0.5	**2:** BK/OG	**2:** 6628	**2:** Left Front Side Impact Sensing Module Low Reference	**2:** I	**2:** -

B63LR SIDE IMPACT SENSOR - LEFT REAR

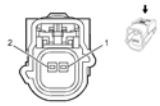

Connector Part Information

- Harness Type: Body
- OEM Connector: 13610095
- Service Connector: 13585852
- Description: 2-Way F Kaizen 0.64 Series, Sealed (D-GY)

Terminal Part Information

Terminal	Terminated	Diagnostic	Terminal	Service		Core	Insulation

Type ID	Lead	Test Probe	Removal Tool	Terminal	Tray	Crimp	Crimp
I	Service by Connector Assembly - 13314084	J-35616-64B (L-BU)	N/A	N	A	N	A

B63LR Side Impact Sensor - Left Rear

Pin	Size	Color	Circuit	Function	Terminal Type ID	Option
1: 1	**1:** 0.5	**1:** OG/D-BU	**1:** 6620	**1:** Left Middle Side Impact Sensing Module Signal	**1:** I	**1:** -
2: 2	**2:** 0.5	**2:** BK/OG	**2:** 6621	**2:** Left Middle Side Impact Sensing Module Low Reference	**2:** I	**2:** -

B63RF SIDE IMPACT SENSOR - RIGHT FRONT

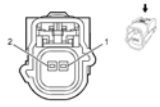

Connector Part Information

- Harness Type: Body
- OEM Connector: 13610095
- Service Connector: 13585852
- Description: 2-Way F Kaizen 0.64 Series, Sealed (D-GY)

Terminal Part Information

Terminal Type ID	Terminated Lead	Diagnostic Test Probe	Terminal Removal Tool	Service Terminal	Tray	Core Crimp	Insulation Crimp
I	Service by Connector Assembly - 13314084	J-35616-64B (L-BU)	N/A	N	A	N	A

B63RF Side Impact Sensor - Right Front

Pin	Size	Color	Circuit	Function	Terminal Type ID	Option
1: 1	**1:** 0.5	**1:** BN/OG	**1:** 2134	**1:** Right Front Side Impact Sensing Module Signal	**1:** I	**1:** -
2: 2	**2:** 0.5	**2:** BK/OG	**2:** 6629	**2:** Right Front Side Impact Sensing Module Low	**2:** I	**2:** -

				Reference		

B63RR SIDE IMPACT SENSOR - RIGHT REAR

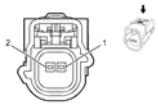

Connector Part Information

- Harness Type: Body
- OEM Connector: 13610095
- Service Connector: 13585852
- Description: 2-Way F Kaizen 0.64 Series, Sealed (D-GY)

Terminal Part Information

Terminal Type ID	Terminated Lead	Diagnostic Test Probe	Terminal Removal Tool	Service Terminal	Tray	Core Crimp	Insulation Crimp
I	Service by Connector Assembly - 13314084	J-35616-64B (L-BU)	N/A	N	A	N	A

B63RR Side Impact Sensor - Right Rear

Pin	Size	Color	Circuit	Function	Terminal Type ID	Option
1: 1	**1:** 0.5	**1:** OG/VT	**1:** 6624	**1:** Right Middle Side Impact Sensing Module Signal	**1:** I	**1:** -
2: 2	**2:** 0.5	**2:** BK/OG	**2:** 6625	**2:** Right Middle Side Impact Sensing Module Low Reference	**2:** I	**2:** -

B111B TURBOCHARGER BOOST/INTAKE AIR TEMPERATURE (LUV)

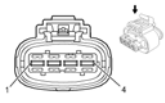

Connector Part Information

- Harness Type: Engine
- OEM Connector: 13343439
- Service Connector: 13384362

- Description: 4-Way F (BK)

Terminal Part Information

Terminal Type ID	Terminated Lead	Diagnostic Test Probe	Terminal Removal Tool	Service Terminal	Tray	Core Crimp	Insulation Crimp
I	13576381	J-35616-35 (VT)	J-38125-561	1928498056	8	E	1

B111B Turbocharger Boost/Intake Air Temperature (LUV)

Pin	Size	Color	Circuit	Function	Terminal Type ID	Option
1: 1	**1:** 0.5	**1:** BK/D-GN	**1:** 7332	**1:** Low Reference	**1:** I	**1:** -
2: 2	**2:** 0.5	**2:** GY	**2:** 7329	**2:** Pre-Throttle Air Temp and Press (TMAP) Temperature Signal	**2:** I	**2:** -
3: 3	**3:** 0.5	**3:** BN/RD	**3:** 7331	**3:** 5 Volt Reference	**3:** I	**3:** -
4: 4	**4:** 0.5	**4:** D-GN	**4:** 7330	**4:** Pre Throttle Air Temp and Press (TMAP) Air Pressure Signal	**4:** I	**4:** -

B68 KNOCK SENSOR (LUV)

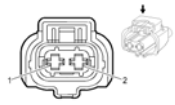

Connector Part Information

- Harness Type: Engine
- OEM Connector: 55565696
- Service Connector: 13355785
- Description: 2-Way F 2.8 DCS Series, Sealed (BK)

Terminal Part Information

Terminal Type ID	Terminated Lead	Diagnostic Test Probe	Terminal Removal Tool	Service Terminal	Tray	Core Crimp	Insulation Crimp
I	13575575	J-35616-64B (L-BU)	J-38125-213	33467-0005	23	J	J

B68 Knock Sensor (LUV)

Pin	Size	Color	Circuit	Function	Terminal Type ID	Option

1: 1	**1:** 0.5	**1:** VT/GY	**1:** 496	**1:** Knock Sensor Signal (1)	**1:** I	**1:** -
2: 2	**2:** 0.5	**2:** BK/YE	**2:** 1716	**2:** Knock Sensor Signal (2)	**2:** I	**2:** -

B68 KNOCK SENSOR (LUW/LWE)

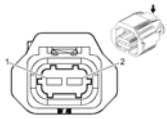

Connector Part Information

- Harness Type: Engine
- OEM Connector: 13140563
- Service Connector: 13581088
- Description: 2-Way F 2.8 Timer Series, Sealed (NA)

Terminal Part Information

Terminal Type ID	Terminated Lead	Diagnostic Test Probe	Terminal Removal Tool	Service Terminal	Tray	Core Crimp	Insulation Crimp
I	13581346	J-35616-35 (VT)	J-38125-36	4-964286-1	16	E	1

B68 Knock Sensor (LUW/LWE)

Pin	Size	Color	Circuit	Function	Terminal Type ID	Option
1: 1	**1:** 0.5	**1:** VT/GY	**1:** 496	**1:** Knock Sensor Signal (1)	**1:** I	**1:** -
2: 2	**2:** 0.5	**2:** BK/YE	**2:** 1716	**2:** Knock Sensor Signal (2)	**2:** I	**2:** -

B74 MANIFOLD ABSOLUTE PRESSURE SENSOR (LUV)

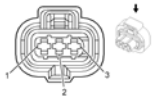

Connector Part Information

- Harness Type: Engine
- OEM Connector: 55566734
- Service Connector: 13355788
- Description: 3-Way F, Sealed (BK)

Terminal Part Information

			Terminal				

Terminal Type ID	Terminated Lead	Diagnostic Test Probe	Removal Tool	Service Terminal	Tray	Core Crimp	Insulation Crimp
I	Pending	Pending	Pending	Not Available	Not Available	Not Available	Not Available

B74 Manifold Absolute Pressure Sensor (LUV)

Pin	Size	Color	Circuit	Function	Terminal Type ID	Option
1: 1	**1:** 0.5	**1:** BN/RD	**1:** 2704	**1:** 5 Volt Reference	**1:** I	**1:** -
2: 2	**2:** 0.5	**2:** BK/L-GN	**2:** 469	**2:** Low Reference	**2:** I	**2:** -
3: 3	**3:** 0.5	**3:** L-GN/WH	**3:** 432	**3:** Manifold Absolute Pressure Sensor Signal	**3:** I	**3:** -

B74 MANIFOLD ABSOLUTE PRESSURE SENSOR (LUW/LWE)

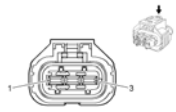

Connector Part Information

- Harness Type: Engine
- OEM Connector: 13140564
- Service Connector: 13585845
- Description: 3-Way F, Sealed (BK)

Terminal Part Information

Terminal Type ID	Terminated Lead	Diagnostic Test Probe	Terminal Removal Tool	Service Terminal	Tray	Core Crimp	Insulation Crimp
I	13581346	J-35616-35 (VT)	J-38125-36	4-964286-1	16	E	1

B74 Manifold Absolute Pressure Sensor (LUW/LWE)

Pin	Size	Color	Circuit	Function	Terminal Type ID	Option
1: 1	**1:** 0.5	**1:** GY/RD	**1:** 2704	**1:** Manifold Absolute Pressure Sensor 5 Volt Reference	**1:** I	**1:** -
2: 2	**2:** 0.5	**2:** BK/L-GN	**2:** 469	**2:** Manifold Absolute Pressure Sensor Low Reference	**2:** I	**2:** -
3: 3	**3:** 0.5	**3:** L-GN/WH	**3:** 432	**3:** Manifold Absolute Pressure Sensor Signal	**3:** I	**3:** -

B75C MULTIFUNCTION AIR INTAKE SENSOR

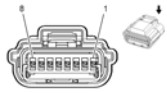

Connector Part Information

- Harness Type: Engine
- OEM Connector: 13504800
- Service Connector: 13583440
- Description: 8-Way F 064 Series, Sealed (BK)

Terminal Part Information

Terminal Type ID	Terminated Lead	Diagnostic Test Probe	Terminal Removal Tool	Service Terminal	Tray	Core Crimp	Insulation Crimp
I	Pending	Pending	Pending	Not Available	Not Available	Not Available	Not Available

B75C Multifunction Air Intake Sensor

Pin	Size	Color	Circuit	Function	Terminal Type ID	Option
1: 1	**1:** 0.5	**1:** BN/GY	**1:** 4008	**1:** Humidity Sensor Signal	**1:** I	**1:** -
2: 2	**2:** 0.5 **2:** 0.5	**2:** WH/RD **2:** WH/YE	**2:** 3201 **2:** 3202	**2:** Throttle Inlet Absolute Pressure Sensor 5 Volt Reference **2:** Throttle Inlet Absolute Pressure Sensor 5 Volt Reference	**2:** I	**2:** LUV **2:** LUW/LWE
3: 3	**3:** 0.5	**3:** GN/WH	**3:** 492	**3:** Mass Air Flow Sensor Signal	**3:** I	**3:** -
4: 4	**4:** 0.5	**4:** BK	**4:** 150	**4:** Ground	**4:** I	**4:** -
5: 5	**5:** 0.75	**5:** VT/BU	**5:** 5294	**5:** Powertrain Main Relay Fused Supply (5)	**5:** I	**5:** -
6: 6	**6:** 0.5	**6:** YE/WH	**6:** 3200	**6:** Throttle Inlet Absolute Pressure Sensor Signal	**6:** I	**6:** -
7: 7	**7:** 0.5	**7:** BK/VT	**7:** 2760	**7:** Intake Air Temperature Sensor Low Reference	**7:** I	**7:** -
8: 8	**8:** 0.5	**8:** BN/VT	**8:** 472	**8:** Induction Air Temperature Sensor Signal	**8:** I	**8:** -

B78E REAR OBJECT SENSOR - LEFT MIDDLE (UD7)

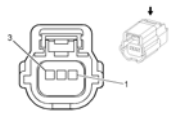

Connector Part Information

- Harness Type: Rear Object Sensor
- OEM Connector: 31404-3700
- Service Connector: 88988337
- Description: 3-Way F 64 Series, Sealed (BK)

Terminal Part Information

Terminal Type ID	Terminated Lead	Diagnostic Test Probe	Terminal Removal Tool	Service Terminal	Tray	Core Crimp	Insulation Crimp
I	13575845	J-35616-64B (L-BU)	J-38125-215A	SAIT-A03T-M064	14	P	P

B78E Rear Object Sensor - Left Middle (UD7)

Pin	Size	Color	Circuit	Function	Terminal Type ID	Option
1: 1	**1:** 0.5	**1:** BN/WH	**1:** 2374	**1:** Object Sensor Control	**1:** I	**1:** -
2: 2	**2:** 0.5	**2:** BK/GY	**2:** 2379	**2:** Object Sensor Low Reference	**2:** I	**2:** -
3: 3	**3:** 0.5	**3:** YE/D-BU	**3:** 2376	**3:** Left Rear Middle Object Sensor Signal	**3:** I	**3:** -

B78F REAR OBJECT SENSOR - RIGHT MIDDLE (UD7)

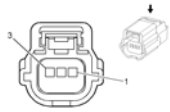

Connector Part Information

- Harness Type: Rear Object Sensor
- OEM Connector: 31404-3700
- Service Connector: 88988337
- Description: 3-Way F 64 Series, Sealed (BK)

Terminal Part Information

Terminal	Terminated	Diagnostic	Terminal	Service		Core	Insulation

Type ID	Lead	Test Probe	Removal Tool	Terminal	Tray	Crimp	Crimp
I	13575845	J-35616-64B (L-BU)	J-38125-215A	SAIT-A03T-M064	14	P	P

B78F Rear Object Sensor - Right Middle (UD7)

Pin	Size	Color	Circuit	Function	Terminal Type ID	Option
1: 1	**1:** 0.5	**1:** BN/WH	**1:** 2374	**1:** Object Sensor Control	**1:** I	**1:** -
2: 2	**2:** 0.5	**2:** BK/GY	**2:** 2379	**2:** Object Sensor Low Reference	**2:** I	**2:** -
3: 3	**3:** 0.5	**3:** YE/WH	**3:** 2377	**3:** Right Rear Middle Object Sensor Signal	**3:** I	**3:** -

B78G REAR OBJECT SENSOR - LEFT OUTER (UD7)

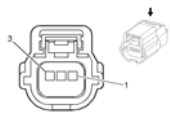

Connector Part Information

- Harness Type: Rear Object Sensor
- OEM Connector: 31404-3700
- Service Connector: 88988337
- Description: 3-Way F 64 Series, Sealed (BK)

Terminal Part Information

Terminal Type ID	Terminated Lead	Diagnostic Test Probe	Terminal Removal Tool	Service Terminal	Tray	Core Crimp	Insulation Crimp
I	13575845	J-35616-64B (L-BU)	J-38125-215A	SAIT-A03T-M064	14	P	P

B78G Rear Object Sensor - Left Outer (UD7)

Pin	Size	Color	Circuit	Function	Terminal Type ID	Option
1: 1	**1:** 0.5	**1:** BN/WH	**1:** 2374	**1:** Object Sensor Control	**1:** I	**1:** -
2: 2	**2:** 0.5	**2:** BK/GY	**2:** 2379	**2:** Object Sensor Low Reference	**2:** I	**2:** -
3: 3	**3:** 0.5	**3:** YE	**3:** 2375	**3:** Left Rear Corner Object Sensor Signal	**3:** I	**3:** -

B78H REAR OBJECT SENSOR - RIGHT OUTER (UD7)

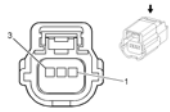

Connector Part Information

- Harness Type: Rear Object Sensor
- OEM Connector: 31404-3700
- Service Connector: 88988337
- Description: 3-Way F 64 Series, Sealed (BK)

Terminal Part Information

Terminal Type ID	Terminated Lead	Diagnostic Test Probe	Terminal Removal Tool	Service Terminal	Tray	Core Crimp	Insulation Crimp
I	13575845	J-35616-64B (L-BU)	J-38125-215A	SAIT-A03T-M064	14	P	P

B78H Rear Object Sensor - Right Outer (UD7)

Pin	Size	Color	Circuit	Function	Terminal Type ID	Option
1: 1	**1:** 0.5	**1:** BN/WH	**1:** 2374	**1:** Object Sensor Control	**1:** I	**1:** -
2: 2	**2:** 0.5	**2:** BK/GY	**2:** 2379	**2:** Object Sensor Low Reference	**2:** I	**2:** -
3: 3	**3:** 0.5	**3:** YE/VT	**3:** 2378	**3:** Right Rear Corner Object Sensor Signal	**3:** I	**3:** -

B80 PARK BRAKE SWITCH

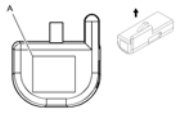

Connector Part Information

- Harness Type: Body
- OEM Connector: 12047682
- Service Connector: 12101850
- Description: 1-Way Female (BK)

Terminal Part Information

Terminal Type ID	Terminated Lead	Diagnostic Test Probe	Terminal Removal Tool	Service Terminal	Tray	Core Crimp	Insulation Crimp

I	13575464	J-35616-14 (GN)	J-38125-12A	15326030	5	E	C

B80 Park Brake Switch

Pin	Size	Color	Circuit	Function	Terminal Type ID	Option
A: A	**A:** 0.5	**A:** D-BU/VT	**A:** 1134	**A:** Park Brake Switch Signal	**A:** I	**A:** -

B87 REARVIEW CAMERA (UVC)

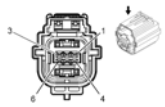

Connector Part Information

- Harness Type: License Lamp
- OEM Connector: 13629704
- Service Connector: Service by Harness - See Part Catalog
- Description: 6-Way F 0.64 Series, Sealed (GY)

Terminal Part Information

Terminal Type ID	Terminated Lead	Diagnostic Test Probe	Terminal Removal Tool	Service Terminal	Tray	Core Crimp	Insulation Crimp
I	13327120	J-35616-64B (L-BU)	J-38125-215A	SAIT-A03T - M064	23	P	P

B87 Rearview Camera (UVC)

Pin	Size	Color	Circuit	Function	Terminal Type ID	Option
1: 1	**1:** 0.35	**1:** GY/YE	**1:** 6972	**1:** Camera Signal #2 +	**1:** I	**1:** -
2: 2	**2:** 0.5	**2:** GY	**2:** 7069	**2:** Camera Shield Extension	**2:** I	**2:** -
3: 3	**3:** 0.35	**3:** L-GN/WH	**3:** 24	**3:** Backup Lamp Supply Voltage	**3:** I	**3:** -
4: 4	**4:** 0.35	**4:** WH/BU	**4:** 6973	**4:** Camera Signal #2	**4:** I	**4:** -
5: 5	**5:** 0.35	**5:** BK	**5:** 2350	**5:** Ground	**5:** I	**5:** -
6: 6	**6:** 0.35	**6:** VT/BK	**6:** 339	**6:** Run/Crank Ignition 1 Voltage	**6:** I	**6:** -

B88D SEAT BELT SWITCH - DRIVER

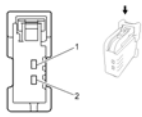

Connector Part Information

- Harness Type: Driver Seat
- OEM Connector: 6098-5510
- Service Connector: 13584097
- Description: 2-Way F 0.64 Series (BK)

Terminal Part Information

Terminal Type ID	Terminated Lead	Diagnostic Test Probe	Terminal Removal Tool	Service Terminal	Tray	Core Crimp	Insulation Crimp
I	13575855	J-35616-2A (GY)	J-38125-553	8240-0127	22	E	C

B88D Seat Belt Switch - Driver

Pin	Size	Color	Circuit	Function	Terminal Type ID	Option
1: 1	**1:** 0.5	**1:** RD	**1:** 238	**1:** Driver Seat Belt Switch Signal	**1:** I	**1:** -
2: 2	**2:** 0.5	**2:** BK	**2:** 1363	**2:** Driver Seat Belt Switch Low Reference	**2:** I	**2:** -

B88P SEAT BELT SWITCH - PASSENGER

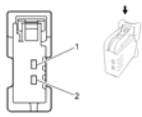

Connector Part Information

- Harness Type: Driver Seat
- OEM Connector: 6098-5510
- Service Connector: 13584097
- Description: 2-Way F 0.64 Series (BK)

Terminal Part Information

Terminal Type ID	Terminated Lead	Diagnostic Test Probe	Terminal Removal Tool	Service Terminal	Tray	Core Crimp	Insulation Crimp
I	13575855	J-35616-2A	J-38125-553	8240-0127	22	E	C

		(GY)					

B88P Seat Belt Switch - Passenger

Pin	Size	Color	Circuit	Function	Terminal Type ID	Option
1: 1	**1:** 0.5	**1:** RD	**1:** 1362	**1:** Passenger Seat Belt Switch Signal	**1:** I	**1:** -
2: 2	**2:** 0.5	**2:** BK	**2:** 1361	**2:** Passenger Seat Belt Switch Low Reference	**2:** I	**2:** -

B99 STEERING WHEEL ANGLE SENSOR (FX3)

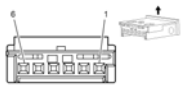

Connector Part Information

- Harness Type: Instrument Panel
- OEM Connector: 1-1241370-3
- Service Connector: 13505903
- Description: 6-Way F 0.64 MQS Series (BK)

Terminal Part Information

Terminal Type ID	Terminated Lead	Diagnostic Test Probe	Terminal Removal Tool	Service Terminal	Tray	Core Crimp	Insulation Crimp
I	13575737	J-35616-64B (L-BU)	J-38125-12A	928999-5	15	J	J

B99 Steering Wheel Angle Sensor (FX3)

Pin	Size	Color	Circuit	Function	Terminal Type ID	Option
1: 1	**1:** 0.5	**1:** WH	**1:** 6106	**1:** High Speed GMLAN Serial Data -	**1:** I	**1:** -
2: 2	**2:** 0.5	**2:** WH	**2:** 6106	**2:** High Speed GMLAN Serial Data -	**2:** I	**2:** -
3: 3	**3:** 0.5	**3:** D-BU/YE	**3:** 6105	**3:** High Speed GMLAN Serial Data +	**3:** I	**3:** -
4: 4	**4:** 0.5	**4:** D-BU/YE	**4:** 6105	**4:** High Speed GMLAN Serial Data +	**4:** I	**4:** -
5: 5	**5:** 0.5	**5:** L-GN/BN	**5:** 2087	**5:** 12 Volt Reference	**5:** I	**5:** -
6: 6	**6:** 0.5	**6:** BK	**6:** 1650	**6:** Ground	**6:** I	**6:** -

B107 ACCELERATOR PEDAL POSITION SENSOR

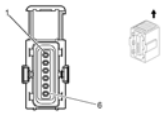

Connector Part Information

- Harness Type: Instrument Panel
- OEM Connector: 15383136
- Service Connector: 13580116
- Description: 6-Way F 1.2 Micro Timer Series, Sealed (BK)

Terminal Part Information

Terminal Type ID	Terminated Lead	Diagnostic Test Probe	Terminal Removal Tool	Service Terminal	Tray	Core Crimp	Insulation Crimp
I	13576269	J-35616-14 (GN)	J-38125-560	4-969005-1	16	E	1

B107 Accelerator Pedal Position Sensor

Pin	Size	Color	Circuit	Function	Terminal Type ID	Option
1: 1	**1:** 0.5	**1:** BN/RD	**1:** 1274	**1:** Accelerator Pedal Position 5 Volt Reference (2)	**1:** I	**1:** -
2: 2	**2:** 0.5	**2:** WH/RD	**2:** 1164	**2:** Accelerator Pedal Position 5 Volt Reference (1)	**2:** I	**2:** -
3: 3	**3:** 0.5	**3:** YE/WH	**3:** 1161	**3:** Accelerator Pedal Position Signal (1)	**3:** I	**3:** -
4: 4	**4:** 0.5	**4:** BK/D-BU	**4:** 1271	**4:** Accelerator Pedal Position Low Reference (1)	**4:** I	**4:** -
5: 5	**5:** 0.5	**5:** BK/VT	**5:** 1272	**5:** Accelerator Pedal Position Low Reference (2)	**5:** I	**5:** -
6: 6	**6:** 0.5	**6:** L-GN/WH	**6:** 1162	**6:** Accelerator Pedal Position Signal (2)	**6:** I	**6:** -

B108 AIR QUALITY SENSOR (C68)

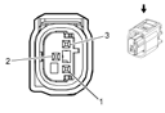

Connector Part Information

- Harness Type: Forward Lamp
- OEM Connector: 15324236
- Service Connector: 13584422
- Description: 3-Way F (BK)

Terminal Part Information

Terminal Type ID	Terminated Lead	Diagnostic Test Probe	Terminal Removal Tool	Service Terminal	Tray	Core Crimp	Insulation Crimp
I	13576395	J-35616-64B (L-BU)	J-38125-12A	962885-5	15	6	6

B108 Air Quality Sensor (C68)

Pin	Size	Color	Circuit	Function	Terminal Type ID	Option
1: 1	**1:** 0.5	**1:** VT/D-GN	**1:** 1339	**1:** Ignition Voltage	**1:** I	**1:** -
2: 2	**2:** 0.5	**2:** BK	**2:** 1350	**2:** Ground	**2:** I	**2:** -
3: 3	**3:** 0.5	**3:** VT/WH	**3:** 5203	**3:** Air Quality Sensor Signal	**3:** I	**3:** -

B115 VEHICLE SPEED SENSOR (MF3 OR MZ0)

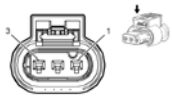

Connector Part Information

- Harness Type: Engine
- OEM Connector: 55564249
- Service Connector: 13574937
- Description: 3-Way F MLK 1.2 Series, Sealed (BK)

Terminal Part Information

Terminal Type ID	Terminated Lead	Diagnostic Test Probe	Terminal Removal Tool	Service Terminal	Tray	Core Crimp	Insulation Crimp
I	Not Stocked in Kit	J-35616-16 (L-GN)	J-38125-21	Not Available	Not Available	Not Available	Not Available

B115 Vehicle Speed Sensor (MF3 or MZ0)

Pin	Size	Color	Circuit	Function	Terminal Type ID	Option

1: 1	**1:** 0.5 **1:** 0.5	**1:** GY/BK **1:** WH/BK	**1:** 3096 **1:** 3096	**1:** 5 Volt Reference **1:** 5 Volt Reference	**1:** I	**1:** LUJ **1:** LUW
2: 2	**2:** 0.5 **2:** 1	**2:** WH/BK **2:** GY/BK	**2:** 3097 **2:** 3097	**2:** Low Reference **2:** Low Reference	**2:** I	**2:** LUJ **2:** LUW
3: 3	**3:** 0.5 **3:** 0.5	**3:** D-GN **3:** L-GN	**3:** 3098 **3:** 3098	**3:** Output Speed **3:** Output Speed	**3:** I	**3:** Digital) Signal (LUJ **3:** Digital) Signal (LUW

B119 MULTI-AXIS ACCELERATION SENSOR (FX3)

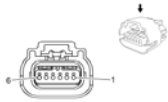

Connector Part Information

- Harness Type: Body
- OEM Connector: 13677844
- Service Connector: 13355767
- Description: 6-Way F Micro 064 Series, Sealed (BK)

Terminal Part Information

Terminal Type ID	Terminated Lead	Diagnostic Test Probe	Terminal Removal Tool	Service Terminal	Tray	Core Crimp	Insulation Crimp
I	13575528	J-35616-64B (L-BU)	J-38125-21	15359541	4	M	M

B119 Multi-Axis Acceleration Sensor (FX3)

Pin	Size	Color	Circuit	Function	Terminal Type ID	Option
1: 1	**1:** 0.5	**1:** WH	**1:** 6106	**1:** High Speed GMLAN Serial Data (-) (2)	**1:** I	**1:** -
2	-	-	-	Not Occupied	-	-
3: 3	**3:** 0.5	**3:** D-BU/YE	**3:** 6105	**3:** High Speed GMLAN Serial Data (+) (2)	**3:** I	**3:** -
4	-	-	-	Not Occupied	-	-
5: 5	**5:** 0.5	**5:** D-GN/BN	**5:** 2087	**5:** Combined Vehicle Inertial Sensor Supply Voltage	**5:** I	**5:** -
6: 6	**6:** 0.5	**6:** GY/RD	**6:** 1337	**6:** Ground	**6:** I	**6:** -

B150 FUEL TANK PRESSURE SENSOR

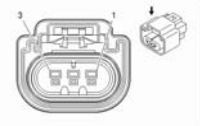

Connector Part Information

- Harness Type: Fuel Tank
- OEM Connector: 88988720
- Service Connector: 13580873
- Description: 3-Way F GT 150 Series, Sealed (GY)

Terminal Part Information

Terminal Type ID	Terminated Lead	Diagnostic Test Probe	Terminal Removal Tool	Service Terminal	Tray	Core Crimp	Insulation Crimp
I	13575412	J-35616-2A (GY)	J-38125-553	12191819	8	E	1

B150 Fuel Tank Pressure Sensor

Pin	Size	Color	Circuit	Function	Terminal Type ID	Option
1: 1	**1:** 0.5	**1:** D-BU/WH	**1:** 890	**1:** Fuel Tank Pressure Sensor Signal	**1:** I	**1:** -
2: 2	**2:** 0.5	**2:** BK/WH	**2:** 6281	**2:** Low Reference	**2:** I	**2:** -
3: 3	**3:** 0.5	**3:** BN/RD	**3:** 2709	**3:** 5 Volt Reference	**3:** I	**3:** -

B160 WINSHIELD TEMPERATURE AND INSIDE MOISTURE SENSOR (C68)

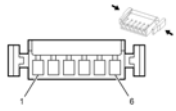

Connector Part Information

- Harness Type: Headliner
- OEM Connector: 13726957
- Service Connector: 13576539
- Description: 6-Way F 0.64 Micro Quadlok Series (BK)

Terminal Part Information

Terminal Type ID	Terminated Lead	Diagnostic Test Probe	Terminal Removal Tool	Service Terminal	Tray	Core Crimp	Insulation Crimp
I	13575782	J-35616-64B	J-38125-	928999-5	15	H	H

		(L-BU)	12A				

B160 Winshield Temperature and Inside Moisture Sensor (C68)

Pin	Size	Color	Circuit	Function	Terminal Type ID	Option
1: 1	**1:** 0.35	**1:** YE/RD	**1:** 597	**1:** 5 Volt Reference	**1:** I	**1:** -
2: 2	**2:** 0.35	**2:** GY/D-BU	**2:** 7564	**2:** Humidity Sensor Signal	**2:** I	**2:** -
3: 3	**3:** 0.35	**3:** BK/D-BU	**3:** 7566	**3:** Ground	**3:** I	**3:** -
4: 4	**4:** 0.35	**4:** GY/D-GN	**4:** 7565	**4:** Windscreen Temp Sensor Signal	**4:** I	**4:** -
5: 5	**5:** 0.35	**5:** YE/D-BU	**5:** 3197	**5:** Humidity Temperature Sensor Signal	**5:** I	**5:** -
6	-	-	-	Not Occupied	-	-

E2LF SIDE MARKER LAMP - LEFT FRONT

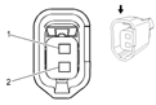

Connector Part Information

- Harness Type: Forward Lamp
- OEM Connector: 13627828
- Service Connector: 13581089
- Description: 2-Way F Bulb Socket (L-GY)

Terminal Part Information

Terminal Type ID	Terminated Lead	Diagnostic Test Probe	Terminal Removal Tool	Service Terminal	Tray	Core Crimp	Insulation Crimp
I	13576389	J-35616-2A (GY)	J-38125-11A	7116-4102-08	9	E	1

E2LF Side Marker Lamp - Left Front

Pin	Size	Color	Circuit	Function	Terminal Type ID	Option
1: 1	**1:** 0.5	**1:** VT/GY	**1:** 709	**1:** Left Park Lamp Control	**1:** I	**1:** -
2: 2	**2:** 0.5	**2:** BK	**2:** 1150	**2:** Ground	**2:** I	**2:** -

E2RF SIDE MARKER LAMP - RIGHT FRONT

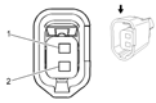

Connector Part Information

- Harness Type: Forward Lamp
- OEM Connector: 13627828
- Service Connector: 13581089
- Description: 2-Way F Bulb Socket (L-GY)

Terminal Part Information

Terminal Type ID	Terminated Lead	Diagnostic Test Probe	Terminal Removal Tool	Service Terminal	Tray	Core Crimp	Insulation Crimp
I	13576389	J-35616-2A (GY)	J-38125-11A	7116-4102-08	9	E	1

E2RF Side Marker Lamp - Right Front

Pin	Size	Color	Circuit	Function	Terminal Type ID	Option
1: 1	**1:** 0.5	**1:** GY/BN	**1:** 309	**1:** Right Park Lamp Control	**1:** I	**1:** -
2: 2	**2:** 0.5	**2:** BK	**2:** 1050	**2:** Ground	**2:** I	**2:** -

E4LR TURN SIGNAL LAMP - LEFT REAR

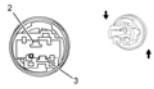

Connector Part Information

- Harness Type: Left Tail Lamp
- OEM Connector: Pending
- Service Connector: Service by Harness - See Part Catalog
- Description: 3-Way F Bulb Socket Sealed (NA)

Terminal Part Information

Terminal Type ID	Terminated Lead	Diagnostic Test Probe	Terminal Removal Tool	Service Terminal	Tray	Core Crimp	Insulation Crimp
I	Service by Harness - See Part	Pending	Not Available	Service by Harness - See Part	Service by Harness - See Part	Not Available	Not Available

	Catalog			Catalog	Catalog		

E4LR Turn Signal Lamp - Left Rear

Pin	Size	Color	Circuit	Function	Terminal Type ID	Option
1	-	-	-	Not Occupied	-	-
2: 2	**2:** 0.5	**2:** YE	**2:** 1334	**2:** Left Rear Turn Signal Lamp Control	**2:** I	**2:** -
3: 3	**3:** 0.5	**3:** BK/WH	**3:** 2550	**3:** Ground	**3:** I	**3:** -

E4RR TURN SIGNAL LAMP - RIGHT REAR

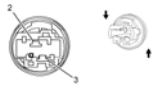

Connector Part Information

- Harness Type: Right Tail Lamp
- OEM Connector: Pending
- Service Connector: Service by Harness - See Part Catalog
- Description: 3-Way F Bulb Socket, Sealed (NA)

Terminal Part Information

Terminal Type ID	Terminated Lead	Diagnostic Test Probe	Terminal Removal Tool	Service Terminal	Tray	Core Crimp	Insulation Crimp
I	Service by Harness - See Part Catalog	Pending	Not Available	Service by Harness - See Part Catalog	Service by Harness - See Part Catalog	Not Available	Not Available

E4RR Turn Signal Lamp - Right Rear

Pin	Size	Color	Circuit	Function	Terminal Type ID	Option
1	-	-	-	Not Occupied	-	-
2: 2	**2:** 0.5	**2:** YE	**2:** 1335	**2:** Right Rear Turn Signal Lamp Control	**2:** I	**2:** -
3: 3	**3:** 0.5	**3:** BK/WH	**3:** 2550	**3:** Ground	**3:** I	**3:** -

E4N PARK/TURN SIGNAL LAMP - LEFT

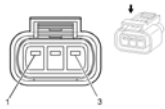

Connector Part Information

- Harness: Forward Lamp
- OEM: 13597525
- Service: Pending
- Description: 3-Way F (WH/BK)

Terminal Part Information

Terminal Type ID	Terminated Lead	Diagnostic Test Probe	Terminal Removal Tool
I	Service by Harness - See Part Catalog	J-35616-18 (BK)	J-38125-553

E4N Park/Turn Signal Lamp - Left

Pin	Size	Color	Circuit	Function	Terminal Type ID	Option
1: 1	**1:** 0.5	**1:** D-BU/WH	**1:** 1314	**1:** Left Front Turn Signal Lamp Control	**1:** I	**1:** -
2: 2	**2:** 0.5	**2:** BK	**2:** 50	**2:** Ground	**2:** I	**2:** -
3: 3	**3:** 0.5	**3:** VT/GY	**3:** 709	**3:** Left Park Lamp Control	**3:** I	**3:** -

E4P PARK/TURN SIGNAL LAMP - RIGHT

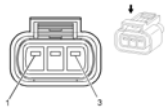

Connector Part Information

- Harness: Forward Lamp
- OEM: 13597525
- Service: Pending
- Description: 3-Way F (WH/BK)

Terminal Part Information

Terminal Type ID	Terminated Lead	Diagnostic Test Probe	Terminal Removal Tool
I	Service by Harness - See Part Catalog	J-35616-18 (BK)	J-38125-553

E4P Park/Turn Signal Lamp - Right

Pin	Size	Color	Circuit	Function	Terminal Type ID	Option
1: 1	**1:** 0.5	**1:** D-GN/VT	**1:** 1315	**1:** Right Front Turn Signal Lamp Control	**1:** I	**1:** -
2: 2	**2:** 0.5	**2:** BK	**2:** 50	**2:** Ground	**2:** I	**2:** -
3: 3	**3:** 0.5	**3:** GY/BN	**3:** 309	**3:** Right Park Lamp Control	**3:** I	**3:** -

E5A BACKUP LAMP - LEFT



Connector Part Information

- Harness Type: Left Tail Lamp
- OEM Connector: Pending
- Service Connector: Service by Harness - See Part Catalog
- Description: 2-Way F Bulb Socket, Sealed (GY)

Terminal Part Information

Terminal Type ID	Terminated Lead	Diagnostic Test Probe	Terminal Removal Tool	Service Terminal	Tray	Core Crimp	Insulation Crimp
I	Service by Harness - See Part Catalog	Pending	Not Available	Service by Harness - See Part Catalog	Service by Harness - See Part Catalog	Not Available	Not Available

E5A Backup Lamp - Left

Pin	Size	Color	Circuit	Function	Terminal Type ID	Option
1: 1	**1:** 0.5	**1:** WH	**1:** 1324	**1:** Backup Lamp Control	**1:** I	**1:** -
2: 2	**2:** 0.5	**2:** BK/WH	**2:** 2550	**2:** Ground	**2:** I	**2:** -

2013 ELECTRICAL

Wiring Systems and Power Management - Component Locator - Component Connector End Views - Cruze

COMPONENT CONNECTOR END VIEWS

E5AA TAIL/STOP LAMP - LEFT

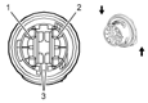

Connector Part Information

- Harness Type: Left Tail Lamp
- OEM Connector: 3235
- Service Connector: 13355733
- Description: 3-Way F Bulb Socket, Sealed (BK)

Terminal Part Information

Terminal Type ID	Terminated Lead	Diagnostic Test Probe	Terminal Removal Tool	Service Terminal	Tray	Core Crimp	Insulation Crimp
I	Service by Harness - See Part Catalog	Pending	Not Available	Service by Harness - See Part Catalog	Service by Harness - See Part Catalog	Not Available	Not Available

E5AA Tail/Stop Lamp - Left

Pin	Size	Color	Circuit	Function	Terminal Type ID	Option
1: 1	**1:** 0.5	**1:** RD	**1:** 7542	**1:** Left Rear Stop Lamp Supply Voltage	**1:** I	**1:** -
2: 2	**2:** 0.5	**2:** D-BU	**2:** 709	**2:** Left Park Lamp Control	**2:** I	**2:** -
3: 3	**3:** 1	**3:** BK	**3:** 2550	**3:** Ground	**3:** I	**3:** -

E5AB TAIL/STOP LAMP - RIGHT

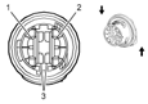

Connector Part Information

- Harness Type: Right Tail Lamp
- OEM Connector: 3235
- Service Connector: 13355733
- Description: 3-Way F Bulb Socket, Sealed (BK)

Terminal Part Information

Terminal Type ID	Terminated Lead	Diagnostic Test Probe	Terminal Removal Tool	Service Terminal	Tray	Core Crimp	Insulation Crimp
I	Service by Harness - See Part Catalog	Pending	Not Available	Service by Harness - See Part Catalog	Service by Harness - See Part Catalog	Not Available	Not Available

E5AB Tail/Stop Lamp - Right

Pin	Size	Color	Circuit	Function	Terminal Type ID	Option
1: 1	**1:** 0.5	**1:** RD	**1:** 7541	**1:** Right Rear Stop Lamp Supply Voltage	**1:** I	**1:** -
2: 2	**2:** 0.5	**2:** D-BU	**2:** 309	**2:** Right Park Lamp Control	**2:** I	**2:** -
3: 3	**3:** 1	**3:** BK	**3:** 2550	**3:** Ground	**3:** I	**3:** -

E5B BACKUP LAMP - RIGHT



Connector Part Information

- Harness Type: Right Tail Lamp
- OEM Connector: Pending
- Service Connector: Service by Harness - See Part Catalog
- Description: 2-Way F Bulb Socket, Sealed (GY)

Terminal Part Information

Terminal Type ID	Terminated Lead	Diagnostic Test Probe	Terminal Removal Tool	Service Terminal	Tray	Core Crimp	Insulation Crimp
I	Service by Harness - See Part Catalog	Pending	Not Available	Service by Harness - See Part Catalog	Service by Harness - See Part Catalog	Not Available	Not Available

E5B Backup Lamp - Right

Pin	Size	Color	Circuit	Function	Terminal Type ID	Option
1: 1	**1:** 0.5	**1:** WH	**1:** 1324	**1:** Backup Lamp Control	**1:** I	**1:** -
2: 2	**2:** 0.5	**2:** BK	**2:** 2550	**2:** Ground	**2:** I	**2:** -

E5E TAIL LAMP - LEFT

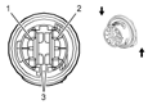

Connector Part Information

- Harness Type: Left Inner Tail Lamp
- OEM Connector: 3233
- Service Connector: Service by Harness - See Part Catalog
- Description: 3-Way F Bulb Socket, Sealed (GN)

Terminal Part Information

Terminal Type ID	Terminated Lead	Diagnostic Test Probe	Terminal Removal Tool	Service Terminal	Tray	Core Crimp	Insulation Crimp
I	Service by Harness - See Part Catalog	Pending	Not Available	Service by Harness - See Part Catalog	Service by Harness - See Part Catalog	Not Available	Not Available

E5E Tail Lamp - Left

Pin	Size	Color	Circuit	Function	Terminal Type ID	Option
1	-	-	-	Not Occupied	-	-
2: 2	**2:** 0.5	**2:** D-BU	**2:** 709	**2:** Left Park Lamp Control	**2:** I	**2:** -
3: 3	**3:** 0.5	**3:** BK	**3:** 2550	**3:** Ground	**3:** I	**3:** -

E5F TAIL LAMP - RIGHT

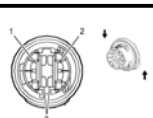

Connector Part Information

- Harness Type: Right Inner Tail Lamp

- OEM Connector: 3233
- Service Connector: Service by Harness - See Part Catalog
- Description: 3-Way F Bulb Socket, Sealed (GN)

Terminal Part Information

Terminal Type ID	Terminated Lead	Diagnostic Test Probe	Terminal Removal Tool	Service Terminal	Tray	Core Crimp	Insulation Crimp
I	Service by Harness - See Part Catalog	Pending	Not Available	Service by Harness - See Part Catalog	Service by Harness - See Part Catalog	Not Available	Not Available

E5F Tail Lamp - Right

Pin	Size	Color	Circuit	Function	Terminal Type ID	Option
1	-	-	-	Not Occupied	-	-
2: 2	**2:** 0.5	**2:** D-BU	**2:** 309	**2:** Right Park Lamp Control	**2:** I	**2:** -
3: 3	**3:** 0.5	**3:** BK	**3:** 2550	**3:** Ground	**3:** I	**3:** -

E6 CENTER HIGH MOUNTED STOP LAMP

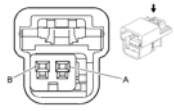

Connector Part Information

- Harness Type: Body
- OEM Connector: 15332129
- Service Connector: 15306425
- Description: 2-Way F GT 150 Series (BK)

Terminal Part Information

Terminal Type ID	Terminated Lead	Diagnostic Test Probe	Terminal Removal Tool	Service Terminal	Tray	Core Crimp	Insulation Crimp
I	13575735	J-35616-2A (GY)	J-38125-553	12191812	19	E	C

E6 Center High Mounted Stop Lamp

Pin	Size	Color	Circuit	Function	Terminal Type ID	Option

A: A	**A:** 0.5	**A:** VT/WH	**A:** 5065	**A:** Stop Lamp Relay Coil Control	**A:** I	**A:** -
B: B	**B:** 0.5	**B:** BK	**B:** 650	**B:** Ground	**B:** I	**B:** -

E7L LICENSE PLATE LAMP - LEFT

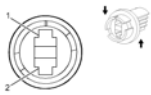

Connector Part Information

- Harness Type: License Lamp
- OEM Connector: Pending
- Service Connector: Service By Harness
- Description: 2-Way F Bulb Socket, Sealed (GY)

Terminal Part Information

Terminal Type ID	Terminated Lead	Diagnostic Test Probe	Terminal Removal Tool	Service Terminal	Tray	Core Crimp	Insulation Crimp
I	Service by Harness - See Part Catalog	Pending	Not Available	Service by Harness - See Part Catalog	Service by Harness - See Part Catalog	Not Available	Not Available

E7L License Plate Lamp - Left

Pin	Size	Color	Circuit	Function	Terminal Type ID	Option
1: 1	**1:** 0.5	**1:** BK/WH	**1:** 2550	**1:** Ground	**1:** I	**1:** -
2: 2	**2:** 0.5	**2:** WH	**2:** 6846	**2:** Rear License Lamp Supply Voltage	**2:** I	**2:** -

E7R LICENSE PLATE LAMP - RIGHT

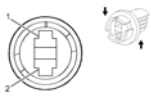

Connector Part Information

- Harness Type: License Lamp
- OEM Connector: Pending
- Service Connector: Service By Harness

- Description: 2-Way F Bulb Socket, Sealed (GY)

Terminal Part Information

Terminal Type ID	Terminated Lead	Diagnostic Test Probe	Terminal Removal Tool	Service Terminal	Tray	Core Crimp	Insulation Crimp
I	Service by Harness - See Part Catalog	Pending	Not Available	Service by Harness - See Part Catalog	Service by Harness - See Part Catalog	Not Available	Not Available

E7R License Plate Lamp - Right

Pin	Size	Color	Circuit	Function	Terminal Type ID	Option
1: 1	**1:** 0.5	**1:** BK/WH	**1:** 2550	**1:** Ground	**1:** I	**1:** -
2: 2	**2:** 0.5	**2:** WH	**2:** 6846	**2:** Rear License Lamp Supply Voltage	**2:** I	**2:** -

E8S REAR COMPARTMENT COURTESY LAMP

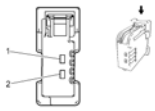

Connector Part Information

- Harness Type: Body
- OEM Connector: 13595207
- Service Connector: 13584097
- Description: 2-Way F 0.64 Series (BK)

Terminal Part Information

Terminal Type ID	Terminated Lead	Diagnostic Test Probe	Terminal Removal Tool	Service Terminal	Tray	Core Crimp	Insulation Crimp
I	13575855	J-35616-2A (GY)	J-38125-553	8240-0127	22	E	C

E8S Rear Compartment Courtesy Lamp

Pin	Size	Color	Circuit	Function	Terminal Type ID	Option
1: 1	**1:** 0.5	**1:** D-GN/GY	**1:** 737	**1:** Trunk Lamp Control	**1:** I	**1:** -
2: 2	**2:** 0.5	**2:** BK	**2:** 2350	**2:** Ground	**2:** I	**2:** -

E13L HEADLAMP - LEFT

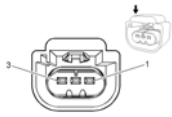

Connector Part Information

- Harness Type: Forward Lamp
- OEM Connector: 13511136
- Service Connector: 13584279
- Description: 3-Way F GT 150 Series, Sealed (GN)

Terminal Part Information

Terminal Type ID	Terminated Lead	Diagnostic Test Probe	Terminal Removal Tool	Service Terminal	Tray	Core Crimp	Insulation Crimp
I	13578879	J-35616-2A (GY)	J-38125-553	12191819	8	2	1
II	13578879	J-35616-2A (GY)	J-38125-553	12191819	8	C	1

E13L Headlamp - Left

Pin	Size	Color	Circuit	Function	Terminal Type ID	Option
1: 1	**1:** 1	**1:** YE	**1:** 712	**1:** Left Headlamp Low Beam Control	**1:** I	**1:** -
2: 2	**2:** 1.5	**2:** BK	**2:** 1150	**2:** Ground	**2:** II	**2:** -
3: 3	**3:** 1.5	**3:** WH	**3:** 711	**3:** Left Headlamp High Beam Control	**3:** II	**3:** -

E13R HEADLAMP - RIGHT

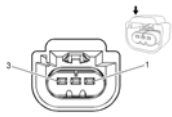

Connector Part Information

- Harness Type: Forward Lamp
- OEM Connector: 13511136
- Service Connector: 13584279
- Description: 3-Way F GT 150 Series, Sealed (GN)

Terminal Part Information

Terminal Type ID	Terminated Lead	Diagnostic Test Probe	Terminal Removal Tool	Service Terminal	Tray	Core Crimp	Insulation Crimp
I	13578879	J-35616-2A (GY)	J-38125-553	12191819	8	2	1
II	13578879	J-35616-2A (GY)	J-38125-553	12191819	8	C	1

E13R Headlamp - Right

Pin	Size	Color	Circuit	Function	Terminal Type ID	Option
1: 1	**1:** 1	**1:** YE	**1:** 312	**1:** Right Headlamp Low Beam Control	**1:** I	**1:** -
2: 2	**2:** 1.5	**2:** BK	**2:** 1050	**2:** Ground	**2:** II	**2:** -
3: 3	**3:** 1.5	**3:** WH	**3:** 311	**3:** Right Headlamp High Beam Control	**3:** II	**3:** -

E14A SEAT HEATING ELEMENT - DRIVER BACK (KA1)

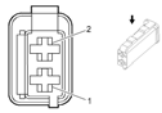

Connector Part Information

- Harness: Driver Seat Cushion Heater
- OEM: Pending
- Service Connector: Service by Harness - See Part Catalog
- Description: 2-Way M (BK)

Terminal Part Information

Terminal Type ID	Terminated Lead	Diagnostic Test Probe	Terminal Removal Tool
I	Pending	Pending	Pending

E14A Seat Heating Element - Driver Back (KA1)

Pin	Size	Color	Circuit	Function	Terminal Type ID	Option
1: 1	**1:** 1	**1:** GN	**1:** 2020	**1:** Driver Heated Back Element Return	**1:** I	**1:** -
2: 2	**2:** 1	**2:** BK	**2:** 2424	**2:** Driver Heated Seat Element Control	**2:** I	**2:** -

E14B SEAT HEATING ELEMENT - DRIVER CUSHION (KA1)

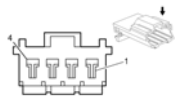

Connector Part Information

- Harness Type: Driver Seat
- OEM Connector: MG620397
- Service Connector: Service by Harness- See Part Catalog
- Description: 4-Way M 090-II Series (NA)

Terminal Part Information

Terminal Type ID	Terminated Lead	Diagnostic Test Probe	Terminal Removal Tool	Service Terminal	Tray	Core Crimp	Insulation Crimp
I	Service by Harness- See Part Catalog	Pending	Not Available	Service by Harness- See Part Catalog	Service by Harness- See Part Catalog	Not Available	Not Available

E14B Seat Heating Element - Driver Cushion (KA1)

Pin	Size	Color	Circuit	Function	Terminal Type ID	Option
1: 1	**1:** 2.5	**1:** YE	**1:** 2077	**1:** Driver Heated Seat Element Supply Voltage	**1:** I	**1:** -
2: 2	**2:** 0.5	**2:** RD	**2:** 2079	**2:** Driver Heated Seat NTC Signal	**2:** I	**2:** -
3: 3	**3:** 0.5	**3:** BK	**3:** 2080	**3:** Driver Heated Seat NTC Low Reference	**3:** I	**3:** -
4: 4	**4:** 0.5	**4:** BK	**4:** 2078	**4:** Driver Heated Seat Element Return	**4:** I	**4:** -

E14C SEAT HEATING ELEMENT - PASSENGER BACK (KA1)

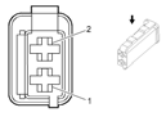

Connector Part Information

- Harness: Passenger Seat Cushion Heater
- OEM: Pending
- Service Connector: Service by Harness - See Part Catalog

- Description: Pending

Terminal Part Information

Terminal Type ID	Terminated Lead	Diagnostic Test Probe	Terminal Removal Tool
I	Pending	Pending	Pending

E14C Seat Heating Element - Passenger Back (KA1)

Pin	Size	Color	Circuit	Function	Terminal Type ID	Option
1: 1	**1:** 1	**1:** GN	**1:** 2019	**1:** Passenger Heated Back Element Return	**1:** I	**1:** -
2: 2	**2:** 1	**2:** BK	**2:** 2433	**2:** Passenger Heated Seat Element Control	**2:** I	**2:** -

E14D SEAT HEATING ELEMENT - PASSENGER CUSHION (KA1)

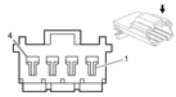

Connector Part Information

- Harness Type: Passenger Seat
- OEM Connector: MG620397
- Service Connector: Service by Harness- See Part Catalog
- Description: 4-Way M 090-II Series (NA)

Terminal Part Information

Terminal Type ID	Terminated Lead	Diagnostic Test Probe	Terminal Removal Tool	Service Terminal	Tray	Core Crimp	Insulation Crimp
I	Service by Harness- See Part Catalog	Pending	Not Available	Service by Harness- See Part Catalog	Service by Harness- See Part Catalog	Not Available	Not Available

E14D Seat Heating Element - Passenger Cushion (KA1)

Pin	Size	Color	Circuit	Function	Terminal Type ID	Option
1: 1	**1:** 2.5	**1:** BN/BU	**1:** 2479	**1:** Driver Heated Seat Element Supply Voltage	**1:** I	**1:** -
2: 2	**2:** 0.5	**2:** BK/VT	**2:** 2480	**2:** Driver Heated Seat Element Return	**2:** I	**2:** -
				3: Driver Heated Seat NTC		

3: 3	**3:** 0.5	**3:** BK/GY	**3:** 2435	Low Reference	**3:** I	**3:** -
4: 4	**4:** 0.5	**4:** WT/GY	**4:** 2434	**4:** Passenger Heated Seat NTC Signal	**4:** I	**4:** -

E18 REAR DEFOGGER X1

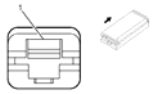

Connector Part Information

- Harness Type: Body
- OEM Connector: 12131240
- Service Connector: 13580102
- Description: 1-Way F (BK)

Terminal Part Information

Terminal Type ID	Terminated Lead	Diagnostic Test Probe	Terminal Removal Tool	Service Terminal	Tray	Core Crimp	Insulation Crimp
I	Service by Connector Assembly - 13580102	J-38125-12A	J-35616-42 (RD)	Not Available	Not Available	Not Available	Not Available

E18 Rear Defogger X1

Pin	Size	Color	Circuit	Function	Terminal Type ID	Option
1: 1	**1:** 4	**1:** BN/VT	**1:** 293	**1:** Rear Defog Element Supply Voltage	**1:** I	**1:** -

E18 REAR DEFOGGER X2

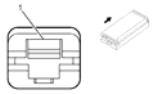

Connector Part Information

- Harness Type: Body
- OEM Connector: 12131240
- Service Connector: 13580102
- Description: 1-Way F (BK)

Terminal Part Information

Terminal Type ID	Terminated Lead	Diagnostic Test Probe	Terminal Removal Tool	Service Terminal	Tray	Core Crimp	Insulation Crimp
I	Service by Connector Assembly - 13580102	J-38125-12A	J-35616-42 (RD)	Not Available	Not Available	Not Available	Not Available

E18 Rear Defogger X2

Pin	Size	Color	Circuit	Function	Terminal Type ID	Option
1: 1	**1:** 4	**1:** BK	**1:** 1650	**1:** Ground	**1:** I	**1:** -

E27 INSTRUMENT PANEL COMPARTMENT LAMP

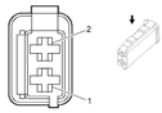

Connector Part Information

- Harness Type: Instrument Panel
- OEM Connector: 13670097
- Service Connector: 13580951
- Description: 2-Way F 1.6 Timer Series (BK)

Terminal Part Information

Terminal Type ID	Terminated Lead	Diagnostic Test Probe	Terminal Removal Tool	Service Terminal	Tray	Core Crimp	Insulation Crimp
I	13575760	J-35616-14 (GN)	J-38125-560	964274-2	16	E	1

E27 Instrument Panel Compartment Lamp

Pin	Size	Color	Circuit	Function	Terminal Type ID	Option
1: 1	**1:** 0.5	**1:** WH/BN	**1:** 6815	**1:** Inadvertent Power Control	**1:** I	**1:** -
2: 2	**2:** 0.5	**2:** BK	**2:** 1650	**2:** Ground	**2:** I	**2:** -

E29LF FOG LAMP - LEFT FRONT (T3U)

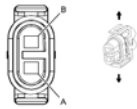

Connector Part Information

- Harness Type: Forward Lamp
- OEM Connector: 12124819
- Service Connector: 13584255
- Description: 2-Way F Metri-Pack 280 Series, Sealed (BK)

Terminal Part Information

Terminal Type ID	Terminated Lead	Diagnostic Test Probe	Terminal Removal Tool	Service Terminal	Tray	Core Crimp	Insulation Crimp
I	13575418	J-35616-4A (PU)	J-38125-11A	12077411	2	2	5

E29LF Fog Lamp - Left Front (T3U)

Pin	Size	Color	Circuit	Function	Terminal Type ID	Option
A: A	**A:** 0.75	**A:** BK	**A:** 1150	**A:** Ground	**A:** I	**A:** -
B: B	**B:** 0.75	**B:** BN/GY	**B:** 5061	**B:** Left Front Fog Lamp Supply Voltage	**B:** I	**B:** -

E29RF FOG LAMP - RIGHT FRONT (T3U)

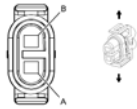

Connector Part Information

- Harness Type: Forward Lamp
- OEM Connector: 12124819
- Service Connector: 13584255
- Description: 2-Way F Metri-Pack 280 Series, Sealed (BK)

Terminal Part Information

Terminal Type ID	Terminated Lead	Diagnostic Test Probe	Terminal Removal Tool	Service Terminal	Tray	Core Crimp	Insulation Crimp
I	13575418	J-35616-4A (PU)	J-38125-11A	12077411	2	2	5

E29RF Fog Lamp - Right Front (T3U)

Pin	Size	Color	Circuit	Function	Terminal Type ID	Option
A: A	**A:** 0.75	**A:** BK	**A:** 1050	**A:** Ground	**A:** I	**A:** -
B: B	**B:** 0.75	**B:** BN/D-GN	**B:** 5062	**B:** Right Front Fog Lamp Supply Voltage	**B:** I	**B:** -

E32 CIGARETTE LIGHTER RECEPTACLE

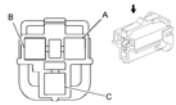

Connector Part Information

- Harness Type: Console
- OEM Connector: 12176836
- Service Connector: 19257374
- Description: 3-Way F Metri-Pack 280 Series (GY)

Terminal Part Information

Terminal Type ID	Terminated Lead	Diagnostic Test Probe	Terminal Removal Tool	Service Terminal	Tray	Core Crimp	Insulation Crimp
I	13575721	J-35616-4A (PU)	J-38125-553	12110844	4	C	A

E32 Cigarette Lighter Receptacle

Pin	Size	Color	Circuit	Function	Terminal Type ID	Option
A: A	**A:** 1	**A:** VT	**A:** 801	**A:** Retained Accessory Power Fuse Supply Voltage	**A:** I	**A:** -
B	-	-	-	Not Occupied	-	-
C: C	**C:** 1	**C:** BK	**C:** 1650	**C:** Ground	**C:** I	**C:** -

E37F DOME/READING LAMPS - FRONT

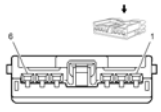

Connector Part Information

- Harness Type: Headliner

- OEM Connector: 13641551
- Service Connector: 13576538
- Description: 6-Way F 1.5 Series (BK)

Terminal Part Information

Terminal Type ID	Terminated Lead	Diagnostic Test Probe	Terminal Removal Tool	Service Terminal	Tray	Core Crimp	Insulation Crimp
I	13575790	J-35616-2A (GY)	J-38125-553	15496302	5	E	A

E37F Dome/Reading Lamps - Front

Pin	Size	Color	Circuit	Function	Terminal Type ID	Option
1: 1	**1:** 0.5	**1:** WH/BN	**1:** 6815	**1:** Inadvertent Power Control	**1:** I	**1:** -
2-5	-	-	-	Not Occupied	-	-
6: 6	**6:** 0.5	**6:** BK	**6:** 1550	**6:** Ground	**6:** I	**6:** -

E37M DOME/READING LAMPS - MIDDLE

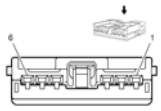

Connector Part Information

- Harness Type: Headliner
- OEM Connector: 13641551
- Service Connector: 13576538
- Description: 6-Way F 1.5 Series (BK)

Terminal Part Information

Terminal Type ID	Terminated Lead	Diagnostic Test Probe	Terminal Removal Tool	Service Terminal	Tray	Core Crimp	Insulation Crimp
I	13575790	J-35616-2A (GY)	J-38125-553	15496302	5	E	A

E37M Dome/Reading Lamps - Middle

Pin	Size	Color	Circuit	Function	Terminal Type ID	Option
1	-	-	-	Not Occupied	-	-

2: 2	**2:** 0.5	**2:** GY	**2:** 157	**2:** Interior Lamp Control	**2:** I	**2:** -
3	-	-	-	Not Occupied	-	-
4: 4	**4:** 0.5	**4:** GY/D-GN	**4:** 328	**4:** Interior Lamp Defeat Switch Signal	**4:** I	**4:** -
5: 5	**5:** 0.5	**5:** D-GN/BN	**5:** 6998	**5:** Inadvertent Load 1 Supply Voltage	**5:** I	**5:** -
6: 6	**6:** 0.5	**6:** BK	**6:** 1550	**6:** Ground	**6:** I	**6:** -

E41 ENGINE COOLANT THERMOSTAT HEATER (LUV)

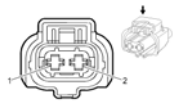

Connector Part Information

- Harness Type: Engine
- OEM Connector: 55565696
- Service Connector: 13355785
- Description: 2-Way F 2.8 DCS Series, Sealed (BK)

Terminal Part Information

Terminal Type ID	Terminated Lead	Diagnostic Test Probe	Terminal Removal Tool	Service Terminal	Tray	Core Crimp	Insulation Crimp
I	13575812	J-35616-64B (L-BU)	J-38125-213	33467-0005	23	J	J

E41 Engine Coolant Thermostat Heater (LUV)

Pin	Size	Color	Circuit	Function	Terminal Type ID	Option
1: 1	**1:** 0.5	**1:** RD/WH	**1:** 5293	**1:** Powertrain Main Relay Fused Supply (4)	**1:** I	**1:** -
2: 2	**2:** 0.5	**2:** L-BU	**2:** 6814	**2:** Thermostat Engine Cool Control	**2:** I	**2:** -

E41 ENGINE COOLANT THERMOSTAT HEATER (LUW/LWE)

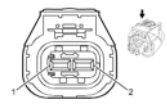

Connector Part Information

- Harness Type: Engine

- OEM Connector: 13140562
- Service Connector: 13581091
- Description: 2-Way F 2.8 Junior Power Timer Series (GY)

Terminal Part Information

Terminal Type ID	Terminated Lead	Diagnostic Test Probe	Terminal Removal Tool	Service Terminal	Tray	Core Crimp	Insulation Crimp
I	13581346	J-35616-35 (VT)	J-38125-36	4-964286-1	16	E	1

E41 Engine Coolant Thermostat Heater (LUW/LWE)

Pin	Size	Color	Circuit	Function	Terminal Type ID	Option
1: 1	**1:** 0.5	**1:** D-BU	**1:** 6814	**1:** Thermostat Engine Cool Control	**1:** I	**1:** -
2: 2	**2:** 0.5	**2:** VT/D-BU	**2:** 5293	**2:** Powertrain Main Relay Fused Supply (4)	**2:** I	**2:** -

F101 PASSENGER INSTRUMENT PANEL AIR BAG X1

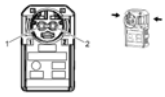

Connector Part Information

- Harness Type: Passenger Instrument Panel Air Bag
- OEM Connector: 13262035
- Service Connector: 19118659
- Description: 2-Way F (L-BU With YE Case)

Terminal Part Information

Terminal Type ID	Terminated Lead	Diagnostic Test Probe	Terminal Removal Tool	Service Terminal	Tray	Core Crimp	Insulation Crimp
I	Service by Connector Assembly - 19118659	J-35616-64B (L-BU)	Not Available	Service by Harness - See Part Catalog	Service by Harness - See Part Catalog	Not Available	Not Available

F101 Passenger Instrument Panel Air Bag X1

Pin	Size	Color	Circuit	Function	Terminal Type ID	Option

1: 1	**1:** 0.5	**1:** YE	**1:** 3025	**1:** Passenger Instrument Panel Module Stage 1 High Control	**1:** I	**1:** -
2: 2	**2:** 0.5	**2:** OG	**2:** 3024	**2:** Passenger Instrument Panel Module Stage 1 Low Control	**2:** I	**2:** -

F101 PASSENGER INSTRUMENT PANEL AIR BAG X2

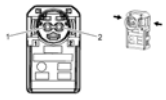

Connector Part Information

- Harness Type: Passenger Instrument Panel Air Bag
- OEM Connector: 13262036
- Service Connector: Service by Harness- See Part Catalog
- Description: 2-Way F (YE with YE case)

Terminal Part Information

Terminal Type ID	Terminated Lead	Diagnostic Test Probe	Terminal Removal Tool	Service Terminal	Tray	Core Crimp	Insulation Crimp
I	Service by Harness- See Part Catalog	J-35616-64B (L-BU)	Not Available	Service by Harness- See Part Catalog	Service by Harness- See Part Catalog	Not Available	Not Available

F101 Passenger Instrument Panel Air Bag X2

Pin	Size	Color	Circuit	Function	Terminal Type ID	Option
1: 1	**1:** 0.5	**1:** GY	**1:** 3027	**1:** Passenger IP Module Stage 2 High Control	**1:** I	**1:** -
2: 2	**2:** 0.5	**2:** PU	**2:** 3026	**2:** Passenger IP Module Stage 2 Low Control	**2:** I	**2:** -

F105L ROOF RAIL AIR BAG - LEFT

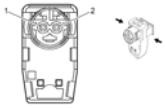

Connector Part Information

- Harness Type: Curtain Airbag

- OEM Connector: 19153416
- Service Connector: 19180245
- Description: 2-Way F FPB90-1 Series (BK with YE cover)

Terminal Part Information

Terminal Type ID	Terminated Lead	Diagnostic Test Probe	Terminal Removal Tool	Service Terminal	Tray	Core Crimp	Insulation Crimp
I	Service by Connector Assembly - 19180245	J-35616-64B (L-BU)	Not Available	Service by Harness - See Part Catalog	Service by Harness - See Part Catalog	Not Available	Not Available

F105L Roof Rail Air Bag - Left

Pin	Size	Color	Circuit	Function	Terminal Type ID	Option
1: 1	**1:** 0.5	**1:** OG/L-GN	**1:** 5019	**1:** Left Front Head Curtain Module High Control	**1:** I	**1:** -
2: 2	**2:** 0.5	**2:** VT/OG	**2:** 5020	**2:** Left Front Head Curtain Module Low Control	**2:** I	**2:** -

F105R ROOF RAIL AIR BAG - RIGHT

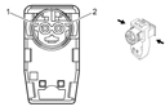

Connector Part Information

- Harness Type: Curtain Airbag
- OEM Connector: 19153416
- Service Connector: 19180245
- Description: 2-Way F FPB90-1 Series (BK with YE cover)

Terminal Part Information

Terminal Type ID	Terminated Lead	Diagnostic Test Probe	Terminal Removal Tool	Service Terminal	Tray	Core Crimp	Insulation Crimp
I	Service by Connector Assembly - 19180245	J-35616-64B (L-BU)	Not Available	Service by Harness - See Part Catalog	Service by Harness - See Part Catalog	Not Available	Not Available

F105R Roof Rail Air Bag - Right

Pin	Size	Color	Circuit	Function	Terminal Type ID	Option
1: 1	**1:** 0.5	**1:** OG/GY	**1:** 5021	**1:** Right Front Head Curtain Module High Control	**1:** I	**1:** -
2: 2	**2:** 0.5	**2:** WH/OG	**2:** 5022	**2:** Right Front Head Curtain Module Low Control	**2:** I	**2:** -

F106D SEAT AIR BAG - DRIVER

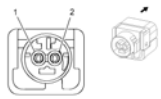

Connector Part Information

- Harness Type: Driver Seat
- OEM Connector: 13773783
- Service Connector: 19258830
- Description: 2-Way F (YE/OG)

Terminal Part Information

Terminal Type ID	Terminated Lead	Diagnostic Test Probe	Terminal Removal Tool	Service Terminal	Tray	Core Crimp	Insulation Crimp
I	Service by Harness - 19258830	J-35616-64B (L-BU)	Not Available	Service by Harness - See Part Catalog	Service by Harness - See Part Catalog	Not Available	Not Available

F106D Seat Air Bag - Driver

Pin	Size	Color	Circuit	Function	Terminal Type ID	Option
1: 1	**1:** 0.5	**1:** OG/D-BU	**1:** 2137	**1:** Left Front Side Impact Module High Control	**1:** I	**1:** -
2: 2	**2:** 0.5	**2:** YE/OG	**2:** 2138	**2:** Left Front Side Impact Module Low Control	**2:** I	**2:** -

F106LR SEAT AIR BAG - LEFT REAR

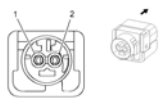

Connector Part Information

- Harness Type: Body
- OEM Connector: 13773783
- Service Connector: 19258830
- Description: 2-Way F (YE/OG)

Terminal Part Information

Terminal Type ID	Terminated Lead	Diagnostic Test Probe	Terminal Removal Tool	Service Terminal	Tray	Core Crimp	Insulation Crimp
I	Service by Harness - 19258830	J-35616-64B (L-BU)	Not Available	Service by Harness - See Part Catalog	Service by Harness - See Part Catalog	Not Available	Not Available

F106LR Seat Air Bag - Left Rear

Pin	Size	Color	Circuit	Function	Terminal Type ID	Option
1: 1	**1:** 0.5	**1:** OG/GY	**1:** 5223	**1:** Left Rear Side Impact SIR Inflator Supply Voltage	**1:** I	**1:** -
2: 2	**2:** 0.5	**2:** BK/OG	**2:** 5224	**2:** Left Rear Side Impact SIR Inflator Control	**2:** I	**2:** -

F106P SEAT AIR BAG - PASSENGER

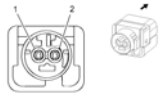

Connector Part Information

- Harness Type: Passenger Seat
- OEM Connector: 13773783
- Service Connector: 19258830
- Description: 2-Way F (YE/OG)

Terminal Part Information

Terminal Type ID	Terminated Lead	Diagnostic Test Probe	Terminal Removal Tool	Service Terminal	Tray	Core Crimp	Insulation Crimp
I	Service by Harness -	J-35616-64B	Not	Service by Harness -	Service by Harness -	Not	Not

	19258830	(L-BU)	Available	See Part Catalog	See Part Catalog	Available	Available

F106P Seat Air Bag - Passenger

Pin	Size	Color	Circuit	Function	Terminal Type ID	Option
1: 1	**1:** 0.5	**1:** OG/YE	**1:** 2135	**1:** Right Front Side Impact Module High Control	**1:** I	**1:** -
2: 2	**2:** 0.5	**2:** D-GN/OG	**2:** 2136	**2:** Right Front Side Impact Module Low Control	**2:** I	**2:** -

F106RR SEAT AIR BAG - RIGHT REAR

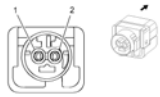

Connector Part Information

- Harness Type: Passenger Seat
- OEM Connector: 13773783
- Service Connector: 19258830
- Description: 2-Way F (YE/OG)

Terminal Part Information

Terminal Type ID	Terminated Lead	Diagnostic Test Probe	Terminal Removal Tool	Service Terminal	Tray	Core Crimp	Insulation Crimp
I	Service by Harness - 19258830	J-35616-64B (L-BU)	Not Available	Service by Harness - See Part Catalog	Service by Harness - See Part Catalog	Not Available	Not Available

F106RR Seat Air Bag - Right Rear

Pin	Size	Color	Circuit	Function	Terminal Type ID	Option
1: 1	**1:** VT/OG	**1:** VT/OG	**1:** 5225	**1:** Right Rear Side Impact SIR Inflator Supply Voltage	**1:** I	**1:** -
2: 2	**2:** OG/GY	**2:** OG/GY	**2:** 5226	**2:** Right Rear Side Impact SIR Inflator Control	**2:** I	**2:** -

F107 STEERING WHEEL AIR BAG X1

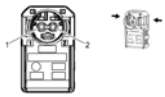

Connector Part Information

- Harness Type: Steering Column
- OEM Connector: 13262035
- Service Connector: 19118659
- Description: 2-Way F (L-GN with YE Case)

Terminal Part Information

Terminal Type ID	Terminated Lead	Diagnostic Test Probe	Terminal Removal Tool	Service Terminal	Tray	Core Crimp	Insulation Crimp
I	Service by Connector Assembly - 19118659	J-35616-64B (L-BU)	Not Available	Service by Harness - See Part Catalog	Service by Harness - See Part Catalog	Not Available	Not Available

F107 Steering Wheel Air Bag X1

Pin	Size	Color	Circuit	Function	Terminal Type ID	Option
1: 1	**1:** 0.5	**1:** TN	**1:** 3021	**1:** Steering Wheel Module Stage 1 High Control	**1:** I	**1:** -
2: 2	**2:** 0.5	**2:** BN	**2:** 3020	**2:** Steering Wheel Module Stage 1 Low Control	**2:** I	**2:** -

F107 STEERING WHEEL AIR BAG X2 (EARLY PRODUCTION)

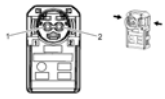

Connector Part Information

- Harness Type: Steering Column
- OEM Connector: 13262036
- Service Connector: Service by Harness- See Part Catalog
- Description: 2-Way F (YE with YE case)

Terminal Part Information

Terminal Type ID	Terminated Lead	Diagnostic Test Probe	Terminal Removal Tool	Service Terminal	Tray	Core Crimp	Insulation Crimp

I	Service by Harness - See Part Catalog	J-35616-64B (L-BU)	Not Available	Service by Harness - See Part Catalog	Service by Harness - See Part Catalog	Not Available	Not Available

F107 Steering Wheel Air Bag X2 (Early Production)

Pin	Size	Color	Circuit	Function	Terminal Type ID	Option
1: 1	**1:** 0.5	**1:** WH	**1:** 3023	**1:** Steering Wheel Module Stage 2 High Control	**1:** I	**1:** -
2: 2	**2:** 0.5	**2:** PK	**2:** 3022	**2:** Steering Wheel Module Stage 2 Low Control	**2:** I	**2:** -

F112D SEAT BELT RETRACTOR PRETENSIONER - DRIVER

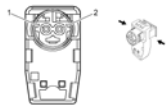

Connector Part Information

- Harness Type: Body
- OEM Connector: 19153416
- Service Connector: 19180245
- Description: 2-Way F FPB90-1 Series (BK with YE cover)

Terminal Part Information

Terminal Type ID	Terminated Lead	Diagnostic Test Probe	Terminal Removal Tool	Service Terminal	Tray	Core Crimp	Insulation Crimp
I	Service by Connector Assembly - 19180245	J-35616-64B (L-BU)	Not Available	Service by Harness - See Part Catalog	Service by Harness - See Part Catalog	Not Available	Not Available

F112D Seat Belt Retractor Pretensioner - Driver

Pin	Size	Color	Circuit	Function	Terminal Type ID	Option
1: 1	**1:** 0.5	**1:** BN/D-BU	**1:** 2118	**1:** Driver Seat Belt Pretensioner High Control	**1:** I	**1:** -
2: 2	**2:** 0.5	**2:** OG/RD	**2:** 2119	**2:** Driver Seat Belt Pretensioner Low Control	**2:** I	**2:** -

F112P SEAT BELT RETRACTOR PRETENSIONER - PASSENGER

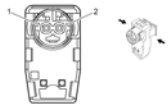

Connector Part Information

- Harness Type: Body
- OEM Connector: 19153416
- Service Connector: 19180245
- Description: 2-Way F FPB90-1 Series (BK with YE cover)

Terminal Part Information

Terminal Type ID	Terminated Lead	Diagnostic Test Probe	Terminal Removal Tool	Service Terminal	Tray	Core Crimp	Insulation Crimp
I	Service by Connector Assembly - 19180245	J-35616-64B (L-BU)	Not Available	Service by Harness - See Part Catalog	Service by Harness - See Part Catalog	Not Available	Not Available

F112P Seat Belt Retractor Pretensioner - Passenger

Pin	Size	Color	Circuit	Function	Terminal Type ID	Option
1: 1	**1:** 0.5	**1:** OG/GY	**1:** 2116	**1:** Passenger Seat Belt Pretensioner High Control	**1:** I	**1:** -
2: 2	**2:** 0.5	**2:** D-BU/BN	**2:** 2117	**2:** Passenger Seat Belt Pretensioner Low Control	**2:** I	**2:** -

F113D SEAT BELT ANCHOR PRESTENSIONER - DRIVER

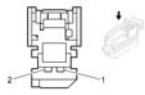

Connector Part Information

- Harness Type: Driver Seat
- OEM Connector: 19153427
- Service Connector: 19208396
- Description: 2-Way F 0.64 Series Unsealed (YE)

Terminal Part Information

Terminal Type ID	Terminated Lead	Diagnostic Test Probe	Terminal Removal Tool	Service Terminal	Tray	Core Crimp	Insulation Crimp

I	Service by Connector Assembly - 19208396	J-35616-64B (L-BU)	Not Available	Service by Harness - See Part Catalog	Service by Harness - See Part Catalog	Not Available	Not Available

F113D Seat Belt Anchor Prestensioner - Driver

Pin	Size	Color	Circuit	Function	Terminal Type ID	Option
1: 1	**1:** 0.5	**1:** RD		**1:** Driver Seat Belt Pretensioner - High Control	**1:** I	**1:** -
2: 2	**2:** 0.5	**2:** BK		**2:** Driver Seat Belt Pretensioner - Low Control	**2:** I	**2:** -

F113P SEAT BELT ANCHOR PRETENSIONER - PASSENGER

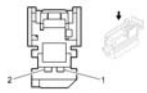

Connector Part Information

- Harness Type: Passenger Seat
- OEM Connector: 19153427
- Service Connector: 19208396
- Description: 2-Way F 0.64 Series Unsealed (YE)

Terminal Part Information

Terminal Type ID	Terminated Lead	Diagnostic Test Probe	Terminal Removal Tool	Service Terminal	Tray	Core Crimp	Insulation Crimp
I	Service by Connector Assembly - 19208396	J-35616-64B (L-BU)	Not Available	Service by Harness - See Part Catalog	Service by Harness - See Part Catalog	Not Available	Not Available

F113P Seat Belt Anchor Pretensioner - Passenger

Pin	Size	Color	Circuit	Function	Terminal Type ID	Option
1: 1	**1:** 0.5	**1:** RD	**1:** 3479	**1:** Passenger Seat Belt Pretensioner - High Control	**1:** I	**1:** -
2: 2	**2:** 0.5	**2:** BK	**2:** 3480	**2:** Passenger Seat Belt Pretensioner - Low Control	**2:** I	**2:** -

F114D KNEE AIR BAG - DRIVER

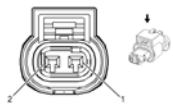

Connector Part Information

- Harness Type: Instrument Panel
- OEM: 13863037
- Service Connector: Pending
- Description: 2-Way F 1.2 MCP Series, Sealed (YE with BK Inner Connector)

Terminal Part Information

Terminal Type ID	Terminated Lead	Diagnostic Test Probe	Terminal Removal Tool	Service Terminal	Tray	Core Crimp	Insulation Crimp
I	Service By Connector Assembly - 19178096	J-35616-64B (L-BU)	Not Available	Not Available	Not Available	Not Available	Not Available

F114D Knee Air Bag - Driver

Pin	Size	Color	Circuit	Function	Terminal Type ID	Option
1: 1	**1:** 0.5	**1:** OG/BU	**1:** 3078	**1:** Driver Knee Module High Control	**1:** I	**1:** -
2: 2	**2:** 0.5	**2:** GY/OG	**2:** 3079	**2:** Driver Knee Module Low Control	**2:** I	**2:** -

F114P KNEE AIR BAG - PASSENGER

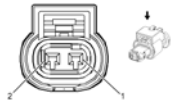

Connector Part Information

- Harness Type: Instrument Panel
- OEM: 13863037
- Service Connector: Pending
- Description: 2-Way F 1.2 MCP Series, Sealed (YE with BK Inner Connector)

Terminal Part Information

Terminal Type ID	Terminated Lead	Diagnostic Test Probe	Terminal Removal	Service Terminal	Tray	Core Crimp	Insulation Crimp

			Tool				
I	Service By Connector Assembly - 19178096	J-35616-64B (L-BU)	Not Available	Not Available	Not Available	Not Available	Not Available

F114P Knee Air Bag - Passenger

Pin	Size	Color	Circuit	Function	Terminal Type ID	Option
1: 1	**1:** 0.5	**1:** OG/D-BU	**1:** 3076	**1:** Passenger Knee Module High Control	**1:** I	**1:** -
2: 2	**2:** 0.5	**2:** GY/OG	**2:** 3077	**2:** Passenger Knee Module Low Control	**2:** I	**2:** -

G10 COOLING FAN MOTOR

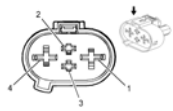

Connector Part Information

- Harness Type: Engine Cooling
- OEM Connector: 10864104
- Service Connector: Service by Harness- See Part Catalog
- Description: 4-Way F 4.8 9.5 Series, Sealed (BK)

Terminal Part Information

Terminal Type ID	Terminated Lead	Diagnostic Test Probe	Terminal Removal Tool	Service Terminal	Tray	Core Crimp	Insulation Crimp
I	13582260	J-35616-22 (RD)	J-38125-11A	60070461	29	A	3
II	Pending	J-35616-40 (BU)	J-38125-556	60040441	21	Not Available	Not Available

G10 Cooling Fan Motor

Pin	Size	Color	Circuit	Function	Terminal Type ID	Option
1: 1	**1:** 4 **1:** 6	**1:** BK **1:** BK	**1:** 1250 **1:** 1250	**1:** Ground **1:** Ground	**1:** -	**1:** Except LUJ with MH8 **1:** LUJ with MH8

2: 2	**2:** 2.5 **2:** 4	**2:** WH/D-BU **2:** WH/D-BU	**2:** 409 **2:** 409	**2:** Cooling Fan Motor Control (1) **2:** Cooling Fan Motor Control (1)	**2:** II	**2:** Except LUJ with MH8 **2:** LUJ with MH8
3: 3	**3:** 2.5 **3:** 4	**3:** GY **3:** GY	**3:** 532 **3:** 532	**3:** Cooling Fan Motor Control (2) **3:** Cooling Fan Motor Control (2)	**3:** II	**3:** Except LUJ with MH8 **3:** LUJ with MH8
4: 4	**4:** 4 **4:** 6	**4:** YE **4:** YE	**4:** 5358 **4:** 5358	**4:** Cooling Fan Motor Control (3) **4:** Cooling Fan Motor Control (3)	**4:** -	**4:** Except LUJ with MH8 **4:** LUJ with MH8

G13 GENERATOR X2

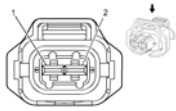

Connector Part Information

- Harness Type: Engine
- OEM Connector: 13115612
- Service Connector: 88953309
- Description: 2-Way F Junior Power Timer 2.8 Series, Sealed (BK)

Terminal Part Information

Terminal Type ID	Terminated Lead	Diagnostic Test Probe	Terminal Removal Tool	Service Terminal	Tray	Core Crimp	Insulation Crimp
I	13580821	J-35616-35 (VT)	J-38125-36	4-964273-1	15	E	1

G13 Generator X2

Pin	Size	Color	Circuit	Function	Terminal Type ID	Option
1: 1	**1:** 0.5 **1:** 0.75	**1:** BU/WH **1:** BN	**1:** 25 **1:** 25	**1:** Charge Indicator Control **1:** Charge Indicator Control	**1:** I	**1:** LUV **1:** LUW/LWE
2: 2	**2:** 0.75	**2:** GY	**2:** 23	**2:** Generator Field Duty Cycle Signal	**2:** I	**2:** -

G24 WINDSHIELD WASHER PUMP



Connector Part Information

- Harness Type: Forward Lamp
- OEM Connector: 10863916
- Service Connector: 13576532
- Description: 2-Way F MCP 2.8 Series, Sealed (BK)

Terminal Part Information

Terminal Type ID	Terminated Lead	Diagnostic Test Probe	Terminal Removal Tool	Service Terminal	Tray	Core Crimp	Insulation Crimp
I	13575435	J-35616-35 (VT)	J-38125-557	1-968857-3	7	C	1

G24 Windshield Washer Pump

Pin	Size	Color	Circuit	Function	Terminal Type ID	Option
1: 1	**1:** 1	**1:** GY/VT	**1:** 228	**1:** Windshield Washer Pump Control	**1:** I	**1:** -
2: 2	**2:** 1	**2:** BK	**2:** 1350	**2:** Ground	**2:** I	**2:** -

K8 BLOWER MOTOR CONTROL MODULE X1

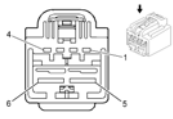

Connector Part Information

- Harness Type: Instrument Panel
- OEM Connector: 13520671
- Service Connector: 88988512
- Description: 6-Way F GT 150 6.3 Series (BK)

Terminal Part Information

Terminal Type ID	Terminated Lead	Diagnostic Test Probe	Terminal Removal Tool	Service Terminal	Tray	Core Crimp	Insulation Crimp

I	13575735	J-35616-2A (GY)	J-38125-553	12191812	19	E	C
II	13575835	J-35616-42 (RD)	J-38125-11A	7116-4122-02	10	D	G

K8 Blower Motor Control Module X1

Pin	Size	Color	Circuit	Function	Terminal Type ID	Option
1-2	-	-	-	Not Occupied	-	-
3: 3	**3:** 0.5	**3:** D-BU/GY	**3:** 754	**3:** Blower Motor Speed Control	**3:** I	**3:** -
4	-	-	-	Not Occupied	-	-
5: 5	**5:** 4	**5:** BK	**5:** 1850	**5:** Ground	**5:** II	**5:** -
6: 6	**6:** 4	**6:** RD/BN	**6:** 440	**6:** Battery Positive Voltage	**6:** II	**6:** -

K8 BLOWER MOTOR CONTROL MODULE X2

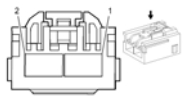

Connector Part Information

- Harness Type: HVAC
- OEM Connector: 10846816
- Service Connector: 88988507
- Description: 2-Way F (GY)

Terminal Part Information

Terminal Type ID	Terminated Lead	Diagnostic Test Probe	Terminal Removal Tool	Service Terminal	Tray	Core Crimp	Insulation Crimp
I	13575835	J-35616-42 (RD)	J-38125-11A	7116-4122-02	7116-4122-02	A	B

K8 Blower Motor Control Module X2

Pin	Size	Color	Circuit	Function	Terminal Type ID	Option
1: 1	**1:** 4	**1:** RD	**1:** 65	**1:** Blower Motor Supply Voltage	**1:** I	**1:** -
2: 2	**2:** 4	**2:** BK	**2:** 374	**2:** Blower Motor Fan Control	**2:** I	**2:** -

K9 BODY CONTROL MODULE X1

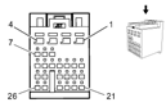

Connector Part Information

- Harness Type: Instrument Panel
- OEM Connector: 13594128
- Service Connector: 19151262
- Description: 26-Way F 0.64 2.8 Series (WH)

Terminal Part Information

Terminal Type ID	Terminated Lead	Diagnostic Test Probe	Terminal Removal Tool	Service Terminal	Tray	Core Crimp	Insulation Crimp
I	13575560	J-35616-35 (VT)	J-38125-12A	SNAC-A081T-M2.8	20	A	D
II	13575870	J-35616-64B (L-BU)	J-38125-12A	SNAC3-A021T-M064	20	J	J

K9 Body Control Module X1

Pin	Size	Color	Circuit	Function	Terminal Type ID	Option
1: 1	**1:** 2.5	**1:** BK	**1:** 1650	**1:** Ground	**1:** I	**1:** -
2: 2	**2:** 2.5	**2:** RD/D-GN	**2:** 2440	**2:** Battery Positive Voltage	**2:** I	**2:** -
3: 3	**3:** 2.5	**3:** RD/YE	**3:** 2340	**3:** Battery Positive Voltage	**3:** I	**3:** -
4: 4	**4:** 1.5	**4:** RD/BN	**4:** 2240	**4:** Battery Positive Voltage	**4:** I	**4:** -
5-8	-	-	-	Not Occupied	-	-
9: 9	**9:** 0.5	**9:** WH/BN	**9:** 7555	**9:** Lighting Control Switch Signal	**9:** II	**9:** -
10	-	-	-	Not Occupied	-	-
11: 11	**11:** 0.35	**11:** D-GN/BN	**11:** 306	**11:** Headlamp Switch Headlamps Off Signal Control	**11:** II	**11:** -
12-13	-	-	-	Not Occupied	-	-
14: 14	**14:** 0.5	**14:** GY/L-GN	**14:** 328	**14:** Interior Lamp Defeat Switch Signal	**14:** II	**14:** -
15	-	-	-	Not Occupied	-	-
16: 16	**16:** 0.35	**16:** WH/VT	**16:** 103	**16:** Headlamp Switch On Signal	**16:** II	**16:** -
17:				**17:** Hazard Switch Turn		

17	**17:** 0.35	**17:** L-BU/VT	**17:** 1717	Flasher Control	**17:** II	**17:** -
18: 18	**18:** D-BU/VT	**18:** D-BU/VT	**18:** 5904	**18:** Steering Column Lock Status Signal	**18:** -	**18:** ULS
19: 19	**19:** 0.5	**19:** BK/BN	**19:** 5360	**19:** Brake Apply Sensor Low Reference	**19:** II	**19:** -
20	-	-	-	Not Occupied	-	-
21: 21	**21:** 0.35	**21:** GY	**21:** 728	**21:** Security Indicator Control	**21:** II	**21:** -
22: 22	**22:** 0.35	**22:** D-GN/GY	**22:** 13	**22:** Headlamp Switch Park Lamp Signal	**22:** II	**22:** -
23	-	-	-	Not Occupied	-	-
24: 24	**24:** 0.5	**24:** WH	**24:** 2501	**24:** High Speed GMLAN Serial Data (-) (1)	**24:** II	**24:** -
25: 25	**25:** 0.5	**25:** D-BU	**25:** 2500	**25:** High Speed GMLAN Serial Data (+) (1)	**25:** II	**25:** -
26: 26	**26:** 0.5	**26:** YE/L-GN	**26:** 3274	**26:** Remote Function Actuator Transmit Signal	**26:** II	**26:** -

K9 BODY CONTROL MODULE X2

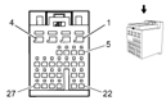

Connector Part Information

- Harness Type: Instrument Panel
- OEM Connector: 13594133
- Service Connector: 19151266
- Description: 27-Way F 0.64 2.8 Series (L-BU)

Terminal Part Information

Terminal Type ID	Terminated Lead	Diagnostic Test Probe	Terminal Removal Tool	Service Terminal	Tray	Core Crimp	Insulation Crimp
I	13575560	J-35616-35 (VT)	J-38125-12A	SNAC-A081T-M028	20	A	D
II	13575870	J-35616-64B (L-BU)	J-38125-12A	SNAC3-A021T-M064	20	J	J
III	13575870	J-35616-64B (L-BU)	J-38125-12A	SNAC3-A021T-M064	20	J	J

K9 Body Control Module X2

					Terminal Type	

Pin	Size	Color	Circuit	Function	ID	Option
1: 1	**1:** 1.5	**1:** RD/GY	**1:** 2140	**1:** Battery Positive Voltage	**1:** I	**1:** -
2: 2	**2:** 2.5	**2:** BK	**2:** 850	**2:** Ground	**2:** I	**2:** -
3: 3	**3:** 1.5	**3:** RD/D-BU	**3:** 2540	**3:** Battery Positive Voltage	**3:** I	**3:** -
4: 4	**4:** 2.5	**4:** RD/GY	**4:** 2840	**4:** Battery Positive Voltage	**4:** I	**4:** -
5-6	-	-	-	Not Occupied	-	-
7: 7	**7:** 0.5	**7:** D-BU/YE	**7:** 5361	**7:** Brake Apply Sensor Signal	**7:** II	**7:** -
8: 8	**8:** 0.5	**8:** YE	**8:** 6817	**8:** LED Backlight Dimming Control	**8:** II	**8:** -
9	-	-	-	Not Occupied	-	-
10: 10	**10:** 0.35	**10:** WH/L-BU	**10:** 278	**10:** Ambient Light Sensor Signal	**10:** III	**10:** -
11: 11	**11:** 0.5	**11:** YE	**11:** 7554	**11:** Park Lock Solenoid Soft Control	**11:** II	**11:** MH8
12	-	-	-	Not Occupied	-	-
13: 13	**13:** 0.5	**13:** WH	**13:** 5359	**13:** Brake Apply Sensor Supply Voltage	**13:** II	**13:** -
14: 14	**14:** 0.5	**14:** D-BU/VT	**14:** 1788	**14:** Traction Control Switch Signal (1)	**14:** II	**14:** -
15: 15	**15:** 0.5	**15:** OG/WH	**15:** 781	**15:** Driver Door Lock Switch Unlock Signal	**15:** II	**15:** -
16: 16	**16:** 0.5	**16:** GY	**16:** 3273	**16:** Remote Function Actuator Return	**16:** II	**16:** -
17-18	-	-	-	Not Occupied	-	-
19: 19	**19:** 0.5	**19:** OG/YE	**19:** 780	**19:** Driver Door Lock Switch Lock Signal	**19:** II	**19:** -
20	-	-	-	Not Occupied	-	-
21: 21	**21:** 0.5	**21:** L-GN/GY	**21:** 6135	**21:** Linear Interconnect Network Bus 4	**21:** II	**21:** -
22: 22	**22:** 0.5	**22:** L-GN	**22:** 5060	**22:** Low Speed GMLAN Serial Data	**22:** II	**22:** -
23: 23	**23:** 0.5	**23:** WH	**23:** 2501	**23:** High Speed GMLAN Serial Data (-) (1)	**23:** II	**23:** -
24: 24	**24:** 0.5	**24:** D-BU	**24:** 2500	**24:** High Speed GMLAN Serial Data (+) (1)	**24:** II	**24:** -
25: 25	**25:** 0.5	**25:** GY/WH	**25:** 3272	**25:** Remote Function Actuator Supply Voltage	**25:** II	**25:** -
26: 26	**26:** 0.35	**26:** D-GN/WH	**26:** 111	**26:** Hazard Switch Signal	**26:** III	**26:** -
27: 27	**27:** 0.5	**27:** D-BU/WH	**27:** 3275	**27:** Remote Function Actuator Receive Signal	**27:** II	**27:** -

K9 BODY CONTROL MODULE X3

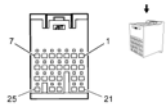

Connector Part Information

- Harness Type: Instrument Panel
- OEM Connector: 13594127
- Service Connector: 19151261
- Description: 25-Way F 0.64 Series (L-GN)

Terminal Part Information

Terminal Type ID	Terminated Lead	Diagnostic Test Probe	Terminal Removal Tool	Service Terminal	Tray	Core Crimp	Insulation Crimp
I	13575870	J-35616-64B (L-BU)	J-38125-12A	SNAC3-A021T-M064	20	J	J

K9 Body Control Module X3

Pin	Size	Color	Circuit	Function	Terminal Type ID	Option
1: 1	**1:** 0.5	**1:** L-GN/GY	**1:** 3277	**1:** Vehicle Anti-Theft System Immobilizer Return	**1:** I	**1:** -
2: 2	**2:** 0.5	**2:** L-GN/VT	**2:** 7533	**2:** Linear Interconnect Network Bus 11	**2:** I	**2:** -
3: 3	**3:** 0.5	**3:** GY/BK	**3:** 3276	**3:** Vehicle Anti-Theft System Immobilizer Supply Voltage	**3:** I	**3:** -
4: 4	**4:** 0.5	**4:** YE	**4:** 7556	**4:** Lighting Control Switch Reference	**4:** I	**4:** -
5: 5	**5:** 0.5	**5:** VT/YE	**5:** 4	**5:** Ignition Voltage	**5:** I	**5:** -
6: 6	**6:** 0.5	**6:** VT/BK	**6:** 3	**6:** Ignition Voltage	**6:** I	**6:** -
7: 7	**7:** 0.5	**7:** VT/YE	**7:** 143	**7:** Ignition Voltage	**7:** I	**7:** -
8: 8	**8:** 0.5	**8:** L-GN/WH	**8:** 6819	**8:** Steering Wheel Resistor Ladder Signal #2	**8:** I	**8:** -
9: 9	**9:** 0.5	**9:** GY/L-GN	**9:** 5737	**9:** Adaptive Cruise Control Gap Up/Down Switch Signal	**9:** I	**9:** -
10: 10	**10:** 0.5	**10:** BK/GY	**10:** 6009	**10:** Windshield Wiper Switch Low Reference	**10:** I	**10:** -
11: 11	**11:** 0.5	**11:** WH	**11:** 524	**11:** Headlamp Dimmer Switch High Beam Signal	**11:** I	**11:** -
12: 12	**12:** 0.5	**12:** WH/L-GN	**12:** 663	**12:** Hazard Switch Left Turn Signal	**12:** I	**12:** -

13: 13	**13:** 0.5	**13:** YE/BK	**13:** 1714	**13:** Windshield Wiper Switch Low Signal	**13:** I	**13:** -
14	-	-	-	Not Occupied	-	-
15: 15	**15:** 0.5	**15:** WH/VT	**15:** 1020	**15:** Ignition Voltage	**15:** I	**15:** -
16	-	-	-	Not Occupied	-	-
17: 17	**17:** 0.5	**17:** YE/BN	**17:** 307	**17:** Headlamp Switch Flash To Pass Signal	**17:** I	**17:** -
18: 18	**18:** 0.5	**18:** L-GN/WH	**18:** 3287	**18:** Horn Switch Signal	**18:** I	**18:** -
19	-	-	-	Not Occupied	-	-
20: 20	**20:** 0.5	**20:** GY	**20:** 1715	**20:** Windshield Wiper Switch High Signal	**20:** I	**20:** -
21	-	-	-	Not Occupied	-	-
22: 22	**22:** 0.5	**22:** WH/BK	**22:** 1073	**22:** Ignition Key Resistor Signal	**22:** I	**22:** -
23	-	-	-	Not Occupied	-	-
24: 24	**24:** 0.5	**24:** VT/D-BU	**24:** 664	**24:** Hazard Switch Right Turn Signal	**24:** I	**24:** -
25: 25	**25:** 0.5	**25:** WH/BK	**25:** 94	**25:** Windshield Washer Switch Signal	**25:** I	**25:** -

K9 BODY CONTROL MODULE X4

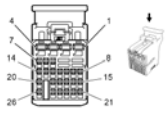

Connector Part Information

- Harness Type: Body
- OEM Connector: 13594129
- Service Connector: 19151263
- Description: 26-Way F 0.64 2.8 Series (BK)

Terminal Part Information

Terminal Type ID	Terminated Lead	Diagnostic Test Probe	Terminal Removal Tool	Service Terminal	Tray	Core Crimp	Insulation Crimp
I	13575560	J-35616-35 (VT)	J-38125-12A	SNAC-A081T-M28	20	C	A
II	13575870	J-35616-64B (L-BU)	J-38125-12A	SNAC3-A021T-M064	20	J	J

K9 Body Control Module X4

					Terminal Type	

Pin	Size	Color	Circuit	Function	ID	Option
1: 1	**1:** 1	**1:** YE	**1:** 312	**1:** Right Headlamp Low Beam Control	**1:** I	**1:** -
2: 2	**2:** 1	**2:** YE	**2:** 712	**2:** Left Headlamp Low Beam Control	**2:** I	**2:** -
3: 3	**3:** 0.5	**3:** D-GN/VT	**3:** 1315	**3:** Right Front Turn Signal Lamp Control	**3:** I	**3:** -
4: 4	**4:** 0.5	**4:** D-BU/VT	**4:** 1335	**4:** Right Rear Turn Signal Lamp Control	**4:** I	**4:** -
5: 5	**5:** 0.5	**5:** GY/BN	**5:** 309	**5:** Right Park Lamp Control	**5:** II	**5:** -
6: 6	**6:** 0.5	**6:** VT/GY	**6:** 709	**6:** Left Park Lamp Control	**6:** II	**6:** -
7: 7	**7:** 0.5	**7:** GY/YE	**7:** 7542	**7:** Left Rear Stop Lamp Supply Voltage	**7:** II	**7:** -
8: 8	**8:** .5 VT/YE	**8:** .5 VT/YE	**8:** 3267	**8:** Child Security Lock Relay Control	**8:** II	**8:** -
9: 9	**9:** 0.5	**9:** YE	**9:** 7546	**9:** Logistics Relay Control	**9:** II	**9:** -
10	-	-	-	Not Occupied	-	-
11: 11	**11:** 0.5	**11:** VT/WH	**11:** 5065	**11:** Stop Lamp Relay Coil Control	**11:** II	**11:** -
12: 12	**12:** 0.5	**12:** VT/BK	**12:** 3	**12:** Ignition Voltage	**12:** II	**12:** -
13: 13	**13:** 0.5	**13:** D-GN/YE	**13:** 6846	**13:** Rear License Lamp Control	**13:** II	**13:** -
14: 14	**14:** 0.5	**14:** BN/GY	**14:** 2268	**14:** Windshield Washer Relay Control	**14:** II	**14:** -
15: 15	**15:** 0.5	**15:** BN/VT	**15:** 1594	**15:** Ignition 3 Relay Control	**15:** II	**15:** -
16: 16	**16:** 0.5	**16:** GY	**16:** 91	**16:** Windshield Wiper Motor Relay Coil Control	**16:** II	**16:** -
17: 17	**17:** 0.5	**17:** BN/D-GN	**17:** 196	**17:** Windshield Wiper Motor Park Switch Signal	**17:** II	**17:** -
18: 18	**18:** 0.5	**18:** WH/YE	**18:** 5075	**18:** Current Sensor Signal	**18:** II	**18:** -
19	-	-	-	Not Occupied	-	-
20: 20	**20:** 0.5	**20:** RD/BN	**20:** 1440	**20:** Battery Positive Voltage	**20:** II	**20:** -
21: 21	**21:** 0.5	**21:** D-BU/VT	**21:** 5076	**21:** Current Sensor Supply Voltage	**21:** II	**21:** -
22: 22	**22:** 0.5	**22:** VT/YE	**22:** 5985	**22:** Accessory Wakeup Serial Data	**22:** II	**22:** -
23: 23	**23:** 0.5	**23:** WH/D-BU	**23:** 5986	**23:** Serial Data Communication Enable	**23:** II	**23:** -
24:		**24:** BN/D-		**24:** Hood Ajar Switch		

24	**24:** 0.5	GN	**24:** 109	Signal	**24:** II	**24:** -
25	-	-	-	Not Occupied	-	-
26: 26	**26:** 0.5	**26:** BK	**26:** 981	**26:** Ground	**26:** II	**26:** -

K9 BODY CONTROL MODULE X5

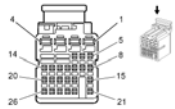

Connector Part Information

- Harness Type: Body
- OEM Connector: 13594130
- Service Connector: 19151264
- Description: 26-Way F 0.64 2.8 Series (BN)

Terminal Part Information

Terminal Type ID	Terminated Lead	Diagnostic Test Probe	Terminal Removal Tool	Service Terminal	Tray	Core Crimp	Insulation Crimp
I	13575560	J-35616-35 (VT)	J-38125-12A	SNAC-A081T-M28	20	E	A
II	13575870	J-35616-64B (L-BU)	J-38125-12A	SNAC3-A021T-M064	20	J	J

K9 Body Control Module X5

Pin	Size	Color	Circuit	Function	Terminal Type ID	Option
1: 1	**1:** 0.5	**1:** D-BU/WH	**1:** 1334	**1:** Left Rear Turn Signal Lamp Control	**1:** I	**1:** -
2: 2	**2:** 0.5	**2:** D-BU/WH	**2:** 1314	**2:** Left Front Turn Signal Lamp Control	**2:** I	**2:** -
3: 3	**3:** 1.5	**3:** RD/WH	**3:** 2740	**3:** Battery Positive Voltage	**3:** I	**3:** -
4: 4	**4:** 1.5	**4:** RD/VT	**4:** 2640	**4:** Battery Positive Voltage	**4:** I	**4:** -
5	-	-	-	Not Occupied	-	-
6: 6	**6:** 0.5	**6:** BK/VT	**6:** 5077	**6:** Current Sensor Low Reference	**6:** II	**6:** -
7: 7	**7:** 0.5	**7:** WH/YE	**7:** 7541	**7:** Right Rear Stop Lamp Supply Voltage	**7:** II	**7:** -
8-10	-	-	-	Not Occupied	-	-
11: 11	**11:** 0.75	**11:** GY/YE	**11:** 6188	**11:** Lift Glass/Trunk Motor Release Control	**11:** II	**11:** -

12: 12	**12:** 0.5	**12:** WH/BU	**12:** 6311	**12:** Cruise/ETC/TCC Brake Signal	**12:** II	**12:** K34
13: 13	**13:** 0.5	**13:** BN/WH	**13:** 1317	**13:** Fog Lamp Relay Control	**13:** II	**13:** -
14-17	-	-	-	Not Occupied	-	-
18: 18	**18:** 0.5	**18:** BN/VT	**18:** 1969	**18:** Headlamp High Beam Relay Control	**18:** II	**18:** -
19: 19	**19:** 0.5	**19:** BN/WH	**19:** 28	**19:** Horn Relay Control	**19:** II	**19:** -
20-23	-	-	-	Not Occupied	-	-
24: 24	**24:** 0.5	**24:** WH/VT	**24:** 860	**24:** Front Windshield Wiper Switch High Signal	**24:** II	**24:** -
25-26	-	-	-	Not Occupied	-	-

K9 BODY CONTROL MODULE X6

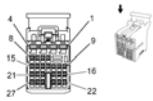

Connector Part Information

- Harness Type: Body
- OEM Connector: 13594134
- Service Connector: 19151267
- Description: 27-Way F 0.64 2.8 Series (PK)

Terminal Part Information

Terminal Type ID	Terminated Lead	Diagnostic Test Probe	Terminal Removal Tool	Service Terminal	Tray	Core Crimp	Insulation Crimp
I	13575560	J-35616-35 (VT)	J-38125-12A	SNAC-A081T-M28	20	A	D
II	13575870	J-35616-64B (L-BU)	J-38125-12A	SNAC3-A021T-M064	20	J	J

K9 Body Control Module X6

Pin	Size	Color	Circuit	Function	Terminal Type ID	Option
1: 1	**1:** 0.75	**1:** GY	**1:** 5911	**1:** Door Lock Actuator Lock Control	**1:** I	**1:** -
2: 2	**2:** 0.75	**2:** GY/D-GN	**2:** 3271	**2:** Door Lock Control (2)	**2:** I	**2:** -
3: 3	**3:** 0.5	**3:** BK	**3:** 1650	**3:** Ground	**3:** I	**3:** -
4: 4	**4:** 0.75	**4:** BN/YE	**4:** 294	**4:** Door Lock Actuator Unlock Control	**4:** I	**4:** -
				5: Lift Gate Ajar Switch		**5:** without

5: 5	**5:** 0.5	**5:** VT/GY	**5:** 1303	Signal (1)	**5:** II	BTV
6: 6	**6:** 0.5	**6:** BN/D-GN	**6:** 109	**6:** Hood Ajar Switch Signal	**6:** II	**6:** -
7-9	-	-	-	Not Occupied	-	-
10: 10	**10:** 0.5	**10:** D-GN/YE	**10:** 6134	**10:** Linear Interconnect Network Bus 3	**10:** II	**10:** -
11-14	-	-	-	Not Occupied	-	-
15: 15	**15:** 0.5	**15:** YE/D-BU	**15:** 5797	**15:** Rear Closure Handle Switch Open Signal	**15:** II	**15:** -
16: 16	**16:** 0.5	**16:** D-GN/BN	**16:** 6132	**16:** Linear Interconnect Network Bus 1	**16:** II	**16:** -
17	-	-	-	Not Occupied	-	-
18: 18	**18:** 0.5	**18:** D-BU	**18:** 2500	**18:** High Speed GMLAN Serial Data (+) (1)	**18:** II	**18:** -
19: 19	**19:** 0.5	**19:** WH	**19:** 2501	**19:** High Speed GMLAN Serial Data (-) (1)	**19:** II	**19:** -
20-23	-	-	-	Not Occupied	-	-
24: 24	**24:** 0.5	**24:** D-BU	**24:** 2500	**24:** High Speed GMLAN Serial Data (+) (1)	**24:** II	**24:** -
25: 25	**25:** 0.5	**25:** WH	**25:** 2501	**25:** High Speed GMLAN Serial Data (-) (1)	**25:** II	**25:** -
26	-	-	-	Not Occupied	-	-
27: 27	**27:** 0.5	**27:** GY	**27:** 747	**27:** Left Rear Door Ajar Switch Signal	**27:** II	**27:** -

K9 BODY CONTROL MODULE X7

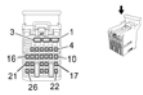

Connector Part Information

- Harness Type: Body
- OEM Connector: 13594132
- Service Connector: 19151265
- Description: 26-Way F 0.64 2.8 Series (GY)

Terminal Part Information

Terminal Type ID	Terminated Lead	Diagnostic Test Probe	Terminal Removal Tool	Service Terminal	Tray	Core Crimp	Insulation Crimp
I	13575560	J-35616-35 (VT)	J-38125-12A	SNAC-A081T-M28	20	E	A
		J-35616-64B	J-38125-	SNAC3-			

II	13575870	(L-BU)	12A	A021T-M064	20	J	J

K9 Body Control Module X7

Pin	Size	Color	Circuit	Function	Terminal Type ID	Option
1: 1	**1:** 0.5	**1:** GY	**1:** 157	**1:** Interior Lamp Control	**1:** I	**1:** -
2: 2	**2:** 1	**2:** WH/BN	**2:** 6815	**2:** Inadvertent Power Control	**2:** I	**2:** -
3: 3	**3:** 0.5	**3:** D-GN/WH	**3:** 1324	**3:** Backup Lamp Control	**3:** I	**3:** -
4-5	-	-	-	Not Occupied	-	-
6: 6	**6:** 0.5	**6:** VT/BK	**6:** 7553	**6:** Park Lock Solenoid Control	**6:** II	**6:** MH8
7: 7	**7:** 0.5	**7:** D-GN/GY	**7:** 737	**7:** Trunk Lamp Control	**7:** II	**7:** -
8	-	-	-	Not Occupied	-	-
9: 9	**9:** 0.5	**9:** YE	**9:** 6817	**9:** LED Backlight Dimming Control	**9:** II	**9:** -
10	-	-	-	Not Occupied	-	-
11: 11	**11:** 0.5	**11:** GY	**11:** 748	**11:** Right Rear Door Ajar Switch Signal	**11:** II	**11:** -
12: 12	**12:** 0.5	**12:** BN/WH	**12:** 3269	**12:** Child Security Lock Motor Status Signal Left Rear	**12:** II	**12:** -
13	-	-	-	Not Occupied	-	-
14: 14	**14:** 0.5	**14:** GY	**14:** 746	**14:** Right Front Door Ajar Switch Signal	**14:** II	**14:** -
15: 15	**15:** 0.5	**15:** D-BU/VT	**15:** 1134	**15:** Park Brake Switch Signal	**15:** II	**15:** -
16: 16	**16:** 0.5	**16:** D-GN/BK	**16:** 5103	**16:** Technology Identification	**16:** II	**16:** -
17	-	-	-	Not Occupied	-	-
18: 18	**18:** 0.5	**18:** GY/BK	**18:** 3268	**18:** Child Security Lock Motor Status Signal Right Rear	**18:** II	**18:** -
19: 19	**19:** 0.5	**19:** D-GN/BN	**19:** 6998	**19:** Inadvertent Load 1 Supply Voltage	**19:** II	**19:** -
20-22	-	-	-	Not Occupied	-	-
23: 23	**23:** 0.5	**23:** D-GN	**23:** 5060	**23:** Low Speed GMLAN Serial Data	**23:** II	**23:** -
24	-	-	-	Not Occupied	-	-
25: 25	**25:** 0.5	**25:** GY	**25:** 745	**25:** Left Front Door Ajar Switch Signal	**25:** II	**25:** -
26	-	-	-	Not Occupied	-	-

KR14 BRAKE BOOSTER PUMP RELAY X1

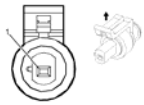

Connector Part Information

- Harness Type: Body
- OEM Connector: 10846708
- Service Connector: 19258185
- Description: 6-Way F 2.8 Series, Sealed (BK)

Terminal Part Information

Terminal Type ID	Terminated Lead	Diagnostic Test Probe	Terminal Removal Tool	Service Terminal	Tray	Core Crimp	Insulation Crimp
I	Pending	Pending	Pending	Pending	Pending	Pending	Pending
II	Pending	J-35616-4A (PU)	J-38125-556	2 21 40 49206 0	27	Not Available	Not Available

KR14 Brake Booster Pump Relay X1

Pin	Size	Color	Circuit	Function	Terminal Type ID	Option
1: 1	**1:** 2.5	**1:** BK	**1:** 1050	**1:** Ground	**1:** I	**1:** -
2: 2	**2:** 0.5	**2:** BN	**2:** 6305	**2:** Brake Vacuum Switch Signal	**2:** II	**2:** -
3-4	-	-	-	Not Occupied	-	-
5: 5	**5:** 2.5	**5:** RD/VT	**5:** 1940	**5:** Battery Positive Voltage	**5:** I	**5:** -
6	-	-	-	Not Occupied	-	-

KR14 BRAKE BOOSTER PUMP RELAY X2

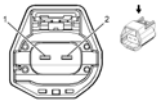

Connector Part Information

- Harness Type: Brake Booster Pump Motor Relay
- OEM Connector: 7283-5575-10
- Service Connector: Service by Harness - See Part Catalog
- Description: 2-Way F 2.8 Series, Sealed (D-GY)

Terminal Part Information

Terminal Type			

ID	Terminated Lead	Diagnostic Test Probe	Terminal Removal Tool
I	Service by Harness - See Part Catalog	Pending	Pending

KR14 Brake Booster Pump Relay X2

Pin	Size	Color	Circuit	Function	Terminal Type ID	Option
1: 1	**1:** 1.5	**1:** RD	**1:** 1470	**1:** Brake Booster Pump Motor Supply Voltage	**1:** I	**1:** -
2: 2	**2:** 1.5	**2:** WH	**2:** 1809	**2:** Brake Booster Vacuum Sensor Signal	**2:** I	**2:** -

K17 ELECTRONIC BRAKE CONTROL MODULE

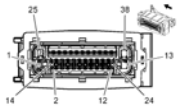

Connector Part Information

- Harness Type: Body
- OEM Connector: 13664198
- Service Connector: 13581097
- Description: 38-Way F 0.64, 2.8, 5.8 Series, Sealed (BK)

Terminal Part Information

Terminal Type ID	Terminated Lead	Diagnostic Test Probe	Terminal Removal Tool	Service Terminal	Tray	Core Crimp	Insulation Crimp
I	13575437	J-35616-42 (RD)	J-38125-36	1241818-1	4	B	G
II	13578854	J-35616-35 (VT)	J-38125-36	Not Available	Not Available	E	1
III	13575264	J-35616-64B (L-BU)	J-38125-215A	SAITS-A03T-M064	14	9	9

K17 Electronic Brake Control Module

Pin	Size	Color	Circuit	Function	Terminal Type ID	Option
1: 1	**1:** 4	**1:** RD/VT	**1:** 1640	**1:** Battery Positive Voltage	**1:** I	**1:** -
2: 2	**2:** 0.5	**2:** GY	**2:** 1903	**2:** AAS Wheel Speed Sensor Signal Left Front	**2:** III	**2:** -
3-4	-	-	-	Not Occupied	-	-
				5: High Speed GMLAN		

5: 5	**5:** 0.5	**5:** D-BU/YE	**5:** 6105	Serial Data (+) (2)	**5:** III	**5:** -
6: 6	**6:** 0.5	**6:** WH	**6:** 6106	**6:** High Speed GMLAN Serial Data (-) (2)	**6:** III	**6:** -
7	-	-	-	Not Occupied	-	-
8: 8	**8:** 0.5	**8:** WH/D-BU	**8:** 5986	**8:** Serial Data Communication Enable	**8:** III	**8:** -
9: 9	**9:** 0.5	**9:** WH	**9:** 2501	**9:** High Speed GMLAN Serial Data (-) (1)	**9:** III	**9:** -
10: 10	**10:** 0.5	**10:** WH	**10:** 2501	**10:** High Speed GMLAN Serial Data (-) (1)	**10:** III	**10:** -
11: 11	**11:** 0.5	**11:** D-BU	**11:** 2500	**11:** High Speed GMLAN Serial Data (+) (1)	**11:** III	**11:** NJ1
12: 12	**12:** 0.5	**12:** D-BU	**12:** 2500	**12:** High Speed GMLAN Serial Data (+) (1)	**12:** III	**12:** -
13: 13	**13:** 4	**13:** BK	**13:** 1450	**13:** Ground	**13:** I	**13:** -
14	-	-	-	Not Occupied	-	-
15: 15	**15:** 0.5	**15:** D-GN/BN	**15:** 2087	**15:** Combined Vehicle Inertial Sensor Supply Voltage	**15:** III	**15:** -
16	-	-	-	Not Occupied	-	-
17: 17	**17:** 0.5	**17:** YE/RD	**17:** 6031	**17:** Brake Vacuum Sensor 5 Volt Reference	**17:** III	**17:** -
18-21	-	-	-	Not Occupied	-	-
22: 22	**22:** 0.5	**22:** YE/VT	**22:** 6030	**22:** Brake Vacuum Sensor Signal	**22:** III	**22:** -
23	-	-	-	Not Occupied	-	-
24: 24	**24:** 0.5	**24:** BK/YE	**24:** 6032	**24:** Brake Vacuum Sensor Low Reference	**24:** III	**24:** -
25: 25	**25:** 1	**25:** RD/D-GN	**25:** 1840	**25:** Battery Positive Voltage	**25:** II	**25:** -
26: 26	**26:** 0.5	**26:** YE	**26:** 872	**26:** Wheel Speed Sensor Signal Right Front	**26:** III	**26:** -
27: 27	**27:** 0.5	**27:** GY/BN	**27:** 7065	**27:** Wheel Speed Sensor Control Right Front	**27:** III	**27:** -
28: 28	**28:** 0.5	**28:** D-GN/GY	**28:** 333	**28:** Brake Fluid Level Sensor Signal	**28:** III	**28:** -
29: 29	**29:** 0.5	**29:** GY/BK	**29:** 7127	**29:** Wheel Speed Sensor Control Left Rear	**29:** III	**29:** -
30: 30	**30:** 0.5	**30:** D-BU	**30:** 884	**30:** Wheel Speed Sensor Signal Left Rear	**30:** III	**30:** -
31-32	-	-	-	Not Occupied	-	-
33: 33	**33:** 0.5	**33:** VT	**33:** 882	**33:** Wheel Speed Sensor Signal Right Rear	**33:** III	**33:** -
				34: Wheel Speed Sensor		

34: 34	**34:** 0.5	**34:** GY/YE	**34:** 7128	Control Right Rear	**34:** III	**34:** -
35	-	-	-	Not Occupied	-	-
36: 36	**36:** 0.5	**36:** GY/WH	**36:** 7064	**36:** Wheel Speed Sensor Control Left Front	**36:** III	**36:** -
37: 37	**37:** 0.5	**37:** GY	**37:** 830	**37:** Wheel Speed Sensor Signal Left Front	**37:** III	**37:** -
38	-	-	-	Not Occupied	-	-

K20 ENGINE CONTROL MODULE X1 (LUW/LWE)

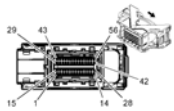

Connector Part Information

- Harness Type: Engine
- OEM Connector: 19167430
- Service Connector: 13581098
- Description: 56-Way F (BK)

Terminal Part Information

Terminal Type ID	Terminated Lead	Diagnostic Test Probe	Terminal Removal Tool	Service Terminal	Tray	Core Crimp	Insulation Crimp
I	13582274	J-35616-64B (L-BU)	J-38125-12A	928999-5	15	J	J
II	13582275	J-35616-64B (L-BU)	J-38125-12A	1719532-5	7	J	J

K20 Engine Control Module X1 (LUW/LWE)

Pin	Size	Color	Circuit	Function	Terminal Type ID	Option
1: 1	**1:** 0.5	**1:** BN/WH	**1:** 419	**1:** Check Engine Indicator Control	**1:** I	**1:** -
2: 2	**2:** 0.5	**2:** D-GN/GY	**2:** 465	**2:** Fuel Pump Primary Relay Control	**2:** I	**2:** -
3: 3	**3:** 0.75	**3:** VT/L-BU	**3:** 5290	**3:** Powertrain Main Relay Fused Supply (1)	**3:** II	**3:** -
4: 4	**4:** 0.5	**4:** WH/GY	**4:** 459	**4:** A/C Compressor Clutch Relay Control	**4:** I	**4:** -
5: 5	**5:** 0.5	**5:** WH/RD	**5:** 1164	**5:** Accelerator Pedal Position 5 Volt Reference (1)	**5:** I	**5:** -
				6: EVAP Canister Vent		

6: 6	**6:** 0.75	**6:** WH	**6:** 1310	Solenoid Control	**6:** II	**6:** -
7: 7	**7:** 0.5	**7:** GY/BK	**7:** 3097	**7:** 5 Volt Reference	**7:** I	**7:** MZ0
8-9	-	-	-	Not Occupied	-	-
10: 10	**10:** 0.5	**10:** D-BU	**10:** 2500	**10:** High Speed GMLAN Serial Data (+) (1)	**10:** I	**10:** -
11: 11	**11:** 0.5	**11:** WH	**11:** 2501	**11:** High Speed GMLAN Serial Data (-) (1)	**11:** I	**11:** -
12: 12	**12:** 0.75	**12:** RD/WH	**12:** 140	**12:** Battery Positive Voltage	**12:** II	**12:** -
13	-	-	-	Not Occupied	-	-
14: 14	**14:** 0.75	**14:** VT/GY	**14:** 139	**14:** Run/Crank Ignition 1 Voltage	**14:** II	**14:** -
15: 15	**15:** 0.5	**15:** BN/YE	**15:** 473	**15:** High Speed Cooling Fan Relay Control	**15:** I	**15:** -
16: 16	**16:** 0.5	**16:** YE	**16:** 5991	**16:** Powertrain Relay Coil Control	**16:** I	**16:** -
17-18	-	-	-	Not Occupied	-	-
19: 19	**19:** 0.5	**19:** BN/RD	**19:** 1274	**19:** Accelerator Pedal Position 5 Volt Reference (2)	**19:** I	**19:** -
20: 20	**20:** 0.5	**20:** BK/L-BU	**20:** 1271	**20:** Accelerator Pedal Position Low Reference (1)	**20:** I	**20:** -
21: 21	**21:** 0.5	**21:** BK/VT	**21:** 1272	**21:** Accelerator Pedal Position Low Reference (2)	**21:** I	**21:** -
22	-	-	-	Not Occupied	-	-
23: 23	**23:** 0.5	**23:** BK/GY	**23:** 6110	**23:** Clutch Apply Sensor Low Reference	**23:** I	**23:** MZ0
24: 24	**24:** 0.5	**24:** BK/VT	**24:** 2760	**24:** Intake Air Temperature Sensor Low Reference	**24:** I	**24:** -
25: 25	**25:** 0.5	**25:** WH/D-BU	**25:** 6311	**25:** Cruise/ETC/TCC Brake Signal	**25:** I	**25:** -
26: 26	**26:** 0.5	**26:** D-GN	**26:** 275	**26:** Park Neutral Position Switch Park Signal	**26:** I	**26:** MH8
27: 27	**27:** 0.5	**27:** L-GN	**27:** 3098	**27:** Output Speed	**27:** I	**27:** Digital) Signal (MZ0
28: 28	**28:** 0.5	**28:** L-GN/WH	**28:** 5007	**28:** Reverse Switch Signal	**28:** I	**28:** MZ0
29: 29	**29:** 0.5	**29:** YE/BK	**29:** 625	**29:** Starter Enable Relay Control	**29:** I	**29:** -
30-31	-	-	-	Not Occupied	-	-
32: 32	**32:** 0.5	**32:** GY/RD	**32:** 6109	**32:** Clutch Apply Sensor Voltage Reference	**32:** I	**32:** MZ0
33: 33	**33:** 0.5	**33:** BN/RD	**33:** 2700	**33:** A/C Pressure Sensor 5 Volt Reference	**33:** I	**33:** -
				34: Fuel Tank Pressure		

34: 34	**34:** 0.5	**34:** YE/RD	**34:** 2709	Sensor 5 Volt Reference	**34:** I	**34:** -
35	-	-	-	Not Occupied	-	-
36: 36	**36:** 0.5	**36:** VT/YE	**36:** 5985	**36:** Accessory Wakeup Serial Data	**36:** I	**36:** -
37	-	-	-	Not Occupied	-	-
38: 38	**38:** 0.5	**38:** BK/D-GN	**38:** 6281	**38:** Fuel Level Sensor Low Reference	**38:** I	**38:** -
39	-	-	-	Not Occupied	-	-
40: 40	**40:** 0.5	**40:** YE/WH	**40:** 1161	**40:** Accelerator Pedal Position Signal (1)	**40:** I	**40:** -
41: 41	**41:** 0.5	**41:** D-GN	**41:** 380	**41:** A/C Refrigerant Pressure Sensor Signal	**41:** I	**41:** -
42: 42	**42:** 0.5	**42:** D-GN/WH	**42:** 1162	**42:** Accelerator Pedal Position Signal (2)	**42:** I	**42:** -
43: 43	**43:** 0.5	**43:** D-BU	**43:** 6814	**43:** Thermostat Engine Cool Control	**43:** I	**43:** -
44: 44	**44:** 0.5	**44:** D-GN/VT	**44:** 335	**44:** Low Speed Cooling Fan Relay Control	**44:** I	**44:** -
45: 45	**45:** 0.5	**45:** BK/BN	**45:** 5514	**45:** A/C Refrigerant Pressure Sensor Low Reference	**45:** I	**45:** -
46: 46	**46:** 0.5	**46:** BK/D-BU	**46:** 6813	**46:** Coolant Temperature Sensor #2 Low Reference	**46:** I	**46:** -
47: 47	**47:** 0.5	**47:** WH/BK	**47:** 3096	**47:** 5 Volt Reference	**47:** I	**47:** MZ0
48-50	-	-	-	Not Occupied	-	-
51: 51	**51:** 0.5	**51:** L-GN/WH	**51:** 492	**51:** Mass Air Flow Sensor Signal	**51:** I	**51:** -
52: 52	**52:** 0.5	**52:** D-BU/VT	**52:** 1589	**52:** Primary Fuel Level Sensor Signal	**52:** I	**52:** -
53: 53	**53:** 0.5	**53:** YE/BK	**53:** 3000	**53:** Coolant Temperature Sensor #2 Signal	**53:** I	**53:** -
54: 54	**54:** 0.5	**54:** BN/VT	**54:** 472	**54:** Intake Air Temperature Sensor Signal	**54:** I	**54:** -
55: 55	**55:** 0.5	**55:** D-BU/WH	**55:** 890	**55:** Fuel Tank Pressure Sensor Signal	**55:** I	**55:** -
56: 56	**56:** 0.5	**56:** YE	**56:** 6111	**56:** Clutch Apply Sensor Signal	**56:** I	**56:** MZ0

K20 ENGINE CONTROL MODULE X2 (LUW/LWE)

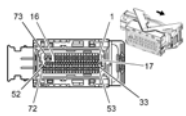

Connector Part Information

- Harness Type: Engine
- OEM Connector: PPI0001016
- Service Connector: 13355865
- Description: 73-Way F 0.64, 2.8 Series, Sealed (BK)

Terminal Part Information

Terminal Type ID	Terminated Lead	Diagnostic Test Probe	Terminal Removal Tool	Service Terminal	Tray	Core Crimp	Insulation Crimp
I	13582274	J-35616-64B (L-BU)	J-38125-12A	928999-5	15	J	J
II	13582275	J-35616-64B (L-BU)	J-38125-12A	1719532-5	7	J	J
III	13581360	Pending	Pending	Not Available	Not Available	Not Available	Not Available

K20 Engine Control Module X2 (LUW/LWE)

Pin	Size	Color	Circuit	Function	Terminal Type ID	Option
1: 1	**1:** 0.5	**1:** BN	**1:** 25	**1:** Charge Indicator Control	**1:** I	**1:** -
2	-	-	-	Not Occupied	-	-
3: 3	**3:** 0.5	**3:** L-GN	**3:** 1668	**3:** Heated Oxygen Sensor High Signal Bank 1 Sensor (2)	**3:** I	**3:** -
4: 4	**4:** 0.5	**4:** L-GN	**4:** 1665	**4:** Heated Oxygen Sensor High Signal Bank 1 Sensor (1)	**4:** I	**4:** -
5: 5	**5:** 0.5	**5:** BN/D-GN	**5:** 485	**5:** Throttle Position Sensor Signal (1)	**5:** I	**5:** -
6-7	-	-	-	Not Occupied	-	-
8: 8	**8:** 0.5	**8:** L-GN/WH	**8:** 432	**8:** Manifold Absolute Pressure Sensor Signal	**8:** I	**8:** -
9: 9	**9:** 0.5	**9:** BN/D-BU	**9:** 486	**9:** Throttle Position Sensor Signal (2)	**9:** I	**9:** -
10: 10	**10:** 0.5	**10:** YE/WH	**10:** 1669	**10:** Heated Oxygen Sensor Low Signal Bank 1 Sensor (2)	**10:** I	**10:** -
11: 11	**11:** 0.5	**11:** VT/BK	**11:** 5273	**11:** Camshaft Position Exhaust Sensor (1)	**11:** I	**11:** -
12: 12	**12:** 0.5	**12:** BN/YE	**12:** 844	**12:** Fuel Injector Control (4)	**12:** I	**12:** -
13: 13	**13:** 0.5	**13:** BK/VT	**13:** 6754	**13:** Cam Phaser X Return Low Reference	**13:** I	**13:** -

14: 14	**14:** 0.5	**14:** GY/D-BU	**14:** 5282	**14:** Camshaft Phaser Exhaust Solenoid (1)	**14:** I	**14:** -
15: 15	**15:** 0.5	**15:** BK/BN	**15:** 6753	**15:** Cam Phaser W Return Low Reference	**15:** I	**15:** -
16: 16	**16:** 0.5	**16:** YE/WH	**16:** 1745	**16:** Fuel Injector Control (2)	**16:** I	**16:** -
17	-	-	-	Not Occupied	-	-
18: 18	**18:** 0.5	**18:** VT/D-BU	**18:** 6270	**18:** Crankshaft 60X Sensor Voltage	**18:** I	**18:** -
19	-	-	-	Not Occupied	-	-
20: 20	**20:** 0.5	**20:** YE/BN	**20:** 1664	**20:** Heated Oxygen Sensor Low Signal Bank 1 Sensor (1)	**20:** I	**20:** -
21: 21	**21:** 0.5	**21:** GY	**21:** 23	**21:** Generator Field Duty Cycle Signal	**21:** I	**21:** -
22-23	-	-	-	Not Occupied	-	-
24: 24	**24:** 0.5	**24:** YE/L-BU	**24:** 231	**24:** Oil Pressure Switch Signal	**24:** I	**24:** -
25: 25	**25:** 0.5	**25:** L-GN/VT	**25:** 2032	**25:** Coolant Temperature Sensor Signal	**25:** I	**25:** -
26: 26	**26:** 0.5	**26:** L-GN	**26:** 6271	**26:** Crankshaft 60X Sensor Signal	**26:** I	**26:** -
27: 27	**27:** 0.5	**27:** YE/VT	**27:** 5275	**27:** Camshaft Position Intake Sensor (1)	**27:** I	**27:** -
28	-	-	-	Not Occupied	-	-
29: 29	**29:** 0.5	**29:** GY/L-GN	**29:** 7303	**29:** Intake Manifold Tuning Valve (IMTV) Position - Signal	**29:** I	**29:** -
30-31	-	-	-	Not Occupied	-	-
32: 32	**32:** 0.5	**32:** VT/BN	**32:** 5284	**32:** Camshaft Phaser Intake Solenoid (1)	**32:** I	**32:** -
33: 33	**33:** 0.5	**33:** GY/YE	**33:** 5297	**33:** Camshaft Position Exhaust Sensor Supply Voltage (1)	**33:** I	**33:** -
34	-	-	-	Not Occupied	-	-
35: 35	**35:** 0.5	**35:** VT/GY	**35:** 496	**35:** Knock Sensor Signal (1)	**35:** I	**35:** -
36: 36	**36:** 0.5	**36:** GY/RD	**36:** 2704	**36:** Manifold Absolute Pressure Sensor 5 Volt Reference	**36:** I	**36:** -
37-38	-	-	-	Not Occupied	-	-
39: 39	**39:** 0.5	**39:** BK/GY	**39:** 5296	**39:** Camshaft Position Exhaust Sensor Low Reference (1)	**39:** I	**39:** -

40: 40	**40:** 0.5	**40:** BK/L-GN	**40:** 5301	**40:** Camshaft Position Intake Sensor Low Reference (1)	**40:** I	**40:** -
41-43	-	-	-	Not Occupied	-	-
44: 44	**44:** 0.5	**44:** D-BU	**44:** 7302	**44:** Intake Manifold Tuning Valve (IMTV) Control - Signal	**44:** I	**44:** -
45: 45	**45:** 0.5	**45:** BK/VT	**45:** 6272	**45:** Crankshaft 60X Sensor Low Reference	**45:** I	**45:** -
46: 46	**46:** 0.75	**46:** YE/D-BU	**46:** 2124	**46:** Ignition Control (4)	**46:** I	**46:** -
47: 47	**47:** 0.75	**47:** L-BU/WH	**47:** 2122	**47:** Ignition Control (2)	**47:** I	**47:** -
48	-	-	-	Not Occupied	-	-
49: 49	**49:** 0.75	**49:** BK/D-BU	**49:** 2129	**49:** Low Reference	**49:** II	**49:** -
50: 50	**50:** 0.5	**50:** BN/VT	**50:** 1744	**50:** Fuel Injector Control (1)	**50:** I	**50:** -
51: 51	**51:** 0.5	**51:** BN/VT	**51:** 1746	**51:** Fuel Injector Control (3)	**51:** I	**51:** -
52: 52	**52:** 0.75	**52:** L-GN/VT	**52:** 1423	**52:** Heated Oxygen Sensor Heater Low Control Bank 1 Sensor (2)	**52:** II	**52:** -
53	-	-	-	Not Occupied	-	-
54: 54	**54:** 0.5	**54:** GY/D-BU	**54:** 5300	**54:** Camshaft Position Intake Sensor Supply Voltage (1)	**54:** I	**54:** -
55: 55	**55:** 0.5	**55:** BK/YE	**55:** 1716	**55:** Knock Sensor Low Reference (1)	**55:** I	**55:** -
56: 56	**56:** 0.5	**56:** BN/RD	**56:** 2701	**56:** Throttle Position Sensor 5 Volt Reference	**56:** I	**56:** -
57-59	-	-	-	Not Occupied	-	-
60: 60	**60:** 0.5	**60:** BK/BN	**60:** 2752	**60:** Throttle Position Sensor Low Reference	**60:** I	**60:** -
61	-	-	-	Not Occupied	-	-
62: 62	**62:** 0.5	**62:** BK/L-GN	**62:** 469	**62:** Manifold Absolute Pressure Sensor Low Reference	**62:** I	**62:** -
63	-	-	-	Not Occupied	-	-
64: 64	**64:** 0.5	**64:** BK/BN	**64:** 2761	**64:** Coolant Temperature Sensor Low Reference	**64:** I	**64:** -
65	-	-	-	Not Occupied	-	-
66: 66	**66:** 0.75	**66:** L-GN/D-BU	**66:** 428	**66:** EVAP Canister Purge Solenoid Control	**66:** II	**66:** -

67	-	-	-	Not Occupied	-	-
68: 68	**68:** 0.75	**68:** BN/WH	**68:** 582	**68:** Throttle Actuator Control Close	**68:** II	**68:** -
69: 69	**69:** 0.75	**69:** YE	**69:** 581	**69:** Throttle Actuator Control Open	**69:** II	**69:** -
70: 70	**70:** 0.75	**70:** BU/VT	**70:** 2121	**70:** Ignition Control (1)	**70:** II	**70:** -
71: 71	**71:** 0.75	**71:** L-GN/D-BU	**71:** 2123	**71:** Ignition Control (3)	**71:** II	**71:** -
72: 72	**72:** 0.75	**72:** GY/WH	**72:** 3113	**72:** Heated Oxygen Sensor Heater Low Control Bank 1 Sensor (1)	**72:** II	**72:** -
73: 73	**73:** 2.5	**73:** BK	**73:** 450	**73:** Ground	**73:** III	**73:** -

2013 ELECTRICAL

Wiring Systems and Power Management - Component Locator - Component Connector End Views - Cruze

COMPONENT CONNECTOR END VIEWS

K20 ENGINE CONTROL MODULE X1 (LUV)

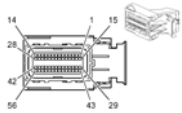

Connector Part Information

- Harness Type: Engine
- OEM Connector: 12582680
- Service Connector: 88988373
- Description: 56-Way F MX123 34576 Series, Sealed (BU)

Terminal Part Information

Terminal Type ID	Terminated Lead	Diagnostic Test Probe	Terminal Removal Tool	Service Terminal	Tray	Core Crimp	Insulation Crimp
I	13575812	J-35616-64B (L-BU)	J-38125-213	33467-0005	23	J	J
II	13575812	J-35616-64B (L-BU)	J-38125-213	33467-0005	23	K	K

K20 Engine Control Module X1 (LUV)

Pin	Size	Color	Circuit	Function	Terminal Type ID	Option
1	-	-	-	Not Occupied	-	-
2: 2	**2:** 0.5	**2:** L-GN/WH	**2:** 1162	**2:** Accelerator Pedal Position Signal (2)	**2:** I	**2:** -
3: 3	**3:** 0.5	**3:** GN/WH	**3:** 492	**3:** Mass Air Flow Sensor Signal	**3:** I	**3:** -
4-7	-	-	-	Not Occupied	-	-
8: 8	**8:** 0.5	**8:** BN/GY	**8:** 4008	**8:** Humidity Sensor Signal	**8:** -	**8:** -
9: 9	**9:** 0.5	**9:** YE/WH	**9:** 3200	**9:** Throttle Inlet Absolute Pressure Sensor Signal	**9:** I	**9:** -
10: 10	**10:** 0.5	**10:** YE/WH	**10:** 1161	**10:** Accelerator Pedal Position Signal (1)	**10:** I	**10:** -
11:				**11:** Pre Throttle Air Temp		

11	**11:** 0.5	**11:** L-GN	**11:** 7330	and Press (TMAP) Air Pressure Signal	**11:** I	**11:** -
12: 12	**12:** 0.5	**12:** L-GN	**12:** 380	**12:** A/C Refrigerant Pressure Sensor Signal	**12:** I	**12:** -
13: 13	**13:** 0.5	**13:** BK/BN	**13:** 5514	**13:** Low Reference	**13:** I	**13:** -
14-15	-	-	-	Not Occupied	-	-
16: 16	**16:** 0.5	**16:** BN/RD	**16:** 1274	**16:** 5 Volt Reference	**16:** I	**16:** -
17	-	-	-	Not Occupied	-	-
18: 18	**18:** 0.5	**18:** BU	**18:** 5985	**18:** Accessory Wakeup Serial Data	**18:** I	**18:** -
19: 19	**19:** 0.75	**19:** VT/D-BU	**19:** 139	**19:** Run/Crank Ignition 1 Voltage	**19:** II	**19:** -
20: 20	**20:** 0.75	**20:** RD/WH	**20:** 140	**20:** Battery Positive Voltage	**20:** II	**20:** -
21-22	-	-	-	Not Occupied	-	-
23: 23	**23:** 0.5	**23:** WH/RD	**23:** 3201	**23:** 5 Volt Reference	**23:** I	**23:** -
24: 24	**24:** 0.5	**24:** BN/RD	**24:** 1164	**24:** 5 Volt Reference	**24:** I	**24:** -
25: 25	**25:** 0.5	**25:** BN/RD	**25:** 7331	**25:** 5 Volt Reference	**25:** I	**25:** -
26: 26	**26:** 0.5	**26:** BN/RD	**26:** 2700	**26:** 5 Volt Reference	**26:** I	**26:** -
27: 27	**27:** 0.5	**27:** YE/BK	**27:** 625	**27:** Starter Enable Relay Control	**27:** I	**27:** -
28: 28	**28:** 0.5	**28:** L-GN/GY	**28:** 465	**28:** Fuel Pump Primary Relay Control	**28:** I	**28:** -
29: 29	**29:** 0.5	**29:** L-BU	**29:** 2500	**29:** High Speed GMLAN Serial Data (+) (1)	**29:** I	**29:** -
30: 30	**30:** 0.5	**30:** BN/VT	**30:** 1272	**30:** Low Reference	**30:** I	**30:** -
31: 31	**31:** 0.5	**31:** BK/VT	**31:** 2760	**31:** Low Reference	**31:** II	**31:** -
32: 32	**32:** BK/L-BU	**32:** BK/L-BU	**32:** 6813	**32:** Low Reference	**32:** I	**32:** -
33: 33	**33:** 0.5	**33:** WH/D-BU	**33:** 6311	**33:** Cruise/ETC/TCC Brake Signal	**33:** I	**33:** -
34: 34	**34:** 0.5	**34:** L-GN	**34:** 275	**34:** Park Neutral Position Switch Park Signal	**34:** I	**34:** MH8
35-36	-	-	-	Not Occupied	-	-
37: 37	**37:** 0.5	**37:** BK/YE	**37:** 6014	**37:** Low Reference	**37:** I	**37:** -

38: 38	**38:** 0.5	**38:** BK/VT	**38:** 1271	**38:** Low Reference	**38:** I	**38:** -
39: 39	**39:** 0.5	**39:** BK/L-GN	**39:** 7332	**39:** Low Reference	**39:** I	**39:** -
40: 40	**40:** 0.5	**40:** YE	**40:** 5991	**40:** Powertrain Relay Coil Control	**40:** I	**40:** -
41: 41	**41:** 0.5	**41:** L-GN/VT	**41:** 335	**41:** Low Speed Cooling Fan Relay Control	**41:** I	**41:** -
42	-	-	-	Not Occupied	-	-
43: 43	**43:** 0.5	**43:** WH	**43:** 2501	**43:** High Speed GMLAN Serial Data (-) (1)	**43:** I	**43:** -
44	-	-	-	Not Occupied	-	-
45: 45	**45:** 0.5	**45:** BN/VT	**45:** 472	**45:** Intake Air Temperature Sensor Signal	**45:** I	**45:** -
46: 46	**46:** 0.5	**46:** YE/BK	**46:** 3000	**46:** Coolant Temperature Sensor #2 Signal	**46:** I	**46:** -
47: 47	**47:** 0.5	**47:** L-BU/WH	**47:** 25	**47:** Charge Indicator Control	**47:** I	**47:** -
48-51	-	-	-	Not Occupied	-	-
52: 52	**52:** 0.5	**52:** BN/WH	**52:** 419	**52:** Check Engine Indicator Control	**52:** I	**52:** -
53	-	-	-	Not Occupied	-	-
54: 54	**54:** 0.5	**54:** BN/YE	**54:** 473	**54:** High Speed Cooling Fan Relay Control	**54:** I	**54:** -
55	-	-	-	Not Occupied	-	-
56: 56	**56:** 0.5	**56:** WH	**56:** 1310	**56:** EVAP Canister Vent Solenoid Control	**56:** I	**56:** -

K20 ENGINE CONTROL MODULE X2 (LUV)

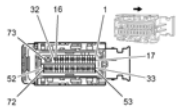

Connector Part Information

- Harness Type: Engine
- OEM Connector: 12582677
- Service Connector: 88988931
- Description: 73-Way F 0.64 2.8 Series, Sealed (BK)

Terminal Part Information

Terminal	Terminated	Diagnostic	Terminal Removal	Service	Tray	Core	Insulation

Type ID	Lead	Test Probe	Tool	Terminal		Crimp	Crimp
I	13575812	J-35616-64B (L-BU)	J-38125-213	33467-0005	23	J	J
II	13575812	J-35616-64B (L-BU)	J-38125-213	33467-0005	23	K	K
III	13575291	J-35616-35 (VT)	J-38125-11A	7116-4152-02	9	A	5

K20 Engine Control Module X2 (LUV)

Pin	Size	Color	Circuit	Function	Terminal Type ID	Option
1: 1	**1:** 0.5	**1:** L-BU/VT	**1:** 2121	**1:** Ignition Control (1)	**1:** I	**1:** -
2: 2	**2:** 0.5	**2:** BN/VT	**2:** 1744	**2:** Fuel Injector Control (1)	**2:** I	**2:** -
3: 3	**3:** 0.5	**3:** BN/YE	**3:** 1746	**3:** Fuel Injector Control (3)	**3:** I	**3:** -
4: 4	**4:** 0.5	**4:** BN	**4:** 844	**4:** Fuel Injector Control (4)	**4:** I	**4:** -
5: 5	**5:** 0.5	**5:** YE/WH	**5:** 1745	**5:** Fuel Injector Control (2)	**5:** I	**5:** -
6-9	-	-	-	Not Occupied	-	-
10: 10	**10:** 0.75	**10:** GY/D-BU	**10:** 5282	**10:** Camshaft Phaser Exhaust Solenoid (1)	**10:** II	**10:** -
11: 11	**11:** 0.75	**11:** VT/BN	**11:** 5284	**11:** Camshaft Phaser Intake Solenoid (1)	**11:** II	**11:** -
12	-	-	-	Not Occupied	-	-
13: 13	**13:** 0.75	**13:** RD/D-BU	**13:** 5290	**13:** Powertrain Main Relay Fused Supply (1)	**13:** II	**13:** -
14: 14	**14:** 0.5	**14:** L-BU	**14:** 6814	**14:** Thermostat Engine Cool Control	**14:** I	**14:** -
15: 15	**15:** 0.5	**15:** BN/RD	**15:** 581	**15:** Throttle Actuator Control Open	**15:** I	**15:** -
16: 16	**16:** 0.5	**16:** BN/WH	**16:** 582	**16:** Throttle Actuator Control Close	**16:** I	**16:** -
17: 17	**17:** 0.5	**17:** L-GN/L-BU	**17:** 2123	**17:** Ignition Control (3)	**17:** I	**17:** -
18-19	-	-	-	Not Occupied	-	-
20: 20	**20:** 0.5	**20:** BK/VT	**20:** 6272	**20:** Low Reference	**20:** I	**20:** -
21: 21	**21:** 0.5	**21:** BK/GY	**21:** 6267	**21:** Camshaft CAM X Ground	**21:** I	**21:** -
22-23	-	-	-	Not Occupied	-	-
24: 24	**24:** 0.5	**24:** BK/L-GN	**24:** 6266	**24:** Camshaft CAM W Ground	**24:** I	**24:** -
25-27	-	-	-	Not Occupied	-	-
28: 28	**28:** 0.75	**28:** RD/D-BU	**28:** 5290	**28:** Powertrain Main Relay Fused Supply (1)	**28:** II	**28:** -
29: 29	**29:**	**29:** BN/WH	**29:** 6783	**29:** Low Reference	**29:** II	**29:** -

	0.75					
30: 30	**30:** 0.75	**30:** BK/VT	**30:** 6754	**30:** Low Reference	**30:** II	**30:** -
31: 31	**31:** 0.75	**31:** YE/D-BU	**31:** 231	**31:** Oil Pressure Switch Signal	**31:** II	**31:** -
32	-	-	-	Not Occupied	-	-
33: 33	**33:** 0.5	**33:** YE/D-BU	**33:** 2124	**33:** Ignition Control (4)	**33:** I	**33:** -
34	-	-	-	Not Occupied	-	-
35: 35	**35:** 0.5	**35:** BK/L-BU	**35:** 2129	**35:** Low Reference	**35:** I	**35:** -
36: 36	**36:** 0.5	**36:** VT/L-BU	**36:** 6270	**36:** Crankshaft 60X Sensor Voltage	**36:** I	**36:** -
37: 37	**37:** 0.5	**37:** GY/YE	**37:** 6457	**37:** Camshaft CAM X Supply Voltage	**37:** I	**37:** -
38-39	-	-	-	Not Occupied	-	-
40: 40	**40:** 0.5	**40:** GY/L-BU	**40:** 6259	**40:** Camshaft CAM W Supply Voltage	**40:** I	**40:** -
41-42	-	-	-	Not Occupied	-	-
43: 43	**43:** 0.75	**43:** BN/RD	**43:** 416	**43:** 5 Volt Reference	**43:** II	**43:** -
44: 44	**44:** 0.75	**44:** BK/YE	**44:** 2752	**44:** Low Reference	**44:** II	**44:** -
45	-	-	-	Not Occupied	-	-
46: 46	**46:** 0.5	**46:** GY	**46:** 5641	**46:** Turbo Boost Pressure Sensor Temperature Signal	**46:** I	**46:** -
47: 47	**47:** 0.5	**47:** BK/L-GN	**47:** 1664	**47:** Heated Oxygen Sensor Low Signal Bank 1 Sensor (1)	**47:** I	**47:** -
48	-	-	-	Not Occupied	-	-
49: 49	**49:** 0.5	**49:** BK/YE	**49:** 1716	**49:** Low Reference	**49:** I	**49:** -
50-52	-	-	-	Not Occupied	-	-
53: 53	**53:** 0.5	**53:** L-BU/WH	**53:** 2122	**53:** Ignition Control (2)	**53:** I	**53:** -
54-55	-	-	-	Not Occupied	-	-
56: 56	**56:** 0.5	**56:** L-GN	**56:** 6271	**56:** Crankshaft 60X Sensor Signal	**56:** I	**56:** -
57: 57	**57:** 0.5	**57:** VT/BK	**57:** 6264	**57:** Camshaft CAM X Signal	**57:** I	**57:** -
58-59	-	-	-	Not Occupied	-	-
60: 60	**60:** 0.5	**60:** YE/VT	**60:** 6265	**60:** Camshaft CAM W Signal	**60:** I	**60:** -
61-62	-	-	-	Not Occupied	-	-
63: 63	**63:** 0.5	**63:** BN/L-GN	**63:** 485	**63:** Throttle Position Sensor Signal (1)	**63:** I	**63:** -
64	-	-	-	Not Occupied	-	-

65: 65	**65:** 0.5	**65:** BN/D-BU	**65:** 486	**65:** Throttle Position Sensor Signal (2)	**65:** I	**65:** -
66	-	-	-	Not Occupied	-	-
67: 67	**67:** 0.5	**67:** L-GN	**67:** 1665	**67:** Heated Oxygen Sensor High Signal Bank 1 Sensor (1)	**67:** I	**67:** -
68	-	-	-	Not Occupied	-	-
69: 69	**69:** 0.5	**69:** VT/GY	**69:** 496	**69:** Knock Sensor Signal (1)	**69:** I	**69:** -
70-71	-	-	-	Not Occupied	-	-
72: 72	**72:** 0.75	**72:** GY/WH	**72:** 3113	**72:** Heated Oxygen Sensor Heater Low Control Bank 1 Sensor (1)	**72:** II	**72:** -
73: 73	**73:** 2.5	**73:** BK	**73:** 450	**73:** Ground	**73:** III	**73:** -

K20 ENGINE CONTROL MODULE X3 (LUV)

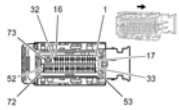

Connector Part Information

- Harness Type: Engine
- OEM Connector: 12582678
- Service Connector: 88988372
- Description: 73-Way F 0.64 2.8 Series, Sealed (BK with GY Terminal Position Assurance Lock)

Terminal Part Information

Terminal Type ID	Terminated Lead	Diagnostic Test Probe	Terminal Removal Tool	Service Terminal	Tray	Core Crimp	Insulation Crimp
I	13575812	J-35616-64B (L-BU)	J-38125-213	33467-0005	23	J	J
II	13575812	J-35616-64B (L-BU)	J-38125-213	33467-0005	23	K	K

K20 Engine Control Module X3 (LUV)

Pin	Size	Color	Circuit	Function	Terminal Type ID	Option
1: 1	**1:** 0.5	**1:** GN/WH	**1:** 5007	**1:** Reverse Switch Signal	**1:** I	**1:** MF3
2-9	-	-	-	Not Occupied	-	-
10: 10	**10:** 0.5	**10:** L-GN/L-BU	**10:** 428	**10:** EVAP Canister Purge Solenoid Control	**10:** I	**10:** -

11-12	-	-	-	Not Occupied	-	-
13: 13	**13:** 0.5	**13:** BN/YE	**13:** 5268	**13:** Overrun Air Valve Solenoid	**13:** I	**13:** -
14	-	-	-	Not Occupied	-	-
15: 15	**15:** 0.75	**15:** BN/RD	**15:** 258	**15:** Waste Gate Solenoid Control	**15:** II	**15:** -
16	-	-	-	Not Occupied	-	-
17: 17	**17:** 0.75	**17:** GY	**17:** 23	**17:** Generator Field Duty Cycle Signal	**17:** II	**17:** -
18	-	-	-	Not Occupied	-	-
19: 19	**19:** 0.5	**19:** WH/BK	**19:** 3097	**19:** Low Reference	**19:** I	**19:** MF3
20-21	-	-	-	Not Occupied	-	-
22: 22	**22:** 0.5 **22:** 0.5	**22:** BK/GY **22:** BK/BN	**22:** 6110 **22:** 5382	**22:** Low Reference **22:** Low Reference	**22:** I	**22:** MF3 **22:** MH8
23-26	-	-	-	Not Occupied	-	-
27: 27	**27:** 0.5	**27:** BN/D-GN	**27:** 6281	**27:** Low Reference	**27:** I	**27:** -
28: 28	**28:** 0.5	**28:** BN/RD	**28:** 2704	**28:** 5 Volt Reference	**28:** I	**28:** -
29: 29	**29:** 0.5	**29:** BK/L-GN	**29:** 469	**29:** Low Reference	**29:** I	**29:** -
30: 30	**30:** 0.75	**30:** BK/D-BU	**30:** 2761	**30:** Low Reference	**30:** II	**30:** -
31	-	-	-	Not Occupied	-	-
32: 32	**32:** 0.75	**32:** BN/GY	**32:** 5035	**32:** Heated Oxygen Sensor Heater High Control Bank 1 Sensor (2)	**32:** II	**32:** -
33-34	-	-	-	Not Occupied	-	-
35: 35	**35:** 0.5	**35:** GY/BK	**35:** 3096	**35:** 5 Volt Reference	**35:** I	**35:** MF3
36-37	-	-	-	Not Occupied	-	-
38: 38	**38:** 0.5 **38:** 0.5	**38:** GY/RD **38:** WH	**38:** 6109 **38:** 5381	**38:** Clutch Apply Sensor Voltage Reference **38:** 5 Volt Reference	**38:** I	**38:** MF3 **38:** MH8
39-42	-	-	-	Not Occupied	-	-
43: 43	**43:** 0.5	**43:** YE/RD	**43:** 2709	**43:** 5 Volt Reference	**43:** I	**43:** -
44	-	-	-	Not Occupied	-	-
45: 45	**45:** 0.5	**45:** L-GN/WH	**45:** 432	**45:** Manifold Absolute Pressure Sensor Signal	**45:** I	**45:** -
46: 46	**46:** 0.75	**46:** D-BU	**46:** 410	**46:** Engine Coolant Temperature Sensor Signal	**46:** II	**46:** -
47-54	-	-	-	Not Occupied	-	-
55: 55	**55:** 0.5	**55:** GN	**55:** 3098	**55:** Output Speed	**55:** I	**55:** Digital) Signal (MF3
56-57	-	-	-	Not Occupied	-	-
58: 58	**58:** 0.5	**58:** YE	**58:** 6111	**58:** Clutch Apply Sensor Signal	**58:** I	**58:** MF3

	58: 0.5	**58:** L-BU/YE	**58:** 5380	**58:** Brake Position Sensor Signal		**58:** MH8
59-62	-	-	-	Not Occupied	-	-
63: 63	**63:** 0.5	**63:** L-BU/WH	**63:** 890	**63:** Fuel Tank Pressure Sensor Signal	**63:** I	**63:** -
64: 64	**64:** 0.5	**64:** L-BU/VT	**64:** 1589	**64:** Primary Fuel Level Sensor Signal	**64:** I	**64:** -
65-66	-	-	-	Not Occupied	-	-
67: 67	**67:** 0.5	**67:** L-GN	**67:** 1668	**67:** Heated Oxygen Sensor High Signal Bank 1 Sensor (2)	**67:** I	**67:** -
68: 68	**68:** 0.5	**68:** BK/L-GN	**68:** 1669	**68:** Heated Oxygen Sensor Low Signal Bank 1 Sensor (2)	**68:** I	**68:** -
69-73	-	-	-	Not Occupied	-	-

K27 FUEL PUMP CONTROL MODULE

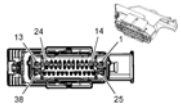

Connector Part Information

- Harness Type: Body
- OEM Connector: 13638773
- Service Connector: 13574909
- Description: 38-Way F, Sealed (BK/GY)

Terminal Part Information

Terminal Type ID	Terminated Lead	Diagnostic Test Probe	Terminal Removal Tool	Service Terminal	Tray	Core Crimp	Insulation Crimp
I	13576407	J-35616-4A (PU)	J-38125-553	15304720	19	4	5
II	13578883	J-35616-64B (L-BU)	J-38125-215A	SAITS-A03T-M064	14	9	9

K27 Fuel Pump Control Module

Pin	Size	Color	Circuit	Function	Terminal Type ID	Option
1: 1	**1:** 2.5	**1:** RD/GY	**1:** 1740	**1:** Battery Positive Voltage	**1:** I	**1:** -
2	-	-	-	Not Occupied	-	-
				3: Shutter Actuator		

3: 3	**3:** 0.5	**3:** GY/BK	**3:** 3437	Solenoid Control	**3:** II	**3:** -
4	-	-	-	Not Occupied	-	-
5: 5	**5:** 0.5	**5:** D-BU	**5:** 2500	**5:** High Speed GMLAN Serial Data Bus (+)	**5:** II	**5:** -
6: 6	**6:** 0.5	**6:** D-BU	**6:** 2500	**6:** High Speed GMLAN Serial Data Bus (+)	**6:** II	**6:** -
7	-	-	-	Not Occupied	-	-
8: 8	**8:** 0.5	**8:** WH/D-BU	**8:** 5986	**8:** Serial Data Communication Enable	**8:** II	**8:** -
9	-	-	-	Not Occupied	-	-
10: 10	**10:** 0.5	**10:** D-BU/WH	**10:** 7446	**10:** Fuel Pressure Sensor Signal	**10:** II	**10:** -
11	-	-	-	Not Occupied	-	-
12: 12	**12:** 0.5	**12:** GY/BK	**12:** 3437	**12:** Shutter Actuator Solenoid Control	**12:** II	**12:** -
13: 13	**13:** 2.5	**13:** GY	**13:** 120	**13:** Fuel Pump Control	**13:** I	**13:** -
14-16	-	-	-	Not Occupied	-	-
17: 17	**17:** 0.5	**17:** WH	**17:** 2501	**17:** High Speed GMLAN Serial Data Bus (-)	**17:** II	**17:** -
18: 18	**18:** 0.5	**18:** WH	**18:** 2501	**18:** High Speed GMLAN Serial Data Bus (-)	**18:** II	**18:** -
19	-	-	-	Not Occupied	-	-
20: 20	**20:** 0.5	**20:** D-GN/GY	**20:** 465	**20:** Fuel Pump Relay Control	**20:** II	**20:** -
21: 21	**21:** 0.5	**21:** VT/BK	**21:** 739	**21:** Ignition Voltage	**21:** II	**21:** -
22: 22	**22:** 0.5	**22:** OG/RD	**22:** 7445	**22:** Fuel Line Pressure Sensor 5V Reference	**22:** II	**22:** -
23: 23	**23:** 0.5	**23:** BK/YE	**23:** 7447	**23:** Low reference	**23:** II	**23:** -
24: 24	**24:** 0.5	**24:** BK	**24:** 120	**24:** Shield	**24:** II	**24:** -
25: 25	**25:** 2.5	**25:** BK	**25:** 2350	**25:** Ground	**25:** I	**25:** -
26-37	-	-	-	Not Occupied	-	-
38: 38	**38:** 2.5	**38:** BK/D-GN	**38:** 1580	**38:** Low reference	**38:** I	**38:** -

K29 SEAT HEATING CONTROL MODULE X1 (KA1)

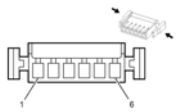

Connector Part Information

- Harness Type: Driver Seat
- OEM Connector: 13527997

- Service Connector: Service by Harness- See Part Catalog
- Description: 2-Way F Metri-Pack 280 Series (BK)

Terminal Part Information

Terminal Type ID	Terminated Lead	Diagnostic Test Probe	Terminal Removal Tool	Service Terminal	Tray	Core Crimp	Insulation Crimp
I	Service by Harness- See Part Catalog	Pending	Not Available	Service by Harness- See Part Catalog	Service by Harness- See Part Catalog	Not Available	Not Available

K29 Seat Heating Control Module X1 (KA1)

Pin	Size	Color	Circuit	Function	Terminal Type ID	Option
A: A	**A:** 2.5	**A:** BK	**A:** 2150	**A:** Ground	**A:** I	**A:** -
B: B	**B:** 2.5	**B:** RD	**B:** 2040	**B:** Battery Positive Voltage	**B:** I	**B:** -

K29 SEAT HEATING CONTROL MODULE X2 (KA1)

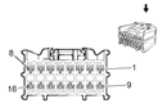

Connector Part Information

- Harness Type: Driver Seat
- OEM Connector: 13520382
- Service Connector: 13503876
- Description: 16-Way F GT FBT 150 Series (BK)

Terminal Part Information

Terminal Type ID	Terminated Lead	Diagnostic Test Probe	Terminal Removal Tool	Service Terminal	Tray	Core Crimp	Insulation Crimp
I	Service by Harness - See Part Catalog	Not Available	Not Available	Not Available	Not Available	Not Available	Not Available

K29 Seat Heating Control Module X2 (KA1)

Pin	Size	Color	Circuit	Function	Terminal Type ID	Option
1: 1	**1:** 1	**1:** BK	**1:** 2424	**1:** Driver Heated Back Element Return	**1:** I	**1:** -

2: 2	**2:** 1	**2:** BK	**2:** 2433	**2:** Passenger Heated Back Element Return	**2:** I	**2:** -
3: 3	**3:** 1	**3:** YE	**3:** 2077	**3:** Driver Heated Seat Element Control	**3:** I	**3:** -
4	-	-	-	Not Occupied	-	-
5: 5	**5:** 1	**5:** YE	**5:** 2479	**5:** Passenger Heated Seat Element Control	**5:** I	**5:** -
6-12	-	-	-	Not Occupied	-	-
13: 13	**13:** 0.5	**13:** BK	**13:** 2080	**13:** Driver Heated Seat NTC Low Reference	**13:** I	**13:** -
14: 14	**14:** 0.5	**14:** BK	**14:** 2435	**14:** Passenger Heated Seat NTC Low Reference	**14:** I	**14:** -
15: 15	**15:** 0.5	**15:** YE	**15:** 7018	**15:** Cushion NTC Signal	**15:** I	**15:** -
16	-	-	-	Not Occupied	-	-

K29 SEAT HEATING CONTROL MODULE X3 (KA1)

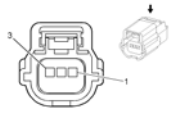

Connector Part Information

- Harness Type: Driver Seat
- OEM Connector: 15477027
- Service Connector: 88988229
- Description: 12-Way F Micro HVT Series (BK)

Terminal Part Information

Terminal Type ID	Terminated Lead	Diagnostic Test Probe	Terminal Removal Tool	Service Terminal	Tray	Core Crimp	Insulation Crimp
I	13575550	J-35616-16 (L-GN)	J-38125-559	15445905	23	J	J

K29 Seat Heating Control Module X3 (KA1)

Pin	Size	Color	Circuit	Function	Terminal Type ID	Option
1-2	-	-	-	Not Occupied	-	-
3: 3	**3:** 0.5	**3:** RD	**3:** 2079	**3:** Driver Heated Seat NTC Signal	**3:** I	**3:** -
4: 4	**4:** 0.5	**4:** RD	**4:** 2434	**4:** Passenger Heated Seat NTC Signal	**4:** I	**4:** -
5-10	-	-	-	Not Occupied	-	-

11: 11	**11:** 0.5	**11:** D-BU	**11:** 5060	**11:** Low Speed GMLAN Serial Data	**11:** I	**11:** -
12	-	-	-	Not Occupied	-	-

K33 HVAC CONTROL MODULE X1

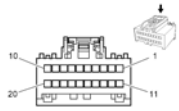

Connector Part Information

- Harness Type: Instrument Panel
- OEM Connector: 13611322
- Service Connector: 13576644
- Description: 20-Way F 0.64 Series (GN)

Terminal Part Information

Terminal Type ID	Terminated Lead	Diagnostic Test Probe	Terminal Removal Tool	Service Terminal	Tray	Core Crimp	Insulation Crimp
I	13582250	J-35616-16 (L-GN)	J-38125-559	15445905	23	J	J

K33 HVAC Control Module X1

Pin	Size	Color	Circuit	Function	Terminal Type ID	Option
1	-	-	-	Not Occupied	-	-
2: 2	**2:** 0.35	**2:** GY/D-GN	**2:** 7565	**2:** Windscreen Temp Sensor Signal	**2:** I	**2:** -
3: 3	**3:** 0.5	**3:** VT/WH	**3:** 5203	**3:** Air Quality Sensor Signal	**3:** I	**3:** -
4: 4	**4:** 0.35	**4:** D-BU/WH	**4:** 734	**4:** Inside Air Temperature Sensor Signal	**4:** I	**4:** -
5: 5	**5:** 0.35	**5:** YE/D-BU	**5:** 3197	**5:** Humidity Temperature Sensor Signal	**5:** I	**5:** -
6: 6	**6:** 0.35	**6:** YE/RD	**6:** 597	**6:** 5V Reference	**6:** I	**6:** -
7: 7	**7:** 0.35	**7:** BK/D-BU	**7:** 7566	**7:** Low Reference	**7:** I	**7:** -
8-11	-	-	-	Not Occupied	-	-
12: 12	**12:** 0.35	**12:** GY/D-BU	**12:** 7564	**12:** Humidity Sensor Signal	**12:** I	**12:** -
13: 13	**13:** 0.35	**13:** D-BU	**13:** 1120	**13:** Solar Sensor Pulsed Supply Voltage	**13:** I	**13:** -
14-15	-	-	-	Not Occupied	-	-

16: 16	**16:** 0.75	**16:** BK	**16:** 1650	**16:** Ground	**16:** I	**16:** -
17	-	-	-	Not Occupied	-	-
18: 18	**18:** 0.5	**18:** BN	**18:** 404	**18:** Upper Air Temperature Sensor Signal	**18:** I	**18:** -
19	-	-	-	Not Occupied	-	-
20: 20	**20:** 0.35	**20:** GY	**20:** 590	**20:** Solar Sensor Driver Signal	**20:** I	**20:** -

K33 HVAC CONTROL MODULE X2

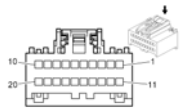

Connector Part Information

- Harness Type: Instrument Panel
- OEM Connector: 15126709
- Service Connector: 15126709
- Description: 20-Way F USCAR 64 Series (BN)

Terminal Part Information

Terminal Type ID	Terminated Lead	Diagnostic Test Probe	Terminal Removal Tool	Service Terminal	Tray	Core Crimp	Insulation Crimp
I	13575867	J-35616-64B (L-BU)	J-38125-215A	SAIT-A03T-M064	14	P	P

K33 HVAC Control Module X2

Pin	Size	Color	Circuit	Function	Terminal Type ID	Option
1: 1	**1:** 0.75	**1:** RD/YE	**1:** 240	**1:** Battery Positive Voltage	**1:** I	**1:** -
2	-	-	-	Not Occupied	-	-
3: 3	**3:** 0.5	**3:** L-GN	**3:** 5060	**3:** Low Speed GMLAN Serial Data	**3:** I	**3:** -
4: 4	**4:** 0.5	**4:** L-GN/YE	**4:** 7531	**4:** Linear Interconnect Network Bus 9	**4:** I	**4:** -
5-7	-	-	-	Not Occupied	-	-
8: 8	**8:** 0.75	**8:** BK	**8:** 1650	**8:** Ground	**8:** I	**8:** -
9: 9	**9:** 0.5	**9:** VT/WH	**9:** 239	**9:** Ignition Voltage	**9:** I	**9:** -
10: 10	**10:** .5 D-BU/YE	**10:** .5 D-BU/YE	**10:** 7574	**10:** Electric Variable Displacement Control	**10:** I	**10:** -

11: 11	**11:** .5 L-BU/BN	**11:** .5 L-BU/BN	**11:** 7573	**11:** Electric Variable Displacement Supply	**11:** I	**11:** -
12-14	-	-	-	Not Occupied	-	-
15: 15	**15:** 0.5	**15:** D-BU/GY	**15:** 754	**15:** Blower Motor Speed Control	**15:** I	**15:** -
16-18	-	-	-	Not Occupied	-	-
19: 19	**19:** 0.5	**19:** BN/VT	**19:** 193	**19:** Rear Defog Relay Control	**19:** I	**19:** -
20	-	-	-	Not Occupied	-	-

K33 HVAC CONTROL MODULE X3

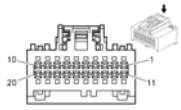

Connector Part Information

- Harness Type: HVAC
- OEM Connector: 15126711
- Service Connector: 15126711
- Description: 20-Way F 64 Series (BK)

Terminal Part Information

Terminal Type ID	Terminated Lead	Diagnostic Test Probe	Terminal Removal Tool	Service Terminal	Tray	Core Crimp	Insulation Crimp
I	13575867	J-35616-64B (L-BU)	J-38125-215A	SAIT-A03T-M064	14	P	P

K33 HVAC Control Module X3

Pin	Size	Color	Circuit	Function	Terminal Type ID	Option
1: 1	**1:** 0.5	**1:** GY/D-GN	**1:** 516	**1:** Upper Left Air Temperature Sensor Signal	**1:** I	**1:** C68
2: 2	**2:** 0.5	**2:** YE	**2:** 936	**2:** Mode Door Stepper Motor Control	**2:** I	**2:** -
3: 3	**3:** 0.5	**3:** WH/RD	**3:** 931	**3:** Mode Door Stepper Motor Control	**3:** I	**3:** -
4: 4	**4:** 0.5	**4:** GY/BN	**4:** 926	**4:** Mode Door Stepper Motor Control	**4:** I	**4:** -
5: 5	**5:** 0.5	**5:** D-GN/WH	**5:** 925	**5:** Mode Door Stepper Motor Control	**5:** I	**5:** -
6-8	-	-	-	Not Occupied	-	-

9: 9	**9:** 0.5	**9:** BK	**9:** 720	**9:** Sensor Low Reference	**9:** I	**9:** -
10	-	-	-	Not Occupied	-	-
11: 11	**11:** 0.5	**11:** D-GN	**11:** 933	**11:** Air Temperature Door Control	**11:** I	**11:** -
12: 12	**12:** 0.5	**12:** WH/RD	**12:** 932	**12:** Air Temperature Door Control	**12:** I	**12:** -
13: 13	**13:** 0.5	**13:** GY/RD	**13:** 930	**13:** Air Temperature Door Control	**13:** I	**13:** -
14: 14	**14:** 0.5	**14:** RD/BK	**14:** 929	**14:** Air Temperature Door Control	**14:** I	**14:** -
15: 15	**15:** 0.5	**15:** OG	**15:** 943	**15:** 5-Volt Reference	**15:** I	**15:** -
16: 16	**16:** 0.5	**16:** GY	**16:** 929	**16:** Recirculation Door Control	**16:** I	**16:** -
17: 17	**17:** 0.5	**17:** D-BU/WH	**17:** 929	**17:** Recirculation Door Control	**17:** I	**17:** -
18: 18	**18:** 0.5	**18:** BN/D-GN	**18:** 929	**18:** Recirculation Door Control	**18:** I	**18:** -
19: 19	**19:** 0.5	**19:** RD/D-GN	**19:** 929	**19:** Recirculation Door Control	**19:** I	**19:** -
20: 20	**20:** 0.5	**20:** BK/GY	**20:** 6137	**20:** EVAP Core Temperature Sensor Signal	**20:** I	**20:** -

K35 IGNITION COIL MODULE

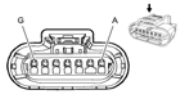

Connector Part Information

- Harness Type: Engine
- OEM Connector: 55563971
- Service Connector: 13355784
- Description: 7-Way F (BK)

Terminal Part Information

Terminal Type ID	Terminated Lead	Diagnostic Test Probe	Terminal Removal Tool	Service Terminal	Tray	Core Crimp	Insulation Crimp
I	Pending	Pending	Not Available	Not Available	Not Available	Not Available	Not Available

K35 Ignition Coil Module

					Terminal Type	

Pin	Size	Color	Circuit	Function	ID	Option
A: A	**A:** 1	**A:** VT/D-BU	**A:** 5291	**A:** Powertrain Main Relay Fused Supply (1)	**A:** I	**A:** -
B: B	**B:** 0.75	**B:** BK	**B:** 250	**B:** Ground	**B:** I	**B:** -
C: C	**C:** 0.5	**C:** BK/D-BU	**C:** 2129	**C:** Low Reference	**C:** I	**C:** -
D: D	**D:** 0.75	**D:** D-BU/VT	**D:** 2121	**D:** Ignition Control (1)	**D:** I	**D:** -
E: E	**E:** 0.75	**E:** D-BU/WH	**E:** 2122	**E:** Ignition Control (2)	**E:** I	**E:** -
F: F	**F:** 0.75	**F:** L-GN/L-BU	**F:** 2123	**F:** Ignition Control (3)	**F:** I	**F:** -
G: G	**G:** 0.75	**G:** YE/D-BU	**G:** 2124	**G:** Ignition Control (4)	**G:** I	**G:** -

K36 INFLATABLE RESTRAINT SENSING AND DIAGNOSTIC MODULE X1

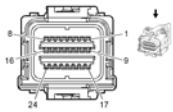

Connector Part Information

- Harness Type: Instrument Panel
- OEM Connector: 13608103
- Service Connector: 13580843
- Description: 24-Way F Kaizen 0.64 Series, Sealed (YE)

Terminal Part Information

Terminal Type ID	Terminated Lead	Diagnostic Test Probe	Terminal Removal Tool	Service Terminal	Tray	Core Crimp	Insulation Crimp
I	13575846	J-35616-64B (L-BU)	J-38125-215A	SAIT-A036F-M064	14	P	P

K36 Inflatable Restraint Sensing and Diagnostic Module X1

Pin	Size	Color	Circuit	Function	Terminal Type ID	Option
1: 1	**1:** 0.5	**1:** OG/D-GN	**1:** 3023	**1:** Steering Wheel Module Stage 2 High Control	**1:** I	**1:** Early Production
2: 2	**2:** 0.5	**2:** WH/D-GN	**2:** 3022	**2:** Steering Wheel Module Stage 2 Low Control	**2:** I	**2:** Early Production
3: 3	**3:** 0.5	**3:** BN/OG	**3:** 3020	**3:** Steering Wheel Module Stage 1 Low Control	**3:** I	**3:** -
				4: Steering Wheel		

4: 4	**4:** 0.5	**4:** OG/VT	**4:** 3021	Module Stage 1 High Control	**4:** I	**4:** -
5: 5	**5:** 0.5	**5:** YE/OG	**5:** 3025	**5:** Passenger Instrument Panel Module Stage 1 High Control	**5:** I	**5:** -
6: 6	**6:** 0.5	**6:** OG/WH	**6:** 3024	**6:** Passenger Instrument Panel Module Stage 1 Low Control	**6:** I	**6:** -
7: 7	**7:** 0.5	**7:** OG/VT	**7:** 3026	**7:** Passenger Instrument Panel Module Stage 2 Low Control	**7:** I	**7:** -
8: 8	**8:** 0.5	**8:** GY/OG	**8:** 3027	**8:** Passenger Instrument Panel Module Stage 2 High Control	**8:** I	**8:** -
9: 9	**9:** 0.75	**9:** RD/YE	**9:** 3040	**9:** Battery Positive Voltage	**9:** I	**9:** -
10: 10	**10:** 0.35	**10:** VT/WH	**10:** 5234	**10:** Passenger Seat Belt Indicator	**10:** I	**10:** -
11: 11	**11:** 0.35	**11:** D-BU	**11:** 2307	**11:** Passenger Air Bag On Indicator Control	**11:** I	**11:** -
12: 12	**12:** 0.35	**12:** D-GN	**12:** 2308	**12:** Passenger Air Bag Off Indicator Control	**12:** I	**12:** -
13-14	-	-	-	Not Occupied	-	-
15: 15	**15:** 0.5	**15:** D-GN	**15:** 5060	**15:** Low Speed GMLAN Serial Data	**15:** I	**15:** -
16	-	-	-	Not Occupied	-	-
17: 17	**17:** 0.5	**17:** VT/D-GN	**17:** 3039	**17:** Ignition Voltage	**17:** I	**17:** -
18	-	-	-	Not Occupied	-	-
19: 19	**19:** 0.5	**19:** BK	**19:** 2450	**19:** Ground	**19:** I	**19:** -
20	-	-	-	Not Occupied	-	-
21: 21	**21:** 0.5	**21:** OG/D-BU	**21:** 3078	**21:** Driver Knee Module High Control	**21:** I	**21:** -
22: 22	**22:** 0.5	**22:** GY/OG	**22:** 3079	**22:** Driver Knee Module Low Control	**22:** I	**22:** -
23: 23	**23:** 0.5	**23:** WH/OG	**23:** 3077	**23:** Passenger Knee Module Low Control	**23:** I	**23:** -
24: 24	**24:** 0.5	**24:** OG/D-BU	**24:** 3076	**24:** Passenger Knee Module High Control	**24:** I	**24:** -

K36 INFLATABLE RESTRAINT SENSING AND DIAGNOSTIC MODULE X2

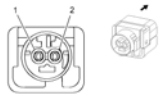

Connector Part Information

- Harness Type: Body
- OEM Connector: 13715983
- Service Connector: 13580845
- Description: 54-Way F 0.64 Series, Sealed (RD w/ YE cover)

Terminal Part Information

Terminal Type ID	Terminated Lead	Diagnostic Test Probe	Terminal Removal Tool	Service Terminal	Tray	Core Crimp	Insulation Crimp
I	13575846	J-35616-64B (L-BU)	J-38125-215A	SAIT-A036F-M064	14	P	P

K36 Inflatable Restraint Sensing and Diagnostic Module X2

Pin	Size	Color	Circuit	Function	Terminal Type ID	Option
1-2	-	-	-	Not Occupied	-	-
3: 3	**3:** 0.5	**3:** OG/GY	**3:** 5226	**3:** Right Rear Side Impact SIR Inflator Control	**3:** I	**3:** -
4: 4	**4:** 0.5	**4:** VT/OG	**4:** 5225	**4:** Right Rear Side Impact SIR Inflator Supply Voltage	**4:** I	**4:** -
5-6	-	-	-	Not Occupied	-	-
7: 7	**7:** 0.5	**7:** BN/OG	**7:** 5224	**7:** Left Rear Side Impact SIR Inflator Control	**7:** I	**7:** -
8: 8	**8:** 0.5	**8:** OG/GY	**8:** 5223	**8:** Left Rear Side Impact SIR Inflator Supply Voltage	**8:** I	**8:** -
9: 9	**9:** 0.5	**9:** OG/YE	**9:** 3481	**9:** Driver Seat Belt Anchor Pretensioner +	**9:** I	**9:** -
10: 10	**10:** 0.5	**10:** YE/OG	**10:** 3482	**10:** Driver Seat Belt Anchor Pretensioner -	**10:** I	**10:** -
11: 11	**11:** 0.5	**11:** GY/OG	**11:** 3480	**11:** Passenger Seat Belt Anchor Pretensioner -	**11:** I	**11:** -
12: 12	**12:** 0.5	**12:** OG/BN	**12:** 3479	**12:** Passenger Seat Belt Anchor Pretensioner +	**12:** I	**12:** -
13: 13	**13:** 0.5	**13:** OG/D-BU	**13:** 2137	**13:** Left Front Side Impact Module High Control	**13:** I	**13:** -
14: 14	**14:** 0.5	**14:** YE/OG	**14:** 2138	**14:** Left Front Side Impact	**14:** I	**14:** -

				Module Low Control		
15: 15	**15:** 0.5	**15:** D-GN/OG	**15:** 2136	**15:** Right Front Side Impact Module Low Control	**15:** I	**15:** -
16: 16	**16:** 0.5	**16:** OG/YE	**16:** 2135	**16:** Right Front Side Impact Module High Control	**16:** I	**16:** -
17: 17	**17:** 0.5	**17:** OG/D-GN	**17:** 5019	**17:** Roof Rail Module - Left - High Control	**17:** I	**17:** -
18: 18	**18:** 0.5	**18:** VT/OG	**18:** 5020	**18:** Roof Rail Module - Left - Low Control	**18:** I	**18:** -
19: 19	**19:** 0.5	**19:** OG/D-GN	**19:** 2132	**19:** Side Impact Sensing Module - Left - Signal	**19:** I	**19:** -
20: 20	**20:** 0.5	**20:** BK/OG	**20:** 6628	**20:** Low Reference	**20:** I	**20:** -
21: 21	**21:** 0.5	**21:** BK/OG	**21:** 6629	**21:** Low Reference	**21:** I	**21:** -
22: 22	**22:** 0.5	**22:** BN/OG	**22:** 2134	**22:** Right Front Side Impact Sensing Module Signal	**22:** I	**22:** -
23: 23	**23:** 0.5	**23:** OG/YE	**23:** 354	**23:** Front End Sensor - Left - Signal	**23:** I	**23:** -
24: 24	**24:** 0.5	**24:** BK/OG	**24:** 5045	**24:** Low Reference	**24:** I	**24:** -
25: 25	**25:** 0.5	**25:** BK/OG	**25:** 5600	**25:** Low Reference	**25:** I	**25:** -
26: 26	**26:** 0.5	**26:** OG/D-GN	**26:** 1409	**26:** Front End Sensor - Right - Signal	**26:** I	**26:** -
27: 27	**27:** 0.5	**27:** OG/D-BU	**27:** 6620	**27:** Left Rear Side Impact Sensing Module Signal	**27:** I	**27:** -
28: 28	**28:** 0.5	**28:** BK/OG	**28:** 6621	**28:** Low Reference	**28:** I	**28:** -
29: 29	**29:** 0.5	**29:** BK/OG	**29:** 6625	**29:** Low Reference	**29:** I	**29:** -
30: 30	**30:** 0.5	**30:** OG/VT	**30:** 6624	**30:** Right Rear Side Impact Sensing Module Signal	**30:** I	**30:** -
31-32	-	-	-	Not Occupied	-	-
33-36	-	-	-	Not Occupied	-	-
37: 37	**37:** 0.5	**37:** BK/D-BU	**37:** 2118	**37:** Driver Seat Belt Pretensioner High Control	**37:** I	**37:** -
38: 38	**38:** 0.5	**38:** OG/RD	**38:** 2119	**38:** Driver Seat Belt Pretensioner Low Control	**38:** I	**38:** -
39: 39	**39:** 0.5	**39:** D-BU/BN	**39:** 2117	**39:** Passenger Seat Belt Pretensioner Low Control	**39:** I	**39:** -
40: 40	**40:** 0.5	**40:** OG/GY	**40:** 2116	**40:** Passenger Seat Belt Pretensioner High Control	**40:** I	**40:** -
41: 41	**41:** 0.5	**41:** OG/BN	**41:** 238	**41:** Seat Belt Switch - Left	**41:** I	**41:** -
42	-	-	-	Not Occupied	-	-
43: 43	**43:** 0.5	**43:** BK/OG	**43:** 1363	**43:** Seat Belt Switch - Left - Low Reference	**43:** I	**43:** -

44: 44	**44:** 0.5	**44:** BK/OG	**44:** 1361	**44:** Seat Belt Switch - Right - Low Reference	**44:** I	**44:** -
45: 45	**45:** 0.5	**45:** OG/VT	**45:** 1362	**45:** Seat Belt Switch - Right - Signal	**45:** I	**45:** -
46	-	-	-	Not Occupied	-	-
47: 47	**47:** 0.5	**47:** OG/BN	**47:** 7571	**47:** Passenger Seat Belt Reminder Signal	**47:** I	**47:** -
48-52	-	-	-	Not Occupied	-	-
53: 53	**53:** 0.5	**53:** OG/D-BU	**53:** 5021	**53:** Roof Rail Module - Right - High Control	**53:** I	**53:** -
54: 54	**54:** 0.5	**54:** WH/BK	**54:** 5022	**54:** Roof Rail Module - Right - Low Control	**54:** I	**54:** -

K41R REAR PARKING ASSIST CONTROL MODULE X1 (UD7)

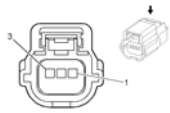

Connector Part Information

- Harness Type: Body
- OEM Connector: 13551678
- Service Connector: 89047364
- Description: 12-Way F 64 Series (BK)

Terminal Part Information

Terminal Type ID	Terminated Lead	Diagnostic Test Probe	Terminal Removal Tool	Service Terminal	Tray	Core Crimp	Insulation Crimp
I	13575867	J-35616-64B (L-BU)	J-38125-215A	SAIT-A03T-M064	14	P	P

K41R Rear Parking Assist Control Module X1 (UD7)

Pin	Size	Color	Circuit	Function	Terminal Type ID	Option
1: 1	**1:** 0.5	**1:** RD/D-GN	**1:** 40	**1:** Battery Positive Voltage	**1:** I	**1:** -
2-5	-	-	-	Not Occupied	-	-
6: 6	**6:** 0.5	**6:** D-GN	**6:** 5060	**6:** Low Speed GMLAN Serial Data	**6:** I	**6:** -
7: 7	**7:** 0.5	**7:** BK	**7:** 50	**7:** Ground	**7:** I	**7:** -
8-12	-	-	-	Not Occupied	-	-

K41R REAR PARKING ASSIST CONTROL MODULE X2 (UD7)

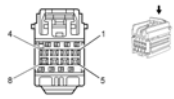

Connector Part Information

- Harness Type: Body
- OEM Connector: 13551679
- Service Connector: 19115653
- Description: 8-Way F YESC Kaizen Series (L-GY)

Terminal Part Information

Terminal Type ID	Terminated Lead	Diagnostic Test Probe	Terminal Removal Tool	Service Terminal	Tray	Core Crimp	Insulation Crimp
I	13575867	J-35616-64B (L-BU)	J-38125-215A	SAIT-A03T-M064	14	P	P

K41R Rear Parking Assist Control Module X2 (UD7)

Pin	Size	Color	Circuit	Function	Terminal Type ID	Option
1: 1	**1:** 0.5	**1:** YE/VT	**1:** 2378	**1:** Right Rear Corner Object Sensor Signal	**1:** I	**1:** -
2: 2	**2:** 0.5	**2:** YE/WH	**2:** 2377	**2:** Right Rear Middle Object Sensor Signal	**2:** I	**2:** -
3: 3	**3:** 0.5	**3:** YE/D-BU	**3:** 2376	**3:** Left Rear Middle Object Sensor Signal	**3:** I	**3:** -
4: 4	**4:** 0.5	**4:** BN/WH	**4:** 2374	**4:** Object Sensor Control	**4:** I	**4:** -
5: 5	**5:** 0.5	**5:** YE	**5:** 2375	**5:** Left Rear Corner Object Sensor Signal	**5:** I	**5:** -
6-7	-	-	-	Not Occupied	-	-
8: 8	**8:** 0.5	**8:** BK/GY	**8:** 2379	**8:** Object Sensor Low Reference	**8:** I	**8:** -

K43 POWER STEERING CONTROL MODULE X1

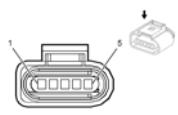

Connector Part Information

- Harness Type: Power Steering

- OEM Connector: 42123000
- Service Connector: 13583122
- Description: 5-Way F Micro II Timer Series, Sealed (BK)

Terminal Part Information

Terminal Type ID	Terminated Lead	Diagnostic Test Probe	Terminal Removal Tool	Service Terminal	Tray	Core Crimp	Insulation Crimp
I	13578884	J-35616-14 (GN)	J-38125-560	964274-2	16	E	1

K43 Power Steering Control Module X1

Pin	Size	Color	Circuit	Function	Terminal Type ID	Option
1: 1	**1:** 0.5	**1:** WH/D-BU	**1:** 5986	**1:** Serial Data Communication Enable	**1:** I	**1:** -
2: 2	**2:** 0.5	**2:** D-BU	**2:** 2500	**2:** High Speed GMLAN Serial Data (+) (1)	**2:** I	**2:** -
3: 3	**3:** 0.5	**3:** D-BU	**3:** 2500	**3:** High Speed GMLAN Serial Data (+) (1)	**3:** I	**3:** -
4: 4	**4:** 0.5	**4:** WH	**4:** 2501	**4:** High Speed GMLAN Serial Data (-) (1)	**4:** I	**4:** -
5: 5	**5:** 0.5	**5:** WH	**5:** 2501	**5:** High Speed GMLAN Serial Data (-) (1)	**5:** I	**5:** -

K43 POWER STEERING CONTROL MODULE X2

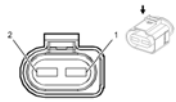

Connector Part Information

- Harness Type: Power Steering
- OEM Connector: 13663324
- Service Connector: 13577532
- Description: 2-Way F ASM CONN 2 F DUCON 9.5 BLK SLD (BK)

Terminal Part Information

Terminal Type ID	Terminated Lead	Diagnostic Test Probe	Terminal Removal Tool	Service Terminal	Tray	Core Crimp	Insulation Crimp
	Service by Harness -	J-35616-22	J-38125-	Not	Not	Not	Not

I	See Part Catalog	(RD)	11A	Available	Available	Available	Available

K43 Power Steering Control Module X2

Pin	Size	Color	Circuit	Function	Terminal Type ID	Option
1: 1	**1:** 10.0	**1:** BK	**1:** 350	**1:** Ground	**1:** I	**1:** -
2: 2	**2:** 10.0	**2:** RD/WH	**2:** 140	**2:** Battery Positive Voltage	**2:** I	**2:** -

K60 STEERING COLUMN LOCK CONTROL MODULE (ULS)

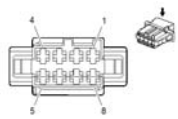

Connector Part Information

- Harness Type: Instrument Panel
- OEM Connector: 24466119
- Service Connector: 13576545
- Description: 8-Way F 1.6 Micro Timer Series (BK)

Terminal Part Information

Terminal Type ID	Terminated Lead	Diagnostic Test Probe	Terminal Removal Tool	Service Terminal	Tray	Core Crimp	Insulation Crimp
I	13575538	J-35616-14 (GN)	J-38125-560	962943-5	16	E	A

K60 Steering Column Lock Control Module (ULS)

Pin	Size	Color	Circuit	Function	Terminal Type ID	Option
1	-	-	-	Not Occupied	-	-
2: 2	**2:** 0.5	**2:** BU/VT	**2:** 5904	**2:** Steering Column Lock Status Signal	**2:** I	**2:** -
3: 3	**3:** 1	**3:** BU/VT	**3:** 807	**3:** OFF /Accessory Voltage	**3:** I	**3:** -
4: 4	**4:** 0.75	**4:** GN/VT	**4:** 1601	**4:** Steering Column Lock Signal	**4:** I	**4:** -
5: 5	**5:** 1	**5:** BN	**5:** 40	**5:** Battery Positive Voltage	**5:** I	**5:** -
6: 6	**6:** 0.5	**6:** BK	**6:** 50	**6:** Ground	**6:** I	**6:** -
7: 7	**7:** 0.5	**7:** BK	**7:** 50	**7:** Ground	**7:** I	**7:** -
8: 8	**8:** 0.5	**8:** GN	**8:** 5060	**8:** Low Speed GMLAN Serial Data	**8:** I	**8:** -

K61 SUNROOF CONTROL MODULE (CF5)

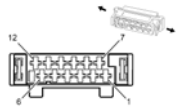

Connector Part Information

- Harness Type: Headliner
- OEM Connector: 10775732
- Service Connector: 90221505
- Description: 12-Way F 2.8 Junior Power Timer Series (BK)

Terminal Part Information

Terminal Type ID	Terminated Lead	Diagnostic Test Probe	Terminal Removal Tool	Service Terminal	Tray	Core Crimp	Insulation Crimp
I	13575472	J-35616-35 (VT)	J-38125-36	4-965999-1	25	4	A
II	13575490	J-35616-35 (VT)	J-38125-36	2-964284-1	25	E	A

K61 Sunroof Control Module (CF5)

Pin	Size	Color	Circuit	Function	Terminal Type ID	Option
1: 1	**1:** 2.5	**1:** RD/WH	**1:** 140	**1:** Battery Positive Voltage	**1:** I	**1:** -
2: 2	**2:** 2.5	**2:** BK	**2:** 2050	**2:** Ground	**2:** I	**2:** -
3: 3	**3:** 0.5 **3:** 0.5	**3:** BK/BN **3:** BK/GY	**3:** 3030 **3:** 128	**3:** Sunroof Vent Switch Low Reference **3:** Sunroof Switch Low Reference	**3:** II	**3:** -
4: 4	**4:** 0.5	**4:** D-GN/BN	**4:** 6132	**4:** Linear Interconnect Network Bus 1	**4:** II	**4:** -
5: 5	**5:** 0.5	**5:** D-BU/VT	**5:** 5027	**5:** Sunroof Switch Data (1)	**5:** II	**5:** -
6: 6	**6:** 0.5	**6:** WH/D-GN	**6:** 3031	**6:** Sunroof Vent Switch Signal	**6:** II	**6:** -
7-12	-	-	-	Not Occupied	-	-

K73 TELEMATICS COMMUNICATIONS INTERFACE CONTROL MODULE X1 (UE1)

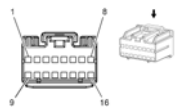

Connector Part Information

- Harness Type: Instrument Panel
- OEM Connector: 15431362
- Service Connector: 15306351
- Description: 16-Way F Micro-Pack 100A Series (NA)

Terminal Part Information

Terminal Type ID	Terminated Lead	Diagnostic Test Probe	Terminal Removal Tool	Service Terminal	Tray	Core Crimp	Insulation Crimp
I	13575548	J-35616-16 (L-GN)	J-38125-559	15445905	23	J	J

K73 Telematics Communications Interface Control Module X1 (UE1)

Pin	Size	Color	Circuit	Function	Terminal Type ID	Option
1: 1	**1:** 0.5	**1:** L-GN	**1:** 5060	**1:** Low Speed GMLAN Serial Data	**1:** I	**1:** -
2: 2	**2:** 0.5	**2:** BN/WH	**2:** 2517	**2:** Keypad Red LED	**2:** I	**2:** -
3: 3	**3:** 0.5	**3:** YE/VT	**3:** 2516	**3:** Keypad Green LED	**3:** I	**3:** -
4-5	-	-	-	Not Occupied	-	-
6: 6	**6:** 0.5	**6:** L-GN/BK	**6:** 2515	**6:** Keypad Supply Voltage	**6:** I	**6:** -
7: 7	**7:** 0.5	**7:** BK	**7:** 1750	**7:** Ground	**7:** I	**7:** -
8-9	-	-	-	Not Occupied	-	-
10: 10	**10:** 0.5	**10:** D-BU	**10:** 2500	**10:** High Speed GMLAN Serial Data (+) (1)	**10:** I	**10:** -
11: 11	**11:** 0.5	**11:** L-GN/WH	**11:** 2514	**11:** Keypad Signal	**11:** I	**11:** -
12: 12	**12:** 0.5	**12:** WH	**12:** 2501	**12:** High Speed GMLAN Serial Data (-) (1)	**12:** I	**12:** -
13: 13	**13:** 0.5	**13:** BK/VT	**13:** 5167	**13:** Low Reference	**13:** I	**13:** -
14: 14	**14:** 0.5	**14:** YE/VT	**14:** 5235	**14:** Battery Backup Supply Voltage	**14:** I	**14:** -
15: 15	**15:** 0.5	**15:** RD/D-BU	**15:** 840	**15:** Battery Positive Voltage	**15:** I	**15:** -
16	-	-	-	Not Occupied	-	-

K73 TELEMATICS COMMUNICATIONS INTERFACE CONTROL MODULE X2 (UE1)

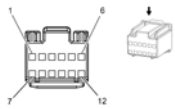

Connector Part Information

- Harness Type: Instrument Panel
- OEM Connector: 15431365
- Service Connector: 88952886
- Description: 12-Way F Micro-Pack 100A Series (NA)

Terminal Part Information

Terminal Type ID	Terminated Lead	Diagnostic Test Probe	Terminal Removal Tool	Service Terminal	Tray	Core Crimp	Insulation Crimp
I	13575548	J-35616-16 (L-GN)	J-38125-559	15445905	23	J	J

K73 Telematics Communications Interface Control Module X2 (UE1)

Pin	Size	Color	Circuit	Function	Terminal Type ID	Option
1: 1	**1:** 0.5	**1:** YE	**1:** 658	**1:** Cellular Telephone Voice Signal	**1:** I	**1:** -
2: 2	**2:** 0.5	**2:** BK/YE	**2:** 659	**2:** Cellular Telephone Voice Low Reference	**2:** I	**2:** -
3: 3	**3:** 0.5	**3:** D-BU	**3:** 2500	**3:** High Speed GMLAN Serial Data Bus+	**3:** I	**3:** -
4: 4	**4:** 0.5	**4:** WH	**4:** 2501	**4:** High Speed GMLAN Serial Data Bus -	**4:** I	**4:** -
5: 5	**5:** 0.5	**5:** BARE	**5:** 5149	**5:** Voice Recognition Audio Signal	**5:** I	**5:** UYS
6: 6	**6:** 0.5	**6:** BK/GY	**6:** 5152	**6:** Low Reference	**6:** I	**6:** UYS
7: 7	**7:** 0.5	**7:** WH/D-BU	**7:** 5986	**7:** Serial Data Communication Enable	**7:** I	**7:** -
8: 8	**8:** 0.5	**8:** BARE	**8:** 1782	**8:** Drain Wire	**8:** I	**8:** -
9: 9	**9:** 0.5	**9:** YE	**9:** 5191	**9:** Microphone High Signal	**9:** I	**9:** -
10: 10	**10:** 0.5	**10:** BARE	**10:** 5193	**10:** Microphone Low Signal	**10:** I	**10:** -
11	-	-	-	Not Occupied	-	-
12: 12	**12:** 0.5	**12:** GY/YE	**12:** 5149	**12:** Voice Recognition Audio Signal	**12:** I	**12:** UYS

K77 REMOTE CONTROL DOOR LOCK RECEIVER

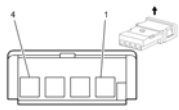

Connector Part Information

- Harness Type: Headliner

- OEM Connector: 968943-1
- Service Connector: 13576534
- Description: 4-Way F 64 MQS Series (BK)

Terminal Part Information

Terminal Type ID	Terminated Lead	Diagnostic Test Probe	Terminal Removal Tool	Service Terminal	Tray	Core Crimp	Insulation Crimp
I	13575587	J-35616-64B (L-BU)	J-38125-12A	928999-5	15	J	J

K77 Remote Control Door Lock Receiver

Pin	Size	Color	Circuit	Function	Terminal Type ID	Option
1: 1	**1:** 0.5	**1:** GY	**1:** 3273	**1:** Remote Function Actuator Return	**1:** I	**1:** -
2: 2	**2:** 0.5	**2:** BU/WH	**2:** 3275	**2:** Remote Function Actuator Receive Signal	**2:** I	**2:** -
3: 3	**3:** 0.5	**3:** YE/GN	**3:** 3274	**3:** Remote Function Actuator Transmit Signal	**3:** I	**3:** -
4: 4	**4:** 0.5	**4:** GY/WH	**4:** 3272	**4:** Remote Function Actuator Supply Voltage	**4:** I	**4:** -

K84 KEYLESS ENTRY CONTROL MODULE X1 (ATH)

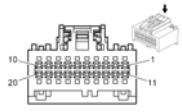

Connector Part Information

- Harness Type: Body
- OEM Connector: 15126711
- Service Connector: 15126711
- Description: 20-Way Female (BK)

Terminal Part Information

Terminal Type ID	Terminated Lead	Diagnostic Test Probe	Terminal Removal Tool	Service Terminal	Tray	Core Crimp	Insulation Crimp
I	13575867	J-35616-64B (L-BU)	J-38125-215A	SAIT-A03T-M064	14	P	P

K84 Keyless Entry Control Module X1 (ATH)

Pin	Size	Color	Circuit	Function	Terminal Type ID	Option
1: 1	**1:** 0.75	**1:** D-GN/VT	**1:** 1601	**1:** Steering Column Lock Signal	**1:** I	**1:** -
2	-	-	-	Not Occupied	-	-
3: 3	**3:** 0.5	**3:** D-GN	**3:** 5060	**3:** Low Speed GMLAN Serial Data	**3:** I	**3:** -
4-8	-	-	-	Not Occupied	-	-
9: 9	**9:** 0.5	**9:** WH/YE	**9:** 3574	**9:** Driver Door Open Switch Signal	**9:** I	**9:** ATH
10: 10	**10:** 0.5	**10:** GY/D-GN	**10:** 3575	**10:** Co-Driver Door Open Switch Signal	**10:** I	**10:** ATH
11: 11	**11:** 0.5 **11:** 0.5	**11:** D-GN/BK **11:** D-GN/BK	**11:** 3558 **11:** 3358	**11:** Passive Start Switch Signal 2 **11:** Left TV Audio Return	**11:** I	**11:** ATH **11:** ATH
12: 12	**12:** 0.5 **12:** 0.5	**12:** BK/GY **12:** BK/GY	**12:** 3359 **12:** 3559	**12:** Right TV Audio Return **12:** Passive Start Switch 2 Low Reference	**12:** I	**12:** ATH **12:** ATH
13-14	-	-	-	Not Occupied	-	-
15: 15	**15:** 0.5	**15:** GY/BK	**15:** 3555	**15:** Passive Start Interior Antenna 2 Signal Lo	**15:** I	**15:** -
16: 16	**16:** 0.5	**16:** BN/BK	**16:** 3552	**16:** Passive Start Interior Antenna 1 Signal Hi	**16:** I	**16:** -
17: 17	**17:** 0.5	**17:** WH	**17:** 3553	**17:** Passive Start Interior Antenna 1 Signal Lo	**17:** I	**17:** -
18: 18	**18:** 0.5	**18:** WH/D-GN	**18:** 3556	**18:** Passive Start Interior Antenna 3 Signal Hi	**18:** I	**18:** -
19: 19	**19:** 0.5	**19:** D-GN	**19:** 3557	**19:** Passive Start Interior Antenna 3 Signal Lo	**19:** I	**19:** -
20: 20	**20:** 0.5	**20:** D-BU	**20:** 3554	**20:** Passive Start Interior Antenna 2 Signal Hi	**20:** I	**20:** -

K84 KEYLESS ENTRY CONTROL MODULE X2 (ATH)

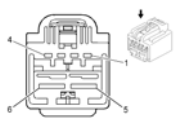

Connector Part Information

- Harness Type: Body
- OEM Connector: 15226104
- Service Connector: 88988512
- Description: 6-Way F YESC Kaizen Series (BK)

Terminal Part Information

Terminal Type ID	Terminated Lead	Diagnostic Test Probe	Terminal Removal Tool	Service Terminal	Tray	Core Crimp	Insulation Crimp
I	13575289	J-35616-42 (RD)	J-38125-11A	7116-4122-02	10	D	G

K84 Keyless Entry Control Module X2 (ATH)

Pin	Size	Color	Circuit	Function	Terminal Type ID	Option
1: 1	**1:** 0.5	**1:** RD/BN	**1:** 1140	**1:** Battery Positive Voltage	**1:** I	**1:** -
2: 2	**2:** 0.5	**2:** BK	**2:** 350	**2:** Ground	**2:** I	**2:** -
3: 3	**3:** 0.5	**3:** VT/YE	**3:** 4	**3:** Ignition Voltage	**3:** I	**3:** -
4: 4	**4:** 0.5	**4:** VT/BK	**4:** 3	**4:** Ignition Voltage	**4:** I	**4:** -
5: 5	**5:** 4	**5:** RD/GN	**5:** 3140	**5:** Battery Positive Voltage	**5:** I	**5:** -
6: 6	**6:** 4	**6:** BK	**6:** 1050	**6:** Ground	**6:** I	**6:** -

K84 KEYLESS ENTRY CONTROL MODULE X4 (ATH)

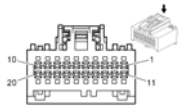

Connector Part Information

- Harness Type: Body
- OEM Connector: 15126710
- Service Connector: 15126710
- Description: 20-Way F USCAR 64 Series (GY)

Terminal Part Information

Terminal Type ID	Terminated Lead	Diagnostic Test Probe	Terminal Removal Tool	Service Terminal	Tray	Core Crimp	Insulation Crimp
I	Pending	J-35616-64B (L-BU)	-38125-215A	Pending	Pending	Pending	Pending

K84 Keyless Entry Control Module X4 (ATH)

Pin	Size	Color	Circuit	Function	Terminal Type ID	Option
1: 1	**1:** 0.5	**1:** YE/GY	**1:** 6158	**1:** Right Rear Door Handle Switch Signal	**1:** I	**1:** -
2: 2	**2:** 0.5	**2:** BN/YE	**2:** 6157	**2:** Left Rear Door Handle Switch Signal	**2:** I	**2:** -

3: 3	**3:** 0.5	**3:** WH/BN	**3:** 3572	**3:** Driver Door Unlatch Enable Signal	**3:** I	**3:** ATH
4	-	-	-	Not Occupied	-	-
5: 5	**5:** 0.75	**5:** GY/BU	**5:** 3576	**5:** Co-Driver Door Exterior Switch Lock Signal	**5:** I	**5:** -
6: 6	**6:** 0.5	**6:** VT	**6:** 3560	**6:** Passive Entry Driver Door Antenna Signal Hi	**6:** I	**6:** -
7: 7	**7:** 0.5	**7:** VT/GY	**7:** 3561	**7:** Passive Entry Driver Door Antenna Signal Lo	**7:** I	**7:** -
8	-	-	-	Not Occupied	-	-
9: 9	**9:** 0.5	**9:** GN/BK	**9:** 3563	**9:** Passive Entry Co Driver Door Antenna Signal Lo	**9:** I	**9:** -
10	-	-	-	Not Occupied	-	-
11: 11	**11:** 0.5	**11:** VT/WH	**11:** 3571	**11:** Co Driver Door Handle Switch Signal	**11:** I	**11:** -
12: 12	**12:** 0.5	**12:** GN/WH	**12:** 3570	**12:** Driver Door Handle Switch Signal	**12:** I	**12:** -
13	-	-	-	Not Occupied	-	-
14: 14	**14:** 0.5	**14:** BU	**14:** 3573	**14:** Non Driver Door Unlatch Enable Signal	**14:** I	**14:** ATH
15: 15	**15:** 0.5	**15:** GN/WH	**15:** 6655	**15:** Driver Door Unlatch Switch Signal	**15:** I	**15:** -
16: 16	**16:** 0.5	**16:** BN/GN	**16:** 3568	**16:** Passive Entry Rear Closure Antenna Signal Hi	**16:** I	**16:** -
17	-	-	-	Not Occupied	-	-
18: 18	**18:** 0.5	**18:** GN/GY	**18:** 3569	**18:** Passive Entry Rear Closure Antenna Signal Lo	**18:** I	**18:** -
19	-	-	-	Not Occupied	-	-
20: 20	**20:** 0.5	**20:** GN/YE	**20:** 3562	**20:** Passive Entry Co Driver Door Antenna Signal Hi	**20:** I	**20:** -

K85 PASSENGER PRESENCE DETECTION MODULE X1

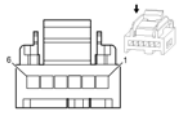

Connector Part Information

- Harness Type: Passenger Seat
- OEM Connector: 15499927
- Service Connector: Service by Harness - See Part Catalog
- Description: 6-Way F Micro-Pack HVT Series (BK)

Terminal Part Information

Terminal Type ID	Terminated Lead	Diagnostic Test Probe	Terminal Removal Tool	Service Terminal	Tray	Core Crimp	Insulation Crimp
I	13575550	J-35616-16 (L-GN)	J-38125-559	15445905	23	J	J

K85 Passenger Presence Detection Module X1

Pin	Size	Color	Circuit	Function	Terminal Type ID	Option
1: 1	**1:** 0.5	**1:** D-BU	**1:** 402	**1:** Battery Positive Voltage	**1:** I	**1:** -
2: 2	**2:** 0.5	**2:** WH	**2:** 5060	**2:** Low Speed GMLAN Serial Data	**2:** I	**2:** -
3: 3	**3:** 0.5	**3:** WH	**3:** 5060	**3:** Low Speed GMLAN Serial Data	**3:** I	**3:** -
4: 4	**4:** 0.5	**4:** BK	**4:** 2450	**4:** Ground	**4:** I	**4:** -
5-6	-	-	-	Not Occupied	-	-

K85 PASSENGER PRESENCE DETECTION MODULE X2

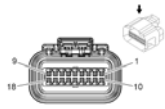

Connector Part Information

- Harness Type: Passenger Presence Detection Sensor
- OEM Connector: Not Available
- Service Connector: Service by Component Assembly - See Part Catalog
- Description: 18-Way F Flexible Printed Circuit Series (BK)

Terminal Part Information

Terminal Type ID	Terminated Lead	Diagnostic Test Probe	Terminal Removal Tool	Service Terminal	Tray	Core Crimp	Insulation Crimp
I			J-35616-6B (L-BU)	Service Connector: Service by Component Assembly - See Part Catalog	Service Connector: Service by Component Assembly - See Part Catalog	Not Available	Not Available

K85 Passenger Presence Detection Module X2

Pin	Size	Color	Circuit	Function	Terminal Type ID	Option
1: 1	**1:** FW	**1:** FW	**1:** -	**1:** -	**1:** I	**1:** -
2: 2	**2:** FW	**2:** FW	**2:** -	**2:** -	**2:** I	**2:** -
3: 3	**3:** FW	**3:** FW	**3:** -	**3:** -	**3:** I	**3:** -
4: 4	**4:** FW	**4:** FW	**4:** -	**4:** -	**4:** I	**4:** -
5: 5	**5:** FW	**5:** FW	**5:** -	**5:** -	**5:** I	**5:** -
6: 6	**6:** FW	**6:** FW	**6:** -	**6:** -	**6:** I	**6:** -
7: 7	**7:** FW	**7:** FW	**7:** -	**7:** -	**7:** I	**7:** -
8: 8	**8:** FW	**8:** FW	**8:** -	**8:** -	**8:** I	**8:** -
9: 9	**9:** FW	**9:** FW	**9:** -	**9:** -	**9:** I	**9:** -
10: 10	**10:** FW	**10:** FW	**10:** -	**10:** -	**10:** I	**10:** -
11: 11	**11:** FW	**11:** FW	**11:** -	**11:** -	**11:** I	**11:** -
12: 12	**12:** FW	**12:** FW	**12:** -	**12:** -	**12:** I	**12:** -
13: 13	**13:** FW	**13:** FW	**13:** -	**13:** -	**13:** I	**13:** -
14: 14	**14:** FW	**14:** FW	**14:** -	**14:** -	**14:** I	**14:** -
15: 15	**15:** FW	**15:** FW	**15:** -	**15:** -	**15:** I	**15:** -
16: 16	**16:** FW	**16:** FW	**16:** -	**16:** -	**16:** I	**16:** -
17: 17	**17:** FW	**17:** FW	**17:** -	**17:** -	**17:** I	**17:** -
18: 18	**18:** FW	**18:** FW	**18:** -	**18:** -	**18:** I	**18:** -

K89 IMMOBILIZER CONTROL MODULE

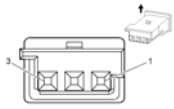

Connector Part Information

- Harness Type: Instrument Panel
- OEM Connector: 13604026
- Service Connector: 13576530
- Description: 3-Way F Micro Quadlok Series (PU)

Terminal Part Information

Terminal Type ID	Terminated Lead	Diagnostic Test Probe	Terminal Removal Tool	Service Terminal	Tray	Core Crimp	Insulation Crimp
I	13575587	J-35616-64B (L-BU)	J-38125-12A	928999-5	15	J	J

K89 Immobilizer Control Module

					Terminal Type	

Pin	Size	Color	Circuit	Function	ID	Option
1: 1	**1:** 0.5	**1:** D-GN/GY	**1:** 3277	**1:** Vehicle Anti-Theft System Immobilizer Return	**1:** I	**1:** -
2: 2	**2:** 0.5	**2:** D-GN/VT	**2:** 7533	**2:** Linear Interconnect Network Bus 11	**2:** I	**2:** -
3: 3	**3:** 0.5	**3:** GY/BK	**3:** 3276	**3:** Vehicle Anti-Theft System Immobilizer Supply Voltage	**3:** I	**3:** -

M6 AIR TEMPERATURE DOOR ACTUATOR

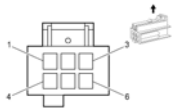

Connector Part Information

- Harness Type: HVAC
- OEM Connector: 15338980
- Service Connector: Service by Harness - See Part Catalog
- Description: 6-Way F 0.64 MQS Series (BK)

Terminal Part Information

Terminal Type ID	Terminated Lead	Diagnostic Test Probe	Terminal Removal Tool	Service Terminal	Tray	Core Crimp	Insulation Crimp
I	13575737	J-35616-64B (L-BU)	J-38125-12A	928999-5	15	J	J

M6 Air Temperature Door Actuator

Pin	Size	Color	Circuit	Function	Terminal Type ID	Option
1: 1	**1:** 0.5	**1:** D-GN	**1:** 933	**1:** Temp Door Stepper Motor Control (1)	**1:** I	**1:** -
2: 2	**2:** 0.5	**2:** OG	**2:** 943	**2:** HVAC Motor Supply Voltage	**2:** I	**2:** -
3: 3	**3:** 0.5	**3:** WH/RD	**3:** 932	**3:** Temp Door Stepper Motor Control (2)	**3:** I	**3:** -
4: 4	**4:** 0.5	**4:** GY/RD	**4:** 930	**4:** Temp Door Stepper Motor Control (3)	**4:** I	**4:** -
5	-	-	-	Not Occupied	-	-
6: 6	**6:** 0.5	**6:** RD/BK	**6:** 929	**6:** Temp Door Stepper Motor Control (4)	**6:** I	**6:** -

M8 BLOWER MOTOR

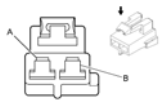

Connector Part Information

- Harness Type: HVAC
- OEM Connector: 12064749
- Service Connector: 13586140
- Description: 2-Way F Metri-Pack 480 Series (BK)

Terminal Part Information

Terminal Type ID	Terminated Lead	Diagnostic Test Probe	Terminal Removal Tool	Service Terminal	Tray	Core Crimp	Insulation Crimp
I	Service by Harness - See Part Catalog	J-35616-40 (BU)	J-38125-11A	12084595	2	F	G

M8 Blower Motor

Pin	Size	Color	Circuit	Function	Terminal Type ID	Option
A: A	**A:** 4	**A:** RD	**A:** 65	**A:** Blower Motor Supply Voltage	**A:** I	**A:** -
B: B	**B:** 4	**B:** BK	**B:** 374	**B:** Blower Motor Fan Control	**B:** I	**B:** -

M37 MODE DOOR ACTUATOR

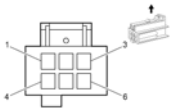

Connector Part Information

- Harness Type: HVAC
- OEM Connector: 15338980
- Service Connector: Service by Harness - See Part Catalog
- Description: 6-Way F 0.64 MQS Series (BK)

Terminal Part Information

Terminal	Terminated	Diagnostic	Terminal	Service		Core	Insulation

Type ID	Lead	Test Probe	Removal Tool	Terminal	Tray	Crimp	Crimp
I	13575737	J-35616-64B (L-BU)	J-38125-12A	928999-5	15	J	J

M37 Mode Door Actuator

Pin	Size	Color	Circuit	Function	Terminal Type ID	Option
1: 1	**1:** 0.5	**1:** YE	**1:** 936	**1:** Mode Door Stepper Motor Control (1)	**1:** I	**1:** -
2: 2	**2:** 0.5	**2:** OG	**2:** 943	**2:** HVAC Motor Supply Voltage	**2:** I	**2:** -
3: 3	**3:** 0.5	**3:** WH/RD	**3:** 931	**3:** Mode Door Stepper Motor Control (2)	**3:** I	**3:** -
4: 4	**4:** 0.5	**4:** GY/BN	**4:** 926	**4:** Mode Door Stepper Motor Control (3)	**4:** I	**4:** -
5	-	-	-	Not Occupied	-	-
6: 6	**6:** 0.5	**6:** D-GN/WH	**6:** 925	**6:** Mode Door Stepper Motor Control (4)	**6:** I	**6:** -

M40 REAR COMPARTMENT LID LATCH

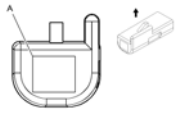

Connector Part Information

- Harness Type: Rear Compartment Lid
- OEM Connector: 15324229
- Service Connector: 15306167
- Description: 4-Way F Timer Micro-Pack Series (BK)

Terminal Part Information

Terminal Type ID	Terminated Lead	Diagnostic Test Probe	Terminal Removal Tool	Service Terminal	Tray	Core Crimp	Insulation Crimp
I	13575538	J-35616-14 (GN)	J-38125-560	962943-5	16	E	A

M40 Rear Compartment Lid Latch

Pin	Size	Color	Circuit	Function	Terminal Type ID	Option
1: 1	**1:** 0.5	**1:** D-BU/YE	**1:** 6795	**1:** Lift Glass/Trunk Motor	**1:** I	**1:** -

				Release Control 2		
2: 2	**2:** 0.5	**2:** BK	**2:** 650	**2:** Ground	**2:** I	**2:** -
3	-	-	-	Not Occupied	-	-
4: 4	**4:** 0.5	**4:** VT/BK	**4:** 1303	**4:** Lift Gate Ajar Switch Signal (1)	**4:** I	**4:** -

M46 AIR RECIRCULATION DOOR ACTUATOR

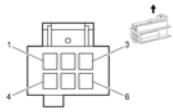

Connector Part Information

- Harness Type: HVAC
- OEM Connector: 15338980
- Service Connector: Service by Harness - See Part Catalog
- Description: 6-Way F 0.64 MQS Series (BK)

Terminal Part Information

Terminal Type ID	Terminated Lead	Diagnostic Test Probe	Terminal Removal Tool	Service Terminal	Tray	Core Crimp	Insulation Crimp
I	13575737	J-35616-64B (L-BU)	J-38125-12A	928999-5	15	Pin: 2: J	J

M46 Air Recirculation Door Actuator

Pin	Size	Color	Circuit	Function	Terminal Type ID	Option
1: 1	**1:** 0.5	**1:** GY	**1:** 929	**1:** Air Inlet Door Stepper Motor Control (1)	**1:** I	**1:** -
2: 2	**2:** 0.5	**2:** OG	**2:** 943	**2:** HVAC Motor Supply Voltage	**2:** I	**2:** -
3: 3	**3:** 0.5	**3:** D-BU/WH	**3:** 929	**3:** Air Inlet Door Stepper Motor Control (2)	**3:** I	**3:** -
4: 4	**4:** 0.5	**4:** BN/D-GN	**4:** 929	**4:** Air Inlet Door Stepper Motor Control (3)	**4:** I	**4:** -
5	-	-	-	Not Occupied	-	-
6: 6	**6:** 0.5	**6:** RD/D-GN	**6:** 929	**6:** Air Inlet Door Stepper Motor Control (4)	**6:** I	**6:** -

M50D SEAT FRONT VERTICAL MOTOR - DRIVER (ADS)

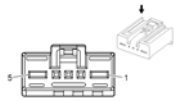

Connector Part Information

- Harness Type: Driver Seat
- OEM Connector: 1379217-1
- Service Connector: Service by Harness - See Part Catalog
- Description: 5-Way F MQS/MCP Mixed Series (BK)

Terminal Part Information

Terminal Type ID	Terminated Lead	Diagnostic Test Probe	Terminal Removal Tool	Service Terminal	Tray	Core Crimp	Insulation Crimp
I	Service by Harness - See Part Catalog	J-35616-4A (PU)	Not Available	Not Available	Not Available	Not Available	Not Available

M50D Seat Front Vertical Motor - Driver (ADS)

Pin	Size	Color	Circuit	Function	Terminal Type ID	Option
1: 1	**1:** 1.5	**1:** GY	**1:** 287	**1:** Driver Power Seat Front Vertical Motor Down Control	**1:** I	**1:** -
2-4	-	-	-	Not Occupied	-	-
5: 5	**5:** 1.5	**5:** BU	**5:** 286	**5:** Driver Power Seat Front Vertical Motor Up Control	**5:** I	**5:** -

M51D SEAT HORIZONTAL MOTOR - DRIVER (ADS)

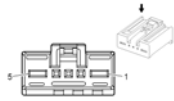

Connector Part Information

- Harness Type: Driver Seat
- OEM Connector: 1379217-1
- Service Connector: Service by Harness - See Part Catalog
- Description: 5-Way F MQS/MCP Mixed Series (BK)

Terminal Part Information

Terminal Type ID	Terminated Lead	Diagnostic Test Probe	Terminal Removal Tool	Service Terminal	Tray	Core Crimp	Insulation Crimp
I	Service by Harness - See Part Catalog	J-35616-4A (PU)	Not Available	Not Available	Not Available	Not Available	Not Available

M51D Seat Horizontal Motor - Driver (ADS)

Pin	Size	Color	Circuit	Function	Terminal Type ID	Option
1: 1	**1:** 1.5	**1:** YE	**1:** 285	**1:** Driver Power Seat Horizontal Motor Forward Control	**1:** I	**1:** -
2-4	-	-	-	Not Occupied	-	-
5: 5	**5:** 1.5	**5:** BN	**5:** 284	**5:** Driver Power Seat Horizontal Motor Rearward Control	**5:** I	**5:** -

M55D SEAT REAR VERTICAL MOTOR - DRIVER (ADS)

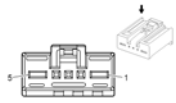

Connector Part Information

- Harness Type: Driver Seat
- OEM Connector: 1379217-1
- Service Connector: Service by Harness - See Part Catalog
- Description: 5-Way F MQS/MCP Mixed Series (BK)

Terminal Part Information

Terminal Type ID	Terminated Lead	Diagnostic Test Probe	Terminal Removal Tool	Service Terminal	Tray	Core Crimp	Insulation Crimp
I	Service by Harness - See Part Catalog	J-35616-4A (PU)	Not Available	Not Available	Not Available	Not Available	Not Available

M55D Seat Rear Vertical Motor - Driver (ADS)

Pin	Size	Color	Circuit	Function	Terminal Type ID	Option
				1: Driver Power Seat Rear		

1: 1	**1:** 1.5	**1:** WH	**1:** 282	Vertical Motor Up Control	**1:** I	**1:** -
2-4	-	-	-	Not Occupied	-	-
5: 5	**5:** 1.5	**5:** GN	**5:** 283	**5:** Driver Power Seat Rear Vertical Motor Down Control	**5:** I	**5:** -

M74D WINDOW MOTOR - DRIVER (AEC)

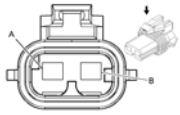

Connector Part Information

- Harness Type: Driver Door
- OEM Connector: 12129487
- Service Connector: 88988609
- Description: 2-Way F Metri-Pack 280 Series, Flexlock, Sealed (GY)

Terminal Part Information

Terminal Type ID	Terminated Lead	Diagnostic Test Probe	Terminal Removal Tool	Service Terminal	Tray	Core Crimp	Insulation Crimp
I	Pending	J-35616-4A (PU)	J-38125-553	12110845	4	F	5

M74D Window Motor - Driver (AEC)

Pin	Size	Color	Circuit	Function	Terminal Type ID	Option
A: A	**A:** 2.5	**A:** D-GN/GY	**A:** 3382	**A:** Power Window Motor Driver Up Control	**A:** I	**A:** -
B: B	**B:** 2.5	**B:** YE/VT	**B:** 3383	**B:** Power Window Motor Driver Down Control	**B:** I	**B:** -

M74D WINDOW MOTOR - DRIVER (AXG)

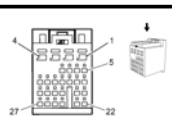

Connector Part Information

- Harness Type: Driver Door
- OEM Connector: 13595813

- Service Connector: Service by Harness- See Part Catalog
- Description: 7-Way F Kaizen 0.64 2.8 Timer Series, Sealed (BK)

Terminal Part Information

Terminal Type ID	Terminated Lead	Diagnostic Test Probe	Terminal Removal Tool	Service Terminal	Tray	Core Crimp	Insulation Crimp
I	13580821	J-35616-35 (VT)	J-38125-36	4-964273-1	15	C	5
II	13575867	J-35616-64B (L-BU)	J-38125-215A	SAIT-A03T-M064	14	P	P

M74D Window Motor - Driver (AXG)

Pin	Size	Color	Circuit	Function	Terminal Type ID	Option
1: 1	**1:** 2.5	**1:** BK	**1:** 1550	**1:** Ground	**1:** I	**1:** -
2: 2	**2:** 2.5	**2:** RD/GN	**2:** 1540	**2:** Battery Positive Voltage	**2:** I	**2:** -
3: 3	**3:** 0.5	**3:** GN/WH	**3:** 3379	**3:** Power Window Switch Driver Up Signal	**3:** II	**3:** -
4: 4	**4:** 0.5	**4:** GN/YE	**4:** 6134	**4:** Linear Interconnect Network Bus 3	**4:** II	**4:** -
5: 5	**5:** 0.5	**5:** GN	**5:** 3381	**5:** Power Window Switch Driver Express Signal	**5:** II	**5:** -
6: 6	**6:** 0.5	**6:** GY	**6:** 745	**6:** Left Front Door Ajar Switch Signal	**6:** II	**6:** -
7: 7	**7:** 0.5	**7:** GY	**7:** 3380	**7:** Power Window Switch Driver Down Signal	**7:** II	**7:** -

M74LR WINDOW MOTOR - LEFT REAR

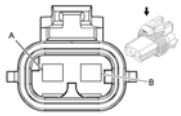

Connector Part Information

- Harness Type: Left Rear Door
- OEM Connector: 12129487
- Service Connector: 88988609
- Description: 2-Way F Metri-Pack 280 Series, Flexlock, Sealed (GY)

Terminal Part Information

Terminal	Terminated	Diagnostic	Terminal Removal	Service	Tray	Core	Insulation

Type ID	Lead	Test Probe	Tool	Terminal		Crimp	Crimp
I	Service by Harness - See Part Catalog	J-35616-4A (PU)	J-38125-553	12110845	4	F	5

M74LR Window Motor - Left Rear

Pin	Size	Color	Circuit	Function	Terminal Type ID	Option
A: A	**A:** 2.5	**A:** D-BU/GY	**A:** 668	**A:** Power Window Motor Left Rear Up Control	**A:** I	**A:** AEQ
B: B	**B:** 2.5	**B:** D-GN/BK	**B:** 669	**B:** Power Window Motor Left Rear Down Control	**B:** I	**B:** AEQ

M74P WINDOW MOTOR - PASSENGER

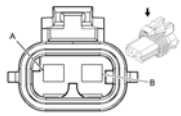

Connector Part Information

- Harness Type: Passenger Door
- OEM Connector: 12129487
- Service Connector: 88988609
- Description: 2-Way F Metri-Pack 280 Series, Flexlock, Sealed (GY)

Terminal Part Information

Terminal Type ID	Terminated Lead	Diagnostic Test Probe	Terminal Removal Tool	Service Terminal	Tray	Core Crimp	Insulation Crimp
I	Service by Harness - See Part Catalog	J-35616-4A (PU)	J-38125-553	12110845	4	F	5

M74P Window Motor - Passenger

Pin	Size	Color	Circuit	Function	Terminal Type ID	Option
A: A	**A:** 2.5	**A:** D-GN/GY	**A:** 3387	**A:** Power Window Motor Co-Driver Up Control	**A:** I	**A:** -
B: B	**B:** 2.5	**B:** YE/D-BU	**B:** 3388	**B:** Power Window Motor Co-Driver Down Control	**B:** I	**B:** -

M74RR WINDOW MOTOR - RIGHT REAR

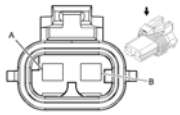

Connector Part Information

- Harness Type: Right Rear Door
- OEM Connector: 12129487
- Service Connector: 88988609
- Description: 2-Way F Metri-Pack 280 Series, Flexlock, Sealed (GY)

Terminal Part Information

Terminal Type ID	Terminated Lead	Diagnostic Test Probe	Terminal Removal Tool	Service Terminal	Tray	Core Crimp	Insulation Crimp
I	Service by Harness - See Part Catalog	J-35616-4A (PU)	J-38125-553	12110845	4	F	5

M74RR Window Motor - Right Rear

Pin	Size	Color	Circuit	Function	Terminal Type ID	Option
A: A	**A:** 2.5	**A:** D-BU/GY	**A:** 670	**A:** Power Window Motor Right Rear Up Control	**A:** I	**A:** AEQ
B: B	**B:** 2.5	**B:** D-GN/BK	**B:** 671	**B:** Power Window Motor Right Rear Down Control	**B:** I	**B:** AEQ

M75 WINDSHIELD WIPER MOTOR

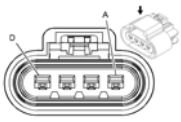

Connector Part Information

- Harness Type: Forward Lamp
- OEM Connector: 13521459
- Service Connector: 13580864
- Description: 4-Way F GT 280 5.8 Series, Sealed (BK)

Terminal Part Information

Terminal Type ID	Terminated Lead	Diagnostic Test Probe	Terminal Removal Tool	Service Terminal	Tray	Core Crimp	Insulation Crimp

I	13575392	J-35616-4A (PU)	J-38125-553	15304720	19	Not Available	Not Available
II	13575392	J-35616-4A (PU)	J-38125-553	15304720	19	4	5

M75 Windshield Wiper Motor

Pin	Size	Color	Circuit	Function	Terminal Type ID	Option
A: A	**A:** 0.5	**A:** BN/GN	**A:** 196	**A:** Windshield Wiper Motor Park Switch Signal	**A:** I	**A:** -
B: B	**B:** 2.5	**B:** YE/BN	**B:** 95	**B:** Windshield Wiper Motor Low Speed Control	**B:** II	**B:** -
C: C	**C:** 2.5	**C:** BK	**C:** 1350	**C:** Ground	**C:** II	**C:** -
D: D	**D:** 2.5	**D:** WH	**D:** 92	**D:** Windshield Wiper Motor High Speed Control	**D:** II	**D:** -

M93 IGNITION CYLINDER LOCK CONTROL SOLENOID ACTUATOR (MH8)

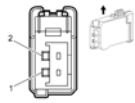

Connector Part Information

- Harness Type: Instrument Panel
- OEM Connector: 13595633
- Service Connector: 13314093
- Description: 2-Way F Kaizen 64 Series (BK)

Terminal Part Information

Terminal Type ID	Terminated Lead	Diagnostic Test Probe	Terminal Removal Tool	Service Terminal	Tray	Core Crimp	Insulation Crimp
I	13575867	J-35616-64B (L-BU)	J-38125-215A	SAIT-A03T-M064	14	P	P

M93 Ignition Cylinder Lock Control Solenoid Actuator (MH8)

Pin	Size	Color	Circuit	Function	Terminal Type ID	Option
1: 1	**1:** 0.5	**1:** VT/YE	**1:** 143	**1:** Ignition Voltage	**1:** I	**1:** -
2: 2	**2:** 0.5	**2:** WH/VT	**2:** 5905	**2:** Key Capture/Column Lock Shift Position Signal	**2:** I	**2:** -

M96 ACTIVE GRILLE AIR SHUTTER ACTUATOR (Y8X)

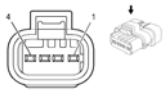

Connector Part Information

- Harness Type: Forward Lamp
- OEM Connector: 13781047
- Service Connector: 13581092
- Description: 4-Way F 1.2 Series, Sealed (BK)

Terminal Part Information

Terminal Type ID	Terminated Lead	Diagnostic Test Probe	Terminal Removal Tool	Service Terminal	Tray	Core Crimp	Insulation Crimp
I	Pending	Pending	Pending	Pending	Pending	Not Available	Not Available

M96 Active Grille Air Shutter Actuator (Y8X)

Pin	Size	Color	Circuit	Function	Terminal Type ID	Option
1: 1	**1:** 0.75	**1:** GY/BK	**1:** 3437	**1:** Shutter Valve Solenoid Control	**1:** I	**1:** -
2: 2	**2:** 0.75	**2:** BK	**2:** 1150	**2:** Ground	**2:** I	**2:** -
3: 3	**3:** 0.5	**3:** VT/GY	**3:** 1039	**3:** Run/Crank Ignition 1 Voltage	**3:** I	**3:** -
4	-	-	-	Not Occupied	-	-

P2 TRANSMISSION SHIFT LEVER POSITION INDICATOR (MH8)

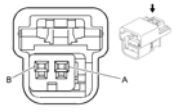

Connector Part Information

- Harness Type: Instrument Panel
- OEM Connector: 15332129
- Service Connector: 15306425
- Description: 2-Way F GT 150 Series (BK)

Terminal Part Information

Terminal Type ID	Terminated Lead	Diagnostic Test Probe	Terminal Removal	Service Terminal	Tray	Core Crimp	Insulation Crimp

			Tool				
I	13575735	J-35616-2A (GY)	J-38125-553	12191812	19	E	C

P2 Transmission Shift Lever Position Indicator (MH8)

Pin	Size	Color	Circuit	Function	Terminal Type ID	Option
A: A	**A:** 0.5	**A:** YE	**A:** 6817	**A:** LED Backlight Dimming Control	**A:** I	**A:** -
B: B	**B:** 0.5	**B:** BK	**B:** 1750	**B:** Ground	**B:** I	**B:** -

P12 HORN

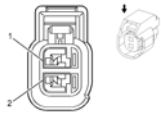

Connector Part Information

- Harness Type: Forward Lamp
- OEM Connector: 13594801
- Service Connector: 13585854
- Description: 2-Way F GT 150 Series, Sealed (BK)

Terminal Part Information

Terminal Type ID	Terminated Lead	Diagnostic Test Probe	Terminal Removal Tool	Service Terminal	Tray	Core Crimp	Insulation Crimp
I	13575412	J-35616-2A (GY)	J-38125-553	12191819	8	2	1

P12 Horn

Pin	Size	Color	Circuit	Function	Terminal Type ID	Option
1: 1	**1:** 1	**1:** BK	**1:** 1050	**1:** Ground	**1:** I	**1:** -
2: 2	**2:** 1	**2:** BN/GY	**2:** 29	**2:** Horn Control	**2:** I	**2:** -

P14 PASSENGER AIR BAG DISABLE INDICATOR

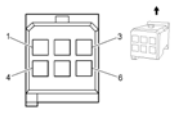

Connector Part Information

- Harness Type: Instrument Panel
- OEM Connector: 13650066
- Service Connector: 13355765
- Description: 6-Way F MTS 0.64 Series (GY)

Terminal Part Information

Terminal Type ID	Terminated Lead	Diagnostic Test Probe	Terminal Removal Tool	Service Terminal	Tray	Core Crimp	Insulation Crimp
I	13575782	J-35616-64B (L-BU)	J-38125-12A	928999-5	15	J	J

P14 Passenger Air Bag Disable Indicator

Pin	Size	Color	Circuit	Function	Terminal Type ID	Option
1: 1	**1:** 0.5	**1:** VT/WH	**1:** 239	**1:** Run/Crank Ignition 1 Voltage	**1:** I	**1:** -
2: 2	**2:** 0.35	**2:** L-BU	**2:** 2307	**2:** Passenger Air Bag On Indicator Control	**2:** I	**2:** -
3: 3	**3:** 0.5	**3:** BK	**3:** 1650	**3:** Ground	**3:** I	**3:** -
4: 4	**4:** 0.5	**4:** BK	**4:** 1650	**4:** Ground	**4:** I	**4:** -
5: 5	**5:** 0.35	**5:** D-GN	**5:** 2308	**5:** Passenger Air Bag Off Indicator Control	**5:** I	**5:** -
6: 6	**6:** 0.35	**6:** VT/WH	**6:** 5234	**6:** Passenger Seat Belt Indicator	**6:** I	**6:** -

P16 INSTRUMENT CLUSTER

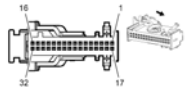

Connector Part Information

- Harness Type: Instrument Panel
- OEM Connector: 12198036
- Service Connector: 88988405
- Description: 32-Way F 64 Quadlock Series (BK)

Terminal Part Information

Terminal Type ID	Terminated Lead	Diagnostic Test Probe	Terminal Removal Tool	Service Terminal	Tray	Core Crimp	Insulation Crimp

I	13575737	J-35616-64B (L-BU)	J-38125-12A	928999-5	15	H	H

P16 Instrument Cluster

Pin	Size	Color	Circuit	Function	Terminal Type ID	Option
1-8	-	-	-	Not Occupied	-	-
9: 9	**9:** 0.35	**9:** BK/BN	**9:** 897	**9:** Driver Information Center Switch Low Reference	**9:** I	**9:** -
10: 10	**10:** 0.35	**10:** D-GN/WH	**10:** 1358	**10:** Driver Information Center Switch Signal	**10:** I	**10:** -
11: 11	**11:** 0.5	**11:** BK/D-BU	**11:** 61	**11:** Outside Ambient Temperature Sensor Low Reference	**11:** I	**11:** -
12: 12	**12:** 0.5	**12:** D-BU/GY	**12:** 636	**12:** Outside Ambient Air Temperature Sensor Signal	**12:** I	**12:** -
13-15	-	-	-	Not Occupied	-	-
16: 16	**16:** 0.75	**16:** BK	**16:** 50	**16:** Ground	**16:** I	**16:** -
17-23	-	-	-	Not Occupied	-	-
24: 24	**24:** 0.5	**24:** D-BU	**24:** 507	**24:** Wait To Start Indicator Control	**24:** I	**24:** -
25: 25	**25:** 0.5	**25:** BN/WH	**25:** 419	**25:** Check Engine Indicator Control	**25:** I	**25:** -
26: 26	**26:** 0.5	**26:** D-GN	**26:** 5060	**26:** Low Speed GMLAN Serial Data	**26:** I	**26:** -
27	-	-	-	Not Occupied	-	-
28: 28	**28:** 0.35	**28:** GY/D-BU	**28:** 893	**28:** Driver Information Center Select Menu Switch Signal	**28:** I	**28:** -
29-30	-	-	-	Not Occupied	-	-
31: 31	**31:** 0.5	**31:** VT/WH	**31:** 239	**31:** Ignition Voltage	**31:** I	**31:** -
32: 32	**32:** 0.75	**32:** RD/WH	**32:** 140	**32:** Battery Positive Voltage	**32:** I	**32:** -

P17 INFO DISPLAY MODULE (UAG)

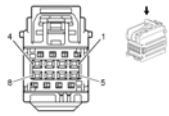

Connector Part Information

- Harness Type: Instrument Panel

- OEM Connector: 7283-9028-30
- Service Connector: 13576542
- Description: 8-Way F YESC Kaizen Series (BK)

Terminal Part Information

Terminal Type ID	Terminated Lead	Diagnostic Test Probe	Terminal Removal Tool	Service Terminal	Tray	Core Crimp	Insulation Crimp
I	13575230	J-35616-64B (L-BU)	J-38125-215A	Not Stocked in Kit	le	P	P
II	13575299	J-35616-64B (L-BU)	J-38125-215A	Not Stocked in Kit	le	P	P

P17 Info Display Module (UAG)

Pin	Size	Color	Circuit	Function	Terminal Type ID	Option
1: 1	**1:** 0.5	**1:** RD/GN	**1:** 3140	**1:** Battery Positive Voltage	**1:** I	**1:** -
2: 2	**2:** 0.5	**2:** BK	**2:** 1750	**2:** Ground	**2:** I	**2:** -
3: 3	**3:** 0.5	**3:** GN/BU	**3:** 7532	**3:** Linear Interconnect Network Bus 10	**3:** I	**3:** -
4: 4	**4:** 0.35	**4:** GY/GN	**4:** 3291	**4:** Integrated Center Stack Wake Up Signal	**4:** II	**4:** -
5: 5	**5:** 0.35	**5:** VT	**5:** 3290	**5:** Integrated Center Stack Reset Signal	**5:** II	**5:** -
6: 6	**6:** 0.35	**6:** BARE	**6:** 7460	**6:** Integrated Center Stack Serial Data Shield	**6:** II	**6:** -
7: 7	**7:** 0.35	**7:** VT	**7:** 7458	**7:** Center Integrated Center Stack Serial Data High	**7:** II	**7:** -
8: 8	**8:** 0.35	**8:** YE	**8:** 7459	**8:** Integrated Center Stack Serial Data Low	**8:** II	**8:** -

2013 ELECTRICAL

Wiring Systems and Power Management - Component Locator - Component Connector End Views - Cruze

COMPONENT CONNECTOR END VIEWS

P17 INFO DISPLAY MODULE X1 (UHQ)

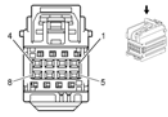

Connector Part Information

- Harness Type: Instrument Panel
- OEM Connector: 7283-9028-30
- Service Connector: 13576542
- Description: 8-Way F YESC Kaizen Series (BK)

Terminal Part Information

Terminal Type ID	Terminated Lead	Diagnostic Test Probe	Terminal Removal Tool	Service Terminal	Tray	Core Crimp	Insulation Crimp
I	13579944	Pending	Pending	Not Available	Not Available	Not Available	Not Available
II	Pending	Pending	Pending	Not Available	Not Available	Not Available	Not Available

P17 Info Display Module X1 (UHQ)

Pin	Size	Color	Circuit	Function	Terminal Type ID	Option
1: 1	**1:** 0.5	**1:** RD/GN	**1:** 3140	**1:** Battery Positive Voltage	**1:** -	**1:** -
2: 2	**2:** 0.5	**2:** BK	**2:** 1750	**2:** Ground	**2:** -	**2:** -
3	-	-	-	Not Occupied	-	-
4: 4	**4:** 0.35	**4:** GY	**4:** 3369	**4:** Touch Screen Display Signal (+)	**4:** II	**4:** -
5: 5	**5:** 0.5	**5:** BN/GN	**5:** 3364	**5:** Navigation Display Reset Signal	**5:** II	**5:** -
6: 6	**6:** 0.5	**6:** GN/YE	**6:** 7066	**6:** Entertainment Remote Enable Signal	**6:** II	**6:** -
7: 7	**7:** 0.35	**7:** BARE	**7:** 3368	**7:** Touch Screen Display Drain Wire	**7:** II	**7:** -
8: 8	**8:** 0.5	**8:** VT	**8:** 3370	**8:** Touch Screen Display	**8:** II	**8:** -

				Signal (-)		

P17 INFO DISPLAY MODULE X2 (UHQ)

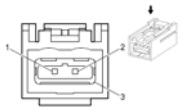

Connector Part Information

- Harness Type: Instrument Panel TWINAX
- OEM Connector: 13649293
- Service Connector: Service by Cable Assembly - See Parts Catalog
- Description: 3-Way F Sealed (L-BU)

Terminal Part Information

Terminal Type ID	Terminated Lead	Diagnostic Test Probe	Terminal Removal Tool
I	Service by Cable Assembly - See Parts Catalog	No Tool Required	No Tool Required

P17 Info Display Module X2 (UHQ)

Pin	Size	Color	Circuit	Function	Terminal Type ID	Option
1: 1	**1:** 0.35	**1:** BN	**1:** 3367	**1:** Navigation Display Signal (-)	**1:** I	**1:** -
2: 2	**2:** 0.35	**2:** BU	**2:** 3366	**2:** Navigation Display Signal (+)	**2:** I	**2:** -
3: 3	**3:** 0.35	**3:** BARE	**3:** 3365	**3:** Navigation Display Drain Wire	**3:** I	**3:** -

P19AA SPEAKER - RIGHT SUBWOOFER

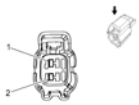

Connector Part Information

- Harness Type: Body
- OEM Connector: 13699622
- Service Connector: 13355768
- Description: 2-Way F 150 Series (BK)

Terminal Part Information

Terminal Type ID	Terminated Lead	Diagnostic Test Probe	Terminal Removal Tool	Service Terminal	Tray	Core Crimp	Insulation Crimp
I	13575480	J-35616-2A (GY)	J-38125-29	13526678	PO	2	A

P19AA Speaker - Right Subwoofer

Pin	Size	Color	Circuit	Function	Terminal Type ID	Option
1: 1	**1:** 1	**1:** GY/BK	**1:** 315	**1:** Right Subwoofer Speaker (-)	**1:** I	**1:** UQA
2: 2	**2:** 1	**2:** D-GN/VT	**2:** 1795	**2:** Right Subwoofer Speaker (+)	**2:** I	**2:** UQA

P19AG SPEAKER - LEFT FRONT DOOR

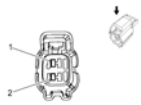

Connector Part Information

- Harness Type: Driver Door
- OEM Connector: 13699622
- Service Connector: 13355768
- Description: 2-Way F 150 Series (BK)

Terminal Part Information

Terminal Type ID	Terminated Lead	Diagnostic Test Probe	Terminal Removal Tool	Service Terminal	Tray	Core Crimp	Insulation Crimp
I	13575480	J-35616-2A (GY)	J-38125-29	13526678	PO	2	A

P19AG Speaker - Left Front Door

Pin	Size	Color	Circuit	Function	Terminal Type ID	Option
1: 1	**1:** 0.75	**1:** BN/D-BU	**1:** 118	**1:** Left Front Speaker Signal (-) (1)	**1:** I	**1:** -
2: 2	**2:** 0.75	**2:** D-BU	**2:** 201	**2:** Left Front Speaker (+) (1)	**2:** I	**2:** -

P19AH SPEAKER - RIGHT FRONT DOOR

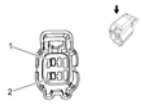

Connector Part Information

- Harness Type: Passenger Door
- OEM Connector: 13699622
- Service Connector: 13555768
- Description: 2-Way F 150 Series (BK)

Terminal Part Information

Terminal Type ID	Terminated Lead	Diagnostic Test Probe	Terminal Removal Tool	Service Terminal	Tray	Core Crimp	Insulation Crimp
I	13575480	J-35616-2A (GY)	J-38125-29	13526678	PO	2	A

P19AH Speaker - Right Front Door

Pin	Size	Color	Circuit	Function	Terminal Type ID	Option
1: 1	**1:** 0.75	**1:** YE/BK	**1:** 117	**1:** Right Front Speaker Signal (-) (1)	**1:** I	**1:** -
2: 2	**2:** 0.75	**2:** YE	**2:** 200	**2:** Right Front Speaker (+) (1)	**2:** I	**2:** -

P19AL SPEAKER - LEFT REAR DOOR

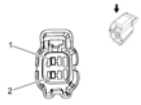

Connector Part Information

- Harness Type: Left Rear Door
- OEM Connector: 13699622
- Service Connector: 13355768
- Description: 2-Way F 150 Series (BK)

Terminal Part Information

Terminal Type ID	Terminated Lead	Diagnostic Test Probe	Terminal Removal Tool	Service Terminal	Tray	Core Crimp	Insulation Crimp
I	13575480	J-35616-2A	J-38125-29	13526678	PO	2	A

		(GY)					

P19AL Speaker - Left Rear Door

Pin	Size	Color	Circuit	Function	Terminal Type ID	Option
1: 1	**1:** 0.75	**1:** D-GN/BK	**1:** 116	**1:** Left Rear Speaker Signal (-)	**1:** I	**1:** -
2: 2	**2:** 0.75	**2:** D-GN	**2:** 199	**2:** Left Rear Speaker (+)	**2:** I	**2:** -

P19AM SPEAKER - RIGHT REAR DOOR

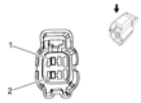

Connector Part Information

- Harness Type: Right Rear Door
- OEM Connector: 13699622
- Service Connector: 13555768
- Description: 2-Way F 150 Series (BK)

Terminal Part Information

Terminal Type ID	Terminated Lead	Diagnostic Test Probe	Terminal Removal Tool	Service Terminal	Tray	Core Crimp	Insulation Crimp
I	13575480	J-35616-2A (GY)	J-38125-29	13526678	PO	2	A

P19AM Speaker - Right Rear Door

Pin	Size	Color	Circuit	Function	Terminal Type ID	Option
1: 1	**1:** 0.75	**1:** D-BU/BK	**1:** 115	**1:** Right Rear Speaker Signal (-)	**1:** I	**1:** -
2: 2	**2:** 0.75	**2:** WH	**2:** 46	**2:** Right Rear Speaker (+)	**2:** I	**2:** -

P19B SPEAKER - CENTER INSTRUMENT PANEL (UQA)

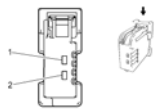

Connector Part Information

- Harness Type: Instrument Panel

- OEM Connector: 13682170
- Service Connector: 13505908
- Description: 2-Way F 1.5 Series (GN)

Terminal Part Information

Terminal Type ID	Terminated Lead	Diagnostic Test Probe	Terminal Removal Tool	Service Terminal	Tray	Core Crimp	Insulation Crimp
I	13327201	J-35616-2A (GY)	J-38125-553	8240-0128	22	C	A

P19B Speaker - Center Instrument Panel (UQA)

Pin	Size	Color	Circuit	Function	Terminal Type ID	Option
1: 1	**1:** 0.75	**1:** D-BU/YE	**1:** 1960	**1:** Front Center Speaker (-)	**1:** I	**1:** UQA
2: 2	**2:** 0.75	**2:** YE/WH	**2:** 1860	**2:** Front Center Speaker (+)	**2:** I	**2:** UQA

P19H SPEAKER - LEFT FRONT TWEETER

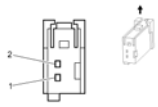

Connector Part Information

- Harness Type: Headliner
- OEM Connector: 19115645
- Service Connector: 13314093
- Description: 2-Way F 0.64 Series (BK)

Terminal Part Information

Terminal Type ID	Terminated Lead	Diagnostic Test Probe	Terminal Removal Tool	Service Terminal	Tray	Core Crimp	Insulation Crimp
I	13575867	J-35616-64B (L-BU)	J-38125-215A	Not Available	Not Available	Not Available	Not Available

P19H Speaker - Left Front Tweeter

Pin	Size	Color	Circuit	Function	Terminal Type ID	Option
1: 1	**1:** 0.75	**1:** BN/D-BU	**1:** 118	**1:** Left Front Speaker Signal (-)	**1:** I	**1:** -
2: 2	**2:** 0.75	**2:** D-BU	**2:** 201	**2:** Left Front Speaker (+)	**2:** I	**2:** -

P19N SPEAKER - LEFT SUBWOOFER

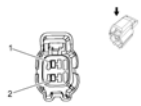

Connector Part Information

- Harness Type: Body
- OEM Connector: 13699622
- Service Connector: 13355768
- Description: 2-Way F 150 Series (BK)

Terminal Part Information

Terminal Type ID	Terminated Lead	Diagnostic Test Probe	Terminal Removal Tool	Service Terminal	Tray	Core Crimp	Insulation Crimp
I	13575480	J-35616-2A (GY)	J-38125-29	13526678	PO	2	A

P19N Speaker - Left Subwoofer

Pin	Size	Color	Circuit	Function	Terminal Type ID	Option
1: 1	**1:** 1	**1:** D-GN/BK	**1:** 1794	**1:** Left/Rear Subwoofer Speaker (-)	**1:** I	**1:** UQA
2: 2	**2:** 1	**2:** D-BU/GY	**2:** 346	**2:** Left/Rear Subwoofer Speaker (+)	**2:** I	**2:** UQA

P19V SPEAKER - RIGHT FRONT TWEETER

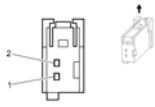

Connector Part Information

- Harness Type: Headliner
- OEM Connector: 19115645
- Service Connector: 13314093
- Description: 2-Way F 0.64 Series (BK)

Terminal Part Information

Terminal Type ID	Terminated Lead	Diagnostic Test Probe	Terminal Removal	Service Terminal	Tray	Core Crimp	Insulation Crimp

			Tool				
I	13575867	J-35616-64B (L-BU)	J-38125-215A	Not Available	Not Available	Not Available	Not Available

P19V Speaker - Right Front Tweeter

Pin	Size	Color	Circuit	Function	Terminal Type ID	Option
1: 1	**1:** 0.75	**1:** YE/BK	**1:** 117	**1:** Right Front Speaker Signal (-) (1)	**1:** I	**1:** -
2: 2	**2:** 0.75	**2:** YE	**2:** 200	**2:** Right Front Speaker (+) (1)	**2:** I	**2:** -

Q6E CAMSHAFT POSITION ACTUATOR SOLENOID VALVE - EXHAUST (LUV)

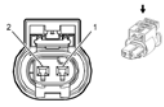

Connector Part Information

- Harness Type: Engine
- OEM Connector: 55564248
- Service Connector: 13577537
- Description: 2-Way F 1.2 MLK Series, Sealed (BK)

Terminal Part Information

Terminal Type ID	Terminated Lead	Diagnostic Test Probe	Terminal Removal Tool	Service Terminal	Tray	Core Crimp	Insulation Crimp
I	13576385	Pending	Pending	Not Available	Not Available	Not Available	Not Available

Q6E Camshaft Position Actuator Solenoid Valve - Exhaust (LUV)

Pin	Size	Color	Circuit	Function	Terminal Type ID	Option
1: 1	**1:** 0.5	**1:** BK/VT	**1:** 6754	**1:** Low Reference	**1:** I	**1:** -
2: 2	**2:** 0.5	**2:** GY/D-BU	**2:** 5282	**2:** Camshaft Phaser Exhaust Solenoid (1)	**2:** I	**2:** -

Q6E CAMSHAFT POSITION ACTUATOR SOLENOID VALVE - EXHAUST (LUW/LWE)

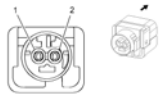

Connector Part Information

- Harness Type: Engine
- OEM Connector: 55566735
- Service Connector: 13581094
- Description: 2-Way F 1.5 Series, Sealed (BK)

Terminal Part Information

Terminal Type ID	Terminated Lead	Diagnostic Test Probe	Terminal Removal Tool	Service Terminal	Tray	Core Crimp	Insulation Crimp
I	13582274	J-35616-64B (L-BU)	J-38125-12A	928999-5	15	J	J

Q6E Camshaft Position Actuator Solenoid Valve - Exhaust (LUW/LWE)

Pin	Size	Color	Circuit	Function	Terminal Type ID	Option
1: 1	**1:** 0.5	**1:** BK/VT	**1:** 6754	**1:** Low Reference	**1:** I	**1:** -
2: 2	**2:** 0.5	**2:** GY/D-BU	**2:** 5282	**2:** Camshaft Phaser Exhaust Solenoid (1)	**2:** I	**2:** -

Q6F CAMSHAFT POSITION ACTUATOR SOLENOID VALVE - INTAKE (LUV)

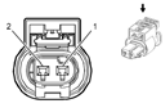

Connector Part Information

- Harness Type: Engine
- OEM Connector: 55564248
- Service Connector: 13577537
- Description: 2-Way F 1.2 MLK Series, Sealed (BK)

Terminal Part Information

Terminal Type ID	Terminated Lead	Diagnostic Test Probe	Terminal Removal Tool	Service Terminal	Tray	Core Crimp	Insulation Crimp
I	13576385	Pending	Pending	Not Available	Not Available	Not Available	Not Available

Q6F Camshaft Position Actuator Solenoid Valve - Intake (LUV)

Pin	Size	Color	Circuit	Function	Terminal Type ID	Option

1: 1	**1:** 0.5	**1:** BN/WH	**1:** 6753	**1:** Low Reference	**1:** I	**1:** -
2: 2	**2:** 0.5	**2:** VT/BN	**2:** 5284	**2:** Camshaft Phaser Intake Solenoid (1)	**2:** I	**2:** -

Q6F CAMSHAFT POSITION ACTUATOR SOLENOID VALVE - INTAKE (LUW/LWE)

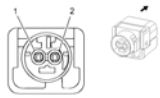

Connector Part Information

- Harness Type: Engine
- OEM Connector: 55566735
- Service Connector: 13581094
- Description: 2-Way F 1.5 Series, Sealed (BK)

Terminal Part Information

Terminal Type ID	Terminated Lead	Diagnostic Test Probe	Terminal Removal Tool	Service Terminal	Tray	Core Crimp	Insulation Crimp
I	13582274	J-35616-64B (L-BU)	J-38125-12A	928999-5	15	J	J

Q6F Camshaft Position Actuator Solenoid Valve - Intake (LUW/LWE)

Pin	Size	Color	Circuit	Function	Terminal Type ID	Option
1: 1	**1:** 0.5	**1:** BK/BN	**1:** 6753	**1:** Low Reference	**1:** I	**1:** -
2: 2	**2:** 0.5	**2:** VT/BN	**2:** 5284	**2:** Camshaft Phaser Intake Solenoid (1)	**2:** I	**2:** -

Q8 CONTROL SOLENOID VALVE ASSEMBLY X1 (MH8)

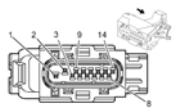

Connector Part Information

- Harness Type: Engine
- OEM Connector: 13522378
- Service Connector: 13503939
- Description: 14-Way F GT 150 280 Series, Sealed (L-GY)

Terminal Part Information

Terminal Type ID	Terminated Lead	Diagnostic Test Probe	Terminal Removal Tool	Service Terminal	Tray	Core Crimp	Insulation Crimp
I	13575392	J-35616-4A (PU)	J-38125-553	15304720	19	4	5
II	13575400	J-35616-2A (GY)	J-38125-553	15326267	19	E	4

Q8 Control Solenoid Valve Assembly X1 (MH8)

Pin	Size	Color	Circuit	Function	Terminal Type ID	Option
1: 1	**1:** 0.75 **1:** 0.75	**1:** RD/WH **1:** RD/WH	**1:** 340 **1:** 1840	**1:** Battery Positive Voltage **1:** Battery Positive Voltage	**1:** I	**1:** LUJ **1:** LUW
2: 2	**2:** 0.75	**2:** BK	**2:** 150	**2:** Ground	**2:** I	**2:** -
3: 3	**3:** 0.5 **3:** 0.5	**3:** L-GN **3:** WH/GY	**3:** 275 **3:** 1786	**3:** Transmission Park/Neutral Signal (1) **3:** Transmission Park/Neutral Signal (1)	**3:** II	**3:** LUJ **3:** LUW
4-5	-	-	-	Not Occupied	-	-
6: 6	**6:** 0.5	**6:** D-BU	**6:** 2500	**6:** High Speed GMLAN Serial Data (+) (1)	**6:** II	**6:** -
7: 7	**7:** 0.5	**7:** D-BU	**7:** 2500	**7:** High Speed GMLAN Serial Data (+) (1)	**7:** II	**7:** -
8: 8	**8:** 0.5	**8:** WH	**8:** 2501	**8:** High Speed GMLAN Serial Data (-) (1)	**8:** II	**8:** -
9	-	-	-	Not Occupied	-	-
10: 10	**10:** 0.5	**10:** WH/D-BU	**10:** 6311	**10:** Cruise/ETC/TCC Brake Signal	**10:** -	**10:** LUW
11	-	-	-	Not Occupied	-	-
12: 12	**12:** 0.5 **12:** 0.5	**12:** VT/D-BU **12:** VT/GY	**12:** 139 **12:** 139	**12:** Ignition Voltage **12:** Ignition Voltage	**12:** II	**12:** LUJ **12:** LUW
13: 13	**13:** 0.5 **13:** 0.5	**13:** BU **13:** VT/YE	**13:** 5985 **13:** 5985	**13:** Accessory Wakeup Serial Data **13:** Accessory Wakeup Serial Data	**13:** II	**13:** LUJ **13:** LUW
14: 14	**14:** 0.5	**14:** WH	**14:** 2501	**14:** High Speed GMLAN Serial Data (-) (1)	**14:** II	**14:** -

Q8 CONTROL SOLENOID VALVE ASSEMBLY X2 (MH8)

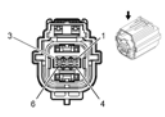

Connector Part Information

- Harness Type: Automatic Transmission
- OEM Connector: 13540209
- Service Connector: 13504952
- Description: 6-Way F Micro-Pack 150.2 Series Sealed (BU)

Terminal Part Information

Terminal Type ID	Terminated Lead	Diagnostic Test Probe	Terminal Removal Tool	Service Terminal	Tray	Core Crimp	Insulation Crimp
I	Service by Component Assembly	J-35616-14 (GN)	Not Available	Not Available	Not Available	Not Available	Not Available

Q8 Control Solenoid Valve Assembly X2 (MH8)

Pin	Size	Color	Circuit	Function	Terminal Type ID	Option
A: A	**A:** 0.5	**A:** BU	**A:** -	**A:** Park/Neutral Switch Signal	**A:** I	**A:** -
B: B	**B:** 0.5	**B:** GN	**B:** -	**B:** Transmission Range Switch Signal A	**B:** I	**B:** -
C: C	**C:** 0.5	**C:** GY	**C:** -	**C:** Transmission Range Switch Signal B	**C:** I	**C:** -
D: D	**D:** 0.5	**D:** YE	**D:** -	**D:** Transmission Range Switch Signal C	**D:** I	**D:** -
E: E	**E:** 0.5	**E:** RD	**E:** -	**E:** Transmission Range Switch Signal P	**E:** I	**E:** -
F: F	**F:** 0.5	**F:** BK	**F:** -	**F:** Low Reference	**F:** I	**F:** -

Q8 CONTROL SOLENOID VALVE ASSEMBLY X3 (MH8)

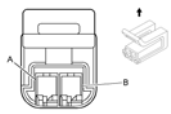

Connector Part Information

- Harness Type: Automatic Transmission
- OEM Connector: 13586529
- Service Connector: Service by Harness - See Part Catalog
- Description: 2-Way F Metri-Pack 150.2 Series (L-GY)

Terminal Part Information

Terminal Type ID	Terminated Lead	Diagnostic Test Probe	Terminal Removal Tool	Service Terminal	Tray	Core Crimp	Insulation Crimp
I	Service by Component Assembly	J-35616-14 (GN)	Not Available	Not Available	Not Available	Not Available	Not Available

Q8 Control Solenoid Valve Assembly X3 (MH8)

Pin	Size	Color	Circuit	Function	Terminal Type ID	Option
A: A	**A:** 0.5	**A:** WH	**A:** -	**A:** ISS High Signal	**A:** I	**A:** -
B: B	**B:** 0.5	**B:** BK	**B:** -	**B:** ISS Low Signal	**B:** I	**B:** -

Q8 CONTROL SOLENOID VALVE ASSEMBLY X4 (MH8)

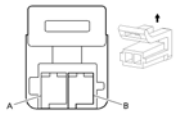

Connector Part Information

- Harness Type: Automatic Transmission
- OEM Connector: 13543034
- Service Connector: Service by Harness - See Part Catalog
- Description: 2-Way F Metri-Pack 150.2 Series (L-GY)

Terminal Part Information

Terminal Type ID	Terminated Lead	Diagnostic Test Probe	Terminal Removal Tool	Service Terminal	Tray	Core Crimp	Insulation Crimp
I	Service by Component Assembly	J-35616-14 (GN)	Not Available	Not Available	Not Available	Not Available	Not Available

Q8 Control Solenoid Valve Assembly X4 (MH8)

Pin	Size	Color	Circuit	Function	Terminal Type ID	Option
A: A	**A:** 0.5	**A:** WH	**A:** -	**A:** OSS High Signal	**A:** I	**A:** -
B: B	**B:** 0.5	**B:** BK	**B:** -	**B:** OSS Low Signal	**B:** I	**B:** -

Q12 EVAPORATIVE EMISSION PURGE SOLENOID VALVE (LUV)

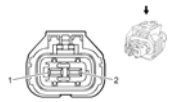

Connector Part Information

- Harness Type: Engine
- OEM Connector: 55565696
- Service Connector: 13355785
- Description: 2-Way F 2.8 Series, Sealed (BK)

Terminal Part Information

Terminal Type ID	Terminated Lead	Diagnostic Test Probe	Terminal Removal Tool	Service Terminal	Tray	Core Crimp	Insulation Crimp
I	Not Available	J-35616-35 (VT)	J-38125-561	1928498056	8	E	1

Q12 Evaporative Emission Purge Solenoid Valve (LUV)

Pin	Size	Color	Circuit	Function	Terminal Type ID	Option
1: 1	**1:** 0.5	**1:** GN/D-BU	**1:** 428	**1:** EVAP Canister Purge Solenoid Control	**1:** I	**1:** -
2: 2	**2:** RD/WH	**2:** RD/WH	**2:** 5293	**2:** Powertrain Main Relay Fused Supply (4)	**2:** I	**2:** -

Q12 EVAPORATIVE EMISSION PURGE SOLENOID VALVE (LUW/LWE)

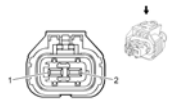

Connector Part Information

- Harness Type: Engine
- OEM Connector: 13125727
- Service Connector: 13355748
- Description: 2-Way F 2.8 Series, Sealed (BK)

Terminal Part Information

Terminal Type ID	Terminated Lead	Diagnostic Test Probe	Terminal Removal Tool	Service Terminal	Tray	Core Crimp	Insulation Crimp
I	Not	J-35616-35	J-38125-561	1928498056	8	E	1

	Available	(VT)					

Q12 Evaporative Emission Purge Solenoid Valve (LUW/LWE)

Pin	Size	Color	Circuit	Function	Terminal Type ID	Option
1: 1	**1:** 0.75	**1:** L-GN/D-BU	**1:** 428	**1:** EVAP Canister Purge Solenoid Control	**1:** I	**1:** -
2: 2	**2:** 0.75	**2:** VT/D-BU	**2:** 5293	**2:** Powertrain Main Relay Fused Supply (4)	**2:** I	**2:** -

Q13 EVAPORATIVE EMISSION VENT SOLENOID VALVE

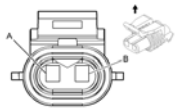

Connector Part Information

- Harness Type: Fuel Tank
- OEM Connector: 12052643
- Service Connector: 13585860
- Description: 2-Way F Metri-Pack 150 Series, Sealed (RD)

Terminal Part Information

Terminal Type ID	Terminated Lead	Diagnostic Test Probe	Terminal Removal Tool	Service Terminal	Tray	Core Crimp	Insulation Crimp
I	13575427	J-35616-14 (GN)	J-38125-12A	12048074	2	E	1

Q13 Evaporative Emission Vent Solenoid Valve

Pin	Size	Color	Circuit	Function	Terminal Type ID	Option
A: A	**A:** 0.75	**A:** RD/D-BU	**A:** 5372	**A:** Canister Valve Solenoid	**A:** I	**A:** -
B: B	**B:** 0.75	**B:** WH	**B:** 1310	**B:** EVAP Canister Vent Solenoid Control	**B:** I	**B:** -

Q17A FUEL INJECTOR 1 (LUV)

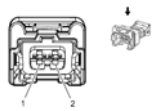

Connector Part Information

- Harness Type: Engine
- OEM Connector: 55565698
- Service Connector: 13577536
- Description: 2-Way F 2.8 DCS Series, Sealed (BK)

Terminal Part Information

Terminal Type ID	Terminated Lead	Diagnostic Test Probe	Terminal Removal Tool	Service Terminal	Tray	Core Crimp	Insulation Crimp
I	13327154	J-35616-35 (VT)	J-38125-36	4-964286-1	16	E	1

Q17A Fuel Injector 1 (LUV)

Pin	Size	Color	Circuit	Function	Terminal Type ID	Option
1: 1	**1:** 0.5	**1:** RD/BU	**1:** 5291	**1:** Powertrain Main Relay Fused Supply (2)	**1:** I	**1:** -
2: 2	**2:** 0.5	**2:** BN/VT	**2:** 1744	**2:** Fuel Injector Control (1)	**2:** I	**2:** -

Q17A FUEL INJECTOR 1 (LUW/LWE)

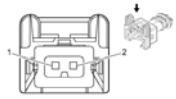

Connector Part Information

- Harness Type: Fuel Injector
- OEM Connector: 24466116
- Service Connector: 24466116
- Description: 2-Way F 2.8 Timer Series, Sealed (BK)

Terminal Part Information

Terminal Type ID	Terminated Lead	Diagnostic Test Probe	Terminal Removal Tool	Service Terminal	Tray	Core Crimp	Insulation Crimp
I	13581346	J-35616-35 (VT)	J-38125-36	4-964286-1	16	E	1

Q17A Fuel Injector 1 (LUW/LWE)

Pin	Size	Color	Circuit	Function	Terminal Type ID	Option
				1: Powertrain Main Relay		

1: 1	**1:** 0.5	**1:** PK/BK	**1:** 5291	Fused Supply (2)	**1:** I	**1:** -
2: 2	**2:** 0.5	**2:** BN	**2:** 1744	**2:** Fuel Injector Control (1)	**2:** I	**2:** -

Q17B FUEL INJECTOR 2 (LUV)

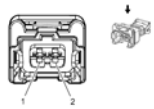

Connector Part Information

- Harness Type: Engine
- OEM Connector: 55565698
- Service Connector: 13577536
- Description: 2-Way F 2.8 DCS Series, Sealed (BK)

Terminal Part Information

Terminal Type ID	Terminated Lead	Diagnostic Test Probe	Terminal Removal Tool	Service Terminal	Tray	Core Crimp	Insulation Crimp
I	13327154	J-35616-35 (VT)	J-38125-36	4-964286-1	16	E	1

Q17B Fuel Injector 2 (LUV)

Pin	Size	Color	Circuit	Function	Terminal Type ID	Option
1: 1	**1:** 0.5	**1:** RD/BU	**1:** 5291	**1:** Powertrain Main Relay Fused Supply (2)	**1:** I	**1:** -
2: 2	**2:** 0.5	**2:** YE/WH	**2:** 1745	**2:** Fuel Injector Control (2)	**2:** I	**2:** -

Q17B FUEL INJECTOR 2 (LUW/LWE)

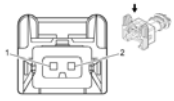

Connector Part Information

- Harness Type: Fuel Injector
- OEM Connector: 24466116
- Service Connector: 24466116
- Description: 2-Way F 2.8 Timer Series, Sealed (BK)

Terminal Part Information

Terminal Type ID	Terminated Lead	Diagnostic Test Probe	Terminal Removal Tool	Service Terminal	Tray	Core Crimp	Insulation Crimp
I	13581346	J-35616-35 (VT)	J-38125-36	4-964286-1	16	E	1

Q17B Fuel Injector 2 (LUW/LWE)

Pin	Size	Color	Circuit	Function	Terminal Type ID	Option
1: 1	**1:** 0.5	**1:** PK/WH	**1:** 5291	**1:** Powertrain Main Relay Fused Supply (2)	**1:** I	**1:** -
2: 2	**2:** 0.5	**2:** L-GN/BK	**2:** 1745	**2:** Fuel Injector Control (2)	**2:** I	**2:** -

Q17C FUEL INJECTOR 3 (LUV)

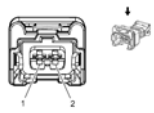

Connector Part Information

- Harness Type: Engine
- OEM Connector: 55565698
- Service Connector: 13577536
- Description: 2-Way F 2.8 DCS Series, Sealed (BK)

Terminal Part Information

Terminal Type ID	Terminated Lead	Diagnostic Test Probe	Terminal Removal Tool	Service Terminal	Tray	Core Crimp	Insulation Crimp
I	13327154	J-35616-35 (VT)	J-38125-36	4-964286-1	16	E	1

Q17C Fuel Injector 3 (LUV)

Pin	Size	Color	Circuit	Function	Terminal Type ID	Option
1: 1	**1:** 0.5	**1:** RD/BU	**1:** 5291	**1:** Powertrain Main Relay Fused Supply (2)	**1:** I	**1:** -
2: 2	**2:** 0.5	**2:** BN/YE	**2:** 1746	**2:** Fuel Injector Control (3)	**2:** I	**2:** -

Q17C FUEL INJECTOR 3 (LUW/LWE)

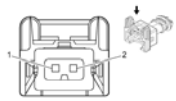

Connector Part Information

- Harness Type: Fuel Injector
- OEM Connector: 24466116
- Service Connector: 24466116
- Description: 2-Way F 2.8 Timer Series, Sealed (BK)

Terminal Part Information

Terminal Type ID	Terminated Lead	Diagnostic Test Probe	Terminal Removal Tool	Service Terminal	Tray	Core Crimp	Insulation Crimp
I	13581346	J-35616-35 (VT)	J-38125-36	4-964286-1	16	E	1

Q17C Fuel Injector 3 (LUW/LWE)

Pin	Size	Color	Circuit	Function	Terminal Type ID	Option
1: 1	**1:** 0.5	**1:** PK/BK	**1:** 5291	**1:** Powertrain Main Relay Fused Supply (2)	**1:** I	**1:** -
2: 2	**2:** 0.5	**2:** WH/BK	**2:** 1746	**2:** Fuel Injector Control (3)	**2:** I	**2:** -

Q17D FUEL INJECTOR 4 (LUV)

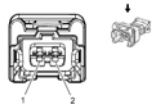

Connector Part Information

- Harness Type: Engine
- OEM Connector: 55565698
- Service Connector: 13577536
- Description: 2-Way F 2.8 DCS Series, Sealed (BK)

Terminal Part Information

Terminal Type ID	Terminated Lead	Diagnostic Test Probe	Terminal Removal Tool	Service Terminal	Tray	Core Crimp	Insulation Crimp
I	13327154	J-35616-35 (VT)	J-38125-36	4-964286-1	16	E	1

Q17D Fuel Injector 4 (LUV)

Pin	Size	Color	Circuit	Function	Terminal Type ID	Option
1: 1	**1:** 0.5	**1:** RD/BU	**1:** 5291	**1:** Powertrain Main Relay Fused Supply (2)	**1:** I	**1:** -
2: 2	**2:** 0.5	**2:** BN	**2:** 844	**2:** Fuel Injector Control (4)	**2:** I	**2:** -

Q17D FUEL INJECTOR 4 (LUW/LWE)

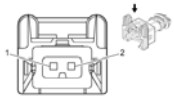

Connector Part Information

- Harness Type: Fuel Injector
- OEM Connector: 24466116
- Service Connector: 24466116
- Description: 2-Way F 2.8 Timer Series, Sealed (BK)

Terminal Part Information

Terminal Type ID	Terminated Lead	Diagnostic Test Probe	Terminal Removal Tool	Service Terminal	Tray	Core Crimp	Insulation Crimp
I	13581346	J-35616-35 (VT)	J-38125-36	4-964286-1	16	E	1

Q17D Fuel Injector 4 (LUW/LWE)

Pin	Size	Color	Circuit	Function	Terminal Type ID	Option
1: 1	**1:** 0.5	**1:** PK/BK	**1:** 5291	**1:** Powertrain Main Relay Fused Supply (2)	**1:** I	**1:** -
2: 2	**2:** 0.5	**2:** D-BU/BK	**2:** 844	**2:** Fuel Injector Control (4)	**2:** I	**2:** -

Q22 INTAKE MANIFOLD TUNING SOLENOID VALVE (LUW/LWE)

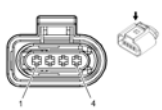

Connector Part Information

- Harness Type: Engine
- OEM Connector: 13167844

- Service Connector: 13581095
- Description: 4-Way F Sealed (BK)

Terminal Part Information

Terminal Type ID	Terminated Lead	Diagnostic Test Probe	Terminal Removal Tool	Service Terminal	Tray	Core Crimp	Insulation Crimp
I	13576394	J-35616-64B (L-BU)	J-38125-12A	962885-5	15	6	6

Q22 Intake Manifold Tuning Solenoid Valve (LUW/LWE)

Pin	Size	Color	Circuit	Function	Terminal Type ID	Option
1: 1	**1:** 0.5	**1:** VT/D-BU	**1:** 5293	**1:** Powertrain Main Relay Fused Supply (4)	**1:** I	**1:** -
2: 2	**2:** 0.5	**2:** BK	**2:** 150	**2:** Ground	**2:** I	**2:** -
3: 3	**3:** 0.5	**3:** D-BU	**3:** 7302	**3:** Intake Manifold Tuning Valve (IMTV) Control - Signal	**3:** I	**3:** -
4: 4	**4:** 0.5	**4:** GY/L-GN	**4:** 7303	**4:** Intake Manifold Tuning Valve (IMTV) Position - Signal	**4:** I	**4:** -

Q38 THROTTLE BODY

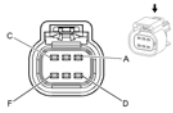

Connector Part Information

- Harness Type: Engine
- OEM Connector: 55565697
- Service Connector: 13355786
- Description: 6-Way Sealed (BK)

Terminal Part Information

Terminal Type ID	Terminated Lead	Diagnostic Test Probe	Terminal Removal Tool	Service Terminal	Tray	Core Crimp	Insulation Crimp
I	13575396	J-35616-2A (GY)	J-38125-553	15326427	5	E	A

Q38 Throttle Body

Pin	Size	Color	Circuit	Function	Terminal Type ID	Option
A: A	**A:** 0.5	**A:** BN/WH	**A:** 582	**A:** Throttle Actuator Control Close	**A:** I	**A:** -
B: B	**B:** 0.5	**B:** BN/RD	**B:** 581	**B:** Throttle Actuator Control Open	**B:** I	**B:** -
C: C	**C:** 0.5	**C:** BK/YE	**C:** 2752	**C:** Throttle Position Sensor Low Reference	**C:** I	**C:** -
D: D	**D:** 0.5	**D:** BN/GN	**D:** 485	**D:** Throttle Position Sensor Signal (1)	**D:** I	**D:** -
E: E	**E:** 0.5	**E:** BN/RD	**E:** 2701	**E:** 5 Volt Reference	**E:** I	**E:** -
F: F	**F:** 0.5	**F:** BN/BU	**F:** 486	**F:** Throttle Position Sensor Signal (2)	**F:** I	**F:** -

Q40 TURBOCHARGER BYPASS SOLENOID VALVE (LUV)

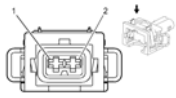

Connector Part Information

- Harness Type: Engine
- OEM Connector: 13123749
- Service Connector: 13355744
- Description: 2-Way F 2.8 Junior Power Timer Series, Sealed (BK)

Terminal Part Information

Terminal Type ID	Terminated Lead	Diagnostic Test Probe	Terminal Removal Tool	Service Terminal	Tray	Core Crimp	Insulation Crimp
I	13575438	J-35616-35 (VT)	J-38125-36	4-964286-1	16	E	1

Q40 Turbocharger Bypass Solenoid Valve (LUV)

Pin	Size	Color	Circuit	Function	Terminal Type ID	Option
1: 1	**1:** 0.5	**1:** BN/WH	**1:** 3060	**1:** Turbo Bypass Solenoid Control Bank (1)	**1:** I	**1:** -
2: 2	**2:** 0.5	**2:** RD/WH	**2:** 5293	**2:** Powertrain Main Relay Fused Supply (4)	**2:** I	**2:** -

Q42 TURBOCHARGER WASTEGATE SOLENOID VALVE (LUV)

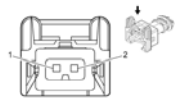

Connector Part Information

- Harness Type: Engine
- OEM Connector: 24466116
- Service Connector: 24466116
- Description: 2-Way F 2.8 Timer Series, Sealed (BK)

Terminal Part Information

Terminal Type ID	Terminated Lead	Diagnostic Test Probe	Terminal Removal Tool	Service Terminal	Tray	Core Crimp	Insulation Crimp
I	13575438	J-35616-35 (VT)	J-38125-36	4-964286-1	16	E	1

Q42 Turbocharger Wastegate Solenoid Valve (LUV)

Pin	Size	Color	Circuit	Function	Terminal Type ID	Option
1: 1	**1:** 0.75	**1:** BN/RD	**1:** 3058	**1:** Turbo Waste Gate Solenoid Control Bank (1)	**1:** I	**1:** -
2: 2	**2:** 0.75	**2:** RD/WH	**2:** 5293	**2:** Powertrain Main Relay Fused Supply (4)	**2:** I	**2:** -

Q46 A/C COMPRESSOR SOLENOID VALVE

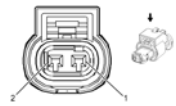

Connector Part Information

- Harness Type: Engine
- OEM Connector: 2-1823608-1
- Service Connector: 13585623
- Description: 2-Way F 1.2 MCP Series, Sealed (BK with NA Inner Connector)

Terminal Part Information

Terminal Type ID	Terminated Lead	Diagnostic Test Probe	Terminal Removal Tool	Service Terminal	Tray	Core Crimp	Insulation Crimp
I	Pending	Pending	Pending	Not	Not	Pending	Pending

				Available	Available		

Q46 A/C Compressor Solenoid Valve

Pin	Size	Color	Circuit	Function	Terminal Type ID	Option
1: 1	**1:** 0.50	**1:** BU/BN	**1:** 7573	**1:** Electric Variable Displacement Supply	**1:** I	**1:** -
2: 2	**2:** 0.50	**2:** BU/YE	**2:** 7574	**2:** Electric Variable Displacement Control	**2:** I	**2:** -

S2 TRANSMISSION MANUAL SHIFT SWITCH (MH8)

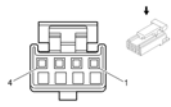

Connector Part Information

- Harness Type: Shift Lever
- OEM Connector: Not Available
- Service Connector: Service By Component - See Part Catalog
- Description: 4-Way F (WH)

Terminal Part Information

Terminal Type ID	Terminated Lead	Diagnostic Test Probe	Terminal Removal Tool	Service Terminal	Tray	Core Crimp	Insulation Crimp
I	Service By Component - See Part Catalog	Not Available	Not Available	Service By Component - See Part Catalog	Service By Component - See Part Catalog	Not Available	Not Available

S2 Transmission Manual Shift Switch (MH8)

Pin	Size	Color	Circuit	Function	Terminal Type ID	Option
1: 1	**1:** VT/WH	**1:** VT/WH	**1:** -	**1:** Battery Positive Voltage	**1:** I	**1:** -
2: 2	**2:** BK	**2:** BK	**2:** -	**2:** Park Lock Solenoid Control	**2:** I	**2:** -
3: 3	**3:** RD/WH	**3:** RD/WH	**3:** -	**3:** Park Lock Solenoid Soft Control	**3:** I	**3:** -
4: 4	**4:** BK	**4:** BK	**4:** -	**4:** Ground	**4:** I	**4:** -

S3 TRANSMISSION SHIFT LEVER (MH8)

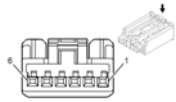

Connector Part Information

- Harness Type: Instrument Panel
- OEM Connector: 13595476
- Service Connector: 19167753
- Description: 6-Way F AIT II Series (BK)

Terminal Part Information

Terminal Type ID	Terminated Lead	Diagnostic Test Probe	Terminal Removal Tool	Service Terminal	Tray	Core Crimp	Insulation Crimp
I	Service by Connector Assembly	J-35616-64B (L-BU)	J-38125-215A	Pending	Pending	Pending	Pending

S3 Transmission Shift Lever (MH8)

Pin	Size	Color	Circuit	Function	Terminal Type ID	Option
1: 1	**1:** 0.5	**1:** RD/BN	**1:** 202	**1:** Battery Positive Voltage	**1:** I	**1:** -
2: 2	**2:** 0.5	**2:** BK	**2:** 2150	**2:** Ground	**2:** I	**2:** -
3: 3	**3:** 0.5	**3:** YE	**3:** 7554	**3:** Park Lock Solenoid Soft Control	**3:** I	**3:** -
4: 4	**4:** 0.5	**4:** VT/BK	**4:** 7553	**4:** Park Lock Solenoid Control	**4:** I	**4:** -
5	-	-	-	Not Occupied	-	-
6: 6	**6:** 0.5	**6:** WH/VT	**6:** 5905	**6:** Key Capture/Column Lock Shift Position Signal	**6:** I	**6:** -

S13D DOOR LOCK SWITCH - DRIVER

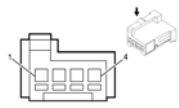

Connector Part Information

- Harness Type: Instrument Panel
- OEM Connector: 15439868
- Service Connector: 13579438
- Description: 4-Way F (BK)

Terminal Part Information

Terminal Type ID	Terminated Lead	Diagnostic Test Probe	Terminal Removal Tool	Service Terminal	Tray	Core Crimp	Insulation Crimp
I	13575782	J-35616-64B (L-BU)	J-38125-12A	928999-5	15	J	J

S13D Door Lock Switch - Driver

Pin	Size	Color	Circuit	Function	Terminal Type ID	Option
1: 1	**1:** 0.5	**1:** BK	**1:** 50	**1:** Ground	**1:** I	**1:** -
2: 2	**2:** 0.5	**2:** YE	**2:** 6817	**2:** LED Backlight Dimming Control	**2:** I	**2:** -
3: 3	**3:** 0.5	**3:** BN/WH	**3:** 781	**3:** Driver Door Lock Switch Unlock Signal	**3:** I	**3:** -
4: 4	**4:** 0.5	**4:** BN/YE	**4:** 780	**4:** Driver Door Lock Switch Lock Signal	**4:** I	**4:** -

S26 HAZARD LAMPS SWITCH

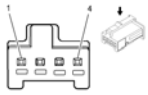

Connector Part Information

- Harness Type: Instrument Panel
- OEM Connector: 15439870
- Service Connector: 13579439
- Description: 4-Way F (BU)

Terminal Part Information

Terminal Type ID	Terminated Lead	Diagnostic Test Probe	Terminal Removal Tool	Service Terminal	Tray	Core Crimp	Insulation Crimp
I	13575782	J-35616-64B (L-BU)	J-38125-12A	928999-5	15	H	H

S26 Hazard Lamps Switch

Pin	Size	Color	Circuit	Function	Terminal Type ID	Option
1: 1	**1:** 0.35	**1:** D-GN/WH	**1:** 111	**1:** Hazard Switch Signal	**1:** I	**1:** -
2: 2	**2:** 0.35	**2:** L-BU/VT	**2:** 1717	**2:** Hazard Switch Turn Flasher Control	**2:** I	**2:** -

3: 3	**3:** 0.5	**3:** BK	**3:** 50	**3:** Ground	**3:** I	**3:** -
4	-	-	-	Not Occupied	-	-

S30 HEADLAMP SWITCH

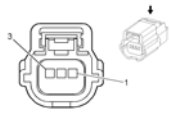

Connector Part Information

- Harness Type: Instrument Panel
- OEM Connector: 15483208
- Service Connector: 88988229
- Description: 12-Way F Micro HVT (BK)

Terminal Part Information

Terminal Type ID	Terminated Lead	Diagnostic Test Probe	Terminal Removal Tool	Service Terminal	Tray	Core Crimp	Insulation Crimp
I	13575550	J-35616-16 (L-GN)	J-38125-559	15445905	23	J	J

S30 Headlamp Switch

Pin	Size	Color	Circuit	Function	Terminal Type ID	Option
1: 1	**1:** 0.5	**1:** YE	**1:** 7556	**1:** Lighting Control Switch Reference	**1:** I	**1:** -
2	-	-	-	Not Occupied	-	-
3: 3	**3:** 0.35	**3:** D-GN/GY	**3:** 13	**3:** Headlamp Switch Park Lamp Signal	**3:** I	**3:** -
4: 4	**4:** 0.35	**4:** WH/VT	**4:** 103	**4:** Headlamp Switch On Signal	**4:** I	**4:** -
5: 5	**5:** 0.35	**5:** D-GN/BN	**5:** 306	**5:** Headlamp Switch Headlamps Off Signal Control	**5:** I	**5:** -
6: 6	**6:** 0.5	**6:** BK	**6:** 1650	**6:** Ground	**6:** I	**6:** -
7: 7	**7:** 0.5	**7:** YE	**7:** 6817	**7:** LED Backlight Dimming Control	**7:** I	**7:** -
8-11	-	-	-	Not Occupied	-	-
12: 12	**12:** 0.5	**12:** WH/BN	**12:** 7555	**12:** Lighting Control Switch Signal	**12:** I	**12:** -

A26 HVAC CONTROLS

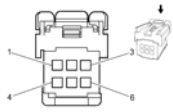

Connector Part Information

- Harness Type: Instrument Panel
- OEM Connector: 10864274
- Service Connector: 13337944
- Description: 6-Way F 0.64 Series (BK)

Terminal Part Information

Terminal Type ID	Terminated Lead	Diagnostic Test Probe	Terminal Removal Tool	Service Terminal	Tray	Core Crimp	Insulation Crimp
I	13579977	J-35616-64B (L-BU)	J-38125-553	1393366-1	16	K	K

A26 HVAC Controls

Pin	Size	Color	Circuit	Function	Terminal Type ID	Option
1: 1	**1:** 0.5	**1:** L-GN/YE	**1:** 7531	**1:** Linear Interconnect Network Bus 9	**1:** I	**1:** -
2: 2	**2:** 0.75	**2:** BK	**2:** 1650	**2:** Ground	**2:** I	**2:** -
3: 3	**3:** 0.75	**3:** RD/YE	**3:** 240	**3:** Battery Positive Voltage	**3:** I	**3:** -
4-6	-	-	-	Not Occupied	-	-

S38 IGNTION MODE SWITCH (BTM)

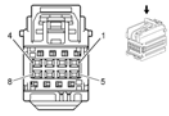

Connector Part Information

- Harness Type: Instrument Panel
- OEM Connector: 15480082
- Service Connector: 19149303
- Description: 8-Way F Micro 64 Series (GY)

Terminal Part Information

Terminal Type ID	Terminated Lead	Diagnostic Test Probe	Terminal Removal Tool	Service Terminal	Tray	Core Crimp	Insulation Crimp

I	13579976	J-35616-64B (L-BU)	J-38125-21	15359541	4	M	M

S38 Igntion Mode Switch (BTM)

Pin	Size	Color	Circuit	Function	Terminal Type ID	Option
1	-	-	-	Not Occupied	-	-
2: 2	**2:** 0.5	**2:** BN/BK	**2:** 5720	**2:** Ignition Mode Switch Accessory LED Signal	**2:** I	**2:** -
3: 3	**3:** 0.5	**3:** D-GN/BK	**3:** 3558	**3:** Passive Start Switch Signal 2	**3:** I	**3:** -
4: 4	**4:** 0.5	**4:** BK	**4:** 1650	**4:** Ground	**4:** I	**4:** -
5: 5	**5:** 0.5	**5:** D-BU/BK	**5:** 5719	**5:** Ignition Mode Switch Start LED Signal	**5:** I	**5:** -
6: 6	**6:** 0.5	**6:** D-BU/D-GN	**6:** 5723	**6:** Ignition Mode Switch Mode Voltage	**6:** I	**6:** -
7: 7	**7:** 0.5	**7:** BK/GY	**7:** 3559	**7:** Passive Start Switch 2 Low Reference	**7:** I	**7:** -
8: 8	**8:** 0.5	**8:** YE	**8:** 6817	**8:** LED Backlight Dimming Control	**8:** I	**8:** -

S39 IGNITION SWITCH

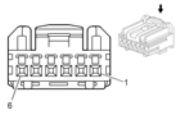

Connector Part Information

- Harness Type: Instrument Panel
- OEM Connector: 13608102
- Service Connector: 19153174
- Description: 6-Way F 1.2 HCM Series (NA)

Terminal Part Information

Terminal Type ID	Terminated Lead	Diagnostic Test Probe	Terminal Removal Tool	Service Terminal	Tray	Core Crimp	Insulation Crimp
I	13575868	J-35616-64B (L-BU)	J-38125-12A	SHCM-A03T-P025	20	J	J

S39 Ignition Switch

Pin	Size	Color	Circuit	Function	Terminal Type ID	Option

1: 1	**1:** 0.5	**1:** VT/BK	**1:** 3	**1:** Run/Crank Ignition 1 Voltage	**1:** I	**1:** -
2: 2	**2:** 0.5	**2:** RD/VT	**2:** 340	**2:** Battery Positive Voltage	**2:** I	**2:** -
3: 3	**3:** 0.5	**3:** VT/YE	**3:** 4	**3:** Accessory Voltage	**3:** I	**3:** -
4: 4	**4:** 0.5	**4:** WH/VT	**4:** 1020	**4:** Off/Run/Crank Voltage	**4:** I	**4:** -
5	-	-	-	Not Occupied	-	-
6: 6	**6:** 0.5	**6:** WH/BK	**6:** 1073	**6:** Ignition Key Resistor Signal	**6:** I	**6:** -

S52 OUTSIDE REARVIEW MIRROR SWITCH

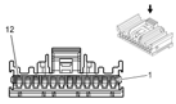

Connector Part Information

- Harness Type: Driver Door
- OEM Connector: 15499371
- Service Connector: 19115105
- Description: 12-Way F Kaizen 64 Series (BK)

Terminal Part Information

Terminal Type ID	Terminated Lead	Diagnostic Test Probe	Terminal Removal Tool	Service Terminal	Tray	Core Crimp	Insulation Crimp
I	13575867	J-35616-64B (L-BU)	J-38125-215A	SAIT-A03T-M064	14	P	P

S52 Outside Rearview Mirror Switch

Pin	Size	Color	Circuit	Function	Terminal Type ID	Option
1: 1	**1:** 0.5	**1:** VT/D-BU	**1:** 3390	**1:** Driver Mirror Motor Up (+) Down (-) Control	**1:** I	**1:** -
2: 2	**2:** 0.5	**2:** YE/BN	**2:** 3391	**2:** Driver Mirror Motor Common Control	**2:** I	**2:** -
3: 3	**3:** 0.5	**3:** BN/BK	**3:** 3389	**3:** Driver Mirror Motor Right (+) Left (-) Control	**3:** I	**3:** -
4: 4	**4:** 0.5	**4:** RD/GY	**4:** 2840	**4:** Battery Positive Voltage	**4:** I	**4:** -
5: 5	**5:** 0.5	**5:** BK	**5:** 50	**5:** Ground	**5:** I	**5:** -
7: 7	**7:** 0.5	**7:** YE/VT	**7:** 3397	**7:** Co-Driver Mirror Motor Up (+) Down (-) Control	**7:** I	**7:** -
8: 8	**8:** 0.5	**8:** WH	**8:** 3398	**8:** Co-Driver Mirror Motor Common Control	**8:** I	**8:** -

9: 9	**9:** 0.5	**9:** D-GN/BK	**9:** 3396	**9:** Co-Driver Mirror Motor Right (+) Left (-) Control	**9:** I	**9:** -
10: 10	**10:** 0.5	**10:** YE	**10:** 6817	**10:** LED Backlight Dimming Control	**10:** I	**10:** -
11-12	-	-	-	Not Occupied	-	-

S64D SEAT ADJUSTER SWITCH - DRIVER (ADS)

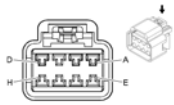

Connector Part Information

- Harness Type: Driver Seat
- OEM Connector: 15326924
- Service Connector: 19153751
- Description: 8-Way F GT 280 Series (BK)

Terminal Part Information

Terminal Type ID	Terminated Lead	Diagnostic Test Probe	Terminal Removal Tool	Service Terminal	Tray	Core Crimp	Insulation Crimp
I	13575756	J-35616-4A (PU)	J-38125-553	15304713	19	F	D

S64D Seat Adjuster Switch - Driver (ADS)

Pin	Size	Color	Circuit	Function	Terminal Type ID	Option
A: A	**A:** 1.5	**A:** D-BU	**A:** 286	**A:** Driver Power Seat Front Vertical Motor Up Control	**A:** I	**A:** -
B: B	**B:** 1.5	**B:** BK	**B:** 2150	**B:** Ground	**B:** I	**B:** -
C: C	**C:** 1.5	**C:** YE	**C:** 285	**C:** Driver Power Seat Horizontal Motor Forward Control	**C:** I	**C:** -
D: D	**D:** 1.5	**D:** RD	**D:** 702	**D:** Battery Positive Voltage	**D:** I	**D:** -
E: E	**E:** 1.5	**E:** WH	**E:** 282	**E:** Driver Power Seat Rear Vertical Motor Up Control	**E:** I	**E:** -
F: F	**F:** 1.5	**F:** BN	**F:** 284	**F:** Driver Power Seat Horizontal Motor Rearward Control	**F:** I	**F:** -
G: G	**G:** 1.5	**G:** D-GN	**G:** 283	**G:** Driver Power Seat Rear Vertical Motor Down Control	**G:** I	**G:** -

H: H	**H:** 1.5	**H:** GY	**H:** 287	**H:** Driver Power Seat Front Vertical Motor Down Control	**H:** I	**H:** -

S70L STEERING WHEEL CONTROLS SWITCH - LEFT (K34)

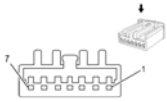

Connector Part Information

- Harness Type: Steering Wheel
- OEM Connector: AIT2PB-7-1FS
- Service Connector: Service by Harness - See Part Catalog
- Description: 7-way F (WH)

Terminal Part Information

Terminal Type ID	Terminated Lead	Diagnostic Test Probe	Terminal Removal Tool	Service Terminal	Tray	Core Crimp	Insulation Crimp
I	Service by Harness - See Parts Catalog	J-35616-64B (L-BU)	Not Available	Service by Harness - See Parts Catalog	Service by Harness - See Parts Catalog	Not Available	Not Available

S70L Steering Wheel Controls Switch - Left (K34)

Pin	Size	Color	Circuit	Function	Terminal Type ID	Option
1: 1	**1:** 0.35	**1:** WH/RD	**1:** 1444	**1:** 12 Volt Reference	**1:** I	**1:** -
2	-	-	-	Not Occupied	-	-
3: 3	**3:** 0.35	**3:** BN/D-GN	**3:** 1884	**3:** Cruise Control Set/Coast/Resume/Accelerate Switch Signal	**3:** I	**3:** -
4-5	-	-	-	Not Occupied	-	-
6: 6	**6:** 0.35	**6:** YE	**6:** 6817	**6:** LED Backlight Dimming Control	**6:** I	**6:** -
7: 7	**7:** 0.35	**7:** BK	**7:** 1650	**7:** Ground	**7:** I	**7:** -

S70R STEERING WHEEL CONTROLS SWITCH - RIGHT (W1Y)

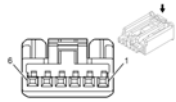

Connector Part Information

- Harness Type: Steering Wheel
- OEM Connector: AIT2PB-6-1AK
- Service Connector: Service by Harness - See Part Catalog
- Description: 6-way F (WH)

Terminal Part Information

Terminal Type ID	Terminated Lead	Diagnostic Test Probe	Terminal Removal Tool	Service Terminal	Tray	Core Crimp	Insulation Crimp
I	Service by Harness - See Parts Catalog	J-35616-64B (L-BU)	Not Available	Service by Harness - See Parts Catalog	Service by Harness - See Parts Catalog	Not Available	Not Available

S70R Steering Wheel Controls Switch - Right (W1Y)

Pin	Size	Color	Circuit	Function	Terminal Type ID	Option
1: 1	**1:** 0.5	**1:** WH/RD	**1:** 1444	**1:** 12V Reference	**1:** I	**1:** -
2: 2	**2:** 0.5	**2:** D-GN/WH	**2:** 6819	**2:** Steering Wheel Resistor Ladder Signal #2	**2:** I	**2:** -
3	-	-	-	Not Occupied	-	-
4: 4	**4:** 0.5	**4:** YE	**4:** 6817	**4:** LED Backlight Dimming Control	**4:** I	**4:** -
5: 5	**5:** 0.5	**5:** BK	**5:** 50	**5:** Ground	**5:** I	**5:** -
6	-	-	-	Not Occupied	-	-

S72 SUNROOF SWITCH (CF5)

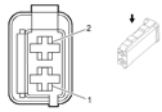

Connector Part Information

- Harness Type: Headliner
- OEM Connector: 10768790
- Service Connector: 13584096
- Description: 4-Way F 0.64 Micro Quadlok Series (BK)

Terminal Part Information

Terminal Type ID	Terminated Lead	Diagnostic Test Probe	Terminal Removal Tool	Service Terminal	Tray	Core Crimp	Insulation Crimp
I	13575782	J-35616-64B (L-BU)	J-38125-12A	928999-5	15	J	J

S72 Sunroof Switch (CF5)

Pin	Size	Color	Circuit	Function	Terminal Type ID	Option
1: 1	**1:** 0.5	**1:** BK/GY	**1:** 128	**1:** Sunroof Switch Low Reference	**1:** I	**1:** -
2: 2	**2:** 0.5	**2:** YE	**2:** 6817	**2:** LED Backlight Dimming Control	**2:** I	**2:** -
3: 3	**3:** 0.5	**3:** BK	**3:** 50	**3:** Ground	**3:** I	**3:** -
4: 4	**4:** 0.5	**4:** D-BU/VT	**4:** 5027	**4:** Sunroof Switch Data (1)	**4:** I	**4:** -

S75 TRACTION CONTROL SWITCH (FX3)

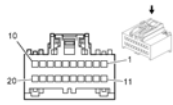

Connector Part Information

- Harness Type: Instrument Panel
- OEM Connector: 13655543
- Service Connector: 13580981
- Description: 6-Way F 0.64 MTS Series (BK)

Terminal Part Information

Terminal Type ID	Terminated Lead	Diagnostic Test Probe	Terminal Removal Tool	Service Terminal	Tray	Core Crimp	Insulation Crimp
I	13575782	J-35616-64B (L-BU)	J-38125-12A	928999-5	15	J	J

S75 Traction Control Switch (FX3)

Pin	Size	Color	Circuit	Function	Terminal Type ID	Option
1	-	-	-	Not Occupied	-	-
2	-	-	-	Not Occupied	-	-
3: 3	**3:** 0.5	**3:** YE	**3:** 6817	**3:** Cruise Control Set/Coast/Resume/Accelerate Switch	**3:** I	**3:** -

				Signal		
4: 4	**4:** 0.5 **4:** 0.5	**4:** BK **4:** BK	**4:** 1750 **4:** 1650	**4:** Ground **4:** Ground	**4:** I	**4:** MF3 or MZ0 **4:** MH8
5-6	-	-	-	Not Occupied	-	-

S78 TURN SIGNAL/MULTI-FUNCTION SWITCH

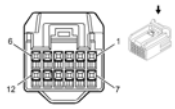

Connector Part Information

- Harness Type: Instrument Panel
- OEM Connector: 13604008
- Service Connector: 13576635
- Description: 12-Way F 0.64 Series (BK)

Terminal Part Information

Terminal Type ID	Terminated Lead	Diagnostic Test Probe	Terminal Removal Tool	Service Terminal	Tray	Core Crimp	Insulation Crimp
I	13575870	J-35616-64B (L-BU)	J-38125-12A	SNAC3-A021T-M064	20	J	J

S78 Turn Signal/Multi-Function Switch

Pin	Size	Color	Circuit	Function	Terminal Type ID	Option
1: 1	**1:** 0.5	**1:** WH/L-GN	**1:** 663	**1:** Hazard Switch Left Turn Signal	**1:** I	**1:** -
2: 2	**2:** 0.5	**2:** WH	**2:** 524	**2:** Headlamp Dimmer Switch High Beam Signal	**2:** I	**2:** -
3: 3	**3:** 0.5	**3:** BK	**3:** 1650	**3:** Ground	**3:** I	**3:** -
4: 4	**4:** 0.5	**4:** YE/BN	**4:** 307	**4:** Headlamp Switch Flash To Pass Signal	**4:** I	**4:** -
5: 5	**5:** 0.35	**5:** GY/L-BU	**5:** 893	**5:** Driver Information Center Select Menu Switch Signal	**5:** I	**5:** -
6: 6	**6:** 0.35	**6:** BK/BN	**6:** 897	**6:** Driver Information Center Switch Low Reference	**6:** I	**6:** -
7: 7	**7:** 0.5	**7:** VT/D-BU	**7:** 664	**7:** Hazard Switch Right Turn Signal	**7:** I	**7:** -

8-11	-	-	-	Not Occupied	-	-
12: 12	**12:** 0.35	**12:** D-GN/WH	**12:** 1358	**12:** Driver Information Center Switch Signal	**12:** I	**12:** -

S79D WINDOW SWITCH - DRIVER (AEC)

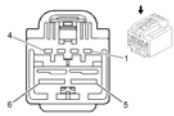

Connector Part Information

- Harness Type: Driver Door
- OEM Connector: 15491286
- Service Connector: 13580111
- Description: 8-Way F 2.8 Series (BK)

Terminal Part Information

Terminal Type ID	Terminated Lead	Diagnostic Test Probe	Terminal Removal Tool	Service Terminal	Tray	Core Crimp	Insulation Crimp
I	Service by Harness - See Part Catalog	Pending	Pending	Not Available	Not Available	Not Available	Not Available

S79D Window Switch - Driver (AEC)

Pin	Size	Color	Circuit	Function	Terminal Type ID	Option
1: 1	**1:** 2.5	**1:** BK	**1:** 2050	**1:** Ground	**1:** I	**1:** -
2: 2	**2:** 0.5	**2:** D-GN/GY	**2:** 3382	**2:** Power Window Motor Driver Up Control	**2:** I	**2:** -
3: 3	**3:** 0.5	**3:** YE/VT	**3:** 3383	**3:** Power Window Motor Driver Down Control	**3:** I	**3:** -
4: 4	**4:** 2.5	**4:** RD/D-GN	**4:** 1540	**4:** Battery Positive Voltage	**4:** I	**4:** -
5: 5	**5:** 0.5	**5:** D-GN/YE	**5:** 6134	**5:** Linear Interconnect Network Bus 3	**5:** I	**5:** -
6: 6	**6:** 0.5	**6:** GY	**6:** 745	**6:** Left Front Door Ajar Switch Signal	**6:** I	**6:** -
7: 7	**7:** 0.5	**7:** WH/VT	**7:** 3270	**7:** Driver Door Lock Motor Status Control	**7:** I	**7:** -
8	-	-	-	Not Occupied	-	-

S79D WINDOW SWITCH - DRIVER (AXG)

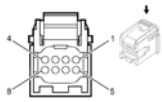

Connector Part Information

- Harness Type: Driver Door
- OEM Connector: 15406142
- Service Connector: 13337949
- Description: 8-Way F Micro 64 Series (GY)

Terminal Part Information

Terminal Type ID	Terminated Lead	Diagnostic Test Probe	Terminal Removal Tool	Service Terminal	Tray	Core Crimp	Insulation Crimp
I	13579976	J-35616-64B (L-BU)	J-38125-21	15359541	4	M	M

S79D Window Switch - Driver (AXG)

Pin	Size	Color	Circuit	Function	Terminal Type ID	Option
1: 1	**1:** 0.5	**1:** BK	**1:** 1550	**1:** Ground	**1:** I	**1:** -
2: 2	**2:** 0.5	**2:** D-GN	**2:** 3381	**2:** Power Window Switch Driver Express Signal	**2:** I	**2:** -
3: 3	**3:** 0.5	**3:** GY	**3:** 3380	**3:** Power Window Switch Driver Down Signal	**3:** I	**3:** -
4: 4	**4:** 0.5	**4:** RD/D-GN	**4:** 1540	**4:** Battery Positive Voltage	**4:** I	**4:** -
5: 5	**5:** 0.5	**5:** D-GN/YE	**5:** 6134	**5:** Linear Interconnect Network Bus 3	**5:** I	**5:** -
6: 6	**6:** 0.5	**6:** D-GN/WH	**6:** 3379	**6:** Power Window Switch Driver Up Signal	**6:** I	**6:** -
7: 7	**7:** 0.5	**7:** WH/VT	**7:** 3270	**7:** Driver Door Lock Motor Status Control	**7:** I	**7:** -
8	-	-	-	Not Occupied	-	-

S79LR WINDOW SWITCH - LEFT REAR

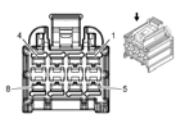

Connector Part Information

- Harness Type: Left Rear Door

- OEM Connector: 13544529
- Service Connector: 13503877
- Description: 8-Way F GT FBT 280 Series (BK)

Terminal Part Information

Terminal Type ID	Terminated Lead	Diagnostic Test Probe	Terminal Removal Tool	Service Terminal	Tray	Core Crimp	Insulation Crimp
I	Service by Connector Assembly	J-35616-35 (VT)	Not Available	Not Available	Not Available	Not Available	Not Available

S79LR Window Switch - Left Rear

Pin	Size	Color	Circuit	Function	Terminal Type ID	Option
1: 1	**1:** 0.5	**1:** D-GN/GY	**1:** 6135	**1:** Linear Interconnect Network Bus 4	**1:** I	**1:** -
2: 2	**2:** 0.5	**2:** GY	**2:** 747	**2:** Left Rear Door Ajar Switch Signal	**2:** I	**2:** -
3: 3	**3:** 0.5	**3:** BK	**3:** 2350	**3:** Ground	**3:** I	**3:** -
4	-	-	-	Not Occupied	-	-
5: 5	**5:** 2.5	**5:** BK	**5:** 2350	**5:** Ground	**5:** I	**5:** -
6: 6	**6:** 2.5	**6:** D-BU/GY	**6:** 668	**6:** Power Window Motor Left Rear Up Control	**6:** I	**6:** -
7: 7	**7:** 2.5	**7:** D-GN/BK	**7:** 669	**7:** Power Window Motor Left Rear Down Control	**7:** I	**7:** -
8: 8	**8:** 2.5	**8:** RD/BN	**8:** 2940	**8:** Battery Positive Voltage	**8:** I	**8:** -

S79P WINDOW SWITCH - PASSENGER

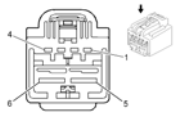

Connector Part Information

- Harness Type: Left Rear Door
- OEM Connector: 13544529
- Service Connector: 13503877
- Description: 8-Way F GT FBT 280 Series (BK)

Terminal Part Information

Terminal	Terminated	Diagnostic	Terminal	Service		Core	Insulation

Type ID	Lead	Test Probe	Removal Tool	Terminal	Tray	Crimp	Crimp
I	Service by Connector Assembly	J-35616-35 (VT)	Not Available	Not Available	Not Available	Not Available	Not Available

S79P Window Switch - Passenger

Pin	Size	Color	Circuit	Function	Terminal Type ID	Option
1: 1	**1:** 2.5	**1:** BK	**1:** 2050	**1:** Ground	**1:** I	**1:** -
2: 2	**2:** 2.5	**2:** D-GN/GY	**2:** 3387	**2:** Power Window Motor Co-Driver Up Control	**2:** I	**2:** -
3: 3	**3:** 2.5	**3:** YE/D-BU	**3:** 3388	**3:** Power Window Motor Co-Driver Down Control	**3:** I	**3:** -
4: 4	**4:** 2.5	**4:** RD/D-GN	**4:** 1540	**4:** Battery Positive Voltage	**4:** I	**4:** -
5: 5	**5:** 0.5	**5:** D-GN/YE	**5:** 6134	**5:** Linear Interconnect Network Bus 3	**5:** I	**5:** -
6: 6	**6:** 0.5	**6:** GY	**6:** 746	**6:** Right Front Door Ajar Switch Signal	**6:** I	**6:** -
7-8	-	-	-	Not Occupied	-	-

S79RR WINDOW SWITCH - RIGHT REAR

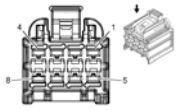

Connector Part Information

- Harness Type: Right Rear Door
- OEM Connector: 13544529
- Service Connector: 13503877
- Description: 8-Way F GT FBT 280 Series (BK)

Terminal Part Information

Terminal Type ID	Terminated Lead	Diagnostic Test Probe	Terminal Removal Tool	Service Terminal	Tray	Core Crimp	Insulation Crimp
I	Service by Connector Assembly	J-35616-35 (VT)	15315247	Not Available	Not Available	Not Available	Not Available

S79RR Window Switch - Right Rear

Pin	Size	Color	Circuit	Function	Terminal Type	Option

					ID	
1: 1	**1:** 0.5	**1:** D-GN/GY	**1:** 6135	**1:** Linear Interconnect Network Bus 4	**1:** I	**1:** -
2: 2	**2:** 0.5	**2:** GY	**2:** 748	**2:** Right Rear Door Ajar Switch Signal	**2:** I	**2:** -
3-4	-	-	-	Not Occupied	-	-
5: 5	**5:** 2.5	**5:** BK	**5:** 2350	**5:** Ground	**5:** I	**5:** -
6: 6	**6:** 2.5	**6:** D-BU/GY	**6:** 670	**6:** Power Window Motor Right Rear Up Control	**6:** I	**6:** -
7: 7	**7:** 2.5	**7:** D-GN/BKk	**7:** 671	**7:** Power Window Motor Right Rear Down Control	**7:** I	**7:** -
8: 8	**8:** 2.5	**8:** RD/BN	**8:** 2940	**8:** Battery Positive Voltage	**8:** I	**8:** -

S82 WINDSHIELD WIPER/WASHER SWITCH

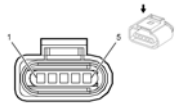

Connector Part Information

- Harness Type: Instrument Panel
- OEM Connector: 13609516
- Service Connector: 13576541
- Description: 8-Way F 1.2 HCM Series (BK)

Terminal Part Information

Terminal Type ID	Terminated Lead	Diagnostic Test Probe	Terminal Removal Tool	Service Terminal	Tray	Core Crimp	Insulation Crimp
I	13575868	J-35616-64B (L-BU)	J-38125-12A	SHCM-A03T-P025	20	J	J

S82 Windshield Wiper/Washer Switch

Pin	Size	Color	Circuit	Function	Terminal Type ID	Option
1: 1	**1:** 0.5	**1:** GY	**1:** 1715	**1:** Windshield Wiper Switch High Signal	**1:** I	**1:** -
2: 2	**2:** 0.5	**2:** BK/GY	**2:** 6009	**2:** Windshield Wiper Switch Low Reference	**2:** I	**2:** -
3: 3	**3:** 0.5	**3:** YE/D-BU	**3:** 1714	**3:** Windshield Wiper Switch Low Signal	**3:** I	**3:** -
4	-	-	-	Not Occupied	-	-
				5: Windshield Washer		

5: 5	**5:** 0.5	**5:** WH/BK	**5:** 94	Switch Signal	**5:** I	**5:** -
6-8	-	-	-	Not Occupied	-	-

S88 SUNROOF TILT SWITCH (CF5)

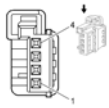

Connector Part Information

- Harness Type: Headliner
- OEM Connector: 13597457
- Service Connector: 13576536
- Description: 4-Way F 0.64 Micro Quadlok Series (WH)

Terminal Part Information

Terminal Type ID	Terminated Lead	Diagnostic Test Probe	Terminal Removal Tool	Service Terminal	Tray	Core Crimp	Insulation Crimp
I	13575782	J-35616-64B (L-BU)	J-38125-12A	928999-5	15	J	J

S88 Sunroof Tilt Switch (CF5)

Pin	Size	Color	Circuit	Function	Terminal Type ID	Option
1: 1	**1:** 0.5	**1:** BK/BN	**1:** 128	**1:** Sunroof Switch Low Reference	**1:** I	**1:** -
2: 2	**2:** 0.5	**2:** YE	**2:** 6817	**2:** LED Backlight Dimming Control	**2:** I	**2:** -
3: 3	**3:** 0.5	**3:** BK	**3:** 50	**3:** Ground	**3:** I	**3:** -
4: 4	**4:** 0.5	**4:** WH/D-GN	**4:** 3031	**4:** Sunroof Vent Switch Signal	**4:** I	**4:** -

T3 AUDIO AMPLIFIER X1 (UQA)

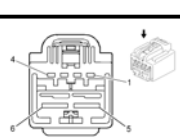

Connector Part Information

- Harness Type: Body
- OEM Connector: 15491286

- Service Connector: 13580111
- Description: 8-Way F 2.8 Series (BK)

Terminal Part Information

Terminal Type ID	Terminated Lead	Diagnostic Test Probe	Terminal Removal Tool	Service Terminal	Tray	Core Crimp	Insulation Crimp
I	13575578	J-35616-35 (VT)	J-38125-553	8100-4444	22	2	A
II	13575577	J-35616-35 (VT)	J-38125-553	8100-4445	22	F	D

T3 Audio Amplifier X1 (UQA)

Pin	Size	Color	Circuit	Function	Terminal Type ID	Option
1: 1	**1:** 1	**1:** L-GN/VT	**1:** 1795	**1:** Right Subwoofer Speaker (+)	**1:** I	**1:** -
2: 2	**2:** 1	**2:** D-GN/BK	**2:** 1794	**2:** Left/Rear Subwoofer Speaker (-)	**2:** I	**2:** -
3: 3	**3:** 1	**3:** D-BU/GY	**3:** 346	**3:** Left/Rear Subwoofer Speaker (+)	**3:** I	**3:** -
4: 4	**4:** 2.5	**4:** RD/WH	**4:** 1040	**4:** Battery Positive Voltage	**4:** II	**4:** -
5: 5	**5:** 1	**5:** GY/BK	**5:** 315	**5:** Right Subwoofer Speaker (-)	**5:** I	**5:** -
6-7	-	-	-	Not Occupied	-	-
8: 8	**8:** 2.5	**8:** BK	**8:** 450	**8:** Ground	**8:** II	**8:** -

T3 AUDIO AMPLIFIER X2 (UQA)

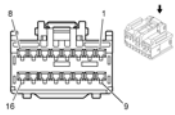

Connector Part Information

- Harness Type: Body
- OEM Connector: 15489823
- Service Connector: 15134091
- Description: 16-Way F 1.5 Series (BK)

Terminal Part Information

Terminal Type ID	Terminated Lead	Diagnostic Test Probe	Terminal Removal Tool	Service Terminal	Tray	Core Crimp	Insulation Crimp

I	13327201	J-35616-2A (GY)	J-38125-553	8240-0128	22	C	A

T3 Audio Amplifier X2 (UQA)

Pin	Size	Color	Circuit	Function	Terminal Type ID	Option
1: 1	**1:** 0.75	**1:** D-BU	**1:** 201	**1:** Left Front Speaker (+) (1)	**1:** I	**1:** -
2: 2	**2:** 0.75	**2:** BN/D-BU	**2:** 118	**2:** Left Front Speaker Signal (-) (1)	**2:** I	**2:** -
3: 3	**3:** 0.75	**3:** D-GN	**3:** 199	**3:** Left Rear Speaker (+)	**3:** I	**3:** -
4: 4	**4:** 0.75	**4:** D-GN/BK	**4:** 116	**4:** Left Rear Speaker Signal (-)	**4:** I	**4:** -
5-6	-	-	-	Not Occupied	-	-
7: 7	**7:** 0.75	**7:** YE/WH	**7:** 1860	**7:** Front Center Speaker (+)	**7:** I	**7:** -
8: 8	**8:** 0.75	**8:** D-BU/YE	**8:** 1960	**8:** Front Center Speaker (-)	**8:** I	**8:** -
9: 9	**9:** 0.75	**9:** D-BU/BK	**9:** 115	**9:** Right Rear Speaker Signal (-)	**9:** I	**9:** -
10: 10	**10:** 0.75	**10:** WH	**10:** 46	**10:** Right Rear Speaker (+)	**10:** I	**10:** -
11: 11	**11:** 0.75	**11:** YE	**11:** 200	**11:** Right Front Speaker (+) (1)	**11:** I	**11:** -
12: 12	**12:** 0.75	**12:** YE/BK	**12:** 117	**12:** Right Front Speaker Signal (-) (1)	**12:** I	**12:** -
13-16	-	-	-	Not Occupied	-	-

T3 AUDIO AMPLIFIER X3 (UQA)

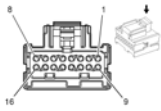

Connector Part Information

- Harness Type: Body
- OEM Connector: 15394150
- Service Connector: 13504130
- Description: 16-Way F Micro-Pack 064 Series (BK)

Terminal Part Information

Terminal Type ID	Terminated Lead	Diagnostic Test Probe	Terminal Removal Tool	Service Terminal	Tray	Core Crimp	Insulation Crimp
		J-35616-64B					

I	13575528	(L-BU)	J-38125-21	15359541	4	M	M

T3 Audio Amplifier X3 (UQA)

Pin	Size	Color	Circuit	Function	Terminal Type ID	Option
1: 1	**1:** 0.35	**1:** D-GN/BK	**1:** 599	**1:** Left Rear Low Level Audio Signal	**1:** I	**1:** -
2: 2	**2:** 0.35	**2:** BN/VT	**2:** 1999	**2:** Left Rear Low Level Audio (-)	**2:** I	**2:** -
3: 3	**3:** 0.35	**3:** D-BU/BK	**3:** 1946	**3:** Right Rear Low Level Audio (-)	**3:** I	**3:** -
4: 4	**4:** 0.35	**4:** BN/WH	**4:** 546	**4:** Right Rear Low Level Audio Signal	**4:** I	**4:** -
5-7	-	-	-	Not Occupied	-	-
8: 8	**8:** 0.35	**8:** D-GN/YE	**8:** 7066	**8:** Entertainment Remote Enable Signal	**8:** I	**8:** -
9: 9	**9:** 0.35	**9:** YE	**9:** 512	**9:** Right Front Low Level Audio Signal	**9:** I	**9:** -
10: 10	**10:** 0.35	**10:** D-BU/BN	**10:** 1546	**10:** Front Low Level Audio (-)	**10:** I	**10:** -
11: 11	**11:** 0.35	**11:** BN/D-BU	**11:** 1947	**11:** Left Front Low Level Audio (-)	**11:** I	**11:** -
12: 12	**12:** 0.35	**12:** D-BU	**12:** 511	**12:** Left Front Low Level Audio Signal	**12:** I	**12:** -
13-15	-	-	-	Not Occupied	-	-
16: 16	**16:** 0.5	**16:** VT/D-BU	**16:** 6978	**16:** Amplifier Control	**16:** I	**16:** -

T10E KEYLESS ENTRY ANTENNA - REAR COMPARTMENT (ATH)

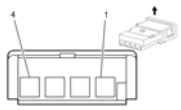

Connector Part Information

- Harness: Body
- OEM: 24414929
- Service: 24414929
- Description: 4-Way F 64 MQS Series (GY)

Terminal Part Information

Terminal Type ID	Terminated Lead	Diagnostic Test Probe	Terminal Removal Tool
	Service by Harness - See		

I	Part Catalog	J-35616-65B (L-BU)	J-38125-215A

T10E Keyless Entry Antenna - Rear Compartment (ATH)

Pin	Size	Color	Circuit	Function	Terminal Type ID	Option
1: 1	**1:** 0.5	**1:** WH/D-GN	**1:** 3556	**1:** Passive Start Interior Antenna 3 Signal Hi	**1:** I	**1:** -
2: 2	**2:** 0.5	**2:** D-GN	**2:** 3557	**2:** Passive Start Interior Antenna 3 Signal Lo	**2:** I	**2:** -
3-4	-	-	-	Not Occupied	-	-

T10G KEYLESS ENTRY ANTENNA - REAR FASCIA (ATH)

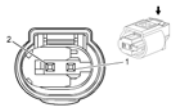

Connector Part Information

- Harness: Body
- OEM: 24461693
- Service Connector: 13316128
- Description: 2-Way F 0.64 MQS Series, Sealed (BK)

Terminal Part Information

Terminal Type ID	Terminated Lead	Diagnostic Test Probe	Terminal Removal Tool
I	13575569	J-35616-65B (L-BU)	J-38125-12A

T10G Keyless Entry Antenna - Rear Fascia (ATH)

Pin	Size	Color	Circuit	Function	Terminal Type ID	Option
1: 1	**1:** 0.5	**1:** BN/D-GN	**1:** 3568	**1:** Passive Entry Rear Closure Antenna Signal Hi	**1:** I	**1:** -
2: 2	**2:** 0.5	**2:** D-GN/GY	**2:** 3569	**2:** Passive Entry Rear Closure Antenna Signal Lo	**2:** I	**2:** -

T10J KEYLESS ENTRY ANTENNA - CENTER CONSOLE FRONT (ATH)

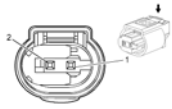

Connector Part Information

- Harness: Console
- OEM: 24461693
- Service Connector: 13316128
- Description: 2-Way F 0.64 MQS Series, Sealed (BK)

Terminal Part Information

Terminal Type ID	Terminated Lead	Diagnostic Test Probe	Terminal Removal Tool
I	Service by Harness- See Part Catalog	J-35616-14 (GN)	J-38125-560

T10J Keyless Entry Antenna - Center Console Front (ATH)

Pin	Size	Color	Circuit	Function	Terminal Type ID	Option
1: 1	**1:** 0.5	**1:** BN/BK	**1:** 3552	**1:** Passive Start Interior Antenna 1 Signal Hi	**1:** I	**1:** -
2: 2	**2:** 0.5	**2:** WH	**2:** 3553	**2:** Passive Start Interior Antenna 1 Signal Lo	**2:** I	**2:** -

T10K KEYLESS ENTRY ANTENNA - CENTER CONSOLE REAR (ATH)

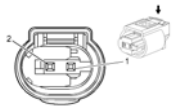

Connector Part Information

- Harness Type: Console
- OEM Connector: 1-967644-1
- Service Connector: 13576533
- Description: 2-Way F 0.64 MQS Series, Sealed (BK)

Terminal Part Information

Terminal Type ID	Terminated Lead	Diagnostic Test Probe	Terminal Removal Tool
I	13576395	J-35616-64B (L-BU)	J-38125-12A

T10K Keyless Entry Antenna - Center Console Rear (ATH)

Pin	Size	Color	Circuit	Function	Terminal Type ID	Option
1: 1	**1:** 0.5	**1:** D-BU	**1:** 3554	**1:** Passive Start Interior Antenna 2 Signal Hi	**1:** I	**1:** -
2: 2	**2:** 0.5	**2:** GY/BK	**2:** 3555	**2:** Passive Start Interior	**2:** I	**2:** -

				Antenna 2 Signal Lo		

T10M KEYLESS ENTRY ANTENNA - DRIVER DOOR HANDLE (ATH)

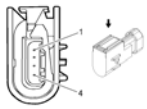

Connector Part Information

- Harness: Driver Door
- OEM: 19153433
- Service Connector: Service by Harness - See Part Catalog
- Description: 4-Way M 0.64 Series, Sealed (BK)

Terminal Part Information

Terminal Type ID	Terminated Lead	Diagnostic Test Probe	Terminal Removal Tool
I	Service by Harness- See Part Catalog	J-35616-14 (GN)	J-38125-560

T10M Keyless Entry Antenna - Driver Door Handle (ATH)

Pin	Size	Color	Circuit	Function	Terminal Type ID	Option
1: 1	**1:** 0.5	**1:** VT	**1:** 3560	**1:** Passive Entry Driver Door Antenna Signal Hi	**1:** I	**1:** -
2: 2	**2:** 0.5	**2:** VT/GY	**2:** 3561	**2:** Passive Entry Driver Door Antenna Signal Lo	**2:** I	**2:** -
3: 3	**3:** 0.5	**3:** GN/WH	**3:** 6655	**3:** Driver Door Unlatch Switch Signal	**3:** I	**3:** -
4: 4	**4:** 0.5	**4:** BK	**4:** 350	**4:** Ground	**4:** I	**4:** -

T10N KEYLESS ENTRY ANTENNA - PASSENGER DOOR HANDLE (ATH)

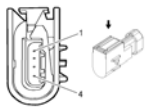

Connector Part Information

- Harness: Passenger Door
- OEM: 19153433
- Service Connector: Service by Harness - See Part Catalog
- Description: 4-Way M 0.64 Series, Sealed (BK)

Terminal Part Information

Terminal Type ID	Terminated Lead	Diagnostic Test Probe	Terminal Removal Tool
I	Service by Harness- See Part Catalog	J-35616-14 (GN)	J-38125-560

T10N Keyless Entry Antenna - Passenger Door Handle (ATH)

Pin	Size	Color	Circuit	Function	Terminal Type ID	Option
1: 1	**1:** 0.5	**1:** GN/YE	**1:** 3562	**1:** Passive Entry Co-Driver Door Antenna Signal Hi	**1:** I	**1:** -
2: 2	**2:** 0.5	**2:** D-GN/BK	**2:** 3563	**2:** Passive Entry Co-Driver Door Antenna Signal Lo	**2:** I	**2:** -
3: 3	**3:** 0.75	**3:** GY/BU	**3:** 3576	**3:** Co-Driver Door Exterior Switch Lock Signal	**3:** I	**3:** -
4: 4	**4:** 0.5	**4:** BK	**4:** 350	**4:** Ground	**4:** I	**4:** -

T11 MULTIMEDIA PLAYER INTERFACE MODULE (KTA)

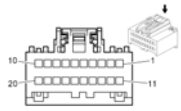

Connector Part Information

- Harness Type: Instrument Panel
- OEM Connector: 15489824
- Service Connector: 15126711
- Description: 20-Way F 64 Series (BK)

Terminal Part Information

Terminal Type ID	Terminated Lead	Diagnostic Test Probe	Terminal Removal Tool	Service Terminal	Tray	Core Crimp	Insulation Crimp
I	13579944	Pending	Pending	Not Available	Not Available	Not Available	Not Available

T11 Multimedia Player Interface Module (KTA)

Pin	Size	Color	Circuit	Function	Terminal Type ID	Option
1: 1	**1:** 0.5	**1:** RD/D-GN	**1:** 3140	**1:** Battery Positive Voltage	**1:** I	**1:** -
2: 2	**2:** 0.35	**2:** D-BU	**2:** 2060	**2:** Auxiliary Detection Signal	**2:** I	**2:** -

3: 3	**3:** 0.35	**3:** VT	**3:** 5843	**3:** Auxiliary Audio Common Signal	**3:** I	**3:** -
4: 4	**4:** 0.35	**4:** D-GN	**4:** 3376	**4:** Auxiliary Audio Common Signal (3)	**4:** I	**4:** -
5: 5	**5:** 0.35	**5:** BARE	**5:** 3375	**5:** Auxiliary Audio Drain Wire (3)	**5:** I	**5:** -
6-7	-	-	-	Not Occupied	-	-
8: 8	**8:** 0.5	**8:** D-GN	**8:** 5060	**8:** Low Speed GMLAN Serial Data	**8:** I	**8:** -
9-10	-	-	-	Not Occupied	-	-
11: 11	**11:** 0.5	**11:** BK	**11:** 1750	**11:** Ground	**11:** I	**11:** -
12: 12	**12:** 0.35	**12:** GY	**12:** 5839	**12:** Left Auxiliary Audio Signal (2)	**12:** I	**12:** -
13: 13	**13:** 0.35	**13:** D-GN	**13:** 5841	**13:** Right Auxiliary Audio Signal (2)	**13:** I	**13:** -
14: 14	**14:** 0.35	**14:** VT	**14:** 3377	**14:** Left Auxiliary Audio Signal (3)	**14:** I	**14:** -
15: 15	**15:** 0.35	**15:** BN	**15:** 3378	**15:** Right Auxiliary Audio Signal (3)	**15:** I	**15:** -
16-17	-	-	-	Not Occupied	-	-
18: 18	**18:** 0.35	**18:** BARE	**18:** 5842	**18:** Auxiliary Audio Screen (2)	**18:** I	**18:** -
19-20	-	-	-	Not Occupied	-	-

X80L ACCESSORY POWER RECEPTACLE - REAR CONSOLE

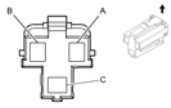

Connector Part Information

- Harness Type: Console
- OEM Connector: 12176836
- Service Connector: 19257374
- Description: 3-Way F Metri-Pack 280 Series (GY)

Terminal Part Information

Terminal Type ID	Terminated Lead	Diagnostic Test Probe	Terminal Removal Tool	Service Terminal	Tray	Core Crimp	Insulation Crimp
I	13575721	J-35616-4A (PU)	J-38125-553	12110844	4	C	A

X80L Accessory Power Receptacle - Rear Console

Pin	Size	Color	Circuit	Function	Terminal Type ID	Option
A: A	**A:** 1.0	**A:** VT	**A:** 801	**A:** Retained Accessory Power Fuse Supply Voltage	**A:** I	**A:** -
B	-	-	-	Not Occupied	-	-
C: C	**C:** 1.0	**C:** BK	**C:** 2150	**C:** Ground	**C:** I	**C:** -

X83 AUXILIARY AUDIO INPUT

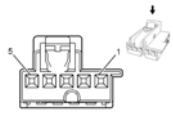

Connector Part Information

- Harness Type: Console
- OEM Connector: 13668446
- Service Connector: 13585147
- Description: 5-Way F 64 MQS Series (BK)

Terminal Part Information

Terminal Type ID	Terminated Lead	Diagnostic Test Probe	Terminal Removal Tool	Service Terminal	Tray	Core Crimp	Insulation Crimp
I	13575782	J-35616-64B (L-BU)	J-38125-12A	928999-5	15	H	H

X83 Auxiliary Audio Input

Pin	Size	Color	Circuit	Function	Terminal Type ID	Option
1: 1	**1:** 0.35	**1:** D-BU	**1:** 2060	**1:** Auxiliary Detection Signal	**1:** I	**1:** -
2: 2	**2:** 0.35	**2:** GY	**2:** 5839	**2:** Left Auxiliary Audio Signal (2)	**2:** I	**2:** -
3: 3	**3:** 0.35	**3:** BARE	**3:** 5842	**3:** Auxiliary Audio Screen (2)	**3:** I	**3:** -
4: 4	**4:** 0.35	**4:** L-GN	**4:** 5841	**4:** Right Auxiliary Audio Signal (2)	**4:** I	**4:** -
5: 5	**5:** 0.35	**5:** VT	**5:** 5843	**5:** Auxiliary Audio Common Signal	**5:** I	**5:** -

X84 DATA LINK CONNECTOR

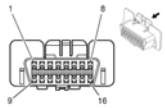

Connector Part Information

- Harness Type: Instrument Panel
- OEM Connector: 15317575
- Service Connector: 15317575
- Description: 16-Way F Metri-Pack/150 Series (BK)

Terminal Part Information

Terminal Type ID	Terminated Lead	Diagnostic Test Probe	Terminal Removal Tool	Service Terminal	Tray	Core Crimp	Insulation Crimp
I	13575725	J-35616-14 (GN)	J-38125-12A	12129484	19	E	C

X84 Data Link Connector

Pin	Size	Color	Circuit	Function	Terminal Type ID	Option
1: 1	**1:** 0.5	**1:** L-GN	**1:** 5060	**1:** Low Speed GMLAN Serial Data	**1:** I	**1:** -
2-3	-	-	-	Not Occupied	-	-
4: 4	**4:** 0.5	**4:** BK	**4:** 2150	**4:** Ground	**4:** I	**4:** -
5: 5	**5:** 0.5	**5:** BK	**5:** 2150	**5:** Ground	**5:** I	**5:** -
6: 6	**6:** 0.5	**6:** D-BU	**6:** 2500	**6:** High Speed GMLAN Serial Data (+) (1)	**6:** I	**6:** -
7: 7	**7:** 0.5	**7:** BN/WH	**7:** 5043	**7:** Keyword 2000 Serial Data	**7:** I	**7:** -
8-11	-	-	-	Not Occupied	-	-
12: 12	**12:** 0.5	**12:** D-BU/YE	**12:** 6105	**12:** High Speed GMLAN Serial Data (+) (2)	**12:** I	**12:** -
13: 13	**13:** 0.5	**13:** WH	**13:** 6106	**13:** High Speed GMLAN Serial Data (-) (2)	**13:** I	**13:** -
14: 14	**14:** 0.5	**14:** WH	**14:** 2501	**14:** High Speed GMLAN Serial Data (-) (1)	**14:** I	**14:** -
15	-	-	-	Not Occupied	-	-
16: 16	**16:** 0.5 **16:** 0.5	**16:** RD/D-BU **16:** RD/D-BU	**16:** 540 **16:** 540	**16:** Battery Positive Voltage **16:** Battery Positive Voltage	**16:** I	**16:** -

X85 STEERING WHEEL AIR BAG COIL X1

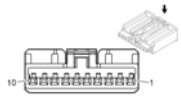

Connector Part Information

- Harness Type: Instrument Panel
- OEM Connector: 13574592
- Service Connector: 13576634
- Description: 10-Way F AIT II Series (BK)

Terminal Part Information

Terminal Type ID	Terminated Lead	Diagnostic Test Probe	Terminal Removal Tool	Service Terminal	Tray	Core Crimp	Insulation Crimp
I	13575867	J-35616-64B (L-BU)	J-38125-215A	SAIT-A03T-M064	14	P	P

X85 Steering Wheel Air Bag Coil X1

Pin	Size	Color	Circuit	Function	Terminal Type ID	Option
1: 1	**1:** 0.5	**1:** L-GN/WH	**1:** 3287	**1:** Horn Switch Signal	**1:** I	**1:** -
2: 2	**2:** 0.5	**2:** BK	**2:** 50	**2:** Ground	**2:** I	**2:** -
3: 3	**3:** 0.5	**3:** GY/D-GN	**3:** 5737	**3:** Adaptive Cruise Control Gap Up/Down Switch Signal	**3:** I	**3:** -
4: 4	**4:** 0.5	**4:** L-GN/WH	**4:** 6819	**4:** Steering Wheel Resistor Ladder Signal 2	**4:** I	**4:** -
5: 5	**5:** 0.5	**5:** WH/RD	**5:** 1444	**5:** 12 Volt Reference	**5:** I	**5:** -
6: 6	**6:** 0.5	**6:** YE	**6:** 6817	**6:** LED Backlight Dimming Control	**6:** I	**6:** -
7-10	-	-	-	Not Occupied	-	-

X85 STEERING WHEEL AIR BAG COIL X2

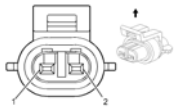

Connector Part Information

- Harness Type: Instrument Panel
- OEM Connector: 15393421
- Service Connector: 13580115

- Description: 4-Way F Micro-Pack 064 Series (YE)

Terminal Part Information

Terminal Type ID	Terminated Lead	Diagnostic Test Probe	Terminal Removal Tool	Service Terminal	Tray	Core Crimp	Insulation Crimp
I	Service by Connector Assembly - 13580115	J-35616-64B (L-BU)	Not Available	Not Available	Not Available	Not Available	Not Available

X85 Steering Wheel Air Bag Coil X2

Pin	Size	Color	Circuit	Function	Terminal Type ID	Option
1: 1	**1:** 0.5	**1:** OG/VT	**1:** 3021	**1:** Steering Wheel Module Stage 1 High Control	**1:** I	**1:** -
2: 2	**2:** 0.5	**2:** BN/OG	**2:** 3020	**2:** Steering Wheel Module Stage 1 Low Control	**2:** I	**2:** -
3: 3	**3:** 0.5	**3:** OG/D-GN	**3:** 3023	**3:** Steering Wheel Module Stage 2 High Control	**3:** I	**3:** Early Production
4: 4	**4:** 0.5	**4:** WH/D-GN	**4:** 3022	**4:** Steering Wheel Module Stage 2 Low Control	**4:** I	**4:** Early Production

X85 STEERING WHEEL AIR BAG COIL X3

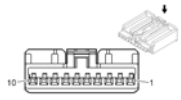

Connector Part Information

- Harness Type: Steering Wheel
- OEM Connector: 13574592
- Service Connector: 13576634
- Description: 10-Way F AIT II Series (BK)

Terminal Part Information

Terminal Type ID	Terminated Lead	Diagnostic Test Probe	Terminal Removal Tool	Service Terminal	Tray	Core Crimp	Insulation Crimp
I	13575867	J-35616-64B (L-BU)	J-38125-215A	SAIT-A03T-M064	14	P	P

X85 Steering Wheel Air Bag Coil X3

Pin	Size	Color	Circuit	Function	Terminal Type ID	Option
1-4	-	-	-	Not Occupied	-	-
5: 5	**5:** 0.5	**5:** YE	**5:** 6817	**5:** LED Backlight Dimming Control	**5:** I	**5:** -
6: 6	**6:** 0.5	**6:** WH/RD	**6:** 1444	**6:** 12 Volt Reference	**6:** I	**6:** -
7: 7	**7:** 0.5	**7:** D-GN/WH	**7:** 6819	**7:** Steering Wheel Resistor Ladder Signal 2	**7:** I	**7:** -
8: 8	**8:** 0.5	**8:** BN/D-GN	**8:** 1884	**8:** Cruise Control Set/Coast/Resume/Accelerate Switch Signal	**8:** I	**8:** -
9: 9	**9:** 0.5	**9:** BK	**9:** 50	**9:** Ground	**9:** I	**9:** -
10: 10	**10:** 0.5	**10:** BN/WH	**10:** 3287	**10:** Horn Switch Signal	**10:** I	**10:** -

2013 ELECTRICAL

Wiring Systems and Power Management - Component Locator - Component Connector End Views - Cruze

COMPONENT CONNECTOR END VIEWS

P17 INFO DISPLAY MODULE X1 (UHQ)

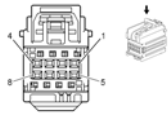

Connector Part Information

- Harness Type: Instrument Panel
- OEM Connector: 7283-9028-30
- Service Connector: 13576542
- Description: 8-Way F YESC Kaizen Series (BK)

Terminal Part Information

Terminal Type ID	Terminated Lead	Diagnostic Test Probe	Terminal Removal Tool	Service Terminal	Tray	Core Crimp	Insulation Crimp
I	13579944	Pending	Pending	Not Available	Not Available	Not Available	Not Available
II	Pending	Pending	Pending	Not Available	Not Available	Not Available	Not Available

P17 Info Display Module X1 (UHQ)

Pin	Size	Color	Circuit	Function	Terminal Type ID	Option
1: 1	**1:** 0.5	**1:** RD/GN	**1:** 3140	**1:** Battery Positive Voltage	**1:** -	**1:** -
2: 2	**2:** 0.5	**2:** BK	**2:** 1750	**2:** Ground	**2:** -	**2:** -
3	-	-	-	Not Occupied	-	-
4: 4	**4:** 0.35	**4:** GY	**4:** 3369	**4:** Touch Screen Display Signal (+)	**4:** II	**4:** -
5: 5	**5:** 0.5	**5:** BN/GN	**5:** 3364	**5:** Navigation Display Reset Signal	**5:** II	**5:** -
6: 6	**6:** 0.5	**6:** GN/YE	**6:** 7066	**6:** Entertainment Remote Enable Signal	**6:** II	**6:** -
7: 7	**7:** 0.35	**7:** BARE	**7:** 3368	**7:** Touch Screen Display Drain Wire	**7:** II	**7:** -
8: 8	**8:** 0.5	**8:** VT	**8:** 3370	**8:** Touch Screen Display	**8:** II	**8:** -

				Signal (-)		

P17 INFO DISPLAY MODULE X2 (UHQ)

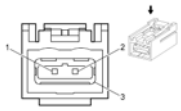

Connector Part Information

- Harness Type: Instrument Panel TWINAX
- OEM Connector: 13649293
- Service Connector: Service by Cable Assembly - See Parts Catalog
- Description: 3-Way F Sealed (L-BU)

Terminal Part Information

Terminal Type ID	Terminated Lead	Diagnostic Test Probe	Terminal Removal Tool
I	Service by Cable Assembly - See Parts Catalog	No Tool Required	No Tool Required

P17 Info Display Module X2 (UHQ)

Pin	Size	Color	Circuit	Function	Terminal Type ID	Option
1: 1	**1:** 0.35	**1:** BN	**1:** 3367	**1:** Navigation Display Signal (-)	**1:** I	**1:** -
2: 2	**2:** 0.35	**2:** BU	**2:** 3366	**2:** Navigation Display Signal (+)	**2:** I	**2:** -
3: 3	**3:** 0.35	**3:** BARE	**3:** 3365	**3:** Navigation Display Drain Wire	**3:** I	**3:** -

P19AA SPEAKER - RIGHT SUBWOOFER

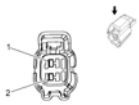

Connector Part Information

- Harness Type: Body
- OEM Connector: 13699622
- Service Connector: 13355768
- Description: 2-Way F 150 Series (BK)

Terminal Part Information

Terminal Type ID	Terminated Lead	Diagnostic Test Probe	Terminal Removal Tool	Service Terminal	Tray	Core Crimp	Insulation Crimp
I	13575480	J-35616-2A (GY)	J-38125-29	13526678	PO	2	A

P19AA Speaker - Right Subwoofer

Pin	Size	Color	Circuit	Function	Terminal Type ID	Option
1: 1	**1:** 1	**1:** GY/BK	**1:** 315	**1:** Right Subwoofer Speaker (-)	**1:** I	**1:** UQA
2: 2	**2:** 1	**2:** D-GN/VT	**2:** 1795	**2:** Right Subwoofer Speaker (+)	**2:** I	**2:** UQA

P19AG SPEAKER - LEFT FRONT DOOR

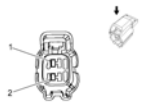

Connector Part Information

- Harness Type: Driver Door
- OEM Connector: 13699622
- Service Connector: 13355768
- Description: 2-Way F 150 Series (BK)

Terminal Part Information

Terminal Type ID	Terminated Lead	Diagnostic Test Probe	Terminal Removal Tool	Service Terminal	Tray	Core Crimp	Insulation Crimp
I	13575480	J-35616-2A (GY)	J-38125-29	13526678	PO	2	A

P19AG Speaker - Left Front Door

Pin	Size	Color	Circuit	Function	Terminal Type ID	Option
1: 1	**1:** 0.75	**1:** BN/D-BU	**1:** 118	**1:** Left Front Speaker Signal (-) (1)	**1:** I	**1:** -
2: 2	**2:** 0.75	**2:** D-BU	**2:** 201	**2:** Left Front Speaker (+) (1)	**2:** I	**2:** -

P19AH SPEAKER - RIGHT FRONT DOOR

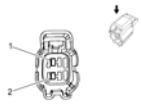

Connector Part Information

- Harness Type: Passenger Door
- OEM Connector: 13699622
- Service Connector: 13555768
- Description: 2-Way F 150 Series (BK)

Terminal Part Information

Terminal Type ID	Terminated Lead	Diagnostic Test Probe	Terminal Removal Tool	Service Terminal	Tray	Core Crimp	Insulation Crimp
I	13575480	J-35616-2A (GY)	J-38125-29	13526678	PO	2	A

P19AH Speaker - Right Front Door

Pin	Size	Color	Circuit	Function	Terminal Type ID	Option
1: 1	**1:** 0.75	**1:** YE/BK	**1:** 117	**1:** Right Front Speaker Signal (-) (1)	**1:** I	**1:** -
2: 2	**2:** 0.75	**2:** YE	**2:** 200	**2:** Right Front Speaker (+) (1)	**2:** I	**2:** -

P19AL SPEAKER - LEFT REAR DOOR

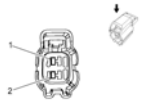

Connector Part Information

- Harness Type: Left Rear Door
- OEM Connector: 13699622
- Service Connector: 13355768
- Description: 2-Way F 150 Series (BK)

Terminal Part Information

Terminal Type ID	Terminated Lead	Diagnostic Test Probe	Terminal Removal Tool	Service Terminal	Tray	Core Crimp	Insulation Crimp
I	13575480	J-35616-2A	J-38125-29	13526678	PO	2	A

		(GY)					

P19AL Speaker - Left Rear Door

Pin	Size	Color	Circuit	Function	Terminal Type ID	Option
1: 1	**1:** 0.75	**1:** D-GN/BK	**1:** 116	**1:** Left Rear Speaker Signal (-)	**1:** I	**1:** -
2: 2	**2:** 0.75	**2:** D-GN	**2:** 199	**2:** Left Rear Speaker (+)	**2:** I	**2:** -

P19AM SPEAKER - RIGHT REAR DOOR

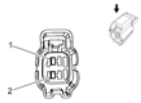

Connector Part Information

- Harness Type: Right Rear Door
- OEM Connector: 13699622
- Service Connector: 13555768
- Description: 2-Way F 150 Series (BK)

Terminal Part Information

Terminal Type ID	Terminated Lead	Diagnostic Test Probe	Terminal Removal Tool	Service Terminal	Tray	Core Crimp	Insulation Crimp
I	13575480	J-35616-2A (GY)	J-38125-29	13526678	PO	2	A

P19AM Speaker - Right Rear Door

Pin	Size	Color	Circuit	Function	Terminal Type ID	Option
1: 1	**1:** 0.75	**1:** D-BU/BK	**1:** 115	**1:** Right Rear Speaker Signal (-)	**1:** I	**1:** -
2: 2	**2:** 0.75	**2:** WH	**2:** 46	**2:** Right Rear Speaker (+)	**2:** I	**2:** -

P19B SPEAKER - CENTER INSTRUMENT PANEL (UQA)

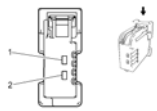

Connector Part Information

- Harness Type: Instrument Panel

- OEM Connector: 13682170
- Service Connector: 13505908
- Description: 2-Way F 1.5 Series (GN)

Terminal Part Information

Terminal Type ID	Terminated Lead	Diagnostic Test Probe	Terminal Removal Tool	Service Terminal	Tray	Core Crimp	Insulation Crimp
I	13327201	J-35616-2A (GY)	J-38125-553	8240-0128	22	C	A

P19B Speaker - Center Instrument Panel (UQA)

Pin	Size	Color	Circuit	Function	Terminal Type ID	Option
1: 1	**1:** 0.75	**1:** D-BU/YE	**1:** 1960	**1:** Front Center Speaker (-)	**1:** I	**1:** UQA
2: 2	**2:** 0.75	**2:** YE/WH	**2:** 1860	**2:** Front Center Speaker (+)	**2:** I	**2:** UQA

P19H SPEAKER - LEFT FRONT TWEETER

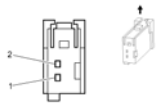

Connector Part Information

- Harness Type: Headliner
- OEM Connector: 19115645
- Service Connector: 13314093
- Description: 2-Way F 0.64 Series (BK)

Terminal Part Information

Terminal Type ID	Terminated Lead	Diagnostic Test Probe	Terminal Removal Tool	Service Terminal	Tray	Core Crimp	Insulation Crimp
I	13575867	J-35616-64B (L-BU)	J-38125-215A	Not Available	Not Available	Not Available	Not Available

P19H Speaker - Left Front Tweeter

Pin	Size	Color	Circuit	Function	Terminal Type ID	Option
1: 1	**1:** 0.75	**1:** BN/D-BU	**1:** 118	**1:** Left Front Speaker Signal (-)	**1:** I	**1:** -
2: 2	**2:** 0.75	**2:** D-BU	**2:** 201	**2:** Left Front Speaker (+)	**2:** I	**2:** -

P19N SPEAKER - LEFT SUBWOOFER

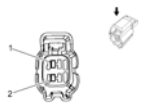

Connector Part Information

- Harness Type: Body
- OEM Connector: 13699622
- Service Connector: 13355768
- Description: 2-Way F 150 Series (BK)

Terminal Part Information

Terminal Type ID	Terminated Lead	Diagnostic Test Probe	Terminal Removal Tool	Service Terminal	Tray	Core Crimp	Insulation Crimp
I	13575480	J-35616-2A (GY)	J-38125-29	13526678	PO	2	A

P19N Speaker - Left Subwoofer

Pin	Size	Color	Circuit	Function	Terminal Type ID	Option
1: 1	**1:** 1	**1:** D-GN/BK	**1:** 1794	**1:** Left/Rear Subwoofer Speaker (-)	**1:** I	**1:** UQA
2: 2	**2:** 1	**2:** D-BU/GY	**2:** 346	**2:** Left/Rear Subwoofer Speaker (+)	**2:** I	**2:** UQA

P19V SPEAKER - RIGHT FRONT TWEETER

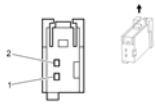

Connector Part Information

- Harness Type: Headliner
- OEM Connector: 19115645
- Service Connector: 13314093
- Description: 2-Way F 0.64 Series (BK)

Terminal Part Information

Terminal Type ID	Terminated Lead	Diagnostic Test Probe	Terminal Removal	Service Terminal	Tray	Core Crimp	Insulation Crimp

			Tool				
I	13575867	J-35616-64B (L-BU)	J-38125-215A	Not Available	Not Available	Not Available	Not Available

P19V Speaker - Right Front Tweeter

Pin	Size	Color	Circuit	Function	Terminal Type ID	Option
1: 1	**1:** 0.75	**1:** YE/BK	**1:** 117	**1:** Right Front Speaker Signal (-) (1)	**1:** I	**1:** -
2: 2	**2:** 0.75	**2:** YE	**2:** 200	**2:** Right Front Speaker (+) (1)	**2:** I	**2:** -

Q6E CAMSHAFT POSITION ACTUATOR SOLENOID VALVE - EXHAUST (LUV)

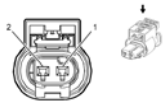

Connector Part Information

- Harness Type: Engine
- OEM Connector: 55564248
- Service Connector: 13577537
- Description: 2-Way F 1.2 MLK Series, Sealed (BK)

Terminal Part Information

Terminal Type ID	Terminated Lead	Diagnostic Test Probe	Terminal Removal Tool	Service Terminal	Tray	Core Crimp	Insulation Crimp
I	13576385	Pending	Pending	Not Available	Not Available	Not Available	Not Available

Q6E Camshaft Position Actuator Solenoid Valve - Exhaust (LUV)

Pin	Size	Color	Circuit	Function	Terminal Type ID	Option
1: 1	**1:** 0.5	**1:** BK/VT	**1:** 6754	**1:** Low Reference	**1:** I	**1:** -
2: 2	**2:** 0.5	**2:** GY/D-BU	**2:** 5282	**2:** Camshaft Phaser Exhaust Solenoid (1)	**2:** I	**2:** -

Q6E CAMSHAFT POSITION ACTUATOR SOLENOID VALVE - EXHAUST (LUW/LWE)

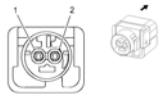

Connector Part Information

- Harness Type: Engine
- OEM Connector: 55566735
- Service Connector: 13581094
- Description: 2-Way F 1.5 Series, Sealed (BK)

Terminal Part Information

Terminal Type ID	Terminated Lead	Diagnostic Test Probe	Terminal Removal Tool	Service Terminal	Tray	Core Crimp	Insulation Crimp
I	13582274	J-35616-64B (L-BU)	J-38125-12A	928999-5	15	J	J

Q6E Camshaft Position Actuator Solenoid Valve - Exhaust (LUW/LWE)

Pin	Size	Color	Circuit	Function	Terminal Type ID	Option
1: 1	**1:** 0.5	**1:** BK/VT	**1:** 6754	**1:** Low Reference	**1:** I	**1:** -
2: 2	**2:** 0.5	**2:** GY/D-BU	**2:** 5282	**2:** Camshaft Phaser Exhaust Solenoid (1)	**2:** I	**2:** -

Q6F CAMSHAFT POSITION ACTUATOR SOLENOID VALVE - INTAKE (LUV)

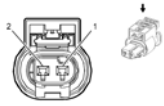

Connector Part Information

- Harness Type: Engine
- OEM Connector: 55564248
- Service Connector: 13577537
- Description: 2-Way F 1.2 MLK Series, Sealed (BK)

Terminal Part Information

Terminal Type ID	Terminated Lead	Diagnostic Test Probe	Terminal Removal Tool	Service Terminal	Tray	Core Crimp	Insulation Crimp
I	13576385	Pending	Pending	Not Available	Not Available	Not Available	Not Available

Q6F Camshaft Position Actuator Solenoid Valve - Intake (LUV)

Pin	Size	Color	Circuit	Function	Terminal Type ID	Option

1: 1	**1:** 0.5	**1:** BN/WH	**1:** 6753	**1:** Low Reference	**1:** I	**1:** -
2: 2	**2:** 0.5	**2:** VT/BN	**2:** 5284	**2:** Camshaft Phaser Intake Solenoid (1)	**2:** I	**2:** -

Q6F CAMSHAFT POSITION ACTUATOR SOLENOID VALVE - INTAKE (LUW/LWE)

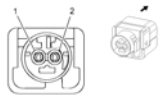

Connector Part Information

- Harness Type: Engine
- OEM Connector: 55566735
- Service Connector: 13581094
- Description: 2-Way F 1.5 Series, Sealed (BK)

Terminal Part Information

Terminal Type ID	Terminated Lead	Diagnostic Test Probe	Terminal Removal Tool	Service Terminal	Tray	Core Crimp	Insulation Crimp
I	13582274	J-35616-64B (L-BU)	J-38125-12A	928999-5	15	J	J

Q6F Camshaft Position Actuator Solenoid Valve - Intake (LUW/LWE)

Pin	Size	Color	Circuit	Function	Terminal Type ID	Option
1: 1	**1:** 0.5	**1:** BK/BN	**1:** 6753	**1:** Low Reference	**1:** I	**1:** -
2: 2	**2:** 0.5	**2:** VT/BN	**2:** 5284	**2:** Camshaft Phaser Intake Solenoid (1)	**2:** I	**2:** -

Q8 CONTROL SOLENOID VALVE ASSEMBLY X1 (MH8)

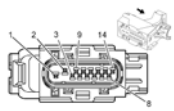

Connector Part Information

- Harness Type: Engine
- OEM Connector: 13522378
- Service Connector: 13503939
- Description: 14-Way F GT 150 280 Series, Sealed (L-GY)

Terminal Part Information

Terminal Type ID	Terminated Lead	Diagnostic Test Probe	Terminal Removal Tool	Service Terminal	Tray	Core Crimp	Insulation Crimp
I	13575392	J-35616-4A (PU)	J-38125-553	15304720	19	4	5
II	13575400	J-35616-2A (GY)	J-38125-553	15326267	19	E	4

Q8 Control Solenoid Valve Assembly X1 (MH8)

Pin	Size	Color	Circuit	Function	Terminal Type ID	Option
1: 1	**1:** 0.75 **1:** 0.75	**1:** RD/WH **1:** RD/WH	**1:** 340 **1:** 1840	**1:** Battery Positive Voltage **1:** Battery Positive Voltage	**1:** I	**1:** LUJ **1:** LUW
2: 2	**2:** 0.75	**2:** BK	**2:** 150	**2:** Ground	**2:** I	**2:** -
3: 3	**3:** 0.5 **3:** 0.5	**3:** L-GN **3:** WH/GY	**3:** 275 **3:** 1786	**3:** Transmission Park/Neutral Signal (1) **3:** Transmission Park/Neutral Signal (1)	**3:** II	**3:** LUJ **3:** LUW
4-5	-	-	-	Not Occupied	-	-
6: 6	**6:** 0.5	**6:** D-BU	**6:** 2500	**6:** High Speed GMLAN Serial Data (+) (1)	**6:** II	**6:** -
7: 7	**7:** 0.5	**7:** D-BU	**7:** 2500	**7:** High Speed GMLAN Serial Data (+) (1)	**7:** II	**7:** -
8: 8	**8:** 0.5	**8:** WH	**8:** 2501	**8:** High Speed GMLAN Serial Data (-) (1)	**8:** II	**8:** -
9	-	-	-	Not Occupied	-	-
10: 10	**10:** 0.5	**10:** WH/D-BU	**10:** 6311	**10:** Cruise/ETC/TCC Brake Signal	**10:** -	**10:** LUW
11	-	-	-	Not Occupied	-	-
12: 12	**12:** 0.5 **12:** 0.5	**12:** VT/D-BU **12:** VT/GY	**12:** 139 **12:** 139	**12:** Ignition Voltage **12:** Ignition Voltage	**12:** II	**12:** LUJ **12:** LUW
13: 13	**13:** 0.5 **13:** 0.5	**13:** BU **13:** VT/YE	**13:** 5985 **13:** 5985	**13:** Accessory Wakeup Serial Data **13:** Accessory Wakeup Serial Data	**13:** II	**13:** LUJ **13:** LUW
14: 14	**14:** 0.5	**14:** WH	**14:** 2501	**14:** High Speed GMLAN Serial Data (-) (1)	**14:** II	**14:** -

Q8 CONTROL SOLENOID VALVE ASSEMBLY X2 (MH8)

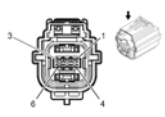

Connector Part Information

- Harness Type: Automatic Transmission
- OEM Connector: 13540209
- Service Connector: 13504952
- Description: 6-Way F Micro-Pack 150.2 Series Sealed (BU)

Terminal Part Information

Terminal Type ID	Terminated Lead	Diagnostic Test Probe	Terminal Removal Tool	Service Terminal	Tray	Core Crimp	Insulation Crimp
I	Service by Component Assembly	J-35616-14 (GN)	Not Available	Not Available	Not Available	Not Available	Not Available

Q8 Control Solenoid Valve Assembly X2 (MH8)

Pin	Size	Color	Circuit	Function	Terminal Type ID	Option
A: A	**A:** 0.5	**A:** BU	**A:** -	**A:** Park/Neutral Switch Signal	**A:** I	**A:** -
B: B	**B:** 0.5	**B:** GN	**B:** -	**B:** Transmission Range Switch Signal A	**B:** I	**B:** -
C: C	**C:** 0.5	**C:** GY	**C:** -	**C:** Transmission Range Switch Signal B	**C:** I	**C:** -
D: D	**D:** 0.5	**D:** YE	**D:** -	**D:** Transmission Range Switch Signal C	**D:** I	**D:** -
E: E	**E:** 0.5	**E:** RD	**E:** -	**E:** Transmission Range Switch Signal P	**E:** I	**E:** -
F: F	**F:** 0.5	**F:** BK	**F:** -	**F:** Low Reference	**F:** I	**F:** -

Q8 CONTROL SOLENOID VALVE ASSEMBLY X3 (MH8)

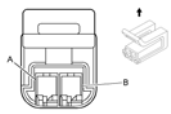

Connector Part Information

- Harness Type: Automatic Transmission
- OEM Connector: 13586529
- Service Connector: Service by Harness - See Part Catalog
- Description: 2-Way F Metri-Pack 150.2 Series (L-GY)

Terminal Part Information

Terminal Type ID	Terminated Lead	Diagnostic Test Probe	Terminal Removal Tool	Service Terminal	Tray	Core Crimp	Insulation Crimp
I	Service by Component Assembly	J-35616-14 (GN)	Not Available	Not Available	Not Available	Not Available	Not Available

Q8 Control Solenoid Valve Assembly X3 (MH8)

Pin	Size	Color	Circuit	Function	Terminal Type ID	Option
A: A	**A:** 0.5	**A:** WH	**A:** -	**A:** ISS High Signal	**A:** I	**A:** -
B: B	**B:** 0.5	**B:** BK	**B:** -	**B:** ISS Low Signal	**B:** I	**B:** -

Q8 CONTROL SOLENOID VALVE ASSEMBLY X4 (MH8)

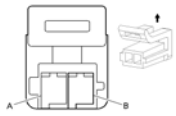

Connector Part Information

- Harness Type: Automatic Transmission
- OEM Connector: 13543034
- Service Connector: Service by Harness - See Part Catalog
- Description: 2-Way F Metri-Pack 150.2 Series (L-GY)

Terminal Part Information

Terminal Type ID	Terminated Lead	Diagnostic Test Probe	Terminal Removal Tool	Service Terminal	Tray	Core Crimp	Insulation Crimp
I	Service by Component Assembly	J-35616-14 (GN)	Not Available	Not Available	Not Available	Not Available	Not Available

Q8 Control Solenoid Valve Assembly X4 (MH8)

Pin	Size	Color	Circuit	Function	Terminal Type ID	Option
A: A	**A:** 0.5	**A:** WH	**A:** -	**A:** OSS High Signal	**A:** I	**A:** -
B: B	**B:** 0.5	**B:** BK	**B:** -	**B:** OSS Low Signal	**B:** I	**B:** -

Q12 EVAPORATIVE EMISSION PURGE SOLENOID VALVE (LUV)

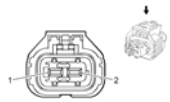

Connector Part Information

- Harness Type: Engine
- OEM Connector: 55565696
- Service Connector: 13355785
- Description: 2-Way F 2.8 Series, Sealed (BK)

Terminal Part Information

Terminal Type ID	Terminated Lead	Diagnostic Test Probe	Terminal Removal Tool	Service Terminal	Tray	Core Crimp	Insulation Crimp
I	Not Available	J-35616-35 (VT)	J-38125-561	1928498056	8	E	1

Q12 Evaporative Emission Purge Solenoid Valve (LUV)

Pin	Size	Color	Circuit	Function	Terminal Type ID	Option
1: 1	**1:** 0.5	**1:** GN/D-BU	**1:** 428	**1:** EVAP Canister Purge Solenoid Control	**1:** I	**1:** -
2: 2	**2:** RD/WH	**2:** RD/WH	**2:** 5293	**2:** Powertrain Main Relay Fused Supply (4)	**2:** I	**2:** -

Q12 EVAPORATIVE EMISSION PURGE SOLENOID VALVE (LUW/LWE)

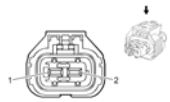

Connector Part Information

- Harness Type: Engine
- OEM Connector: 13125727
- Service Connector: 13355748
- Description: 2-Way F 2.8 Series, Sealed (BK)

Terminal Part Information

Terminal Type ID	Terminated Lead	Diagnostic Test Probe	Terminal Removal Tool	Service Terminal	Tray	Core Crimp	Insulation Crimp
I	Not	J-35616-35	J-38125-561	1928498056	8	E	1

	Available	(VT)					

Q12 Evaporative Emission Purge Solenoid Valve (LUW/LWE)

Pin	Size	Color	Circuit	Function	Terminal Type ID	Option
1: 1	**1:** 0.75	**1:** L-GN/D-BU	**1:** 428	**1:** EVAP Canister Purge Solenoid Control	**1:** I	**1:** -
2: 2	**2:** 0.75	**2:** VT/D-BU	**2:** 5293	**2:** Powertrain Main Relay Fused Supply (4)	**2:** I	**2:** -

Q13 EVAPORATIVE EMISSION VENT SOLENOID VALVE

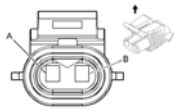

Connector Part Information

- Harness Type: Fuel Tank
- OEM Connector: 12052643
- Service Connector: 13585860
- Description: 2-Way F Metri-Pack 150 Series, Sealed (RD)

Terminal Part Information

Terminal Type ID	Terminated Lead	Diagnostic Test Probe	Terminal Removal Tool	Service Terminal	Tray	Core Crimp	Insulation Crimp
I	13575427	J-35616-14 (GN)	J-38125-12A	12048074	2	E	1

Q13 Evaporative Emission Vent Solenoid Valve

Pin	Size	Color	Circuit	Function	Terminal Type ID	Option
A: A	**A:** 0.75	**A:** RD/D-BU	**A:** 5372	**A:** Canister Valve Solenoid	**A:** I	**A:** -
B: B	**B:** 0.75	**B:** WH	**B:** 1310	**B:** EVAP Canister Vent Solenoid Control	**B:** I	**B:** -

Q17A FUEL INJECTOR 1 (LUV)

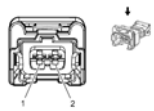

Connector Part Information

- Harness Type: Engine
- OEM Connector: 55565698
- Service Connector: 13577536
- Description: 2-Way F 2.8 DCS Series, Sealed (BK)

Terminal Part Information

Terminal Type ID	Terminated Lead	Diagnostic Test Probe	Terminal Removal Tool	Service Terminal	Tray	Core Crimp	Insulation Crimp
I	13327154	J-35616-35 (VT)	J-38125-36	4-964286-1	16	E	1

Q17A Fuel Injector 1 (LUV)

Pin	Size	Color	Circuit	Function	Terminal Type ID	Option
1: 1	**1:** 0.5	**1:** RD/BU	**1:** 5291	**1:** Powertrain Main Relay Fused Supply (2)	**1:** I	**1:** -
2: 2	**2:** 0.5	**2:** BN/VT	**2:** 1744	**2:** Fuel Injector Control (1)	**2:** I	**2:** -

Q17A FUEL INJECTOR 1 (LUW/LWE)

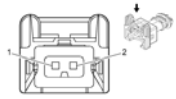

Connector Part Information

- Harness Type: Fuel Injector
- OEM Connector: 24466116
- Service Connector: 24466116
- Description: 2-Way F 2.8 Timer Series, Sealed (BK)

Terminal Part Information

Terminal Type ID	Terminated Lead	Diagnostic Test Probe	Terminal Removal Tool	Service Terminal	Tray	Core Crimp	Insulation Crimp
I	13581346	J-35616-35 (VT)	J-38125-36	4-964286-1	16	E	1

Q17A Fuel Injector 1 (LUW/LWE)

Pin	Size	Color	Circuit	Function	Terminal Type ID	Option
				1: Powertrain Main Relay		

1: 1	**1:** 0.5	**1:** PK/BK	**1:** 5291	Fused Supply (2)	**1:** I	**1:** -
2: 2	**2:** 0.5	**2:** BN	**2:** 1744	**2:** Fuel Injector Control (1)	**2:** I	**2:** -

Q17B FUEL INJECTOR 2 (LUV)

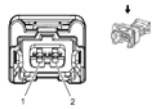

Connector Part Information

- Harness Type: Engine
- OEM Connector: 55565698
- Service Connector: 13577536
- Description: 2-Way F 2.8 DCS Series, Sealed (BK)

Terminal Part Information

Terminal Type ID	Terminated Lead	Diagnostic Test Probe	Terminal Removal Tool	Service Terminal	Tray	Core Crimp	Insulation Crimp
I	13327154	J-35616-35 (VT)	J-38125-36	4-964286-1	16	E	1

Q17B Fuel Injector 2 (LUV)

Pin	Size	Color	Circuit	Function	Terminal Type ID	Option
1: 1	**1:** 0.5	**1:** RD/BU	**1:** 5291	**1:** Powertrain Main Relay Fused Supply (2)	**1:** I	**1:** -
2: 2	**2:** 0.5	**2:** YE/WH	**2:** 1745	**2:** Fuel Injector Control (2)	**2:** I	**2:** -

Q17B FUEL INJECTOR 2 (LUW/LWE)

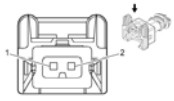

Connector Part Information

- Harness Type: Fuel Injector
- OEM Connector: 24466116
- Service Connector: 24466116
- Description: 2-Way F 2.8 Timer Series, Sealed (BK)

Terminal Part Information

Terminal Type ID	Terminated Lead	Diagnostic Test Probe	Terminal Removal Tool	Service Terminal	Tray	Core Crimp	Insulation Crimp
I	13581346	J-35616-35 (VT)	J-38125-36	4-964286-1	16	E	1

Q17B Fuel Injector 2 (LUW/LWE)

Pin	Size	Color	Circuit	Function	Terminal Type ID	Option
1: 1	**1:** 0.5	**1:** PK/WH	**1:** 5291	**1:** Powertrain Main Relay Fused Supply (2)	**1:** I	**1:** -
2: 2	**2:** 0.5	**2:** L-GN/BK	**2:** 1745	**2:** Fuel Injector Control (2)	**2:** I	**2:** -

Q17C FUEL INJECTOR 3 (LUV)

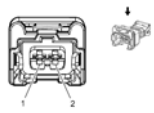

Connector Part Information

- Harness Type: Engine
- OEM Connector: 55565698
- Service Connector: 13577536
- Description: 2-Way F 2.8 DCS Series, Sealed (BK)

Terminal Part Information

Terminal Type ID	Terminated Lead	Diagnostic Test Probe	Terminal Removal Tool	Service Terminal	Tray	Core Crimp	Insulation Crimp
I	13327154	J-35616-35 (VT)	J-38125-36	4-964286-1	16	E	1

Q17C Fuel Injector 3 (LUV)

Pin	Size	Color	Circuit	Function	Terminal Type ID	Option
1: 1	**1:** 0.5	**1:** RD/BU	**1:** 5291	**1:** Powertrain Main Relay Fused Supply (2)	**1:** I	**1:** -
2: 2	**2:** 0.5	**2:** BN/YE	**2:** 1746	**2:** Fuel Injector Control (3)	**2:** I	**2:** -

Q17C FUEL INJECTOR 3 (LUW/LWE)

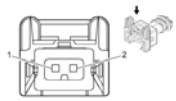

Connector Part Information

- Harness Type: Fuel Injector
- OEM Connector: 24466116
- Service Connector: 24466116
- Description: 2-Way F 2.8 Timer Series, Sealed (BK)

Terminal Part Information

Terminal Type ID	Terminated Lead	Diagnostic Test Probe	Terminal Removal Tool	Service Terminal	Tray	Core Crimp	Insulation Crimp
I	13581346	J-35616-35 (VT)	J-38125-36	4-964286-1	16	E	1

Q17C Fuel Injector 3 (LUW/LWE)

Pin	Size	Color	Circuit	Function	Terminal Type ID	Option
1: 1	**1:** 0.5	**1:** PK/BK	**1:** 5291	**1:** Powertrain Main Relay Fused Supply (2)	**1:** I	**1:** -
2: 2	**2:** 0.5	**2:** WH/BK	**2:** 1746	**2:** Fuel Injector Control (3)	**2:** I	**2:** -

Q17D FUEL INJECTOR 4 (LUV)

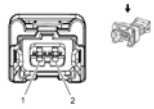

Connector Part Information

- Harness Type: Engine
- OEM Connector: 55565698
- Service Connector: 13577536
- Description: 2-Way F 2.8 DCS Series, Sealed (BK)

Terminal Part Information

Terminal Type ID	Terminated Lead	Diagnostic Test Probe	Terminal Removal Tool	Service Terminal	Tray	Core Crimp	Insulation Crimp
I	13327154	J-35616-35 (VT)	J-38125-36	4-964286-1	16	E	1

Q17D Fuel Injector 4 (LUV)

Pin	Size	Color	Circuit	Function	Terminal Type ID	Option
1: 1	**1:** 0.5	**1:** RD/BU	**1:** 5291	**1:** Powertrain Main Relay Fused Supply (2)	**1:** I	**1:** -
2: 2	**2:** 0.5	**2:** BN	**2:** 844	**2:** Fuel Injector Control (4)	**2:** I	**2:** -

Q17D FUEL INJECTOR 4 (LUW/LWE)

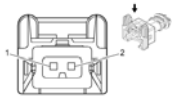

Connector Part Information

- Harness Type: Fuel Injector
- OEM Connector: 24466116
- Service Connector: 24466116
- Description: 2-Way F 2.8 Timer Series, Sealed (BK)

Terminal Part Information

Terminal Type ID	Terminated Lead	Diagnostic Test Probe	Terminal Removal Tool	Service Terminal	Tray	Core Crimp	Insulation Crimp
I	13581346	J-35616-35 (VT)	J-38125-36	4-964286-1	16	E	1

Q17D Fuel Injector 4 (LUW/LWE)

Pin	Size	Color	Circuit	Function	Terminal Type ID	Option
1: 1	**1:** 0.5	**1:** PK/BK	**1:** 5291	**1:** Powertrain Main Relay Fused Supply (2)	**1:** I	**1:** -
2: 2	**2:** 0.5	**2:** D-BU/BK	**2:** 844	**2:** Fuel Injector Control (4)	**2:** I	**2:** -

Q22 INTAKE MANIFOLD TUNING SOLENOID VALVE (LUW/LWE)

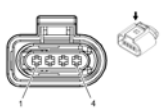

Connector Part Information

- Harness Type: Engine
- OEM Connector: 13167844

- Service Connector: 13581095
- Description: 4-Way F Sealed (BK)

Terminal Part Information

Terminal Type ID	Terminated Lead	Diagnostic Test Probe	Terminal Removal Tool	Service Terminal	Tray	Core Crimp	Insulation Crimp
I	13576394	J-35616-64B (L-BU)	J-38125-12A	962885-5	15	6	6

Q22 Intake Manifold Tuning Solenoid Valve (LUW/LWE)

Pin	Size	Color	Circuit	Function	Terminal Type ID	Option
1: 1	**1:** 0.5	**1:** VT/D-BU	**1:** 5293	**1:** Powertrain Main Relay Fused Supply (4)	**1:** I	**1:** -
2: 2	**2:** 0.5	**2:** BK	**2:** 150	**2:** Ground	**2:** I	**2:** -
3: 3	**3:** 0.5	**3:** D-BU	**3:** 7302	**3:** Intake Manifold Tuning Valve (IMTV) Control - Signal	**3:** I	**3:** -
4: 4	**4:** 0.5	**4:** GY/L-GN	**4:** 7303	**4:** Intake Manifold Tuning Valve (IMTV) Position - Signal	**4:** I	**4:** -

Q38 THROTTLE BODY

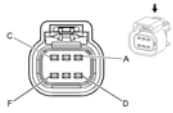

Connector Part Information

- Harness Type: Engine
- OEM Connector: 55565697
- Service Connector: 13355786
- Description: 6-Way Sealed (BK)

Terminal Part Information

Terminal Type ID	Terminated Lead	Diagnostic Test Probe	Terminal Removal Tool	Service Terminal	Tray	Core Crimp	Insulation Crimp
I	13575396	J-35616-2A (GY)	J-38125-553	15326427	5	E	A

Q38 Throttle Body

Pin	Size	Color	Circuit	Function	Terminal Type ID	Option
A: A	**A:** 0.5	**A:** BN/WH	**A:** 582	**A:** Throttle Actuator Control Close	**A:** I	**A:** -
B: B	**B:** 0.5	**B:** BN/RD	**B:** 581	**B:** Throttle Actuator Control Open	**B:** I	**B:** -
C: C	**C:** 0.5	**C:** BK/YE	**C:** 2752	**C:** Throttle Position Sensor Low Reference	**C:** I	**C:** -
D: D	**D:** 0.5	**D:** BN/GN	**D:** 485	**D:** Throttle Position Sensor Signal (1)	**D:** I	**D:** -
E: E	**E:** 0.5	**E:** BN/RD	**E:** 2701	**E:** 5 Volt Reference	**E:** I	**E:** -
F: F	**F:** 0.5	**F:** BN/BU	**F:** 486	**F:** Throttle Position Sensor Signal (2)	**F:** I	**F:** -

Q40 TURBOCHARGER BYPASS SOLENOID VALVE (LUV)

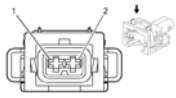

Connector Part Information

- Harness Type: Engine
- OEM Connector: 13123749
- Service Connector: 13355744
- Description: 2-Way F 2.8 Junior Power Timer Series, Sealed (BK)

Terminal Part Information

Terminal Type ID	Terminated Lead	Diagnostic Test Probe	Terminal Removal Tool	Service Terminal	Tray	Core Crimp	Insulation Crimp
I	13575438	J-35616-35 (VT)	J-38125-36	4-964286-1	16	E	1

Q40 Turbocharger Bypass Solenoid Valve (LUV)

Pin	Size	Color	Circuit	Function	Terminal Type ID	Option
1: 1	**1:** 0.5	**1:** BN/WH	**1:** 3060	**1:** Turbo Bypass Solenoid Control Bank (1)	**1:** I	**1:** -
2: 2	**2:** 0.5	**2:** RD/WH	**2:** 5293	**2:** Powertrain Main Relay Fused Supply (4)	**2:** I	**2:** -

Q42 TURBOCHARGER WASTEGATE SOLENOID VALVE (LUV)

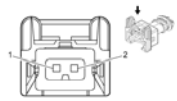

Connector Part Information

- Harness Type: Engine
- OEM Connector: 24466116
- Service Connector: 24466116
- Description: 2-Way F 2.8 Timer Series, Sealed (BK)

Terminal Part Information

Terminal Type ID	Terminated Lead	Diagnostic Test Probe	Terminal Removal Tool	Service Terminal	Tray	Core Crimp	Insulation Crimp
I	13575438	J-35616-35 (VT)	J-38125-36	4-964286-1	16	E	1

Q42 Turbocharger Wastegate Solenoid Valve (LUV)

Pin	Size	Color	Circuit	Function	Terminal Type ID	Option
1: 1	**1:** 0.75	**1:** BN/RD	**1:** 3058	**1:** Turbo Waste Gate Solenoid Control Bank (1)	**1:** I	**1:** -
2: 2	**2:** 0.75	**2:** RD/WH	**2:** 5293	**2:** Powertrain Main Relay Fused Supply (4)	**2:** I	**2:** -

Q46 A/C COMPRESSOR SOLENOID VALVE

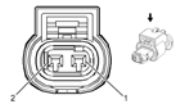

Connector Part Information

- Harness Type: Engine
- OEM Connector: 2-1823608-1
- Service Connector: 13585623
- Description: 2-Way F 1.2 MCP Series, Sealed (BK with NA Inner Connector)

Terminal Part Information

Terminal Type ID	Terminated Lead	Diagnostic Test Probe	Terminal Removal Tool	Service Terminal	Tray	Core Crimp	Insulation Crimp
I	Pending	Pending	Pending	Not	Not	Pending	Pending

				Available	Available		

Q46 A/C Compressor Solenoid Valve

Pin	Size	Color	Circuit	Function	Terminal Type ID	Option
1: 1	**1:** 0.50	**1:** BU/BN	**1:** 7573	**1:** Electric Variable Displacement Supply	**1:** I	**1:** -
2: 2	**2:** 0.50	**2:** BU/YE	**2:** 7574	**2:** Electric Variable Displacement Control	**2:** I	**2:** -

S2 TRANSMISSION MANUAL SHIFT SWITCH (MH8)

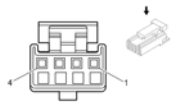

Connector Part Information

- Harness Type: Shift Lever
- OEM Connector: Not Available
- Service Connector: Service By Component - See Part Catalog
- Description: 4-Way F (WH)

Terminal Part Information

Terminal Type ID	Terminated Lead	Diagnostic Test Probe	Terminal Removal Tool	Service Terminal	Tray	Core Crimp	Insulation Crimp
I	Service By Component - See Part Catalog	Not Available	Not Available	Service By Component - See Part Catalog	Service By Component - See Part Catalog	Not Available	Not Available

S2 Transmission Manual Shift Switch (MH8)

Pin	Size	Color	Circuit	Function	Terminal Type ID	Option
1: 1	**1:** VT/WH	**1:** VT/WH	**1:** -	**1:** Battery Positive Voltage	**1:** I	**1:** -
2: 2	**2:** BK	**2:** BK	**2:** -	**2:** Park Lock Solenoid Control	**2:** I	**2:** -
3: 3	**3:** RD/WH	**3:** RD/WH	**3:** -	**3:** Park Lock Solenoid Soft Control	**3:** I	**3:** -
4: 4	**4:** BK	**4:** BK	**4:** -	**4:** Ground	**4:** I	**4:** -

S3 TRANSMISSION SHIFT LEVER (MH8)

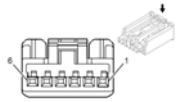

Connector Part Information

- Harness Type: Instrument Panel
- OEM Connector: 13595476
- Service Connector: 19167753
- Description: 6-Way F AIT II Series (BK)

Terminal Part Information

Terminal Type ID	Terminated Lead	Diagnostic Test Probe	Terminal Removal Tool	Service Terminal	Tray	Core Crimp	Insulation Crimp
I	Service by Connector Assembly	J-35616-64B (L-BU)	J-38125-215A	Pending	Pending	Pending	Pending

S3 Transmission Shift Lever (MH8)

Pin	Size	Color	Circuit	Function	Terminal Type ID	Option
1: 1	**1:** 0.5	**1:** RD/BN	**1:** 202	**1:** Battery Positive Voltage	**1:** I	**1:** -
2: 2	**2:** 0.5	**2:** BK	**2:** 2150	**2:** Ground	**2:** I	**2:** -
3: 3	**3:** 0.5	**3:** YE	**3:** 7554	**3:** Park Lock Solenoid Soft Control	**3:** I	**3:** -
4: 4	**4:** 0.5	**4:** VT/BK	**4:** 7553	**4:** Park Lock Solenoid Control	**4:** I	**4:** -
5	-	-	-	Not Occupied	-	-
6: 6	**6:** 0.5	**6:** WH/VT	**6:** 5905	**6:** Key Capture/Column Lock Shift Position Signal	**6:** I	**6:** -

S13D DOOR LOCK SWITCH - DRIVER

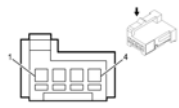

Connector Part Information

- Harness Type: Instrument Panel
- OEM Connector: 15439868
- Service Connector: 13579438
- Description: 4-Way F (BK)

Terminal Part Information

Terminal Type ID	Terminated Lead	Diagnostic Test Probe	Terminal Removal Tool	Service Terminal	Tray	Core Crimp	Insulation Crimp
I	13575782	J-35616-64B (L-BU)	J-38125-12A	928999-5	15	J	J

S13D Door Lock Switch - Driver

Pin	Size	Color	Circuit	Function	Terminal Type ID	Option
1: 1	**1:** 0.5	**1:** BK	**1:** 50	**1:** Ground	**1:** I	**1:** -
2: 2	**2:** 0.5	**2:** YE	**2:** 6817	**2:** LED Backlight Dimming Control	**2:** I	**2:** -
3: 3	**3:** 0.5	**3:** BN/WH	**3:** 781	**3:** Driver Door Lock Switch Unlock Signal	**3:** I	**3:** -
4: 4	**4:** 0.5	**4:** BN/YE	**4:** 780	**4:** Driver Door Lock Switch Lock Signal	**4:** I	**4:** -

S26 HAZARD LAMPS SWITCH

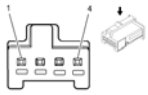

Connector Part Information

- Harness Type: Instrument Panel
- OEM Connector: 15439870
- Service Connector: 13579439
- Description: 4-Way F (BU)

Terminal Part Information

Terminal Type ID	Terminated Lead	Diagnostic Test Probe	Terminal Removal Tool	Service Terminal	Tray	Core Crimp	Insulation Crimp
I	13575782	J-35616-64B (L-BU)	J-38125-12A	928999-5	15	H	H

S26 Hazard Lamps Switch

Pin	Size	Color	Circuit	Function	Terminal Type ID	Option
1: 1	**1:** 0.35	**1:** D-GN/WH	**1:** 111	**1:** Hazard Switch Signal	**1:** I	**1:** -
2: 2	**2:** 0.35	**2:** L-BU/VT	**2:** 1717	**2:** Hazard Switch Turn Flasher Control	**2:** I	**2:** -

3: 3	**3:** 0.5	**3:** BK	**3:** 50	**3:** Ground	**3:** I	**3:** -
4	-	-	-	Not Occupied	-	-

S30 HEADLAMP SWITCH

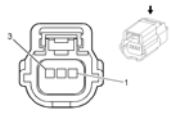

Connector Part Information

- Harness Type: Instrument Panel
- OEM Connector: 15483208
- Service Connector: 88988229
- Description: 12-Way F Micro HVT (BK)

Terminal Part Information

Terminal Type ID	Terminated Lead	Diagnostic Test Probe	Terminal Removal Tool	Service Terminal	Tray	Core Crimp	Insulation Crimp
I	13575550	J-35616-16 (L-GN)	J-38125-559	15445905	23	J	J

S30 Headlamp Switch

Pin	Size	Color	Circuit	Function	Terminal Type ID	Option
1: 1	**1:** 0.5	**1:** YE	**1:** 7556	**1:** Lighting Control Switch Reference	**1:** I	**1:** -
2	-	-	-	Not Occupied	-	-
3: 3	**3:** 0.35	**3:** D-GN/GY	**3:** 13	**3:** Headlamp Switch Park Lamp Signal	**3:** I	**3:** -
4: 4	**4:** 0.35	**4:** WH/VT	**4:** 103	**4:** Headlamp Switch On Signal	**4:** I	**4:** -
5: 5	**5:** 0.35	**5:** D-GN/BN	**5:** 306	**5:** Headlamp Switch Headlamps Off Signal Control	**5:** I	**5:** -
6: 6	**6:** 0.5	**6:** BK	**6:** 1650	**6:** Ground	**6:** I	**6:** -
7: 7	**7:** 0.5	**7:** YE	**7:** 6817	**7:** LED Backlight Dimming Control	**7:** I	**7:** -
8-11	-	-	-	Not Occupied	-	-
12: 12	**12:** 0.5	**12:** WH/BN	**12:** 7555	**12:** Lighting Control Switch Signal	**12:** I	**12:** -

A26 HVAC CONTROLS

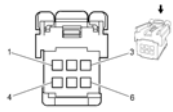

Connector Part Information

- Harness Type: Instrument Panel
- OEM Connector: 10864274
- Service Connector: 13337944
- Description: 6-Way F 0.64 Series (BK)

Terminal Part Information

Terminal Type ID	Terminated Lead	Diagnostic Test Probe	Terminal Removal Tool	Service Terminal	Tray	Core Crimp	Insulation Crimp
I	13579977	J-35616-64B (L-BU)	J-38125-553	1393366-1	16	K	K

A26 HVAC Controls

Pin	Size	Color	Circuit	Function	Terminal Type ID	Option
1: 1	**1:** 0.5	**1:** L-GN/YE	**1:** 7531	**1:** Linear Interconnect Network Bus 9	**1:** I	**1:** -
2: 2	**2:** 0.75	**2:** BK	**2:** 1650	**2:** Ground	**2:** I	**2:** -
3: 3	**3:** 0.75	**3:** RD/YE	**3:** 240	**3:** Battery Positive Voltage	**3:** I	**3:** -
4-6	-	-	-	Not Occupied	-	-

S38 IGNTION MODE SWITCH (BTM)

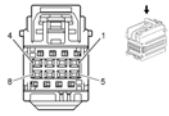

Connector Part Information

- Harness Type: Instrument Panel
- OEM Connector: 15480082
- Service Connector: 19149303
- Description: 8-Way F Micro 64 Series (GY)

Terminal Part Information

Terminal Type ID	Terminated Lead	Diagnostic Test Probe	Terminal Removal Tool	Service Terminal	Tray	Core Crimp	Insulation Crimp

I	13579976	J-35616-64B (L-BU)	J-38125-21	15359541	4	M	M

S38 Igntion Mode Switch (BTM)

Pin	Size	Color	Circuit	Function	Terminal Type ID	Option
1	-	-	-	Not Occupied	-	-
2: 2	**2:** 0.5	**2:** BN/BK	**2:** 5720	**2:** Ignition Mode Switch Accessory LED Signal	**2:** I	**2:** -
3: 3	**3:** 0.5	**3:** D-GN/BK	**3:** 3558	**3:** Passive Start Switch Signal 2	**3:** I	**3:** -
4: 4	**4:** 0.5	**4:** BK	**4:** 1650	**4:** Ground	**4:** I	**4:** -
5: 5	**5:** 0.5	**5:** D-BU/BK	**5:** 5719	**5:** Ignition Mode Switch Start LED Signal	**5:** I	**5:** -
6: 6	**6:** 0.5	**6:** D-BU/D-GN	**6:** 5723	**6:** Ignition Mode Switch Mode Voltage	**6:** I	**6:** -
7: 7	**7:** 0.5	**7:** BK/GY	**7:** 3559	**7:** Passive Start Switch 2 Low Reference	**7:** I	**7:** -
8: 8	**8:** 0.5	**8:** YE	**8:** 6817	**8:** LED Backlight Dimming Control	**8:** I	**8:** -

S39 IGNITION SWITCH

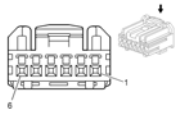

Connector Part Information

- Harness Type: Instrument Panel
- OEM Connector: 13608102
- Service Connector: 19153174
- Description: 6-Way F 1.2 HCM Series (NA)

Terminal Part Information

Terminal Type ID	Terminated Lead	Diagnostic Test Probe	Terminal Removal Tool	Service Terminal	Tray	Core Crimp	Insulation Crimp
I	13575868	J-35616-64B (L-BU)	J-38125-12A	SHCM-A03T-P025	20	J	J

S39 Ignition Switch

Pin	Size	Color	Circuit	Function	Terminal Type ID	Option

1: 1	**1:** 0.5	**1:** VT/BK	**1:** 3	**1:** Run/Crank Ignition 1 Voltage	**1:** I	**1:** -
2: 2	**2:** 0.5	**2:** RD/VT	**2:** 340	**2:** Battery Positive Voltage	**2:** I	**2:** -
3: 3	**3:** 0.5	**3:** VT/YE	**3:** 4	**3:** Accessory Voltage	**3:** I	**3:** -
4: 4	**4:** 0.5	**4:** WH/VT	**4:** 1020	**4:** Off/Run/Crank Voltage	**4:** I	**4:** -
5	-	-	-	Not Occupied	-	-
6: 6	**6:** 0.5	**6:** WH/BK	**6:** 1073	**6:** Ignition Key Resistor Signal	**6:** I	**6:** -

S52 OUTSIDE REARVIEW MIRROR SWITCH

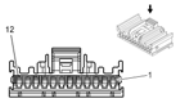

Connector Part Information

- Harness Type: Driver Door
- OEM Connector: 15499371
- Service Connector: 19115105
- Description: 12-Way F Kaizen 64 Series (BK)

Terminal Part Information

Terminal Type ID	Terminated Lead	Diagnostic Test Probe	Terminal Removal Tool	Service Terminal	Tray	Core Crimp	Insulation Crimp
I	13575867	J-35616-64B (L-BU)	J-38125-215A	SAIT-A03T-M064	14	P	P

S52 Outside Rearview Mirror Switch

Pin	Size	Color	Circuit	Function	Terminal Type ID	Option
1: 1	**1:** 0.5	**1:** VT/D-BU	**1:** 3390	**1:** Driver Mirror Motor Up (+) Down (-) Control	**1:** I	**1:** -
2: 2	**2:** 0.5	**2:** YE/BN	**2:** 3391	**2:** Driver Mirror Motor Common Control	**2:** I	**2:** -
3: 3	**3:** 0.5	**3:** BN/BK	**3:** 3389	**3:** Driver Mirror Motor Right (+) Left (-) Control	**3:** I	**3:** -
4: 4	**4:** 0.5	**4:** RD/GY	**4:** 2840	**4:** Battery Positive Voltage	**4:** I	**4:** -
5: 5	**5:** 0.5	**5:** BK	**5:** 50	**5:** Ground	**5:** I	**5:** -
7: 7	**7:** 0.5	**7:** YE/VT	**7:** 3397	**7:** Co-Driver Mirror Motor Up (+) Down (-) Control	**7:** I	**7:** -
8: 8	**8:** 0.5	**8:** WH	**8:** 3398	**8:** Co-Driver Mirror Motor Common Control	**8:** I	**8:** -

9: 9	**9:** 0.5	**9:** D-GN/BK	**9:** 3396	**9:** Co-Driver Mirror Motor Right (+) Left (-) Control	**9:** I	**9:** -
10: 10	**10:** 0.5	**10:** YE	**10:** 6817	**10:** LED Backlight Dimming Control	**10:** I	**10:** -
11-12	-	-	-	Not Occupied	-	-

S64D SEAT ADJUSTER SWITCH - DRIVER (ADS)

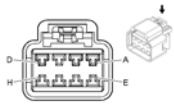

Connector Part Information

- Harness Type: Driver Seat
- OEM Connector: 15326924
- Service Connector: 19153751
- Description: 8-Way F GT 280 Series (BK)

Terminal Part Information

Terminal Type ID	Terminated Lead	Diagnostic Test Probe	Terminal Removal Tool	Service Terminal	Tray	Core Crimp	Insulation Crimp
I	13575756	J-35616-4A (PU)	J-38125-553	15304713	19	F	D

S64D Seat Adjuster Switch - Driver (ADS)

Pin	Size	Color	Circuit	Function	Terminal Type ID	Option
A: A	**A:** 1.5	**A:** D-BU	**A:** 286	**A:** Driver Power Seat Front Vertical Motor Up Control	**A:** I	**A:** -
B: B	**B:** 1.5	**B:** BK	**B:** 2150	**B:** Ground	**B:** I	**B:** -
C: C	**C:** 1.5	**C:** YE	**C:** 285	**C:** Driver Power Seat Horizontal Motor Forward Control	**C:** I	**C:** -
D: D	**D:** 1.5	**D:** RD	**D:** 702	**D:** Battery Positive Voltage	**D:** I	**D:** -
E: E	**E:** 1.5	**E:** WH	**E:** 282	**E:** Driver Power Seat Rear Vertical Motor Up Control	**E:** I	**E:** -
F: F	**F:** 1.5	**F:** BN	**F:** 284	**F:** Driver Power Seat Horizontal Motor Rearward Control	**F:** I	**F:** -
G: G	**G:** 1.5	**G:** D-GN	**G:** 283	**G:** Driver Power Seat Rear Vertical Motor Down Control	**G:** I	**G:** -

H: H	**H:** 1.5	**H:** GY	**H:** 287	**H:** Driver Power Seat Front Vertical Motor Down Control	**H:** I	**H:** -

S70L STEERING WHEEL CONTROLS SWITCH - LEFT (K34)

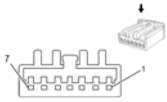

Connector Part Information

- Harness Type: Steering Wheel
- OEM Connector: AIT2PB-7-1FS
- Service Connector: Service by Harness - See Part Catalog
- Description: 7-way F (WH)

Terminal Part Information

Terminal Type ID	Terminated Lead	Diagnostic Test Probe	Terminal Removal Tool	Service Terminal	Tray	Core Crimp	Insulation Crimp
I	Service by Harness - See Parts Catalog	J-35616-64B (L-BU)	Not Available	Service by Harness - See Parts Catalog	Service by Harness - See Parts Catalog	Not Available	Not Available

S70L Steering Wheel Controls Switch - Left (K34)

Pin	Size	Color	Circuit	Function	Terminal Type ID	Option
1: 1	**1:** 0.35	**1:** WH/RD	**1:** 1444	**1:** 12 Volt Reference	**1:** I	**1:** -
2	-	-	-	Not Occupied	-	-
3: 3	**3:** 0.35	**3:** BN/D-GN	**3:** 1884	**3:** Cruise Control Set/Coast/Resume/Accelerate Switch Signal	**3:** I	**3:** -
4-5	-	-	-	Not Occupied	-	-
6: 6	**6:** 0.35	**6:** YE	**6:** 6817	**6:** LED Backlight Dimming Control	**6:** I	**6:** -
7: 7	**7:** 0.35	**7:** BK	**7:** 1650	**7:** Ground	**7:** I	**7:** -

S70R STEERING WHEEL CONTROLS SWITCH - RIGHT (W1Y)

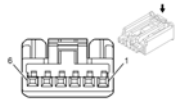

Connector Part Information

- Harness Type: Steering Wheel
- OEM Connector: AIT2PB-6-1AK
- Service Connector: Service by Harness - See Part Catalog
- Description: 6-way F (WH)

Terminal Part Information

Terminal Type ID	Terminated Lead	Diagnostic Test Probe	Terminal Removal Tool	Service Terminal	Tray	Core Crimp	Insulation Crimp
I	Service by Harness - See Parts Catalog	J-35616-64B (L-BU)	Not Available	Service by Harness - See Parts Catalog	Service by Harness - See Parts Catalog	Not Available	Not Available

S70R Steering Wheel Controls Switch - Right (W1Y)

Pin	Size	Color	Circuit	Function	Terminal Type ID	Option
1: 1	**1:** 0.5	**1:** WH/RD	**1:** 1444	**1:** 12V Reference	**1:** I	**1:** -
2: 2	**2:** 0.5	**2:** D-GN/WH	**2:** 6819	**2:** Steering Wheel Resistor Ladder Signal #2	**2:** I	**2:** -
3	-	-	-	Not Occupied	-	-
4: 4	**4:** 0.5	**4:** YE	**4:** 6817	**4:** LED Backlight Dimming Control	**4:** I	**4:** -
5: 5	**5:** 0.5	**5:** BK	**5:** 50	**5:** Ground	**5:** I	**5:** -
6	-	-	-	Not Occupied	-	-

S72 SUNROOF SWITCH (CF5)

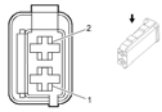

Connector Part Information

- Harness Type: Headliner
- OEM Connector: 10768790
- Service Connector: 13584096
- Description: 4-Way F 0.64 Micro Quadlok Series (BK)

Terminal Part Information

Terminal Type ID	Terminated Lead	Diagnostic Test Probe	Terminal Removal Tool	Service Terminal	Tray	Core Crimp	Insulation Crimp
I	13575782	J-35616-64B (L-BU)	J-38125-12A	928999-5	15	J	J

S72 Sunroof Switch (CF5)

Pin	Size	Color	Circuit	Function	Terminal Type ID	Option
1: 1	**1:** 0.5	**1:** BK/GY	**1:** 128	**1:** Sunroof Switch Low Reference	**1:** I	**1:** -
2: 2	**2:** 0.5	**2:** YE	**2:** 6817	**2:** LED Backlight Dimming Control	**2:** I	**2:** -
3: 3	**3:** 0.5	**3:** BK	**3:** 50	**3:** Ground	**3:** I	**3:** -
4: 4	**4:** 0.5	**4:** D-BU/VT	**4:** 5027	**4:** Sunroof Switch Data (1)	**4:** I	**4:** -

S75 TRACTION CONTROL SWITCH (FX3)

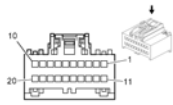

Connector Part Information

- Harness Type: Instrument Panel
- OEM Connector: 13655543
- Service Connector: 13580981
- Description: 6-Way F 0.64 MTS Series (BK)

Terminal Part Information

Terminal Type ID	Terminated Lead	Diagnostic Test Probe	Terminal Removal Tool	Service Terminal	Tray	Core Crimp	Insulation Crimp
I	13575782	J-35616-64B (L-BU)	J-38125-12A	928999-5	15	J	J

S75 Traction Control Switch (FX3)

Pin	Size	Color	Circuit	Function	Terminal Type ID	Option
1	-	-	-	Not Occupied	-	-
2	-	-	-	Not Occupied	-	-
3: 3	**3:** 0.5	**3:** YE	**3:** 6817	**3:** Cruise Control Set/Coast/Resume/Accelerate Switch	**3:** I	**3:** -

				Signal		
4: 4	**4:** 0.5 **4:** 0.5	**4:** BK **4:** BK	**4:** 1750 **4:** 1650	**4:** Ground **4:** Ground	**4:** I	**4:** MF3 or MZ0 **4:** MH8
5-6	-	-	-	Not Occupied	-	-

S78 TURN SIGNAL/MULTI-FUNCTION SWITCH

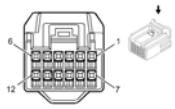

Connector Part Information

- Harness Type: Instrument Panel
- OEM Connector: 13604008
- Service Connector: 13576635
- Description: 12-Way F 0.64 Series (BK)

Terminal Part Information

Terminal Type ID	Terminated Lead	Diagnostic Test Probe	Terminal Removal Tool	Service Terminal	Tray	Core Crimp	Insulation Crimp
I	13575870	J-35616-64B (L-BU)	J-38125-12A	SNAC3-A021T-M064	20	J	J

S78 Turn Signal/Multi-Function Switch

Pin	Size	Color	Circuit	Function	Terminal Type ID	Option
1: 1	**1:** 0.5	**1:** WH/L-GN	**1:** 663	**1:** Hazard Switch Left Turn Signal	**1:** I	**1:** -
2: 2	**2:** 0.5	**2:** WH	**2:** 524	**2:** Headlamp Dimmer Switch High Beam Signal	**2:** I	**2:** -
3: 3	**3:** 0.5	**3:** BK	**3:** 1650	**3:** Ground	**3:** I	**3:** -
4: 4	**4:** 0.5	**4:** YE/BN	**4:** 307	**4:** Headlamp Switch Flash To Pass Signal	**4:** I	**4:** -
5: 5	**5:** 0.35	**5:** GY/L-BU	**5:** 893	**5:** Driver Information Center Select Menu Switch Signal	**5:** I	**5:** -
6: 6	**6:** 0.35	**6:** BK/BN	**6:** 897	**6:** Driver Information Center Switch Low Reference	**6:** I	**6:** -
7: 7	**7:** 0.5	**7:** VT/D-BU	**7:** 664	**7:** Hazard Switch Right Turn Signal	**7:** I	**7:** -

8-11	-	-	-	Not Occupied	-	-
12: 12	**12:** 0.35	**12:** D-GN/WH	**12:** 1358	**12:** Driver Information Center Switch Signal	**12:** I	**12:** -

S79D WINDOW SWITCH - DRIVER (AEC)

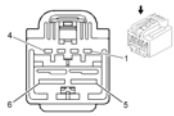

Connector Part Information

- Harness Type: Driver Door
- OEM Connector: 15491286
- Service Connector: 13580111
- Description: 8-Way F 2.8 Series (BK)

Terminal Part Information

Terminal Type ID	Terminated Lead	Diagnostic Test Probe	Terminal Removal Tool	Service Terminal	Tray	Core Crimp	Insulation Crimp
I	Service by Harness - See Part Catalog	Pending	Pending	Not Available	Not Available	Not Available	Not Available

S79D Window Switch - Driver (AEC)

Pin	Size	Color	Circuit	Function	Terminal Type ID	Option
1: 1	**1:** 2.5	**1:** BK	**1:** 2050	**1:** Ground	**1:** I	**1:** -
2: 2	**2:** 0.5	**2:** D-GN/GY	**2:** 3382	**2:** Power Window Motor Driver Up Control	**2:** I	**2:** -
3: 3	**3:** 0.5	**3:** YE/VT	**3:** 3383	**3:** Power Window Motor Driver Down Control	**3:** I	**3:** -
4: 4	**4:** 2.5	**4:** RD/D-GN	**4:** 1540	**4:** Battery Positive Voltage	**4:** I	**4:** -
5: 5	**5:** 0.5	**5:** D-GN/YE	**5:** 6134	**5:** Linear Interconnect Network Bus 3	**5:** I	**5:** -
6: 6	**6:** 0.5	**6:** GY	**6:** 745	**6:** Left Front Door Ajar Switch Signal	**6:** I	**6:** -
7: 7	**7:** 0.5	**7:** WH/VT	**7:** 3270	**7:** Driver Door Lock Motor Status Control	**7:** I	**7:** -
8	-	-	-	Not Occupied	-	-

S79D WINDOW SWITCH - DRIVER (AXG)

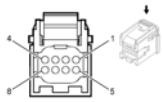

Connector Part Information

- Harness Type: Driver Door
- OEM Connector: 15406142
- Service Connector: 13337949
- Description: 8-Way F Micro 64 Series (GY)

Terminal Part Information

Terminal Type ID	Terminated Lead	Diagnostic Test Probe	Terminal Removal Tool	Service Terminal	Tray	Core Crimp	Insulation Crimp
I	13579976	J-35616-64B (L-BU)	J-38125-21	15359541	4	M	M

S79D Window Switch - Driver (AXG)

Pin	Size	Color	Circuit	Function	Terminal Type ID	Option
1: 1	**1:** 0.5	**1:** BK	**1:** 1550	**1:** Ground	**1:** I	**1:** -
2: 2	**2:** 0.5	**2:** D-GN	**2:** 3381	**2:** Power Window Switch Driver Express Signal	**2:** I	**2:** -
3: 3	**3:** 0.5	**3:** GY	**3:** 3380	**3:** Power Window Switch Driver Down Signal	**3:** I	**3:** -
4: 4	**4:** 0.5	**4:** RD/D-GN	**4:** 1540	**4:** Battery Positive Voltage	**4:** I	**4:** -
5: 5	**5:** 0.5	**5:** D-GN/YE	**5:** 6134	**5:** Linear Interconnect Network Bus 3	**5:** I	**5:** -
6: 6	**6:** 0.5	**6:** D-GN/WH	**6:** 3379	**6:** Power Window Switch Driver Up Signal	**6:** I	**6:** -
7: 7	**7:** 0.5	**7:** WH/VT	**7:** 3270	**7:** Driver Door Lock Motor Status Control	**7:** I	**7:** -
8	-	-	-	Not Occupied	-	-

S79LR WINDOW SWITCH - LEFT REAR

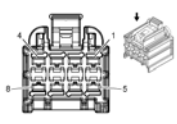

Connector Part Information

- Harness Type: Left Rear Door

- OEM Connector: 13544529
- Service Connector: 13503877
- Description: 8-Way F GT FBT 280 Series (BK)

Terminal Part Information

Terminal Type ID	Terminated Lead	Diagnostic Test Probe	Terminal Removal Tool	Service Terminal	Tray	Core Crimp	Insulation Crimp
I	Service by Connector Assembly	J-35616-35 (VT)	Not Available	Not Available	Not Available	Not Available	Not Available

S79LR Window Switch - Left Rear

Pin	Size	Color	Circuit	Function	Terminal Type ID	Option
1: 1	**1:** 0.5	**1:** D-GN/GY	**1:** 6135	**1:** Linear Interconnect Network Bus 4	**1:** I	**1:** -
2: 2	**2:** 0.5	**2:** GY	**2:** 747	**2:** Left Rear Door Ajar Switch Signal	**2:** I	**2:** -
3: 3	**3:** 0.5	**3:** BK	**3:** 2350	**3:** Ground	**3:** I	**3:** -
4	-	-	-	Not Occupied	-	-
5: 5	**5:** 2.5	**5:** BK	**5:** 2350	**5:** Ground	**5:** I	**5:** -
6: 6	**6:** 2.5	**6:** D-BU/GY	**6:** 668	**6:** Power Window Motor Left Rear Up Control	**6:** I	**6:** -
7: 7	**7:** 2.5	**7:** D-GN/BK	**7:** 669	**7:** Power Window Motor Left Rear Down Control	**7:** I	**7:** -
8: 8	**8:** 2.5	**8:** RD/BN	**8:** 2940	**8:** Battery Positive Voltage	**8:** I	**8:** -

S79P WINDOW SWITCH - PASSENGER

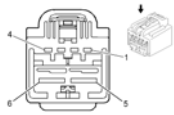

Connector Part Information

- Harness Type: Left Rear Door
- OEM Connector: 13544529
- Service Connector: 13503877
- Description: 8-Way F GT FBT 280 Series (BK)

Terminal Part Information

Terminal	Terminated	Diagnostic	Terminal	Service		Core	Insulation

Type ID	Lead	Test Probe	Removal Tool	Terminal	Tray	Crimp	Crimp
I	Service by Connector Assembly	J-35616-35 (VT)	Not Available	Not Available	Not Available	Not Available	Not Available

S79P Window Switch - Passenger

Pin	Size	Color	Circuit	Function	Terminal Type ID	Option
1: 1	**1:** 2.5	**1:** BK	**1:** 2050	**1:** Ground	**1:** I	**1:** -
2: 2	**2:** 2.5	**2:** D-GN/GY	**2:** 3387	**2:** Power Window Motor Co-Driver Up Control	**2:** I	**2:** -
3: 3	**3:** 2.5	**3:** YE/D-BU	**3:** 3388	**3:** Power Window Motor Co-Driver Down Control	**3:** I	**3:** -
4: 4	**4:** 2.5	**4:** RD/D-GN	**4:** 1540	**4:** Battery Positive Voltage	**4:** I	**4:** -
5: 5	**5:** 0.5	**5:** D-GN/YE	**5:** 6134	**5:** Linear Interconnect Network Bus 3	**5:** I	**5:** -
6: 6	**6:** 0.5	**6:** GY	**6:** 746	**6:** Right Front Door Ajar Switch Signal	**6:** I	**6:** -
7-8	-	-	-	Not Occupied	-	-

S79RR WINDOW SWITCH - RIGHT REAR

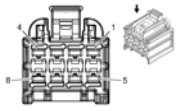

Connector Part Information

- Harness Type: Right Rear Door
- OEM Connector: 13544529
- Service Connector: 13503877
- Description: 8-Way F GT FBT 280 Series (BK)

Terminal Part Information

Terminal Type ID	Terminated Lead	Diagnostic Test Probe	Terminal Removal Tool	Service Terminal	Tray	Core Crimp	Insulation Crimp
I	Service by Connector Assembly	J-35616-35 (VT)	15315247	Not Available	Not Available	Not Available	Not Available

S79RR Window Switch - Right Rear

Pin	Size	Color	Circuit	Function	Terminal Type	Option

					ID	
1: 1	**1:** 0.5	**1:** D-GN/GY	**1:** 6135	**1:** Linear Interconnect Network Bus 4	**1:** I	**1:** -
2: 2	**2:** 0.5	**2:** GY	**2:** 748	**2:** Right Rear Door Ajar Switch Signal	**2:** I	**2:** -
3-4	-	-	-	Not Occupied	-	-
5: 5	**5:** 2.5	**5:** BK	**5:** 2350	**5:** Ground	**5:** I	**5:** -
6: 6	**6:** 2.5	**6:** D-BU/GY	**6:** 670	**6:** Power Window Motor Right Rear Up Control	**6:** I	**6:** -
7: 7	**7:** 2.5	**7:** D-GN/BKk	**7:** 671	**7:** Power Window Motor Right Rear Down Control	**7:** I	**7:** -
8: 8	**8:** 2.5	**8:** RD/BN	**8:** 2940	**8:** Battery Positive Voltage	**8:** I	**8:** -

S82 WINDSHIELD WIPER/WASHER SWITCH

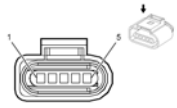

Connector Part Information

- Harness Type: Instrument Panel
- OEM Connector: 13609516
- Service Connector: 13576541
- Description: 8-Way F 1.2 HCM Series (BK)

Terminal Part Information

Terminal Type ID	Terminated Lead	Diagnostic Test Probe	Terminal Removal Tool	Service Terminal	Tray	Core Crimp	Insulation Crimp
I	13575868	J-35616-64B (L-BU)	J-38125-12A	SHCM-A03T-P025	20	J	J

S82 Windshield Wiper/Washer Switch

Pin	Size	Color	Circuit	Function	Terminal Type ID	Option
1: 1	**1:** 0.5	**1:** GY	**1:** 1715	**1:** Windshield Wiper Switch High Signal	**1:** I	**1:** -
2: 2	**2:** 0.5	**2:** BK/GY	**2:** 6009	**2:** Windshield Wiper Switch Low Reference	**2:** I	**2:** -
3: 3	**3:** 0.5	**3:** YE/D-BU	**3:** 1714	**3:** Windshield Wiper Switch Low Signal	**3:** I	**3:** -
4	-	-	-	Not Occupied	-	-
				5: Windshield Washer		

5: 5	**5:** 0.5	**5:** WH/BK	**5:** 94	Switch Signal	**5:** I	**5:** -
6-8	-	-	-	Not Occupied	-	-

S88 SUNROOF TILT SWITCH (CF5)

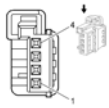

Connector Part Information

- Harness Type: Headliner
- OEM Connector: 13597457
- Service Connector: 13576536
- Description: 4-Way F 0.64 Micro Quadlok Series (WH)

Terminal Part Information

Terminal Type ID	Terminated Lead	Diagnostic Test Probe	Terminal Removal Tool	Service Terminal	Tray	Core Crimp	Insulation Crimp
I	13575782	J-35616-64B (L-BU)	J-38125-12A	928999-5	15	J	J

S88 Sunroof Tilt Switch (CF5)

Pin	Size	Color	Circuit	Function	Terminal Type ID	Option
1: 1	**1:** 0.5	**1:** BK/BN	**1:** 128	**1:** Sunroof Switch Low Reference	**1:** I	**1:** -
2: 2	**2:** 0.5	**2:** YE	**2:** 6817	**2:** LED Backlight Dimming Control	**2:** I	**2:** -
3: 3	**3:** 0.5	**3:** BK	**3:** 50	**3:** Ground	**3:** I	**3:** -
4: 4	**4:** 0.5	**4:** WH/D-GN	**4:** 3031	**4:** Sunroof Vent Switch Signal	**4:** I	**4:** -

T3 AUDIO AMPLIFIER X1 (UQA)

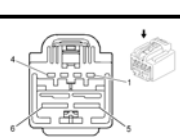

Connector Part Information

- Harness Type: Body
- OEM Connector: 15491286

- Service Connector: 13580111
- Description: 8-Way F 2.8 Series (BK)

Terminal Part Information

Terminal Type ID	Terminated Lead	Diagnostic Test Probe	Terminal Removal Tool	Service Terminal	Tray	Core Crimp	Insulation Crimp
I	13575578	J-35616-35 (VT)	J-38125-553	8100-4444	22	2	A
II	13575577	J-35616-35 (VT)	J-38125-553	8100-4445	22	F	D

T3 Audio Amplifier X1 (UQA)

Pin	Size	Color	Circuit	Function	Terminal Type ID	Option
1: 1	**1:** 1	**1:** L-GN/VT	**1:** 1795	**1:** Right Subwoofer Speaker (+)	**1:** I	**1:** -
2: 2	**2:** 1	**2:** D-GN/BK	**2:** 1794	**2:** Left/Rear Subwoofer Speaker (-)	**2:** I	**2:** -
3: 3	**3:** 1	**3:** D-BU/GY	**3:** 346	**3:** Left/Rear Subwoofer Speaker (+)	**3:** I	**3:** -
4: 4	**4:** 2.5	**4:** RD/WH	**4:** 1040	**4:** Battery Positive Voltage	**4:** II	**4:** -
5: 5	**5:** 1	**5:** GY/BK	**5:** 315	**5:** Right Subwoofer Speaker (-)	**5:** I	**5:** -
6-7	-	-	-	Not Occupied	-	-
8: 8	**8:** 2.5	**8:** BK	**8:** 450	**8:** Ground	**8:** II	**8:** -

T3 AUDIO AMPLIFIER X2 (UQA)

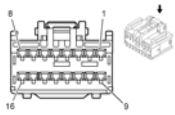

Connector Part Information

- Harness Type: Body
- OEM Connector: 15489823
- Service Connector: 15134091
- Description: 16-Way F 1.5 Series (BK)

Terminal Part Information

Terminal Type ID	Terminated Lead	Diagnostic Test Probe	Terminal Removal Tool	Service Terminal	Tray	Core Crimp	Insulation Crimp

I	13327201	J-35616-2A (GY)	J-38125-553	8240-0128	22	C	A

T3 Audio Amplifier X2 (UQA)

Pin	Size	Color	Circuit	Function	Terminal Type ID	Option
1: 1	**1:** 0.75	**1:** D-BU	**1:** 201	**1:** Left Front Speaker (+) (1)	**1:** I	**1:** -
2: 2	**2:** 0.75	**2:** BN/D-BU	**2:** 118	**2:** Left Front Speaker Signal (-) (1)	**2:** I	**2:** -
3: 3	**3:** 0.75	**3:** D-GN	**3:** 199	**3:** Left Rear Speaker (+)	**3:** I	**3:** -
4: 4	**4:** 0.75	**4:** D-GN/BK	**4:** 116	**4:** Left Rear Speaker Signal (-)	**4:** I	**4:** -
5-6	-	-	-	Not Occupied	-	-
7: 7	**7:** 0.75	**7:** YE/WH	**7:** 1860	**7:** Front Center Speaker (+)	**7:** I	**7:** -
8: 8	**8:** 0.75	**8:** D-BU/YE	**8:** 1960	**8:** Front Center Speaker (-)	**8:** I	**8:** -
9: 9	**9:** 0.75	**9:** D-BU/BK	**9:** 115	**9:** Right Rear Speaker Signal (-)	**9:** I	**9:** -
10: 10	**10:** 0.75	**10:** WH	**10:** 46	**10:** Right Rear Speaker (+)	**10:** I	**10:** -
11: 11	**11:** 0.75	**11:** YE	**11:** 200	**11:** Right Front Speaker (+) (1)	**11:** I	**11:** -
12: 12	**12:** 0.75	**12:** YE/BK	**12:** 117	**12:** Right Front Speaker Signal (-) (1)	**12:** I	**12:** -
13-16	-	-	-	Not Occupied	-	-

T3 AUDIO AMPLIFIER X3 (UQA)

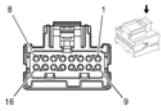

Connector Part Information

- Harness Type: Body
- OEM Connector: 15394150
- Service Connector: 13504130
- Description: 16-Way F Micro-Pack 064 Series (BK)

Terminal Part Information

Terminal Type ID	Terminated Lead	Diagnostic Test Probe	Terminal Removal Tool	Service Terminal	Tray	Core Crimp	Insulation Crimp
		J-35616-64B					

I	13575528	(L-BU)	J-38125-21	15359541	4	M	M

T3 Audio Amplifier X3 (UQA)

Pin	Size	Color	Circuit	Function	Terminal Type ID	Option
1: 1	**1:** 0.35	**1:** D-GN/BK	**1:** 599	**1:** Left Rear Low Level Audio Signal	**1:** I	**1:** -
2: 2	**2:** 0.35	**2:** BN/VT	**2:** 1999	**2:** Left Rear Low Level Audio (-)	**2:** I	**2:** -
3: 3	**3:** 0.35	**3:** D-BU/BK	**3:** 1946	**3:** Right Rear Low Level Audio (-)	**3:** I	**3:** -
4: 4	**4:** 0.35	**4:** BN/WH	**4:** 546	**4:** Right Rear Low Level Audio Signal	**4:** I	**4:** -
5-7	-	-	-	Not Occupied	-	-
8: 8	**8:** 0.35	**8:** D-GN/YE	**8:** 7066	**8:** Entertainment Remote Enable Signal	**8:** I	**8:** -
9: 9	**9:** 0.35	**9:** YE	**9:** 512	**9:** Right Front Low Level Audio Signal	**9:** I	**9:** -
10: 10	**10:** 0.35	**10:** D-BU/BN	**10:** 1546	**10:** Front Low Level Audio (-)	**10:** I	**10:** -
11: 11	**11:** 0.35	**11:** BN/D-BU	**11:** 1947	**11:** Left Front Low Level Audio (-)	**11:** I	**11:** -
12: 12	**12:** 0.35	**12:** D-BU	**12:** 511	**12:** Left Front Low Level Audio Signal	**12:** I	**12:** -
13-15	-	-	-	Not Occupied	-	-
16: 16	**16:** 0.5	**16:** VT/D-BU	**16:** 6978	**16:** Amplifier Control	**16:** I	**16:** -

T10E KEYLESS ENTRY ANTENNA - REAR COMPARTMENT (ATH)

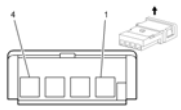

Connector Part Information

- Harness: Body
- OEM: 24414929
- Service: 24414929
- Description: 4-Way F 64 MQS Series (GY)

Terminal Part Information

Terminal Type ID	Terminated Lead	Diagnostic Test Probe	Terminal Removal Tool
	Service by Harness - See		

I	Part Catalog	J-35616-65B (L-BU)	J-38125-215A

T10E Keyless Entry Antenna - Rear Compartment (ATH)

Pin	Size	Color	Circuit	Function	Terminal Type ID	Option
1: 1	**1:** 0.5	**1:** WH/D-GN	**1:** 3556	**1:** Passive Start Interior Antenna 3 Signal Hi	**1:** I	**1:** -
2: 2	**2:** 0.5	**2:** D-GN	**2:** 3557	**2:** Passive Start Interior Antenna 3 Signal Lo	**2:** I	**2:** -
3-4	-	-	-	Not Occupied	-	-

T10G KEYLESS ENTRY ANTENNA - REAR FASCIA (ATH)

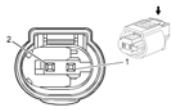

Connector Part Information

- Harness: Body
- OEM: 24461693
- Service Connector: 13316128
- Description: 2-Way F 0.64 MQS Series, Sealed (BK)

Terminal Part Information

Terminal Type ID	Terminated Lead	Diagnostic Test Probe	Terminal Removal Tool
I	13575569	J-35616-65B (L-BU)	J-38125-12A

T10G Keyless Entry Antenna - Rear Fascia (ATH)

Pin	Size	Color	Circuit	Function	Terminal Type ID	Option
1: 1	**1:** 0.5	**1:** BN/D-GN	**1:** 3568	**1:** Passive Entry Rear Closure Antenna Signal Hi	**1:** I	**1:** -
2: 2	**2:** 0.5	**2:** D-GN/GY	**2:** 3569	**2:** Passive Entry Rear Closure Antenna Signal Lo	**2:** I	**2:** -

T10J KEYLESS ENTRY ANTENNA - CENTER CONSOLE FRONT (ATH)

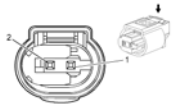

Connector Part Information

- Harness: Console
- OEM: 24461693
- Service Connector: 13316128
- Description: 2-Way F 0.64 MQS Series, Sealed (BK)

Terminal Part Information

Terminal Type ID	Terminated Lead	Diagnostic Test Probe	Terminal Removal Tool
I	Service by Harness- See Part Catalog	J-35616-14 (GN)	J-38125-560

T10J Keyless Entry Antenna - Center Console Front (ATH)

Pin	Size	Color	Circuit	Function	Terminal Type ID	Option
1: 1	**1:** 0.5	**1:** BN/BK	**1:** 3552	**1:** Passive Start Interior Antenna 1 Signal Hi	**1:** I	**1:** -
2: 2	**2:** 0.5	**2:** WH	**2:** 3553	**2:** Passive Start Interior Antenna 1 Signal Lo	**2:** I	**2:** -

T10K KEYLESS ENTRY ANTENNA - CENTER CONSOLE REAR (ATH)

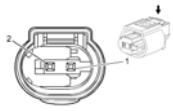

Connector Part Information

- Harness Type: Console
- OEM Connector: 1-967644-1
- Service Connector: 13576533
- Description: 2-Way F 0.64 MQS Series, Sealed (BK)

Terminal Part Information

Terminal Type ID	Terminated Lead	Diagnostic Test Probe	Terminal Removal Tool
I	13576395	J-35616-64B (L-BU)	J-38125-12A

T10K Keyless Entry Antenna - Center Console Rear (ATH)

Pin	Size	Color	Circuit	Function	Terminal Type ID	Option
1: 1	**1:** 0.5	**1:** D-BU	**1:** 3554	**1:** Passive Start Interior Antenna 2 Signal Hi	**1:** I	**1:** -
2: 2	**2:** 0.5	**2:** GY/BK	**2:** 3555	**2:** Passive Start Interior	**2:** I	**2:** -

				Antenna 2 Signal Lo		

T10M KEYLESS ENTRY ANTENNA - DRIVER DOOR HANDLE (ATH)

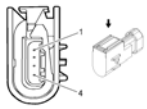

Connector Part Information

- Harness: Driver Door
- OEM: 19153433
- Service Connector: Service by Harness - See Part Catalog
- Description: 4-Way M 0.64 Series, Sealed (BK)

Terminal Part Information

Terminal Type ID	Terminated Lead	Diagnostic Test Probe	Terminal Removal Tool
I	Service by Harness- See Part Catalog	J-35616-14 (GN)	J-38125-560

T10M Keyless Entry Antenna - Driver Door Handle (ATH)

Pin	Size	Color	Circuit	Function	Terminal Type ID	Option
1: 1	**1:** 0.5	**1:** VT	**1:** 3560	**1:** Passive Entry Driver Door Antenna Signal Hi	**1:** I	**1:** -
2: 2	**2:** 0.5	**2:** VT/GY	**2:** 3561	**2:** Passive Entry Driver Door Antenna Signal Lo	**2:** I	**2:** -
3: 3	**3:** 0.5	**3:** GN/WH	**3:** 6655	**3:** Driver Door Unlatch Switch Signal	**3:** I	**3:** -
4: 4	**4:** 0.5	**4:** BK	**4:** 350	**4:** Ground	**4:** I	**4:** -

T10N KEYLESS ENTRY ANTENNA - PASSENGER DOOR HANDLE (ATH)

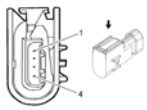

Connector Part Information

- Harness: Passenger Door
- OEM: 19153433
- Service Connector: Service by Harness - See Part Catalog
- Description: 4-Way M 0.64 Series, Sealed (BK)

Terminal Part Information

Terminal Type ID	Terminated Lead	Diagnostic Test Probe	Terminal Removal Tool
I	Service by Harness- See Part Catalog	J-35616-14 (GN)	J-38125-560

T10N Keyless Entry Antenna - Passenger Door Handle (ATH)

Pin	Size	Color	Circuit	Function	Terminal Type ID	Option
1: 1	**1:** 0.5	**1:** GN/YE	**1:** 3562	**1:** Passive Entry Co-Driver Door Antenna Signal Hi	**1:** I	**1:** -
2: 2	**2:** 0.5	**2:** D-GN/BK	**2:** 3563	**2:** Passive Entry Co-Driver Door Antenna Signal Lo	**2:** I	**2:** -
3: 3	**3:** 0.75	**3:** GY/BU	**3:** 3576	**3:** Co-Driver Door Exterior Switch Lock Signal	**3:** I	**3:** -
4: 4	**4:** 0.5	**4:** BK	**4:** 350	**4:** Ground	**4:** I	**4:** -

T11 MULTIMEDIA PLAYER INTERFACE MODULE (KTA)

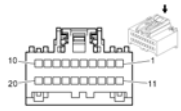

Connector Part Information

- Harness Type: Instrument Panel
- OEM Connector: 15489824
- Service Connector: 15126711
- Description: 20-Way F 64 Series (BK)

Terminal Part Information

Terminal Type ID	Terminated Lead	Diagnostic Test Probe	Terminal Removal Tool	Service Terminal	Tray	Core Crimp	Insulation Crimp
I	13579944	Pending	Pending	Not Available	Not Available	Not Available	Not Available

T11 Multimedia Player Interface Module (KTA)

Pin	Size	Color	Circuit	Function	Terminal Type ID	Option
1: 1	**1:** 0.5	**1:** RD/D-GN	**1:** 3140	**1:** Battery Positive Voltage	**1:** I	**1:** -
2: 2	**2:** 0.35	**2:** D-BU	**2:** 2060	**2:** Auxiliary Detection Signal	**2:** I	**2:** -

3: 3	**3:** 0.35	**3:** VT	**3:** 5843	**3:** Auxiliary Audio Common Signal	**3:** I	**3:** -
4: 4	**4:** 0.35	**4:** D-GN	**4:** 3376	**4:** Auxiliary Audio Common Signal (3)	**4:** I	**4:** -
5: 5	**5:** 0.35	**5:** BARE	**5:** 3375	**5:** Auxiliary Audio Drain Wire (3)	**5:** I	**5:** -
6-7	-	-	-	Not Occupied	-	-
8: 8	**8:** 0.5	**8:** D-GN	**8:** 5060	**8:** Low Speed GMLAN Serial Data	**8:** I	**8:** -
9-10	-	-	-	Not Occupied	-	-
11: 11	**11:** 0.5	**11:** BK	**11:** 1750	**11:** Ground	**11:** I	**11:** -
12: 12	**12:** 0.35	**12:** GY	**12:** 5839	**12:** Left Auxiliary Audio Signal (2)	**12:** I	**12:** -
13: 13	**13:** 0.35	**13:** D-GN	**13:** 5841	**13:** Right Auxiliary Audio Signal (2)	**13:** I	**13:** -
14: 14	**14:** 0.35	**14:** VT	**14:** 3377	**14:** Left Auxiliary Audio Signal (3)	**14:** I	**14:** -
15: 15	**15:** 0.35	**15:** BN	**15:** 3378	**15:** Right Auxiliary Audio Signal (3)	**15:** I	**15:** -
16-17	-	-	-	Not Occupied	-	-
18: 18	**18:** 0.35	**18:** BARE	**18:** 5842	**18:** Auxiliary Audio Screen (2)	**18:** I	**18:** -
19-20	-	-	-	Not Occupied	-	-

X80L ACCESSORY POWER RECEPTACLE - REAR CONSOLE

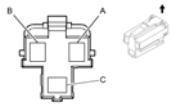

Connector Part Information

- Harness Type: Console
- OEM Connector: 12176836
- Service Connector: 19257374
- Description: 3-Way F Metri-Pack 280 Series (GY)

Terminal Part Information

Terminal Type ID	Terminated Lead	Diagnostic Test Probe	Terminal Removal Tool	Service Terminal	Tray	Core Crimp	Insulation Crimp
I	13575721	J-35616-4A (PU)	J-38125-553	12110844	4	C	A

X80L Accessory Power Receptacle - Rear Console

Pin	Size	Color	Circuit	Function	Terminal Type ID	Option
A: A	**A:** 1.0	**A:** VT	**A:** 801	**A:** Retained Accessory Power Fuse Supply Voltage	**A:** I	**A:** -
B	-	-	-	Not Occupied	-	-
C: C	**C:** 1.0	**C:** BK	**C:** 2150	**C:** Ground	**C:** I	**C:** -

X83 AUXILIARY AUDIO INPUT

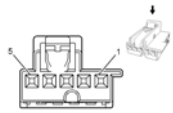

Connector Part Information

- Harness Type: Console
- OEM Connector: 13668446
- Service Connector: 13585147
- Description: 5-Way F 64 MQS Series (BK)

Terminal Part Information

Terminal Type ID	Terminated Lead	Diagnostic Test Probe	Terminal Removal Tool	Service Terminal	Tray	Core Crimp	Insulation Crimp
I	13575782	J-35616-64B (L-BU)	J-38125-12A	928999-5	15	H	H

X83 Auxiliary Audio Input

Pin	Size	Color	Circuit	Function	Terminal Type ID	Option
1: 1	**1:** 0.35	**1:** D-BU	**1:** 2060	**1:** Auxiliary Detection Signal	**1:** I	**1:** -
2: 2	**2:** 0.35	**2:** GY	**2:** 5839	**2:** Left Auxiliary Audio Signal (2)	**2:** I	**2:** -
3: 3	**3:** 0.35	**3:** BARE	**3:** 5842	**3:** Auxiliary Audio Screen (2)	**3:** I	**3:** -
4: 4	**4:** 0.35	**4:** L-GN	**4:** 5841	**4:** Right Auxiliary Audio Signal (2)	**4:** I	**4:** -
5: 5	**5:** 0.35	**5:** VT	**5:** 5843	**5:** Auxiliary Audio Common Signal	**5:** I	**5:** -

X84 DATA LINK CONNECTOR

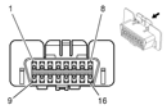

Connector Part Information

- Harness Type: Instrument Panel
- OEM Connector: 15317575
- Service Connector: 15317575
- Description: 16-Way F Metri-Pack/150 Series (BK)

Terminal Part Information

Terminal Type ID	Terminated Lead	Diagnostic Test Probe	Terminal Removal Tool	Service Terminal	Tray	Core Crimp	Insulation Crimp
I	13575725	J-35616-14 (GN)	J-38125-12A	12129484	19	E	C

X84 Data Link Connector

Pin	Size	Color	Circuit	Function	Terminal Type ID	Option
1: 1	**1:** 0.5	**1:** L-GN	**1:** 5060	**1:** Low Speed GMLAN Serial Data	**1:** I	**1:** -
2-3	-	-	-	Not Occupied	-	-
4: 4	**4:** 0.5	**4:** BK	**4:** 2150	**4:** Ground	**4:** I	**4:** -
5: 5	**5:** 0.5	**5:** BK	**5:** 2150	**5:** Ground	**5:** I	**5:** -
6: 6	**6:** 0.5	**6:** D-BU	**6:** 2500	**6:** High Speed GMLAN Serial Data (+) (1)	**6:** I	**6:** -
7: 7	**7:** 0.5	**7:** BN/WH	**7:** 5043	**7:** Keyword 2000 Serial Data	**7:** I	**7:** -
8-11	-	-	-	Not Occupied	-	-
12: 12	**12:** 0.5	**12:** D-BU/YE	**12:** 6105	**12:** High Speed GMLAN Serial Data (+) (2)	**12:** I	**12:** -
13: 13	**13:** 0.5	**13:** WH	**13:** 6106	**13:** High Speed GMLAN Serial Data (-) (2)	**13:** I	**13:** -
14: 14	**14:** 0.5	**14:** WH	**14:** 2501	**14:** High Speed GMLAN Serial Data (-) (1)	**14:** I	**14:** -
15	-	-	-	Not Occupied	-	-
16: 16	**16:** 0.5 **16:** 0.5	**16:** RD/D-BU **16:** RD/D-BU	**16:** 540 **16:** 540	**16:** Battery Positive Voltage **16:** Battery Positive Voltage	**16:** I	**16:** -

X85 STEERING WHEEL AIR BAG COIL X1

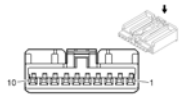

Connector Part Information

- Harness Type: Instrument Panel
- OEM Connector: 13574592
- Service Connector: 13576634
- Description: 10-Way F AIT II Series (BK)

Terminal Part Information

Terminal Type ID	Terminated Lead	Diagnostic Test Probe	Terminal Removal Tool	Service Terminal	Tray	Core Crimp	Insulation Crimp
I	13575867	J-35616-64B (L-BU)	J-38125-215A	SAIT-A03T-M064	14	P	P

X85 Steering Wheel Air Bag Coil X1

Pin	Size	Color	Circuit	Function	Terminal Type ID	Option
1: 1	**1:** 0.5	**1:** L-GN/WH	**1:** 3287	**1:** Horn Switch Signal	**1:** I	**1:** -
2: 2	**2:** 0.5	**2:** BK	**2:** 50	**2:** Ground	**2:** I	**2:** -
3: 3	**3:** 0.5	**3:** GY/D-GN	**3:** 5737	**3:** Adaptive Cruise Control Gap Up/Down Switch Signal	**3:** I	**3:** -
4: 4	**4:** 0.5	**4:** L-GN/WH	**4:** 6819	**4:** Steering Wheel Resistor Ladder Signal 2	**4:** I	**4:** -
5: 5	**5:** 0.5	**5:** WH/RD	**5:** 1444	**5:** 12 Volt Reference	**5:** I	**5:** -
6: 6	**6:** 0.5	**6:** YE	**6:** 6817	**6:** LED Backlight Dimming Control	**6:** I	**6:** -
7-10	-	-	-	Not Occupied	-	-

X85 STEERING WHEEL AIR BAG COIL X2

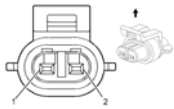

Connector Part Information

- Harness Type: Instrument Panel
- OEM Connector: 15393421
- Service Connector: 13580115

- Description: 4-Way F Micro-Pack 064 Series (YE)

Terminal Part Information

Terminal Type ID	Terminated Lead	Diagnostic Test Probe	Terminal Removal Tool	Service Terminal	Tray	Core Crimp	Insulation Crimp
I	Service by Connector Assembly - 13580115	J-35616-64B (L-BU)	Not Available	Not Available	Not Available	Not Available	Not Available

X85 Steering Wheel Air Bag Coil X2

Pin	Size	Color	Circuit	Function	Terminal Type ID	Option
1: 1	**1:** 0.5	**1:** OG/VT	**1:** 3021	**1:** Steering Wheel Module Stage 1 High Control	**1:** I	**1:** -
2: 2	**2:** 0.5	**2:** BN/OG	**2:** 3020	**2:** Steering Wheel Module Stage 1 Low Control	**2:** I	**2:** -
3: 3	**3:** 0.5	**3:** OG/D-GN	**3:** 3023	**3:** Steering Wheel Module Stage 2 High Control	**3:** I	**3:** Early Production
4: 4	**4:** 0.5	**4:** WH/D-GN	**4:** 3022	**4:** Steering Wheel Module Stage 2 Low Control	**4:** I	**4:** Early Production

X85 STEERING WHEEL AIR BAG COIL X3

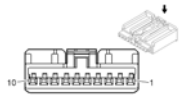

Connector Part Information

- Harness Type: Steering Wheel
- OEM Connector: 13574592
- Service Connector: 13576634
- Description: 10-Way F AIT II Series (BK)

Terminal Part Information

Terminal Type ID	Terminated Lead	Diagnostic Test Probe	Terminal Removal Tool	Service Terminal	Tray	Core Crimp	Insulation Crimp
I	13575867	J-35616-64B (L-BU)	J-38125-215A	SAIT-A03T-M064	14	P	P

X85 Steering Wheel Air Bag Coil X3

Pin	Size	Color	Circuit	Function	Terminal Type ID	Option
1-4	-	-	-	Not Occupied	-	-
5: 5	**5:** 0.5	**5:** YE	**5:** 6817	**5:** LED Backlight Dimming Control	**5:** I	**5:** -
6: 6	**6:** 0.5	**6:** WH/RD	**6:** 1444	**6:** 12 Volt Reference	**6:** I	**6:** -
7: 7	**7:** 0.5	**7:** D-GN/WH	**7:** 6819	**7:** Steering Wheel Resistor Ladder Signal 2	**7:** I	**7:** -
8: 8	**8:** 0.5	**8:** BN/D-GN	**8:** 1884	**8:** Cruise Control Set/Coast/Resume/Accelerate Switch Signal	**8:** I	**8:** -
9: 9	**9:** 0.5	**9:** BK	**9:** 50	**9:** Ground	**9:** I	**9:** -
10: 10	**10:** 0.5	**10:** BN/WH	**10:** 3287	**10:** Horn Switch Signal	**10:** I	**10:** -

2013 ELECTRICAL

Wiring Systems And Power Management - Inline Harness Connector End Views - Index

INLINE HARNESS CONNECTOR END VIEWS - INDEX

NOTE: **Inline Harness Connector end views are sorted in alpha/Numeric sequence based upon connector ID (Code), NOT component name. If you do not know the connector ID, a search using the relevant component may help locate the desired connector link.**

INLINE HARNESS CONNECTOR END VIEWS - INDEX

Description
X100 Body Harness to Forward Lamp Harness
X102 Engine Cooling Harness to Forward Lamp Harness
X104 Engine Cooling Harness to Forward Lamp Harness
X105 Engine Harness to Fuel Injectors Harness (LUW/LWE)
X190 Body Harness to Engine Harness
X114 Power Steering Harness to Forward Lamp Harness
X200 Instrument Panel Harness to Body Harness
X203 Instrument Panel Harness to Passenger Instrument Panel Air Bag Harness
X205 Instrument Panel Harness to Body Harness (UQA)
X210 Headliner Harness to Body Harness
X211 Headliner Harness to Body Harness
X212 Instrument Panel Harness to HVAC Harness (C68)
X300 Console Harness to Instrument Panel Harness
X310 Body Harness to Driver Seat Harness
X320 Body Harness to Passenger Seat Harness
X335 Body Harness to Curtain Air Bag Harness
X345 Body Harness to Curtain Air Bag Harness
X401 Fuel Tank Harness to Body Harness
X402 Rear Object Sensor Harness to Body Harness (UD7)
X410 Left Tail Lamp Harness to Body Harness
X420 Right Tail Lamp Harness to Body Harness
X500 Driver Door Harness to Body Harness
X600 Passenger Door Harness to Body Harness
X700 Left Rear Door Harness to Body Harness
X800 Right Rear Door Harness to Body Harness
X900 Rear Compartment Lid Harness to Body Harness
X910 Left Inner Tail Lamp Harness to Rear Compartment Lid Harness
X920 Right Inner Tail Lamp Harness to Rear Compartment Lid Harness
X915 License Lamp Harness to Rear Compartment Lid Harness (-UVC)

X915 License Lamp Harness to Rear Compartment Lid Harness (UVC)

2013 ELECTRICAL

Wiring Systems and Power Management - Component Locator - Inline Harness Connector End Views - Cruze

INLINE HARNESS CONNECTOR END VIEWS

X100 BODY HARNESS TO FORWARD LAMP HARNESS

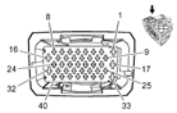	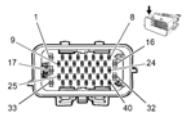
Connector Part Information • Harness Type: Body • OEM Connector: 13603185 • Service Connector: 13576549 • Description: 40-Way F 1.5/2.8 Series, Sealed (BK)	Connector Part Information • Harness Type: Forward Lamp • OEM Connector: 13603205 • Service Connector: 13576552 • Description: 40-Way M 1.5/2.8 Series, Sealed (BK)

Terminal Part Information

Terminal Type ID	Terminated Lead	Diagnostic Test Probe	Terminal Removal Tool	Service Terminal	Tray	Core Crimp	Insulation Crimp
I	13575393	J-35616-35 (VT)	J-38125-36	4-964286-1	16	E	1
II	13578874	J-35616-14 (GN)	J-38125-560	964274-2	16	E	1
III	13575356	J-35616-3 (GY)	J-38125-560	964269-3	32	E	1
IV	13327146	J-35616-5 (PU)	J-38125-36	1-962915-3	15	E	1
V	SEALED: 13575387 UNSEALED: 13327171	J-35616-3 (GY)	J-38125-560	969079-2	32	2	C

X100 Body Harness to Forward Lamp Harness

Pin	Size	Color	Circuit	Terminal Type ID	Option	Function	Pin	Size	Color	Circuit	Termi Type I
1: 1	**1:** 1	**1:** YE	**1:** 712	**1:** I	**1:** -	**1:** Left Headlamp Low Beam Control	**1:** 1	**1:** 1	**1:** YE	**1:** 712	**1:** IV
						2: Shutter					

2: 2	**2:** 0.75	**2:** GY/BK	**2:** 3437	**2:** -	**2:** WA7	Valve Solenoid Control	**2:** 2	**2:** 0.75	**2:** GY/BK	**2:** 3437	**2:** Ill
3-7	-	-	-	-	-	Not Occupied	3-7	-	-	-	-
8: 8	**8:** 0.5	**8:** BN/D-GN	**8:** 109	**8:** -	**8:** -	**8:** Hood Ajar Switch Signal	**8:** 8	**8:** 0.5	**8:** BN/D-GN	**8:** 109	**8:** -
9: 9	**9:** 0.5	**9:** D-BU	**9:** 2500	**9:** -	**9:** -	**9:** High Speed GMLAN Serial Data (+) (1)	**9:** 9	**9:** 0.5	**9:** D-BU	**9:** 2500	**9:** -
10: 10	**10:** 0.5	**10:** WH	**10:** 2501	**10:** -	**10:** -	**10:** High Speed GMLAN Serial Data (-) (1)	**10:** 10	**10:** 0.5	**10:** WH	**10:** 2501	**10:** -
11: 11	**11:** 0.5	**11:** D-BU	**11:** 2500	**11:** -	**11:** -	**11:** High Speed GMLAN Serial Data (+) (1)	**11:** 11	**11:** 0.5	**11:** D-BU	**11:** 2500	**11:** -
12: 12	**12:** 0.5	**12:** WH	**12:** 2501	**12:** -	**12:** -	**12:** High Speed GMLAN Serial Data (-) (1)	**12:** 12	**12:** 0.5	**12:** WH	**12:** 2501	**12:** -
13: 13	**13:** 0.5	**13:** WH/D-BU	**13:** 5986	**13:** -	**13:** -	**13:** Serial Data Communication Enable	**13:** 13	**13:** 0.5	**13:** WH/D-BU	**13:** 5986	**13:** -
14-16	-	-	-	-	-	Not Occupied	14-16	-	-	-	-
17: 17	**17:** 1	**17:** YE	**17:** 312	**17:** -	**17:** -	**17:** Right Headlamp Low Beam Control	**17:** 17	**17:** 1	**17:** YE	**17:** 312	**17:** -
18: 18	**18:** 0.5	**18:** D-BU/WH	**18:** 1314	**18:** -	**18:** -	**18:** Left Front Turn Signal Lamp Control	**18:** 18	**18:** 0.5	**18:** L-BU/WH	**18:** 1314	**18:** -
19: 19	**19:** 0.5	**19:** D-GN/VT	**19:** 1315	**19:** -	**19:** -	**19:** Right Front Turn Signal Lamp Control	**19:** 19	**19:** 0.5	**19:** D-GN/VT	**19:** 1315	**19:** -
20: 20	**20:** 0.5	**20:** VT/WH	**20:** 5203	**20:** -	**20:** -	**20:** Air Quality Sensor Signal	**20:** 20	**20:** 0.5	**20:** VT/WH	**20:** 5203	**20:** -
21: 21	**21:** 0.5	**21:** D-BU/GY	**21:** 636	**21:** -	**21:** -	**21:** Outside Ambient Air Temperature Sensor Signal	**21:** 21	**21:** 0.5	**21:** D-BU/GY	**21:** 636	**21:** -
22: 22	**22:** 0.5	**22:** BK/D-BU	**22:** 61	**22:** -	**22:** -	**22:** Outside Ambient Temperature Sensor Low Reference	**22:** 22	**22:** 0.5	**22:** BK/D-BU	**22:** 61	**22:** -
23-24	-	-	-	-	-	Not Occupied	23-24	-	-	-	-
						25: Right Front					

25: 25	**25:** 0.5BK/OG	**25:** 0.5BK/OG	**25:** 5600	**25:** -	**25:** -	Discriminating Sensor Low Reference	**25:** 25	**25:** 0.5BK/OG	**25:** 0.5BK/OG	**25:** 5600	**25:** -
26: 26	**26:** 0.5	**26:** OG/D-GN	**26:** 1409	**26:** -	**26:** -	**26:** Right Front Discriminating Sensor Signal	**26:** 26	**26:** 0.5	**26:** OG/D-GN	**26:** 1409	**26:** -
27: 27	**27:** 0.5	**27:** BN/D-GN	**27:** 109	**27:** -	**27:** -	**27:** Hood Ajar Switch Signal	**27:** 27	**27:** -	**27:** -	**27:** -	**27:** -
28: 28	**28:** 0.5	**28:** BN/D-GN	**28:** 59	**28:** -	**28:** LXT, LXV or 2H0	**28:** A/C Compressor Clutch Control	**28:** 28	**28:** 0.5	**28:** BN/D-GN	**28:** 59	**28:** -
29	-	-	-	-	-	Not Occupied	29	-	-	-	-
30: 30	**30:** 0.5	**30:** VT/GY	**30:** 709	**30:** -	**30:** -	**30:** Left Park Lamp Control	**30:** 30	**30:** 0.5	**30:** VT/GY	**30:** 709	**30:** -
31: 31	**31:** 0.5	**31:** GY/BN	**31:** 309	**31:** -	**31:** -	**31:** Right Park Lamp Control	**31:** 31	**31:** 0.5	**31:** GY/BN	**31:** 309	**31:** -
32-33	-	-	-	-	-	Not Occupied	32-33	-	-	-	-
34: 34	**34:** 0.5	**34:** BN/D-GN	**34:** 196	**34:** -	**34:** -	**34:** Windshield Wiper Motor Park Switch Signal	**34:** 34	**34:** 0.5	**34:** BN/D-GN	**34:** 196	**34:** -
35: 35	**35:** 0.5	**35:** GY/WH	**35:** 7064	**35:** -	**35:** -	**35:** Wheel Speed Sensor Control Left Front	**35:** 35	**35:** 0.5	**35:** GY/WH	**35:** 7064	**35:** -
36: 36	**36:** 0.5	**36:** GY	**36:** 830	**36:** -	**36:** -	**36:** Wheel Speed Sensor Signal Left Front	**36:** 36	**36:** 0.5	**36:** GY	**36:** 830	**36:** -
37: 37	**37:** 0.5	**37:** GY/BN	**37:** 7065	**37:** -	**37:** -	**37:** Wheel Speed Sensor Control Right Front	**37:** 37	**37:** 0.5	**37:** GY/BN	**37:** 7065	**37:** -
38: 38	**38:** 0.5	**38:** YE	**38:** 872	**38:** -	**38:** -	**38:** Wheel Speed Sensor Signal Right Front	**38:** 38	**38:** 0.5	**38:** YE	**38:** 872	**38:** -
39: 39	**39:** 0.5	**39:** OG/YE	**39:** 354	**39:** -	**39:** -	**39:** Left Front Discriminating Sensor Signal	**39:** 39	**39:** 0.5	**39:** OG/YE	**39:** 354	**39:** -
40: 40	**40:** 0.5	**40:** BK/OG	**40:** 5045	**40:** -	**40:** -	**40:** Left Front Discriminating Sensor Low Reference	**40:** 40	**40:** 0.5	**40:** BK/OG	**40:** 5045	**40:** -

X102 ENGINE COOLING HARNESS TO FORWARD LAMP HARNESS

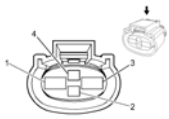

Connector Part Information

- Harness Type: Engine Cooling
- OEM Connector: 13652295
- Service Connector: Service by Harness - See Part Catalog
- Description: 4-Way F 2.8 6.3 MCP Series, Sealed (BK)

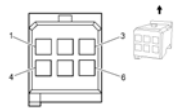

Connector Part Information

- Harness Type: Forward Lamp
- OEM Connector: 13652747
- Service Connector: 13581096
- Description: 4-Way M (BK)

Terminal Part Information

Terminal Type ID	Terminated Lead	Diagnostic Test Probe	Terminal Removal Tool	Service Terminal	Tray	Core Crimp	Insulation Crimp
I	Pending	Pending	Pending	Pending	Pending	Not Available	Not Available
II	Pending	Pending	Pending	Pending	Pending	Not Available	Not Available
III	13327146	J-35616-5 (PU)	J-38125-36	1-962915-3	15	E	1
IV	13578881	Not Available	Not Available	Not Available	Not Available	Not Available	Not Available

X102 Engine Cooling Harness to Forward Lamp Harness

Pin	Size	Color	Circuit	Terminal Type ID	Option	Function	Pin	Size	Color	Circuit	Terminal Type ID	Option
1: 1	**1:** 4	**1:** YE	**1:** 5358	**1:** I	**1:** -	**1:** Cooling Fan Motor Control (3)	**1:** 1	**1:** 4	**1:** YE	**1:** 5358	**1:** II	**1:** -
2: 2	**2:** 2.5	**2:** GY	**2:** 532	**2:** I	**2:** -	**2:** Cooling Fan Motor Control (2)	**2:** 2	**2:** 2.5	**2:** GY	**2:** 532	**2:** IV	**2:** -
3: 3	**3:** 2.5	**3:** WH/D-BU	**3:** 409	**3:** I	**3:** -	**3:** Cooling Fan Motor Control (1)	**3:** 3	**3:** 2.5	**3:** WH/D-BU	**3:** 409	**3:** II	**3:** -
4	-	-	-	-	-	Not Occupied	4	-	-	-	-	-

X104 ENGINE COOLING HARNESS TO FORWARD LAMP HARNESS

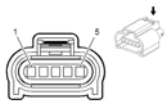

Connector Part Information

- Harness Type: Engine Cooling
- OEM Connector: 13652294
- Service Connector: Service by Harness- See Part Catalog
- Description: 5-Way F 1.5 MCP Series, Sealed (BK)

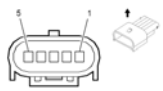

Connector Part Information

- Harness Type: Forward Lamp
- OEM Connector: 1897207
- Service Connector: 13580975
- Description: 5-Way M (BK)

Terminal Part Information

Terminal Type ID	Terminated Lead	Diagnostic Test Probe	Terminal Removal Tool	Service Terminal	Tray	Core Crimp	Insulation Crimp
I	Pending	No Tool Reqd	No Tool Reqd	15366022	20	Not Available	Not Available
II	SEALED: 13575387 UNSEALED: 13327171	J-35616-3 (GY)	J-38125-560	969079-2	32	2	C

X104 Engine Cooling Harness to Forward Lamp Harness

Pin	Size	Color	Circuit	Terminal Type ID	Option	Function	Pin	Size	Color	Circuit	Terminal Type ID	Option
1: 1	**1:** 0.5	**1:** D-GN	**1:** 380	**1:** I	**1:** -	**1:** A/C Refrigerant Pressure Sensor Signal	**1:** 1	**1:** 0.5	**1:** D-GN	**1:** 380	**1:** II	**1:** -
2: 2	**2:** 0.5	**2:** BN/RD	**2:** 2700	**2:** I	**2:** -	**2:** A/C Pressure Sensor 5V Reference	**2:** 2	**2:** 0.5	**2:** BN/RD	**2:** 2700	**2:** II	**2:** -
3: 3	**3:** 0.5	**3:** BK/BN	**3:** 5514	**3:** I	**3:** -	**3:** A/C Refrigerant Pressure Sensor Low Reference	**3:** 3	**3:** 0.5	**3:** BK/BN	**3:** 5514	**3:** II	**3:** -
4: 4	**4:** 0.5	**4:** D-GN/VT	**4:** 2032	**4:** I	**4:** -	**4:** Coolant Temperature Sensor Signal	**4:** 4	**4:** 0.5	**4:** D-GN/VT	**4:** 2032	**4:** II	**4:** -
	5:	**5:**	**5:**			**5:** Coolant Temperature		**5:**	**5:**	**5:**		

5: 5	0.5	BK/D-BU	6813	**5:** I	**5:** -	Sensor #2 Low Reference	**5:** 5	0.5	BK/D-BU	6813	**5:** II	**5:** -

X105 ENGINE HARNESS TO FUEL INJECTORS HARNESS (LUW/LWE)

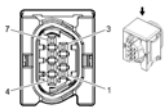

Connector Part Information

- Harness Type: Engine
- OEM Connector: 13123956
- Service Connector: 13355745
- Description: 7-Way F 1.6 Series, Sealed (BK)

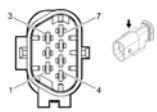

Connector Part Information

- Harness Type: Fuel Injector
- OEM Connector: 13123957
- Service Connector: Service by Harness - See Part Catalog
- Description: 7-Way M 1.6 Series, Sealed (BK)

Terminal Part Information

Terminal Type ID	Terminated Lead	Diagnostic Test Probe	Terminal Removal Tool	Service Terminal	Tray	Core Crimp	Insulation Crimp
I	Pending	J-35616-14 (GN)	J-38125-560	964274-2	16	E	1
II	Pending	Pending	Pending	Pending	Pending	Not Available	Not Available

X105 Engine Harness to Fuel Injectors Harness (LUW/LWE)

Pin	Size	Color	Circuit	Terminal Type ID	Option	Function	Pin	Size	Color	Circuit	Terminal Type ID	Option
1: 1	**1:** 0.5	**1:** BN/VT	**1:** 1744	**1:** I	**1:** -	**1:** Fuel Injector Control (1)	**1:** 1	**1:** 0.5	**1:** BN	**1:** 1744	**1:** II	**1:** -
2: 2	**2:** 0.5	**2:** YE/WH	**2:** 1745	**2:** I	**2:** -	**2:** Fuel Injector Control (2)	**2:** 2	**2:** 0.5	**2:** L-GN/BK	**2:** 1745	**2:** II	**2:** -
3: 3	**3:** 0.5	**3:** BN/VT	**3:** 1746	**3:** I	**3:** -	**3:** Fuel Injector Control (3)	**3:** 3	**3:** 0.5	**3:** WH/BK	**3:** 1746	**3:** II	**3:** -
4: 4	**4:** 0.5	**4:** BN/YE	**4:** 844	**4:** I	**4:** -	**4:** Fuel Injector Control (4)	**4:** 4	**4:** 0.5	**4:** D-BU/BK	**4:** 844	**4:** II	**4:** -
	5:	**5:**	**5:**			**5:** Powertrain Main Relay		**5:**	**5:**	**5:**		

5: 5	0.5	VT/D-BU	5291	**5:** I	**5:** -	Fused Supply (2)	**5:** 5	0.5	PK/BK	5291	**5:** II	**5:** -
6-7	-	-	-	-	-	Not Occupied	6-7	-	-	-	-	-

X190 BODY HARNESS TO ENGINE HARNESS

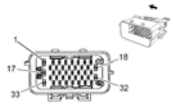	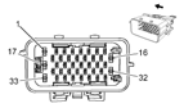
Connector Part Information • Harness Type: Body • OEM Connector: 13603186 • Service Connector: 13576550 • Description: 40-Way F 1.5/2.8 Series, Sealed (GY)	Connector Part Information • Harness Type: Engine • OEM Connector: 13603206 • Service Connector: 13576553 • Description: 40-Way M 1.5/2.8 Series, Sealed (GY)

Terminal Part Information

Terminal Type ID	Terminated Lead	Diagnostic Test Probe	Terminal Removal Tool	Service Terminal	Tray	Core Crimp	Insulation Crimp
I	13327156	J-35616-35 (VT)	J-38125-36	4-964286-1	16	E	1
II	Pending	J-35616-14 (GN)	J-38125-560	964274-2	16	E	1
III	Pending	Pending	Not Available	Service by Harness - See Part Catalog	Service by Harness - See Part Catalog	Not Available	Not Available
IV	13575380	J-35616-3 (GY)	J-38125-560	964265-2	28	E	1

X190 Body Harness to Engine Harness

Pin	Size	Color	Circuit	Terminal Type ID	Option	Function	Pin	Size	Color	Circuit	Terminal Type ID	Option
1	-	-	-	-	-	Not Occupied	1	-	-	-	-	-
2: 2	**2:** 0.5	**2:** WH	**2:** 5359	**2:** -	**2:** LUJ with MH8	**2:** Brake Apply Sensor Supply Voltage	**2:** 2	**2:** 0.5	**2:** WH	**2:** 5381	**2:** -	**2:** LUJ with MH8
3: 3	**3:** 0.5	**3:** BK/BN	**3:** 5360	**3:** -	**3:** LUJ with MH8	**3:** Low Reference	**3:** 3	**3:** 0.5	**3:** BK/BN	**3:** 5382	**3:** -	**3:** LUJ with MH8
4:	**4:**	**4:** D-	**4:**		**4:** LUJ	**4:** Brake Apply	**4:**	**4:**	**4:** L-	**4:**		**4:** LUJ

4	0.5	BU/YE	5361	**4:** -	with MH8	Sensor Signal	4	0.5	BU/YE	5380	**4:** -	with MH8
5	-	-	-	-	-	Not Occupied	5	-	-	-	-	-
6: 6	**6:** 0.5	**6:** D-BU/VT	**6:** 1589	**6:** -	**6:** -	**6:** Primary Fuel Level Sensor Signal	**6:** 6	**6:** 0.5 **6:** 0.5	**6:** D-BU/VT **6:** L-BU/VT	**6:** 1589 **6:** 1589	**6:** -	**6:** LUJ **6:** LUW
7	-	-	-	-	-	Not Occupied	7	-	-	-	-	-
8: 8	**8:** 0.5	**8:** YE	**8:** 6111	**8:** -	**8:** -	**8:** Clutch Apply Sensor Signal	**8:** 8	**8:** 0.5	**8:** YE	**8:** 6111	**8:** -	**8:** MF3
9: 9	**9:** 0.5	**9:** GY/RD	**9:** 6109	**9:** -	**9:** -	**9:** Clutch Apply Sensor Voltage Reference	**9:** 9	**9:** 0.5	**9:** GY/RD	**9:** 6109	**9:** -	**9:** MF3
10: 10	**10:** 0.5	**10:** WH/D-BU	**10:** 6311	**10:** -	**10:** -	**10:** Cruise/ETC/TCC Brake Signal	**10:** 10	**10:** 0.5	**10:** WH/L-BU	**10:** 6311	**10:** -	**10:** -
11: 11	**11:** 0.5	**11:** VT/YE	**11:** 5985	**11:** -	**11:** -	**11:** Accessory Wakeup Serial Data	**11:** 11	**11:** 0.5 **11:** 0.5	**11:** L-BU **11:** VT/YE	**11:** 5985 **11:** 5985	**11:** -	**11:** LUJ **11:** LUW
12: 12	**12:** 0.5	**12:** BN/WH	**12:** 419	**12:** -	**12:** -	**12:** Check Engine Indicator Control	**12:** 12	**12:** 0.5	**12:** BN/WH	**12:** 419	**12:** -	**12:** -
13: 13	**13:** 0.5	**13:** WH	**13:** 2501	**13:** -	**13:** -	**13:** High Speed GMLAN Serial Data (-) (1)	**13:** 13	**13:** 0.5	**13:** WH	**13:** 2501	**13:** -	**13:** -
14: 14	**14:** 0.5	**14:** D-BU	**14:** 2500	**14:** -	**14:** -	**14:** High Speed GMLAN Serial Data (+) (1)	**14:** 14	**14:** 0.5	**14:** L-BU	**14:** 2500	**14:** -	**14:** -
15: 15	**15:** 0.5	**15:** D-GN/GY	**15:** 465	**15:** -	**15:** -	**15:** Fuel Pump Primary Relay Control	**15:** 15	**15:** 0.5 **15:** 0.5	**15:** L-GN/GY **15:** D-GN/GY	**15:** 465 **15:** 465	**15:** -	**15:** LUJ **15:** LUW
16-17	-	-	-	-	-	Not Occupied	16-17	-	-	-	-	-
18: 18	**18:** 0.5	**18:** BK/D-GN	**18:** 6281	**18:** -	**18:** -	**18:** Low Reference	**18:** 18	**18:** 0.5	**18:** BK/D-GN	**18:** 6281	**18:** -	**18:** -
19: 19	**19:** 0.5	**19:** D-BU/WH	**19:** 890	**19:** -	**19:** -	**19:** Fuel Tank Pressure Sensor Signal	**19:** 19	**19:** 0.5	**19:** L-BU/WH	**19:** 890	**19:** -	**19:** -
20: 20	**20:** 0.5	**20:** YE/RD	**20:** 2709	**20:** -	**20:** -	**20:** 5 Volt Reference	**20:** 20	**20:** 0.5	**20:** YE/RD	**20:** 2709	**20:** -	**20:** -
21: 21	**21:** 0.75	**21:** WH	**21:** 1310	**21:** -	**21:** -	**21:** EVAP Canister Vent	**21:** 21	**21:** 0.75	**21:** WH	**21:** 1310	**21:** -	**21:** -

						Solenoid Control						
22: 22	**22:** 0.5	**22:** BK/D-GN	**22:** 6281	**22:** -	**22:** -	**22:** Low Reference	**22:** 22	**22:** 0.5 **22:** 0.5	**22:** BN/D-GN **22:** BK/D-GN	**22:** 6281 **22:** 6281	**22:** -	**22:** LUJ **22:** LUW
23: 23	**23:** 0.5	**23:** BK/GY	**23:** 6110	**23:** -	**23:** -	**23:** Clutch Apply Sensor Low Reference	**23:** 23	**23:** 0.5	**23:** BK/GY	**23:** 6110	**23:** -	**23:** -
24: 24	**24:** 0.5	**24:** BK/D-BU	**24:** 1271	**24:** -	**24:** -	**24:** Accelerator Pedal Position Low Reference (1)	**24:** 24	**24:** 0.5 **24:** 0.5	**24:** BK/VT **24:** BK/L-BU	**24:** 1271 **24:** 1271	**24:** -	**24:** LUJ **24:** LUW
25: 25	**25:** 0.5	**25:** YE/WH	**25:** 1161	**25:** -	**25:** -	**25:** Accelerator Pedal Position Signal (1)	**25:** 25	**25:** 0.5	**25:** YE/WH	**25:** 1161	**25:** -	**25:** -
26: 26	**26:** 0.5	**26:** WH/RD	**26:** 1164	**26:** -	**26:** -	**26:** Accelerator Pedal Position 5V Reference (1)	**26:** 26	**26:** 0.5 **26:** 0.5	**26:** BN/RD **26:** WH/RD	**26:** 1164 **26:** 1164	**26:** -	**26:** LUJ **26:** LUW
27: 27	**27:** 0.5 **27:** 0.5	**27:** BK **27:** BK/VT	**27:** 1272 **27:** 1272	**27:** -	**27:** LUJ **27:** LUW	**27:** Accelerator Pedal Position Low Reference (2) **27:** Accelerator Pedal Position Low Reference (2)	**27:** 27	**27:** 0.5 **27:** 0.5	**27:** BN/VT **27:** BK/VT	**27:** 1272 **27:** 1272	**27:** -	**27:** LUJ **27:** LUW
28: 28	**28:** 0.5	**28:** D-GN/WH	**28:** 1162	**28:** -	**28:** -	**28:** Accelerator Pedal Position Signal (2)	**28:** 28	**28:** 0.5 **28:** 0.5	**28:** L-GN/WH **28:** D-GN/WH	**28:** 1162 **28:** 1162	**28:** -	**28:** LUJ **28:** LUW
29: 29	**29:** 0.5	**29:** BN/RD	**29:** 1274	**29:** -	**29:** -	**29:** Accelerator Pedal Position Signal (2)	**29:** 29	**29:** 0.5	**29:** BN/RD	**29:** 1274	**29:** -	**29:** -
30: 30	**30:** 0.75	**30:** D-BU	**30:** 5372	**30:** -	**30:** -	**30:** Canister Valve Solenoid	**30:** 30	**30:** 0.75	**30:** D-BU	**30:** 5372	**30:** -	**30:** -
31	-	-	-	-	-	Not Occupied	31	-	-	-	-	-
32: 32	**32:** 0.75	**32:** D-BU/BN	**32:** 7573	**32:** I	**32:** -	**32:** Electric Variable Displacement Supply	**32:** 32	**32:** 0.75 **32:** 0.75	**32:** BN/BK **32:** L-BU/BN	**32:** 7573 **32:** 7573	**32:** III	**32:** LUJ **32:** LUW
						33: Electric		**33:**	**33:** BK/D-	**33:**		**33:**

33: 33	**33:** 0.75	**33:** D-BU/YE	**33:** 7574	**33:** I	**33:** -	Variable Displacement Control	**33:** 33	0.75 **33:** 0.75	BU **33:** L-BU/YE	7574 **33:** 7574	**33:** III	LUJ **33:** LUW
34-40	-	-	-	-	-	Not Occupied	34-40	-	-	-	-	-

X114 POWER STEERING HARNESS TO FORWARD LAMP HARNESS

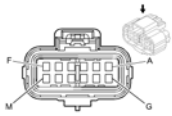

Connector Part Information

- Harness Type: Power Steering
- OEM Connector: 88986320
- Service Connector: 13504588
- Description: 12-Way F GT 150 Series, Sealed (BK/VT)

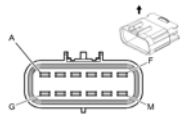

Connector Part Information

- Harness Type: Forward Lamp
- OEM Connector: 88986190
- Service Connector: 88986252
- Description: 12-Way M (BK/VT)

Terminal Part Information

Terminal Type ID	Terminated Lead	Diagnostic Test Probe	Terminal Removal Tool	Service Terminal	Tray	Core Crimp	Insulation Crimp
I	13578912	J-35616-2A (GY)	J-38125-553	12191819	8	E	1
II	Pending	J-35616-3 (GY)	J-38125-553	15326269	19	E	4

X114 Power Steering Harness to Forward Lamp Harness

Pin	Size	Color	Circuit	Terminal Type ID	Option	Function	Pin	Size	Color	Circuit	Terminal Type ID	Option
A: A	**A:** 0.5	**A:** D-BU	**A:** 2500	**A:** I	**A:** -	**A:** High Speed GMLAN Serial Data (+)	**A:** A	**A:** 0.5	**A:** D-BU	**A:** 2500	**A:** II	**A:** -
B: B	**B:** 0.5	**B:** WH	**B:** 2501	**B:** I	**B:** -	**B:** High Speed GMLAN Serial Data (-) (1)	**B:** B	**B:** 0.5	**B:** WH	**B:** 2501	**B:** II	**B:** -
C: C	**C:** 0.5	**C:** D-BU	**C:** 2500	**C:** I	**C:** -	**C:** High Speed GMLAN Serial Data (+)	**C:** C	**C:** 0.5	**C:** D-BU	**C:** 2500	**C:** II	**C:** -
D: D	**D:** 0.5	**D:** WH	**D:** 2501	**D:** I	**D:** -	**D:** High Speed GMLAN Serial Data (-) (1)	**D:** D	**D:** 0.5	**D:** WH	**D:** 2501	**D:** II	**D:** -
E-K	-	-	-	-	-	Not Occupied	E-K	-	-	-	-	-

L: L	**L:** 0.5	**L:** WH/D-BU	**L:** 5986	**L:** I	**L:** -	**L:** Serial Data Communication Enable	**L:** L	**L:** 0.5	**L:** WH/D-BU	**L:** 5986	**L:** II	**L:** -
M	-	-	-	-	-	Not Occupied	M	-	-	-	-	-

X200 INSTRUMENT PANEL HARNESS TO BODY HARNESS

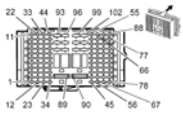

Connector Part Information

- Harness Type: Instrument Panel
- OEM Connector: 13611146
- Service Connector: 13337990
- Description: 102-Way F 1.6/2.8/8.0 Timer Series (BK)

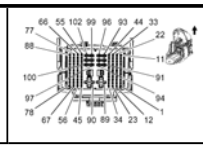

Connector Part Information

- Harness Type: Body
- OEM Connector: 13617496
- Service Connector: 13574781
- Description: 102-Way M 1.6/2.8/8.0 Timer Series (BK)

Terminal Part Information

Terminal Type ID	Terminated Lead	Diagnostic Test Probe	Terminal Removal Tool	Service Terminal	Tray	Core Crimp	Insulation Crimp
I	Pending	J-35616-44 (YE)	N/A	962932-1//A	962932-1//A	Not Available	Not Available
II	13575472	J-35616-35 (VT)	J-38125-36	4-965999-1	25	4	A
III	13575760	J-35616-14 (GN)	J-38125-560	964274-2	16	E	1
IV	13575591	J-35616-14 (GN)	J-38125-560	964265-2	28	E	2
V	Pending	J-35616-3 (GY)	J-38125-560	969079-2	32	2	C
VI	Pending	J-35616-21 (RD)	J-38125-221	963768-2//A	963768-2//A	Not Available	Not Available
VII	13575574	J-35616-5 (PU)	J-38125-36	2-964296-1	31	C	A
VIII	13575593	J-35616-14 (GN)	J-38125-560	964265-2	28	E	2

X200 Instrument Panel Harness to Body Harness

Pin	Size	Color	Circuit	Terminal Type ID	Option	Function	Pin	Size	Color	Circuit	Terminal Type ID	Op
1:	**1:** 0.75	**1:** D-	**1:**	**1:** -	**1:** UQA	**1:** Front Center	**1:**	**1:**	**1:** D-	**1:**	**1:** -	**1:** U

1		BU/YE	1960			Speaker (-)	1	0.75	BU/YE	1960		
2: 2	**2:** 0.75 1860 YE/WH	**2:** 0.75 1860 YE/WH	**2:** 1860	**2:** -	**2:** UQA	**2:** Front Center Speaker (+)	**2:** 2	**2:** 0.75	**2:** YE/WH	**2:** 1860	**2:** -	**2:** U
3	-	-	-	-	-	Not Occupied	3	-	-	-	-	
4: 4	**4:** 0.75	**4:** L-BU/BN	**4:** 7573	**4:** -	**4:** -	**4:** Electric Variable Displacement Supply	**4:** 4	**4:** 0.75	**4:** D-BU/BN	**4:** 7573	**4:** -	**4**
5: 5	**5:** 0.75	**5:** D-BU/YE	**5:** 7574	**5:** -	**5:** -	**5:** Electric Variable Displacement Control	**5:** 5	**5:** 0.75	**5:** D-BU/YE	**5:** 7574	**5:** -	**5**
6-7	-	-	-	-	-	Not Occupied	6-7	-	-	-	-	
8: 8	**8:** 0.5	**8:** BN/BK	**8:** 3552	**8:** -	**8:** -	**8:** Passive Start Interior Antenna 1 Signal Hi	**8:** 8	**8:** 0.5	**8:** BN/BK	**8:** 3552	**8:** -	**8**
9: 9	**9:** 0.5	**9:** D-BU	**9:** 3554	**9:** -	**9:** -	**9:** Passive Start Interior Antenna 2 Signal Hi	**9:** 9	**9:** 0.5	**9:** D-BU	**9:** 3554	**9:** -	**9**
10: 10	**10:** 0.5	**10:** GY/BK	**10:** 3555	**10:** -	**10:** -	**10:** Passive Start Interior Antenna 2 Signal Lo	**10:** 10	**10:** 0.5	**10:** GY/BK	**10:** 3555	**10:** -	**10**
11: 11	**11:** 0.5	**11:** WH	**11:** 3553	**11:** -	**11:** -	**11:** Passive Start Interior Antenna 1 Signal Lo	**11:** 11	**11:** 0.5	**11:** WH	**11:** 3553	**11:** -	**11**
12: 12	**12:** 0.75	**12:** BN/D-BU	**12:** 118	**12:** -	**12:** WIthout UQA	**12:** Left Front Speaker Signal (-)	**12:** 12	**12:** 0.75	**12:** BN/D-BU	**12:** 118	**12:** -	**1** WIt U
13: 13	**13:** 0.75	**13:** YE/BK	**13:** 117	**13:** -	**13:** WIthout UQA	**13:** Right Front Speaker Signal (-)	**13:** 13	**13:** 0.75	**13:** YE/BK	**13:** 117	**13:** -	**1** WIt U
14: 14	**14:** 0.75	**14:** D-GN/BK	**14:** 116	**14:** -	**14:** WIthout UQA	**14:** Left Rear Speaker Signal (-)	**14:** 14	**14:** 0.75	**14:** D-GN	**14:** 116	**14:** -	**1** WIt U
15: 15	**15:** 0.75	**15:** D-BU/BK	**15:** 115	**15:** -	**15:** -	**15:** Right Rear Speaker Signal (-)	**15:** 15	**15:** 0.75	**15:** D-BU	**15:** 115	**15:** -	**15**
16: 16	**16:** 0.5	**16:** VT/BK	**16:** 7553	**16:** -	**16:** -	**16:** Park Lock Solenoid Control	**16:** 16	**16:** 0.5	**16:** VT/BK	**16:** 7553	**16:** -	**16**
17-18	-	-	-	-	-	Not Occupied	17-18	-	-	-	-	
19: 19	**19:** 0.5	**19:** D-BU/YE	**19:** 6105	**19:** -	**19:** -	**19:** High Speed GMLAN Serial Data (+) (2)	**19:** 19	**19:** 0.5	**19:** D-BU/YE	**19:** 6105	**19:** -	**19**
20: 20	**20:** 0.5	**20:** WH	**20:** 6106	**20:** -	**20:** -	**20:** High Speed GMLAN Serial Data (-) (2)	**20:** 20	**20:** 0.5	**20:** WH	**20:** 6106	**20:** -	**20**
21: 21	**21:** 0.5	**21:** RD/WH	**21:** 40	**21:** -	**21:** -	**21:** Battery Positive Voltage	**21:** 21	**21:** 0.5	**21:** RD/WH	**21:** 40	**21:** -	**21**

22: 22	**22:** 0.5	**22:** YE	**22:** 40	**22:** -	**22:** -	**22:** Battery Positive Voltage	**22:** 22	**22:** 0.5	**22:** YE	**22:** 40	**22:** -	**22**
23: 23	**23:** 0.75	**23:** D-BU	**23:** 201	**23:** -	**23:** Without UQA	**23:** Left Front Speaker (+)	**23:** 23	**23:** 0.75	**23:** D-BU	**23:** 201	**23:** -	**2** Wit U
24: 24	**24:** 0.75	**24:** YE	**24:** 200	**24:** -	**24:** WIthout UQA	**24:** Right Front Speaker (+)	**24:** 24	**24:** 0.75	**24:** YE	**24:** 200	**24:** -	**2** WIt U
25: 25	**25:** 0.75	**25:** D-GN	**25:** 199	**25:** -	**25:** WIthout UQA	**25:** Left Rear Speaker (+)	**25:** 25	**25:** 0.75	**25:** D-GN	**25:** 199	**25:** -	**2** WIt U
26: 26	**26:** 0.75	**26:** WH	**26:** 46	**26:** -	**26:** WIthout UQA	**26:** Right Rear Speaker (+)	**26:** 26	**26:** 0.75	**26:** WH	**26:** 46	**26:** -	**2** WIt U
27: 27	**27:** 1	**27:** D-BU/VT	**27:** 807	**27:** -	**27:** -	**27:** OFF/Accessory Voltage	**27:** 27	**27:** 1	**27:** D-BU/VT	**27:** 807	**27:** -	**27**
28	-	-	-	-	-	Not Occupied	28	-	-	-	-	
29: 29	**29:** 0.5	**29:** BK/GY	**29:** 6110	**29:** -	**29:** -	**29:** Clutch Apply Sensor Low Reference	**29:** 29	**29:** 0.5	**29:** BK/GY	**29:** 6110	**29:** -	**29**
30: 30	**30:** 0.5	**30:** YE	**30:** 6111	**30:** -	**30:** -	**30:** Clutch Apply Sensor Signal	**30:** 30	**30:** 0.5	**30:** YE	**30:** 6111	**30:** -	**30**
31: 31	**31:** 0.5	**31:** GY/RD	**31:** 6109	**31:** -	**31:** -	**31:** Clutch Apply Sensor Voltage Reference	**31:** 31	**31:** 0.5	**31:** GY/RD	**31:** 6109	**31:** -	**31**
32: 32	**32:** 0.5	**32:** YE	**32:** 7546	**32:** -	**32:** -	**32:** Logistics Relay Control	**32:** 32	**32:** 0.5	**32:** YE	**32:** 7546	**32:** -	**32**
33: 33	**33:** 0.35	**33:** GY/D-GN	**33:** 7565	**33:** -	**33:** C68	**33:** Windscreen Temp Sensor Signal	**33:** 33	**33:** 0.35	**33:** GY/D-GN	**33:** 7565	**33:** IV	**33:**
34	-	-	-	-	-	Not Occupied	34	-	-	-	-	
35: 35	**35:** 0.5	**35:** L-GN/BK	**35:** 5103	**35:** -	**35:** -	**35:** Technology Identification	**35:** 35	**35:** 0.5	**35:** D-GN/BK	**35:** 5103	**35:** -	**35**
36: 36	**36:** 0.5	**36:** YE/D-GN	**36:** 3274	**36:** -	**36:** -	**36:** Remote Function Actuator Transmit Signal	**36:** 36	**36:** 0.5	**36:** YE/D-GN	**36:** 3274	**36:** -	**36**
37: 37	**37:** 0.5	**37:** D-BU/WH	**37:** 3275	**37:** -	**37:** -	**37:** Remote Function Actuator Receive Signal	**37:** 37	**37:** 0.5	**37:** D-BU/WH	**37:** 3275	**37:** -	**37**
38: 38	**38:** 0.5	**38:** GY/WH	**38:** 3272	**38:** -	**38:** -	**38:** Remote Function Actuator Supply Voltage	**38:** 38	**38:** 0.5	**38:** GY/WH	**38:** 3272	**38:** -	**38**
39: 39	**39:** 0.5	**39:** GY	**39:** 3273	**39:** -	**39:** -	**39:** Remote Function Actuator Return	**39:** 39	**39:** 0.5	**39:** GY	**39:** 3273	**39:** -	**39**
40:	**40:**	**40:** D-	**40:**			**40:** Steering Column	**40:**	**40:**	**40:** D-	**40:**		

40	0.75	GN/VT	1601	**40:** -	**40:** -	Lock Signal	40	0.75	GN/VT	1601	**40:** -
41: 41	**41:** 0.5	**41:** D-BU/GY	**41:** 636	**41:** -	**41:** -	**41:** Outside Ambient Air Temperature Sensor Signal 45	**41:** 41	**41:** 0.5	**41:** D-BU/GY	**41:** 636	**41:** -
42-43	-	-	-	-	-	Not Occupied	42-43	-	-	-	-
44: 44	**44:** 0.35	**44:** YE/D-BU	**44:** 3197	**44:** -	**44:** C68	**44:** Humidity Temperature Sensor Signal	**44:** 44	**44:** 0.35	**44:** YE/D-BU	**44:** 3197	**44:** IV
45: 45	**45:** 0.5	**45:** YE/WH	**45:** 1161	**45:** -	**45:** -	**45:** Accelerator Pedal Position Signal (1)	**45:** 45	**45:** 0.5	**45:** YE/WH	**45:** 1161	**45:** -
46: 46	**46:** 0.5	**46:** BK/D-BU	**46:** 1271	**46:** -	**46:** -	**46:** Accelerator Pedal Position Low Reference (1)	**46:** 46	**46:** 0.5	**46:** BK/D-BU	**46:** 1271	**46:** -
47: 47	**47:** 0.5	**47:** BK/VT	**47:** 1272	**47:** -	**47:** -	**47:** Accelerator Pedal Position Low Reference (2)	**47:** 47	**47:** 0.5	**47:** BK/VT	**47:** 1272	**47:** -
48: 48	**48:** 0.5	**48:** L-GN/WH	**48:** 1162	**48:** -	**48:** -	**48:** Accelerator Pedal Position Signal (2)	**48:** 48	**48:** 0.5	**48:** D-GN/WH	**48:** 1162	**48:** -
49: 49	**49:** 0.5	**49:** BK/D-BU	**49:** 61	**49:** -	**49:** -	**49:** Outside Ambient Temperature Sensor Low Reference	**49:** 49	**49:** 0.5	**49:** BK/D-BU	**49:** 61	**49:** -
50: 50	**50:** 0.35	**50:** VT/WH	**50:** 5203	**50:** -	**50:** -	**50:** Air Quality Sensor Signal	**50:** 50	**50:** 0.5	**50:** VT/WH	**50:** 5203	**50:** -
51: 51	**51:** 0.5	**51:** L-GN/GY	**51:** 6135	**51:** -	**51:** -	**51:** Linear Interconnect Network Bus 4	**51:** 51	**51:** 0.5	**51:** D-GN/GY	**51:** 6135	**51:** -
52: 52	**52:** 0.5	**52:** WH	**52:** 5359	**52:** -	**52:** -	**52:** Brake Apply Sensor Supply Voltage	**52:** 52	**52:** 0.5	**52:** WH	**52:** 5359	**52:** -
53: 53	**53:** 0.5	**53:** VT/L-GN	**53:** 39	**53:** -	**53:** -	**53:** Ignition Voltage	**53:** 53	**53:** 0.5	**53:** VT/D-GN	**53:** 39	**53:** -
54: 54	**54:** 0.5	**54:** RD/L-GN	**54:** 40	**54:** -	**54:** -	**54:** Battery Positive Voltage	**54:** 54	**54:** 0.5	**54:** RD/D-GN	**54:** 40	**54:** -
55: 55	**55:** 0.5	**55:** RD/D-BU	**55:** 840	**55:** -	**55:** -	**55:** Battery Positive Voltage	**55:** 55	**55:** -	**55:** -	**55:** -	**55:** -
56: 56	**56:** 0.5	**56:** L-GN/BK	**56:** 2515	**56:** -	**56:** -	**56:** Keypad Supply Voltage	**56:** 56	**56:** 0.5	**56:** L-GN/BK	**56:** 2515	**56:** -
57: 57	**57:** 0.5	**57:** BN/YE	**57:** 39	**57:** -	**57:** -	**57:** Ignition Voltage	**57:** 57	**57:** 0.5	**57:** RD/D-GN	**57:** 39	**57:** -
58:	**58:**	**58:**	**58:**			**58:** Lift Glass/Trunk	**58:**	**58:**	**58:**	**58:**	

58	0.75	GY/YE	6188	**58:** -	**58:** -	Motor Release Control	58	0.75	GY/YE	6188	**58:** -	**58**
59: 59	**59:** 1	**59:** WH/BN	**59:** 6815	**59:** -	**59:** -	**59:** Inadvertent Power Control	**59:** 59	**59:** 0.5	**59:** WH/BN	**59:** 6815	**59:** -	**59**
60	-	-	-	-	-	Not Occupied	60	-	-	-	-	
61: 61	**61:** 0.5	**61:** BN/VT	**61:** 193	**61:** -	**61:** -	**61:** Rear Defog Relay Control	**61:** 61	**61:** 0.5	**61:** BN/VT	**61:** 193	**61:** -	**61**
62: 62	**62:** 0.35	**62:** BK/D-BU	**62:** 7566	**62:** -	**62:** C68	**62:** Humidity/Windscreen Temp Sensor Low Reference	**62:** 62	**62:** 0.35	**62:** BK/D-BU	**62:** 7566	**62:** -	**62:**
63: 63	**63:** 0.35	**63:** GY/D-BU	**63:** 7564	**63:** -	**63:** C68	**63:** Humidity Sensor Signal	**63:** 63	**63:** 0.35	**63:** GY/D-BU	**63:** 7564	**63:** -	**63:**
64: 64	**64:** 0.35	**64:** YE/RD	**64:** 597	**64:** -	**64:** C68	**64:** 5V Reference	**64:** 64	**64:** 0.35	**64:** YE/RD	**64:** 597	**64:** -	**64:**
65: 65	**65:** 0.5	**65:** BN/RD	**65:** 1274	**65:** -	**65:** -	**65:** Accelerator Pedal Position 5V Reference (2)	**65:** 65	**65:** 0.5	**65:** BN/RD	**65:** 1274	**65:** -	**65**
66: 66	**66:** 0.5	**66:** WH/RD	**66:** 1164	**66:** -	**66:** -	**66:** Accelerator Pedal Position 5V Reference (1)	**66:** 66	**66:** 0.5	**66:** WH/RD	**66:** 1164	**66:** -	**66**
67: 67	**67:** 0.5	**67:** WH/VT	**67:** 5905	**67:** -	**67:** -	**67:** Key Capture/Column Lock Shift Position Signal	**67:** 67	**67:** 0.5	**67:** WH/VT	**67:** 5905	**67:** -	**67**
68: 68	**68:** 0.5	**68:** L-GN/BN	**68:** 2087	**68:** -	**68:** -	**68:** Combined Vehicle Inertial Sensor Supply Voltage	**68:** 68	**68:** 0.5 **68:** 0.5	**68:** D-GN/BN **68:** D-GN/BN	**68:** 2087 **68:** 2087	**68:** V	**68**
69: 69	**69:** 0.5	**69:** D-BU/YE	**69:** 6795	**69:** -	**69:** -	**69:** Lift Glass/Trunk Motor Release Control 2	**69:** 69	**69:** 0.5	**69:** D-BU/YE	**69:** 6795	**69:** -	**69**
70: 70	**70:** 0.5	**70:** VT/WH	**70:** 239	**70:** -	**70:** -	**70:** Ignition Voltage	**70:** 70	**70:** 0.5	**70:** VT/WH	**70:** 239	**70:** -	**70**
71: 71	**71:** 0.5 **71:** 0.5	**71:** VT/WH **71:** VT/WH	**71:** 39 **71:** 39	**71:** -	**71:** -	**71:** Ignition Voltage **71:** Ignition Voltage	**71:** 71	**71:** 0.5	**71:** VT/WH	**71:** 39	**71:** -	**71**
72: 72	**72:** 0.5	**72:** GY/L-GN	**72:** 328	**72:** -	**72:** -	**72:** Interior Lamp Defeat Switch Signal	**72:** 72	**72:** 0.5	**72:** GY/D-GN	**72:** 328	**72:** -	**72**
73: 73	**73:** 0.5	**73:** YE	**73:** 5191	**73:** -	**73:** -	**73:** Microphone High Signal	**73:** 73	**73:** 0.5	**73:** YE	**73:** 5191	**73:** -	**73**
74:	**74:** 0.5	**74:**	**74:**	**74:** -	**74:** -	**74:** Microphone Low	**74:**	**74:**	**74:**	**74:**	**74:** -	**74**

74		BARE	5193			Signal	74	0.5	BARE	5193		
75: 75	**75:** 0.5	**75:** BN/WH	**75:** 2517	**75:** -	**75:** -	**75:** Keypad Red LED	**75:** 75	**75:** 0.5	**75:** OG/WH	**75:** 2517	**75:** -	**75**
76: 76	**76:** 0.5	**76:** YE/VT	**76:** 2516	**76:** -	**76:** -	**76:** Keypad Green LED	**76:** 76	**76:** 0.5	**76:** YE	**76:** 2516	**76:** -	**76**
77: 77	**77:** 0.5	**77:** L-GN/WH	**77:** 2514	**77:** -	**77:** -	**77:** Keypad Signal	**77:** 77	**77:** 0.5	**77:** D-GN/WH	**77:** 2514	**77:** -	**77**
78: 78	**78:** 0.5	**78:** BN/WH	**78:** 5043	**78:** -	**78:** -	**78:** Keyword 2000 Serial Data	**78:** 78	**78:** 0.5	**78:** BN/WH	**78:** 5043	**78:** -	**78**
79: 79	**79:** 0.5	**79:** BN/WH	**79:** 419	**79:** -	**79:** -	**79:** Check Engine Indicator Control	**79:** 79	**79:** 0.5	**79:** BN/WH	**79:** 419	**79:** -	**79**
80: 80	**80:** 0.5	**80:** WH/D-BU	**80:** 507	**80:** -	**80:** -	**80:** Wait To Start Indicator Control	**80:** 80	**80:** 0.5	**80:** WH/D-BU	**80:** 507	**80:** -	**80**
81: 81	**81:** 0.5 **81:** 0.5	**81:** D-BU **81:** D-BU	**81:** 6105 **81:** 6105	**81:** -	**81:** -	**81:** High Speed GMLAN Serial Data (+) (2) **81:** High Speed GMLAN Serial Data (+) (2)	**81:** 81	**81:** 0.5	**81:** D-BU/YE	**81:** 6105	**81:** -	**81**
82: 82	**82:** 0.5 **82:** 0.5	**82:** WH **82:** WH	**82:** 6106 **82:** 6106	**82:** -	**82:** -	**82:** High Speed GMLAN Serial Data (-) (2) **82:** High Speed GMLAN Serial Data (-) (2)	**82:** 82	**82:** 0.5	**82:** WH	**82:** 6106	**82:** -	**82**
83: 83	**83:** 0.5	**83:** D-BU/YE	**83:** 5361	**83:** -	**83:** -	**83:** Brake Apply Sensor Signal	**83:** 83	**83:** 0.5	**83:** D-BU/YE	**83:** 5361	**83:** -	**83**
84: 84	**84:** 0.5	**84:** VT/BK	**84:** 3	**84:** -	**84:** -	**84:** Ignition Voltage	**84:** 84	**84:** 0.5	**84:** VT/BK	**84:** 3	**84:** -	**84**
85: 85	**85:** 0.5	**85:** GY	**85:** 1903	**85:** -	**85:** UDN	**85:** AAS Wheel Speed Sensor Signal Left Front	**85:** 85	**85:** 0.5	**85:** GY	**85:** 1903	**85:** -	**8** UI
86: 86	**86:** 0.5	**86:** BK/BN	**86:** 5360	**86:** -	**86:** -	**86:** Brake Apply Sensor Low Reference	**86:** 86	**86:** 0.5	**86:** BK/BN	**86:** 5360	**86:** -	**86**
87: 87	**87:** 0.5	**87:** D-BU	**87:** 2500	**87:** -	**87:** -	**87:** High Speed GMLAN Serial Data (+) (1)	**87:** 87	**87:** 0.5	**87:** D-BU	**87:** 2500	**87:** -	**87**
88: 88	**88:** 0.5	**88:** WH	**88:** 2501	**88:** -	**88:** -	**88:** High Speed GMLAN Serial Data (-) (1)	**88:** 88	**88:** 0.5	**88:** WH	**88:** 2501	**88:** -	**88**
89: 89	**89:** 10	**89:** RD/YE	**89:** 40	**89:** I	**89:** -	**89:** Battery Positive Voltage	**89:** 89	**89:** 10	**89:** RD/YE	**89:** 40	**89:** VI	**89**
90:		**90:**				**90:** Battery Positive	**90:**	**90:**	**90:**			

90	**90:** 10	RD/D-GN	**90:** 40	**90:** I	**90:** -	Voltage	90	10	RD/D-GN	**90:** 40	**90:** VI	**90**
91: 91	**91:** 1.5	**91:** RD/BN	**91:** 702	**91:** II	**91:** -	**91:** Battery Positive Voltage	**91:** 91	**91:** 1.5	**91:** RD/BN	**91:** 702	**91:** VII	**91**
92-102	-	-	-	-	-	Not Occupied	92-102	-	-	-	-	

X203 INSTRUMENT PANEL HARNESS TO PASSENGER INSTRUMENT PANEL AIR BAG HARNESS

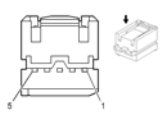

Connector Part Information

- Harness Type: Instrument Panel
- OEM Connector: 13601511
- Service Connector: 19178096
- Description: 5-Way F 0.64 Series Unsealed (YE)

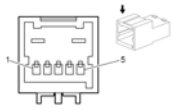

Connector Part Information

- Harness Type: Passenger Instrument Panel Air Bag
- OEM Connector: 19153435
- Service Connector: 19153435
- Description: 5-Way M 0.64 Series Unsealed (YE)

Terminal Part Information

Terminal Type ID	Terminated Lead	Diagnostic Test Probe	Terminal Removal Tool	Service Terminal	Tray	Core Crimp	Insulation Crimp
I	Service by Connector Assembly-13601511	J-35616-64B (L-BU)	J-38125-215A	Service by Connector Assembly-13601511	Service by Connector Assembly-13601511	Not Available	Not Available
II	Service by Harness- See Part Catalog	J-35616-65B (L-BU)	J-38125-215A	Service by Harness- See Part Catalog	Service by Harness- See Part Catalog	Not Available	Not Available

X203 Instrument Panel Harness to Passenger Instrument Panel Air Bag Harness

Pin	Size	Color	Circuit	Terminal Type ID	Option	Function	Pin	Size	Color	Circuit	Terminal Type ID	Option
1: 1	**1:** YE	**1:** YE	**1:** 3025	**1:** I	**1:** -	**1:** Passenger IP Module Stage 1 High Control	**1:** 1	**1:** 0.5	**1:** YE	**1:** 3025	**1:** II	**1:** -
2: 2	**2:** 0.5	**2:** OG	**2:** 3024	**2:** I	**2:** -	**2:** Passenger IP Module Stage 1 Low Control	**2:** 2	**2:** 0.5	**2:** OG	**2:** 3024	**2:** II	**2:** -
	3:		**3:**					**3:**		**3:**		

3: 3	0.5	**3:** BN	3050	**3:** I	**3:** -	**3:** Ground	**3:** 3	0.5	**3:** BN	3050	**3:** II	**3:** -
4: 4	**4:** 0.5	**4:** GY	**4:** 3027	**4:** I	**4:** -	**4:** Passenger IP Module Stage 2 High Control	**4:** 4	**4:** 0.5	**4:** GY	**4:** 3027	**4:** II	**4:** -
5: 5	**5:** 0.5	**5:** PU	**5:** 3026	**5:** I	**5:** -	**5:** Passenger IP Module Stage 2 Low Control	**5:** 5	**5:** 0.5	**5:** PU	**5:** 3026	**5:** II	**5:** -

X205 INSTRUMENT PANEL HARNESS TO BODY HARNESS (UQA)

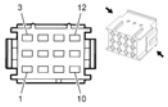

Connector Part Information

- Harness Type: Instrument Panel
- OEM Connector: 15426893
- Service Connector: 13337995
- Description: 12-Way F 1.2 Micro II Timer Series (BU)

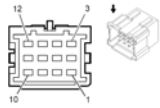

Connector Part Information

- Harness Type: Body
- OEM Connector: 15426897
- Service Connector: 13337988
- Description: 12-Way M 1.2 Micro II Timer Series (BU)

Terminal Part Information

Terminal Type ID	Terminated Lead	Diagnostic Test Probe	Terminal Removal Tool	Service Terminal	Tray	Core Crimp	Insulation Crimp
I	13575538	J-35616-14 (GN)	J-38125-560	962943-5	16	E	A
II	13575593	J-35616-14 (GN)	J-38125-560	964265-2	28	E	2
III	13575591	J-35616-14 (GN)	J-38125-560	964265-2	28	E	2

X205 Instrument Panel Harness to Body Harness (UQA)

Pin	Size	Color	Circuit	Terminal Type ID	Option	Function	Pin	Size	Color	Circuit	Terminal Type ID	Option
1: 1	**1:** 0.35	**1:** L-BU/BK	**1:** 1946	**1:** I	**1:** -	**1:** Right Rear Low Level Audio (-)	**1:** 1	**1:** 0.35	**1:** D-BU/BK	**1:** 1946	**1:** -	**1:** -
2: 2	**2:** 0.35	**2:** Bare	**2:** 2099	**2:** I	**2:** -	**2:** Left Rear Audio Drain Wire	**2:** 2	**2:** 0.35	**2:** Bare	**2:** 2099	**2:** -	**2:** -
3: 3	**3:** 0.35	**3:** L-BU/OG	**3:** 1546	**3:** I	**3:** -	**3:** Right Front Low Level Audio (-)	**3:** 3	**3:** 0.35	**3:** D-BU/BN	**3:** 1546	**3:** -	**3:** -

4: 4	**4:** 0.35	**4:** OG/VT	**4:** 1999	**4:** I	**4:** -	**4:** Left Rear Low Level Audio (-)	**4:** 4	**4:** 0.35	**4:** BN/VT	**4:** 1999	**4:** -	**4:** -
5: 5	**5:** 0.5	**5:** GN/YE	**5:** 7066	**5:** I	**5:** -	**5:** Entertainment Remote Enable Signal	**5:** 5	**5:** 0.5	**5:** D-GN/YE	**5:** 7066	**5:** -	**5:** -
6: 6	**6:** 0.35	**6:** YE	**6:** 512	**6:** I	**6:** -	**6:** Right Front Audio Signal (+)	**6:** 6	**6:** 0.35	**6:** YE	**6:** 512	**6:** -	**6:** -
7: 7	**7:** 0.35	**7:** BN/WH	**7:** 546	**7:** I	**7:** -	**7:** Right Rear Audio Signal (+)	**7:** 7	**7:** 0.35	**7:** BN/WH	**7:** 546	**7:** -	**7:** -
8: 8	**8:** 0.5	**8:** OG/D-BU	**8:** 6978	**8:** I	**8:** -	**8:** Amplifier Control	**8:** 8	**8:** 0.5	**8:** VT/D-BU	**8:** 6978	**8:** II	**8:** -
9: 9	**9:** 0.35	**9:** BN/D-BU	**9:** 1947	**9:** I	**9:** -	**9:** Left Front Low Level Audio (-)	**9:** 9	**9:** 0.35	**9:** BN/D-BU	**9:** 1947	**9:** -	**9:** -
10: 10	**10:** 0.35	**10:** D-GN/BK	**10:** 599	**10:** I	**10:** -	**10:** Left Front Audio Signal (+)	**10:** 10	**10:** 0.35	**10:** D-GN/BK	**10:** 599	**10:** -	**10:** -
11: 11	**11:** 0.35	**11:** BARE	**11:** 2011	**11:** I	**11:** -	**11:** Left Front Audio Drain Wire	**11:** 11	**11:** 0.35	**11:** BARE	**11:** 2011	**11:** -	**11:** -
12: 12	**12:** 0.35	**12:** D-BU	**12:** 511	**12:** I	**12:** -	**12:** Left Front Audio Signal (+)	**12:** 12	**12:** 0.35	**12:** D-BU	**12:** 511	**12:** -	**12:** -

X210 HEADLINER HARNESS TO BODY HARNESS

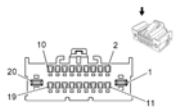

Connector Part Information

- Harness Type: Headliner
- OEM Connector: 13652302
- Service Connector: 13338800
- Description: 20-Way F (GY)

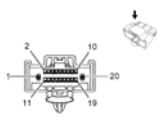

Connector Part Information

- Harness Type: Body
- OEM Connector: 90288200
- Service Connector: 13338001
- Description: 20-Way M (GY)

Terminal Part Information

Terminal Type ID	Terminated Lead	Diagnostic Test Probe	Terminal Removal	Service Terminal	Tray	Core Crimp	Insulation Crimp

			Tool				
I	Pending	Pending	Pending	Pending	Pending	Not Available	Not Available
II	Pending	Pending	Pending	Pending	Pending	Not Available	Not Available

X210 Headliner Harness to Body Harness

Pin	Size	Color	Circuit	Terminal Type ID	Option	Function	Pin	Size	Color	Circuit	Terminal Type ID	Option
1: 1	**1:** 1	**1:** BK	**1:** 50	**1:** I	**1:** -	**1:** Ground	**1:** 1	**1:** 1	**1:** BK	**1:** 50	**1:** II	**1:** -
2: 2	**2:** 0.5	**2:** GY	**2:** 3273	**2:** I	**2:** -	**2:** Remote Function Actuator Return	**2:** 2	**2:** 0.5	**2:** GY	**2:** 3273	**2:** II	**2:** -
3: 3	**3:** 0.5	**3:** GY/WH	**3:** 3272	**3:** I	**3:** -	**3:** Remote Function Actuator Supply Voltage	**3:** 3	**3:** 0.5	**3:** GY/WH	**3:** 3272	**3:** II	**3:** -
4: 4	**4:** 0.5	**4:** D-BU/WH	**4:** 3275	**4:** I	**4:** -	**4:** Remote Function Actuator Receive Signal	**4:** 4	**4:** 0.5	**4:** D-BU/WH	**4:** 3275	**4:** II	**4:** -
5: 5	**5:** 0.5	**5:** YE/D-GN	**5:** 3274	**5:** I	**5:** -	**5:** Remote Function Actuator Transmit Signal	**5:** 5	**5:** 0.5	**5:** YE/D-GN	**5:** 3274	**5:** II	**5:** -
6: 6	**6:** 1	**6:** WH/BN	**6:** 6815	**6:** I	**6:** -	**6:** Inadvertent Power Control	**6:** 6	**6:** 1	**6:** WH/BN	**6:** 6815	**6:** II	**6:** -
7: 7	**7:** 0.5	**7:** GY	**7:** 157	**7:** I	**7:** -	**7:** Interior Lamp Control	**7:** 7	**7:** 0.5	**7:** GY	**7:** 157	**7:** II	**7:** -
8: 8	**8:** 0.5	**8:** GY/D-GN	**8:** 328	**8:** I	**8:** -	**8:** Interior Lamp Defeat Switch Signal	**8:** 8	**8:** 0.5	**8:** GY/D-GN	**8:** 328	**8:** II	**8:** -
9: 9	**9:** 0.35	**9:** GY/D-BU	**9:** 7564	**9:** I	**9:** C68	**9:** Humidity Sensor Signal	**9:** 9	**9:** 0.35	**9:** GY/D-BU	**9:** 7564	**9:** II	**9:** C68
10: 10	**10:** 0.75	**10:** BN/D-BU	**10:** 118	**10:** I	**10:** UZ6	**10:** Left Front Speaker Signal (-) (1)	**10:** 10	**10:** 0.75	**10:** BN/D-BU	**10:** 118	**10:** II	**10:** UZ6
11: 11	**11:** 0.75	**11:** D-BU	**11:** 201	**11:** I	**11:** UZ6	**11:** Left Front Speaker (+)	**11:** 11	**11:** 0.75	**11:** D-BU	**11:** 201	**11:** II	**11:** UZ6

						(1)						
12: 12	**12:** 0.75	**12:** YE	**12:** 200	**12:** I	**12:** UZ6	**12:** Right Front Speaker (+) (1)	**12:** 12	**12:** 0.75	**12:** YE	**12:** 200	**12:** II	**12:** UZ6
13: 13	**13:** 0.75	**13:** YE/BK	**13:** 117	**13:** I	**13:** UZ6	**13:** Right Front Speaker Signal (-) (1)	**13:** 13	**13:** 0.75	**13:** YE/BK	**13:** 117	**13:** II	**13:** UZ6
14: 14	**14:** 0.5	**14:** WH/BN	**14:** 6815	**14:** I	**14:** -	**14:** Inadvertent Power Control	**14:** 14	**14:** 0.5	**14:** WH/BN	**14:** 6815	**14:** II	**14:** -
15: 15	**15:** 0.5	**15:** WH/BN	**15:** 6815	**15:** I	**15:** -	**15:** Inadvertent Power Control	**15:** 15	**15:** 0.5	**15:** WH/BN	**15:** 6815	**15:** II	**15:** -
16: 16	**16:** 0.35	**16:** BK/D-BU	**16:** 50	**16:** I	**16:** C68	**16:** Ground	**16:** 16	**16:** 0.35	**16:** BK/D-BU	**16:** 50	**16:** II	**16:** C68
17: 17	**17:** 0.35	**17:** GY/D-GN	**17:** 7565	**17:** I	**17:** C68	**17:** Windscreen Temp Sensor Signal	**17:** 17	**17:** 0.35	**17:** GY/D-GN	**17:** 7565	**17:** II	**17:** C68
18: 18	**18:** 0.35	**18:** YE/D-BU	**18:** 3197	**18:** I	**18:** C68	**18:** Humidity Temperature Sensor Signal	**18:** 18	**18:** 0.35	**18:** YE/D-BU	**18:** 3197	**18:** II	**18:** C68
19: 19	**19:** 0.35	**19:** YE/RD	**19:** 597	**19:** I	**19:** CJ2	**19:** 5V Reference	**19:** 19	**19:** 0.35	**19:** YE/RD	**19:** 597	**19:** II	**19:** CJ2
20: 20	**20:** 0.5	**20:** D-GN/BN	**20:** 6998	**20:** I	**20:** -	**20:** Inadvertent Load 1 Supply Voltage	**20:** 20	**20:** 0.5	**20:** D-GN/BN	**20:** 6998	**20:** II	**20:** -

2013 ELECTRICAL

Wiring Systems and Power Management - Component Locator - Inline Harness Connector End Views - Cruze

INLINE HARNESS CONNECTOR END VIEWS

X211 HEADLINER HARNESS TO BODY HARNESS

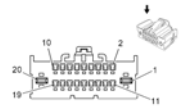	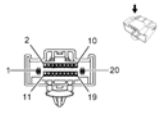
Connector Part Information • Harness Type: Headliner • OEM Connector: 13684139 • Service Connector: 13338003 • Description: 20-Way F (WH)	Connector Part Information • Harness Type: Body • OEM Connector: 90293800 • Service Connector: 13355858 • Description: 20-Way M (WH)

Terminal Part Information

Terminal Type ID	Terminated Lead	Diagnostic Test Probe	Terminal Removal Tool	Service Terminal	Tray	Core Crimp	Insulation Crimp
I	Pending	Pending	Pending	Pending	Pending	Not Available	Not Available
II	Pending	Pending	Pending	Pending	Pending	Not Available	Not Available

X211 Headliner Harness to Body Harness

Pin	Size	Color	Circuit	Terminal Type ID	Option	Function	Pin	Size	Color	Circuit	Terminal Type ID	Option
1: 1	**1:** 2.5	**1:** BK	**1:** 2050	**1:** I	**1:** -	**1:** Ground	**1:** 1	**1:** 2.5	**1:** BK	**1:** 2050	**1:** II	**1:** -
2: 2	**2:** 0.5	**2:** BK	**2:** 2050	**2:** I	**2:** -	**2:** Ground	**2:** 2	**2:** 0.5	**2:** BK	**2:** 2050	**2:** II	**2:** -
3: 3	**3:** 0.5	**3:** YE	**3:** 6817	**3:** I	**3:** CF5	**3:** LED Backlight Dimming Control	**3:** 3	**3:** 0.5	**3:** YE	**3:** 6817	**3:** II	**3:** CF5
4: 4	**4:** 0.5	**4:** D-GN/BN	**4:** 6132	**4:** I	**4:** -	**4:** Linear Interconnect Network Bus 1	**4:** 4	**4:** 0.5	**4:** D-GN/BN	**4:** 6132	**4:** II	**4:** -
	5:	**5:**				**5:** Ignition		**5:**	**5:**			

5: 5	0.5	VT/WH	**5:** 39	**5:** I	**5:** -	Voltage	**5:** 5	0.5	VT/WH	**5:** 39	**5:** II	**5:** -
6: 6	**6:** 0.35	**6:** D-GN/WH	**6:** 1324	**6:** I	**6:** -	**6:** Backup Lamp Control	**6:** 6	**6:** 0.35	**6:** D-GN/WH	**6:** 1324	**6:** II	**6:** -
7: 7	**7:** 0.5	**7:** YE	**7:** 5191	**7:** I	**7:** -	**7:** Microphone High Signal	**7:** 7	**7:** 0.5	**7:** YE	**7:** 5191	**7:** II	**7:** -
8: 8	**8:** 0.5	**8:** BARE	**8:** 5193	**8:** I	**8:** -	**8:** Microphone Low Signal	**8:** 8	**8:** 0.5	**8:** BARE	**8:** 5193	**8:** II	**8:** -
9: 9	**9:** 0.5	**9:** YE/VT	**9:** 2516	**9:** I	**9:** -	**9:** Keypad Green LED	**9:** 9	**9:** 0.5	**9:** YE/VT	**9:** 2516	**9:** II	**9:** -
10: 10	**10:** 0.5	**10:** L-GN/BK	**10:** 2515	**10:** I	**10:** -	**10:** Keypad Supply Voltage	**10:** 10	**10:** 0.5	**10:** L-GN/BK	**10:** 2515	**10:** II	**10:** -
11: 11	**11:** 0.5	**11:** GN/WH	**11:** 2514	**11:** I	**11:** -	**11:** Keypad Signal	**11:** 11	**11:** 0.5	**11:** D-GN/WH	**11:** 2514	**11:** II	**11:** -
12: 12	**12:** 0.5	**12:** BN/WH	**12:** 2517	**12:** I	**12:** -	**12:** Keypad Red LED	**12:** 12	**12:** 0.5	**12:** BN/WH	**12:** 2517	**12:** II	**12:** -
13-19	-	-	-	-	-	Not Occupied	14-19	-	-	-	-	-
20: 20	**20:** 2.5	**20:** RD/WH	**20:** 40	**20:** I	**20:** -	**20:** Battery Positive Voltage	**20:** 20	**20:** 2.5	**20:** RD/WH	**20:** 40	**20:** II	**20:** -

X212 INSTRUMENT PANEL HARNESS TO HVAC HARNESS (C68)

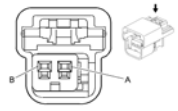

Connector Part Information

- Harness Type: Instrument Panel
- OEM Connector: 15332129
- Service Connector: 15306425
- Description: 2-Way F GT 150 Series (BK)

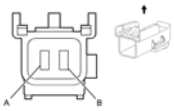

Connector Part Information

- Harness Type: HVAC
- OEM Connector: 15332130
- Service Connector: 88986459
- Description: 2-Way M GT 150 Series (BK)

Terminal Part Information

Terminal Type ID	Terminated Lead	Diagnostic Test Probe	Terminal Removal Tool	Service Terminal	Tray	Core Crimp	Insulation Crimp
I	13575735	J-35616-2A (GY)	J-38125-553	12191812	19	E	C
II	Pending	Pending	Pending	Pending	Pending	Not	Not

						Available	Available

X212 Instrument Panel Harness to HVAC Harness (C68)

Pin	Size	Color	Circuit	Terminal Type ID	Option	Function	Pin	Size	Color	Circuit	Terminal Type ID	Option
A	-	-	-	-	-	Not Occupied	A	-	-	-	-	-
B: B	**B:** 0.5	**B:** BN	**B:** 404	**B:** I	**B:** -	**B:** Upper Air Temperature Sensor Signal	**B:** B	**B:** 0.5	**B:** D-BU	**B:** 404	**B:** II	**B:** -

X300 CONSOLE HARNESS TO INSTRUMENT PANEL HARNESS

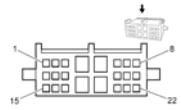

Connector Part Information

- Harness Type: Console
- OEM Connector: 13677589
- Service Connector: Service by Harness - See Part Catalog
- Description: 22-Way F MQS/MCP 2.8 Series (BK)

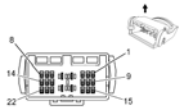

Connector Part Information

- Harness Type: Instrument Panel
- OEM Connector: 1897540
- Service Connector: 13580994
- Description: 22-Way M (BK)

Terminal Part Information

Terminal Type ID	Terminated Lead	Diagnostic Test Probe	Terminal Removal Tool	Service Terminal	Tray	Core Crimp	Insulation Crimp
I	SEALED: 13575390 UNSEALED: 13575522	J-35616-64B (L-BU)	J-38125-12A	928999-5	15	H	H
II	Pending	Pending	Pending	Pending	Pending	Not Available	Not Available
III	13327167	J-35616-65B (L-BU)	J-38125-12A	963716-2	7	H	H
IV	13575574	J-35616-5 (PU)	J-38125-36	2-964296-1	31	C	A

X300 Console Harness to Instrument Panel Harness

Pin	Size	Color	Circuit	Terminal Type ID	Option	Function	Pin	Size	Color	Circuit	Terminal Type ID	Option
1-3	-	-	-	-	-	Not Occupied	1-3	-	-	-	-	-

4: 4	**4:** 1	**4:** BK	**4:** 50	**4:** -	**4:** -	**4:** Ground	**4:** 4	**4:** 1	**4:** BK	**4:** 50	**4:** -	**4:** -
5: 5	**5:** 1	**5:** VT	**5:** 801	**5:** -	**5:** -	**5:** Retained Accessory Power Fuse Supply Voltage	**5:** 5	**5:** 1	**5:** VT	**5:** 801	**5:** -	**5:** -
6: 6	**6:** 0.5	**6:** D-BU	**6:** 3554	**6:** -	**6:** -	**6:** Passive Start Interior Antenna 2 Signal Hi	**6:** 6	**6:** 0.5	**6:** D-BU	**6:** 3554	**6:** -	**6:** -
7	-	-	-	-	-	Not Occupied	7	-	-	-	-	-
8: 8	**8:** 0.5	**8:** BK	**8:** 50	**8:** -	**8:** -	**8:** Ground	**8:** 8	**8:** 0.5	**8:** BK	**8:** 50	**8:** -	**8:** -
9-11	-	-	-	-	-	Not Occupied	9-11	-	-	-	-	-
12: 12	**12:** 0.35	**12:** L-GN	**12:** 5841	**12:** I	**12:** -	**12:** Right Auxiliary Audio Signal (2)	**12:** 12	**12:** 0.35	**12:** D-GN	**12:** 5841	**12:** III	**12:** -
13: 13	**13:** 0.35	**13:** VT	**13:** 5843	**13:** I	**13:** -	**13:** Auxiliary Audio Common Signal	**13:** 13	**13:** 0.35	**13:** VT	**13:** 5843	**13:** III	**13:** -
14: 14	**14:** 0.35	**14:** GY	**14:** 5839	**14:** I	**14:** -	**14:** Left Auxiliary Audio Signal (2)	**14:** 14	**14:** 0.35	**14:** GY	**14:** 5839	**14:** III	**14:** -
15	-	-	-	-	-	Not Occupied	15	-	-	-	-	-
16-17	-	-	-	-	-	Not Occupied	17	-	-	-	-	-
18: 18	**18:** 1	**18:** BK	**18:** 50	**18:** -	**18:** -	**18:** Ground	**18:** 18	**18:** 1	**18:** BK	**18:** 50	**18:** -	**18:** -
19: 19	**19:** 1	**19:** VT	**19:** 801	**19:** -	**19:** -	**19:** Retained Accessory Power Fuse Supply Voltage	**19:** 19	**19:** 1	**19:** VT	**19:** 801	**19:** -	**19:** -
20	-	-	-	-	-	Not Occupied	20	-	-	-	-	-
21: 21	**21:** 0.35	**21:** BK	**21:** 5842	**21:** -	**21:** -	**21:** Auxiliary Audio Screen (2)	**21:** 21	**21:** 0.35	**21:** BARE	**21:** 5842	**21:** -	**21:** -
22: 22	**22:** 0.35	**22:** D-BU	**22:** 2060	**22:** -	**22:** -	**22:** Auxiliary Detection Signal	**22:** 22	**22:** 0.35	**22:** L-BU	**22:** 2060	**22:** -	**22:** -

X310 BODY HARNESS TO DRIVER SEAT HARNESS

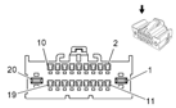

Connector Part Information

- Harness Type: Body
- OEM Connector: 902873-00
- Service Connector: 13577553
- Description: 20-Way F, 1.6 2.8 Series (BK)

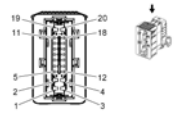

Connector Part Information

- Harness Type: Driver Seat
- OEM Connector: 902874-00
- Service Connector: 13584427
- Description: 20-Way M, 1.6 2.8 Timer Series (BK)

Terminal Part Information

Terminal Type ID	Terminated Lead	Diagnostic Test Probe	Terminal Removal Tool	Service Terminal	Tray	Core Crimp	Insulation Crimp
I	Pending	J-35616-35 (VT)	J-38125-12A	54001400	29	Not Available	Not Available
II	Pins: 5-7, 12, 15, 18: 13579989	J-35616-3 (GY)	J-38125-560	Not Available	Not Available	Not Available	Not Available
III	Service by Harness - See Part Catalog	Service by Harness - See Part Catalog	Service by Harness - See Part Catalog	Service by Harness - See Part Catalog	Service by Harness - See Part Catalog	Not Available	Not Available

X310 Body Harness to Driver Seat Harness

Pin	Size	Color	Circuit	Terminal Type ID	Option	Function	Pin	Size	Color	Circuit	Terminal Type ID	Option
1: 1	**1:** 1.5	**1:** RD/BN	**1:** 702	**1:** I	**1:** -	**1:** Battery Positive Voltage	**1:** 1	**1:** 1.5	**1:** RD	**1:** 702	**1:** III	**1:** -
2: 2	**2:** 1	**2:** BN/D-BU	**2:** 2479	**2:** I	**2:** KA1	**2:** Passenger Heated Seat Element Control	**2:** 2	**2:** 1	**2:** YE	**2:** 2479	**2:** III	**2:** KA1
3: 3	**3:** 2.5	**3:** RD/WH	**3:** 40	**3:** I	**3:** -	**3:** Battery Positive Voltage	**3:** 3	**3:** 2.5	**3:** RD	**3:** 40	**3:** III	**3:** -
4: 4	**4:** 1	**4:** D-BU/BK	**4:** 2433	**4:** I	**4:** KA1	**4:** Passenger Heated Back Element Return	**4:** 4	**4:** 1	**4:** BK	**4:** 2433	**4:** III	**4:** KA1
5: 5	**5:**	**5:**	**5:**	**5:** II	**5:** -	**5:** Driver Seat Belt Switch	**5:** 5	**5:**	**5:** BK	**5:**	**5:** III	**5:** -

	0.5	BK/OG	1363			Low Reference		0.5		1363		
6: 6	**6:** 0.5	**6:** BK/GY	**6:** 2435	**6:** II	**6:** KA1	**6:** Passenger Heated Seat NTC Low Reference	**6:** 6	**6:** 0.5	**6:** BK	**6:** 2435	**6:** III	**6:** KA1
7: 7	**7:** 0.5	**7:** WH/GY	**7:** 2434	**7:** II	**7:** KA1	**7:** Passenger Heated Seat NTC Signal	**7:** 7	**7:** 0.5	**7:** RD	**7:** 2434	**7:** III	**7:** KA1
8: 8	**8:** 0.5	**8:** YE/OG	**8:** 2138	**8:** II	**8:** -	**8:** Left Front Side Impact Module Low Control	**8:** 8	**8:** 0.5	**8:** WH/BK	**8:** 2138	**8:** III	**8:** -
9: 9	**9:** 0.5	**9:** OG/D-BU	**9:** 2137	**9:** II	**9:** -	**9:** Left Front Side Impact Module High Control	**9:** 9	**9:** 0.5	**9:** L-GN/WH	**9:** 2137	**9:** III	**9:** -
10-11	-	-	-	-	-	Not Occupied	10-11	-	-	-	-	-
12: 12	**12:** 0.5	**12:** OG/BN	**12:** 238	**12:** II	**12:** -	**12:** Driver Seat Belt Switch Signal	**12:** 12	**12:** 0.5	**12:** RD	**12:** 238	**12:** III	**12:** -
13: 13	**13:** 0.5	**13:** YE/OG	**13:** 3482	**13:** II	**13:** -	**13:** Driver Seat Belt Anchor Pretensioner Low Control	**13:** 13	**13:** 0.5	**13:** BK	**13:** 3482	**13:** III	**13:** -
14: 14	**14:** 0.5	**14:** OG/YE	**14:** 3481	**14:** II	**14:** -	**14:** Driver Seat Belt Anchor Pretensioner High Control	**14:** 14	**14:** 0.5	**14:** RD	**14:** 3481	**14:** III	**14:** -
15: 15	**15:** 0.5	**15:** WH/BK	**15:** 7018	**15:** II	**15:** KA1	**15:** Cushion NTC Signal	**15:** 15	**15:** 0.5	**15:** YE	**15:** 7018	**15:** III	**15:** KA1
16-17	-	-	-	-	-	Not Occupied	16-17	-	-	-	-	-
18: 18	**18:** 0.5	**18:** D-GN	**18:** 5060	**18:** II	**18:** -	**18:** Low Speed GMLAN Serial Data	**18:** 18	**18:** 0.5	**18:** D-BU	**18:** 5060	**18:** III	**18:** -
19: 19	**19:** 1.5	**19:** BK	**19:** 50	**19:** I	**19:** -	**19:** Ground	**19:** 19	**19:** 1.5	**19:** BK	**19:** 50	**19:** III	**19:** -
20: 20	**20:** 2.5	**20:** BK	**20:** 50	**20:** -	**20:** -	**20:** Ground	**20:** 20	**20:** 2.5	**20:** BK	**20:** 50	**20:** III	**20:** -

X320 BODY HARNESS TO PASSENGER SEAT HARNESS

2013 Chevrolet Cruze

2013 ELECTRICAL Wiring Systems and Power Management - Component Locator - Inline Harness Connector End Views - Cruze

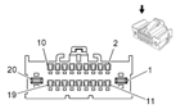

Connector Part Information

- Harness Type: Body
- OEM Connector: 902873-00
- Service Connector: 13577553
- Description: 20-Way F, 1.6 2.8 Series (BK)

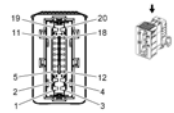

Connector Part Information

- Harness Type: Passenger Seat
- OEM Connector: 902874-00
- Service Connector: 13584427
- Description: 20-Way M, 1.6 2.8 Timer Series (BK)

Terminal Part Information

Terminal Type ID	Terminated Lead	Diagnostic Test Probe	Terminal Removal Tool	Service Terminal	Tray	Core Crimp	Insulation Crimp
I	Pending	J-35616-35 (VT)	J-38125-12A	54001400	29	Not Available	Not Available
II	Pins: 5-7, 12, 15, 18: 13579989	J-35616-3 (GY)	J-38125-560	Not Available	Not Available	Not Available	Not Available
III	Service by Harness - See Part Catalog	Service by Harness - See Part Catalog	Service by Harness - See Part Catalog	Service by Harness - See Part Catalog	Service by Harness - See Part Catalog	Not Available	Not Available

X320 Body Harness to Passenger Seat Harness

Pin	Size	Color	Circuit	Terminal Type ID	Option	Function	Pin	Size	Color	Circuit	Terminal Type ID	Option
1	-	-	-	-	-	Not Occupied	1	-	-	-	-	-
2: 2	**2:** 1	**2:** BN/D-BU	**2:** 2479	**2:** I	**2:** KA1	**2:** Passenger Heated Seat Element Control	**2:** 2	**2:** 1	**2:** YE	**2:** 2479	**2:** III	**2:** KA1
3	-	-	-	-	-	Not Occupied	3	-	-	-	-	-
4: 4	**4:** 1	**4:** D-BU/BK	**4:** 2433	**4:** -	**4:** KA1	**4:** Passenger Heated Back Element Return	**4:** 4	**4:** 1	**4:** BK	**4:** 2433	**4:** III	**4:** KA1
5: 5	**5:** 0.5	**5:** BK/OG	**5:** 1361	**5:** II	**5:** -	**5:** Passenger Seat Belt Switch Low Reference	**5:** 5	**5:** 0.5	**5:** BK	**5:** 1361	**5:** III	**5:** -
	6:	**6:**	**6:**		**6:**	**6:** Passenger Heated Seat		**6:**		**6:**		**6:**

6: 6	0.5	BK/GY	2435	**6:** II	KA1	NTC Low Reference	**6:** 6	0.5	**6:** BK	2435	**6:** III	KA1
7: 7	**7:** 0.5	**7:** WH/GY	**7:** 2434	**7:** II	**7:** KA1	**7:** Passenger Heated Seat NTC Signal	**7:** 7	**7:** 0.5	**7:** RD	**7:** 2434	**7:** III	**7:** KA1
8: 8	**8:** 0.5	**8:** D-GN/OG	**8:** 2136	**8:** II	**8:** -	**8:** Right Front Side Impact Module Low Control	**8:** 8	**8:** 0.5	**8:** L-GN	**8:** 2136	**8:** III	**8:** -
9: 9	**9:** 0.5	**9:** OG/YE	**9:** 2135	**9:** II	**9:** -	**9:** Right Front Side Impact Module High Control	**9:** 9	**9:** 0.5	**9:** WH	**9:** 2135	**9:** III	**9:** -
10: 10	**10:** 0.5	**10:** RD/GY	**10:** 402	**10:** II	**10:** -	**10:** Battery Positive Voltage	**10:** 10	**10:** 0.5	**10:** D-BU	**10:** 402	**10:** III	**10:** -
11: 11	**11:** 0.5	**11:** D-GN	**11:** 5060	**11:** II	**11:** -	**11:** Low Speed GMLAN Serial Data	**11:** 11	**11:** 0.5	**11:** WH	**11:** 5060	**11:** III	**11:** -
12: 12	**12:** 0.5	**12:** OG/VT	**12:** 1362	**12:** II	**12:** -	**12:** Passenger Seat Belt Switch Signal	**12:** 12	**12:** 0.5	**12:** RD	**12:** 1362	**12:** III	**12:** -
13: 13	**13:** 0.5	**13:** GY/OG	**13:** 3480	**13:** II	**13:** -	**13:** Passenger Seat Belt Anchor Pretensioner Low Control	**13:** 13	**13:** 0.5	**13:** BK	**13:** 3480	**13:** III	**13:** -
14: 14	**14:** 0.5	**14:** OG/BN	**14:** 3479	**14:** II	**14:** -	**14:** Passenger Seat Belt Anchor Pretensioner High Control	**14:** 14	**14:** 0.5	**14:** RD	**14:** 3479	**14:** III	**14:** -
15: 15	**15:** 0.5	**15:** WH/BK	**15:** 7018	**15:** II	**15:** KA1	**15:** Cushion NTC Signal	**15:** 15	**15:** 0.5	**15:** YE	**15:** 7018	**15:** III	**15:** KA1
16	-	-	-	-	-	Not Occupied	16	-	-	-	-	-
17: 17	**17:** 0.5	**17:** BK	**17:** 50	**17:** II	**17:** -	**17:** Ground	**17:** 17	**17:** 0.5	**17:** BK	**17:** 50	**17:** III	**17:** -
19-20	-	-	-	-	-	Passenger Seat Belt Reminder Signal Not Occupied	18-20	-	-	-	-	-

X335 BODY HARNESS TO CURTAIN AIR BAG HARNESS

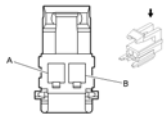

Connector Part Information

- Harness Type: Body
- OEM Connector: 19177519
- Service Connector: 15306044
- Description: 2-Way F Metri-Pack 150 Series (YE)

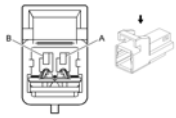

Connector Part Information

- Harness Type: Curtain Air Bag
- OEM Connector: 13687802
- Service Connector: Service by Harness - See Part Catalog
- Description: 2-Way M, Metri-Pack 150 Series (YE)

Terminal Part Information

Terminal Type ID	Terminated Lead	Diagnostic Test Probe	Terminal Removal Tool	Service Terminal	Tray	Core Crimp	Insulation Crimp
I	13575524	J-35616-14 (GN)	J-38125-12A	15326030	2	E	C
II	Pending	Pending	Pending	Pending	Pending	Not Available	Not Available

X335 Body Harness to Curtain Air Bag Harness

Pin	Size	Color	Circuit	Terminal Type ID	Option	Function	Pin	Size	Color	Circuit	Terminal Type ID	Option
A: A	**A:** 0.5	**A:** OG/D-GN	**A:** 5019	**A:** I	**A:** -	**A:** Left Front Head Curtain Module High Control	**A:** A	**A:** 0.5	**A:** OG/GY	**A:** 5019	**A:** II	**A:** -
B: B	**B:** 0.5	**B:** VT/OG	**B:** 5020	**B:** I	**B:** -	**B:** Left Front Head Curtain Module Low Control	**B:** B	**B:** 0.5	**B:** VT/OG	**B:** 5020	**B:** II	**B:** -

X345 BODY HARNESS TO CURTAIN AIR BAG HARNESS

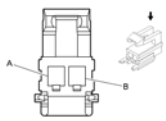

Connector Part Information

- Harness Type: Body
- OEM Connector: 19177519

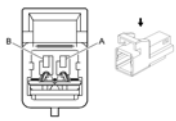

Connector Part Information

- Harness Type: Curtain Air Bag
- OEM Connector: 13687802
- Service Connector: Service by Harness - See

- Service Connector: 15306044
- Description: 2-Way F Metri-Pack 150 Series (YE)

Part Catalog

- Description: 2-Way M, Metri-Pack 150 Series (YE)

Terminal Part Information

Terminal Type ID	Terminated Lead	Diagnostic Test Probe	Terminal Removal Tool	Service Terminal	Tray	Core Crimp	Insulation Crimp
I	13575524	J-35616-14 (GN)	J-38125-12A	15326030	2	E	C
II	Pending	Pending	Pending	Pending	Pending	Not Available	Not Available

X345 Body Harness to Curtain Air Bag Harness

Pin	Size	Color	Circuit	Terminal Type ID	Option	Function	Pin	Size	Color	Circuit	Terminal Type ID	Option
A: A	**A:** 0.5	**A:** OG/D-BU	**A:** 5021	**A:** I	**A:** -	**A:** Right Front Head Curtain Module High Control	**A:** A	**A:** 0.5	**A:** OG/GY	**A:** 5021	**A:** II	**A:** -
B: B	**B:** 0.5	**B:** WH/BK	**B:** 5022	**B:** I	**B:** -	**B:** Right Front Head Curtain Module Low Control	**B:** B	**B:** 0.5	**B:** WH/OG	**B:** 5022	**B:** II	**B:** -

X401 FUEL TANK HARNESS TO BODY HARNESS

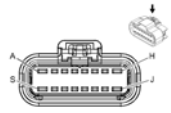

Connector Part Information

- Harness Type: Fuel Tank
- OEM Connector: 15326084
- Service Connector: 15306348
- Description: 16-Way F GT 150 280 Sealed 4.0 5.8 (BK)

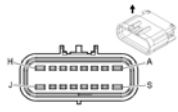

Connector Part Information

- Harness Type: Body
- OEM Connector: 19177613
- Service Connector: 19181245
- Description: 16-Way M GT 150 280 Sealed 4.0 5.8 (BK)

Terminal Part Information

Terminal Type ID	Terminated Lead	Diagnostic Test Probe	Terminal Removal	Service Terminal	Tray	Core Crimp	Insulation Crimp

			Tool				
I	Pending	Pending	Pending	Pending	Pending	Not Available	Not Available
II	SEALED: 13575443 UNSEALED: 13579955	J-35616-5 (PU)	J-38125-553	15304732	8	A	5
III	13327134	J-35616-5 (PU)	J-38125-553	15304731	19	E	5
IV	Pending	J-35616-3 (GY)	J-38125-553	15326269	19	E	4
V	Pending	J-35616-3 (GY)	J-38125-553	15326269	19	E	1

X401 Fuel Tank Harness to Body Harness

Pin	Size	Color	Circuit	Terminal Type ID	Option	Function	Pin	Size	Color	Circuit	Terminal Type ID	Option
A: A	**A:** 2.5	**A:** GY	**A:** 120	**A:** I	**A:** -	**A:** Fuel Pump Control	**A:** A	**A:** 2.5	**A:** GY	**A:** 120	**A:** II	**A:** -
B: B	**B:** 0.5	**B:** D-BU/VT	**B:** 1589	**B:** I	**B:** -	**B:** Primary Fuel Level Sensor Signal	**B:** B	**B:** 0.5	**B:** D-BU/VT	**B:** 1589	**B:** IV	**B:** -
C	-	-	-	-	-	Not Occupied	C	-	-	-	-	-
D: D	**D:** 0.5	**D:** BN/RD	**D:** 2709	**D:** I	**D:** -	**D:** Fuel Tank Pressure Sensor 5V Reference	**D:** D	**D:** 0.5	**D:** YE/RD	**D:** 2709	**D:** IV	**D:** -
E: E	**E:** 0.5	**E:** D-BU/WH	**E:** 890	**E:** I	**E:** -	**E:** Fuel Tank Pressure Sensor Signal	**E:** E	**E:** 0.5	**E:** D-BU/WH	**E:** 890	**E:** IV	**E:** -
F: F	**F:** 0.5	**F:** BK/WH	**F:** 6281	**F:** I	**F:** -	**F:** Fuel Level Sensor Low Reference	**F:** F	**F:** 0.5	**F:** BK/D-GN	**F:** 6281	**F:** IV	**F:** -
G	-	-	-	-	-	Not Occupied	G	-	-	-	-	-
H: H	**H:** 0.5	**H:** BN/RD	**H:** 7445	**H:** I	**H:** -	**H:** Fuel Line Pressure Sensor 5V Reference	**H:** H	**H:** 0.5	**H:** BN/RD	**H:** 7445	**H:** III	**H:** -
I-J	-	-	-	-	-	Not Occupied	I-J	-	-	-	-	-
K: K	**K:** 0.5	**K:** D-BU/VT	**K:** 7446	**K:** I	**K:** -	**K:** Fuel Line Pressure Sensor Signal	**K:** K	**K:** 0.5	**K:** D-BU/WH	**K:** 7446	**K:** IV	**K:** -
L:	**L:**	**L:**	**L:**			**L:** Fuel Line Pressure	**L:**	**L:**	**L:**	**L:**		

L	0.5	BK/YE	7447	**L:** I	**L:** -	Sensor Low Reference	L	0.5	BK/YE	7447	**L:** IV	**L:** -
M: M	**M:** 0.75	**M:** RD/D-BU	**M:** 5372	**M:** I	**M:** -	**M:** Canister Valve Solenoid	**M:** M	**M:** 0.75	**M:** RD/D-BU	**M:** 5372	**M:** -	**M:** -
N: N	**N:** 0.75	**N:** WH	**N:** 1310	**N:** I	**N:** -	**N:** EVAP Canister Vent Solenoid Control	**N:** N	**N:** 0.75	**N:** WH	**N:** 1310	**N:** -	**N:** -
O-Q	-	-	-	-	-	Not Occupied	O-Q	-	-	-	-	-
R: R	**R:** 0.5	**R:** BK/D-GN	**R:** 6281	**R:** I	**R:** -	**R:** Fuel Level Sensor Low Reference	**R:** R	**R:** 0.5	**R:** BK/D-GN	**R:** 6281	**R:** -	**R:** -
S: S	**S:** 2.5	**S:** BK/D-GN	**S:** 2350	**S:** I	**S:** -	**S:** Ground	**S:** S	**S:** 2.5	**S:** BK/D-GN	**S:** 2350	**S:** -	**S:** -

X402 REAR OBJECT SENSOR HARNESS TO BODY HARNESS (UD7)

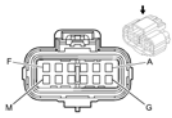

Connector Part Information

- Harness Type: Rear Object Sensor
- OEM Connector: 88986320
- Service Connector: 13504588
- Description: 12-Way F 150 GT Series, Sealed (BK)

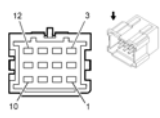

Connector Part Information

- Harness Type: Body
- OEM Connector: 88986190
- Service Connector: 88986252
- Description: 12-Way M 150 GT Series Sealed (BK)

Terminal Part Information

Terminal Type ID	Terminated Lead	Diagnostic Test Probe	Terminal Removal Tool	Service Terminal	Tray	Core Crimp	Insulation Crimp
I	Pending	Pending	Pending	Pending	Pending	Not Available	Not Available
II	Pending	J-35616-3 (GY)	J-38125-553	15326269	19	E	4

X402 Rear Object Sensor Harness to Body Harness (UD7)

Pin	Size	Color	Circuit	Terminal Type ID	Option	Function	Pin	Size	Color	Circuit	Terminal Type ID	Option
A:	**A:**	**A:**	**A:**			**A:** Right Rear Corner	**A:**	**A:**	**A:**	**A:**		

A	0.5	YE/VT	2378	**A:** I	**A:** -	Object Sensor Signal	A	0.5	YE/VT	2378	**A:** II	**A:** -
B: B	**B:** 0.5	**B:** YE/WH	**B:** 2377	**B:** I	**B:** -	**B:** Right Rear Middle Object Sensor Signal	**B:** B	**B:** 0.5	**B:** YE/WH	**B:** 2377	**B:** II	**B:** -
C: C	**C:** 0.5	**C:** YE/D-BU	**C:** 2376	**C:** I	**C:** -	**C:** Left Rear Middle Object Sensor Signal	**C:** C	**C:** 0.5	**C:** YE/D-BU	**C:** 2376	**C:** II	**C:** -
D: D	**D:** 0.5	**D:** BN/WH	**D:** 2374	**D:** I	**D:** -	**D:** Object Sensor Control	**D:** D	**D:** 0.5	**D:** BN/WH	**D:** 2374	**D:** II	**D:** -
E: E	**E:** 0.5	**E:** YE	**E:** 2375	**E:** I	**E:** -	**E:** Left Rear Corner Object Sensor Signal	**E:** E	**E:** 0.5	**E:** YE	**E:** 2375	**E:** II	**E:** -
F: F	**F:** 0.5	**F:** BK/GY	**F:** 2379	**F:** I	**F:** -	**F:** Object Sensor Low Reference	**F:** F	**F:** 0.5	**F:** BK/GY	**F:** 2379	**F:** II	**F:** -
G: G	**G:** 0.5	**G:** RD/GN	**G:** 3140	**G:** I	**G:** -	**G:** Battery Positive Voltage	**G:** G	**G:** 0.5	**G:** RD/GN	**G:** 3140	**G:** II	**G:** -
H: H	**H:** 0.5	**H:** BK	**H:** 2350	**H:** I	**H:** -	**H:** Ground	**H:** H	**H:** 0.5	**H:** BK	**H:** 2350	**H:** II	**H:** -
J: J	**J:** 0.5	**J:** GN	**J:** 5060	**J:** I	**J:** -	**J:** Low Speed GMLAN Serial Data	**J:** J	**J:** 0.5	**J:** GN	**J:** 5060	**J:** II	**J:** -
K: K	**K:** 0.5	**K:** GY/YE	**K:** 5853	**K:** I	**K:** -	**K:** Driver Side Object Detection LED Signal (1)	**K:** K	**K:** 0.5	**K:** GY/YE	**K:** 5853	**K:** II	**K:** -
L: L	**L:** 0.5	**L:** GY	**L:** 5861	**L:** I	**L:** -	**L:** Passenger Side Object Detection LED Signal (1)	**L:** L	**L:** 0.5	**L:** GY	**L:** 5861	**L:** II	**L:** -
M	-	-	-	-	-	Not Occupied	M	-	-	-	-	-

X410 LEFT TAIL LAMP HARNESS TO BODY HARNESS

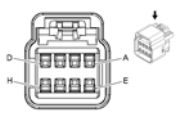

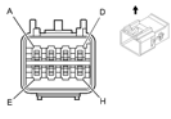

Connector Part Information

- Harness Type: Left Tail Lamp
- OEM Connector: 15332145
- Service Connector: 15306407
- Description: 8-Way F GT 150 Series (BK)

Connector Part Information

- Harness Type: Body
- OEM Connector: 15332150
- Service Connector: 88986250
- Description: 8-Way M GT 150 Series (BK)

Terminal Part Information

Terminal Type ID	Terminated Lead	Diagnostic Test Probe	Terminal Removal Tool	Service Terminal	Tray	Core Crimp	Insulation Crimp
I	Pending	Pending	Pending	Pending	Pending	Not Available	Not Available
II	13575502	J-35616-3 (GY)	J-38125-553	15304702	19	E	4

X410 Left Tail Lamp Harness to Body Harness

Pin	Size	Color	Circuit	Terminal Type ID	Option	Function	Pin	Size	Color	Circuit	Terminal Type ID	Option
A: A	**A:** 0.5	**A:** RD	**A:** 7542	**A:** I	**A:** -	**A:** Left Rear Stop Lamp Supply Voltage	**A:** A	**A:** 0.5	**A:** GY/YE	**A:** 7542	**A:** II	**A:** -
B: B	**B:** 0.5	**B:** D-GN	**B:** 709	**B:** I	**B:** -	**B:** Left Park Lamp Control	**B:** B	**B:** 0.5	**B:** VT/GY	**B:** 709	**B:** II	**B:** -
C	-	-	-	-	-	Not Occupied	C	-	-	-	-	-
D: D	**D:** 1	**D:** BK	**D:** 2550	**D:** I	**D:** -	**D:** Ground	**D:** D	**D:** 1	**D:** BK	**D:** 2550	**D:** II	**D:** -
E: E	**E:** 0.5	**E:** YE	**E:** 1334	**E:** I	**E:** -	**E:** Left Rear Turn Signal Lamp Control	**E:** E	**E:** 0.5	**E:** D-BU/WH	**E:** 1334	**E:** II	**E:** -
F: F	**F:** 0.5	**F:** WH	**F:** 1324	**F:** I	**F:** -	**F:** Backup Lamp Control	**F:** F	**F:** 0.5	**F:** D-GN/WH	**F:** 1324	**F:** II	**F:** -
G	-	-	-	-	-	Not Occupied	G	-	-	-	-	-
H: H	**H:** 0.5	**H:** BK/WH	**H:** 2550	**H:** I	**H:** -	**H:** Ground	**H:** H	**H:** 0.5	**H:** BK	**H:** 2550	**H:** II	**H:** -

X420 RIGHT TAIL LAMP HARNESS TO BODY HARNESS

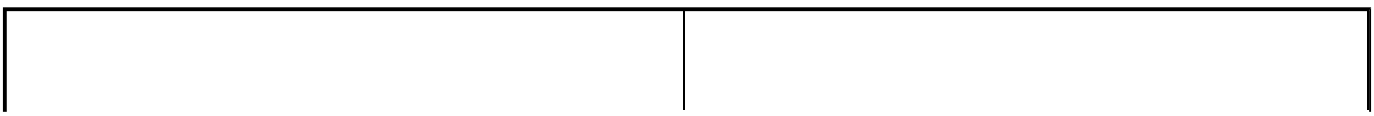

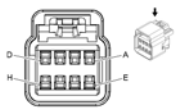

Connector Part Information

- Harness Type: Right Tail Lamp
- OEM Connector: 15332145
- Service Connector: 15306407
- Description: 8-Way F GT 150 Series (BK)

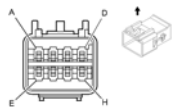

Connector Part Information

- Harness Type: Body
- OEM Connector: 15332150
- Service Connector: 88986250
- Description: 8-Way M GT 150 Series (BK)

Terminal Part Information

Terminal Type ID	Terminated Lead	Diagnostic Test Probe	Terminal Removal Tool	Service Terminal	Tray	Core Crimp	Insulation Crimp
I	Pending	Pending	Pending	Pending	Pending	Not Available	Not Available
II	13575502	J-35616-3 (GY)	J-38125-553	15304702	19	E	4

X420 Right Tail Lamp Harness to Body Harness

Pin	Size	Color	Circuit	Terminal Type ID	Option	Function	Pin	Size	Color	Circuit	Terminal Type ID	Option
A: A	**A:** 0.5	**A:** RD	**A:** 7541	**A:** I	**A:** -	**A:** Right Rear Stop Lamp Supply Voltage	**A:** A	**A:** 0.5	**A:** WH/YE	**A:** 7541	**A:** II	**A:** -
B: B	**B:** 0.5	**B:** D-GN	**B:** 309	**B:** I	**B:** -	**B:** Right Park Lamp Control	**B:** B	**B:** 0.5	**B:** GY/BN	**B:** 309	**B:** II	**B:** -
C	-	-	-	-	-	Not Occupied	C	-	-	-	-	-
D: D	**D:** 1	**D:** BK	**D:** 2550	**D:** I	**D:** -	**D:** Ground	**D:** D	**D:** 1	**D:** BK	**D:** 2550	**D:** II	**D:** -
E: E	**E:** 0.5	**E:** YE	**E:** 1335	**E:** I	**E:** -	**E:** Right Rear Turn Signal Lamp Control	**E:** E	**E:** 0.5	**E:** D-BU/VT	**E:** 1335	**E:** II	**E:** -
F: F	**F:** 0.5	**F:** WH	**F:** 1324	**F:** I	**F:** -	**F:** Backup Lamp Control	**F:** F	**F:** 0.5	**F:** D-GN/WH	**F:** 1324	**F:** II	**F:** -
G	-	-	-	-	-	Not Occupied	G	-	-	-	-	-
H: H	**H:** 0.5	**H:** BK/WH	**H:** 2550	**H:** I	**H:** -	**H:** Ground	**H:** H	**H:** 0.5	**H:** BK	**H:** 2550	**H:** II	**H:** -

X500 DRIVER DOOR HARNESS TO BODY HARNESS

2013 Chevrolet Cruze

2013 ELECTRICAL Wiring Systems and Power Management - Component Locator - Inline Harness Connector End Views - Cruze

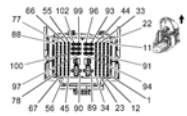

Connector Part Information

- Harness Type: Driver Door
- OEM Connector: 13600509
- Service Connector: Service by Harness - See Part Catalog
- Description: 41-Way F 4.8 TIMER/DSQ 1.5 Series (GY)

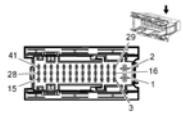

Connector Part Information

- Harness Type: Body
- OEM Connector: 13600511
- Service Connector: 13576548
- Description: 41-Way M DSQ 1.5 2.8 Series (GY)

Terminal Part Information

Terminal Type ID	Terminated Lead	Diagnostic Test Probe	Terminal Removal Tool	Service Terminal	Tray	Core Crimp	Insulation Crimp
I	13575858	J-35616-42 (RD)	J-38125-36	927837-1	25	A	D
II	13575539	J-35616-14 (GN)	J-38125-560	962943-5	16	E	A
III	13575538	J-35616-14 (GN)	J-38125-560	962943-5	16	E	A
IV	13582220	Pending	Pending	Not Available	Not Available	Not Available	Not Available
V	13579964	J-35616-3 (GY)	J-38125-560	969079-2	32	2	C
VI	13580818	Pending	Pending	Not Available	Not Available	Not Available	Not Available

X500 Driver Door Harness to Body Harness

Pin	Size	Color	Circuit	Terminal Type ID	Option	Function	Pin	Size	Color	Circuit	Terminal Type ID	Option
1: 1	**1:** 2.5	**1:** RD/D-GN	**1:** 1540	**1:** -	**1:** -	**1:** Battery Positive Voltage	**1:** 1	**1:** 2.5	**1:** RD/D-GN	**1:** 1540	**1:** -	**1:** -
2: 2	**2:** 2.5	**2:** BK	**2:** 1550	**2:** -	**2:** -	**2:** Ground	**2:** 2	**2:** 2.5	**2:** BK	**2:** 1550	**2:** -	**2:** -
3: 3	**3:** 1.25	**3:** BK	**3:** 1550	**3:** II	**3:** -	**3:** Ground	**3:** 3	**3:** 1	**3:** BK	**3:** 1550	**3:** -	**3:** -
4: 4	**4:** 2.5	**4:** RD/D-GN	**4:** 1540	**4:** -	**4:** AXG	**4:** Battery Positive Voltage	**4:** 4	**4:** 2.5	**4:** RD/D-GN	**4:** 1540	**4:** -	**4:** -
5-8	-	-	-	-	-	Not Occupied	5-8	-	-	-	-	-

9: 9	**9:** 0.75	**9:** GY	**9:** 295	**9:** II	**9:** -	**9:** Door Lock Actuator Lock Control	**9:** 9	**9:** 0.75	**9:** GY	**9:** 295	**9:** -	**9:** -
10: 10	**10:** 0.75	**10:** BN/YE	**10:** 294	**10:** II	**10:** -	**10:** Door Lock Actuator Unlock Control	**10:** 10	**10:** 0.75	**10:** BN/YE	**10:** 294	**10:** -	**10:** -
11-13	-	-	-	-	-	Not Occupied	11-13	-	-	-	-	-
14: 14	**14:** 0.75	**14:** D-BU	**14:** 201	**14:** II	**14:** -	**14:** Left Front Speaker Signal (+) (1)	**14:** 14	**14:** 0.75 **14:** 0.75	**14:** D-BU **14:** D-BU	**14:** 201 **14:** 201	**14:** -	**14:** -
15: 15	**15:** 0.75	**15:** BN/D-BU	**15:** 118	**15:** II	**15:** -	**15:** Left Front Speaker Signal (-) (1)	**15:** 15	**15:** 0.75 **15:** 0.75	**15:** BN/D-BU **15:** BN/D-BU	**15:** 118 **15:** 118	**15:** -	**15:** -
16-17	-	-	-	-	-	Not Occupied	16-17	-	-	-	-	-
18: 18	**18:** 0.5	**18:** D-GN/YE	**18:** 6134	**18:** -	**18:** -	**18:** Linear Interconnect Network Bus 3	**18:** 18	**18:** 0.5	**18:** D-GN/YE	**18:** 6134	**18:** -	**18:** -
19-20	-	-	-	-	-	Not Occupied	19-20	-	-	-	-	-
21: 21	**21:** 0.5	**21:** YE	**21:** 6817	**21:** -	**21:** -	**21:** LED Backlight Dimming Control	**21:** 21	**21:** 0.5	**21:** YE	**21:** 6817	**21:** -	**21:** -
22: 22	**22:** 0.5	**22:** D-GN/BK	**22:** 3396	**22:** -	**22:** -	**22:** Co-Driver Mirror Motor Right (+) Left (-) Control	**22:** 22	**22:** 0.5	**22:** D-GN/BK	**22:** 3396	**22:** -	**22:** -
23: 23	**23:** 0.5	**23:** WH	**23:** 3398	**23:** -	**23:** -	**23:** Co-Driver Mirror Motor Common Control	**23:** 23	**23:** 0.5	**23:** WH	**23:** 3398	**23:** -	**23:** -
24: 24	**24:** 0.5	**24:** YE/VT	**24:** 3397	**24:** -	**24:** -	**24:** Co-Driver Mirror Motor Up (+) Down (-) Control	**24:** 24	**24:** 0.5	**24:** YE/VT	**24:** 3397	**24:** -	**24:** -
25: 25	**25:** 0.75	**25:** BK	**25:** 1550	**25:** II	**25:** -	**25:** Ground	**25:** 25	**25:** 0.75	**25:** BK	**25:** 1550	**25:** -	**25:** -
						26: Battery						

26: 26	**26:** 0.5	**26:** RD/GY	**26:** 2840	**26:** -	**26:** -	Positive Voltage	**26:** 26	**26:** 0.5	**26:** RD/GY	**26:** 2840	**26:** -	**26:** -
27	-	-	-	-	-	Not Occupied	27	-	-	-	-	-
28: 28	**28:** 0.5	**28:** BN/YE	**28:** 2267	**28:** -	**28:** -	**28:** Mirror Heating Element Control	**28:** 28	**28:** 0.5	**28:** BN/YE	**28:** 2267	**28:** -	**28:** -
29-41	-	-	-	-	-	Not Occupied	29-41	-	-	-	-	-

X600 PASSENGER DOOR HARNESS TO BODY HARNESS

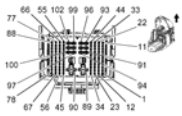

Connector Part Information

- Harness Type: Passenger Door
- OEM Connector: 13600509
- Service Connector: Service by Harness - See Part Catalog
- Description: 41-Way F 4.8 TIMER/DSQ 1.5 Series (GY)

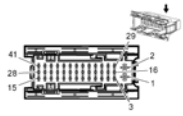

Connector Part Information

- Harness Type: Body
- OEM Connector: 13600511
- Service Connector: 13576548
- Description: 41-Way M DSQ 1.5 2.8 Series (GY)

Terminal Part Information

Terminal Type ID	Terminated Lead	Diagnostic Test Probe	Terminal Removal Tool	Service Terminal	Tray	Core Crimp	Insulation Crimp
I	13575858	J-35616-42 (RD)	J-38125-36	927837-1	25	A	D
II	13575539	J-35616-14 (GN)	J-38125-560	962943-5	16	E	A
III	13582220	Pending	Pending	Not Available	Not Available	Not Available	Not Available
IV	13579964	J-35616-3 (GY)	J-38125-560	969079-2	32	2	C
V	13580818	Pending	Pending	Not Available	Not Available	Not Available	Not Available

X600 Passenger Door Harness to Body Harness

Pin	Size	Color	Circuit	Terminal Type ID	Option	Function	Pin	Size	Color	Circuit	Terminal Type ID	Option
	1:	**1:**	**1:**			**1:** Battery		**1:**	**1:**	**1:**		

1: 1	2.5	RD/D-GN	1540	**1:** -	**1:** -	Positive Voltage	**1:** 1	2.5	RD/D-GN	1540	**1:** -	**1:** -
2: 2	**2:** 2.5	**2:** BK	**2:** 2050	**2:** -	**2:** -	**2:** Ground	**2:** 2	**2:** 2.5	**2:** BK	**2:** 2050	**2:** -	**2:** -
3: 3	**3:** 1	**3:** BK	**3:** 2050	**3:** -	**3:** -	**3:** Ground	**3:** 3	**3:** 1	**3:** BK	**3:** 2050	**3:** -	**3:** -
4	-	-	-	-	-	Not Occupied	4	-	-	-	-	-
5: 5	**5:** 0.75	**5:** BN/YE	**5:** 294	**5:** -	**5:** -	**5:** Door Lock Actuator Unlock Control	**5:** 5	**5:** 0.75	**5:** BN/YE	**5:** 294	**5:** -	**5:** -
6-8	-	-	-	-	-	Not Occupied	6-8	-	-	-	-	-
9: 9	**9:** 0.75	**9:** GY	**9:** 295	**9:** -	**9:** -	**9:** Door Lock Actuator Lock Control	**9:** 9	**9:** 0.75	**9:** GY/BK	**9:** 295	**9:** -	**9:** -
10	-	-	-	-	-	Not Occupied	10	-	-	-	-	-
11: 11	**11:** 0.5	**11:** YE/VT	**11:** 3397	**11:** -	**11:** -	**11:** Co-Driver Mirror Motor Up (+) Down (-) Control	**11:** 11	**11:** 0.5	**11:** YE/VT	**11:** 3397	**11:** -	**11:** -
12	-	-	-	-	-	Not Occupied	12	-	-	-	-	-
13: 13	**13:** 0.5	**13:** D-GN/BK	**13:** 3396	**13:** -	**13:** -	**13:** Co-Driver Mirror Motor Right (+) Left (-) Control	**13:** 13	**13:** 0.5	**13:** D-GN/BK	**13:** 3396	**13:** -	**13:** -
14: 14	**14:** 0.5	**14:** WH	**14:** 3398	**14:** -	**14:** -	**14:** Co-Driver Mirror Motor Common Control	**14:** 14	**14:** 0.5	**14:** WH	**14:** 3398	**14:** -	**14:** -
15: 15	**15:** 0.5	**15:** D-GN/YE	**15:** 6134	**15:** -	**15:** -	**15:** Linear Interconnect Network Bus 3	**15:** 15	**15:** 0.5	**15:** D-GN/YE	**15:** 6134	**15:** -	**15:** -
16	-	-	-	-	-	Not Occupied	16	-	-	-	-	-
17: 17	**17:** 0.75	**17:** YE/BK	**17:** 117	**17:** -	**17:** -	**17:** Right Front Speaker Signal (-) (1)	**17:** 17	**17:** 0.75 **17:** 0.75	**17:** YE/BK **17:** YE/BK	**17:** 117 **17:** 117	**17:** -	**17:** -
18: 18	**18:** 0.75	**18:** YE	**18:** 200	**18:** -	**18:** -	**18:** Right Front Speaker (+) (1)	**18:** 18	**18:** 0.75 **18:** 0.75	**18:** YE **18:** YE	**18:** 200 **18:** 200	**18:** -	**18:** -
19-22	-	-	-	-	-	Not Occupied	19-22	-	-	-	-	-
						23: Mirror						

23: 23	**23:** 0.5	**23:** BN/YE	**23:** 2267	**23:** -	**23:** -	Heating Element Control	**23:** 23	**23:** 0.5	**23:** BN/YE	**23:** 2267	**23:** -	**23:** -
24-41	-	-	-	-	-	Not Occupied	28-41	-	-	-	-	-

X700 LEFT REAR DOOR HARNESS TO BODY HARNESS

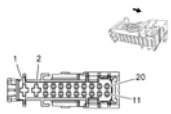

Connector Part Information

- Harness Type: Left Rear Door
- OEM Connector: 13600493
- Service Connector: Service by Harness - See Part Catalog
- Description: 20-Way F (GY)

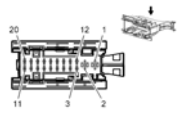

Connector Part Information

- Harness Type: Body
- OEM Connector: 13600495
- Service Connector: 13576560
- Description: 20-Way M 5.8 TTS 1.5 Series (GY)

Terminal Part Information

Terminal Type ID	Terminated Lead	Diagnostic Test Probe	Terminal Removal Tool	Service Terminal	Tray	Core Crimp	Insulation Crimp
I	13575858	J-35616-42 (RD)	J-38125-36	927837-1	25	A	D
II	13575538	J-35616-14 (GN)	J-38125-560	962943-5	16	E	A
III	13575539	J-35616-14 (GN)	J-38125-560	962943-5	16	E	A
IV	13575706	Pending	J-38125-36	964308-1	NA	Not Available	Not Available
V	13575593	J-35616-14 (GN)	J-38125-560	964265-2	28	E	2
VI	13575593	J-35616-14 (GN)	J-38125-560	964265-2	28	E	C

X700 Left Rear Door Harness to Body Harness

Pin	Size	Color	Circuit	Terminal Type ID	Option	Function	Pin	Size	Color	Circuit	Terminal Type ID	Option
1: 1	**1:** 2.5	**1:** BK	**1:** 2350	**1:** -	**1:** -	**1:** Ground	**1:** 1	**1:** 2.5	**1:** BK	**1:** 2350	**1:** -	**1:** -
2: 2	**2:** 2.5	**2:** RD/BN	**2:** 2940	**2:** -	**2:** -	**2:** Battery Positive	**2:** 2	**2:** 2.5	**2:** RD/BN	**2:** 2940	**2:** -	**2:** -

						Voltage						
3: 3	**3:** 0.75	**3:** BN/YE	**3:** 294	**3:** -	**3:** -	**3:** Door Lock Actuator Unlock Control	**3:** 3	**3:** 0.75	**3:** BN/YE	**3:** 294	**3:** -	**3:** -
4: 4	**4:** 0.75	**4:** GY	**4:** 295	**4:** -	**4:** -	**4:** Door Lock Actuator Lock Control	**4:** 4	**4:** 0.75	**4:** GY	**4:** 295	**4:** -	**4:** -
5-8	-	-	-	-	-	Not Occupied	5-8	-	-	-	-	-
9: 9	**9:** 0.5	**9:** D-GN/GY	**9:** 6135	**9:** -	**9:** -	**9:** Linear Interconnect Network Bus 4	**9:** 9	**9:** 0.5	**9:** D-GN/GY	**9:** 6135	**9:** -	**9:** -
10-16	-	-	-	-	-	Not Occupied	12-16	-	-	-	-	-
17: 17	**17:** 0.5	**17:** BN/WH	**17:** 3269	**17:** -	**17:** -	**17:** Child Security Lock Motor Status Signal Left Rear	**17:** 17	**17:** 0.5	**17:** BN/WH	**17:** 3269	**17:** -	**17:** -
18: 18	**18:** 0.75	**18:** WH/D-BU	**18:** 3266	**18:** -	**18:** -	**18:** Child Security Lock Motor Unlock Control	**18:** 18	**18:** 0.75	**18:** WH/D-BU	**18:** 3266	**18:** -	**18:** -
19: 19	**19:** 0.75	**19:** D-GN	**19:** 199	**19:** -	**19:** -	**19:** Left Rear Speaker (+)	**19:** 19	**19:** 0.75	**19:** D-GN	**19:** 199	**19:** -	**19:** -
20: 20	**20:** 0.75	**20:** D-GN/BK	**20:** 116	**20:** -	**20:** -	**20:** Left Rear Speaker Signal (-)	**20:** 20	**20:** 0.75	**20:** D-GN/BK	**20:** 116	**20:** -	**20:** -

X800 RIGHT REAR DOOR HARNESS TO BODY HARNESS

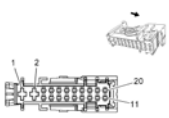

Connector Part Information

- Harness Type: Right Rear Door
- OEM Connector: 13600493
- Service Connector: Service by Harness - See Part Catalog
- Description: 20-Way F (GY)

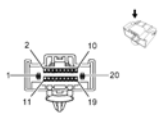

Connector Part Information

- Harness Type: Body
- OEM Connector: 13600495
- Service Connector: 13576560
- Description: 20-Way M 5.8 TTS 1.5 Series (GY)

Terminal Part Information

Terminal Type ID	Terminated Lead	Diagnostic Test Probe	Terminal Removal Tool	Service Terminal	Tray	Core Crimp	Insulation Crimp
I	13575858	J-35616-42 (RD)	J-38125-36	927837-1	25	A	D
II	13575538	J-35616-14 (GN)	J-38125-560	962943-5	16	E	A
III	13575539	J-35616-14 (GN)	J-38125-560	962943-5	16	E	A
IV	13575706	Pending	J-38125-36	964308-1	NA	Not Available	Not Available
V	13575593	J-35616-14 (GN)	J-38125-560	964265-2	28	E	2
VI	13575593	J-35616-14 (GN)	J-38125-560	964265-2	28	E	C

X800 Right Rear Door Harness to Body Harness

Pin	Size	Color	Circuit	Terminal Type ID	Option	Function	Pin	Size	Color	Circuit	Terminal Type ID	Option
1: 1	**1:** 2.5	**1:** BK	**1:** 2050	**1:** -	**1:** -	**1:** Ground	**1:** 1	**1:** 2.5	**1:** BK	**1:** 2050	**1:** -	**1:** -
2: 2	**2:** 2.5	**2:** RD/BN	**2:** 2940	**2:** -	**2:** -	**2:** Battery Positive Voltage	**2:** 2	**2:** 2.5	**2:** RD/BN	**2:** 2940	**2:** -	**2:** -
3: 3	**3:** 0.75	**3:** BN/YE	**3:** 294	**3:** -	**3:** -	**3:** Door Lock Actuator Unlock Control	**3:** 3	**3:** 0.75	**3:** BN/YE	**3:** 294	**3:** -	**3:** -
4: 4	**4:** 0.75	**4:** GY	**4:** 295	**4:** -	**4:** -	**4:** Door Lock Actuator Lock Control	**4:** 4	**4:** 0.75	**4:** GY	**4:** 295	**4:** -	**4:** -
5-8	-	-	-	-	-	Not Occupied	5-8	-	-	-	-	-
9: 9	**9:** 0.5	**9:** D-GN/GY	**9:** 6135	**9:** -	**9:** -	**9:** Linear Interconnect Network Bus 4	**9:** 9	**9:** 0.5	**9:** D-GN/GY	**9:** 6135	**9:** -	**9:** -
10	-	-	-	-	-	Not Occupied	10	-	-	-	-	-
11: 11	**11:** 0.5	**11:** GY	**11:** 748	**11:** -	**11:** -	**11:** Front Passenger Door Ajar Switch Signal	**11:** 11	**11:** 0.5	**11:** GY	**11:** 748	**11:** V	**11:** -
12-16	-	-	-	-	-	Not Occupied	12-16	-	-	-	-	-
						17: Child Security Lock						

17: 17	**17:** 0.5	**17:** GY/BK	**17:** 3268	**17:** -	**17:** -	Motor Status Signal Right Rear	**17:** 17	**17:** 0.5	**17:** GY/BK	**17:** 3268	**17:** -	**17:** -
18: 18	**18:** 0.75	**18:** WH/D-BU	**18:** 3266	**18:** -	**18:** -	**18:** Child Security Lock Motor Unlock Control	**18:** 18	**18:** 0.75	**18:** WH/D-BU	**18:** 3266	**18:** -	**18:** -
19: 19	**19:** 0.75	**19:** WH	**19:** 46	**19:** -	**19:** -	**19:** Right Rear Speaker (+)	**19:** 19	**19:** 0.75	**19:** WH	**19:** 46	**19:** -	**19:** -
20: 20	**20:** 0.75	**20:** D-BU/BK	**20:** 115	**20:** -	**20:** -	**20:** Right Rear Speaker Signal (-)	**20:** 20	**20:** 0.75	**20:** D-BU/BK	**20:** 115	**20:** -	**20:** -

X900 REAR COMPARTMENT LID HARNESS TO BODY HARNESS

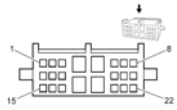

Connector Part Information

- Harness Type: Rear Compartment Lid
- OEM Connector: 13677589
- Service Connector: Pending
- Description: 22-Way F MQS/MCP 2.8 Series (BK)

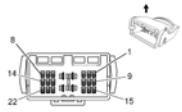

Connector Part Information

- Harness Type: Body
- OEM Connector: 13677156
- Service Connector: Pending
- Description: 22-Way M MQS/MCP 2.8 Series (BK)

Terminal Part Information

Terminal Type ID	Terminated Lead	Diagnostic Test Probe	Terminal Removal Tool	Service Terminal	Tray	Core Crimp	Insulation Crimp
I	Pending	Pending	Pending	Pending	Pending	Not Available	Not Available
II	Pending	Pending	Pending	Pending	Pending	Not Available	Not Available

X900 Rear Compartment Lid Harness to Body Harness

Pin	Size	Color	Circuit	Terminal Type ID	Option	Function	Pin	Size	Color	Circuit	Terminal Type ID	Option
1: 1	**1:** 0.5	**1:** BU/YE	**1:** 6795	**1:** I	**1:** -	**1:** Lift Glass/Trunk Motor Release Control 2	**1:** 1	**1:** 0.5	**1:** BU/YE	**1:** 6795	**1:** II	**1:** -

2: 2	**2:** 0.5	**2:** VT/GY	**2:** 1303	**2:** I	**2:** -	**2:** Lift Gate Ajar Switch Signal (1)	**2:** 2	**2:** 0.5	**2:** VT/GY	**2:** 1303	**2:** II	**2:** -
3: 3	**3:** 0.5	**3:** GN/YE	**3:** 6846	**3:** I	**3:** -	**3:** Rear License Lamp Control	**3:** 3	**3:** 0.5	**3:** GN/YE	**3:** 6846	**3:** II	**3:** -
4	-	-	-	-	-	Not Occupied	4	-	-	-	-	-
5	-	-	-	-	-	Not Occupied	5	-	-	-	-	-
6	-	-	-	-	-	Not Occupied	6	-	-	-	-	-
7: 7	**7:** 0.5	**7:** BK	**7:** 2550	**7:** I	**7:** -	**7:** Lift Gate Ajar Switch Signal (1)	**7:** 7	**7:** 0.5	**7:** BK	**7:** 2550	**7:** II	**7:** -
8: 8	**8:** 0.5	**8:** BK	**8:** 650	**8:** I	**8:** -	**8:** Ground	**8:** 8	**8:** 0.5	**8:** BK	**8:** 650	**8:** II	**8:** -
9: 9	**9:** 0.5	**9:** BK	**9:** 1650	**9:** I	**9:** -	**9:** Ground	**9:** 9	**9:** 0.5	**9:** BK	**9:** 1650	**9:** II	**9:** -
10: 10	**10:** 0.5	**10:** YE/BU	**10:** 5797	**10:** I	**10:** -	**10:** Rear Closure Handle Switch Open Signal	**10:** 10	**10:** 0.5	**10:** YE/BU	**10:** 5797	**10:** II	**10:** -
11	-	-	-	-	-	Not Occupied	11	-	-	-	-	-
12	-	-	-	-	-	Not Occupied	12	-	-	-	-	-
13: 13	**13:** 0.5	**13:** VT/GY	**13:** 709	**13:** I	**13:** -	**13:** Left Park Lamp Supply Voltage	**13:** 13	**13:** 0.5	**13:** VT/GY	**13:** 709	**13:** II	**13:** -
14: 14	**14:** 0.5	**14:** GY/BN	**14:** 309	**14:** I	**14:** -	**14:** Right Park Lamp Control	**14:** 14	**14:** 0.5	**14:** GY/BN	**14:** 309	**14:** II	**14:** -
15: 15	**15:** 0.5	**15:** BARE	**15:** 6974	**15:** I	**15:** -	**15:** Camera Drain Wire	**15:** 15	**15:** 0.5	**15:** BARE	**15:** 6974	**15:** II	**15:** -
16: 16	**16:** 0.5	**16:** WH/BU	**16:** 6973	**16:** I	**16:** -	**16:** Camera Signal #2	**16:** 16	**16:** 0.5	**16:** WH/BU	**16:** 6973	**16:** II	**16:** -
17: 17	**17:** 0.5	**17:** GY/YE	**17:** 6972	**17:** I	**17:** -	**17:** Camera Signal #2 +	**17:** 17	**17:** 0.5	**17:** GY/YE	**17:** 6972	**17:** II	**17:** -
18	-	-	-	-	-	Not Occupied	18	-	-	-	-	-
19	-	-	-	-	-	Not Occupied	19	-	-	-	-	-
20: 20	**20:** 0.5	**20:** BK	**20:** 1324	**20:** I	**20:** -	**20:** Backup Lamp Supply Voltage	**20:** 20	**20:** 0.5	**20:** BK	**20:** 1324	**20:** II	**20:** -
21: 21	**21:** 0.5	**21:** VT/BK	**21:** 339	**21:** I	**21:** -	**21:** Run/Crank Ignition 1 Voltage	**21:** 21	**21:** 0.5	**21:** VT/BK	**21:** 339	**21:** II	**21:** -
22	-	-	-	-	-	Not Occupied	22	-	-	-	-	-

X910 LEFT INNER TAIL LAMP HARNESS TO REAR COMPARTMENT LID HARNESS

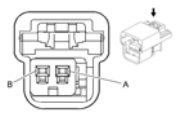

Connector Part Information

- Harness Type: Left Inner Tail Lamp
- OEM Connector: 15332129
- Service Connector: 15306425
- Description: 2-Way F GT 150 Series (BK)

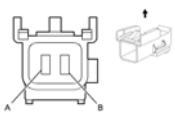

Connector Part Information

- Harness Type: Rear Compartment Lid
- OEM Connector: 15332130
- Service Connector: 88986459
- Description: 2-Way M GT 150 Series (BK)

Terminal Part Information

Terminal Type ID	Terminated Lead	Diagnostic Test Probe	Terminal Removal Tool	Service Terminal	Tray	Core Crimp	Insulation Crimp
I	Service by Connector Assembly - 15306425	Pending	Not Available	Not Available	Not Available	Not Available	Not Available
II	13575502	J-35616-3 (GY)	J-38125-553	15304702	19	E	4

X910 Left Inner Tail Lamp Harness to Rear Compartment Lid Harness

Pin	Size	Color	Circuit	Terminal Type ID	Option	Function	Pin	Size	Color	Circuit	Terminal Type ID	Option
A: A	**A:** 0.5	**A:** BK	**A:** 709	**A:** I	**A:** -	**A:** Left Park Lamp Supply Voltage	**A:** A	**A:** 0.5	**A:** VT/GY	**A:** 709	**A:** II	**A:** -
B: B	**B:** 0.5	**B:** D-BU	**B:** 2550	**B:** I	**B:** -	**B:** Ground	**B:** B	**B:** 0.5	**B:** BK	**B:** 2550	**B:** II	**B:** -

X920 RIGHT INNER TAIL LAMP HARNESS TO REAR COMPARTMENT LID HARNESS

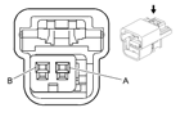

Connector Part Information

- Harness Type: Right Inner Tail Lamp
- OEM Connector: 15332129
- Service Connector: 15306425

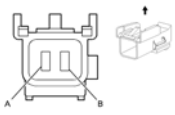

Connector Part Information

- Harness Type: Rear Compartment Lid
- OEM Connector: 15332130
- Service Connector: 88986459

- Description: 2-Way F GT 150 Series (BK)
- Description: 2-Way M GT 150 Series (BK)

Terminal Part Information

Terminal Type ID	Terminated Lead	Diagnostic Test Probe	Terminal Removal Tool	Service Terminal	Tray	Core Crimp	Insulation Crimp
I	Service by Connector Assembly - 15306425	Pending	Not Available	Not Available	Not Available	Not Available	Not Available
II	13575502	J-35616-3 (GY)	J-38125-553	15304702	19	E	4

X920 Right Inner Tail Lamp Harness to Rear Compartment Lid Harness

Pin	Size	Color	Circuit	Terminal Type ID	Option	Function	Pin	Size	Color	Circuit	Terminal Type ID	Option
A: A	**A:** 0.5	**A:** BK	**A:** 309	**A:** I	**A:** -	**A:** Right Park Lamp Supply Voltage	**A:** A	**A:** 0.5	**A:** GY/BN	**A:** 309	**A:** II	**A:** -
B: B	**B:** 0.5	**B:** D-BU	**B:** 2550	**B:** I	**B:** -	**B:** Ground	**B:** B	**B:** 0.5	**B:** BK	**B:** 2550	**B:** II	**B:** -

X915 LICENSE LAMP HARNESS TO REAR COMPARTMENT LID HARNESS (-UVC)

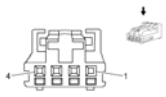

Connector Part Information

- Harness Type: License Lamp
- OEM Connector: 936119-1
- Service Connector: Service by Harness- See Part Catalog
- Description: 4-Way F (BK)



Connector Part Information

- Harness Type: Rear Compartment Lid
- OEM Connector: 13599751
- Service Connector: Service by Harness - See Part Catalog
- Description: 4-Way M (BK)

Terminal Part Information

Terminal Type ID	Terminated Lead	Diagnostic Test Probe	Terminal Removal Tool	Service Terminal	Tray	Core Crimp	Insulation Crimp
I	13575585	J-35616-64B (L-BU)	J-38125-12A	928999-5	15	J	J
II	13327167	J-35616-65B (L-BU)	J-38125-12A	963716-2	7	J	J

X915 License Lamp Harness to Rear Compartment Lid Harness (-UVC)

Pin	Size	Color	Circuit	Terminal Type ID	Option	Function	Pin	Size	Color	Circuit	Terminal Type ID	Option
1: 1	**1:** 0.5	**1:** BK/WH	**1:** 2550	**1:** I	**1:** -	**1:** Ground	**1:** 1	**1:** 0.5	**1:** BK	**1:** 2550	**1:** II	**1:** -
2: 2	**2:** 0.5	**2:** WH	**2:** 6846	**2:** I	**2:** -	**2:** Rear License Lamp Control	**2:** 2	**2:** 0.5	**2:** GN/YE	**2:** 6846	**2:** II	**2:** -
3: 3	**3:** 0.5	**3:** BK	**3:** 1650	**3:** I	**3:** -	**3:** Ground	**3:** 3	**3:** 0.5	**3:** BK	**3:** 1650	**3:** II	**3:** -
4: 4	**4:** 0.5	**4:** BK	**4:** 5797	**4:** I	**4:** -	**4:** Rear Closure Handle Switch Open Signal	**4:** 4	**4:** 0.5	**4:** YE/D-BU	**4:** 5797	**4:** II	**4:** -

X915 LICENSE LAMP HARNESS TO REAR COMPARTMENT LID HARNESS (UVC)

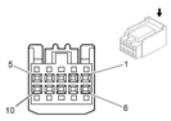

Connector Part Information

- Harness Type: License Lamp
- OEM Connector: 13815336
- Service Connector: 13577390
- Description: 10-Way F Kaisen 0.64 Series (BK)

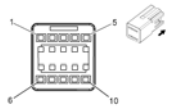

Connector Part Information

- Harness Type: Rear Compartment Lid
- OEM Connector: 13761859
- Service Connector: 19177677
- Description: 10-Way M Kaisen 0.64 Series (BK)

Terminal Part Information

Terminal Type ID	Terminated Lead	Diagnostic Test Probe	Terminal Removal Tool	Service Terminal	Tray	Core Crimp	Insulation Crimp
I	Pending	J-35616-64B (L-BU)	J-38125-215A	Not Available	Not Available	Not Available	Not Available
II	Pending	J-35616-65B (L-BU)	J-38125-215A	18	18	Not Available	Not Available

X915 License Lamp Harness to Rear Compartment Lid Harness (UVC)

Pin	Size	Color	Circuit	Terminal Type ID	Option	Function	Pin	Size	Color	Circuit	Terminal Type ID	Option
1: 1	**1:** 0.5	**1:** BK	**1:** 2550	**1:** I	**1:** -	**1:** Ground	**1:** 1	**1:** 0.5	**1:** BK	**1:** 2550	**1:** II	**1:** -
	2:		**2:**					**2:**		**2:**		

2: 2	0.5	**2:** BK	1650	**2:** I	**2:** -	**2:** Ground	**2:** 2	0.5	**2:** BK	1650	**2:** II	**2:** -
3: 3	**3:** 0.5	**3:** GY/YE	**3:** 6972	**3:** I	**3:** -	**3:** Camera Signal #2 +	**3:** 3	**3:** 0.5	**3:** GY/YE	**3:** 6972	**3:** II	**3:** -
4: 4	**4:** 0.5	**4:** BARE	**4:** 6974	**4:** I	**4:** -	**4:** Camera Drain Wire	**4:** 4	**4:** 0.5	**4:** BARE	**4:** 6974	**4:** II	**4:** -
5: 5	**5:** 0.5	**5:** GN/WH	**5:** 1324	**5:** I	**5:** -	**5:** Backup Lamp Supply Voltage	**5:** 5	**5:** 0.5	**5:** GN/WH	**5:** 1324	**5:** II	**5:** -
6: 6	**6:** 0.5	**6:** GN/YE	**6:** 6846	**6:** I	**6:** -	**6:** Rear License Lamp Supply Voltage	**6:** 6	**6:** 0.5	**6:** GN/YE	**6:** 6846	**6:** II	**6:** -
7: 7	**7:** 0.5	**7:** YE/BU	**7:** 5797	**7:** I	**7:** -	**7:** Rear Closure Handle Switch Open Signal	**7:** 7	**7:** 0.5	**7:** YE/BU	**7:** 5797	**7:** II	**7:** -
8: 8	**8:** 0.5	**8:** WH/BU	**8:** 6973	**8:** I	**8:** -	**8:** Camera Signal #2	**8:** 8	**8:** 0.5	**8:** WH/BU	**8:** 6973	**8:** II	**8:** -
9: 9	**9:** 0.5	**9:** BK	**9:** 2350	**9:** I	**9:** -	**9:** Ground	**9:** 9	**9:** 0.5	**9:** BK	**9:** 2350	**9:** II	**9:** -
10: 10	**10:** 0.5	**10:** VT/BK	**10:** 339	**10:** I	**10:** -	**10:** Run/Crank Ignition 1 Voltage	**10:** 10	**10:** 0.5	**10:** VT/BK	**10:** 339	**10:** II	**10:** -

2013 ELECTRICAL

Wiring Systems and Power Management - Schematic and Routing Diagrams - Cruze

WIRING SCHEMATICS AND WIRING HARNESS ROUTING DIAGRAMS

HARNESS ROUTING VIEWS

Forward Lamp Harness Routing

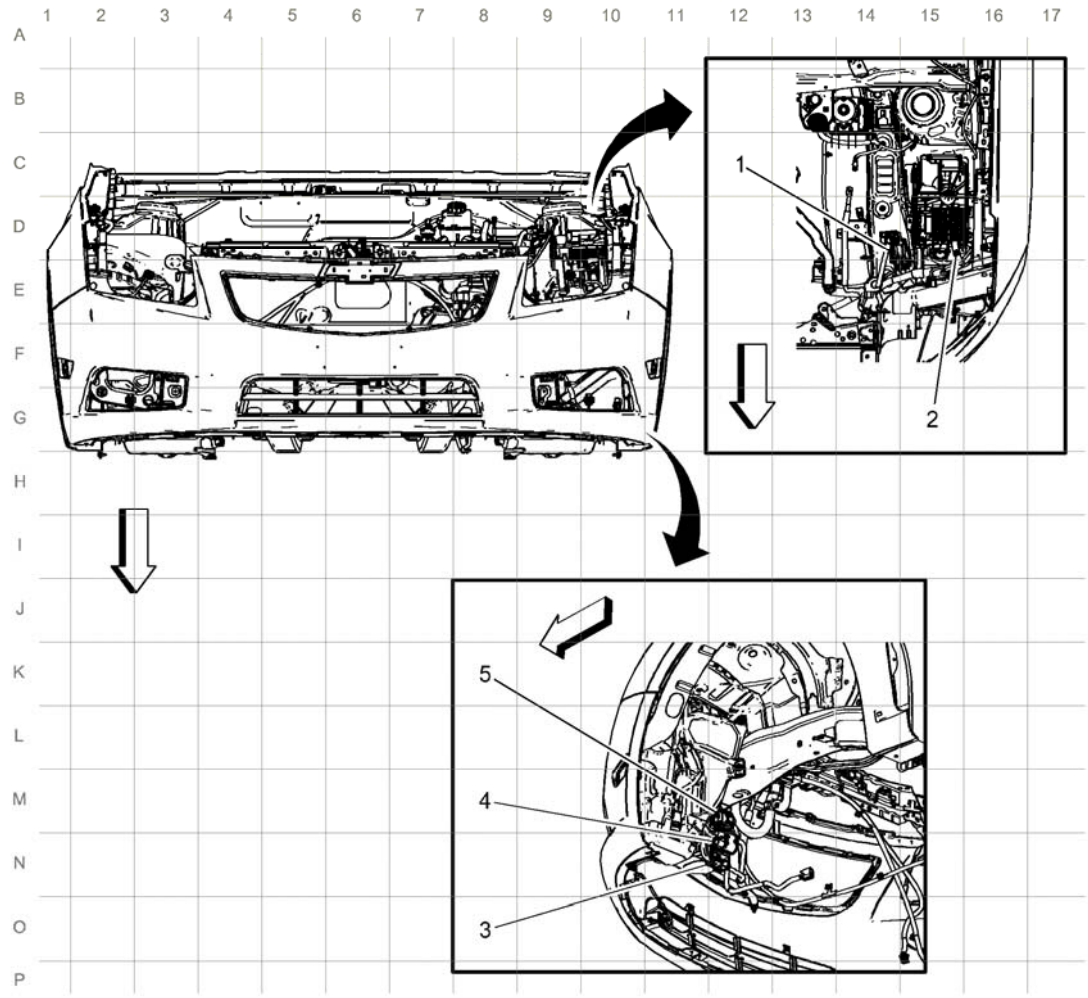

Fig. 1: Foward Lamp Harness Routing
Courtesy of GENERAL MOTORS COMPANY

Items
1: X100 **X100 Body Harness to Forward Lamp Harness**
2: J116 (T3U)
3: X102 **X102 Engine Cooling Harness to Forward Lamp Harness**

4: X104 **X104 Engine Cooling Harness to Forward Lamp Harness**
5: X114 **X114 Power Steering Harness to Forward Lamp Harness**

Engine Harness Routing - Left Front (LUV)

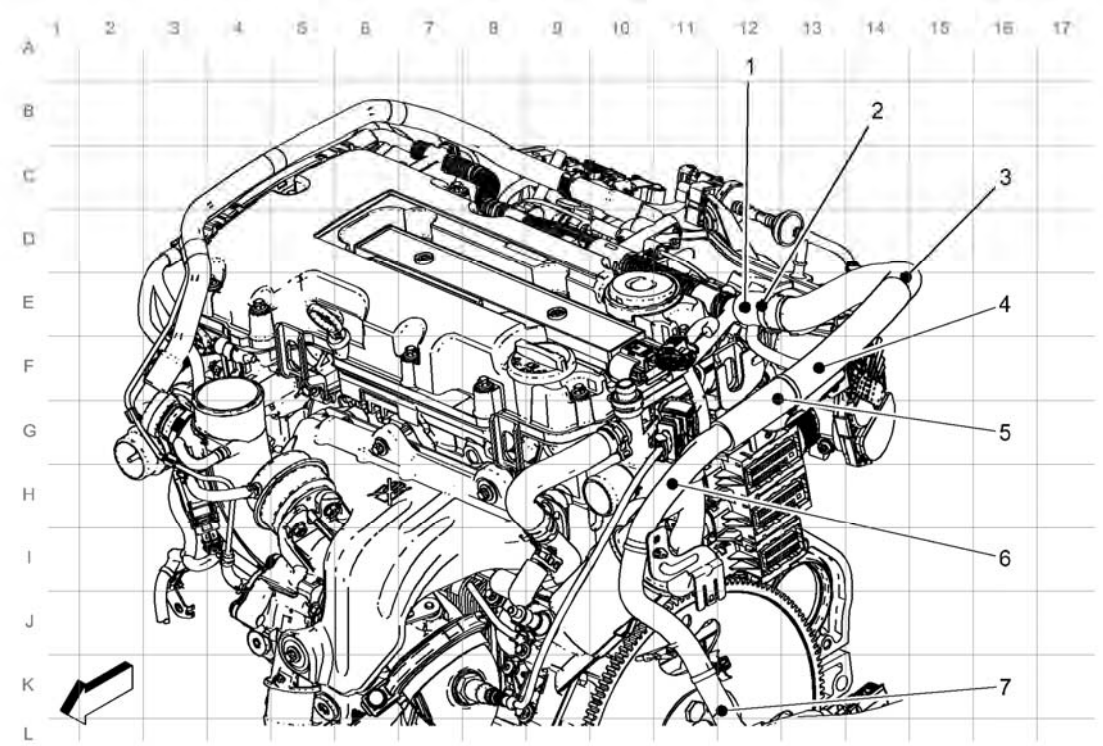

Fig. 2: Engine Harness Routing -- Left Front (LUJ)
Courtesy of GENERAL MOTORS COMPANY

Items
1: J114
2: J111
3: J127
4: J144
5: J112 (LUV)
6: J119
7: J132

Engine Harness Routing - Left Front (LUW/LWE)

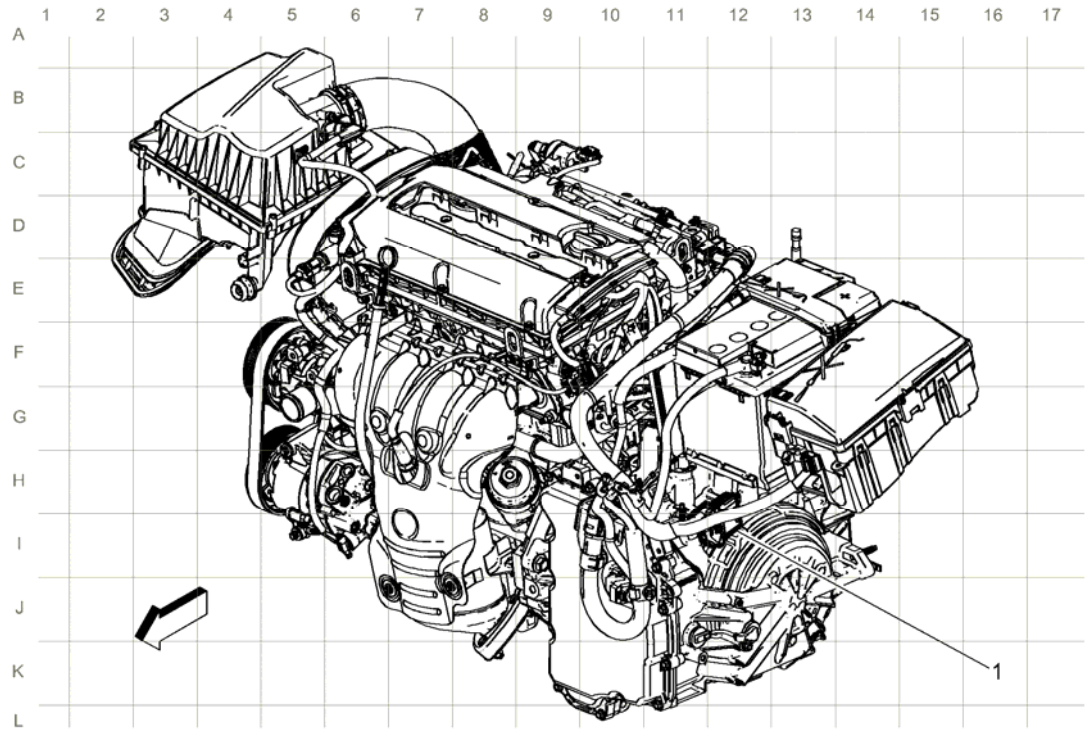

Fig. 3: Engine Harness Routing -- Left Front (LUW)
Courtesy of GENERAL MOTORS COMPANY

Items
1: X190 **X190 Body Harness to Engine Harness**

Engine Harness Routing - Right Rear (LUW/LWE)

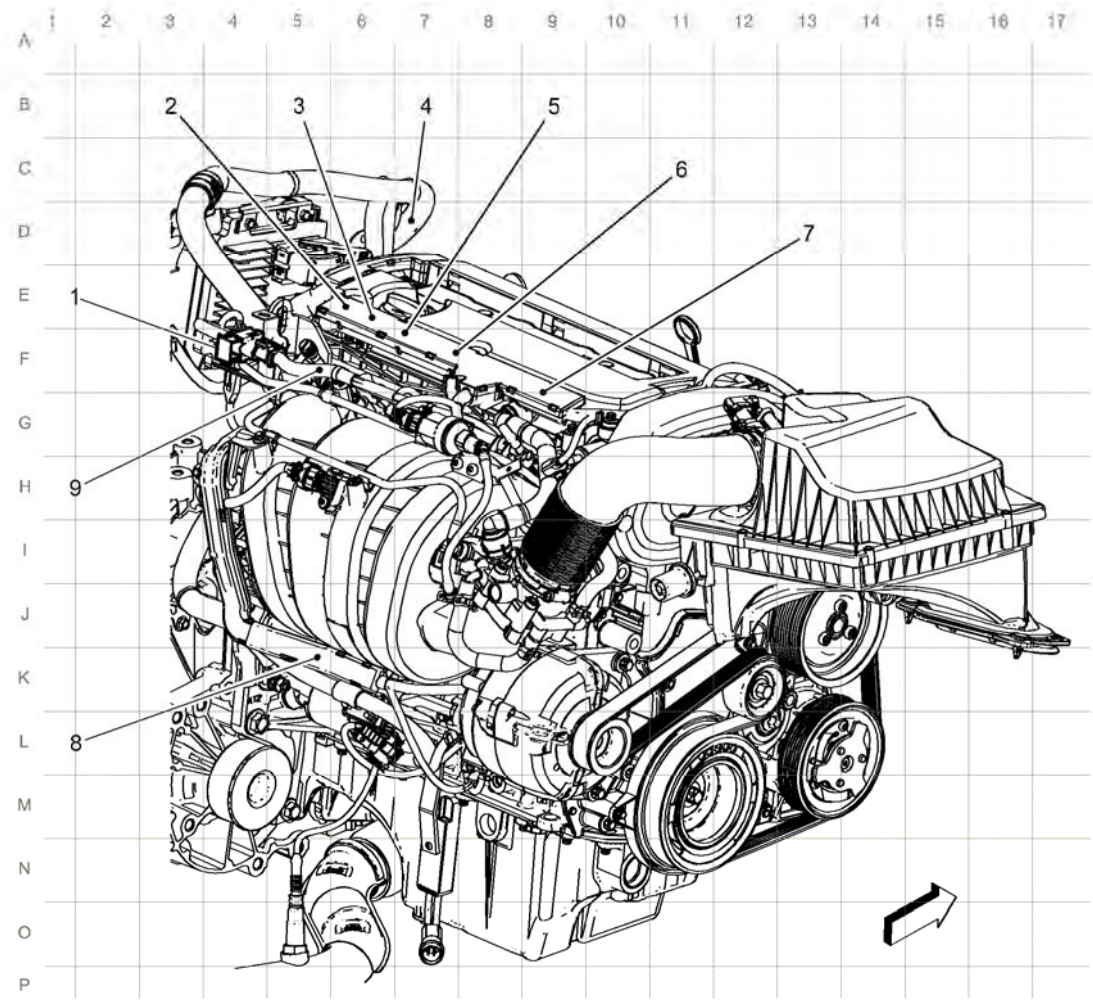

Fig. 4: Engine Harness Routing -- Right Rear (LUW)
Courtesy of GENERAL MOTORS COMPANY

Items
1: X105 (LUW/LWE) **X105 Engine Harness to Fuel Injectors Harness (LUW/LWE)**
2: J114
3: J144
4: J127
5: J111
6: J132
7: J119
8: J122 (LUW or LWE with MH9)
9: J108 (LUW/LWE)

Instrument Panel Harness Routing

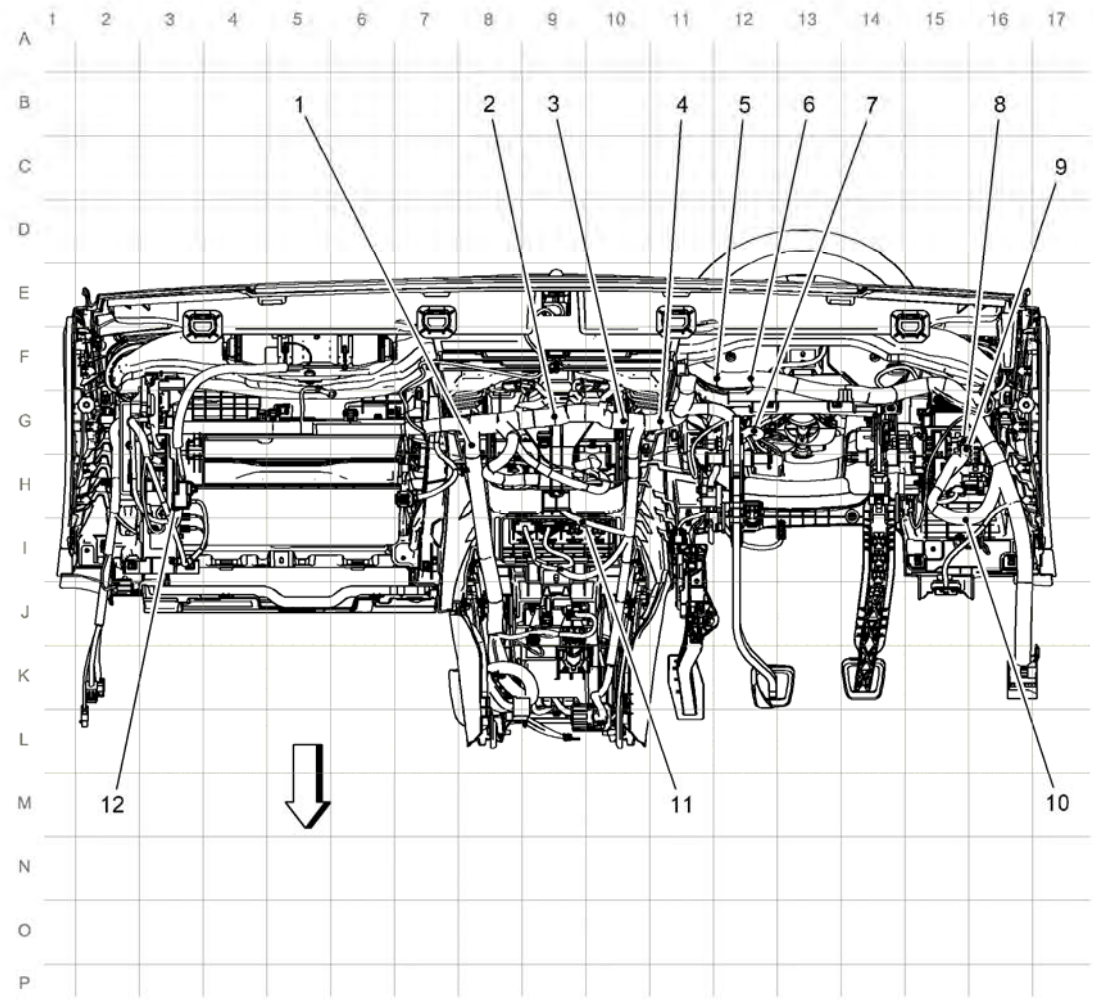

Fig. 5: Instrument Panel Harness Routing
Courtesy of GENERAL MOTORS COMPANY

Items
1: J202
2: J214
3: J204
4: J200
5: J213
6: J203
7: J209
8: J207
9: J206
10: J201
11: J211
12: X203 **X203 Instrument Panel Harness to Passenger Instrument Panel Air Bag Harness**

Center Console Harness Routing

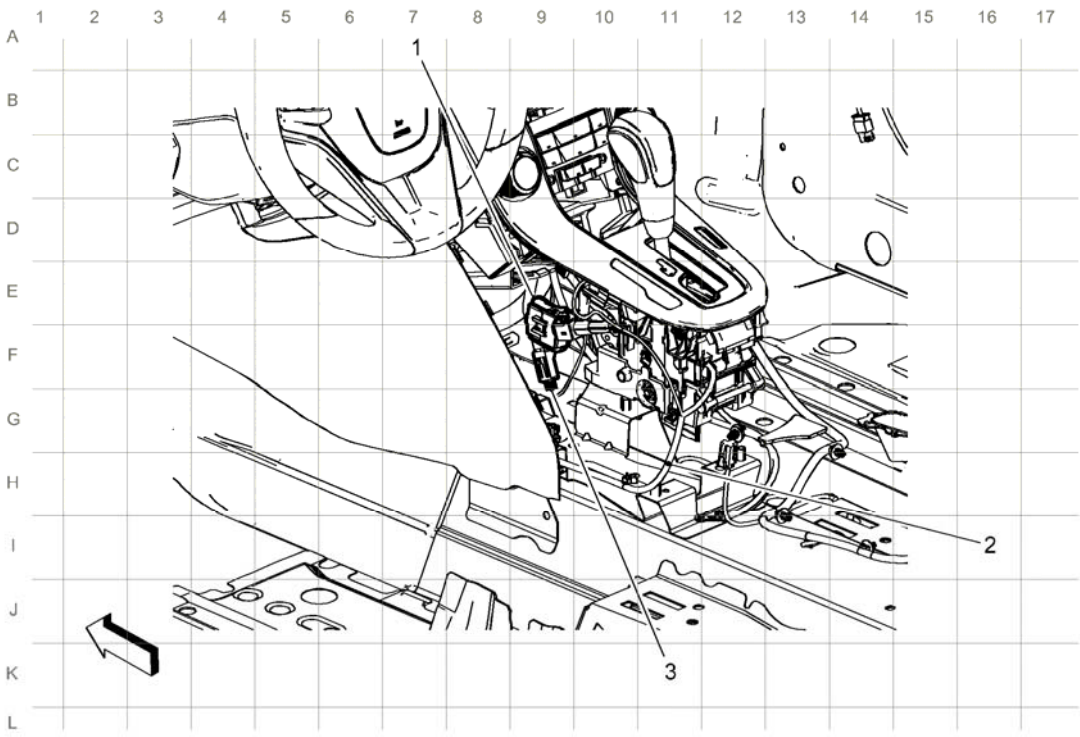

Fig. 6: Center Console Harness Routing
Courtesy of GENERAL MOTORS COMPANY

Items
1: X300 **X300 Console Harness to Instrument Panel Harness**
2: J212
3: X301

Passenger Compartment Harness Routing

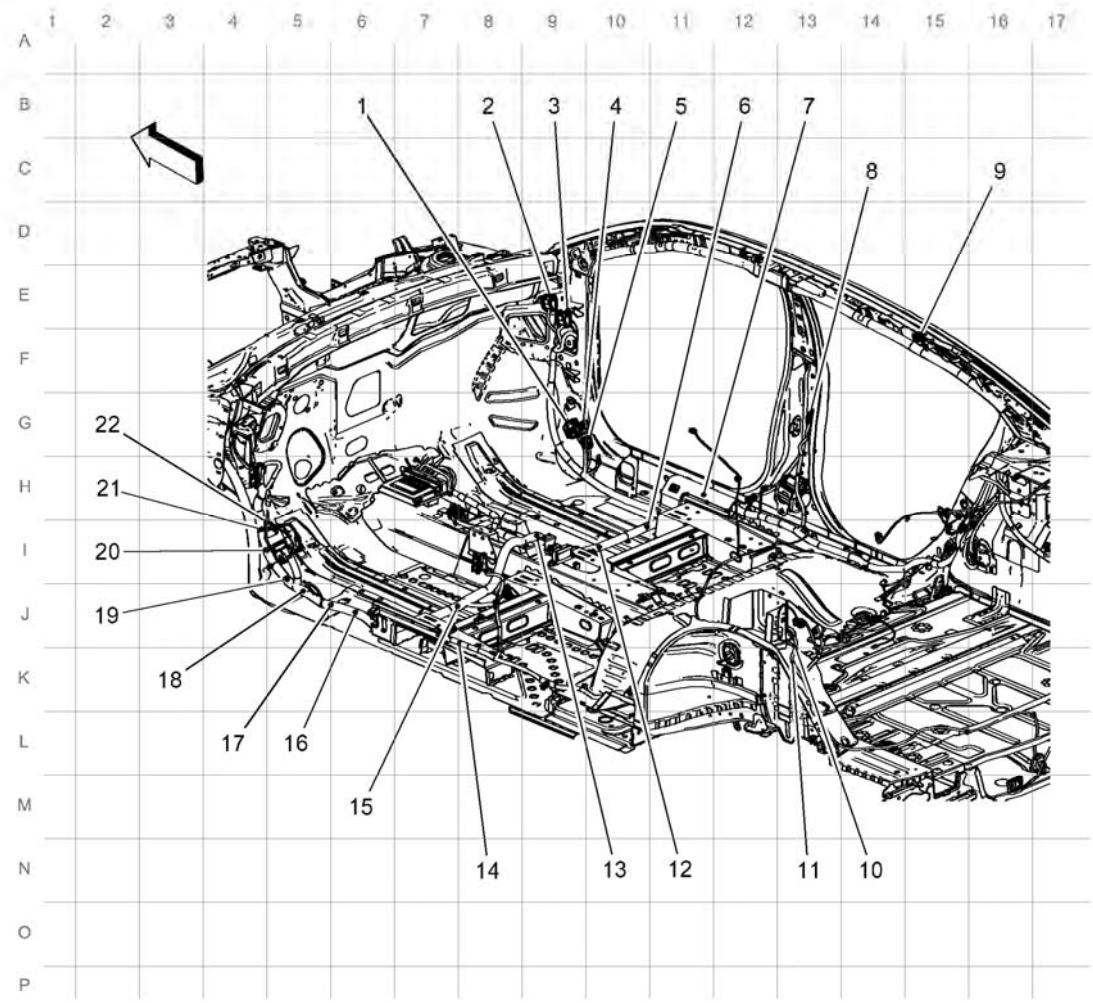

Fig. 7: Passenger Compartment Harness Routing
Courtesy of GENERAL MOTORS COMPANY

Items

1: X205 (UQA) **X205 Instrument Panel Harness to Body Harness (UQA)**
2: X211 **X211 Headliner Harness to Body Harness**
3: X210 **X210 Headliner Harness to Body Harness**
4: X206
5: X207
6: J302
7: J308
8: X800 **X800 Right Rear Door Harness to Body Harness**
9: X345 **X345 Body Harness to Curtain Air Bag Harness**
10: J402
11: J401
12: J305
13: J307

14: J315
15: J313
16: J314
17: J311
18: J319
19: J301
20: J303
21: J316
22: X200 **X200 Instrument Panel Harness to Body Harness**

Driver Seat Harness Routing

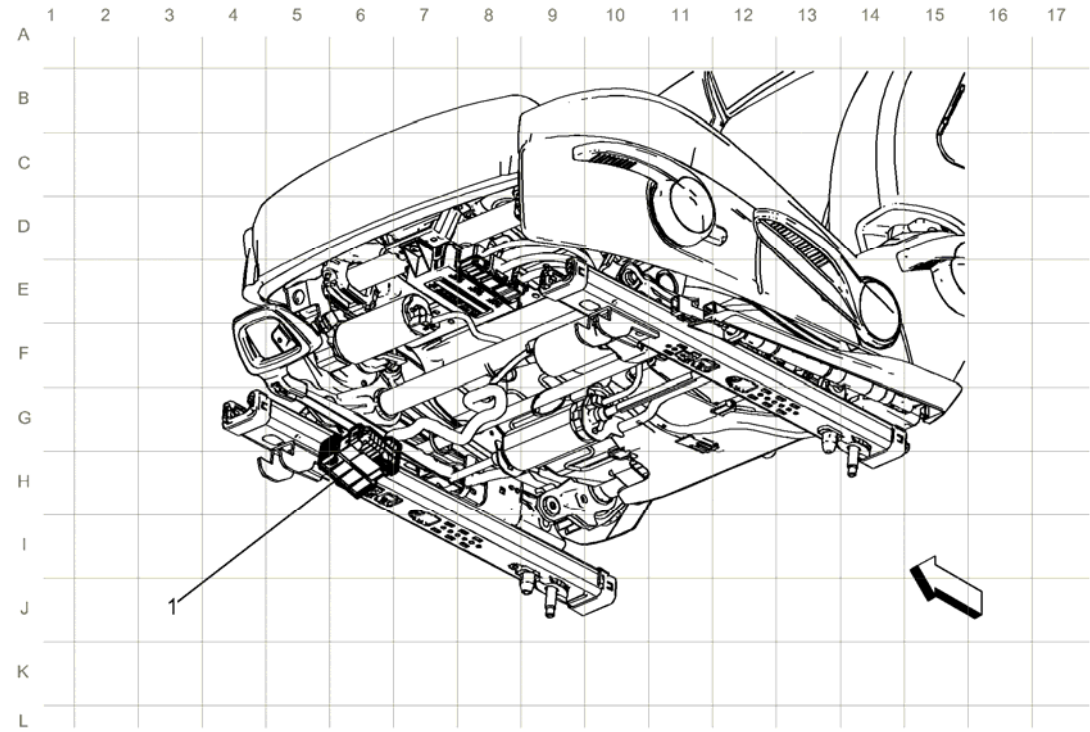

Fig. 8: Driver Seat Harness Routing
Courtesy of GENERAL MOTORS COMPANY

Items
1: X310 **X310 Body Harness to Driver Seat Harness**

Passenger Seat Harness Routing

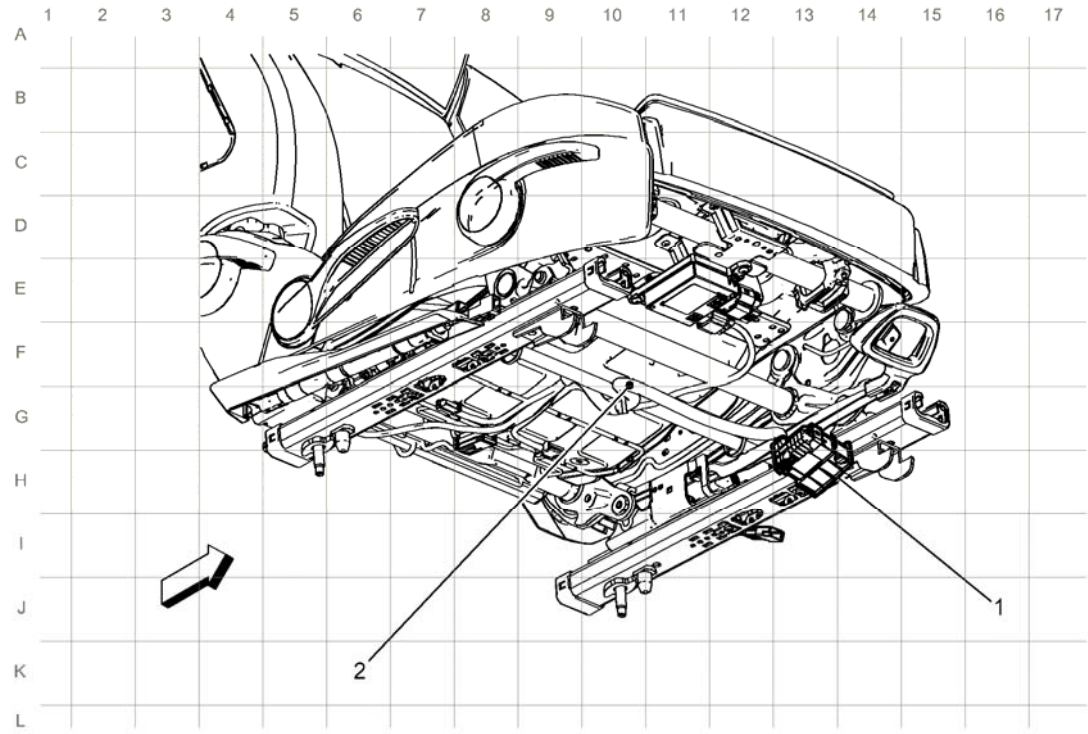

Fig. 9: Passenger Seat Harness Routing
Courtesy of GENERAL MOTORS COMPANY

Items
1: X320 **X320 Body Harness to Passenger Seat Harness**
2: J317

Driver Door Harness Routing

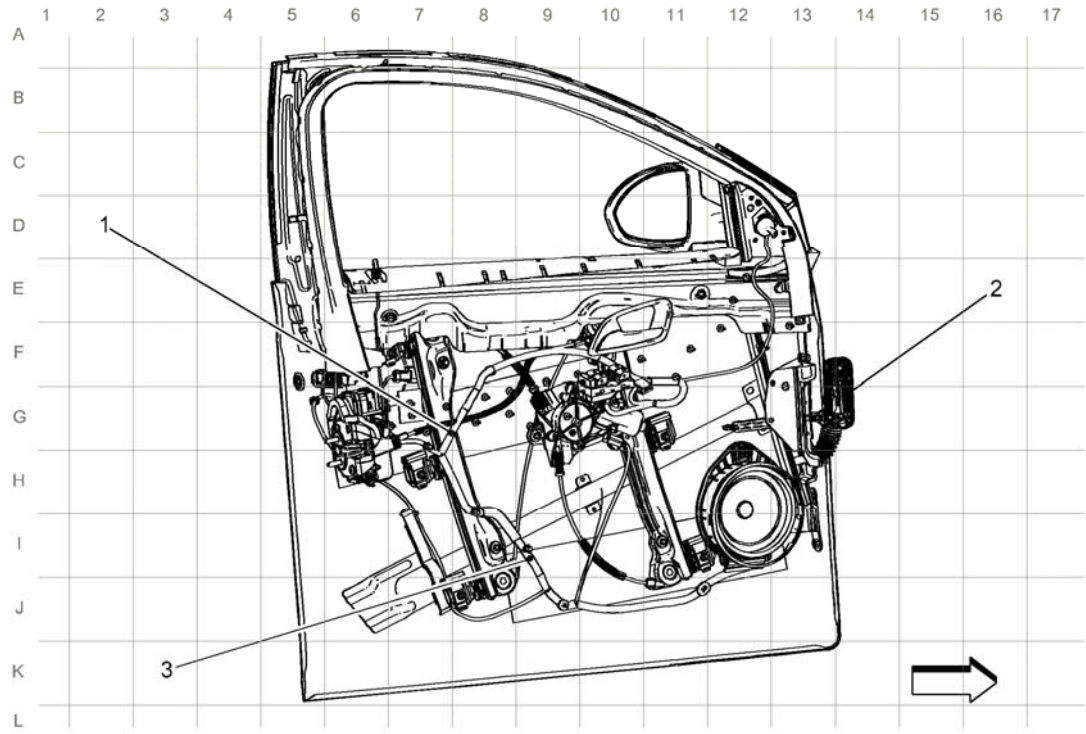

Fig. 10: Driver Door Harness Routing
Courtesy of GENERAL MOTORS COMPANY

Items
1: J501 (AXG)
2: X500 **X500 Driver Door Harness to Body Harness**
3: J502

Passenger Door Harness Routing

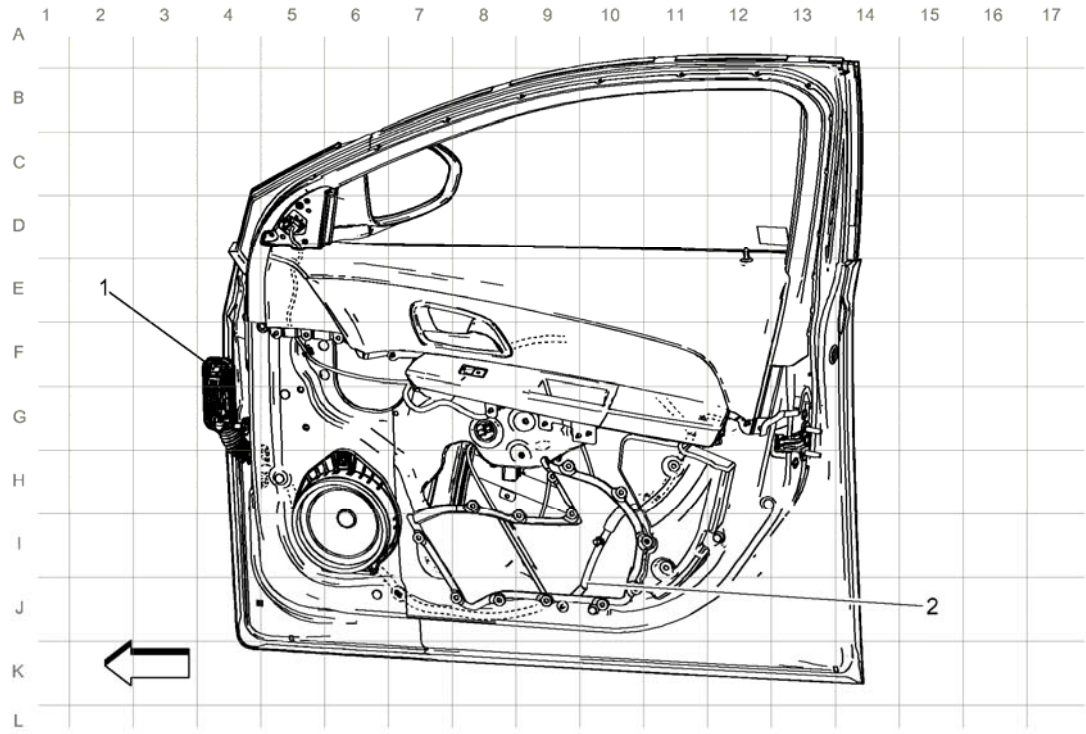

Fig. 11: Passenger Door Harness Routing
Courtesy of GENERAL MOTORS COMPANY

Items
1: X600 **X600 Passenger Door Harness to Body Harness**
2: J605

Left Rear Door Harness Routing

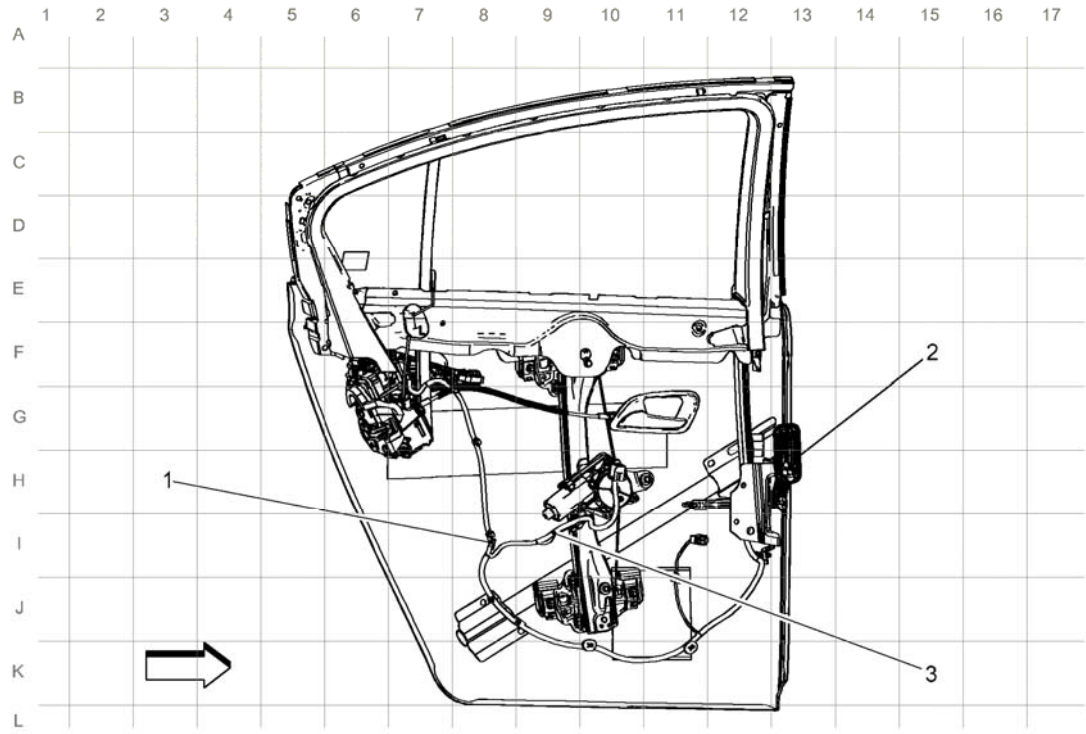

Fig. 12: Left Rear Door Harness Routing
Courtesy of GENERAL MOTORS COMPANY

Items
1: J704
2: X700 **X700 Left Rear Door Harness to Body Harness**
3: J702

Right Rear Door Harness Routing

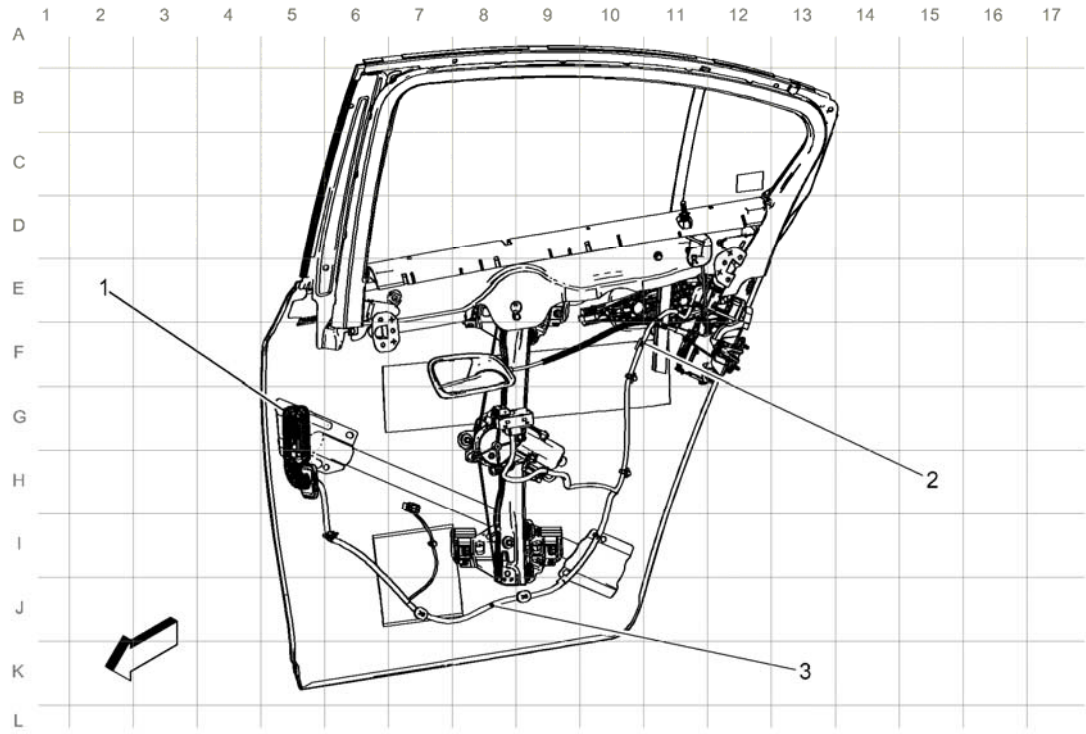

Fig. 13: Right Rear Door Harness Routing
Courtesy of GENERAL MOTORS COMPANY

Items
1: X800 **X800 Right Rear Door Harness to Body Harness**
2: J803
3: J801

Headliner Harness Routing

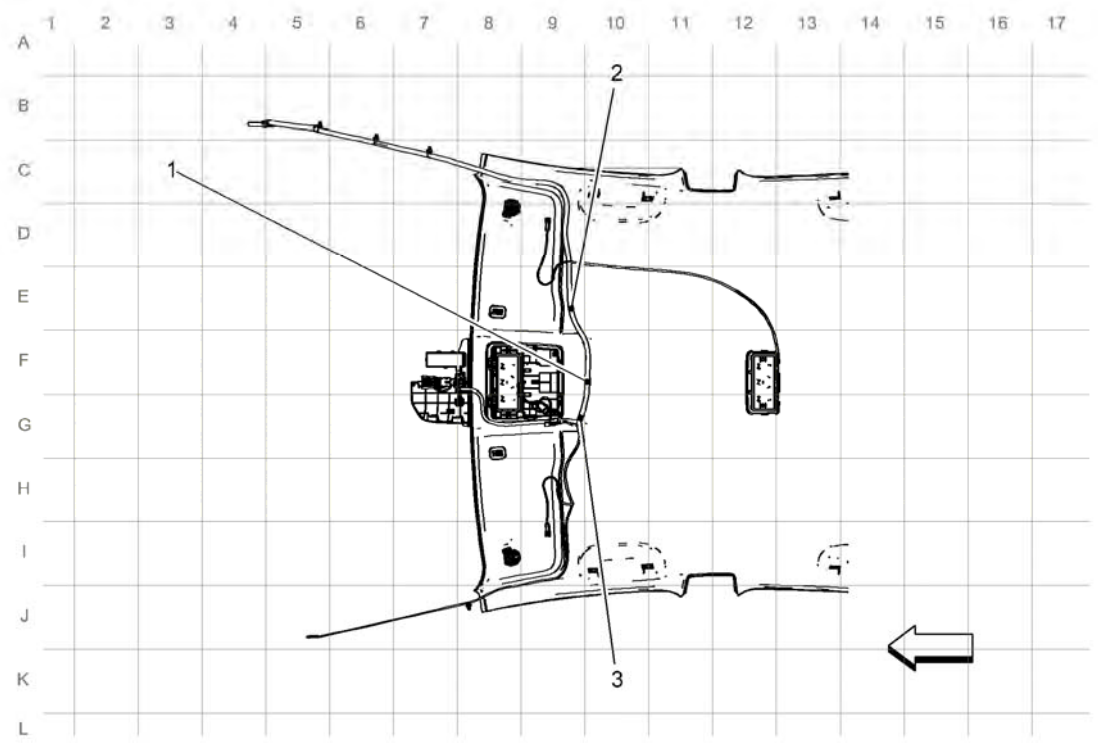

Fig. 14: Headliner Harness Routing
Courtesy of GENERAL MOTORS COMPANY

Items
1: J334
2: J333 (CF5)
3: J332

Rear Compartment Lid Harness Routing

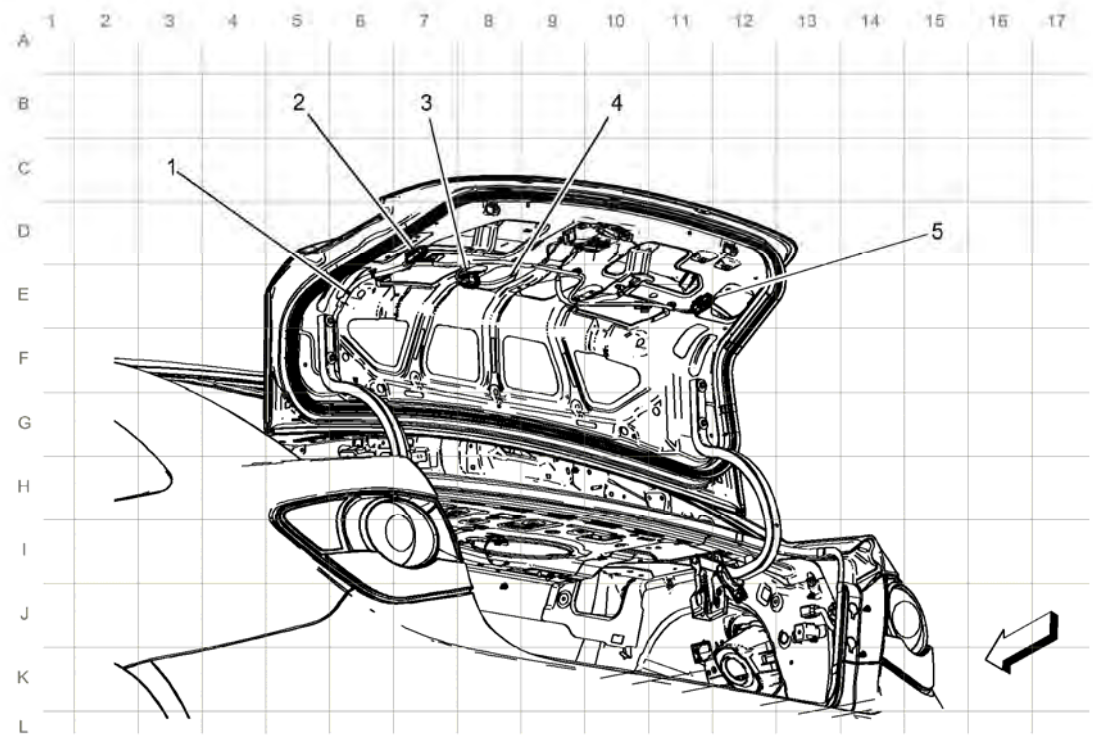

Fig. 15: Rear Compartment Lid Harness Routing
Courtesy of GENERAL MOTORS COMPANY

Items
1: J903
2: X910 **X910 Left Inner Tail Lamp Harness to Rear Compartment Lid Harness**
3: X915 **X915 License Lamp Harness to Rear Compartment Lid Harness (-UVC)** **X915 License Lamp Harness to Rear Compartment Lid Harness (UVC)**
4: J901
5: X920 **X920 Right Inner Tail Lamp Harness to Rear Compartment Lid Harness**

Body Harness Routing - Left Side of the Luggage Compartment

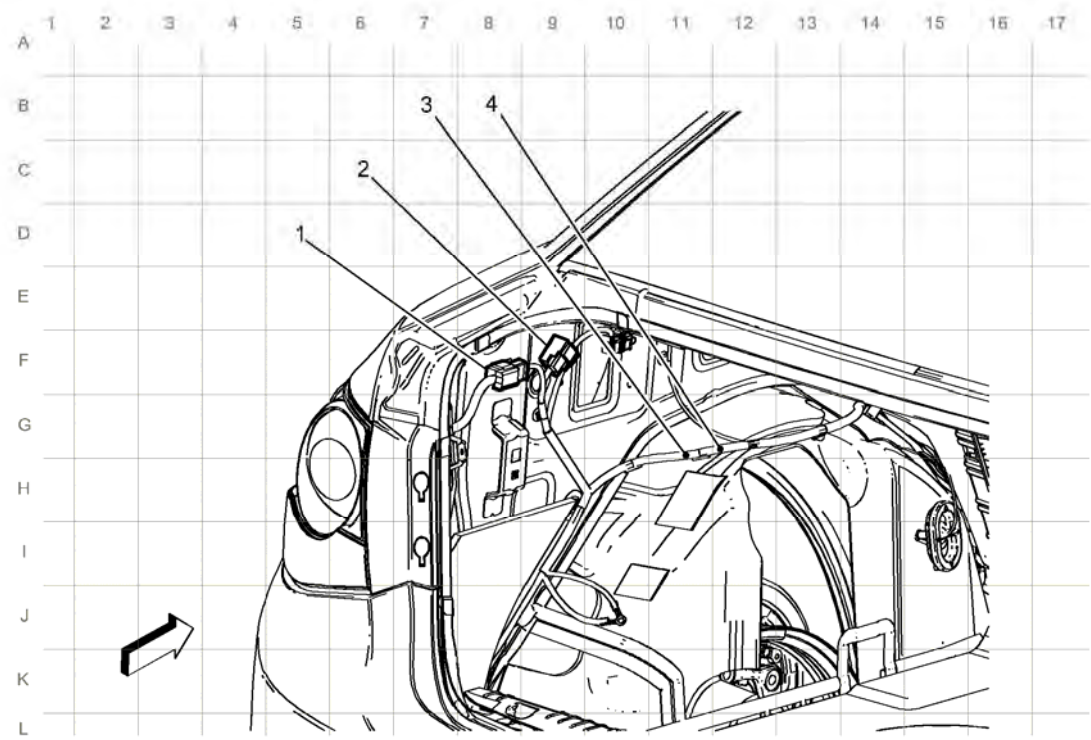

Fig. 16: Body Harness Routing -- Left Side of the Luggage Compartment
Courtesy of GENERAL MOTORS COMPANY

Items
1: X410 **X410 Left Tail Lamp Harness to Body Harness**
2: X900 **X900 Rear Compartment Lid Harness to Body Harness**
3: J401
4: J402

Body Harness Routing - Right Side of the Luggage Compartment

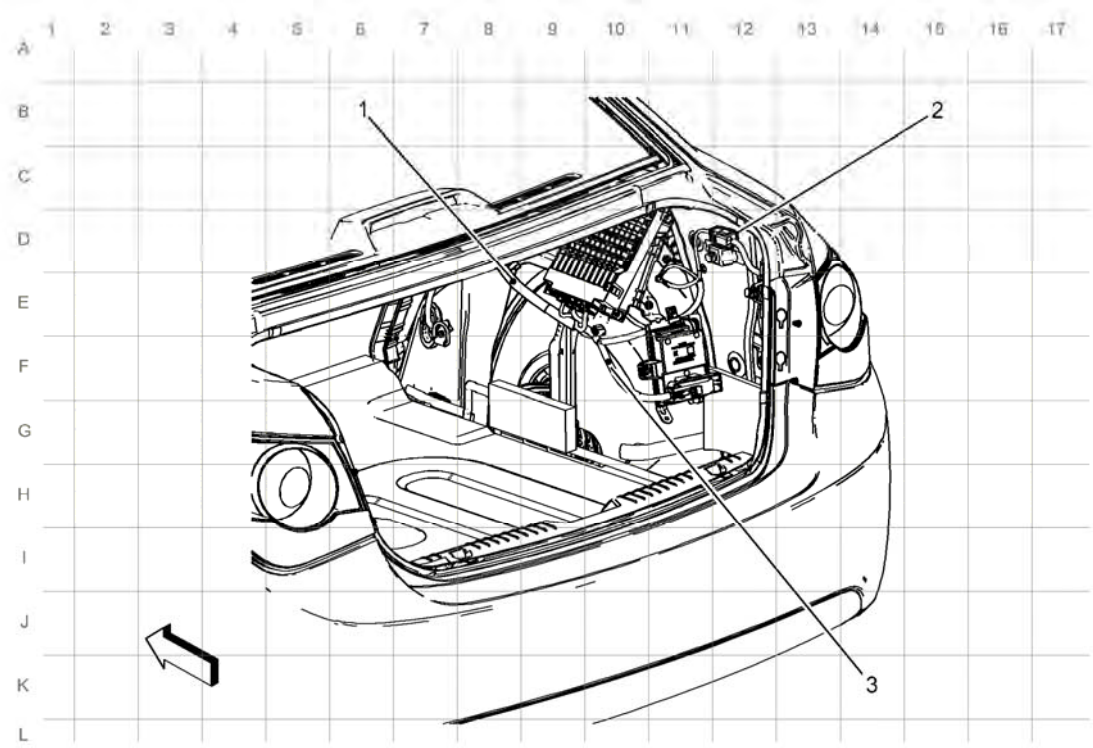

Fig. 17: Body Harness Routing - Right Side of the Luggage Compartment
Courtesy of GENERAL MOTORS COMPANY

Items
1: J312 (Y8X)
2: X420 **X420 Right Tail Lamp Harness to Body Harness**
3: J404

Body Harness Routing - Under the Rear of the Vehicle

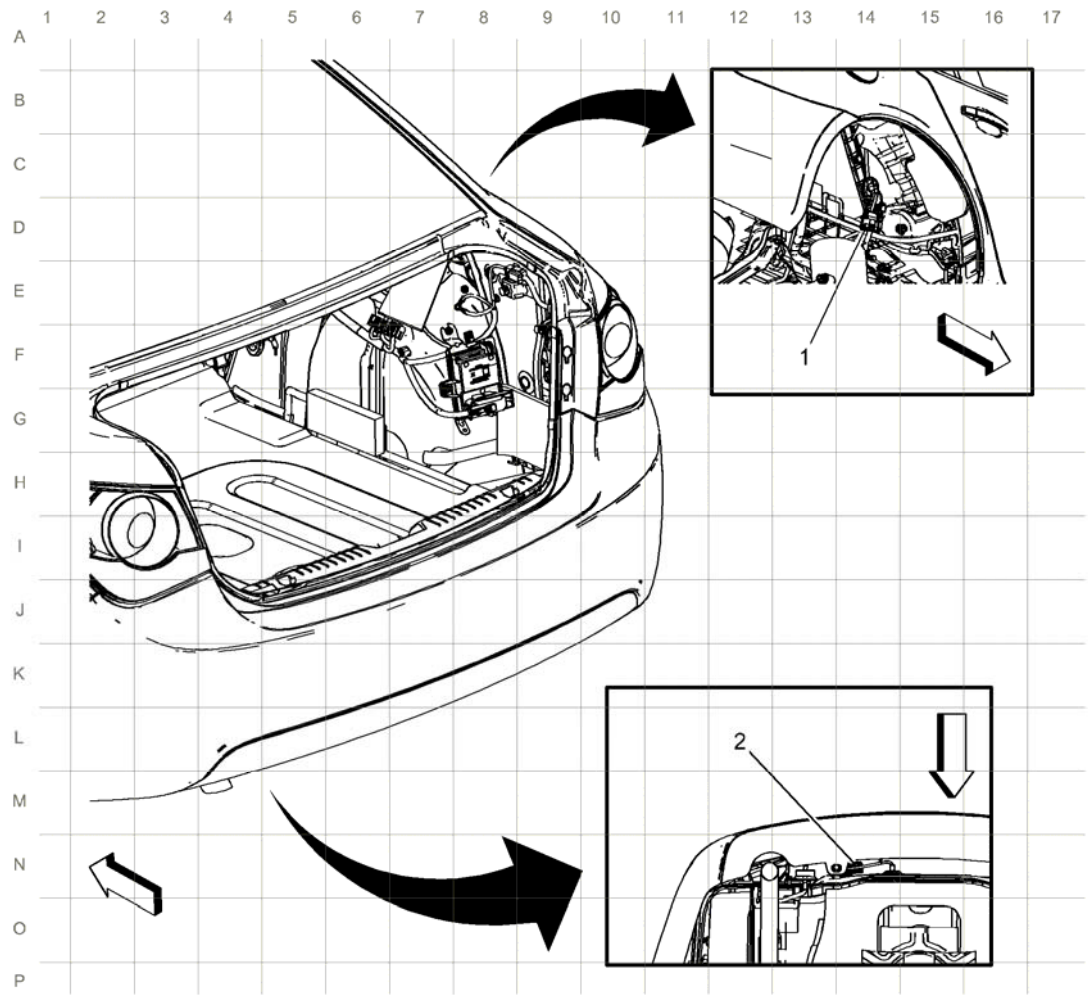

Fig. 18: Body Harness Routing -- Under the Rear of the Vehicle
Courtesy of GENERAL MOTORS COMPANY

Items
1: X401 **X401 Fuel Tank Harness to Body Harness**
2: X402 (UD7) **X402 Rear Object Sensor Harness to Body Harness (UD7)**

ELECTRICAL SCHEMATIC SYMBOLS

Voltage Indicators

Symbol	Description
B+	Battery Voltage

	Ignition Switch- Off Position
	Ignition Switch- Accessory Position
	Ignition Switch- Run Position
	Ignition Switch- Start Position

General Icons

Symbol	Description
	Master Component List Icon This icon is used on the schematic to link to the Master Electrical Component List.
	Description and Operation Icon This icon is used on the schematic to link to the Description and Operation of that particular system.
	Computer Programming Icon This icon is used on the schematic to link to Control Module References, which identifies which components need programming upon replacement.
	Next Schematic Page Icon This icon is used on the schematic to navigate to the next schematic in the subsystem.

	
	Previous Schematic Page Icon This icon is used on the schematic to navigate to the previous schematic in the subsystem.
	Supplemental Inflatable Restraint (SIR) or Supplemental Restraint System (SRS) Icon This icon is used to alert the technician that the system contains SIR/SRS components that require certain precautions before servicing.
	Information Icon This icon is used to alert the technician that there is additional information that will aid in servicing a system.
	Danger Icon This icon is intended to alert the technician that a component within the system contains labeling with the same icon. This icon is used when a source component has potential for 60 volts DC or greater or has potential for 42 volts AC or greater.
	High Voltage Icon This icon is intended to alert the technician that a component within the system contains labeling with the same icon. This icon is used when a component/circuit has potential for 60 volts DC or greater or has potential for 42 volts AC or greater.
	Caution Icon This icon is used to advise the technician to use caution when servicing this component. This icon may be used when a component/circuit has a voltage range potential between 30-60 volts DC or 15-42 volts AC.
	Functional Serial Data Communication This icon is used to show the technician that the serial data circuit detail is shown incomplete. It also provides an active link to the Data Communication Schematics

	were the circuit is shown complete.

Switch Position Icons

Symbol	Description
↑ ^ △	Generic Up Arrows
↓ v ▽	Generic Down Arrows
← < ◁	Generic Left Arrows
→ > ▷	Generic Right Arrows
⇊	Generic Express Down Arrows
⏻	On/Off Icon
	Generic Lock Icon

	
	Generic Unlock Icon
	Generic Window Switch Positions- 4 Door
	Generic Window Switch Positions- 2 Door

Module Circuit Function Icons

Symbol	Description
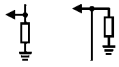	I/O Pull-Down Resistors (-)
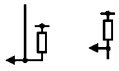	I/O Pull-Up Resistors (+)
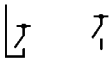	I/O High-Side Drive Switch (+)
	I/O Low-Side Drive Switch (+)

	
	I/O Bidirectional Switch (+/-)
	Pulse-Width Modulation Symbol
	Battery Voltage
	Ignition Voltage
	Voltage Reference
	A/C Voltage
	Low Reference

	Ground
	Serial Data
	Antenna Signal- In
	Antenna Signal- Out
	Brake Apply

Harness Components

Symbol	Description
	Fuse
	Fuse Supplied by a Relay
	Circuit Breaker

	
	Fusible Link
	Ground
	Case Ground
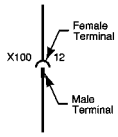	Inline Harness Connector
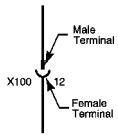	Inline Harness Connector
	Pigtail Connection
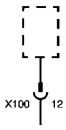	Pigtail Connection

	Provisional or Diagnostic Connector
	Blunt Cut Wire
	Incomplete Physical Splice
	Complete Physical Splice- 2 Wires
	Complete Physical Splice- 3 or more wires
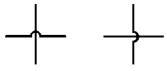	Wire Crosses
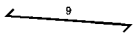	Twisted Wires
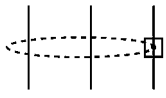	Shield

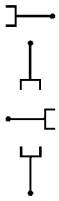	Circuit References
	Circuit Continuation Arrowheads
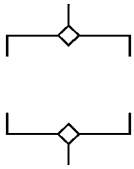	Option Breakpoint
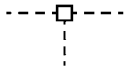	Ground Circuit Connection
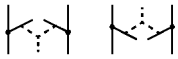	Connector Shorting Clip

Component Parts

Symbol	Description
	Partial Component When a component is represented in a dashed box, the component or its wiring is not shown in its entirety.
	Entire Component When a component is represented in a solid box the component or its wiring is shown in its entirety.
	Connector Directly Attached to Component

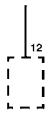	
	Pigtail Connector

Switches and Relays

Symbol	Description
	Accessory Power Outlet
	Cigar Lighter
	Switch- 2 Position Normally Open
	Switch- 2 Position Normally Closed
	Switch- Rocker
	Switch- Contact Plate (1 Wire)

	
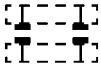	Switch- Contact Plate (2 Wire)
	Switch- 3 Position
	Switch- 4 Position
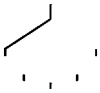	Switch- 5 Position
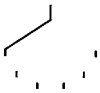	Switch- 6 Position
	Switch Actuator- Push (Momentary)
	Switch Actuator- Push (Latching)

J---	Switch Actuator- Pull (Momentary)
JV--	Switch Actuator- Pull (Latching)
L---	Switch Actuator- Rotate (Momentary)
LV--	Switch Actuator- Rotate (Latching)
S---	Switch Actuator- Slide (Momentary)
SV--	Switch Actuator- Slide (Latching)
P---	Switch Actuator- Pressure (Momentary)
T---	Switch Actuator- Temperature (Momentary)

	Switch Actuator- Volume (Latching)
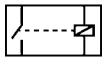	4-Pin Single Pole/Throw Relay- Normally Open
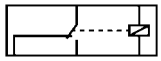	5-Pin Relay- Normally Closed

Devices and Sensors

Symbol	Description
	Battery
	Battery Assembly- Hybrid
	Single Filament Light Bulb
	Double Filament Light Bulb
	Light Emitting Diode (LED)

	
	Photo Sensor
	Gauge
	Diode
	Capacitor
	Resistor
	Variable Resistor
	Variable Resistor- NTC

	Breakable Wire
	Heating Element
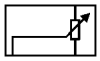	Position Sensor
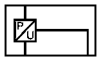	Pressure Sensor
	Knock Sensor
	Inductive Type Sensor- 2-Wire
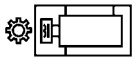	Inductive Type Sensor- 3-Wire
	Hall Effect Sensor- 2-Wire

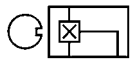	Hall Effect Sensor- 3-Wire
	Oxygen Sensor- 2-Wire
	Heated Oxygen Sensor- 4-Wire
	Solenoid- Actuator
	Solenoid- Valve
	Clutch
	Motor
	Motor with PTC

	Antenna
	Speaker
	Horn
	Microphone
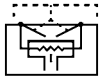	Airbag
	SIR Coil
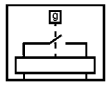	SIR Impact Sensor

VEHICLE ZONING STRATEGY

All grounds, in-line connectors, and splices have identifying numbers that correspond to where they are located in the vehicle. The following table explains the numbering system.

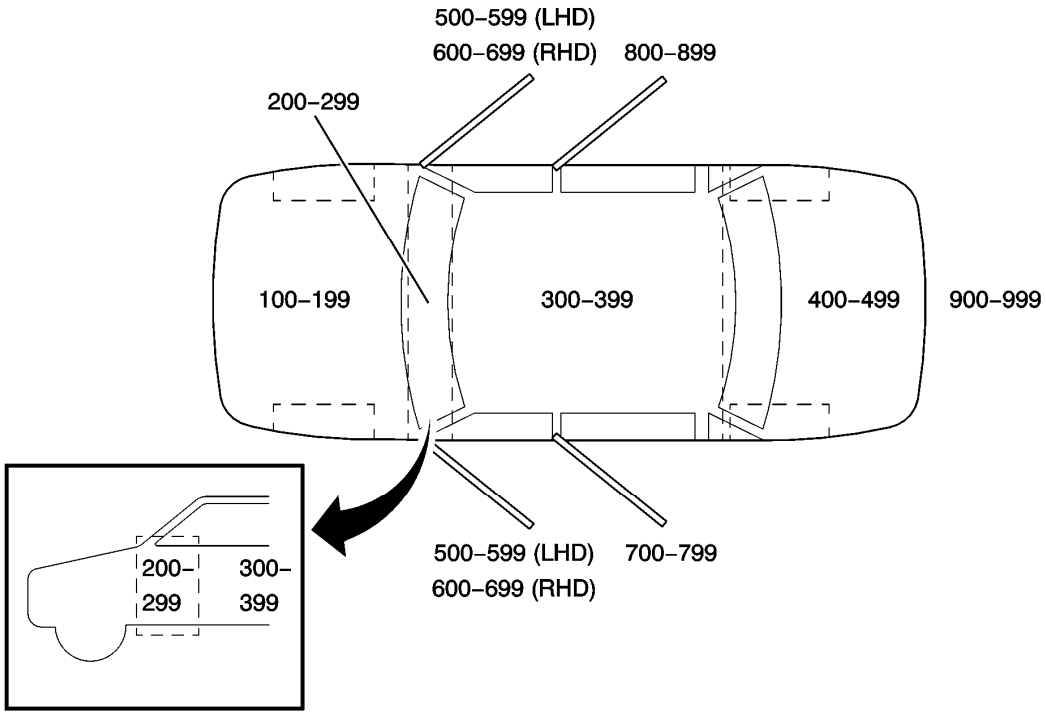

Fig. 19: Passenger Car Zoning View
Courtesy of GENERAL MOTORS COMPANY

Vehicle Zoning Strategy

Callout Numbers	Zone Description
100-199	Engine compartment (all forward of the instrument panel)
200-299	Within the instrument panel area (between the bulkhead and the front plane of the instrument panel)
300-399	Passenger compartment (from instrument panel to the back of the rear seats)
400-499	Luggage compartment (from the back of the rear seats to the rear of the vehicle)
500-599	Inline harness connectors to or within the driver door
600-699	Inline harness connectors to or within the front passenger door
700-799	Inline harness connectors to or within the left rear door
800-899	Inline harness connectors to or within the right rear door
900-999	Inline harness connectors to or within the luggage compartment lid or hatch

SCHEMATICS RPO CODE LIST

Schematics RPO Code List

RPO	Option Name	Country Group
2H0	ENGINE-GAS, 4 CYL, 1.8L, MFI, 103KW, DOHC	S America2 - Andean (MAY), All Europe (MAE)
A69	RESTRAINT-SEAT BELT TENSIONER, FRT, VAR. 2	All Europe (MAE)
ADS	ADJUSTER FRT ST-POWER, MULTI-DIRECTIONAL, RECLINER MANUAL, DRIVER	
AEC	WINDOW-POWER OPERATED, DRIVER EXPRESS DOWN	All Europe (MAE), VietNam (MBL)
AED	WINDOW-POWER OPERATED, PASSENGER, EXPRESS DOWN	India (MBF), S America2 - Andean (MAY), All Europe (MAE), VietNam (MBL)
AEF	WINDOW-POWER OPERATED, PASSENGER, EXPRESS UP/DOWN	
AEQ	WINDOW-POWER OPERATED, RR DRS, EXPRESS DOWN	ASEAN (-VietNam) (MBJ), India (MBF), S America2 - Andean (MAY), VietNam (MBL)
AJG	RESTRAINT SYSTEM-SEAT, INFLATABLE, DRIVER and PASS, FRT and SEAT SIDE, SINGLE STAGE	
ATH	LOCK CONTROL, ENTRY-REMOTE ENTRY, EXTENDED RANGE, PASSIVE ENTRY, ALL DOORS	
AU3	LOCK CONTROL-SIDE DR, ELEC	
AXG	WINDOW-POWER OPERATED-EXPRESS DRIVER UP/DOWN	ASEAN (-VietNam) (MBJ), India (MBF), S America2 - Andean (MAY)
AYC	RESTRAINT SYSTEM-SEAT, INFLATABLE, DRIVER and PASS FRT, SEAT SIDE, ROOF SIDE, SINGLE STAGE	All Europe (MAE)
BLUETOOTH	Bluetooth	
C25	WIPER SYS RR WINDOW-INTERMITTENT	S America2 - Andean (MAY), All Europe (MAE)
C32	HEATER-HEATING/DEFROSTER SYSTEM, REINFORCED, ELECTRIC	All Europe (MAE)
C67	HVAC SYSTEM-AIR CONDITIONER FRT, ELECTRONIC CONTROLS	ASEAN (-VietNam) (MBJ), S America2 - Andean (MAY), All Europe (MAE), VietNam (MBL)
C68	HVAC SYSTEM-AIR CONDITIONER FRT,	

	AUTO, ELECTRONIC CONTROLS	
CE1	WIPER SYS WINDSHIELD-PULSE, MOISTURE SENSITIVE	
CF5	ROOF-SUN, GLASS, SLIDING, ELEC	
CV8	COUNTRY-IRAQ	
CX5	COUNTRY-AUSTRALIA	
D61	MIRROR I/S FRT VAN-SUNSHADE, DRIVER, W/MIRROR, COVER, ILLUM, PASS, W/MIRROR, COVER, ILLUM	
DD8	MIRROR I/S R/V-LT SENSITIVE	
DMH	MIRROR I/S FRT VAN-SUNSHADE, DRIVER, W/MIRROR, COVER, ILLUM, PASS, W/MIRROR, COVER	
DT4	ASHTRAY-CIGARETTE LIGHTER	S America2 - Andean (MAY), All Europe (MAE), VietNam (MBL)
DWE	MIRROR O/S-LH and RH, RC, ELEC, HEAT, AUX WFOV/DRVR, MANFOLD, CNVX/PASS	S America2 - Andean (MAY), All Europe (MAE)
DWF	MIRROR O/S-LH and RH, RC, ELEC, HEAT, AUX WFOV/DRVR, PWRFOLD, CNVX/PASS	
DWY	MIRROR O/S-LH and RH, RC, ELEC, MANFOLD, AUX WFOV/DRVR, CNVX/PASS	India (MBF), S America2 - Andean (MAY), VietNam (MBL)
E30	ECM CONTROL MODULE WITH EDGE MOUNTED CONNECTORS	
E83	ECM CONTROL MODULE WITH FACE MOUNTED CONNECTORS	
FX3	RIDE AND HANDLING-AUTOMATIC ELECTRONIC CONTROLLED	S America2 - Andean (MAY), All Europe (MAE)
GENHATCH	Hatchback	
GENSEDAN	Notchback	
HATCHBACK	HATCHBACK	
J94	BRAKE SYSTEM-POWER, FRT DISC, RR DRUM, 15"	VietNam (MBL)
K27	Fuel Pump Control Module	
K34	CRUISE CONTROL-AUTOMATIC, ELECTRONIC	S America2 - Andean (MAY)
KA1	HEATER SEAT FRT-DRVR and PASS	
KC5	RECEPTACLE-ELECTRICAL, ACCESSORY	
KC7	RECEPTACLE-ELECTRICAL, RR SEAT	All Europe (MAE), VietNam (MBL)

KL9	ENG CONTROL-STOP/START SYS	
KRE	FUEL RATING-OCTANE NO. 95	S America2 - Andean (MAY), All Europe (MAE)
KTA	AUDIO INTERFACE-	India (MBF)
KTB	AUDIO INTERFACE-WIRELESS	
L2W	ENGINE-GAS, 4 CYL, 1.6L, MFI, L4, DOHC, FAM 1, GEN S200, 80 KW, E20 MAX	
LAM	TBD	
LDD	TBD	
LDE	ENGINE-GAS, 4 CYL, 1.6L, MFI, DOHC, VVT, VARIABLE CAMSHAFT PHASING, VARIABLE INTAKE MODULE (VIM)	All Europe (MAE)
LFH	ENGINE-GAS, 4 CYL, 1.8L, MFI, E100 MAX	
LHD	VEHICLE DRIVE-LEFTHAND DRIVE	All Europe (MAE), VietNam (MBL)
LKR	TBD	
LLU	ENGINE-GAS, 4 CYL, 1.6L, MFI, DOHC, TURBO, PT-JV, 132KW	
LNP	ENGINE-DIESEL, 4 CYL, L4, 2.0L, CRI, DOHC, TURBO, 120 KW,	India (MBF), S America2 - Andean (MAY), All Europe (MAE)
LUD	ENGINE-DIESEL, 4 CYL, 1.7L, L4, CRI, DOHC, VGT, 96KW	
LUJ	ENGINE-GAS, 4 CYL, L4, 1.4L, MFI, DOHC, TURBO HO, ALUM, GME	
LUW	ENGINE-GAS, 4 CYL, 1.8L, MFI, 103KW, DOHC, E85 MAX	
LXT	ENGINE-GAS, 4 CYL, 1.6L, MFI, DOHC, 80KW (GMDAT)	
LXV	TBD	
M26	TBD	
MF3	TRANSMISSION-MAN 6 SPD, OPEL, 76.5 MM, 4.273 1ST, 2.158 2ND, 1.302 3RD, 0.959 4TH, 0.744 5TH, 0.614 6TH, M32-6 WR	
MFH	TRANSMISSION-MAN 5 SPD, D16 M/CR	ASEAN (-VietNam) (MBJ), S America2 - Andean (MAY), All Europe (MAE), VietNam (MBL)
MFV	TBD	
MH7	TRANSMISSION-AUTO 6 SPD, HMD, X23FHD	S America2 - Andean (MAY)
MH8	TRANSMISSION-AUTO 6 SPD, HMD, X23F	

MH9	TRANSMISSION-AUTO 6 SPD, HMD, X24F	S America2 - Andean (MAY), All Europe (MAE)
MSA	TRANSMISSION-MAN 5 SPD, D20 M/CR, 1ST 3.818, 5TH 0.868	
MYH	TRANSMISSION-MAN 6 SPD, 4.167 1ST, 2.208 2ND, 1.321 3RD, 0, 954 4TH, 0.755 5TH, 0.623 6TH F40-6 WR	
MYJ	TRANSMISSION-MAN 6 SPD, (F40-6, FWD) 1ST 4.167, SIXTH 0.623	S America2 - Andean (MAY), All Europe (MAE)
MZ0	TRANSMISSION-MAN 6 SPD, OPEL, 76.5 MM, 3.82 1ST, 0.74 6TH, (M32 WR)	
MZ4	TRANSMISSION-MAN 6 SPD, OPEL, 76.5 MM, 3.82 1ST, 0.615 6TH, (M32 WR)	All Europe (MAE)
NJ1	STEERING-POWER, NON-VARIABLE RATIO, ELECTRIC	All Europe (MAE)
NOTCHBACK	NOTCHBACK	
OJP	Outside Ambient Air Temperature Sensor	
RHD	VEHICLE DRIVE-RIGHTHAND DRIVE	ASEAN (-VietNam) (MBJ), India (MBF), S America2 - Andean (MAY), All Europe (MAE)
SPO	Special Part Option	
T39	LAMP-TURN SIGNAL, AUX	
T79	LAMP-FOG, RR	S America2 - Andean (MAY), All Europe (MAE)
T83	CONTROL, HEADLAMPS-AUTOMATIC ON-OFF	
TR6	CONTROL, HEADLAMPS-LEVELING SYSTEM, MANUAL	All Europe (MAE)
TRAILER	Trailer	
TS6	LAMP-STOP, HIGH LEVEL	
U05	TBD	
UAG	INFOTAINMENT DISPLAY-GRAPHIC INFO DISPLAY (GID), VAR 1	ASEAN (-VietNam) (MBJ), India (MBF), All Europe (MAE)
UD7	PARK ASSIST-REAR	S America2 - Andean (MAY)
UEC	SENSOR INDICATOR-AUTOMATIC AIR RECIRCULATION	
UFD	INFOTAINMENT DISPLAY-TIME, EXTERNAL TEMP, RADIO	All Europe (MAE), VietNam (MBL)
UH0	INDICATOR-SEAT BELT WARNING, LH	S America2 - Andean (MAY), All Europe (MAE), VietNam (MBL)

UH1	INDICATOR-SEAT BELT WARNING, RH	ASEAN (-VietNam) (MBJ), India (MBF), S America2 - Andean (MAY), All Europe (MAE)
ULS	LOCK CONTROL-STEERING COLUMN	ASEAN (-VietNam) (MBJ), S America2 - Andean (MAY), All Europe (MAE), VietNam (MBL)
UQG	TBD	
UTJ	THEFT DETERENT-ELECTRICAL, UNAUTHORIZED ENTRY	
UTR	ALARM, HORN-CONTENT THEFT DETERENT, SELF POWERED	
UTU	SENSOR, VEHICLE-INCLINATION	
UVC	VISION-REAR VIEW	
UW6	SPEAKER SYSTEM-6, CUSTOM	S America2 - Andean (MAY), All Europe (MAE)
UZZ	RADIO-AM/FM STEREO, CD-ROM, CAF, RSA, MUSIC NAVIGATOR (GME/ME/TAIWAN VERSION)	
UDY	INFOTAINMENT DISPLAY-COLOR INFO DISPLAY (CID) 7", WVGA, TOUCH SCREEN	
UDK	INFOTAINMENT DISPLAY-COLOR INFO DISPLAY (CID) 7", QVGA	

MASTER ELECTRICAL SCHEMATIC ICONS

Icon	Icon Definition
	**WARNING:** **This vehicle is equipped with a Supplemental Inflatable Restraint (SIR) System. Failure to follow the correct procedure could cause the following conditions:** • **Air bag deployment** • **Personal injury** • **Unnecessary SIR system repairs** **In order to avoid the above conditions, observe the following guidelines:** • **Refer to SIR Component Views in order to determine if you are performing service on or near the SIR components or the SIR wiring.** • **If you are performing service on or near the SIR components or the SIR wiring, disable the SIR system.**

	Refer to Disabling the SIR System.
	NOTE: **Twisted wires provide an effective shield that helps protect sensitive electronic components from electrical interference.** **In order to prevent electrical interference from degrading the performance of the connected components, you must maintain the proper specification when making any repairs to the twisted wires shown** • **The wires must be twisted a minimum of 10 turns per 31 cm (12 in) as measured anywhere along the length of the wires.** • **The outside diameter of the twisted wires must not exceed 6.0 mm (0.25 in).**

POWER DISTRIBUTION WIRING SCHEMATICS

B+ Bus (1 of 3)

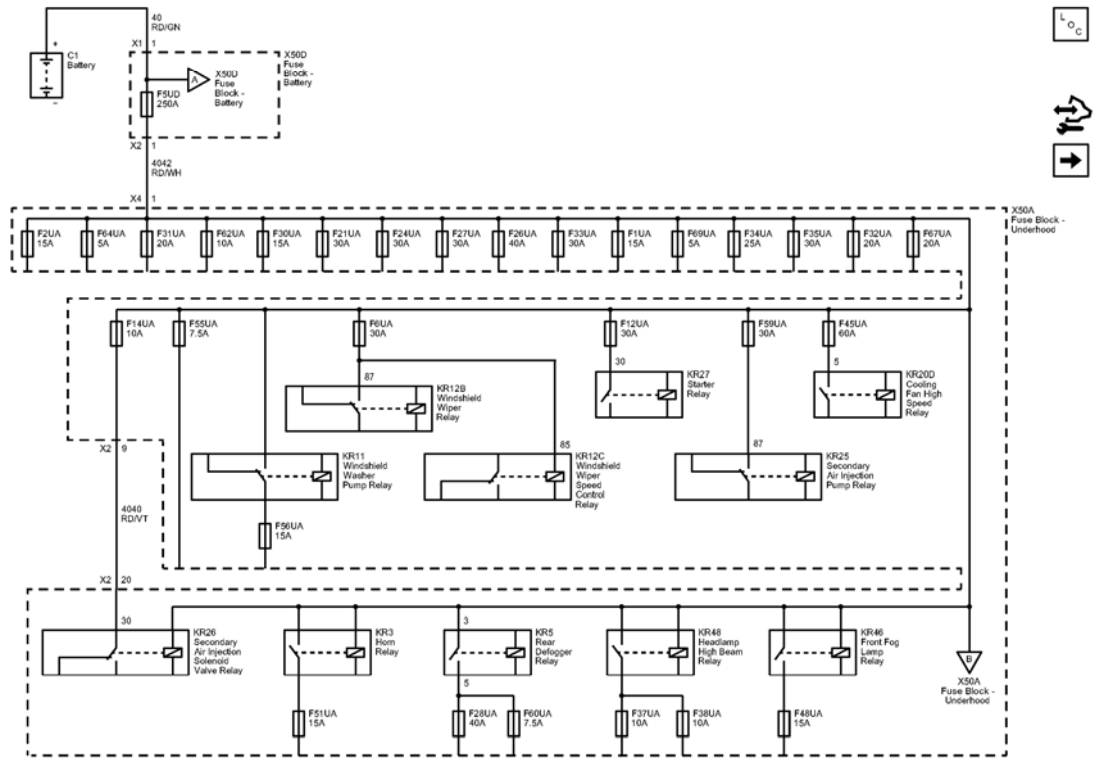

Fig. 20: B+ Bus (1 of 3)
Courtesy of GENERAL MOTORS COMPANY

Callout	Component Name

4042	Battery Positive Voltage
4042_RD/WH	4042 RD/WH
CAV_1	1
CONN_X4	X4
CAV_1	1
CONN_X2	X2
40	Battery Positive Voltage
40_RD/GN	40 RD/GN
CAV_1	1
CONN_X1	X1
4040	Battery Positive Voltage
4040_RD/VT	4040 RD/VT
CAV 20	20
CONN_X2	X2
CAV_9	9
CONN_X2	X2
CAV_87	87
CAV_85	85
CAV_30	30
CAV_87	87
CAV_5	5
CAV_30	30
CAV_3	3
CAV_5	5
A_REF	A
F5UD	F5UD 250A
F2UA	F2UA 15A
F64UA	F64UA 5A
F31UA	F31UA 20A
F62UA	F62UA 10A
F30UA	F30UA 15A
F21UA	F21UA 30A
F24UA	F24UA 30A
F27UA	F27UA 30A
F26UA	F26UA 40A
F33UA	F33UA 30A
F1UA	F1UA 15A
F69UA	F69UA 5A
F34UA	F34UA 25A
F35UA	F35UA 30A
F32UA	F32UA 20A

	F67UA 20A
F14UA	F14UA 10A
F55UA	F55UA 7.5A
F6UA	F6UA 30A
F12UA	F12UA 30A
F59UA	F59UA 30A
F45UA	F45UA 60A
F56UA	F56UA 15A
F51UA	F51UA 15A
F28UA	F28UA 40A
F60UA	F60UA 7.5A
F37UA	F37UA 10A
F38UA	F38UA 10A
F48UA	F48UA 15A
C1	
KR11	
KR27	
KR3	
KR5	
KR48	
KR46	
X50A	
X50A	
KR20D	
KR12B	
KR12C	
X50D	
X50D	
KR25	
KR26	

B+ Bus (2 of 3)

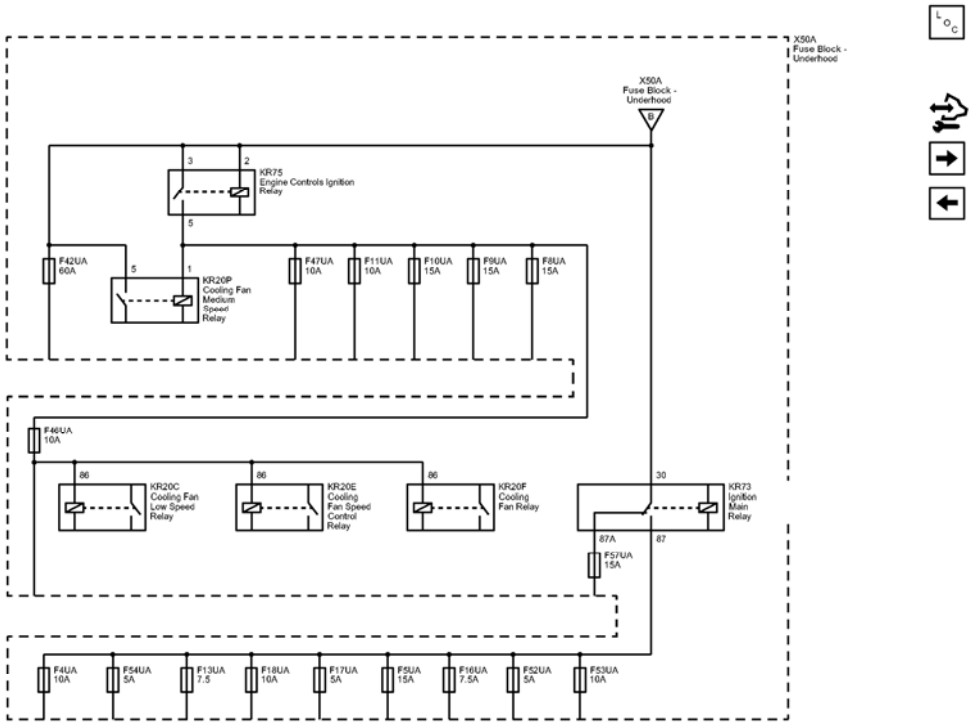

Fig. 21: B+ Bus (2 of 3)
Courtesy of GENERAL MOTORS COMPANY

Callout	Component Name
CAV_86	86
CAV 86	86
CAV_86	86
CAV_87A	87A
CAV_87	87
CAV_30	30
CAV_5	5
CAV_1	1
CAV_5	5
CAV_2	2
CAV_3	3
F42UA	F42UA 60A
F47UA	F47UA 10A
F11UA	F11UA 10A
F10UA	F10UA 15A
F9UA	F9UA 15A
F8UA	F8UA 15A

F46UA	F46UA 10A
F57UA	F57UA 15A
F53UA	F53UA 10A
F52UA	F52UA 5A
F16UA	F16UA 7.5A
F5UA	F5UA 15A
F17UA	F17UA 5A
F18UA	F18UA 10A
F13UA	F13UA 7.5
F54UA	F54UA 5A
F4UA	F4UA 10A
B_REF	B
X50A	
X50A	
KR73	
KR20E	
KR20F	
KR20P	
KR20C	
KR75	

B+ Bus (3 of 3)

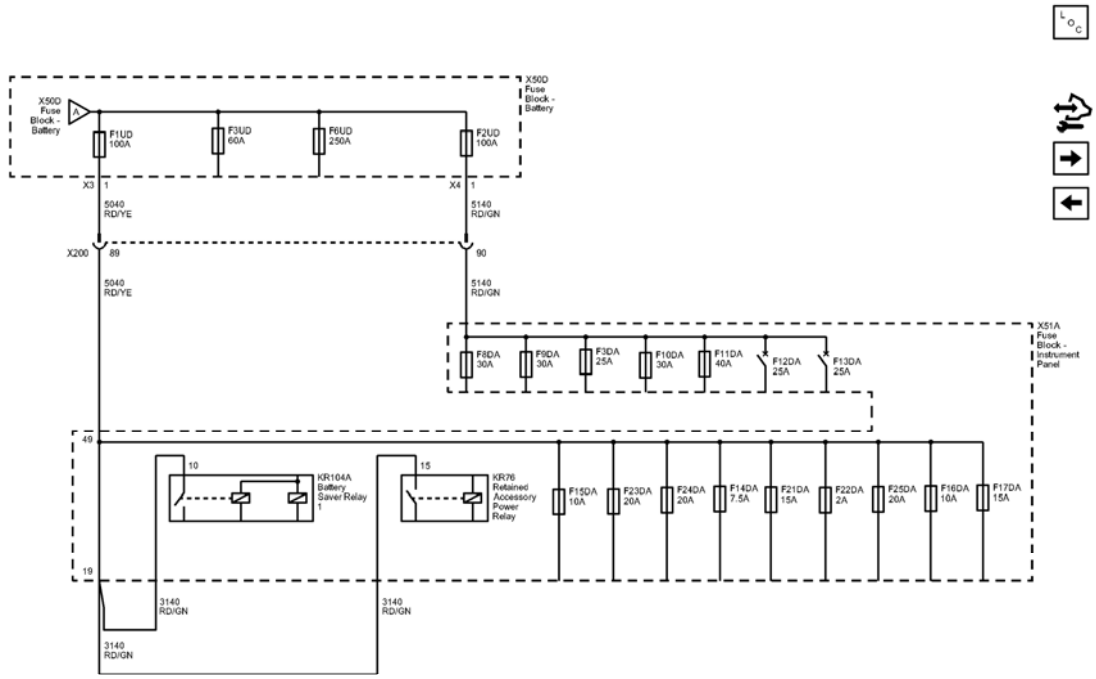

Fig. 22: B+ Bus (3 of 3)
Courtesy of GENERAL MOTORS COMPANY

Callout	Component Name
5040	Battery Positive Voltage
5040 RD/YE	5040 RD/YE
CAV_1	1
CONN_X3	X3
5040_RD/YE	5040 RD/YE
5140	Battery Positive Voltage
5140_RD/GN	5140 RD/GN
CAV_1	1
CONN_X4	X4
5140_RD/GN	5140 RD/GN
3140	Battery Positive Voltage
3140_RD/GN	3140 RD/GN
3140_RD/GN	3140 RD/GN
CAV_19	19
3140_RD/GN	3140 RD/GN
CAV_10	10
CAV_49	49

CAV_15	15
X200	X200
CAV_89	89
CAV_90	90
A_REF	A
F1UD	F1UD 100A
F3UD	F3UD 60A
F6UD	F6UD 250A
F2UD	F2UD 100A
F23DA	F23DA 20A
F15DA	F15DA 10A
F24DA	F24DA 20A
F14DA	F14DA 7.5A
F21DA	F21DA 15A
F22DA	F22DA 2A
F25DA	F25DA 20A
F16DA	F16DA 10A
F17DA	F17DA 15A
F8DA	F8DA 30A
F9DA	F9DA 30A
F3DA	F3DA 25A
F10DA	F10DA 30A
F11DA	F11DA 40A
F13DA	F13DA 25A
F12DA	F12DA 25A
X200	X200
X51A	
X50D	
X50D	
KR104A	
KR76	

F2UA, F21UA, F25UA, F27UA, F31UA, F32UA, F34UA, F35UA, F69UA, and F70UA Fuses

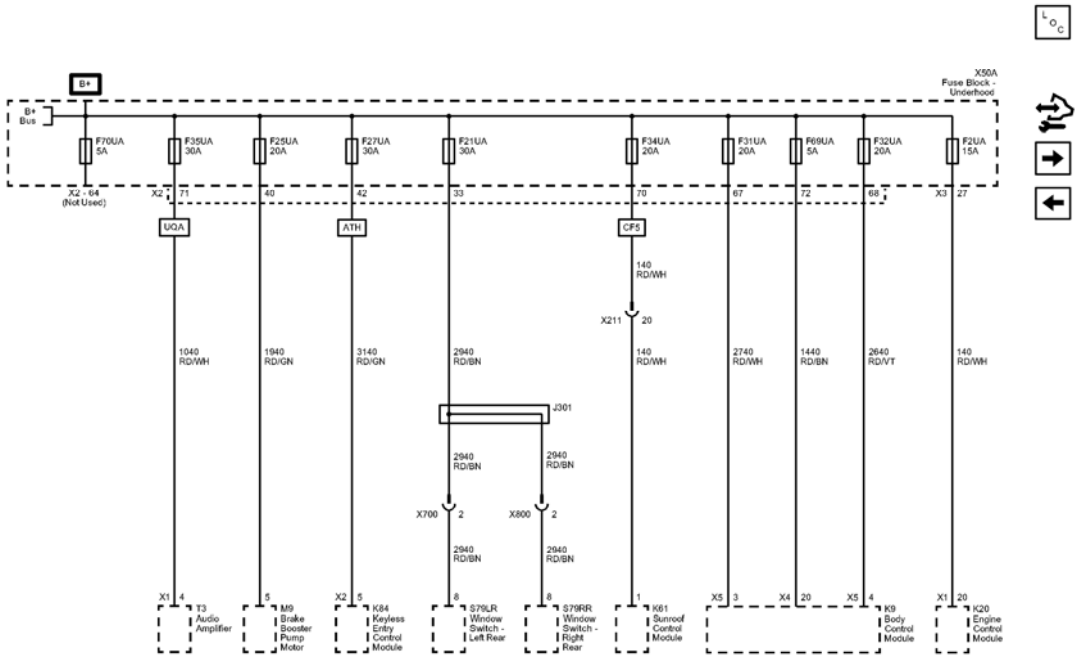

Fig. 23: F2UA, F21UA, F25UA, F27UA, F31UA, F32UA, F34UA, F35UA, F69UA, and F70UA Fuses
Courtesy of GENERAL MOTORS COMPANY

Callout	Component Name
1040	Battery Positive Voltage
1040 RD/WH	1040 RD/WH
CAV_4	4
CONN_X1	X1
CAV_71	71
CONN_X2	X2
1940	Battery Positive Voltage
1940_RD/GN	1940 RD/GN
CAV_5	5
CAV_40	40
3140	Battery Positive Voltage
3140_RD/GN	3140 RD/GN
CAV_5	5
CONN_X2	X2
CAV_42	42
2940	Battery Positive Voltage
2940_RD/BN	2940 RD/BN

CAV_8	8
CAV_33	33
CAV_8	8
140	Battery Positive Voltage
140_RD/WH	140 RD/WH
CAV_1	1
CAV_70	70
2740	Battery Positive Voltage
2740_RD/WH	2740 RD/WH
CAV_3	3
CONN_X5	X5
CAV_67	67
1440	Battery Positive Voltage
1440_RD/BN	1440 RD/BN
CAV_20	20
CONN_X4	X4
CAV_72	72
2640	Battery Positive Voltage
2640_RD/VT	2640 RD/VT
CAV_4	4
CONN_X5	X5
CAV_68	68
140_RD/WH	140 RD/WH
CAV_20	20
CONN_X1	X1
CAV_27	27
CONN_X3	X3
2940 RD/BN	2940 RD/BN
2940_RD/BN	2940 RD/BN
2940 RD/BN	2940 RD/BN
2940_RD/BN	2940 RD/BN
140_RD/WH	140 RD/WH
UQA	SPEAKER SYSTEM-PREMIUM AUDIO BRANDED WITH AMPLIFIER
ATH	LOCK CONTROL, ENTRY-REMOTE ENTRY, EXTENDED RANGE, PASSIVE ENTRY, ALL DOORS
CF5	ROOF-SUN, GLASS, SLIDING, ELEC
CAV_2	2
CAV_2	2
CAV_20	20
J301	J301

X700	X700
X800	X800
X211	X211
F70UA	F70UA 5A
F35UA	F35UA 30A
F25UA	F25UA 20A
F27UA	F27UA 30A
F21UA	F21UA 30A
F34UA	F34UA 20A
F31UA	F31UA 20A
F69UA	F69UA 5A
F32UA	F32UA 20A
F2UA	F2UA 15A
S79LR	
S79RR	
K61	(CF5)
K20	
K9	
T3	(UQA)
M9	
X50A	
K84	(ATH)

F1UA, F26UA, F30UA, F33UA, F55UA, F64UA, and F67UA Fuses

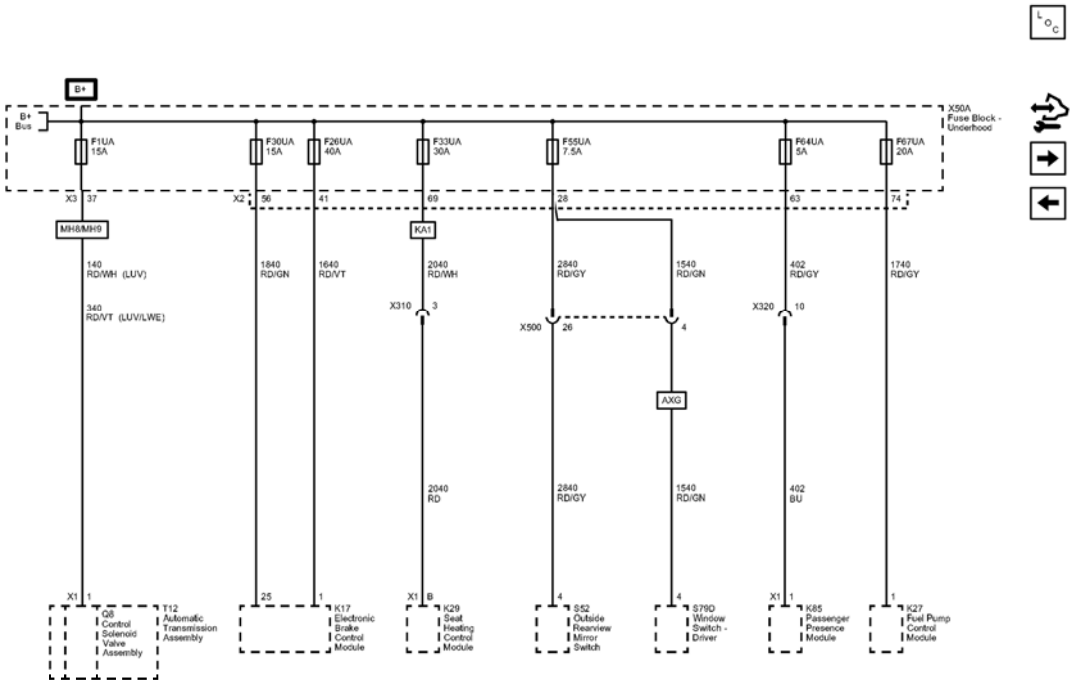

Fig. 24: F1UA, F26UA, F30UA, F33UA, F55UA, F64UA, and F67UA Fuses
Courtesy of GENERAL MOTORS COMPANY

Callout	Component Name
140	Battery Positive Voltage
140 RD/WH	140 RD/WH
CAV_37	37
CONN_X3	X3
CAV_1	1
CONN_X1	X1
1840	Battery Positive Voltage
1840_RD/GN	1840 RD/GN
CAV_25	25
CAV_56	56
CONN_X2	X2
1640	Battery Positive Voltage
1640_RD/VT	1640 RD/VT
CAV_1	1
CAV_41	41
2040	Battery Positive Voltage
2040_RD/WH	2040 RD/WH

CAV_69	69
2040_RD	2040 RD
CAV_B	B
CONN_X1	X1
1540	Battery Positive Voltage
1540_RD/GN	1540 RD/GN
CAV_4	4
2840	Battery Positive Voltage
2840_RD/GY	2840 RD/GY
CAV_4	4
CAV_28	28
402	Battery Positive Voltage
402 RD/GY	402 RD/GY
CAV_63	63
402_BU	402 BU
CAV_1	1
CONN_X1	X1
1740	Battery Positive Voltage
1740_RD/GY	1740 RD/GY
CAV_1	1
CAV_74	74
1540_RD/GN	1540 RD/GN
2840_RD/GY	2840 RD/GY
340_RD/VT	340 RD/VT
LUV	ENGINE-GAS, 4 CYL, 1.4L, MFI, DOHC, TURBO, VVT, ALUM, GME, E85 MAX
LUV	ENGINE-GAS, 4 CYL, 1.4L, MFI, DOHC, TURBO, VVT, ALUM, GME, E85 MAX
LWE	ENGINE-GAS, 4 CYL, 1.8L, MFI, DOHC, VVT, 103 KW, GME
MH8	TRANSMISSION-AUTO 6 SPD, HMD, X23F
MH9	TRANSMISSION-AUTO 6 SPD, HMD, X24F
KA1	HEATER SEAT FRT-DRVR and PASS
AXG	WINDOW-POWER OPERATED-EXPRESS DRIVER UP/DOWN
CAV_3	3
CAV_10	10
X500	X500
CAV_26	26
CAV_4	4
F1UA	F1UA 15A
F30UA	F30UA 15A

F26UA	F26UA 40A
F33UA	F33UA 30A
F55UA	F55UA 7.5A
F64UA	F64UA 5A
F67UA	F67UA 20A
X310	X310
X320	X320
X500	X500
X50A	
S79D	
S52	
K29	(KA1)
K17	
K27	
Q8	(MH8/MH9)
T12	(MH8/MH9)
K85	Passenger Presence Module

F5UB, F6UB, F14UA, F24UA, F45UA, and F48UA Fuses

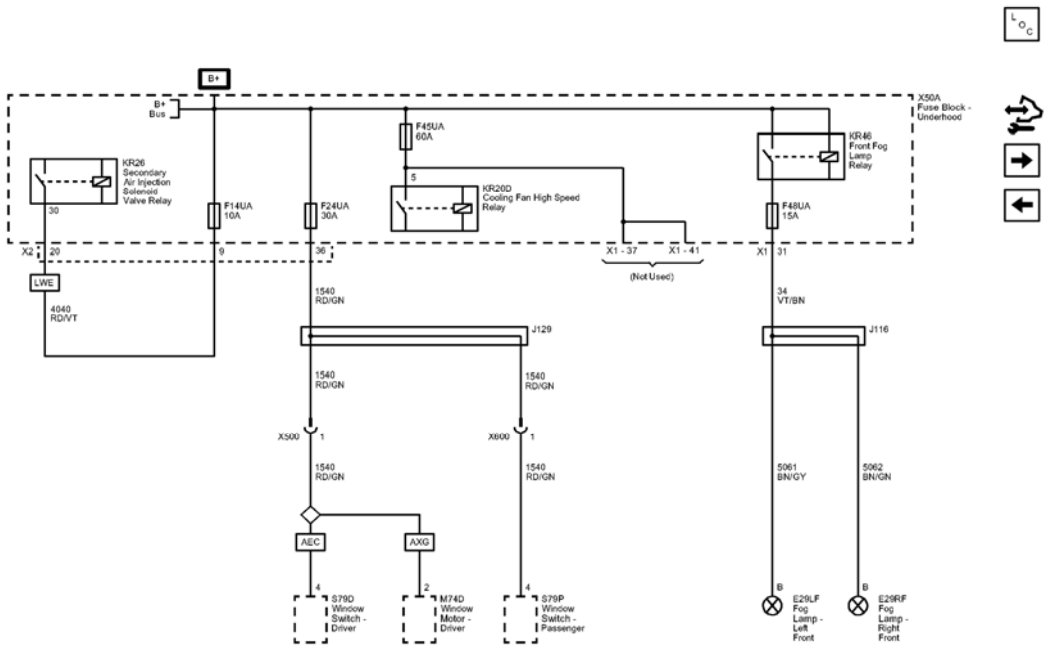

Fig. 25: F5UB, F6UB, F14UA, F24UA, F45UA, and F48UA Fuses

Courtesy of GENERAL MOTORS COMPANY

Callout	Component Name
4040	Battery Positive Voltage
4040 RD/VT	4040 RD/VT
CAV_9	9
CAV 20	20
CONN_X2	X2
1540	Battery Positive Voltage
CAV_4	4
CAV_36	36
1540_RD/GN	1540 RD/GN
CAV_4	4
CAV_2	2
1540_RD/GN	1540 RD/GN
1540_RD/GN	1540 RD/GN
1540_RD/GN	1540 RD/GN
1540_RD/GN	1540 RD/GN
34	Front Fog Lamp Supply Voltage
34_VT/BN	34 VT/BN
CAV_31	31
CONN X1	X1
5061	Left Front Fog Lamp Supply Voltage
5061_BN/GY	5061 BN/GY
CAV_B	B
5062	Right Front Fog Lamp Supply Voltage
5062_BN/GN	5062 BN/GN
CAV_B	B
CAV_30	30
CAV_5	5
AEC	WINDOW-POWER OPERATED, DRIVER EXPRESS DOWN
AXG	WINDOW-POWER OPERATED-EXPRESS DRIVER UP/DOWN
LWE	ENGINE-GAS, 4 CYL, 1.8L, MFI, DOHC, VVT, 103 KW, GME
CAV_1	1
CAV_1	1
J129	J129
J116	J116
F14UA	F14UA 10A
F24UA	F24UA 30A

F45UA	F45UA 60A
F48UA	F48UA 15A
X500	X500
X600	X600
S79D	
M74D	
E29LF	(T3U)
E29RF	(T3U)
KR46	
X50A	
KR26	
S79P	
KR20D	

F3DA, F3UD, F6UD, F8DA, F9DA, F10DA, F11DA, and F16DA Fuses

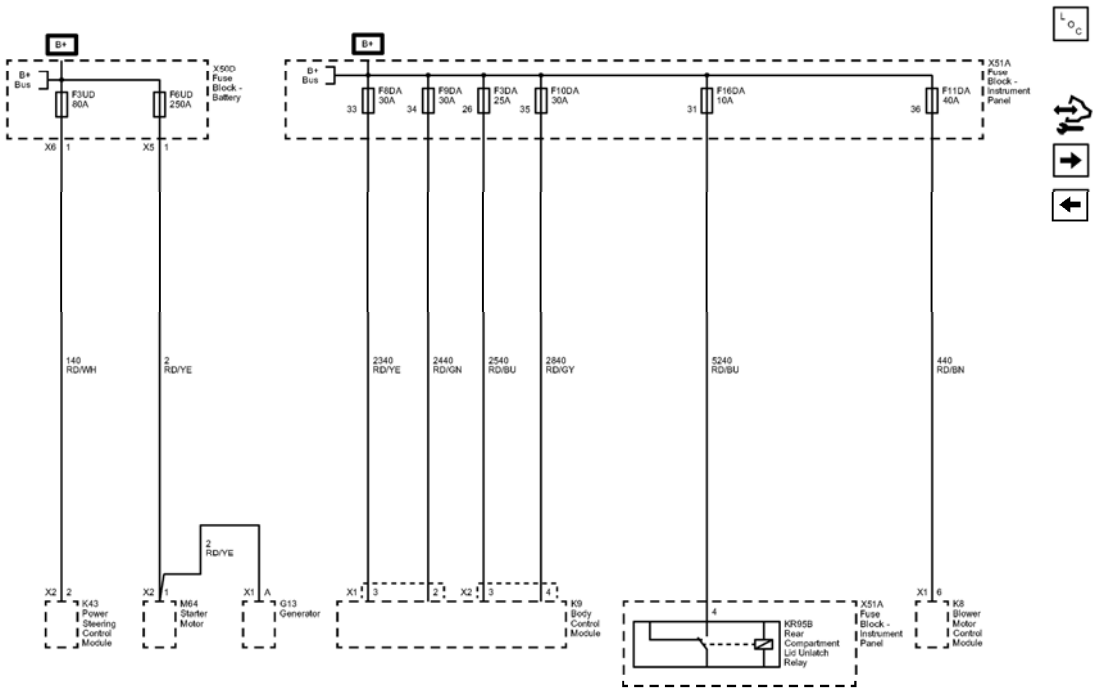

Fig. 26: F3DA, F3UD, F6UD, F8DA, F9DA, F10DA, F11DA, and F16DA Fuses
Courtesy of GENERAL MOTORS COMPANY

Callout	Component Name
CAV_33	33

CAV_34	34
CAV_26	26
CAV_35	35
CAV_31	31
CAV_36	36
140	Battery Positive Voltage
140_RD/WH	140 RD/WH
CAV_2	2
CONN_X2	X2
CAV_1	1
CONN_X6	X6
2	TBD
2 RD/YE	2 RD/YE
CAV_1	1
CONN_X2	X2
CAV_1	1
CONN_X5	X5
2340	Battery Positive Voltage
2340_RD/YE	2340 RD/YE
CAV_3	3
CONN_X1	X1
2440	Battery Positive Voltage
2440_RD/GN	2440 RD/GN
CAV_2	2
2540	Battery Positive Voltage
2540_RD/BU	2540 RD/BU
CAV_3	3
CONN X2	X2
2840	Battery Positive Voltage
2840 RD/GY	2840 RD/GY
CAV_4	4
5240	Battery Positive Voltage
5240_RD/BU	5240 RD/BU
440	Battery Positive Voltage
440_RD/BN	440 RD/BN
CAV_6	6
CONN_X1	X1
2_RD/YE	2 RD/YE
CAV_A	A
CONN_X1	X1
CAV_4	4

	F3UD 80A
F6UD	F6UD 250A
F8DA	F8DA 30A
F9DA	F9DA 30A
F3DA	F3DA 25A
F10DA	F10DA 30A
F16DA	F16DA 10A
F11DA	F11DA 40A
G13	
M64	
K8	
K43	
X51A	
X51A	
X50D	
K9	
KR95B	

F12DA and F13DA Circuit Breakers, and F14DA, F15DA, F17DA, F21DA, F23DA, F24DA, and F25DA Fuses

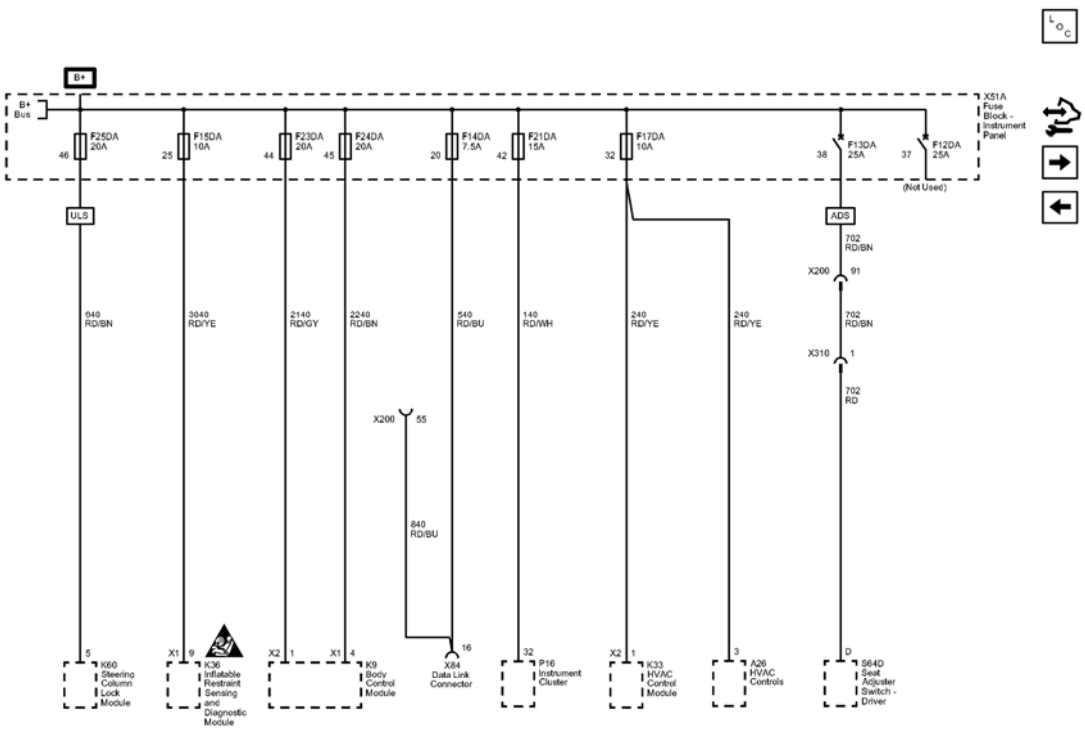

Fig. 27: F12DA and F13DA Circuit Breakers, and F14DA, F15DA, F17DA, F21DA, F23DA, F24DA, and

F25DA Fuses
Courtesy of GENERAL MOTORS COMPANY

Callout	Component Name
940_RD/BN	940 RD/BN
CAV_5	5
3040	Battery Positive Voltage
3040_RD/YE	3040 RD/YE
CAV_9	9
CONN_X1	X1
2140	Battery Positive Voltage
2140_RD/GY	2140 RD/GY
CAV_1	1
CONN_X2	X2
2240	Battery Positive Voltage
2240_RD/BN	2240 RD/BN
CAV_4	4
CONN_X1	X1
540	Battery Positive Voltage
540_RD/BU	540 RD/BU
840	Battery Positive Voltage
840_RD/BU	840 RD/BU
140	Battery Positive Voltage
140_RD/WH	140 RD/WH
CAV_32	32
240	Battery Positive Voltage
240_RD/YE	240 RD/YE
CAV_1	1
CONN_X2	X2
240_RD/YE	240 RD/YE
CAV_3	3
702	Battery Positive Voltage
702_RD/BN	702 RD/BN
CAV_D	D
702_RD/BN	702 RD/BN
702_RD	702 RD
CAV_91	91
CAV_1	1
CAV_32	32
CAV_42	42
CAV_20	20

CAV_45	45
CAV_44	44
CAV_25	25
CAV_46	46
ULS	STEERING COLUMN LOCK-MECHANICAL
ADS	ADJUSTER FRT ST-POWER, MULTI-DIRECTIONAL, RECLINER MANUAL, DRIVER
CAV_38	38
CAV_37	37
CAV_16	16
CAV_55	55
X200	X200
X310	X310
F13DA	F13DA 25A
F12DA	F12DA 25A
F17DA	F17DA 10A
F21DA	F21DA 15A
F14DA	F14DA 7.5A
F24DA	F24DA 20A
F23DA	F23DA 20A
F15DA	F15DA 10A
F25DA	F25DA 20A
X200	X200
K36	
K9	
P16	
K33	
X51A	
S64D	(ADS)
X84	
K60	(ULS)
A26	

Ignition Switch and Fuse F22DA (without BTM)

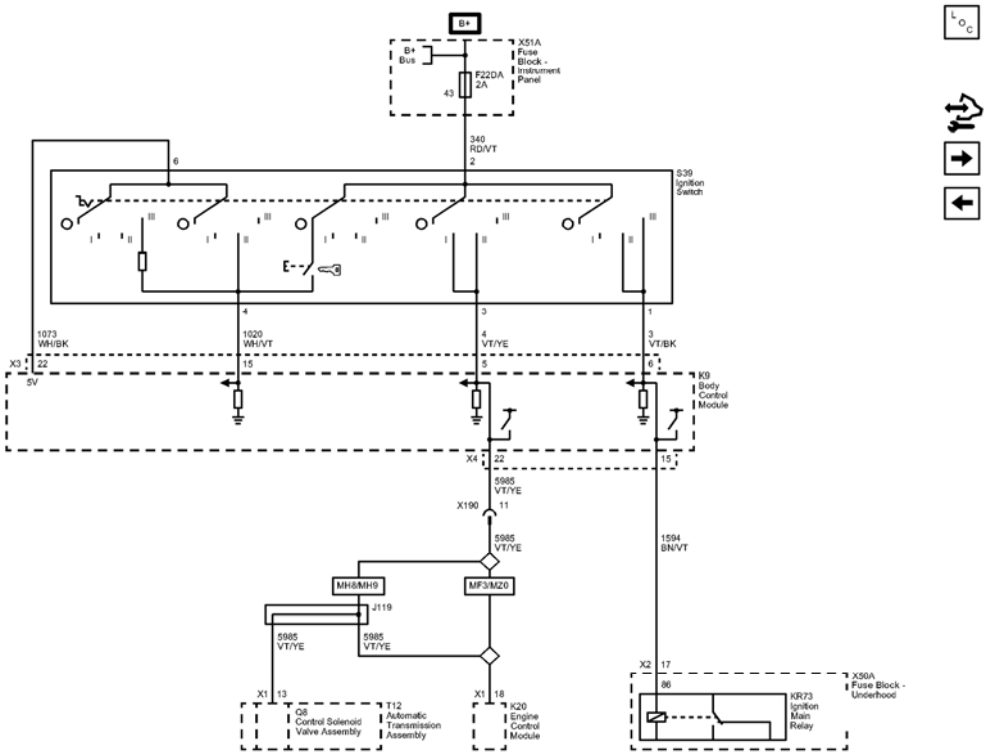

Fig. 28: Ignition Switch and Fuse F22DA (without BTM)
Courtesy of GENERAL MOTORS COMPANY

Callout	Component Name
CAV_43	43
340	Battery Positive Voltage
340_RD/VT	340 RD/VT
CAV_2	2
1073	Ignition Key Resistor Signal
1073_WH/BK	1073 WH/BK
CAV_22	22
CONN_X3	X3
CAV_6	6
1020	Off/Run/Crank Voltage
1020_WH/VT	1020 WH/VT
CAV_15	15
CAV_4	4
4	Accessory Voltage
4_VT/YE	4 VT/YE
CAV_5	5
CAV_3	3

3	Run/Crank Ignition 1 Voltage
3_VT/BK	3 VT/BK
CAV_6	6
CAV_1	1
1594	Ignition 3 Relay Control
1594_BN/VT	1594 BN/VT
CAV_17	17
CONN_X2	X2
CAV_15	15
CAV_86	86
5985	Accessory Wakeup Serial Data
5985_VT/YE	5985 VT/YE
CAV_18	18
CONN_X1	X1
CAV_22	22
CONN_X4	X4
5985_VT/YE	5985 VT/YE
CAV_11	11
5985_VT/YE	5985 VT/YE
5985_VT/YE	5985 VT/YE
CAV_13	13
CONN_X1	X1
MF3	TRANSMISSION-MAN 6 SPD, OPEL, 76.5 MM, 4.273 1ST, 2.158 2ND, 1.302 3RD, 0.959 4TH, 0.744 5TH, 0.614 6TH, M32-6 WR
MZ0	TRANSMISSION-MAN 6 SPD, OPEL, 76.5 MM, 3.82 1ST, 0.74 6TH, (M32 WR)
MH8	TRANSMISSION-AUTO 6 SPD, HMD, X23F
MH9	TRANSMISSION-AUTO 6 SPD, HMD, X24F
F22DA	F22DA 2A
X190	X190
J119	J119
S39	(without BTM)
KR73	
X50A	
K9	
X51A	
K20	
T12	(MH8/MH9)
Q8	(MH8/MH9)

Ignition Switch and Fuse F22DA (BTM)

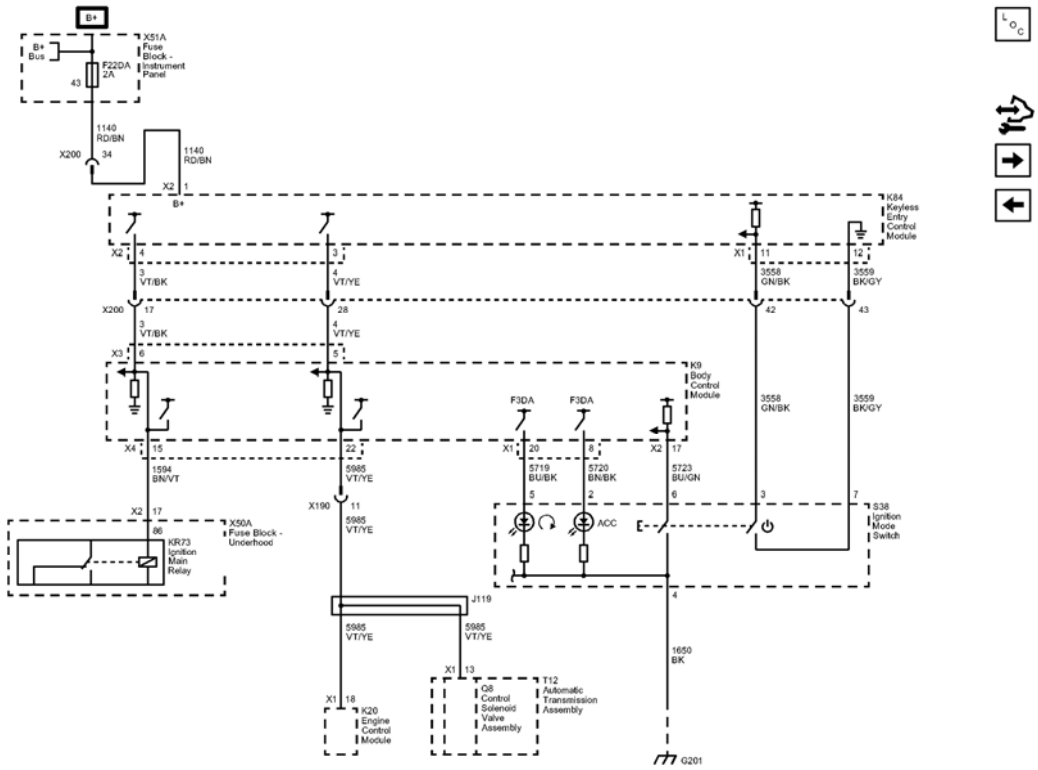

Fig. 29: Ignition Switch and Fuse F22DA (BTM)
Courtesy of GENERAL MOTORS COMPANY

Callout	Component Name
CAV_43	43
1140	Battery Positive Voltage
1140_RD/BN	1140 RD/BN
CAV_1	1
CONN_X2	X2
3	Run/Crank Ignition 1 Voltage
3_VT/BK	3 VT/BK
CAV_6	6
CONN_X3	X3
CAV_4	4
CONN_X2	X2
4	Accessory Voltage
4_VT/YE	4 VT/YE
CAV_5	5
CAV_3	3
3558	Passive Start Switch Signal 2
3558_GN/BK	3558 GN/BK

CAV_3	3
CAV_11	11
CONN_X1	X1
3559	Passive Start Switch 2 Low Reference
3559_BK/GY	3559 BK/GY
CAV_7	7
CAV_12	12
5723	Ignition Mode Switch Mode Voltage
5723_BU/GN	5723 BU/GN
CAV_6	6
CAV_17	17
CONN_X2	X2
5720	Ignition Mode Switch Accessory LED Signal
5720_BN/BK	5720 BN/BK
CAV_2	2
CAV_8	8
5719	Ignition Mode Switch Start LED Signal
5719_BU/BK	5719 BU/BK
CAV_5	5
CAV_20	20
CONN_X1	X1
1594	Ignition 3 Relay Control
1594_BN/VT	1594 BN/VT
CAV_17	17
CONN_X2	X2
CAV_15	15
CONN_X4	X4
5985	Accessory Wakeup Serial Data
5985_VT/YE	5985 VT/YE
CAV 18	18
CONN_X1	X1
CAV_22	22
5985_VT/YE	5985 VT/YE
CAV_13	13
CONN_X1	X1
1650	Ground
1650_BK	1650 BK
CAV_4	4
1140_RD/BN	1140 RD/BN
CAV_34	34
3_VT/BK	3 VT/BK
4_VT/YE	

	4 VT/YE
3558_GN/BK	3558 GN/BK
3559_BK/GY	3559 BK/GY
5985_VT/YE	5985 VT/YE
5985_VT/YE	5985 VT/YE
CAV_11	11
CAV_86	86
X200	X200
CAV_17	17
CAV_28	28
CAV_42	42
CAV_43	43
G201	G201
F22DA	F22DA 2A
F3DA	F3DA
F3DA	F3DA
X200	X200
X190	X190
J119	J119
X200	X200
X51A	
K84	(ATH)
K9	
KR73	
X50A	
S38	(BTM)
Q8	(MH8/MH9)
T12	(MH8/MH9)
K20	

F47UA, F59UA, and F62UA Fuses

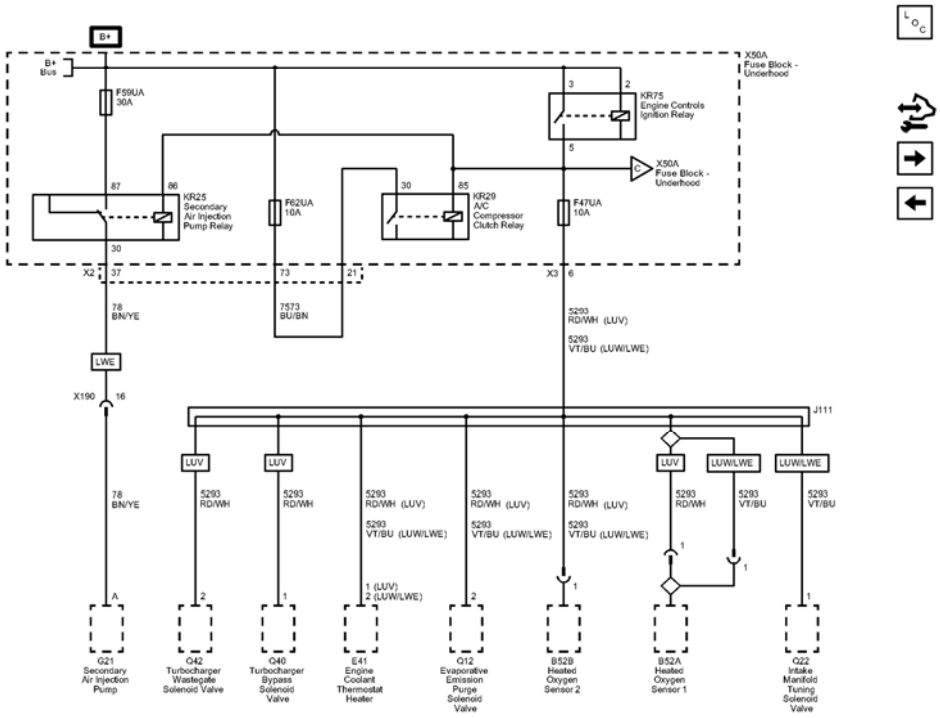

Fig. 30: F47UA, F59UA, and F62UA Fuses
Courtesy of GENERAL MOTORS COMPANY

Callout	Component Name
CAV_87	87
CAV_86	86
CAV_30	30
CAV_30	30
CAV_85	85
CAV_5	5
CAV_3	3
CAV_2	2
78	Air Injection Reaction Pump Supply Voltage
78_BN/YE	78 BN/YE
CAV_A	A
CAV_37	37
CONN_X2	X2
7573	Electric Variable Displacement Supply
7573_BU/BN	7573 BU/BN
CAV_21	21
CAV_73	73

5293	Powertrain Main Relay Fused Supply (4)
5293_RD/WH	5293 RD/WH
CAV_6	6
CONN_X3	X3
5293_RD/WH	5293 RD/WH
CAV_2	2
5293_RD/WH	5293 RD/WH
CAV_1	1
5293_RD/WH	5293 RD/WH
CAV_2	2
5293_RD/WH	5293 RD/WH
CAV_2	2
5293 RD/WH	5293 RD/WH
5293_VT/BU	5293 VT/BU
CAV_1	1
5293_VT/BU	5293 VT/BU
5293_VT/BU	5293 VT/BU
5293_VT/BU	5293 VT/BU
5293_VT/BU	5293 VT/BU
CAV_1	1
CAV_1	1
CAV_1	1
CAV_1	1
LUV	ENGINE-GAS, 4 CYL, 1.4L, MFI, DOHC, TURBO, VVT, ALUM, GME, E85 MAX
LUV	ENGINE-GAS, 4 CYL, 1.4L, MFI, DOHC, TURBO, VVT, ALUM, GME, E85 MAX
LUV	ENGINE-GAS, 4 CYL, 1.4L, MFI, DOHC, TURBO, VVT, ALUM, GME, E85 MAX
LUW	ENGINE-GAS, 4 CYL, 1.8L, MFI, 103KW, DOHC, E85 MAX
LWE	ENGINE-GAS, 4 CYL, 1.8L, MFI, DOHC, VVT, 103 KW, GME
LUV	ENGINE-GAS, 4 CYL, 1.4L, MFI, DOHC, TURBO, VVT, ALUM, GME, E85 MAX
LUV	ENGINE-GAS, 4 CYL, 1.4L, MFI, DOHC, TURBO, VVT, ALUM, GME, E85 MAX
LUV	ENGINE-GAS, 4 CYL, 1.4L, MFI, DOHC, TURBO, VVT, ALUM, GME, E85 MAX
LUV	ENGINE-GAS, 4 CYL, 1.4L, MFI, DOHC, TURBO, VVT, ALUM, GME, E85 MAX
LUW	ENGINE-GAS, 4 CYL, 1.8L, MFI, 103KW, DOHC, E85 MAX

LWE	ENGINE-GAS, 4 CYL, 1.8L, MFI, DOHC, VVT, 103 KW, GME
LUW	ENGINE-GAS, 4 CYL, 1.8L, MFI, 103KW, DOHC, E85 MAX
LWE	ENGINE-GAS, 4 CYL, 1.8L, MFI, DOHC, VVT, 103 KW, GME
LUW	ENGINE-GAS, 4 CYL, 1.8L, MFI, 103KW, DOHC, E85 MAX
LWE	ENGINE-GAS, 4 CYL, 1.8L, MFI, DOHC, VVT, 103 KW, GME
LUW	ENGINE-GAS, 4 CYL, 1.8L, MFI, 103KW, DOHC, E85 MAX
LWE	ENGINE-GAS, 4 CYL, 1.8L, MFI, DOHC, VVT, 103 KW, GME
5293_RD/WH	5293 RD/WH
5293_VT/BU	5293 VT/BU
78_BN/YE	78 BN/YE
CAV 16	16
LWE	ENGINE-GAS, 4 CYL, 1.8L, MFI, DOHC, VVT, 103 KW, GME
LUV	ENGINE-GAS, 4 CYL, 1.4L, MFI, DOHC, TURBO, VVT, ALUM, GME, E85 MAX
LUW	ENGINE-GAS, 4 CYL, 1.8L, MFI, 103KW, DOHC, E85 MAX
LWE	ENGINE-GAS, 4 CYL, 1.8L, MFI, DOHC, VVT, 103 KW, GME
LUW	ENGINE-GAS, 4 CYL, 1.8L, MFI, 103KW, DOHC, E85 MAX
LWE	ENGINE-GAS, 4 CYL, 1.8L, MFI, DOHC, VVT, 103 KW, GME
F59UA	F59UA 30A
F62UA	F62UA 10A
F47UA	F47UA 10A
X190	X190
J111	J111
C_REF	C
KR29	
X50A	
X50A	
B52A	
B52B	
Q12	
Q22	(LUW/LWE)

E41	
Q42	(LUV)
Q40	(LUV)
G21	
KR25	
KR75	

F8UA, F9UA, F10UA, and F11UA Fuses

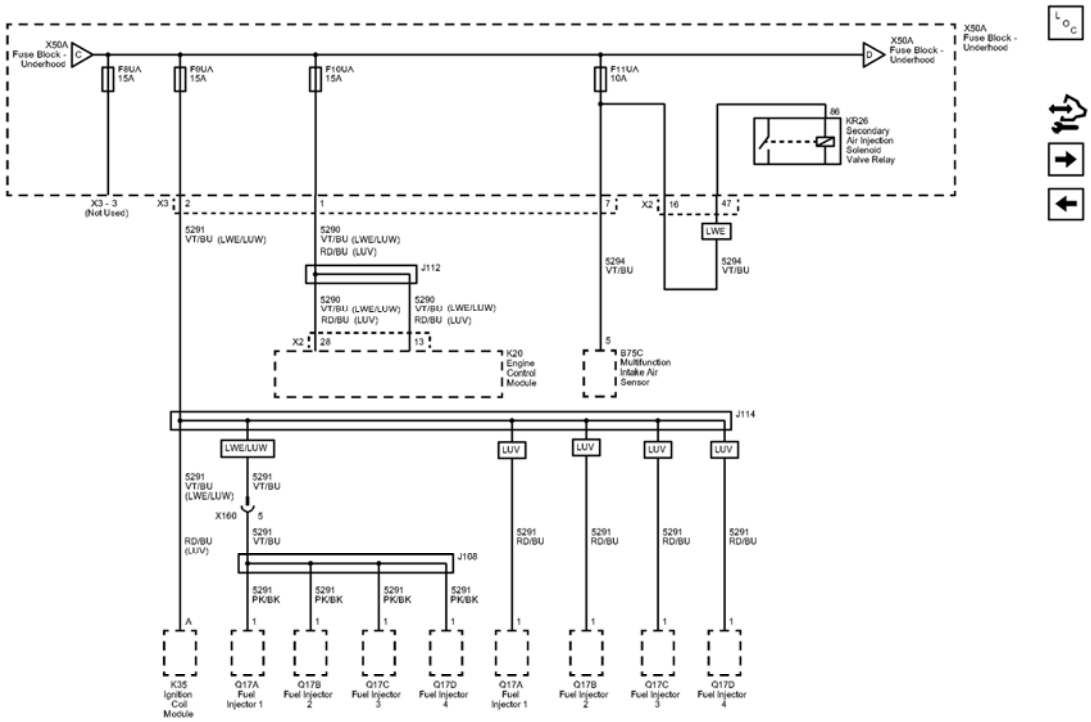

Fig. 31: F8UA, F9UA, F10UA, and F11UA Fuses
Courtesy of GENERAL MOTORS COMPANY

Callout	Component Name
X3_-_3	X3 - 3
5291	Powertrain Main Relay Fused Supply (2)
5291_VT/BU	5291 VT/BU
CAV_A	A
CAV_2	2
CONN_X3	X3
5291_VT/BU	5291 VT/BU
LWE	ENGINE-GAS, 4 CYL, 1.8L, MFI, DOHC, VVT, 103

	KW, GME
LUW	ENGINE-GAS, 4 CYL, 1.8L, MFI, 103KW, DOHC, E85 MAX
RD/BU	RD/BU
LUV	ENGINE-GAS, 4 CYL, 1.4L, MFI, DOHC, TURBO, VVT, ALUM, GME, E85 MAX
LWE	ENGINE-GAS, 4 CYL, 1.8L, MFI, DOHC, VVT, 103 KW, GME
LUW	ENGINE-GAS, 4 CYL, 1.8L, MFI, 103KW, DOHC, E85 MAX
5290	Powertrain Main Relay Fused Supply (1)
5290_VT/BU	5290 VT/BU
CAV_28	28
CONN_X2	X2
5290_VT/BU	5290 VT/BU
RD/BU	RD/BU
LUV	ENGINE-GAS, 4 CYL, 1.4L, MFI, DOHC, TURBO, VVT, ALUM, GME, E85 MAX
RD/BU	RD/BU
LUV	ENGINE-GAS, 4 CYL, 1.4L, MFI, DOHC, TURBO, VVT, ALUM, GME, E85 MAX
LWE	ENGINE-GAS, 4 CYL, 1.8L, MFI, DOHC, VVT, 103 KW, GME
LUW	ENGINE-GAS, 4 CYL, 1.8L, MFI, 103KW, DOHC, E85 MAX
LWE	ENGINE-GAS, 4 CYL, 1.8L, MFI, DOHC, VVT, 103 KW, GME
LUW	ENGINE-GAS, 4 CYL, 1.8L, MFI, 103KW, DOHC, E85 MAX
CAV_1	1
5290_VT/BU	5290 VT/BU
CAV_13	13
LWE	ENGINE-GAS, 4 CYL, 1.8L, MFI, DOHC, VVT, 103 KW, GME
LUW	ENGINE-GAS, 4 CYL, 1.8L, MFI, 103KW, DOHC, E85 MAX
RD/BU	RD/BU
LUV	ENGINE-GAS, 4 CYL, 1.4L, MFI, DOHC, TURBO, VVT, ALUM, GME, E85 MAX
5294	Powertrain Main Relay Fused Supply (5)
5294_VT/BU	5294 VT/BU
CAV_16	16
CONN_X2	X2

CAV_47	47
LWE	ENGINE-GAS, 4 CYL, 1.8L, MFI, DOHC, VVT, 103 KW, GME
5294 VT/BU	5294 VT/BU
CAV_5	5
CAV_86	86
5291_VT/BU	5291 VT/BU
CAV_1	1
5291_VT/BU	5291 VT/BU
5291_PK/BK	5291 PK/BK
5291_PK/BK	5291 PK/BK
CAV_1	1
5291_PK/BK	5291 PK/BK
CAV_1	1
5291_PK/BK	5291 PK/BK
CAV_1	1
CAV_5	5
LWE	ENGINE-GAS, 4 CYL, 1.8L, MFI, DOHC, VVT, 103 KW, GME
LUW	ENGINE-GAS, 4 CYL, 1.8L, MFI, 103KW, DOHC, E85 MAX
5291 RD/BU	5291 RD/BU
CAV_1	1
5291_RD/BU	5291 RD/BU
CAV_1	1
5291_RD/BU	5291 RD/BU
CAV_1	1
5291_RD/BU	5291 RD/BU
CAV_1	1
LUV	ENGINE-GAS, 4 CYL, 1.4L, MFI, DOHC, TURBO, VVT, ALUM, GME, E85 MAX
LUV	ENGINE-GAS, 4 CYL, 1.4L, MFI, DOHC, TURBO, VVT, ALUM, GME, E85 MAX
LUV	ENGINE-GAS, 4 CYL, 1.4L, MFI, DOHC, TURBO, VVT, ALUM, GME, E85 MAX
LUV	ENGINE-GAS, 4 CYL, 1.4L, MFI, DOHC, TURBO, VVT, ALUM, GME, E85 MAX
CAV_7	7
C_REF	C
D_REF	D
F8UA	F8UA 15A
F9UA	F9UA 15A

J112	J112
F11UA	F11UA 10A
F10UA	F10UA 15A
X160	X160
J114	J114
J108	J108
X50A	
K20	
Q17A	
Q17B	
Q17C	
Q17D	
X50A	
X50A	
Q17A	
Q17B	
Q17C	
Q17D	
K35	
KR26	
B75C	

F42UA and F46UA Fuses

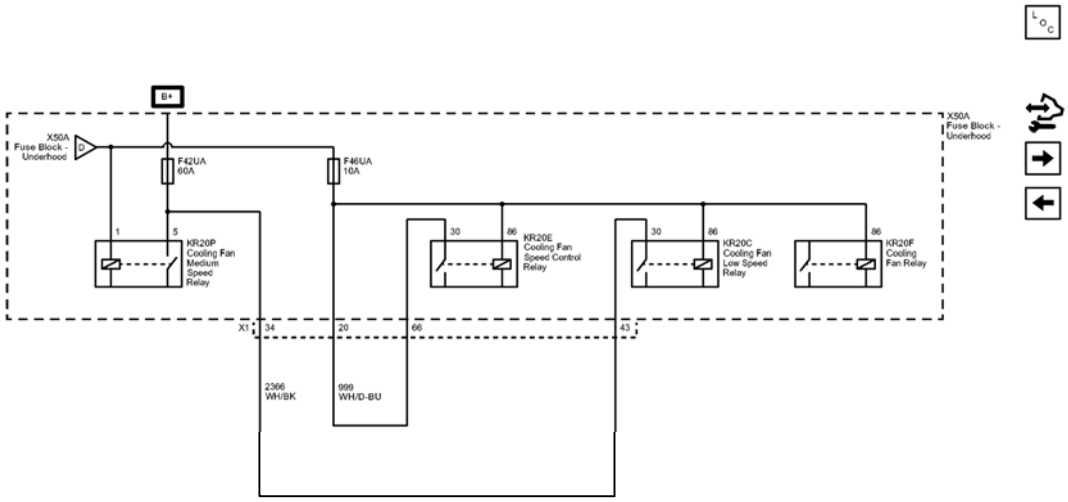

Fig. 32: F42UA and F46UA Fuses
Courtesy of GENERAL MOTORS COMPANY

Callout	Component Name
2366	Cooling Fan Control Relay Speed Signal
CAV 43	43
CAV_34	34
CONN_X1	X1
999_WH/D-BU	999 WH/D-BU
CAV_66	66
CAV_20	20
2366_WH/BK	2366 WH/BK
CAV_1	1
CAV_5	5
CAV_30	30
CAV_86	86
CAV_30	30
CAV_86	86
CAV_86	86
F42UA	F42UA 60A
F46UA	F46UA 10A

D_REF	D
X50A	
KR20F	
X50A	
KR20P	
KR20C	
KR20E	

F16UA, F17UA, F18UA, F20UA, F52UA, F54UA, and F57UA Fuses

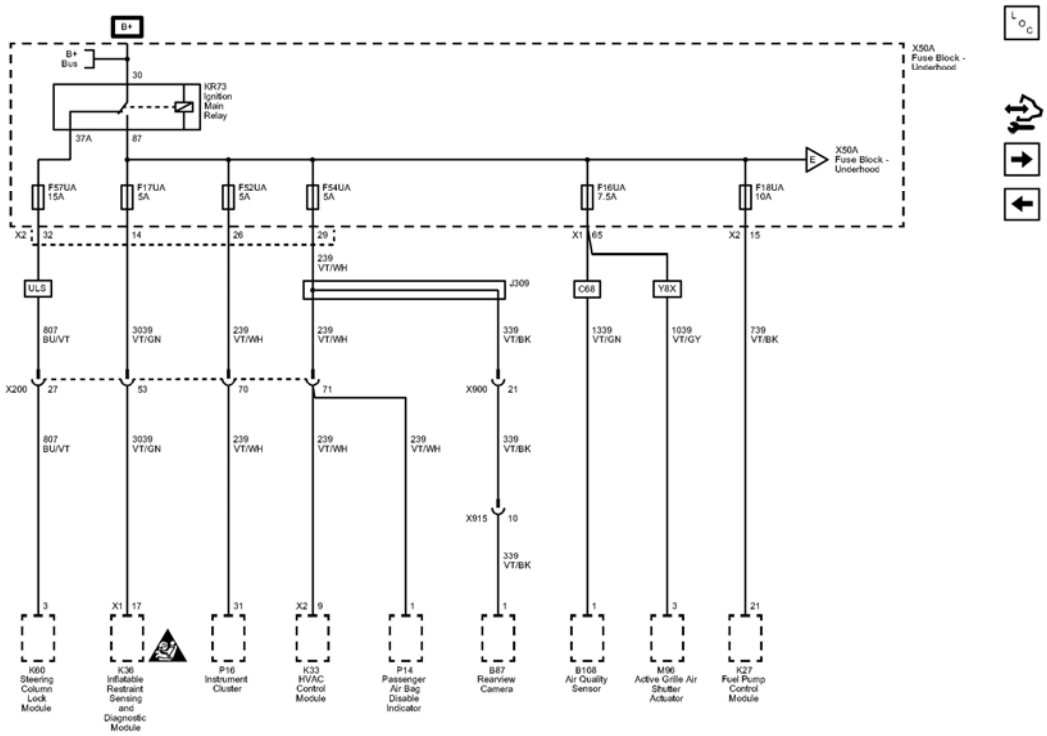

Fig. 33: F16UA, F17UA, F18UA, F20UA, F52UA, F54UA, and F57UA Fuses
Courtesy of GENERAL MOTORS COMPANY

Callout	Component Name
739	Run/Crank Ignition 1 Voltage
739_VT/BK	739 VT/BK
CAV_21	21
CAV_15	15
CONN_X2	X2
1339	Run/Crank Ignition 1 Voltage
1339_VT/GN	1339 VT/GN

CAV_1	1
CAV_65	65
CONN_X1	X1
1039	Run/Crank Ignition 1 Voltage
1039_VT/GY	1039 VT/GY
CAV_3	3
339	Run/Crank Ignition 1 Voltage
339_VT/BK	339 VT/BK
CAV_1	1
339_VT/BK	339 VT/BK
339_VT/BK	339 VT/BK
239	Run/Crank Ignition 1 Voltage
239 VT/WH	239 VT/WH
CAV_9	9
CONN_X2	X2
CAV_29	29
239_VT/WH	239 VT/WH
239_VT/WH	239 VT/WH
239_VT/WH	239 VT/WH
CAV_1	1
CAV_21	21
CAV_10	10
239_VT/WH	239 VT/WH
CAV_31	31
CAV_26	26
239_VT/WH	239 VT/WH
3039	Run/Crank Ignition 1 Voltage
3039 VT/GN	3039 VT/GN
CAV_17	17
CONN X1	X1
CAV_14	14
3039_VT/GN	3039 VT/GN
807	OFF /Accessory Voltage
807_BU/VT	807 BU/VT
CAV_3	3
CAV_32	32
CONN_X2	X2
807_BU/VT	807 BU/VT
CAV_37A	37A
CAV_87	87
CAV_30	30

	STEERING COLUMN LOCK-MECHANICAL
C68	HVAC SYSTEM-AIR CONDITIONER FRT, AUTO, ELECTRONIC CONTROLS
Y8X	MODEL CONVERSION-ENGINE IMPROVEMENT
X200	X200
CAV_70	70
CAV_53	53
CAV_27	27
CAV_71	71
E_REF	E
X900	X900
X915	X915
F57UA	F57UA 15A
F17UA	F17UA 5A
F52UA	F52UA 5A
F54UA	F54UA 5A
F16UA	F16UA 7.5A
F18UA	F18UA 10A
J309	J309
X200	X200
B108	(C68)
K33	
P16	
X50A	
KR73	
X50A	
K27	
K36	
P14	
M96	(Y8K)
K60	(ULS)
B87	(UVC)

F5UA, F13UA, F53UA, and F65UA Fuses

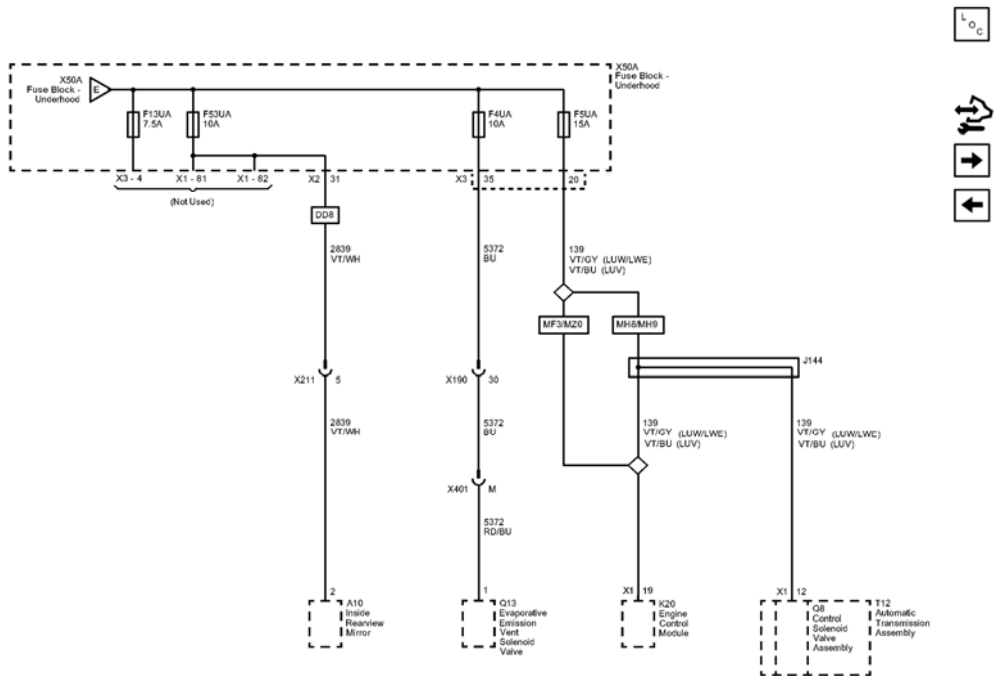

Fig. 34: F5UA, F13UA, F53UA, and F65UA Fuses
Courtesy of GENERAL MOTORS COMPANY

Callout	Component Name
2839	Run/Crank Ignition 1 Voltage
CAV 2	2
CAV_31	31
CONN_X2	X2
5372	Canister Valve Solenoid
CAV_35	35
CONN_X3	X3
5372_RD/BU	5372 RD/BU
CAV_1	1
139	Run/Crank Ignition 1 Voltage
139_VT/GY	139 VT/GY
CAV_19	19
CONN_X1	X1
CAV_20	20
139_VT/GY	139 VT/GY
CAV_19	19
CONN_X1	X1

139_VT/GY	139 VT/GY
CAV_12	12
CONN_X1	X1
5372_BU	5372 BU
5372_BU	5372 BU
2839_VT/WH	2839 VT/WH
2839_VT/WH	2839 VT/WH
VT/BU	VT/BU
LUV	ENGINE-GAS, 4 CYL, 1.4L, MFI, DOHC, TURBO, VVT, ALUM, GME, E85 MAX
LUW	ENGINE-GAS, 4 CYL, 1.8L, MFI, 103KW, DOHC, E85 MAX
LWE	ENGINE-GAS, 4 CYL, 1.8L, MFI, DOHC, VVT, 103 KW, GME
VT/BU	VT/BU
LUV	ENGINE-GAS, 4 CYL, 1.4L, MFI, DOHC, TURBO, VVT, ALUM, GME, E85 MAX
LUW	ENGINE-GAS, 4 CYL, 1.8L, MFI, 103KW, DOHC, E85 MAX
LWE	ENGINE-GAS, 4 CYL, 1.8L, MFI, DOHC, VVT, 103 KW, GME
VT/BU	VT/BU
LUV	ENGINE-GAS, 4 CYL, 1.4L, MFI, DOHC, TURBO, VVT, ALUM, GME, E85 MAX
LUW	ENGINE-GAS, 4 CYL, 1.8L, MFI, 103KW, DOHC, E85 MAX
LWE	ENGINE-GAS, 4 CYL, 1.8L, MFI, DOHC, VVT, 103 KW, GME
MH8	TRANSMISSION-AUTO 6 SPD, HMD, X23F
MH9	TRANSMISSION-AUTO 6 SPD, HMD, X24F
MF3	TRANSMISSION-MAN 6 SPD, OPEL, 76.5 MM, 4.273 1ST, 2.158 2ND, 1.302 3RD, 0.959 4TH, 0.744 5TH, 0.614 6TH, M32-6 WR
MZ0	TRANSMISSION-MAN 6 SPD, OPEL, 76.5 MM, 3.82 1ST, 0.74 6TH, (M32 WR)
DD8	MIRROR I/S R/V-LT SENSITIVE
CAV_M	M
CAV_30	30
CAV_5	5
J144	J144
F13UA	F13UA 7.5A
F53UA	F53UA 10A
F4UA	F4UA 10A

F5UA	F5UA 15A
E_REF	E
X401	X401
X190	X190
X211	X211
X50A	
X50A	
A10	(DD8)
Q13	
K20	
Q8	(MH8/MH9)
T12	(MH8/MH9)

F28UA, F37UA, F38UA, F51UA, F56UA, and F60UA Fuses

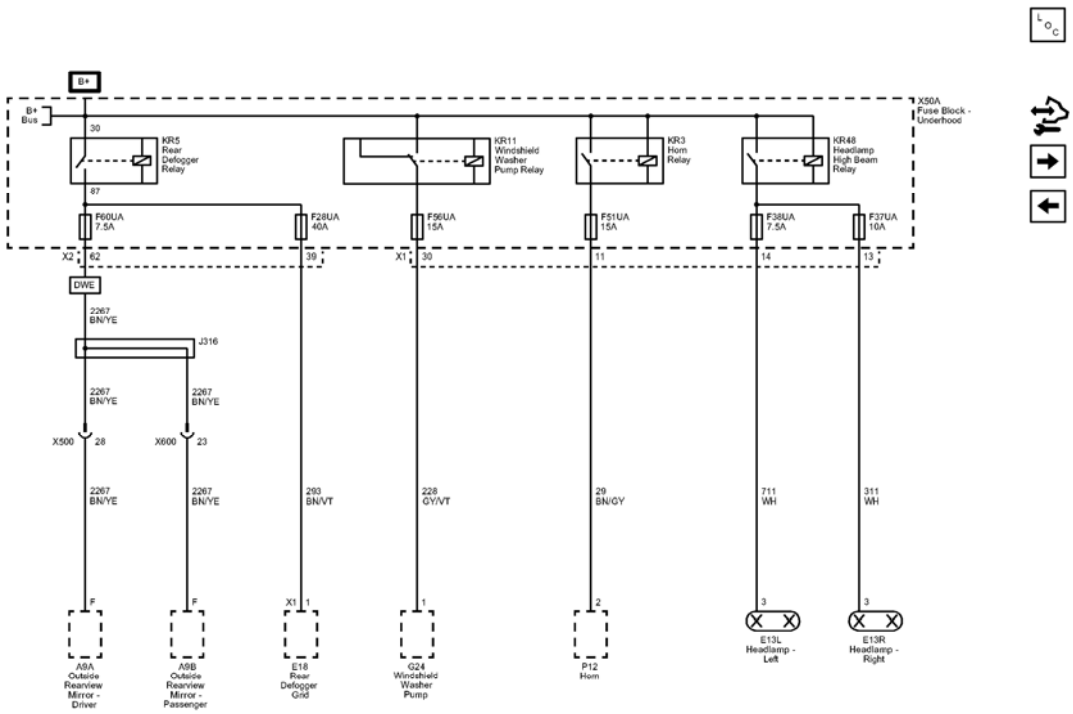

Fig. 35: F28UA, F37UA, F38UA, F51UA, F56UA, and F60UA Fuses
Courtesy of GENERAL MOTORS COMPANY

Callout	Component Name
2267	Mirror Heating Element Supply Voltage
CAV_F	F

CAV_62	62
CONN_X2	X2
CAV_F	F
293	Rear Defog Element Supply Voltage
293_BN/VT	293 BN/VT
CAV_1	1
CONN_X1	X1
CAV_39	39
228	Windshield Washer Pump Control
228_GY/VT	228 GY/VT
CAV_1	1
CAV_30	30
CONN X1	X1
29	Horn Control
29_BN/GY	29 BN/GY
CAV_2	2
CAV_11	11
711	Left Headlamp High Beam Supply Voltage
711_WH	711 WH
CAV_3	3
CAV_14	14
311	Right Headlamp High Beam Supply Voltage
311_WH	311 WH
CAV_3	3
CAV_13	13
2267_BN/YE	2267 BN/YE
2267_BN/YE	2267 BN/YE
2267 BN/YE	2267 BN/YE
2267_BN/YE	2267 BN/YE
2267 BN/YE	2267 BN/YE
DWE	MIRROR O/S-LH and RH, RC, ELEC, HEAT, AUX WFOV/DRVR, MANFOLD, CNVX/PASS
CAV_87	87
CAV_30	30
CAV_28	28
CAV 23	23
J316	J316
F60UA	F60UA 7.5A
F28UA	F28UA 40A
F56UA	F56UA 15A
F51UA	F51UA 15A

F38UA	F38UA 7.5A
F37UA	F37UA 10A
X500	X500
X600	X600
KR5	
KR3	
KR48	
X50A	
A9B	
G24	
KR11	
E18	
A9A	
E13R	
E13L	
P12	

F1DA, F4DA, F5DA, F6DA, and F7DA Fuses

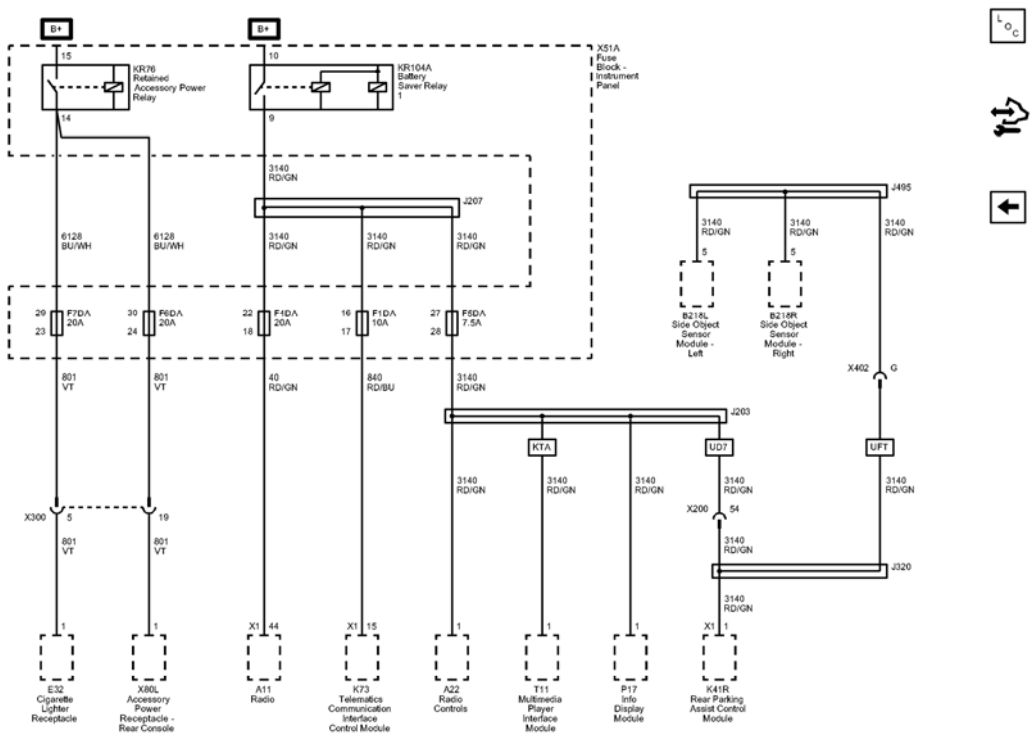

Fig. 36: F1DA, F4DA, F5DA, F6DA, and F7DA Fuses
Courtesy of GENERAL MOTORS COMPANY

Callout	Component Name
6128	Rear Closure Unlatch Motor Unlatch Control
6128_BU/WH	6128 BU/WH
CAV_14	14
6128_BU/WH	6128 BU/WH
801	Retained Accessory Power Fuse Supply Voltage
CAV_1	1
CAV_1	1
40	Battery Positive Voltage
CAV_44	44
CONN_X1	X1
840	Battery Positive Voltage
CAV 15	15
CONN_X1	X1
3140	Battery Positive Voltage
3140_RD/GN	3140 RD/GN
CAV_1	1
3140_RD/GN	3140 RD/GN
CAV_1	1
3140_RD/GN	3140 RD/GN
CAV_1	1
3140_RD/GN	3140 RD/GN
CAV_1	1
CONN_X1	X1
3140_RD/GN	3140 RD/GN
3140_RD/GN	3140 RD/GN
CAV_5	5
3140 RD/GN	3140 RD/GN
CAV_5	5
3140 RD/GN	3140 RD/GN
3140_RD/GN	3140 RD/GN
3140_RD/GN	3140 RD/GN
3140_RD/GN	3140 RD/GN
CAV_9	9
CAV_10	10
CAV_15	15
801_VT	801 VT
801_VT	801 VT
801_VT	801 VT
801_VT	801 VT
40_RD/GN	40 RD/GN

	840 RD/BU
3140_RD/GN	3140 RD/GN
3140_RD/GN	3140 RD/GN
3140_RD/GN	3140 RD/GN
3140_RD/GN	3140 RD/GN
CAV_29	29
CAV_23	23
CAV_30	30
CAV_24	24
CAV_22	22
CAV_18	18
CAV_16	16
CAV 17	17
CAV_27	27
CAV_28	28
KTA	AUDIO INTERFACE-
UD7	PARK ASSIST-REAR
UFT	SIDE ACTIVE SAFETY-OBSTACLE DETECTION
CAV_54	54
CAV_G	G
X300	X300
CAV_5	5
CAV_19	19
F7DA	F7DA 20A
F6DA	F6DA 20A
F4DA	F4DA 20A
F1DA	F1DA 10A
F5DA	F5DA 7.5A
X200	X200
X402	X402
J320	J320
J203	J203
X300	X300
A22	
P17	
T11	(KTA)
A11	
X80L	
E32	
X51A	
K73	(UE1)

K41R	(UD7)
B218L	
B218R	
KR76	

POWER MODING WIRING SCHEMATICS

Ignition Main Relay Wiring Schematics

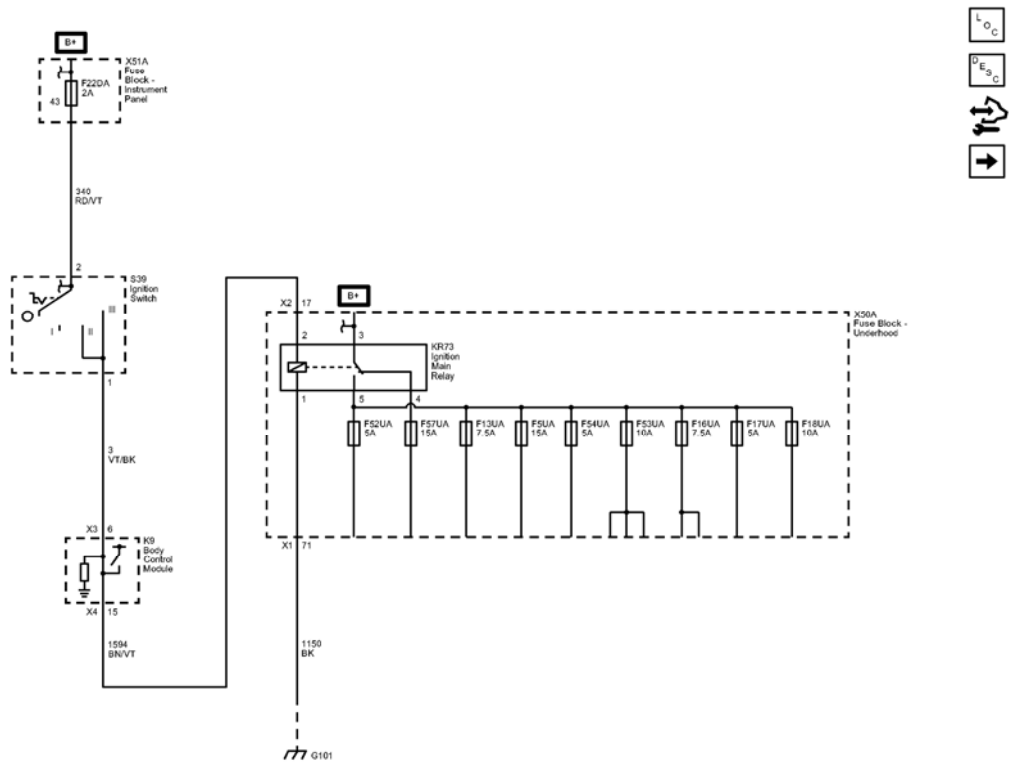

Fig. 37: Ignition Main Relay Wiring Schematics
Courtesy of GENERAL MOTORS COMPANY

Callout	Component Name
340	Battery Positive Voltage
340_RD/VT	340 RD/VT
CAV_2	2
1594	Ignition 3 Relay Control
1594_BN/VT	1594 BN/VT
CAV_15	15
CONN_X4	X4

CAV_17	17
CONN_X2	X2
3	Run/Crank Ignition 1 Voltage
3_VT/BK	3 VT/BK
CAV_6	6
CONN_X3	X3
CAV_1	1
1150	Ground
1150_BK	1150 BK
CAV_71	71
CONN_X1	X1
CAV_43	43
CAV 2	2
CAV_3	3
CAV_1	1
CAV_5	5
CAV_4	4
G101	G101
F22DA	F22DA 2A
F52UA	F52UA 5A
F57UA	F57UA 15A
F13UA	F13UA 7.5A
F5UA	F5UA 15A
F54UA	F54UA 5A
F53UA	F53UA 10A
F16UA	F16UA 7.5A
F17UA	F17UA 5A
F18UA	F18UA 10A
S39	(without BTM)
K9	
KR73	
X51A	
X50A	

Retained Accessory Power Relay Wiring Schematics

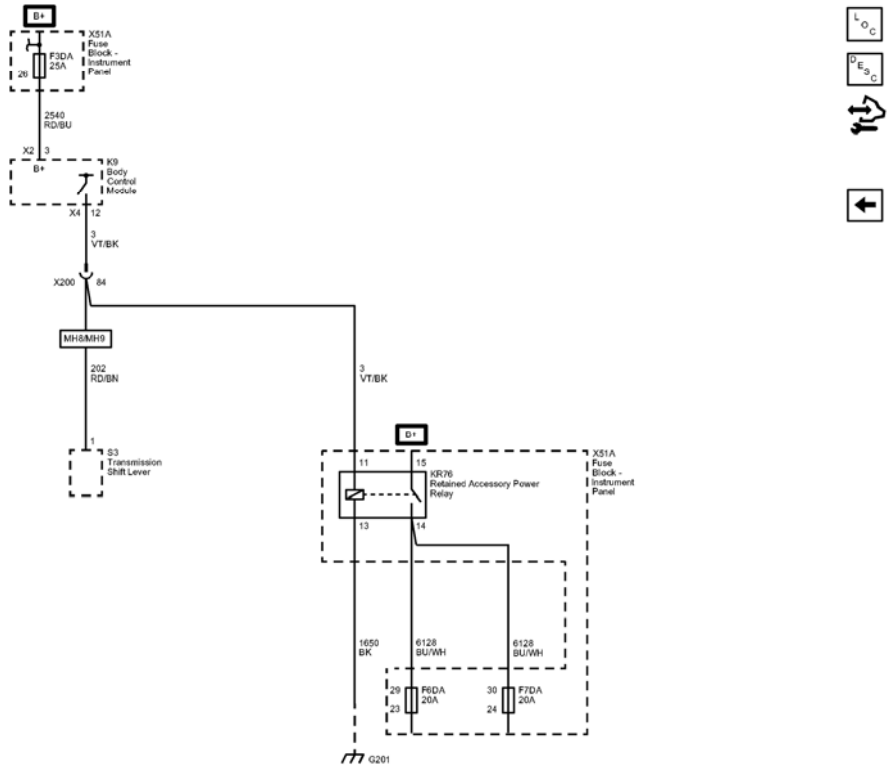

Fig. 38: Retained Accessory Power Relay Wiring Schematics
Courtesy of GENERAL MOTORS COMPANY

Callout	Component Name
202	Battery Positive Voltage
2540	Battery Positive Voltage
2540_RD/BU	2540 RD/BU
CAV_3	3
CONN_X2	X2
3	Run/Crank Ignition 1 Voltage
3_VT/BK	3 VT/BK
CAV_12	12
CONN_X4	X4
202_RD/BN	202 RD/BN
CAV_1	1
3_VT/BK	3 VT/BK
CAV_84	84
1650	Ground
1650_BK	1650 BK
6128	Rear Closure Unlatch Motor Unlatch Control
6128_BU/WH	6128 BU/WH

6128_BU/WH	6128 BU/WH
CAV_29	29
CAV_23	23
CAV_30	30
CAV_24	24
CAV_11	11
CAV_15	15
CAV_13	13
CAV_14	14
CAV_26	26
MH8	TRANSMISSION-AUTO 6 SPD, HMD, X23F
MH9	TRANSMISSION-AUTO 6 SPD, HMD, X24F
G201	G201
X200	X200
F6DA	F6DA 20A
F7DA	F7DA 20A
F3DA	F3DA 25A
S3	(MH8/MH9)
X51A	
K9	
X51A	
KR76	

Battery Saver Relay Wiring Schematics

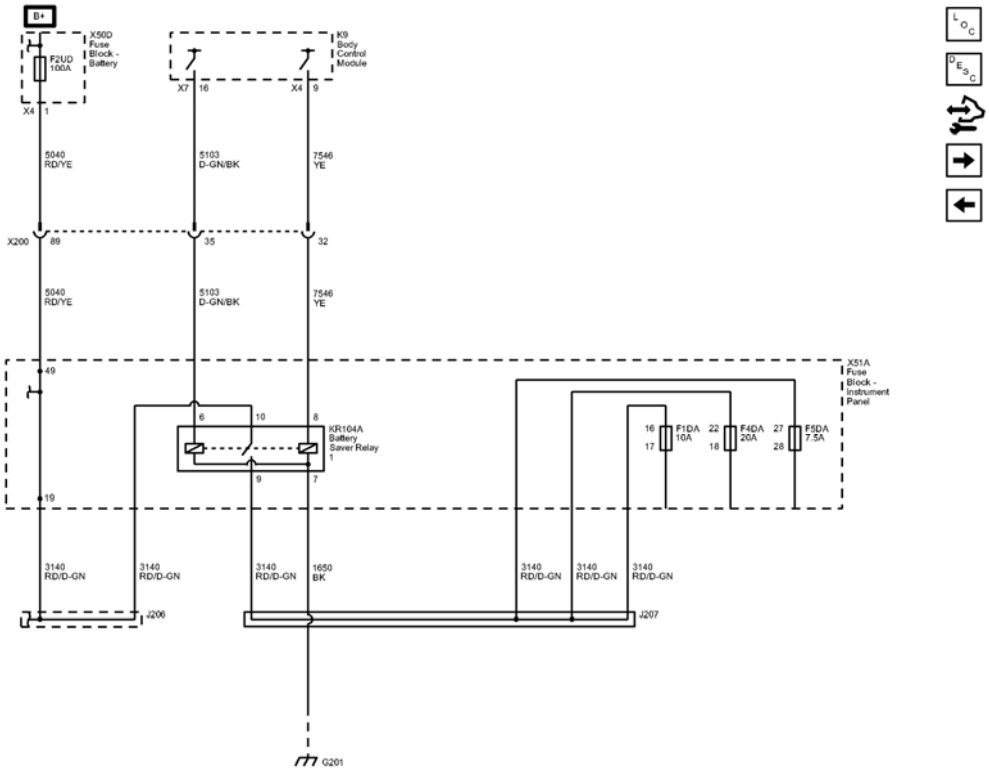

Fig. 39: Battery Saver Relay Wiring Schematics
Courtesy of GENERAL MOTORS COMPANY

IGNITION LOCK WIRING SCHEMATICS

Ignition Lock Wiring Schematics

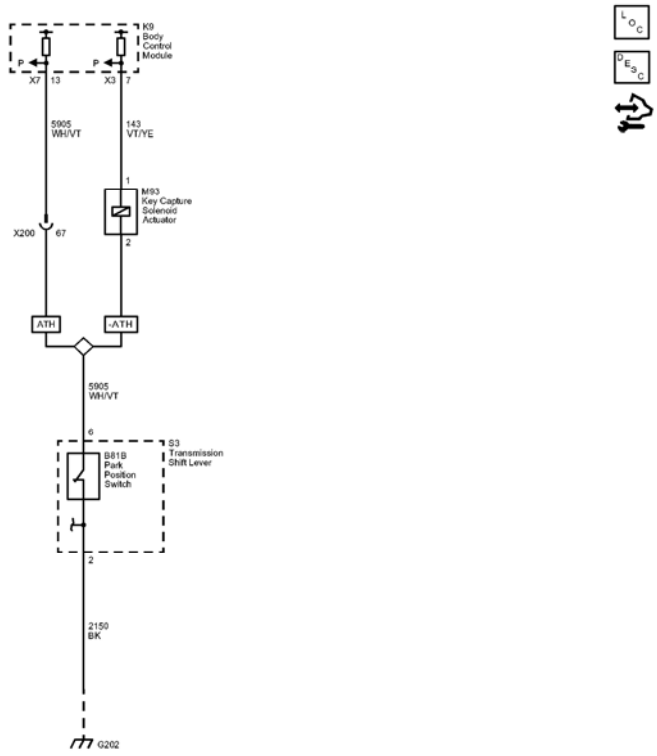

Fig. 40: Ignition Lock Wiring Schematics
Courtesy of GENERAL MOTORS COMPANY

Callout	Component Name
5905	Key Capture/Column Lock Shift Position Signal
5905 WH/VT	5905 WH/VT
CAV_6	6
CAV_13	13
CONN_X7	X7
143	Accessory Voltage
143_VT/YE	143 VT/YE
CAV_1	1
CAV_7	7
CONN_X3	X3
5905_WH/VT	5905 WH/VT
CAV_2	2
CAV_67	67
ATH	LOCK CONTROL, ENTRY-REMOTE ENTRY, EXTENDED RANGE, PASSIVE ENTRY, ALL DOORS
	LOCK CONTROL, ENTRY-REMOTE ENTRY,

ATH	EXTENDED RANGE, PASSIVE ENTRY, ALL DOORS
2150	Ground
2150 BK	2150 BK
CAV_2	2
G202	G202
X200	X200
K9	
B81B	(MH8/MH9)
S3	(MH8/MH9)
M93	(MH8/MH9)

GROUND DISTRIBUTION WIRING SCHEMATICS

G100, G101, and G102 Wiring Schematics

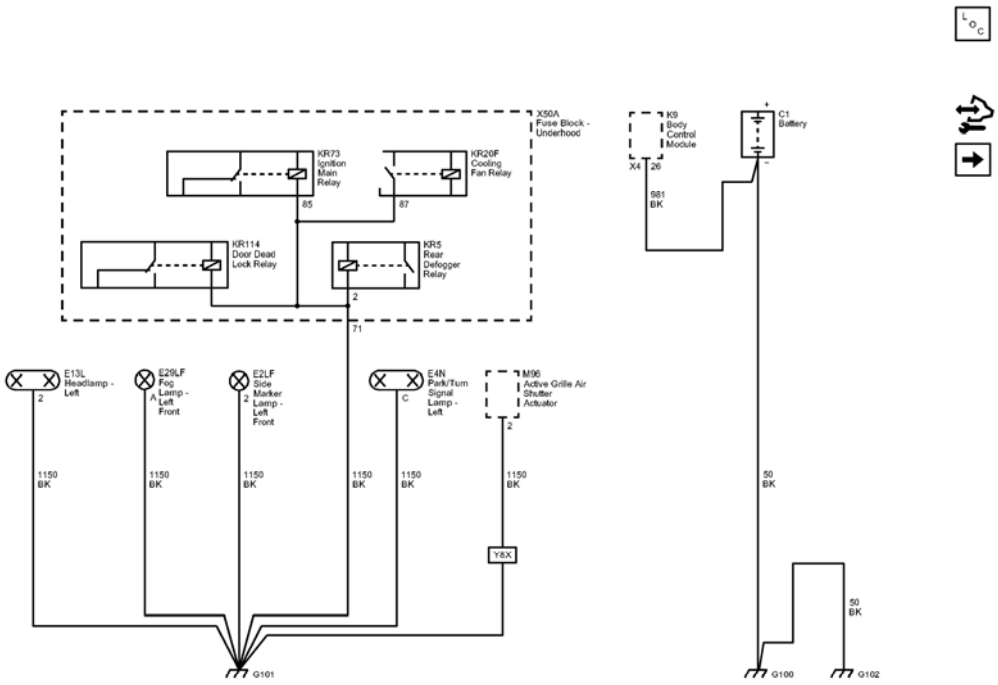

Fig. 41: G100, G101, and G102
Courtesy of GENERAL MOTORS COMPANY

Callout	Component Name
50	Ground
CAV_85	85

CAV_87	87
CAV_2	2
981_BK	981 BK
CAV_26	26
CONN_X4	X4
50_BK	50 BK
50_BK	50 BK
1150	Ground
1150_BK	1150 BK
CAV_71	71
1150_BK	1150 BK
CAV_2	2
1150 BK	1150 BK
CAV_A	A
1150_BK	1150 BK
CAV_2	2
1150_BK	1150 BK
CAV_C	C
1150_BK	1150 BK
CAV_2	2
Y8X	MODEL CONVERSION-ENGINE IMPROVEMENT
G101	G101
G100	G100
G102	G102
C1	
E29LF	(T3U)
KR73	
E13L	
E2LF	
E4N	
K9	
KR5	
X50A	
M96	(Y8K)
KR20F	
KR114	

G103, G104, and G105 Wiring Schematics

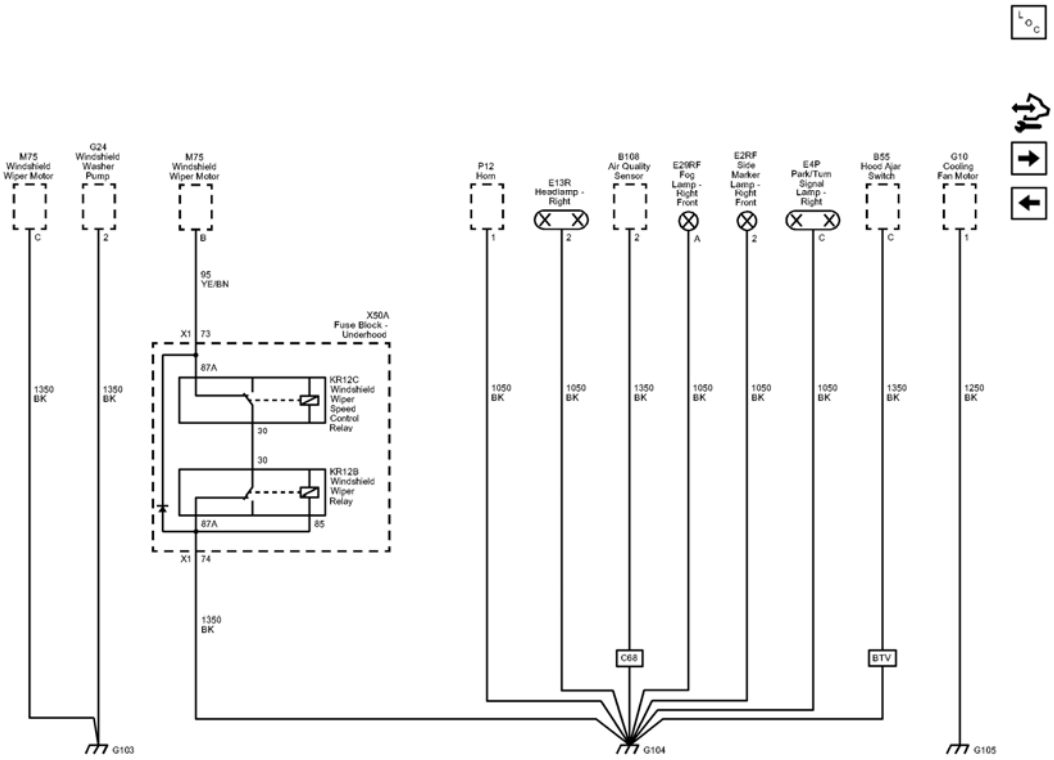

Fig. 42: G103, G104, and G105
Courtesy of GENERAL MOTORS COMPANY

Callout	Component Name
CAV_87A	87A
CAV 30	30
CAV_30	30
CAV_85	85
CAV_87A	87A
1350	Ground
1350_BK	1350 BK
CAV_C	C
CAV_2	2
95	Windshield Wiper Motor Low Speed Control
95_YE/BN	95 YE/BN
CAV_73	73
CONN_X1	X1
CAV_B	B
CAV_1	1
1050	Ground
1050_BK	1050 BK

1050_BK	1050 BK
CAV_2	2
1350_BK	1350 BK
CAV_2	2
1050_BK	1050 BK
CAV_A	A
1050_BK	1050 BK
CAV_2	2
1050_BK	1050 BK
CAV_C	C
1350_BK	1350 BK
CAV_C	C
1250	Ground
1250_BK	1250 BK
CAV_1	1
1350_BK	1350 BK
CAV_74	74
CONN_X1	X1
1350_BK	1350 BK
C68	HVAC SYSTEM-AIR CONDITIONER FRT, AUTO, ELECTRONIC CONTROLS
BTV	REMOTE START-ENGINE
G103	G103
G104	G104
G105	G105
M75	
G24	
B108	(C68)
E29RF	(T3U)
B55	
E13R	
G10	
E2RF	
E4P	
KR12B	
KR12C	
X50A	
M75	
P12	

G112 and G114 Wiring Schematics

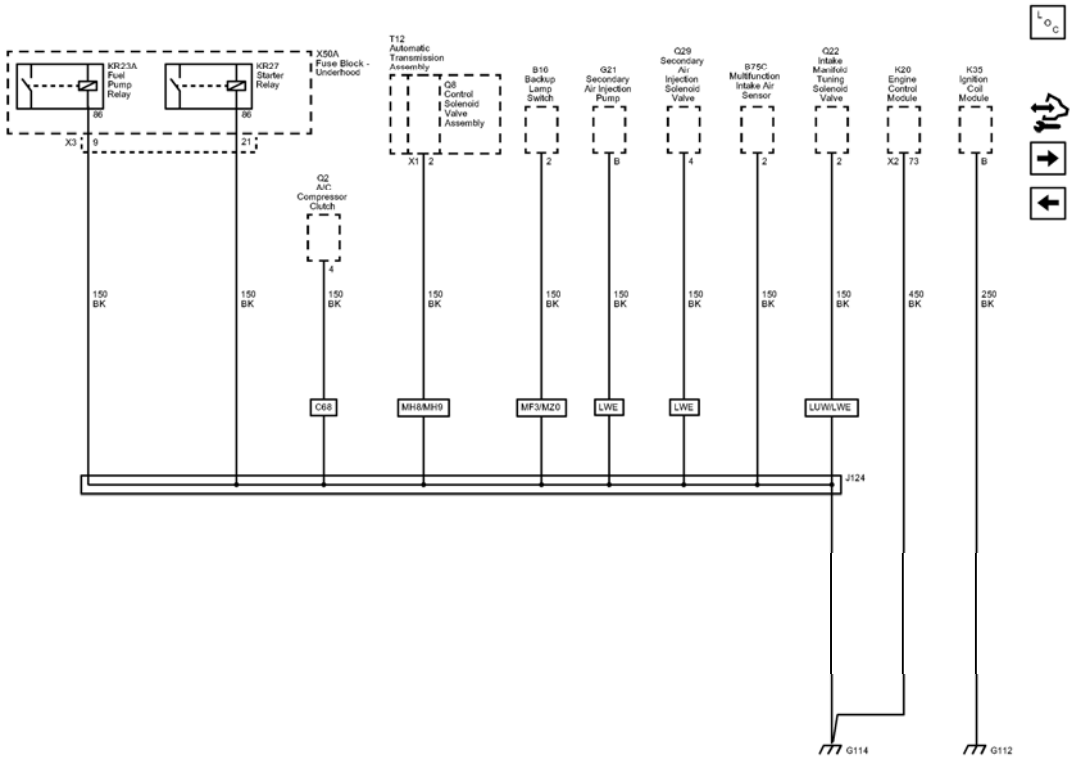

Fig. 43: G112 and G114
Courtesy of GENERAL MOTORS COMPANY

Callout	Component Name
CAV_86	86
CAV 86	86
150	Ground
150_BK	150 BK
CAV_9	9
CONN_X3	X3
150_BK	150 BK
CAV_21	21
150_BK	150 BK
CAV_4	4
150_BK	150 BK
CAV_2	2
CONN_X1	X1
150_BK	150 BK
CAV_2	2
150_BK	150 BK
CAV_B	B

150_BK	150 BK
CAV_4	4
150_BK	150 BK
CAV_2	2
150_BK	150 BK
CAV_2	2
450	Ground
450_BK	450 BK
CAV_73	73
CONN_X2	X2
250	Ground
250_BK	250 BK
CAV_B	B
C68	HVAC SYSTEM-AIR CONDITIONER FRT, AUTO, ELECTRONIC CONTROLS
MH8	TRANSMISSION-AUTO 6 SPD, HMD, X23F
MH9	TRANSMISSION-AUTO 6 SPD, HMD, X24F
MF3	TRANSMISSION-MAN 6 SPD, OPEL, 76.5 MM, 4.273 1ST, 2.158 2ND, 1.302 3RD, 0.959 4TH, 0.744 5TH, 0.614 6TH, M32-6 WR
MZ0	TRANSMISSION-MAN 6 SPD, OPEL, 76.5 MM, 3.82 1ST, 0.74 6TH, (M32 WR)
LWE	ENGINE-GAS, 4 CYL, 1.8L, MFI, DOHC, VVT, 103 KW, GME
LWE	ENGINE-GAS, 4 CYL, 1.8L, MFI, DOHC, VVT, 103 KW, GME
LUW	ENGINE-GAS, 4 CYL, 1.8L, MFI, 103KW, DOHC, E85 MAX
LWE	ENGINE-GAS, 4 CYL, 1.8L, MFI, DOHC, VVT, 103 KW, GME
G112	G112
G114	G114
J124	J124
KR27	
X50A	
B16	(MF3 or MZ0)
Q22	(LUW/LWE)
K20	
Q8	(MH8/MH9)
T12	(MH8/MH9)
G21	
Q29	
B75C	

KR23A	
Q2	
K35	

G120, G121, and G201 Wiring Schematics

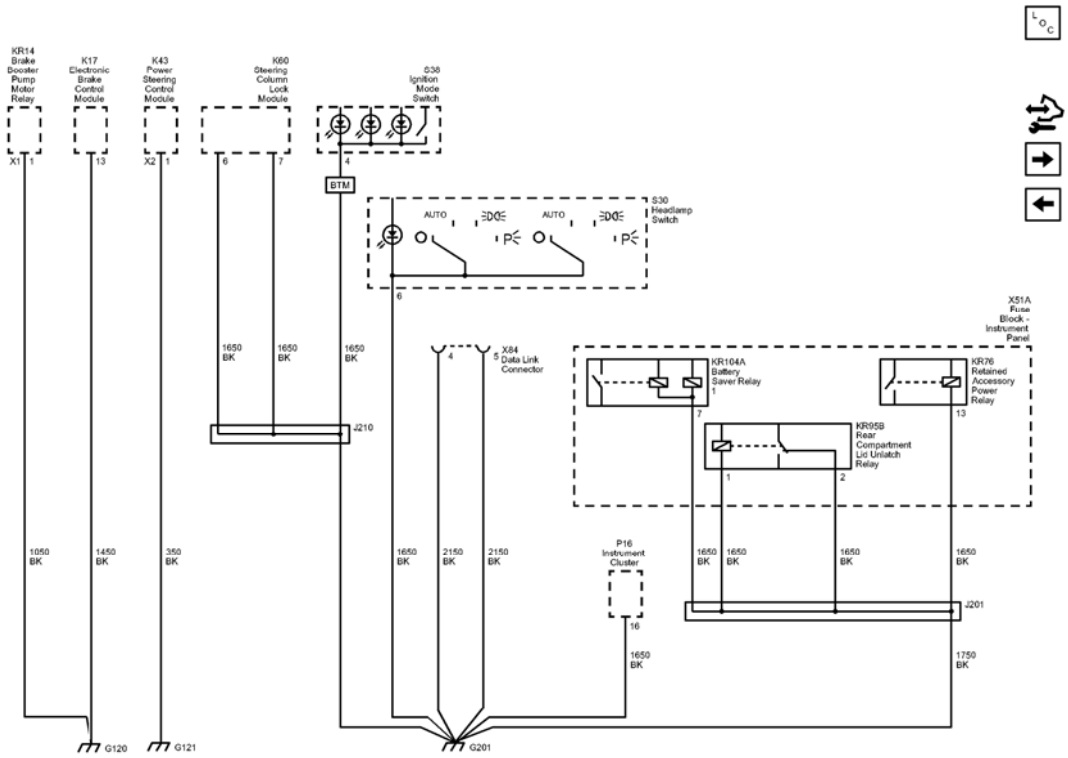

Fig. 44: G120, G121, and G201
Courtesy of GENERAL MOTORS COMPANY

Callout	Component Name
1050	Ground
1050_BK	1050 BK
CAV_1	1
CONN_X1	X1
1450	Ground
1450_BK	1450 BK
CAV_13	13
350	Ground
350 BK	350 BK
CAV_1	1
CONN_X2	X2

1650	Ground
1650_BK	1650 BK
CAV_6	6
1650_BK	1650 BK
CAV_7	7
1650_BK	1650 BK
CAV_4	4
1650_BK	1650 BK
CAV_6	6
2150	Ground
2150_BK	2150 BK
2150_BK	2150 BK
1650_BK	1650 BK
CAV_16	16
1650_BK	1650 BK
1650_BK	1650 BK
1650_BK	1650 BK
1650_BK	1650 BK
1750	Ground
1750_BK	1750 BK
CAV_7	7
CAV_1	1
CAV_2	2
CAV_13	13
BTM	SWITCH-ENGINE START, KEYLESS
CAV_4	4
CAV_5	5
G120	G120
G121	G121
G201	G201
J210	J210
J201	J201
S30	
X84	
K17	
K43	
P16	
X51A	
K60	(ULS)
KR104A	
KR95B	

S38	(BTM)
KR14	

G202 Wiring Schematics

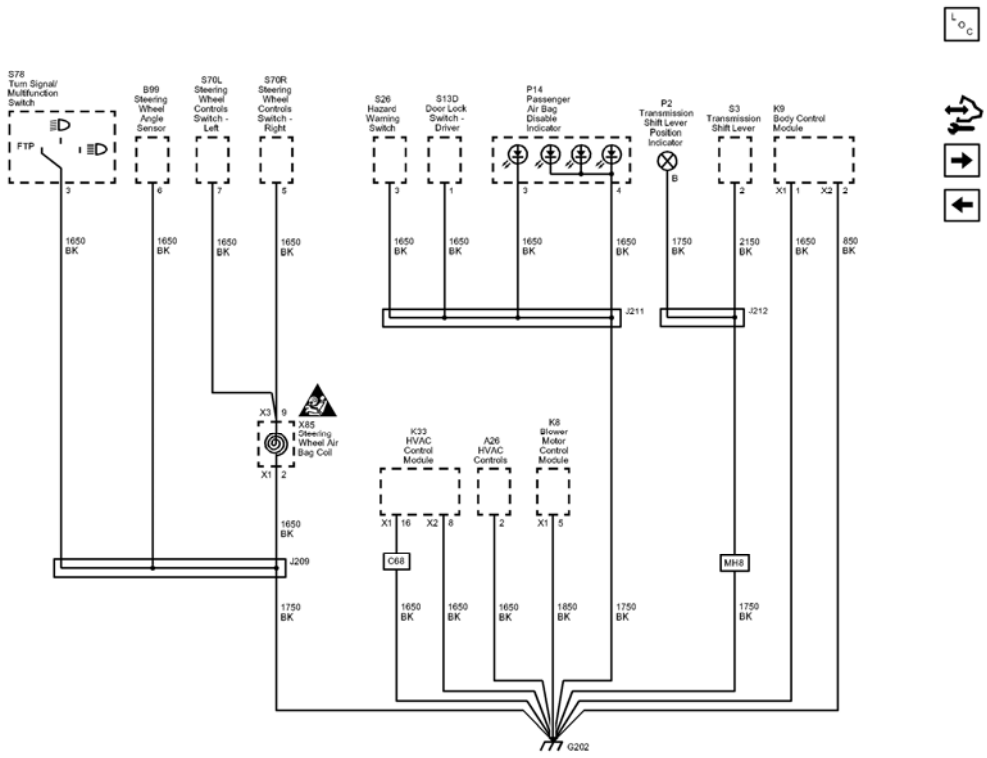

Fig. 45: G202
Courtesy of GENERAL MOTORS COMPANY

Callout	Component Name
1650	Ground
1650_BK	1650 BK
CAV 3	3
1650_BK	1650 BK
CAV 6	6
1650_BK	1650 BK
CAV_7	7
1650_BK	1650 BK
CAV_9	9
CONN_X3	X3
CAV_5	5

1750	Ground
1750_BK	1750 BK
CAV_2	2
CONN_X1	X1
1650_BK	1650 BK
CAV_3	3
1650_BK	1650 BK
CAV_1	1
1650_BK	1650 BK
CAV_3	3
1750_BK	1750 BK
CAV_4	4
1850	Ground
1850_BK	1850 BK
CAV_5	5
CONN_X1	X1
1650_BK	1650 BK
CAV_2	2
1650_BK	1650 BK
CAV_8	8
CONN_X2	X2
1650_BK	1650 BK
CAV_16	16
CONN_X1	X1
1750_BK	1750 BK
CAV_B	B
1750_BK	1750 BK
CAV 2	2
1650_BK	1650 BK
CAV 1	1
CONN_X1	X1
850	Ground
850_BK	850 BK
CAV_2	2
CONN_X2	X2
MH8	TRANSMISSION-AUTO 6 SPD, HMD, X23F
1650_BK	1650 BK
C68	HVAC SYSTEM-AIR CONDITIONER FRT, AUTO, ELECTRONIC CONTROLS
1650_BK	1650 BK
2150	Ground

2150_BK	2150 BK
J209	J209
J211	J211
J212	J212
X85	
B99	(FX3)
S70L	(K34)
S70R	(W1Y)
K8	
S13D	
S3	(MH8/MH9)
K9	
P2	(MH8/MH9)
P14	
S78	
S26	
A26	
K33	

G203 Wiring Schematics

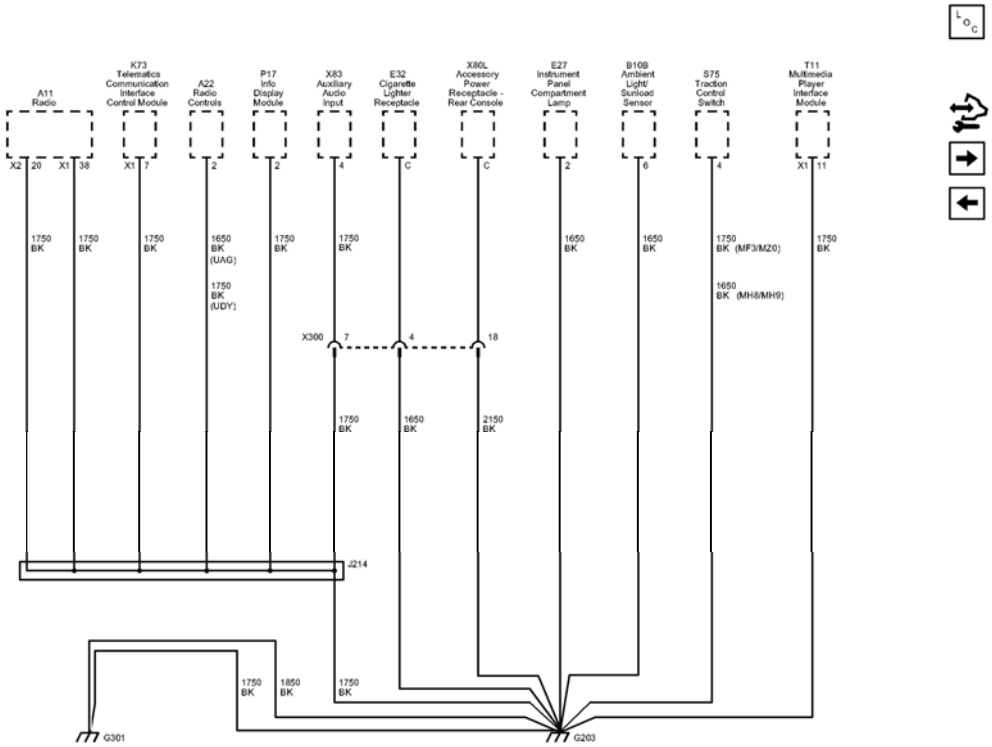

Fig. 46: G203
Courtesy of GENERAL MOTORS COMPANY

Callout	Component Name
1650	Ground
1750	Ground
1850	Ground
1750_BK	1750 BK
CAV_20	20
CONN_X2	X2
1750_BK	1750 BK
CAV_38	38
CONN X1	X1
1750_BK	1750 BK
CAV 7	7
CONN_X1	X1
1650_BK	1650 BK
CAV_2	2
1750_BK	1750 BK
1750_BK	1750 BK
CAV_2	2
1750_BK	1750 BK
1750_BK	1750 BK
1750_BK	1750 BK
CAV_4	4
1650_BK	1650 BK
CAV_C	C
2150	Ground
2150_BK	2150 BK
CAV C	C
1650_BK	1650 BK
CAV_2	2
1650_BK	1650 BK
CAV_6	6
1650_BK	1650 BK
CAV_4	4
1750_BK	1750 BK
1750_BK	1750 BK
CAV_11	11
CONN_X1	X1
1850_BK	1850 BK

1750_BK	1750 BK
MF3	TRANSMISSION-MAN 6 SPD, OPEL, 76.5 MM, 4.273 1ST, 2.158 2ND, 1.302 3RD, 0.959 4TH, 0.744 5TH, 0.614 6TH, M32-6 WR
MZ0	TRANSMISSION-MAN 6 SPD, OPEL, 76.5 MM, 3.82 1ST, 0.74 6TH, (M32 WR)
MH8	TRANSMISSION-AUTO 6 SPD, HMD, X23F
MH9	TRANSMISSION-AUTO 6 SPD, HMD, X24F
UAG	INFOTAINMENT DISPLAY-GRAPHIC INFO DISPLAY (GID), VAR 1
UDY	"INFOTAINMENT DISPLAY-COLOR INFO DISPLAY (CID) 7"", WVGA, TOUCH SCREEN"
X300	X300
CAV_7	7
CAV_4	4
CAV_18	18
J214	J214
G301	G301
X300	X300
A22	
P17	
A11	
E32	
X80L	
E27	
B10B	
S75	(FX3)
T11	(KTA)
K73	(UE1)
X83	

G204 and G305 Wiring Schematics

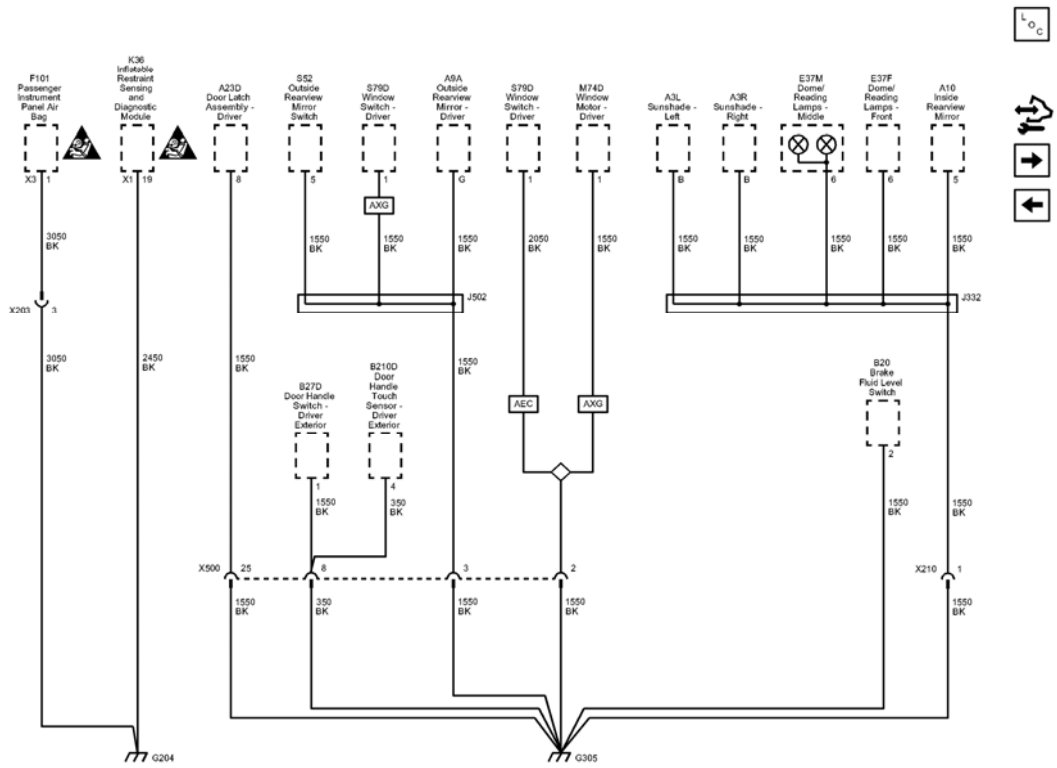

Fig. 47: G204 and G305 Wiring Schematics
Courtesy of GENERAL MOTORS COMPANY

Callout	Component Name
2450	Ground
2450_BK	2450 BK
CAV_19	19
CONN_X1	X1
3050	Ground
3050_BK	3050 BK
CAV_1	1
CONN_X3	X3
3050_BK	3050 BK
CAV_3	3
1550	Ground
1550_BK	1550 BK
CAV_G	G
1550_BK	1550 BK
1550_BK	1550 BK
1550_BK	1550 BK
CAV_1	1

1550_BK	1550 BK
CAV_5	5
1550_BK	1550 BK
CAV_8	8
1550_BK	1550 BK
350	Ground
350_BK	350 BK
CAV_1	1
350_BK	350 BK
CAV_4	4
1550_BK	1550 BK
1550_BK	1550 BK
CAV_1	1
1550_BK	1550 BK
1550_BK	1550 BK
CAV_5	5
1550_BK	1550 BK
1550_BK	1550 BK
1550_BK	1550 BK
CAV_2	2
1550_BK	1550 BK
CAV_B	B
1550_BK	1550 BK
CAV_B	B
1550_BK	1550 BK
CAV_6	6
1550_BK	1550 BK
CAV_6	6
CAV_1	1
AXG	WINDOW-POWER OPERATED-EXPRESS DRIVER UP/DOWN
AXG	WINDOW-POWER OPERATED-EXPRESS DRIVER UP/DOWN
2050	Ground
2050_BK	2050 BK
CAV_1	1
AEC	WINDOW-POWER OPERATED, DRIVER EXPRESS DOWN
X500	X500
CAV_25	25
CAV_8	8
CAV_3	3

CAV_2	2
X203	X203
J502	J502
J332	J332
X210	X210
X500	X500
A23D	
S52	
S79D	
A9A	
S79D	
M74D	
A3L	(D6I)
A3R	(D6I)
A10	(DD8)
B20	
E37M	
E37F	
B27D	
B210D	
F101	
K36	

G307 and G308 Wiring Schematics

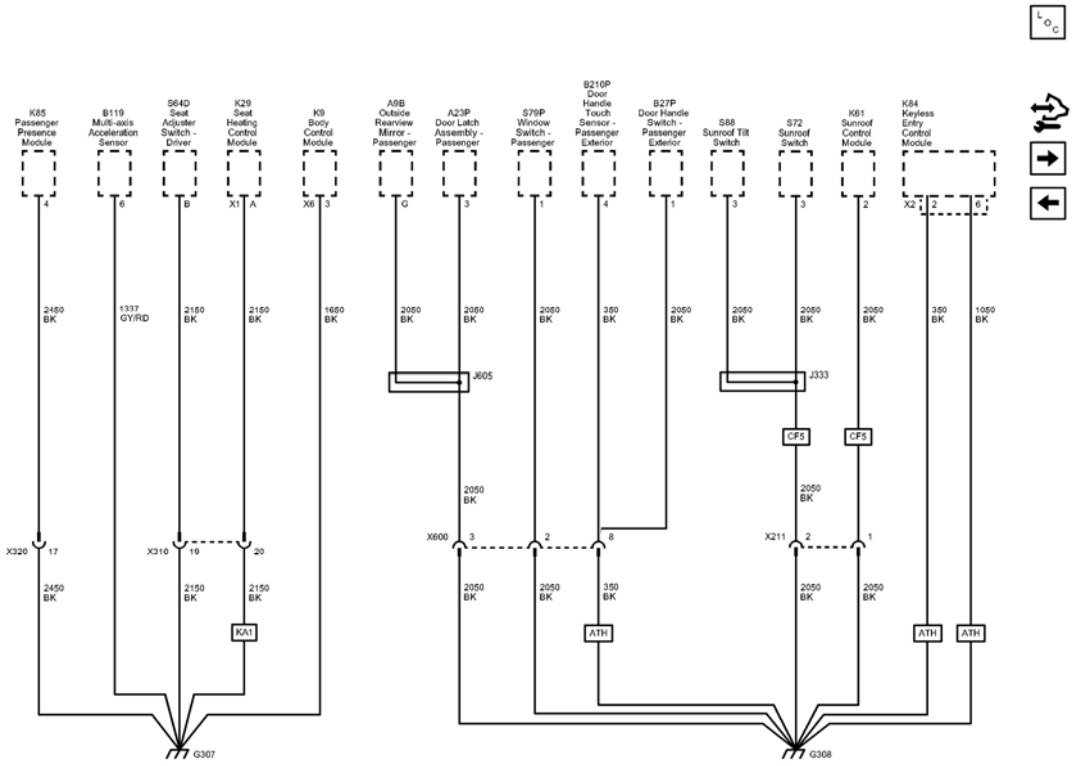

Fig. 48: G307 and G308
Courtesy of GENERAL MOTORS COMPANY

Callout	Component Name
2150	Ground
2050	Ground
350	Ground
2450	Ground
2450_BK	2450 BK
CAV_4	4
1337	Yaw Rate Sensor Volt Reference
1337_GY/RD	1337 GY/RD
CAV_6	6
2150_BK	2150 BK
CAV_B	B
2150_BK	2150 BK
CAV_A	A
CONN_X1	X1
1650	Ground
1650_BK	1650 BK
CAV_3	3

CONN_X6	X6
2050_BK	2050 BK
CAV_G	G
2050_BK	2050 BK
CAV_3	3
2050_BK	2050 BK
CAV_1	1
350_BK	350 BK
CAV_4	4
2050_BK	2050 BK
CAV_1	1
2050_BK	2050 BK
CAV_3	3
2050_BK	2050 BK
CAV_3	3
2050_BK	2050 BK
CAV_2	2
350_BK	350 BK
CAV_2	2
CONN_X2	X2
1050	Ground
1050_BK	1050 BK
CAV_6	6
2050_BK	2050 BK
2050_BK	2050 BK
2050_BK	2050 BK
2050_BK	2050 BK
2050_BK	2050 BK
2050_BK	2050 BK
350_BK	350 BK
2450_BK	2450 BK
2150_BK	2150 BK
2150_BK	2150 BK
CAV_17	17
CF5	ROOF-SUN, GLASS, SLIDING, ELEC
CF5	ROOF-SUN, GLASS, SLIDING, ELEC
KA1	HEATER SEAT FRT-DRVR and PASS
ATH	LOCK CONTROL, ENTRY-REMOTE ENTRY, EXTENDED RANGE, PASSIVE ENTRY, ALL DOORS
ATH	LOCK CONTROL, ENTRY-REMOTE ENTRY, EXTENDED RANGE, PASSIVE ENTRY, ALL

	DOORS
ATH	LOCK CONTROL, ENTRY-REMOTE ENTRY, EXTENDED RANGE, PASSIVE ENTRY, ALL DOORS
X310	X310
CAV_19	19
CAV_20	20
X600	X600
CAV_3	3
CAV_2	2
CAV_8	8
X211	X211
CAV_2	2
CAV 1	1
G307	G307
G308	G308
X320	X320
J333	J333
J605	J605
X310	X310
X600	X600
X211	X211
B119	(FX3)
A9B	
A23P	
S79P	
S88	(CF5)
S72	(CF5)
K61	(CF5)
K29	(KA1)
S64D	(ADS)
K9	
K84	(ATH)
B210P	
B27P	
K85	Passenger Presence Module

G309 Wiring Schematics

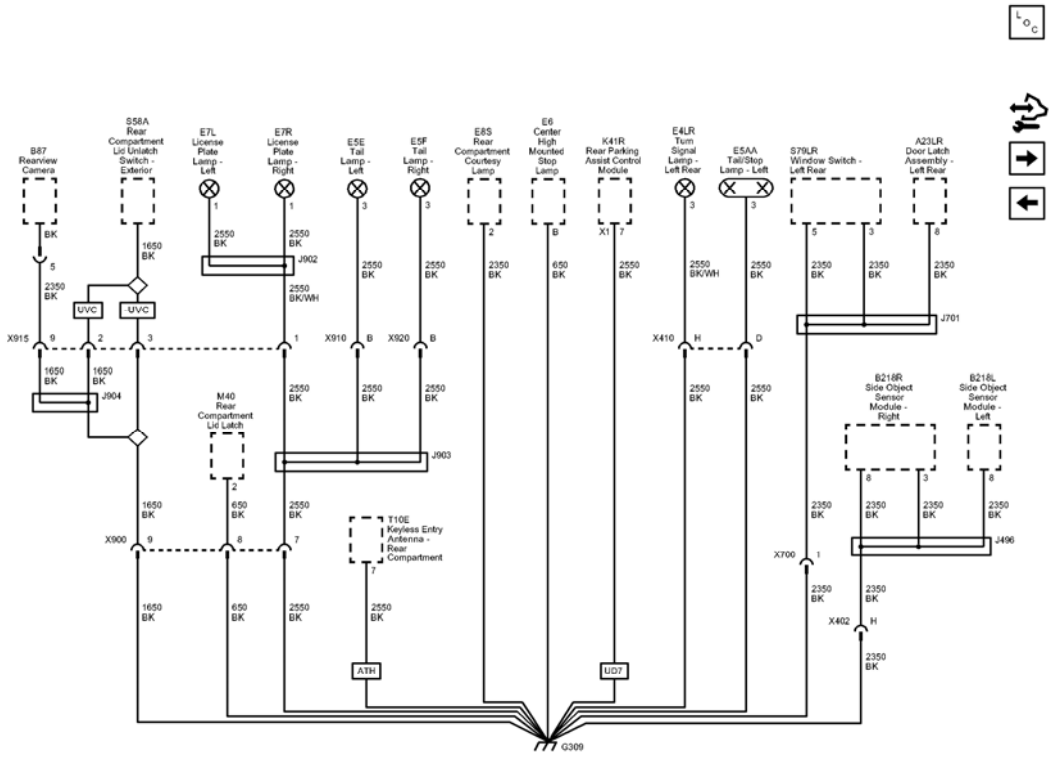

Fig. 49: G309
Courtesy of GENERAL MOTORS COMPANY

Callout	Component Name
1650	Ground
1650_BK	1650 BK
2350_BK	2350 BK
BK	BK
1650_BK	1650 BK
1650_BK	1650 BK
1650_BK	1650 BK
1650_BK	1650 BK
2550	Ground
2550_BK	2550 BK
CAV_1	1
2550_BK	2550 BK
2550_BK	2550 BK
2550_BK	2550 BK
2550_BK/WH	2550 BK/WH
2550_BK	2550 BK
CAV_1	1

650	Ground
650_BK	650 BK
CAV_2	2
650_BK	650 BK
CAV_5	5
2550_BK	2550 BK
CAV_7	7
2550_BK	2550 BK
CAV_3	3
2550_BK	2550 BK
2550_BK	2550 BK
CAV_3	3
2550_BK	2550 BK
CAV_B	B
CAV_B	B
2350	Ground
2350_BK	2350 BK
CAV_2	2
650_BK	650 BK
CAV_B	B
2550_BK	2550 BK
CAV_7	7
CONN_X1	X1
2550_BK	2550 BK
CAV_3	3
2550_BK/WH	2550 BK/WH
2550_BK	2550 BK
CAV_3	3
2550_BK	2550 BK
2350_BK	2350 BK
CAV_5	5
2350_BK	2350 BK
2350_BK	2350 BK
2350_BK	2350 BK
CAV_3	3
2350_BK	2350 BK
CAV_8	8
2350_BK	2350 BK
CAV_8	8
2350_BK	2350 BK
2350_BK	2350 BK

	2350 BK
CAV_3	3
2350_BK	2350 BK
CAV_8	8
CAV_1	1
CAV_H	H
UVC	VISION-REAR VIEW, MONO
UVC	VISION-REAR VIEW, MONO
ATH	LOCK CONTROL, ENTRY-REMOTE ENTRY, EXTENDED RANGE, PASSIVE ENTRY, ALL DOORS
UD7	PARK ASSIST-REAR
X900	X900
CAV_9	9
CAV_8	8
CAV_7	7
X915	X915
CAV_9	9
CAV_2	2
CAV_3	3
CAV_1	1
X410	X410
CAV_D	D
CAV_H	H
G309	G309
J904	J904
J902	J902
X920	X920
X910	X910
J903	J903
J701	J701
J496	J496
X700	X700
X402	X402
X900	X900
X915	X915
X410	X410
S58A	
E5E	
E5F	
S79LR	

A23LR	
E8S	
E6	
E5AA	
E4LR	
E7L	
E7R	
K41R	(UD7)
M40	
B87	(UVC)
T10E	(ATH)
B218R	
B218L	

G400 and G402 Wiring Schematics

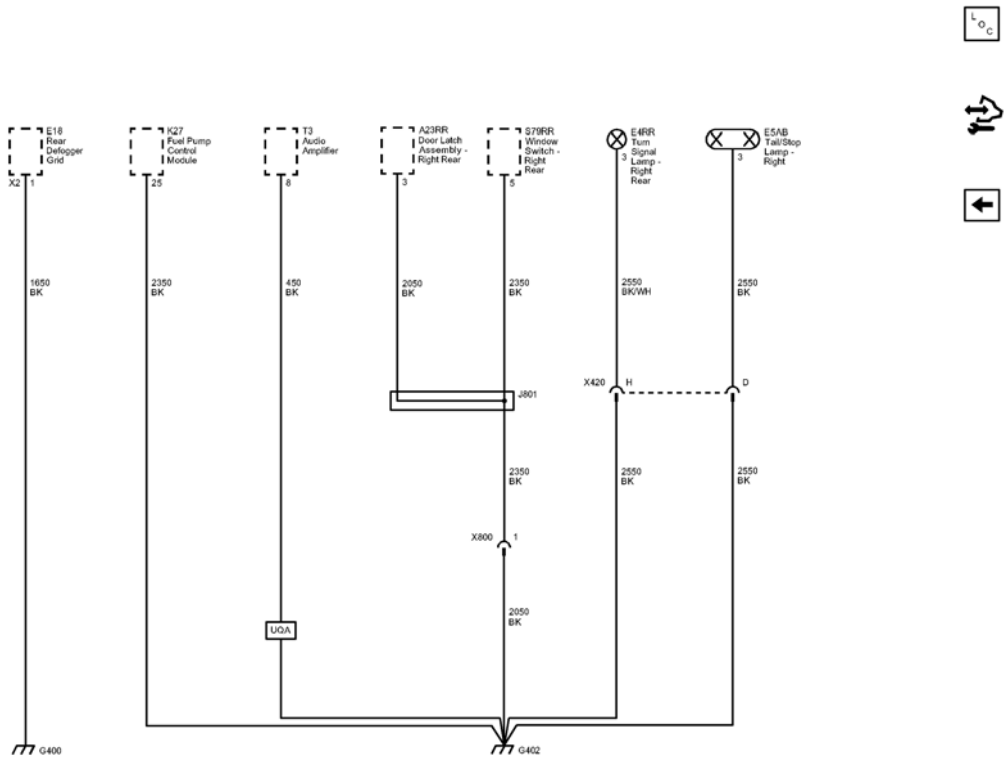

Fig. 50: G400 and G402
Courtesy of GENERAL MOTORS COMPANY

Callout	Component Name
2050	Ground

1650	Ground
1650_BK	1650 BK
CAV_1	1
CONN_X2	X2
2350	Ground
2350_BK	2350 BK
CAV_25	25
450	Ground
450_BK	450 BK
CAV_8	8
2050_BK	2050 BK
CAV_3	3
2350_BK	2350 BK
CAV_5	5
2050_BK	2050 BK
2550	Ground
2550_BK/WH	2550 BK/WH
CAV_3	3
2550_BK	2550 BK
2550_BK	2550 BK
CAV_3	3
2350_BK	2350 BK
2550_BK	2550 BK
UQA	SPEAKER SYSTEM-PREMIUM AUDIO BRANDED WITH AMPLIFIER
CAV_1	1
X420	X420
CAV_H	H
CAV_D	D
G402	G402
G400	G400
X800	X800
J801	J801
X420	X420
A23RR	
S79RR	
E4RR	
E5AB	
T3	(UQA)
E18	
K27	

2013 ELECTRICAL

Wiring Systems And Power Management - Component Connector End Views - Index - Cruz

COMPONENT CONNECTOR END VIEWS - INDEX

NOTE: **Component Connector end views are sorted in alpha/Numeric sequence based upon connector ID (Code), NOT component name. If you do not know the connector ID, a search using the relevant component may help locate the desired connector link.**

COMPONENT CONNECTOR END VIEWS - INDEX

Description
A3L Sunshade - Left (D61)
A3R Sunshade - Right (D6I)
A7 Fuel Pump and Level Sensor Assembly
A9A Outside Rearview Mirror - Driver
A9B Outside Rearview Mirror - Passenger
A10 Inside Rearview Mirror
A11 Radio X1
A11 Radio X2 (UDN)
A11 Radio X3 (UEW)
A22 Radio Controls (UYC or UYE)
A22 Radio Controls (UEW)
A23D Door Latch Assembly - Driver
A23LR Door Latch Assembly - Left Rear
A23P Door Latch Assembly - Passenger
A23RR Door Latch Assembly - Right Rear
B1 A/C Refrigerant Pressure Sensor
B5LF Wheel Speed Sensor - Left Front
B5LR Wheel Speed Sensor - Left Rear
B5RF Wheel Speed Sensor - Right Front
B5RR Wheel Speed Sensor - Right Rear
B7D Air Temperature Sensor - Duct Left Lower (C68)
B7H Air Temperature Sensor - Duct Left Upper (C68)
B9 Ambient Air Temperature Sensor
B10B Ambient Light/Sunload Sensor
B16 Backup Lamp Switch (MF3 or MZ0)
B18 Battery Current Sensor
B19B Brake Booster Vacuum Sensor
B20 Brake Fluid Level Switch
B22 Brake Pedal Position Sensor (MF3 or MZ0)

B22 Brake Pedal Position Sensor (MH8)
B23E Camshaft Position Sensor - Exhaust (LUV)
B23E Camshaft Position Sensor - Exhaust (LUW/LWE)
B23F Camshaft Position Sensor - Intake (LUV)
B23F Camshaft Position Sensor - Intake (LUW/LWE)
B24 Cellular Phone Microphone (UE1)
B25B Clutch Pedal Position Sensor (MF3 or MZ0)
B26 Crankshaft Position Sensor (LUV)
B26 Crankshaft Position Sensor (LUW/LWE)
B34A Engine Coolant Temperature Sensor 1 (LUV)
B34A Engine Coolant Temperature Sensor 1 (LUW/LWE)
B34B Engine Coolant Temperature Sensor 2
B37 Engine Oil Pressure Switch
B39 A/C Evaporator Temperature Sensor
B47 Fuel Pressure Sensor
B52A Heated Oxygen Sensor 1 (LUV)
B52A Heated Oxygen Sensor 1 (LUW/LWE)
B52B Heated Oxygen Sensor 2
B55 Hood Ajar Switch
B59L Front Impact Sensor - Left
B59R Front Impact Sensor - Right
B63LF Side Impact Sensor - Left Front
B63LR Side Impact Sensor - Left Rear
B63RF Side Impact Sensor - Right Front
B63RR Side Impact Sensor - Right Rear
B111B Turbocharger Boost/Intake Air Temperature (LUV)
B68 Knock Sensor (LUV)
B68 Knock Sensor (LUW/LWE)
B74 Manifold Absolute Pressure Sensor (LUV)
B74 Manifold Absolute Pressure Sensor (LUW/LWE)
B75C Multifunction Air Intake Sensor
B78E Rear Object Sensor - Left Middle (UD7)
B78F Rear Object Sensor - Right Middle (UD7)
B78G Rear Object Sensor - Left Outer (UD7)
B78H Rear Object Sensor - Right Outer (UD7)
B80 Park Brake Switch
B87 Rearview Camera (UVC)
B88D Seat Belt Switch - Driver
B88P Seat Belt Switch - Passenger
B99 Steering Wheel Angle Sensor (FX3)
B107 Accelerator Pedal Position Sensor
B108 Air Quality Sensor (C68)

B115 Vehicle Speed Sensor (MF3 or MZ0)
B119 Multi-Axis Acceleration Sensor (FX3)
B150 Fuel Tank Pressure Sensor
B160 Winshield Temperature and Inside Moisture Sensor (C68)
E2LF Side Marker Lamp - Left Front
E2RF Side Marker Lamp - Right Front
E4LR Turn Signal Lamp - Left Rear
E4RR Turn Signal Lamp - Right Rear
E4N Park/Turn Signal Lamp - Left
E4P Park/Turn Signal Lamp - Right
E5A Backup Lamp - Left
E5AA Tail/Stop Lamp - Left
E5AB Tail/Stop Lamp - Right
E5B Backup Lamp - Right
E5E Tail Lamp - Left
E5F Tail Lamp - Right
E6 Center High Mounted Stop Lamp
E7L License Plate Lamp - Left
E7R License Plate Lamp - Right
E8S Rear Compartment Courtesy Lamp
E13L Headlamp - Left
E13R Headlamp - Right
E14A Seat Heating Element - Driver Back (KA1)
E14B Seat Heating Element - Driver Cushion (KA1)
E14C Seat Heating Element - Passenger Back (KA1)
E14D Seat Heating Element - Passenger Cushion (KA1)
E18 Rear Defogger X1
E18 Rear Defogger X2
E27 Instrument Panel Compartment Lamp
E29LF Fog Lamp - Left Front (T3U)
E29RF Fog Lamp - Right Front (T3U)
E32 Cigarette Lighter Receptacle
E37F Dome/Reading Lamps - Front
E37M Dome/Reading Lamps - Middle
E41 Engine Coolant Thermostat Heater (LUV)
E41 Engine Coolant Thermostat Heater (LUW/LWE)
F101 Passenger Instrument Panel Air Bag X1
F101 Passenger Instrument Panel Air Bag X2
F105L Roof Rail Air Bag - Left
F105R Roof Rail Air Bag - Right
F106D Seat Air Bag - Driver

F106P Seat Air Bag - Passenger
F106RR Seat Air Bag - Right Rear
F107 Steering Wheel Air Bag X1
F107 Steering Wheel Air Bag X2 (Early Production)
F112D Seat Belt Retractor Pretensioner - Driver
F112P Seat Belt Retractor Pretensioner - Passenger
F113D Seat Belt Anchor Prestensioner - Driver
F113P Seat Belt Anchor Pretensioner - Passenger
F114D Knee Air Bag - Driver
F114P Knee Air Bag - Passenger
G10 Cooling Fan Motor
G13 Generator X2
G24 Windshield Washer Pump
K8 Blower Motor Control Module X1
K8 Blower Motor Control Module X2
K9 Body Control Module X1
K9 Body Control Module X2
K9 Body Control Module X3
K9 Body Control Module X4
K9 Body Control Module X5
K9 Body Control Module X6
K9 Body Control Module X7
KR14 Brake Booster Pump Relay X1
KR14 Brake Booster Pump Relay X2
K17 Electronic Brake Control Module
K20 Engine Control Module X1 (LUW/LWE)
K20 Engine Control Module X2 (LUW/LWE)
K20 Engine Control Module X1 (LUV)
K20 Engine Control Module X2 (LUV)
K20 Engine Control Module X3 (LUV)
K27 Fuel Pump Control Module
K29 Seat Heating Control Module X1 (KA1)
K29 Seat Heating Control Module X2 (KA1)
K29 Seat Heating Control Module X3 (KA1)
K33 HVAC Control Module X1
K33 HVAC Control Module X2
K33 HVAC Control Module X3
K35 Ignition Coil Module
K36 Inflatable Restraint Sensing and Diagnostic Module X1
K36 Inflatable Restraint Sensing and Diagnostic Module X2
K41R Rear Parking Assist Control Module X1 (UD7)

K41R Rear Parking Assist Control Module X2 (UD7)
K43 Power Steering Control Module X1
K43 Power Steering Control Module X2
K60 Steering Column Lock Control Module (ULS)
K61 Sunroof Control Module (CF5)
K73 Telematics Communications Interface Control Module X1 (UE1)
K73 Telematics Communications Interface Control Module X2 (UE1)
K77 Remote Control Door Lock Receiver
K84 Keyless Entry Control Module X1 (ATH)
K84 Keyless Entry Control Module X2 (ATH)
K84 Keyless Entry Control Module X4 (ATH)
K85 Passenger Presence Detection Module X1
K85 Passenger Presence Detection Module X2
K89 Immobilizer Control Module
M6 Air Temperature Door Actuator
M8 Blower Motor
M37 Mode Door Actuator
M40 Rear Compartment Lid Latch
M46 Air Recirculation Door Actuator
M50D Seat Front Vertical Motor - Driver (ADS)
M51D Seat Horizontal Motor - Driver (ADS)
M55D Seat Rear Vertical Motor - Driver (ADS)
M74D Window Motor - Driver (AEC)
M74D Window Motor - Driver (AXG)
M74LR Window Motor - Left Rear
M74P Window Motor - Passenger
M74RR Window Motor - Right Rear
M75 Windshield Wiper Motor
M93 Ignition Cylinder Lock Control Solenoid Actuator (MH8)
M96 Active Grille Air Shutter Actuator (Y8X)
P2 Transmission Shift Lever Position Indicator (MH8)
P12 Horn
P14 Passenger Air Bag Disable Indicator
P16 Instrument Cluster
P17 Info Display Module (UAG)
P17 Info Display Module X1 (UHQ)
P17 Info Display Module X2 (UHQ)
P19AA Speaker - Right Subwoofer
P19AG Speaker - Left Front Door
P19AH Speaker - Right Front Door
P19AL Speaker - Left Rear Door

P19B Speaker - Center Instrument Panel (UQA)
P19H Speaker - Left Front Tweeter
P19N Speaker - Left Subwoofer
P19V Speaker - Right Front Tweeter
Q6E Camshaft Position Actuator Solenoid Valve - Exhaust (LUV)
Q6E Camshaft Position Actuator Solenoid Valve - Exhaust (LUW/LWE)
Q6F Camshaft Position Actuator Solenoid Valve - Intake (LUV)
Q6F Camshaft Position Actuator Solenoid Valve - Intake (LUW/LWE)
Q8 Control Solenoid Valve Assembly X1 (MH8)
Q8 Control Solenoid Valve Assembly X2 (MH8)
Q8 Control Solenoid Valve Assembly X3 (MH8)
Q8 Control Solenoid Valve Assembly X4 (MH8)
Q12 Evaporative Emission Purge Solenoid Valve (LUV)
Q12 Evaporative Emission Purge Solenoid Valve (LUW/LWE)
Q13 Evaporative Emission Vent Solenoid Valve
Q17A Fuel Injector 1 (LUV)
Q17A Fuel Injector 1 (LUW/LWE)
Q17B Fuel Injector 2 (LUV)
Q17B Fuel Injector 2 (LUW/LWE)
Q17C Fuel Injector 3 (LUV)
Q17C Fuel Injector 3 (LUW/LWE)
Q17D Fuel Injector 4 (LUV)
Q17D Fuel Injector 4 (LUW/LWE)
Q22 Intake Manifold Tuning Solenoid Valve (LUW/LWE)
Q38 Throttle Body
Q40 Turbocharger Bypass Solenoid Valve (LUV)
Q42 Turbocharger Wastegate Solenoid Valve (LUV)
Q46 A/C Compressor Solenoid Valve
S2 Transmission Manual Shift Switch (MH8)
S3 Transmission Shift Lever (MH8)
S13D Door Lock Switch - Driver
S26 Hazard Lamps Switch
S30 Headlamp Switch
A26 HVAC Controls
S38 Igntion Mode Switch (BTM)
S39 Ignition Switch
S52 Outside Rearview Mirror Switch
S64D Seat Adjuster Switch - Driver (ADS)
S70L Steering Wheel Controls Switch - Left (K34)
S70R Steering Wheel Controls Switch - Right (W1Y)
S72 Sunroof Switch (CF5)

S75 Traction Control Switch (FX3)
S78 Turn Signal/Multi-Function Switch
S79D Window Switch - Driver (AEC)
S79D Window Switch - Driver (AXG)
S79LR Window Switch - Left Rear
S79P Window Switch - Passenger
S79RR Window Switch - Right Rear
S82 Windshield Wiper/Washer Switch
S88 Sunroof Tilt Switch (CF5)
T3 Audio Amplifier X1 (UQA)
T3 Audio Amplifier X2 (UQA)
T3 Audio Amplifier X3 (UQA)
T10E Keyless Entry Antenna - Rear Compartment (ATH)
T10G Keyless Entry Antenna - Rear Fascia (ATH)
T10J Keyless Entry Antenna - Center Console Front (ATH)
T10K Keyless Entry Antenna - Center Console Rear (ATH)
T10M Keyless Entry Antenna - Driver Door Handle (ATH)
T10N Keyless Entry Antenna - Passenger Door Handle (ATH)
T11 Multimedia Player Interface Module (KTA)
X80L Accessory Power Receptacle - Rear Console
X83 Auxiliary Audio Input
X84 Data Link Connector
X85 Steering Wheel Air Bag Coil X1
X85 Steering Wheel Air Bag Coil X2
X85 Steering Wheel Air Bag Coil X3

2013 ELECTRICAL

Wiring Systems and Power Management - Description and Operation - Cruze

DESCRIPTION AND OPERATION

ELECTRONIC PARK LOCK DESCRIPTION AND OPERATION

Without ATH or BTM

If the vehicle is equipped with automatic transmission and a floor mounted console gear shift, it has an electronic park lock system (EPL). The EPL system purpose is to prevent the ignition key from being turned to the OFF position when the transmission is in any position other than PARK and the vehicle may still be moving. The EPL system consists of an ignition lock cylinder solenoid, and a park position switch that is located in the A/T shift lock control switch. The ignition lock cylinder solenoid contains a pin that is spring loaded to mechanically prevent the ignition key cylinder from being turned to the lock position when the vehicle transmission is not in the PARK position. If vehicle power is lost, and/or the transmission is not in the Park position the operator will not be able to turn the ignition key to the lock position and will not be able to remove the ignition key from the column.

With ATH or BTM

If the vehicle is equipped with automatic transmission and a floor mounted console gear shift, it has an electronic park lock system. The electronic park lock system purpose is to prevent the ignition from being switched to the OFF position when the transmission is in any position other than PARK and the vehicle may still be moving. The electronic park lock system incorporates the park position switch that located in the A/T shift lock control switch. When the transmission shift selector is in PARK, the park position switch closes and the BCM allows the ignition to be turned OFF.

If the vehicle is not in PARK, the ignition will return to ACC/ACCESSORY and display the message SHIFT TO PARK in the Driver Information Center. When the vehicle is shifted into PARK, the ignition system will switch to OFF.

POWER MODE DESCRIPTION AND OPERATION

Serial Data Power Mode Master

Power to many of this vehicles circuits is controlled by the module that is designated the power mode master. This vehicles power mode master is the body control module (BCM). The BCM has multiple B+ circuits that feed into it. Each of those circuits are partitioned within the controller to drive certain outputs of the vehicle's body functions. An open or short in any one of the B+ circuits may induce multiple codes/or a section of non-functionality within the BCM with the rest of the BCM functioning normally. In this case it is useful to refer to the power distribution schematics to determine if the non-functional partition of the controller shares a common B+ circuit. The ignition switch is a low current switch with multiple discrete ignition switch signals to the power mode master for determination of the power mode that will be sent over the serial data circuits to the other modules that need this information. The power mode master will also activate relays and other direct outputs of the power mode master as needed. The power mode master determines which power mode (Off, Accessory, Run, Crank Request) is required, and reports this information to other modules via serial data.

Modules which have switched voltage inputs may operate in a default mode if the power mode serial data message does not match what the individual module can see from its own connections.

The power mode master receives ignition switch signals to identify the operators desired power mode. The Power Mode Parameters table below illustrates the correct state of these input parameters (circuits) in correspondence to the ignition switch position:

Power Mode Parameters

Ignition Switch Position	Power Mode Transmitted	Ign. Off/Run/Crank (Off/Run Crank Voltage Circuit)	Ignition Accessory/Run (Accessory Voltage Circuit)	Ignition Run/Crank (Ignition 1 Voltage Circuit)
Off Key Out	Off	Key Out / ACC	Inactive	Inactive
Off Key IN	Off	Key In / Off	Inactive	Inactive
Accessory	Accessory	Key Out / ACC	Active	Inactive
Run	Run	Run	Active	Active
Start	Crank Request	Crank	Inactive	Active

Relay Controlled Power Mode

The BCM uses the discrete ignition switch inputs Off/Run/Crank Voltage, Accessory Voltage, and Ignition 1 Voltage, to distinguish the correct power mode. The BCM, after determining the desired power mode, will activate the appropriate relays for that power mode.

The retained accessory power relay remains on for a timed period after the Ignition key is removed. Refer to **Retained Accessory Power Description and Operation** for more information on the retained accessory power function.

Push Button Start (If Equipped)

The ignition mode switch has 2 LEDs that indicate the vehicle power mode. When the vehicle is in the off mode, both LED's will be off. Pressing the ignition mode switch button once (without the brake pedal applied), the vehicle enters the accessory mode and the amber LED (ACC) will illuminate. The accessory mode has a 5 minute timeout to reduce battery drain. Pressing the ignition mode switch button a second time (without the brake pedal applied), the vehicle enters the run/start mode (without the engine running) and the green LED (Run/Start) will illuminate. With the ignition off (without the brake pedal applied) and pressing and holding the push button start switch for up to 10 seconds will place the vehicle in run/start mode (without the vehicle running) and the green LED (Run/Start) will illuminate. With the ignition off (with the brake pedal applied), pressing the ignition mode switch button once, the vehicle will enter run/start mode and the green LED (run/start) will illuminate. This will start the engine. Both LED's have the voltage supplied from the body control module (BCM). The ignition mode switch sends the ignition mode switch status to the passive entry passive start module (PEPS) and to the BCM. The PEPS module sends a redundant signal to the BCM with the ignition mode switch status.

Battery Saver Mode (Transport Mode) (If Equipped)

The battery saver mode (transport mode) reduces the parasitic load of some modules during overseas shipment

or during vehicle storage conditions. This improves the drain time on the battery (up to 70 days without the battery going dead). When the vehicle is in transport/storage, some features may have reduced functionality while in the battery saver mode (transport mode), such as disabling the Remote Function Actuator or content theft features.

The battery saver mode (transport mode) incorporates a latching relay that when enabled disconnects some modules from their ignition power or memory power sources. Battery saver mode (transport mode) is initiated by turning on the hazard flashers and then turning the ignition key into the crank position or pushing the push button start switch (if equipped) for greater than 15 seconds. The mode is disengaged by repeating the previous process causing the relay to latch in the other direction. After battery saver mode (transport mode) has been enabled, the BCM may not send the command to unlatch the relay until after the ignition has been switched to the off position for up to 1 minute. In battery saver mode (transport mode) the BCM will send a command to latch the relay for operation of those modules while the ignition is in the run position and then again unlatching the relay after the ignition is turned off. The DIC (if equipped) will display Transport Mode is On when the transport mode is enabled and Transport Mode is Off when the transport mode is disabled. For vehicles not equipped with a DIC, the battery indicator light will constantly flash on the Instrument Cluster when transport mode is enabled. Once the vehicle is running and the hazard flashers are on, turning the ignition key into the crank position or pushing the push button start switch (if equipped) for greater than 15 seconds will latch the relay in the other direction. This feature can be used as many times as necessary if the vehicle is to be stored for an extended period of time.

BCM Awake/Sleep States

The BCM is able to control or perform all of the BCM functions in the awake state. The BCM enters the sleep state when active control or normal monitoring of system functions has stopped and a time limit has passed. The BCM must detect certain wake-up inputs before entering the awake state. The BCM monitors for these inputs during the sleep state.

The BCM will enter the awake state if any of the following wake-up inputs are detected:

- Activity on the serial data line
- Detection of a battery reconnect
- Any door open signal
- Headlamps ON
- Key-in-ignition
- Ignition ON
- Park lamps ON
- Keyless entry or remote start message

The BCM will enter a sleep state when all of the following conditions exist:

- The ignition switch is OFF, key out.
- No activity exists on the serial data line.
- No outputs are commanded.
- No delay timers are actively counting.

- No wake-up inputs are present.

If all these conditions are met, the BCM will enter a low power or sleep condition.

RETAINED ACCESSORY POWER DESCRIPTION AND OPERATION

Retained Accessory Power

The body control module (BCM) monitors the ignition switch position, battery condition, and each door ajar/open switch status to determine whether the retained accessory power should be initiated or terminated. Retained accessory power is controlled by two different methods; relay control and serial data. Some modules receive a retained accessory power message from the BCM over the serial data circuits. Serial data controlled retained accessory power is deactivated as required by their modules retained accessory power mode operation. Other subsystems are activated directly by the BCM through a relay. Components and systems that are active in retained accessory power are also activated anytime the ignition is any position other than OFF regardless of the door switch signals.

Relay Controlled Retained Accessory Power

The BCM keeps the relay energized during all power modes, except Off-Awake and Crank. The relay is also energized for approximately 10 minutes after shutting the ignition OFF and removing the key, providing no door is opened.

Relay controlled retained accessory power will end when one of the following conditions is met:

- The BCM receives an input from any door ajar or open switch indicating the opening of any door after the ignition key is out of the ignition.

NOTE: If the BCM is receiving any door ajar or open signal from those switches when the ignition key is turned OFF, retained accessory power will not initiate.

- The BCM internal timer for the retained accessory power expires after approximately 10 minutes.
- The BCM detects a decrease in battery capacity below a prescribed limit.

Systems powered by the retained accessory power relay during the retained accessory power mode are as follows:

NOTE: The vehicle may not be equipped with all components as listed below.

-
- Accessory Power Receptacle
- Cigarette Lighter Receptacle
- Window Switches
- Sunroof Control Module

- Sunroof Switch
- Mobile Device Wireless Charger Module
- Mobile Telephone Control Module
- Traffic Data Receiver
- Transmission Shift Lever Position Indicator (w/floor mounted console gear shift)
- Seat Heating Control Module

Serial Data Controlled Retained Accessory Power

Retained accessory power systems controlled by serial data are as follows:

Radio

Radio retained accessory power activation / termination is the same as relay operation with one exception; the only door switch that will turn off the radio during retained accessory power is the driver door open switch.

Vehicle Communication Interface Module (VCIM) (Onstar®) (If Equipped)

VCIM RAP activation/termination is the same as radio operation with 1 exception; if there is an active call when the ignition key is turned off the VCIM will remain in RAP mode, and keep the radio in RAP mode until the call is terminated.

2013 ACCESSORIES & EQUIPMENT

Wiring Systems and Power Management - Repair Instructions - Cruze

REPAIR INSTRUCTIONS

GMLAN AND MEDIA ORIENTED SYSTEMS TRANSPORT (MOST) WIRING REPAIRS

Special Tools

- **EL-38125-10** Splice Sleeve Crimping Tool
- DuraSeal splice sleeves
- A wire stripping tool

For equivalent regional tools, refer to **Special Tools** .

The DuraSeal splice sleeves have the following 2 critical features:

- A special heat shrink sleeve environmentally seals the splice. The heat shrink sleeve contains a sealing adhesive inside.
- A cross hatched (knurled) core crimp provides necessary contact integrity for the sensitive, low energy circuits.

The GM Local Area Network (GMLAN) System requires special wiring repair procedures due to the sensitive nature of the circuitry. Follow the specific procedures and instructions when working on GMLAN connectors and terminals.

GMLAN Repairs

NOTE: When making a repair to any GMLAN network, the original wire length after the repair must be the same length as before the repair. If the network is a twisted pair, the twist must be maintained after the repair is completed.

GMLAN has 2 types of networks, low speed and high speed. Low speed GMLAN has a single wire and works at slow speeds. High speed GMLAN has 2 wires in a twisted pair and works at higher speeds. For more information on GMLAN, refer to **Data Link Communications Description and Operation** .

GMLAN Connector Terminal Repair

NOTE: A terminated lead can be used to replace damaged connector terminals for both high speed and low speed GMLAN systems. When making a connector terminal repair on a GMLAN high speed system with twisted pair wires, do not untwist the wires more than necessary to make the repair.

If the individual terminals are damaged on any GMLAN connection, use the appropriate connector repair procedure in order to repair the terminal. Refer to **Connector Repairs** for the appropriate connector repair

procedure.

GMLAN Wire Repair

NOTE: Refer to Wiring Repairs in the service information connector end views or the vehicle schematics in order to determine the correct wire size for the circuit you are repairing. You must obtain this information in order to ensure circuit integrity.

If any wire except the pigtail is damaged, repair the wire by splicing in a new section of wire of the same gauge size (0.5 mm^2 , 0.8 mm^2 , 1.0 mm^2 etc.). Use the DuraSeal splice sleeves and **EL-38125-10** tool. For wiring repair, refer to **Splicing Copper Wire Using Splice Sleeves** .

INSTRUMENT PANEL WIRING HARNESS FUSE BLOCK DISASSEMBLE

NOTE: To remove wires from the top part using terminal release tools, only steps 1, 3, 8, 9, 10, 11, 12 and 13 are required. Use release tool J-38125-38 for cavities 16-18, 20-34, 37-47.

Fuse Block Disassemble Procedure

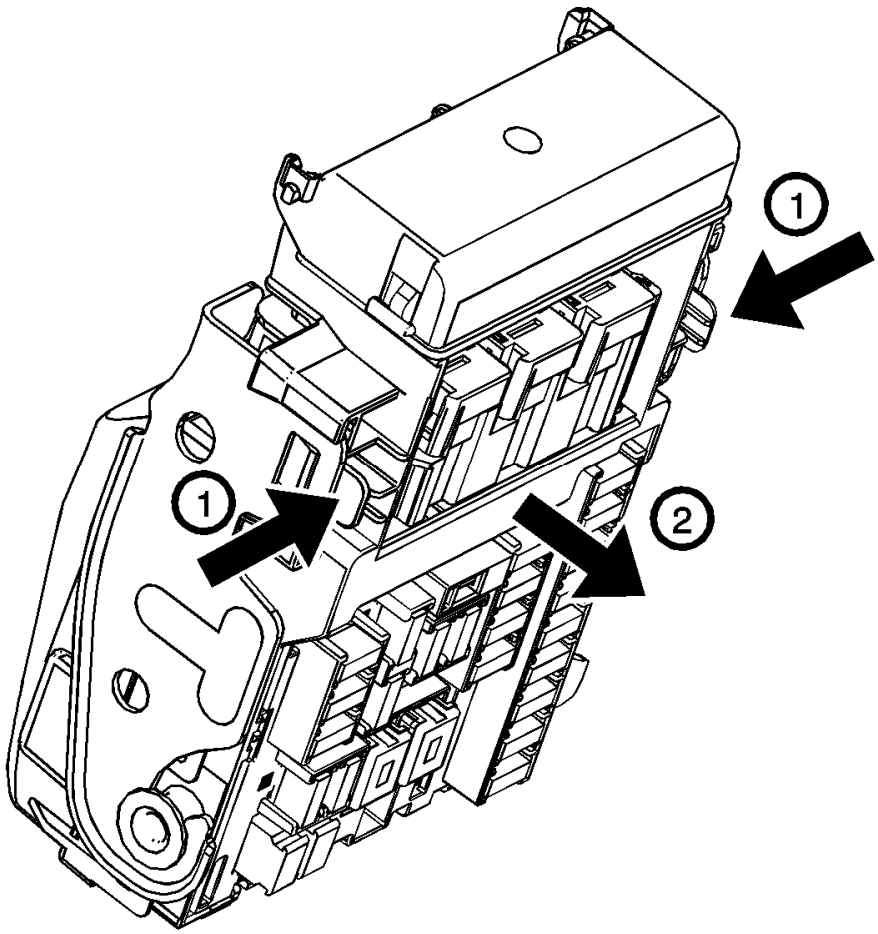

Fig. 1: Fuse Block & Locking Arms
Courtesy of GENERAL MOTORS COMPANY

1. Push the locking arms (1) and unlock the fuse block (2).

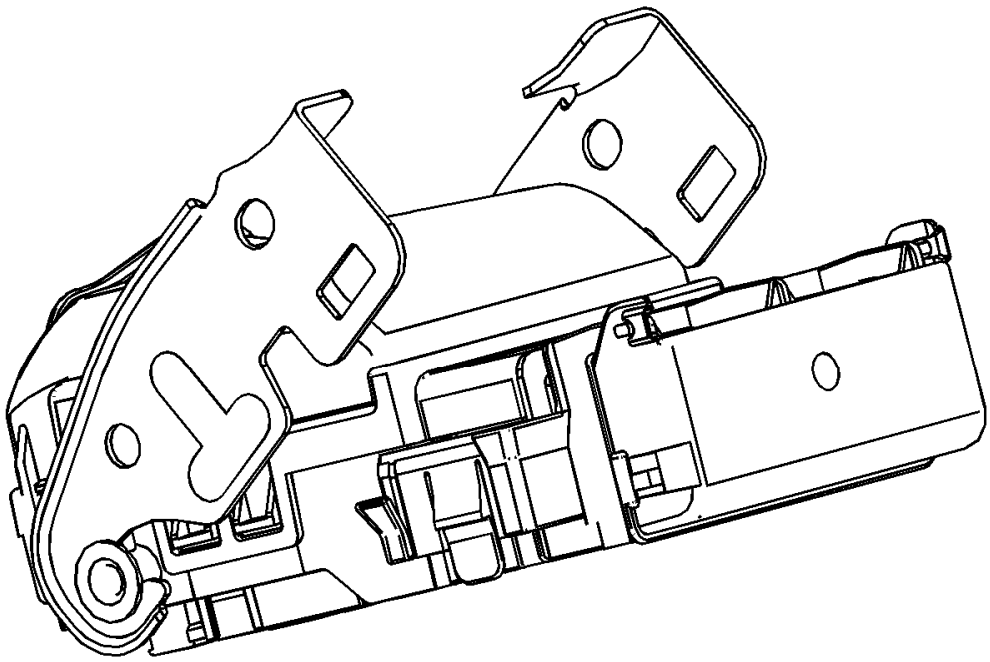

Fig. 2: Fuse Block In Unlocked Position
Courtesy of GENERAL MOTORS COMPANY

2. Fuse block unlocked.

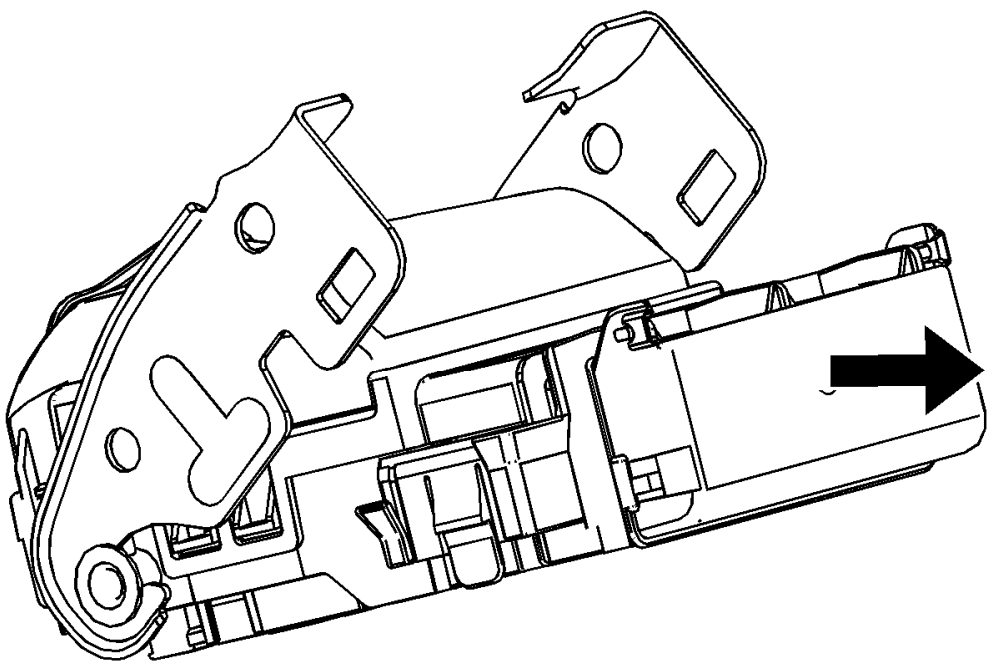

Fig. 3: Fuse Block & Bracket
Courtesy of GENERAL MOTORS COMPANY

3. Pull out and remove the fuse block from bracket.

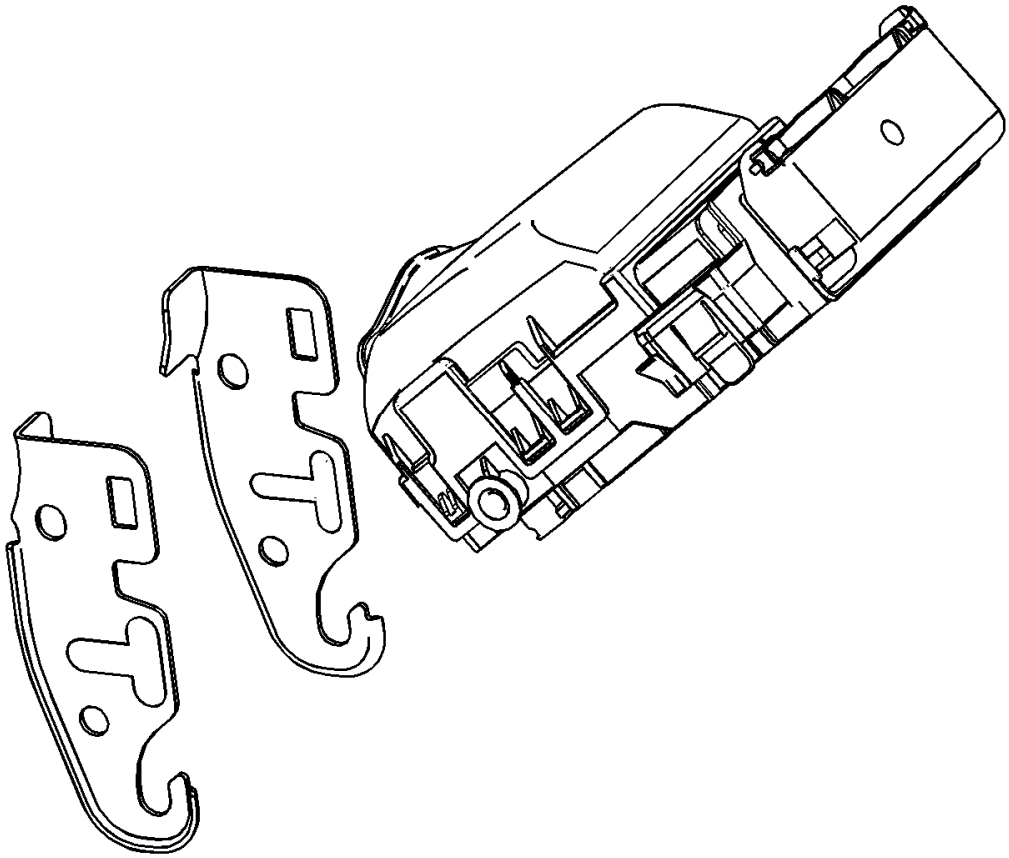

Fig. 4: Fuse Block & Brackets
Courtesy of GENERAL MOTORS COMPANY

4. Fuse block after removed from bracket.

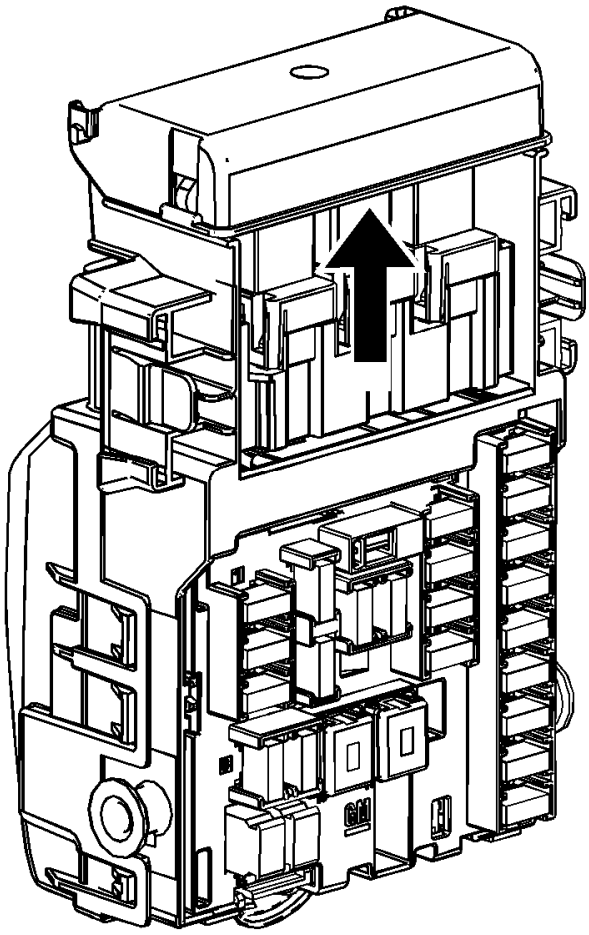

Fig. 5: Fuse Block & Relay Protection Cover
Courtesy of GENERAL MOTORS COMPANY

5. Push and open the relay protection cover.

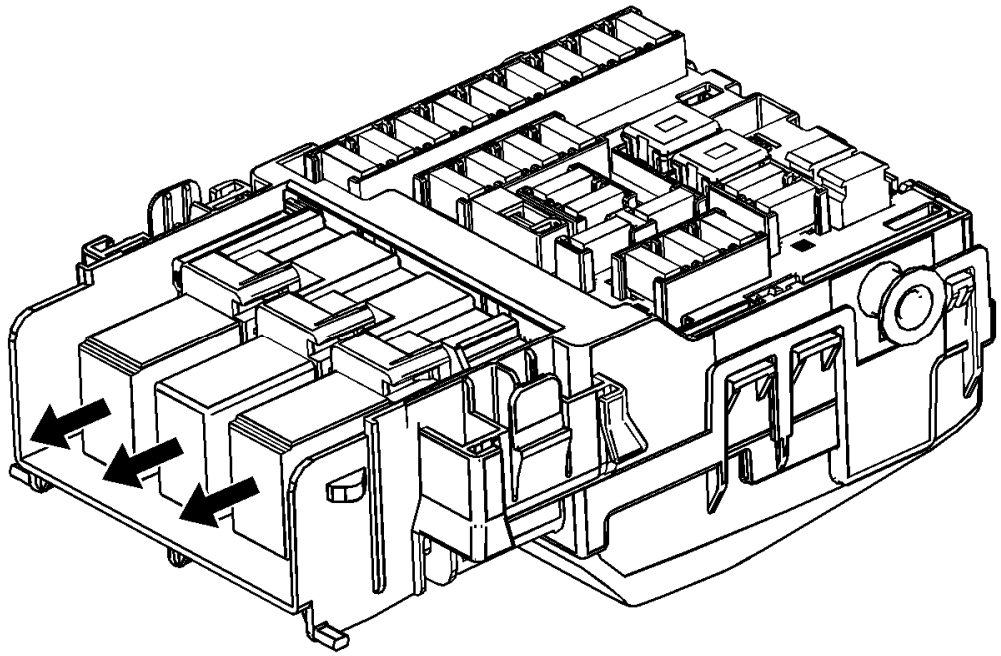

Fig. 6: Fuse Block Micro Relays
Courtesy of GENERAL MOTORS COMPANY

6. Remove micro relays (3x).

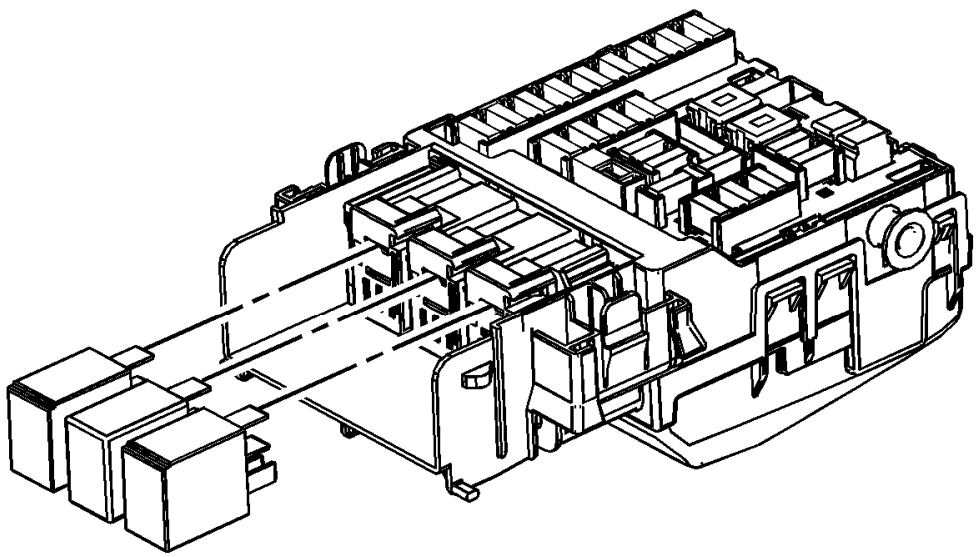

Fig. 7: Micro Relays
Courtesy of GENERAL MOTORS COMPANY

7. Fuse block with relays removed.

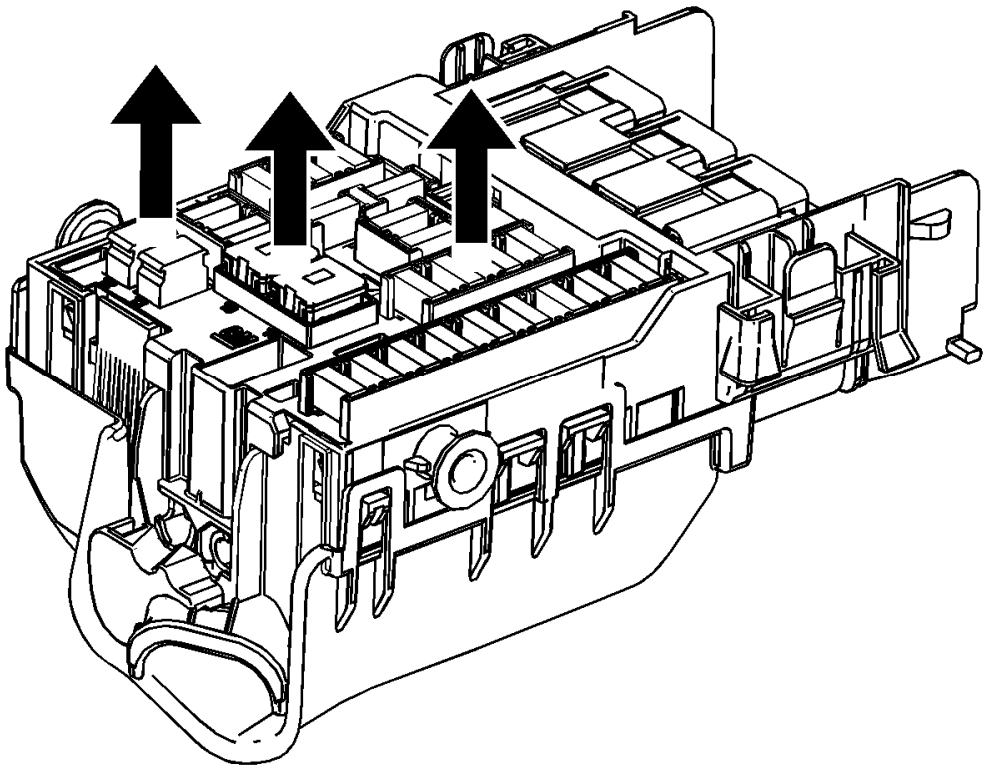

Fig. 8: Fuse Block Components
Courtesy of GENERAL MOTORS COMPANY

8. Remove mini fuses (22x), J-case fuses (2x), and circuit breakers (2x) from fuse block.

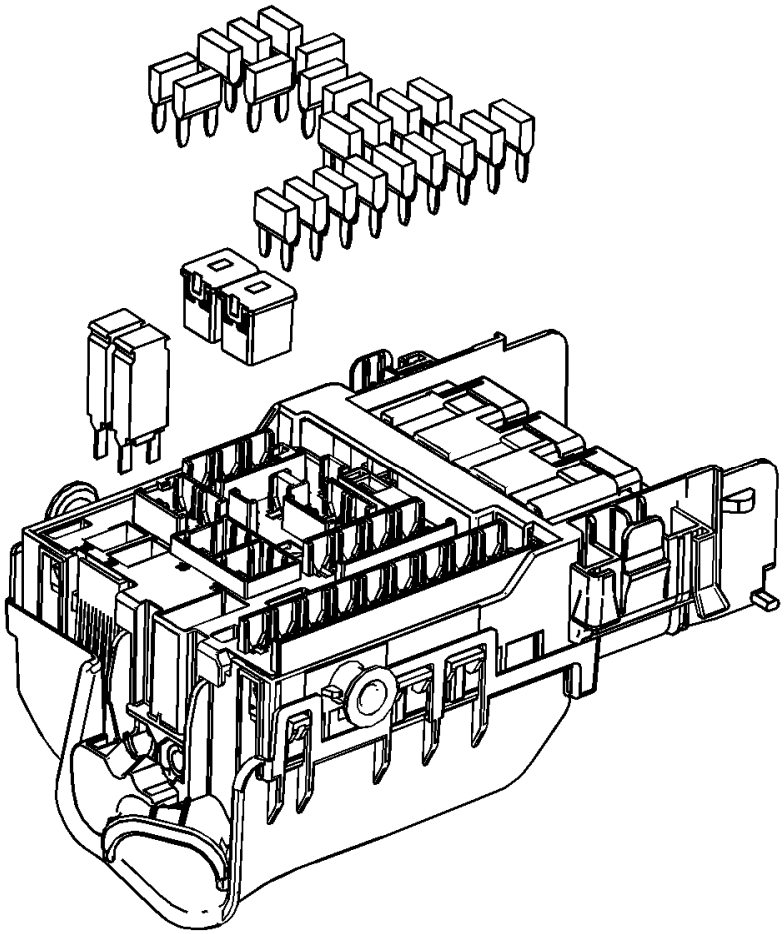

Fig. 9: View Of Fuse Block Components
Courtesy of GENERAL MOTORS COMPANY

9. Fuse block with all fuses and circuit breakers removed.

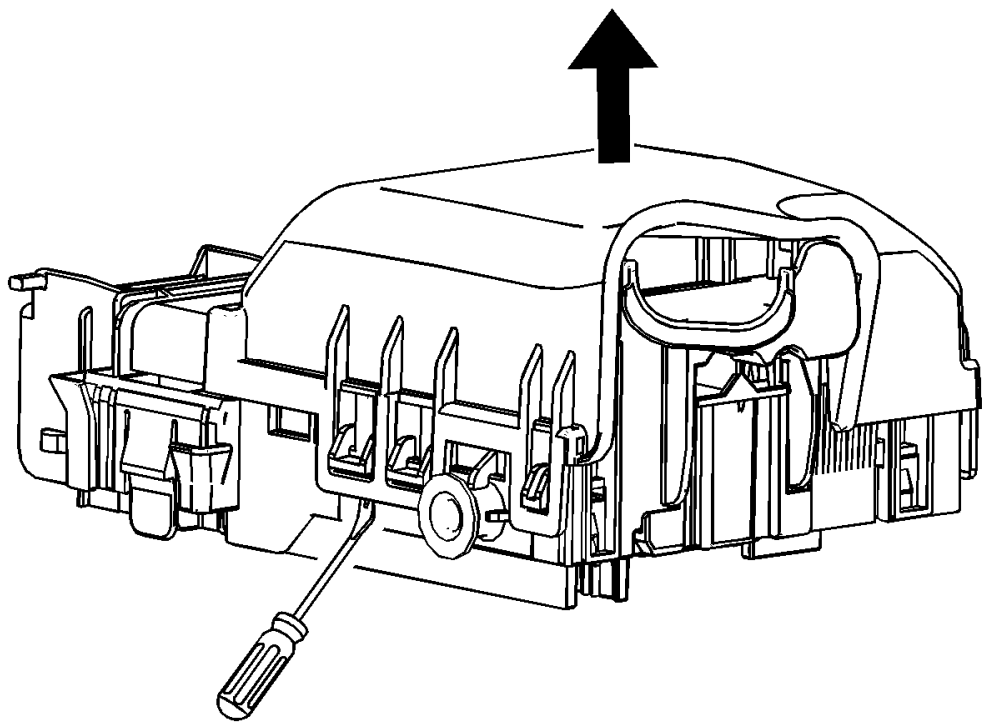

Fig. 10: Fuse Block Cover
Courtesy of GENERAL MOTORS COMPANY

10. Unlock (6 locking points) and remove bottom protection cover from fuse block.

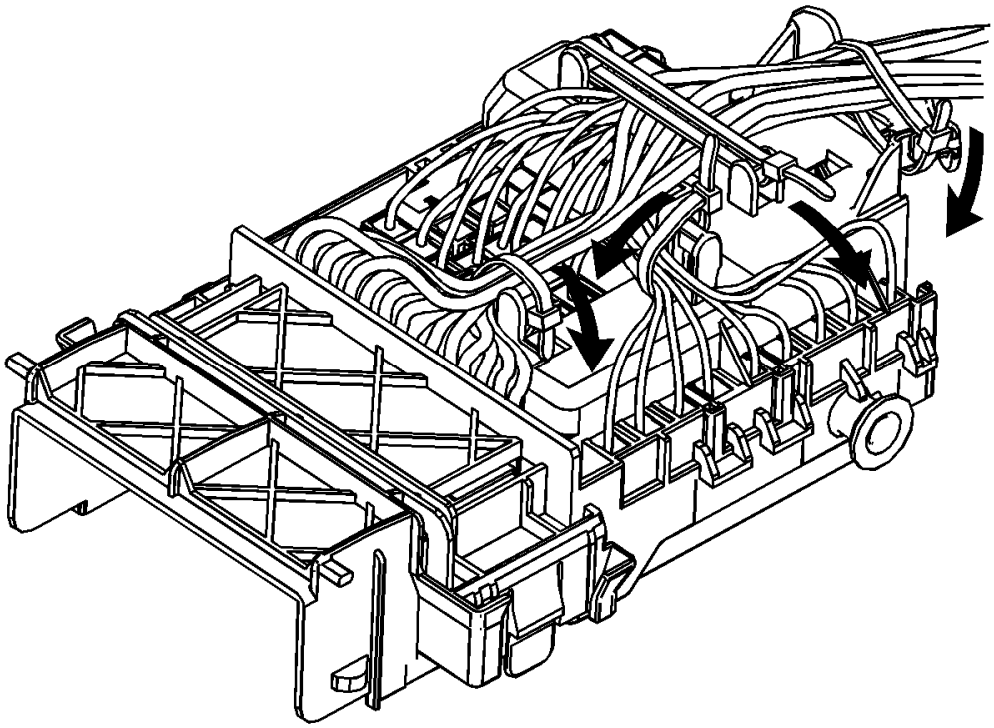

Fig. 11: Fuse Block Wires & Straps
Courtesy of GENERAL MOTORS COMPANY

11. Remove straps (4x) from wires.

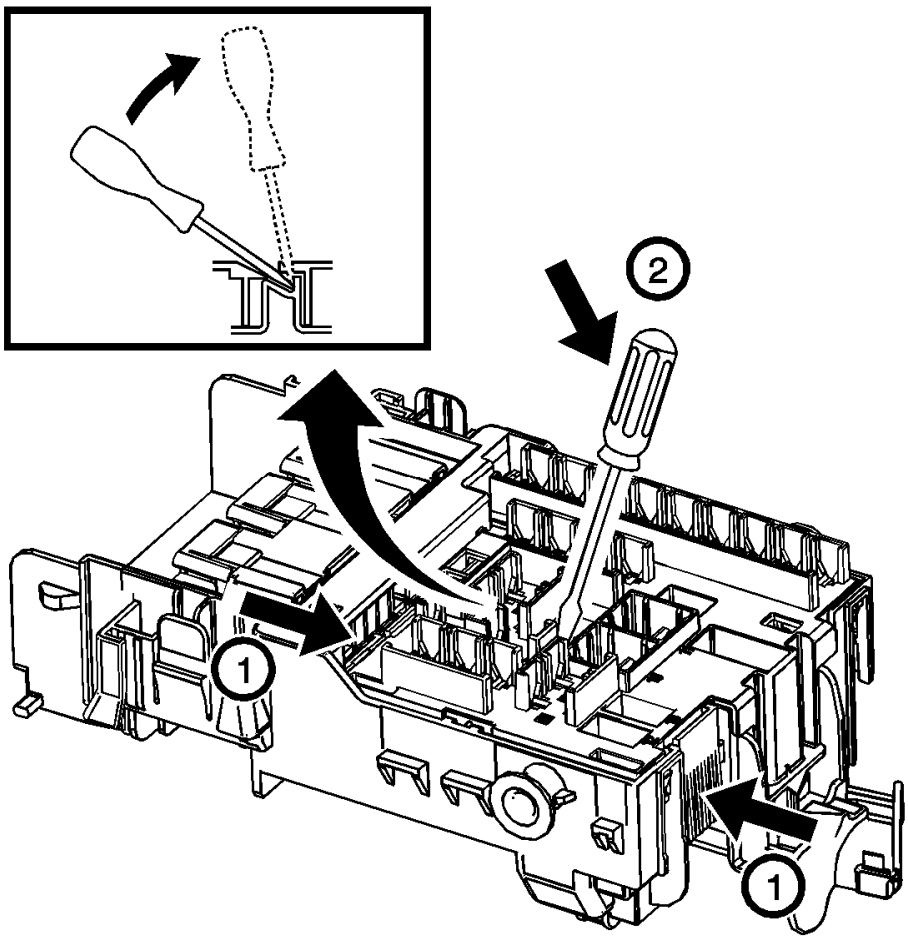

Fig. 12: Fuse Block Locking Arm Components
Courtesy of GENERAL MOTORS COMPANY

12. To place the top part (1) in pre-assembled position, press together locking arms on both sides of the bottom part (2), insert a pry tool into an appropriate hole in the top part and lever the top part upward until it remains in the pre-assembled position. Release the locking arms.

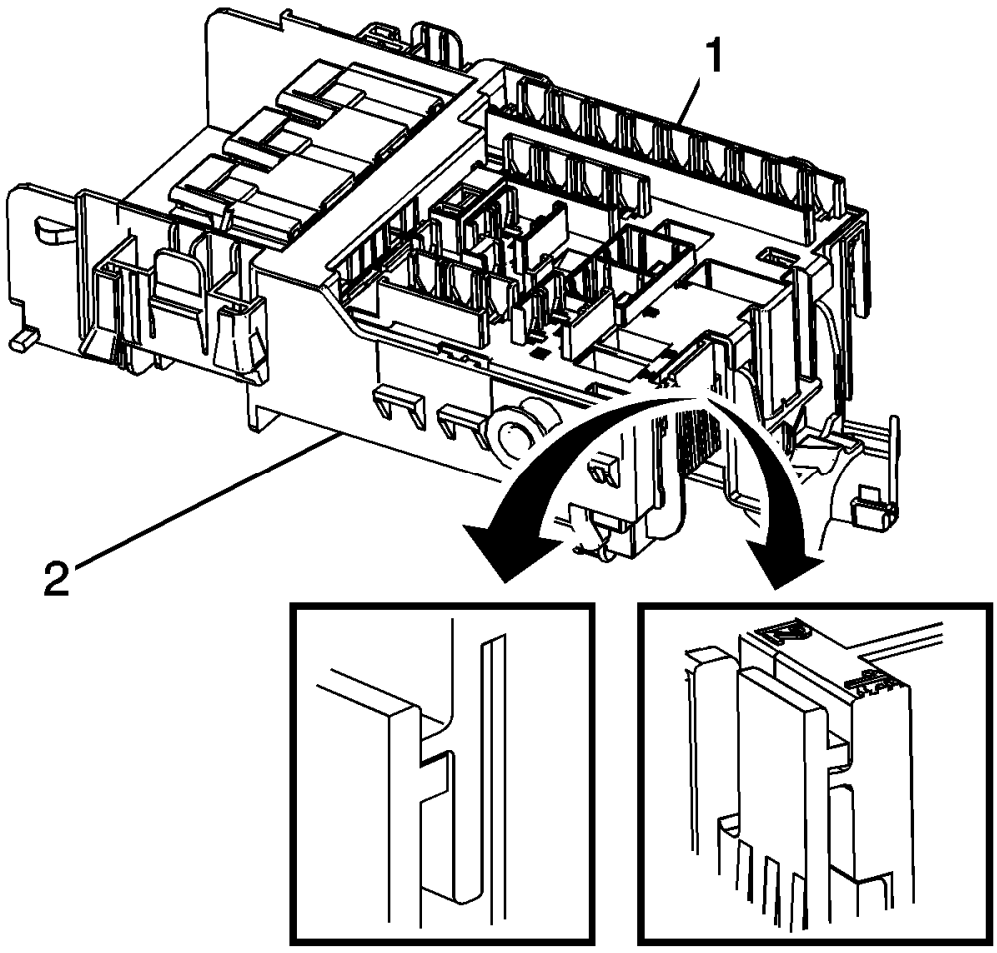

Fig. 13: Fuse Block Tabs
Courtesy of GENERAL MOTORS COMPANY

13. When the top part is in the pre-assembled position (required to release wire terminals), the tabs of the top part are on top of the tabs of the bottom part (left close-up view).

    When the top part is in the end-locking position (required after wires are inserted), the tabs of the bottom part are on top of the tabs of the top part (right close-up view).

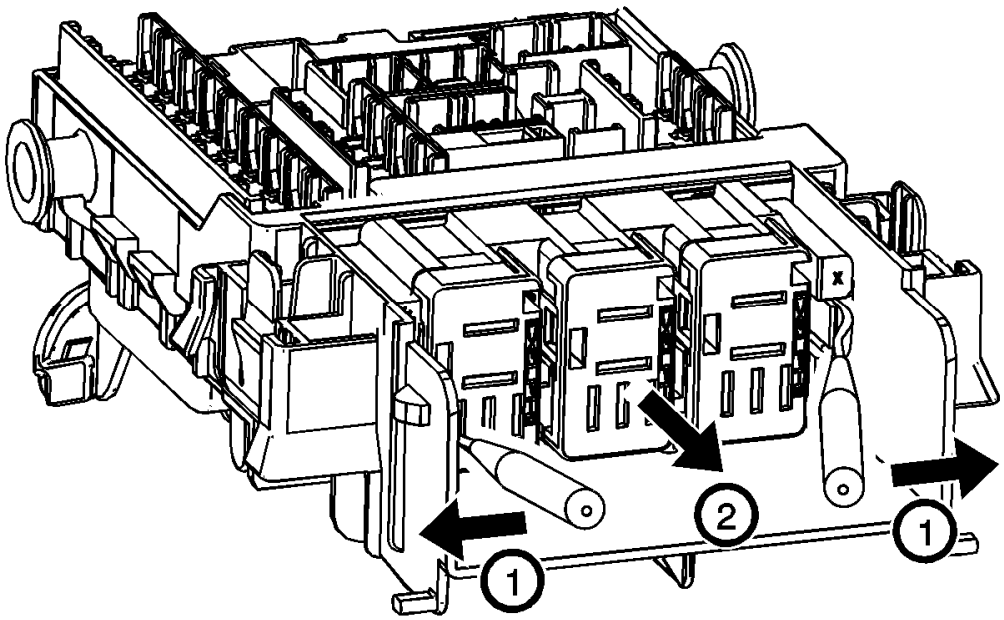

Fig. 14: Fuse Block Relays
Courtesy of GENERAL MOTORS COMPANY

14. Unlock and remove relay socket from fuse block.

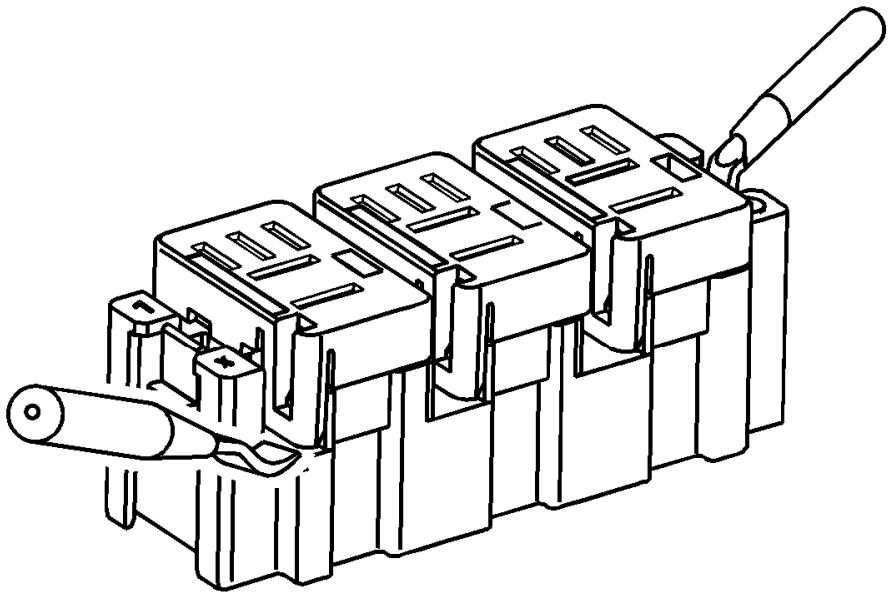

Fig. 15: Fuse Block Relay Socket & Locking Caps
Courtesy of GENERAL MOTORS COMPANY

15. Unlock (6 locking points) and remove locking caps (3x) from relay socket.

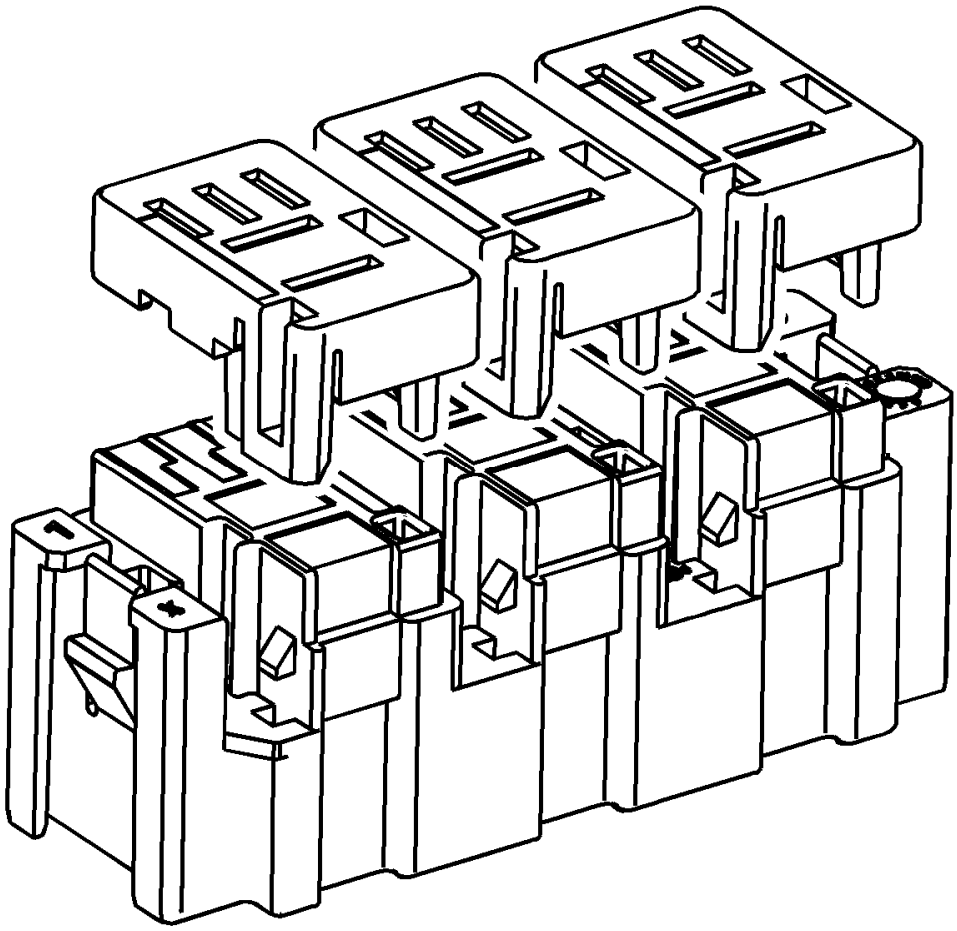

Fig. 16: Relay Socket & Locking Caps
Courtesy of GENERAL MOTORS COMPANY

16. Relay socket with locking caps removed.

RELAY REPLACEMENT (ATTACHED TO WIRE HARNESS)

Removal Procedure

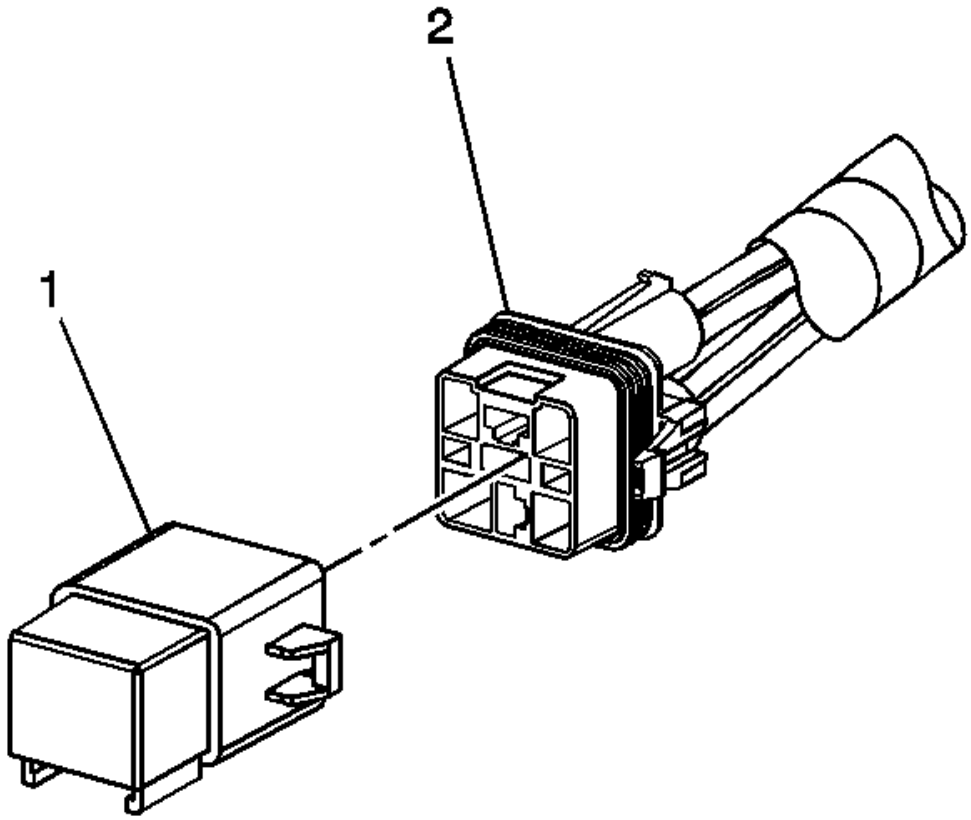

Fig. 17: Identifying Relay & Wire Harness Connector
Courtesy of GENERAL MOTORS COMPANY

1. Locate the relay. Refer to the **Master Electrical Component List** to locate the relay in the vehicle.
2. Remove any fasteners which hold the relay in place.
3. Remove any connector position assurance (CPA) devices or secondary locks.

NOTE: Use care when removing a relay in a wiring harness when the relay is secured by fasteners or tape.

4. Separate the relay (1) from the wire harness connector (2).

Installation Procedure

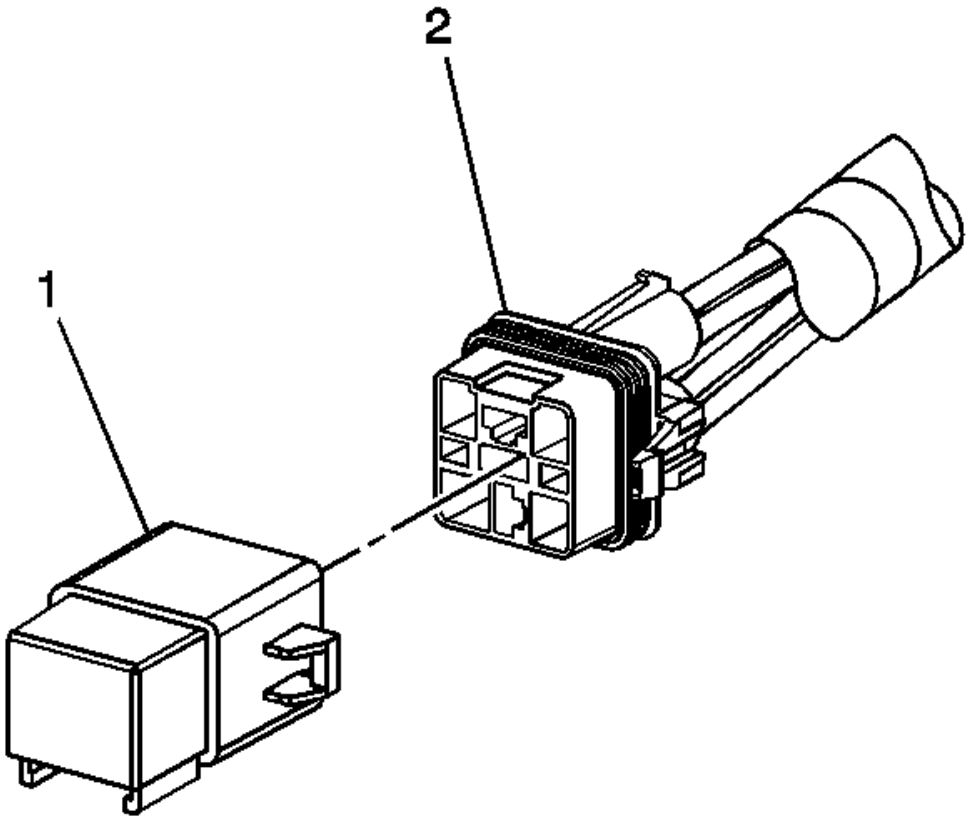

Fig. 18: Identifying Relay & Wire Harness Connector
Courtesy of GENERAL MOTORS COMPANY

1. Connect the relay (1) to the wire harness connector (2).
2. Install any connector position assurance (CPA) devices or secondary locks.
3. Install the relay using any fasteners or tape that originally held the relay in place.

RELAY REPLACEMENT (WITHIN AN ELECTRICAL CENTER)

Special Tools

EL-43244 Relay Puller Pliers

Removal Procedure

1. Remove the electrical center cover.

NOTE:

- **Always note the orientation of the relay.**

- **If equipped with a notch style relay; observe the location of the notch on the old relay to verify the new relay is installed with the notch in the same location.**
- **Ensure that the electrical center is secure, as not to put added stress on the wires or terminals.**

2. Locate the relay. Refer to **Electrical Center Identification Views** to locate the electrical center where the relay exists.

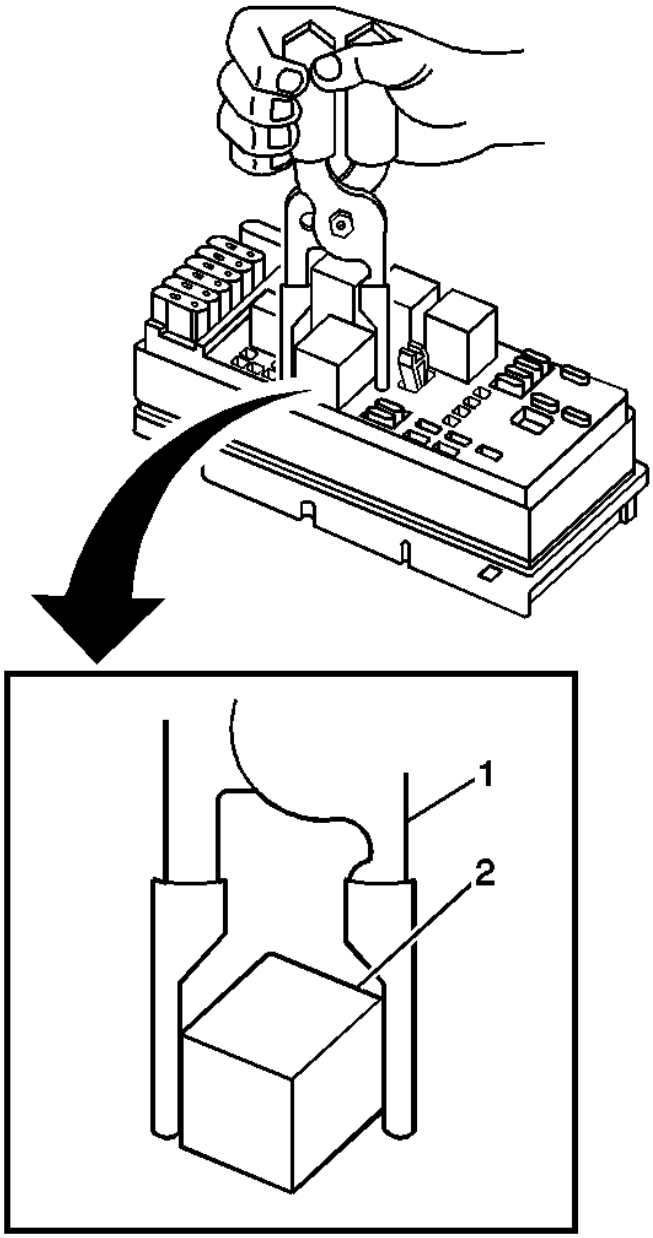

Fig. 19: Removing/Installing Relay
Courtesy of GENERAL MOTORS COMPANY

3. Using the EL-43244 (1) position the tool on opposing corners of the relay (2).

CAUTION: Use EL-43244 to pull the relay straight out from the electrical center terminals. The use of pliers or a flat bladed tool could damage the electrical center.

4. Remove the relay (2) from the electrical center.

Installation Procedure

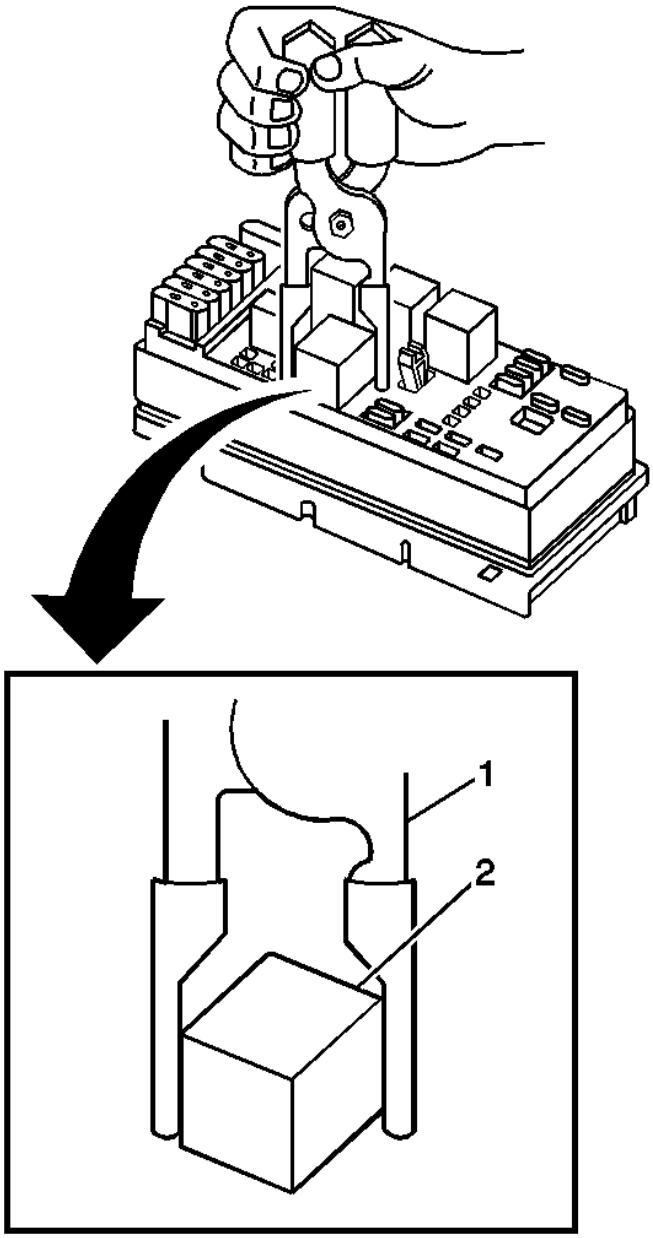

Fig. 20: Removing/Installing Relay
Courtesy of GENERAL MOTORS COMPANY

1. Install the relay (2) in the same position as removed.
2. Install the electrical center cover.

GROUND REPAIR

Electrical Grounds

Proper electrical system function relies on secure, positive, corrosion-free ground connections. Loose, stripped, or corroded connections increase the possibility of improper system function and loss of module communication. These conditions may also lead to unnecessary repairs and component replacements.

In general, electrical ground connections are accomplished using one, or a combination of, three attachment methods:

- Welded M6 stud and nut
- Welded M6 nut and bolt
- Welded M8 nut and bolt

CAUTION: Use GM approved replacement fasteners with conductive finish for electrical ground repair.

Determine which attachment method is used, and carry out the appropriate repair.

M6 Weld Stud Replacement

1. Select a location adjacent the damaged or missing M6 ground stud having 20 mm (0.79 in) clearance behind the panel surface and 20 mm (0.79 in) clearance surrounding the M6 rivet stud flange.
2. Using GM approved residue-free solvent or equivalent, remove any grease from the repair site and allow to dry.

NOTE: Ensure 20 mm (0.79 in) clearance is maintained behind the panel to be drilled.

3. Drill a 10 mm (0.40 in) diameter hole through the panel.
4. Carefully remove paint and primer from the area surrounding the rivet stud flange until bare metal is visible.

CAUTION: Use GM approved replacement fasteners with conductive finish for electrical ground repair.

5. Select a replacement conductive M6 rivet stud. Refer to GM parts catalog for the correct part number and application.
6. Using a rivet stud installer, install the replacement conductive M6 rivet stud.
7. Ensure the new rivet stud is securely fastened, with no detectable movement.

NOTE: The rivet stud and surrounding panel area must be properly refinished prior to the installation of the ground terminal and nut to maintain positive

electrical grounding.

8. Completely wrap the threads of the rivet stud with painters tape or equivalent.
9. Refinish the repair area using an anti-corrosion primer. Refer to **Anti-Corrosion Treatment and Repair** .
10. Allow the refinished repair area to cure sufficiently before removing the protective material applied to the rivet stud threads.
11. Remove the painters tape or equivalent from the rivet stud threads.
12. Using GM approved residue-free solvent or equivalent, thoroughly clean the rivet stud threads to remove any adhesive and allow to dry.
13. Carefully remove any corrosion from the electrical ground wire terminal. Refer to **Testing for Intermittent Conditions and Poor Connections** .
14. Using a small brush, apply Dielectric Lubricant GM P/N 12377900 (Canadian P/N 10953529) to the new conductive M6 rivet stud threads.
15. Install the ground terminal to the new rivet stud.
16. Select a new, conductive M6 nut. Refer to GM parts catalog for the correct part number and application.

CAUTION: Refer to Fastener Caution .

17. Install the M6 nut and tighten to 8 N.m (71 lb in).
18. Check for proper system operation.

M6 Weld Nut

CAUTION: Use GM approved replacement fasteners with conductive finish for electrical ground repair.

1. If the M6 weld nut at the electrical ground location is damaged or stripped, a new, conductive self-threading M7 bolt may be used to secure the ground terminal. Refer to GM parts catalog for the correct part number and application.
2. Using GM approved residue-free solvent or equivalent, remove any grease from the surface surrounding the weld nut and allow to dry.
3. Remove any loose metal particles from the damaged or stripped weld nut with a stiff brush.
4. Using a small brush, apply Dielectric Lubricant GM P/N 12377900 (Canadian P/N 10953529) to the new, conductive, self-threading M7 bolt threads.
5. Carefully remove any corrosion from the electrical ground terminal. Refer to **Testing for Intermittent Conditions and Poor Connections** .
6. Install the electrical ground terminal to the new, conductive M7 bolt.

CAUTION: Refer to Fastener Caution .

7. Install the M7 bolt and tighten to 9 N.m (80 lb in).
8. Check for proper system operation.

M6 Weld Nut (Alternative Repair)

CAUTION: Use GM approved replacement fasteners with conductive finish for electrical ground repair.

1. If the electrical ground location is accessible from both sides of the panel, a conductive M6 bolt and a conductive M6 nut may be used to secure the electrical ground terminal. Refer to GM parts catalog for the correct part number and application.
2. Select a location adjacent the damaged M6 weld nut having 20 mm (0.79) clearance behind the panel surface and 20 mm (0.79) clearance surrounding the new electrical ground site.
3. Using GM approved residue-free solvent or equivalent, remove any grease from the surface surrounding the ground location and allow to dry.

NOTE: Ensure 20 mm (0.79 in) clearance is maintained behind the panel to be drilled.

4. Drill a 10 mm (0.40 in) diameter hole through the panel.
5. Carefully remove paint and primer from the area surrounding the new ground site until bare metal is visible.
6. Using a small brush, apply Dielectric Lubricant GM P/N 12377900 (Canadian P/N 10953529) to the new, conductive M6 bolt threads.
7. Carefully remove any corrosion from the electrical ground terminal. Refer to **Testing for Intermittent Conditions and Poor Connections** .
8. Install the electrical ground terminal and new, conductive M6 bolt to the ground location.

CAUTION: Refer to Fastener Caution .

9. Install the conductive M6 nut and tighten to 8 N.m (71 lb in).

NOTE: The repair area must be properly refinished to maintain positive electrical grounding.

10. Refinish the repair area using an anti-corrosion primer. Refer to **Anti-Corrosion Treatment and Repair** .
11. Check for proper system operation.

M8 Weld Nut

CAUTION: Use GM approved replacement fasteners with conductive finish for electrical ground repair.

1. If the M8 weld nut electrical ground location is accessible from both sides of the panel, a conductive M8 bolt and a conductive M8 nut may be used to secure the ground terminal. Refer to GM parts catalog for the correct part numbers and application.
2. Select a location adjacent to M8 weld nut having 20 mm (0.79 in) clearance behind the panel surface and 20 mm (0.79 in) clearance surrounding the new electrical ground site.
3. Using GM approved residue-free solvent or equivalent, remove any grease from the surface surrounding the ground location and allow to dry.

NOTE: Ensure 20 mm (0.79 in) clearance is maintained behind the panel to be drilled.

4. Drill a 10 mm (0.40 in) diameter hole through the panel.
5. Carefully remove paint and primer from the area surrounding the new ground site until bare metal is visible.
6. Using a small brush, apply Dielectric Lubricant GM P/N 12377900 (Canadian P/N 10953529) to the new, conductive M8 bolt threads.
7. Carefully remove any corrosion from the electrical ground terminal. Refer to **Testing for Intermittent Conditions and Poor Connections** .
8. Install the electrical ground terminal and new, conductive M8 bolt to the ground location.

CAUTION: Refer to Fastener Caution .

9. Install the conductive M8 nut and tighten to 22 N.m (16 lb ft).

NOTE: The repair area must be properly refinished to maintain positive electrical grounding.

10. Refinish the repair area using an anti-corrosion primer. Refer to **Anti-Corrosion Treatment and Repair** .
11. Check for proper system operation.

M8 Weld Nut (Alternative Repair)

CAUTION: Use GM approved replacement fasteners with conductive finish for electrical ground repair.

1. If the M8 weld nut electrical ground location is not accessible from both sides of the panel, a conductive M6 rivet stud and a conductive M6 nut may be used to secure the ground terminal. Refer to GM parts catalog for the correct part numbers and application.

2. Select a location adjacent the damaged M8 weld nut having 20 mm (0.79 in) clearance behind the panel surface and 20 mm (0.79 in) clearance surrounding the new, conductive M6 rivet stud flange.
3. Using GM approved residue-free solvent or equivalent, remove any grease from the repair site and allow to dry.

NOTE: Ensure 20 mm (0.79 in) clearance is maintained behind the panel to be drilled.

4. Drill a 10 mm (0.40 in) diameter hole through the panel.
5. Carefully remove paint and primer from the area surrounding the rivet stud flange until bare metal is visible.
6. Using a rivet stud installer, install the replacement conductive M6 rivet stud.
7. Ensure the new rivet stud is securely fastened, with no detectable movement.

NOTE: The rivet stud and surrounding panel area must be properly refinished prior to the installation of the ground terminal and nut to maintain positive electrical grounding.

8. Completely wrap the threads of the rivet stud with painters tape or equivalent.
9. Refinish the repair area using an anti-corrosion primer. Refer to **Anti-Corrosion Treatment and Repair** .
10. Allow the refinished repair area to cure sufficiently before removing the protective material applied to the rivet stud threads.
11. Remove the painters tape or equivalent from the rivet stud threads.
12. Using GM approved residue-free solvent or equivalent, thoroughly clean the rivet stud threads to remove any adhesive and allow to dry.
13. Carefully remove any corrosion from the electrical ground wire terminal. Refer to **Testing for Intermittent Conditions and Poor Connections** .
14. Using a small brush, apply Dielectric Lubricant GM P/N 12377900 (Canadian P/N 10953529) to the new conductive M6 rivet stud threads.
15. Install the ground terminal to the new, conductive M6 rivet stud.

CAUTION: Refer to Fastener Caution .

16. Install the conductive M6 nut and tighten to 8 N.m (71 lb in).
17. Check for proper system operation.

FUSE BLOCK REPLACEMENT

Removal Procedure

1. Disconnect battery negative cable. Refer to **Battery Negative Cable Disconnection and Connection** .

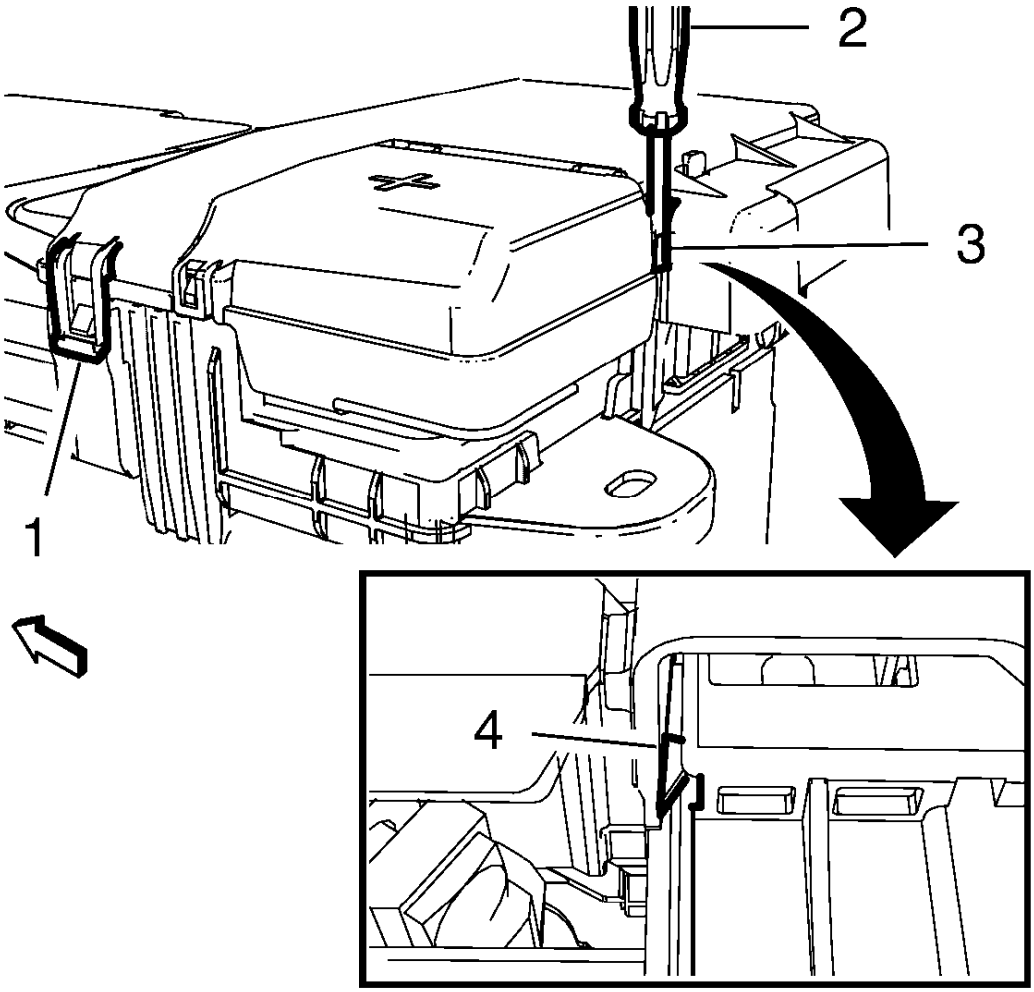

Fig. 21: Battery Fuse Box Cover
Courtesy of GENERAL MOTORS COMPANY

2. Unlock the retaining tab (1) on the battery fuse box cover.
3. Use a suitable screwdriver (2) to unlock the clip (4) through the window (3).

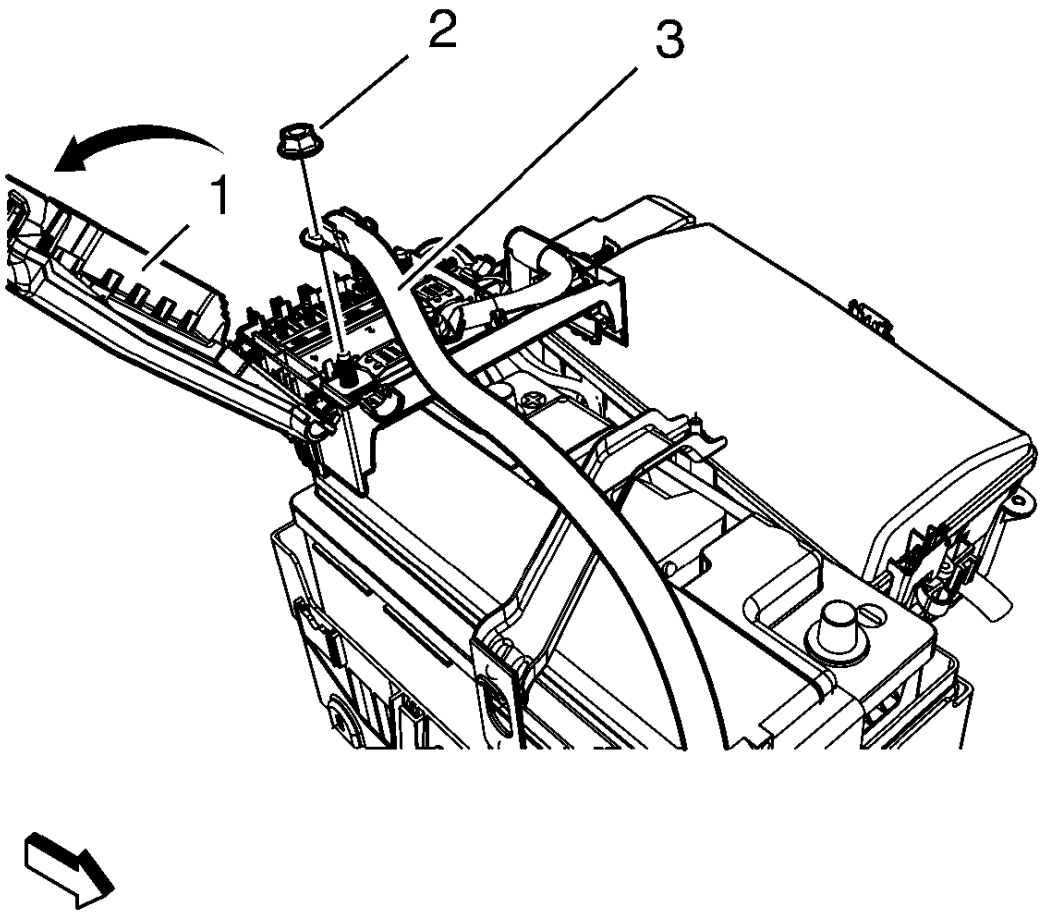

Fig. 22: View Of Fuse Box Cover, Battery Cable And Nut
Courtesy of GENERAL MOTORS COMPANY

NOTE: Pull the battery fuse box housing. DO NOT pull the flap.

4. Open the battery fuse box cover (1).
5. Remove the positive battery cable to starter nut (2).
6. Remove the positive battery cable to starter (3) from the battery.
7. Remove the positive battery cable. Refer to **Battery Positive Cable Replacement** .

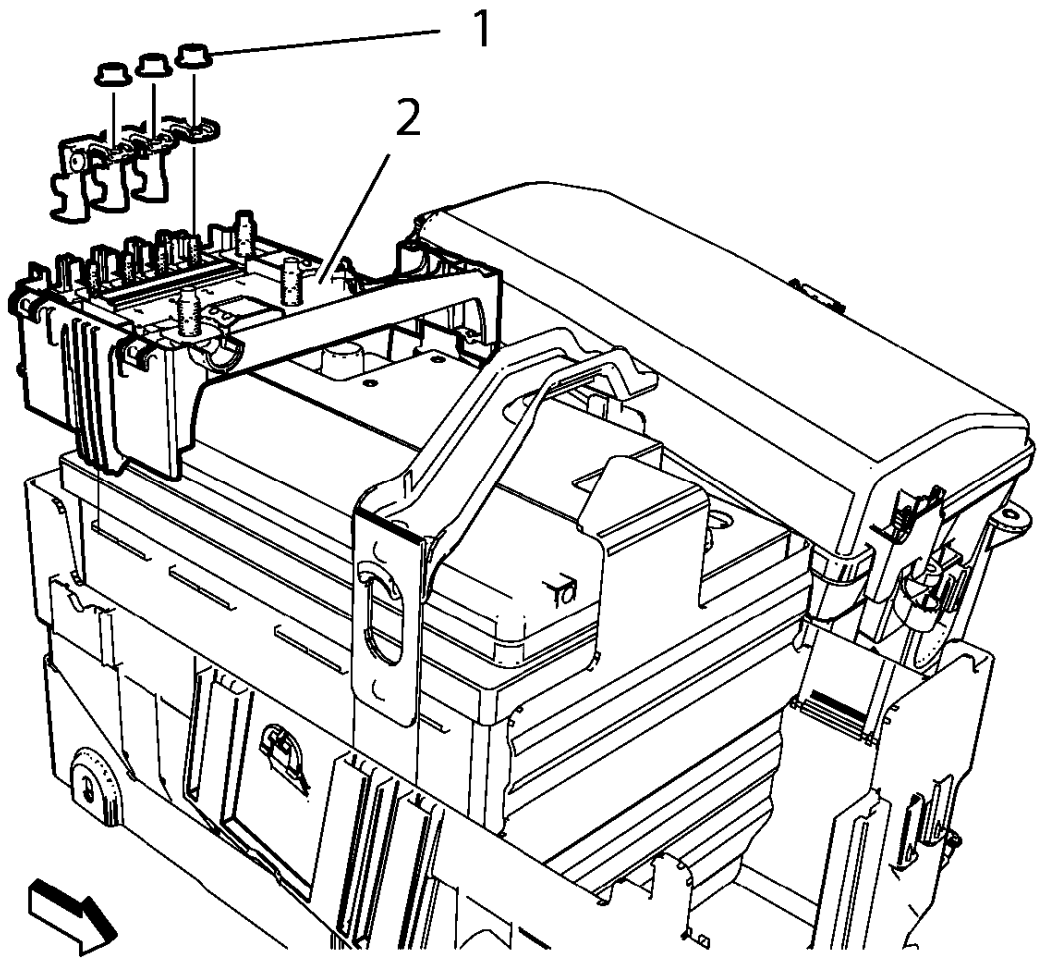

Fig. 23: Identifying Fuse Block, Body Wiring Harness And Nuts
Courtesy of GENERAL MOTORS COMPANY

8. Remove 2 body wiring harness nuts (1) and body wiring harness.
9. Remove fuse block (2).

Installation Procedure

1. Install fuse block.

CAUTION: Refer to Fastener Caution

2. Install body wiring harness and 2 body wiring harness nuts and tighten to 4.7 N.m (42 lb in).
3. Install the positive battery cable. Refer to **Battery Positive Cable Replacement** .

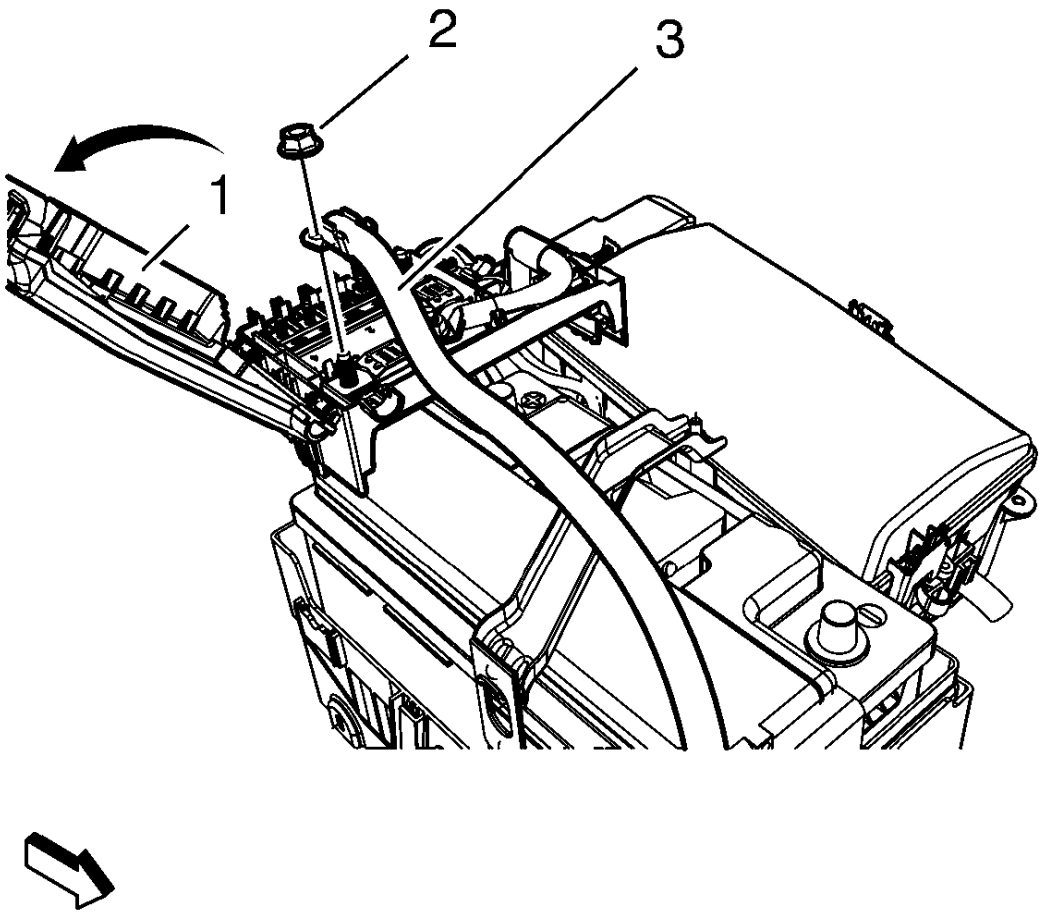

Fig. 24: View Of Fuse Box Cover, Battery Cable And Nut
Courtesy of GENERAL MOTORS COMPANY

4. Install the positive battery cable to starter (3).
5. Install the positive battery cable to starter nut (2) and tighten to 9 N.m (80 lb in).

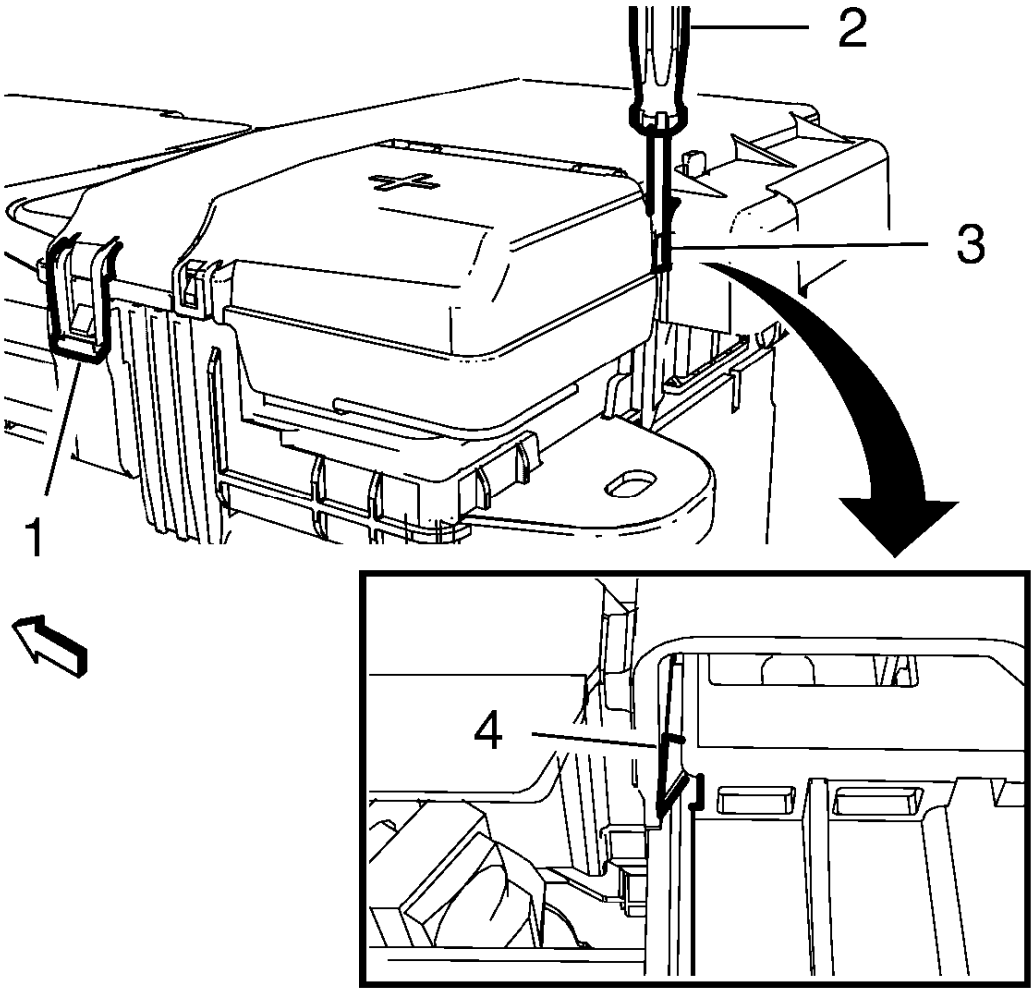

Fig. 25: Battery Fuse Box Cover
Courtesy of GENERAL MOTORS COMPANY

6. Close the battery fuse box cover and lock the retaining tabs (1) and (4).
7. Connect battery negative cable. Refer to **Battery Negative Cable Disconnection and Connection** .

FRONT COMPARTMENT FUSE BLOCK REPLACEMENT

Removal Procedure

1. Disconnect battery negative cable. Refer to **Battery Negative Cable Disconnection and Connection** .
2. Remove the front compartment fuse block cover. Refer to **Front Compartment Fuse Block Cover Replacement**.

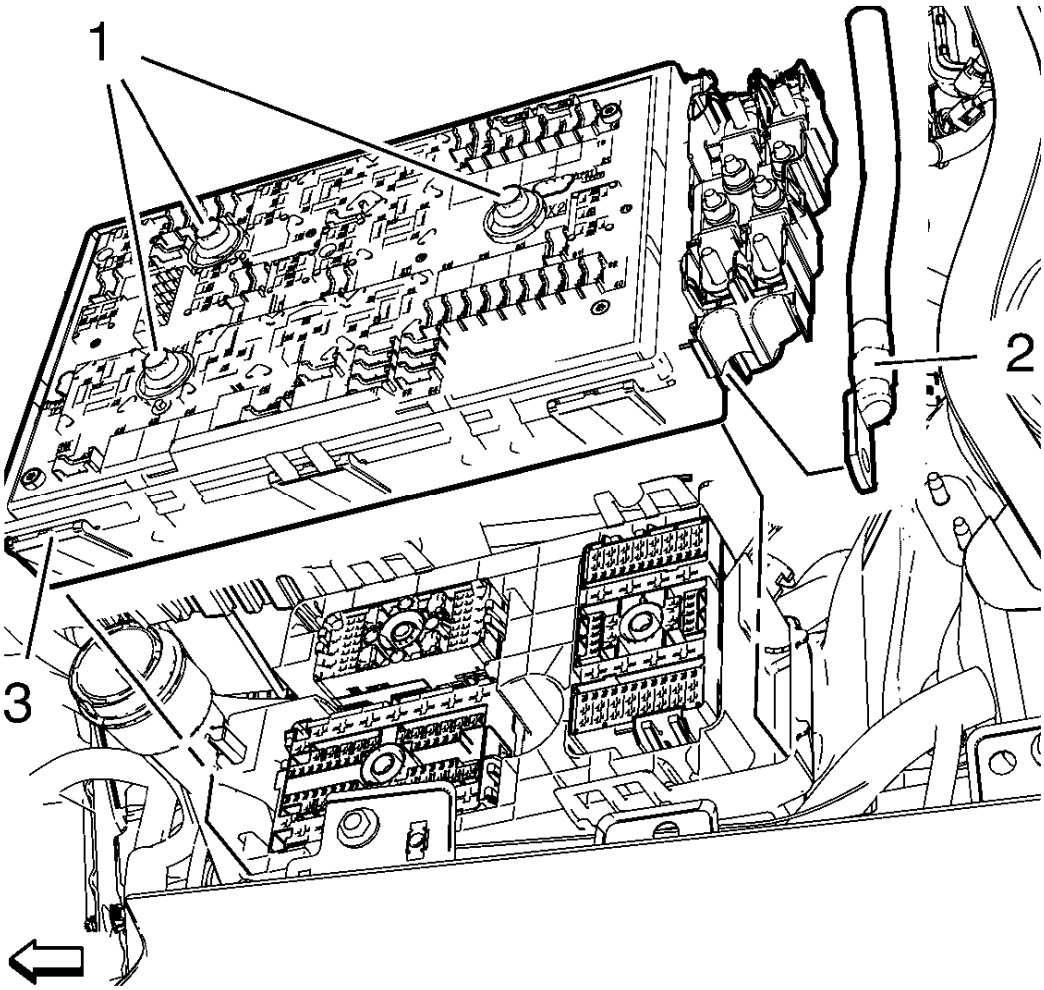

Fig. 26: View Of Front Compartment Fuse Block, Wiring Harness Supply And Fuse Block Bolt
Courtesy of GENERAL MOTORS COMPANY

NOTE: Bolts (1) are encapsulated on the end of threads so that they can not be removed from the fuse block. The fuse block must be pulled out to expose the positive cable lug.

3. Remove the 3 front compartment fuse block bolts (1).
4. Unlock retaining tabs and remove the front compartment fuse block (3).
5. Remove the front compartment fuse block wiring harness supply (2).

Installation Procedure

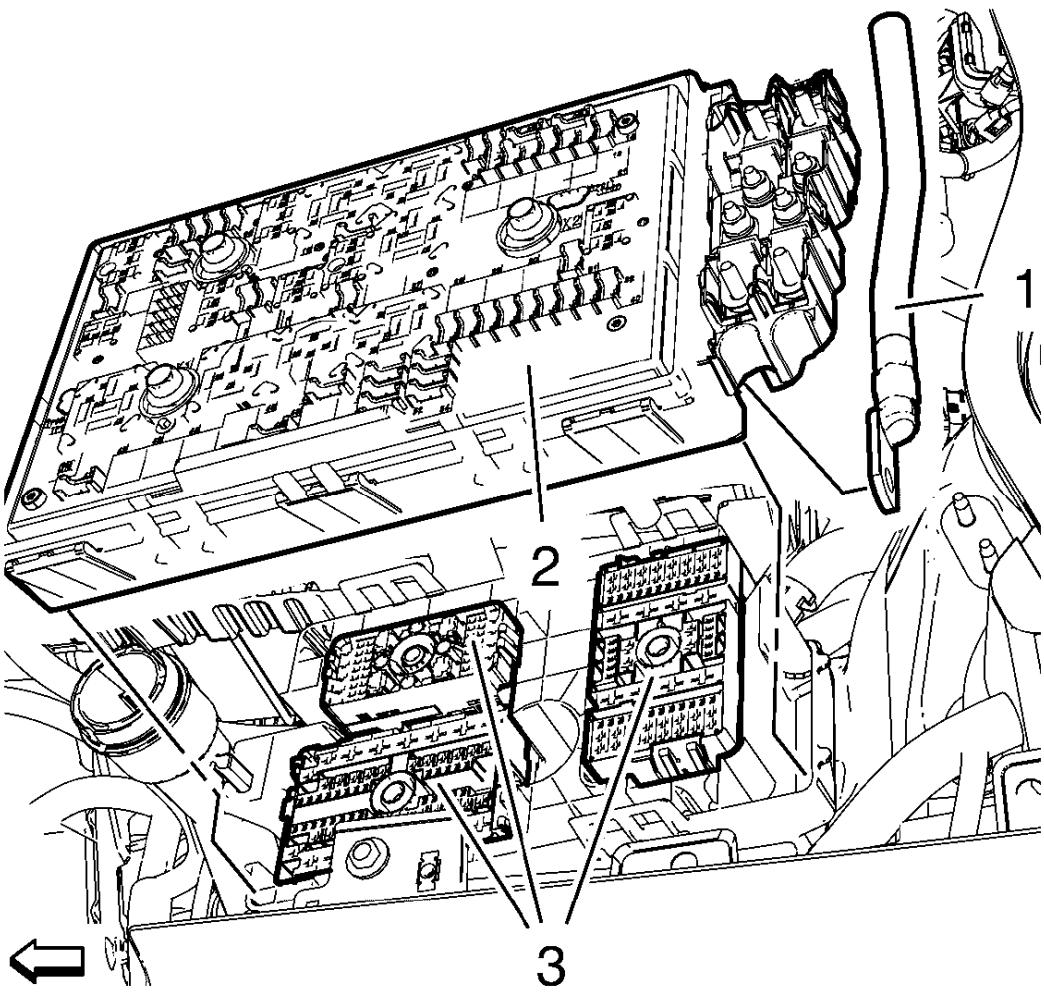

Fig. 27: Wiring Harness Supply, Front Compartment Fuse Block And Electrical Connectors
Courtesy of GENERAL MOTORS COMPANY

CAUTION: Refer to Fastener Caution .

1. Install front compartment fuse block wiring harness supply (1) and tighten to 12 N.m (106 lb in).
2. Push down the 3 electrical connectors (3) before installation of the front compartment fuse block (2).

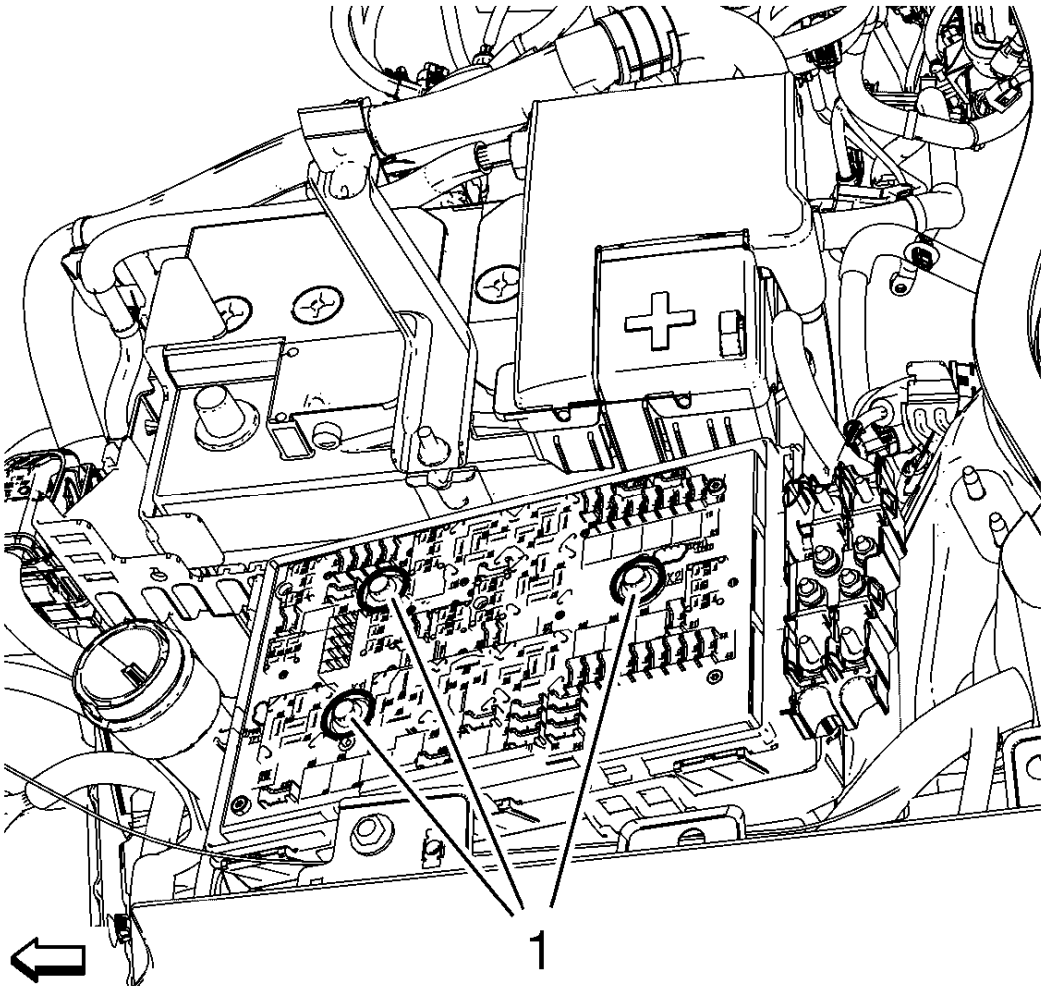

Fig. 28: Identifying Front Compartment Fuse Block Bolt
Courtesy of GENERAL MOTORS COMPANY

3. Install 3 front compartment fuse block bolts (1) and tighten to 6 N.m (53 lb in).
4. Install the front compartment fuse block cover. Refer to **Front Compartment Fuse Block Cover Replacement**.
5. Connect battery negative cable. Refer to **Battery Negative Cable Disconnection and Connection** .

FRONT COMPARTMENT FUSE BLOCK HOUSING REPLACEMENT

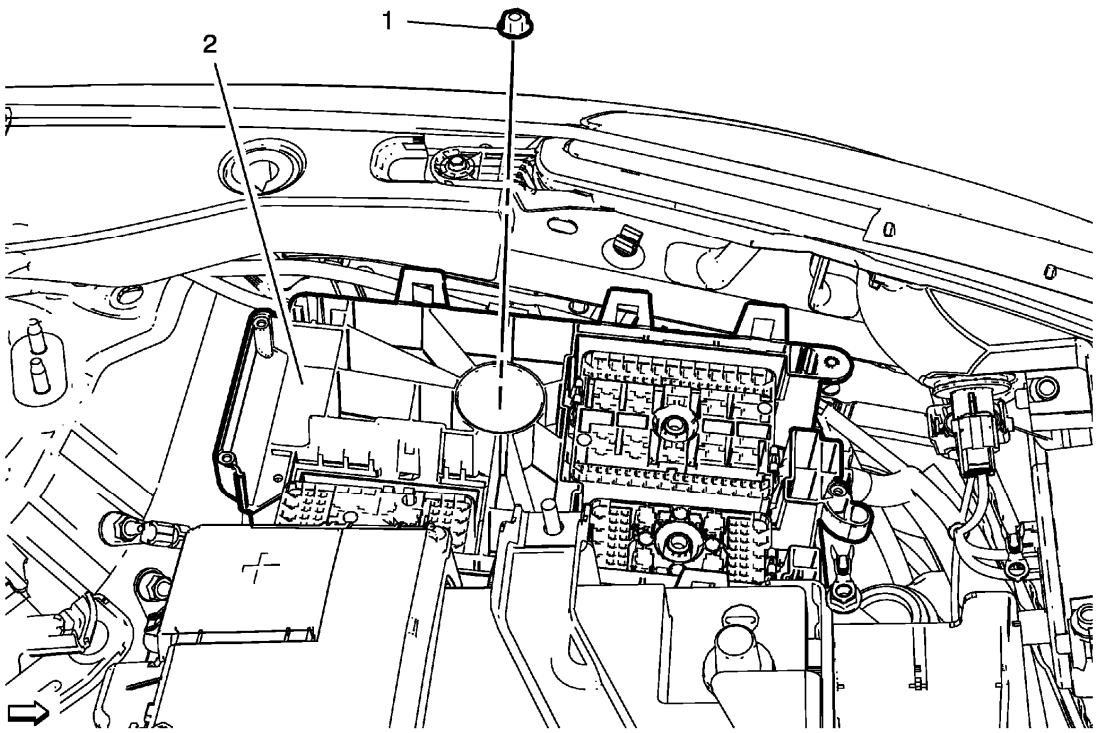

Fig. 29: Identifying Front Compartment Fuse Block Housing And Nut
Courtesy of GENERAL MOTORS COMPANY

Front Compartment Fuse Block Housing Replacement

Callout	Component Name
Preliminary Procedures 1. Disconnect the negative battery cable. Refer to **Battery Negative Cable Disconnection and Connection** . 2. Remove the windshield washer solvent container filler tube. Refer to **Windshield Washer Solvent Container Filler Tube Replacement** . 3. Remove front compartment fuse block. Refer to **Front Compartment Fuse Block Replacement**.	
1	Front Compartment Fuse Block Housing Nut **CAUTION:** **Refer to Fastener Caution .** **Tighten** 22 N.m(16 lb ft)
2	Front Compartment Fuse Block Housing **Procedure**

	1. Remove 3 electrical connectors from front compartment fuse block housing. 2. Remove attaching parts and unclip wiring harnesses from front compartment fuse block housing.

FRONT COMPARTMENT FUSE BLOCK COVER REPLACEMENT

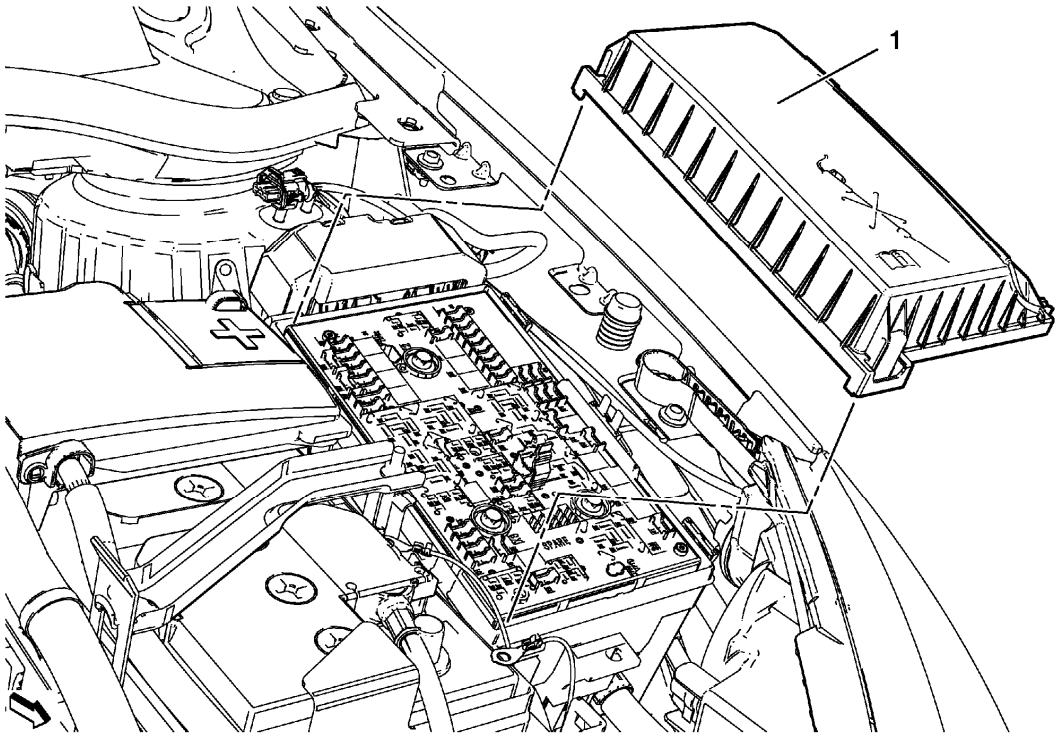

Fig. 30: Identifying Front Compartment Fuse Block Cover
Courtesy of GENERAL MOTORS COMPANY

Front Compartment Fuse Block Cover Replacement

Callout	Component Name
1	Front Compartment Fuse Block Cover **Procedure** Squeeze 3 tabs to release cover.

IGNITION LOCK CYLINDER REPLACEMENT

Removal Procedure

1. Disconnect the battery negative cable. Refer to **Battery Negative Cable Disconnection and Connection** .
2. Remove the steering column lower trim cover. Refer to **Steering Column Lower Trim Cover Replacement** .

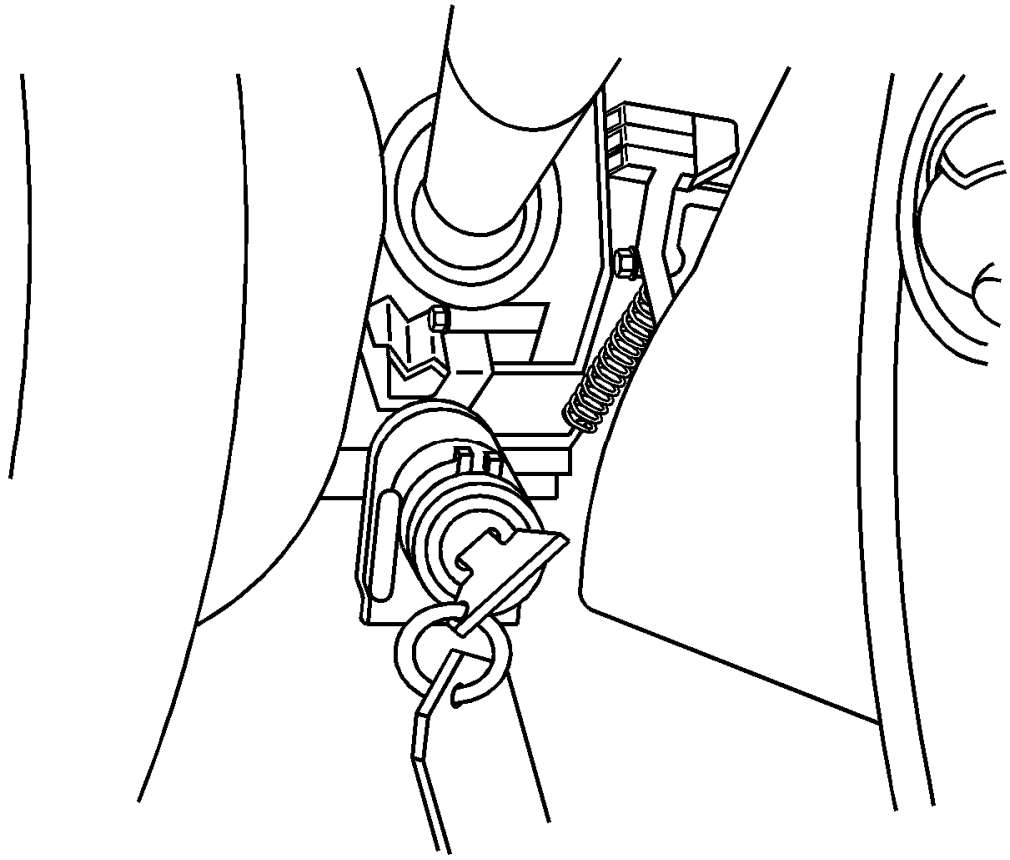

Fig. 31: Key & Ignition Lock Cylinder
Courtesy of GENERAL MOTORS COMPANY

3. Insert the key into the ignition lock cylinder and turn the key to the RUN position.

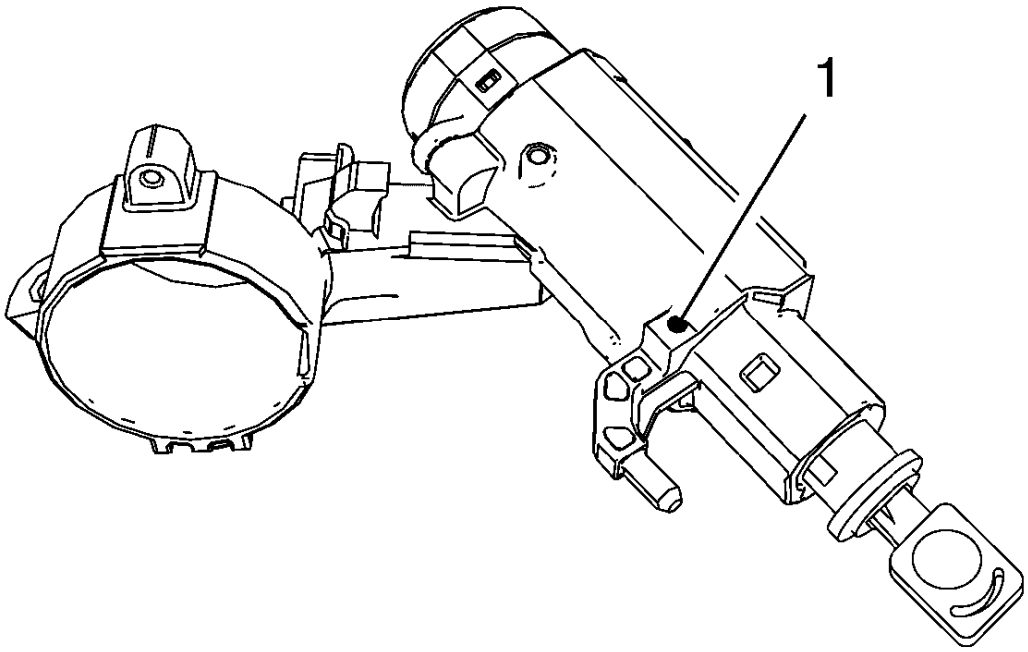

Fig. 32: Access Hole
Courtesy of GENERAL MOTORS COMPANY

4. Depress the retainer through the lock housing access hole (1) with a small Allen wrench or similar pick-type tool.
5. Remove the ignition lock cylinder from the lock housing.

Installation Procedure

1. If you are installing a new ignition lock cylinder, code the lock cylinder. Refer to **Key and Lock Cylinder Coding** .

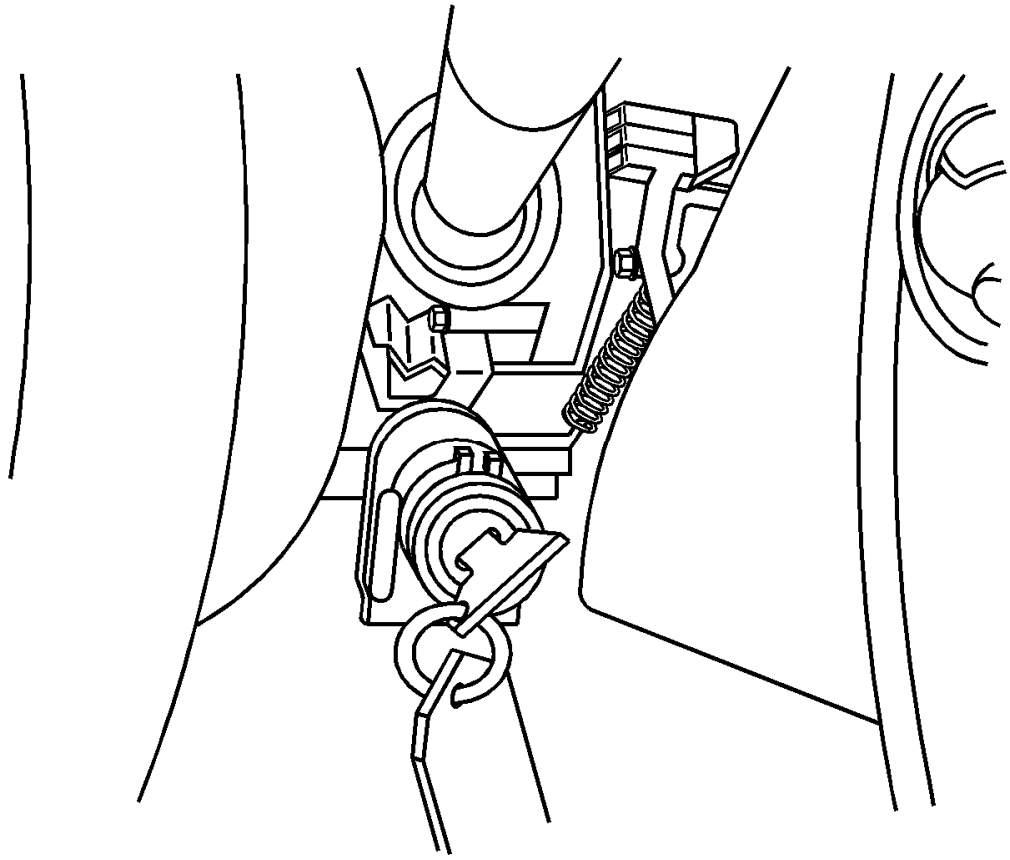

Fig. 33: Key & Ignition Lock Cylinder
Courtesy of GENERAL MOTORS COMPANY

2. Turn the key to the RUN position and insert ignition lock cylinder into the lock housing.
3. Turn the key to the LOCK position and remove the key from the ignition lock cylinder.
4. Install the steering column lower trim cover. Refer to **Steering Column Lower Trim Cover Replacement** .
5. Connect the battery negative cable. Refer to **Battery Negative Cable Disconnection and Connection** .

IGNITION AND START SWITCH REPLACEMENT

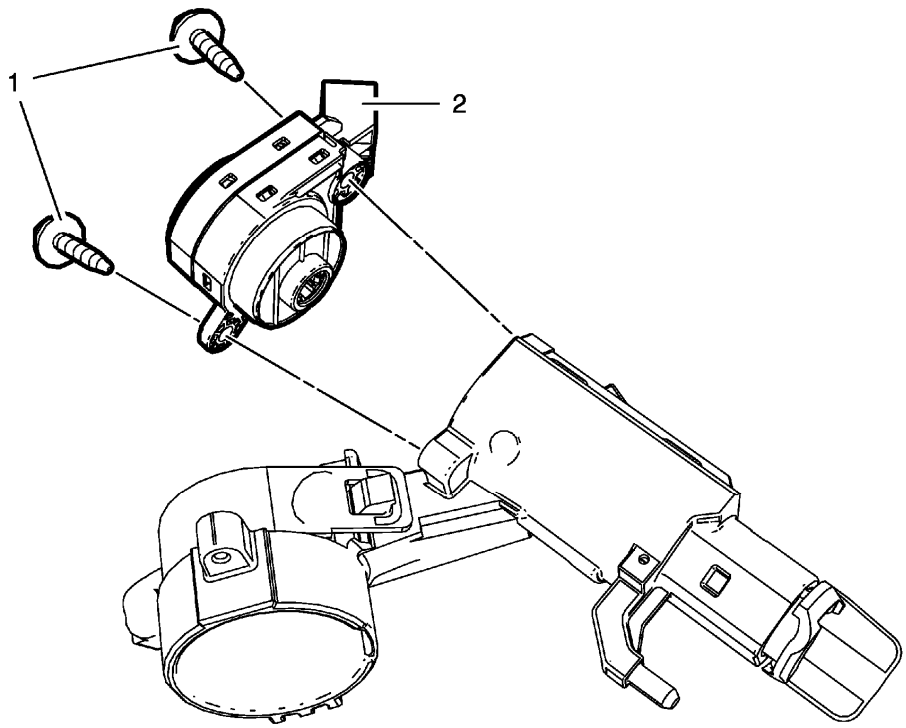

Fig. 34: Ignition Switch And Bolts
Courtesy of GENERAL MOTORS COMPANY

Ignition and Start Switch Replacement

Callout	Component Name
Preliminary Procedures 1. Disconnect the battery negative cable. Refer to **Battery Negative Cable Disconnection and Connection** . 2. Remove the steering column lower trim cover. Refer to **Steering Column Lower Trim Cover Replacement**	
1	Ignition and Start Switch Bolt (Qty: 2) **CAUTION:** **Refer to Fastener Caution .** **Procedure** Reposition the steering column wiring harness retainers in order to gain access to the switch bolts.
2	Ignition and Start Switch

ENGINE STOP/START MODE CONTROL SWITCH REPLACEMENT

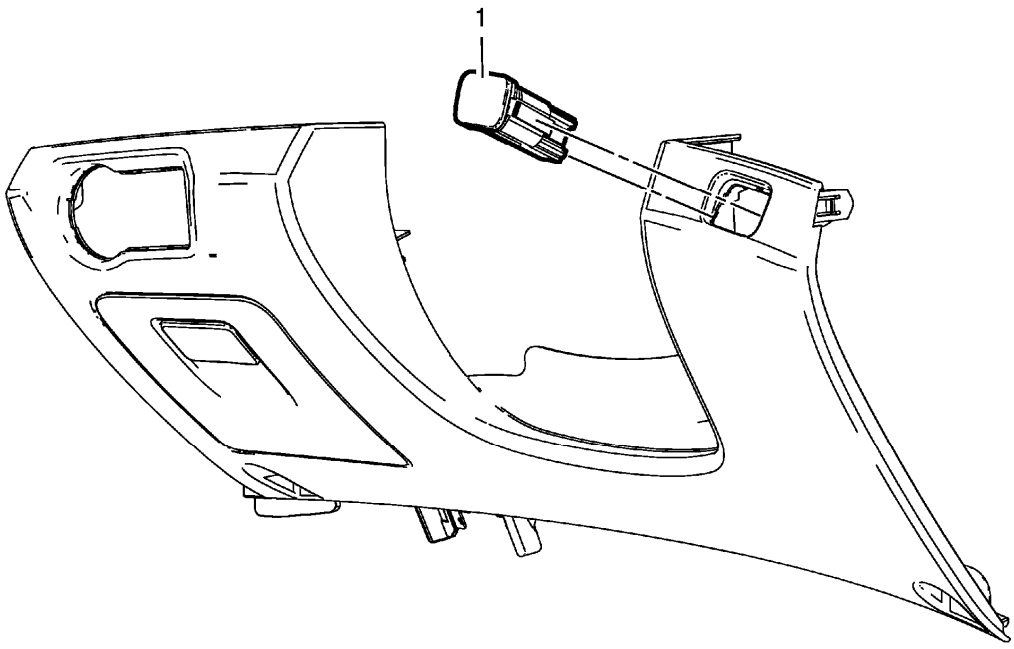

Fig. 35: Engine Stop/Start Mode Control Switch
Courtesy of GENERAL MOTORS COMPANY

Engine Stop/Start Mode Control Switch Replacement

Callout	Component Name
Preliminary Procedure Remove the instrument panel lower trim pad cover. Refer to **Instrument Panel Lower Trim Pad Cover Replacement (without Knee Airbag)** , **Instrument Panel Lower Trim Pad Cover Replacement (with Knee Airbag)** .	
1	Engine Stop/Start Mode Control Switch **Procedure** Unlock the retaining tabs.

IGNITION AND START SWITCH HOUSING REPLACEMENT

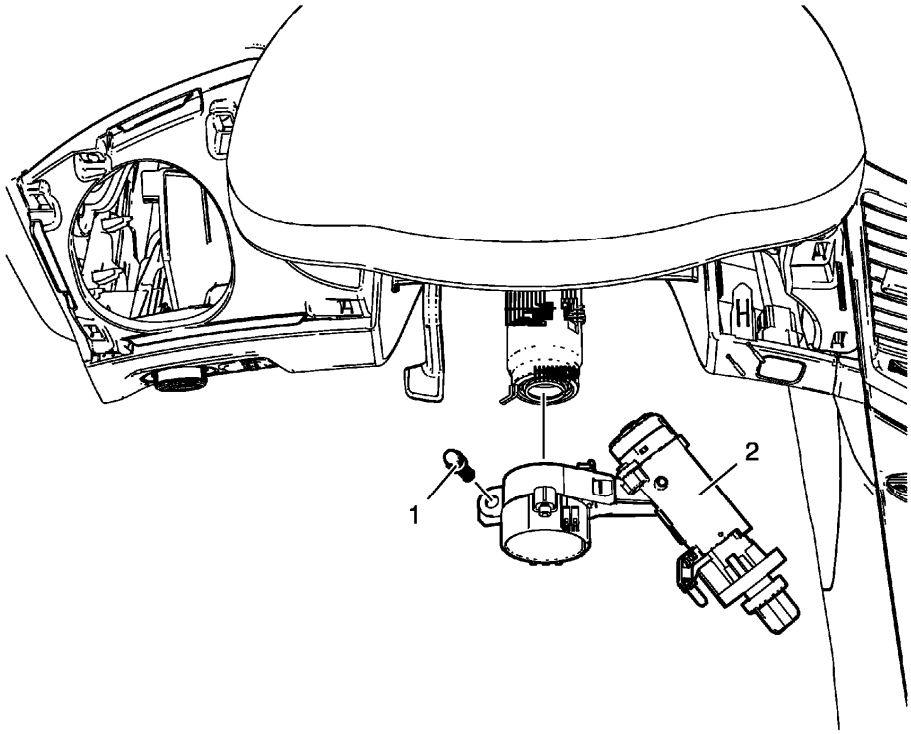

Fig. 36: Ignition And Start Switch Housing
Courtesy of GENERAL MOTORS COMPANY

Ignition and Start Switch Housing Replacement

Callout	Component Name
Preliminary Procedures 1. Remove the ignition lock cylinder. Refer to **Ignition Lock Cylinder Replacement** 2. Remove the turn signal switch bracket. Refer to **Turn Signal Switch Bracket Replacement**	
1	Ignition Lock Cylinder Bolt **CAUTION:** **Refer to Fastener Caution .** **Procedure** 1. Use a suitable chisel to remove bolt. 2. Install NEW bolt and tighten until head tears off.
2	Ignition and Start Switch Housing **Procedure** 1. Disconnect the electrical connector. 2. Remove ignition and start switch. Refer to **Ignition and Start**

	Switch Replacement.

2013 ELECTRICAL

Wiring Systems and Power Management - Cruze

DIAGNOSTIC CODE INDEX

DIAGNOSTIC CODE INDEX

DTC	Description
DTC B097B	DTC B097B Power Mode Start Switch Circuit
DTC B097C	DTC B097C Power Mode Run/Start Indicator Circuit
DTC B1370 (Instrument Cluster)	DTC B1370 Control Module Ignition On and Start Circuit
DTC B1370-B1379, B1380-B1389, or B1440-B1443	DTC B1370 Control Module Ignition ON and Start Circuit DTC B1380 Control Module Ignition Accessory Circuit DTC B1441 Control Module Ignition OFF, Run, and Start Circuit
DTC B1448	DTC B1448 01 Accessory Power Relay Circuit Short to Battery DTC B1448 02 Accessory Power Relay Circuit Short to Ground DTC B1448 04 Accessory Power Relay Circuit Open
DTC B144B	DTC B144B 01 Run/Crank Power Relay Circuit Short to Battery DTC B144B 02 Run/Crank Power Relay Circuit Short to Ground DTC B144B 04 Run/Crank Power Relay Circuit Open
DTC B1451	DTC B1451 Accessory Power Circuit
DTC B147E or B147F	DTC B147E 01 Battery Saver Relay Set Secondary Circuit Short to Battery DTC B147E 02 Battery Saver Relay Set Secondary Circuit Short to Ground DTC B147E 04 Battery Saver Relay Set Secondary Circuit Open DTC B147F 01 Battery Saver Relay Reset Secondary Circuit Short to Battery DTC B147F 02 Battery Saver Relay Reset Secondary Circuit Short to Ground DTC B147F 04 Battery Saver Relay Reset Secondary Circuit Open
DTC P2537	DTC P2537 Ignition Accessory Switch Circuit Low Voltage

2013 ENGINE

Engine Cooling - Cruze

SPECIFICATIONS

TEMPERATURE VERSUS RESISTANCE

Temperature Versus Resistance

°C	°F	Sensor Resistance
Temperature vs Resistance Values (Approximate)		
100	212	155
90	194	208
80	176	283
70	158	392
60	140	552
50	122	793
45	113	958
40	104	1165
35	95	1425
30	86	1755
25	77	2176
20	68	2717
15	59	3428
10	50	4356
5	41	5578
0	32	7198
-5	23	9362
-10	14	12278
-15	5	16229
-20	-4	21653
-30	-22	39631
-40	-40	75532

FASTENER TIGHTENING SPECIFICATIONS (1.4L LUV)

Fastener Tightening Specifications (1.4L LUV)

Application	Specification	
	Metric	English
Air Conditioning Compressor And Condenser Hose Bolt	9 N.m	80 lb in
Air Conditioning Compressor And Condenser Hose Nut	19 N.m	14 lb ft
Air Conditioning Evaporator Hose Nut	19 N.m	14 lb ft

Engine Coolant Thermostat Housing Bolt	8 N.m	71 lb in
Engine Oil Cooler Bolt	20 N.m	15 lb ft
Engine Oil Cooler Inlet Pipe Bolt	10 N.m	89 lb in
Engine Oil Cooler Outlet Pipe Bolt	10 N.m	89 lb in
Ground Cable Nut - Coolant Fan Wiring Harness	10 N.m	89 lb in
Oil Pressure Indicator Switch	20 N.m	15 lb ft
Radiator Lower Bracket Bolt	22 N.m	16 lb ft
Radiator Upper Bracket Bolt	22 N.m	16 lb ft
Turbocharger Coolant Return Pipe Bolt	10 N.m	89 lb in
Water Outlet Bolt	8 N.m	71 lb in
Water Pump Bolt	8 N.m	71 lb in
Water Pump Pulley Bolt	22 N.m	16 lb ft

FASTENER TIGHTENING SPECIFICATIONS (1.8L LUW AND LWE)

Fastener Tightening Specifications (1.8L LUW and LWE)

Application	Specification	
	Metric	English
Engine Coolant Fan Motor Bolt	4 N.m	36 lb in
Engine Coolant Fan Resistor Bolt	4 N.m	36 lb in
Engine Coolant Thermostat Bolt	8 N.m	71 lb in
Engine Coolant Thermostat Bypass Pipe Bolt	8 N.m	71 lb in
Engine Coolant Thermostat Housing Bolt	8 N.m	71 lb in
Engine Coolant Thermostat Housing Retainer Nut	9 N.m	80 lb in
Engine Oil Cooler Bolt	8 N.m	71 lb in
Engine Oil Cooler Housing Bolt	25 N.m	19 lb ft
Engine Oil Cooler Pipe Bolt	8 N.m	71 lb in
Hood Hold Open Rod Retainer Bracket Bolt	22 N.m	17 lb ft
Radiator Bracket Bolt	25 N.m	18 lb ft
Radiator Support Bracket Bolt	22 N.m	17 lb ft
Water Pump Housing Bolt	8 N.m	71 lb in
Water Pump Pulley Bolt	20 N.m (1)	15 lb ft (1)
(1) Recut threads before re-use and insert bolts with screw locking compound. The installation time, including torque inspection, is a maximum of 10 minutes.		

ENGINE COOLING SYSTEM SPECIFICATIONS (1.4L LUV)

Engine Cooling System Specifications (1.4L LUV)

Application	Specification	
	Metric	English
Cooling System		
• Water Pump Design	Rotary Pump	

• Cooling Filling Quantity	6.2 L	6.6 quart
Thermostat (Grid Controlled)		
• Thermostat Opening 0V	103°C	217°F
• Thermostat Opening 12V	80°C	176°F

ENGINE COOLING SYSTEM SPECIFICATIONS (1.8L LUW AND LWE)

Engine Cooling System Specifications (1.8L LUW and LWE)

Application	Specification	
	Metric	English
Cooling System		
Water Pump Design	Rotary Pump	
Flow (engine outlet 6000 min $^{-1}$, Thermostat fully open)	165 l/min	43.588 US gal
Coolant filling quantity	5.9L	5.917 quart
Thermostat		
Thermostat Opening- Electrical	90°C	194°F
Thermostat Opening- Thermic	105°C	221°F

SCHEMATIC WIRING DIAGRAMS

ENGINE HEATING/COOLING WIRING SCHEMATICS

Engine Cooling Wiring Schematics

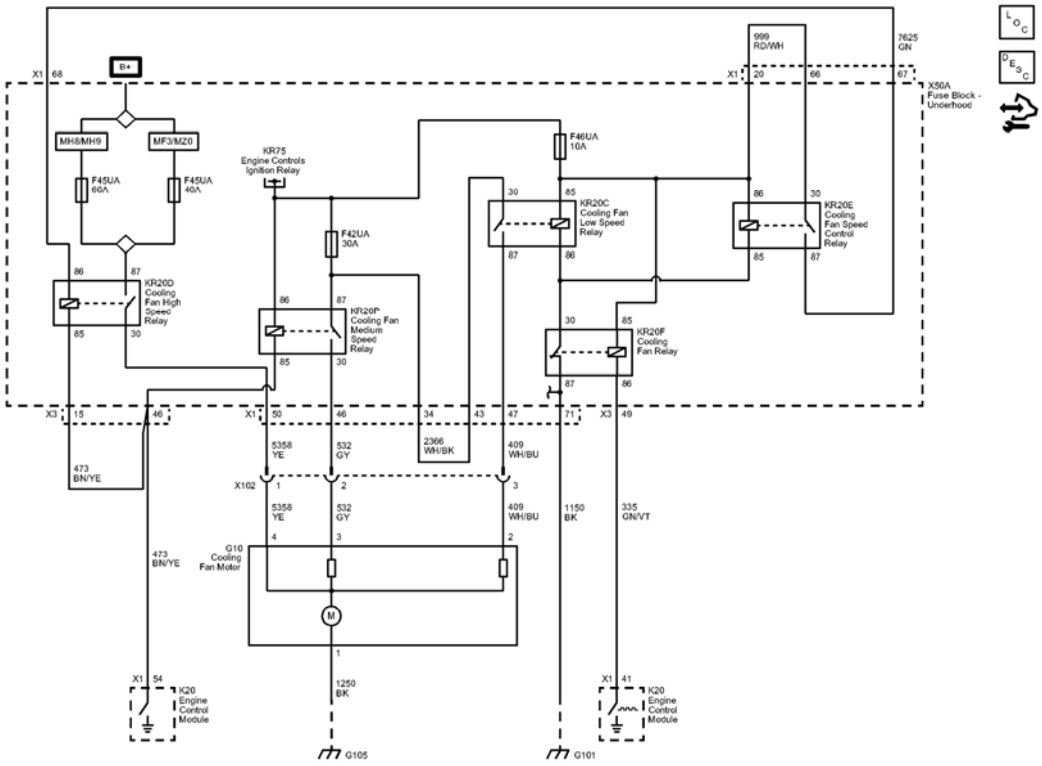

Fig. 1: Engine Cooling Wiring Schematics
Courtesy of GENERAL MOTORS COMPANY

Callout	Component Name
CAV_86	86
CAV_87	87
CAV_30	30
CAV_85	85
CAV_86	86
CAV_87	87
CAV_30	30
CAV_85	85
CAV_30	30
CAV_85	85
CAV_86	86
CAV_87	87
CAV_30	30
CAV_85	85
CAV_86	86
CAV_87	87
CAV_86	86

CAV_30	30
CAV_87	87
CAV_85	85
7625	Cooling Fan Motor Supply Voltage (4)
7625_GN	7625 GN
CAV_67	67
CAV_68	68
CONN_X1	X1
999_RD/WH	999 RD/WH
CAV_66	66
CAV_20	20
CONN_X1	X1
MH8	TRANSMISSION-AUTO 6 SPD, HMD, X23F
MH9	TRANSMISSION-AUTO 6 SPD, HMD, X24F
MF3	TRANSMISSION-MAN 6 SPD, OPEL, 76.5 MM, 4.273 1ST, 2.158 2ND, 1.302 3RD, 0.959 4TH, 0.744 5TH, 0.614 6TH, M32-6 WR
MZ0	TRANSMISSION-MAN 6 SPD, OPEL, 76.5 MM, 3.82 1ST, 0.74 6TH, (M32 WR)
473	High Speed Cooling Fan Relay Control
473_BN/YE	473 BN/YE
CAV 15	15
CONN_X3	X3
473_BN/YE	473 BN/YE
CAV_54	54
CONN_X1	X1
CAV_46	46
5358	Cooling Fan Motor Supply Voltage (3)
5358_YE	5358 YE
CAV_4	4
CAV_50	50
CONN_X1	X1
532	Cooling Fan Motor Supply Voltage (2)
532_GY	532 GY
CAV_3	3
CAV_46	46
2366	Cooling Fan Control Relay Speed Signal
2366_WH/BK	2366 WH/BK
CAV_43	43
CAV_34	34
409	Cooling Fan Motor Supply Voltage (1)
409_WH/BU	409 WH/BU

CAV_2	2
CAV_47	47
5358_YE	5358 YE
532_GY	532 GY
409_WH/BU	409 WH/BU
1150	Ground
1150_BK	1150 BK
CAV_71	71
335	Low Speed Cooling Fan Relay Control
335_GN/VT	335 GN/VT
CAV_41	41
CONN_X1	X1
CAV 49	49
CONN_X3	X3
1250	Ground
1250_BK	1250 BK
CAV_1	1
X102	X102
CAV_1	1
CAV_2	2
CAV_3	3
G101	G101
G105	G105
F45UA	F45UA 60A
F45UA	F45UA 40A
F42UA	F42UA 30A
F46UA	F46UA 10A
X102	X102
KR20E	
KR20F	
K20	
X50A	
G10	
KR20C	
KR20P	
KR75	
K20	
KR20D	

DIAGNOSTIC INFORMATION AND PROCEDURES

DIAGNOSTIC CODE INDEX

DIAGNOSTIC CODE INDEX

DTC	Description
DTC P00B3 or P00B4	DTC P00B3 Radiator Coolant Temperature (RCT) Sensor Circuit Low Voltage DTC P00B4 Radiator Coolant Temperature (RCT) Sensor Circuit High Voltage
DTC P00B6	DTC P00B6 Radiator Coolant Temperature (RCT)-Engine Coolant Temperature (ECT) Not Plausible
DTC P00B7	DTC P00B7 Engine Coolant Flow Insufficient
DTC P0480, P0481, P0691, P0692, P0693, or P0694	DTC P0480 Cooling Fan Relay 1 Control Circuit DTC P0481 Cooling Fan Relays 2 and 3 Control Circuit DTC P0691 Cooling Fan Relay 1 Control Circuit Low Voltage DTC P0692 Cooling Fan Relay 1 Control Circuit High Voltage DTC P0693 Cooling Fan Relays 2 and 3 Control Circuit Low Voltage DTC P0694 Cooling Fan Relays 2 and 3 Control Circuit High Voltage
DTC P0597-P0599	DTC P0597 Engine Coolant Thermostat Heater Control Circuit DTC P0598 Engine Coolant Thermostat Heater Control Circuit Low Voltage DTC P0599 Engine Coolant Thermostat Heater Control Circuit High Voltage
DTC P2181	DTC P2181 Engine Cooling System Performance

DTC P00B3 OR P00B4

Diagnostic Instructions

- Perform the **Diagnostic System Check - Vehicle** prior to using this diagnostic procedure.
- Review **Strategy Based Diagnosis** for an overview of the diagnostic approach.
- **Diagnostic Procedure Instructions** provides an overview of each diagnostic category.

DTC Descriptors

DTC P00B3

Radiator Coolant Temperature (RCT) Sensor Circuit Low Voltage

DTC P00B4

Radiator Coolant Temperature (RCT) Sensor Circuit High Voltage

Diagnostic Fault Information

Circuit	Short to Ground	Open/High Resistance	Short to Voltage	Signal Performance
Signal	P00B3	P00B4	P00B4*	P00B6
Low Reference	-	P00B4	-	P00B6
* Internal ECM or sensor damage may occur if the circuit is shorted to B+.				

Typical Scan Tool Data

Radiator Coolant Temperature Sensor

Circuit	Short to Ground	Open	Short to Voltage
Operating Conditions: Engine Running **Parameter Normal Range:** Varies with ambient temperature			
Signal	140°C (284°F)	-40°C (-40°F)	-40°C (-40°F)*
Low Reference	-	-40°C (-40°F)	-
* Internal ECM or sensor damage may occur if the circuit is shorted to B+.			

Circuit/System Description

NOTE: The radiator coolant temperature sensor is referred to as B34B Engine Coolant Temperature Sensor 2 in schematics and other areas.

The radiator coolant temperature (RCT) sensor is a variable resistor that measures the temperature of the engine coolant in the radiator. This diagnostic checks for an open, short to ground or an intermittent circuit condition between the engine control module (ECM) and RCT sensor.

The following table illustrates the difference between temperature, resistance, and voltage:

RCT	RCT Resistance	RCT Signal Voltage
Cold	High	High
Warm	Low	Low

Conditions for Running the DTC

P00B3

- The engine run time is greater than 10 s.
- The intake air temperature (IAT) is colder than 70°C (158°F).
- The DTC runs continuously when the above conditions are met.

P00B4

- The engine run time is greater than 60 s.
- The intake air temperature (IAT) is warmer than -7°C (19°F).
- The DTC runs continuously when the above conditions are met.

Conditions for Setting the DTC

P00B3

The ECM detects that the RCT sensor is warmer than 149°C (300°F) for greater than 10 s.

P00B4

NOTE: The scan tool only displays to -40°C (-40°F).

The ECM detects that the RCT sensor is colder than -60°C (-76°F) for greater than 10 s.

Action Taken When the DTC Sets

DTC P00B3 and P00B4 are Type B DTCs.

Conditions for Clearing the MIL/DTC

DTC P00B3 and P00B4 are Type B DTCs.

Diagnostic Aids

NOTE: The engine coolant temperature (ECT) sensor is mounted on the engine and the radiator coolant temperature (RCT) sensor is mounted on the radiator.

- As the thermostat opens, the RCT sensor temperature should rise steadily, then stabilize once the thermostat opens completely.
- Test the RCT sensor at various temperature levels in order to evaluate the possibility of a skewed sensor.
- If the vehicle has sat for greater than 8 hours, the ECT sensor and the RCT sensor values should display within 3°C (5°F).

Reference Information

Schematic Reference

Engine Controls Schematics

Connector End View Reference

COMPONENT CONNECTOR END VIEWS - INDEX

Electrical Information Reference

- **Circuit Testing**
- **Connector Repairs**
- **Testing for Intermittent Conditions and Poor Connections**
- **Wiring Repairs**

DTC Type Reference

Powertrain Diagnostic Trouble Code (DTC) Type Definitions

Scan Tool Reference

Control Module References for scan tool information

Circuit/System Verification

1. Ignition ON.
2. Verify the scan tool Radiator Coolant Temperature Sensor parameter is between -39 to + 120°C (-38 to +248°F) and changes with engine run time.
    - **If not between -39 to + 120°C (-38 to +248°F) or does not change**

      Refer to Circuit/System Testing below.

    - **If between -39 to + 120°C (-38 to +248°F) and changes**
3. Operate the vehicle within the Conditions for Running the DTC. You may also operate the vehicle within the conditions that you observed from the Freeze Frame/Failure Records data.
4. Verify the DTC does not set.
    - **If the DTC sets**

      Refer to Circuit/System Testing below.

    - **If the DTC does not set**
5. All OK.

Circuit/System Testing

1. Ignition OFF and all vehicle systems OFF, disconnect the harness connector at the B34B Engine Coolant Temperature Sensor. It may take up to 2 min for all vehicle systems to power down.
2. Test for less than 5 ohms between the low reference circuit terminal 1 and ground.
    - **If 5 ohms or greater**
    1. Ignition OFF, disconnect the harness connector at the K20 Engine Control Module.
    2. Test for less than 2 ohms in the low reference circuit end to end.
        - If 2 ohms or greater, repair the open/high resistance in the circuit.
        - If less than 2 ohms, replace the K20 Engine Control Module.

- **If less than 5 ohms**

3. Ignition ON.
4. Verify the scan tool Radiator Coolant Temperature Sensor parameter is colder than -39°C (-38°F).
   - **If warmer than -39°C (-38°F)**
     1. Ignition OFF, disconnect the harness connector at the K20 Engine Control Module.
     2. Test for infinite resistance between the signal circuit terminal 2 and ground.
        - If less than infinite resistance, repair the short to ground on the circuit.
        - If infinite resistance, replace the K20 Engine Control Module.
   - **If colder than -39°C (-38°F)**
5. Install a 3 A fused jumper wire between the signal circuit terminal 2 and the low reference circuit terminal 1.
6. Verify the scan tool Radiator Coolant Temperature sensor parameter is warmer than 137°C (280°F).
   - **If colder than 137°C (280°F)**
     1. Ignition OFF, remove the jumper wire, disconnect the harness connector at the K20 Engine Control Module.
     2. Test for less than 1 V between the signal circuit and ground.
        - If 1 V or greater, repair the short to voltage on the circuit.
        - If less than 1 V
     3. Ignition OFF.
     4. Test for less than 2 ohms in the signal circuit end to end.
        - If 2 ohms or greater, repair the open/high resistance in the circuit.
        - If less than 2 ohms, replace the K20 Engine Control Module.
   - **If warmer than 137°C (280°F)**
7. Test or replace the B34B Engine Coolant Temperature Sensor.

Component Testing

1. Ignition OFF, disconnect the harness connector at the B34B Engine Coolant Temperature Sensor.
2. Test the RCT sensor by varying the sensor temperature while monitoring the sensor resistance. Compare the readings with the **Temperature Versus Resistance** table. The resistance values should be in range of the table values.
   - **If not within the specified range**
   - Replace the B34B Engine Coolant Temperature Sensor.
   - **If within the specified range**
3. Test for infinite resistance between each terminal and the sensor housing.
   - **If less than infinite resistance**

     Replace the B34B Engine Coolant Temperature Sensor.

   - **If infinite resistance**

4. All OK.

Repair Instructions

Perform the **Diagnostic Repair Verification** after completing the diagnostic procedure.

- **Engine Coolant Temperature Sensor Replacement (Radiator)** , **Engine Coolant Temperature Sensor Replacement (Water Outlet)** for radiator coolant temperature sensor replacement.
- **Engine Control Module Replacement** for engine control module replacement, setup, and programming.

DTC P00B6

Diagnostic Instructions

- Perform the **Diagnostic System Check - Vehicle** prior to using this diagnostic procedure.
- Review **Strategy Based Diagnosis** for an overview of the diagnostic approach.
- **Diagnostic Procedure Instructions** provides an overview of each diagnostic category.

DTC Descriptor

DTC P00B6

Radiator Coolant Temperature (RCT)-Engine Coolant Temperature (ECT) Not Plausible

Diagnostic Fault Information

Circuit	Short to Ground	Open/High Resistance	Short to Voltage	Signal Performance
Coolant Temperature Sensor Signal	P00B3	P00B4	P00B4*	P00B6
Low Reference	-	P00B4	-	P00B6
* Internal ECM or sensor damage may occur if the circuit is shorted to B+.				

Typical Scan Tool Data

Radiator Coolant Temperature Sensor

Circuit	Short to Ground	Open	Short to Voltage
Operating Conditions: Engine Running in Closed Loop **Parameter Normal Range:** Varies with ambient temperature			
Coolant Temperature Sensor Signal	140°C (284°F)	-40°C (-40°F)	-40°C (-40°F)*
Low Reference	-	-40°C (-40°F)	-40°C (-40°F)*
* Internal ECM or sensor damage may occur if the circuit is shorted to B+.			

Circuit Description

The engine coolant temperature sensor is a variable resistor that measures the temperature of the engine coolant in the radiator. The engine control module (ECM) supplies 5 volts to the engine coolant temperature signal circuit and supplies a ground to the low reference circuit. The purpose of this diagnostic is to determine if the input from the RCT sensor is skewed warmer than normal. The internal clock of the ECM will record the amount of time the engine is OFF. If the required engine OFF time is met at start-up, the ECM will compare the temperature difference between the actual measured RCT and ECT sensors.

The following table illustrates the difference between temperature, resistance, and voltage:

RCT	RCT Resistance	RCT Signal Voltage
Cold	High	High
Warm	Low	Low

Conditions for Running the DTC

- DTCs P00B3, P00B4, P00B6, P0112, P0113, P0117, P0118, P0502, P0503 or P2610 are not set.
- The vehicle has been OFF for greater than 8 hours before vehicle ON.
- The vehicle is ON, or the engine is running.
- The intake air temperature (IAT) is warmer than -7°C (19°F).
- The fuel level is greater than 10 percent.
- The DTC runs once per ignition cycle when the above conditions are met.

Conditions for Setting the DTC

The ECM determines the absolute difference of temperature between the RCT start up temperature and ECT start up temperature is greater than 20°C (68°F).

Action Taken When the DTC Sets

DTC P00B6 is a Type B DTC.

Conditions for Clearing the MIL/DTC

DTC P00B6 is a Type B DTC.

Diagnostic Aids

- As the thermostat opens, the radiator coolant temperature sensor signal should rise steadily, then stabilize once the thermostat opens completely.
- Inspect for the correct operation of the engine cooling system and verify the correct coolant level.

Reference Information

Schematic Reference

Engine Controls Schematics

Connector End View Reference

COMPONENT CONNECTOR END VIEWS - INDEX

Electrical Information Reference

- **Circuit Testing**
- **Connector Repairs**
- **Testing for Intermittent Conditions and Poor Connections**
- **Wiring Repairs**

DTC Type Reference

Powertrain Diagnostic Trouble Code (DTC) Type Definitions

Scan Tool Reference

Control Module References for scan tool information

Circuit/System Verification

1. Engine running, observe the DTC information with a scan tool. DTC P00B3, P00B4, P0117, P0118, P0597, P0598, or P0599 should not be set.
    - If a DTC is set, refer to **Diagnostic Trouble Code (DTC) List - Vehicle** for further diagnosis.
2. Verify the coolant in the radiator surge tank is at the correct level and there are no engine coolant leaks. Refer to **Cooling System Draining and Filling (Static Fill)**, **Cooling System Draining and Filling (GE-47716 Fill)**, and **Loss of Coolant**.
3. Engine idling for 15 minutes with the A/C OFF.

NOTE: Depending on ambient temperature, it may take up to 4 minutes for the temperatures to equalize.

4. Command the engine coolant thermostat heater to 100 percent with a scan tool. Increase the engine speed to 3, 000 RPM. Observe the scan tool radiator coolant temperature sensor and ECT sensor parameters. The radiator coolant temperature sensor and the ECT sensor parameters should be within 20°C (68°F).
5. Operate the vehicle within the conditions for running the DTC to verify the DTC does not reset. You may also operate the vehicle within the conditions that you observed from the freeze frame/failure records data.

Circuit/System Testing

1. Vehicle OFF, disconnect the harness connector at the B34B engine coolant temperature sensor.
2. Vehicle OFF, all systems OFF. This may take up to 2 minutes for all vehicle systems to power down. Test for less than 5 ohms between the low reference circuit terminal 1 and ground.
    - If greater than the specified range, test the low reference circuit for an open/high resistance. If the

circuit tests normal, replace the K20 engine control module.

3. Vehicle ON, verify the scan tool Radiator Coolant Temperature Sensor parameter is at -40°C (-40°F).
   - If warmer than the specified range, test the signal circuit terminal 2 for a short to ground. If the circuit tests normal, replace the K20 engine control module.

NOTE: If the fuse in the jumper wire opens, the signal circuit is shorted to a voltage and the sensor may be damaged.

4. Install a 1 A fused jumper wire between the signal circuit terminal 2 and the low reference circuit terminal 1. Verify the scan tool Radiator Coolant Temperature Sensor parameter is at 140°C (284°F).
   - If less than specified range, test the signal circuit for a short to voltage or an open/high resistance. If the circuit tests normal, replace the K20 engine control module.
5. If all circuits test normal, test or replace the B34B engine coolant temperature sensor.

Component Testing

1. Vehicle OFF, remove the B34B engine coolant temperature sensor.

NOTE: A thermometer can be used to the used to test the sensor off the vehicle.

2. Test the engine coolant temperature sensor by varying the sensor temperature while monitoring the sensor resistance. Compare the readings with the **Temperature Versus Resistance** table and verify that the resistance is within 5 percent of the specification.
   - If not within the specified range, replace the B34B engine coolant temperature sensor.

Repair Instructions

Perform the **Diagnostic Repair Verification** after completing the diagnostic procedure.

- **Engine Coolant Temperature Sensor Replacement (Radiator)** , **Engine Coolant Temperature Sensor Replacement (Water Outlet)**
- **Engine Control Module Replacement** for ECM replacement, setup, and programming

DTC P00B7

Diagnostic Instructions

- Perform the **Diagnostic System Check - Vehicle** prior to using this diagnostic procedure.
- Review **Strategy Based Diagnosis** for an overview of the diagnostic approach.
- **Diagnostic Procedure Instructions** provides an overview of each diagnostic category.

DTC Descriptors

DTC P00B7

Engine Coolant Flow Insufficient

Diagnostic Fault Information

Circuit	Short to Ground	Open/High Resistance	Short to Voltage	Signal Performance
Coolant Temperature Sensor Signal	P00B3	P00B4	P00B4*	P00B6
Low Reference	-	P00B4	P00B4*	P00B6
* Internal ECM or sensor damage may occur if the circuit is shorted to B+.				

Typical Scan Tool Data

Radiator Coolant Temperature Sensor

Circuit	Short to Ground	Open	Short to Voltage
Operating Conditions: Engine Running in Closed Loop **Parameter Normal Range:** Varies with ambient temperature			
Radiator Coolant Temperature Sensor Signal	140°C (284°F)	-40°C (-40°F)	-40°C (-40°F)*
Low Reference	-	-40°C (-40°F)	-40°C (-40°F)*
* Internal ECM or sensor damage may occur if the circuit is shorted to B+.			

Circuit Description

The engine control module (ECM) monitors the temperature of the engine radiator coolant. The ECM controls the thermostat with a pulse width modulated (PWM) signal. The ECM compares the radiator coolant temperature to the engine coolant temperature in order to determine if there sufficient coolant flow through the thermostat.

Conditions for Running the DTC

- DTCs P00B3, P00B4, P00B6, P0116, P0117, and P0118 are not set.
- The engine run time is greater than 5 m.

OR

- The engine coolant temperature is greater than 105°C (221°F).
- The DTC runs continuously when the above conditions are met.

Conditions for Setting the DTC

NOTE: The scan tool display range is between -40 and + 150°C (-40 and +302°F).

The ECM detects the difference between the RCT sensor and the ECT sensor is greater than 30°C (86°F) when the ECT sensor is warmer than 117°C (242°F) for greater than 5 s.

Action Taken When the DTC Sets

DTC P00B7 is a Type B DTC.

Conditions for Clearing the MIL/DTC

DTC P00B7 is a Type B DTC.

Diagnostic Aids

- The thermostat has a mechanical fail-safe in case of an electrical condition with the thermostat heater. The mechanical thermostat will open at approximately 80°C (176°F). The mechanical thermostat will cycle from approximately 85°C (185°F) to approximately 102°C (215°F).
- A resistance condition in the RCT sensor circuits may cause this DTC. This condition results in a greater voltage on the RCT sensor signal circuit, which is interpreted by the ECM as a colder RCT.

Reference Information

Schematic Reference

Engine Controls Schematics

Electrical Information Reference

- **Circuit Testing**
- **Connector Repairs**
- **Testing for Intermittent Conditions and Poor Connections**
- **Wiring Repairs**

DTC Type Reference

Powertrain Diagnostic Trouble Code (DTC) Type Definitions

Scan Tool Reference

Control Module References for scan tool information

Circuit/System Verification

1. Engine Running, observe the DTC information with a scan tool. DTC P00B3, P00B4, P00B6, P0117, P0118, P0597, P0598, and P0599 should not be set.
    - If a DTC is set, refer to **Diagnostic Trouble Code (DTC) List - Vehicle** for further diagnosis.
2. Verify the coolant in the radiator surge tank is at the correct level and there are no engine coolant leaks. Refer to **Cooling System Draining and Filling (Static Fill)**, **Cooling System Draining and Filling (GE-47716 Fill)**, and **Loss of Coolant**.
3. Verify the engine cooling fan operates. Refer to **Cooling Fan Inoperative**.

4. Engine idling for 15 minutes with the A/C OFF.

NOTE: Depending on ambient temperature, it may take up to 4 minutes for the temperature to decrease less than the specified value.

5. Command the Engine Coolant Thermostat Heater to 100 percent with a scan tool. Increase the engine speed to 3, 000 RPM. Observe the scan tool ECT sensor parameter. The temperature should decrease to less than 85°C (185°F).
6. Operate the vehicle within the conditions for running the DTC. You may also operate the vehicle within the conditions that you observed from the freeze frame/failure records data.

Circuit/System Testing

1. Vehicle OFF, inspect the cooling system for the conditions below. Refer to **Symptoms - Engine Cooling**.
   - Weak coolant solution
   - Obstructed radiator air flow or bent radiator fins
   - Blocked cooling system passages
   - Radiator hoses that are restricted, collapsed, or deteriorated
   - Damaged water pump and or belt
   - Loss of cooling system pressure
     - Leaking surge tank cap
     - Radiator hoses
   - Cylinder head or an engine block that is cracked or plugged
   - If you find any of the above conditions, repair as necessary.
2. If all conditions test normal, replace the E41 engine coolant thermostat heater.

Repair Instructions

Perform the **Diagnostic Repair Verification** after completing the diagnostic procedure.

Engine Coolant Thermostat Replacement

DTC P0480, P0481, P0691, P0692, P0693, OR P0694

Diagnostic Instructions

- Perform the **Diagnostic System Check - Vehicle** prior to using this diagnostic procedure.
- Review **Strategy Based Diagnosis** for an overview of the diagnostic approach.
- **Diagnostic Procedure Instructions** provides an overview of each diagnostic category.

DTC Descriptors

DTC P0480

Cooling Fan Relay 1 Control Circuit

DTC P0481

Cooling Fan Relays 2 and 3 Control Circuit

DTC P0691

Cooling Fan Relay 1 Control Circuit Low Voltage

DTC P0692

Cooling Fan Relay 1 Control Circuit High Voltage

DTC P0693

Cooling Fan Relays 2 and 3 Control Circuit Low Voltage

DTC P0694

Cooling Fan Relays 2 and 3 Control Circuit High Voltage

Diagnostic Fault Information

KR20C Cooling Fan Low Speed Relay

Circuit	Short to Ground	Open/High Resistance	Short to Voltage	Signal Performance
Relay Coil Ignition	P0480, P0691	2	-	-
Relay Switch B+	1	2	-	-
Relay Coil Control	3	2	4	-
Relay Controlled Output	1	2	3	-

1. Low and medium speed fan inoperative without a DTC.
2. Low speed fan inoperative without a DTC.
3. Low speed fan always ON without a DTC.
4. Low and high speed fan inoperative without a DTC.

KR20D Cooling Fan High Speed Relay

Circuit	Short to Ground	Open/High Resistance	Short to Voltage	Signal Performance
Relay Coil Ignition	P0480, P0691	2	1	-
Relay Switch B+	2	2	-	-
Relay Control	P0481 or P0693	P0481	P0481 or P0694	-
Relay Controlled Output	2	2	3	-

1. Medium speed fan replaced by high speed fan without a DTC.
2. High speed fan inoperative without a DTC.
3. High speed fan always ON without a DTC.

KR20E Cooling Fan Speed Control Relay

Circuit	Short to Ground	Open/High Resistance	Short to Voltage	Signal Performance
Relay Coil Ignition	P0480, P0691	1	-	-
Relay Switch Ignition	P0480, P0691	1	-	-
Relay Coil Control	2	1	3	-
Relay Controlled Output	1	1	4	-

1. High speed fan inoperative without a DTC.
2. Low speed fan always ON without a DTC.
3. Low and high speed fan inoperative without a DTC.
4. Medium speed fan inoperative without a DTC.

KR20F Cooling Fan Relay

Circuit	Short to Ground	Open/High Resistance	Short to Voltage	Signal Performance
Relay Coil Ignition	P0480, P0691	P0480	-	-
Relay Switch Ignition	1	2	-	-
Relay Control	P0480 or P0691	P0480	P0480 or P0692	-
Relay Controlled Output	-	2	-	-

1. Low speed fan always ON without a DTC.
2. Low speed fan and high speed fan inoperative.

KR20P Cooling Fan Medium Speed Relay

Circuit	Short to Ground	Open/High Resistance	Short to Voltage	Signal Performance
Relay Coil Ignition	-	P0481	-	-
Relay Switch B+	1	2	-	-
Relay Control	P0481 or P0693	P0481	P0481 or P0694	-
Relay Controlled Output	1	2	3	-

1. Low and medium speed fan inoperative without a DTC.
2. Medium speed fan inoperative without a DTC.
3. Medium speed fan always ON without a DTC.

Circuit/System Description

The engine cooling fan system is composed of one cooling fan, a series of 5 relays, the engine control module (ECM), and the associated wiring. The cooling fan assembly includes two resistors. This combination of components enables the ECM to operate the cooling fan at 3 speeds using two fan control circuits.

Conditions for Running the DTC

- The ignition voltage is greater 11 volts.
- The ECM has commanded the output driver ON and OFF at least once during the ignition cycle.
- The DTCs run continuously when the conditions above are met.

Conditions for Setting the DTC

The commanded state of the ECM driver and the actual state of the control circuit do not match for greater than 5 seconds.

Action Taken When the DTC Sets

DTCs P0480 P0481, P0691, P0692, P0693, and P0694 are Type B DTCs.

Conditions for Clearing the MIL/DTC

DTCs P0480 P0481, P0691, P0692, P0693, and P0694 are Type B DTCs.

Diagnostic Aids

- The ECM has the capability of providing command to the fan relays even when a scan tool output control is being used. Always refer to the scan tool Cooling Fan Relay Command parameters to know which fans are being commanded ON by the ECM.
- The scan tool cooling fan output control operates as follows:
  - Cooling Fan Relay 1 operates the fan at a low speed
  - Cooling Fan Relay 2 and 3 operates the fan at a medium speed
  - Cooling Fan Relay 1, 2 and 3 operates the fan at a high speed
- When disconnecting or removing fuses and relays from a fuse block, always inspect the component electrical terminals for corrosion and the correct orientation in the fuse block. Test the mating electrical terminals for tightness.

Reference Information

Schematic Reference

Engine Heating/Cooling Schematics

Connector End View Reference

- **COMPONENT CONNECTOR END VIEWS - INDEX**
- **Electrical Center Identification Views**

Description and Operation

Cooling Fan Description and Operation

Electrical Information Reference

- **Circuit Testing**
- **Connector Repairs**
- **Testing for Intermittent Conditions and Poor Connections**
- **Wiring Repairs**

DTC Type Reference

Powertrain Diagnostic Trouble Code (DTC) Type Definitions

Scan Tool Reference

Control Module References for scan tool information

Circuit/System Verification

1. Ignition ON.
2. Verify an audible click is heard or felt from each cooling fan relay when commanding the cooling fan ON and OFF with a scan tool.
    - **If a click is not heard or felt at each of the relays**

      Refer to Circuit/System Testing below.

    - **If a click is heard or felt at each of the relays**
3. Operate the vehicle within the Conditions for Running the DTC to verify the DTC does not reset. You may also operate the vehicle within the conditions that you observed from the Freeze Frame/Failure Records data.
4. Verify the DTC does not set.
    - **If the DTC sets**

      Refer to Circuit/System Testing below.

    - **If the DTC does not set**
5. All OK.

Circuit/System Testing

1. Ignition OFF, disconnect the KR20 cooling fan relays listed below:
    - KR20F Cooling Fan Relay
    - KR20P Cooling Fan Medium Speed Relay

- KR20D Cooling Fan High Speed Relay

NOTE: The following test must be performed on each of the relay coil ignition circuits.

2. Ignition ON, verify that a test lamp illuminates between ground and the relay coil ignition circuit terminal listed below:
   - KR20F Cooling Fan Relay terminal 85
   - KR20P Cooling Fan Medium Speed Relay terminal 1
   - **If the test lamp does not illuminate and the fuse is good**
   1. Ignition OFF, and all vehicle systems OFF, it may take up to 2 minutes for all vehicle systems to power down.
   2. Test for less than 2 ohms in the ignition circuit of the appropriate KR20 Cooling Fan Relay, end to end.
      - If 2 ohms or greater, repair the open/high resistance in the circuit.
      - If less than 2 ohms, verify the fuse is not open and there is voltage at the fuse.
   - **If the test lamp does not illuminate and the circuit fuse is open**
   1. Ignition OFF, and all vehicle systems OFF, it may take up to 2 minutes for all vehicle systems to power down.
   2. Test for infinite resistance between the relay coil ignition circuits listed below and ground:
      - KR20F Cooling Fan Relay terminal 85
      - KR20D Cooling Fan High Speed Relay terminal 1
      - If less than infinite resistance, repair the short to ground in the circuit.
      - If infinite resistance, test all of the appropriate KR20 Cooling Fan Relays for a short and replace as necessary.
   - **If the test lamp illuminates**
3. Ignition OFF, remove the test lamp, ignition ON.

NOTE: The following tests must be performed on all three fan relay control circuits.

4. Connect a DMM, set on the diode setting, between a control circuit terminal listed below and ground:
   - KR20F Cooling Fan Relay terminal 86
   - KR20P Cooling Fan Medium Speed Relay terminal 2
   - KR20D Cooling Fan High Speed Relay terminal 2
5. Verify the DMM reading is greater than 2.5 V or displays O.L.
   - **If 2.5 V or less**
   1. Ignition OFF, and all vehicle systems OFF, it may take up to 2 minutes for all vehicle systems to power down. Disconnect the X1 harness connector at the K20 Engine Control Module.
   2. Test for infinite resistance between the appropriate relay coil control circuit and ground.

- If less than infinite resistance, repair the short to ground on the circuit.
- If infinite resistance, replace the K20 Engine Control Module.

- **If greater than 2.5 V or displays O.L.**

NOTE: The following test must be performed on all three fan relay circuits.

6. Verify the DMM reading is less than 1 V when commanding the Cooling Fan Relays ON with a scan tool.
   - **If 1 V or greater**
   1. Ignition OFF, disconnect the X1 harness connector at the K20 Engine Control Module, ignition ON.
   2. Test for less than 1 V between the appropriate KR20 Cooling Fan Relay control circuit and ground.
      - If 1 V or greater, repair the short to voltage on the circuit.
      - If less than 1 V.
   3. Ignition OFF.
   4. Test for less than 2 ohms in the appropriate KR20 Cooling Fan Relay control circuit end to end.
      - If 2 ohms or greater, repair the open/high resistance in the circuit.
      - If less than 2 ohms, replace the K20 Engine Control Module.
   - **If less than 1 V**
7. Test or replace the appropriate KR20 Cooling Fan Relay.

Component Testing

1. Ignition OFF.
2. Disconnect a KR20 Cooling Fan Relay.
3. Test for 70-110 ohms between terminals 85/2 and 86/1. 95-135 ohms for the KR20F Cooling Fan Relay.
   - **If less than or greater than the specified range**

     Replace the KR20 Cooling Fan Relay.

   - **If within the specified range**
4. Test for infinite resistance between the following terminals:
   - 30/3 and 86/1
   - 30/3 and 87/5
   - 30/3 and 85/2
   - 85/2 and 87/5
   - **If less than infinite resistance**

     Replace the KR20 Cooling Fan Relay.

   - **If infinite resistance**
5. Install a 20 A fused jumper wire between relay terminal 85/2 and 12 V.

6. Install a jumper wire between relay terminal 86/1 and ground.
7. Test for less than 2 ohms between terminals 30/3 and 87/5.
   - **If 2 ohms or greater**

     Replace the KR20 Cooling Fan Relay.

   - **If less than 2 ohms**
8. All OK.

Repair Instructions

Perform the **Diagnostic Repair Verification** after completing the diagnostic procedure.

- **Relay Replacement (Within an Electrical Center)** , **Relay Replacement (Attached to Wire Harness)**
- **Control Module References** for ECM replacement, setup, and programming

DTC P0597-P0599

Diagnostic Instructions

- Perform the **Diagnostic System Check - Vehicle** prior to using this diagnostic procedure.
- Review **Strategy Based Diagnosis** for an overview of the diagnostic approach.
- **Diagnostic Procedure Instructions** provides an overview of each diagnostic category.

DTC Descriptor

DTC P0597

Engine Coolant Thermostat Heater Control Circuit

DTC P0598

Engine Coolant Thermostat Heater Control Circuit Low Voltage

DTC P0599

Engine Coolant Thermostat Heater Control Circuit High Voltage

Diagnostic Fault Information

Circuit	Short to Ground	Open/High Resistance	Short to Voltage	Signal Performance
Voltage	P0031, P0037, P0135, P0141, P0443, P0597,	P0031, P0037, P0135, P0141, P0443, P0597,	-	-

	P0598*, P0660, P0661	P0598, P0660, P0661		
Thermostat Control Circuit	P0458, P0598	P0597	P0599	-
*Opens the fuse that supplies voltage to the engine coolant thermostat				

Circuit/System Description

The engine control module (ECM) controls the pulse width modulated (PWM) thermostat. The thermostat controls coolant flow and regulates the engine operating temperature. Ignition voltage is supplied directly to the thermostat through a fuse. The ECM controls the thermostat by grounding the control circuit with a solid state device called a driver. The driver is equipped with a feedback circuit that is pulled-up to a voltage. The ECM can determine if the control circuit is open, shorted to ground, or shorted to a voltage by monitoring the feedback voltage.

Conditions for Running the DTCs

- The ignition is ON, or the engine is running.
- The DTCs run continuously once the above condition is met

Conditions for Setting the DTC

The ECM detects that the commanded state of the driver and the actual state of the control circuit do not match for greater than 15 seconds.

Action Taken When the DTC Sets

- DTCs P0597, P0598, and P0599 are Type B DTCs.
- The engine control module commands the engine cooling fans ON.

Conditions for Clearing the DTC

DTCs P0597, P0598, and P0599 are Type B DTCs.

Diagnostic Aids

- A low engine coolant level could cause the thermostat heater to overheat and set a DTC.
- The thermostat has a mechanical fail-safe in case of an electrical condition with the thermostat heater. The mechanical thermostat will open at approximately 80°C (176°F). The mechanical thermostat will cycle from approximately 85°C (185°F) to approximately 102°C (215°F).

Reference Information

Schematic Reference

Engine Controls Schematics

Connector End View Reference

COMPONENT CONNECTOR END VIEWS - INDEX

Electrical Information Reference

- **Circuit Testing**
- **Connector Repairs**
- **Testing for Intermittent Conditions and Poor Connections**
- **Wiring Repairs**

DTC Type Reference

Powertrain Diagnostic Trouble Code (DTC) Type Definitions

Scan Tool Reference

Control Module References for scan tool information

Circuit/System Verification

1. Verify the coolant in the radiator surge tank is at the correct level and there are no engine coolant leaks. **Loss of Coolant**, and **Cooling System Draining and Filling (Static Fill)**, **Cooling System Draining and Filling (GE-47716 Fill)**
    - **If the coolant level is not correct**

      Repair as necessary.

    - **If the coolant level is correct**
2. Ignition ON.
3. Verify the parameters listed below do not display Malfunction when commanding the Engine Coolant Thermostat Heater ON and OFF with a scan tool.
    - Engine Coolant Thermostat Heater Control Circuit Low Voltage Test Status
    - Engine Coolant Thermostat Heater Control Circuit Open Test Status
    - Engine Coolant Thermostat Heater Control Circuit High Voltage Test Status
        - **If Malfunction is displayed**

          Refer to Circuit/System Testing below.

        - **If Malfunction is not displayed**
4. Operate the vehicle within the conditions for running the DTC. You may also operate the vehicle within the conditions that you observed from the freeze frame/failure records data.
5. Verify the DTC does not set.
    - **If any DTC sets**

      Refer to Circuit/System Testing below.

- **If the DTC does not set**

6. All OK.

Circuit/System Testing

1. Ignition OFF, disconnect the harness connector at the E41 Engine Coolant Thermostat Heater, Ignition ON.
2. Verify that a test lamp illuminates between the ignition circuit terminal 2 and ground.
   - **If the test lamp does not illuminate and the circuit fuse is good**
   1. Ignition OFF, remove the test lamp.
   2. Test for less than 2 ohms in the ignition circuit end to end.
      - If 2 ohms or greater, repair the open/high resistance in the circuit.
      - If less than 2 ohms verify the fuse is not open and there is voltage at the fuse.
   - **If the test lamp does not illuminate and the circuit fuse is open**
   1. Ignition OFF, remove the test lamp.
   2. Test for infinite resistance between the ignition circuit and ground.
      - If less than infinite resistance, repair the short to ground in the circuit.
      - If infinite resistance, test all the components connected to fuse and replace as necessary.
   - **If the test lamp illuminates**
3. Verify that a test lamp does not illuminate between the ignition circuit terminal 2 and the control circuit terminal 1.
   - **If the test lamp illuminates**
   1. Ignition OFF, disconnect the harness connector at the K20 Engine Control Module.
   2. Test for infinite resistance between the control circuit and ground.
      - If less than infinite resistance, repair the short to ground on the circuit.
      - If infinite resistance, replace the K20 Engine Control Module.
      - **If the test lamp does not illuminate**
4. Remove the test lamp, command the E41 Engine Coolant Thermostat Heater ON with a scan tool.
5. Verify the scan tool E41 Engine Coolant Thermostat Heater Control Circuit High Voltage Test Status parameter displays OK.
   - **If OK is not displayed**
   1. Ignition OFF, disconnect the harness connector at the K20 Engine Control Module, ignition ON.
   2. Test for less than 1 V between the control circuit and ground.
      - If 1 V or greater, repair the short to voltage on the circuit.
      - If less than 1 V, replace the K20 Engine Control Module.
   - **If OK is displayed**
6. Install a 3 A fused jumper wire between the control circuit terminal 1 and the ignition circuit terminal 2.
7. Verify the scan tool Engine Coolant Thermostat Heater Circuit High Voltage Test Status parameter is displaying Malfunction when commanding the E41 Engine Coolant Thermostat Heater ON with a scan tool.

- **If Malfunction is not displayed**

1. Ignition OFF, remove the jumper wire, disconnect the harness connector at the K20 Engine Control Module.
2. Test for less than 2 ohms in the control circuit end to end.
   - If 2 ohms or greater, repair the open/high resistance in the circuit.
   - If less than 2 ohms replace the K20 Engine Control Module.

- **If Malfunction is displayed**

8. Test or replace the E41 Engine Coolant Thermostat Heater.

Repair Instructions

Perform the **Diagnostic Repair Verification** after completing the diagnostic procedure.

- **Engine Coolant Thermostat Replacement** for E41 engine coolant thermostat heater replacement.
- **Control Module References** for engine control module, replacement, programming, and setup.

DTC P2181

Diagnostic Instructions

- Perform the **Diagnostic System Check - Vehicle** prior to using this diagnostic procedure.
- Review **Strategy Based Diagnosis** for an overview of the diagnostic approach.
- **Diagnostic Procedure Instructions** provides an overview of each diagnostic category.

DTC Descriptor

DTC P2181

Engine Cooling System Performance

Circuit/System Description

The engine control module (ECM) monitors temperature difference between the engine coolant temperature (ECT) sensor and the radiator coolant temperature (RCT) sensor during a cold start-up. The purpose of this diagnostic is to analyze the engine coolant thermostat for being stuck open.

Conditions for Running the DTC

- DTCs P00B3, P00B4, P00B6, P0101, P0102, P0103, P0111, P0112, P0113, P0114, P0116, P0117, or P0118 are not set.
- The engine run time is between 70 s and 30 min.
- The engine coolant temperature (ECT) sensor at start-up is between -10°C to +59°C (14°F to 138°F).
- The intake air temperature (IAT) sensor is between -7°C to +60°C (-4°F to +140°F).
- The airflow into the engine is between 1 to 100 g/s.

- The DTC runs once per ignition cycle when the above conditions are met.

Conditions for Setting the DTC

The ECM detects the engine coolant thermostat is stuck open for at least 2.5 min.

Action Taken When the DTC Sets

DTC P2181 is a Type B DTC

Conditions for Clearing the DTC

DTC P2181 is a Type B DTC

Diagnostic Aids

- Insufficient vehicle interior heating is an indication of improper thermostat operation.
- The scan tool Desired ECT Sensor and the ECT Sensor parameters should be within 5°C (9°F) when the engine is at operating temperature.
- A resistance condition in the ECT sensor circuits may cause this DTC. This condition results in a greater voltage on the ECT sensor signal circuit, which is interpreted by the ECM as a colder ECT.

Reference Information

Schematic Reference

Engine Controls Schematics

Connector End View Reference

COMPONENT CONNECTOR END VIEWS - INDEX

Description and Operation

Cooling System Description and Operation (1.4L LUV), **Cooling System Description and Operation (1.8L LUW and LWE)**

Electrical Information Reference

- **Circuit Testing**
- **Connector Repairs**
- **Testing for Intermittent Conditions and Poor Connections**
- **Wiring Repairs**

Scan Tool Reference

Control Module References for scan tool information

Circuit/System Verification

1. Engine running, observe the DTC information with a scan tool. DTC P00B3, P00B4, P00B6, P0117, or P0118 should not be set.
   - If a DTC is set, refer to **Diagnostic Trouble Code (DTC) List - Vehicle** for further diagnosis.
2. Verify the coolant in the radiator surge tank is at the correct level and there are no engine coolant leaks. Refer to **Cooling System Draining and Filling (Static Fill)**, **Cooling System Draining and Filling (GE-47716 Fill)**, and **Loss of Coolant**.

NOTE: Depending on ambient temperature, it may take up to 4 min for the temperature to increase greater than the specified value.

3. Engine idling for 15 min with the A/C OFF. Verify the engine cooling fan is not ON at all times.
4. Command the Engine Coolant Thermostat Heater to 0 % with a scan tool. Increase the engine speed to 3, 000 RPM. Observe the scan tool ECT sensor parameter. The temperature should increase to greater than 102°C (215°F).
   - If less than the specified value, replace the E41 engine coolant thermostat heater.
5. Operate the vehicle within the conditions for running the DTC to verify the DTC does not reset. You may also operate the vehicle within the conditions that you observed from the freeze frame/failure records data.

Repair Instructions

Perform the **Diagnostic Repair Verification** after completing the diagnostic procedure.

Engine Coolant Thermostat Replacement

SYMPTOMS - ENGINE COOLING

Important Preliminary Inspections Before Starting

Before using the Symptom diagnosis, perform the following:

- Perform **Diagnostic System Check - Vehicle** and verify all of the following items:
  - Engine control module (ECM) and malfunction indicator lamp (MIL) are operating correctly.
  - There are no diagnostic trouble codes (DTCs) stored.
  - Scan tool data is within a normal operating range.
- Verify the customer concern.
- Perform the Visual/Physical Inspection in this section. The visual/physical inspection is extremely important, and can lead to correcting a condition without additional testing. It may also help reveal the cause of an intermittent condition.
- Locate the correct symptom. Perform the tests and inspections associated with the symptom.

Review the entire cooling system operation in order to familiarize yourself with the system functions. Refer to **Cooling Fan Description and Operation**, and **Cooling System Description and Operation (1.4L LUV)**, **Cooling System Description and Operation (1.8L LUW and LWE)**.

Visual/Physical Inspection

CAUTION: Use the connector test adapter kit EL-35616-F for any test that requires probing the following items:

- **The control module harness connectors**
- **The electrical center fuse/relay cavities**
- **The component terminals**
- **The component harness connector**

Using this kit will prevent damage caused by the improper probing of connector terminals.

Several of the symptom procedures call for a careful visual and physical inspection. This can lead to correcting a condition without further tests and can save time. This inspection should include the following:

- Ensure that the control module grounds are clean, tight, and correctly located.
- Inspect cooling system hoses and pipes for splits, kinks, and improper connections. Inspect thoroughly for any type of leak or restriction.
- Inspect for a dirty or restricted radiator or HVAC condenser.
- Inspect for aftermarket devices which could affect the operation of the cooling system.
- Inspect the easily accessible or visible system components for obvious damage or conditions which could cause the symptom.
- Inspect the surge tank reservoir for proper coolant level.

Identifying Intermittent Conditions

Many intermittent conditions occur with harness or connector movement due to engine torque, rough pavement, vibration or physical movement of a component. Refer to the following for a list to help isolate an intermittent condition:

- Water intrusion in connectors, terminals, or components
- Poor connector mating
- Terminal contact
- High circuit or component resistance-High resistance can include any resistance, regardless of the amount, which can interrupt the operation of the component.
- Harness' that are routed too tight, or chaffed circuits
- High or low ambient temperatures
- High or low engine coolant temperatures

- High underhood temperatures
- Heat build up in components or circuits due to circuit resistance, poor terminal contact, or high electrical load
- High or low system voltage
- High vehicle load conditions
- Rough road surface
- Electro-magnetic interference (EMI)/circuit interference from relays, solenoids or other electrical surge
- Incorrect installation of non-factory, aftermarket, or after factory add on accessories

If an intermittent is detected, refer to **Testing for Intermittent Conditions and Poor Connections** for specific strategies in diagnosing intermittent conditions.

Symptom List

Refer to a symptom diagnostic procedure from the following list in order to diagnose the symptom:

- **Cooling Fan Always On**
- **Cooling Fan Inoperative**
- **Engine Overheating**
- **Loss of Coolant**
- **Thermostat Diagnosis (1.8L LUW and LWE)**, **Thermostat Diagnosis (1.4L LUV)**
- **Engine Fails To Reach Normal Operating Temperature**

COOLING FAN ALWAYS ON

Diagnostic Instructions

- Perform the **Diagnostic System Check - Vehicle** prior to using this diagnostic procedure.
- Review **Strategy Based Diagnosis** for an overview of the diagnostic approach.
- **Diagnostic Procedure Instructions** provides an overview of the diagnostic category.

Circuit/System Description

The engine cooling fan system is composed of one cooling fan, a series of 5 relays, the engine control module (ECM), and the associated wiring. The cooling fan assembly includes two resistors. This combination of components enables the ECM to operate the cooling fan at 3 speeds using two fan control circuits.

Diagnostic Aids

- The scan tool cooling fan output control operates as follows:
  - Cooling Fan Relay 1 operates the fan at a low speed
  - Cooling Fan Relay 2 and 3 operates the fan at a medium speed
  - Cooling Fan Relay 1, 2 and 3 operates the fan at a high speed

- Certain resistance conditions with IAT or ECT sensors may cause unwarranted cooling fan activation. If the ECM is commanding the cooling fans ON for no apparent reason and without any component or system DTCs set, the IAT or ECT sensor may be skewed. If this condition is suspected, refer to the Temperature Versus Resistance tables in the appropriate engine controls subsection.
- If the cooling fan operates at high speed when the ECM is requesting medium speed operation, test or replace the KR20E Cooling Fan Speed Control Relay.

Reference Information

Schematic Reference

Engine Heating/Cooling Schematics

Connector End View Reference

- **COMPONENT CONNECTOR END VIEWS - INDEX**
- **Electrical Center Identification Views**

Description and Operation

Cooling Fan Description and Operation

Electrical Information Reference

- **Circuit Testing**
- **Connector Repairs**
- **Testing for Intermittent Conditions and Poor Connections**
- **Wiring Repairs**

Scan Tool Reference

Control Module References for scan tool information

Circuit/System Verification

1. Ignition ON.
2. Verify that there are no cooling system DTCs set.
    - **If any DTCs are set**

      Refer to **Diagnostic Trouble Code (DTC) List - Vehicle** .

    - **If no DTCs are set**
3. Verify the scan tool parameters listed below display OFF.
    - Cooling Fan Relay 1 Command
    - Cooling Fan Relays 2 and 3 Command

- **If a scan tool parameter displays ON**

  Refer to Diagnostic Aids and **Symptoms - Engine Cooling** for further diagnosis.

- **If both scan tool parameters display OFF**

4. Verify that the fan is not activated.
   - **If the fan is operating**

     Refer to Circuit/System Testing below.

   - **If the fan is OFF**
5. All OK.

Circuit/System Testing

NOTE: The following tests must be performed on each cooling fan relay.

1. Ignition OFF, disconnect each KR20 cooling fan relay one at a time, in the order listed below, ignition ON:
   - KR20F Cooling Fan Relay
   - KR20C Cooling Fan Low Speed Relay
   - KR20P Cooling Fan Medium Speed Relay
   - KR20D Cooling Fan High Speed Relay
2. Verify that the cooling fan is not activated after each relay is removed.
   - **If the cooling fan is ON with all of the listed relays removed**
     1. Ignition OFF, disconnect the harness connector at the G10 Cooling Fan Motor, ignition ON.
     2. Test for less than 1 V between ground and the relay controlled output circuit terminal listed below:
        - KR20C Cooling Fan Low Speed Relay terminal 87
        - KR20P Cooling Fan Medium Speed Relay terminal 5
        - KR20D Cooling Fan High Speed Relay terminal 3
        - If 1 V or greater, repair the short to voltage in the appropriate circuit.
   - **If the cooling fan is OFF after a listed relay is removed**
3. Replace the appropriate KR20 Cooling Fan Relay.

Component Testing

1. Ignition OFF.
2. Disconnect a KR20 Cooling Fan Relay.
3. Test for 70-110 ohms between terminals 85/2 and 86/1. 95-135 ohms for the KR20F Cooling Fan Relay.
   - **If less than or greater than the specified range**

     Replace the KR20 Cooling Fan Relay.

- **If within the specified range**

4. Test for infinite resistance between the following terminals:
   - 30/3 and 86/1
   - 30/3 and 87/5
   - 30/3 and 85/2
   - 85/2 and 87/5
   - **If less than infinite resistance**

     Replace the KR20 Cooling Fan Relay.

   - **If infinite resistance**
5. Install a 20 A fused jumper wire between relay terminal 85/2 and 12 V.
6. Install a jumper wire between relay terminal 86/1 and ground.
7. Test for less than 2 ohms between terminals 30/3 and 87/5.
   - **If 2 ohms or greater**

     Replace the KR20 Cooling Fan Relay.

   - **If less than 2 ohms**
8. All OK.

Repair Instructions

Perform the **Diagnostic Repair Verification** after completing the diagnostic procedure.

Relay Replacement (Within an Electrical Center) , **Relay Replacement (Attached to Wire Harness)**

COOLING FAN INOPERATIVE

Diagnostic Instructions

- Perform the **Diagnostic System Check - Vehicle** prior to using this diagnostic procedure.
- Review **Strategy Based Diagnosis** for an overview of the diagnostic approach.
- **Diagnostic Procedure Instructions** provides an overview of each diagnostic category.

Circuit/System Description

The engine cooling fan system is composed of one cooling fan, a series of 5 relays, the engine control module (ECM), and the associated wiring. The cooling fan assembly includes two resistors. This combination of components enables the ECM to operate the cooling fan at 3 speeds using two fan control circuits.

Diagnostic Aids

- The scan tool cooling fan output control operates as follows:

  - Cooling Fan Relay 1 operates the fan at a low speed
  - Cooling Fan Relay 2 and 3 operates the fan at a medium speed
  - Cooling Fan Relay 1, 2 and 3 operates the fan at a high speed
- When disconnecting or removing fuses and relays from a fuse block, always inspect the component electrical terminals for corrosion and the correct orientation in the fuse block. Test the mating electrical terminals for tightness.

Reference Information

Schematic Reference

Engine Heating/Cooling Schematics

Connector End View Reference

- **COMPONENT CONNECTOR END VIEWS - INDEX**
- **Electrical Center Identification Views**

Description and Operation

Cooling Fan Description and Operation

Electrical Information Reference

- **Circuit Testing**
- **Connector Repairs**
- **Testing for Intermittent Conditions and Poor Connections**
- **Wiring Repairs**

Scan Tool Reference

Control Module References for scan tool information

Circuit/System Verification

1. Ignition ON.
2. Verify that DTC P0480, P0481, P0691, P0692, P0693, or P0694 is not set.
   - **If a DTC is set**

     Refer to **DTC P0480, P0481, P0691, P0692, P0693, or P0694**.

   - **If no DTC is set**
3. Verify that the cooling fan operates at low, medium, and high speed, when commanding the appropriate cooling fan relays ON and OFF with a scan tool.

- **If the cooling fan does not operate at all speeds**

  Refer to Circuit/System Testing below.

- **If the cooling fan operates at all speeds**

4. All OK.

Circuit/System Testing

Inoperative in All Speeds

1. Ignition OFF, disconnect the harness connector at the G10 Cooling Fan Motor.
2. Verify a test lamp illuminates between the ground circuit terminal 1 and B+
   - **If the test lamp does not illuminate**
     1. Ignition OFF, remove the test lamp.
     2. Test for less than 2 ohms in the ground circuit end to end.
        - If 2 ohms or greater, repair the open/high resistance in the circuit.
        - If less than 2 ohms, repair the open/high resistance in the ground connection.
   - **If the test lamp illuminates**
3. Test or replace the G10 Cooling Fan Motor. Replace the cooling fan fuses if necessary.

Low, Medium or High Speed Inoperative

1. Disconnect the following cooling fan relays, ignition ON:
   - KR20C Cooling Fan Low Speed Relay
   - KR20D Cooling Fan High Speed Relay
   - KR20E Cooling Fan Speed Control Relay
   - KR20F Cooling Fan Relay
   - KR20P Cooling Fan Medium Speed Relay
2. Verify a test lamp illuminates between ground and each of the cooling fan relay B+ circuit terminals listed below:
   - KR20C Cooling Fan Low Speed Relay terminal 30
   - KR20D Cooling Fan High Speed Relay terminal 5
   - KR20P Cooling Fan Medium Speed Relay terminal 3
   - **If the test lamp does not illuminate and the circuit fuse is good**
     1. Ignition OFF, remove the test lamp.
     2. Test for less than 2 ohms in the appropriate relay B+ circuit, end to end.
        - If 2 ohms or greater, repair the open/high resistance in the circuit.
        - If less than 2 ohms, verify the fuse is not open and there is voltage at the fuse.
   - **If the test lamp does not illuminate and the circuit fuse is open**
     1. Ignition OFF, disconnect the harness connector at the G10 Cooling Fan Motor.

2. Test for infinite resistance between the appropriate relay controlled output circuit terminal listed below and ground:
    - KR20C Cooling Fan Low Speed Relay terminal 87
    - KR20D Cooling Fan High Speed Relay terminal 3
    - KR20P Cooling Fan Medium Speed Relay terminal 5
    - If less than infinite resistance, repair the short to ground in the circuit.
    - If infinite resistance, test or replace the G10 Cooling Fan Motor, replace the fuse as necessary.

- **If the test lamp illuminates**

3. Verify a test lamp illuminates between the KR20F Cooling Fan Relay output circuit terminal 87 and B+.
    - **If the test lamp does not illuminate**
    1. Ignition OFF, remove the test lamp.
    2. Test for less than 2 ohms in the ground circuit, end to end.
        - If 2 ohms or greater, repair the open/high resistance in the circuit.
        - If less than 2 ohms, repair the open/high resistance in the ground connection.
    - **If the test lamp illuminates**
4. Ignition OFF, Install the KR20F Cooling Fan Relay, ignition ON.
5. Verify a test lamp illuminates between ground and each of the cooling fan relay terminals listed below:
    - KR20C Cooling Fan Low Speed Relay terminal 85
    - KR20E Cooling Fan Speed Control Relay terminal 86 and 30
    - **If the test lamp does not illuminate at each terminal**
    1. Ignition OFF, remove the test lamp.
    2. Test for less than 2 ohms in the appropriate relay ignition circuit, end to end.
        - If 2 ohms or greater, repair the open/high resistance in the circuit.
        - If less than 2 ohms, verify the fuse is not open and there is voltage at the fuse.
    - **If the test lamp illuminates at each terminal**
6. Command the cooling fan ON at low speed with a scan tool.
7. Verify a test lamp illuminates between B+ and each of the KR20 Cooling Fan Relay terminals listed below:
    - KR20C Cooling Fan Low Speed Relay terminal 86
    - KR20E Cooling Fan Speed Control Relay terminal 85
    - **If the test lamp does not illuminate**
    1. Ignition OFF, remove the test lamp and disconnect the KR20F Cooling Fan Relay.
    2. Test for less than 2 ohms between the KR20F Cooling Fan Relay terminal 30 and the relay control circuit terminals listed below:
        - KR20C Cooling Fan Low Speed Relay terminal 86
        - KR20E Cooling Fan Speed Control Relay terminal 85
        - If 2 ohms or greater, repair the open/high resistance in the circuit.

- If less than 2 ohms, replace the KR20F Cooling Fan Relay.
- **If the test lamp illuminates**

8. Ignition OFF, install the KR20E Cooling Fan Speed Control Relay, Ignition ON.
9. Command the cooling fan ON at low speed with a scan tool.
10. Verify a test lamp illuminates between ground and the KR20D High Speed Relay ignition circuit terminal 1.
    - **If the test lamp does not illuminate**
    1. Ignition OFF, remove the test lamp and disconnect the KR20E Cooling Fan Speed Control Relay.
    2. Test for less than 2 ohms between the KR20D High Speed Relay terminal 1 and KR20E Cooling Fan Speed Control Relay 87
        - If 2 ohms or greater, repair the open/high resistance in the circuit.
        - If less than 2 ohms, replace the KR20E Cooling Fan Speed Control Relay.
    - **If the test lamp illuminates**
11. Ignition OFF, install all of the previously removed KR20 Cooling Fan Relays. Disconnect the harness connector at the G10 Cooling Fan Motor, ignition ON.
12. Command the cooling fan ON at high speed with a scan tool.
13. Verify a test lamp illuminates between ground and each of the G10 Cooling Fan Motor circuit terminals listed below:
    - G10 Cooling Fan low speed circuit terminal 2
    - G10 Cooling Fan medium speed circuit terminal 3
    - G10 Cooling Fan high speed circuit terminal 4
    - **If the test lamp does not illuminate at each terminal**
    1. Ignition OFF, remove the test lamp.
    2. Disconnect the appropriate relay from the list below:
        - KR20C Cooling Fan Low Speed Relay
        - KR20D Cooling Fan High Speed Relay
        - KR20P Cooling Fan Medium Speed Relay
    3. Test for less than 2 ohms in the relay controlled output circuit, end to end.
        - If 2 ohms or greater, repair the open/high resistance in the circuit.
        - If less than 2 ohms, test or replace the relay.
    - **If the test lamp illuminate at each terminal**
14. Test or replace the G10 Cooling Fan Motor.

Component Testing

1. Ignition OFF.
2. Disconnect a KR20 Cooling Fan Relay.
3. Test for 70-110 ohms between terminals 85/2 and 86/1. 95-135 ohms for the KR20F Cooling Fan Relay.
    - **If less than or greater than the specified range**

Replace the KR20 Cooling Fan Relay.

- **If within the specified range**

4. Test for infinite resistance between the following terminals:
   - 30/3 and 86/1
   - 30/3 and 87/5
   - 30/3 and 85/2
   - 85/2 and 87/5
   - **If less than infinite resistance**

     Replace the KR20 Cooling Fan Relay.

   - **If infinite resistance**
5. Install a 20 A fused jumper wire between relay terminal 85/2 and 12 V.
6. Install a jumper wire between relay terminal 86/1 and ground.
7. Test for less than 2 ohms between terminals 30/3 and 87/5.
   - **If 2 ohms or greater**

     Replace the KR20 Cooling Fan Relay.

   - **If less than 2 ohms**
8. All OK.

Repair Instructions

Perform the **Diagnostic Repair Verification** after completing the diagnostic procedure.

- **Relay Replacement (Within an Electrical Center)** , **Relay Replacement (Attached to Wire Harness)**
- **Engine Coolant Fan Replacement**

ENGINE OVERHEATING

Engine Overheating

Step	Action	Yes	No
DEFINITION: Either of the following conditions indicate a probable engine overheat condition. • The engine temperature gauge is in the red (overheat) zone and/or the engine temperature indicator is ON. • Hot engine coolant overflows from the coolant recovery reservoir and/or radiator cap onto the ground while the engine is running.			
	1. Inspect and fill the cooling system, as necessary. Refer to **Cooling System Draining and Filling (Static Fill)**, **Cooling**		

1	**System Draining and Filling (GE-47716 Fill)**. 2. Inspect the cooling system for leaks, as necessary. 3. Repair the cooling system leaks, as necessary. Has the inspection/repair been performed?	Go to **Step 2**	-
2	1. Start the engine and allow the engine to run at approximately 1, 200 RPM. 2. Use the Scan Tool in order to verify the overheat condition. Does the Scan Tool verify the engine overheat condition?	Go to **Step 3**	Go to **Diagnostic System Check - Vehicle**
3	1. Verify that the cooling fans are operating properly. 2. Repair the cooling fan system, as necessary. Does the engine still overheat?	Go to **Step 4**	System OK
4	Perform the following inspections: • Inspect the radiator and the A/C condenser cooling fins for debris or any other obstruction. • Inspect the drive belt system and the drive belt tensioner for proper operation in order to ensure that the coolant pump is rotating properly. • Inspect for loose, damaged and/or missing air deflector(s). • Check for a pinched or kinked cooling system hose. • Repair the systems as necessary. Does the engine still overheat?	Go to **Step 5**	System OK
5	Inspect the thermostat for proper operation. Refer to **Thermostat Diagnosis (1.8L LUW and LWE)**, **Thermostat Diagnosis (1.4L LUV)**. Is the thermostat operating properly?	Go to **Step 7**	Go to **Step 6**
6	Replace the thermostat. Refer to **Engine Coolant Thermostat Replacement**. Does the engine still overheat?	Go to **Step 7**	System OK

7	**NOTE:** **Excessive coolant freeze point protection MAY cause the coolant to boil at low temperatures.** 1. Inspect for the proper coolant concentration (mixture). Correct the coolant concentration as necessary. 2. Remove the radiator cap. 3. Start the engine and inspect for a constant flow of air bubbles in the engine coolant. Is there a constant flow of air bubbles in the engine coolant?	Go to **Step 8**	Go to **Step 9**
8	The probable cause of the engine overheat is combustion chamber gasses leaking into the cooling system. This condition is usually caused by the following: • A worn or damaged cylinder head gasket • A worn or damaged cylinder head • A worn and/or damaged engine block Verify this condition by inspecting the spark plug electrodes and porcelain surrounding the spark plug electrode for signs of coolant. Replace and/or repair the engine internal component(s), as necessary, in order to repair the engine internal coolant leak. Does the engine still overheat?	Go to **Step 1**	System OK
9	The engine overheat may be caused by a cooling system blockage. Flush the cooling system. Refer to **Coolant System Flushing** Does the engine still overheat?	Go to **Step 10**	System OK
10	**NOTE:** **It is unlikely that the water pump is the cause of the overheat condition.** If NONE of the cooling system passages are restricted, replace the coolant pump. Refer to **Water Pump Replacement (1.8L LUW and LWE)**, **Water Pump Replacement (1.4L LUV)** Does the engine still overheat?	Go to **Step 1**	System OK

LOSS OF COOLANT

Loss of Coolant

Step	Action	Yes	No
DEFINITION: The cooling system is losing coolant either internally or externally. **Special Tools** **BO-42220** Universal 12V Leak Detection Lamp For equivalent regional tools, refer to **Special Tools**.			
1	Are you sent here from Symptoms?	Go to **Step 2**	Go to **Symptoms - Engine Cooling**
2	Repair any present DTCs. Refer to **Diagnostic System Check - Vehicle** . Is the action complete?	Go to **Step 3**	-
3	Inspect the coolant level. Is the coolant at the proper level?	Go to **Step 5**	Go to **Step 4**
4	Fill the cooling system to the proper level. Refer to **Cooling System Draining and Filling (Static Fill)**, **Cooling System Draining and Filling (GE-47716 Fill)**. Is the action complete?	Go to **Step 5**	-
5	If the engine is suspected to have a coolant leak into a cylinder, the coolant can hydraulically lock the engine. Does the engine crankshaft rotate?	Go to **Step 6**	Go to **Step 25**
6	Engine overheating can cause a loss of coolant. Is the engine overheating?	Go to **Step 28**	Go to **Step 7**
7	Extended operation with a low coolant level can cause engine internal component failure. Is the engine knocking?	Go to **Step 30**	Go to **Step 8**
8	1. Idle the engine at normal operating temperature. 2. Inspect for heavy white smoke coming out of the exhaust pipe. Is a heavy white smoke present from the exhaust pipe?	Go to **Step 9**	Go to **Step 10**
9	Coolant in the exhaust system creates a distinctive, burning coolant odor in the exhaust. Condensation in the exhaust system can cause an odorless white smoke during engine warm up. Does the white smoke have a burning coolant type odor?	Go to **Step 29**	Go to **Step 10**
10	**WARNING:** **Refer to Moving Parts and Hot Surfaces Warning .** With the engine idling, inspect the coolant		

	recovery system.Does the coolant recovery system discharge coolant while the engine is idling?	Go to **Step 15**	Go to **Step 11**
11	Visually inspect the hoses, pipes and hose clamps at the following locations: • The coolant surge tank • The heater core • The radiator Are any of the hoses, clamps or pipes leaking?	Go to **Step 21**	Go to **Step 12**
12	Visually inspect the following components: • The coolant pressure cap • The core plugs • The cylinder head gaskets • The engine block • The intake manifold • The radiator • The thermostat housing • The water pump Are any of the listed components leaking?	Go to **Step 21**	Go to **Step 13**
13	1. Pressure test the cooling system. Refer to **Cooling System Leak Testing**. 2. With the cooling system pressurized, visually inspect the components listed in steps 11 and 12. Are any leaks present?	Go to **Step 21**	Go to **Step 14**
14	Pressure test the coolant pressure cap. Does the coolant pressure cap hold pressure?	Go to **Step 15**	Go to **Step 22**
15	Inspect for the following conditions: • A coolant smell inside of the vehicle • Coolant in the HVAC module drain tube • Coolant on the vehicle floor covering near the HVAC module Is coolant present?	Go to **Step 23**	Go to **Step 16**

16	1. Add 30 ml (1 oz) of Extended Life Coolant Leak Detection Dye to the cooling system for each 15 L (4 gal) of coolant. Refer to **Approximate Fluid Capacities** . 2. Start the vehicle and allow the engine to reach normal operating temperature. 3. Shut the engine off. 4. Use **BO 42220** detection lamp to visually inspect the components listed in steps 11 and 12. Are any leaks present?	Go to **Step 21**	Go to **Step 17**
17	Use **BO 42220** detection lamp to inspect for the following conditions: • Coolant dye in the HVAC module drain tube • Coolant dye on the vehicle floor covering near the HVAC module Is coolant dye present?	Go to **Step 23**	Go to **Step 18**
18	Inspect the underside of the engine oil fill cap for a gray/white milky substance. Is a milky substance under the oil fill cap?	Go to **Step 19**	Go to **Step 20**
19	Inspect the engine oil fluid level indicator for a gray/white milky substance. Is a milky substance on the engine oil fluid level indicator?	Go to **Step 29**	Go to **Step 20**
20	Inspect the automatic transmission oil fluid level indicator, if equipped, for a gray/white milky substance. Is there a milky substance on the automatic transmission fluid level indicator?	Go to **Step 24**	Go to **Step 32**
21	Repair or replace the leaking component. Refer to the appropriate repair. Is the repair complete?	Go to **Step 32**	-
22	Replace the coolant pressure cap. Is the repair complete?	Go to **Step 32**	-
23	Replace the heater core. Refer to **Heater Core Replacement** . Is the repair complete?	Go to **Step 32**	-
	1. Remove the transmission oil cooler lines from the radiator.		

24	2. Pressure test the cooling system. Refer to **Cooling System Leak Testing**. 3. Inspect the transmission oil cooler for coolant. Is coolant present?	Go to **Step 25**	Go to **Step 26**
25	1. Replace the radiator. Refer to **Radiator Replacement (1.4L LUV with Automatic Transmission)**, **Radiator Replacement (1.8L LUW and LWE)**, **Radiator Replacement (1.4L LUV with Manual Transmission)**. 2. Service the automatic transmission. Is the repair complete?	Go to **Step 32**	-
26	Install the cooler lines to the radiator. Is the action complete?	Go to **Step 32**	-
27	Repair the engine no crank condition. Is the repair complete?	Go to **Step 32**	-
28	Repair the engine overheating condition. Is the repair complete?	Go to **Step 32**	-
29	Repair the engine internal coolant leak. Is the repair complete?	Go to **Step 32**	-
30	Repair the engine knock. Is the repair complete?	Go to **Step 32**	-
31	Repair the combustion pressure in the cooling system problem. Is the repair complete?	Go to **Step 32**	-
32	Operate the system in order to verify the repair. Did you find and correct the condition?	System OK	Go to **Step 2**

THERMOSTAT DIAGNOSIS (1.4L LUV)

Thermostat Diagnosis (1.4L LUV)

Step	Action	Values	Yes	No
1	1. Pressure test the cooling system and the cap for leaks. 2. Repair any leaks before proceeding. These engines use a 105°C (221°F) thermostat. The ambient temperatures should be within the specified range given. 3. Set the HVAC controls in the OFF position.	13-38°C (55-		

	4. Run the cold engine at idle 20°C-21°C (68-70°F) for 15-20 minutes before checking the engine temperature. 5. Check the engine coolant temperature at idle with the scan tool. Is the engine coolant temperature (ECT) between 105-120°C (221-248°F)?	100°F)	System OK	Go to **Step 2**
2	Is the ECT below 105°C (221°F)?	-	Go to **Step 3**	Go to **Step 4**
3	The thermostat is opening early, or the thermostat seal is leaking. Replace the thermostat and the thermostat seal. Is the repair complete?	-	System OK	-
4	Is the ECT over 120°C (248°F)?	-	Go to **Step 5**	-
5	Is the radiator inlet hot?	-	Go to **Step 6**	Go to **Step 7**
6	1. Turn ON the heater. 2. Check if hot air is coming from the heater outlets. Is the air hot?	-	Go to **Step 11**	Go to **Step 12**
7	There may be air in the system. 1. Add coolant to the surge tank if the coolant level is low. Refer to **Cooling System Draining and Filling (Static Fill)**, **Cooling System Draining and Filling (GE-47716 Fill)**. 2. Recheck the radiator inlet hose. Is the inlet hose hot?	-	Go to **Step 6**	Go to **Step 8**
8	Inspect for blockage in the following areas: • The cylinder head • The radiator • The radiator hoses Is there a blockage?	-	Go to **Step 9**	Go to **Step 10**
	1. Repair the blockage. 2. Recheck the coolant temperature with			

9	the scan tool. Is the repair complete?	-	System OK	-
10	1. Replace the thermostat housing. Refer to **Engine Coolant Thermostat Housing Replacement (1.4L LUV)**, **Engine Coolant Thermostat Housing Replacement (1.8L LUW and LWE)**. 2. Recheck the coolant temperature with the scan tool. Is the repair complete?	-	System OK	-
11	Inspect for blockage in the radiator. Is there any blockage?	-	Go to **Step 9**	Go to **Step 10**
12	1. Accelerate the engine several times in order to remove any air from the system. 2. Inspect for blockage in the heater circuit. 3. Inspect for any pinched or buckled hoses. Is there any blockage?	-	Go to **Step 9**	Go to **Step 13**
13	Is the repair complete?		System OK	-

THERMOSTAT DIAGNOSIS (1.8L LUW AND LWE)

Thermostat Diagnosis (1.8L LUW and LWE)

Step	Action	Values	Yes	No
1	1. Pressure test the cooling system and the cap for leaks. 2. Repair any leaks before proceeding. These engines use a 90°C (194°F) thermostat. The ambient temperatures should be within the specified range given. 3. Set the HVAC controls in the OFF position. 4. Run the cold engine at idle (68-70°F) for 15-20 minutes before checking the engine temperature. 5. Check the engine coolant temperature at idle with the scan tool.	13-38°C (55-100°F)		

	Is the engine coolant temperature (ECT) between 90-105°C (194-221°F)?		System OK	Go to **Step 2**
2	Is the ECT below 90°C (194°F)?	-	Go to **Step 3**	Go to **Step 4**
3	The thermostat is opening early, or the thermostat seal is leaking. Replace the thermostat and the thermostat seal. Is the repair complete?	-	System OK	-
4	Is the ECT over 105°C (221°F)?	-	Go to **Step 5**	-
5	Is the radiator inlet hot?	-	Go to **Step 6**	Go to **Step 7**
6	1. Turn ON the heater. 2. Check if hot air is coming from the heater outlets. Is the air hot?	-	Go to **Step 11**	Go to **Step 12**
7	There may be air in the system. 1. Add coolant to the surge tank if the coolant level is low. Refer to **Cooling System Draining and Filling (Static Fill)**, **Cooling System Draining and Filling (GE-47716 Fill)**. 2. Recheck the radiator inlet hose. Is the inlet hose hot?	-	Go to **Step 6**	Go to **Step 8**
8	Inspect for blockage in the following areas: • The cylinder head • The radiator • The radiator hoses Is there a blockage?	-	Go to **Step 9**	Go to **Step 10**
9	1. Repair the blockage. 2. Recheck the coolant temperature with the the scan tool. Is the repair complete?	-	System OK	-
10	1. Replace the thermostat. Refer to **Engine Coolant Thermostat Replacement**. 2. Recheck the coolant temperature with the scan tool.	-		

	Is the repair complete?		System OK	-
11	Inspect for blockage in the radiator. Is there any blockage?	-	Go to **Step 9**	Go to **Step 10**
12	1. Accelerate the engine several times in order to remove any air from the system. 2. Inspect for blockage in the heater circuit. 3. Inspect for any pinched or buckled hoses. Is there any blockage?	-	Go to **Step 9**	Go to **Step 13**
13	Is the repair complete?		System OK	-

ENGINE FAILS TO REACH NORMAL OPERATING TEMPERATURE

Engine Fails To Reach Normal Operating Temperature

Step	Action	Yes	No
1	Check the coolant level in the radiator surge tank. Refer to **Cooling System Draining and Filling (Static Fill)**, **Cooling System Draining and Filling (GE-47716 Fill)**. Is the coolant at the proper level?	Go to **Step 3**	Go to **Step 2**
2	Add coolant to the radiator surge tank as necessary. Does the engine still fail to reach normal operating temperatures?	Go to **Step 3**	System OK
3	Check for a blockage in the coolant passages. Are there any blockages in the coolant passages?	Go to **Step 4**	Go to **Step 5**
4	Flush the cooling system or flow check the radiator. Does the engine still fail to reach normal operating temperatures?	Go to **Step 5**	System OK
5	Check to see if the incorrect thermostat was installed or if it is stuck or sticks in the open position. Was the incorrect thermostat installed, or is it stuck or does it stick in the open position?	Go to **Step 6**	-
6	Replace the thermostat. Refer to **Engine Coolant Thermostat Replacement**. Does the engine still fail to reach normal operating temperature?	-	System OK

COOLING SYSTEM LEAK TESTING

Special Tools

- **EN-471** Adapter
- **EN-6327-A** Cooling System Test Adapter

For equivalent regional tools, refer to **Special Tools**.

WARNING: Under pressure, the temperature of the solution in the radiator can be considerably higher, without boiling. Removing the radiator cap while the engine is hot (pressure is high), will cause the solution to boil instantaneously, with explosive force. The solution will spew out over the engine, fenders, and the person removing the cap. Serious bodily injury may result. Flammable antifreeze, such as alcohol, is not recommended for use at any time. Flammable antifreeze could cause a serious fire.

WARNING: In order to help avoid being burned, do not remove the radiator cap while the engine and the radiator are hot. Scalding fluid and steam can be blown out under pressure if the cap is removed too soon.

1. Detach the coolant expansion tank closure cap.

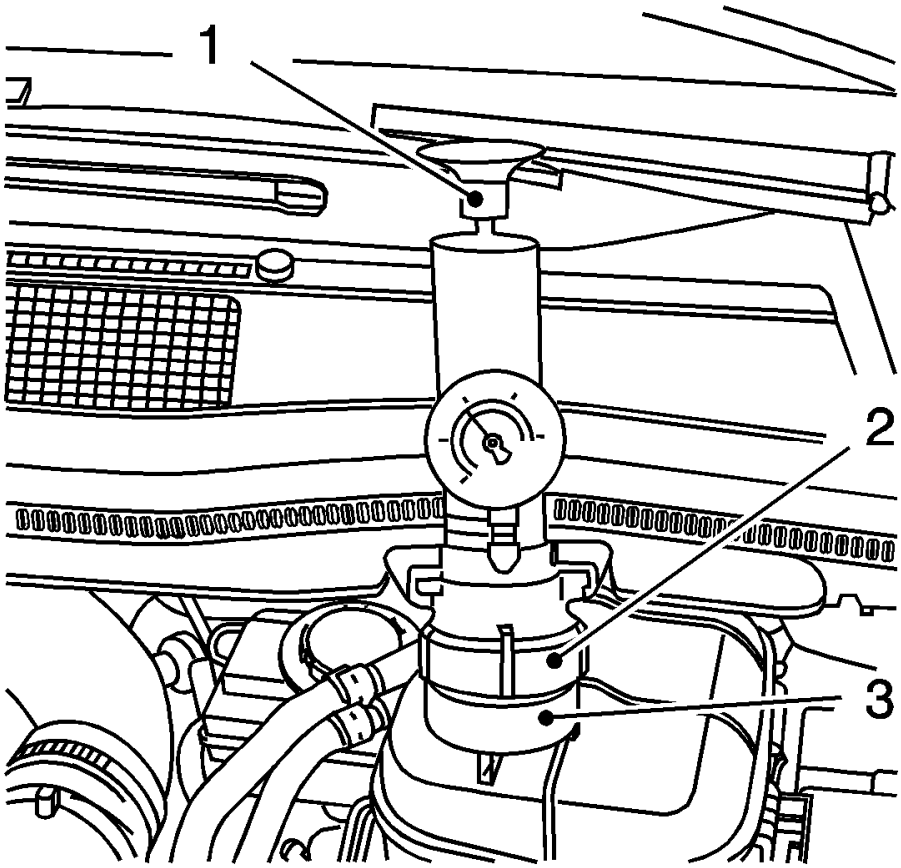

Fig. 2: View Of Coolant System Tester, KM-471 And KM-6327
Courtesy of GENERAL MOTORS COMPANY

2. Check the coolant level.

   Top up the coolant to the COLD mark if necessary.

3. Pull the coolant expansion tank from the bracket in the direction of the battery.

NOTE: Follow manufacturer instructions.

4. Attach the coolant system tester (1) with **EN-471** adapter (2) and **EN-6327-A** adapter (3) to the coolant expansion tank.
5. Apply approximately 100 kPa (15 psi) to the cooling system.
6. Cooling system, check for leaks.
7. Detach the cooling system tester.
   - Release the pressure

- Detach the cooling system tester with **EN-471** adapter.

8. Attach the coolant expansion tank closure cap.
9. Slide the coolant expansion tank onto the bracket.

REPAIR INSTRUCTIONS

COOLING SYSTEM DRAINING AND FILLING (GE-47716 FILL)

Special Tools

- **GE-26568** Coolant and Battery Fluid Tester
- **GE-42401-A** Radiator Pressure Adapter
- **GE-47716** Vac N Fill Coolant Refill Tool

For equivalent regional tools, refer to **Special Tools**

Draining Procedure

WARNING: With a pressurized cooling system, the coolant temperature in the radiator can be considerably higher than the boiling point of the solution at atmospheric pressure. Removal of the surge tank cap, while the cooling system is hot and under high pressure, causes the solution to boil instantaneously with explosive force. This will cause the solution to spew out over the engine, the fenders, and the person removing the cap. Serious bodily injury may result.

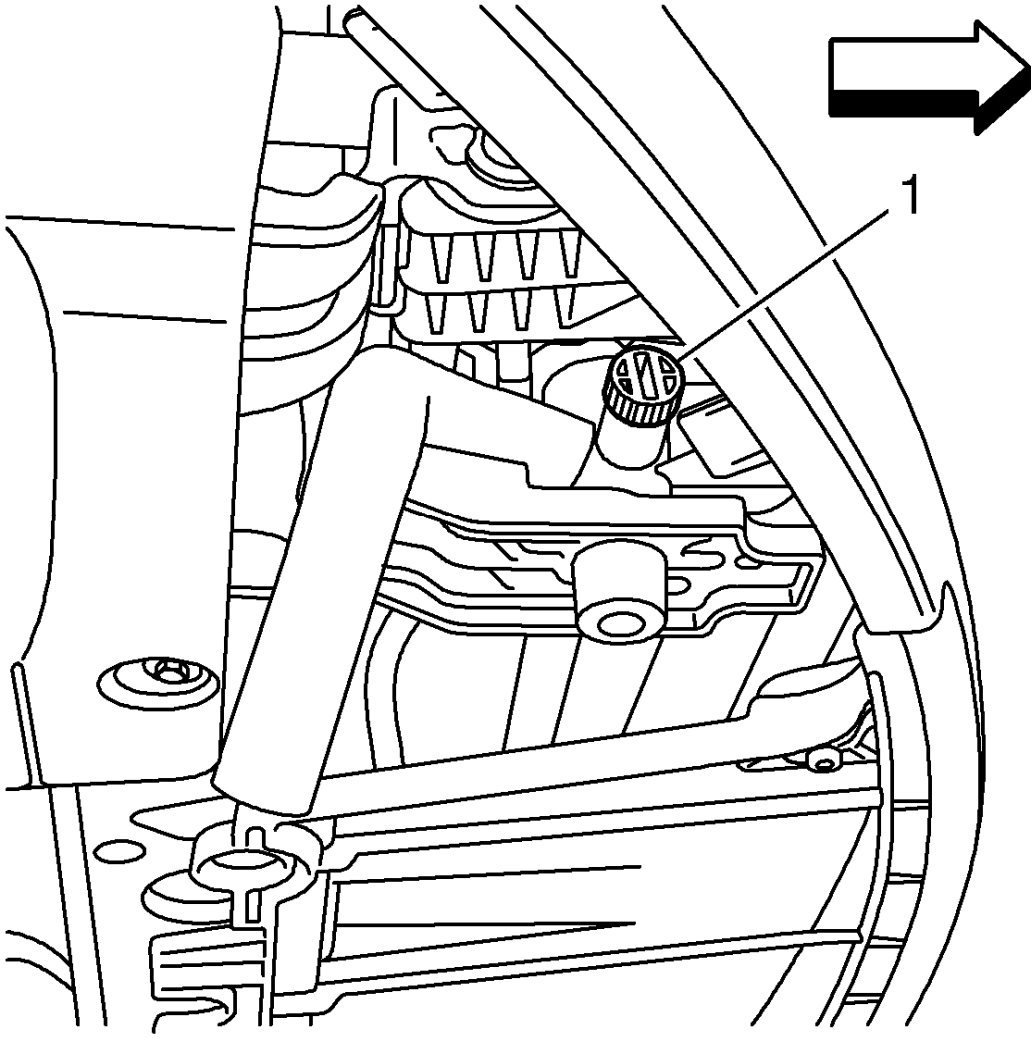

Fig. 3: Radiator Drain Plug
Courtesy of GENERAL MOTORS COMPANY

1. Unscrew the surge tank cap to remove vacuum when draining coolant.
2. Raise the vehicle. Refer to **Lifting and Jacking the Vehicle** .
3. Place a container under the radiator drain.
4. Unscrew the radiator drain plug (1) until coolant flows out the radiator drain.
5. Follow the appropriate procedure based on the condition of the coolant:
   - Normal in appearance-Follow the filling procedure.
   - Discolored-Follow the flush procedure. Refer to **Coolant System Flushing**.

Vac-N-Fill Procedure

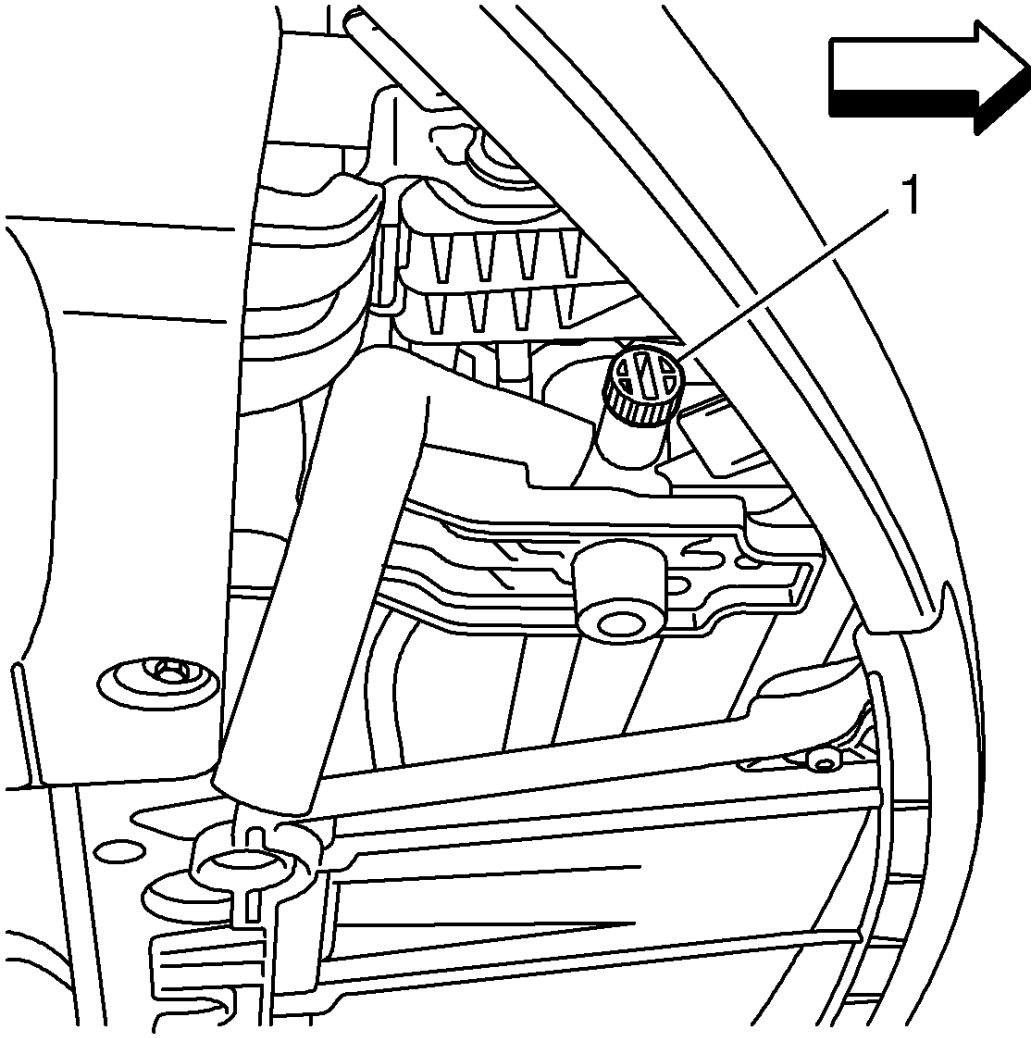

Fig. 4: Radiator Drain Plug
Courtesy of GENERAL MOTORS COMPANY

CAUTION: The procedure below must be followed. Improper coolant level could result in a low or high coolant level condition, causing engine damage.

1. Close the radiator drain cock by hand.

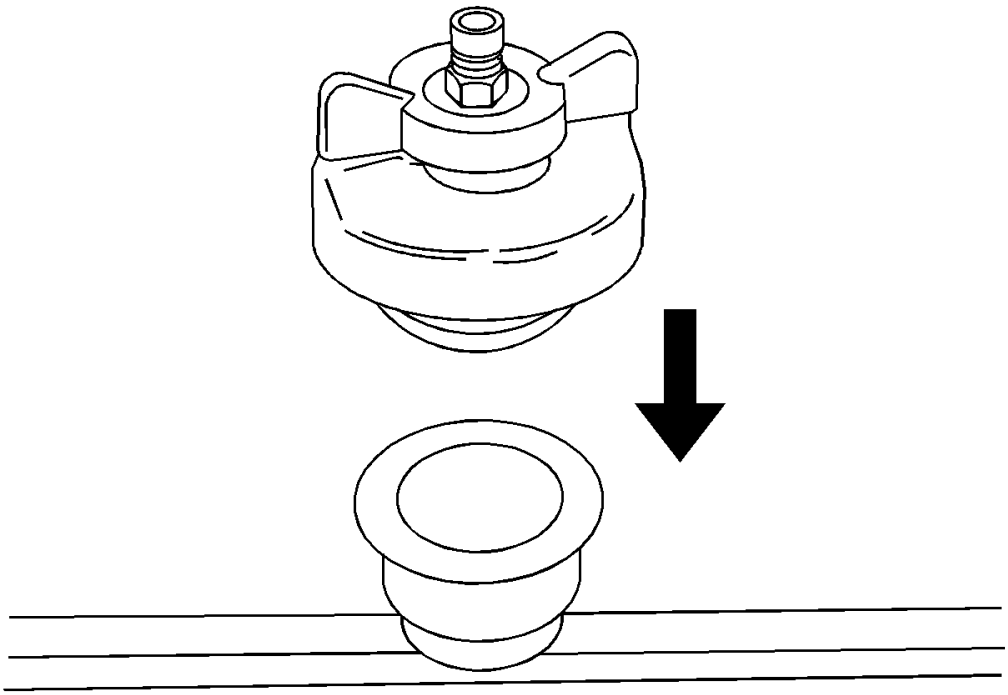

Fig. 5: Identifying Vac-N-Fill Cap
Courtesy of GENERAL MOTORS COMPANY

NOTE: To prevent boiling of the coolant/water mixture in the vehicle's cooling system, do not apply vacuum to a cooling system above 49° C (120° F). The tool will not operate properly when the coolant is boiling.

2. Install **GE-42401-2** adapter into the surge tank fill neck.
3. Install **GE-42401-3** adapter to the surge tank fill neck.
4. Attach the Vac N Fill cap to the **GE-42401-3** adapter.

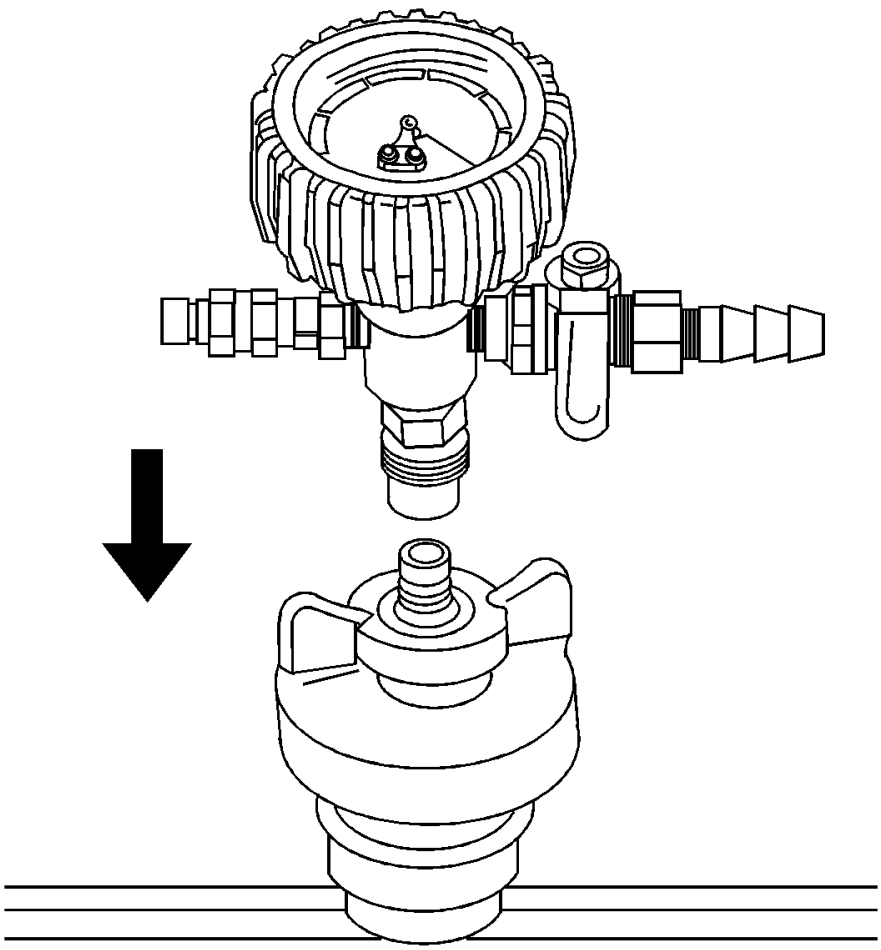

Fig. 6: Vacuum Gage & Vac N Fill cap
Courtesy of GENERAL MOTORS COMPANY

5. Attach the vacuum gauge assembly to the Vac N Fill cap.

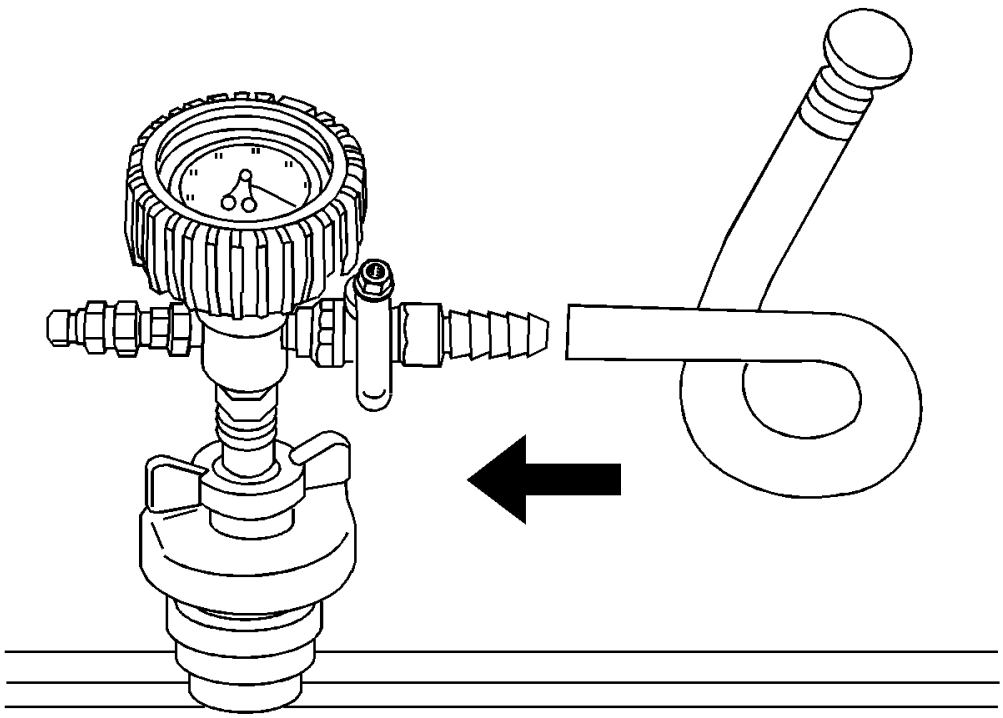

Fig. 7: View Of Fill Hose & Vacuum Gage Assembly
Courtesy of GENERAL MOTORS COMPANY

6. Attach the fill hose to the barb fitting on the vacuum gauge assembly.

   Ensure that the valve is closed.

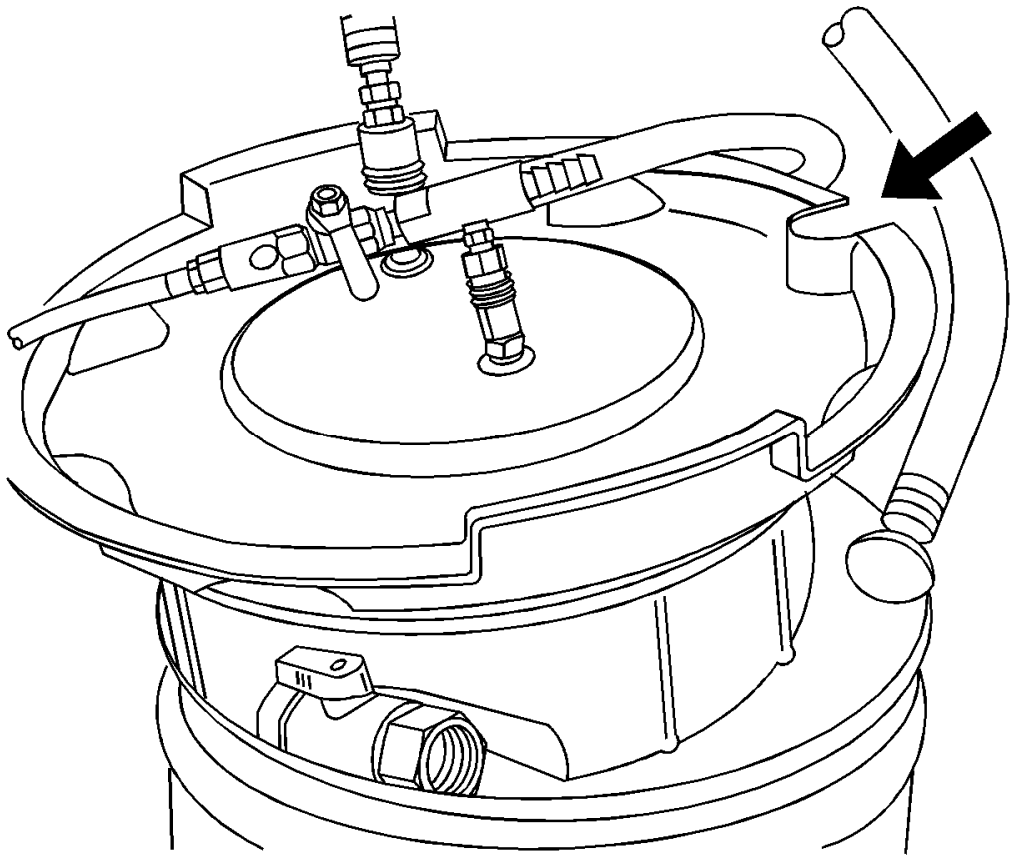

Fig. 8: View Of Graduated Reservoir & Hose
Courtesy of GENERAL MOTORS COMPANY

NOTE: **Use a 50/50 mixture of DEX-COOL antifreeze and clean, drinkable water.**

Always use more coolant than necessary. This will eliminate air from being drawn into the cooling system.

7. Pour the coolant mixture into the graduated reservoir.
8. Place the fill hose in the graduated reservoir.

NOTE: **Prior to installing the vacuum tank onto the graduated reservoir, ensure that the drain valve located on the bottom of the tank is closed.**

9. Install the vacuum tank on the graduated reservoir with the fill hose routed through the cut-out area in the vacuum tank.

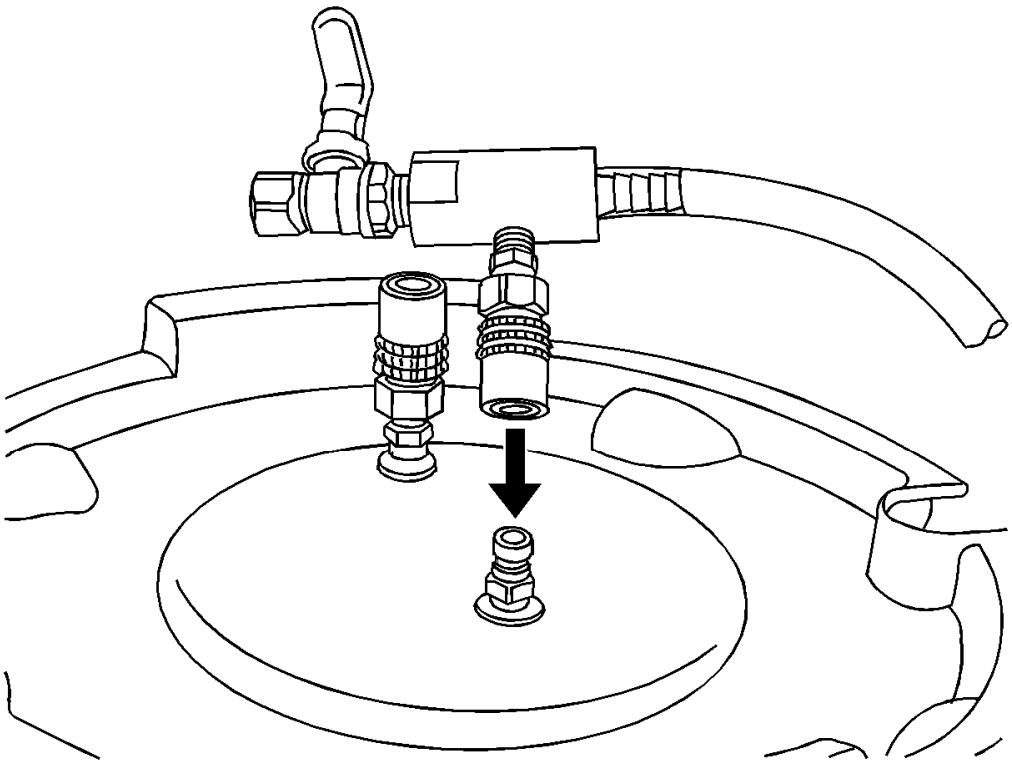

Fig. 9: View Of Venturi Assembly & Vacuum Tank
Courtesy of GENERAL MOTORS COMPANY

10. Attach the venturi assembly to the vacuum tank.

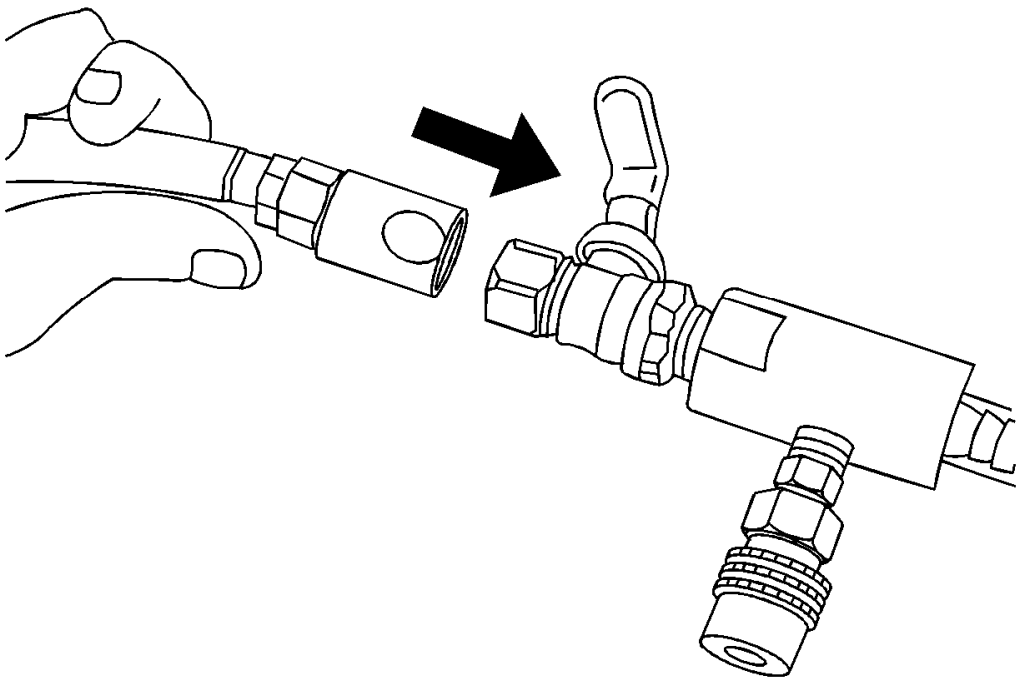

Fig. 10: View Of Shop Air Hose & Venturi Assembly
Courtesy of GENERAL MOTORS COMPANY

11. Attach a shop air hose to the venturi assembly.

    Ensure the valve on the venturi assembly is closed.

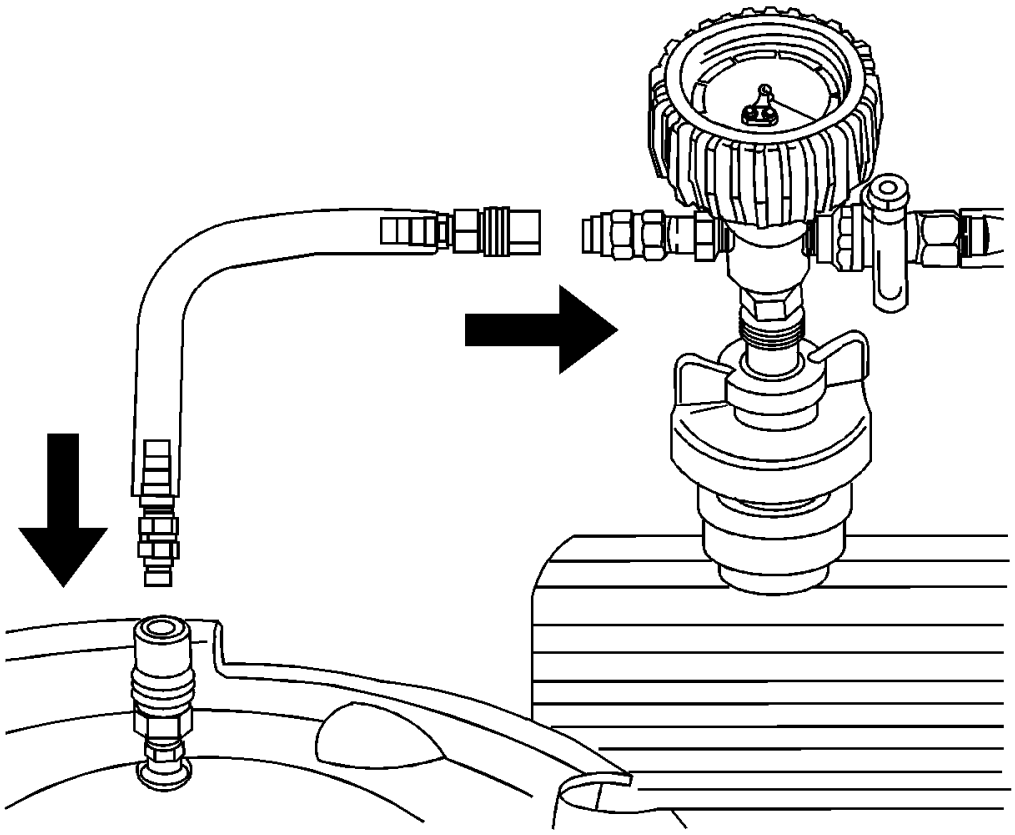

Fig. 11: Vacuum Gage Assembly And Vacuum Tank
Courtesy of GENERAL MOTORS COMPANY

12. Attach the vacuum hose to the vacuum gauge assembly and the vacuum tank.

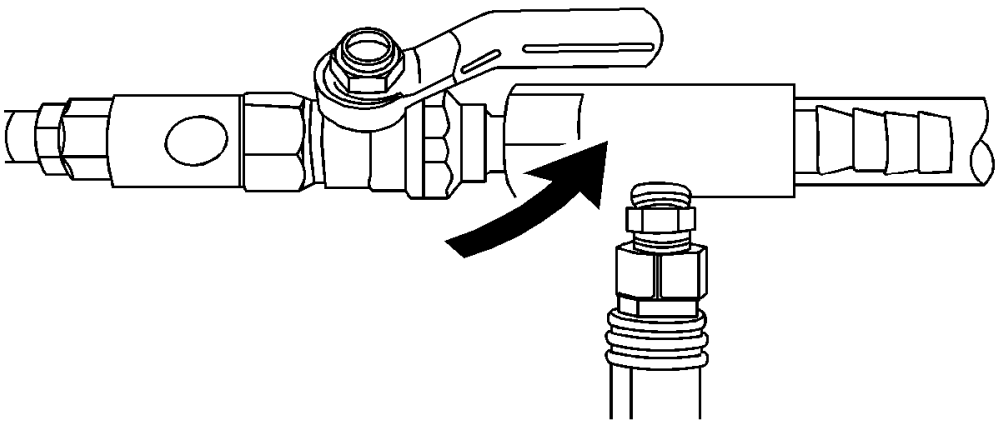

Fig. 12: Identifying Valve On Venturi Assembly
Courtesy of GENERAL MOTORS COMPANY

13. Open the valve on the venturi assembly. The vacuum gauge will begin to rise and a hissing noise will be present.

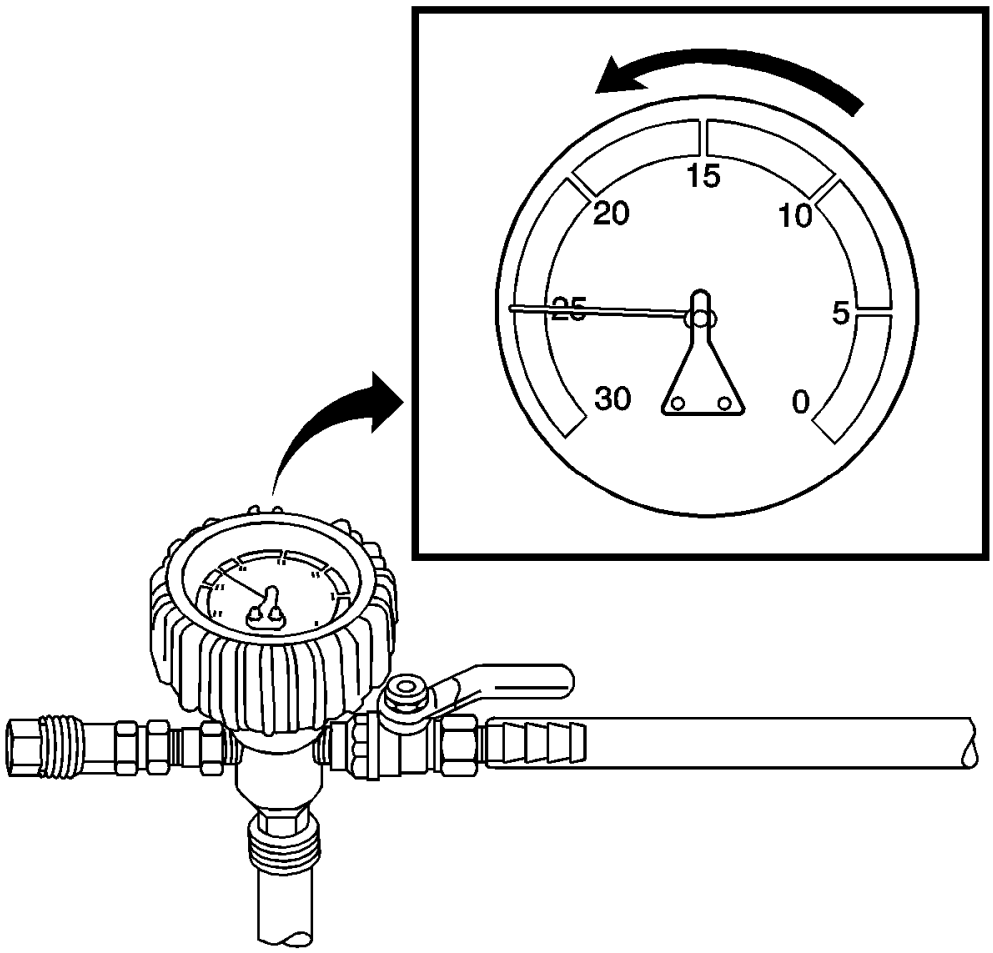

Fig. 13: View Of Vacuum Gauge
Courtesy of GENERAL MOTORS COMPANY

14. Continue to draw vacuum until the needle stops rising. This should be 610-660 mm Hg (24-26 in Hg).

    Cooling hoses may start to collapse. This is normal due to vacuum draw.

15. To aid in the fill process, position the graduated reservoir above the coolant fill port.

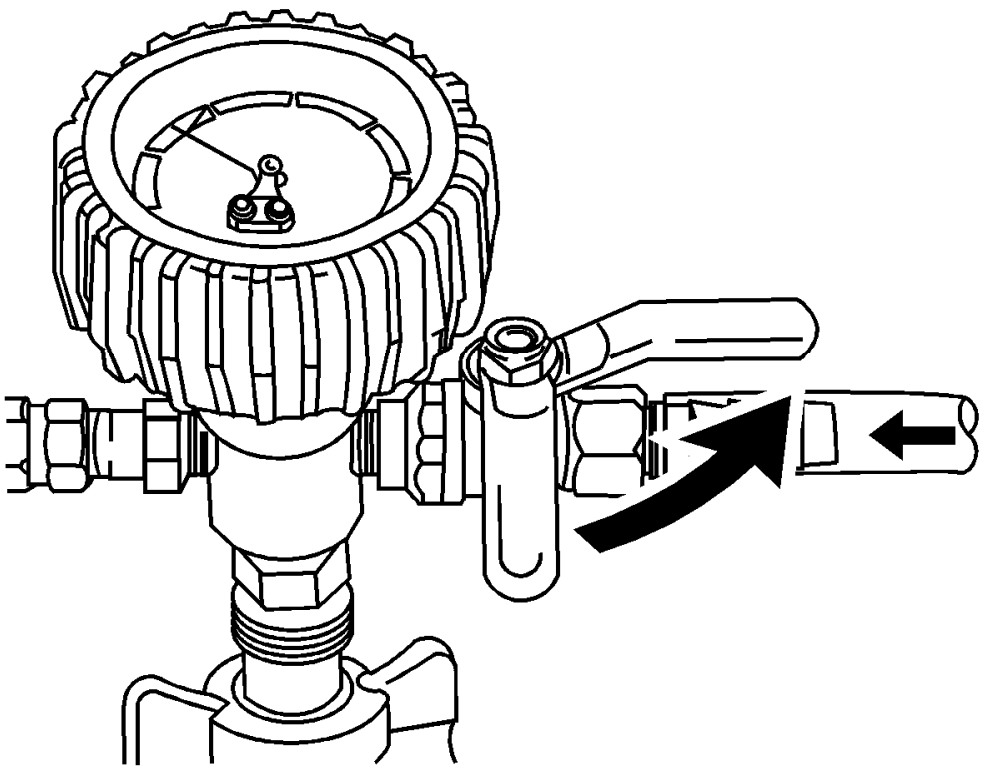

Fig. 14: Identifying Valve On Vacuum Gage Assembly
Courtesy of GENERAL MOTORS COMPANY

16. Slowly open the valve on the vacuum gauge assembly. When the coolant reaches the top of the fill hose, close the valve. This will eliminate air from the fill hose.
17. Close the valve on the venturi assembly.
18. If there is a suspected leak in the cooling system, allow the system to stabilize under vacuum and monitor for vacuum loss.

    If vacuum loss is observed, refer to **Loss of Coolant**.

19. Open the valve on the vacuum gauge assembly. The vacuum gauge will drop as coolant is drawn into the system.

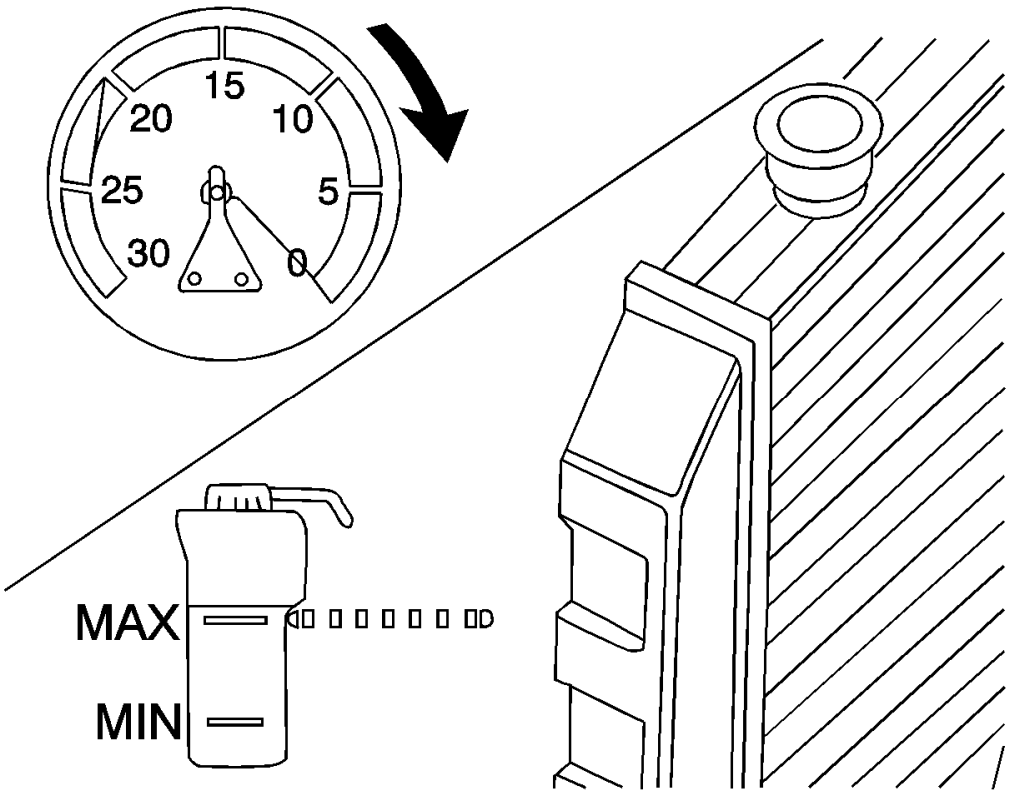

Fig. 15: View Of Vacuum Gauge & Radiator
Courtesy of GENERAL MOTORS COMPANY

20. Once the vacuum gauge reaches zero, close the valve on the vacuum gauge assembly and repeat steps 10-16.
21. Detach the Vac N Fill cap from the vehicle's coolant fill port.
22. Add coolant to the system as necessary.
23. Inspect the concentration of the coolant mixture, using the **GE-26568** tester.

NOTE: After filling the cooling system, the extraction hose can be used to remove excess coolant to achieve the proper coolant level.

24. Detach the vacuum hose from the vacuum gauge assembly.

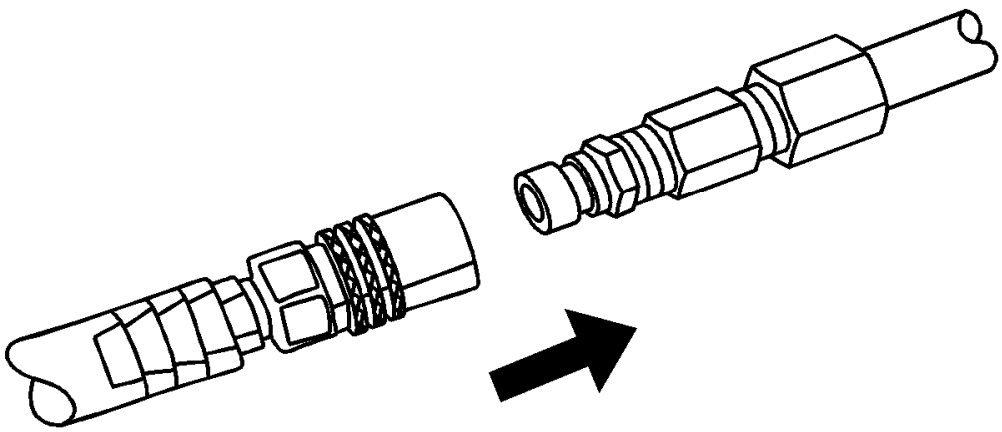

Fig. 16: Extraction Hose And Vacuum Hose
Courtesy of GENERAL MOTORS COMPANY

25. Attach the extraction hose to the vacuum hose.

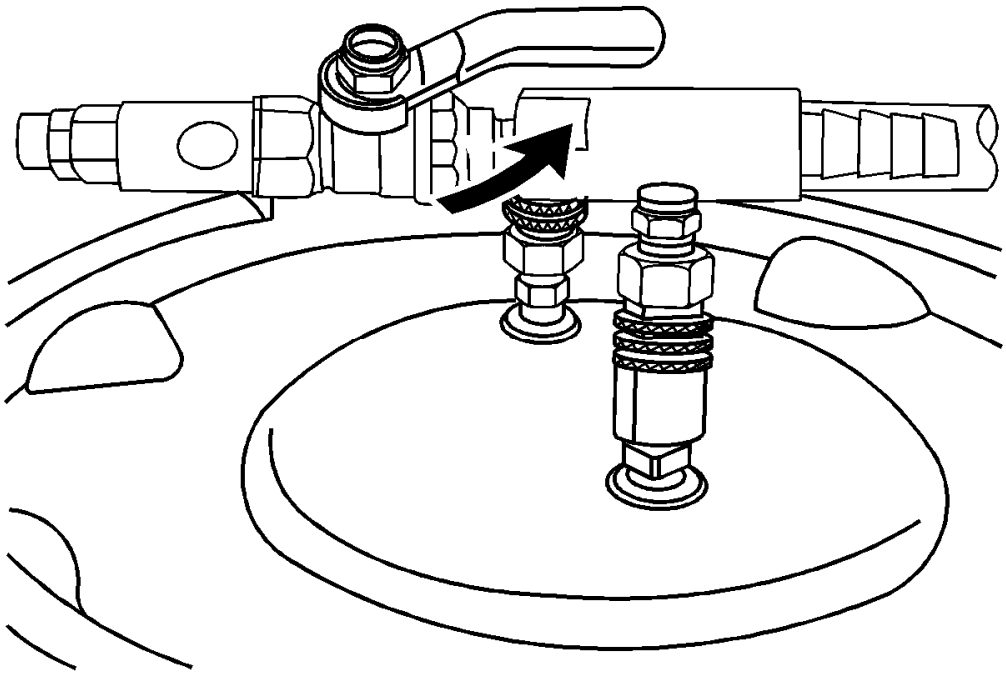

Fig. 17: Identifying Valve On Venturi Assembly
Courtesy of GENERAL MOTORS COMPANY

26. Open the valve on the venturi assembly to start a vacuum draw.

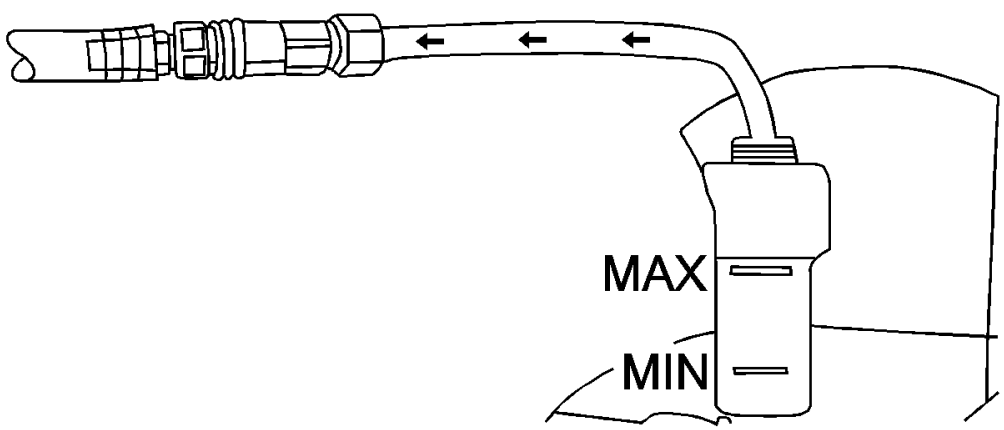

Fig. 18: Using Extraction Hose To Draw Out Coolant
Courtesy of GENERAL MOTORS COMPANY

27. Use the extraction hose to draw out coolant to the proper level.
28. The vacuum tank has a drain valve on the bottom of the tank. Open the valve to drain coolant from the vacuum tank into a suitable container for disposal.

COOLING SYSTEM DRAINING AND FILLING (STATIC FILL)

Special Tools

GE-26568 Coolant and Battery Fluid Tester

For equivalent regional tools, refer to **Special Tools**.

Draining Procedure

WARNING: With a pressurized cooling system, the coolant temperature in the radiator can be considerably higher than the boiling point of the solution

at atmospheric pressure. Removal of the surge tank cap, while the cooling system is hot and under high pressure, causes the solution to boil instantaneously with explosive force. This will cause the solution to spew out over the engine, the fenders, and the person removing the cap. Serious bodily injury may result.

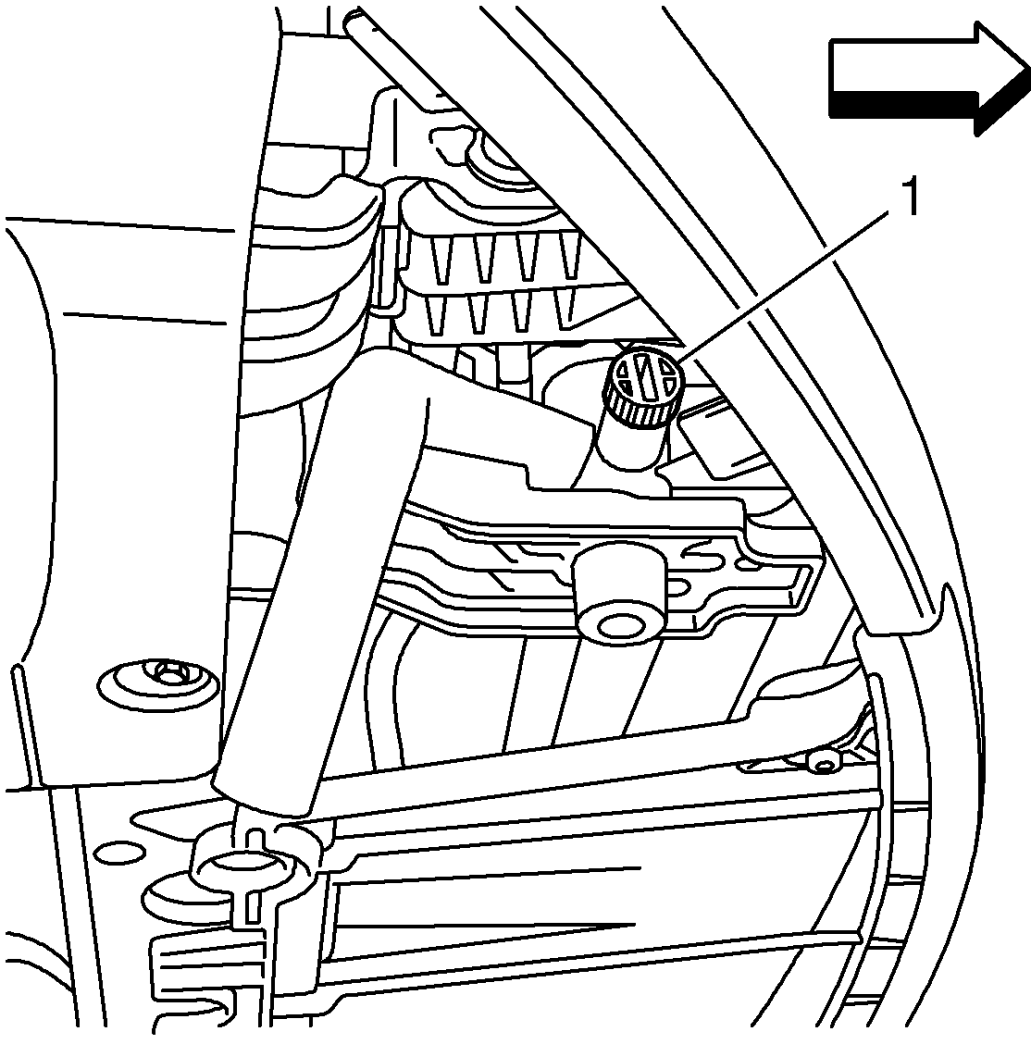

Fig. 19: Radiator Drain Plug
Courtesy of GENERAL MOTORS COMPANY

1. Unscrew the surge tank cap to remove vacuum when draining coolant.
2. Raise the vehicle. Refer to **Lifting and Jacking the Vehicle** .
3. Place a container under the radiator drain.
4. Unscrew the radiator drain plug (1) until coolant flows out the radiator drain.
5. Follow the appropriate procedure based on the condition of the coolant:
    - Normal in appearance-Follow the filling procedure.

- Discolored-Follow the flush procedure. Refer to **Coolant System Flushing**.

Fill Procedure

1. Close the radiator drain plug.
2. Lower the vehicle.
3. Vehicle should be level.

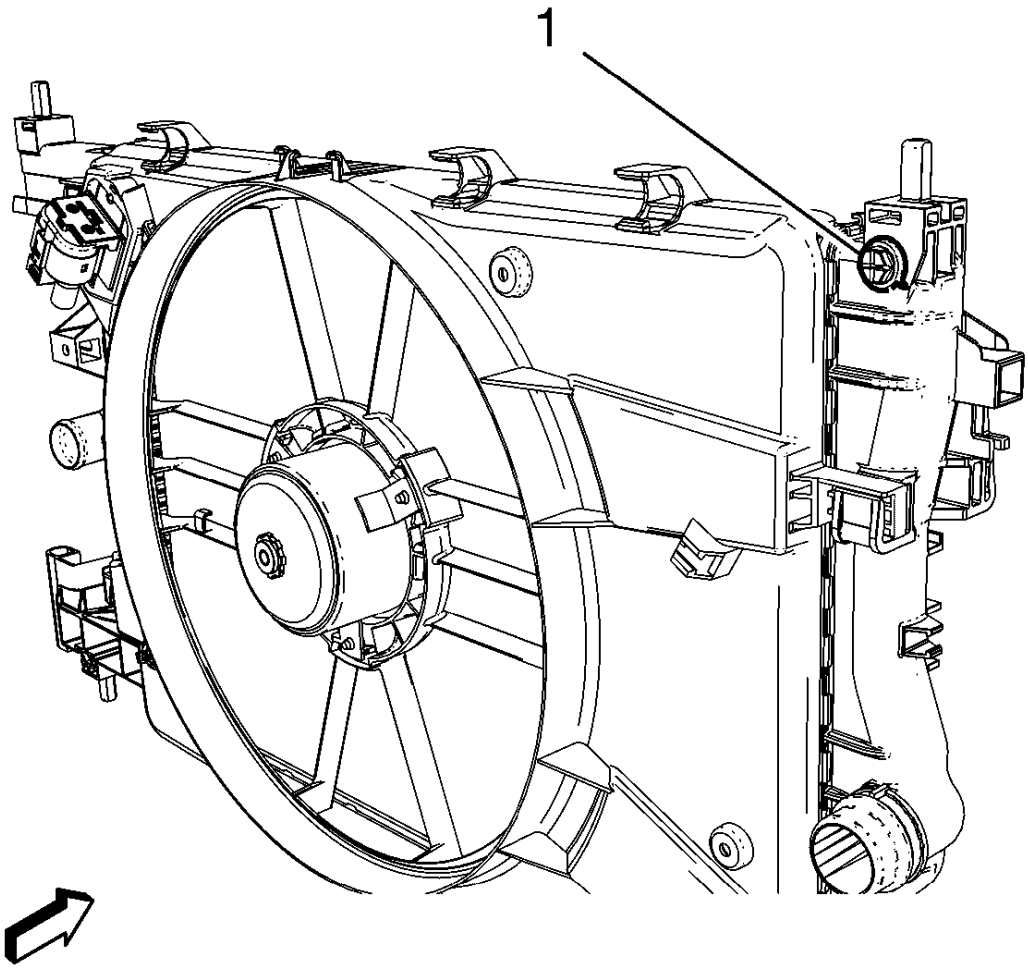

Fig. 20: Radiator Vent Screw
Courtesy of GENERAL MOTORS COMPANY

NOTE: Close vent screw when coolant begins to flow from the vent screw.

4. Loosen the vent screw (1) on the radiator.

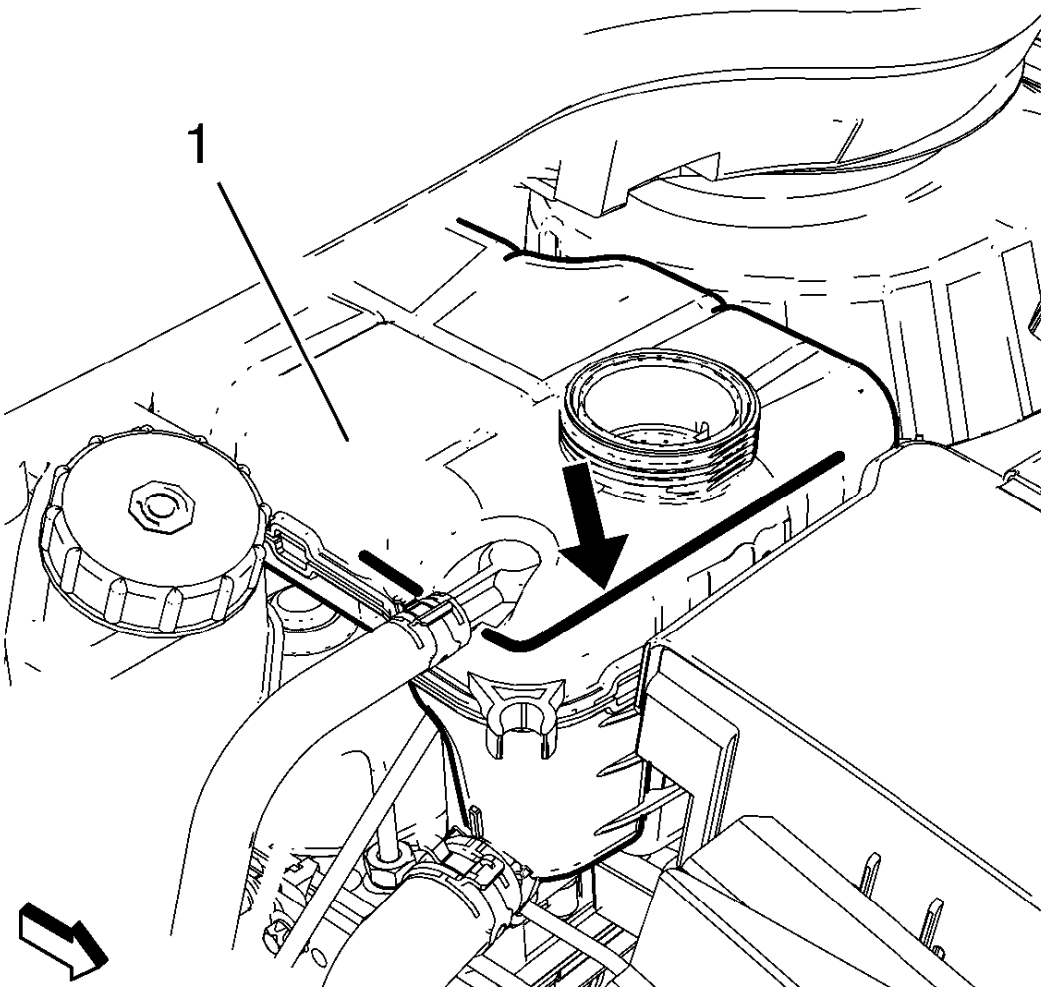

Fig. 21: Radiator Coolant Surge Tank
Courtesy of GENERAL MOTORS COMPANY

5. Add a mixture of 50/50 DEX-COOL® antifreeze and clean drinkable water to the bottom line of the bleed nozzle on the coolant surge tank (1).

   When the coolant level stabilizes, add enough coolant to reach the bottom line of the down pipe hole (black arrow).

6. Start the engine. After the engine starts, verify that the coolant level reaches the bottom line of the down pipe hole (black arrow).
7. Install the surge tank cap.
8. Warm up the engine.

NOTE: **If the heater core has been replaced, let the engine run for 2 minutes at 2.000-2.500 RPM. This ensures complete venting of the cooling system.**

Run at 2, 500 RPM until the engine cooling fan turns ON.

9. Turn the engine OFF and allow the engine to cool down.
10. Remove the surge tank cap.

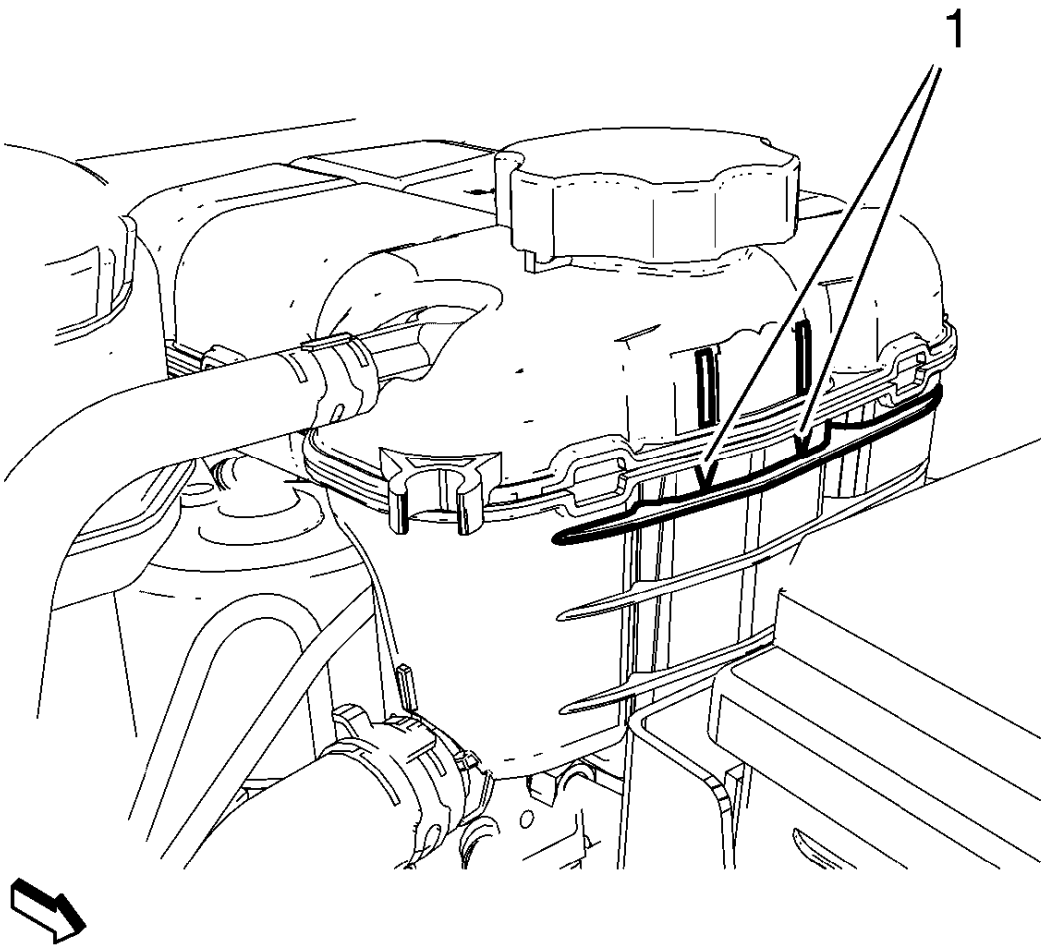

Fig. 22: Identifying Coolant Level Mark
Courtesy of GENERAL MOTORS COMPANY

NOTE: After a test drive let the engine cool down and check the coolant level again. Adjust the coolant level to the "COLD" mark if necessary.

11. Check the coolant level and fill to the "COLD" mark if necessary (1).
12. Inspect the concentration of the engine coolant, using **GE-26568** tester.
13. Install the surge tank cap.
14. Rinse away any excess coolant from the engine and the engine compartment.

COOLANT SYSTEM FLUSHING

NOTE: **Do not use a chemical flush.**

Store used coolant in the proper manner, such as in a used engine coolant holding tank.

Do not pour used coolant down a drain. Ethylene glycol antifreeze is a very toxic chemical.

Do not dispose of coolant into the sewer system or ground water. This is illegal and ecologically unsound.

Various methods and equipment can be used to flush the cooling system. If special equipment is used, such as a back flusher, follow the manufactures instruction. However, always remove the thermostat before back flushing the system.

1. Apply the park brake.
2. Drain the coolant. Refer to **Cooling System Draining and Filling (Static Fill)**, **Cooling System Draining and Filling (GE-47716 Fill)**.
3. Fill the coolant system with clean drinkable water. Refer to **Cooling System Draining and Filling (Static Fill)**, **Cooling System Draining and Filling (GE-47716 Fill)**.
4. Start the engine and run at 2.000 RPM until the thermostat opens.
5. Turn OFF the engine.
6. Drain the coolant system. Refer to **Cooling System Draining and Filling (Static Fill)**, **Cooling System Draining and Filling (GE-47716 Fill)**.
7. Repeat the above procedure until the water from the coolant system is colorless.
8. Drain the coolant system. Refer to **Cooling System Draining and Filling (Static Fill)**, **Cooling System Draining and Filling (GE-47716 Fill)**.
9. Add 3.8 liters (1.0 gal) of concentrated antifreeze since there will be some water in the system.
10. Add a mixture of 50/50 antifreeze and clean drinkable water until the level stabilizes at the weld seam on the surge tank. Refer to **Cooling System Draining and Filling (Static Fill)**, **Cooling System Draining and Filling (GE-47716 Fill)**.

RADIATOR CLEANING

WARNING: **NEVER spray water on a hot heat exchanger. The resulting steam could cause personal injury.**

CAUTION: **The heat exchanger fins are necessary for good heat transfer. Do not brush the fins. This may cause damage to the fins, reducing heat transfer.**

NOTE: Remove bugs, leaves, dirt and other debris by blowing compressed air through the engine side of the radiator.

- Some conditions may require the use of warm water and a mild detergent.
- Clean the A/C condenser fins.
- Clean between the A/C condenser and radiator.
- Clean the radiator cooling fins.
- Straighten any damaged cooling fins.

RADIATOR SURGE TANK REPLACEMENT

Removal Procedure

WARNING: With a pressurized cooling system, the coolant temperature in the radiator can be considerably higher than the boiling point of the solution at atmospheric pressure. Removal of the surge tank cap, while the cooling system is hot and under high pressure, causes the solution to boil instantaneously with explosive force. This will cause the solution to spew out over the engine, the fenders, and the person removing the cap. Serious bodily injury may result.

NOTE: Use only a GM released anti-freeze mixture and ensure a concentration of 50 percent water to 50 percent antifreeze. Antifreeze does not just prevent the cooling system from freezing up, it also protects all the components that are in contact with coolant from rust/limescale deposits. As a result, antifreeze should always be added, even in tropical countries.

In addition to the anti-freeze mixture, water quality also plays an important role. Potable tap water should normally suffice to fulfil this requirement. The quality of regenerated sea water is not suitable.

1. Open the cooling system by removing the radiator surge tank cap.
2. Raise and support the vehicle. Refer to **Lifting and Jacking the Vehicle** .

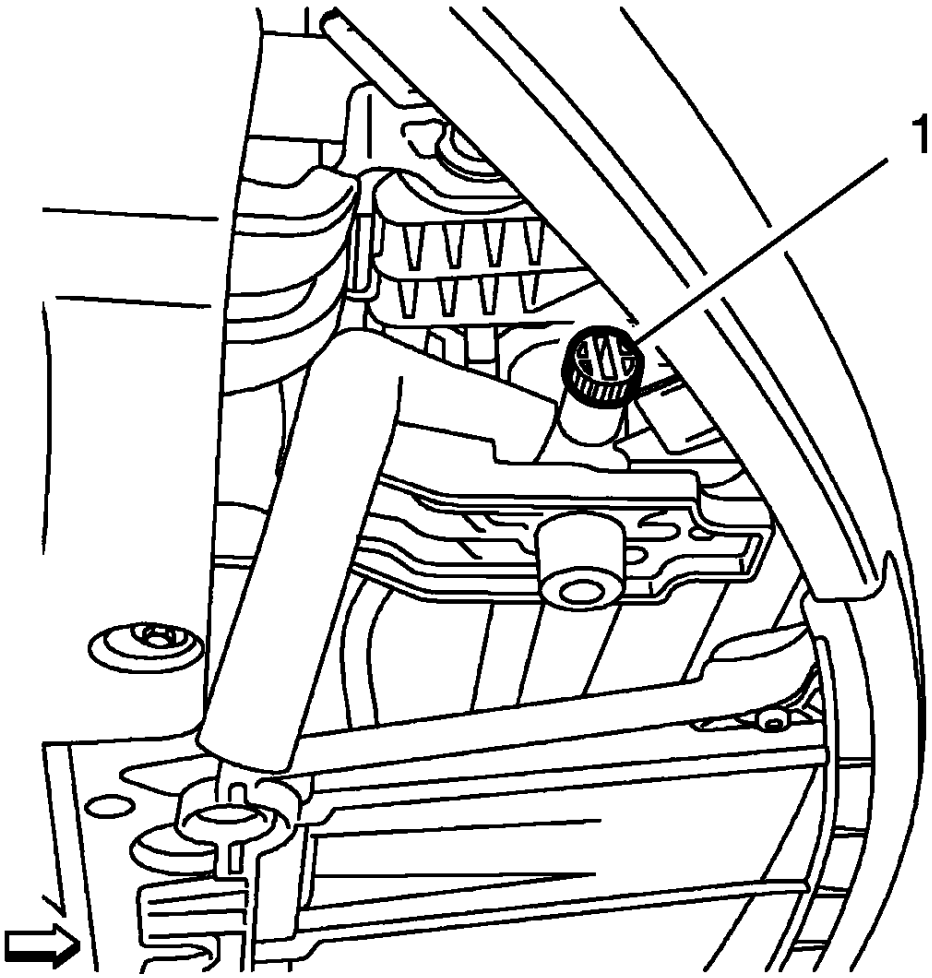

Fig. 23: Surge Tank Drain Screw
Courtesy of GENERAL MOTORS COMPANY

NOTE: Do NOT drain more than 1.5 liter (1.36 quarts) of coolant fluid to avoid necessity of the coolant system bleeding procedure.

3. Install a drain hose, slowly open the drain screw (1) and allow the to drain out max. 1.5 liter (1.36 quarts) coolant fluid into a clean measuring pincher.
4. Lower the vehicle.

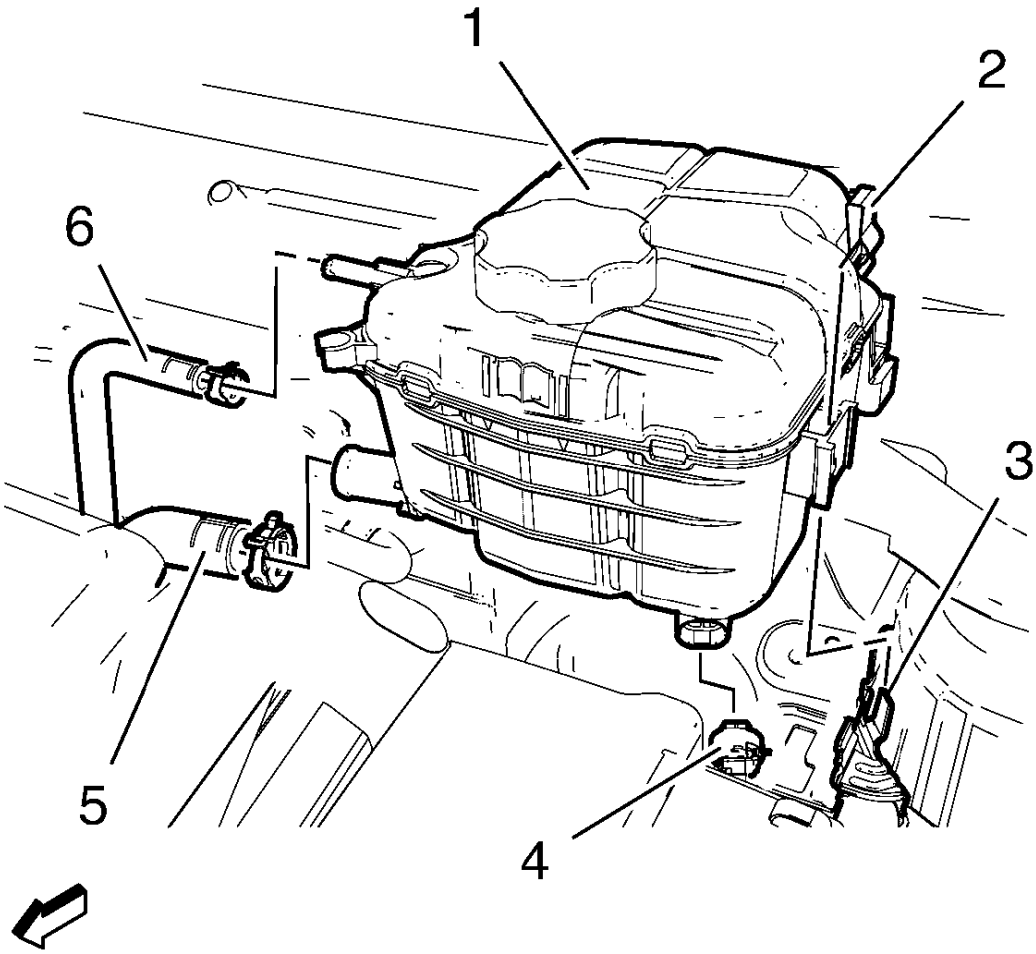

Fig. 24: Surge Tank And Components
Courtesy of GENERAL MOTORS COMPANY

5. Remove the engine coolant air bleed hose (6), remove the clamp.
6. Remove the radiator surge tank engine hose (5), remove the clamp.
7. Remove radiator surge tank clip (2).
8. Disconnect coolant level sensor wiring harness plug (4).
9. Remove the radiator surge tank (1), unclip from the bracket (3).

Installation Procedure

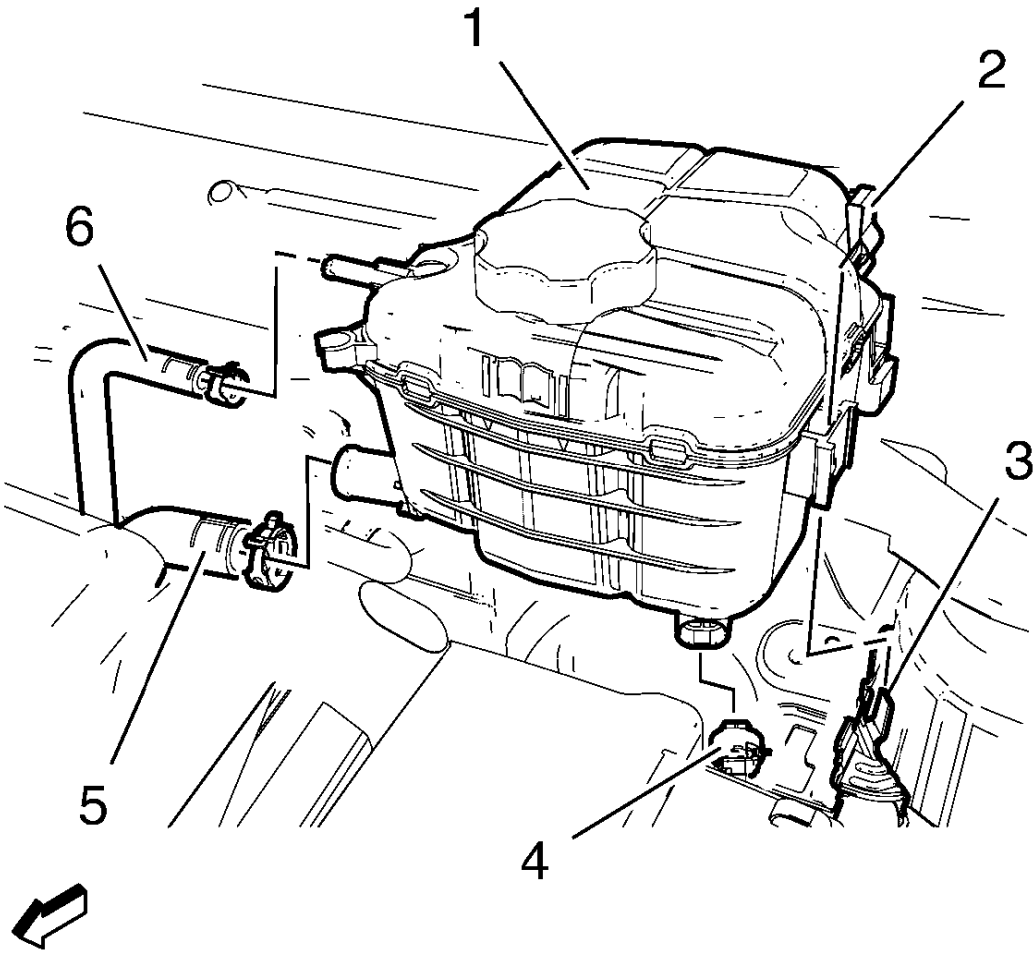

Fig. 25: Surge Tank And Components
Courtesy of GENERAL MOTORS COMPANY

1. Install the radiator surge tank (1) and clip into the bracket (3).
2. Connect coolant level sensor wiring harness plug (4).
3. Install radiator surge tank clip (2).
4. Install the radiator surge tank engine hose (5), install the clamp.
5. Install the engine coolant air bleed hose (6), install the clamp.
6. Refill the radiator surge tank with the coolant fluid, which has been drained out before.

RADIATOR SURGE TANK OUTLET HOSE REPLACEMENT

Removal Procedure

1. Drain the cooling system. Refer to **Cooling System Draining and Filling (Static Fill)**, **Cooling System Draining and Filling (GE-47716 Fill)**.

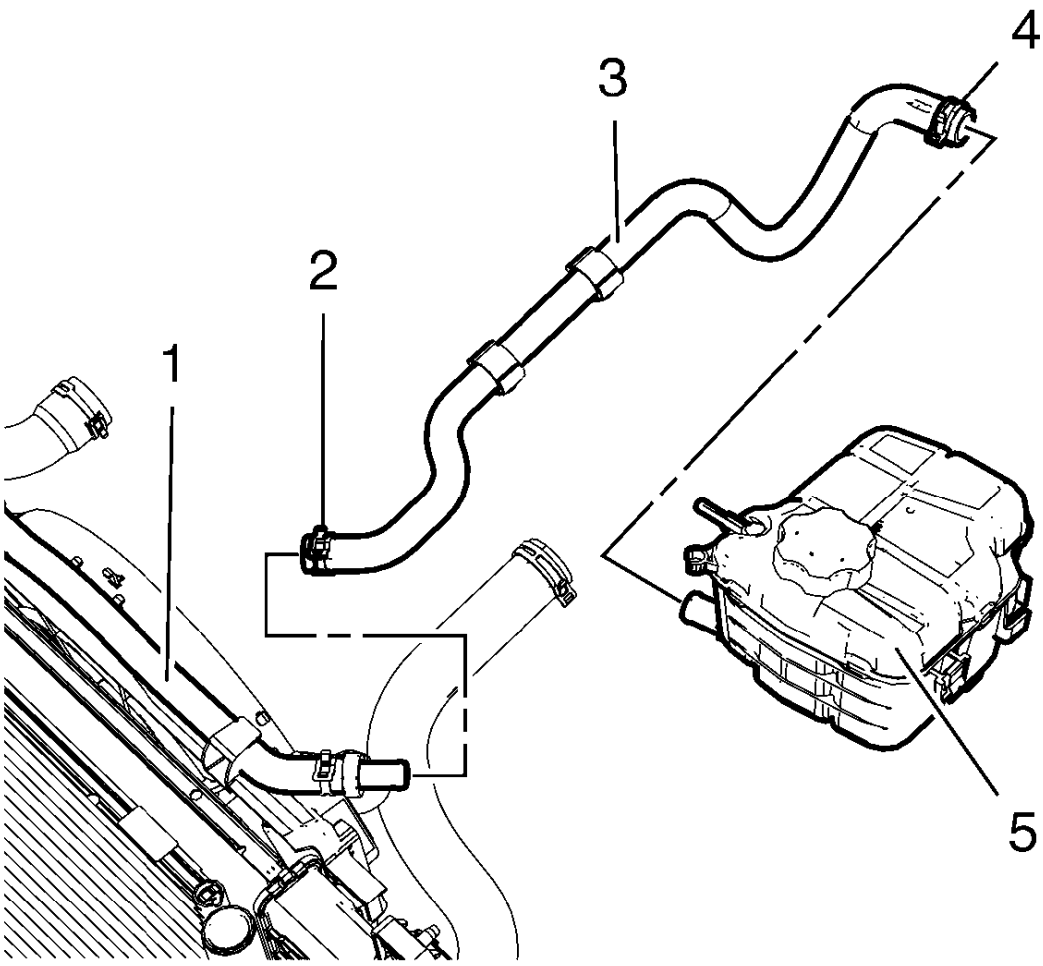

Fig. 26: Radiator Surge Tank, Hoses And Clamps
Courtesy of GENERAL MOTORS COMPANY

2. Loosen the hose clamp (4).
3. Remove the radiator surge tank hose (3) from the surge tank (5).
4. Loosen the clamp (2).
5. Remove the radiator surge tank hose (3) from the radiator outlet hose (1).

Installation Procedure

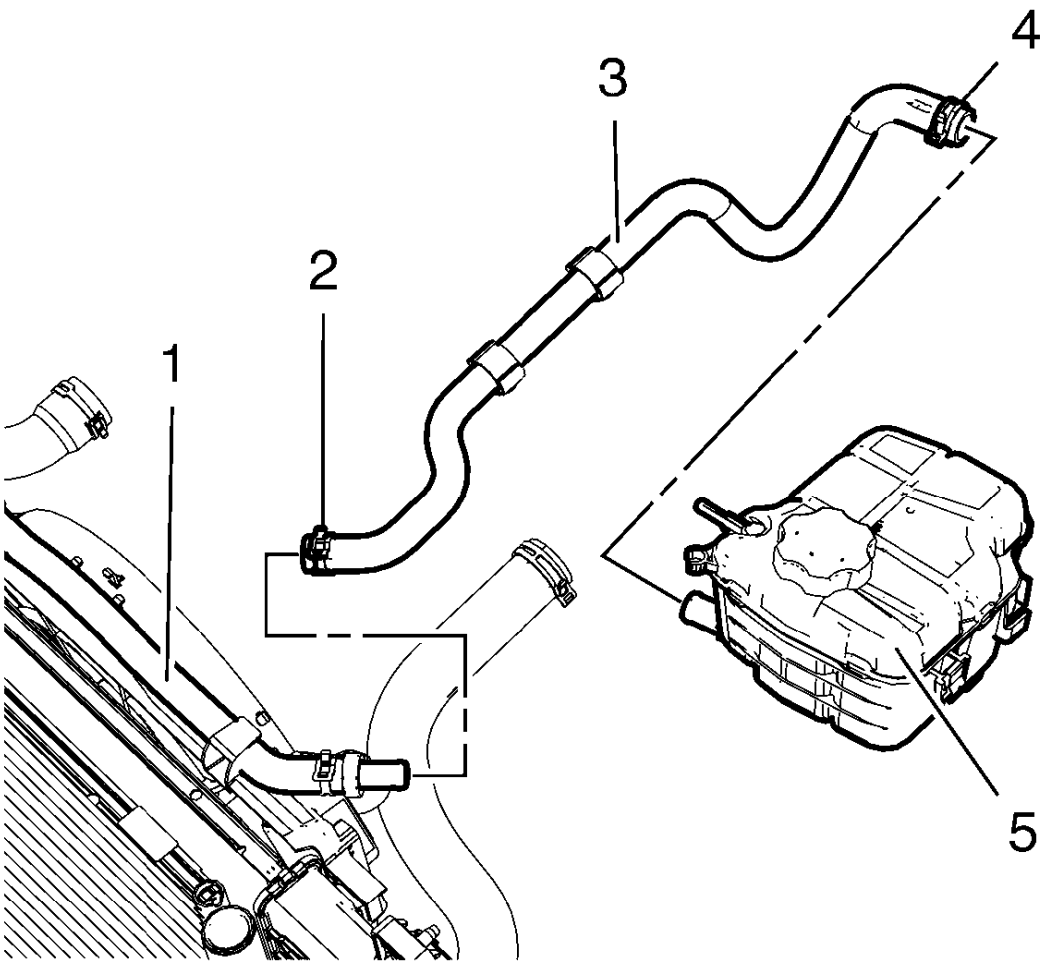

Fig. 27: Radiator Surge Tank, Hoses And Clamps
Courtesy of GENERAL MOTORS COMPANY

1. Install the radiator surge tank outlet hose (3) to the radiator outlet hose (1).
2. Install the clamp (2).
3. Install the radiator surge tank outlet hose (3) to the surge tank (5).
4. Install the clamp (4).
5. Fill the cooling system. Refer to **Cooling System Draining and Filling (Static Fill)**, **Cooling System Draining and Filling (GE-47716 Fill)**.

RADIATOR INLET HOSE REPLACEMENT (1.4L LUV)

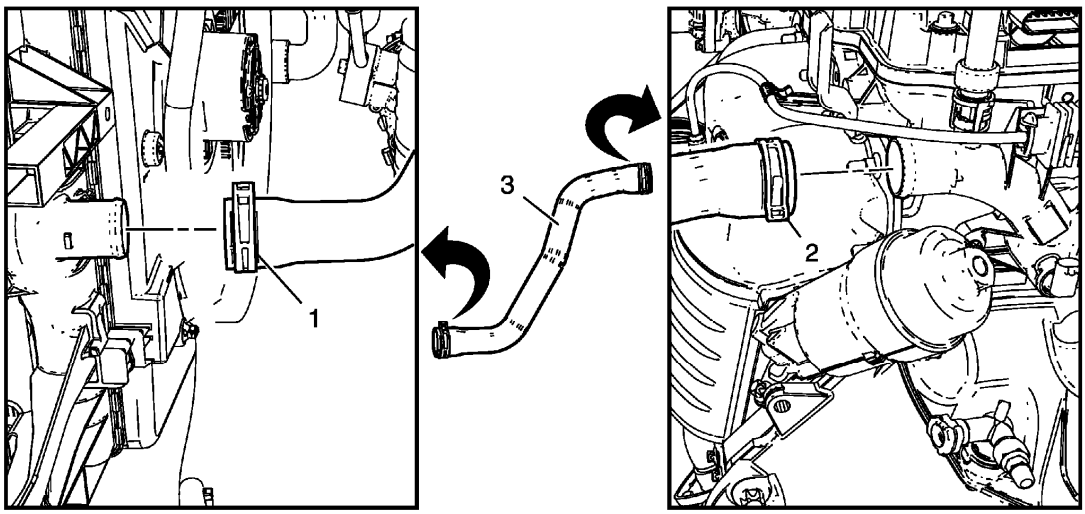

Fig. 28: Radiator Inlet Hose
Courtesy of GENERAL MOTORS COMPANY

Radiator Inlet Hose Replacement (1.4L LUV)

Callout	Component Name
Preliminary Procedures Drain the cooling system. Refer to **Cooling System Draining and Filling (Static Fill)**, **Cooling System Draining and Filling (GE-47716 Fill)**.	
1	Radiator Inlet Hose Clamp **Procedure** Place a drain pan below the vehicle.
2	Radiator Inlet Hose Clamp
3	Radiator Inlet Hose

RADIATOR INLET HOSE REPLACEMENT (1.8L LUW AND LWE)

Removal Procedure

1. Disconnect the battery. Refer to **Battery Negative Cable Disconnection and Connection** .
2. Unclip the engine control module, if necessary.
3. Raise and support the vehicle. Refer to **Lifting and Jacking the Vehicle** .
4. Place a drain pan below the vehicle.
5. Drain the cooling system. Refer to **Cooling System Draining and Filling (Static Fill)**, **Cooling System Draining and Filling (GE-47716 Fill)**.

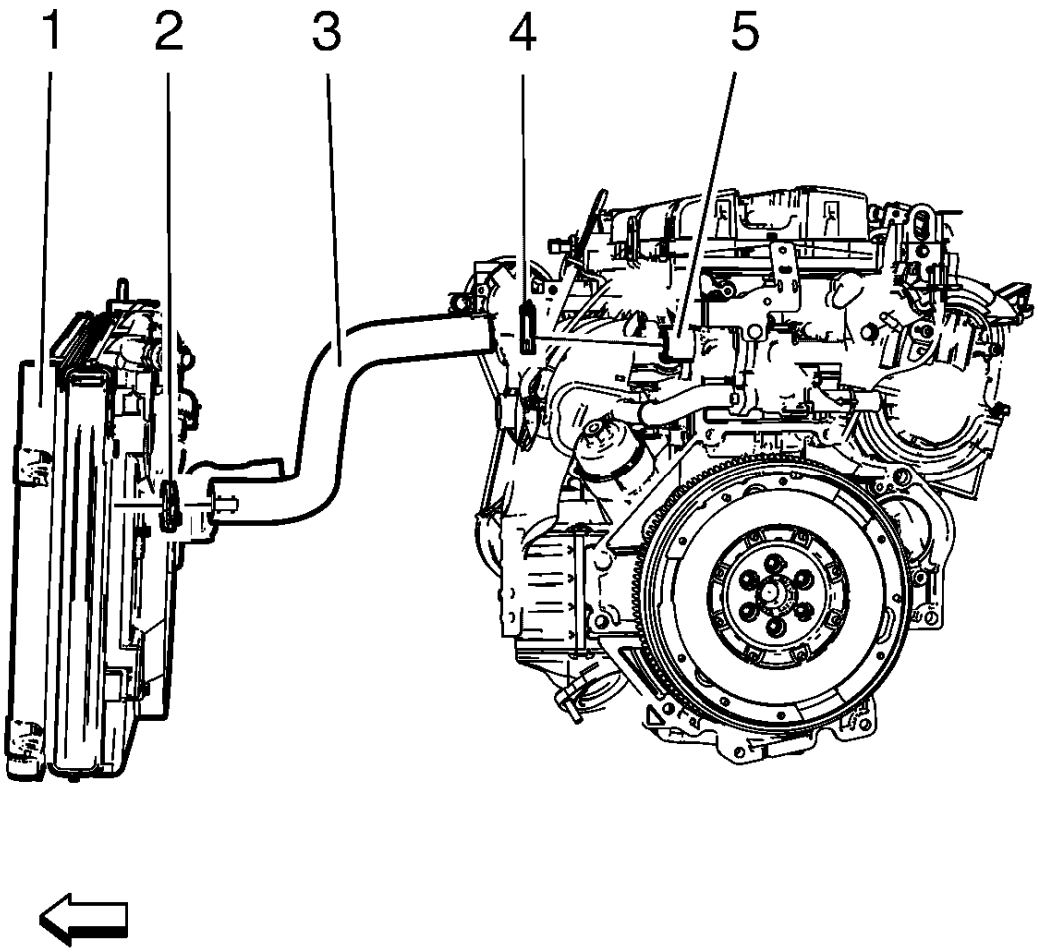

Fig. 29: Radiator Inlet Hose
Courtesy of GENERAL MOTORS COMPANY

6. Loosen the radiator inlet hose clamp (2).
7. Remove the radiator inlet hose (3) from the radiator (1).
8. Loosen the radiator inlet hose clamp (4).
9. Remove the radiator inlet hose (3) from the thermostat housing (5).

Installation Procedure

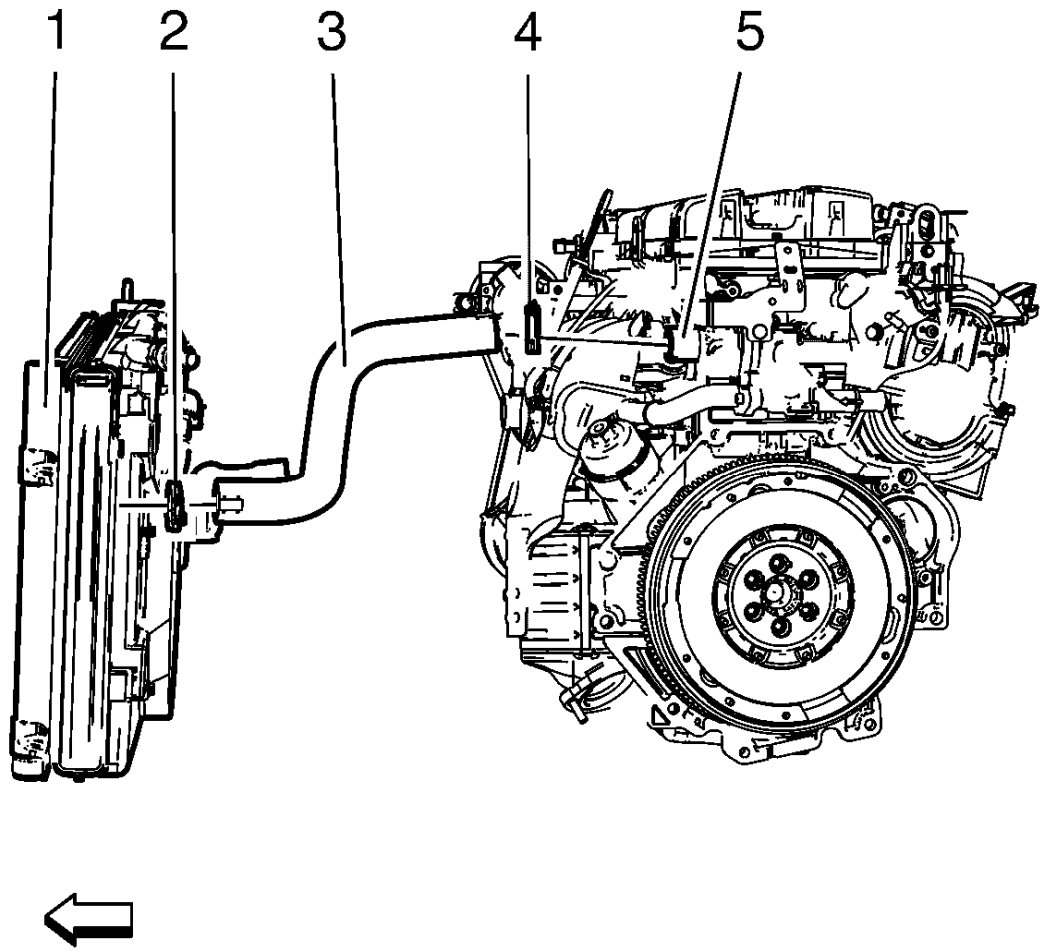

Fig. 30: Radiator Inlet Hose
Courtesy of GENERAL MOTORS COMPANY

1. Install the radiator inlet hose (3) to the thermostat housing (5).
2. Install the radiator inlet hose clamp (4).
3. Install the radiator inlet hose (3) to the radiator (1).
4. Install the radiator inlet hose clamp (2).
5. Lower the vehicle.
6. Fill the cooling system. Refer to **Cooling System Draining and Filling (Static Fill)**, **Cooling System Draining and Filling (GE-47716 Fill)**.
7. Clip in the engine control module, if necessary.
8. Connect the battery. Refer to **Battery Negative Cable Disconnection and Connection** .

RADIATOR OUTLET HOSE REPLACEMENT (1.4L LUV)

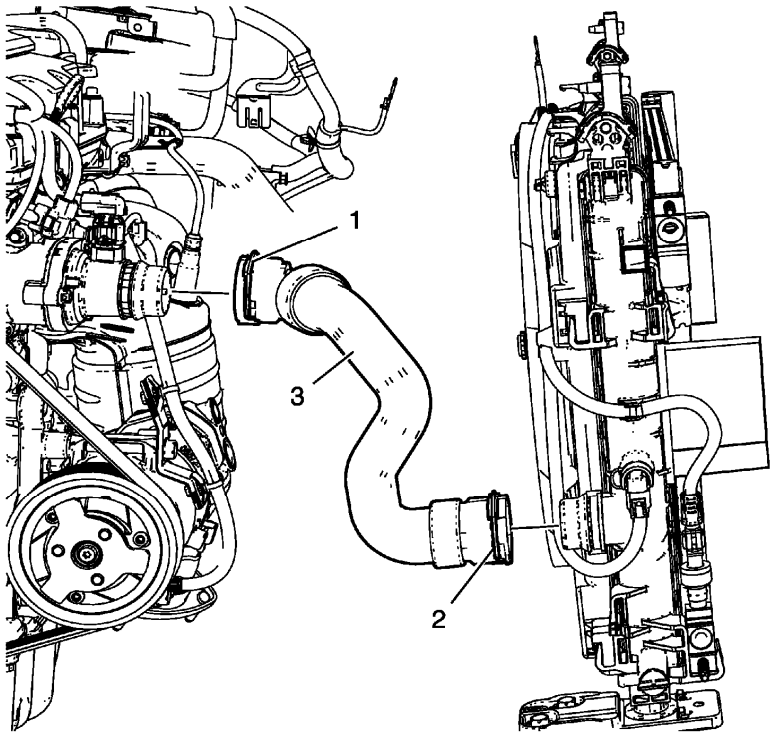

Fig. 31: Radiator Outlet Hose
Courtesy of GENERAL MOTORS COMPANY

Radiator Outlet Hose Replacement (1.4L LUV)

Callout	Component Name
Preliminary Procedure Drain the cooling system. Refer to **Cooling System Draining and Filling (Static Fill)**, **Cooling System Draining and Filling (GE-47716 Fill)**.	
1	Radiator Outlet Hose Connector **Procedure** 1. Place a drain pan below the vehicle. 2. Unlock radiator outlet hose connector.
2	Radiator Outlet Hose Connector **Procedure** Unlock the radiator outlet hose connector.
3	Radiator Outlet Hose

RADIATOR OUTLET HOSE REPLACEMENT (1.8L LUW AND LWE)

Removal Procedure

1. Drain the cooling system. Refer to **Cooling System Draining and Filling (Static Fill)**, **Cooling System Draining and Filling (GE-47716 Fill)**

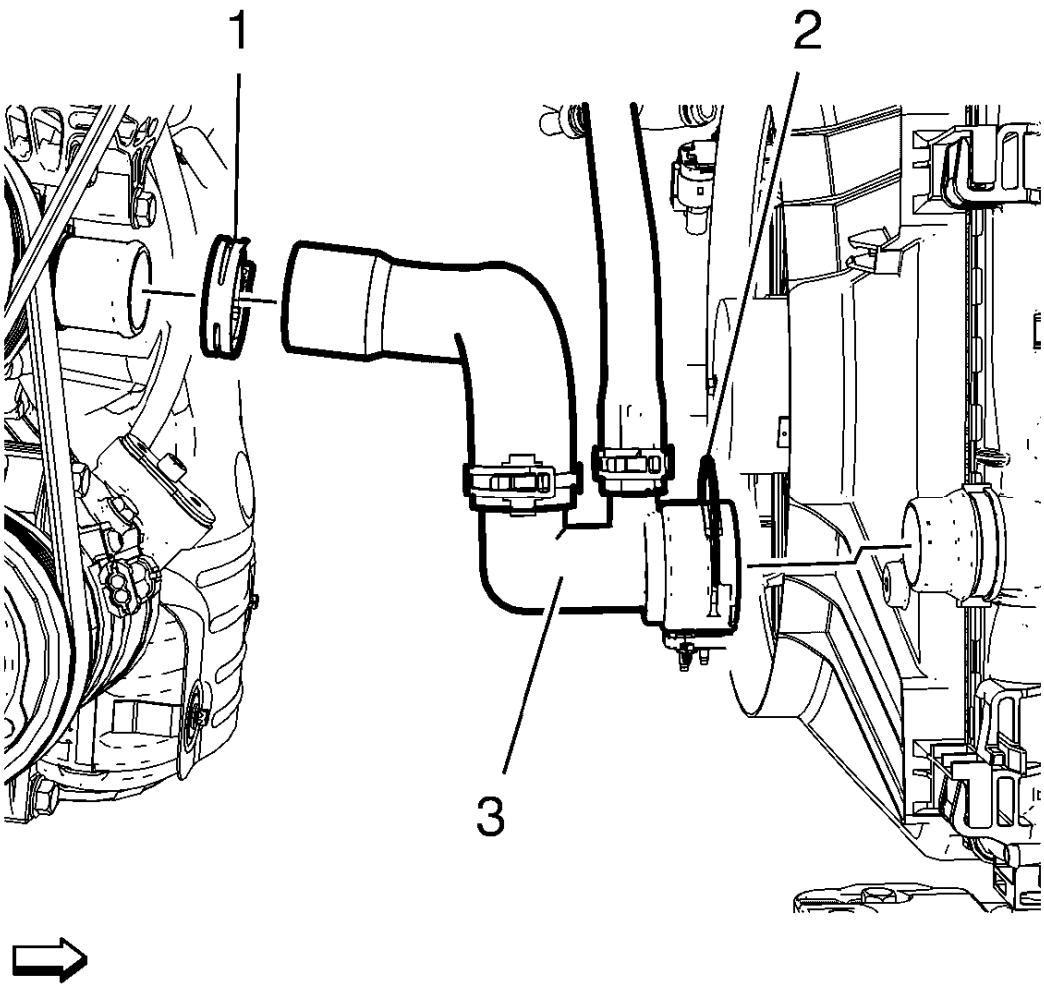

Fig. 32: Radiator Outlet Hose Assembly
Courtesy of GENERAL MOTORS COMPANY

2. Loosen the hose clamp (1).
3. Remove the radiator outlet hose assembly (3) from the water pump.
4. Unclip the clamp (2).
5. Remove the radiator outlet hose assembly (3) from the radiator.

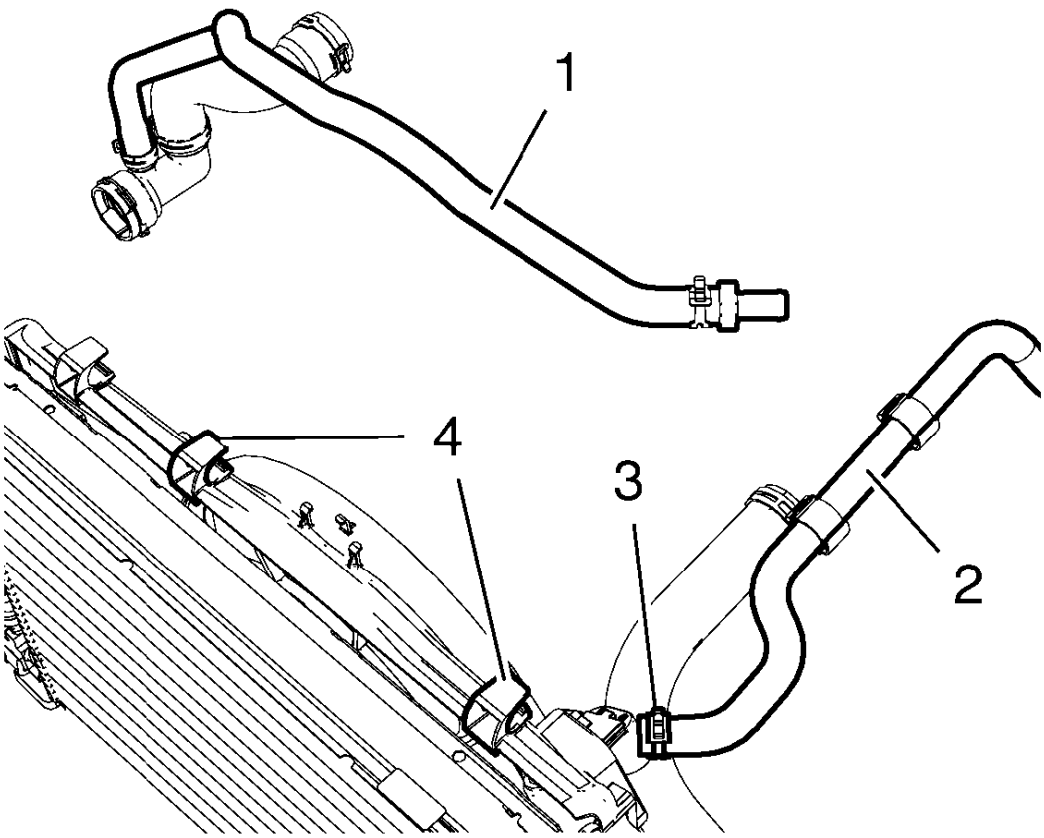

Fig. 33: Radiator Surge Tank Outlet Hose
Courtesy of GENERAL MOTORS COMPANY

6. Loosen the clamp (3).
7. Remove the radiator outlet hose (1) from the radiator surge tank outlet hose (2).
8. Unclip the radiator outlet hose (1) from the 2 clips (4).

Installation Procedure

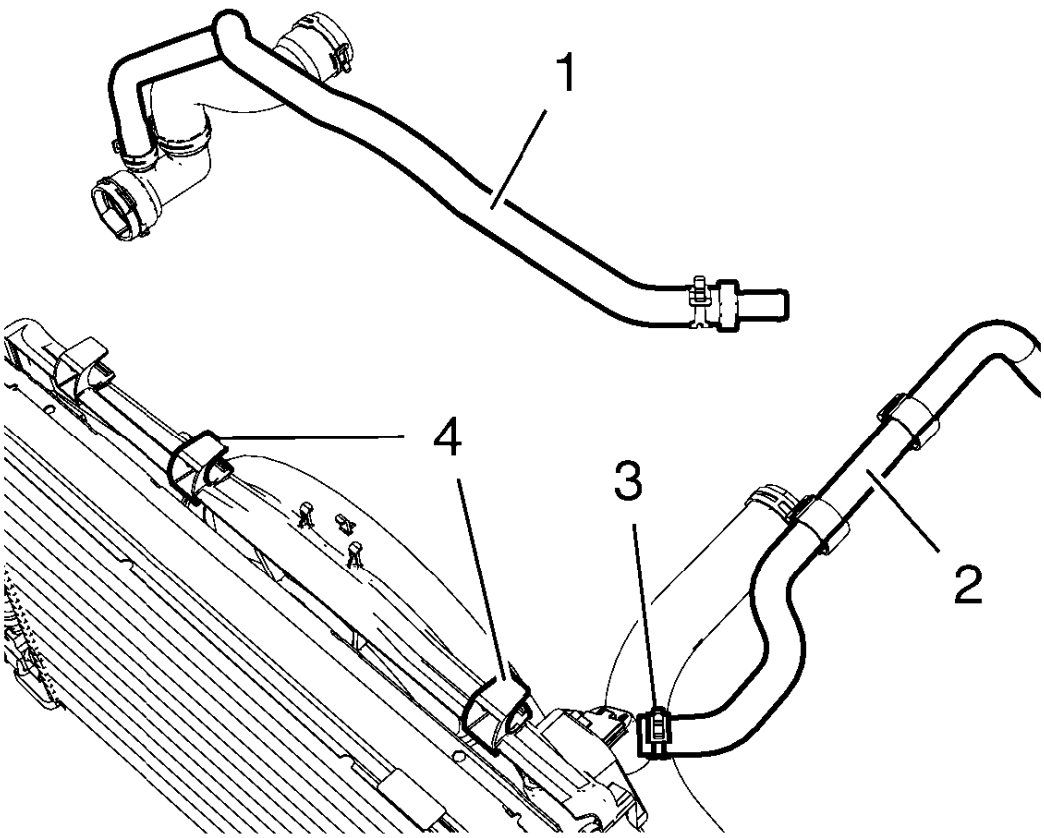

Fig. 34: Radiator Surge Tank Outlet Hose
Courtesy of GENERAL MOTORS COMPANY

1. Clip in the radiator outlet hose (1) into the 2 clips (4).
2. Install the radiator outlet hose (1) to the radiator surge tank outlet hose (2).
3. Install the clamp (3).

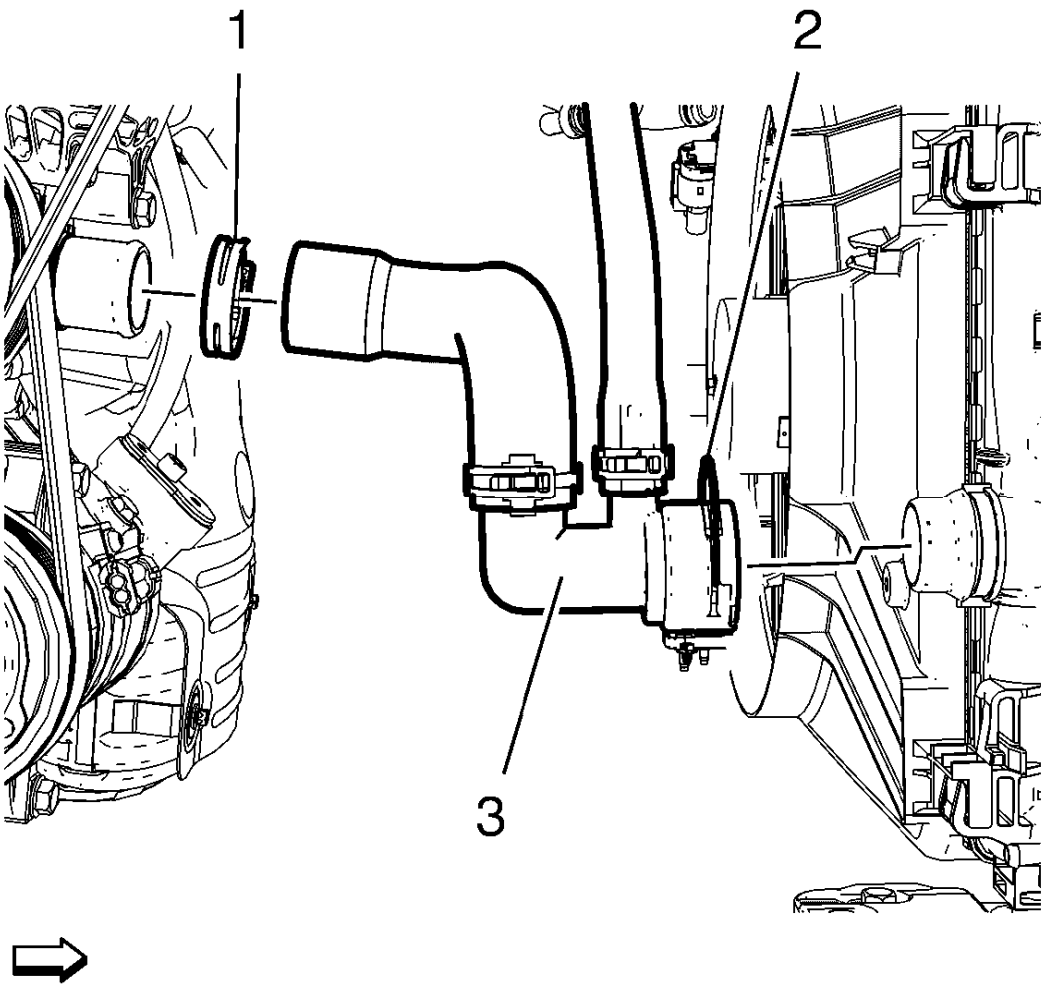

Fig. 35: Radiator Outlet Hose Assembly
Courtesy of GENERAL MOTORS COMPANY

4. Install the radiator surge tank outlet hose assembly (3) to the radiator.
5. Clip in the clamp (2).
6. Install the radiator surge tank outlet hose assembly (3) to the water pump.
7. Install the hose clamp (1).
8. Fill the cooling system. Refer to **Cooling System Draining and Filling (Static Fill)**, **Cooling System Draining and Filling (GE-47716 Fill)**

RADIATOR MOUNTING STUD REPAIR

Repair Procedure

1. Pressure test the cooling system. Refer to **Cooling System Leak Testing**. If the radiator is not leaky, perform the following procedure.

2. Remove the radiator. Refer to **Radiator Replacement (1.4L LUV with Automatic Transmission)**, **Radiator Replacement (1.8L LUW and LWE)**, **Radiator Replacement (1.4L LUV with Manual Transmission)**.

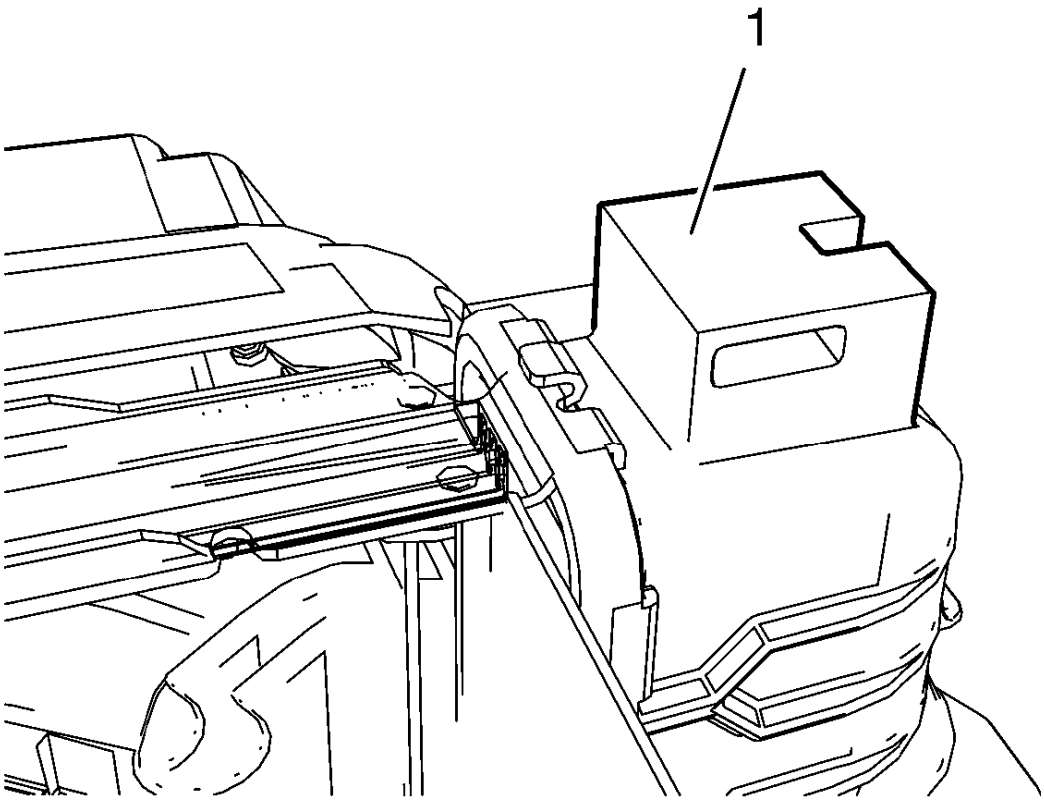

Fig. 36: Identifying Fracture Surface
Courtesy of GENERAL MOTORS COMPANY

3. Grind the fracture surface (1) with a proper tool.
4. Drill a hole in the center of the fractured surface, using a 6 mm (0.24 in) drill.

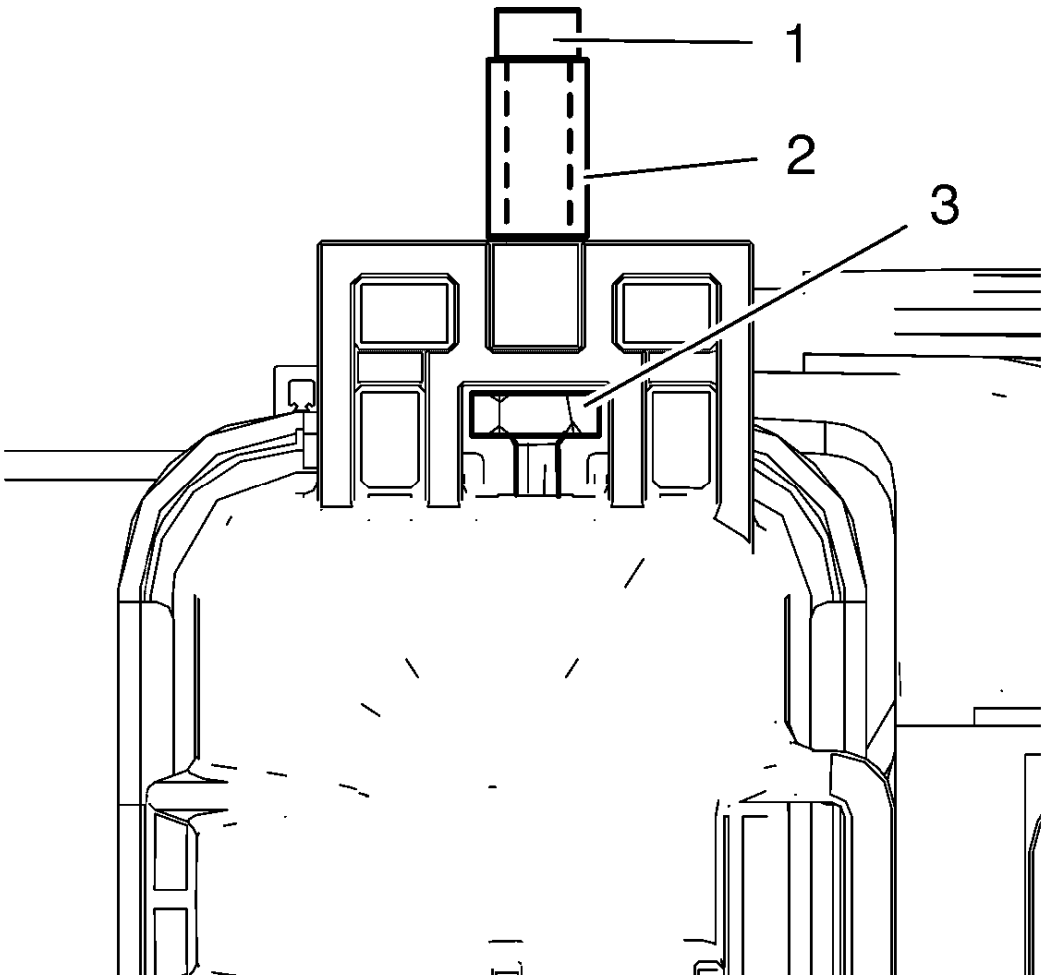

Fig. 37: Radiator Mounting Pin, Nut And Bolt
Courtesy of GENERAL MOTORS COMPANY

5. Install the new radiator mounting pin (2).
   - Install the nut (3).

     NOTE: The bolt should not be longer than 35 mm (1.38 in).

   - Install the radiator mounting pin (2) with the bolt (1).

     CAUTION: Refer to Fastener Caution .

6. Tighten the bolt 5 N.m (44 lb in).
7. Install the radiator. Refer to **Radiator Replacement (1.4L LUV with Automatic Transmission)**, **Radiator Replacement (1.8L LUW and LWE)**, **Radiator Replacement (1.4L LUV with Manual**

Transmission).

CHARGE AIR COOLER REPLACEMENT (AUTOMATIC TRANSMISSION)

Removal Procedure

1. Disconnect battery negative cable. Refer to **Battery Negative Cable Disconnection and Connection** .
2. Remove the front bumper fascia. Refer to **Front Bumper Fascia Replacement** .
3. Remove the radiator upper air seal.
4. Remove the left and right side radiator air baffles.
5. Remove the charge air cooler inlet air hose from the charge air cooler. Refer to **Charge Air Cooler Inlet Air Hose Replacement** .
6. Remove the charge air cooler outlet air hose from the charge air cooler. Refer to **Charge Air Cooler Outlet Air Hose Replacement (Automatic Transmission)** , **Charge Air Cooler Outlet Air Hose Replacement (Manual Transmission)** .

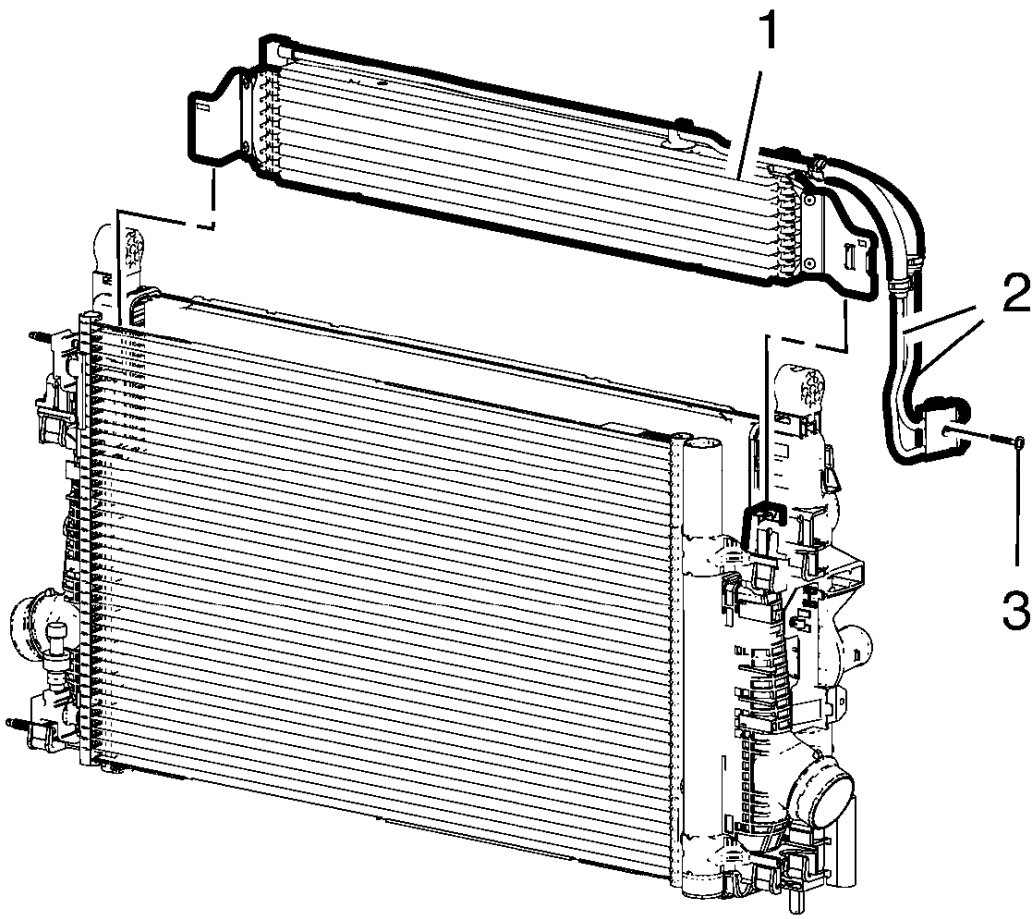

Fig. 38: Transmission Fluid Cooler
Courtesy of GENERAL MOTORS COMPANY

7. Unclip the transmission fluid cooler (1) from the radiator.
8. Reposition the transmission fluid cooler (1) away from the radiator and secure.

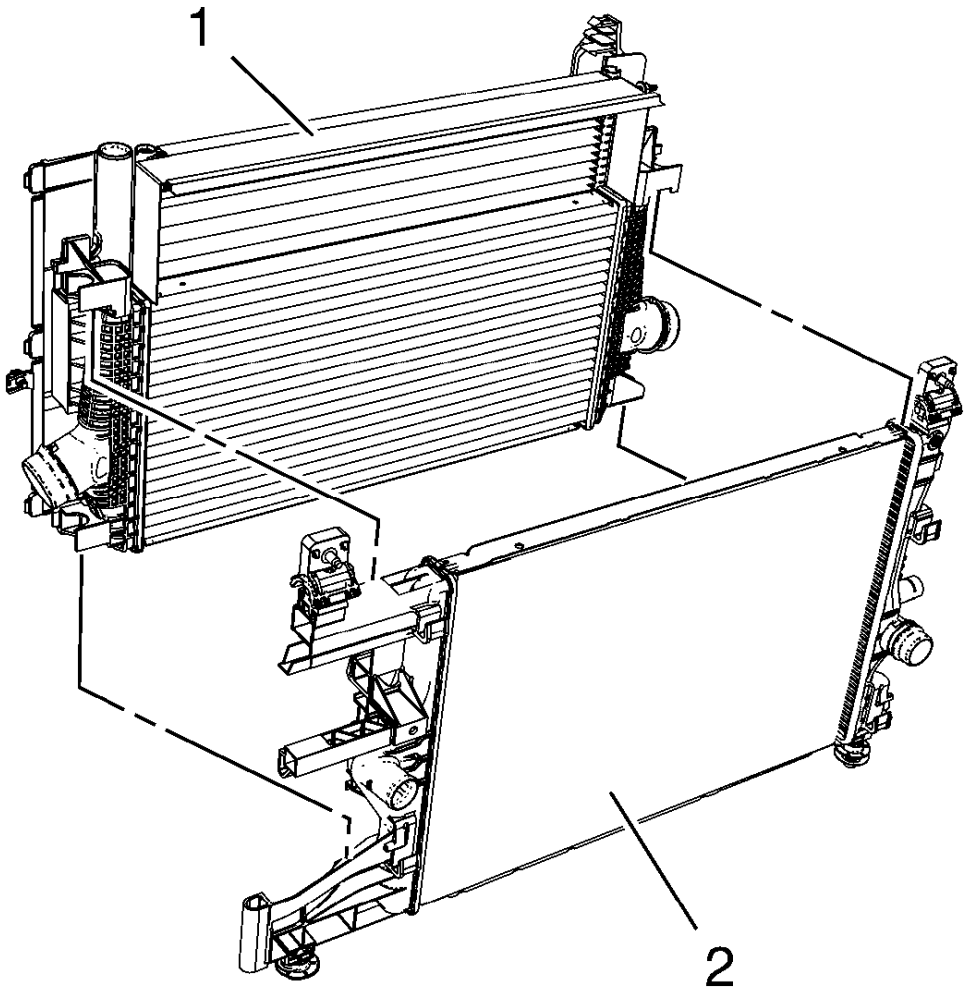

Fig. 39: Identifying Air Conditioning Condenser And Charge Air Cooler
Courtesy of GENERAL MOTORS COMPANY

9. Unclip the air conditioning condenser (2) from the charge air cooler (1).
10. Reposition the air conditioning condenser (2) forward and below the front bumper impact bar.

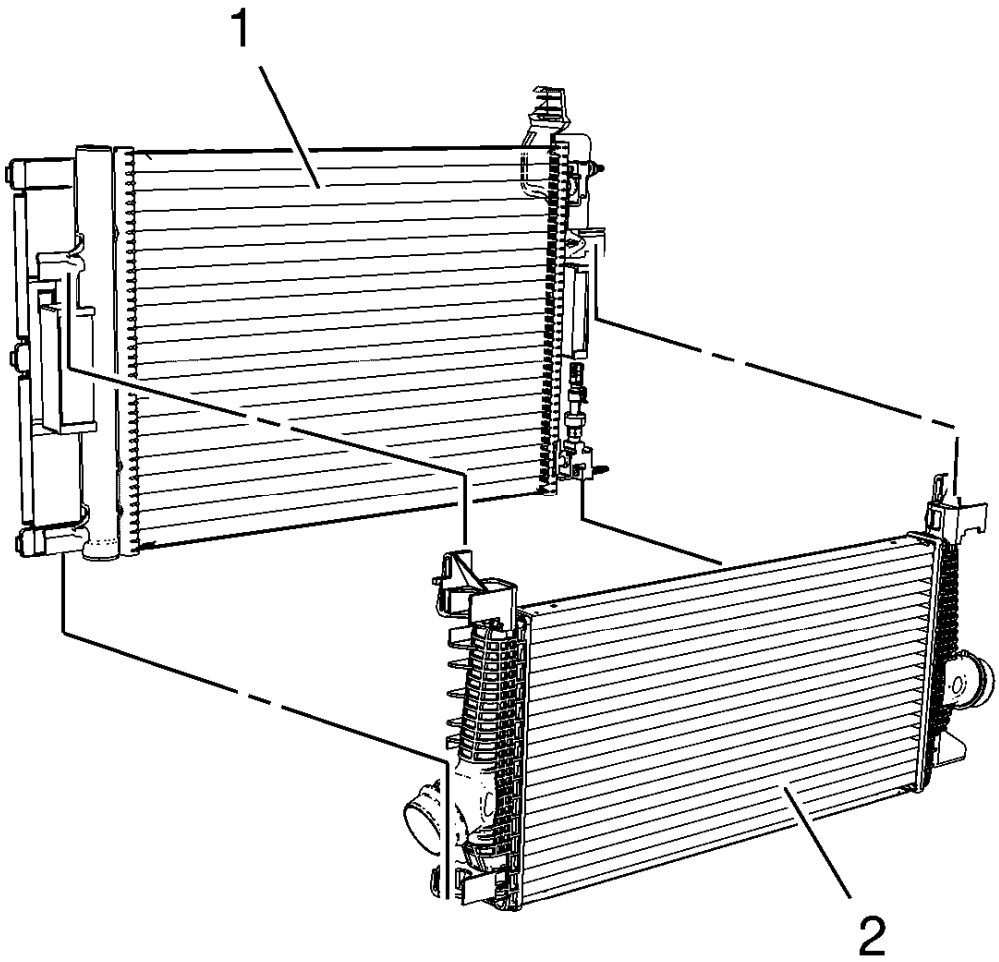

Fig. 40: Identifying Charge Air Cooler And Radiator
Courtesy of GENERAL MOTORS COMPANY

11. Unclip the charge air cooler (2) from the radiator (1).
12. Lift the charge air cooler (2) up and away from the radiator (1).

Installation Procedure

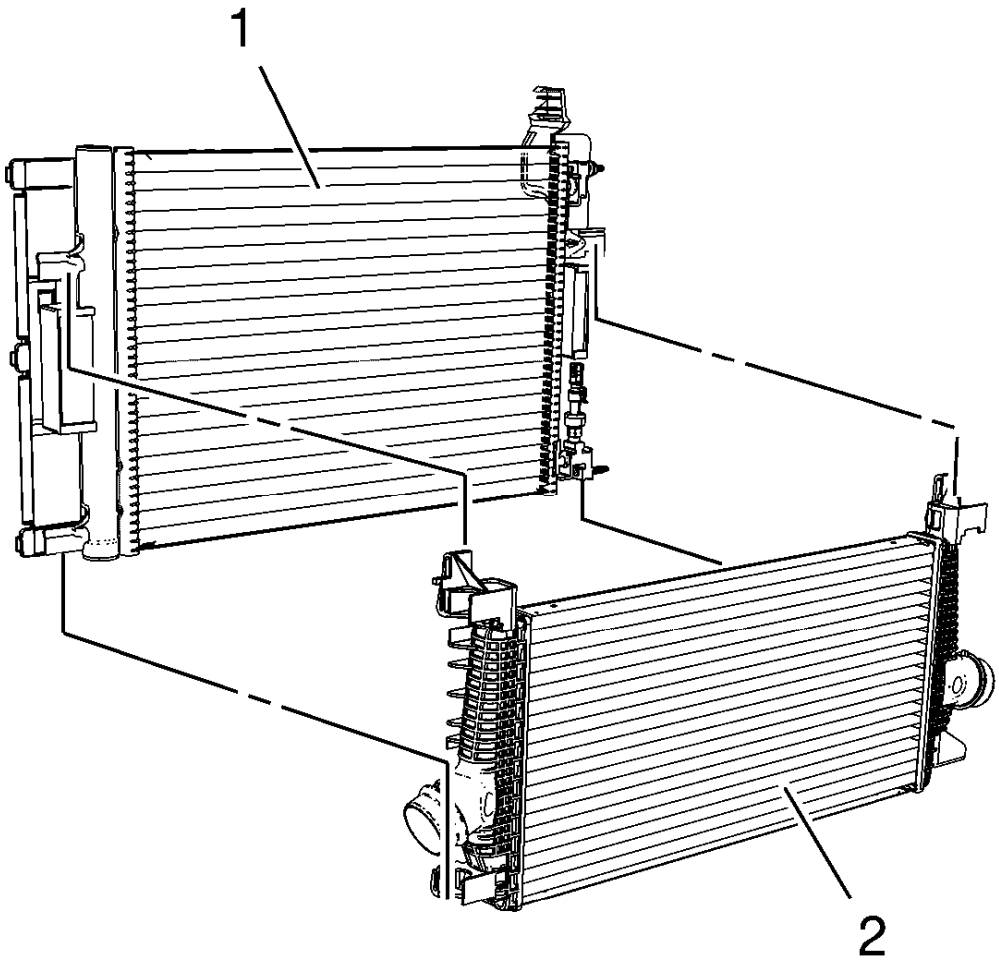

Fig. 41: Identifying Charge Air Cooler And Radiator
Courtesy of GENERAL MOTORS COMPANY

1. Clip the charge air cooler (2) to the radiator (1).

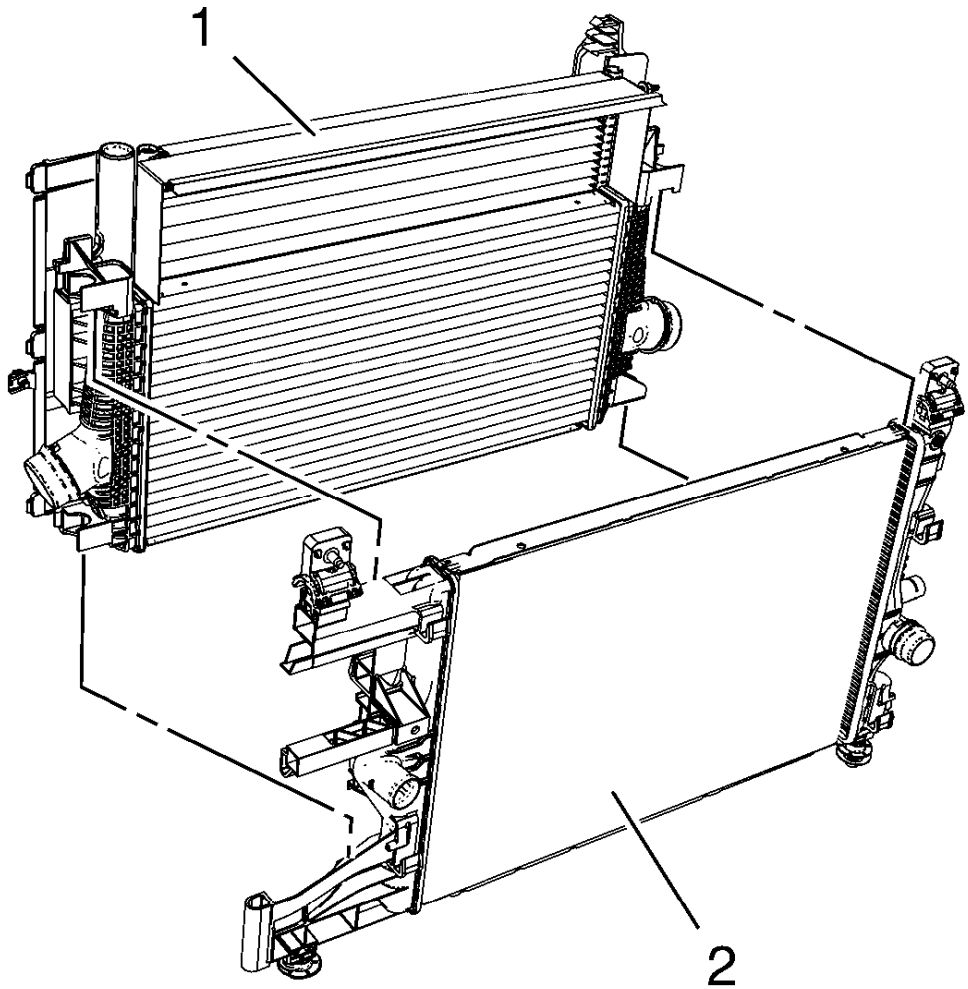

Fig. 42: Identifying Air Conditioning Condenser And Charge Air Cooler
Courtesy of GENERAL MOTORS COMPANY

2. Clip the air conditioning condenser (2) to the charge air cooler (1).

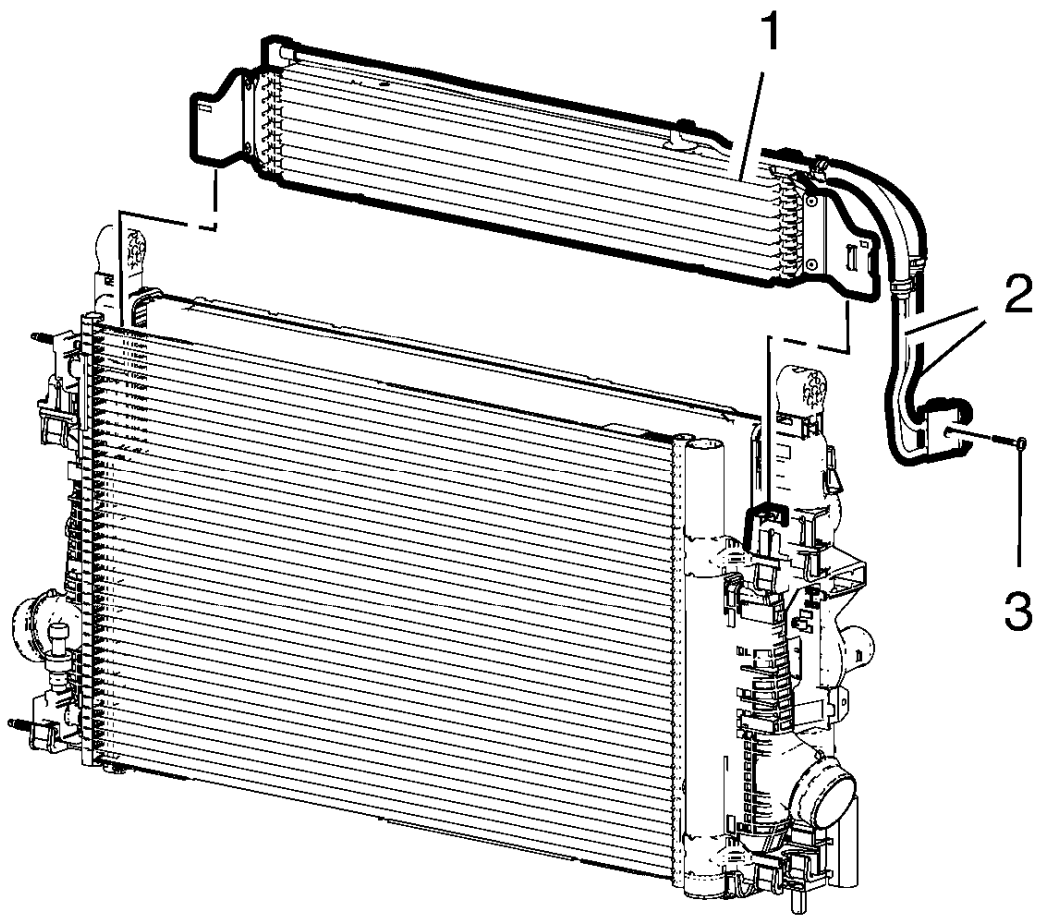

Fig. 43: Transmission Fluid Cooler
Courtesy of GENERAL MOTORS COMPANY

3. Clip the transmission fluid cooler (1) to the radiator.
4. Install the charge air cooler inlet air hose to the charge air cooler. Refer to **Charge Air Cooler Inlet Air Hose Replacement** .
5. Install the charge air cooler outlet air hose to the charge air cooler. Refer to **Charge Air Cooler Outlet Air Hose Replacement (Automatic Transmission)** , **Charge Air Cooler Outlet Air Hose Replacement (Manual Transmission)** .
6. Install the left and right side radiator air baffles.
7. Install the radiator upper air seal.
8. Install the front bumper fascia. Refer to **Front Bumper Fascia Replacement** .
9. Connect battery negative cable. Refer to **Battery Negative Cable Disconnection and Connection** .

CHARGE AIR COOLER REPLACEMENT (MANUAL TRANSMISSION)

Removal Procedure

1. Disconnect the battery negative cable. Refer to **Battery Negative Cable Disconnection and Connection** .
2. Remove the front bumper fascia. Refer to **Front Bumper Fascia Replacement** .
3. Remove the radiator upper air seal.
4. Remove the left and right side radiator air baffles.
5. Remove the charge air cooler inlet air hose from the charge air cooler. Refer to **Charge Air Cooler Inlet Air Hose Replacement** .
6. Remove the charge air cooler outlet air hose from the charge air cooler. Refer to **Charge Air Cooler Outlet Air Hose Replacement (Automatic Transmission)** , **Charge Air Cooler Outlet Air Hose Replacement (Manual Transmission)** .

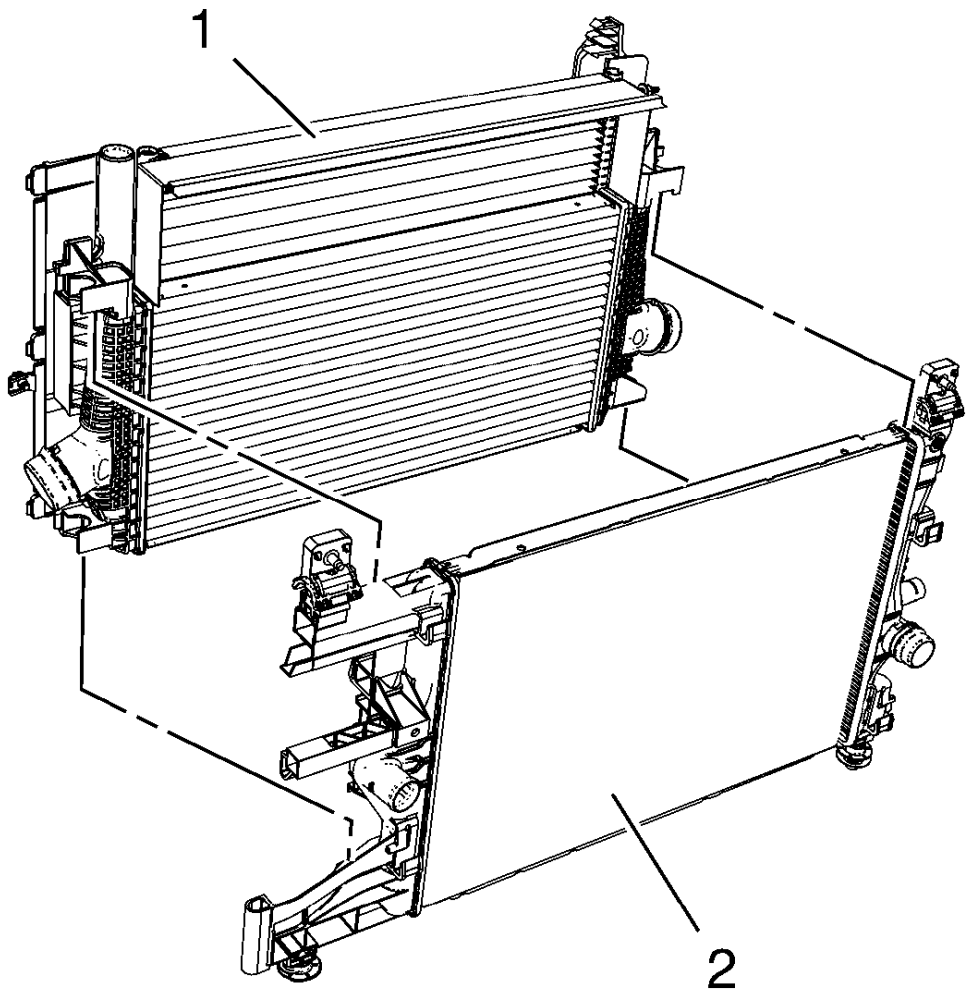

Fig. 44: Identifying Air Conditioning Condenser And Charge Air Cooler
Courtesy of GENERAL MOTORS COMPANY

7. Unclip the air conditioning condenser (2) from the charge air cooler (1).
8. Reposition the air conditioning condenser (2) forward and below the front bumper impact bar.

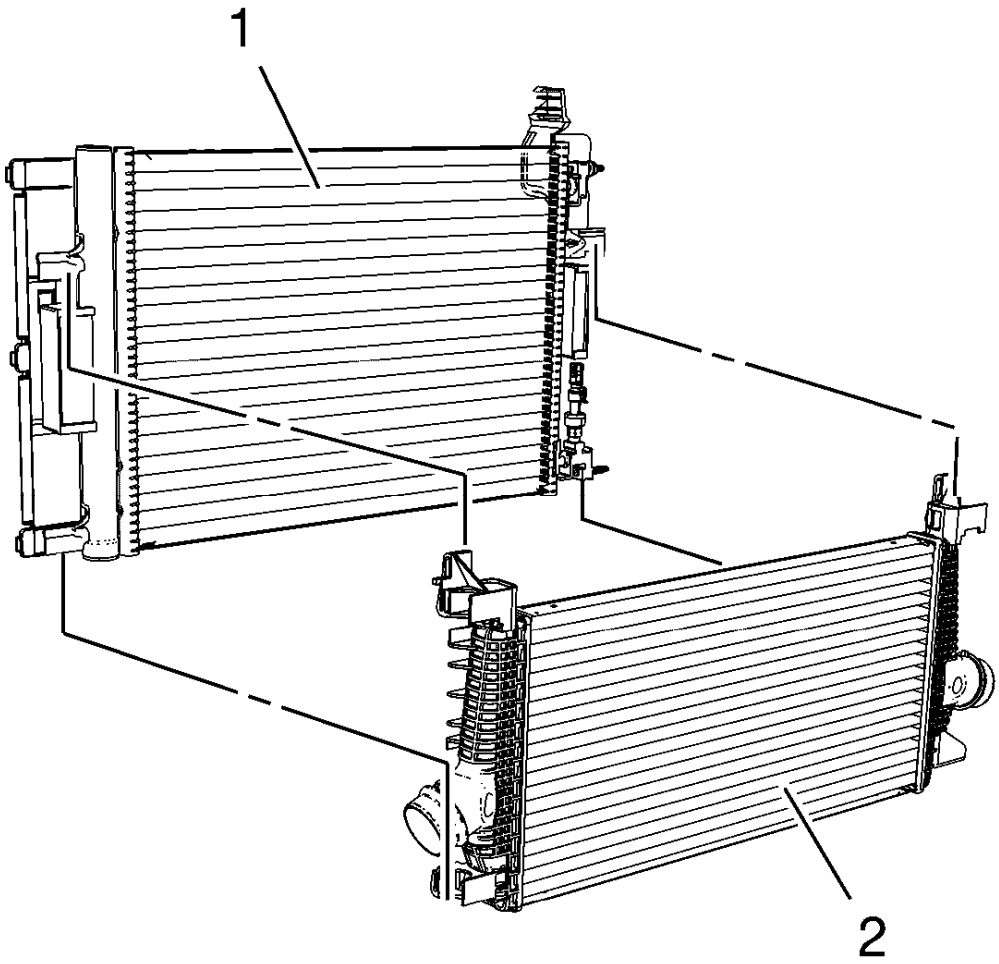

Fig. 45: Identifying Charge Air Cooler And Radiator
Courtesy of GENERAL MOTORS COMPANY

9. Unclip the charge air cooler (2) from the radiator (1).
10. Lift the charge air cooler (2) up and away from the radiator (1).

Installation Procedure

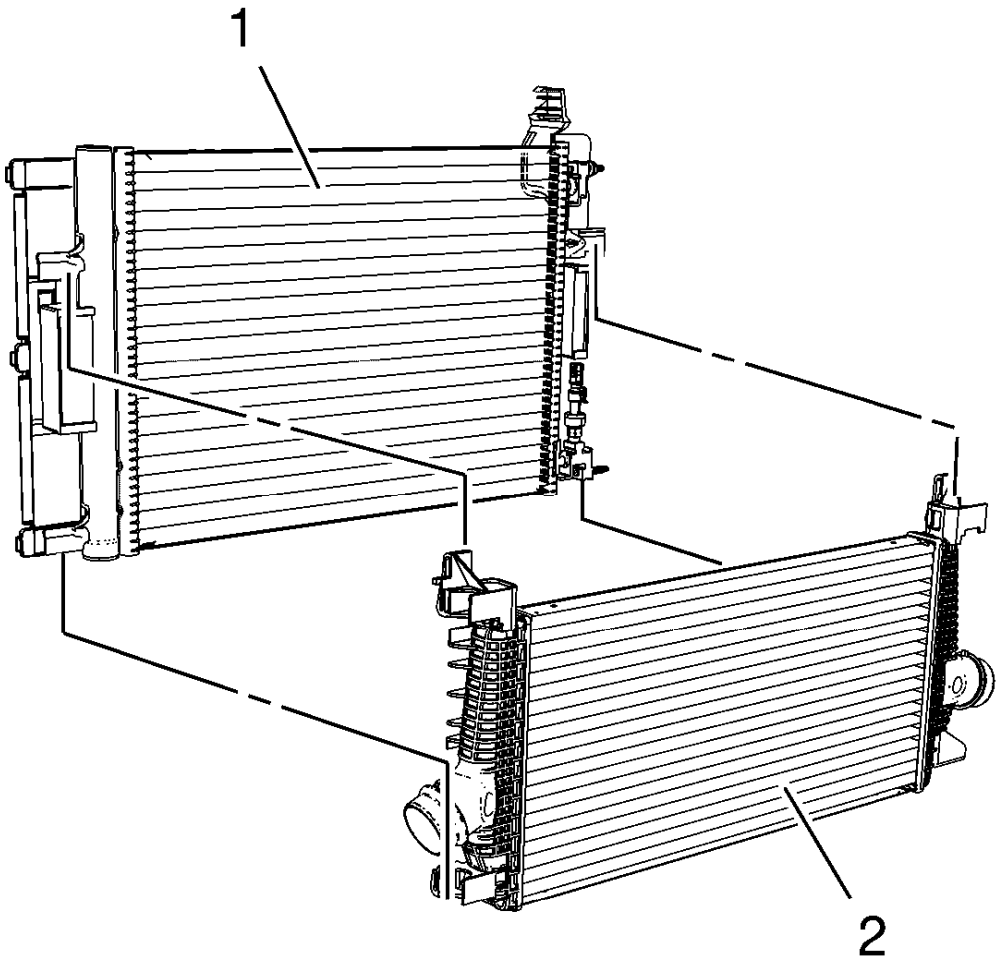

Fig. 46: Identifying Charge Air Cooler And Radiator
Courtesy of GENERAL MOTORS COMPANY

1. Clip the charge air cooler (2) to the radiator (1).

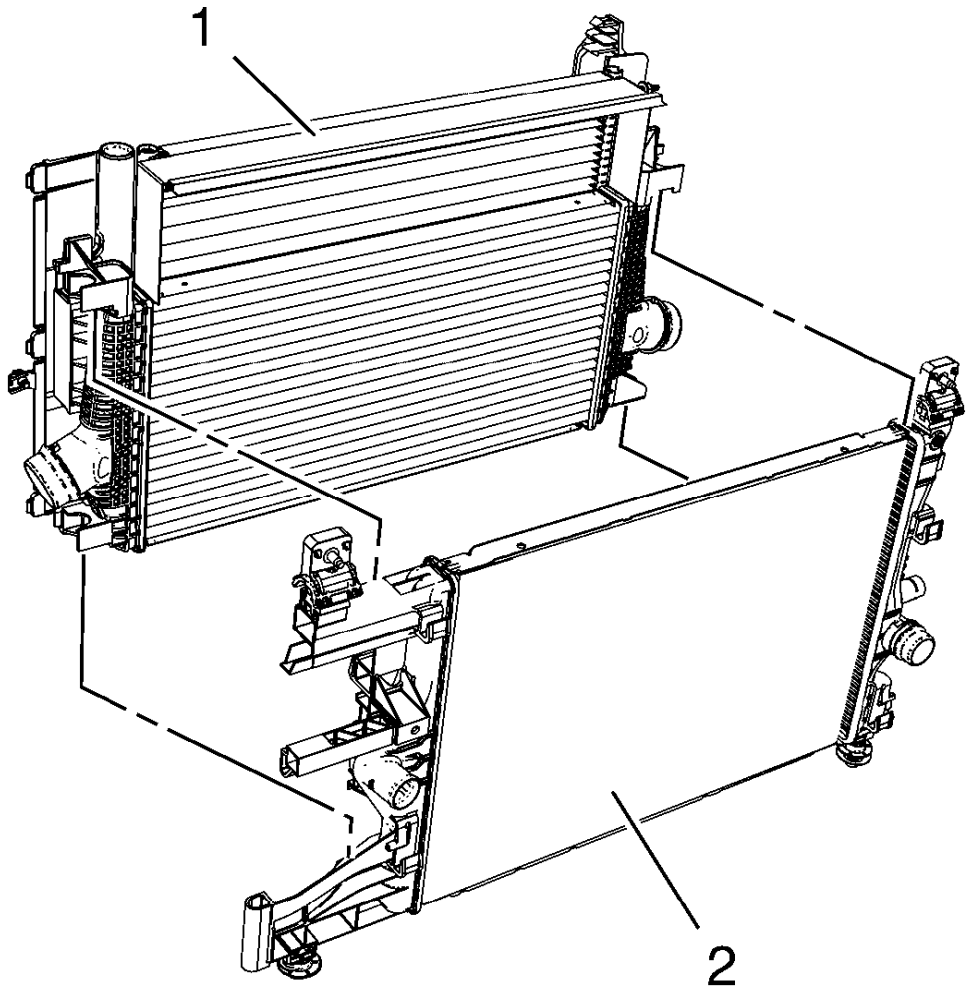

Fig. 47: Identifying Air Conditioning Condenser And Charge Air Cooler
Courtesy of GENERAL MOTORS COMPANY

2. Clip the air conditioning condenser (2) to the charge air cooler (1).
3. Install the charge air cooler inlet air hose to the charge air cooler. Refer to **Charge Air Cooler Inlet Air Hose Replacement** .
4. Install the charge air cooler outlet air hose to the charge air cooler. Refer to **Charge Air Cooler Outlet Air Hose Replacement (Automatic Transmission)** , **Charge Air Cooler Outlet Air Hose Replacement (Manual Transmission)** .
5. Install the left and right side radiator air baffles.
6. Install the radiator upper air seal.
7. Install the front bumper fascia. Refer to **Front Bumper Fascia Replacement** .
8. Connect battery negative cable. Refer to **Battery Negative Cable Disconnection and Connection** .

RADIATOR AND CHARGE AIR COOLER BRACKET REPAIR

1. Remove the radiator. Refer to **Radiator Replacement (1.4L LUV with Automatic Transmission)**, **Radiator Replacement (1.8L LUW and LWE)**, **Radiator Replacement (1.4L LUV with Manual Transmission)**.

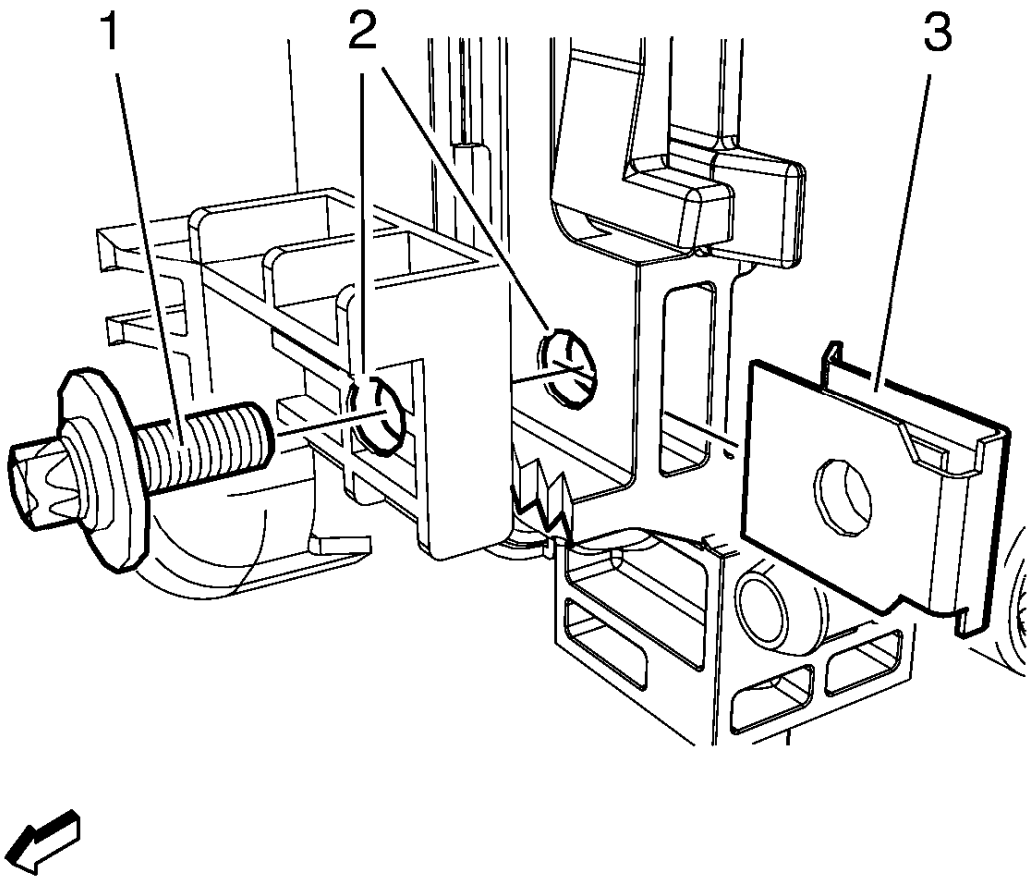

Fig. 48: Radiator Mounting Components
Courtesy of GENERAL MOTORS COMPANY

2. Drill hole in the charge air cooler bracket and radiator bracket (2) using a 7 mm (0.28 in) drill.
3. Install the j-clip (3) to the radiator.
4. Install the radiator. Refer to **Radiator Replacement (1.4L LUV with Automatic Transmission)**, **Radiator Replacement (1.8L LUW and LWE)**, **Radiator Replacement (1.4L LUV with Manual Transmission)**.

CAUTION: Refer to Fastener Caution .

5. Install the repair bolt (1) with locking compound and tighten to 5 N.m (45 lb in).

RADIATOR LOWER BRACKET REPLACEMENT

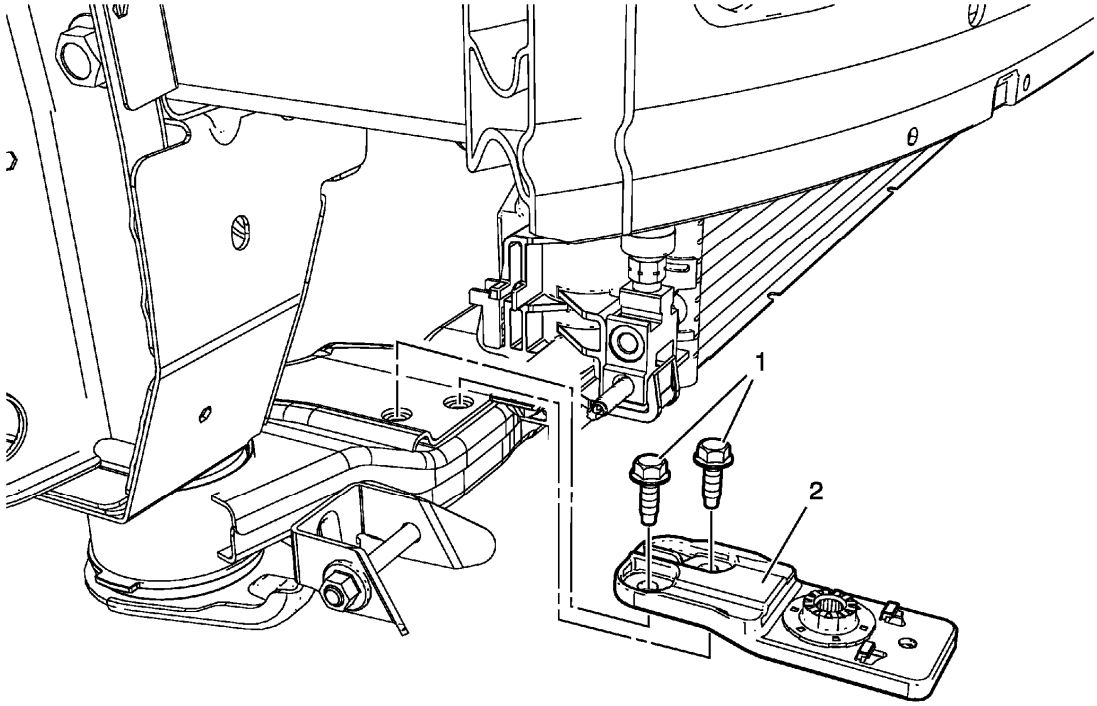

Fig. 49: Radiator Lower Bracket
Courtesy of GENERAL MOTORS COMPANY

Radiator Lower Bracket Replacement

Callout	Component Name
Preliminary Procedure Remove the front bumper fascia. Refer to **Front Bumper Fascia Replacement** .	
1	Radiator Lower Bracket Bolt (Qty: 2) **CAUTION:** **Refer to Fastener Caution .** **Procedure** Secure the radiator. **Tighten** 22 N.m (16 lb ft)
2	Radiator Lower Bracket

ENGINE COOLANT FAN RESISTOR MOUNT REPAIR

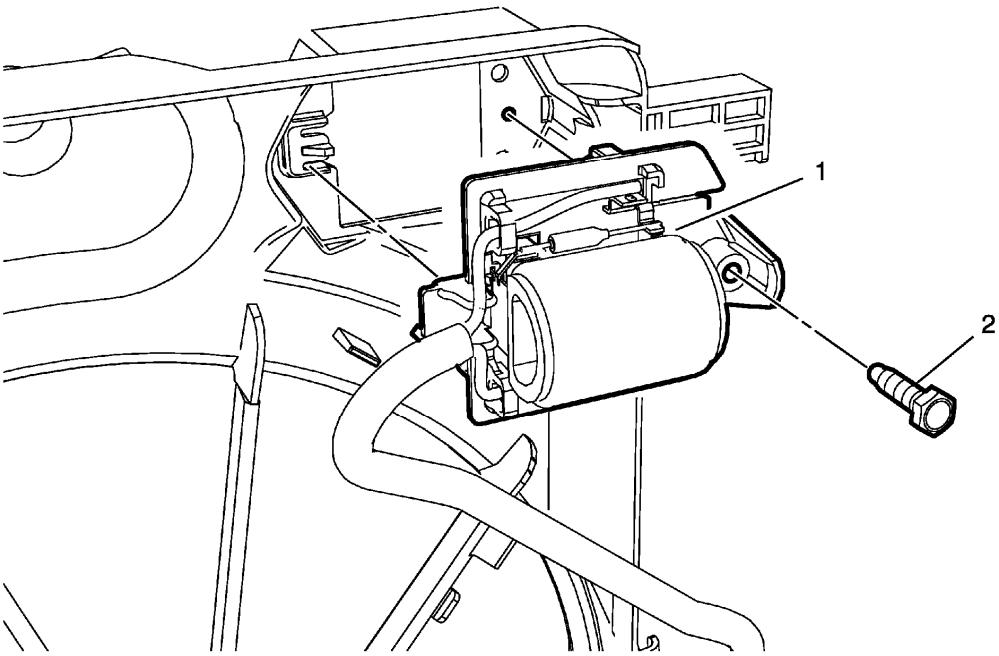

Fig. 50: Engine Coolant Fan Resistor Mount (Single Coolant Fan)
Courtesy of GENERAL MOTORS COMPANY

Engine Coolant Fan Resistor Mount Repair

Callout	Component Name
Preliminary Procedures Remove the engine cooling fan shroud. Refer to **Engine Coolant Fan Replacement**.	
1	Engine Coolant Fan Resistor Mount
2	Engine Coolant Fan Resistor Mount Bolt **CAUTION:** **Refer to Fastener Caution .** **Procedure** In case of a broken engine coolant fan resistor mount use this repair procedure. **Tighten** 5 N.m (44 lb in)

THROTTLE BODY HEATER INLET HOSE REPLACEMENT

Removal Procedure

1. Open the hood.

2. Place a collection basin under the vehicle.

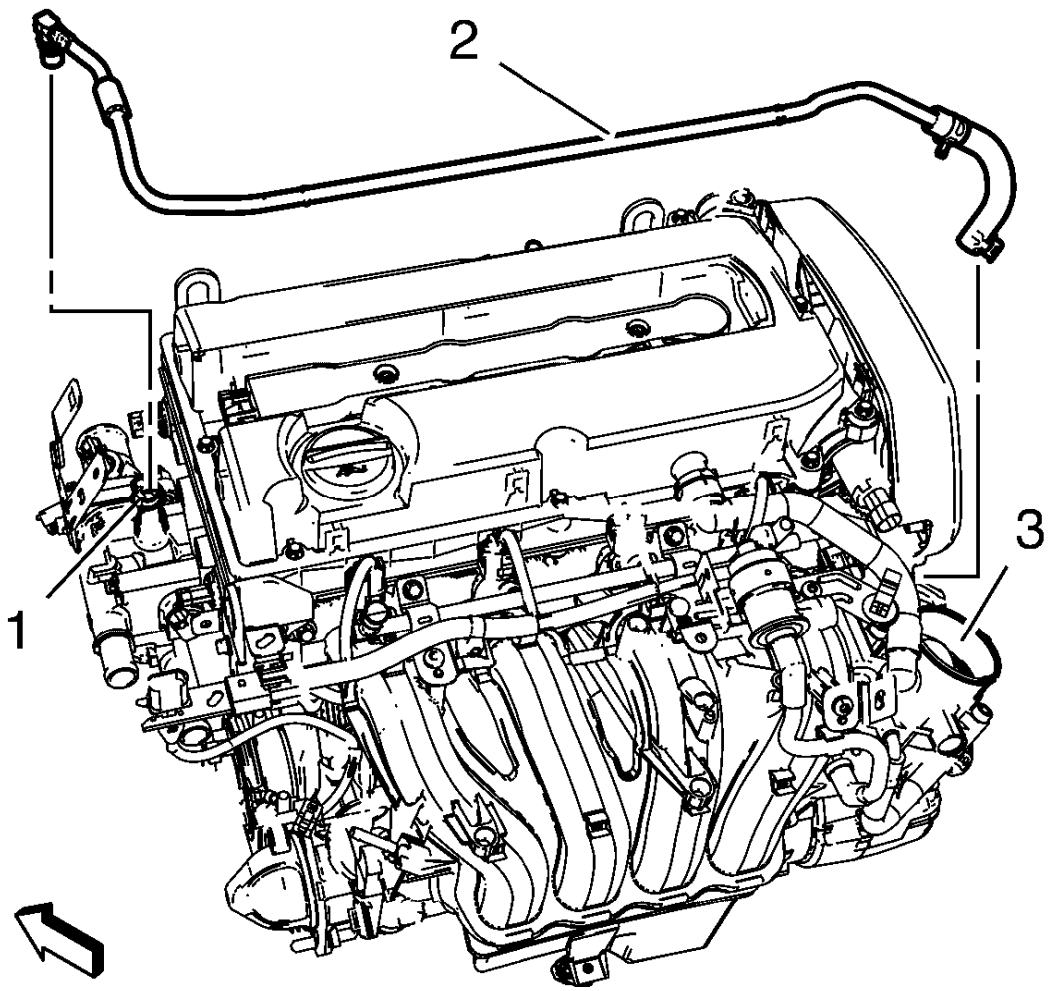

Fig. 51: Identifying Engine Coolant Thermostat Housing
Courtesy of GENERAL MOTORS COMPANY

3. Disconnect the throttle body heater inlet hose connector from the engine coolant thermostat housing (1).
4. Loosen the clamp and disconnect the throttle body heater inlet hose connector from the throttle body (3).
5. Remove the throttle body heater inlet hose (2).

Installation Procedure

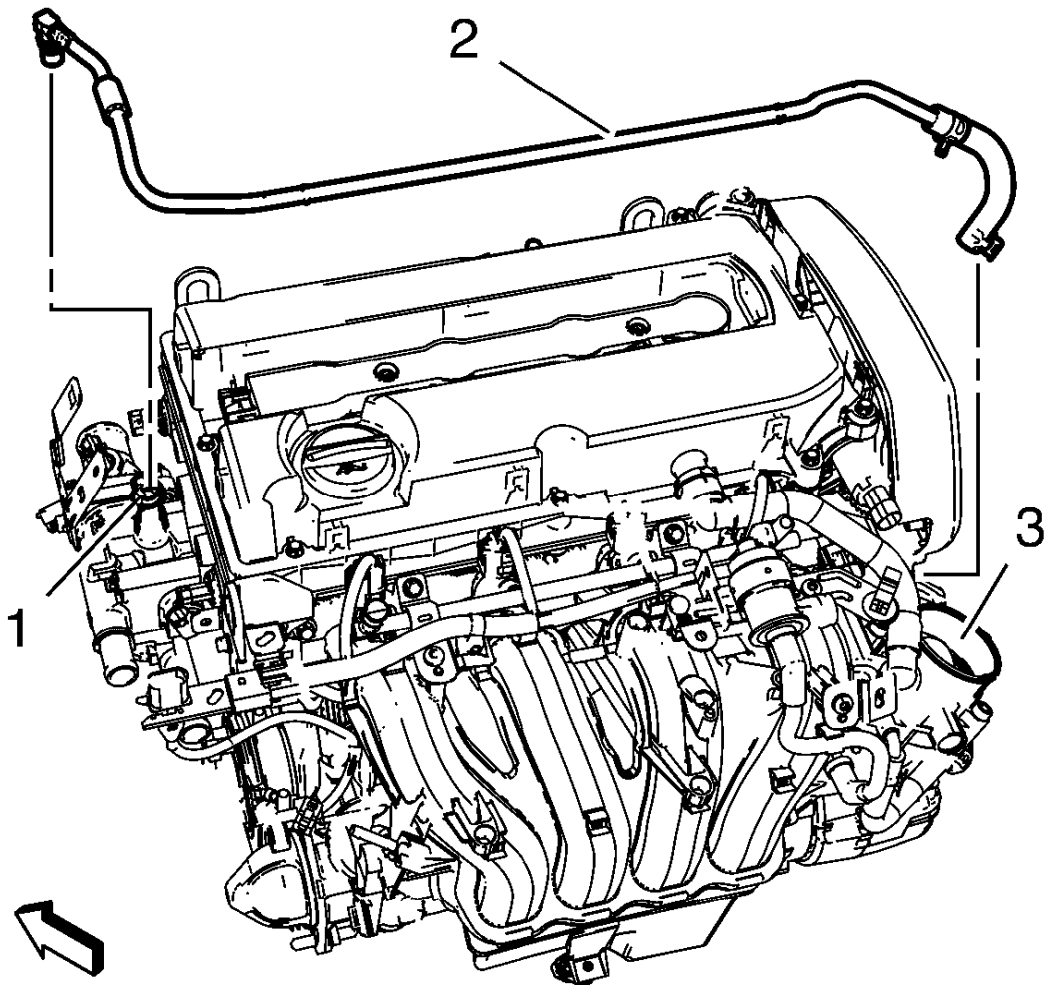

Fig. 52: Identifying Engine Coolant Thermostat Housing
Courtesy of GENERAL MOTORS COMPANY

1. Install the throttle body heater inlet hose (2).
2. Connect the throttle body heater inlet hose to the throttle body (3) and install the clamp.
3. Connect the throttle body heater inlet hose (2) to the engine coolant thermostat housing (1).

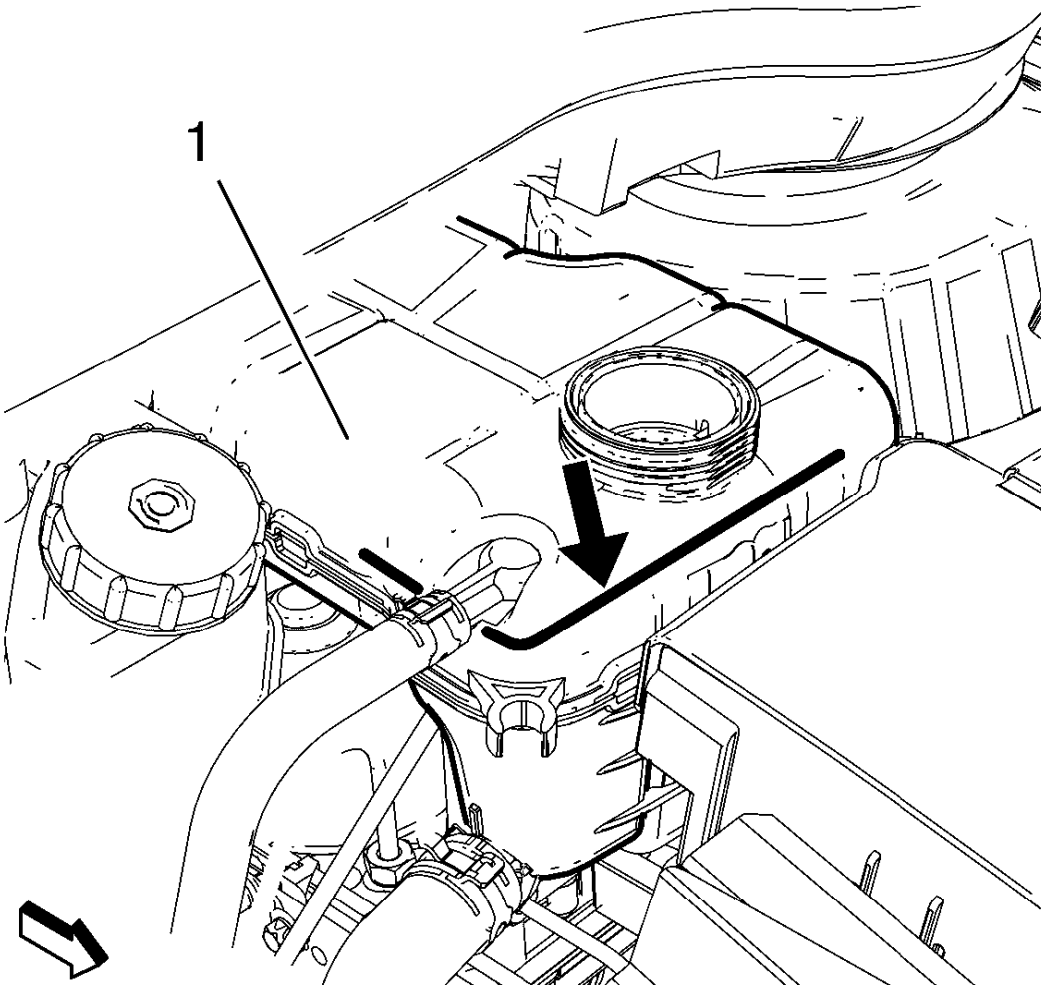

Fig. 53: Radiator Coolant Surge Tank
Courtesy of GENERAL MOTORS COMPANY

4. Top off the coolant by filling to the bottom line (black arrow) on the coolant surge tank (1) if necessary.
5. Close the hood.

THROTTLE BODY HEATER OUTLET HOSE REPLACEMENT

Removal Procedure

1. Open the hood.
2. Place a collection basin under the vehicle.

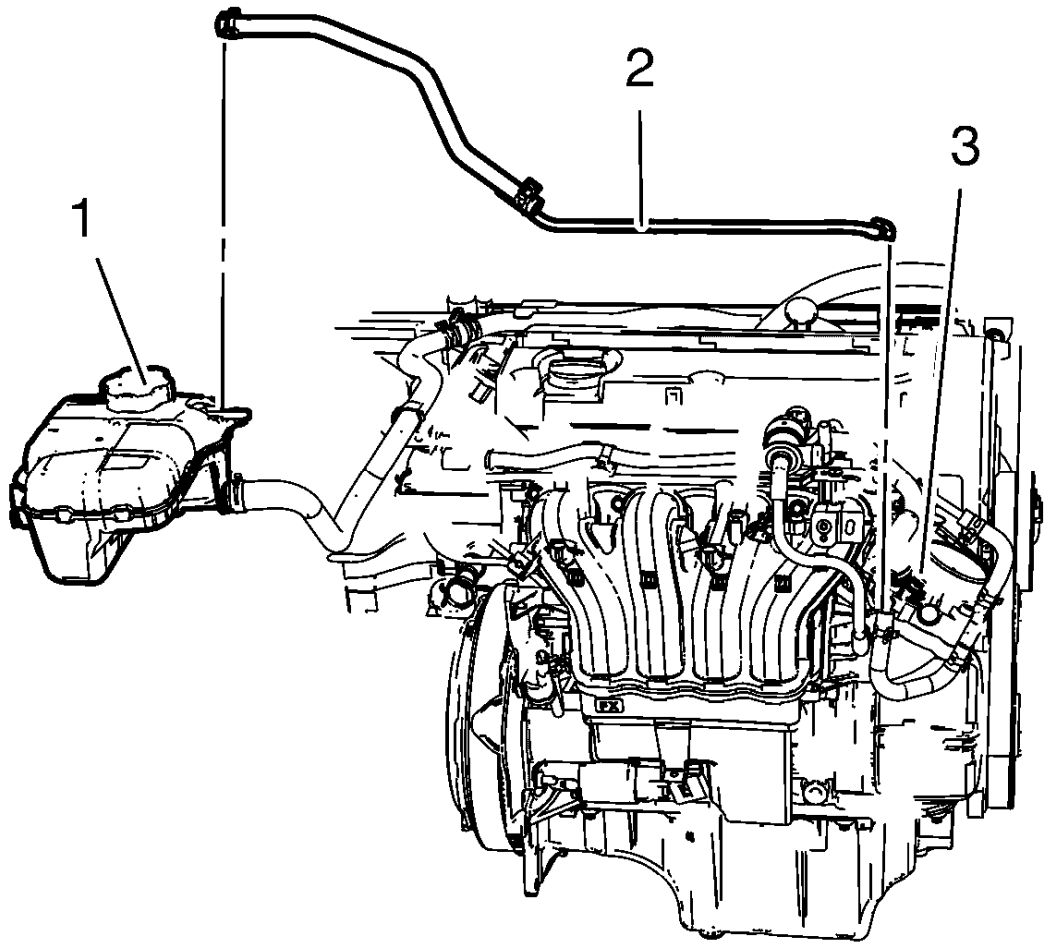

Fig. 54: Radiator Surge Tank, Throttle Body And Throttle Body Heater Outlet Hose
Courtesy of GENERAL MOTORS COMPANY

3. Clip out the throttle body heater outlet hose from the intake manifold.
4. Loosen the clamp and disconnect the throttle body heater outlet hose (2) from the radiator surge tank (1).
5. Disconnect the throttle body heater outlet hose connector from the throttle body (3).
6. Remove the throttle body heater outlet hose (2).

Installation Procedure

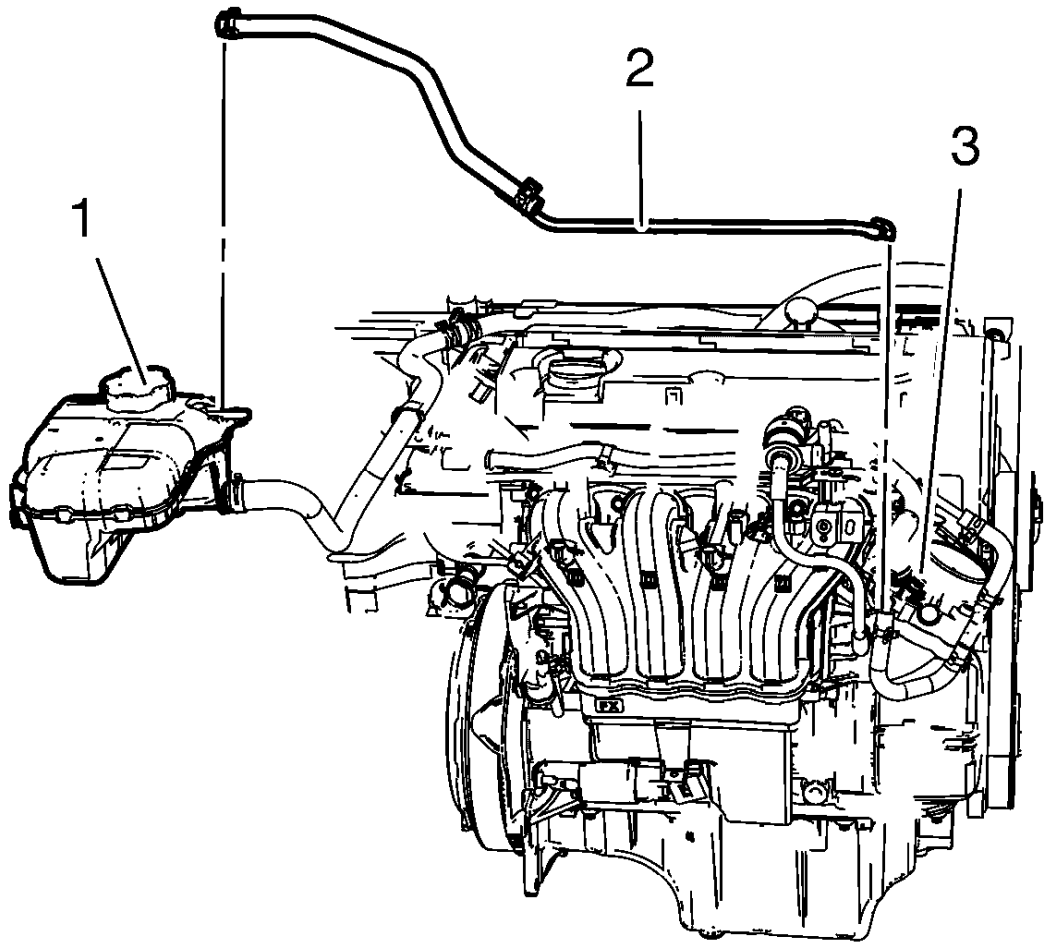

Fig. 55: Radiator Surge Tank, Throttle Body And Throttle Body Heater Outlet Hose
Courtesy of GENERAL MOTORS COMPANY

1. Install the throttle body heater outlet hose (2).
2. Connect the throttle body heater outlet hose connector to the throttle body (3)
3. Connect the throttle body heater outlet hose (2) to the radiator surge tank (1) and install the clamp.
4. Clip in the throttle body heater outlet hose to the intake manifold

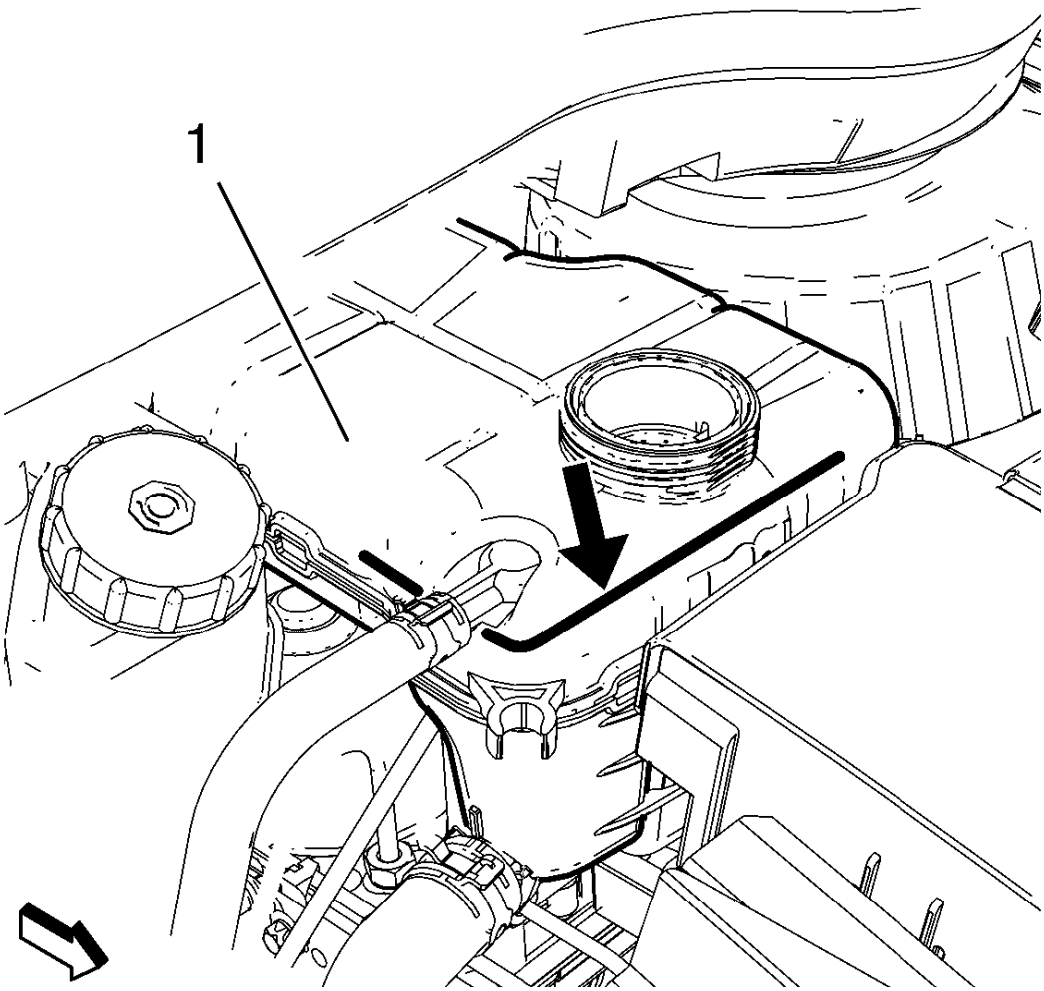

Fig. 56: Radiator Coolant Surge Tank
Courtesy of GENERAL MOTORS COMPANY

5. Top off the coolant by filling to the bottom line (black arrow) on the coolant surge tank (1), if necessary.
6. Close the hood.

ENGINE OIL COOLER REPLACEMENT (1.4L LUV)

Removal Procedure

1. Disconnect battery negative cable. Refer to **Battery Negative Cable Disconnection and Connection** .
2. Drain engine coolant. Refer to **Cooling System Draining and Filling (Static Fill)**, **Cooling System Draining and Filling (GE-47716 Fill)**
3. Remove the turbocharger oil feed pipe. Refer to **Turbocharger Oil Feed Pipe Replacement** .
4. Remove the warm up three way catalytic converter. Refer to **Warm Up Three-Way Catalytic Converter Replacement** .

5. Lower vehicle.
6. Remove the air cleaner outlet duct. Refer to **Air Cleaner Outlet Duct Replacement** .

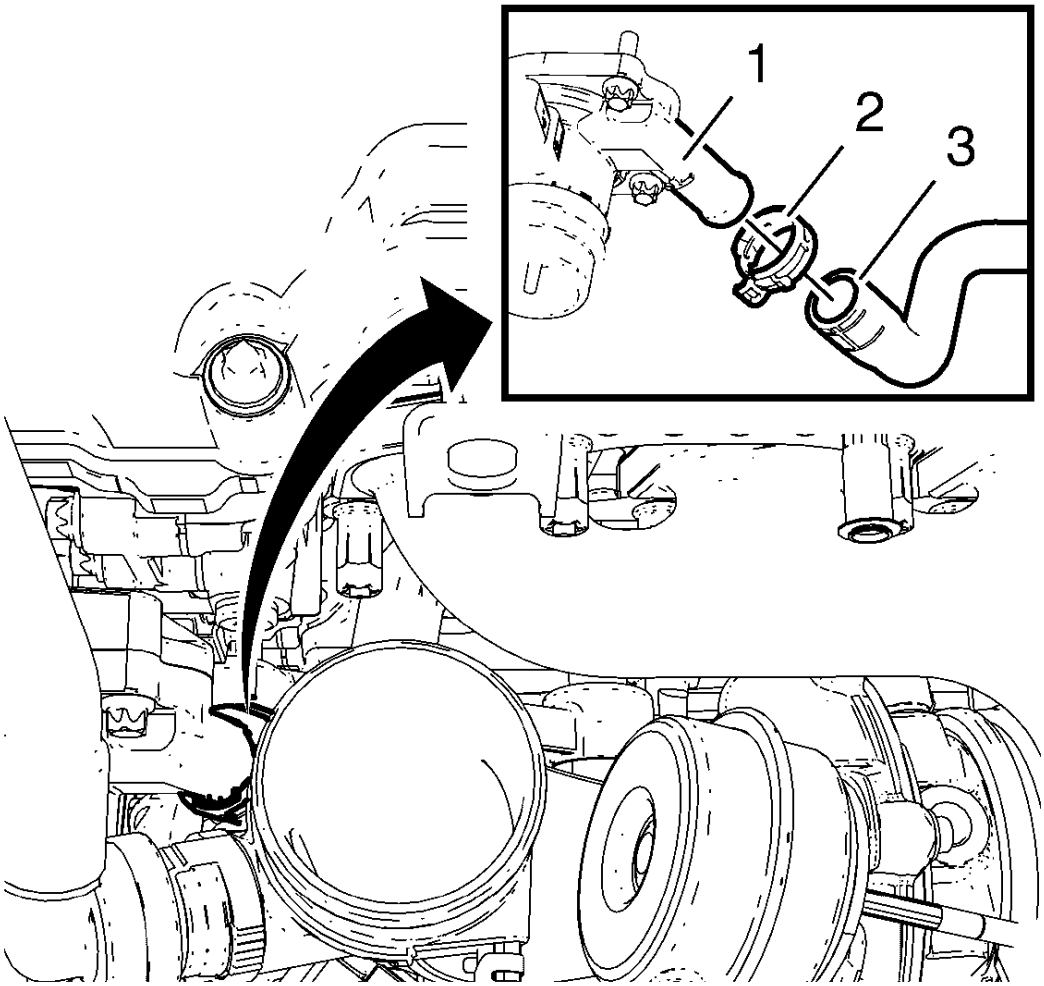

Fig. 57: Thermostat Housing And Oil Cooler Outlet Hose
Courtesy of GENERAL MOTORS COMPANY

7. Remove the oil cooler outlet hose clamp (2).
8. Remove the oil cooler outlet hose (3) from the thermostat housing (1).

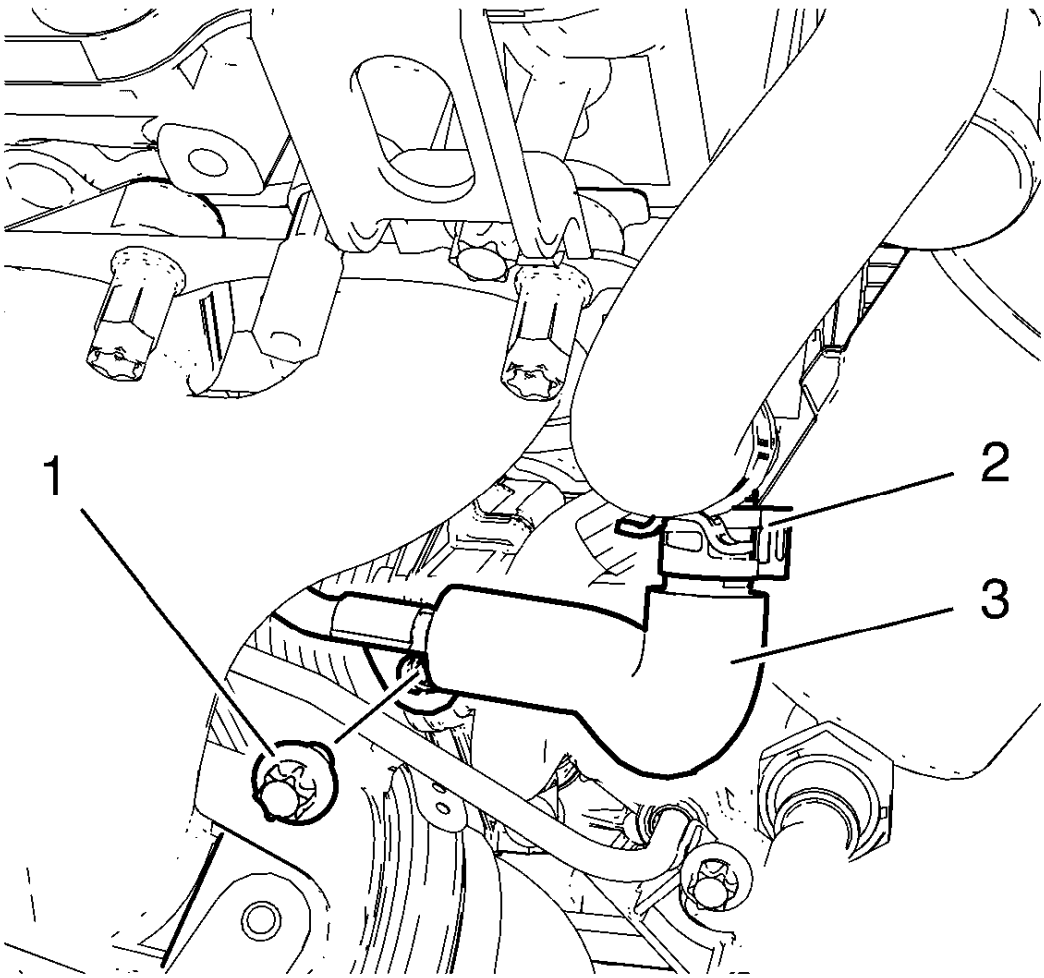

Fig. 58: Turbocharger Coolant Return Pipe Clamp And Bolt
Courtesy of GENERAL MOTORS COMPANY

9. Remove the turbocharger coolant return pipe bolt (1) from the oil cooler housing.
10. Remove the turbocharger coolant return pipe clamp (2).

NOTE: Do not move the turbocharger coolant return pipe too much. An excessive moving of the turbocharger coolant return pipe could cause leakage.

11. Remove the turbocharger coolant return pipe (3) from the oil cooler inlet pipe.
12. Disconnect the oil pressure indicator switch wiring harness plug.

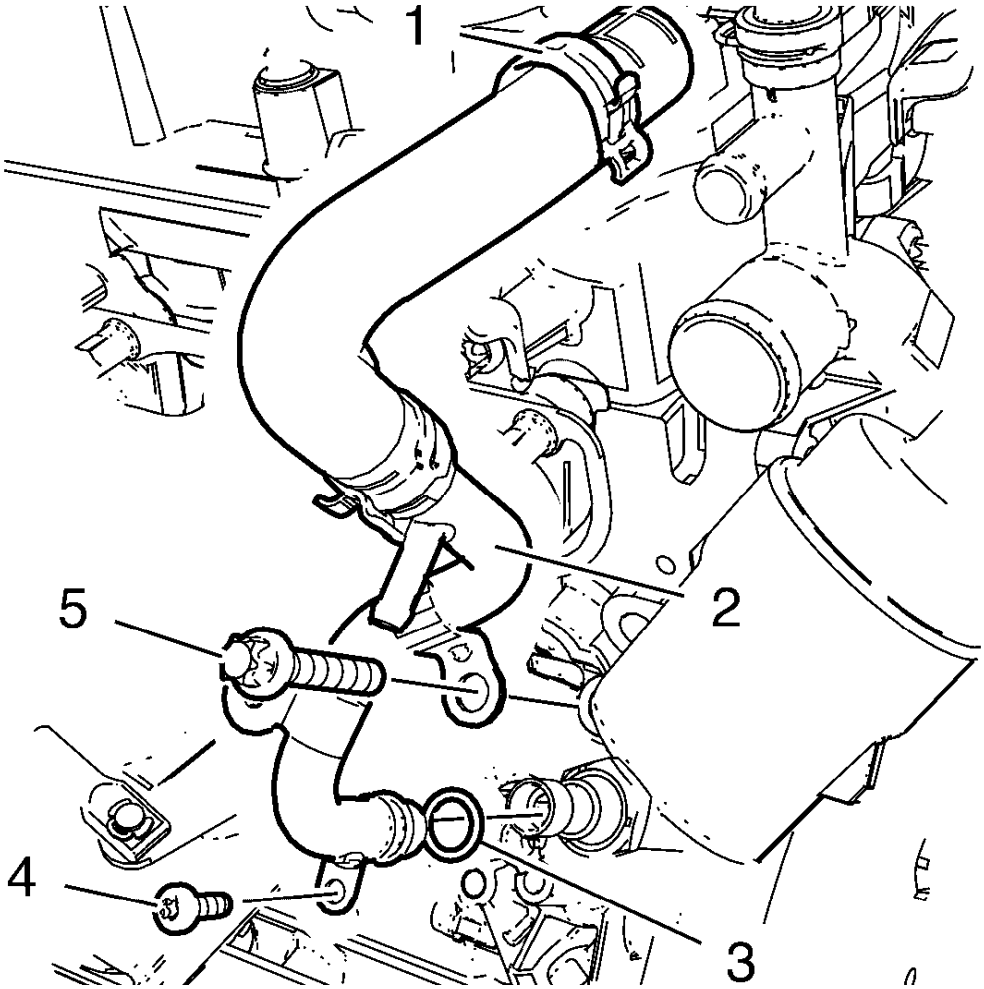

Fig. 59: Oil Cooler Inlet Pipe
Courtesy of GENERAL MOTORS COMPANY

13. Remove the oil cooler inlet hose clamp (1) and remove the oil cooler inlet hose from the water outlet.
14. Remove the engine oil cooler bolt (5).
15. Remove the engine oil cooler inlet pipe bolt (4).
16. Remove the engine oil cooler inlet pipe (2) and the seal ring (3).
17. Raise vehicle.

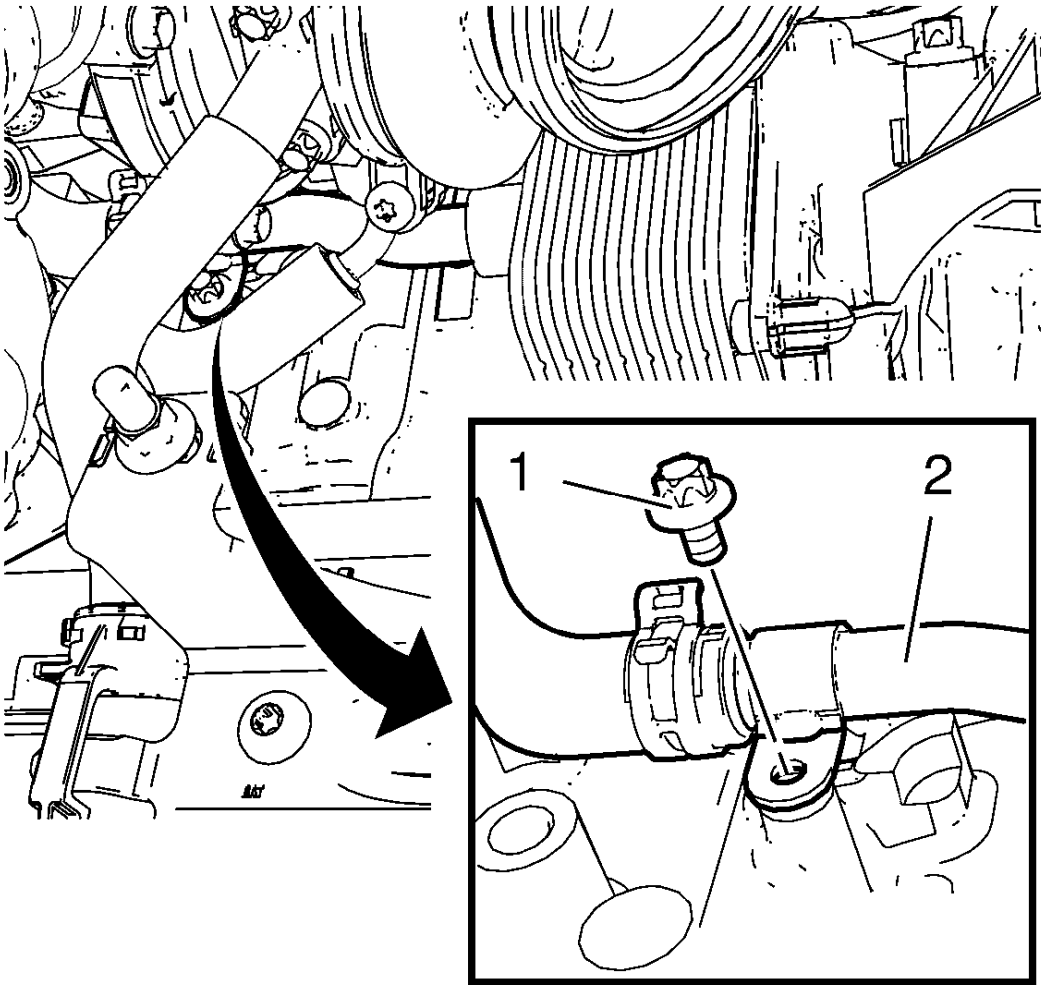

Fig. 60: Oil Cooler Outlet Pipe
Courtesy of GENERAL MOTORS COMPANY

18. Remove the oil cooler outlet pipe bolt (1) from the engine block.
19. Remove the oil cooler outlet pipe (2) in compound with the oil cooler outlet hose.
20. Lower vehicle.

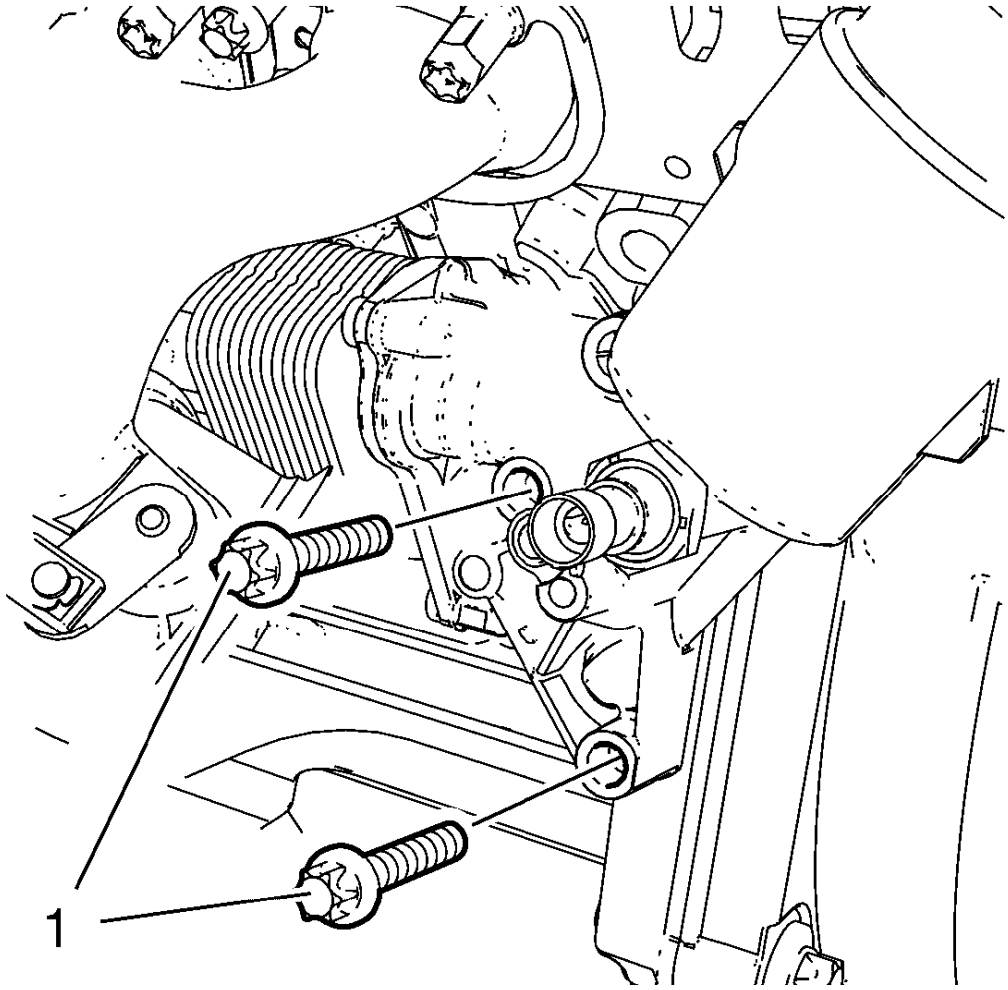

Fig. 61: Oil Cooler Bolts
Courtesy of GENERAL MOTORS COMPANY

21. Remove the 2 oil cooler bolts (1).
22. Raise vehicle.

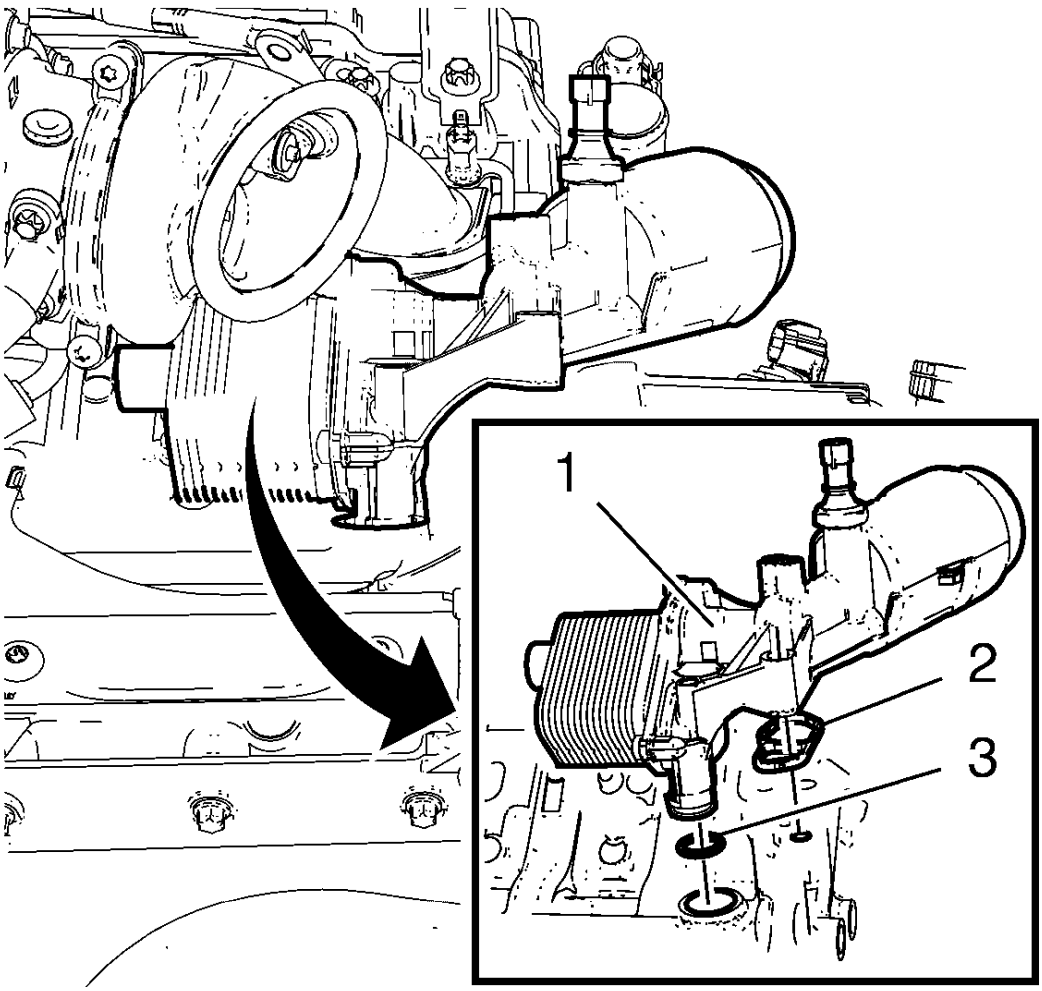

Fig. 62: Oil Cooler And Oil Cooler Gasket
Courtesy of GENERAL MOTORS COMPANY

23. Remove the oil cooler (1) in compound with the oil cooler gasket (2) and the seal ring (3).
24. Remove the oil pressure indicator switch from the oil cooler.

Installation Procedure

1. Install the oil pressure indicator switch to the oil cooler. Use a NEW seal ring.

CAUTION: Refer to Fastener Caution .

2. Tighten the oil pressure indicator switch to 20 N.m (15 lb ft).

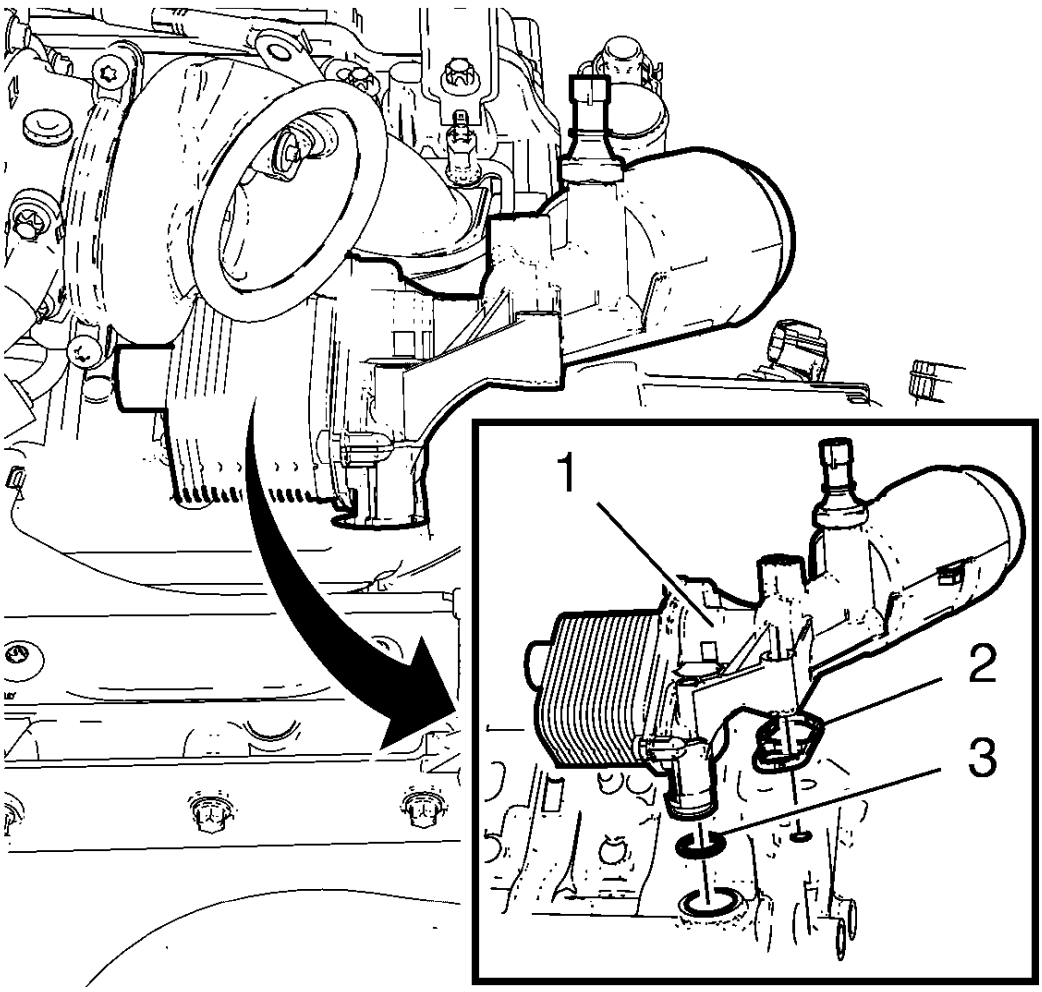

Fig. 63: Oil Cooler And Oil Cooler Gasket
Courtesy of GENERAL MOTORS COMPANY

3. Clean the sealing surfaces.
4. Install the oil cooler (1) in compound with a NEW oil cooler gasket (2) and a NEW seal ring (3).
5. Lower vehicle.

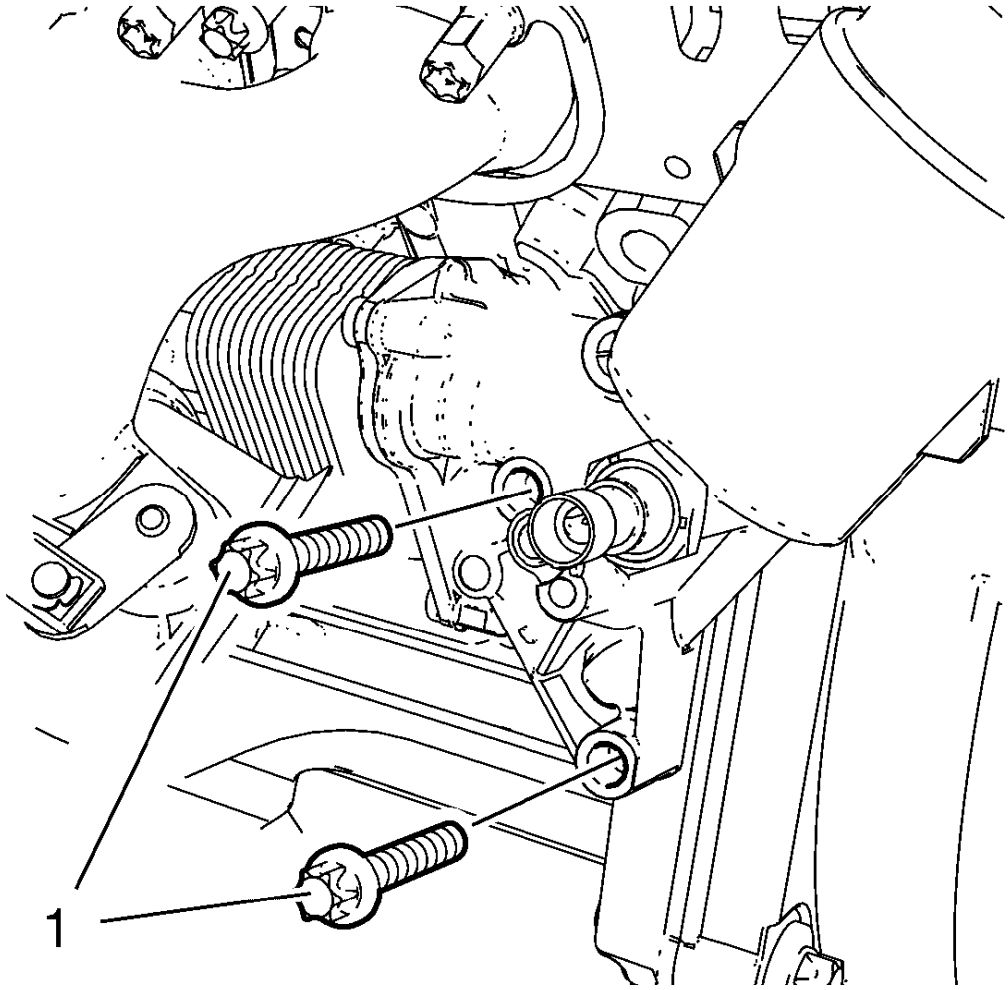

Fig. 64: Oil Cooler Bolts
Courtesy of GENERAL MOTORS COMPANY

6. Install the 2 oil cooler bolts (1) and hand tighten.

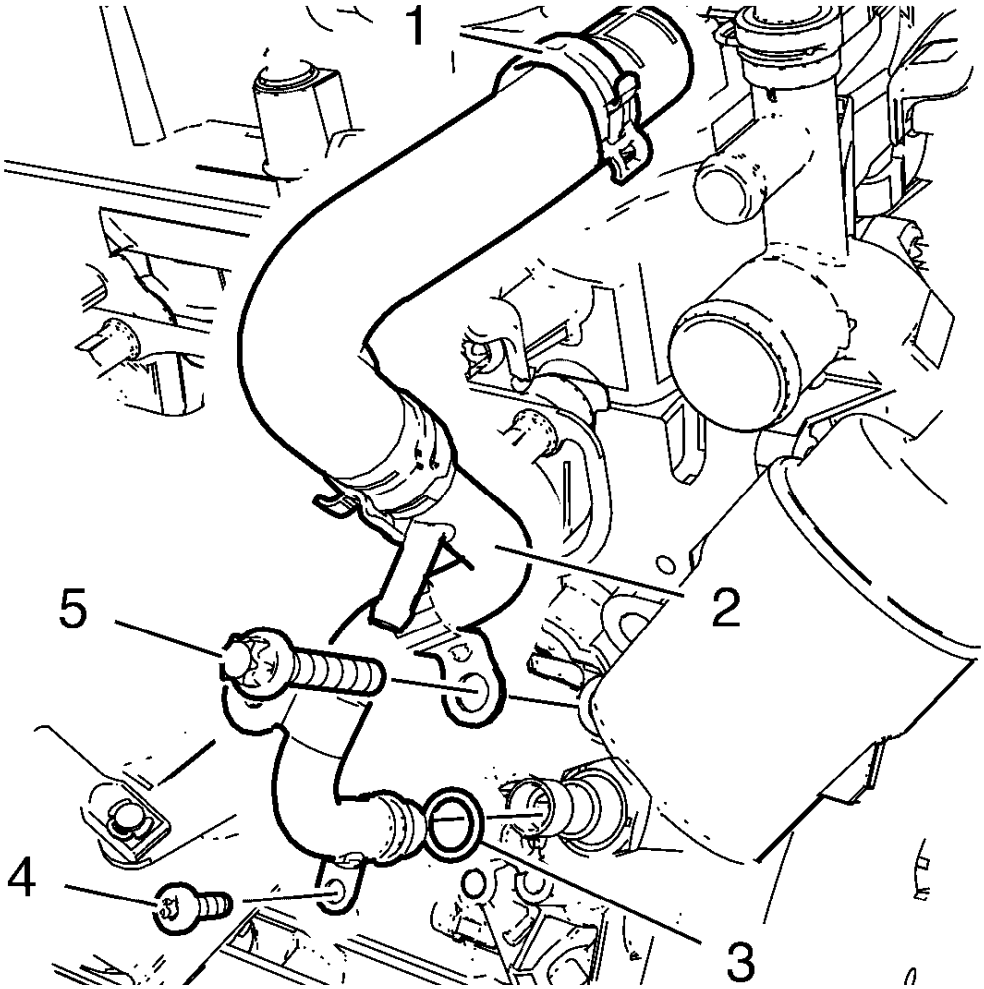

Fig. 65: Oil Cooler Inlet Pipe
Courtesy of GENERAL MOTORS COMPANY

7. Install the engine oil cooler inlet pipe (2) in compound with a NEW seal ring (3).
8. Install the oil cooler inlet hose to the water outlet and install the oil cooler inlet hose clamp (1).
9. Install the engine oil cooler bolt (5).
10. Install the engine oil cooler inlet pipe bolt (4) and tighten to 10 N.m (89 lb in).
11. Tighten the 3 engine oil cooler bolts to 20 N.m (15 lb ft).

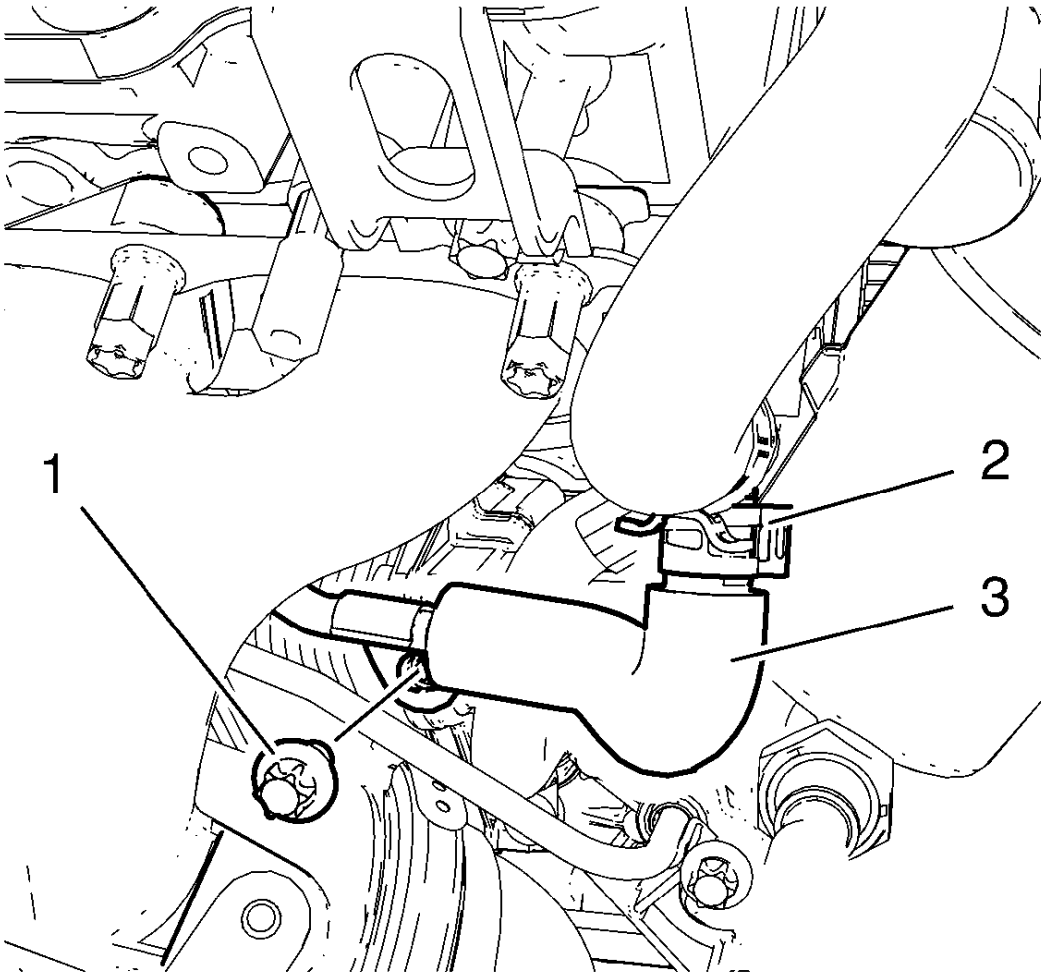

Fig. 66: Turbocharger Coolant Return Pipe Clamp And Bolt
Courtesy of GENERAL MOTORS COMPANY

12. Install the turbocharger coolant return pipe (3) to the oil cooler inlet pipe.
13. Install the turbocharger coolant return pipe clamp (2).
14. Install turbocharger coolant return pipe bolt (1) and tighten to 10 N.m (89 lb in).
15. Connect the oil pressure indicator switch wiring harness plug.
16. Raise vehicle.

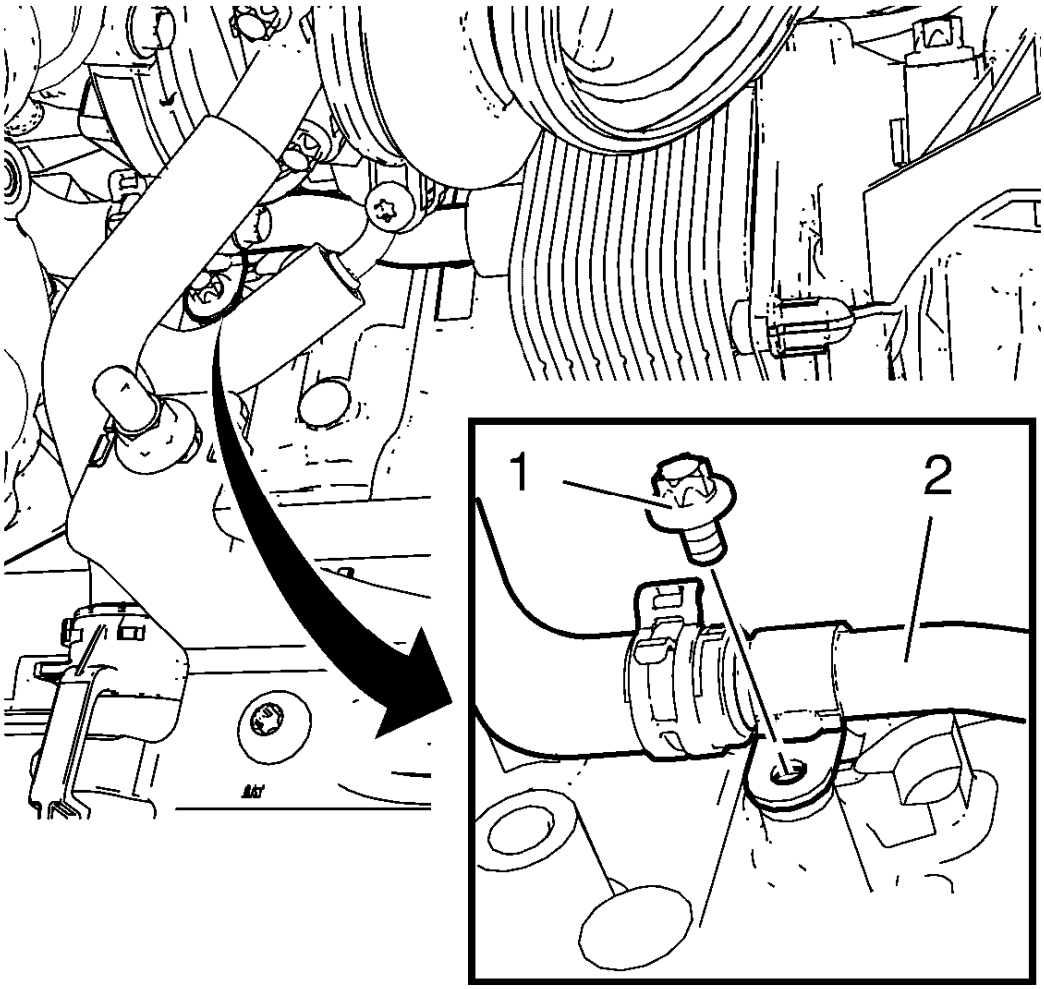

Fig. 67: Oil Cooler Outlet Pipe
Courtesy of GENERAL MOTORS COMPANY

17. Install the oil cooler outlet pipe (2) in compound with the oil cooler outlet hose to the oil cooler.
18. Install the oil cooler outlet pipe bolt (1) to the engine block and tighten to 10 N.m (89 lb in).
19. Install the warm up three way catalytic converter. Refer to **Warm Up Three-Way Catalytic Converter Replacement** .

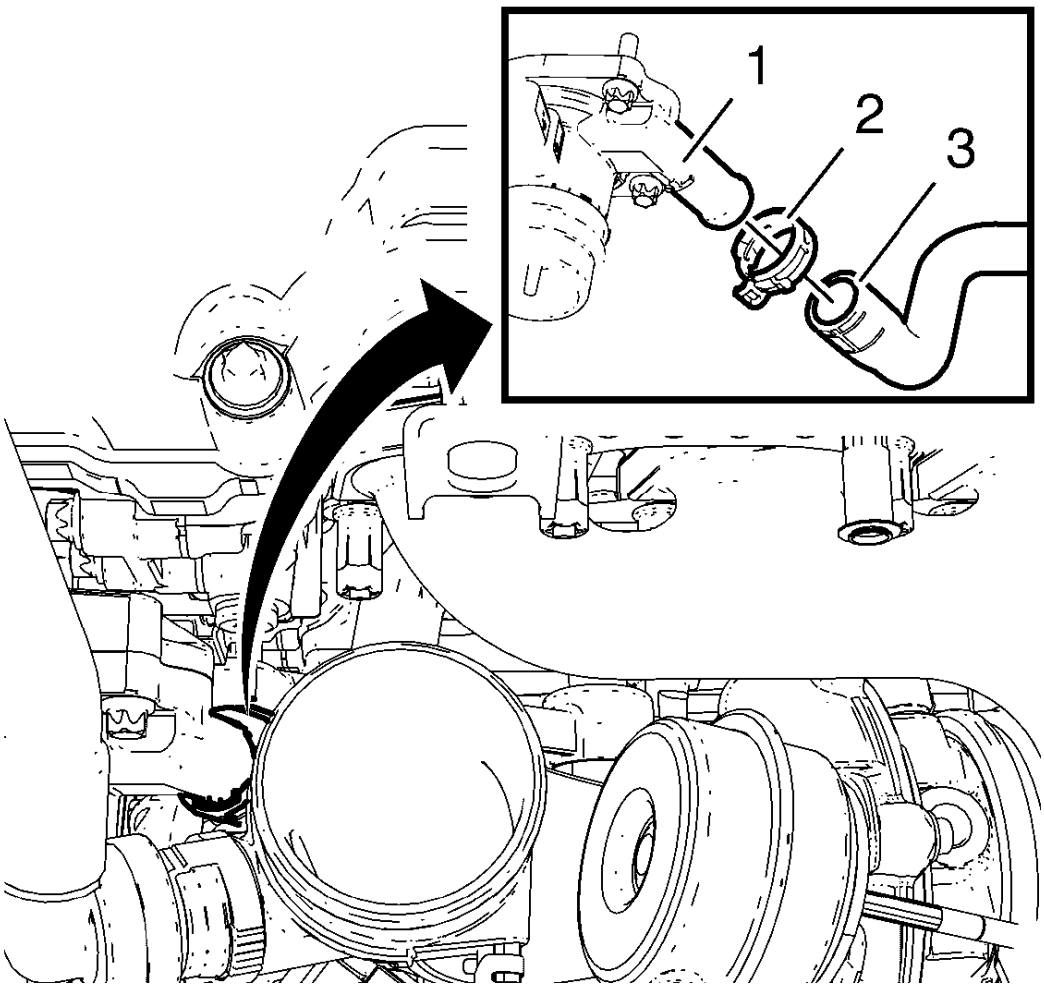

Fig. 68: Thermostat Housing And Oil Cooler Outlet Hose
Courtesy of GENERAL MOTORS COMPANY

20. Install the oil cooler outlet hose (3) to the thermostat housing (1).
21. Install the oil cooler outlet hose clamp (2).
22. Install the air cleaner outlet duct. Refer to **Air Cleaner Outlet Duct Replacement** .
23. Install the turbocharger oil feed pipe and the exhaust manifold heat shield. Refer to **Turbocharger Oil Feed Pipe Replacement** .
24. Connect battery negative cable. Refer to **Battery Negative Cable Disconnection and Connection** .
25. Fill engine coolant. Refer to **Cooling System Draining and Filling (Static Fill)**, **Cooling System Draining and Filling (GE-47716 Fill)**.

ENGINE OIL COOLER REPLACEMENT (1.8L LUW AND LWE)

1. Remove the exhaust manifold. Refer to **Exhaust Manifold Replacement** .
2. Drain the cooling system. Refer to **Cooling System Draining and Filling (Static Fill)**, **Cooling System**

Draining and Filling (GE-47716 Fill).

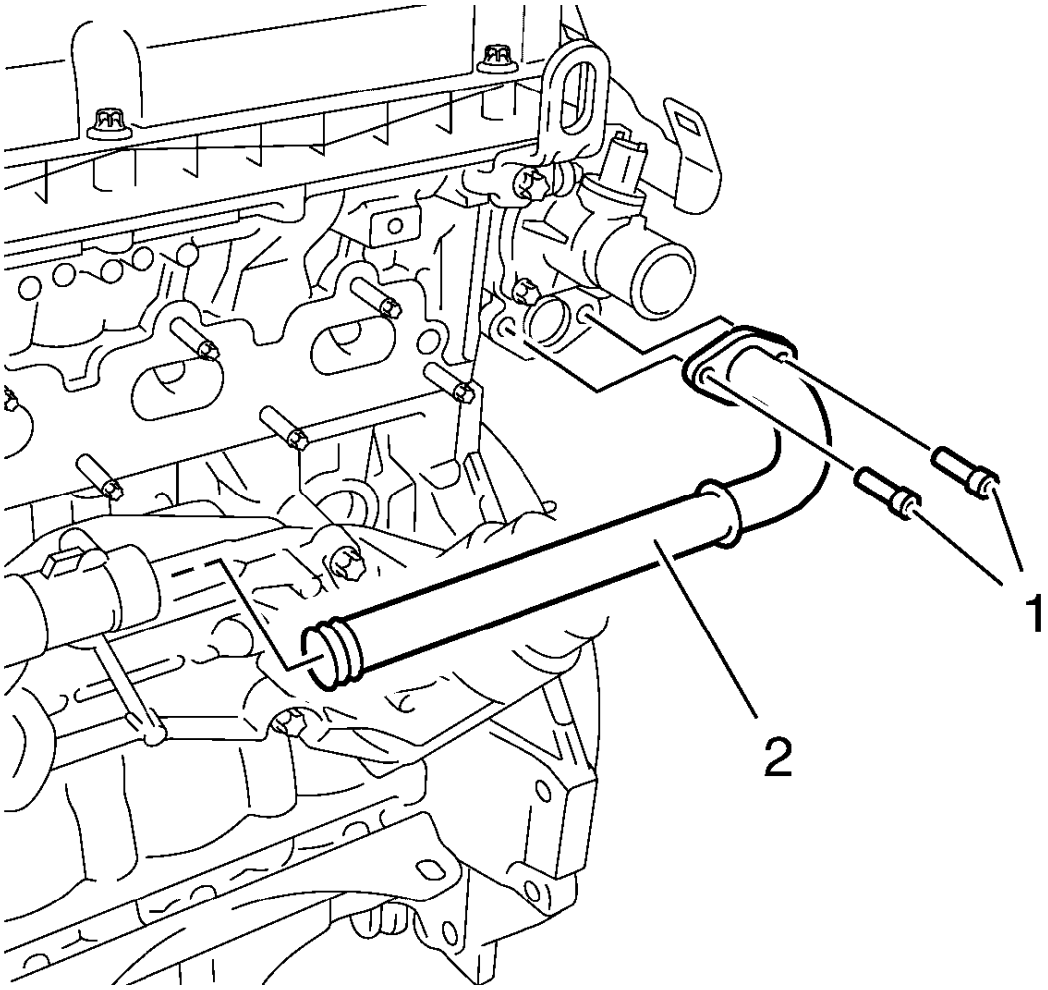

Fig. 69: Identifying Engine Oil Cooler Outlet Pipe And Bolts
Courtesy of GENERAL MOTORS COMPANY

3. Remove the 2 engine oil cooler outlet pipe bolts (1).
4. Remove the engine oil cooler outlet pipe (2) from the engine oil cooler housing and the engine coolant thermostat housing.
5. Remove the 2 engine oil cooler outlet pipe gaskets.

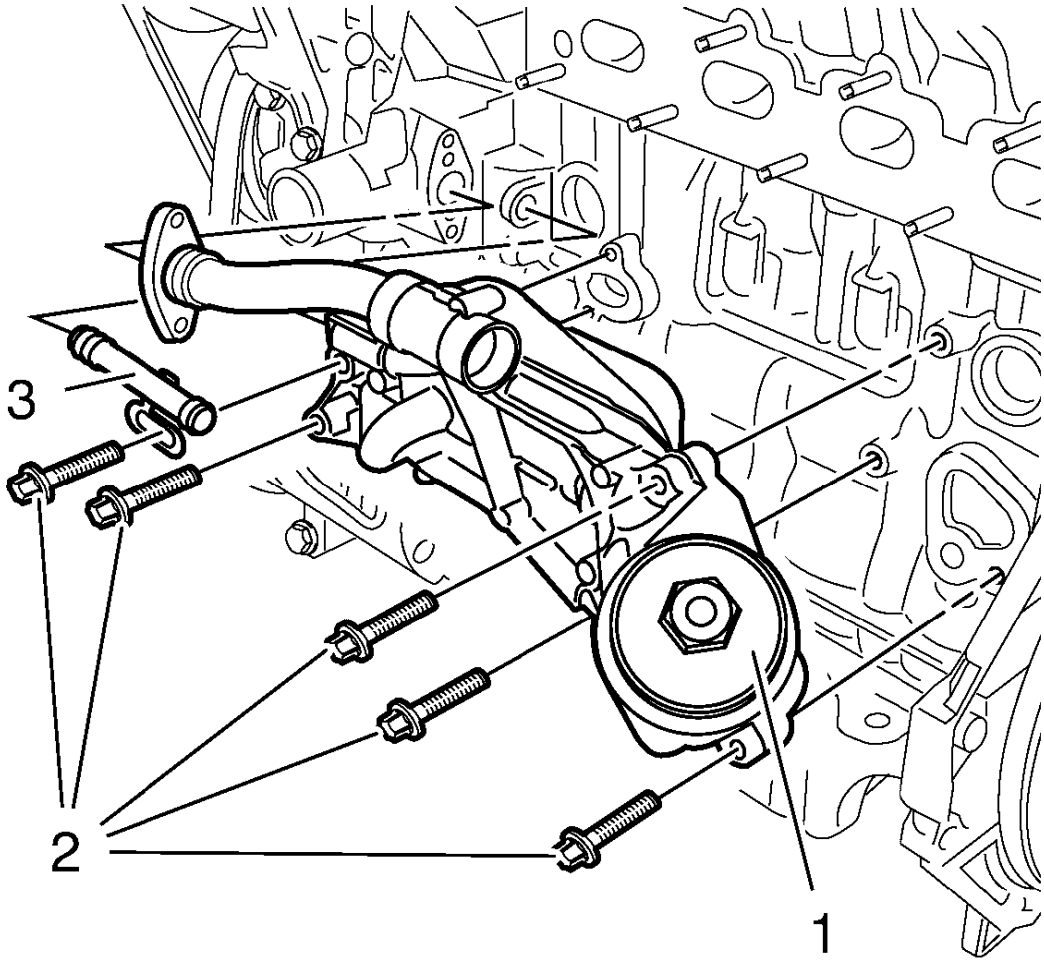

Fig. 70: Identifying Engine Oil Cooler Housing, Bolts And Engine Oil Cooler Inlet Pipe
Courtesy of GENERAL MOTORS COMPANY

6. Remove the 5 engine oil cooler housing bolts (2).
7. Remove the engine oil cooler housing (1).
8. Remove the 2 engine oil cooler housing gaskets.
9. Remove the engine oil cooler inlet pipe (3).
10. Remove the 2 engine oil cooler inlet pipe gaskets.

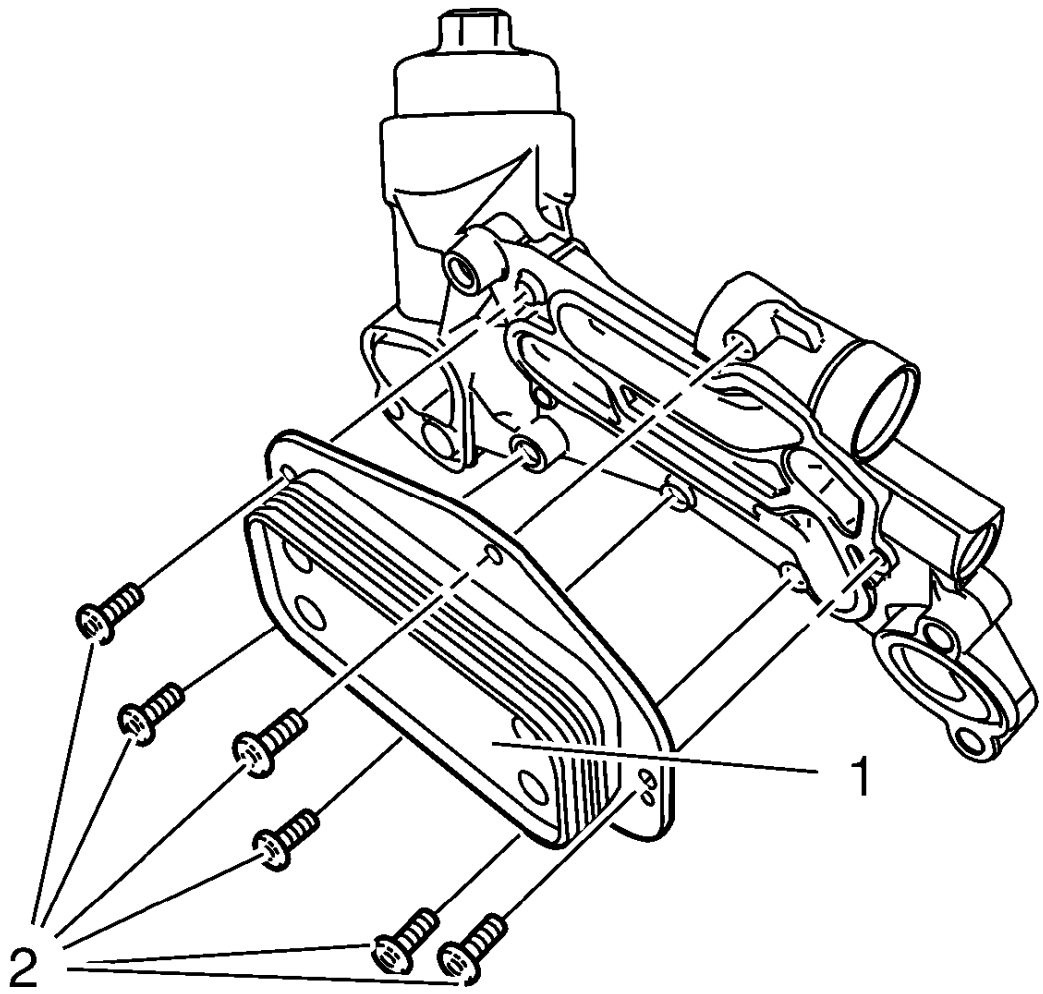

Fig. 71: Identifying Engine Oil Cooler And Bolts
Courtesy of GENERAL MOTORS COMPANY

11. Remove the 6 engine oil cooler bolts (2) and the engine oil cooler (1) from the engine oil cooler housing.
12. Remove the engine oil cooler gasket.

Installation Procedure

1. Clean the engine oil cooler to engine oil cooler housing sealing surfaces.
2. Install a NEW engine oil cooler gasket.

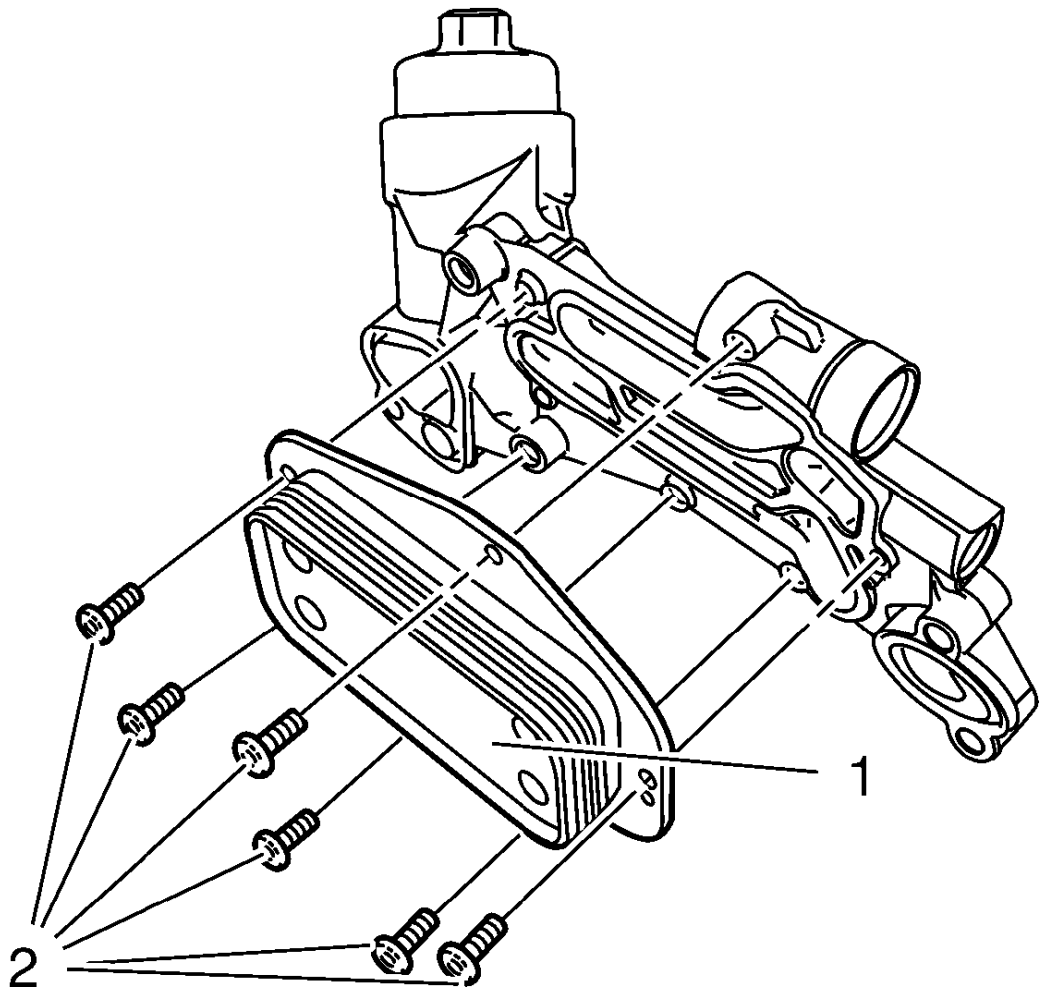

Fig. 72: Identifying Engine Oil Cooler And Bolts
Courtesy of GENERAL MOTORS COMPANY

3. Install the engine oil cooler (1) to the engine oil cooler housing.

CAUTION: Refer to Fastener Caution .

4. Install the 6 engine oil cooler bolts (2) and tighten to 8 N.m (71 lb in).

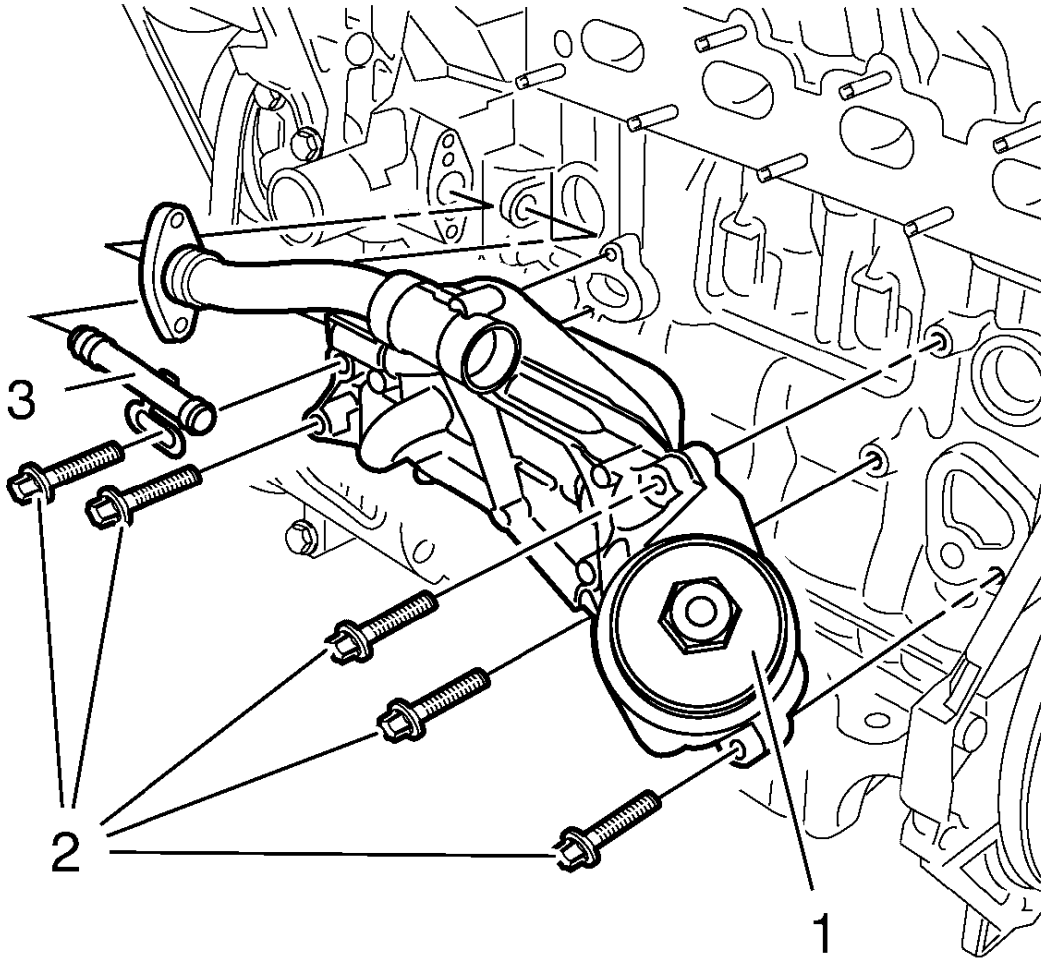

Fig. 73: Identifying Engine Oil Cooler Housing, Bolts And Engine Oil Cooler Inlet Pipe
Courtesy of GENERAL MOTORS COMPANY

5. Install the 2 NEW engine oil cooler inlet pipe gaskets.
6. Install the engine oil cooler inlet pipe (3).
7. Install the 2 NEW engine oil cooler housing gaskets.
8. Install the engine oil cooler housing (1).
9. Install the 5 engine oil cooler housing bolts (2) and tighten to 25 N.m (19 lb ft).

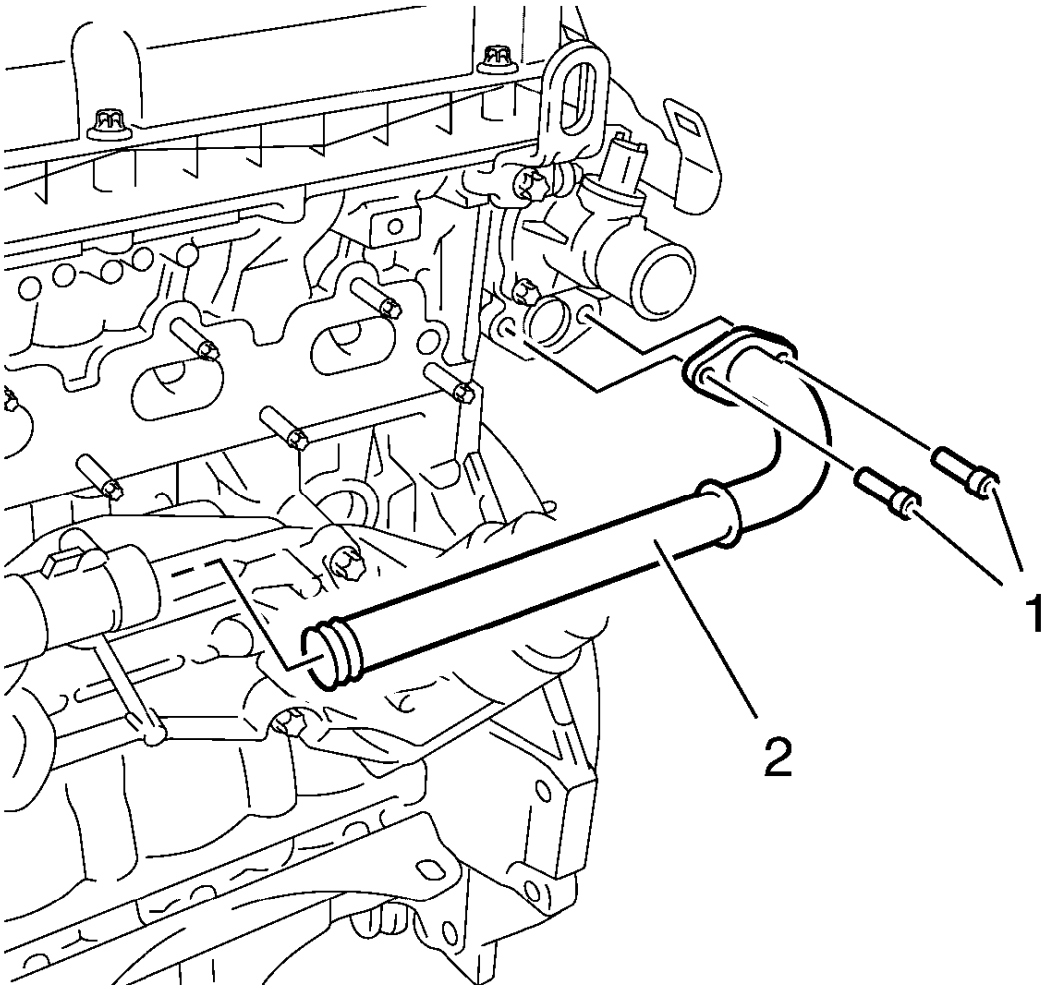

Fig. 74: Identifying Engine Oil Cooler Outlet Pipe And Bolts
Courtesy of GENERAL MOTORS COMPANY

10. Clean the engine oil cooler outlet pipe sealing surfaces.
11. Install the 2 NEW engine oil cooler outlet pipe gaskets.
12. Install the engine oil cooler outlet pipe (2) to the engine oil cooler housing and the engine coolant thermostat housing.
13. Install the 2 engine oil cooler outlet pipe bolts (1) and tighten to 8 N.m (71 lb in).
14. Fill the cooling system. Refer to **Cooling System Draining and Filling (Static Fill)**, **Cooling System Draining and Filling (GE-47716 Fill)**.
15. Install the exhaust manifold. Refer to **Exhaust Manifold Replacement** .

ENGINE OIL COOLER OUTLET HOSE REPLACEMENT

Removal Procedure

1. Disconnect battery negative cable. Refer to **Battery Negative Cable Disconnection and Connection**
2. Drain engine coolant. Refer to **Cooling System Draining and Filling (Static Fill)**, **Cooling System Draining and Filling (GE-47716 Fill)**
3. Remove the air cleaner outlet duct. Refer to **Air Cleaner Outlet Duct Replacement**

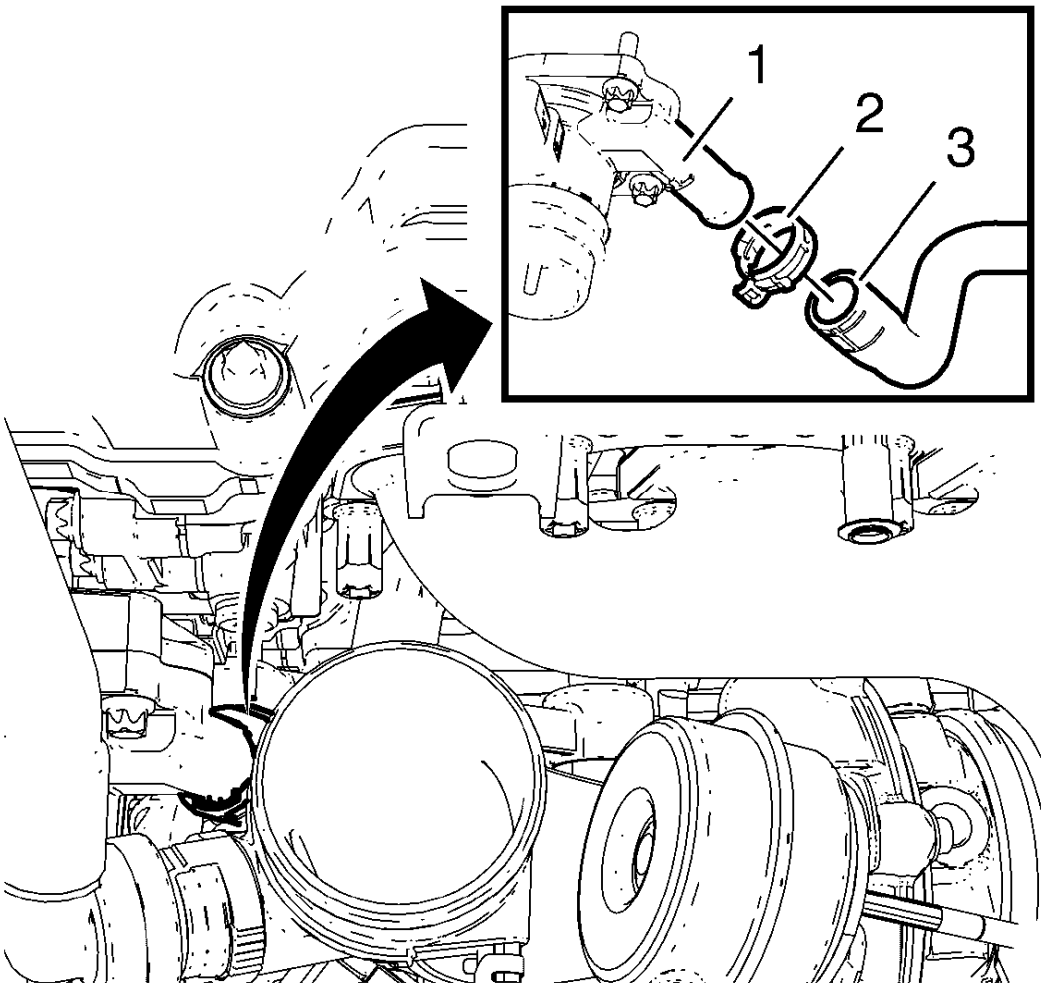

Fig. 75: Thermostat Housing And Oil Cooler Outlet Hose
Courtesy of GENERAL MOTORS COMPANY

4. Remove the oil cooler outlet hose clamp (2).
5. Remove the oil cooler outlet hose (3) from the thermostat housing (1).
6. Remove the warm up three way catalytic converter. Refer to **Warm Up Three-Way Catalytic Converter Replacement**

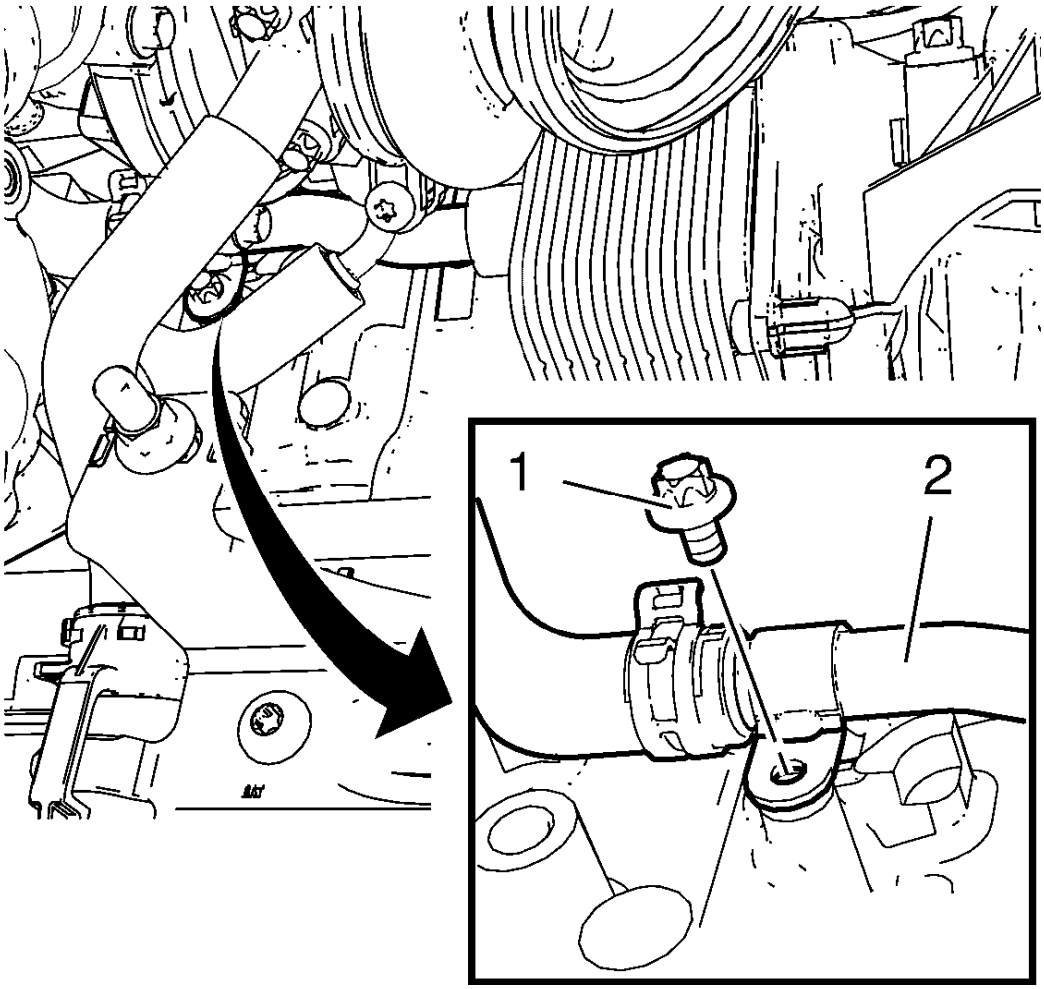

Fig. 76: Oil Cooler Outlet Pipe
Courtesy of GENERAL MOTORS COMPANY

7. Remove the oil cooler outlet pipe bolt (1) from the engine block.
8. Remove the oil cooler outlet pipe (2) in compound with the oil cooler outlet hose.
9. Remove the oil cooler outlet hose clamp.
10. Remove the oil cooler outlet hose from the oil cooler outlet pipe.

Installation Procedure

1. Install the oil cooler outlet hose to the oil cooler outlet pipe.
2. Install the oil cooler outlet hose clamp.

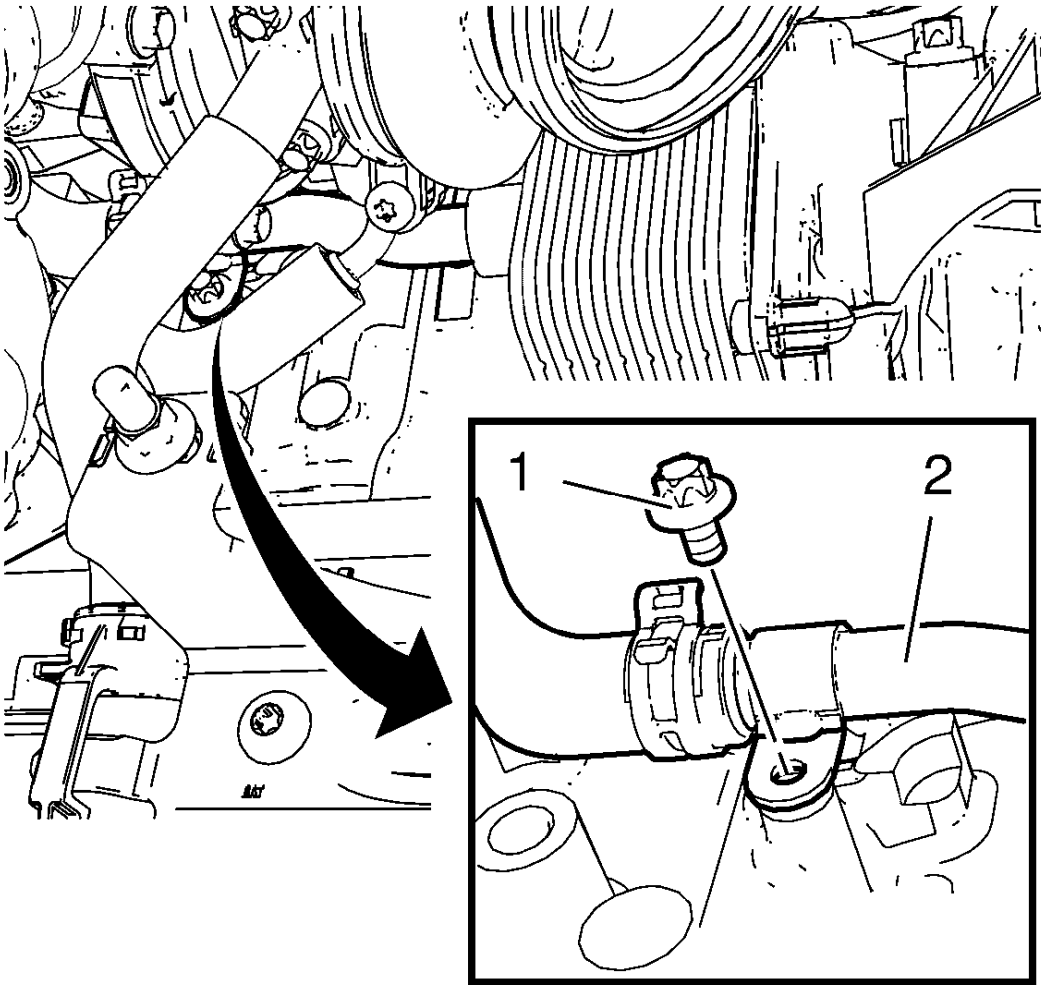

Fig. 77: Oil Cooler Outlet Pipe
Courtesy of GENERAL MOTORS COMPANY

3. Install the oil cooler outlet pipe (2) in compound with the oil cooler outlet hose to the oil cooler.
4. Install the oil cooler outlet pipe bolt (1) to the engine block and tighten to 10 N.m (89 lb in).
5. Install the warm up three way catalytic converter. Refer to **Warm Up Three-Way Catalytic Converter Replacement**

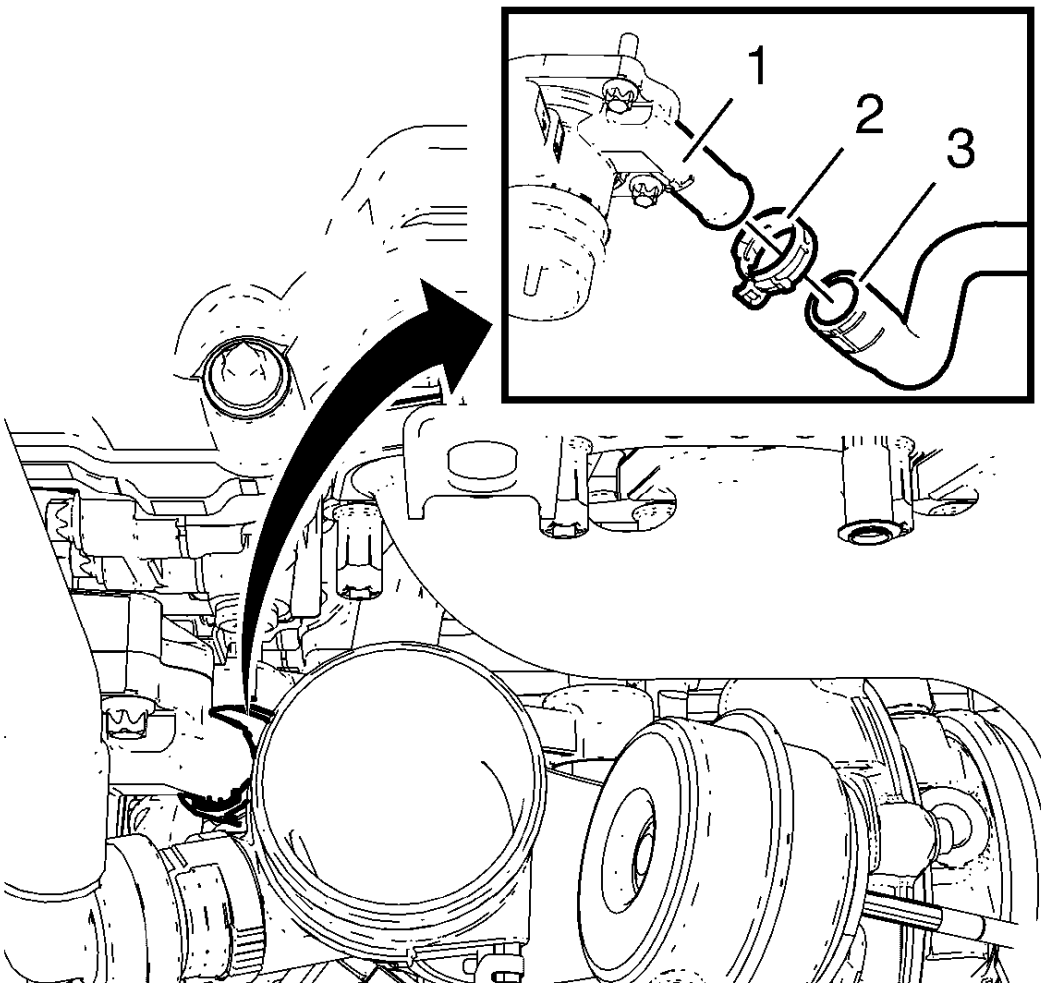

Fig. 78: Thermostat Housing And Oil Cooler Outlet Hose
Courtesy of GENERAL MOTORS COMPANY

6. Install the oil cooler outlet hose (3) to the thermostat housing (1).
7. Install the oil cooler outlet hose clamp (2).
8. Install the air cleaner outlet duct. Refer to **Air Cleaner Outlet Duct Replacement**
9. Install the turbocharger oil feed pipe and the exhaust manifold heat shield. Refer to **Turbocharger Oil Feed Pipe Replacement**
10. Connect battery negative cable. Refer to **Battery Negative Cable Disconnection and Connection**
11. Fill engine coolant. Refer to **Cooling System Draining and Filling (Static Fill)**, **Cooling System Draining and Filling (GE-47716 Fill)**

ENGINE OIL COOLER INLET HOSE REPLACEMENT

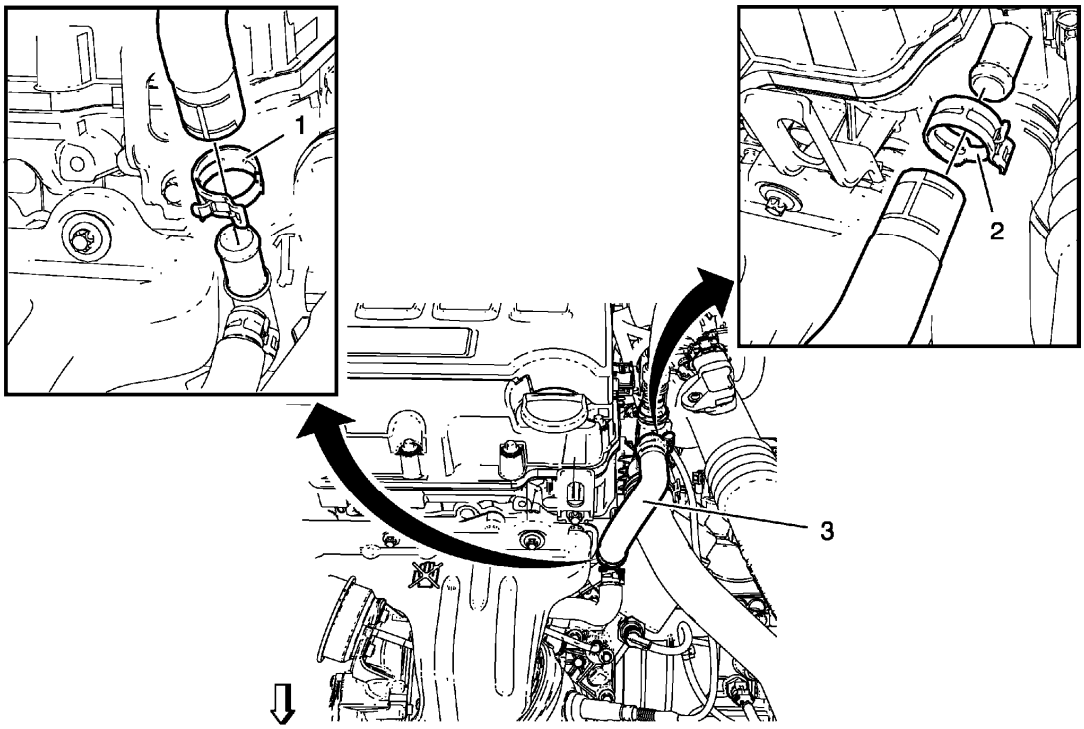

Fig. 79: Identifying Engine Oil Cooler Inlet Hose
Courtesy of GENERAL MOTORS COMPANY

Engine Oil Cooler Inlet Hose Replacement

Callout	Component Name
Preliminary Procedure 1. Open the hood. 2. Drain the cooling system. Refer to **Cooling System Draining and Filling (Static Fill)**, **Cooling System Draining and Filling (GE-47716 Fill)**.	
1	Oil Cooler Inlet Hose Clamp **Procedure** 1. Place a drain pan below the vehicle. 2. Remove / install engine coolant air bleed hose clamp.
2	Oil Cooler Inlet Hose Clamp **Procedure** 1. Place a drain pan below the vehicle. 2. Remove / install engine coolant air bleed hose clamp.
3	Oil Cooler Inlet Hose

ENGINE OIL COOLER INLET PIPE REPLACEMENT (1.4L LUV)

Removal Procedure

1. Drain coolant fluid. Refer to **Cooling System Draining and Filling (Static Fill)**, **Cooling System Draining and Filling (GE-47716 Fill)**.
2. Remove the warm up three way catalytic converter. Refer to **Warm Up Three-Way Catalytic Converter Replacement** .
3. Remove the engine oil cooler inlet hose from the engine oil cooler inlet pipe. Refer to **Engine Oil Cooler Inlet Hose Replacement**.

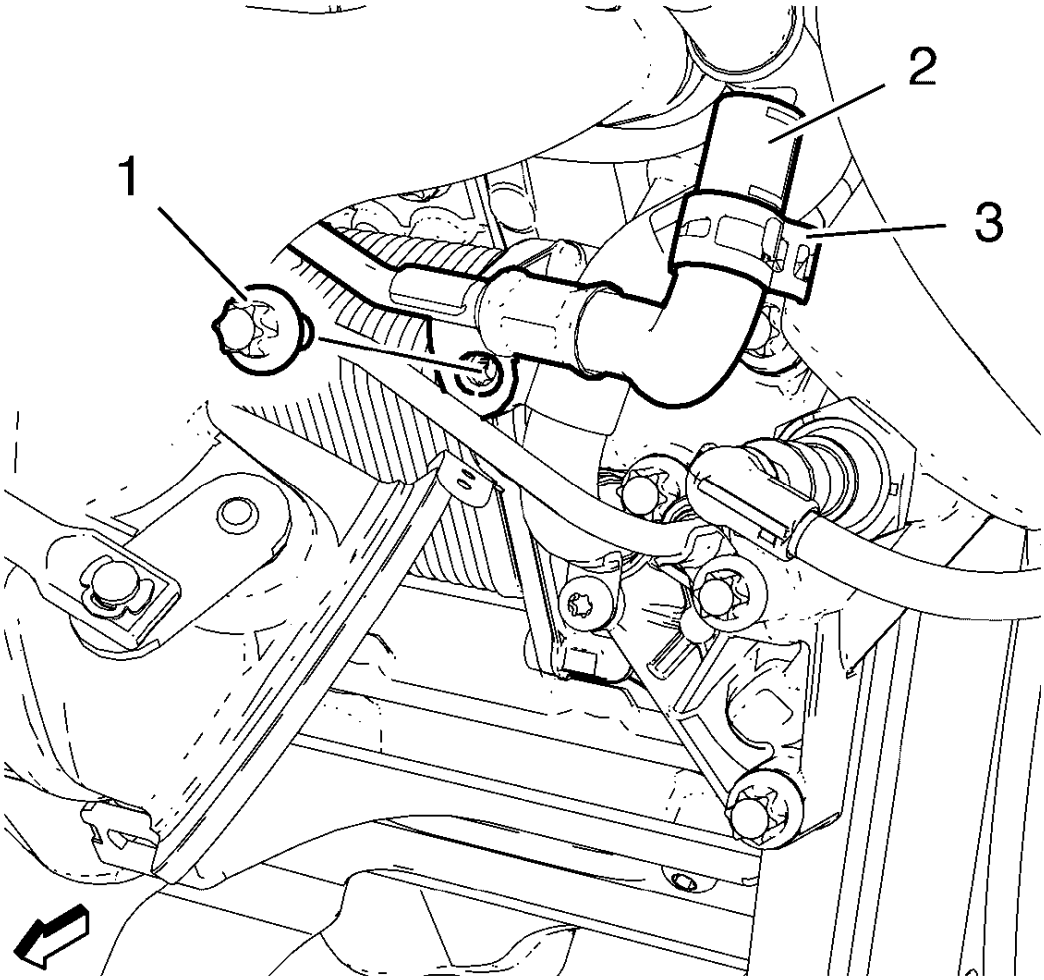

Fig. 80: Turbocharger Coolant Return Pipe Hose, Clamp And Bolt
Courtesy of GENERAL MOTORS COMPANY

4. Remove the turbocharger coolant return pipe hose clamp (3).
5. Remove the turbocharger coolant return pipe hose (2) from the engine oil cooler inlet pipe.

NOTE: Do not move the turbocharger coolant return pipe too much. An excessive moving of the turbocharger coolant return pipe could cause leakage.

6. Remove the turbocharger coolant return pipe bolt (1).

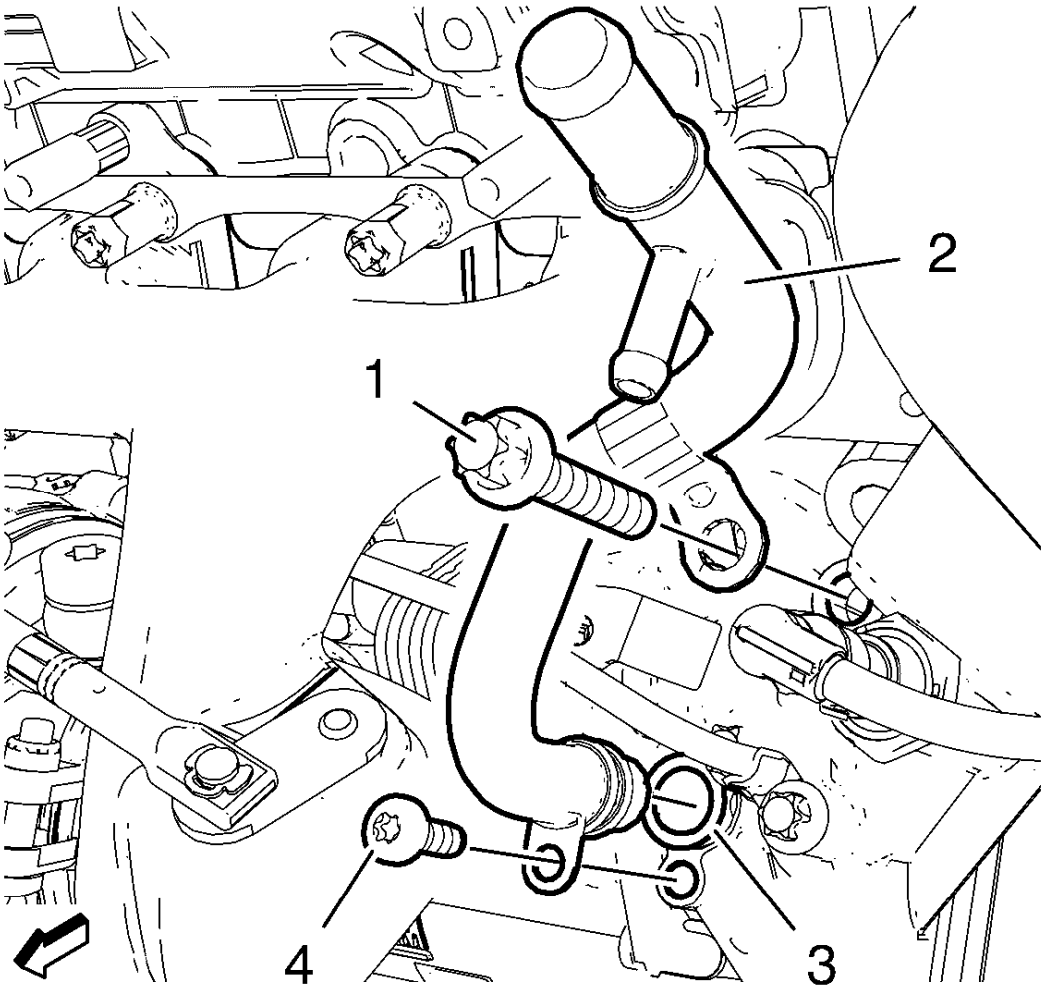

Fig. 81: Identifying Engine Oil Cooler Inlet Pipe
Courtesy of GENERAL MOTORS COMPANY

7. Remove the engine oil cooler bolt (1).
8. Remove the engine oil cooler inlet pipe bolt (4).
9. Remove the engine oil cooler inlet pipe (2) and the seal ring (3).

Installation Procedure

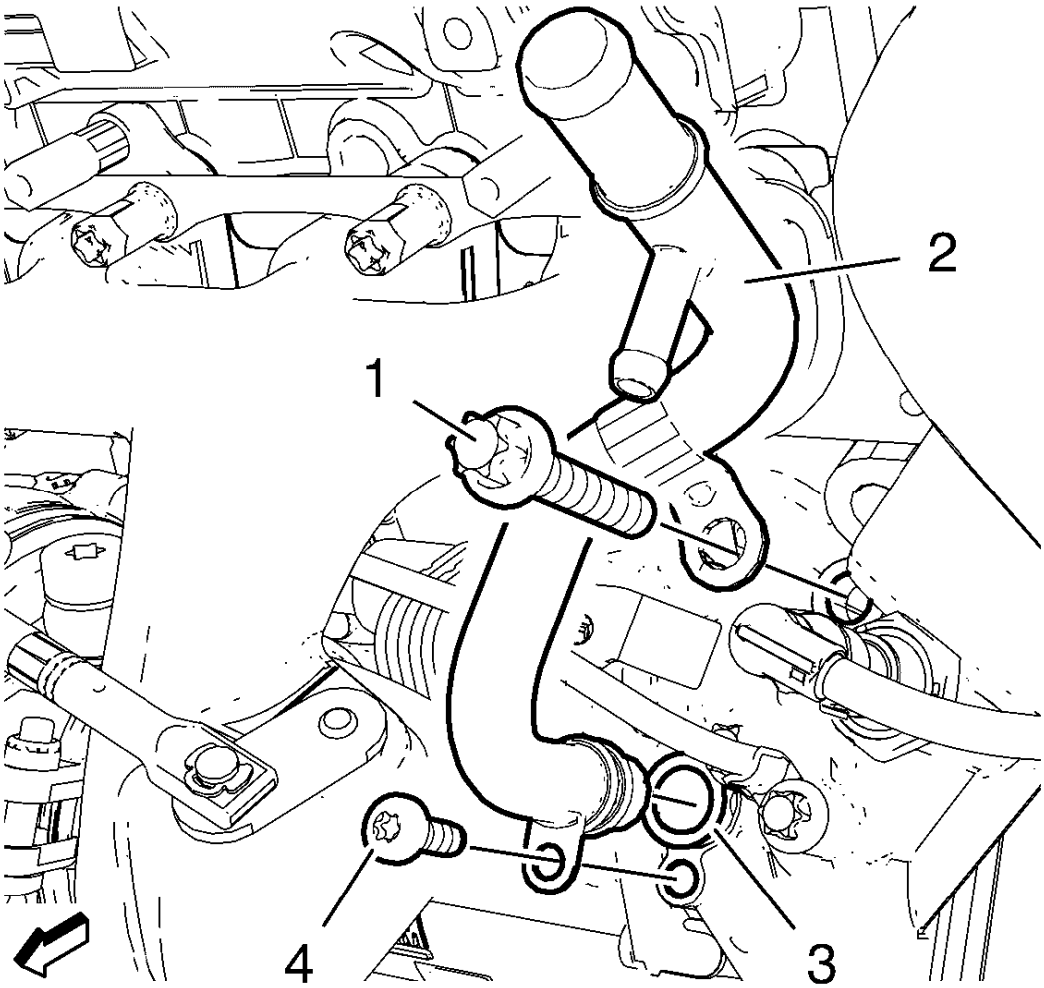

Fig. 82: Identifying Engine Oil Cooler Inlet Pipe
Courtesy of GENERAL MOTORS COMPANY

1. Install the engine oil cooler inlet pipe (2) in compound with a NEW seal ring (3).
2. Install the engine oil cooler bolt (1).

CAUTION: Refer to Fastener Caution .

3. Install the engine oil cooler inlet pipe bolt (4) and tighten to 10 N.m (89 lb in).
4. Tighten the engine oil cooler bolt (1) to 20 N.m (15 lb ft).

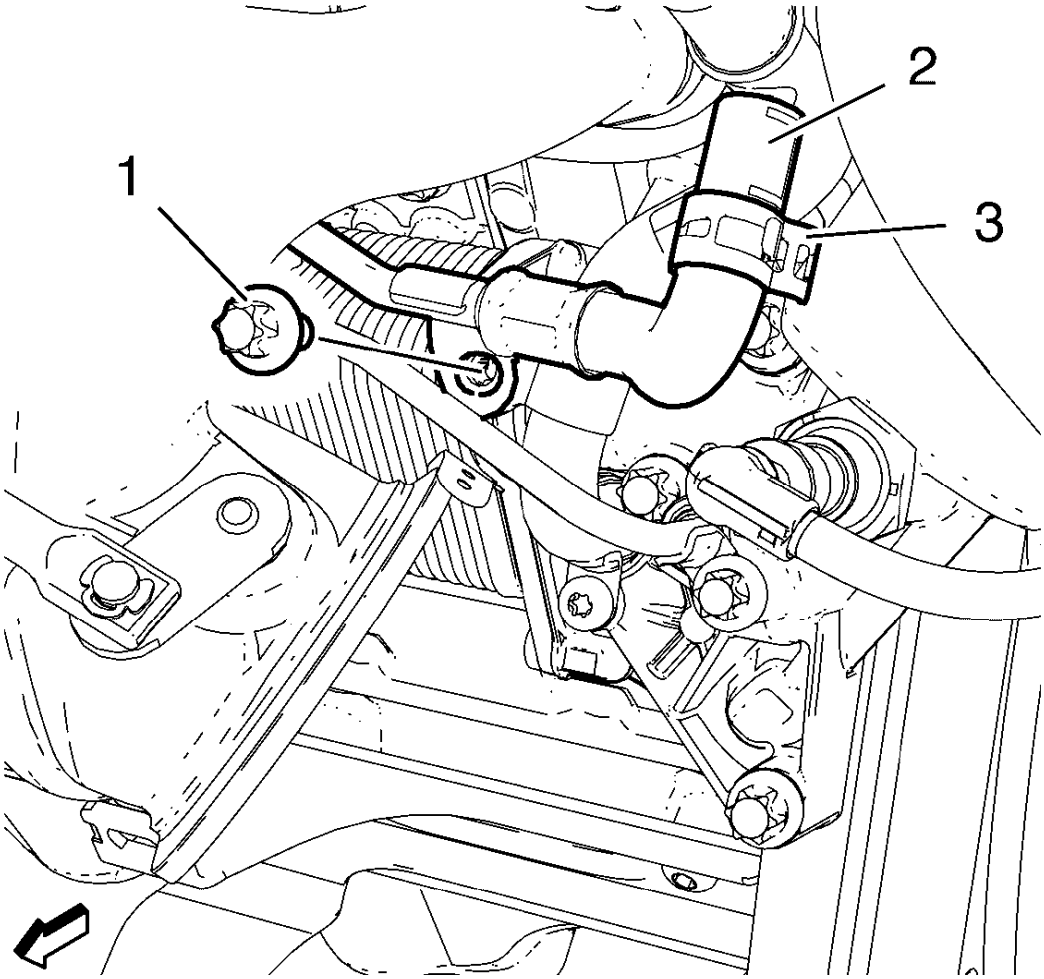

Fig. 83: Turbocharger Coolant Return Pipe Hose, Clamp And Bolt
Courtesy of GENERAL MOTORS COMPANY

5. Install the turbocharger coolant return pipe hose (2) to the engine oil cooler inlet pipe.
6. Install the turbocharger coolant return pipe hose clamp (3).
7. Install turbocharger coolant return pipe bolt (1) and tighten to 10 N.m (89 lb in).
8. Install the engine oil cooler inlet hose to the engine oil cooler inlet pipe. Refer to **Engine Oil Cooler Inlet Hose Replacement**.
9. Install the warm up three way catalytic converter. Refer to **Warm Up Three-Way Catalytic Converter Replacement** .
10. Fill up coolant fluid. Refer to **Cooling System Draining and Filling (Static Fill)**, **Cooling System Draining and Filling (GE-47716 Fill)**.

ENGINE OIL COOLER INLET PIPE REPLACEMENT (1.8L LUW AND LWE)

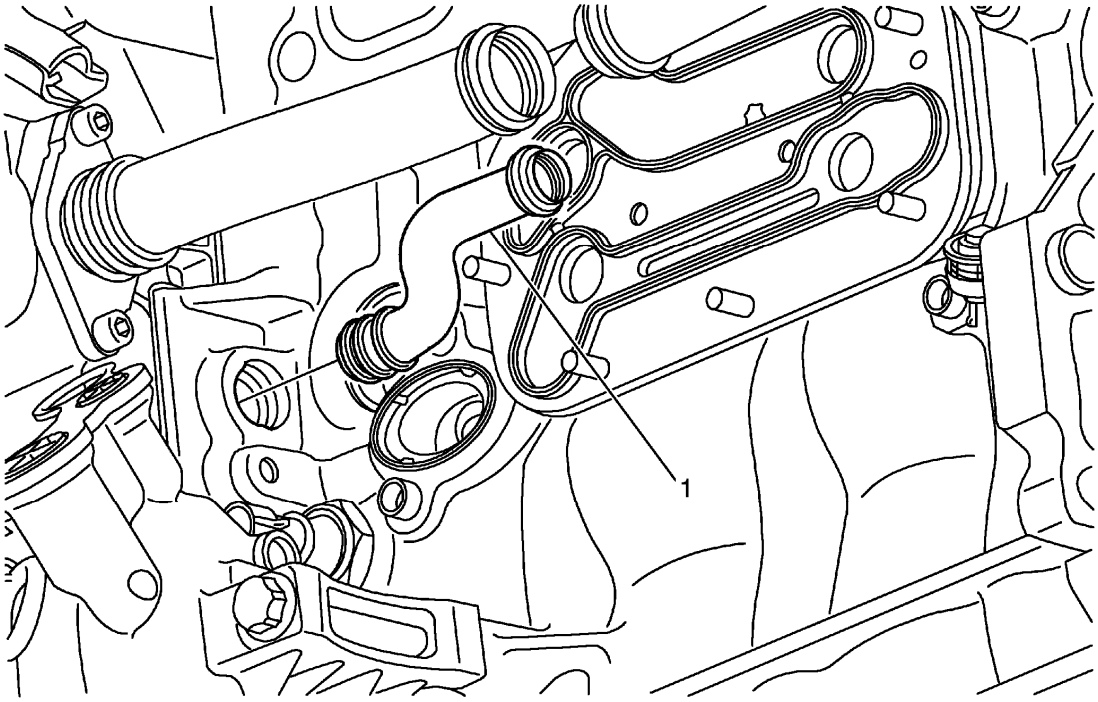

Fig. 84: Identifying Engine Oil Cooler Inlet Pipe
Courtesy of GENERAL MOTORS COMPANY

Engine Oil Cooler Inlet Pipe Replacement (1.8L LUW and LWE)

Callout	Component Name
Preliminary Procedure Remove the engine oil cooler housing. Refer to **Engine Oil Cooler Replacement (1.8L LUW and LWE)**, **Engine Oil Cooler Replacement (1.4L LUV)**.	
1	Engine Oil Cooler Inlet Pipe

ENGINE OIL COOLER OUTLET PIPE REPLACEMENT

Removal Procedure

1. Remove the exhaust manifold. Refer to **Exhaust Manifold Replacement** .
2. Drain the cooling system. Refer to **Cooling System Draining and Filling (Static Fill)**, **Cooling System Draining and Filling (GE-47716 Fill)**.

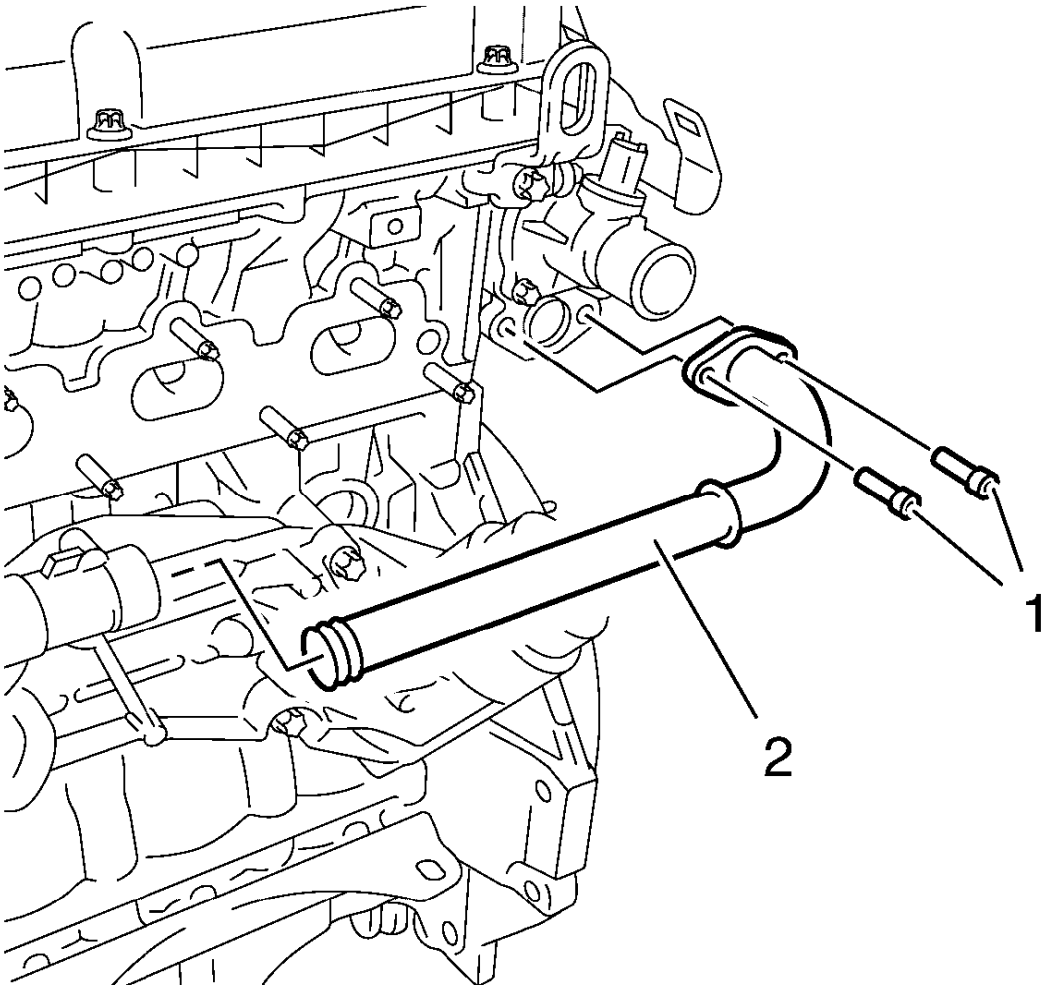

Fig. 85: Identifying Engine Oil Cooler Outlet Pipe And Bolts
Courtesy of GENERAL MOTORS COMPANY

3. Remove the 2 engine oil cooler outlet pipe bolts (1).
4. Remove the engine oil cooler outlet pipe (2) from the engine oil cooler housing and the engine coolant thermostat housing.
5. Remove the 2 engine oil cooler outlet pipe gaskets.

Installation Procedure

1. Clean the engine oil cooler outlet pipe sealing surfaces.
2. Install the 2 NEW engine oil cooler outlet pipe gaskets.

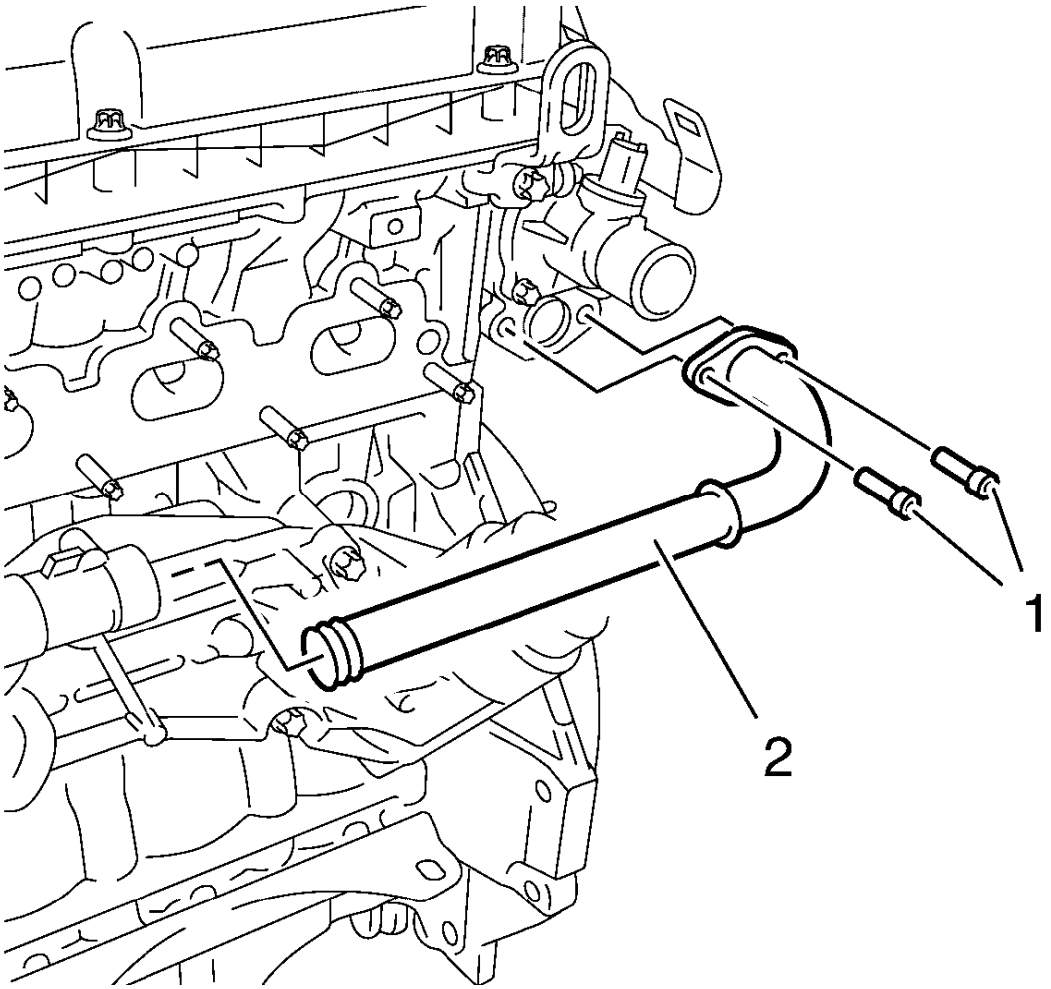

Fig. 86: Identifying Engine Oil Cooler Outlet Pipe And Bolts
Courtesy of GENERAL MOTORS COMPANY

3. Install the engine oil cooler outlet pipe (2) to the engine oil cooler housing and the engine coolant thermostat housing.

CAUTION: Refer to Fastener Caution .

4. Install the 2 engine oil cooler outlet pipe bolts (1) and tighten to 8 N.m (71 lb in).
5. Fill the cooling system. Refer to **Cooling System Draining and Filling (Static Fill)**, **Cooling System Draining and Filling (GE-47716 Fill)**.
6. Install the exhaust manifold. Refer to **Exhaust Manifold Replacement** .

ENGINE COOLANT FAN REPLACEMENT

Removal Procedure

NOTE: It is not necessary to remove the hood latches and wiring clips from the front end upper tie bar for this procedure.

1. Remove and reposition the front end upper tie bar rearward. Refer to **Front End Upper Tie Bar Replacement** .
2. Disconnect battery negative cable. Refer to **Battery Negative Cable Disconnection and Connection** .
3. Remove the radiator upper air seal.
4. Remove the left and right side radiator air baffles.
5. Position the radiator assembly forward for engine coolant fan shroud access.

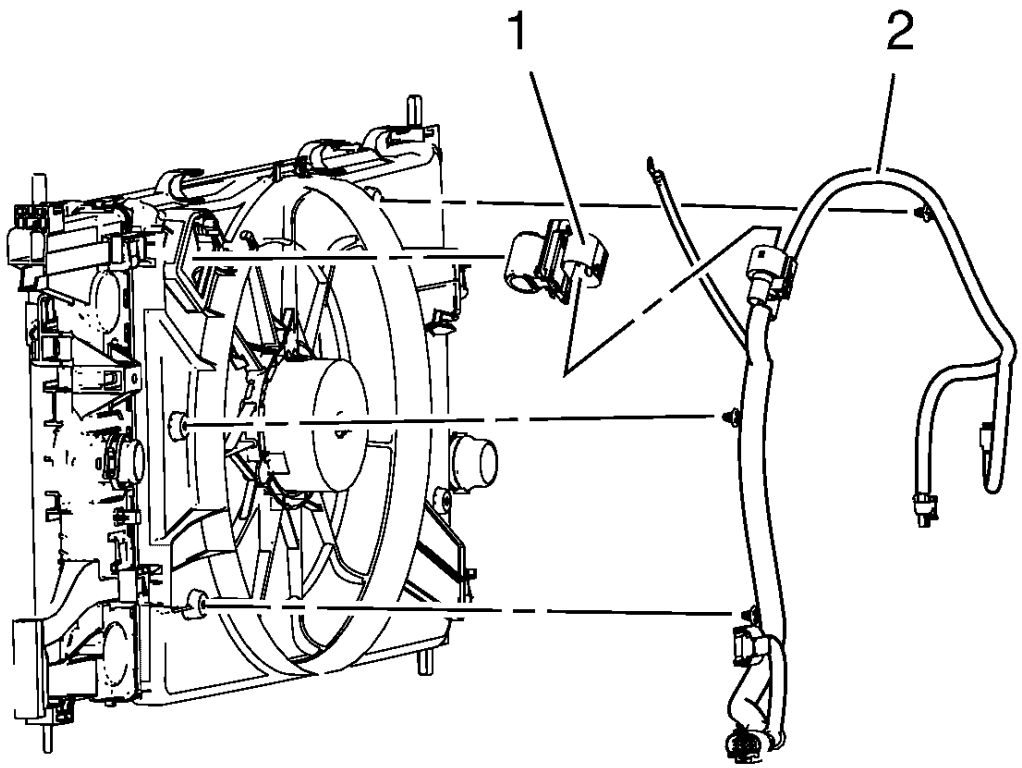

Fig. 87: Identifying Engine Coolant Fan Resistor Wiring Harness Connector
Courtesy of GENERAL MOTORS COMPANY

6. Disconnect the engine coolant fan resistor wiring harness connector (1) and remove the ground cable nut.

7. Remove the wiring harness (3) and clips.

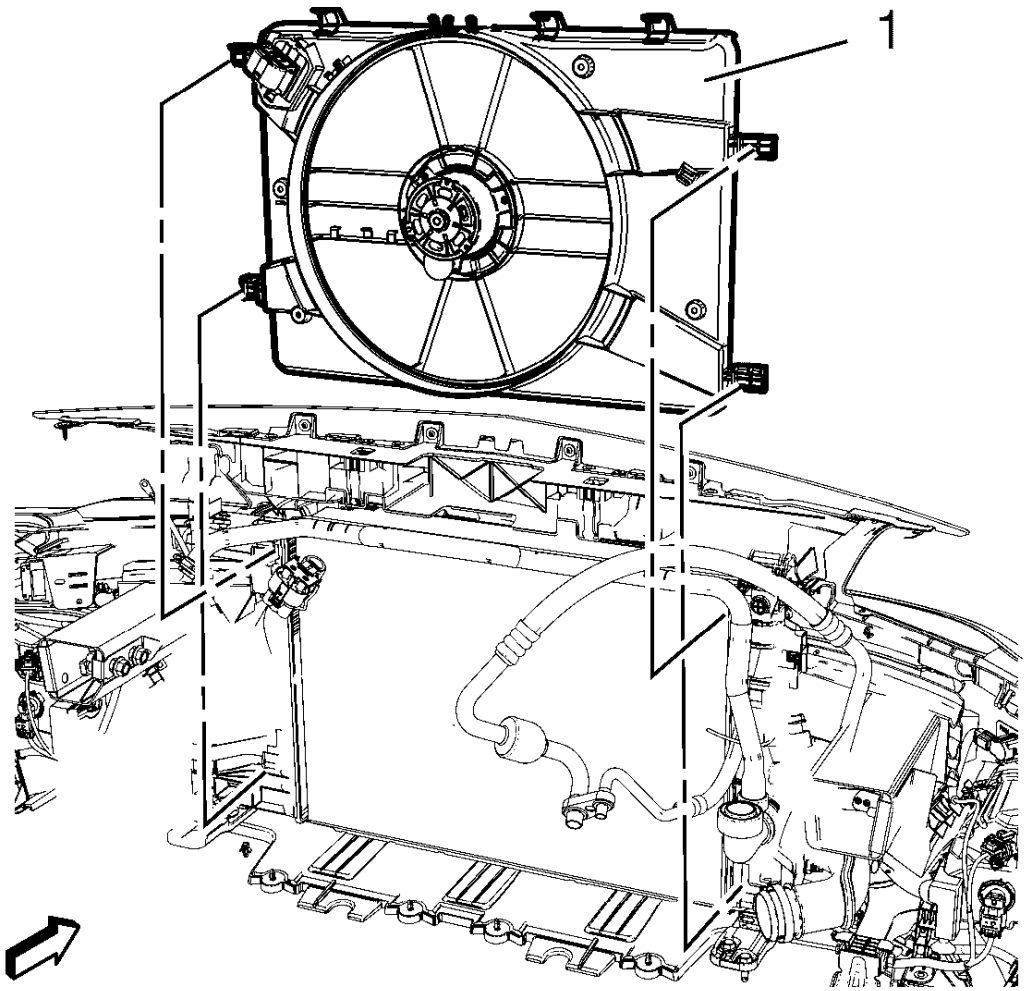

Fig. 88: Identifying Engine Coolant Fan Shroud
Courtesy of GENERAL MOTORS COMPANY

8. Unclip the engine coolant fan shroud (1) from the four mounting points shown.
9. Remove the engine coolant fan shroud (1).
    1. Slide the engine coolant fan shroud (1) toward the right side of the vehicle.
    2. Lift the left hand side of the engine coolant fan shroud (1) up.
    3. Remove the engine coolant fan shroud (1) from the vehicle.

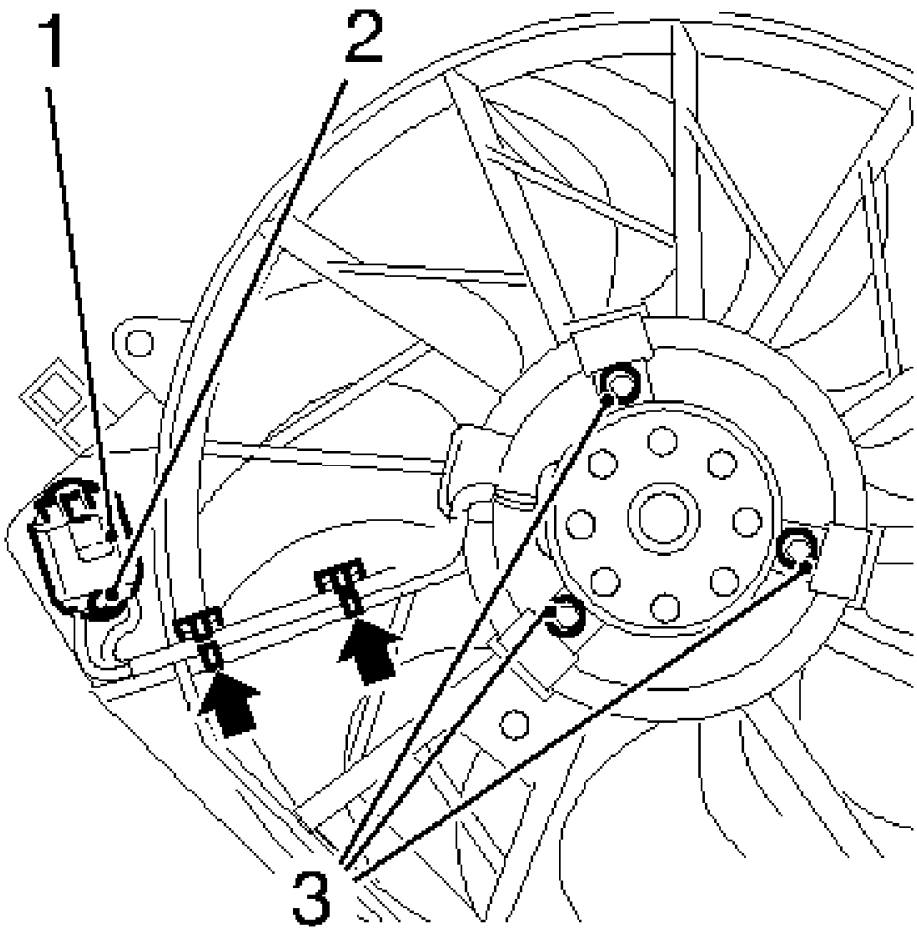

Fig. 89: Identifying Engine Coolant Fan Resistor
Courtesy of GENERAL MOTORS COMPANY

10. Remove the engine coolant fan resistor (1) by uncliping the retainer clip (2).
11. Unclip the engine coolant fan resistor wiring harness (arrows) from the shroud.
12. Remove the 3 engine coolant fan engine bolts (3) from the engine coolant fan.
13. Remove the engine coolant fan.

Installation Procedure

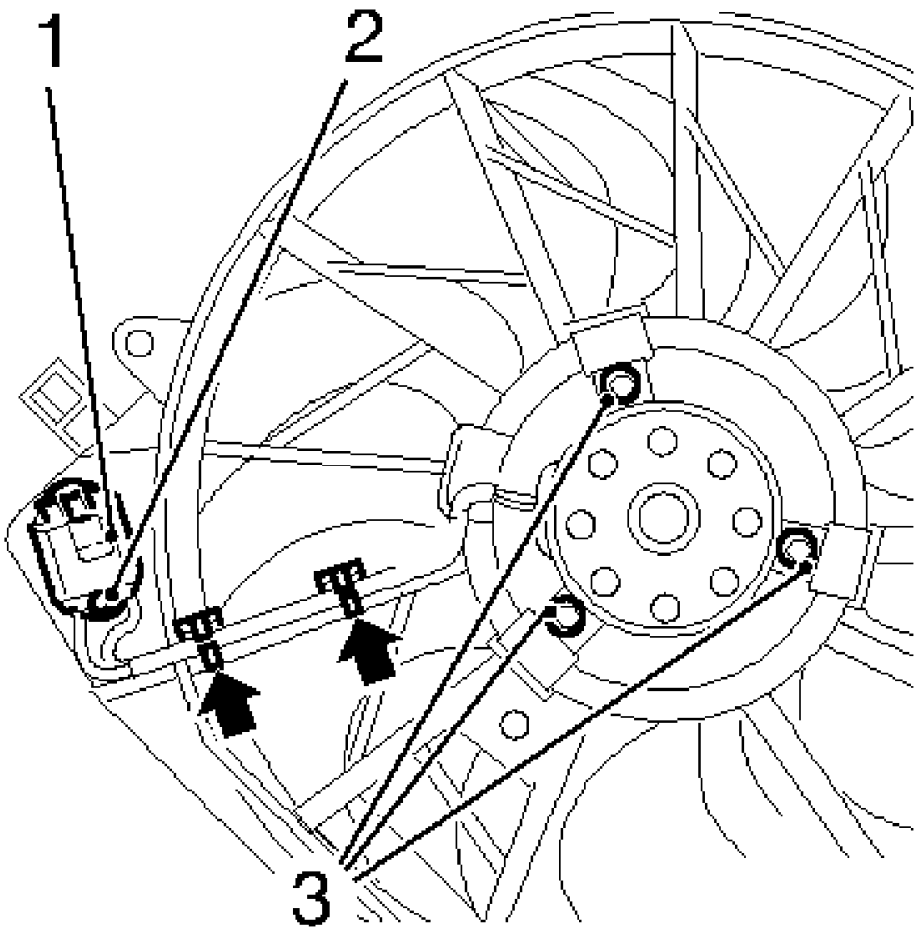

Fig. 90: Identifying Engine Coolant Fan Resistor
Courtesy of GENERAL MOTORS COMPANY

1. Install the engine coolant fan.

CAUTION: Refer to Fastener Caution

2. Install the 3 engine coolant fan engine bolts (3) to the engine coolant fan and tighten.
3. Clip in the engine coolant fan resistor wiring harness (arrows) to the shroud.
4. Install the engine coolant fan resistor (1) by clipping the retainer clip (2).

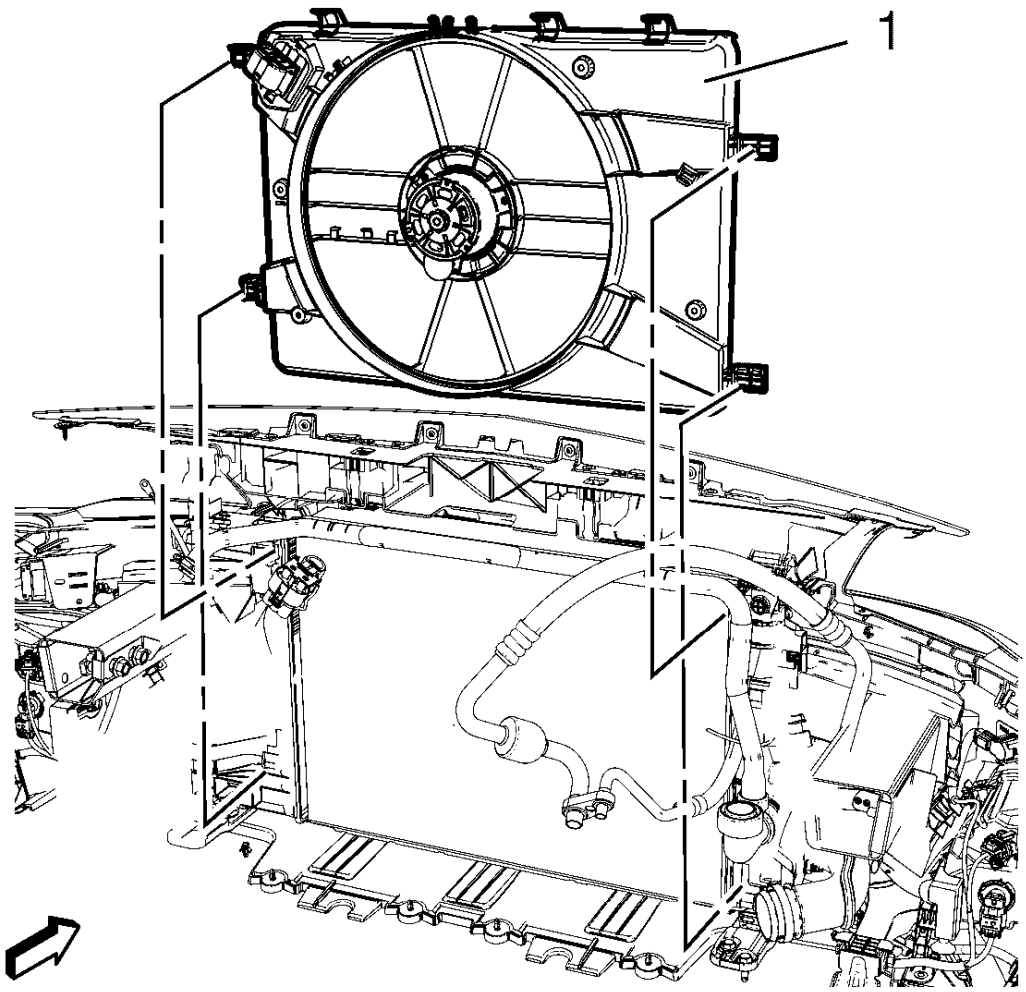

Fig. 91: Identifying Engine Coolant Fan Shroud
Courtesy of GENERAL MOTORS COMPANY

5. Install the engine coolant fan shroud (1).
    1. Lower the right hand side of the engine coolant fan shroud (1) behind the radiator.
    2. Slide the engine coolant fan shroud (1) toward the left side of the vehicle.
6. Clip in the engine coolant fan shroud (1) to the four mounting points shown.

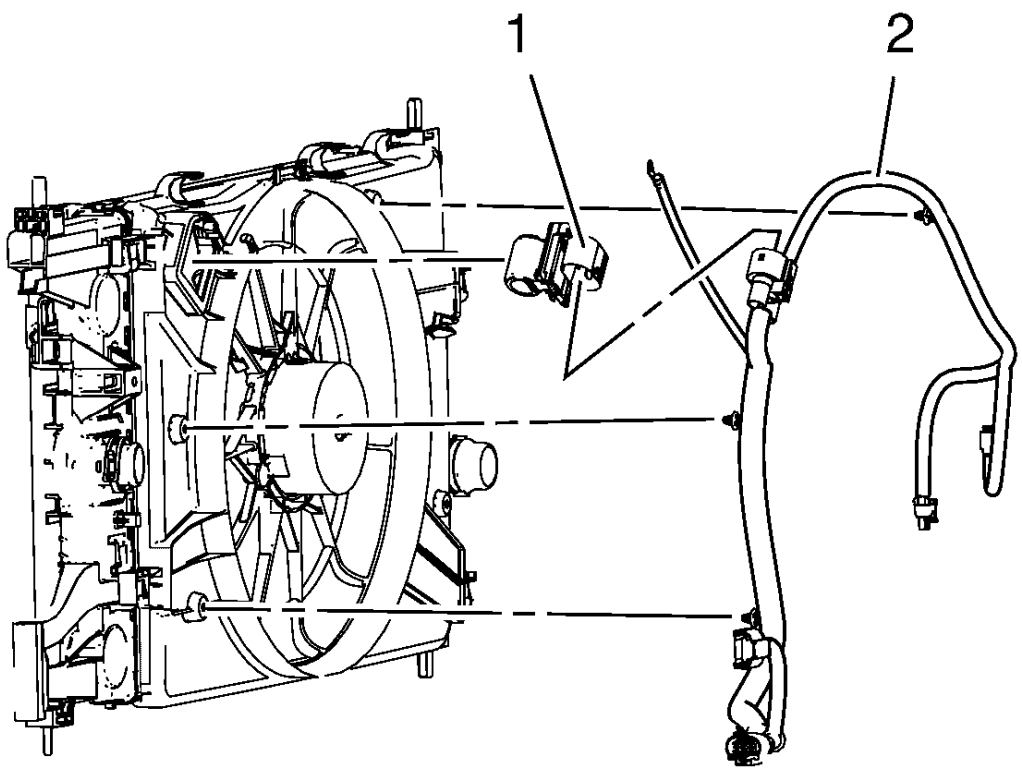

Fig. 92: Identifying Engine Coolant Fan Resistor Wiring Harness Connector
Courtesy of GENERAL MOTORS COMPANY

7. Connect the engine coolant fan resistor wiring harness connector (1).
8. Install the wiring harness (3) and clips.
9. Install the front end upper tie bar. Refer to **Front End Upper Tie Bar Replacement** .
10. Install the left and right side radiator air baffles.
11. Install the radiator upper air seal.
12. Connect battery negative cable. Refer to **Battery Negative Cable Disconnection and Connection** .

ENGINE COOLANT FAN RESISTOR REPLACEMENT

Removal Procedure

1. Disconnect the negative cable from the battery. Refer to **Battery Negative Cable Disconnection and Connection** .

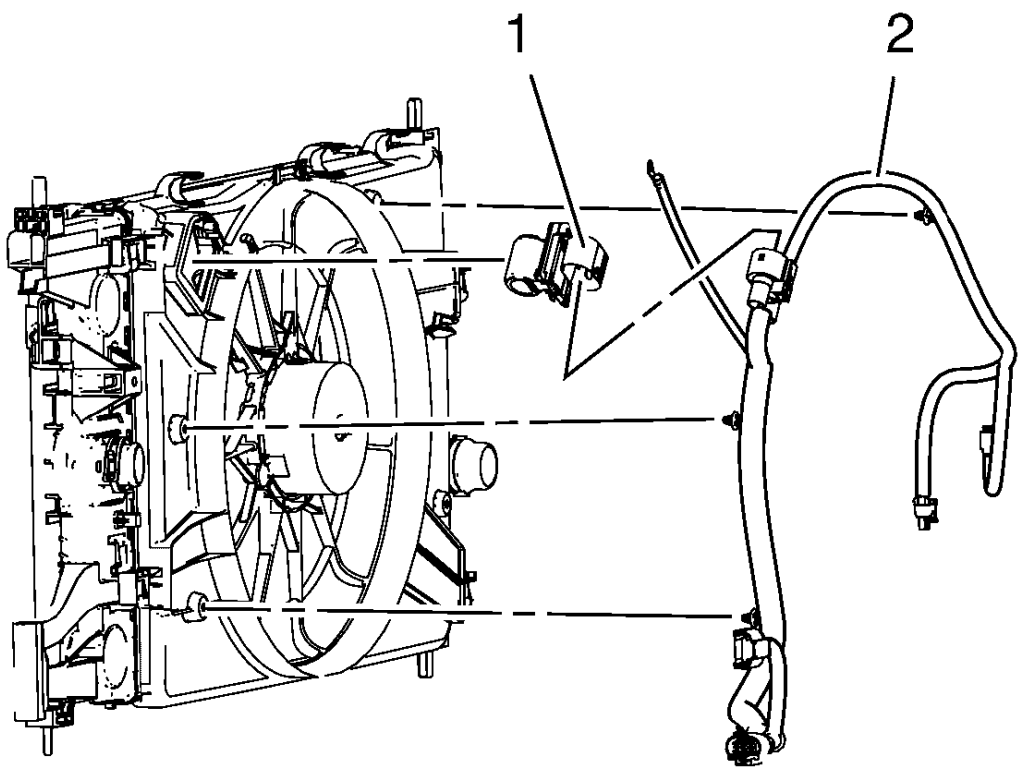

Fig. 93: Identifying Engine Coolant Fan Resistor Wiring Harness Connector
Courtesy of GENERAL MOTORS COMPANY

2. Disconnect the engine coolant fan resistor wiring harness plug.
3. Remove the engine coolant fan resistor bolt (2).
4. Remove the engine coolant fan resistor (1).

Installation Procedure

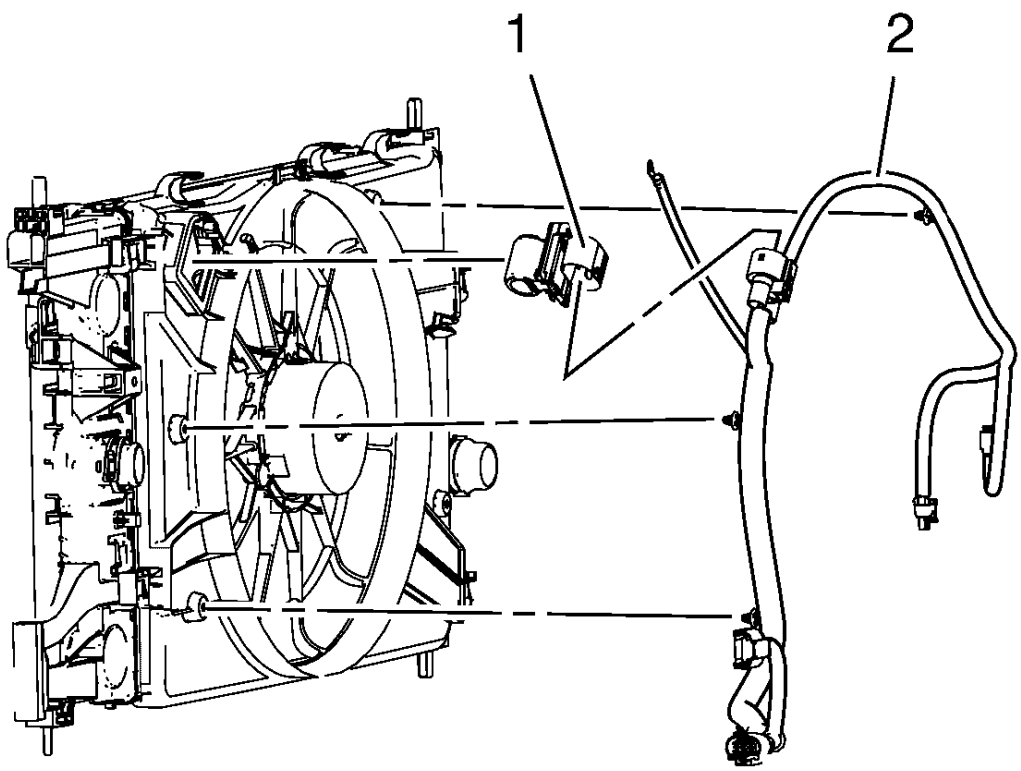

Fig. 94: Identifying Engine Coolant Fan Resistor Wiring Harness Connector
Courtesy of GENERAL MOTORS COMPANY

1. Install the engine coolant fan resistor (1).

CAUTION: Refer to Fastener Caution .

2. Install the engine coolant fan resistor bolt (2) and tighten to 4 N.m (36 lb in).
3. Connect the engine coolant fan resistor wiring harness plug.
4. Connect the negative cable to the battery. Refer to **Battery Negative Cable Disconnection and Connection** .

ENGINE COOLANT LEVEL INDICATOR MODULE REPLACEMENT

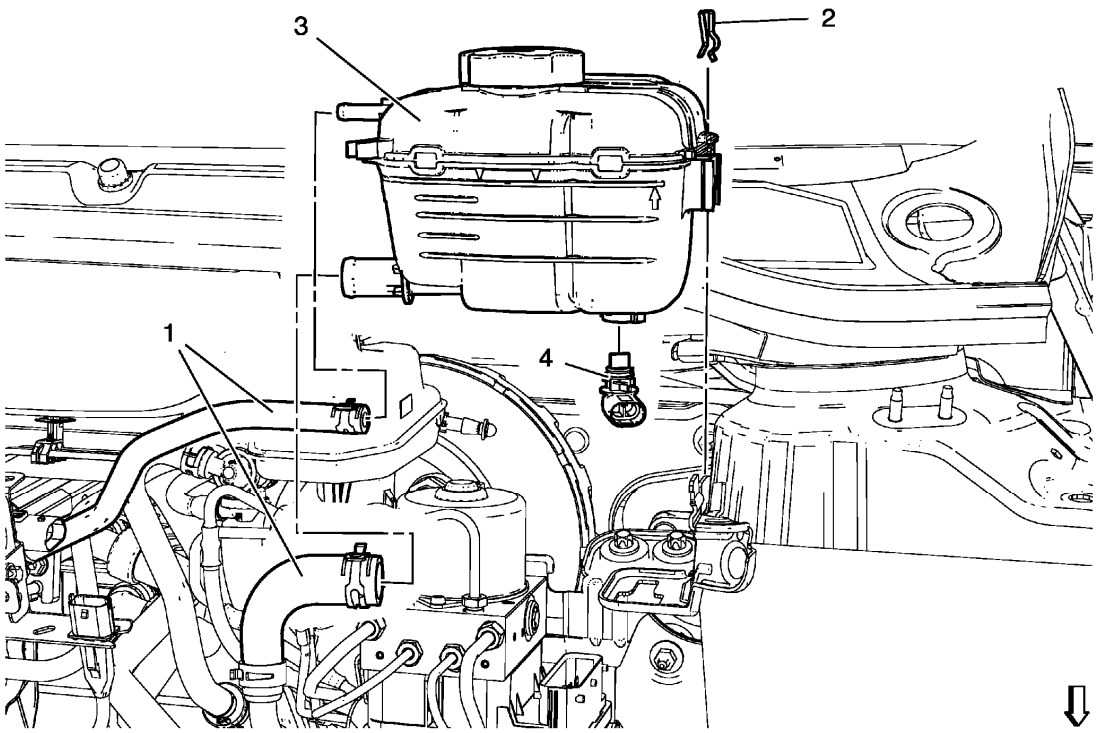

Fig. 95: Identifying Engine Coolant Level Indicator Module
Courtesy of GENERAL MOTORS COMPANY

Engine Coolant Level Indicator Module Replacement

Callout	Component Name
Preliminary Procedure 1. Drain the cooling system. Refer to **Cooling System Draining and Filling (Static Fill)**, **Cooling System Draining and Filling (GE-47716 Fill)**. 2. Remove the fuse block. Refer to **Fuse Block Replacement** .	
1	Coolant Hose (Qty: 2)
2	Radiator Surge Tank Clip
3	Radiator Surge Tank
4	Engine Coolant Level Indicator Module **Procedure** Disconnect the electrical connector.

TURBOCHARGER COOLANT FEED PIPE REPLACEMENT

Removal Procedure

1. Remove the turbocharger. Refer to **Turbocharger Replacement** .
2. Remove the turbocharger coolant feed pipe from quick fitting connector. Refer to **Turbocharger Disassemble** .

Installation Procedure

1. Install the turbocharger coolant feed pipe to the quick fitting connector. Refer to **Turbocharger Assemble** .
2. Install the turbocharger. Refer to **Turbocharger Replacement** .

TURBOCHARGER COOLANT RETURN PIPE REPLACEMENT

Removal Procedure

1. Remove the turbocharger. Refer to **Turbocharger Replacement** .
2. Remove the turbocharger coolant return pipe from quick fitting connector. Refer to **Turbocharger Disassemble** .
3. Replace the quick fitting connector. Refer to **Turbocharger Disassemble** .

Installation Procedure

1. Install the turbocharger coolant return pipe to the quick fitting connector. Refer to **Turbocharger Disassemble** .
2. Install the turbocharger. Refer to **Turbocharger Replacement** .

ENGINE COOLANT THERMOSTAT HOUSING REPLACEMENT (1.4L LUV)

Removal Procedure

1. Drain the cooling system. Refer to **Cooling System Draining and Filling (Static Fill)**, **Cooling System Draining and Filling (GE-47716 Fill)**.
2. Remove the air cleaner outlet duct. Refer to **Air Cleaner Outlet Duct Replacement** .
3. Disconnect the positive crankcase ventilation pipe from the turbocharger. Refer to **Positive Crankcase Ventilation Hose/Pipe/Tube Replacement** .
4. Remove the radiator outlet hose from the engine coolant thermostat housing. Refer to **Radiator Outlet Hose Replacement (1.8L LUW and LWE)**, **Radiator Outlet Hose Replacement (1.4L LUV)**.
5. Disconnect the engine coolant temperature sensor wiring harness connector.

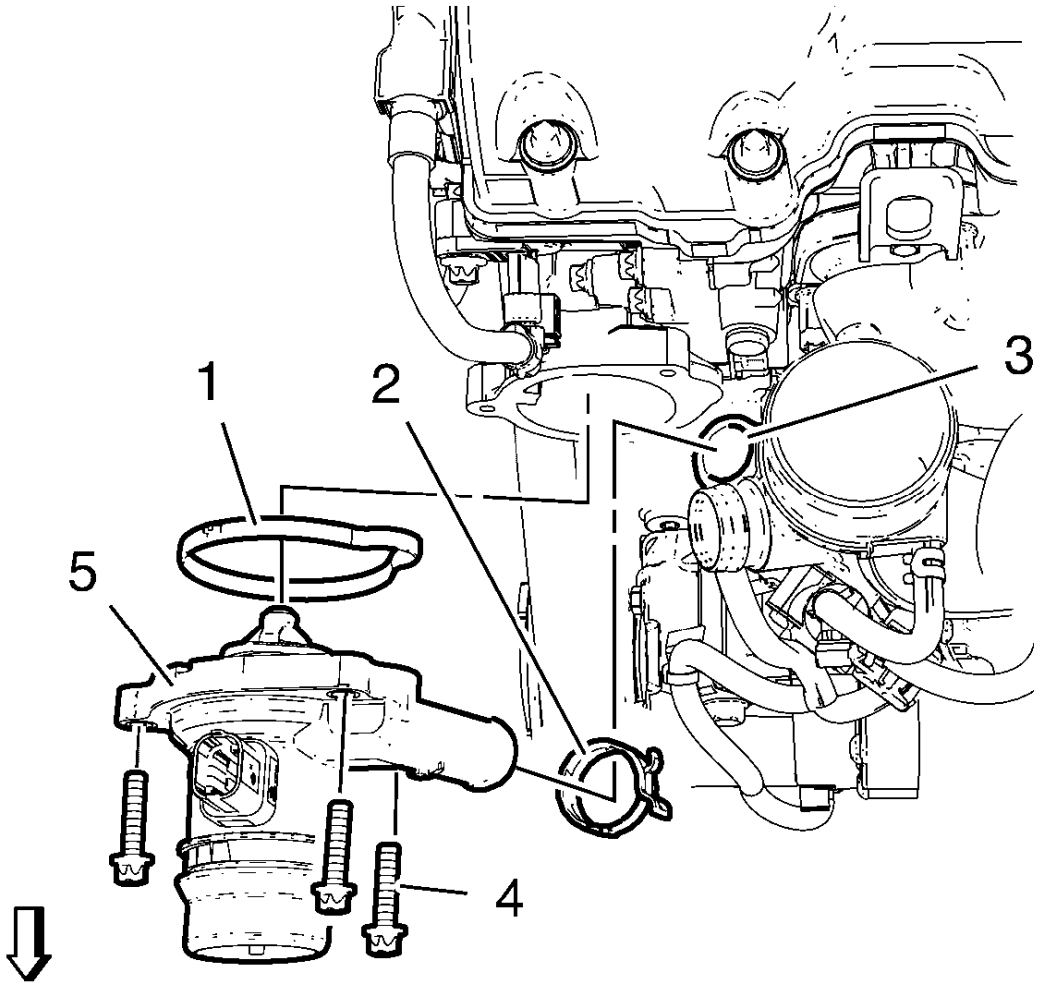

Fig. 96: Identifying Engine Coolant Thermostat Housing And Engine Oil Cooler Outlet Hose
Courtesy of GENERAL MOTORS COMPANY

6. Remove the engine oil cooler outlet hose clamp (2).
7. Remove the engine oil cooler outlet hose (3) from the engine coolant thermostat housing.
8. Remove the 3 engine coolant thermostat housing bolts (4).
9. Remove the engine coolant thermostat housing (5) and the seal ring (1).

Installation Procedure

1. Clean the sealing surfaces.

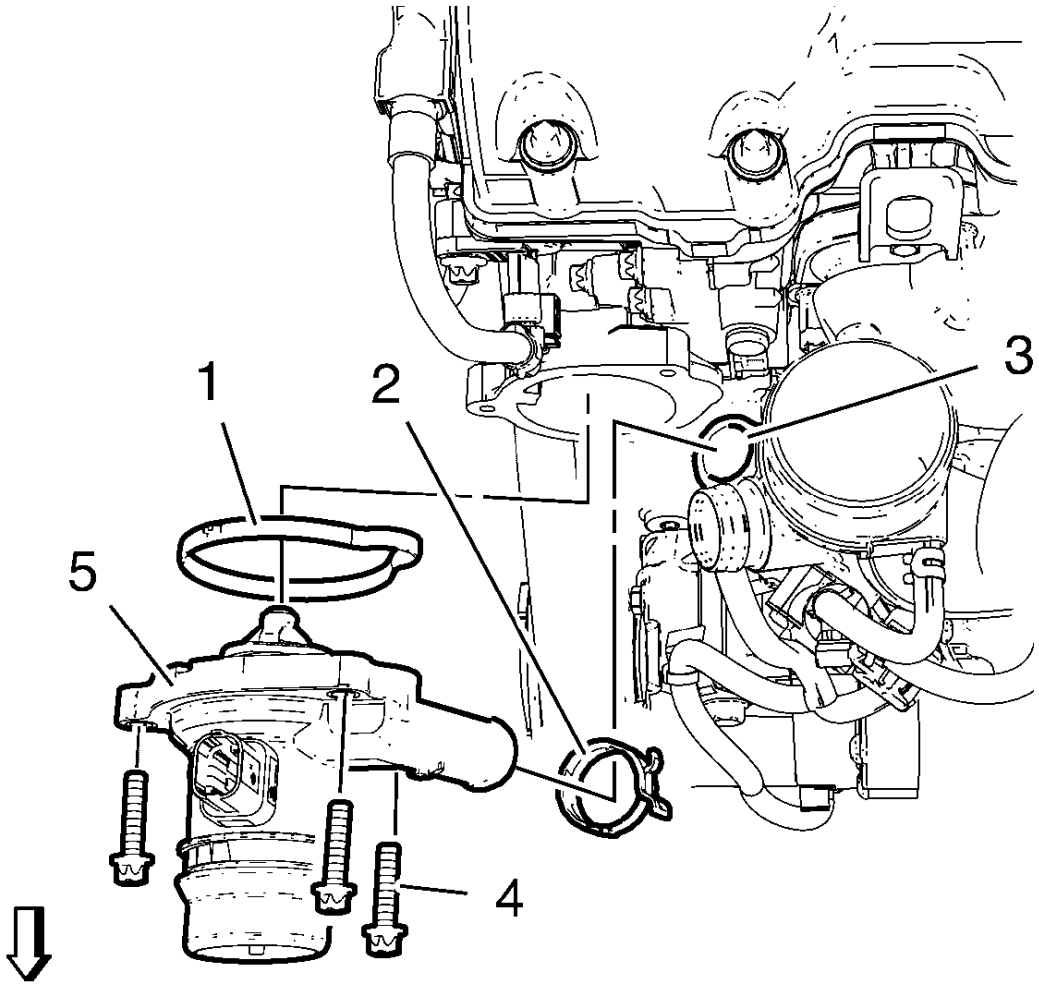

Fig. 97: Identifying Engine Coolant Thermostat Housing And Engine Oil Cooler Outlet Hose
Courtesy of GENERAL MOTORS COMPANY

2. Install the engine coolant thermostat housing (5) along with a NEW seal ring (1).

CAUTION: Refer to Fastener Caution .

3. Install the 3 engine coolant thermostat housing bolts (4) and tighten to 8 N.m(71 lb in).
4. Install the engine oil cooler outlet hose (3) to the engine coolant thermostat housing.
5. Install the engine oil cooler outlet hose clamp (2).
6. Connect the engine coolant temperature sensor wiring harness connector.
7. Install the radiator outlet hose to the engine coolant thermostat housing. Refer to **Radiator Outlet Hose Replacement (1.8L LUW and LWE)**, **Radiator Outlet Hose Replacement (1.4L LUV)**.
8. Connect the positive crankcase ventilation pipe to the turbocharger. Refer to **Positive Crankcase**

Ventilation Hose/Pipe/Tube Replacement .

9. Install the air cleaner outlet duct. Refer to **Air Cleaner Outlet Duct Replacement** .
10. Fill the cooling system. Refer to **Cooling System Draining and Filling (Static Fill)**, **Cooling System Draining and Filling (GE-47716 Fill)**.

ENGINE COOLANT THERMOSTAT HOUSING REPLACEMENT (1.8L LUW AND LWE)

Removal Procedure

CAUTION: Refer to Engine Coolant Thermostat Housing Caution .

1. Open the hood.
2. Raise and support the vehicle. Refer to **Lifting and Jacking the Vehicle** .
3. Place a drain pan below the vehicle.
4. Drain the cooling system. Refer to **Cooling System Draining and Filling (Static Fill)**, **Cooling System Draining and Filling (GE-47716 Fill)**.

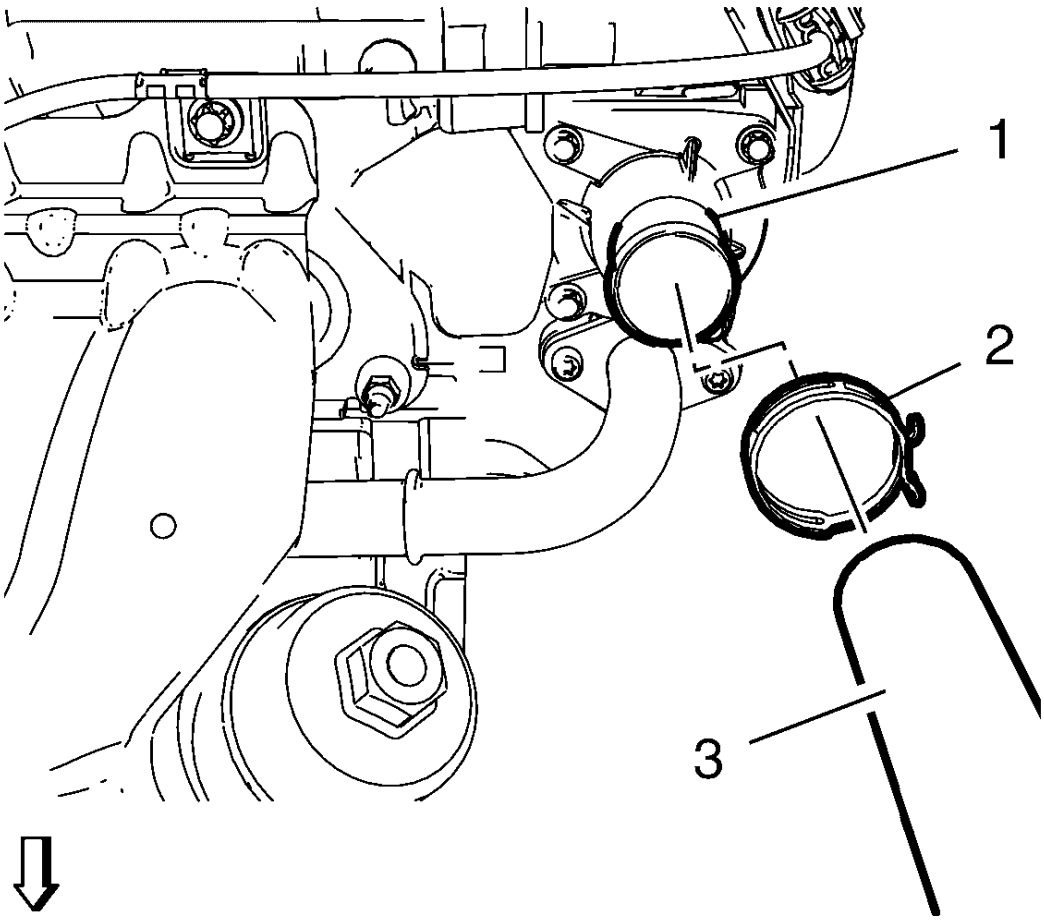

Fig. 98: Radiator Inlet Hose And Clamp
Courtesy of GENERAL MOTORS COMPANY

5. Loosen the radiator inlet hose clamp (2).
6. Remove the radiator inlet hose (3) from the engine coolant thermostat (1).

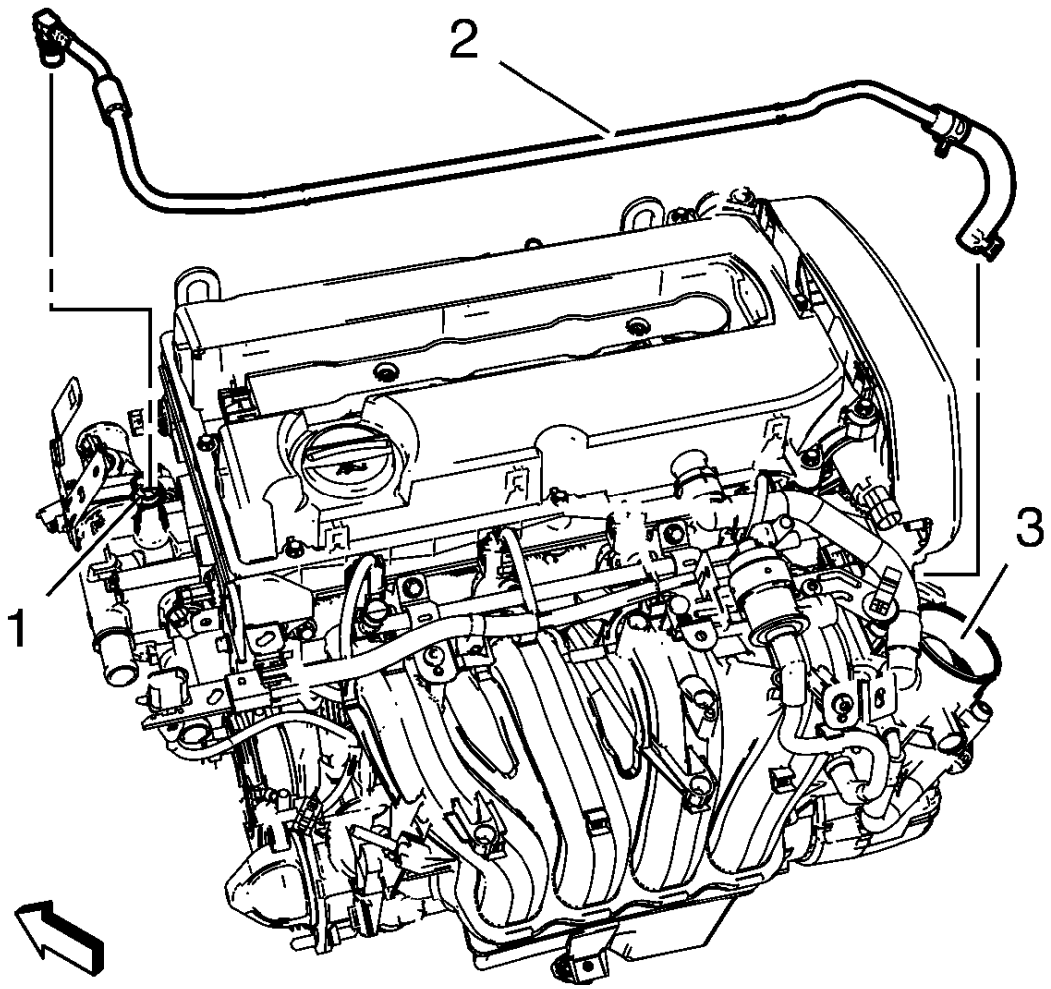

Fig. 99: Identifying Engine Coolant Thermostat Housing
Courtesy of GENERAL MOTORS COMPANY

7. Remove the throttle body heater inlet hose (2) from the engine coolant thermostat (1).
8. Remove the heater outlet hose from the engine coolant thermostat housing. Refer to **Heater Outlet Hose Replacement (1.8L LUW)** , **Heater Outlet Hose Replacement (1.4L LUV)** , **Heater Outlet Hose Replacement (1.8L LWE)** .
9. Remove the heater inlet hose from the engine coolant thermostat housing. Refer to **Heater Inlet Hose Replacement (1.8L LUW and LWE)** , **Heater Inlet Hose Replacement (1.4L LUV)** .
10. Remove the thermostat housing bracket nut.
11. Remove the thermostat housing bracket.

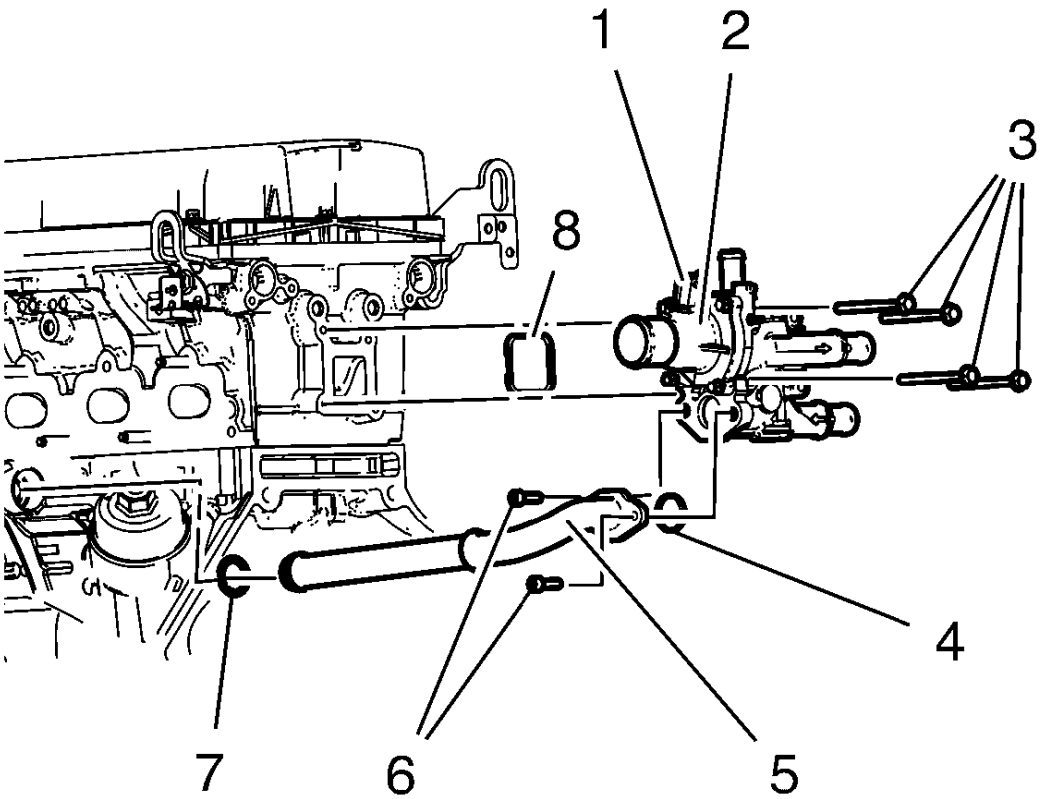

Fig. 100: Identifying Engine Coolant Temperature Sensor Connector, Engine Oil Cooler Pipe And Thermostat Housing
Courtesy of GENERAL MOTORS COMPANY

12. Disconnect the engine coolant temperature sensor connector (1).
13. Remove the 2 engine oil cooler pipe bolts (6).

NOTE: Pull the engine oil cooler pipe out of the engine oil cooler.

14. Remove the engine oil cooler pipe (5).
15. Remove the engine oil cooler pipe seals (4, 7).
16. Remove the 4 engine coolant thermostat housing bolts (3).
17. Remove the thermostat housing (2).
18. Remove the thermostat housing seal (8).

Installation Procedure

1. Clean sealing surface.

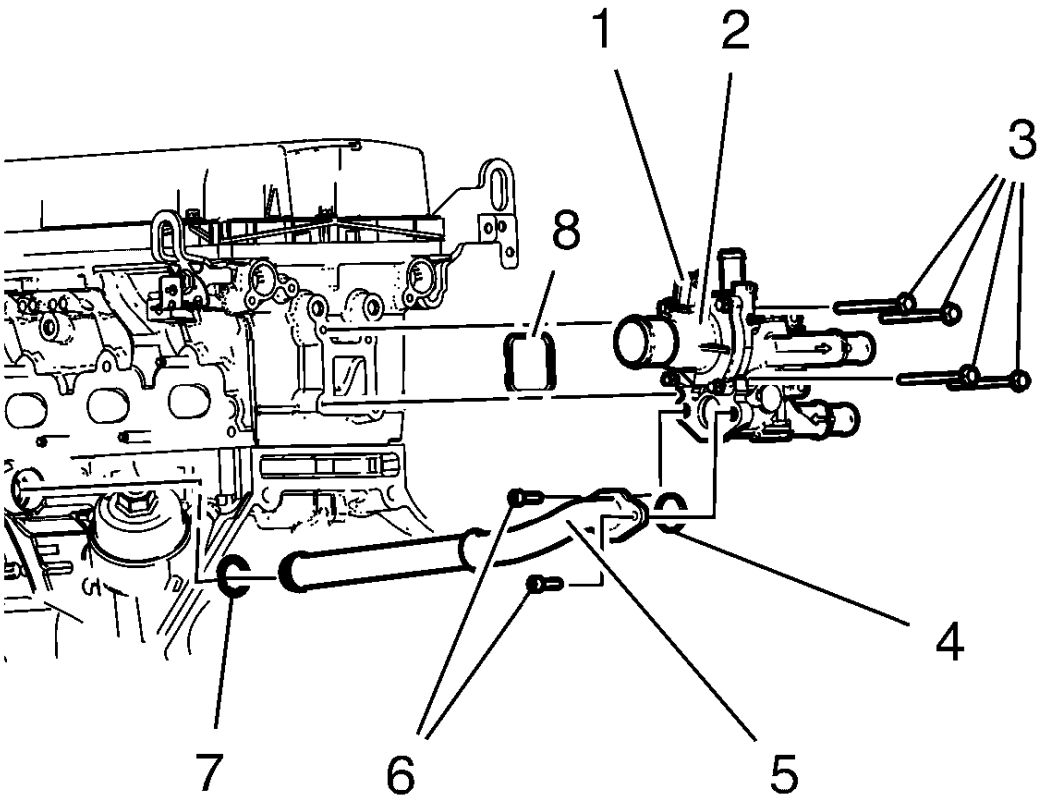

Fig. 101: Identifying Engine Coolant Temperature Sensor Connector, Engine Oil Cooler Pipe And Thermostat Housing
Courtesy of GENERAL MOTORS COMPANY

2. Install a NEW engine coolant thermostat housing seal (8).
3. Install the engine coolant thermostat housing (2).

CAUTION: Refer to Fastener Caution .

NOTE: Partially install the 4 bolts until the engine coolant thermostat housing is in contact with the cylinder head.

4. Install the 4 engine coolant thermostat housing bolts (3) and tighten to 2 N.m (18 lb in).

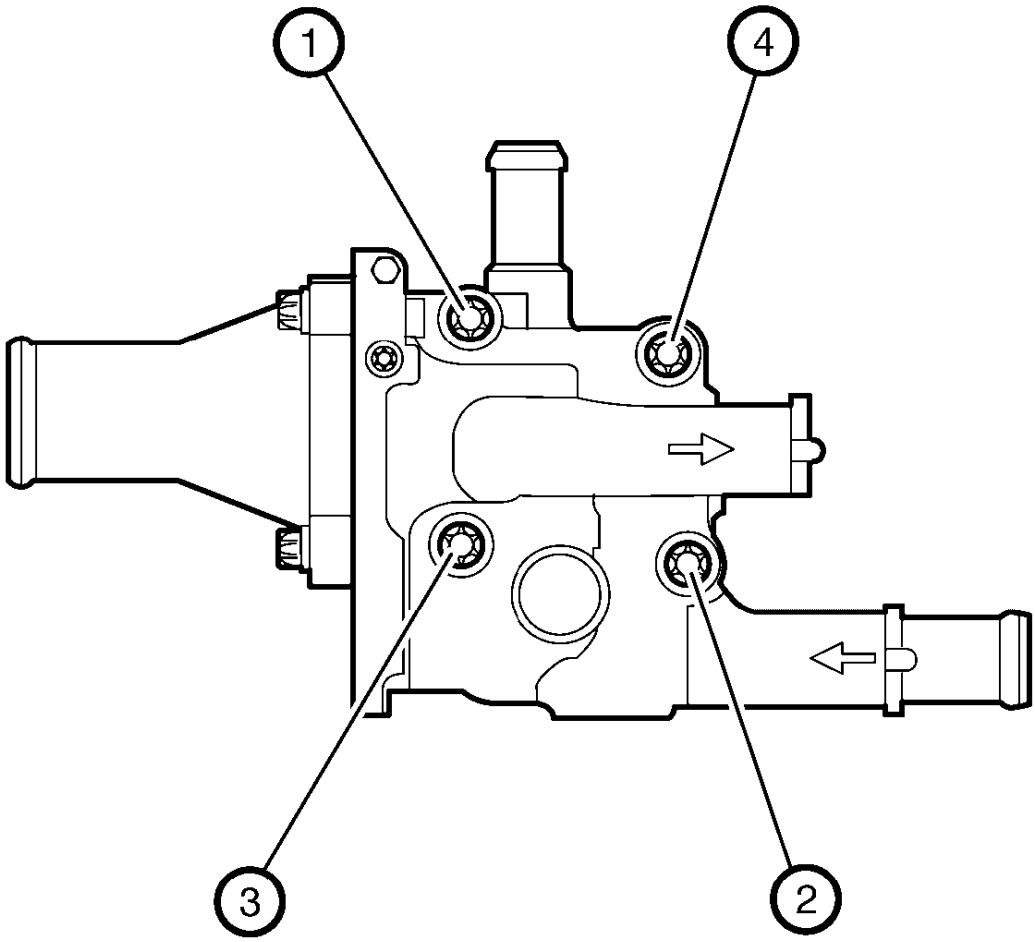

Fig. 102: Identifying Engine Coolant Thermostat Housing Bolts Tightening Sequence
Courtesy of GENERAL MOTORS COMPANY

CAUTION: Following the proper fastener tightening sequence and torque is essential. Failure to do so may fracture the thermostat housing.

5. Tighten the 4 engine coolant thermostat housing bolts to 8 N.m (71 lb in) in sequence (1-2-3-4).

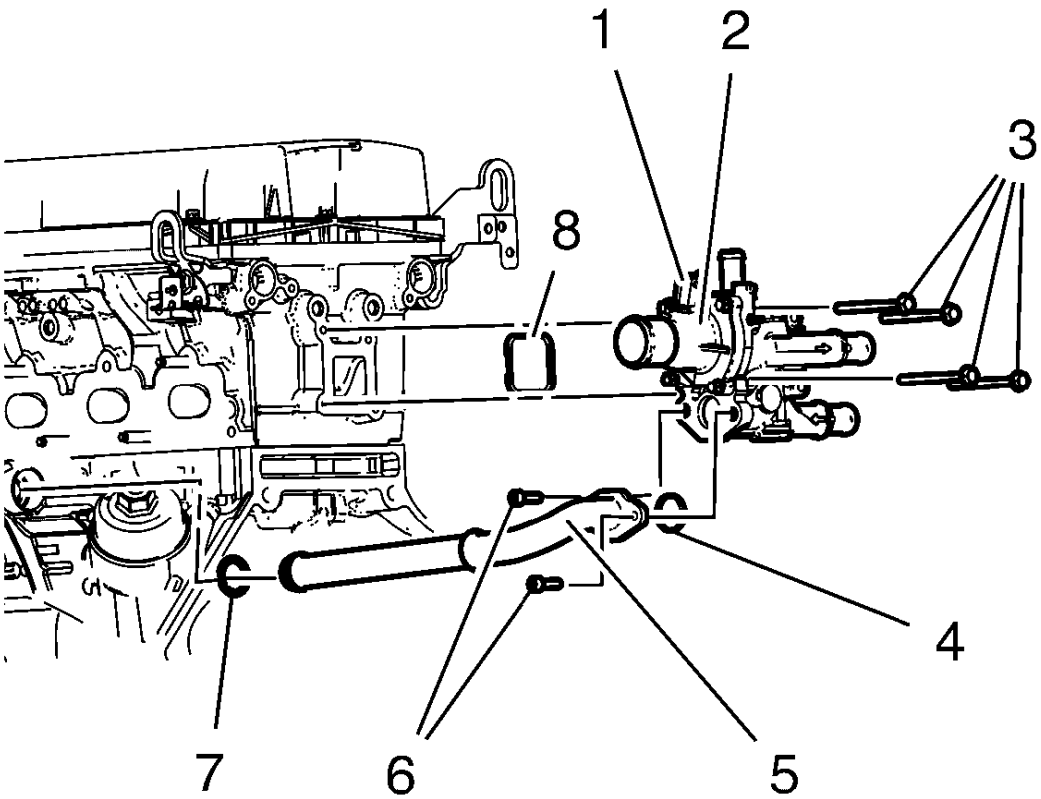

Fig. 103: Identifying Engine Coolant Temperature Sensor Connector, Engine Oil Cooler Pipe And Thermostat Housing
Courtesy of GENERAL MOTORS COMPANY

6. Install NEW engine oil cooler pipe seals (4, 7).

NOTE: Push the engine oil cooler pipe into the engine oil cooler.

7. Install the engine oil cooler pipe (5).
8. Install the 2 engine oil cooler pipe bolts (6) and tighten to 8 N.m (71 lb in).
9. Install the heater inlet hose to the engine coolant thermostat housing. Refer to **Heater Inlet Hose Replacement (1.8L LUW and LWE)** , **Heater Inlet Hose Replacement (1.4L LUV)** .
10. Install the heater outlet hose to the engine coolant thermostat housing. Refer to **Heater Outlet Hose Replacement (1.8L LUW)** , **Heater Outlet Hose Replacement (1.4L LUV)** , **Heater Outlet Hose Replacement (1.8L LWE)** .
11. Connect the engine coolant temperature sensor connector (1).

12. Install the engine coolant thermostat housing bracket.
13. Install the engine coolant thermostat housing bracket nut and tighten to 6 N.m (53 lb in).

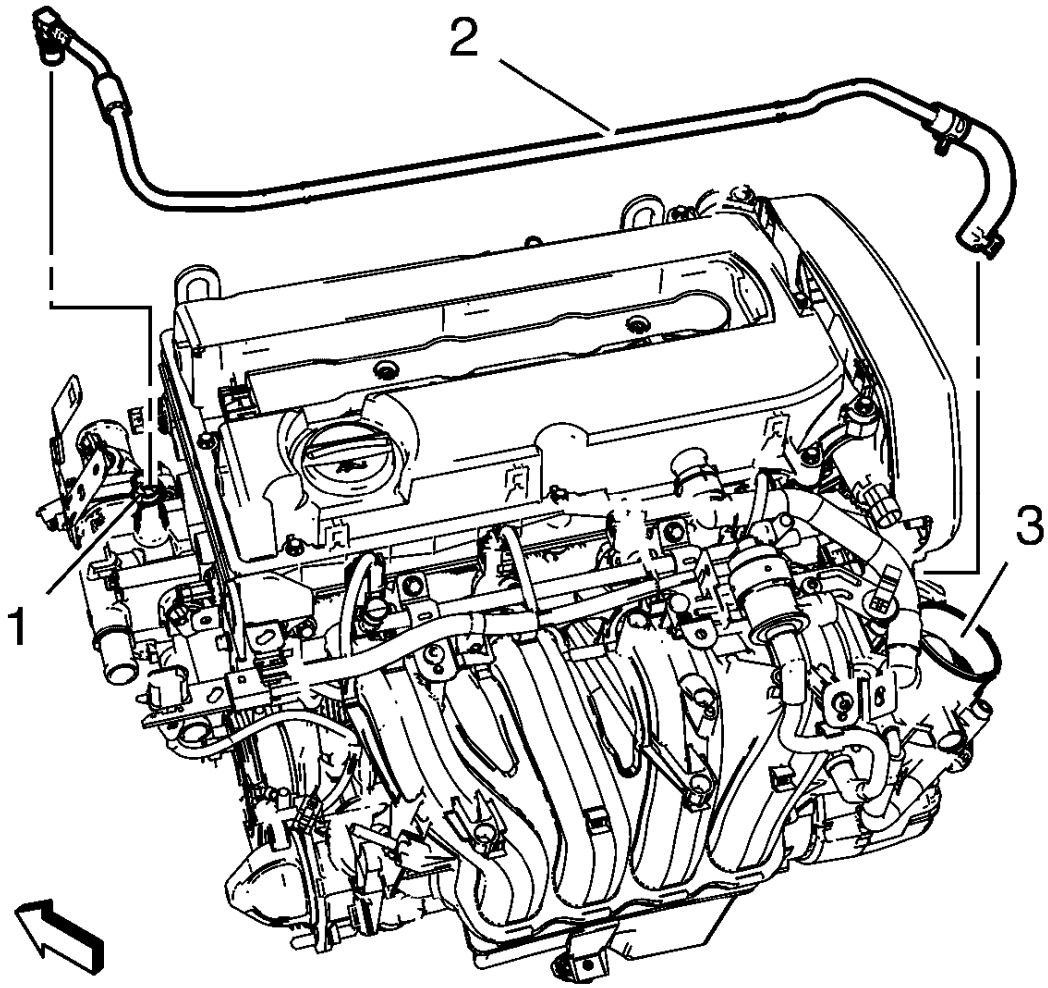

Fig. 104: Identifying Engine Coolant Thermostat Housing
Courtesy of GENERAL MOTORS COMPANY

14. Install the throttle body heater inlet hose (2) to the engine coolant thermostat housing (1).

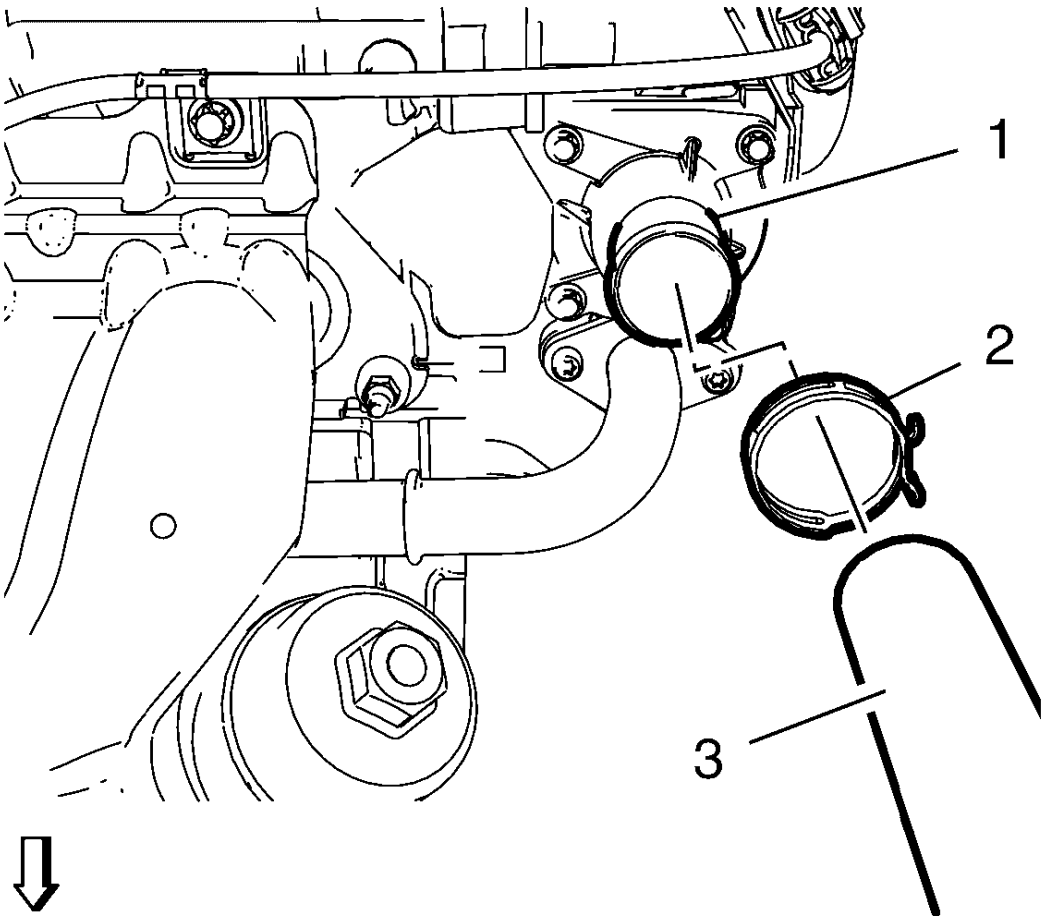

Fig. 105: Radiator Inlet Hose And Clamp
Courtesy of GENERAL MOTORS COMPANY

15. Install the radiator inlet hose (3) with the radiator inlet hose clamp (2) to the engine coolant thermostat (1).
16. Lower the vehicle.
17. Fill the cooling system. Refer to **Cooling System Draining and Filling (Static Fill)**, **Cooling System Draining and Filling (GE-47716 Fill)**.

ENGINE COOLANT THERMOSTAT REPLACEMENT

Removal Procedure

CAUTION: Refer to Engine Coolant Thermostat Housing Caution .

1. Raise and support the vehicle. Refer to **Lifting and Jacking the Vehicle** .
2. Place a drain pan below the vehicle.
3. Drain the cooling system. Refer to **Cooling System Draining and Filling (Static Fill)**, **Cooling System Draining and Filling (GE-47716 Fill)**.

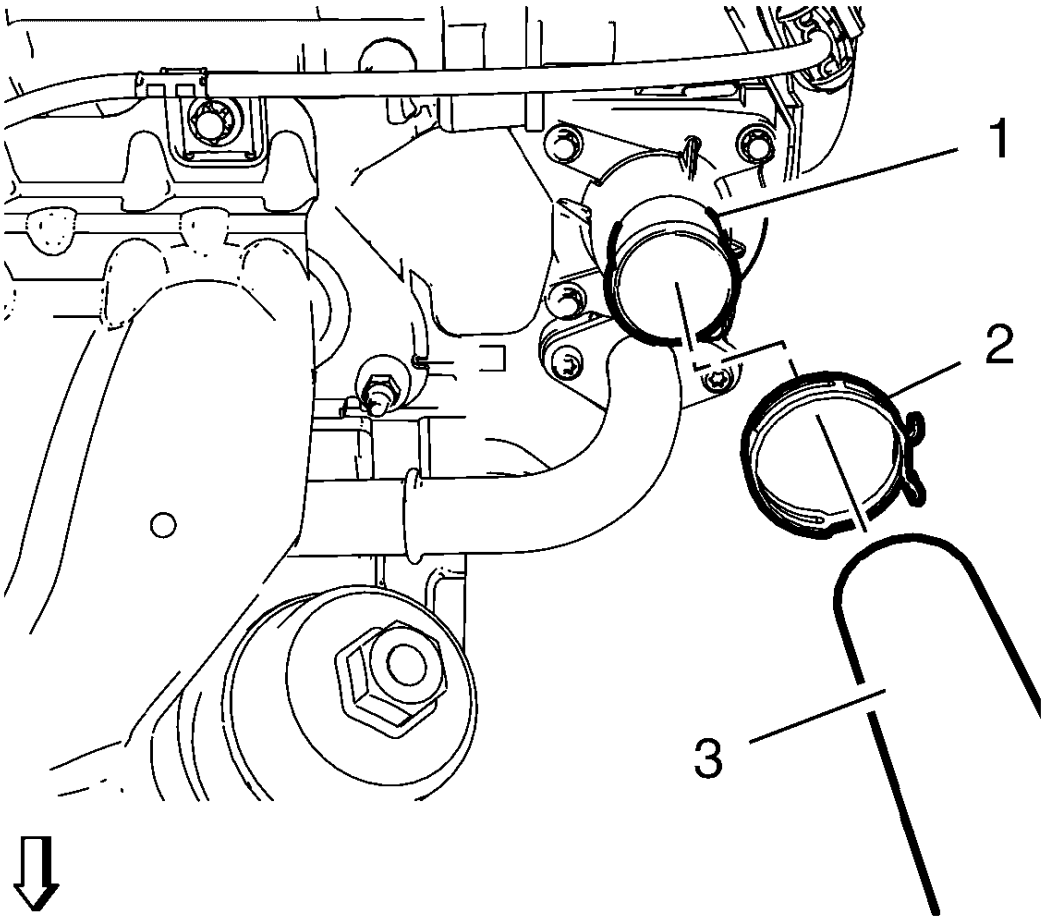

Fig. 106: Radiator Inlet Hose And Clamp
Courtesy of GENERAL MOTORS COMPANY

4. Loosen the radiator inlet hose clamp (2).
5. Remove the radiator inlet hose (3) from the engine coolant thermostat (1).

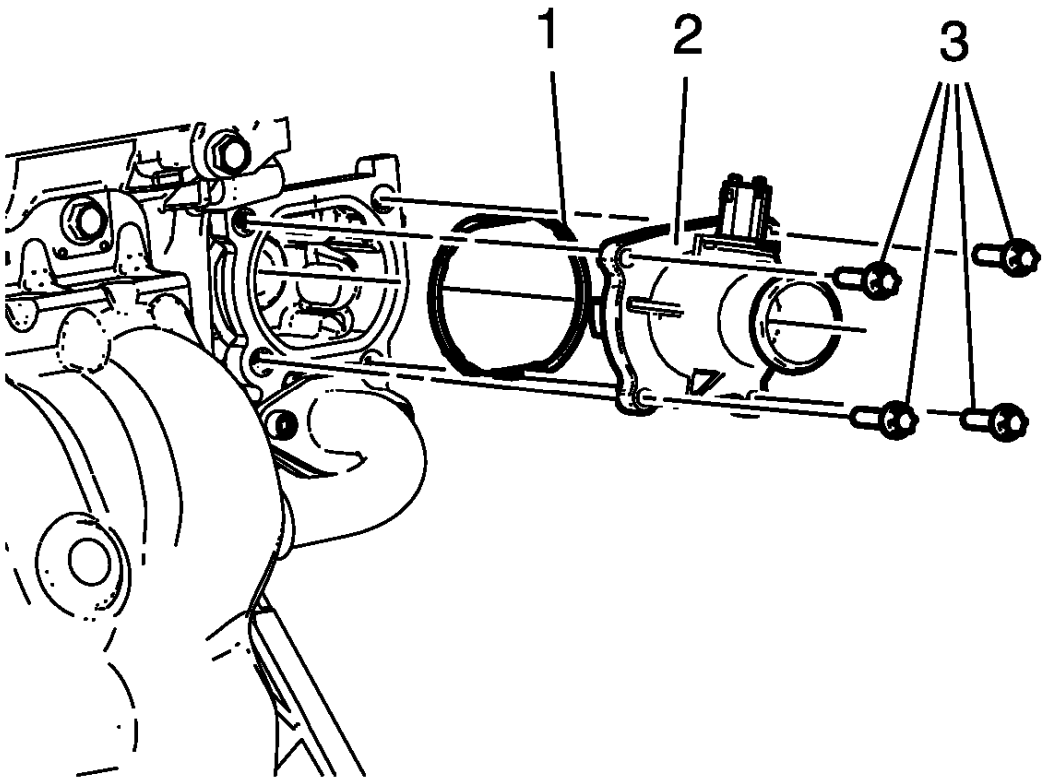

Fig. 107: Identifying Engine Coolant Thermostat Assembly
Courtesy of GENERAL MOTORS COMPANY

6. Remove the 4 engine coolant thermostat bolts (3).
7. Remove the engine coolant thermostat assembly (2).
8. Remove the engine coolant seal (1).

Installation Procedure

1. Clean the engine coolant sealing surfaces.

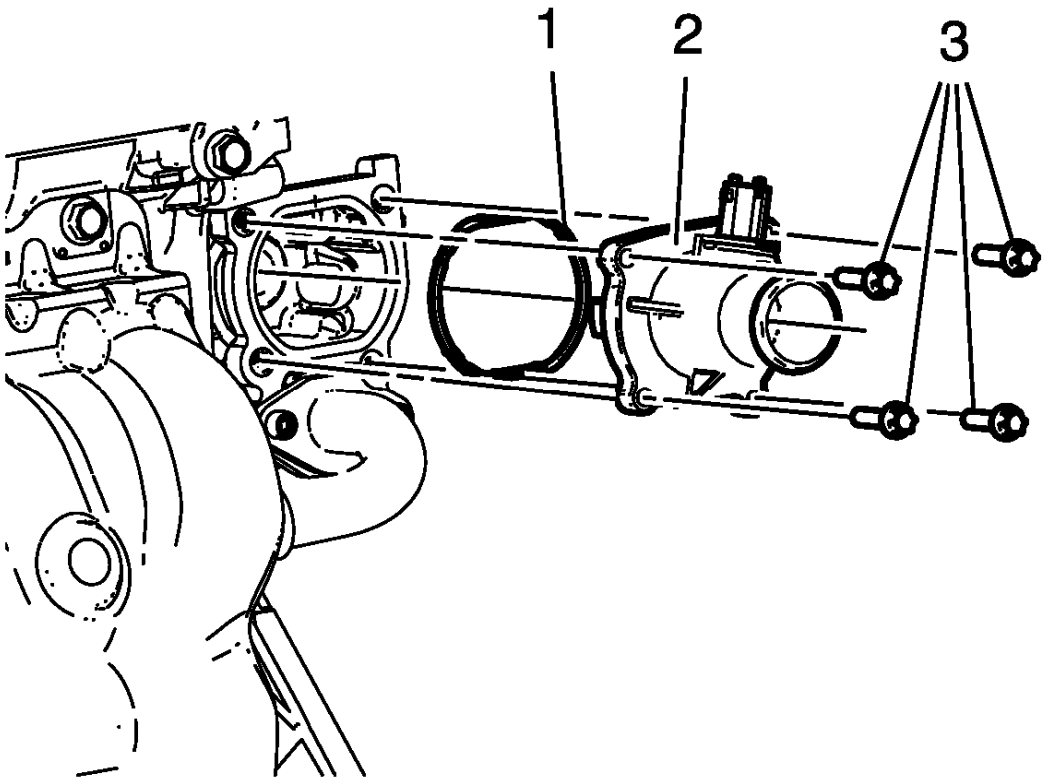

Fig. 108: Identifying Engine Coolant Thermostat Assembly
Courtesy of GENERAL MOTORS COMPANY

2. Install the engine coolant seal (1).
3. Install the engine coolant thermostat assembly (2).

CAUTION: Refer to Fastener Caution .

4. Install the 4 engine coolant thermostat bolts (3) and tighten to 8 N.m (71 lb in).

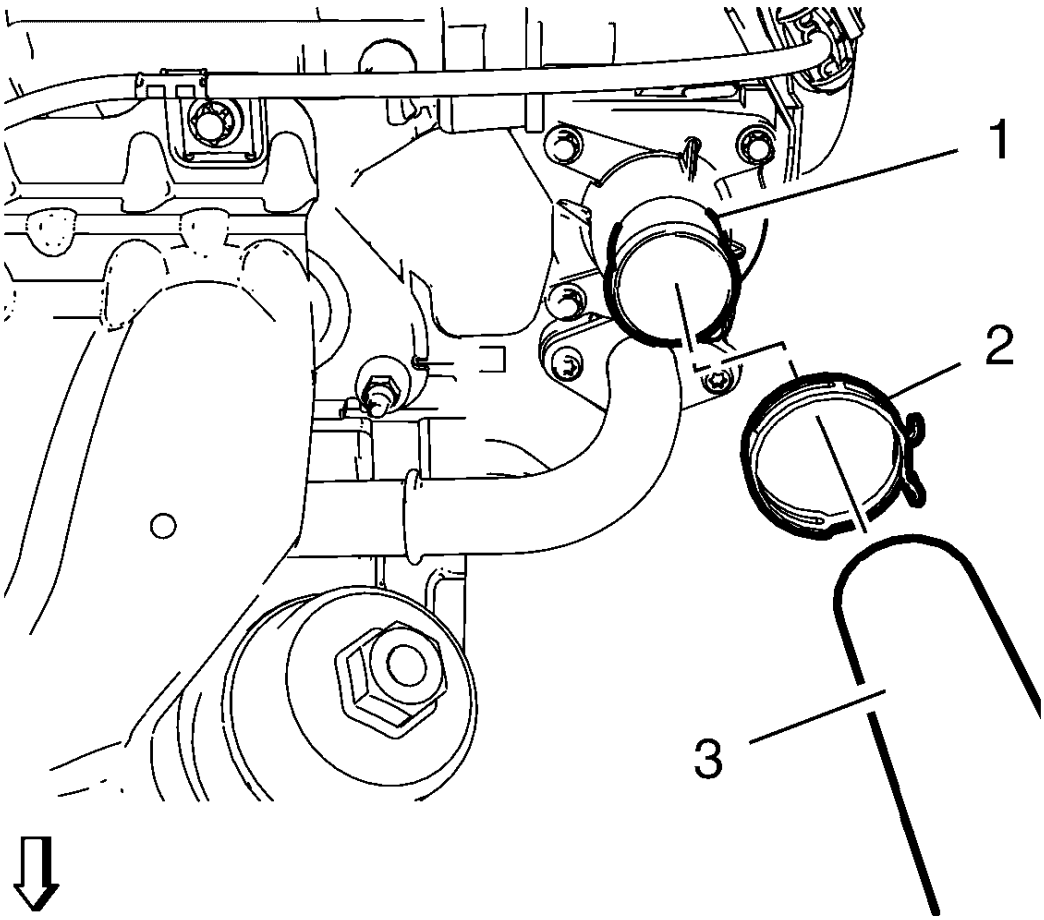

Fig. 109: Radiator Inlet Hose And Clamp
Courtesy of GENERAL MOTORS COMPANY

5. Install the radiator inlet hose (3) with the radiator inlet hose clamp (2) to the engine coolant thermostat (1).
6. Lower the vehicle.
7. Fill the cooling system. Refer to **Cooling System Draining and Filling (Static Fill)**, **Cooling System Draining and Filling (GE-47716 Fill)**.

ENGINE COOLANT AIR BLEED HOSE REPLACEMENT (1.4L LUV)

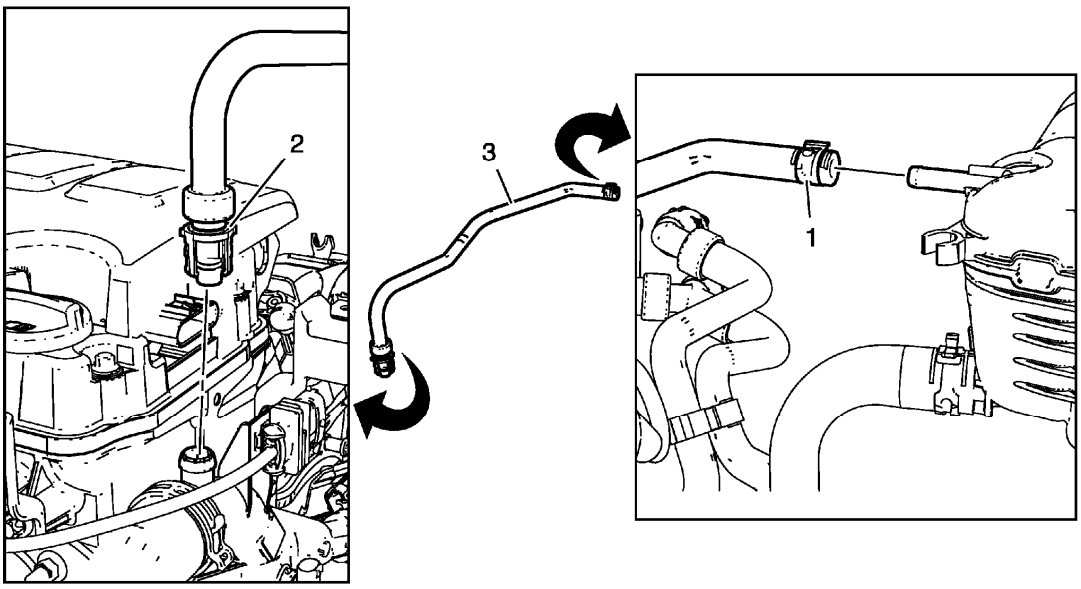

Fig. 110: Identifying Engine Coolant Air Bleed Hose
Courtesy of GENERAL MOTORS COMPANY

Engine Coolant Air Bleed Hose Replacement (1.4L LUV)

Callout	Component Name
1	Engine Coolant Air Bleed Hose Clamp **Procedure** 1. Place a drain pan below the vehicle. 2. Remove / install engine coolant air bleed hose clamp.
2	Engine Coolant Air Bleed Hose Connector **Procedure** Unlock / lock engine coolant air bleed hose connector.
3	Engine Coolant Air Bleed Hose

ENGINE COOLANT AIR BLEED HOSE REPLACEMENT (1.8L LUW AND LWE)

NOTE: The engine coolant air bleed hose is the same part like the throttle body heater outlet hose.

Remove and install the engine coolant air bleed hose. Refer to **Throttle Body Heater Outlet Hose Replacement**.

WATER OUTLET REPLACEMENT

Removal Procedure

1. Drain the cooling system. Refer to **Cooling System Draining and Filling (Static Fill)**, **Cooling System Draining and Filling (GE-47716 Fill)**.
2. Remove the charge air cooler outlet air hose from the throttle body. Refer to **Charge Air Cooler Outlet Air Hose Replacement (Automatic Transmission)** , **Charge Air Cooler Outlet Air Hose Replacement (Manual Transmission)** .
3. Remove the engine coolant air bleed hose from the water outlet. Refer to **Engine Coolant Air Bleed Hose Replacement (1.8L LUW and LWE)**, **Engine Coolant Air Bleed Hose Replacement (1.4L LUV)**.
4. Remove the heater inlet hose from the water outlet. Refer to **Heater Inlet Hose Replacement (1.8L LUW and LWE)** , **Heater Inlet Hose Replacement (1.4L LUV)** .
5. Remove the radiator inlet hose from the water outlet. Refer to **Radiator Inlet Hose Replacement (1.4L LUV)**, **Radiator Inlet Hose Replacement (1.8L LUW and LWE)**.
6. Remove the engine oil cooler inlet hose from the water outlet. Refer to **Engine Oil Cooler Inlet Hose Replacement**.
7. Disconnect the engine coolant temperature sensor (water outlet) wiring harness connector.

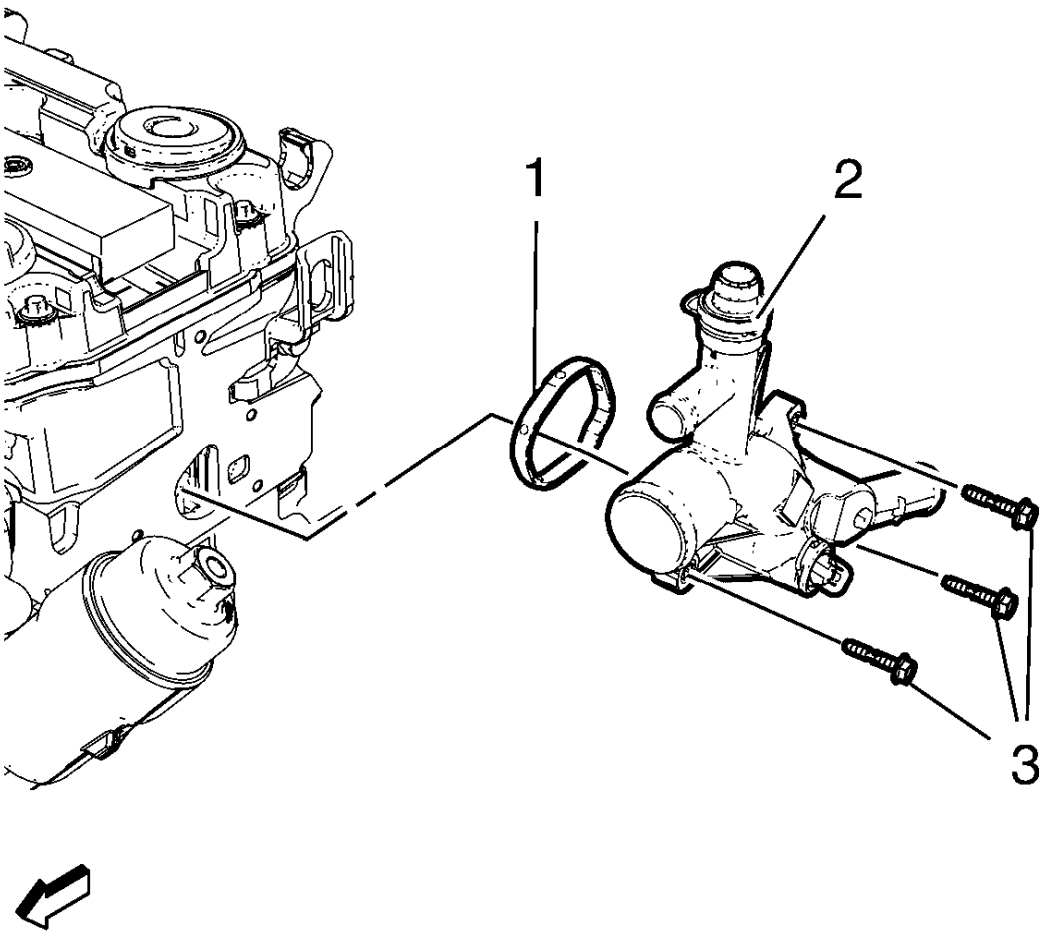

Fig. 111: Water Outlet
Courtesy of GENERAL MOTORS COMPANY

8. Remove the 3 water outlet bolts (3).
9. Remove the water outlet (2) and the water outlet seal ring (1).

Installation Procedure

1. Clean the sealing surfaces.

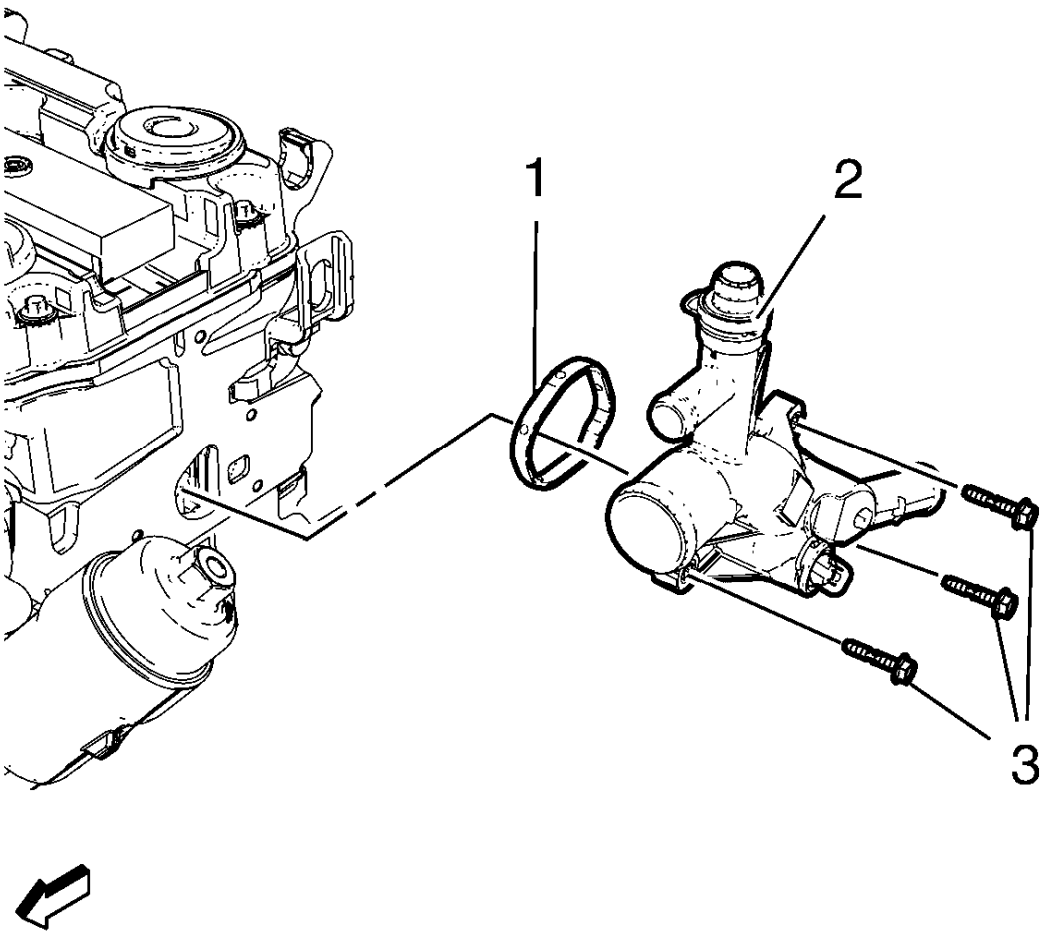

Fig. 112: Water Outlet
Courtesy of GENERAL MOTORS COMPANY

2. Install the water outlet (2) and a NEW water outlet seal ring (1).

CAUTION: Refer to Fastener Caution .

3. Install the 3 water outlet bolts (3) and tighten to 8 N.m (71 lb in).
4. Connect the engine coolant temperature sensor (water outlet) wiring harness connector.
5. Install the engine oil cooler inlet hose to the water outlet. Refer to **Engine Oil Cooler Inlet Hose Replacement**.
6. Install the radiator inlet hose to the water outlet. Refer to **Radiator Inlet Hose Replacement (1.4L LUV)**, **Radiator Inlet Hose Replacement (1.8L LUW and LWE)**.
7. Install the heater inlet hose to the water outlet. Refer to **Heater Inlet Hose Replacement (1.8L LUW and LWE)** , **Heater Inlet Hose Replacement (1.4L LUV)** .

8. Install the engine coolant air bleed hose to the water outlet. Refer to **Engine Coolant Air Bleed Hose Replacement (1.8L LUW and LWE)**, **Engine Coolant Air Bleed Hose Replacement (1.4L LUV)**.
9. Install the charge air cooler outlet air hose to the throttle body. Refer to **Charge Air Cooler Outlet Air Hose Replacement (Automatic Transmission)** , **Charge Air Cooler Outlet Air Hose Replacement (Manual Transmission)** .
10. Fill the cooling system. Refer to **Cooling System Draining and Filling (Static Fill)**, **Cooling System Draining and Filling (GE-47716 Fill)**.

WATER PUMP PULLEY REPLACEMENT (1.4L LUV)

Removal Procedure

1. Remove the air cleaner assembly. Refer to **Air Cleaner Assembly Replacement** .
2. Remove the engine mount bracket. Refer to **Engine Mount Bracket Replacement - Right Side** .
3. Remove the drive belt. Refer to **Drive Belt Replacement** .

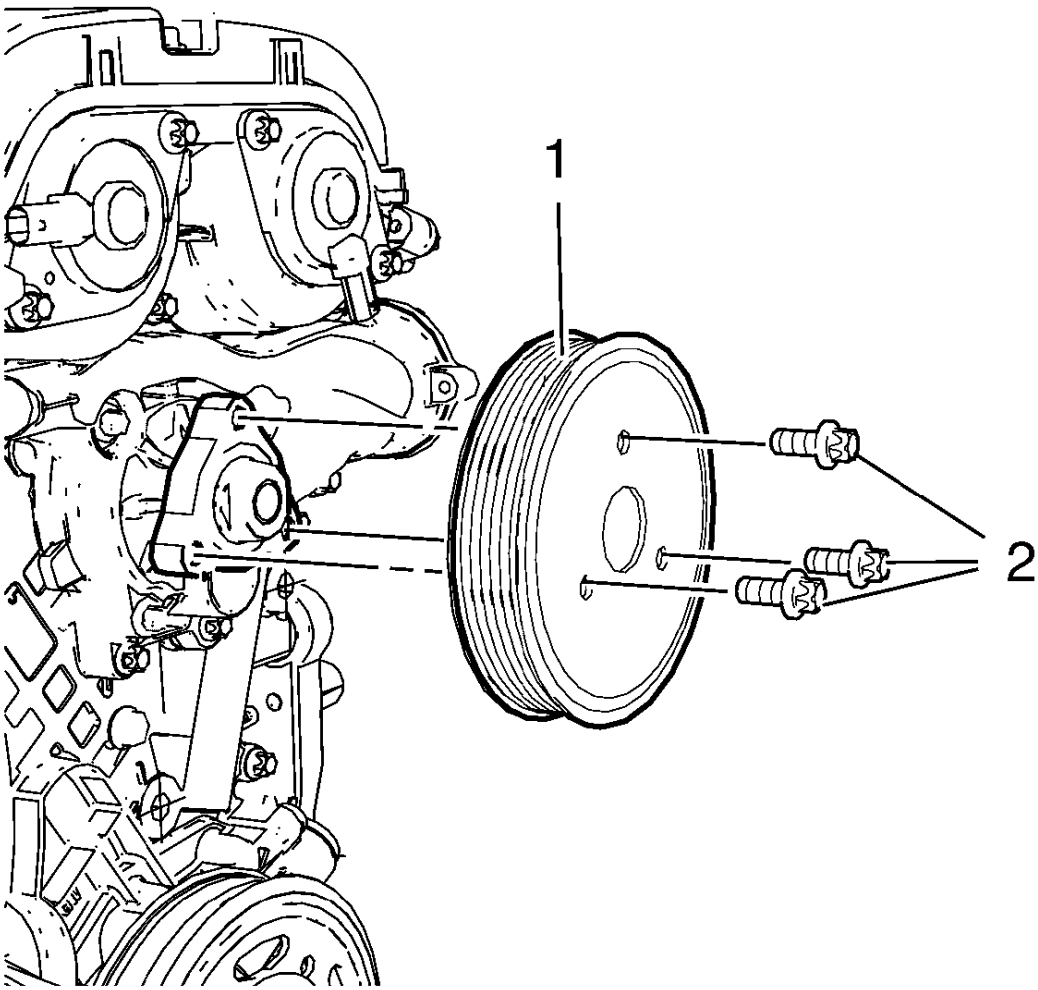

Fig. 113: Water Pump Pulley
Courtesy of GENERAL MOTORS COMPANY

4. Loosen the 3 water pump pulley bolts (2) while holding the water pump pulley hub with a wrench.
5. Remove the 3 water pump pulley bolts (2).
6. Remove the water pump pulley (1).

Installation Procedure

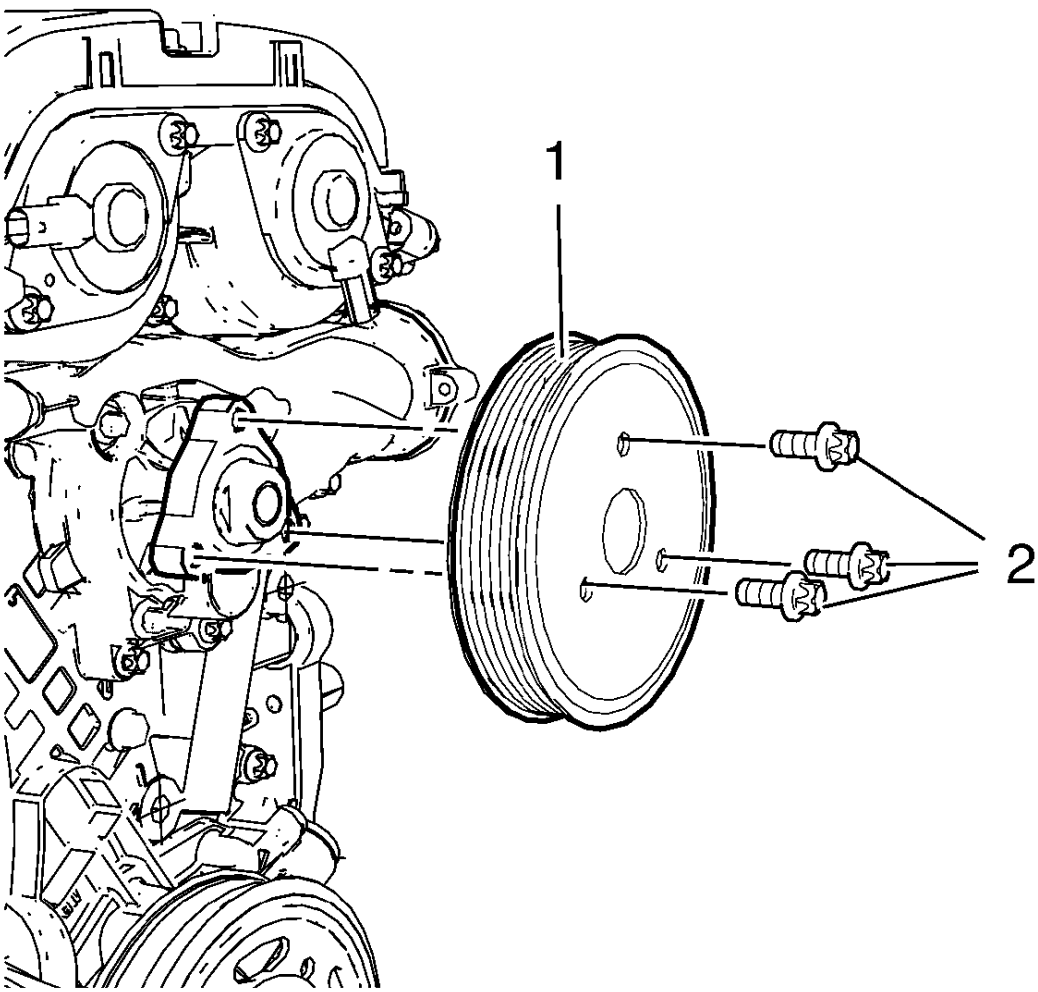

Fig. 114: Water Pump Pulley
Courtesy of GENERAL MOTORS COMPANY

1. Install the water pump pulley (1).
2. Install the 3 water pump pulley bolts (2).

CAUTION: Refer to Fastener Caution .

3. Tighten the 3 water pump pulley bolts to 22 N.m (16 lb ft) while holding the water pump pulley hub with a wrench.
4. Install the drive belt. Refer to **Drive Belt Replacement** .
5. Install the engine mount bracket. Refer to **Engine Mount Bracket Replacement - Right Side** .
6. Install the air cleaner assembly. Refer to **Air Cleaner Assembly Replacement** .

WATER PUMP PULLEY REPLACEMENT (1.8L LUW AND LWE)

Removal Procedure

1. Remove the air cleaner housing. Refer to **Air Cleaner Assembly Replacement (1.8L LWE)** , **Air Cleaner Assembly Replacement (1.8L LUW)** .

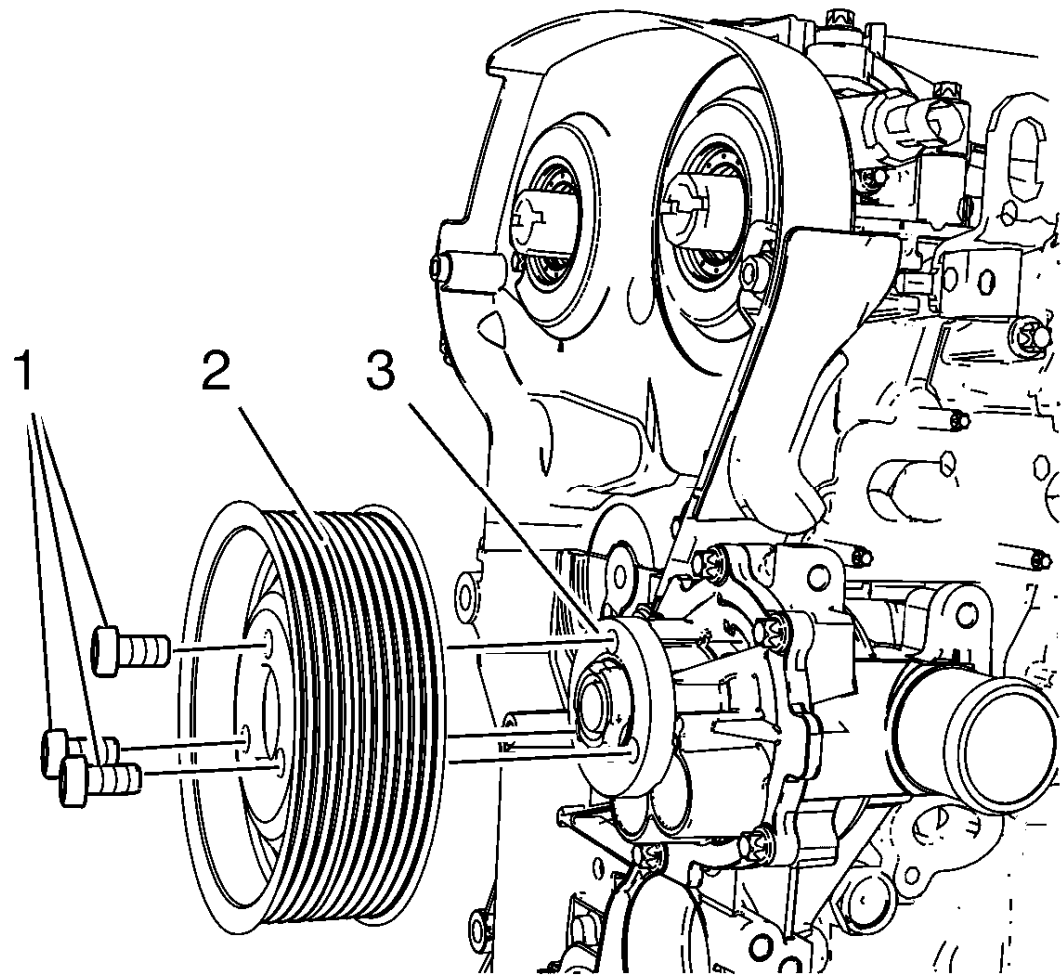

Fig. 115: Water Pump And Water Pump Pulley
Courtesy of GENERAL MOTORS COMPANY

NOTE: Counterhold against crankshaft balancer bolt.

2. Loosen the 3 water pump pulley bolts (1).
3. Remove the drive belt. Refer to **Drive Belt Replacement** .
4. Remove the 3 water pump pulley bolts (1).
5. Remove the water pump pulley (2) from the water pump (3).

Installation Procedure

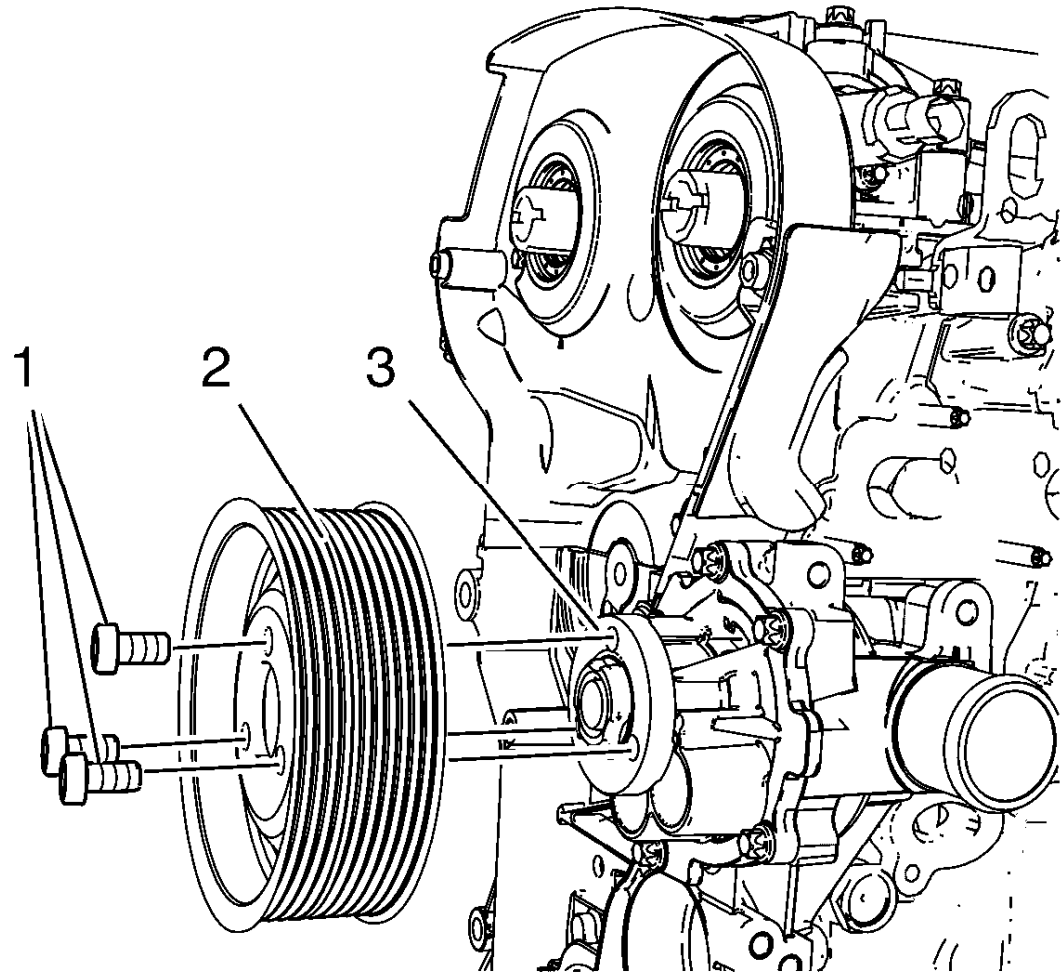

Fig. 116: Water Pump And Water Pump Pulley
Courtesy of GENERAL MOTORS COMPANY

1. Install the water pump pulley (2) to the water pump (3).
2. Install the 3 water pump pulley bolts (1).
3. Install the drive belt. Refer to **Drive Belt Replacement** .

CAUTION: Refer to Fastener Caution .

NOTE: Counterhold against crankshaft balancer bolt.

4. Tighten the 3 water pump pulley bolts (1) to 20 N.m (15 lb ft).
5. Install the air cleaner housing. Refer to **Air Cleaner Assembly Replacement (1.8L LWE)** , **Air Cleaner Assembly Replacement (1.8L LUW)** .

WATER PUMP REPLACEMENT (1.4L LUV)

Removal Procedure

1. Drain the cooling system. Refer to **Cooling System Draining and Filling (Static Fill)**, **Cooling System Draining and Filling (GE-47716 Fill)**.
2. Remove the engine coolant thermostat housing from water pump. Refer to **Engine Coolant Thermostat Housing Replacement (1.4L LUV)**, **Engine Coolant Thermostat Housing Replacement (1.8L LUW and LWE)**.
3. Remove the water pump pulley. Refer to **Water Pump Pulley Replacement (1.8L LUW and LWE)**, **Water Pump Pulley Replacement (1.4L LUV)**
4. Remove the heater outlet hose from the water pump. Refer to **Heater Outlet Hose Replacement (1.8L LUW)** , **Heater Outlet Hose Replacement (1.4L LUV)** , **Heater Outlet Hose Replacement (1.8L LWE)** .

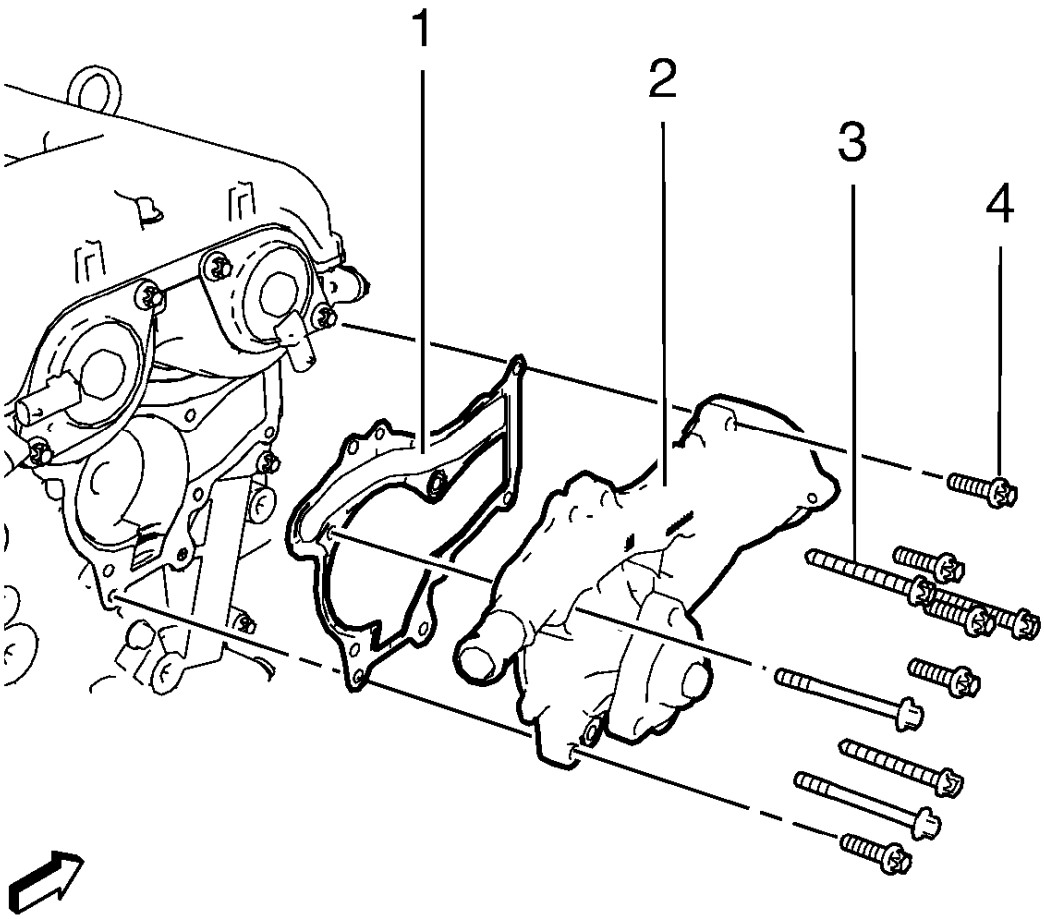

Fig. 117: Water Pump, Bolts And Gasket
Courtesy of GENERAL MOTORS COMPANY

5. Remove the 5 water pump bolts (4) and the 5 long engine front cover bolts (3).
6. Remove the water pump (2).
7. Remove and DISCARD the water pump gasket (1).

Installation Procedure

1. Clean the sealing surfaces.

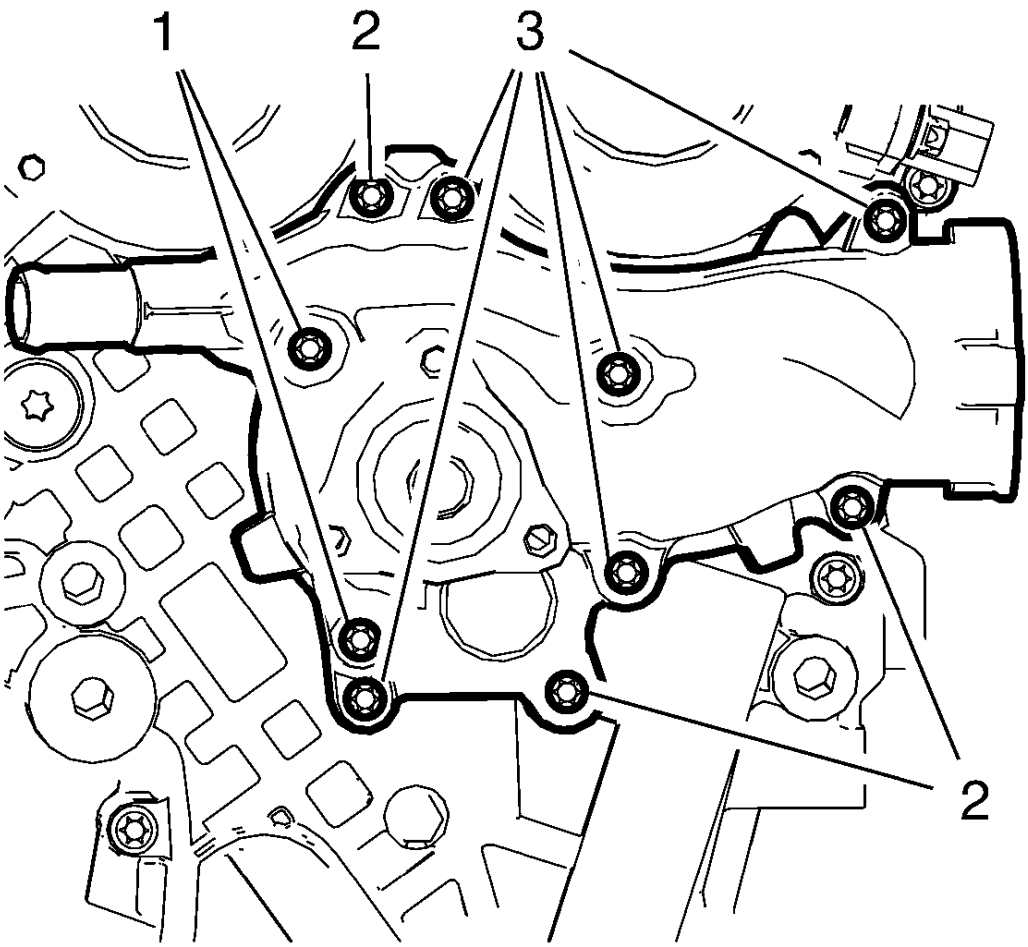

Fig. 118: Water Pump And Engine Front Cover Bolts
Courtesy of GENERAL MOTORS COMPANY

2. The water pump and engine front cover bolts are located as followed:
    - Engine front cover special bolt without cone end 60 mm (2.362 in) (1).
    - Engine front cover standard bolt with cone end 52 mm (2.047 in) (2).
    - Water pump bolt 25 mm (0.984 in) (3).

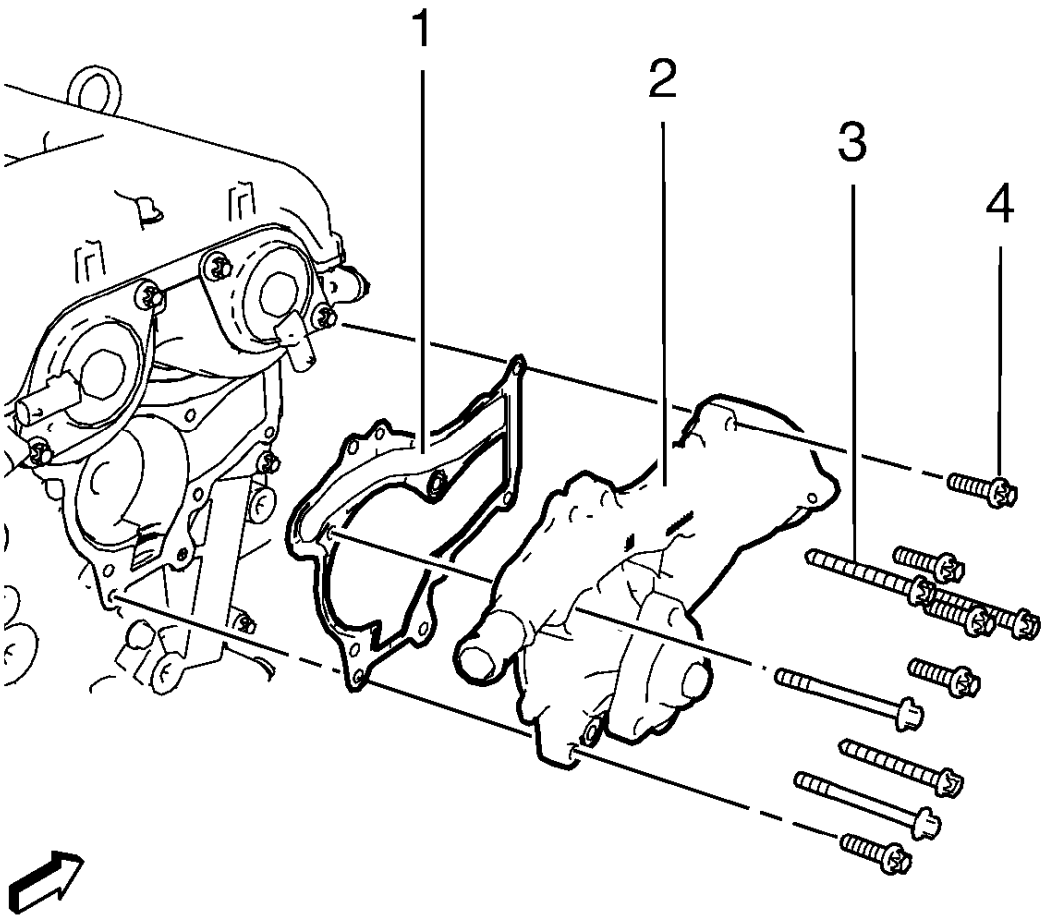

Fig. 119: Water Pump, Bolts And Gasket
Courtesy of GENERAL MOTORS COMPANY

3. Install the water pump (2) and a NEW water pump gasket (1).

CAUTION: Refer to Fastener Caution .

4. Install the 5 water pump bolts (4) and the 5 engine front cover bolts (3) and tighten in a cross sequence to 8 N.m (71 lb in).
5. Install the heater outlet hose from the water pump. Refer to **Heater Outlet Hose Replacement (1.8L LUW)** , **Heater Outlet Hose Replacement (1.4L LUV)** , **Heater Outlet Hose Replacement (1.8L LWE)** .
6. Install the water pump pulley. Refer to **Water Pump Pulley Replacement (1.8L LUW and LWE)**, **Water Pump Pulley Replacement (1.4L LUV)**.
7. Install the engine coolant thermostat housing to the water pump. Refer to **Engine Coolant Thermostat**

Housing Replacement (1.4L LUV), **Engine Coolant Thermostat Housing Replacement (1.8L LUW and LWE)**.

8. Fill the cooling system. Refer to **Cooling System Draining and Filling (Static Fill)**, **Cooling System Draining and Filling (GE-47716 Fill)**.

WATER PUMP REPLACEMENT (1.8L LUW AND LWE)

Removal Procedure

1. Drain the cooling system. Refer to **Cooling System Draining and Filling (Static Fill)**, **Cooling System Draining and Filling (GE-47716 Fill)**.
2. Remove the water pump pulley. Refer to **Water Pump Pulley Replacement (1.8L LUW and LWE)**, **Water Pump Pulley Replacement (1.4L LUV)**.

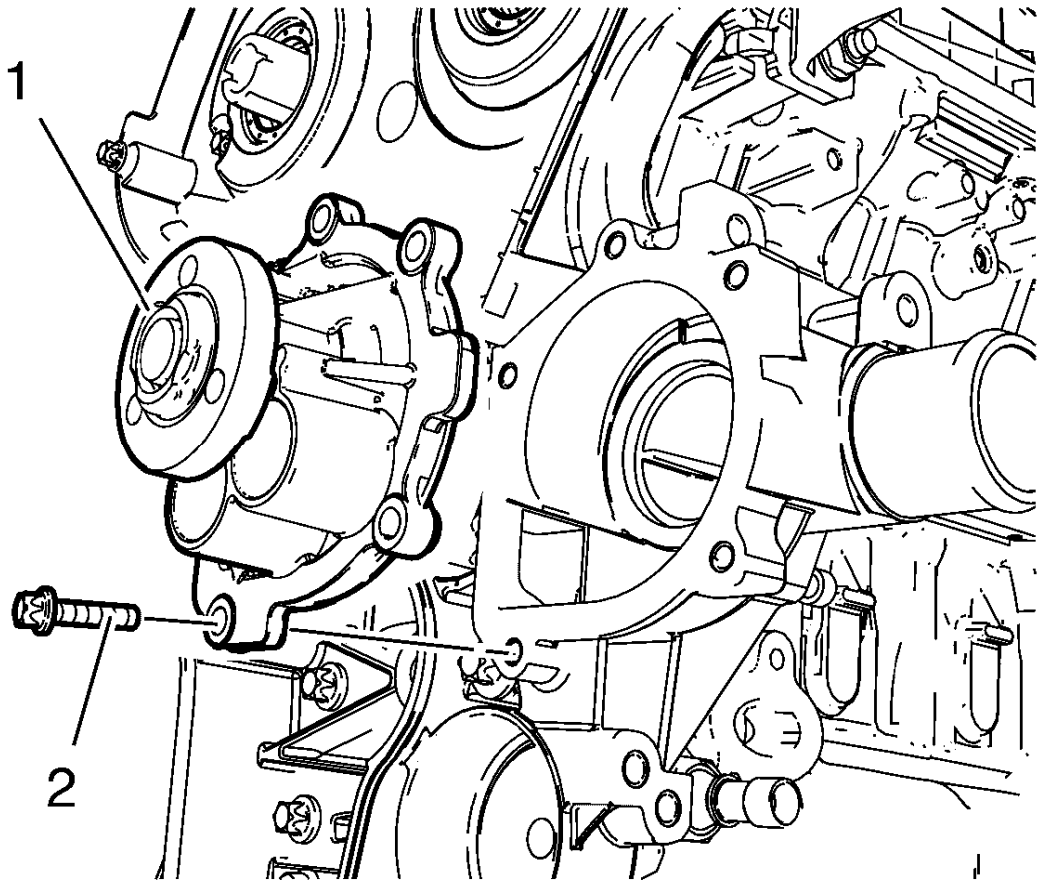

Fig. 120: Water Pump And Bolts
Courtesy of GENERAL MOTORS COMPANY

3. Remove the 5 water pump bolts (2).
4. Remove the water pump (1).
5. Remove and DISCARD the water pump seal ring.

Installation Procedure

1. Clean the 5 water pump threads.
2. Clean the water pump sealing surface.
3. Insert a NEW water pump seal ring.

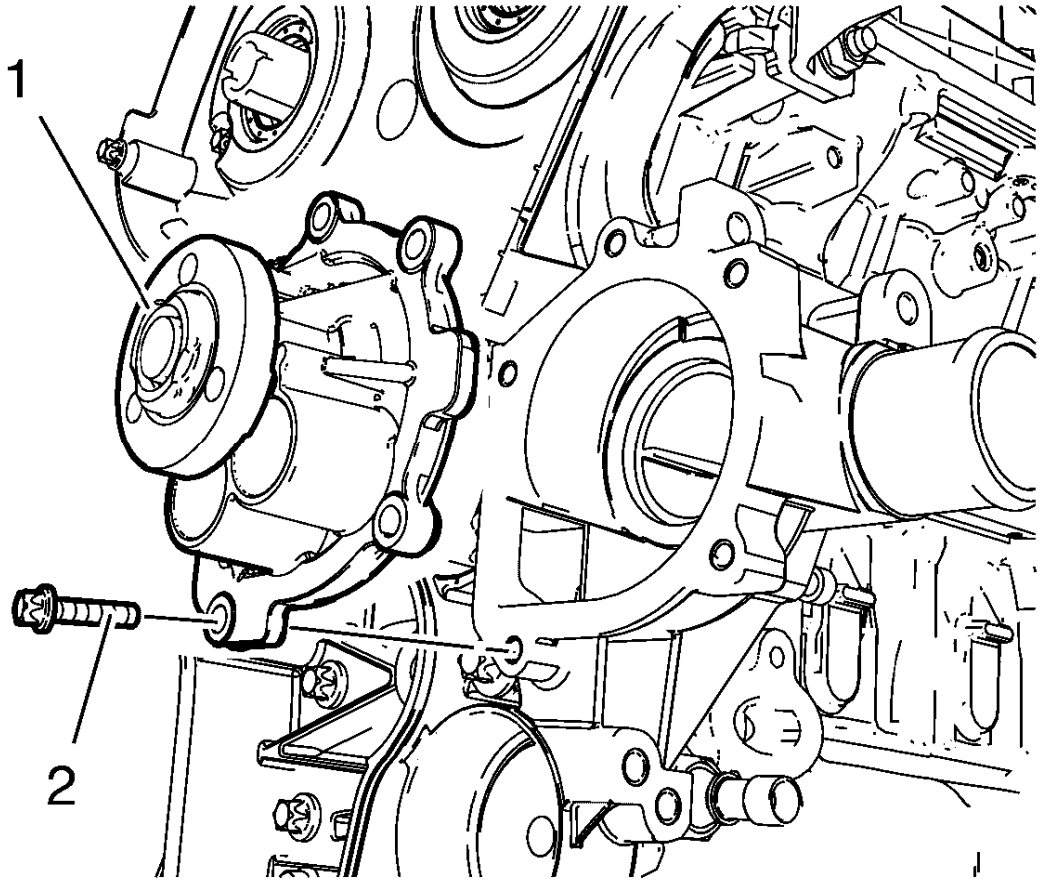

Fig. 121: Water Pump And Bolts
Courtesy of GENERAL MOTORS COMPANY

4. Install the water pump (1).

CAUTION: Refer to Fastener Caution .

5. Install the 5 water pump bolts (2) and tighten to 8 N.m (71 lb in).
6. Install the water pump pulley. Refer to **Water Pump Pulley Replacement (1.8L LUW and LWE)**, **Water Pump Pulley Replacement (1.4L LUV)**.
7. Refill the cooling system. Refer to **Cooling System Draining and Filling (Static Fill)**, **Cooling System Draining and Filling (GE-47716 Fill)**.

ENGINE COOLANT FAN SHROUD REPLACEMENT

Removal Procedure

NOTE: It is not necessary to remove the hood latches and wiring clips from the front end upper tie bar for this procedure.

1. Remove and reposition the front end upper tie bar rearward. Refer to **Front End Upper Tie Bar Replacement** .
2. Disconnect battery negative cable. Refer to **Battery Negative Cable Disconnection and Connection** .
3. Remove the radiator upper air seal.
4. Remove the left and right side radiator air baffles.
5. Position the radiator assembly forward for engine coolant fan shroud access.

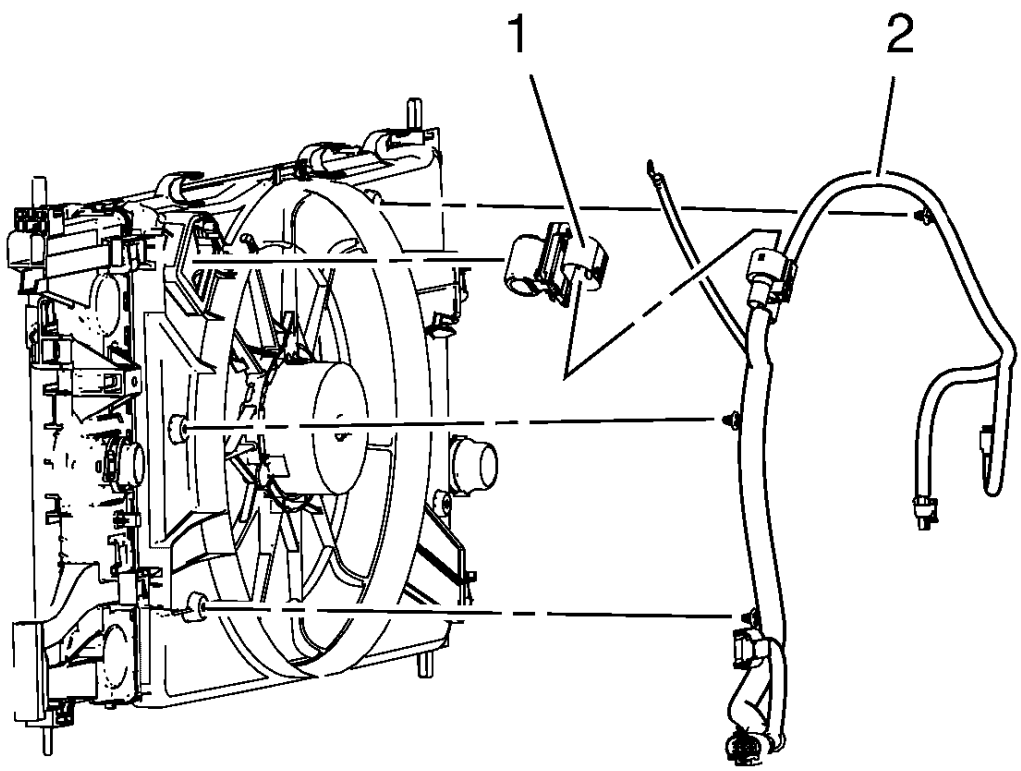

Fig. 122: Identifying Engine Coolant Fan Resistor Wiring Harness Connector
Courtesy of GENERAL MOTORS COMPANY

6. Disconnect the engine coolant fan resistor wiring harness plug (1) and remove the ground cable nut.
7. Remove the wiring harness (3) and clips.

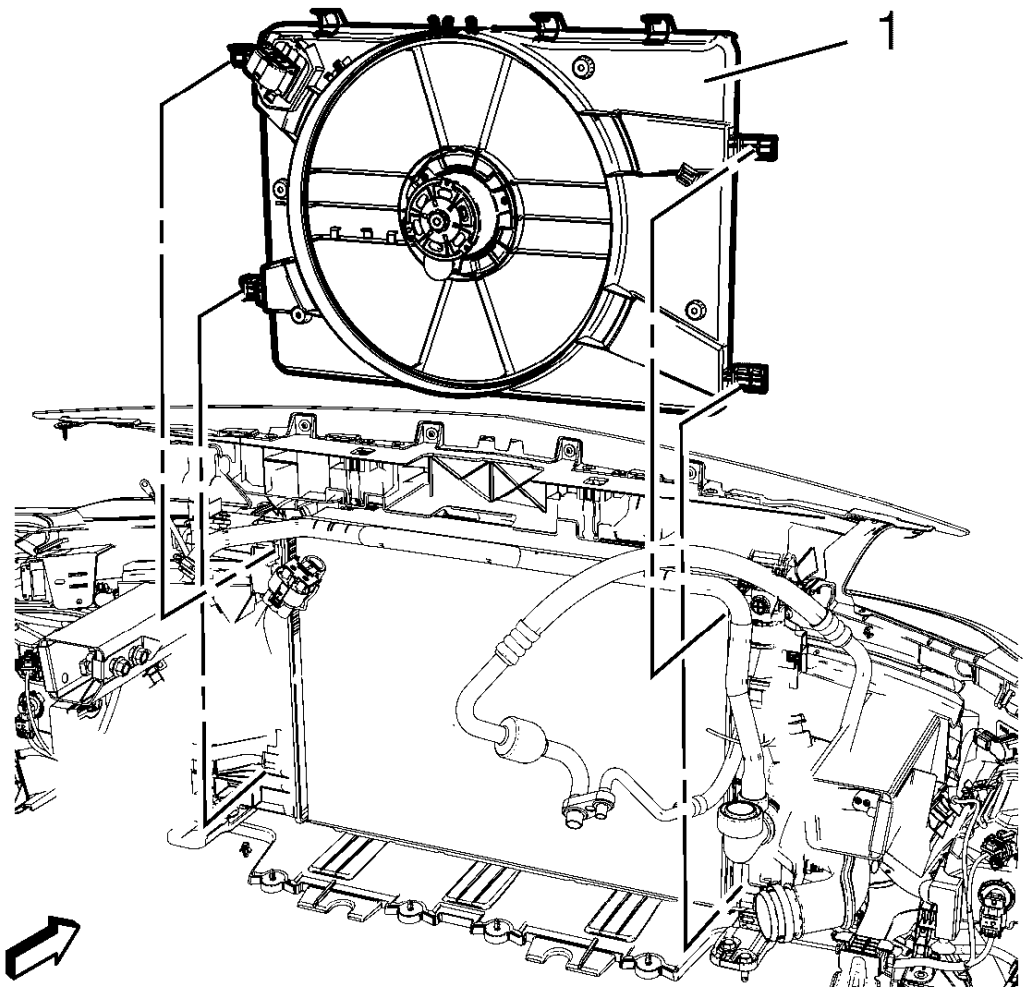

Fig. 123: Identifying Engine Coolant Fan Shroud
Courtesy of GENERAL MOTORS COMPANY

8. Unclip the engine coolant fan shroud (1) at the four mounting points shown.
9. Remove the engine coolant fan shroud (1).
    1. Slide the engine coolant fan shroud (1) toward the right side of the vehicle.
    2. Lift the left hand side of the engine coolant fan shroud (1) up.
    3. Remove the engine coolant fan shroud (1) from the vehicle.

Installation Procedure

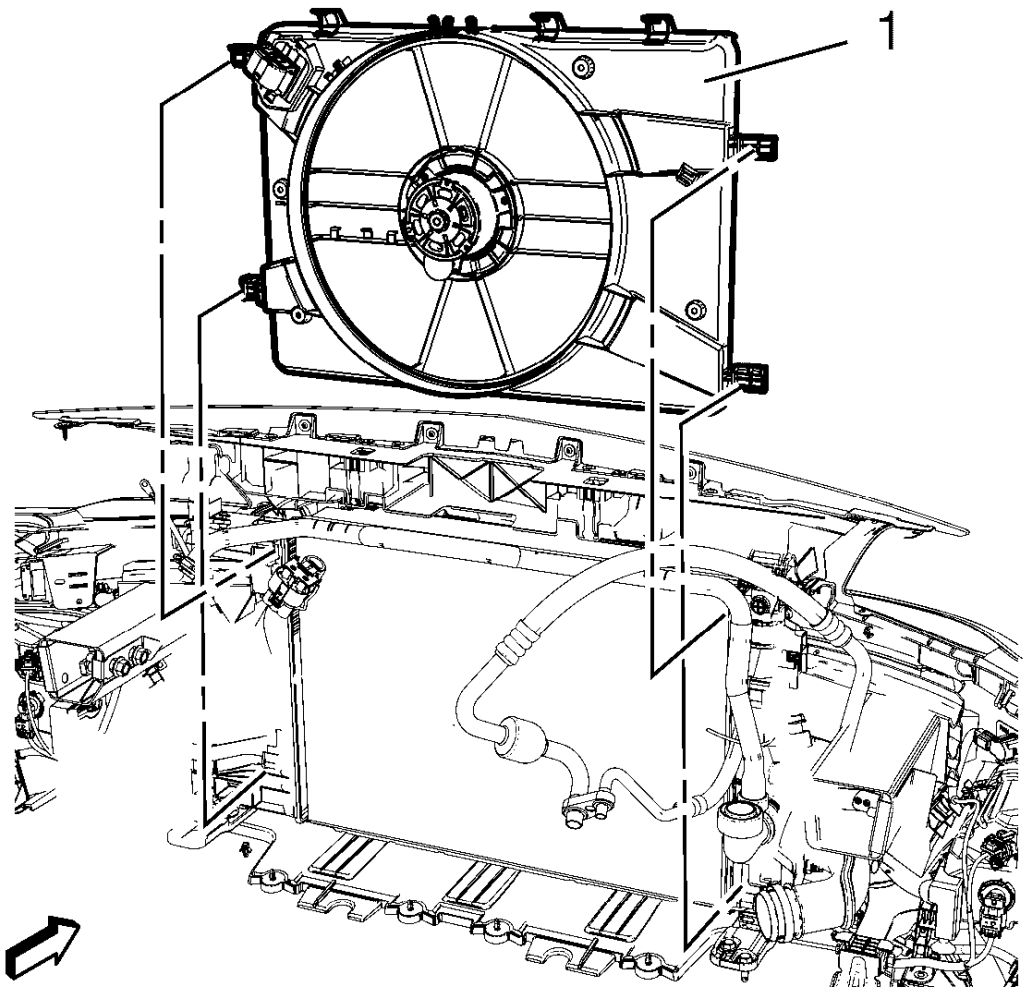

Fig. 124: Identifying Engine Coolant Fan Shroud
Courtesy of GENERAL MOTORS COMPANY

1. Install the engine coolant fan shroud (1).
    1. Lower the right hand side of the engine coolant fan shroud (1) behind the radiator.
    2. Slide the engine coolant fan shroud (1) toward the left side of the vehicle.
2. Clip in the engine coolant fan shroud (1) at the four mounting points shown.

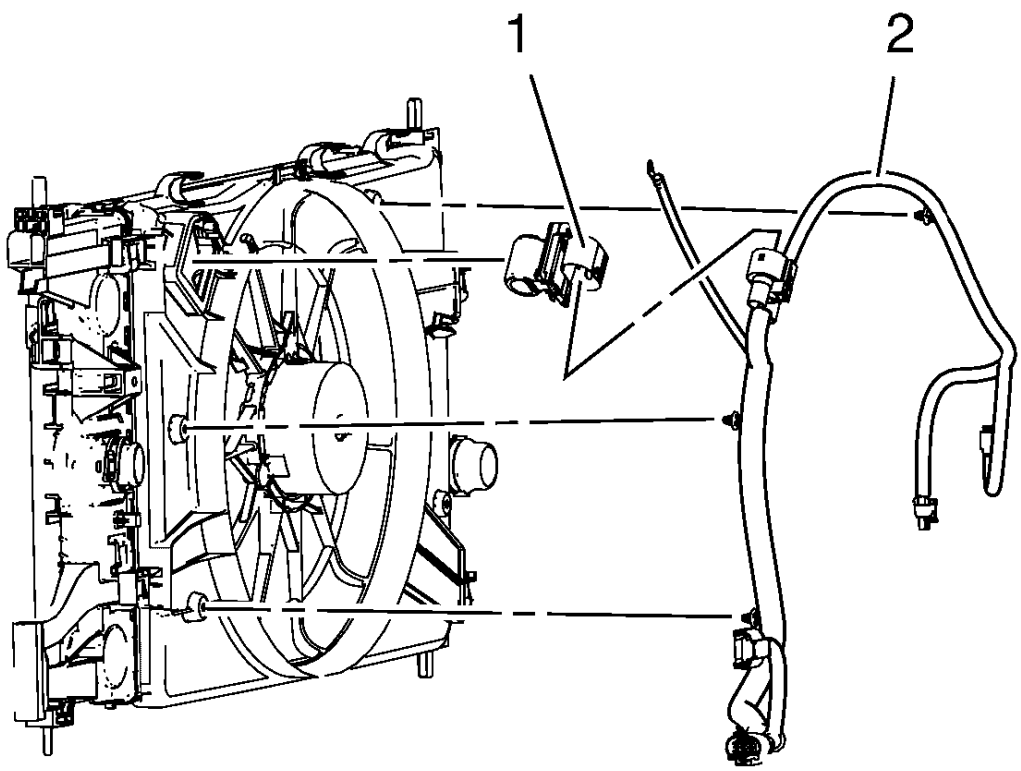

Fig. 125: Identifying Engine Coolant Fan Resistor Wiring Harness Connector
Courtesy of GENERAL MOTORS COMPANY

3. Connect the engine coolant fan resistor wiring harness connector (1).
4. Install the wiring harness (3) and clips.

CAUTION: Refer to Fastener Caution

5. Install the front end upper tie bar. Refer to **Front End Upper Tie Bar Replacement** .
6. Install the left and right side radiator air baffles.
7. Install the radiator upper air seal.
8. Connect battery negative cable. Refer to **Battery Negative Cable Disconnection and Connection** .

RADIATOR REPLACEMENT (1.4L LUV WITH AUTOMATIC TRANSMISSION)

Removal Procedure

1. Remove the charge air cooler. Refer to **Charge Air Cooler Replacement (Automatic Transmission)**, **Charge Air Cooler Replacement (Manual Transmission)**.
2. Drain the cooling system. Refer to **Cooling System Draining and Filling (Static Fill)**, **Cooling System Draining and Filling (GE-47716 Fill)**.
3. Disconnect the radiator outlet hose and the radiator inlet hose from the radiator. Refer to **Radiator Outlet Hose Replacement (1.8L LUW and LWE)**, **Radiator Outlet Hose Replacement (1.4L LUV)**, and **Radiator Inlet Hose Replacement (1.4L LUV)**, **Radiator Inlet Hose Replacement (1.8L LUW and LWE)**.
4. Remove the transmission fluid cooler inlet pipe from the radiator. Refer to **Transmission Fluid Cooler Inlet Pipe Replacement (1.4L LUV)** .
5. Remove the transmission fluid auxiliary cooler pipe. Refer to **Transmission Fluid Cooler Hose/Pipe Replacement** .
6. Use care and lay the transmission fluid cooler aside. Fix it in a suitable position so that the radiator is easy accessible.
7. Unclip the engine coolant fan shroud from the radiator.

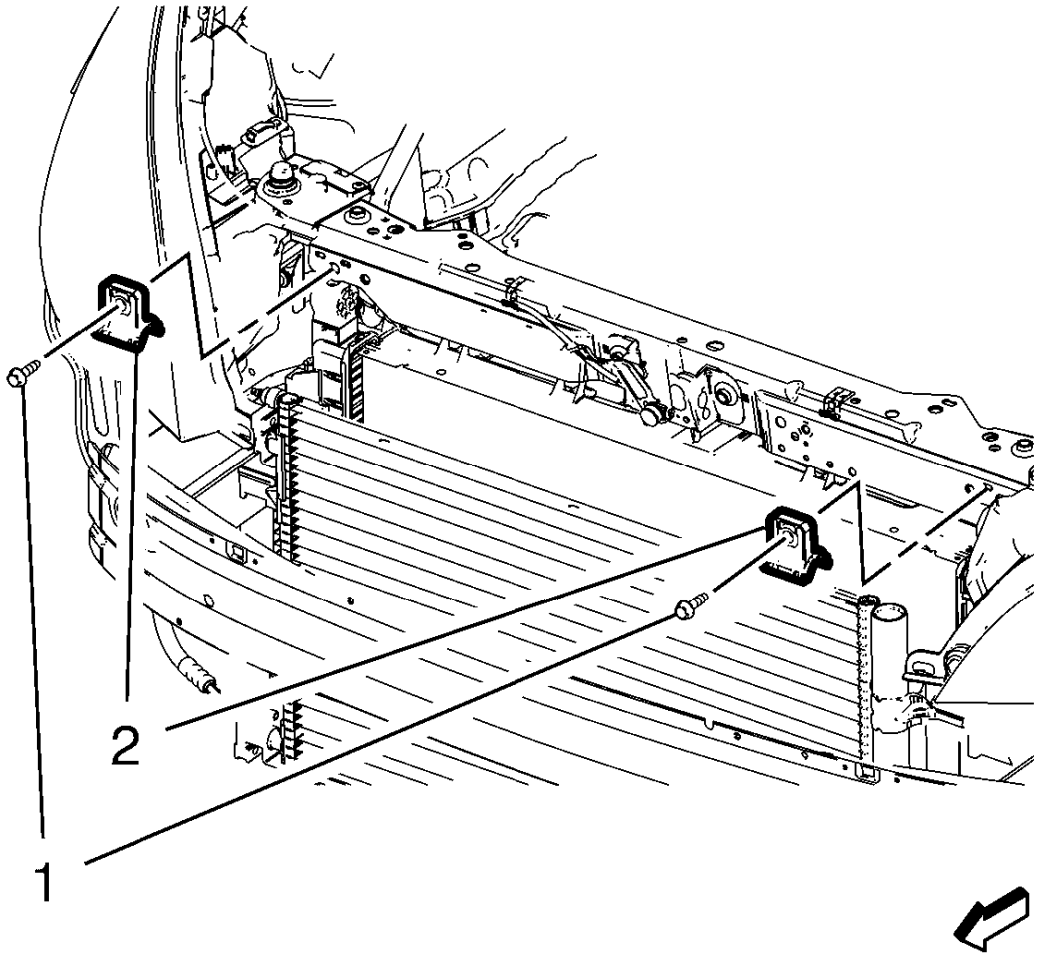

Fig. 126: Radiator Upper Bracket And Bolts
Courtesy of GENERAL MOTORS COMPANY

8. Remove the 2 radiator upper bracket bolts (1) and the 2 radiator upper brackets (2).

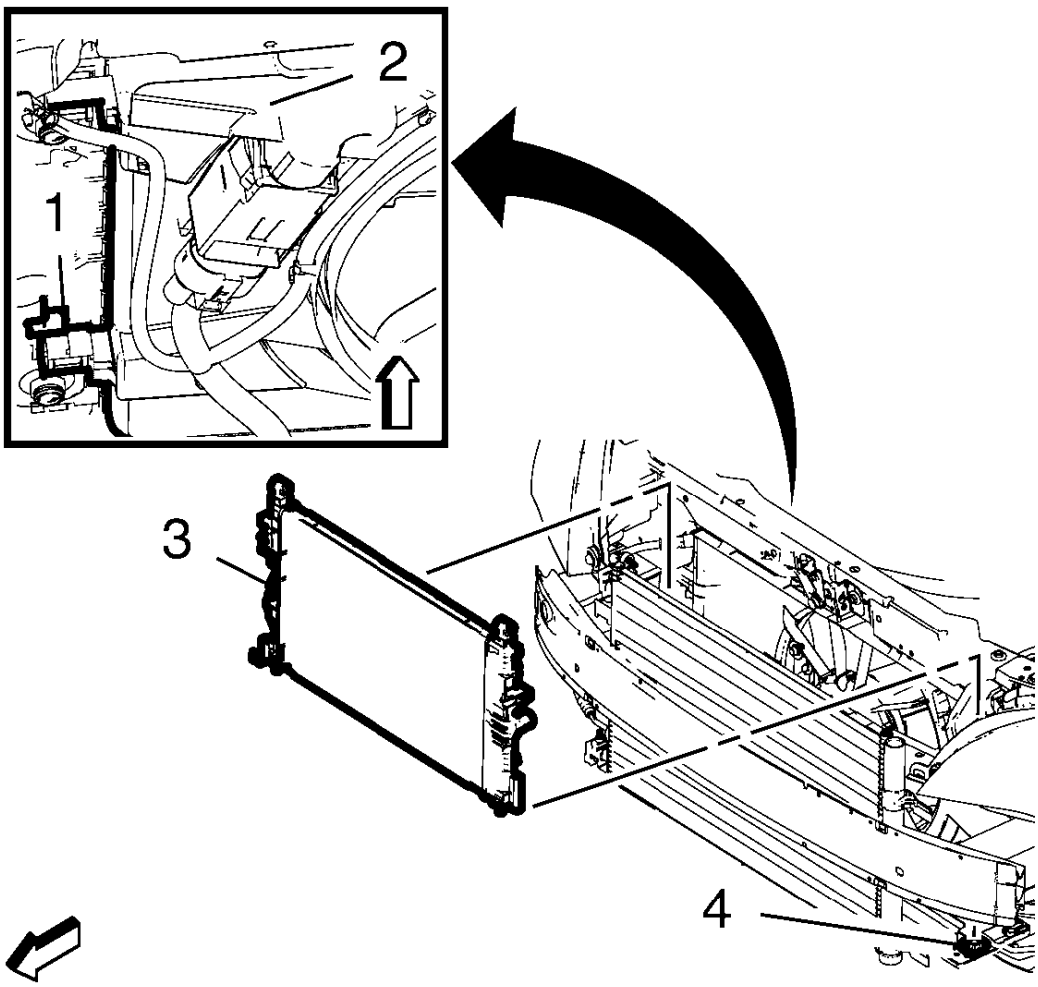

Fig. 127: Radiator And Lower Bracket
Courtesy of GENERAL MOTORS COMPANY

9. Remove the radiator (1) from the 2 lower brackets (2).
10. Use care and rotate the radiator in order to gain more access for the removal.
11. Use care and lift the radiator up and away from the vehicle.

Installation Procedure

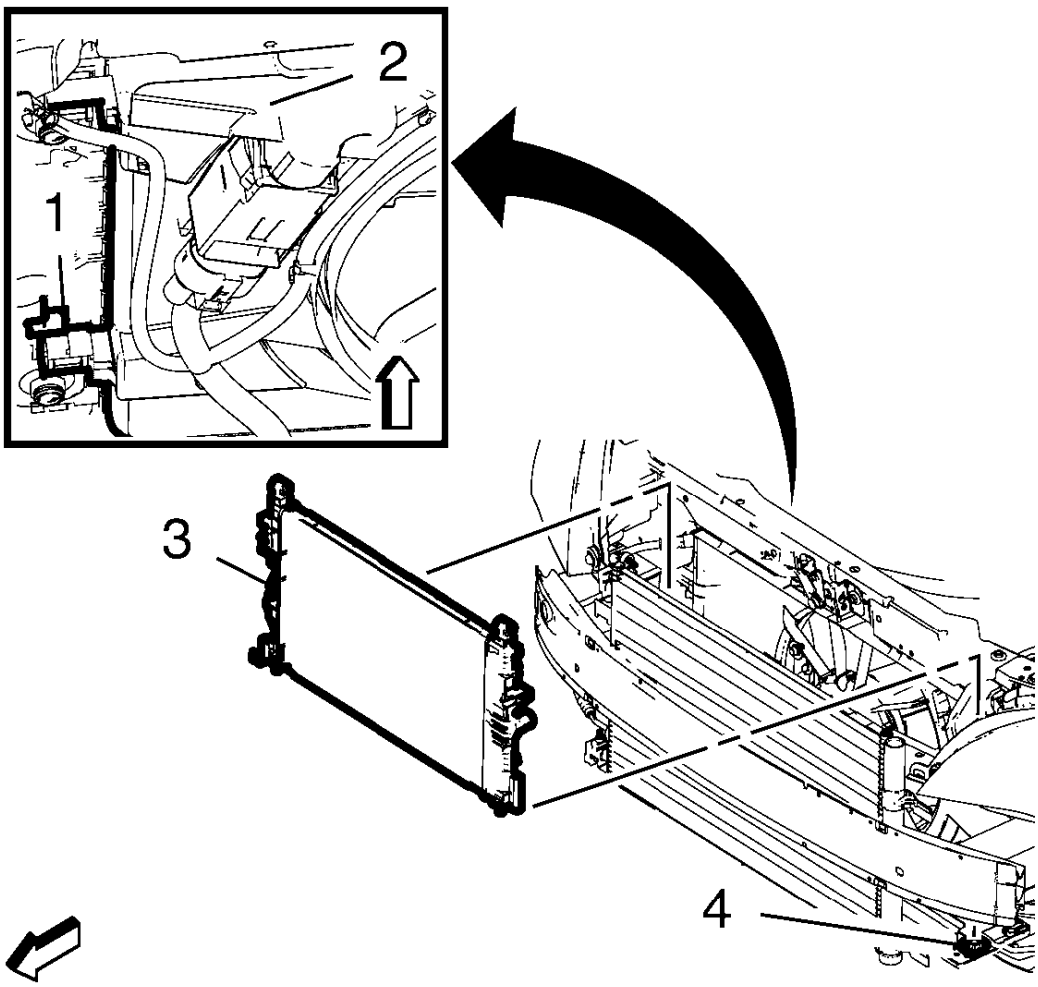

Fig. 128: Radiator And Lower Bracket
Courtesy of GENERAL MOTORS COMPANY

1. Use care and install the radiator (1).
2. Use care and rotate the radiator in order to get more access for the installation.
3. Install the radiator (1) to the 2 lower brackets (2).

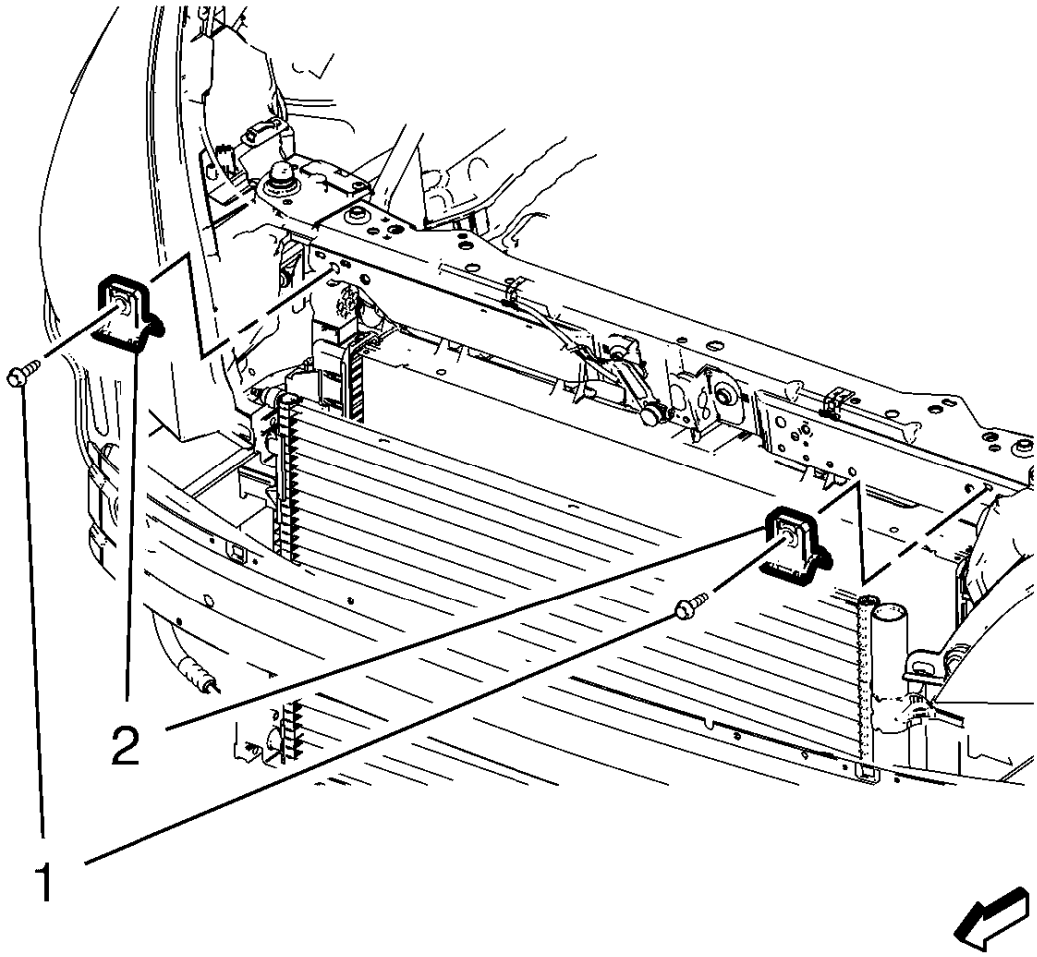

Fig. 129: Radiator Upper Bracket And Bolts
Courtesy of GENERAL MOTORS COMPANY

4. Install the 2 radiator upper brackets (2).

CAUTION: Refer to Fastener Caution .

5. Install the 2 radiator upper bracket bolts (1) and tighten to 22 N.m (16 lb ft).
6. Clip the engine coolant fan shroud to the radiator.
7. Install the transmission fluid auxiliary cooler pipe. Refer to **Transmission Fluid Cooler Hose/Pipe Replacement** .
8. Install the transmission fluid cooler inlet pipe to the radiator. Refer to **Transmission Fluid Cooler Inlet Pipe Replacement (1.4L LUV)** .
9. Connect the radiator outlet hose and the radiator inlet hose to the radiator. Refer to **Radiator Outlet Hose Replacement (1.8L LUW and LWE)**, **Radiator Outlet Hose Replacement (1.4L LUV)**, and **Radiator**

Inlet Hose Replacement (1.4L LUV), **Radiator Inlet Hose Replacement (1.8L LUW and LWE)**.

10. Fill and bleed the cooling system. Refer to **Cooling System Draining and Filling (Static Fill)**, **Cooling System Draining and Filling (GE-47716 Fill)**.
11. Install the charge air cooler. Refer to **Charge Air Cooler Replacement (Automatic Transmission)**, **Charge Air Cooler Replacement (Manual Transmission)**.

RADIATOR REPLACEMENT (1.4L LUV WITH MANUAL TRANSMISSION)

Removal Procedure

1. Remove the charge air cooler. Refer to **Charge Air Cooler Replacement (Automatic Transmission)**, **Charge Air Cooler Replacement (Manual Transmission)**.
2. Drain the cooling system. Refer to **Cooling System Draining and Filling (Static Fill)**, **Cooling System Draining and Filling (GE-47716 Fill)**.
3. Disconnect the radiator outlet hose and the radiator inlet hose from the radiator. Refer to **Radiator Outlet Hose Replacement (1.8L LUW and LWE)**, **Radiator Outlet Hose Replacement (1.4L LUV)**, and **Radiator Inlet Hose Replacement (1.4L LUV)**, **Radiator Inlet Hose Replacement (1.8L LUW and LWE)**.
4. Unclip the engine coolant fan shroud from the radiator.

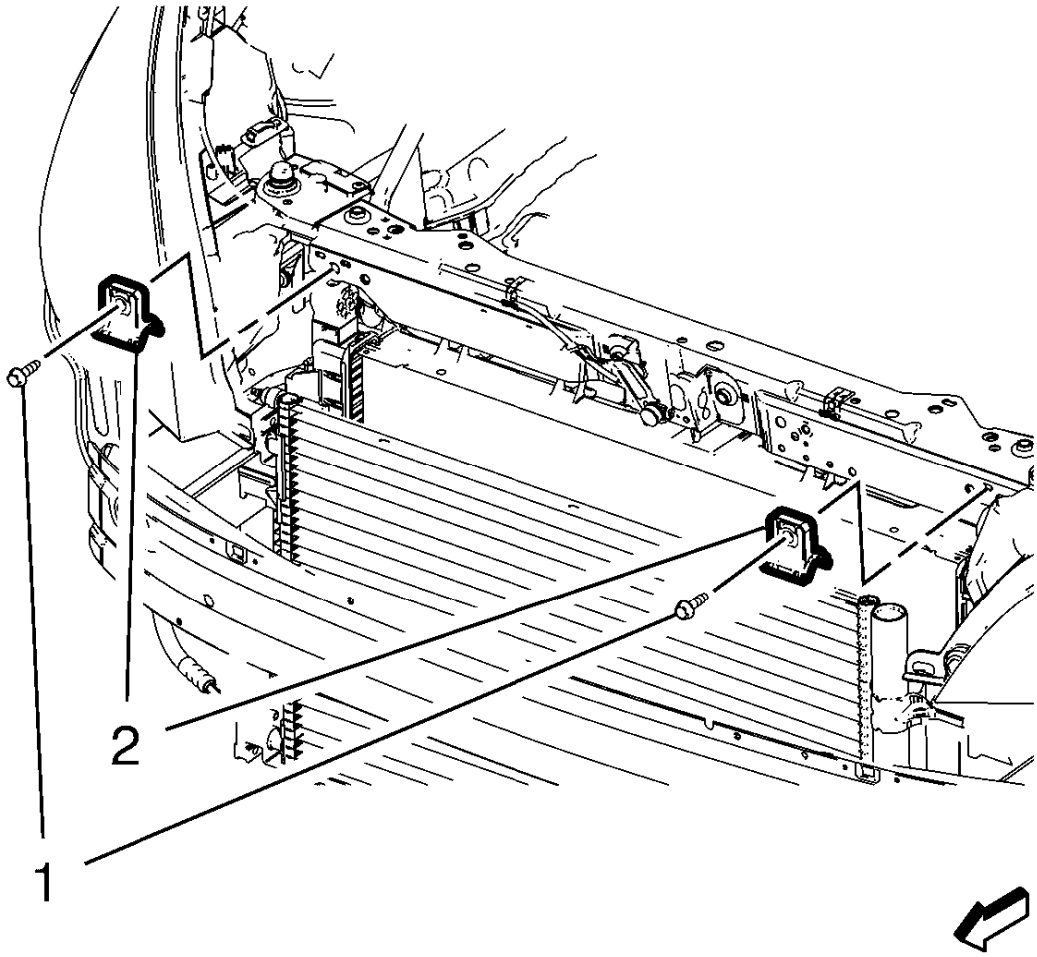

Fig. 130: Radiator Upper Bracket And Bolts
Courtesy of GENERAL MOTORS COMPANY

5. Remove the 2 radiator upper bracket bolts (1) and the 2 radiator upper brackets (2).

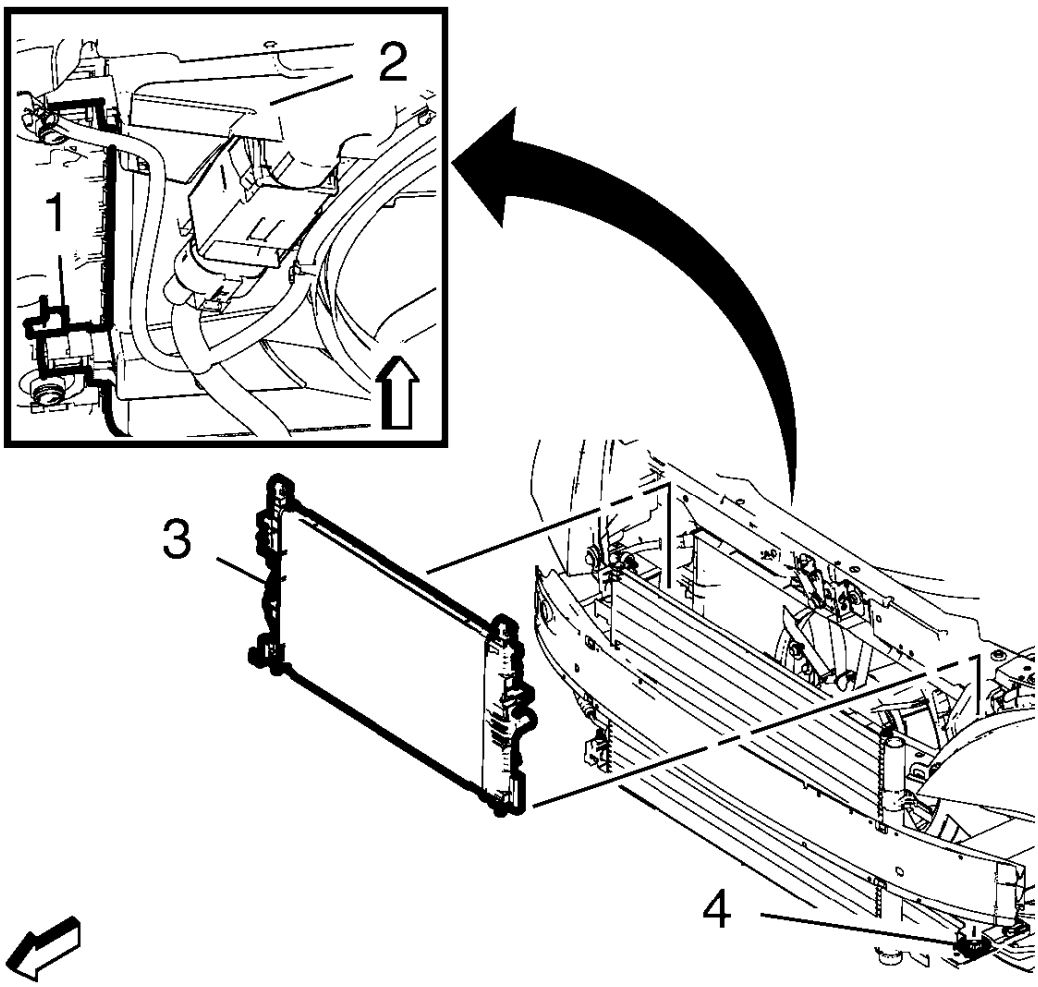

Fig. 131: Radiator And Lower Bracket
Courtesy of GENERAL MOTORS COMPANY

6. Remove the radiator (1) from the 2 lower brackets (2).
7. Use care and rotate the radiator in order to gain more access for the removal.
8. Use care and lift the radiator up and away from the vehicle.

Installation Procedure

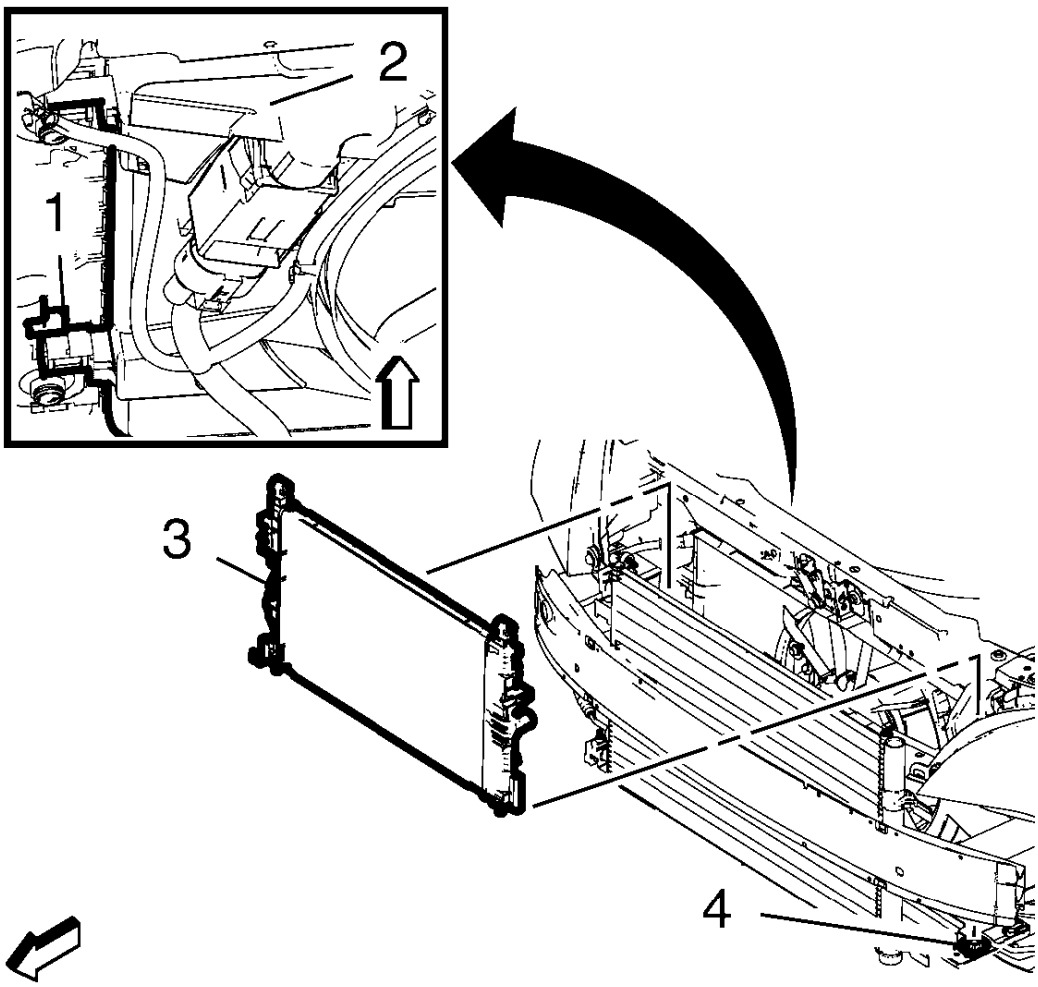

Fig. 132: Radiator And Lower Bracket
Courtesy of GENERAL MOTORS COMPANY

1. Use care and install the radiator (1).
2. Use care and rotate the radiator in order to get more access for the installation.
3. Install the radiator (1) to the 2 lower brackets (2).

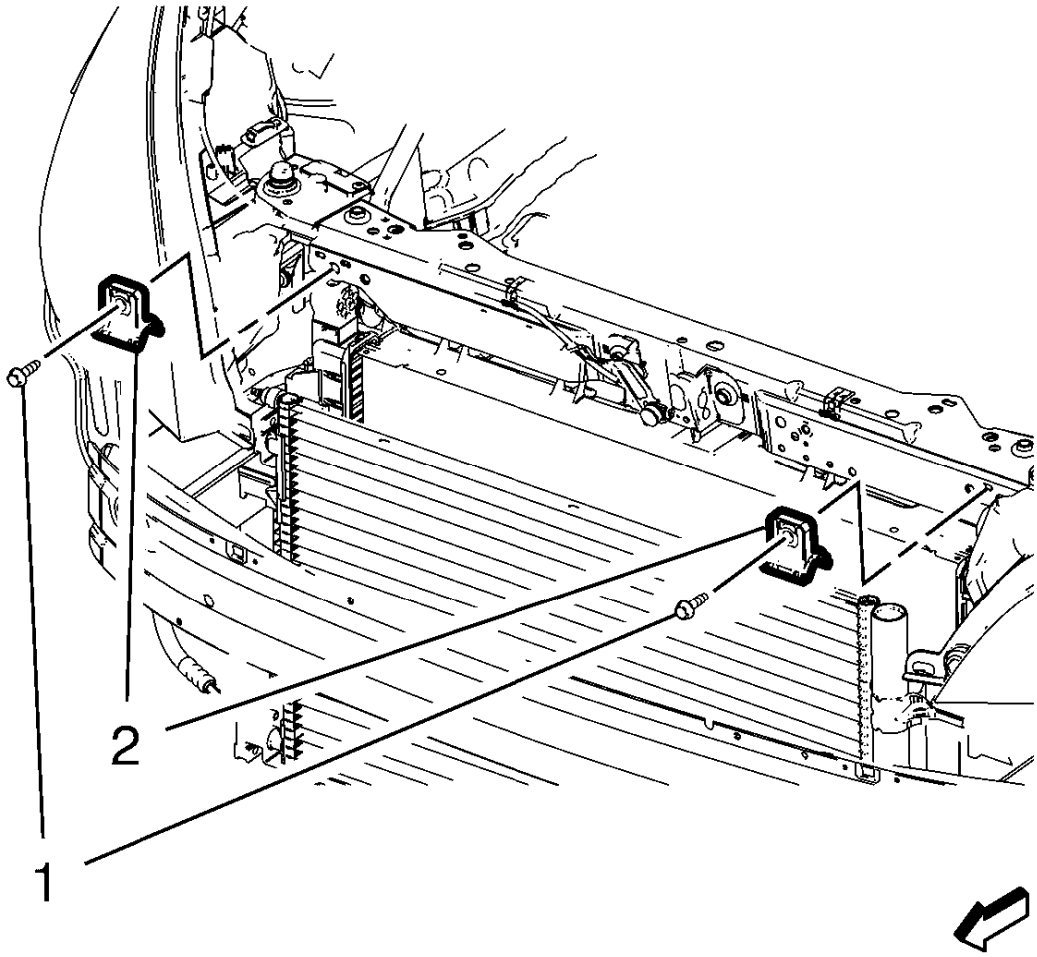

Fig. 133: Radiator Upper Bracket And Bolts
Courtesy of GENERAL MOTORS COMPANY

4. Install the 2 radiator upper brackets (2).

CAUTION: Refer to Fastener Caution .

5. Install the 2 radiator upper bracket bolts (1) and tighten to 22 N.m (16 lb ft).
6. Clip the engine coolant fan shroud to the radiator.
7. Connect the radiator outlet hose and the radiator inlet hose to the radiator. Refer to **Radiator Outlet Hose Replacement (1.8L LUW and LWE)**, **Radiator Outlet Hose Replacement (1.4L LUV)**, and **Radiator Inlet Hose Replacement (1.4L LUV)**, **Radiator Inlet Hose Replacement (1.8L LUW and LWE)**.
8. Fill and bleed the cooling system. Refer to **Cooling System Draining and Filling (Static Fill)**, **Cooling System Draining and Filling (GE-47716 Fill)**.
9. Install the charge air cooler. Refer to **Charge Air Cooler Replacement (Automatic Transmission)**,

Charge Air Cooler Replacement (Manual Transmission).

RADIATOR REPLACEMENT (1.8L LUW AND LWE)

Removal Procedure

1. Disconnect the battery negative cable. Refer to **Battery Negative Cable Disconnection and Connection** .
2. Remove the front bumper fascia. Refer to **Front Bumper Fascia Replacement** .
3. Drain the cooling system. Refer to **Cooling System Draining and Filling (Static Fill)**, **Cooling System Draining and Filling (GE-47716 Fill)**.
4. Remove the front intake air duct deflector.

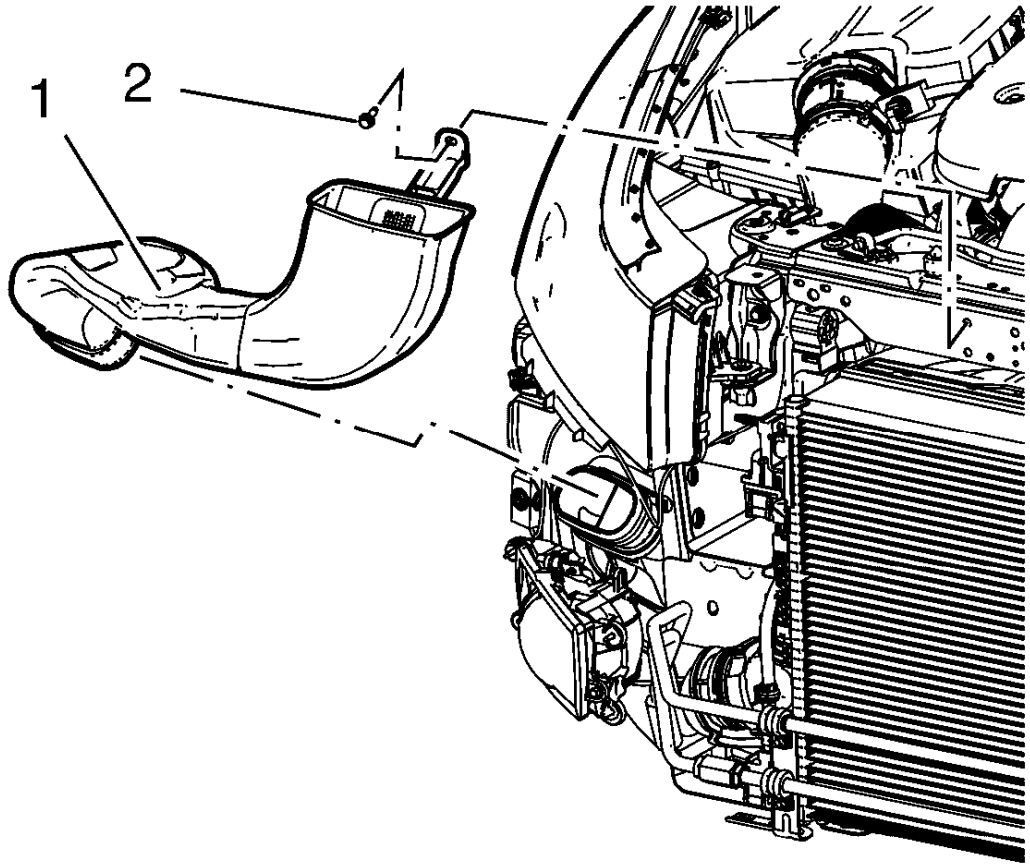

Fig. 134: Intake Air Duct And Bolt
Courtesy of GENERAL MOTORS COMPANY

5. Remove the front intake air duct bolt (2).

6. Remove the front intake air duct (1).
7. Remove the radiator grill support. Refer to **Front Grille Support Replacement** .

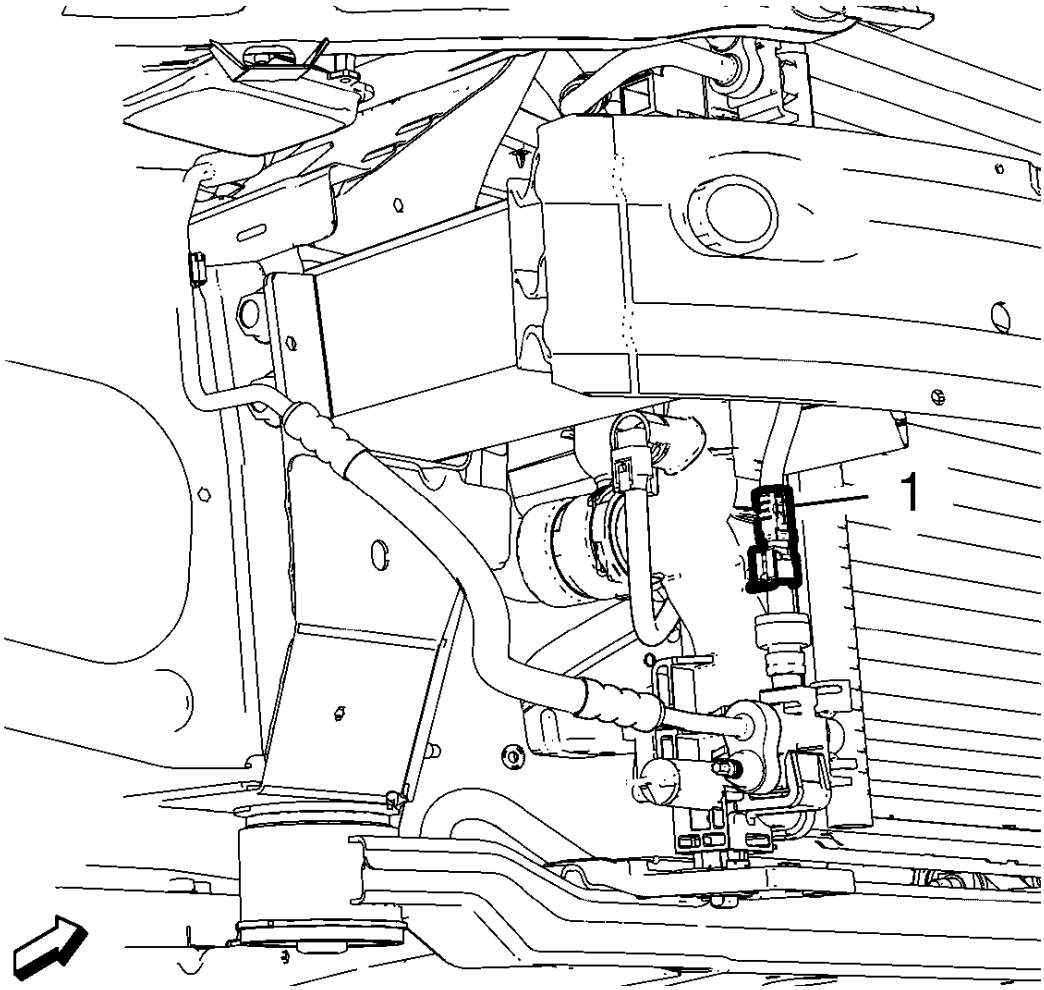

Fig. 135: A/C Pressure Sensor Wiring Harness
Courtesy of GENERAL MOTORS COMPANY

8. Disconnect and unclip the A/C pressure sensor wiring harness (1).

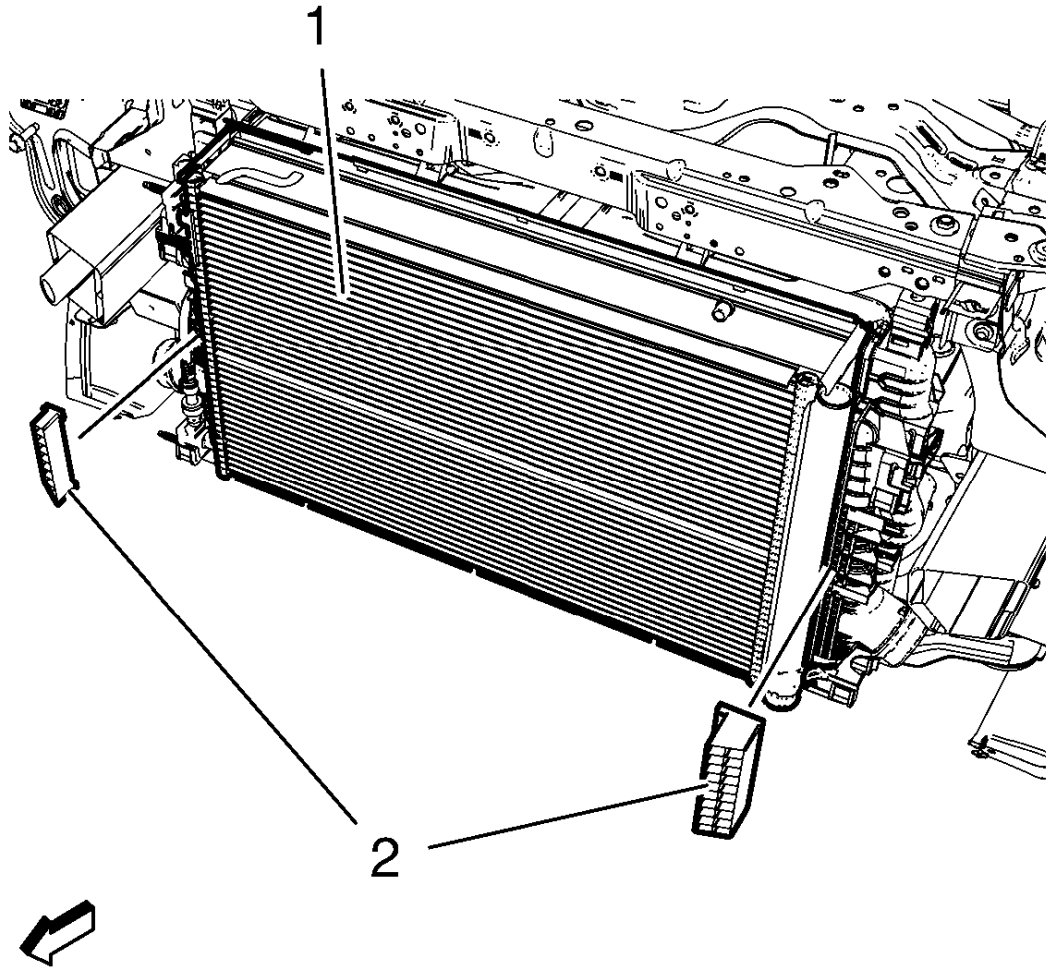

Fig. 136: Radiator Protector Fenders
Courtesy of GENERAL MOTORS COMPANY

9. Remove the 2 protector fenders (2) from the charge air cooler (1).
10. Disconnect the radiator outlet hose and the radiator inlet hose from the radiator. Refer to **Radiator Outlet Hose Replacement (1.8L LUW and LWE)**, **Radiator Outlet Hose Replacement (1.4L LUV)**, and **Radiator Inlet Hose Replacement (1.4L LUV)**, **Radiator Inlet Hose Replacement (1.8L LUW and LWE)**.
11. If equipped, remove the transmission fluid cooler inlet pipe from the radiator. Refer to **Transmission Fluid Cooler Inlet Pipe Replacement (1.4L LUV)** .
12. If equipped, remove the transmission fluid cooler outlet pipe from the radiator. Refer to **Transmission Fluid Cooler Outlet Pipe Replacement (1.4L LUV)** .
13. Unclip the engine coolant fan shroud from the radiator.

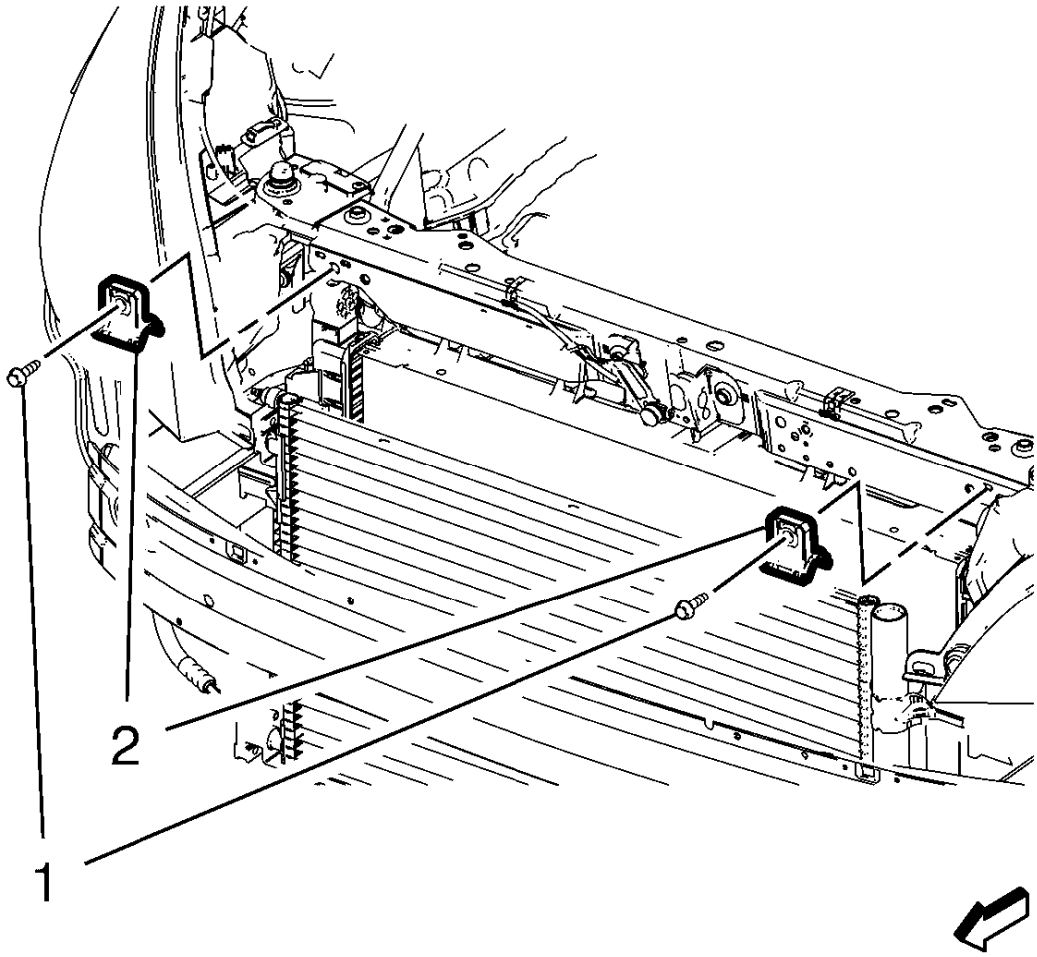

Fig. 137: Radiator Upper Bracket And Bolts
Courtesy of GENERAL MOTORS COMPANY

14. Remove the 2 radiator upper bracket bolts (1) and the 2 radiator upper brackets (2).

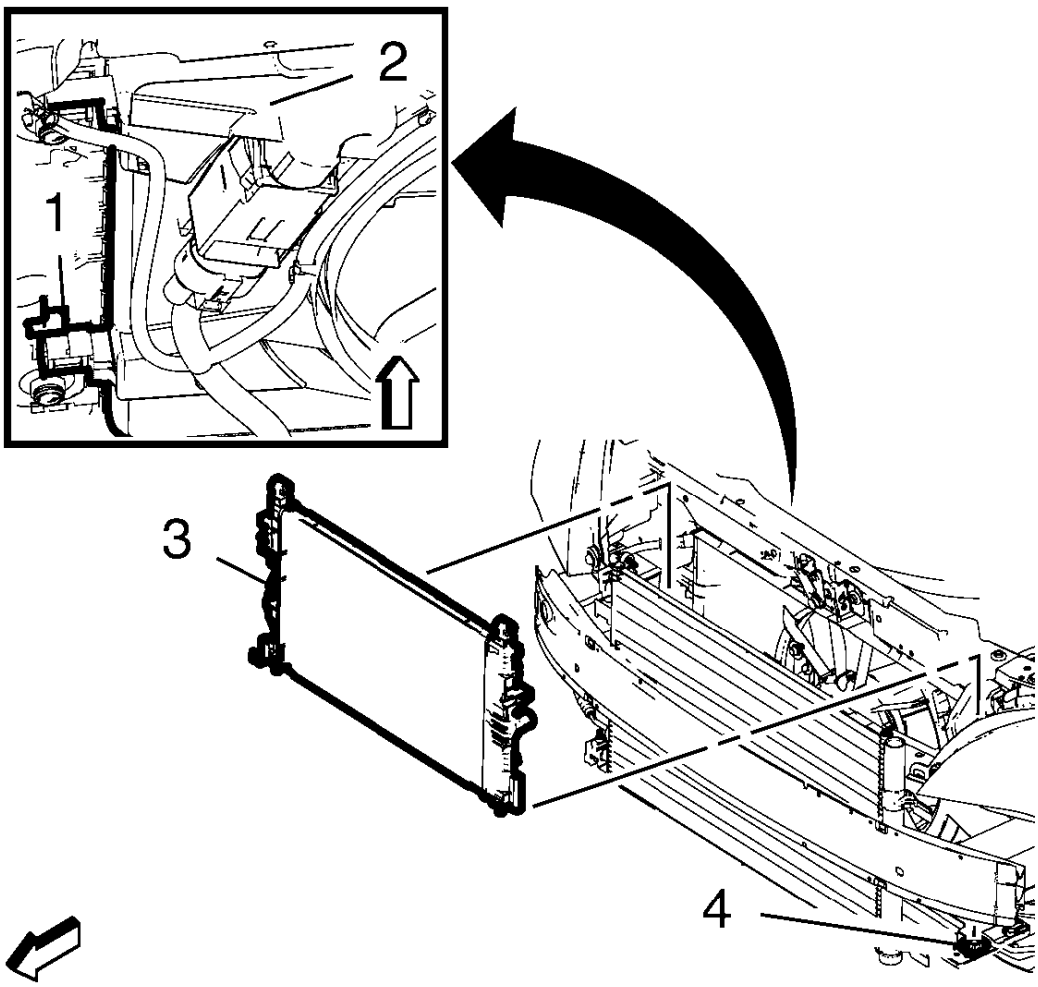

Fig. 138: Radiator And Lower Bracket
Courtesy of GENERAL MOTORS COMPANY

15. Remove the radiator (1) from the 2 lower brackets (2).
16. Use care and rotate the radiator in order to gain more access for the removal.
17. Use care and lift the radiator up and away from the vehicle.

Installation Procedure

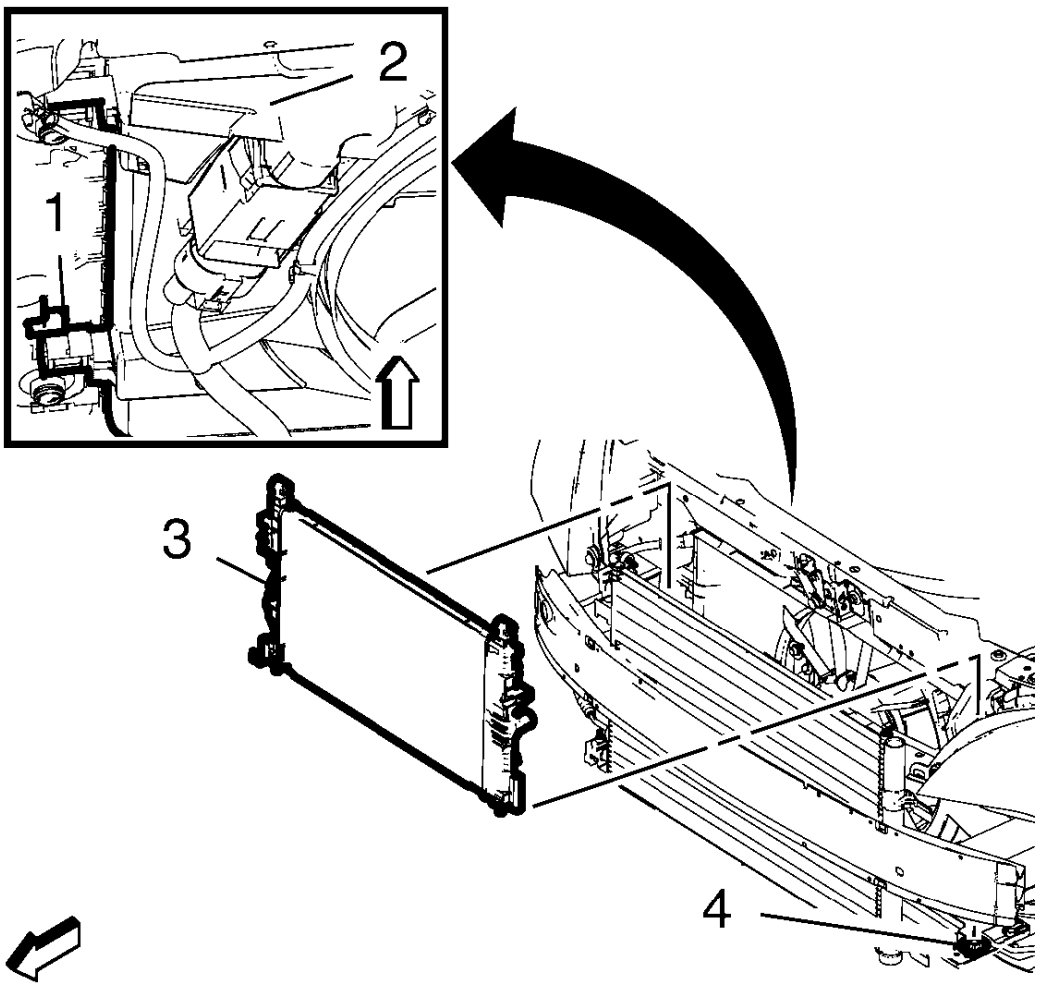

Fig. 139: Radiator And Lower Bracket
Courtesy of GENERAL MOTORS COMPANY

NOTE: Handle the radiator with care.

1. Use care and install the radiator (1).
2. Use care and rotate the radiator in order to get more access for the installation.
3. Install the radiator (1) to the 2 lower brackets (2).

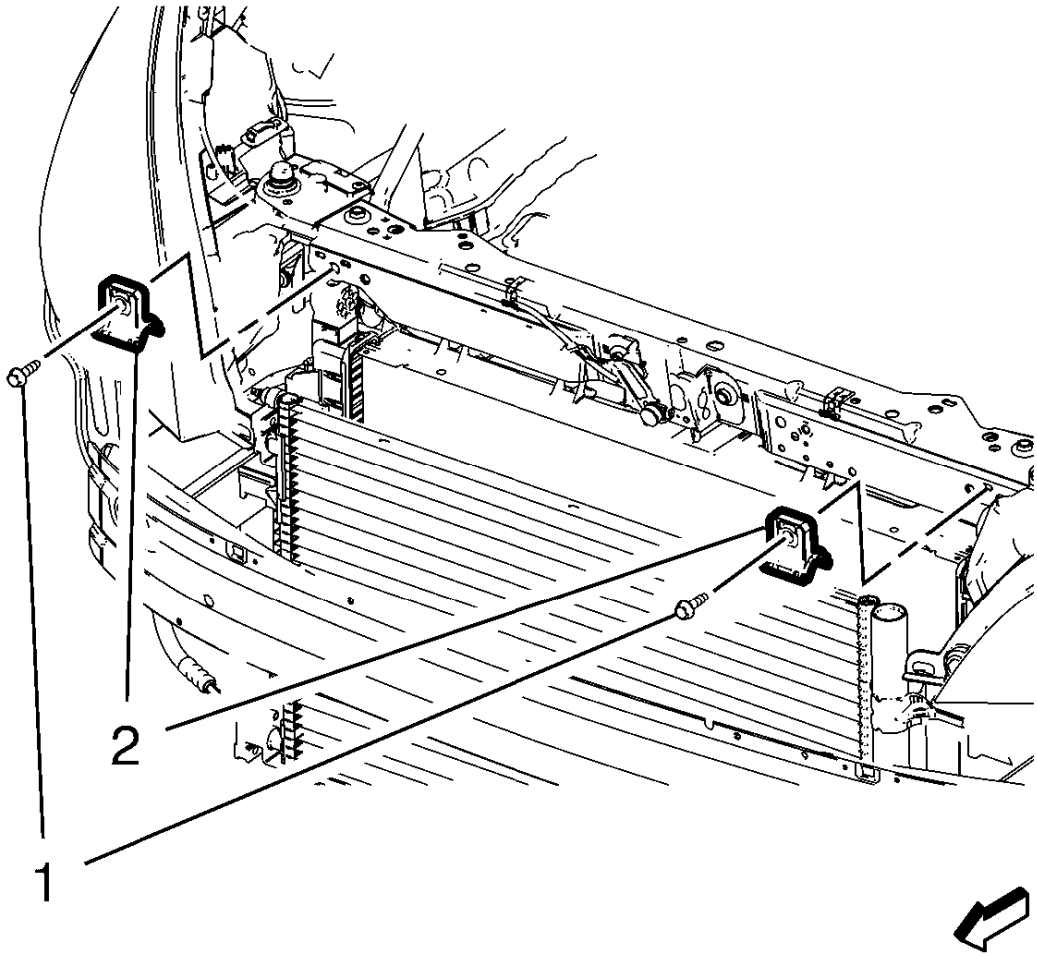

Fig. 140: Radiator Upper Bracket And Bolts
Courtesy of GENERAL MOTORS COMPANY

4. Install the 2 radiator upper brackets (2).

CAUTION: Refer to Fastener Caution .

5. Install the 2 radiator upper bracket bolts (1) and tighten to 22 N.m (16 lb ft).
6. Clip the engine coolant fan shroud to the radiator.
7. Connect the radiator outlet hose and the radiator inlet hose to the radiator. Refer to **Radiator Outlet Hose Replacement (1.8L LUW and LWE)**, **Radiator Outlet Hose Replacement (1.4L LUV)**, and **Radiator Inlet Hose Replacement (1.4L LUV)**, **Radiator Inlet Hose Replacement (1.8L LUW and LWE)**.
8. If equipped, install the transmission fluid cooler inlet pipe to the radiator. Refer to **Transmission Fluid Cooler Inlet Pipe Replacement (1.4L LUV)** .
9. If equipped, install the transmission fluid cooler outlet pipe to the radiator. Refer to **Transmission Fluid**

Cooler Outlet Pipe Replacement (1.4L LUV) .

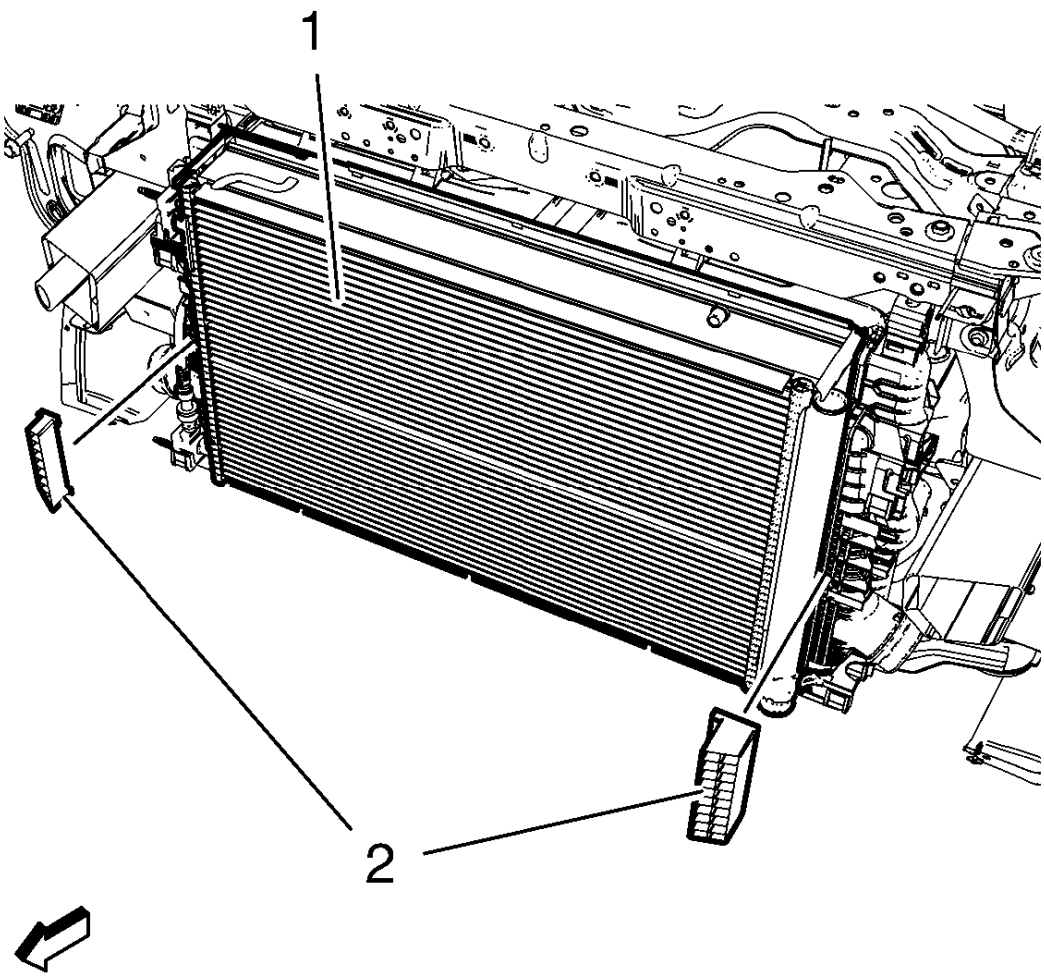

Fig. 141: Radiator Protector Fenders
Courtesy of GENERAL MOTORS COMPANY

10. Install the 2 protector fenders (2) to the charge air cooler (1).

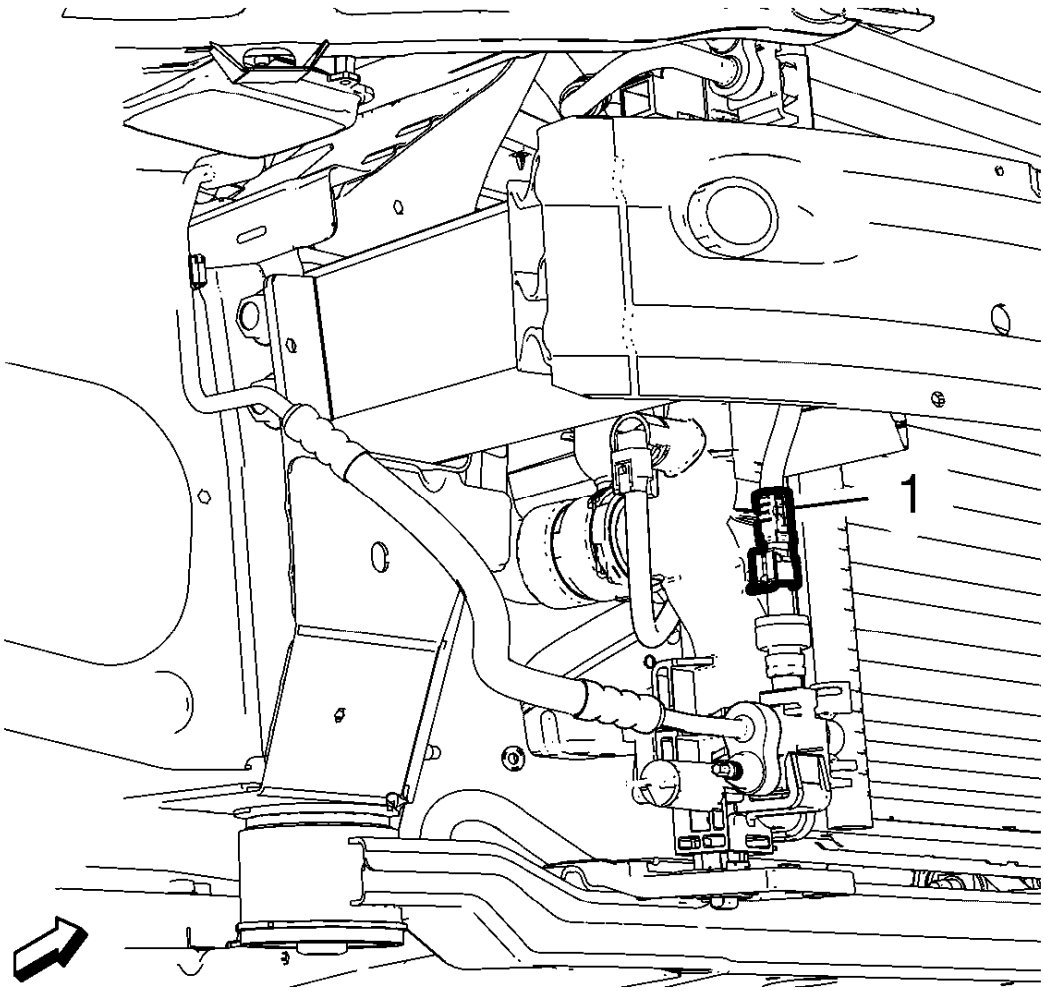

Fig. 142: A/C Pressure Sensor Wiring Harness
Courtesy of GENERAL MOTORS COMPANY

11. Connect and clip in the A/C pressure sensor wiring harness (1).
12. Install the radiator grill support. Refer to **Front Grille Support Replacement** .

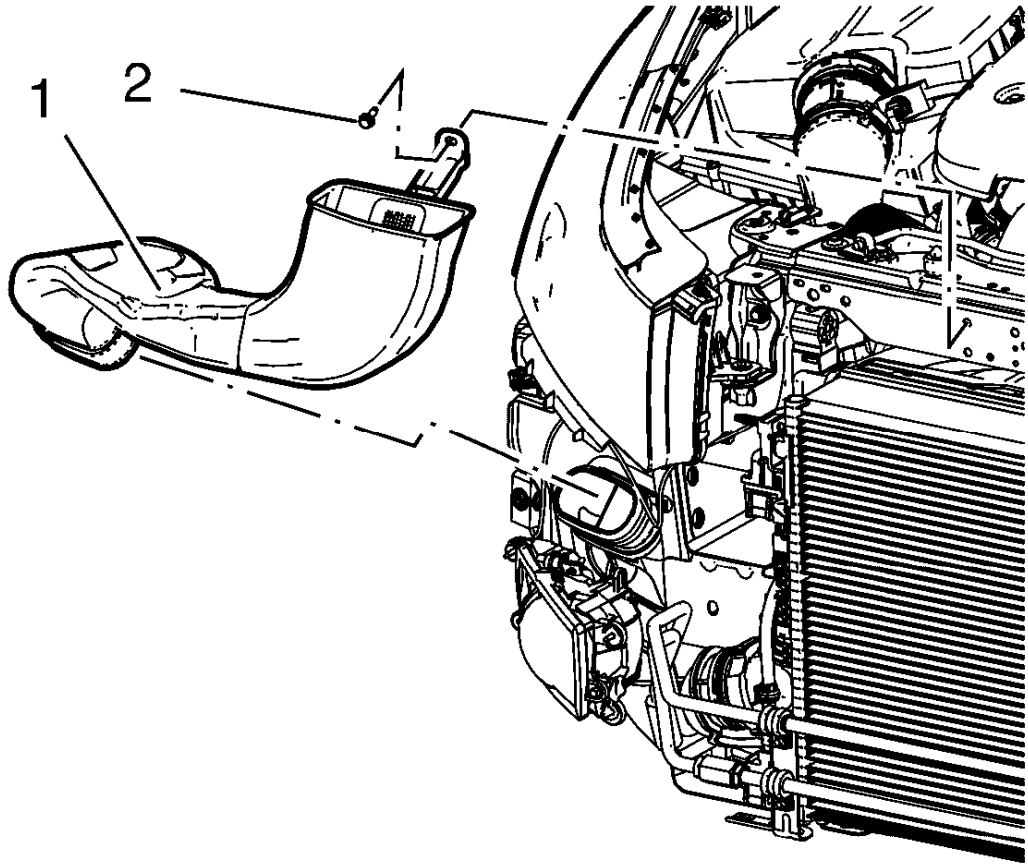

Fig. 143: Intake Air Duct And Bolt
Courtesy of GENERAL MOTORS COMPANY

13. Install the front intake air duct (1).
14. Install the front intake air duct bolt (2).
15. Install the front intake air duct deflector.
16. Install the front bumper fascia. Refer to **Front Bumper Fascia Replacement** .
17. Connect the battery negative cable. Refer to **Battery Negative Cable Disconnection and Connection** .
18. Fill and bleed the cooling system. Refer to **Cooling System Draining and Filling (Static Fill)**, **Cooling System Draining and Filling (GE-47716 Fill)**.

RADIATOR SUPPORT BRACKET REPLACEMENT

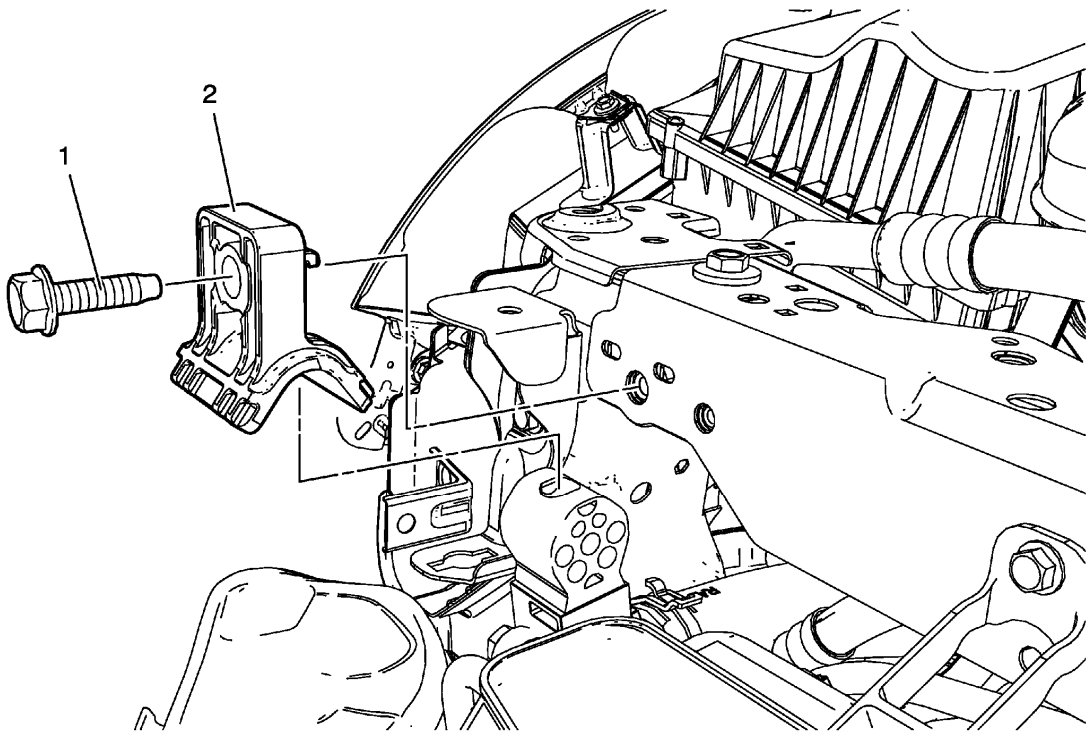

Fig. 144: Radiator Support Bracket
Courtesy of GENERAL MOTORS COMPANY

Radiator Support Bracket Replacement

Callout	Component Name
Preliminary Procedure Remove the front bumper fascia. Refer to **Front Bumper Fascia Replacement** .	
1	Radiator Support Bracket Bolt **CAUTION:** **Refer to Fastener Caution .** **Tighten** 22 N.m (17 lb ft)
2	Radiator Support Bracket **Procedure** Pull the radiator forward until the bracket is reachable.

DESCRIPTION AND OPERATION

COOLING FAN DESCRIPTION AND OPERATION

The engine cooling fan system is composed of one cooling fan, a series of 5 relays, the engine control module (ECM), and the associated wiring. The cooling fan assembly includes two resistors. This combination of

components enables the ECM to operate the cooling fan at 3 speeds using two fan control circuits.

Low Speed Operation

The ECM applies ground at the FAN 1 control circuit for the coil side of the cooling fan relay. The energized cooling fan relay completes a ground, through the switch side of the relay, for the coils of the cooling fan low speed relay and the cooling fan speed control relay. The speed control relay activates and supplies B+ to the coil side of the cooling fan high speed relay. The high speed relay remains inactive because the ECM is not commanding the FAN 2 control circuit ON. The energized low speed relay switch closes to supply B+ through the internal low speed resistor of the engine cooling fan motor. The result is cooling fan operation at a reduced speed.

Medium Speed Operation

The ECM applies ground at the FAN 2 control circuit for the coil side of the cooling fan high speed, and medium speed relays. The high speed relay remains inactive because the ECM is not commanding the FAN 1 control circuit ON. The energized medium speed relay switch closes to supply B+ through the internal medium speed resistor of the engine cooling fan motor. The result is cooling fan operation at a medium speed.

High Speed Operation

The ECM applies ground at the FAN 1 control circuit for the coil side of the cooling fan relay. The energized cooling fan relay completes a ground, through the switch side of the relay, for the coil of the cooling fan speed control relay. The energized speed control relay switch closes to supply B+ to the coil side of cooling fan high speed relay. Simultaneously, the ECM applies ground at the FAN 2 control circuit for the coil side of the cooling fan high speed relay. The energized high speed relay switch closes to supply B+ directly to the engine cooling fan motor, by-passing the fans internal resistors. The result is cooling fan operation at full speed.

COOLING SYSTEM DESCRIPTION AND OPERATION (1.4L LUV)

Cooling System

The cooling systems function is to maintain an efficient engine operating temperature during all engine speeds and operating conditions. The cooling system is designed to remove approximately one-third of the heat produced by the burning of the air-fuel mixture. When the engine is cold, the coolant does not flow to the radiator until the thermostat opens. This allows the engine to warm quickly. Refer to the following illustration for the components in the system and the basic flow path of the coolant.

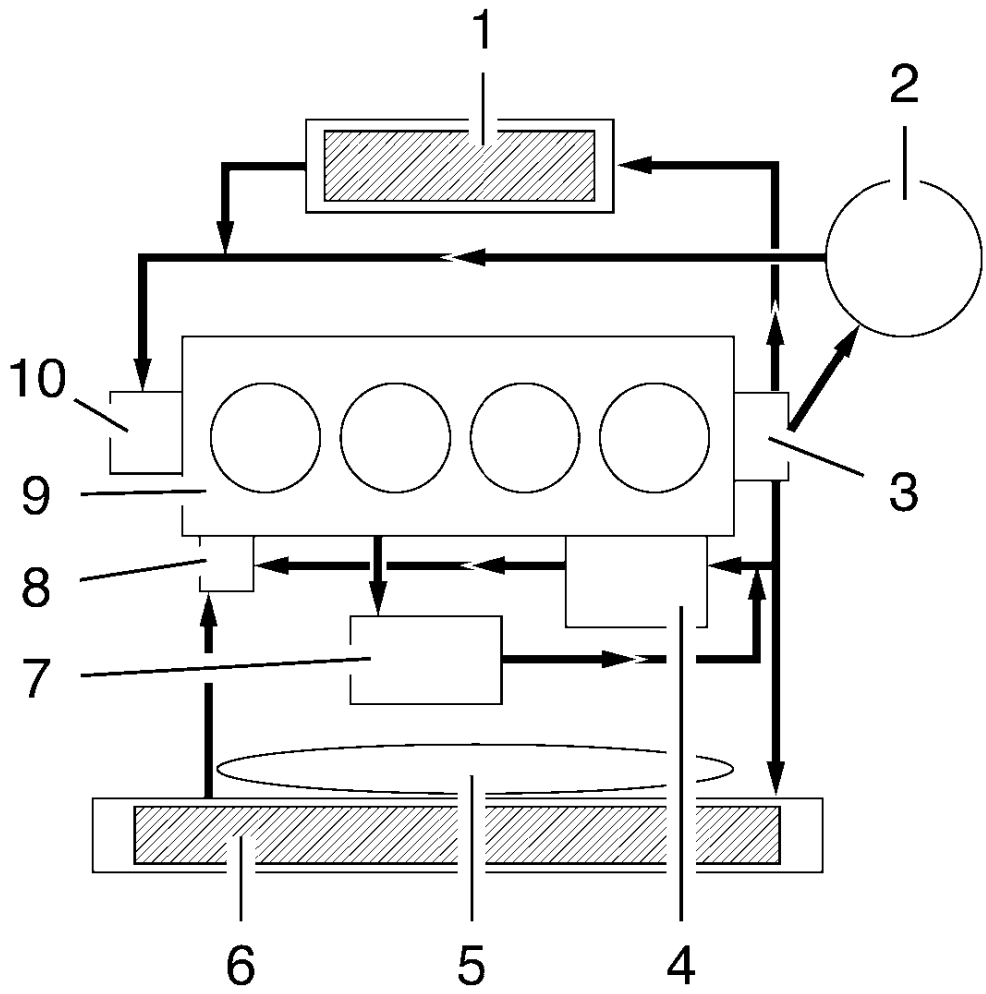

Fig. 145: Cooling System Flow Operation
Courtesy of GENERAL MOTORS COMPANY

NOTE: See arrows for coolant flow order.

The cooling system consists of the following components:

- Heater (1)
- Surge Tank (2)
- Water Outlet (3)
- Engine Oil Cooler (4)
- Cooling Fan (5)
- Radiator (6)
- Turbocharger (7)
- Engine Coolant Thermostat (8)

- Engine Block (9)
- Water Pump (10)

Water Pump

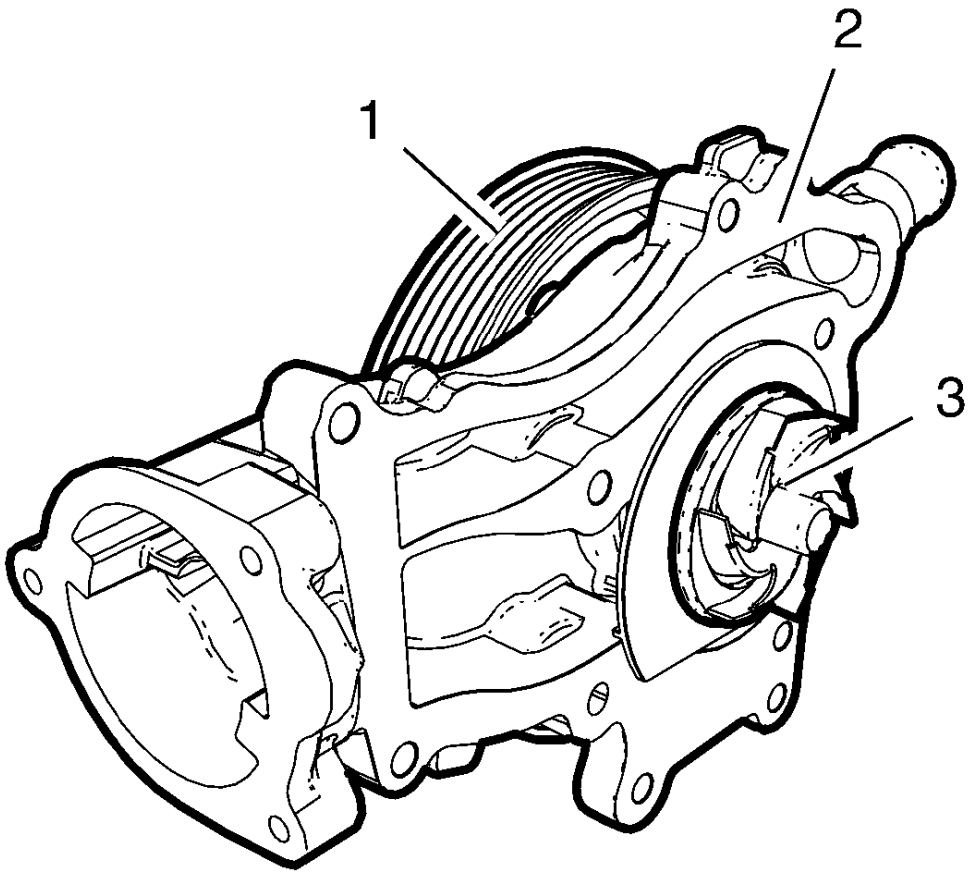

Fig. 146: Water Pump (1.4L LUJ)
Courtesy of GENERAL MOTORS COMPANY

Water pump is a component of the engine cooling system and circulated the coolant from each cooling circuit components. This water pump consists of sealing, bearing, pulley (1) and housing (2) and is driven by the drive belt to loose noise to water pump pulley. Water pump apply drain hole cup to cap to prevent coolant leakage for customers. Water pump is not open impeller type but closed plastic impeller type (3) to increase the cooling efficiency.

Thermostat

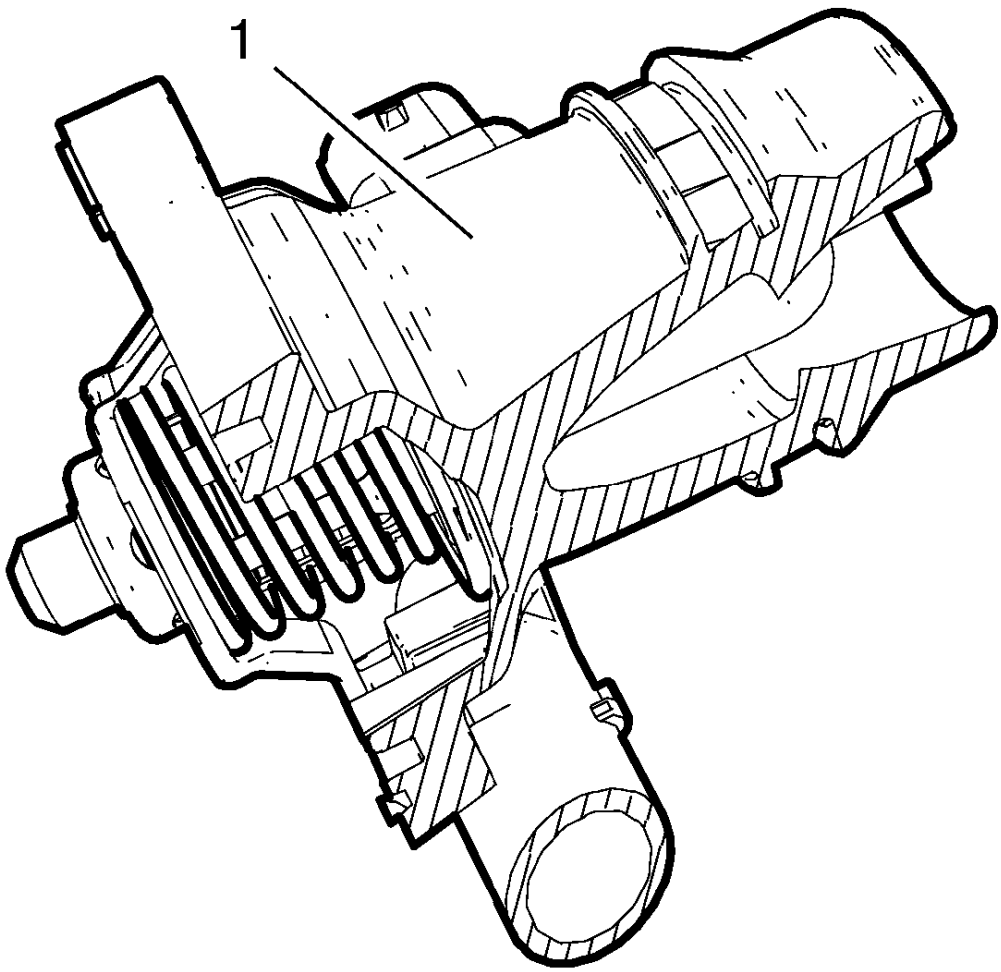

Fig. 147: Thermostat (1.4L LUJ)
Courtesy of GENERAL MOTORS COMPANY

The Thermostat is a regular part of the Thermostat Housing (1). The thermostat controls coolant flowing. It is a grid controlled electronic wax pellet type. By coolant temperature and / or applying current, the wax-pellet of the thermostat is molten what leads to the opening of the thermostat. That allows the coolant to flow through the radiator. The electronic heating of the thermostat is controlled by the engine control unit. The thermostat begins to open with 0V at 103°C (217°F) and with 12V at 80°C (176°F). It is fully open at 117°C (243°F). Whether the thermostat opening is supported by the electronic heating or not depends on load conditions which are defined as parameters in the grid.

Radiator

The radiator is a heat exchanger. It consists of a core and 2 tanks. The aluminum core is a tube and fin cross-flow design that extends from the inlet tank to the outlet tank. Fins are placed around the outside of the tubes to improve heat transfer to the atmosphere. The inlet and outlet tanks are a molded, high temperature, nylon reinforced plastic material. A high temperature rubber gasket seals the tank flange edge to the aluminum core. The tanks are clamped to the core with clinch tabs. The tabs are part of the aluminum header at each end of the

core. The radiator also has a drain cock located in the bottom of the left hand tank. The drain cock unit includes the drain cock and drain cock seal. The radiator removes heat from the coolant passing through it. The fins on the core transfer heat from the coolant passing through the tubes. As air passes between the fins, it absorbs heat and cools the coolant.

Surge Tank

The surge tank is a plastic tank with a threaded pressure cap. The tank is mounted at a point higher than all other coolant passages. The surge tank provides an air space in the cooling system that allows the coolant to expand and contract. The surge tank provides a coolant fill point and a central air bleed location. During vehicle use, the coolant heats and expands. The increased coolant volume flows into the surge tank. As the coolant circulates, any air is allowed to bubble out. Coolant without air bubbles absorbs heat much better than coolant with bubbles.

Cooling Fan

The cooling fan is mounted behind the radiator in the engine compartment. The engine cooling fan is driven by electric power. The cooling fan draws air through the radiator to improve the transfer of heat from the coolant to the atmosphere. As the fan blades spin, they increase the flow of air across the radiator core and across the condenser on air condition (A/C) equipped vehicles. This helps to speed cooling when the vehicle is at idle or moving at low speeds.

COOLING SYSTEM DESCRIPTION AND OPERATION (1.8L LUW AND LWE)

Cooling System

The cooling system's function is to maintain an efficient engine operating temperature during all engine speeds and operating conditions. The cooling system is designed to remove approximately one-third of the heat produced by the burning of the air-fuel mixture. When the engine is cold, the coolant does not flow to the radiator until the thermostat opens. This allows the engine to warm quickly.

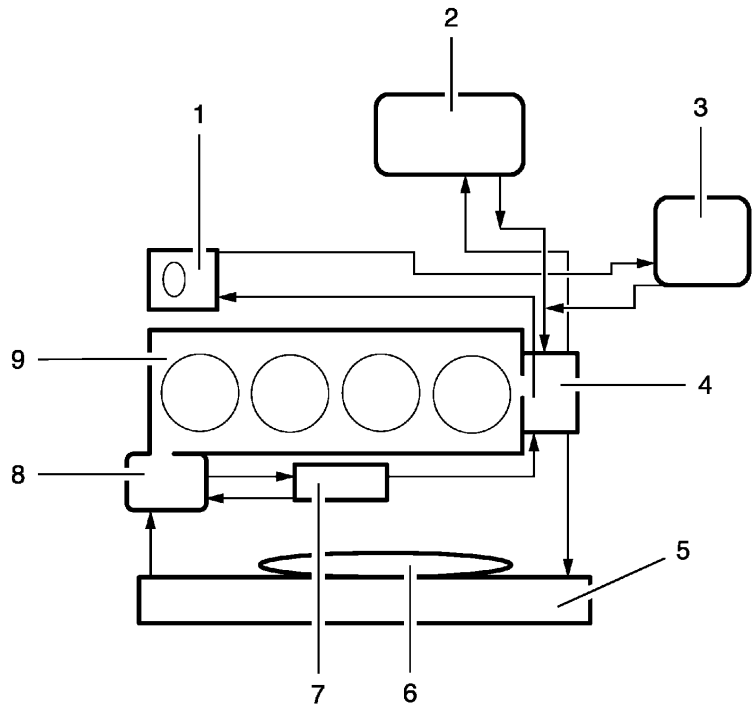

Fig. 148: Cooling System Flow Operation Diagram
Courtesy of GENERAL MOTORS COMPANY

NOTE: **See arrows for coolant flow order. Notice the port between cylinder head and thermostat housing, as well as the port between cylinder block and water pump.**

The cooling system consists of the following components:

- Throttle Body (1)
- Heater (2)
- Surge Tank (3)
- Engine Coolant Thermostat Housing (4)
- Radiator (5)
- Cooling Fan (6)
- Engine Oil Cooler Housing (7)
- Water Pump (8)
- Cylinder Head / Cylinder Block (9)

Water Pump

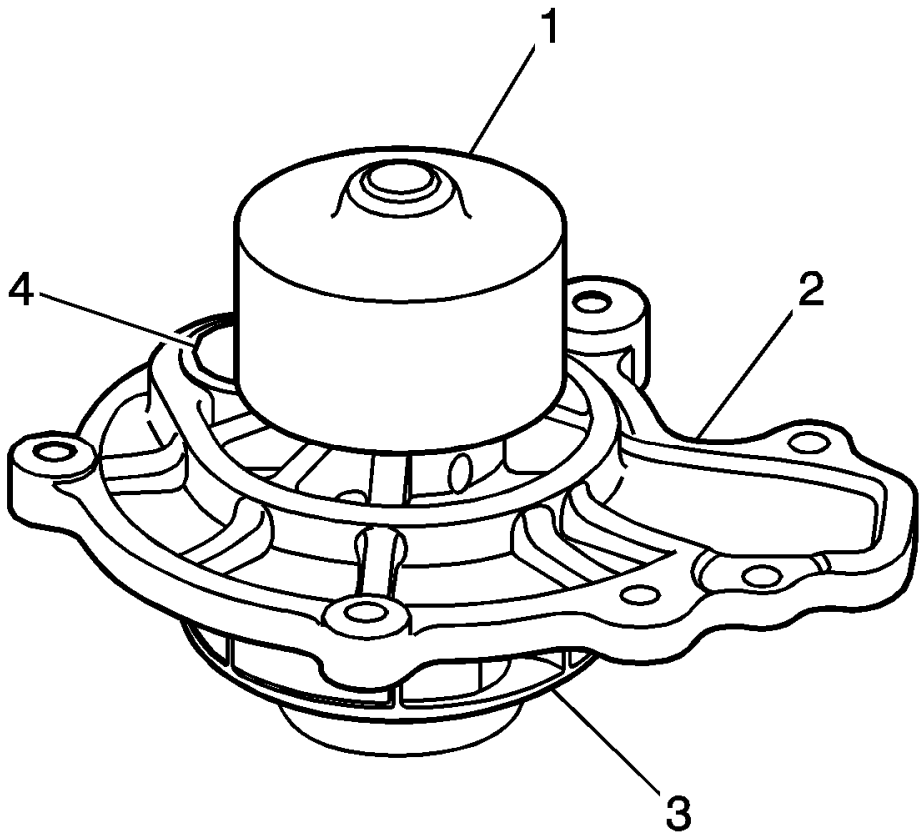

Fig. 149: Water Pump And Components
Courtesy of GENERAL MOTORS COMPANY

Water pump is a component of the engine cooling system and circulated the coolant from each cooling circuit components. This water pump consists of sealing, bearing, pulley (3) and housing (2) and is driven by the crankshaft with the back of timing belt to loose noise to water pump pulley. Water pump apply drain hole cup to cap to prevent coolant leakage for customers. Water pump is not open impeller type but closed plastic impeller type to increase the cooling efficiency.

Thermostat

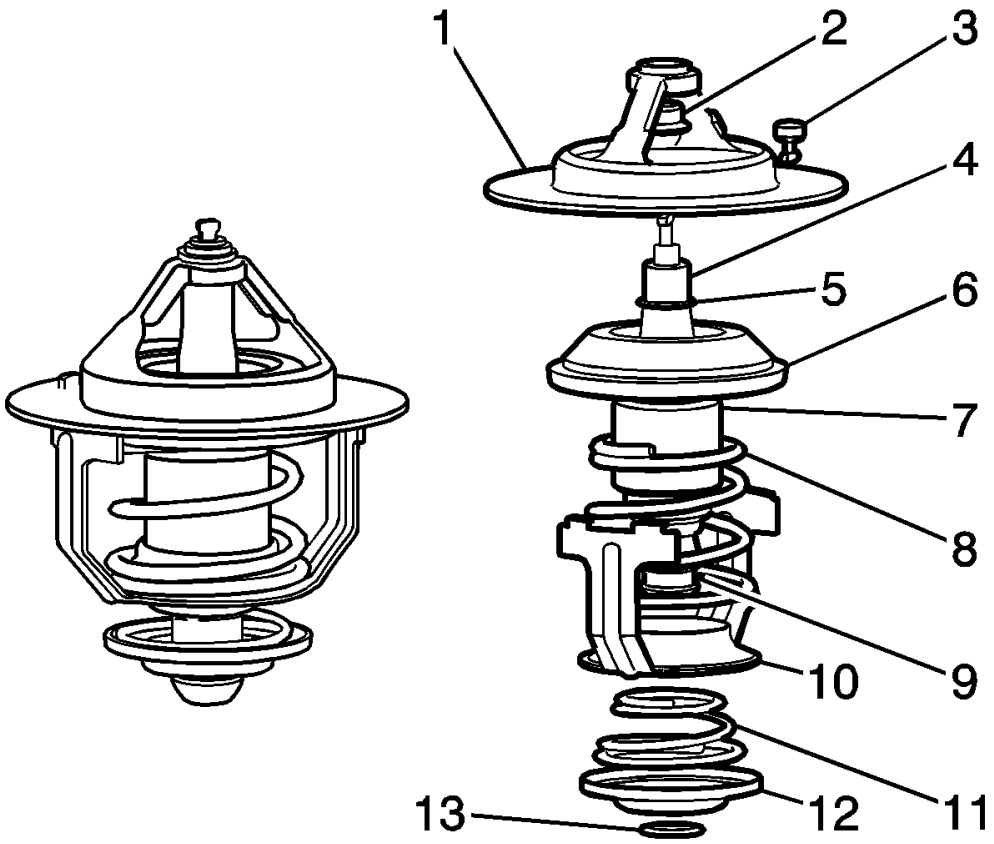

Fig. 150: View Of Thermostat And Components
Courtesy of GENERAL MOTORS COMPANY

Thermostat controls the flow of coolant and is mounted to the cylinder head. The thermostat contains a wax pellet (7) that expands and contracts based on the coolant temperature, which will mechanically move the main spring and a sealing disc to control the flow of coolant. The thermostat will begins to open electrically at 90°C (194°F) and will fully open mechanically at 105°C (221°F).

Radiator

The radiator is a heat exchanger. It consists of a core and 2 tanks. The aluminum core is a tube and fin cross-flow design that extends from the inlet tank to the outlet tank. Fins are placed around the outside of the tubes to improve heat transfer to the atmosphere. The inlet and outlet tanks are a molded, high temperature, nylon reinforced plastic material. A high temperature rubber gasket seals the tank flange edge to the aluminum core. The tanks are clamped to the core with clinch tabs. The tabs are part of the aluminum header at each end of the core. The radiator also has a drain cock located in the bottom of the left hand tank. The drain cock unit includes the drain cock and drain cock seal. The radiator removes heat from the coolant passing through it. The fins on the core transfer heat from the coolant passing through the tubes. As air passes between the fins, it absorbs heat and cools the coolant.

Surge Tank

The surge tank is a plastic tank with a threaded pressure cap. The tank is mounted at a point higher than all other coolant passages. The surge tank provides an air space in the cooling system that allows the coolant to expand and contract. The surge tank provides a coolant fill point and a central air bleed location. During vehicle use, the coolant heats and expands. The increased coolant volume flows into the surge tank. As the coolant circulates, any air is allowed to bubble out. Coolant without air bubbles absorbs heat much better than coolant with bubbles.

Cooling Fan

The cooling fans are mounted behind the radiator in the engine compartment. The engine cooling fan is driven by electric power. The cooling fan draws air through the radiator to improve the transfer of heat from the coolant to the atmosphere. As the fan blades spin, they increase the flow of air across the radiator core and across the condenser on air condition (A/C) equipped vehicles. This helps to speed cooling when the vehicle is at idle or moving at low speeds.

SPECIAL TOOLS AND EQUIPMENT

SPECIAL TOOLS

Illustration	Tool Number / Description
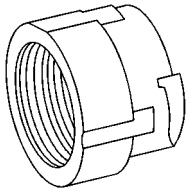	EN-471 KM-471 GE-42401-A Adapter
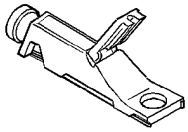	GE-26568 J 26568 Coolant and Battery Fluid Tester
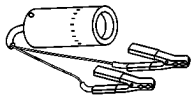	BO-42220 J-42220 Universal 12V Leak Detection Lamp
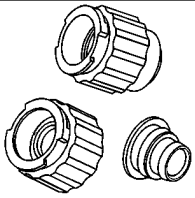	GE-42401-A J 42401 Radiator Cap/Surge Tank Tester Adapter

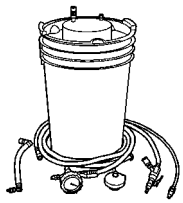	GE 47716 Vac N Fill Coolant Refill Tool
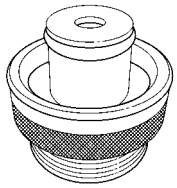	EN-6327-A KM-6327-A GE-42401-A Cooling System Test Adapter

2013 ELECTRICAL

Engine Electrical - Cruze

SPECIFICATIONS

FASTENER TIGHTENING SPECIFICATIONS (1.4L LUV)

Fastener Tightening Specifications (1.4L LUV)

Application	Specification	
	Metric	English
Battery Ground Cable Nut	9 N.m	80 lb in
Battery Ground Cable To Battery Negative Cable Nut	9 N.m	80 lb in
Battery Hold Down Retainer Nut	12 N.m	106 lb in
Battery Negative Cable Nut	4.5 N.m	40 lb in
Battery Positive Cable Nut	4.5 N.m	40 lb in
Battery Positive Cable To Fuse Box Nut	9 N.m	80 lb in
Battery Positive Cable Nut To Starter Cable Nut	12 N.m	106 lb in
Battery Positive Plate Nut	12 N.m	106 lb in
Battery Sensor Wiring Harness Ground Cable Bolt	5 N.m	44 lb in
Battery Sensor Wiring Harness Ground Cable Nut	11 N.m	97 lb in
Battery Tray Bolt	15 N.m	11 lb ft
Generator Bolt	35 N.m	26 lb ft
Generator Positive Cable Nut	20 N.m	15 lb ft
Generator Wiring Harness Nut	7 N.m	62 lb in
Starter Bolt	25 N.m	18 lb ft
Starter Stud	25 N.m	18 lb ft
Starter Ground Cable Nut	12.5 N.m	111 lb in
Starter And Generator Positive Cable Nut	12.5 N.m	111 lb in
Starter Positive Cable Nut	12.5 N.m	111 lb in

FASTENER TIGHTENING SPECIFICATIONS (1.8L LUW AND LWE)

Fastener Tightening Specifications (1.8L LUW and LWE)

Application	Specification	
	Metric	English
Battery Ground Cable Nut	9 N.m	80 lb in
Battery Ground Cable to Battery Negative Cable Nut	9 N.m	80 lb in
Battery Hold Down Retainer Nut	12 N.m	106 lb in
Battery Negative Cable Nut	4.5 N.m	40 lb in
Battery Positive Cable Nut	4.5 N.m	40 lb in

Battery Positive Cable to Fuse Box Nut	9 N.m	80 lb in
Battery Positive Cable Nut to Starter Cable Nut	12 N.m	106 lb in
Battery Positive Plate Nut	12 N.m	106 lb in
Battery Sensor Wiring Harness Ground Cable Bolt	5 N.m	44 lb in
Battery Sensor Wiring Harness Ground Cable Nut	11 N.m	97 lb in
Battery Tray Bolt	15 N.m	11 lb ft
Generator Bolt	35 N.m	26 lb ft
Generator Positive Cable Nut	12.5 N.m	111 lb in
Generator Wiring Harness Nut	7 N.m	62 lb in
Starter Bolt	25 N.m	18 lb ft
Starter Stud	25 N.m	18 lb ft
Starter Ground Cable Nut	20 N.m	15 lb ft
Starter And Generator Positive Cable Nut	12.5 N.m	111 lb in
Starter Positive Cable Nut	12.5 N.m	111 lb in

BATTERY USAGE

Battery Usage

Application	Specification
Cold Cranking Amperage (CCA)	438 A
Amp Hour Rating	60 Ah

GENERATOR USAGE

Generator Usage

Description	Specification
Rated Output	130A (KL9)
Load Test Output	92 A (KL9)

SCHEMATIC WIRING DIAGRAMS

STARTING AND CHARGING WIRING SCHEMATICS

Starting Wiring Schematics

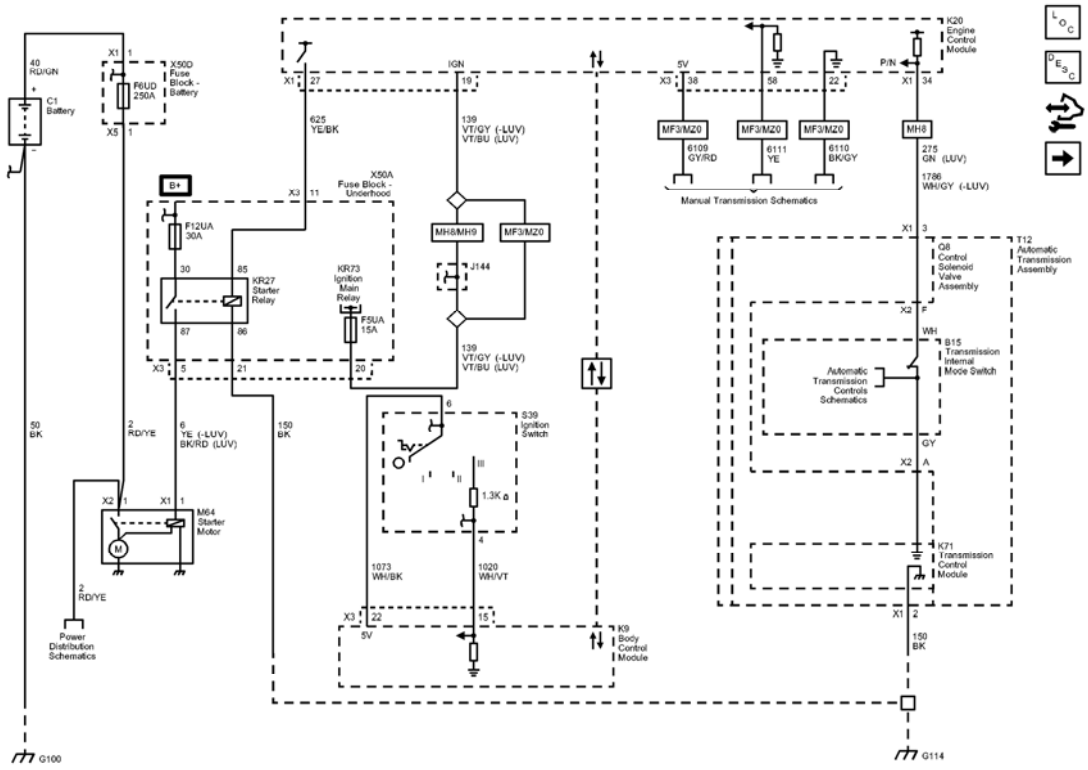

Fig. 1: Starting Wiring Schematics
Courtesy of GENERAL MOTORS COMPANY

Callout	Component Name
40	Battery Positive Voltage
40_RD/GN	40 RD/GN
CAV_1	1
CONN_X1	X1
50	Ground
50_BK	50 BK
2	TBD
2_RD/YE	2 RD/YE
CAV_1	1
CONN_X2	X2
2_RD/YE	2 RD/YE
CAV_1	1
CONN_X5	X5
625	Starter Enable Relay Control
625_YE/BK	625 YE/BK
CAV_11	11

CONN_X3	X3
CAV_27	27
CONN_X1	X1
139	Run/Crank Ignition 1 Voltage
139_VT/GY	139 VT/GY
CAV_19	19
VT/BU	VT/BU
LUV	ENGINE-GAS, 4 CYL, 1.4L, MFI, DOHC, TURBO, VVT, ALUM, GME, E85 MAX
LUV	ENGINE-GAS, 4 CYL, 1.4L, MFI, DOHC, TURBO, VVT, ALUM, GME, E85 MAX
139_VT/GY	139 VT/GY
CAV 20	20
VT/BU	VT/BU
LUV	ENGINE-GAS, 4 CYL, 1.4L, MFI, DOHC, TURBO, VVT, ALUM, GME, E85 MAX
LUV	ENGINE-GAS, 4 CYL, 1.4L, MFI, DOHC, TURBO, VVT, ALUM, GME, E85 MAX
6	Starter Solenoid Crank Voltage
6_YE	6 YE
CAV_1	1
CONN_X1	X1
CAV_5	5
CONN_X3	X3
BK/RD	BK/RD
LUV	ENGINE-GAS, 4 CYL, 1.4L, MFI, DOHC, TURBO, VVT, ALUM, GME, E85 MAX
LUV	ENGINE-GAS, 4 CYL, 1.4L, MFI, DOHC, TURBO, VVT, ALUM, GME, E85 MAX
CAV_30	30

CAV_85	85
CAV_87	87
CAV_86	86
SD	Serial Data
Data_Communication_Schematics_REF	Data Communication Schematics
1020	Off/Run/Crank Voltage
1020_WH/VT	1020 WH/VT
CAV_15	15
CAV_4	4
1073	Ignition Key Resistor Signal
1073_WH/BK	1073 WH/BK
CAV 22	22
CONN_X3	X3
CAV_6	6
6109	Clutch Apply Sensor Voltage Reference
6109_GY/RD	6109 GY/RD
CAV 38	38
CONN_X3	X3
6111	Clutch Apply Sensor Signal
6111_YE	6111 YE
CAV_58	58
6110	Clutch Apply Sensor Low Reference
6110_BK/GY	6110 BK/GY
CAV 22	22
275	Park Neutral Position Switch Park Signal
275_GN	275 GN
CAV_3	3
CONN_X1	X1
CAV_34	34
CONN_X1	X1
1786 WH/GY	1786 WH/GY
LUV	ENGINE-GAS, 4 CYL, 1.4L, MFI, DOHC, TURBO, VVT, ALUM, GME, E85 MAX
LUV	ENGINE-GAS, 4 CYL, 1.4L, MFI, DOHC, TURBO, VVT, ALUM,

	GME, E85 MAX
150	Ground
150_BK	150 BK
CAV_2	2
CONN_X1	X1
150_BK	150 BK
CAV_21	21
CAV_A	A
CONN_X2	X2
CAV_F	F
CONN_X2	X2
MF3	TRANSMISSION-MAN 6 SPD, OPEL, 76.5 MM, 4.273 1ST, 2.158 2ND, 1.302 3RD, 0.959 4TH, 0.744 5TH, 0.614 6TH, M32-6 WR
MZ0	TRANSMISSION-MAN 6 SPD, OPEL, 76.5 MM, 3.82 1ST, 0.74 6TH, (M32 WR)
MF3	TRANSMISSION-MAN 6 SPD, OPEL, 76.5 MM, 4.273 1ST, 2.158 2ND, 1.302 3RD, 0.959 4TH, 0.744 5TH, 0.614 6TH, M32-6 WR
MZ0	TRANSMISSION-MAN 6 SPD, OPEL, 76.5 MM, 3.82 1ST, 0.74 6TH, (M32 WR)
MF3	TRANSMISSION-MAN 6 SPD, OPEL, 76.5 MM, 4.273 1ST, 2.158 2ND, 1.302 3RD, 0.959 4TH, 0.744 5TH, 0.614 6TH, M32-6 WR
MZ0	TRANSMISSION-MAN 6 SPD, OPEL, 76.5 MM, 3.82 1ST, 0.74 6TH, (M32 WR)
MH8	TRANSMISSION-AUTO 6 SPD, HMD, X23F
MH8	TRANSMISSION-AUTO 6 SPD, HMD, X23F

MH9	TRANSMISSION-AUTO 6 SPD, HMD, X24F
MF3	TRANSMISSION-MAN 6 SPD, OPEL, 76.5 MM, 4.273 1ST, 2.158 2ND, 1.302 3RD, 0.959 4TH, 0.744 5TH, 0.614 6TH, M32-6 WR
MZ0	TRANSMISSION-MAN 6 SPD, OPEL, 76.5 MM, 3.82 1ST, 0.74 6TH, (M32 WR)
_WH	WH
_GY	GY
G100	G100
G114	G114
F6UD	F6UD 250A
F12UA	F12UA 30A
F5UA	F5UA 15A
C1	
B15	(MH8/MH9)
Q8	(MH8/MH9)
K9	
Automatic_Transmission_Controls_Schematics_REF	Automatic Transmission Controls Schematics
K71	(MH8/MH9)
K20	
KR27	
X50D	
T12	(MH8/MH9)
M64	
Power_Distribution_Schematics_REF	Power Distribution Schematics
X50A	
S39	(without BTM)
KR73	
Manual_Transmission_Schematics_REF	Manual Transmission Schematics

Charging Wiring Schematics

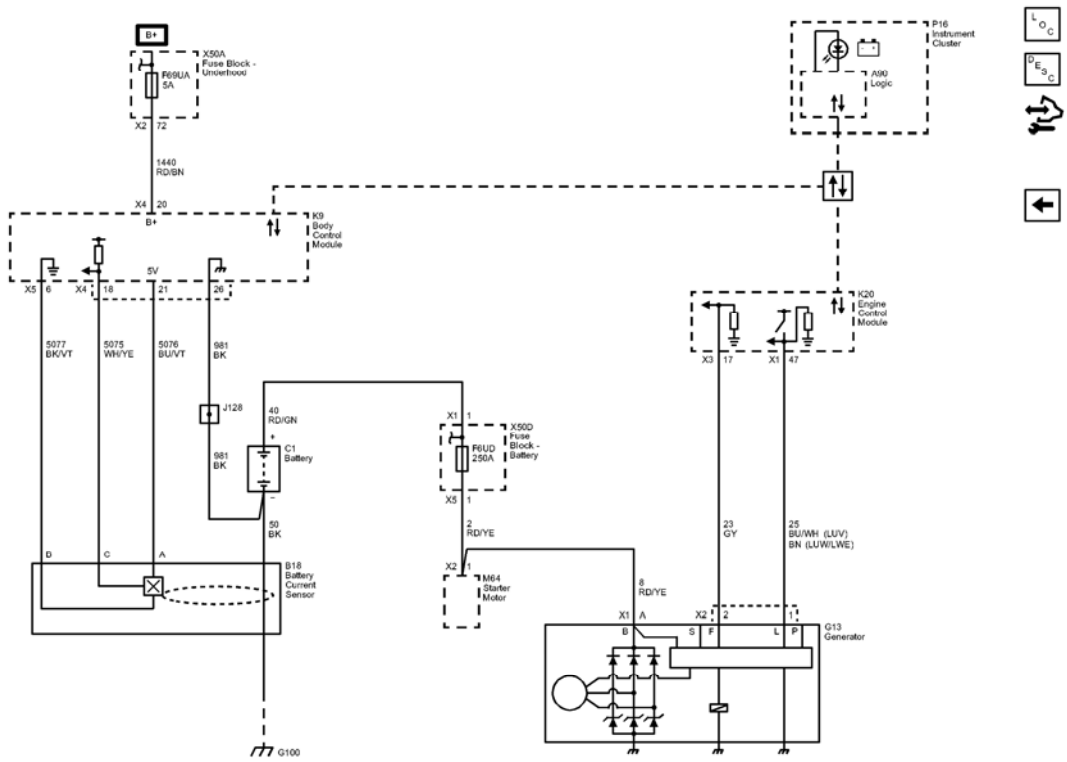

Fig. 2: Charging Wiring Schematics
Courtesy of GENERAL MOTORS COMPANY

Callout	Component Name
50	Ground
1440	Battery Positive Voltage
1440_RD/BN	1440 RD/BN
CAV_20	20
CONN_X4	X4
CAV 72	72
CONN_X2	X2
5077	Current Sensor Low Reference
5077_BK/VT	5077 BK/VT
CAV_B	B
CAV 6	6
CONN_X5	X5
5075	Current Sensor Signal
5075_WH/YE	5075 WH/YE
CAV_C	C
CAV_18	18

CONN_X4	X4
5076	Current Sensor Supply Voltage
5076 BU/VT	5076 BU/VT
CAV_A	A
CAV_21	21
981_BK	981 BK
CAV_26	26
981_BK	981 BK
50_BK	50 BK
40	Battery Positive Voltage
40_RD/GN	40 RD/GN
CAV_1	1
CONN_X1	X1
2	TBD
2_RD/YE	2 RD/YE
CAV_1	1
CONN_X2	X2
CAV 1	1
CONN_X5	X5
8	Instrument Panel Lamp Supply Voltage (1)
8_RD/YE	8 RD/YE
CAV_A	A
CONN_X1	X1
23	Generator Field Duty Cycle Signal
23_GY	23 GY
CAV_2	2
CONN_X2	X2
CAV_17	17
CONN_X3	X3
25	Charge Indicator Control
25_BU/WH	25 BU/WH
CAV_1	1
CAV_47	47
CONN X1	X1
BN	BN
LUV	ENGINE-GAS, 4 CYL, 1.4L, MFI, DOHC, TURBO, VVT, ALUM, GME, E85 MAX
	ENGINE-GAS, 4 CYL, 1.8L,

LUW	MFI, 103KW, DOHC, E85 MAX
LWE	ENGINE-GAS, 4 CYL, 1.8L, MFI, DOHC, VVT, 103 KW, GME
SD	Serial Data
Data_Communication_Schematics_REF	Data Communication Schematics
G100	G100
F69UA	F69UA 5A
J128	J128
F6UD	F6UD 250A
B18	
G13	
A90	Logic
C1	
X50A	
M64	
K9	
X50D	
K20	
P16	

DIAGNOSTIC INFORMATION AND PROCEDURES

DIAGNOSTIC CODE INDEX

DIAGNOSTIC CODE INDEX

DTC	Description
DTC B1325, B1330, B1517, C0800, P0560, P0562, or P0563	DTC B1325 03 Control Module Power Circuit Low Voltage DTC B1325 07 Control Module Power Circuit High Voltage DTC B1330 03 Device Power 2 Circuit Low Voltage DTC B1517 03 Battery Voltage Low Voltage DTC B1517 07 Battery Voltage High Voltage DTC B1517 5A Battery Voltage Plausibility Failure DTC C0800 03 Control Module Power Circuit Low Voltage DTC C0800 07 Control Module Power Circuit High Voltage DTC C0800 08 Control Module Power Circuit Voltage Signal Invalid

	DTC C0800 11 Control Module Power Circuit High Input DTC C0800 12 Control Module Power Circuit Low Input DTC C0800 0D Control Module Power Circuit High Resistance DTC P0560 System Voltage DTC P0562 System Voltage Low Voltage DTC P0563 System Voltage High Voltage
DTC B1516	DTC B1516 08 Battery Current Sensor Performance - Signal Invalid DTC B1516 66 Battery Current Sensor Incorrect Mounting
DTC B151A	DTC B151A 58 Battery Capacity Performance
DTC B1527	DTC B1527 00 Parasitic Load
DTC P0615, P0616, or P0617	DTC P0615 Starter Relay Control Circuit DTC P0616 Starter Relay Control Circuit Low Voltage DTC P0617 Starter Relay Control Circuit High Voltage
DTC P0621	DTC P0621 Generator L-Terminal Circuit
DTC P0622	DTC P0622 Generator F-Terminal Circuit

DTC B1325, B1330, B1517, C0800, P0560, P0562, OR P0563

Diagnostic Instructions

- Perform the **Diagnostic System Check - Vehicle** prior to using this diagnostic procedure.
- Review **Strategy Based Diagnosis** for an overview of the diagnostic approach.
- **Diagnostic Procedure Instructions** provides an overview of each diagnostic category.

DTC Descriptors

DTC B1325 03

Control Module Power Circuit Low Voltage

DTC B1325 07

Control Module Power Circuit High Voltage

DTC B1330 03

Device Power 2 Circuit Low Voltage

DTC B1517 03

Battery Voltage Low Voltage

DTC B1517 07

Battery Voltage High Voltage

DTC B1517 5A

Battery Voltage Plausibility Failure

DTC C0800 03

Control Module Power Circuit Low Voltage

DTC C0800 07

Control Module Power Circuit High Voltage

DTC C0800 08

Control Module Power Circuit Voltage Signal Invalid

DTC C0800 11

Control Module Power Circuit High Input

DTC C0800 12

Control Module Power Circuit Low Input

DTC C0800 0D

Control Module Power Circuit High Resistance

DTC P0560

System Voltage

DTC P0562

System Voltage Low Voltage

DTC P0563

System Voltage High Voltage

Circuit/System Description

The vehicle control modules or sensors monitor the system voltage to verify the system voltage is within the normal operating range.

Conditions for Running the DTC

The engine is running.

Conditions for Setting the DTC

The control module or sensor detects a system voltage of less than approximately 9 V or greater than 18 V for approximately 5 s.

Action Taken When the DTC Sets

- A driver information center message and/or warning indicator may be displayed.
- The control module may be temporarily disabled.

Conditions for Clearing the DTC

The system voltage returns to normal operating range.

Diagnostic Aids

- A high or low voltage DTC set or voltage value in multiple modules/sensors indicates a concern in the charging system.
- A possible cause of this DTC could be overcharging with a battery charger or jump starting.

Reference Information

Schematic Reference

Control Module References

Connector End View Reference

- **COMPONENT CONNECTOR END VIEWS - INDEX**
- **INLINE HARNESS CONNECTOR END VIEWS - INDEX**

Description and Operation

Charging System Description and Operation

Electrical Information Reference

- **Circuit Testing**
- **Connector Repairs**
- **Testing for Intermittent Conditions and Poor Connections**

- **Wiring Repairs**

DTC Type Reference

Powertrain Diagnostic Trouble Code (DTC) Type Definitions

Scan Tool Reference

Control Module References for scan tool information

Special Tools

For equivalent regional tools, refer to **Special Tools**.

Circuit/System Verification

1. Ignition OFF, measure and record the battery voltage at the battery terminals.
2. Verify the battery voltage stabilizes between 12.4 and 12.8 V within a few minutes of turning the ignition OFF.
    - **If battery voltage is less than 12.4 V or more than 12.8 V**

      Refer to **Battery Inspection/Test**.

    - **If battery voltage is between 12.4 and 12.8 V**
3. Engine running, headlights ON, measure and record the battery voltage at the battery terminals.
4. Verify the voltage is at least 1 V greater than the voltage measured in step 1, but less than 15 V.
    - **If the voltage is not at least 1 V greater than the voltage measured in step 1 or is greater than 15 V.**

      Refer to **Charging System Test**.

    - **If the voltage is at least 1 V greater than the voltage measured in step 1, but less than 15 V.**
5. Verify the appropriate control module scan tool battery voltage and ignition voltage parameters are within 1 V of the battery voltage.
    - **If not within 1 V of the battery voltage**

      Refer to Circuit/System Testing below.

    - **If within 1 V of the battery voltage**
6. All OK.

Circuit/System Testing

NOTE: Use the schematic to identify the following:

- **Control modules the vehicle is equipped with**
- **The control module's ground, B+, and Ignition circuit terminal IDs and connectors**

NOTE: Some control module ground circuits may require up to 20 min after the ignition is turned off before achieving a resistance reading of less than 5 ohms. In most cases the readings will drop below 20 ohms within 1 min indicating the control module is going to sleep.

1. Ignition OFF and all vehicle systems OFF, disconnect the harness connectors at the appropriate control module. It may take up to 2 min for all vehicle systems to power down.
2. Test for less than 10 ohms between each ground circuit terminal and ground.
   - **If 10 ohms or greater**
   1. Ignition OFF.
   2. Test for less than 2 ohms in the ground circuit end to end.
      - If 2 ohms or greater, repair the open/high resistance in the circuit.
      - If less than 2 ohms, repair the open/high resistance in the ground connection.
   - **If less than 10 ohms**
3. If equipped, verify a test lamp illuminates between each B+ circuit terminal and ground.
   - **If the test lamp does not illuminate and the circuit fuse is good**
   1. Ignition OFF.
   2. Test for less than 2 ohms in the B+ circuit end to end.
      - If 2 ohms or greater, repair the open/high resistance in the circuit.
      - If less than 2 ohms, verify the fuse is not open and there is voltage at the fuse.
   - **If the test lamp does not illuminate and the circuit fuse is open**
   1. Ignition OFF.
   2. Test for infinite resistance between the B+ circuit and ground.
      - If less than infinite resistance, repair the short to ground on the circuit.
      - If infinite resistance, replace the appropriate control module.
   - **If the test lamp illuminates**
4. Ignition ON.
5. If equipped, verify a test lamp illuminates between each ignition circuit terminal and ground.
   - **If the test lamp does not illuminate and the circuit fuse is good**
   1. Ignition OFF.
   2. Test for less than 2 ohms in the ignition circuit end to end.
      - If 2 ohms or greater, repair the open/high resistance in the circuit.
      - If less than 2 ohms, verify the fuse is not open and there is voltage at the fuse.
   - **If the test lamp does not illuminate and the circuit fuse is open**
   1. Ignition OFF.

2. Test for infinite resistance between the ignition circuit and ground.
    - If less than infinite resistance, repair the short to ground on the circuit.
    - If infinite resistance, replace the appropriate control module.
- **If the test lamp illuminates**

6. Replace the control module.

Repair Instructions

Perform the **Diagnostic Repair Verification** after completing the repair.

Control Module References for control module replacement, programming and setup

DTC B1516

Diagnostic Instructions

- Perform the **Diagnostic System Check - Vehicle** prior to using this diagnostic procedure.
- Review **Strategy Based Diagnosis** for an overview of the diagnostic approach.
- **Diagnostic Procedure Instructions** provides an overview of each diagnostic category.

DTC Descriptors

DTC B1516 08

Battery Current Sensor Performance - Signal Invalid

DTC B1516 66

Battery Current Sensor Incorrect Mounting

Diagnostic Fault Information

Circuit	Short to Ground	Open/High Resistance	Short to Voltage	Signal Performance
5 V Reference	B1516 08	B1516 08	B1516 08	-
Signal	B1516 08	B1516 08	B1516 08	B1516 08, B1516 66
Low Reference	-	B1516 08	-	-

Circuit/System Description

The battery current sensor is a 3-wire hall effect current sensor. The body control module (BCM) supplies 5 V and ground to the battery current sensor. The battery current sensor measures the amount of current flowing to or from the battery, and supplies a pulse width modulation (PWM) signal to the BCM.

Conditions for Running the DTC

B1516 08

The BCM is awake.

B1516 66

- The BCM is awake.
- The engine is OFF.

Conditions for Setting the DTC

B1516 08

The battery current signal is less than 4 percent or greater than 96 percent duty cycle for 2 minutes.

B1516 66

The battery current polarity is positive for 2 minutes.

Action Taken When the DTC Sets

The regulated voltage control is disabled.

Conditions for Clearing the DTC

The DTC passes when the battery current returns to the normal range for 15 seconds.

Diagnostic Aids

DTC B1516 08 could be set by overcharging with a battery charger or jump starting.

Reference Information

Schematic Reference

Starting and Charging Schematics

Connector End View Reference

COMPONENT CONNECTOR END VIEWS - INDEX

Description and Operation

Charging System Description and Operation

Electrical Information Reference

- **Circuit Testing**
- **Connector Repairs**
- **Testing for Intermittent Conditions and Poor Connections**
- **Wiring Repairs**

Scan Tool Reference

Control Module References for scan tool information

Circuit/System Testing

B1516 08

1. Ignition OFF and all vehicle systems OFF, disconnect the harness connector at the B18 Battery Current Sensor. It may take up to 2 minutes for all vehicle systems to power down.
2. Test for less than 30 ohms between the low reference circuit terminal B and ground.
    - **If 30 ohms or greater**
    1. Ignition OFF, disconnect the X5 harness connector at the K9 Body Control Module.
    2. Test for less than 2 ohms in the low reference circuit end to end.
        - If 2 ohms or greater, repair the open/high resistance in the circuit.
        - If less than 2 ohms, replace the K9 Body Control Module.
    - **If less than 30 ohms**
3. Ignition ON.
4. Test for 4.8-5.2 V between the 5 V reference circuit terminal A and ground.
    - **If less than 4.8 V**
    1. Ignition OFF, disconnect the X4 harness connector at the K9 Body Control Module.
    2. Test for infinite resistance between the 5 V reference circuit and ground.
        - If less than infinite resistance, repair the short to ground on the circuit.
        - If infinite resistance
    3. Test for less than 2 ohms in the 5V reference circuit end to end.
        - If 2 ohms or greater, repair the open/high resistance in the circuit.
        - If less than 2 ohms, replace the K9 Body Control Module.
    - **If greater than 5.2 V**
    1. Ignition OFF, disconnect the X4 harness connector at the K9 Body Control Module, ignition ON.
    2. Test for less than 1 V between the 5 V reference circuit and ground.
        - If 1 V or greater, repair the short to voltage on the circuit.
        - If less than 1 V, replace the K9 Body Control Module.
    - **If between 4.8-5.2 V**
5. Test for 4.8-5.2 V between the signal circuit terminal C and ground.
    - **If less than 4.8 V**

1. Ignition OFF, disconnect the X4 harness connector at the K9 Body Control Module.
2. Test for infinite resistance between the signal circuit and ground.
    - If less than infinite resistance, repair the short to ground on the circuit.
    - If infinite resistance
3. Test for less than 2 ohms in the signal circuit end to end.
    - If 2 ohms or greater, repair the open/high resistance in the circuit.
    - If less than 2 ohms, replace the K9 Body Control Module.

- **If greater than 5.2 V**

1. Ignition OFF, disconnect the X4 harness connector at the K9 Body Control Module, ignition ON.
2. Test for less than 1 V between the signal circuit and ground.
    - If 1 V or greater, repair the short to voltage on the circuit.
    - If less than 1 V, replace the K9 Body Control Module.

- **If between 4.8-5.2 V**

6. Test or replace the B18 Battery Current Sensor.

B1516 66

1. Verify that the B18 Battery Current Sensor is installed securely around the negative battery cable, with the tape tab pointing away from the negative terminal on the C1 Battery.
    - **If the B18 Battery Current Sensor is not installed correctly**

      Remove and reinstall the B18 Battery Current Sensor properly.

    - **If the B18 Battery Current Sensor is installed correctly**
2. Replace the B18 Battery Current Sensor.

Repair Instructions

Perform the **Diagnostic Repair Verification** after completing the repair.

- **Battery Positive and Negative Cable Replacement**
- **Control Module References** for BCM replacement, programming, and setup.

DTC B151A

Diagnostic Instructions

- Perform the **Diagnostic System Check - Vehicle** prior to using this diagnostic procedure.
- Review **Strategy Based Diagnosis** for an overview of the diagnostic approach.
- **Diagnostic Procedure Instructions** provides an overview of each diagnostic category.

DTC Descriptor

DTC B151A 58

Battery Capacity Performance

Circuit/System Description

The body control module (BCM) monitors the battery voltage level during an engine crank event to detect a low battery voltage condition.

Conditions for Running the DTC

The vehicle is ON

Conditions for Setting the DTC

A minimum crank battery voltage is less than the minimum crank battery voltage threshold for 16 consecutive crank events.

Action Taken When the DTC Sets

A driver information center message is displayed.

Conditions for Clearing the DTC

The DTC will clear if the minimum crank voltage is greater than the minimum crank voltage threshold during a crank event.

Reference Information

Schematic Reference

Starting and Charging Schematics

Connector End View Reference

COMPONENT CONNECTOR END VIEWS - INDEX

Description and Operation

Charging System Description and Operation

Electrical Information Reference

- **Circuit Testing**
- **Connector Repairs**
- **Testing for Intermittent Conditions and Poor Connections**
- **Wiring Repairs**

Scan Tool Reference

Control Module References for scan tool information

Circuit/System Verification

1. Verify DTC P0621 or P0622 is not set.
   - **If DTC P0621 or P0622 is set**

     Refer to **DTC P0621**, or **DTC P0622**

   - **If DTC P0621 or P0622 is not set**
2. Perform the **Battery Inspection/Test**.

DTC B1527

Diagnostic Instructions

- Perform the **Diagnostic System Check - Vehicle** prior to using this diagnostic procedure.
- Review **Strategy Based Diagnosis** for an overview of the diagnostic approach.
- **Diagnostic Procedure Instructions** provides an overview of each diagnostic category.

DTC Descriptor

DTC B1527 00

Parasitic Load

Circuit/System Description

The body control module (BCM) monitors the state of charge of the electrical system.

Conditions for Running the DTC

The ignition is in Accessory or Run mode.

Conditions for Setting the DTC

The state of charge at ignition ON is 30% lower than when the engine was running and battery drain is more than 2 A.

Action Taken When the DTC Sets

There is no battery telltale illuminated or DIC message displayed.

Conditions for Clearing the DTC

- The DTC will clear if the fault does not return after 50 consecutive ignition cycles.
- The DTC will clear when run state of charge is greater than or equal to 80%.

Reference Information

Schematic Reference

Starting and Charging Schematics

Connector End View Reference

COMPONENT CONNECTOR END VIEWS - INDEX

Description and Operation

Charging System Description and Operation

Electrical Information Reference

- **Circuit Testing**
- **Connector Repairs**
- **Testing for Intermittent Conditions and Poor Connections**
- **Wiring Repairs**

Scan Tool Reference

Control Module References for scan tool information

Circuit/System Verification

Refer to **Battery Electrical Drain/Parasitic Load Test**.

DTC P0615, P0616, OR P0617

Diagnostic Instructions

- Perform the **Diagnostic System Check - Vehicle** prior to using this diagnostic procedure.
- Review **Strategy Based Diagnosis** for an overview of the diagnostic approach.
- **Diagnostic Procedure Instructions** provides an overview of each diagnostic category.

DTC Descriptors

DTC P0615

Starter Relay Control Circuit

DTC P0616

Starter Relay Control Circuit Low Voltage

DTC P0617

Starter Relay Control Circuit High Voltage

Diagnostic Fault Information

Circuit	Short to Ground	Open/High Resistance	Short to Voltage	Signal Performance
Control	P0616	P0615	P0617	-
Ground	-	P0615	-	-

Circuit/System Description

When the ignition switch is placed in the CRANK position, a discrete signal is supplied to the body control module (BCM) notifying it that the ignition is in the CRANK position. The BCM then sends a message to the engine control module (ECM) that crank has been requested. The ECM then verifies that the clutch pedal is depressed or the transmission is in Park/Neutral. If it is, the ECM then supplies 12 V to the control circuit of the starter relay. When this occurs, battery voltage is supplied through the switch of the starter relay to the starter motor.

Conditions for Running the DTC

- The ignition is in the CRANK position.
- The system voltage is between 9.5-18 V.

Conditions for Setting the DTC

The ECM detects improper voltage on the control circuit of the starter relay.

Action Taken When the DTC Sets

DTC P0615, P0616, and P0617 are C type DTCs.

Conditions for Clearing the DTC

DTC P0615, P0616, and P0617 are C type DTCs.

Reference Information

Schematic Reference

Starting and Charging Schematics

Connector End View Reference

COMPONENT CONNECTOR END VIEWS - INDEX

Description and Operation

Starting System Description and Operation

Electrical Information Reference

- **Circuit Testing**
- **Connector Repairs**
- **Testing for Intermittent Conditions and Poor Connections**
- **Wiring Repairs**

DTC Type Reference

Powertrain Diagnostic Trouble Code (DTC) Type Definitions

Scan Tool Reference

Control Module References for scan tool information

Circuit/System Testing

1. Ignition OFF and all vehicle systems OFF, disconnect the KR27 Starter Relay. It may take up to 2 minutes for all vehicle systems to power down.
2. Test for less than 10 ohms between the ground circuit terminal 86 and ground.
    - **If 10 ohms or greater**
    1. Ignition OFF.
    2. Test for less than 2 ohms in the ground circuit end to end.
        - If 2 ohms or greater, repair the open/high resistance in the circuit.
        - If less than 2 ohms, repair the open/high resistance in the ground connection.
    - **If less than 10 ohms**
3. Ignition ON.
4. Verify a test lamp illuminates between the B+ circuit terminal 30 and ground.
    - **If the test lamp does not illuminate and the circuit fuse is good**
    1. Ignition OFF.
    2. Test for less than 2 ohms in the B+ circuit end to end.
        - If 2 ohms or greater, repair the open/high resistance in the circuit.
        - If less than 2 ohms, verify the fuse is good and there is voltage at the fuse.
    - **If the test lamp does not illuminate and the circuit fuse is open**

1. Ignition OFF.
2. Test for infinite resistance between the B+ circuit and ground.
    - If less than infinite resistance, repair the short to ground on the circuit.
    - If infinite resistance
3. Test for infinite resistance between the control circuit terminal 87 and ground.
    - If less than infinite resistance, repair the short to ground on the circuit.
    - If infinite resistance, replace the KR27 Starter Relay.

- **If the test lamp illuminates**

5. Connect a test lamp between the control circuit terminal 85 and the ground circuit terminal 86.
6. Verify the test lamp turns ON and OFF when commanding the KR27 Starter Relay ON and OFF with a scan tool.

- **If the test lamp is always OFF**

1. Ignition OFF, disconnect the harness connector at the K20 Engine Control Module.
2. Test for infinite resistance between the control circuit and ground.
    - If less than infinite resistance, repair the short to ground on the circuit.
    - If infinite resistance
3. Test for less than 2 ohms in the control circuit end to end.
    - If 2 ohms or greater, repair the open/high resistance in the circuit.
    - If less than 2 ohms, replace the K20 Engine Control Module.

- **If the test lamp is always ON**

1. Ignition OFF, disconnect the harness connector at the K20 Engine Control Module, ignition ON.
2. Test for less than 1 V between the control circuit and ground.
    - If 1 V or greater, repair the short to voltage on the circuit.
    - If less than 1 V, replace the K20 Engine Control Module.

- **If the test lamp turns ON and OFF**

7. Ignition ON, connect a 30 A fused jumper wire between the B+ circuit terminal 30 and the control circuit terminal 87.
8. Verify the M64 starter motor is activated.

- **If the M64 starter motor does not activate**

1. Ignition OFF, disconnect the X1 harness connector at the M64 starter motor.
2. Test for infinite resistance between the control circuit terminal X1 1 and ground.
    - If less than infinite resistance, repair the short to ground on the circuit.
    - If infinite resistance
3. Test for less than 2 ohms in the control circuit end to end.
    - If 2 ohms or greater, repair the open/high resistance in the circuit.
    - If less than 2 ohms, replace the M64 starter motor.

- **If the M64 starter motor activates**

9. Test or replace the KR27 Starter Relay.

Component Testing

Relay Test

1. Ignition OFF, disconnect the KR27 Starter Relay.
2. Test for 60-180 ohms between terminals 85 and 86.
   - **If less than 60 or greater than 180 ohms**

     Replace the relay.

   - **If between 60-180 ohms**
3. Test for infinite resistance between the terminals listed below:
   - 30 and 86
   - 30 and 87
   - 30 and 85
   - 85 and 87
   - **If less than infinite resistance**

     Replace the relay.

   - **If infinite resistance**
4. Install a 20 A fused jumper wire between relay terminal 85 and 12 V. Install a jumper wire between relay terminal 86 and ground.
5. Test for less than 2 ohms between terminals 30 and 87.
   - **If 2 ohms or greater**

     Replace the relay.

   - **If less than 2 ohms**
6. All OK

Repair Instructions

Perform the **Diagnostic Repair Verification** after completing the repair.

- **Relay Replacement (Within an Electrical Center)** , **Relay Replacement (Attached to Wire Harness)**
- **Starter Replacement (1.4L LUV)**, **Starter Replacement (1.8L LUW and LWE)**
- **Control Module References** for ECM replacement, programming, and setup.

DTC P0621

Diagnostic Instructions

- Perform the **Diagnostic System Check - Vehicle** prior to using this diagnostic procedure.

- Review **Strategy Based Diagnosis** for an overview of the diagnostic approach.
- **Diagnostic Procedure Instructions** provides an overview of each diagnostic category.

DTC Descriptor

DTC P0621

Generator L-Terminal Circuit

Diagnostic Fault Information

Circuit	Short to Ground	Open/High Resistance	Short to Voltage	Signal Performance
B+	P0622	P0621	-	-
Control - L Terminal	P0621	P0621	P0621	-
Signal - F Terminal	P0622	P0622	P0622	P0622

Circuit/System Description

The engine control module (ECM) uses the generator turn ON control circuit to control the load of the generator on the engine. A high side driver in the ECM applies a duty cycled voltage to the voltage regulator. The duty cycle controls the voltage regulator to turn the field circuit ON and OFF. The ECM monitors the state of the generator turn ON control circuit. The ECM should detect low voltage on the generator turn on control circuit when the ignition is ON and the engine is OFF, or when the charging system malfunctions. With the engine running, the ECM should detect high voltage when the duty cycle voltage is commanded high and a low voltage when the duty cycle voltage is commanded low. on the generator turn on control circuit.

Conditions for Running the DTC

- Ignition ON, engine OFF (Prior to Ignition ON, the ignition must have been OFF for at least 5 seconds)
- The engine is running for the run test

Conditions for Setting the DTC

- Ignition ON, engine OFF - The ECM detects greater than 3.5 V on the generator control circuit for 5 seconds
- Engine running - The ECM detects a low voltage for 15 seconds on the generator control circuit when the duty cycle voltage is commanded high
- Engine running - The ECM detects a high voltage for 15 seconds on the generator control circuit when the duty cycle voltage is commanded low

Action Taken When the DTC Sets

DTC P0621 is a C type DTC

Conditions for Clearing the DTC

- Ignition ON, engine OFF- Low voltage
- Engine running - A control signal duty cycle is detected

Reference Information

Schematic Reference

Starting and Charging Schematics

Connector End View Reference

COMPONENT CONNECTOR END VIEWS - INDEX

Description and Operation

Charging System Description and Operation

Electrical Information Reference

- **Circuit Testing**
- **Connector Repairs**
- **Testing for Intermittent Conditions and Poor Connections**
- **Wiring Repairs**

DTC Type Reference

Powertrain Diagnostic Trouble Code (DTC) Type Definitions

Scan Tool Reference

Control Module References for scan tool information

Circuit/System Verification

1. Operate the vehicle within the Conditions for Running the DTC. You may also operate the vehicle within the conditions that you observed from the Freeze Frame/Failure Records data.
2. Verify the DTC does not set.
    - **If the DTC sets**

      Refer to Circuit/System Testing below.

    - **If the DTC does not set**
3. All OK.

Circuit/System Testing

1. Verify a test lamp illuminates between the G13 Generator B+ circuit terminal A X1 and ground.
    - **If the test lamp does not illuminate and the circuit fuse is good**
    1. Remove the test lamp and disconnect the B+ cable at the G13 Generator.
    2. Test for less than 2 ohms in the B+ circuit end to end.
        - If 2 ohms or greater, repair the open/high resistance in the circuit.
        - If less than 2 ohms, verify the fuse is not open and there is voltage at the fuse.
    - **If the test lamp does not illuminate and the circuit fuse is open**
    1. Remove the test lamp, disconnect the battery negative cable, and disconnect the G13 Generator B+ cable.
    2. Test for infinite resistance between the B+ circuit and ground.
        - If less than infinite resistance, repair the short to ground on the circuit.
    - **If the test lamp illuminates**
2. Disconnect the X2 harness connector at the G13 Generator, ignition ON.
3. Test for 3.0- 5.5 V between the control circuit terminal 1 and ground.
    - **If less than 3.0 V**
    1. Ignition OFF, disconnect the harness connectors at the K20 Engine Control Module.
    2. Test for infinite resistance between the control circuit and ground.
        - If less than infinite resistance, repair the short to ground on the circuit.
        - If infinite resistance
    3. Test for less than 2 ohms in the control circuit end to end.
        - If greater the 2 ohms, repair the open/high resistance in the circuit.
        - If less than 2 ohms, replace the K20 Engine Control Module.
    - **If greater than 5.5 V**
    1. Ignition OFF, disconnect the harness connectors at the K20 Engine Control Module, Ignition ON.
    2. Test for less than 1 V between the control circuit and ground.
        - If greater than 1 V, repair the short to voltage on the circuit.
        - If less than 1 V, replace the K20 Engine Control Module.
    - **If between 3.0-5.5 V**
4. Test or replace the G13 Generator.

Repair Instructions

Perform the **Diagnostic Repair Verification** after completing the repair.

- **Generator Replacement (1.4L LUV)**, **Generator Replacement (1.8L LUW and LWE)**
- **Control Module References** for Engine Control Module replacement, programming, and setup

DTC P0622

Diagnostic Instructions

- Perform the **Diagnostic System Check - Vehicle** prior to using this diagnostic procedure.
- Review **Strategy Based Diagnosis** for an overview of the diagnostic approach.
- **Diagnostic Procedure Instructions** provides an overview of each diagnostic category.

DTC Descriptor

DTC P0622

Generator F-Terminal Circuit

Diagnostic Fault Information

Circuit	Short to Ground	Open/High Resistance	Short to Voltage	Signal Performance
B+	P0622	P0621	-	-
Control - L Terminal	P0621	P0621	P0621	-
Signal - F Terminal	P0622	P0622	P0622	P0622

Circuit/System Description

The engine control module (ECM) uses the generator field duty cycle signal circuit, or F-terminal circuit, to monitor the duty cycle of the generator. The generator field duty cycle signal circuit connects to high side of the field windings in the generator. A pulse width modulated (PWM) high side driver in the voltage regulator turns the field windings ON and OFF. The ECM uses the PWM signal input to determine the generator load on the engine. This allows the ECM to adjust the idle speed to compensate for high electrical loads. The ECM monitors the status of the generator field duty cycle signal circuit. When the ignition is ON and the engine is OFF, the ECM should detect a duty cycle near 0%. When the engine is running, the duty cycle should be between 5-99%.

Conditions for Running the DTC

- Ignition ON, engine OFF (Prior to Ignition ON, the ignition must have been OFF for at least 5 seconds)
- Engine running at less than 3, 000 RPM

Conditions for Setting the DTC

- DTC P0621 is not set.
- Ignition ON, engine OFF (Prior to Ignition ON, the ignition must have been OFF for at least 5 seconds), the ECM detects a PWM signal that is greater than 65% for 5 seconds
- Engine running at less than 3, 000 RPM - The ECM detects a PWM signal that is less than 5% for 30 seconds

Action Taken When the DTC Sets

DTC P0622 is a C type DTC

Conditions for Clearing the DTC

- Ignition ON, Engine OFF - Low / no PWM signal detected
- Engine running - A 5-90% duty cycle is detected

Reference Information

Schematic Reference

Starting and Charging Schematics

Connector End View Reference

COMPONENT CONNECTOR END VIEWS - INDEX

Description and Operation

Charging System Description and Operation

Electrical Information Reference

- **Circuit Testing**
- **Connector Repairs**
- **Testing for Intermittent Conditions and Poor Connections**
- **Wiring Repairs**

DTC Type Reference

Powertrain Diagnostic Trouble Code (DTC) Type Definitions

Scan Tool Reference

Control Module References for scan tool information

Circuit/System Verification

NOTE: Do not have a battery charger connected during the generator testing.

1. Engine running.
2. Verify the scan tool Engine Control Module Generator F-Terminal Signal parameter is between 5-90%.
    - **If not between 5-90%**

      Refer to Circuit/System Testing below.

    - **If between 5-90%**

3. Verify the scan tool Engine Control Module Generator F-Terminal Signal parameter changes when commanding the headlamps ON and OFF.
    - **If the parameter does not change**

      Refer to Circuit/System Testing below.

    - **If the parameter changes**
4. Operate the vehicle within the Conditions for Running the DTC. You may also operate the vehicle within the conditions that you observed from the Freeze Frame/Failure Records data.
5. Verify the DTC does not set.
    - **If the DTC sets**

      Refer to Circuit/System Testing below.

    - **If the DTC does not set**
6. All OK.

Circuit/System Testing

1. Verify a test lamp illuminates between the G13 Generator B+ circuit terminal A X1 and ground.
    - **If the test lamp does not illuminate and the circuit fuse is good**
    1. Remove the test lamp and disconnect the B+ cable at the G13 Generator.
    2. Test for less than 2 ohms in the B+ circuit end to end.
        - If 2 ohms or greater, repair the open/high resistance in the circuit.
        - If less than 2 ohms, verify the fuse is not open and there is voltage at the fuse.
    - **If the test lamp does not illuminate and the circuit fuse is open**
    1. Remove the test lamp, disconnect the battery negative cable, and disconnect the G13 Generator B+ cable.
    2. Test for infinite resistance between the B+ circuit and ground.
        - If less than infinite resistance, repair the short to ground on the circuit.
        - If infinite resistance, test or replace the G13 Generator.
    - **If the test lamp illuminates**
2. Disconnect the X2 harness connector at the G13 Generator, engine running.
3. Verify the scan tool Engine Control Module Generator F-Terminal Signal parameter is less than 5%.
    - **If 5% or greater**
    1. Ignition OFF, disconnect the harness connector at the K20 Engine Control Module, ignition ON.
    2. Test for less than 1 V between the signal circuit terminal 2 and ground.
        - If 1 V or greater, repair the short to voltage on the circuit.
        - If less than 1 V, replace the K20 Engine Control Module.
    - **If less than 5%**
4. Install a 3 A fused jumper wire between the signal circuit terminal 2 and B+, engine running.

5. Verify the scan tool Engine Control Module Generator F-Terminal Signal parameter is greater than 95%.
    - **If 95% or less**
    1. Ignition OFF, remove the jumper wire, disconnect the harness connector at the K20 Engine Control Module.
    2. Test for infinite resistance between the signal circuit and ground.
        - If less than infinite resistance, repair the short to ground on the circuit.
        - If infinite resistance
    3. Test for less than 2 ohms in the signal circuit end to end.
        - If 2 ohms or greater, repair the open/high resistance in the circuit
        - If less than 2 ohms, replace the K20 Engine Control Module.
    - **If greater than 95%**
6. Test or replace the G13 Generator.

Repair Instructions

Perform the **Diagnostic Repair Verification** after completing the repair.

- **Generator Replacement (1.4L LUV)**, **Generator Replacement (1.8L LUW and LWE)**
- **Control Module References** for Engine Control Module replacement, programming, and setup

SYMPTOMS - ENGINE ELECTRICAL

NOTE: The following steps must be completed before using the symptom tables.

- Perform **Diagnostic System Check - Vehicle** before using the Symptom Tables in order to verify that all of the following are true:
    - There are no DTCs set.
    - The control modules can communicate via the serial data link.
- Review the system descriptions and operations in order to familiarize yourself with the system functions. Refer to one of the following system operations:
    - **Battery Description and Operation**
    - **Charging System Description and Operation**
    - **Electrical Power Management Description and Operation**
    - **Starting System Description and Operation**

Visual/Physical Inspection

- Inspect for aftermarket devices which could affect the operation of the starting and charging systems. Refer to **Checking Aftermarket Accessories** .
- Inspect the easily accessible or visible system components for obvious damage or conditions which could cause the symptom.

Intermittent

Faulty electrical connections or wiring may be the cause of intermittent conditions. Refer to **Testing for Intermittent Conditions and Poor Connections** .

Symptom List

Refer to a symptom diagnostic procedure from the following list in order to diagnose the symptom:

- **Battery Inspection/Test**
- **Battery Electrical Drain/Parasitic Load Test**
- **Charging System Test**
- **Generator Noise Diagnosis**
- **Starter Solenoid Does Not Click**
- **Starter Solenoid Clicks, Engine Does Not Crank**
- **Engine Cranks Slowly**
- **Starter Noise Diagnosis**

BATTERY INSPECTION/TEST

Diagnostic Instructions

- Perform the **Diagnostic System Check - Vehicle** prior to using this diagnostic procedure.
- Review **Strategy Based Diagnosis** for an overview of the diagnostic approach.
- **Diagnostic Procedure Instructions** provides an overview of each diagnostic category.

Diagnostic Aids

NOTE: For Warranty repairs -

You must use regionally required battery test equipment for warranty repairs.

For accurate test results the battery must be disconnected from the vehicle and the equipment connected directly to the battery posts. When setting up the equipment, select "Out of Vehicle" and then the correct battery type (Flooded or AGM) and rated CCA (both from the battery label) must be entered.

- **Failure to obtain the correct connections during the test may result in a failed test on a good battery.**
- **Use the Out of Vehicle test (both batteries disconnected with test equipment connected directly to the post) test for each battery when testing a vehicle with dual batteries.**

Follow these instructions in order to avoid an incorrect diagnosis because of connections:

- If testing the vehicle with the battery cables still connected, wiggle the battery tester clips on the terminal. This may cut through any coating or through any oxidation that may be present on the terminal.
- If correct connections to the battery terminals in the vehicle are in doubt, perform the following steps:
  1. Disconnect the negative battery cable.
  2. Disconnect the positive battery cable.
  3. Follow the instructions for testing a removed battery.
- If the tester displays a REPLACE BATTERY or BAD CELL-REPLACE result for a battery tested in the vehicle with the battery cables connected, perform the following steps:
  1. Disconnect the negative battery cable.
  2. Disconnect the positive battery cable.

NOTE: **Always write the test code displayed by the tester on the repair order for any warranty purposes. The number is a unique code that describes the test data for a particular battery at a particular time. The test code may occasionally repeat when you retest the same battery. More often, each test will result in a different code. Use the test code from the second, or Out of Vehicle test.**

  3. Follow the instructions for testing a removed battery.
  4. Replace the battery only if the second test shows a REPLACE BATTERY or BAD CELL-REPLACE result.

     Use the test code from the second test for any warranty purposes.

Reference Information

Schematic Reference

Starting and Charging Schematics

Connector End View Reference

COMPONENT CONNECTOR END VIEWS - INDEX

Description and Operation

Starting System Description and Operation

Electrical Information Reference

- **Circuit Testing**
- **Connector Repairs**
- **Testing for Intermittent Conditions and Poor Connections**
- **Wiring Repairs**

Scan Tool Reference

Control Module References for scan tool information

Special Tools

Battery Tester, for regionally available devices, refer to **Special Tools**.

Circuit/System Testing

WARNING: Unless directed otherwise, the ignition and start switch must be in the OFF or LOCK position, and all electrical loads must be OFF before servicing any electrical component. Disconnect the negative battery cable to prevent an electrical spark should a tool or equipment come in contact with an exposed electrical terminal. Failure to follow these precautions may result in personal injury and/or damage to the vehicle or its components.

For Vehicles equipped with OnStar® (UE1) with Back Up Battery:

The Back Up Battery is a redundant power supply to allow limited OnStar® functionality in the event of a main vehicle battery power disruption to the VCIM (OnStar®module). Do not disconnect the main vehicle battery or remove the OnStar® fuse with the ignition key in any position other than OFF. Retained accessory power should be allowed to time out or be disabled (simply opening the driver door should disable retained accessory power) before disconnecting power. Disconnecting power to the OnStar® module in any way while the ignition is On or with retained accessory power activated may cause activation of the OnStar® Back-Up Battery system and will discharge and permanently damage the back-up battery. Once the Back-Up Battery is activated it will stay on until it has completely discharged. The back-up battery is not rechargeable and once activated the back-up battery must be replaced.

1. Verify the C1 Battery case is not cracked, broken, or damaged, which may be indicated by battery acid leakage.
   - **If there is any apparent damage**

     Replace the C1 Battery.

   - **If there is no damage**
2. Verify the cold cranking amperage and amperage hour rating of the C1 Battery. Refer to the manufacturer specifications on the battery label.
   - **If the C1 Battery does not meet specifications**

     Replace the C1 Battery.

- **If the C1 Battery meets specifications**

3. Verify that the battery cables are clean and tight. The battery terminal bolts should be torqued as specified in **Fastener Tightening Specifications (1.8L LUW and LWE)**, **Fastener Tightening Specifications (1.4L LUV)**.
   - **If the battery cables need to be cleaned or tightened**

     Clean as required and tighten as specified.

   - **If the battery cables are clean and tight**
4. Install the battery tester and follow directions supplied by the tester.

Repair Instructions

Perform the **Diagnostic Repair Verification** after completing the repair.

Battery Replacement

BATTERY CHARGING

Special Tools

EL 50313 Battery Tester

For equivalent regional tools, refer to **Special Tools**.

Diagnostic Aids

- For best results, use an automatic taper-rate battery charger with a voltage capability of 16 V.
- The charging area should be well ventilated.
- Do not charge a battery that appears to be frozen. Allow the battery to warm to room temperature and test it using the EL 50313 before charging.

Battery State of Charge

NOTE: Using voltage to determine the batteries state of charge is only accurate after the battery has been at rest for 24 hours. This is enough time for the acid in each cell to equalize. If the battery has been charged or discharged in the past 24 hours, the battery state of charge will only be an estimate.

The maintenance-free batteries state of charge is estimated by reading the voltage of the battery across the battery terminals. Because the voltage is affected by current flow into or out of the battery, the engine must be stopped and all electrical loads turned OFF, including parasitic loads, when checking the voltage. The voltage can also be affected if the battery has just been charged or discharged, so it is important to consider what has happened to the battery in the time just before testing. Use the following procedure to determine the battery's state of charge:

1. Be sure all electrical loads are turned OFF.
2. Determine whether the battery has been used in a vehicle or charged within the past 12 hours.
   - If the answer is no, the terminal voltage will be stabilized and no action is necessary before reading the voltage. Skip to step 3.
   - If the answer is yes, terminal voltage will not be stabilized and you should wait 12 hours since the last time the battery was used.
3. Estimate the battery temperature by determining the average temperature to which the battery has been exposed for the past 12 hours.

NOTE: The table is accurate to 10 % only after the battery has been at rest for 12 hours.

4. Measure the battery voltage at the battery terminals. Refer to the following table to determine the state of charge according to the estimated battery temperature:

Battery Voltage	% Charge at 0°C (32°F)	% Charge at 25°C (75°F)
12.75 V	100%	100%
12.7 V	100%	90%
12.6 V	90%	75%
12.45 V	75%	65%
12.2 V	65%	45%
12.0 V	40%	20%

Use the state of charge information as follows:

- A battery with a state of charge that is below 65% must always be recharged before returning it to service or continuing storage.
- A battery with a state of charge that is 65% or greater is generally considered to be charged enough in order to be returned to normal service or in order to continue storage. However, if the battery is being used in slow traffic or with short drive times, or if the temperature is very hot or very cold, the battery should be fully charged, to at least 90%, before returning it to service or continuing storage.

Charging Time Required

The time required to charge a battery will vary depending upon the following factors:

- The battery charger capacity-The higher the charger amperage, the less time it will take to charge the battery.
- The state of charge of the battery-A completely discharged battery requires more than twice as much charging time as a half charged battery. In a discharged battery with a voltage below 11 V, the battery has a very high internal resistance and may only accept a very low current at first. Later, as the charging current causes the acid content to increase in the electrolyte, the charging current will increase. Extremely discharged batteries may not activate the reversed voltage protection in some chargers. Refer to the manufacturer's instructions for operating this circuitry.

- The temperature of the battery-The colder the battery is, the more time it takes to recharge the battery. The charging current accepted by a cold battery is very low at first. As the battery warms, the charging current will increase.

Charging Procedure

CAUTION: Turn OFF the ignition when connecting or disconnecting the battery cables, the battery charger or the jumper cables. Failure to do so may damage the ECM/PCM or other electronic components.

CAUTION: Refer to Fastener Caution .

When charging side-terminal batteries with the battery cables connected, connect the charger to the positive cable bolt and to a ground located away from the battery. When charging side-terminal batteries with the battery cables disconnected, install the battery side terminal adapters and connect the charger to the adapters.

Tighten

Tighten the battery side terminal adapters to 15 (11 lb ft).

Use the following procedure to charge the battery:

1. Turn OFF the charger.
2. Ensure that all of the battery terminal connections are clean and tight.
3. Connect the charger positive lead to the battery positive terminal on the battery or the remote jumper stud underhood.

CAUTION: Do not connect the negative charger lead to the housings of other vehicle electrical accessories or equipment. The action of the battery charger may damage such equipment.

4. Connect the negative charger lead to a solid engine ground or to a ground stud in the engine compartment that is connected directly to the battery negative terminal, but away from the battery. If the negative battery cable is disconnected and a terminal adapter is being used, connect directly to the adapter.
5. Turn ON the charger and set to the highest setting for normal charging.
6. Inspect the battery every half hour after starting the battery charger.
   - Charge the battery until the taper-rate charger indicates that the battery is fully charged.
   - Estimate the battery temperature by feeling the side of the battery. If it feels hot to the touch or its temperature is over 45°C (125°F), discontinue charging and allow the battery to cool before resuming charging.
7. After charging, test the battery. Refer to **Battery Inspection/Test**.

BATTERY ELECTRICAL DRAIN/PARASITIC LOAD TEST

12 V Battery

The following procedure is for the 12 V battery only.

Diagnostic Instructions

- Perform the **Diagnostic System Check - Vehicle** prior to using this diagnostic procedure.
- Review **Strategy Based Diagnosis** for an overview of the diagnostic approach.
- **Diagnostic Procedure Instructions** provides an overview of each diagnostic category.

Circuit/System Description

Components most likely to cause a parasitic draw on the vehicles battery are switches, relays, and control modules. After the ignition is turned OFF the control modules will begin to go to sleep shut OFF). All control modules do not go to sleep at the same time, some may take up to 30 min or longer after turning the ignition off before going to sleep, like the HVAC and body control modules. Others such as the ON Star and keyless entry control modules may periodically wake up then go back to sleep. These are all normal conditions.

Diagnostic Aids

- Rule out any possible aftermarket equipment causing an unacceptable parasitic current drain. Aftermarket accessories installed into the courtesy lamp circuit can cause the inadvertent power timer in the body control module (BCM) to keep resetting. This may cause the BCM to remain awake and cause a current drain on the battery.
- Rule out customer driving habits such as regular short trips that do not allow enough time to properly charge the battery. Refer to **Battery Description and Operation**.
- Verify that the battery and charging system are in proper working order. Refer to **Battery Charging**, and **Charging System Test**.
- A battery discharging for no apparent reason while the vehicle is parked can be caused by an intermittent draw, such as a module waking up, or a continuous draw, such as a dome light or stuck relay.
- Some systems and modules such as OnStar®, and regulated voltage control, if equipped, are designed to wake up, perform a task, and go back asleep at regular intervals. Refer to **Body Control System Description and Operation** for the system or modules description and operation.
- An engine off natural vacuum evaporative test can occur if the engine control module ECM) determines the drive cycle has met the appropriate criteria immediately after key off. The ECM will stay awake and the vent solenoid will stay energized for as long as 45 min. The typical current draw for this is about 1 A.
- Digital OnStar generation 6 and later vehicle communication interface module do not "wake up" every 10 min for the first 48 h as the generation 5 and prior. generation 6 and later vehicle communication interface module current draw is very low, less than 40 mA, so the OnStar system is left in that state for up to the first 48 h. Parasitic draw of up to 40 mA with an occasional spike as high as 80 mA through the vehicle communication interface module for the first 48 h is normal.
- Some automatic climate control systems can remain in a semi awake state for up to three hours, actual draw amounts vary by vehicle platform but are typically not greater than 50 mA.
- An extremely low mA current level is consumed by the remote keyless entry receiver for monitoring purposes, actual system wake up only occurs when the fobs for the vehicle are used. When other devices on the same remote keyless entry operating frequency are activated, such as the 4 tire pressure monitoring

sensors and other vehicle FOBs in the vicinity, the remote keyless entry receiver will have a 100 mA spike. These spikes are normal and occur too briefly to have a significant effect on battery drain. Competing signals may cause remote keyless entry performance issues such as jamming but should not cause excessive battery draw.

- If an excessive current draw is not present during initial testing, continue periodic testing over a 1-2 hour period to see if the current draw increases and stays above an unacceptable level.

NOTE: The battery specification listed below is a generic specification. Refer to the label on the original battery when testing the battery.

- The battery run down time will vary depending on the batteries reserve capacity. If the reserve capacity is higher, then the battery run down time may be longer. If the reserve capacity is lower, then the battery run down time may be shorter. The graph below indicates roughly how many days a 690 cold cranking amperage battery with a 110 min reserve capacity starting at 80% state of charge will last with a constant current draw until it reaches 50% state of charge. Differences in battery reserve capacity and temperature will affect the results.

Current Drain	Days
25 mA	33
50 mA	16.5
75 mA	11
100 mA	8.25
250 mA	3.3
500 mA	1.65
750 mA	1
1 A	0.8
2 A	0.4

Reference Information

Schematic Reference

Control Module References

Connector End View Reference

COMPONENT CONNECTOR END VIEWS - INDEX

Electrical Information Reference

- **Circuit Testing**
- **Testing for Intermittent Conditions and Poor Connections**
- **Connector Repairs**
- **Wiring Repairs**

Scan Tool Reference

Control Module References for scan tool information

Special Tools

EL 38758 Parasitic Draw Test Switch

For equivalent regional tools, refer to **Special Tools**.

Circuit/System Verification

NOTE:

- **Most vehicle systems will go to sleep within 30 min but it can take up to 2 h before all systems power down allowing the parasitic draw test to pass. An occasional increase in the parasitic draw is normal as long as it returns within 1 s.**
- **Closing the door latches/ajar switch while leaving the doors open is recommended, this allows the vehicle systems to perform in a "doors closed" mode while allowing vehicle interior access that may be needed to complete the diagnostic steps.**
- **Locking doors will arm the vehicle content theft deterrent system if equipped. Failure to arm the system may cause a theft system fault to not be present during testing.**
- **There are many things that can prevent the vehicle from completely going to sleep and passing the parasitic draw test. Make sure all the conditions listed below are met before performing the parasitic current draw test.**
  - **Ignition OFF**
  - **Key out of the ignition switch - when not equipped with keyless access and start**
  - **Retained Accessory Power OFF - open and close the driver door after ignition OFF**
  - **Scan tool not communicating with a vehicle control module - in some cases it may need to be disconnected from the DLC**
  - **All access doors closed**
  - **Headlamps OFF - auto headlamps disabled**
  - **Any delay lighting OFF**
  - **If equipped with an under hood lamp disable it**
  - **HVAC after blow OFF**
  - **Any accessory that can work with ignition OFF inactive or OFF**
  - **Wait up to 2 min or longer, after all other listed conditions are met**

Using an Inductive Pickup Probe

1. Connect an inductive pickup probe to the negative battery cable that can read down to 1 mA.
2. Ignition OFF, as the vehicle systems shut down test for less than 30 mA of parasitic current drain.
    - If greater than the specified range, refer to Circuit/System Testing below.

Using the EL 38758 Parasitic Draw Test Switch

WARNING: Refer to Battery Disconnect Warning .

CAUTION: When a fused jumper wire or digital multimeter is connected to the test switch terminals, always turn the test switch ON before opening any access door, turning the ignition on, or turning any accessory on. This is to prevent damaging the jumper wire or digital multimeter fuse.

NOTE: The switch knob on the EL 38758 switch is marked ON and OFF. When the switch knob is in the ON position, the circuit is closed and electrical current will pass through the switch. When the switch knob is in the OFF position, the circuit is open and electrical current will not pass through the switch.

1. Ignition OFF, disconnect the battery negative cable from the battery. Refer to **Battery Negative Cable Disconnection and Connection**.
2. Turn the **EL 38758** switch knob to the OFF position.
3. Install the male end of the **EL 38758** switch to the battery ground terminal.
4. Install the battery negative cable to the female end of the **EL 38758** switch.
5. Turn the **EL 38758** switch knob to the ON position.
6. Road test the vehicle and activate all of the accessories such as the radio and air conditioning.
7. Ignition OFF, connect a 10 A fused jumper wire to the test switch tool terminals.
8. Turn the **EL 38758** switch knob to the OFF position. The current now flows through the jumper wire.
9. Check the fuse in the jumper wire. The fuse should be OK.
    - Failed: If the jumper wire fuse is blown, refer to Circuit/System Testing below.
    - Passed
10. Turn the **EL 38758** switch knob to the ON position. Remove the fused jumper wire.
11. Connect a DMM set to the 10 A DC scale between the test switch tool terminals.
12. Turn the **EL 38758** switch knob to the OFF position. The current now flows through the DMM.
13. As the vehicle systems shut down test for less than 30 mA of parasitic current drain.
    - If greater than the specified range, refer to Circuit/System Testing below.

Circuit/System Testing

NOTE:

- **Removing or installing a fuse, relay, or connector, to determine the area causing high parasitic draw may wake up control modules. You must wait for the control modules to go back to sleep before retesting. It is best to install any removed or disconnected components after the diagnosis is completed.**
- **Fuses for power mode master components such as the BCM should be removed last to avoid misdiagnosis.**
- **If a scan tool is connected to the DLC, either disconnect it or subtract the scan tool current draw from the DMM reading to get the actual vehicle parasitic current draw.**

If the vehicle has an unacceptable amount of parasitic current draw, remove each fuse one at a time until the current draw falls to an acceptable level. A drop of more than 10-20 mA, when disabling a single system or circuit, is an indication of an overly high current draw that could be causing the battery drain. Refer to **Power Distribution Schematics** to diagnose exactly which circuit of the suspect system is causing the high parasitic drain. The following is a list of common components that could cause a high current draw:

- Stuck switch
- Stuck relay
- Control module

Repair Instructions

Perform the **Diagnostic Repair Verification** after completing the diagnostic procedure.

Control Module References for control module replacement, programming and setup

CHARGING SYSTEM TEST

Diagnostic Instructions

- Perform the **Diagnostic System Check - Vehicle** prior to using this diagnostic procedure.
- Review **Strategy Based Diagnosis** for an overview of the diagnostic approach.
- **Diagnostic Procedure Instructions** provides an overview of each diagnostic category.

Diagnostic Fault Information

Circuit	Short to Ground	Open/High Resistance	Short to Voltage	Signal Performance
B+	P0622	P0621	-	-
Control - L Terminal	P0621	P0621	P0621	-
Signal - F Terminal	P0622	P0622	P0622	P0622

Circuit/System Description

The engine control module (ECM) uses the generator turn ON control circuit to control the load of the generator on the engine. A high side driver in the ECM applies a duty cycled voltage to the voltage regulator. The duty cycle controls the voltage regulator to turn the field circuit ON and OFF. The ECM monitors the state of the generator turn ON control circuit. The ECM should detect low voltage on the generator turn on control circuit when the ignition is ON and the engine is OFF, or when the charging system malfunctions. With the engine running, the ECM should detect high voltage when the duty cycle voltage is commanded high and a low voltage when the duty cycle voltage is commanded low on the generator turn on control circuit.

The engine control module (ECM) uses the generator field duty cycle signal circuit, or F-terminal circuit, to monitor the duty cycle of the generator. The generator field duty cycle signal circuit connects to high side of the field windings in the generator. A pulse width modulated (PWM) high side driver in the voltage regulator turns the field windings on and off. The ECM uses the PWM signal input to determine the generator load on the engine. This allows the ECM to adjust the idle speed to compensate for high electrical loads. The ECM monitors the status of the generator field duty cycle signal circuit. When the ignition is ON and the engine is off, the ECM should detect a duty cycle near 0%. When the engine is running, the duty cycle should be between 5-99%.

Reference Information

Schematic Reference

Starting and Charging Schematics

Connector End View Reference

COMPONENT CONNECTOR END VIEWS - INDEX

Description and Operation

Charging System Description and Operation

Electrical Information Reference

- **Circuit Testing**
- **Connector Repairs**
- **Testing for Intermittent Conditions and Poor Connections**
- **Wiring Repairs**

Circuit/System Verification

NOTE: Do not have a battery charger connected during the generator testing.

1. Ignition ON.
2. Verify that no G13 Generator or B18 Battery Current Sensor DTCs are set that would cause a charging system concern.
    - **If DTCs are set**

Refer to **Diagnostic Trouble Code (DTC) List - Vehicle** .

- **If no DTCs are set**

3. Verify the scan tool Body Control Module Battery Voltage parameter is 12 V or greater.
   - **If less than 12 V**

     Refer to **Battery Inspection/Test**.

   - **If 12 V or greater**
4. Engine running, all accessories OFF.
5. Verify the scan tool Body Control Module Battery Voltage parameter continually increases when controlling the Body Control Module Generator Regulator Setpoint from 10% to 80% with a scan tool. It may take up to 10 seconds for the battery voltage to stabilize between each setpoint change.
   - **If the battery voltage does not continually increase**

     Refer to Circuit/System Testing below.

   - **If the battery voltage continually increases**
6. All OK.

Circuit/System Testing

NOTE: You must perform the Circuit/System Verification before proceeding with Circuit/System Testing.

1. Ignition OFF.
2. Test for less than 2 ohms between the G13 Generator housing and battery negative terminal.
   - **If 2 ohms or greater**

     Repair the open/high resistance in the circuit.

   - **If less than 2 ohms**
3. Verify a test lamp illuminates between the G13 Generator B+ circuit terminal A X1 and ground.
   - **If the test lamp does not illuminate and the circuit fuse is good**
   1. Remove the test lamp and disconnect the B+ cable at the G13 Generator.
   2. Test for less than 2 ohms in the B+ circuit end to end.
      - If 2 ohms or greater, repair the open/high resistance in the circuit.
      - If less than 2 ohms, verify the fuse is not open and there is voltage at the fuse.
   - **If the test lamp does not illuminate and the circuit fuse is open**
   1. Remove the test lamp, disconnect the battery negative cable, and disconnect the G13 Generator B+ cable.
   2. Test for infinite resistance between the B+ circuit and ground.

- If less than infinite resistance, repair the short to ground on the circuit.
- If infinite resistance, test or replace the G13 Generator.

- **If the test lamp illuminates**

4. Test or replace the G13 Generator.

Repair Instructions

Perform the **Diagnostic Repair Verification** after completing the repair.

Generator Replacement (1.4L LUV), **Generator Replacement (1.8L LUW and LWE)**

GENERATOR NOISE DIAGNOSIS

Diagnostic Instructions

- Perform the **Diagnostic System Check - Vehicle** prior to using this diagnostic procedure.
- Review **Strategy Based Diagnosis** for an overview of the diagnostic approach.
- **Diagnostic Procedure Instructions** provides an overview of each diagnostic category.

Diagnostic Aids

Noise from a generator may be due to electrical or mechanical noise. Electrical noise or magnetic whine usually varies with the electrical load placed on the generator and is a normal operating characteristic of all generators. When diagnosing a noisy generator, it is important to remember that loose or misaligned components around the generator may transmit the noise into the passenger compartment and that replacing the generator may not solve the problem.

Circuit/System Testing

1. Start the engine. Verify the noise can be heard. Compare the concern to a similar vehicle.
2. Perform a charging system test. Verify that the generator is charging properly.
3. Inspect the generator, generator mounting, wiring harness, heater hoses, A/C lines, or other accessory equipment that may be misrouted or be the cause of noise being transmitted into the passenger compartment.
4. Ignition OFF, remove the engine drive belt.
5. Verify the generator, A/C compressor, water pump pulley, power steering pump, idler pulley, and tensioner pulley spin freely.
   - **If any of the pulleys do not spin freely**

     Replace the affected component.

   - **If all belt driven components spin freely**
6. Start the engine. Operate the engine for no longer than 30-40 seconds.
7. Verify that the noise goes away.

- **If the noise is still present**

  The generator is not the cause of the noise. Refer to **Symptoms - Engine Mechanical** , for 1.4L engine or **Symptoms - Engine Mechanical** for 1.6L or 1.8L engine.

- **If noise is no longer present**

8. Inspect for worn accessory drive components or abnormalities such as severe cracking, bumps, or missing areas in the accessory drive belt and/or misalignment of system components

Repair Instructions

Perform the **Diagnostic Repair Verification** after completing the diagnostic procedure.

STARTER SOLENOID DOES NOT CLICK

Diagnostic Instructions

- Perform the **Diagnostic System Check - Vehicle** prior to using this diagnostic procedure.
- Review **Strategy Based Diagnosis** for an overview of the diagnostic approach.
- **Diagnostic Procedure Instructions** provides an overview of each diagnostic category.

Diagnostic Fault Information

Circuit	Short to Ground	Open/High Resistance	Short to Voltage	Signal Performance
B+ (relay terminal 30)	1	1	-	-
Relay Coil Control (relay terminal 85)	P0615	P0615	2	-
Starter Control (relay terminal 87)	1	1	2	-
Ground (relay terminal 86)	-	P0615	-	-
1. Starter Solenoid Does Not Click 2. Cranks All The Time				

Circuit/System Description

When the ignition mode switch is placed in the START position, a discrete signal is supplied to the body control module (BCM) notifying it that the ignition is in the START position. The BCM then sends a serial data message to the engine control module (ECM) that crank has been requested. The ECM then verifies that the clutch is fully depressed or the automatic transmission is in Park/Neutral. If it is, the ECM then supplies 12 V to the control circuit of the starter relay. When this occurs, battery voltage is supplied through the switch of the starter relay to the starter solenoid.

Reference Information

Schematic Reference

- **Starting and Charging Schematics**
- **Automatic Transmission Controls Schematics**
- **Manual Transmission Schematics**

Connector End View Reference

COMPONENT CONNECTOR END VIEWS - INDEX

Description and Operation

Starting System Description and Operation

Electrical Information Reference

- **Circuit Testing**
- **Connector Repairs**
- **Testing for Intermittent Conditions and Poor Connections**
- **Wiring Repairs**

Scan Tool Reference

Control Module References for scan tool information

Circuit/System Verification

1. Ignition ON.
2. Verify that no ignition, starter relay, brake pedal position sensor, immobilizer, or automatic transmission DTCs are set that would cause the ECM to disable engine starting.
    - **If DTCs are set**

      Refer to **Diagnostic Trouble Code (DTC) List - Vehicle** .

    - **If no DTCs are set**
3. Verify the scan tool BCM 5 V Ignition Switch parameter is Crank Request when the ignition switch is in the crank position.
    - **If Crank Request not displayed**

      Refer to **Power Mode Mismatch** .

4. Verify the scan tool TCM Internal Mode Switch parameter displays Park with the transmission range selector in park.
    - **If the TCM Internal Mode Switch parameter does not indicate Park**

      Refer to **Transmission Internal Mode Switch Logic** for the M32 transmission.

- **If the TCM Internal Mode Switch parameter indicates Park**

5. Verify the scan tool ECM Crankshaft Position Active Counter parameter is not incrementing.
   - **If the counter increments**

     Replace the B26 Crankshaft Position Sensor.

   - **If the counter does not increment**
6. Verify the crank relay clicks and the engine begins cranking with the ignition in the Crank position.
   - **If the KR27 starter relay does not click**

     Refer to Circuit/System Testing below.

   - **If the KR27 starter relay clicks**
7. All OK.

Circuit/System Testing

1. Ignition ON.
2. Verify the scan tool ECM Ignition 1 Signal parameter is greater than 10 V.
   - **If 10 V or less**
   1. Ignition OFF, disconnect the harness connector at the K20 engine control module.
   2. Test for infinite resistance between the ignition voltage circuits and ground.
      - If less than infinite resistance, repair the short to ground on the circuit.
      - If infinite resistance
   3. Test for less than 2 ohms in the control circuit end to end.
      - If 2 ohms or greater, repair the open/high resistance in the circuit.
      - If less than 2 ohms, replace the K20 engine control module.
   - **If greater than 10 V**
3. Ignition OFF, disconnect the KR27 starter relay, ignition ON.
4. Verify that a test lamp illuminates between the B+ circuit terminal 30 and ground.
   - **If the test lamp does not illuminate and the circuit fuse is good**
   1. Ignition OFF.
   2. Test for less than 2 ohms in the B+ circuit end to end.
      - If 2 ohms or greater, repair the open/high resistance in the circuit.
      - If less than 2 ohms, verify the fuse is not open and there is voltage at the fuse.
   - **If the test lamp does not illuminate and the circuit fuse is open**
   1. Ignition OFF.
   2. Test for infinite resistance between the B+ circuit and ground.
      - If less than infinite resistance, repair the short to ground on the circuit.
      - If infinite resistance,

3. Disconnect X1 harness connector at the M64 starter motor.
4. Test for infinite resistance between the control circuit terminal 87 and ground.
    - If less than infinite resistance, repair the short to ground on the circuit.
    - If infinite resistance, replace the M64 starter motor.

- **If the test lamp illuminates**

5. Ensure the parking brake is applied and the T12 transmission is in PARK. Momentarily install a 30 A fused jumper wire between the B+ circuit terminal 30 and the control circuit terminal 87.
6. Verify the M64 starter motor is activated.
    - **If the M64 starter motor does not activate**

    1. Disconnect the X1 harness connector at the M64 starter motor.
    2. Test for less than 2 ohms in the control circuit end to end.
        - If greater the 2 ohms, repair the open/high resistance in the circuit.
        - If less than 2 ohms, replace the M64 starter motor.

    - **If the M64 starter motor activates**
7. Test or replace the KR27 starter relay.

Component Testing

Relay Test

1. Ignition OFF, disconnect the KR27 starter relay.
2. Test for 60-180 ohms between terminals 85 and 86.
    - **If less than 60 or greater than 180 ohms**

      Replace the relay.

    - **If between 60-180 ohms**
3. Test for infinite resistance between the terminals listed below:
    - 30 and 86
    - 30 and 87
    - 30 and 85
    - 85 and 87
    - **If less than infinite resistance**

      Replace the relay.

    - **If infinite resistance**
4. Install a 20 A fused jumper wire between relay terminal 85 and 12 V. Install a jumper wire between relay terminal 86 and ground.
5. Test for less than 2 ohms between terminals 30 and 87.
    - **If 2 ohms or greater**

Replace the relay.

- **If less than 2 ohms**

6. All OK

Repair Instructions

Perform the **Diagnostic Repair Verification** after completing the repair.

- **Manual Shift Detent Lever with Shaft Position Switch Assembly Replacement**
- **Relay Replacement (Within an Electrical Center)** , **Relay Replacement (Attached to Wire Harness)**
- **Crankshaft Position Sensor Replacement** for the 1.4L engine
- **Crankshaft Position Sensor Replacement** for the 1.8L engine
- **Control Module References** for ECM replacement, programming, and setup.

STARTER SOLENOID CLICKS, ENGINE DOES NOT CRANK

Diagnostic Instructions

- Perform the **Diagnostic System Check - Vehicle** prior to using this diagnostic procedure.
- Review **Strategy Based Diagnosis** for an overview of the diagnostic approach.
- **Diagnostic Procedure Instructions** provides an overview of each diagnostic category.

Reference Information

Schematic Reference

Starting and Charging Schematics

Connector End View Reference

COMPONENT CONNECTOR END VIEWS - INDEX

Description and Operation

Starting System Description and Operation

Electrical Information Reference

- **Circuit Testing**
- **Connector Repairs**
- **Testing for Intermittent Conditions and Poor Connections**
- **Wiring Repairs**

Scan Tool Reference

Control Module References for scan tool information

Circuit/System Testing

1. Ignition OFF, measure and record the battery voltage at the C1 terminals.
2. Verify the measured voltage is between 12-15 V.
   - **If voltage is less than 12 V or greater than 15 V**

     Refer to **Battery Inspection/Test**.

   - **If voltage is between 12-15V**
3. Remove the drive belts. Refer to **Drive Belt Replacement** , for the 1.4L LUV engine or **Drive Belt Replacement** for the 1.8L LUW and LWE engines.
4. Verify the crankshaft rotates rotate the crankshaft by hand using the appropriate tools.
   - **If the crankshaft does not rotate**

     Refer to **Engine Will Not Crank - Crankshaft Will Not Rotate** , for the 1.4L LUV engine or **Engine Will Not Crank - Crankshaft Will Not Rotate** for the 1.8L LUW and LWE engines.

   - **If the crankshaft rotates**
5. Verify the engine does not crank when attempting to start the vehicle.
   - **If the engine cranks**

     Inspect the engine and belt drive system for mechanical binding, seized engine, or seized generator.

   - **If the engine does not crank**
6. Verify that a test lamp illuminates between the M64 starter motor B+ terminal 1 X2 and ground.
   - **If the test lamp does not illuminate and the circuit fuse is good**
   1. Ignition OFF.
   2. Test for less than 2 ohms in the B+ circuit end to end.
      - If 2 ohms or greater, repair the open/high resistance in the circuit.
      - If less than 2 ohms, verify the fuse is not open and there is voltage at the fuse.

   - **If the test lamp does not illuminate and the circuit fuse is open**
   1. Ignition OFF.
   2. Test for greater than 100 ohms between the B+ circuit and ground.
      - If 100 ohms or less, repair the short to ground on the circuit.
      - If greater than 100 ohms, replace the M64 starter motor.

   - **If the test lamp illuminates**
7. Test for less than 0.5 V between the positive battery cable and M64 Starter Motor B+ terminal 1 X2 with the ignition in the START position.
   - **If 0.5 V or greater**

Replace the positive battery cable.

- **If less than 0.5 V**

8. Test for less than 0.5 V between the negative battery cable and the M64 starter motor case with the ignition in the START position.
   - **If 0.5 V or greater**

     Replace the negative battery cable.

   - **less than 0.5 V**
9. Replace the M64 starter motor.

Repair Instructions

Perform the **Diagnostic Repair Verification** after completing the repair.

- **Battery Positive and Negative Cable Replacement**
- **Starter Replacement (1.4L LUV)**, **Starter Replacement (1.8L LUW and LWE)**

ENGINE CRANKS SLOWLY

Diagnostic Instructions

- Perform the **Diagnostic System Check - Vehicle** prior to using this diagnostic procedure.
- Review **Strategy Based Diagnosis** for an overview of the diagnostic approach.
- **Diagnostic Procedure Instructions** provides an overview of each diagnostic category.

Reference Information

Schematic Reference

Starting and Charging Schematics

Connector End View Reference

COMPONENT CONNECTOR END VIEWS - INDEX

Description and Operation

Starting System Description and Operation

Electrical Information Reference

- **Circuit Testing**
- **Connector Repairs**

- **Testing for Intermittent Conditions and Poor Connections**
- **Wiring Repairs**

Scan Tool Reference

Control Module References for scan tool information

Circuit/System Testing

1. Ignition OFF, measure and record the battery voltage at the C1 terminals.
2. Verify the measured voltage is between 12 -15.0 V.
   - **If voltage is less than 12 V or greater than 15 V**

     Refer to **Battery Inspection/Test**.

   - **If voltage is between 12-15 V**
3. Remove the drive belts. Refer to **Drive Belt Replacement** , for the 1.4Lengine or **Drive Belt Replacement** for the 1.8L engine.
4. Verify the engine cranks slowly when attempting to start the vehicle.
   - **If the engine cranks at normal speed**

     Inspect the engine and belt drive system for mechanical binding, seized engine, or seized generator.

   - **If the engine cranks slowly**
5. Verify that a test lamp illuminates between the M64 starter motor B+ terminal 1 X2 and ground.
   - **If the test lamp does not illuminate**
     1. Ignition OFF.
     2. Test for less than 2 ohms in the B+ circuit end to end.
        - If 2 ohms or greater, repair the open/high resistance in the circuit.
        - If less than 2 ohms, verify the fuse is not open and there is voltage at the fuse.
   - **If the test lamp illuminates**
6. Test for less than 0.5 V between the positive battery cable and terminal 1 X2 at the M64 starter motor with the ignition in the START position.
   - **If 0.5 V or greater**

     Replace the positive battery cable.

   - **If less than 0.5 V**
7. Test for less than 0.5 V between the negative battery cable and the M64 starter motor case with the ignition in the START position.
   - **If 0.5 V or greater**

     Replace the negative battery cable.

- **If less than 0.5 V**

8. Replace the M64 starter motor.

Repair Instructions

Perform the **Diagnostic Repair Verification** after completing the repair.

- **Battery Positive and Negative Cable Replacement**
- **Starter Replacement (1.4L LUV)**, **Starter Replacement (1.8L LUW and LWE)**

STARTER NOISE DIAGNOSIS

Diagnostic Instructions

- Perform the **Diagnostic System Check - Vehicle** prior to using this diagnostic procedure.
- Review **Strategy Based Diagnosis** for an overview of the diagnostic approach.
- **Diagnostic Procedure Instructions** provides an overview of each diagnostic category.

Circuit/System Description

The starter motors are non-repairable. They have pole pieces that are arranged around the armature. Both solenoid windings are energized. The pull-in winding circuit is completed to the ground through the starter motor. The windings work together magnetically to pull and hold in the plunger. The plunger moves the shift lever. This action causes the starter drive assembly to rotate on the armature shaft spline as it engages with the flywheel ring gear on the engine. Moving at the same time, the plunger also closes the solenoid switch contacts in the starter solenoid. Full battery voltage is applied directly to the starter motor and it cranks the engine.

Reference Information

Description and Operation

Starting System Description and Operation

Circuit/System Verification

Start the engine. Listen to the starter noise, while the engine is cranking. Compare the concern to a similar vehicle.

Circuit/System Testing

1. Remove the flywheel inspection cover.
2. Inspect the flywheel for the following:
    - Loose flywheel bolts
    - Chipped gear teeth
    - Missing gear teeth

- Bent flywheel
- Debris in the bell housing
  - If not within specifications, remove the debris, tighten the flywheel bolts, or repair or replace the flywheel.

3. If all inspections were within specification, replace the starter motor.

Repair Instructions

Perform the **Diagnostic Repair Verification** after completing the diagnostic procedure.

- **Fastener Tightening Specifications** for the 1.8L LUW
- **Engine Flywheel Replacement** for the 1.8L LUW
- **Fastener Tightening Specifications** for the 1.4L LUJ
- **Engine Flywheel Replacement** for the 1.4L LUJ

REPAIR INSTRUCTIONS

BATTERY NEGATIVE CABLE DISCONNECTION AND CONNECTION

Removal Procedure

1. Turn on the radio and record all of the customer radio station presets.
2. Ensure that all lamps and accessories are turned off.
3. Turn the ignition OFF and remove the ignition key.

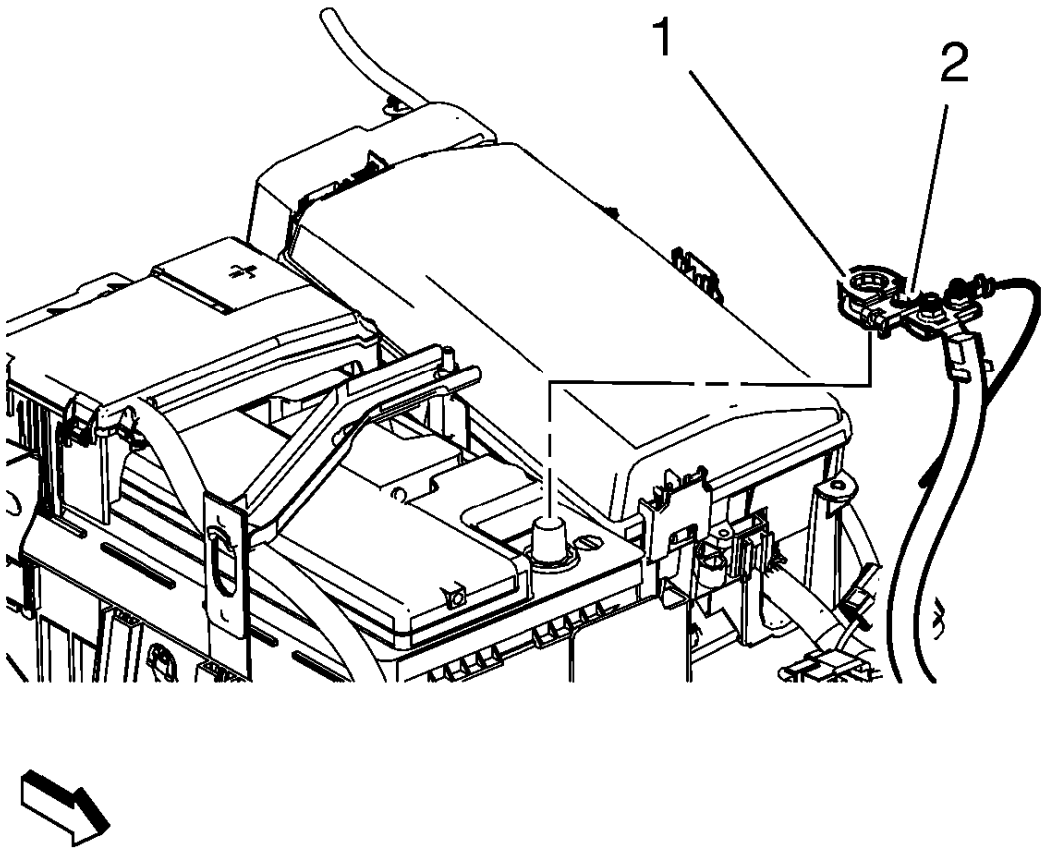

Fig. 3: Battery Negative Cable And Nut
Courtesy of GENERAL MOTORS COMPANY

WARNING: Refer to Battery Disconnect Warning .

4. Loosen the battery negative cable nut (2).
5. Remove the battery negative cable (1) from the battery.

Installation Procedure

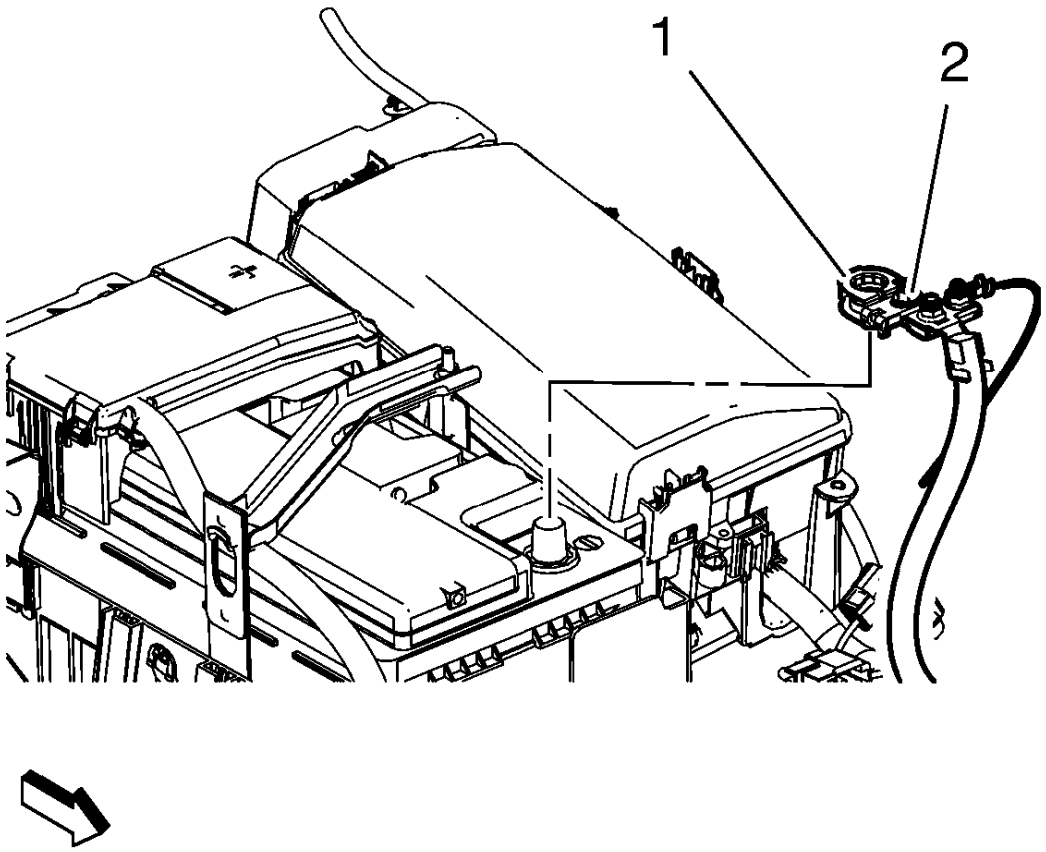

Fig. 4: Battery Negative Cable And Nut
Courtesy of GENERAL MOTORS COMPANY

1. Install the battery negative cable (1) to the battery.

CAUTION: Refer to Fastener Caution .

2. Fasten the battery negative cable nut (2) and tighten the nut to 4.5 N.m (40 lb in).
3. Insert the ignition key and turn the ignition to the ON position.
4. Program volatile memory. Refer to **Volatile Memory Programming** .
5. Program all of the customer's radio station presets and set the radio clock to the current time.

BATTERY CURRENT SENSOR REPLACEMENT

Removal Procedure

1. Open the hood.
2. Disconnect the battery negative cable. Refer to **Battery Negative Cable Disconnection and Connection**.

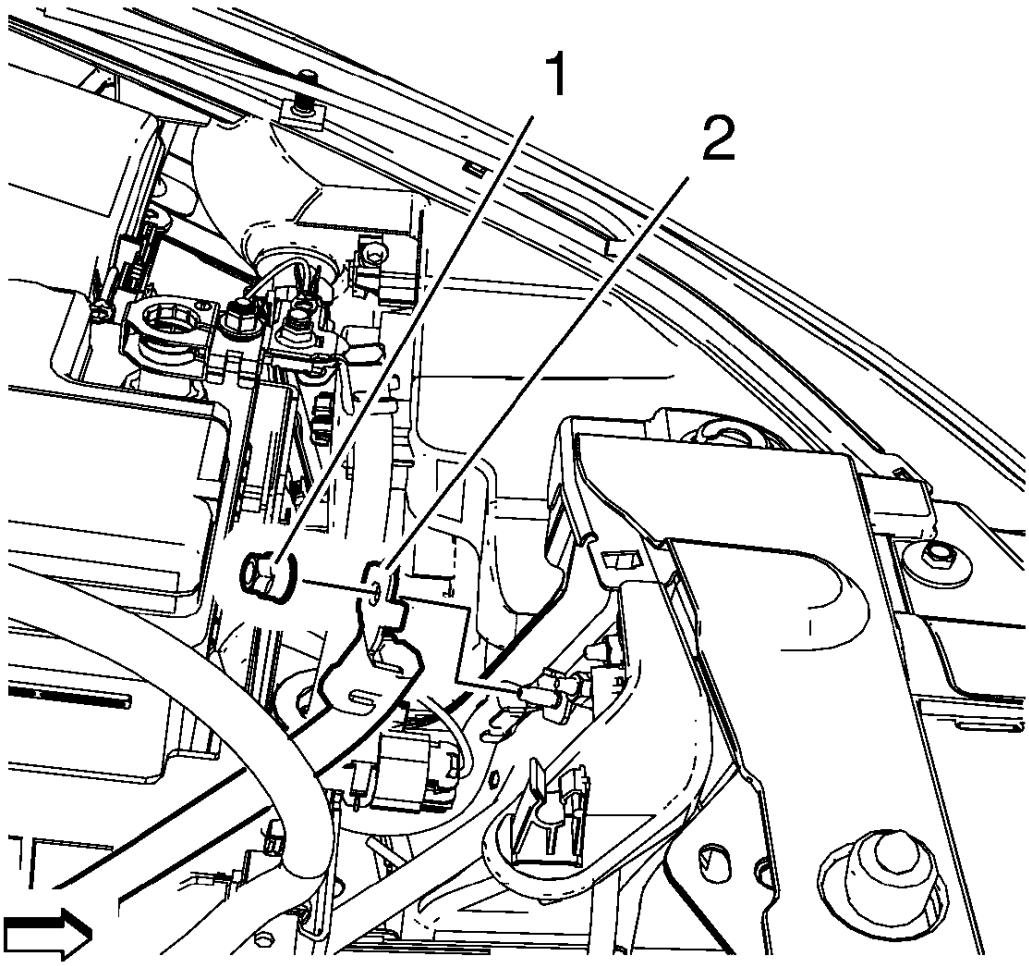

Fig. 5: Battery Negative Cable And Battery Ground Cable Nut
Courtesy of GENERAL MOTORS COMPANY

3. Remove the battery ground cable nut (1).
4. Remove the battery negative cable (2).

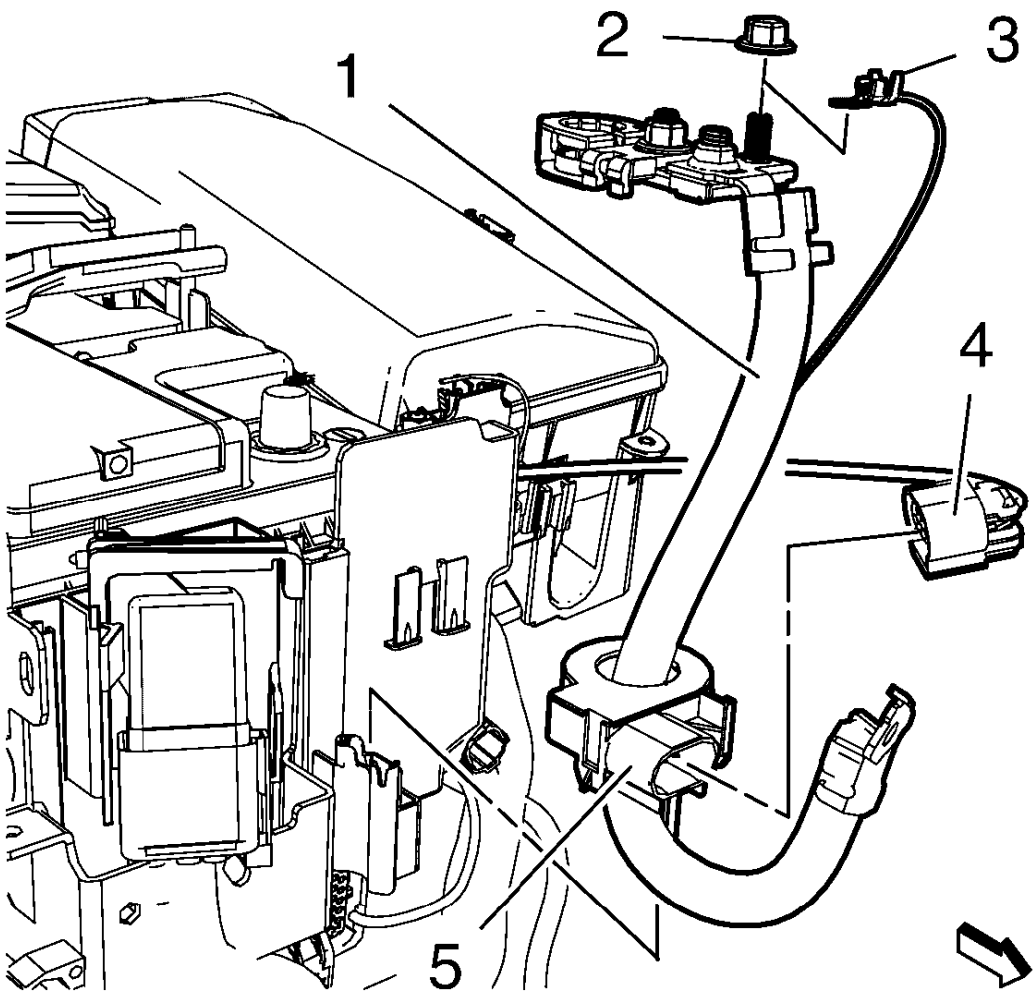

Fig. 6: Wiring Harness Current Sensor Plug
Courtesy of GENERAL MOTORS COMPANY

5. Disconnect the wiring harness current sensor plug (4).
6. Remove the current sensor (5) from the battery tray.

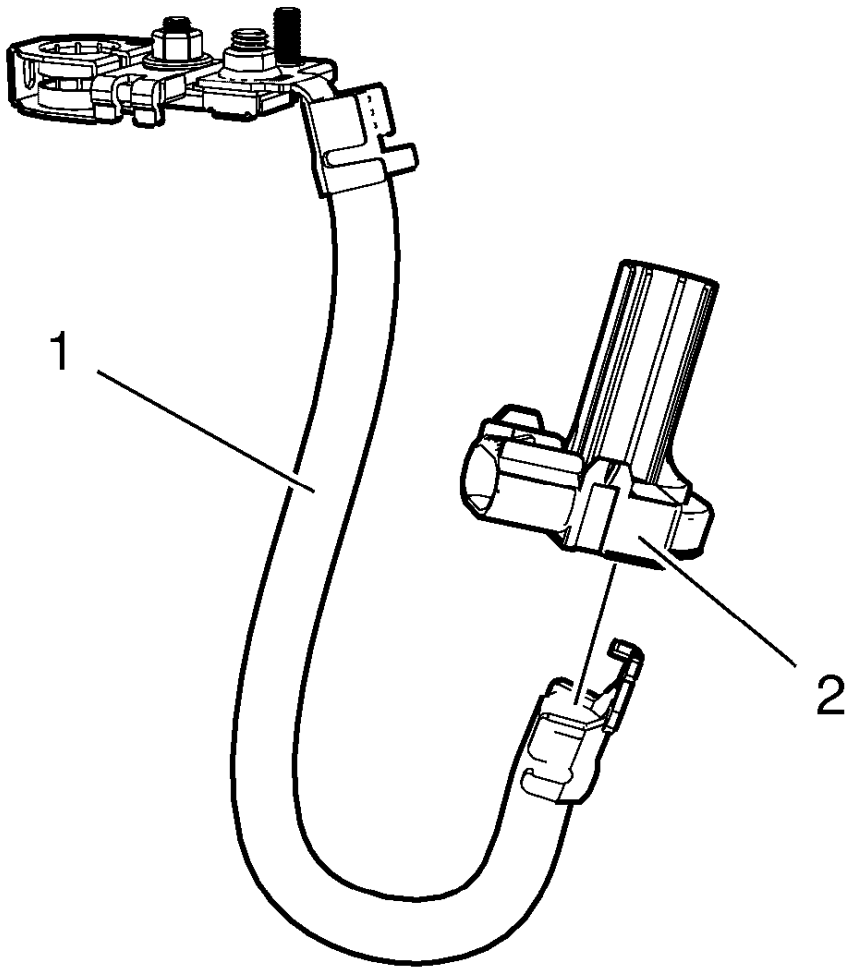

Fig. 7: Battery Negative Cable And Current Sensor
Courtesy of GENERAL MOTORS COMPANY

7. Remove the current sensor (2) from the battery negative cable (1).

Installation Procedure

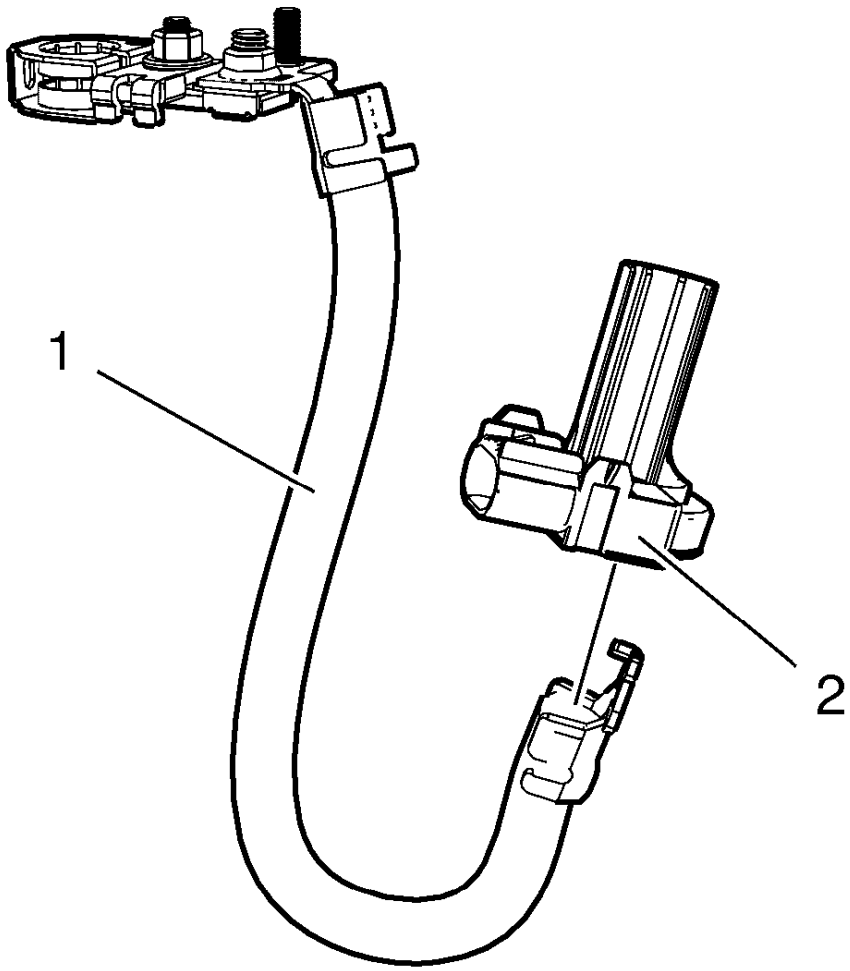

Fig. 8: Battery Negative Cable And Current Sensor
Courtesy of GENERAL MOTORS COMPANY

1. Install the current sensor (2) to the battery negative cable (1).

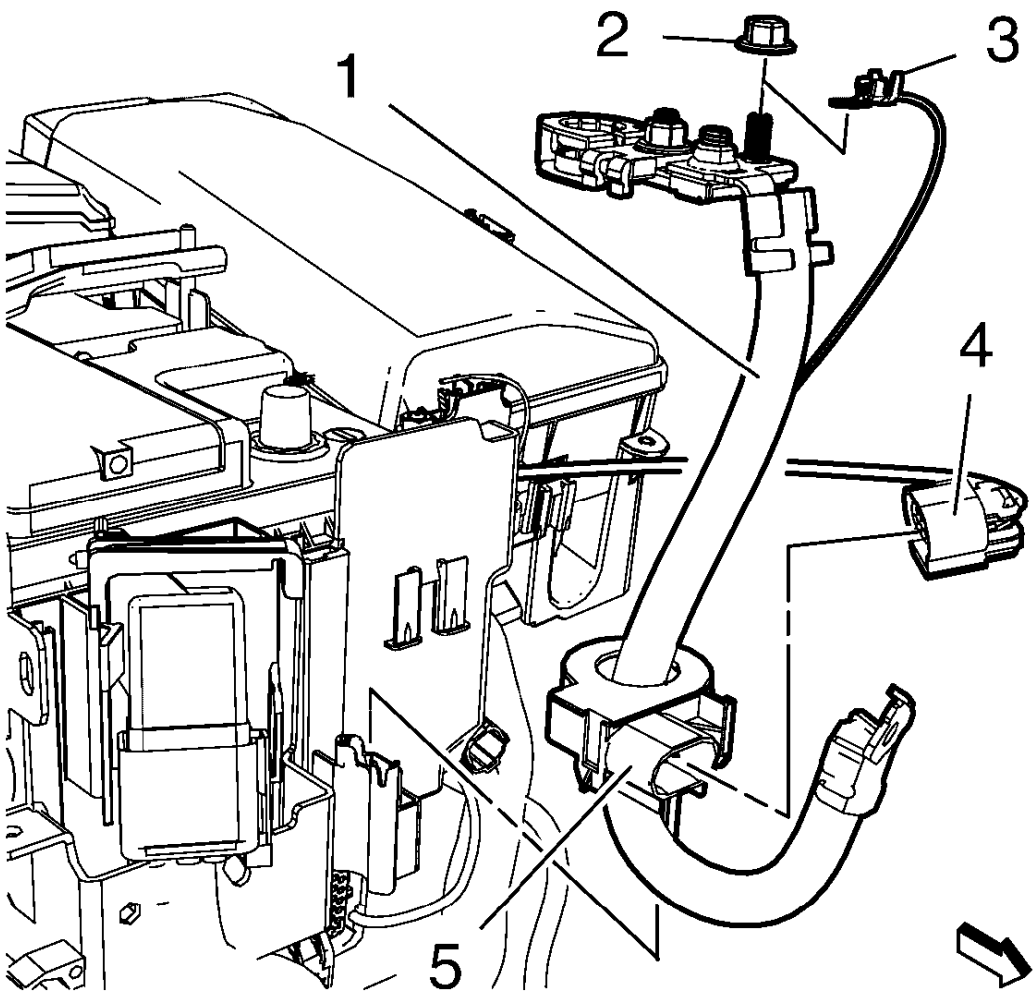

Fig. 9: Wiring Harness Current Sensor Plug
Courtesy of GENERAL MOTORS COMPANY

2. Install the current sensor (5) to the battery tray.
3. Connect the wiring harness current sensor plug (4).

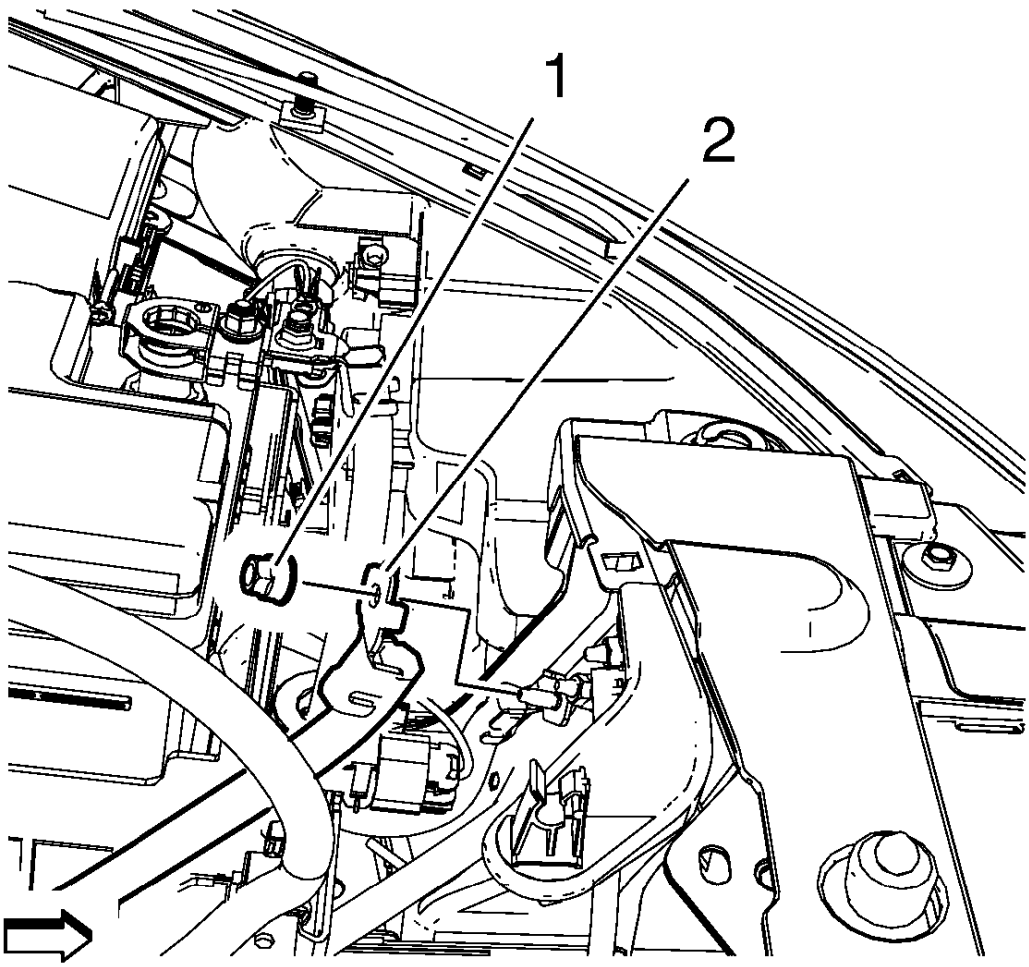

Fig. 10: Battery Negative Cable And Battery Ground Cable Nut
Courtesy of GENERAL MOTORS COMPANY

4. Install the battery negative cable (2).

CAUTION: Refer to Fastener Caution .

5. Install the battery ground cable nut (1) and tighten to 9 N.m (80 lb in).
6. Connect the battery negative cable. Refer to **Battery Negative Cable Disconnection and Connection**.
7. Close the hood.

BATTERY POSITIVE AND NEGATIVE CABLE REPLACEMENT

Removal Procedure

1. Disconnect the battery negative cable. Refer to **Battery Negative Cable Disconnection and Connection**.

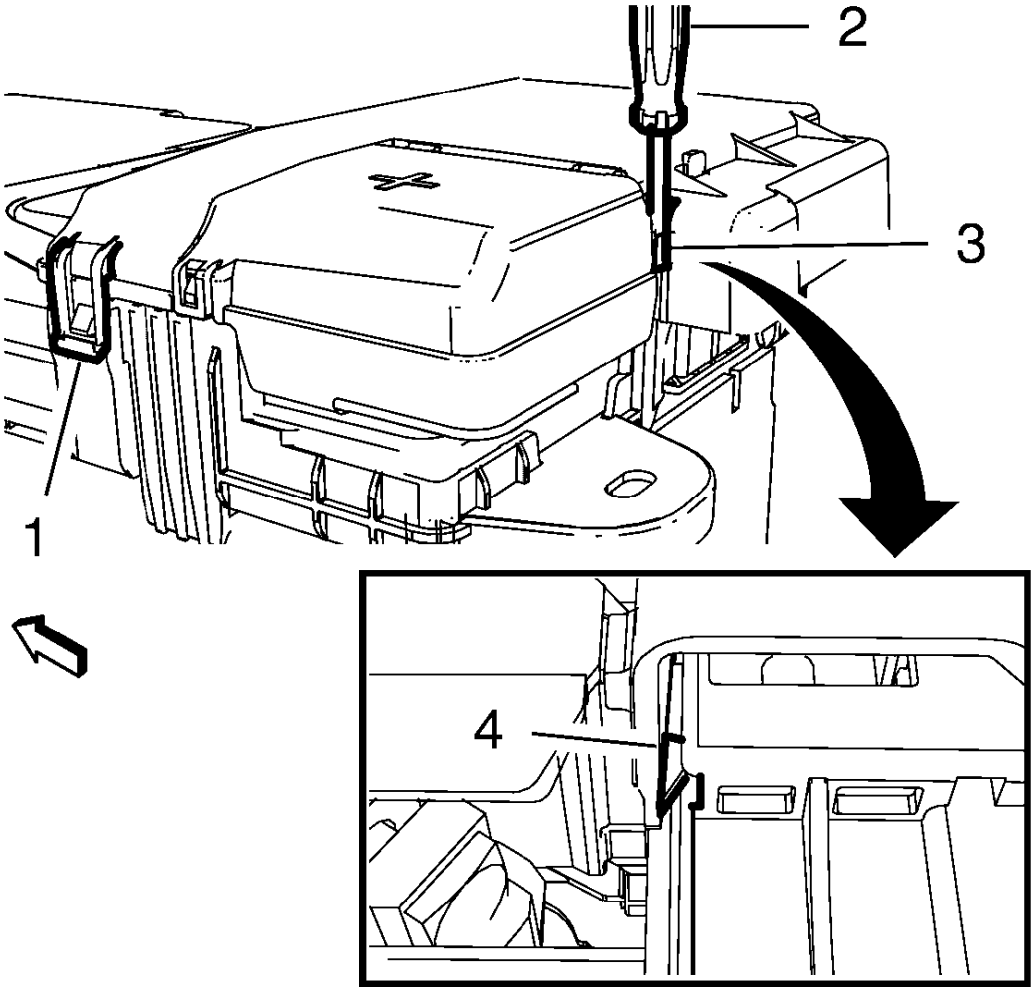

Fig. 11: Battery Fuse Box Cover
Courtesy of GENERAL MOTORS COMPANY

2. Unlock the retaining tab (1) on the battery fuse box cover.
3. Use a suitable screw driver (2) to unlock the clip (4) through the window (3).

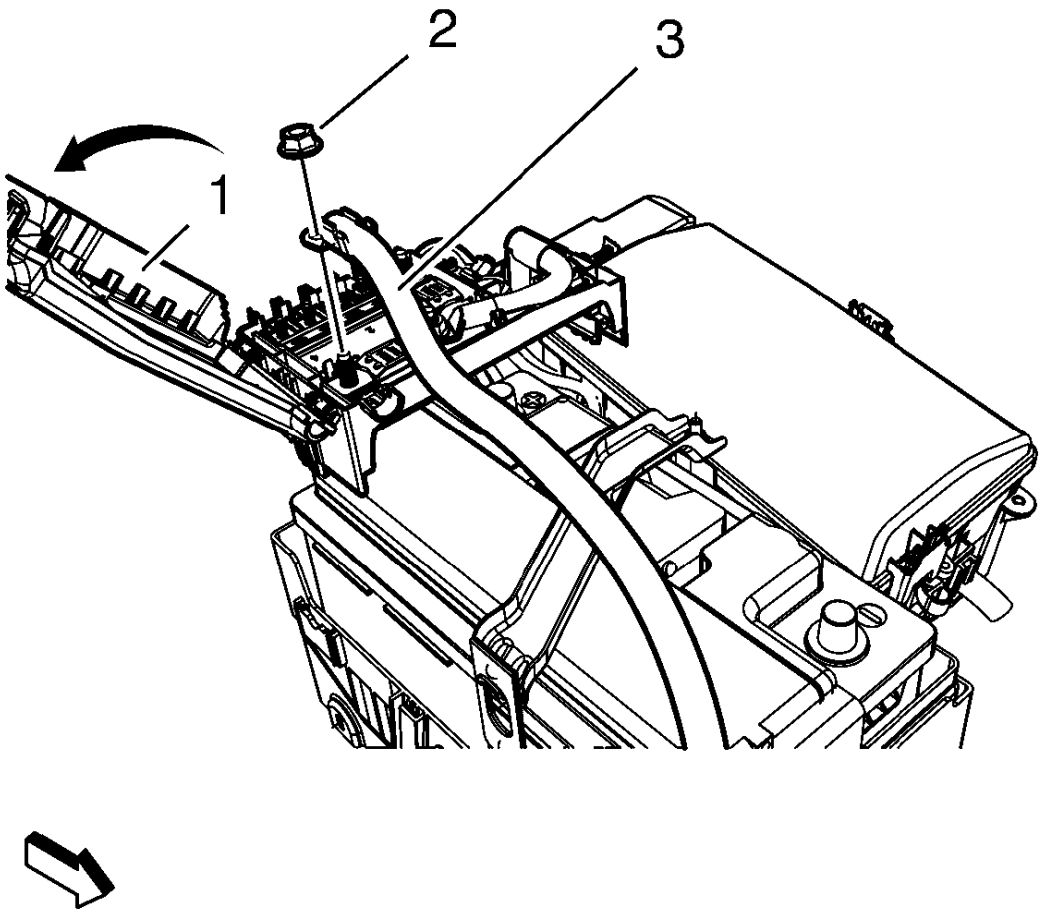

Fig. 12: View Of Fuse Box Cover, Battery Cable And Nut
Courtesy of GENERAL MOTORS COMPANY

NOTE: Pull the battery fuse box housing. DO NOT pull the flap.

4. Open the battery fuse box cover (1).
5. Remove the battery positive cable to starter nut (2).
6. Remove the battery positive cable to starter (3) from the battery.

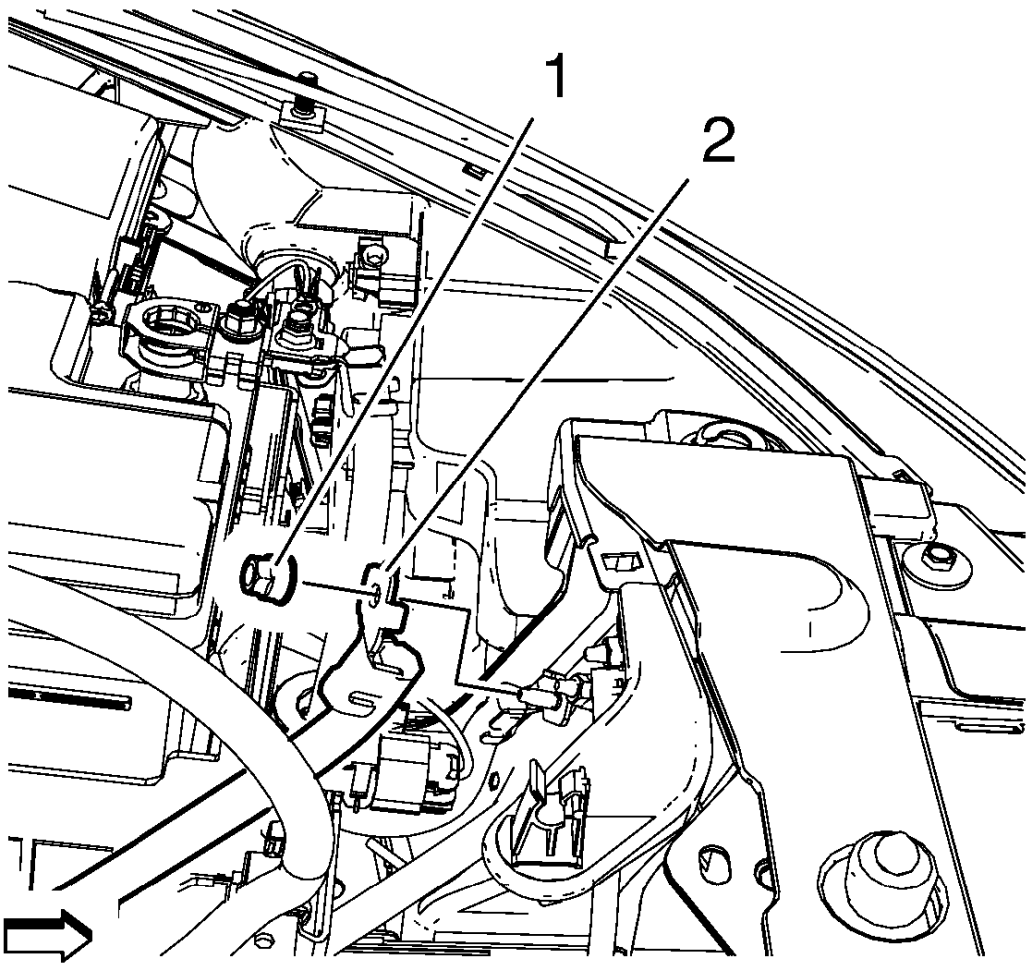

Fig. 13: Battery Negative Cable And Battery Ground Cable Nut
Courtesy of GENERAL MOTORS COMPANY

7. Remove the battery ground cable nut (1).
8. Remove the battery negative cable (2).

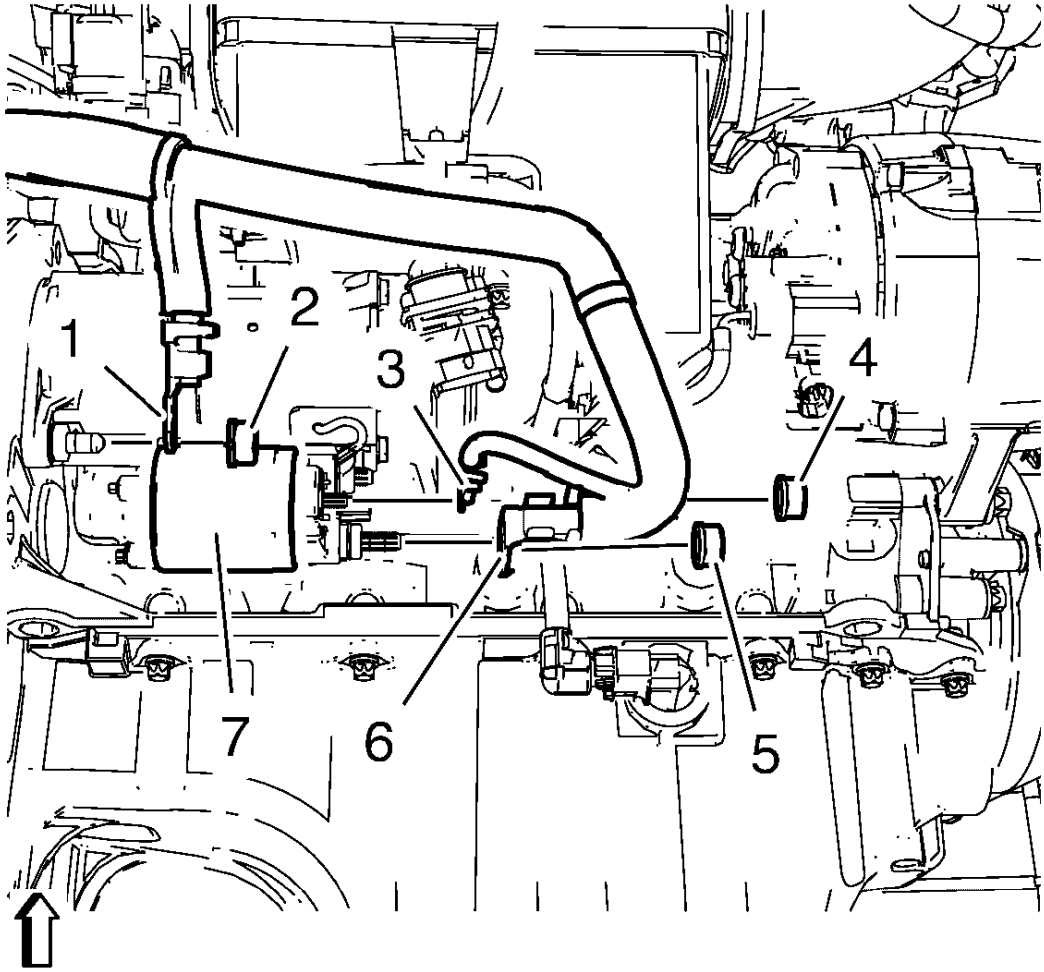

Fig. 14: Starter Motor, Negative Cable And Positive Cables
Courtesy of GENERAL MOTORS COMPANY

9. Remove the starter ground cable nut (2) from the starter motor (7).
10. Remove the negative cable (1).
11. Remove the starter and generator positive cable nut (5) and the starter positive cable nut (4).
12. Remove the 2 positive cables (3, 6).

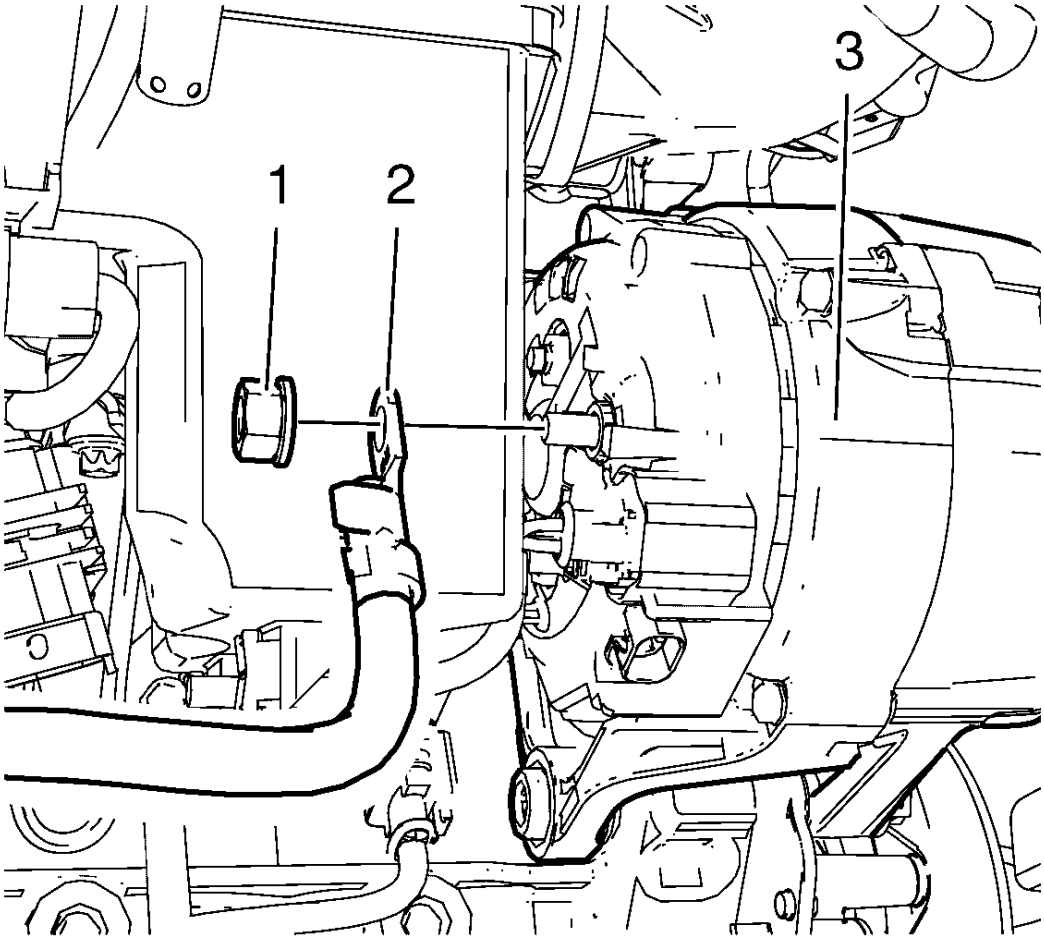

Fig. 15: Generator And Generator Positive Cable
Courtesy of GENERAL MOTORS COMPANY

13. Remove the rubber cap from the positive cable generator connector.
14. Remove the positive cable nut (1) from the generator (3).
15. Remove the generator positive cable (2) from the generator (3).

Installation Procedure

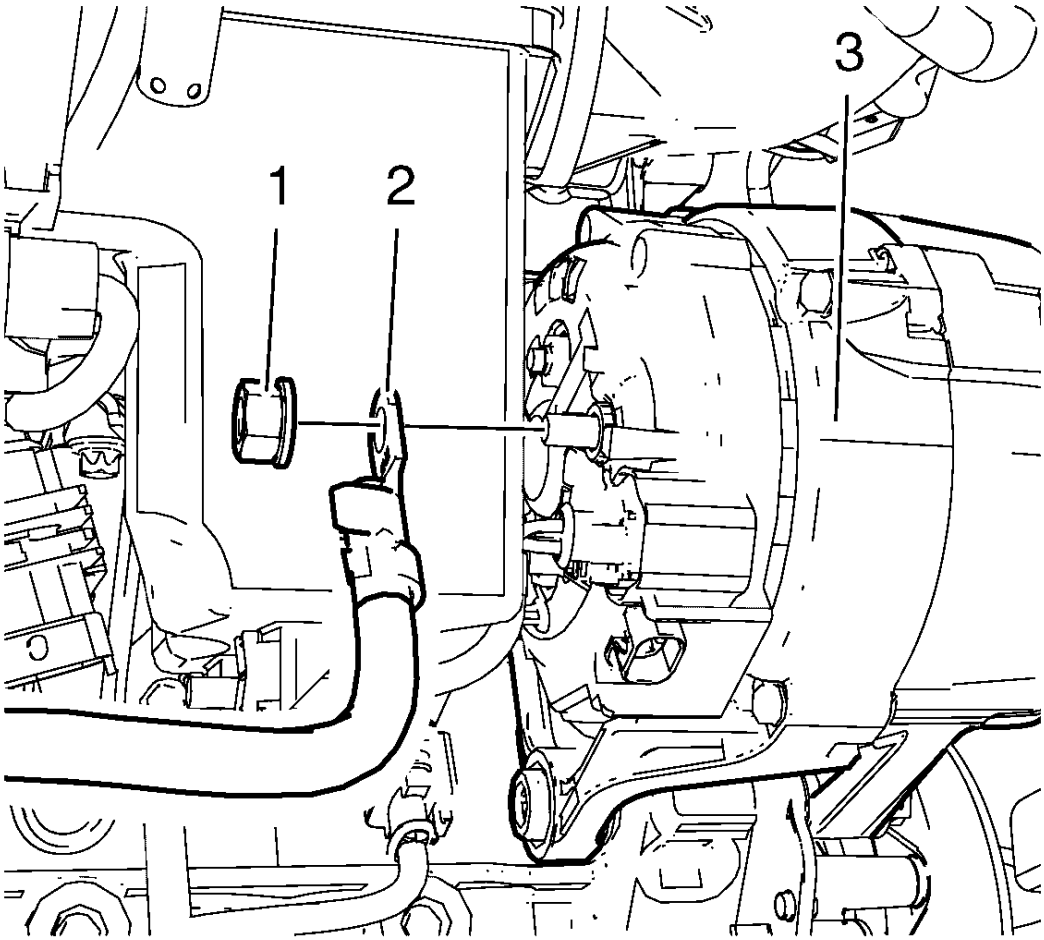

Fig. 16: Generator And Generator Positive Cable
Courtesy of GENERAL MOTORS COMPANY

1. Install the positive cable (2) to the generator (3).

CAUTION: Refer to Fastener Caution

2. Install the generator positive cable nut (1) to the generator (3) and tighten to 20 N.m (15 lb ft).
3. Install the rubber cap to the positive cable generator connector.

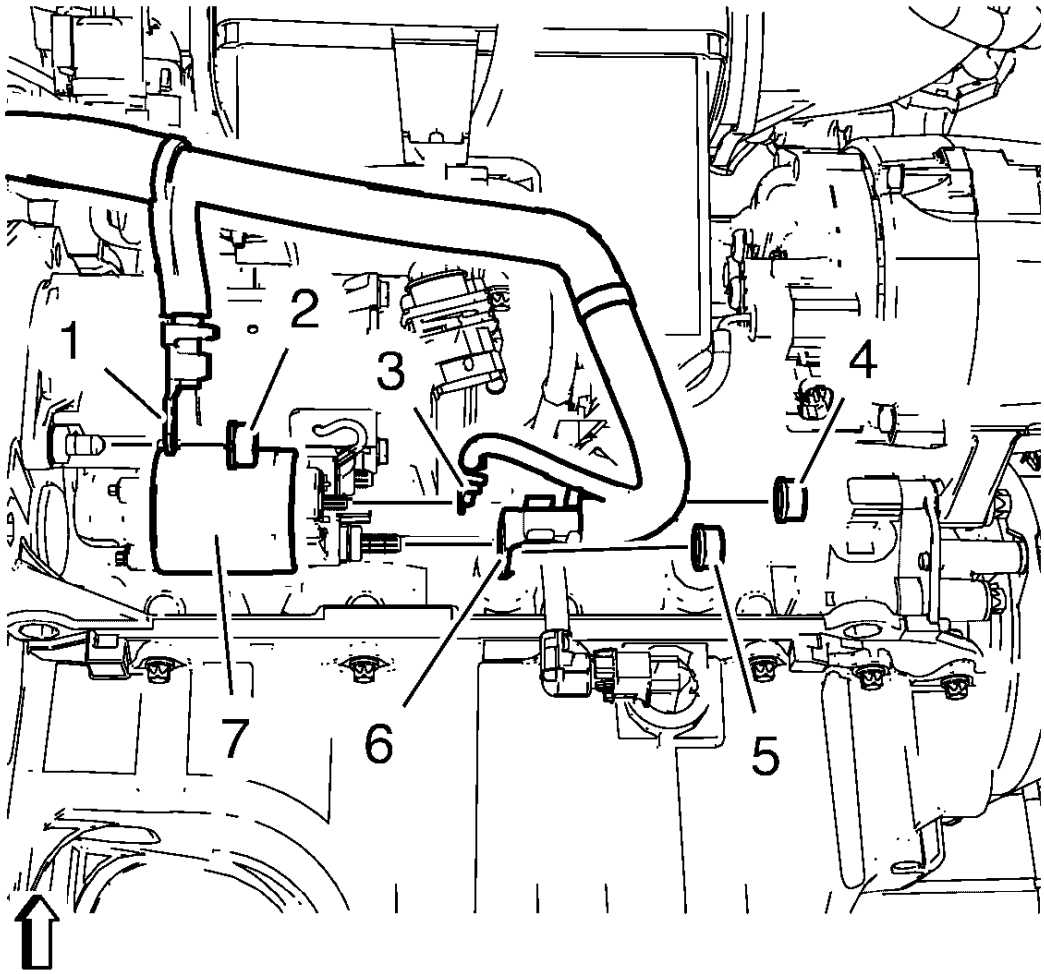

Fig. 17: Starter Motor, Negative Cable And Positive Cables
Courtesy of GENERAL MOTORS COMPANY

4. Install the 2 positive cables (3, 6).
5. Install the starter and generator positive cable nut (5) and the starter positive cable nut (4) and tighten to 12.5 N.m (111 lb in).
6. Install the negative cable (1).
7. Install the starter ground cable nut (2) to the starter motor (7) and tighten to 12.5 N.m (111 lb in).

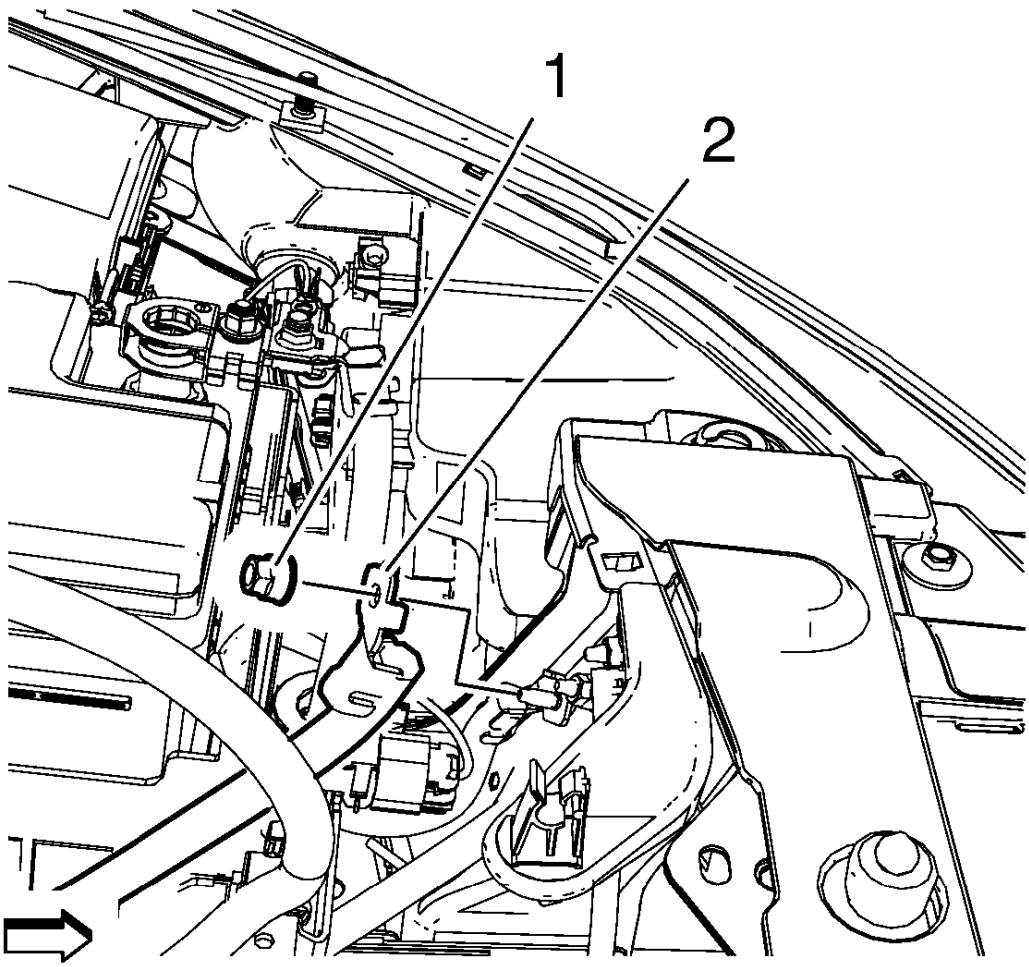

Fig. 18: Battery Negative Cable And Battery Ground Cable Nut
Courtesy of GENERAL MOTORS COMPANY

8. Install the battery ground cable (2).
9. Install the battery negative cable nut (1) and tighten to 9 N.m (80 lb in).

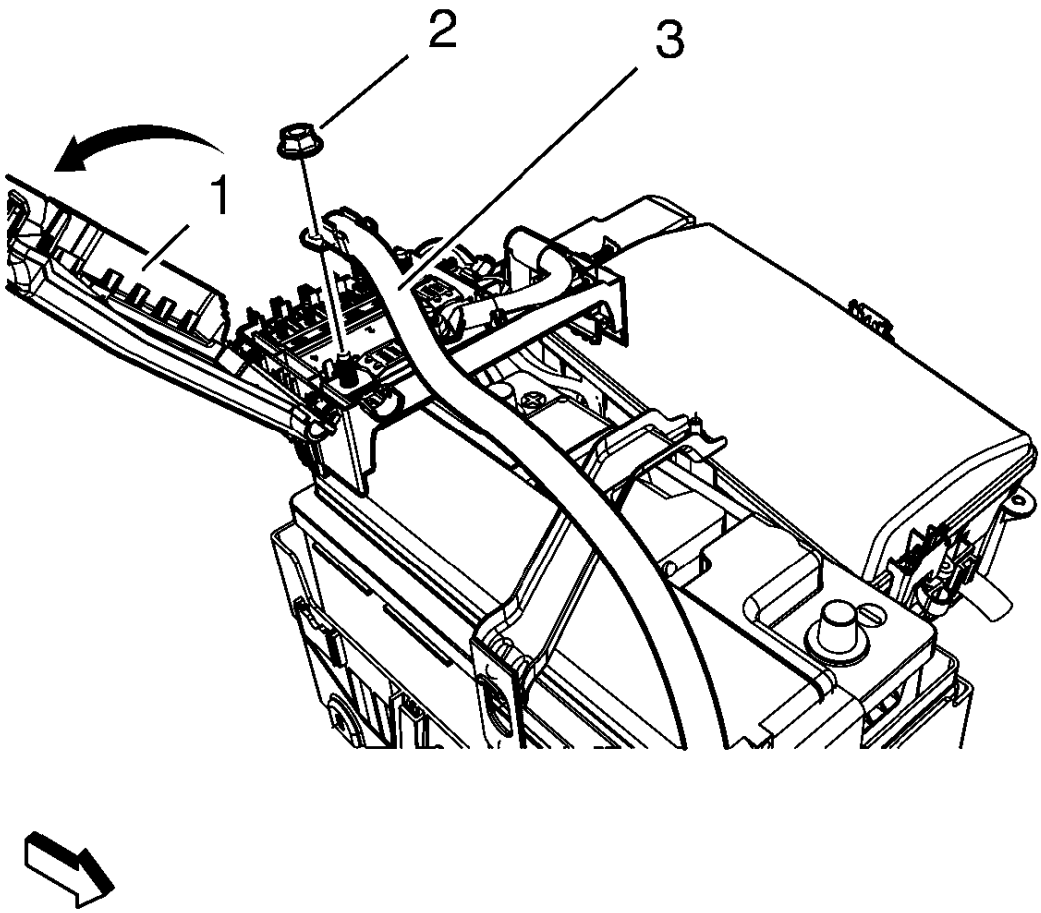

Fig. 19: View Of Fuse Box Cover, Battery Cable And Nut
Courtesy of GENERAL MOTORS COMPANY

10. Install the battery positive cable to starter (3) at the battery.
11. Install the battery positive cable to starter nut (2) and tighten to 12 N.m (106 lb in).

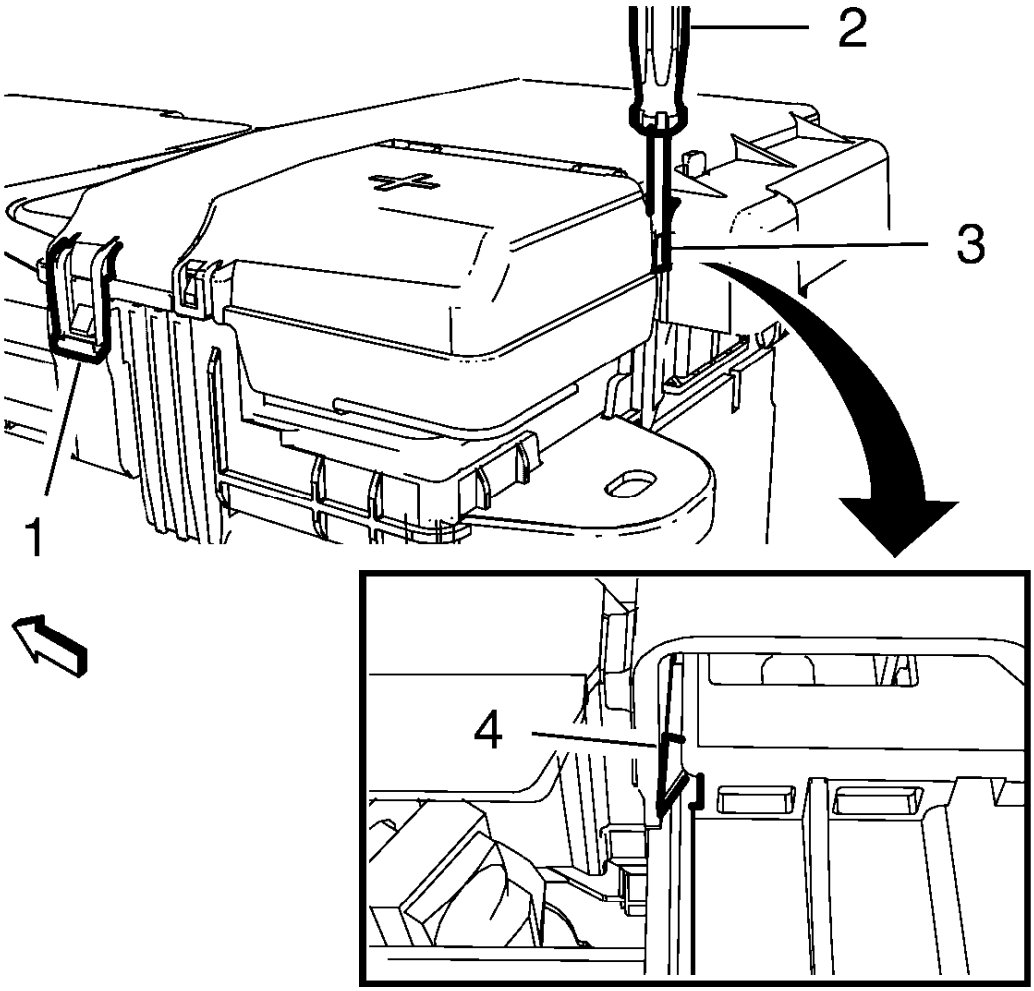

Fig. 20: Battery Fuse Box Cover
Courtesy of GENERAL MOTORS COMPANY

12. Close the battery fuse box cover and lock the retaining tabs (1) and (4).
13. Connect the battery negative cable. Refer to **Battery Negative Cable Disconnection and Connection**.

BATTERY NEGATIVE CABLE REPLACEMENT

Removal Procedure

1. Disconnect the battery negative cable. Refer to **Battery Negative Cable Disconnection and Connection**.

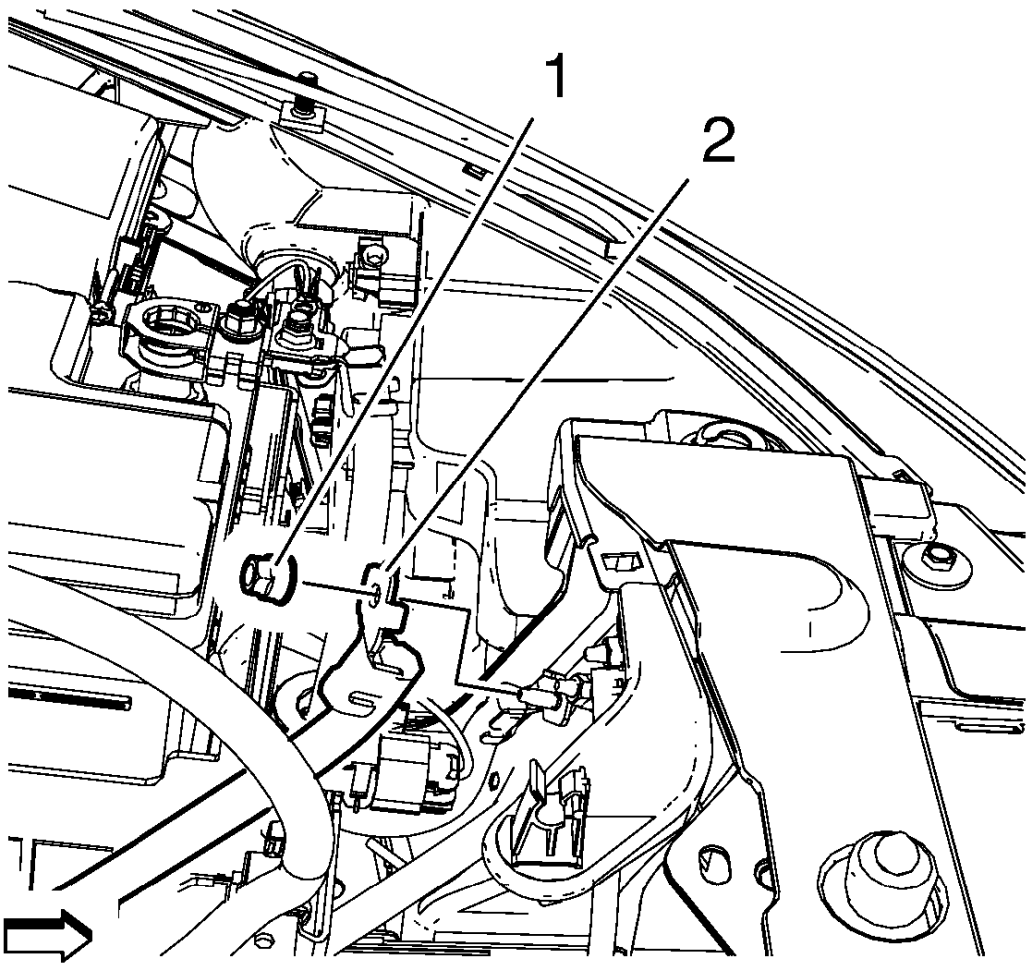

Fig. 21: Battery Negative Cable And Battery Ground Cable Nut
Courtesy of GENERAL MOTORS COMPANY

2. Remove the battery ground cable nut (1).
3. Remove the battery negative cable (2).

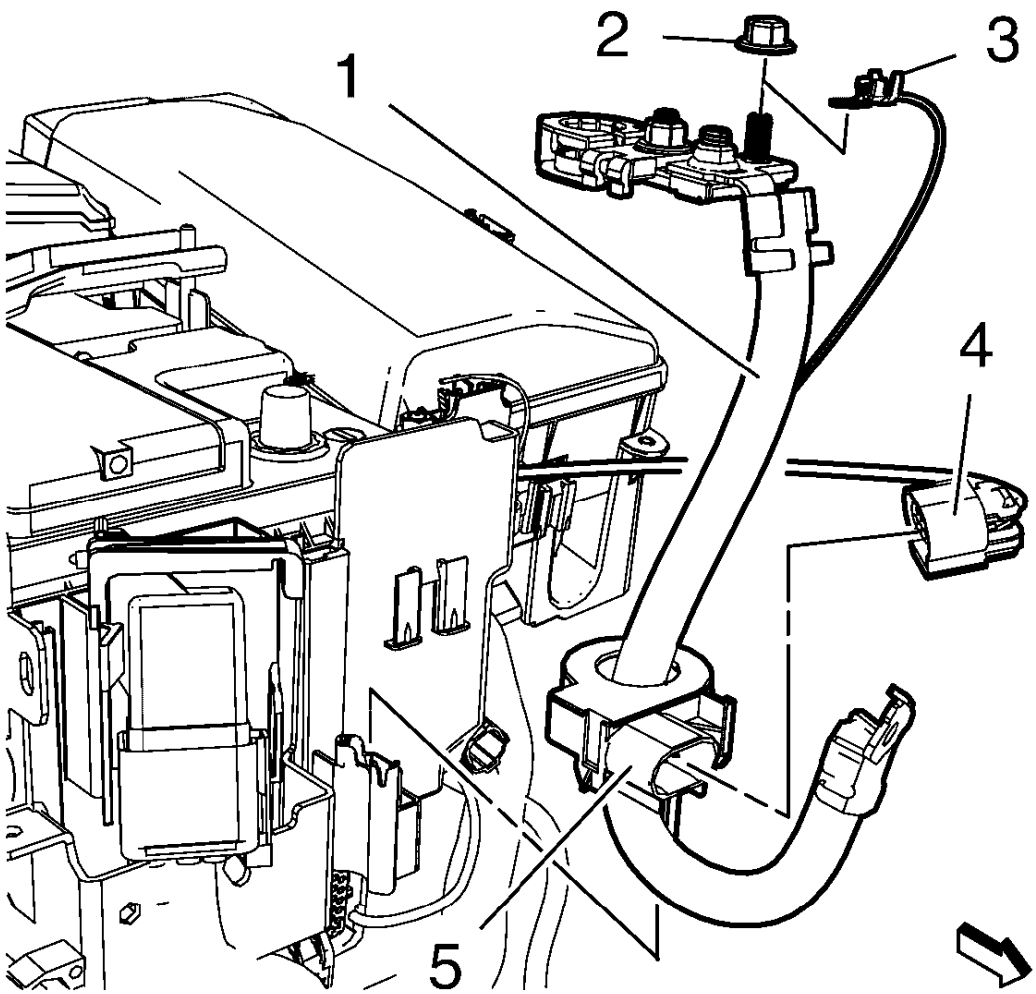

Fig. 22: Wiring Harness Current Sensor Plug
Courtesy of GENERAL MOTORS COMPANY

4. Disconnect the wiring harness current sensor plug (4).
5. Remove the current sensor (5) from the battery tray.
6. Remove battery ground cable from the battery negative cable nut (2).
7. Remove the ground cable (3).
8. Remove the battery negative cable (1).

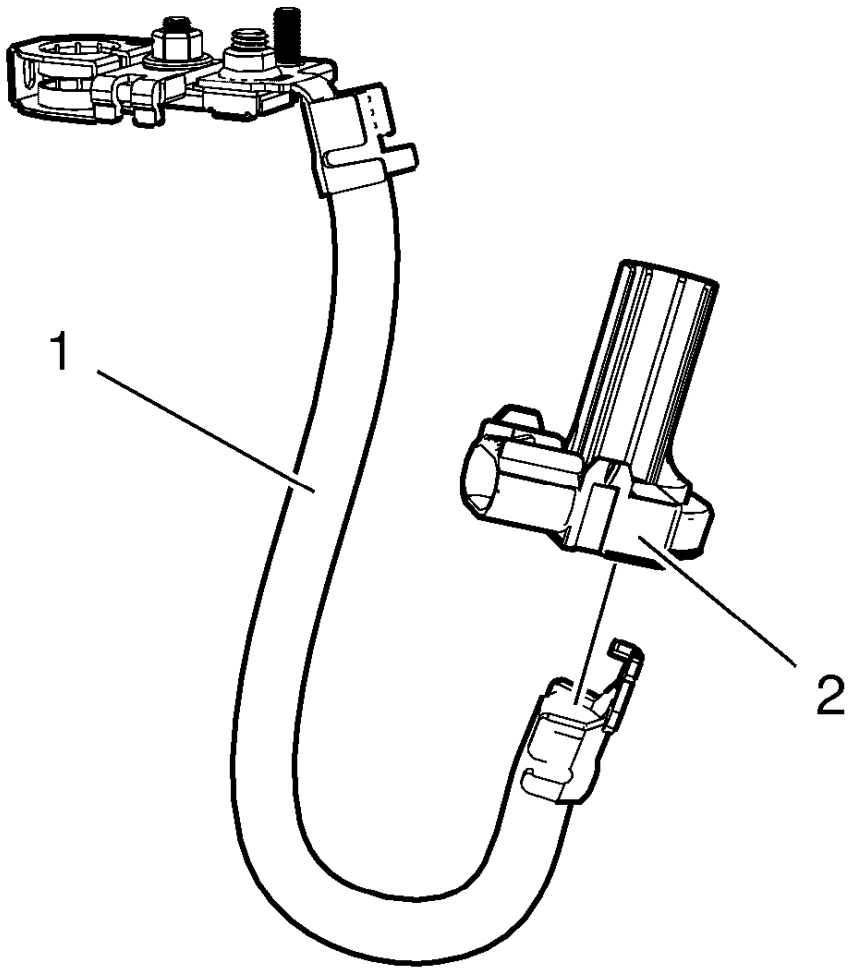

Fig. 23: Battery Negative Cable And Current Sensor
Courtesy of GENERAL MOTORS COMPANY

9. Remove the current sensor (2) from the battery negative cable (1).

Installation Procedure

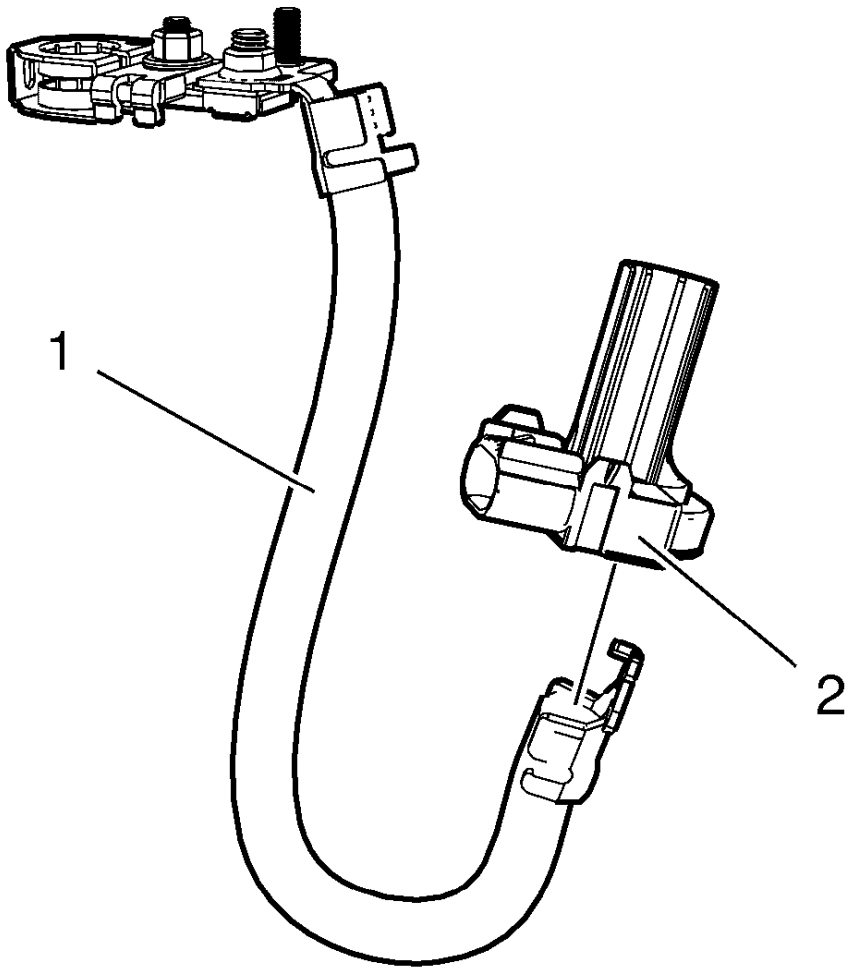

Fig. 24: Battery Negative Cable And Current Sensor
Courtesy of GENERAL MOTORS COMPANY

1. Install the current sensor (2) to the battery negative cable (1).

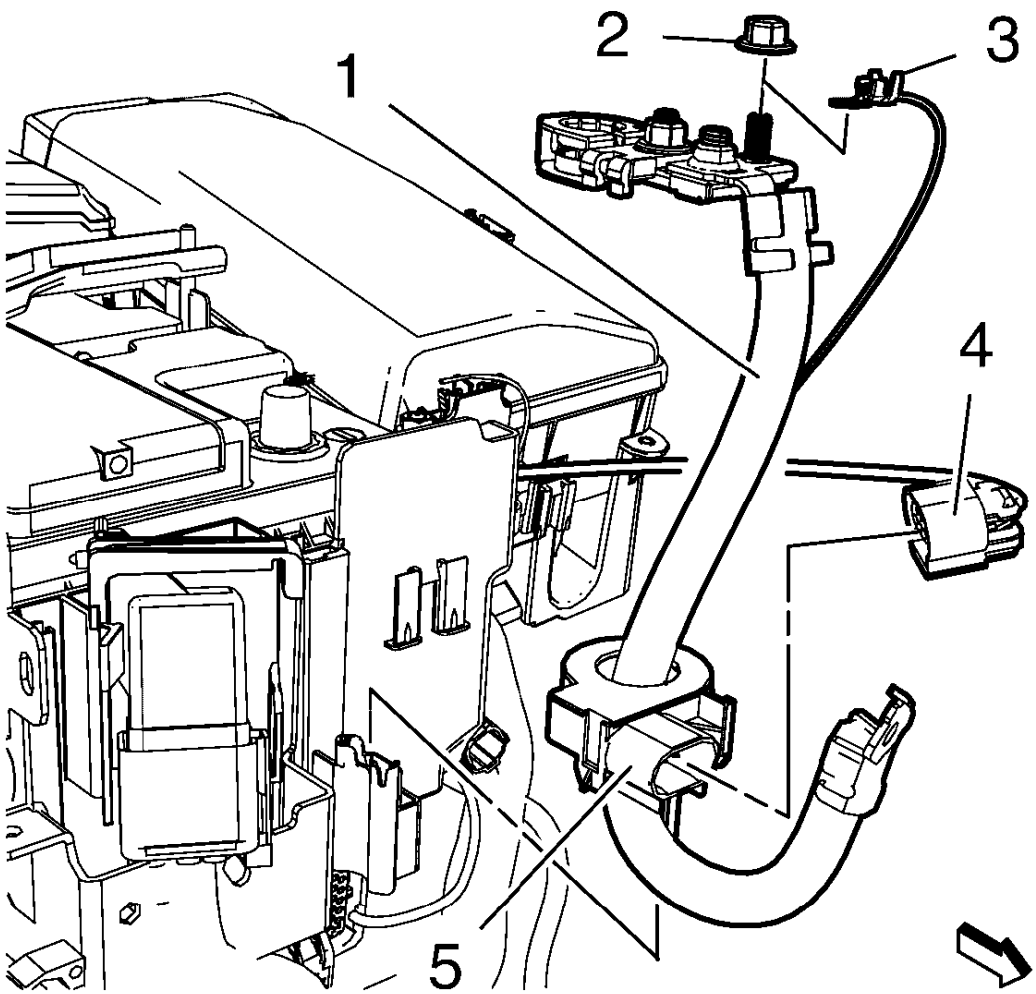

Fig. 25: Wiring Harness Current Sensor Plug
Courtesy of GENERAL MOTORS COMPANY

2. Install the battery negative cable (1).
3. Install the ground cable (3).

CAUTION: Refer to Fastener Caution .

4. Install the battery ground cable to the battery negative cable nut (2) and tighten to 9 N.m (80 lb in).
5. Install the current sensor (5) at the battery tray.
6. Connect the wiring harness current sensor plug (4).

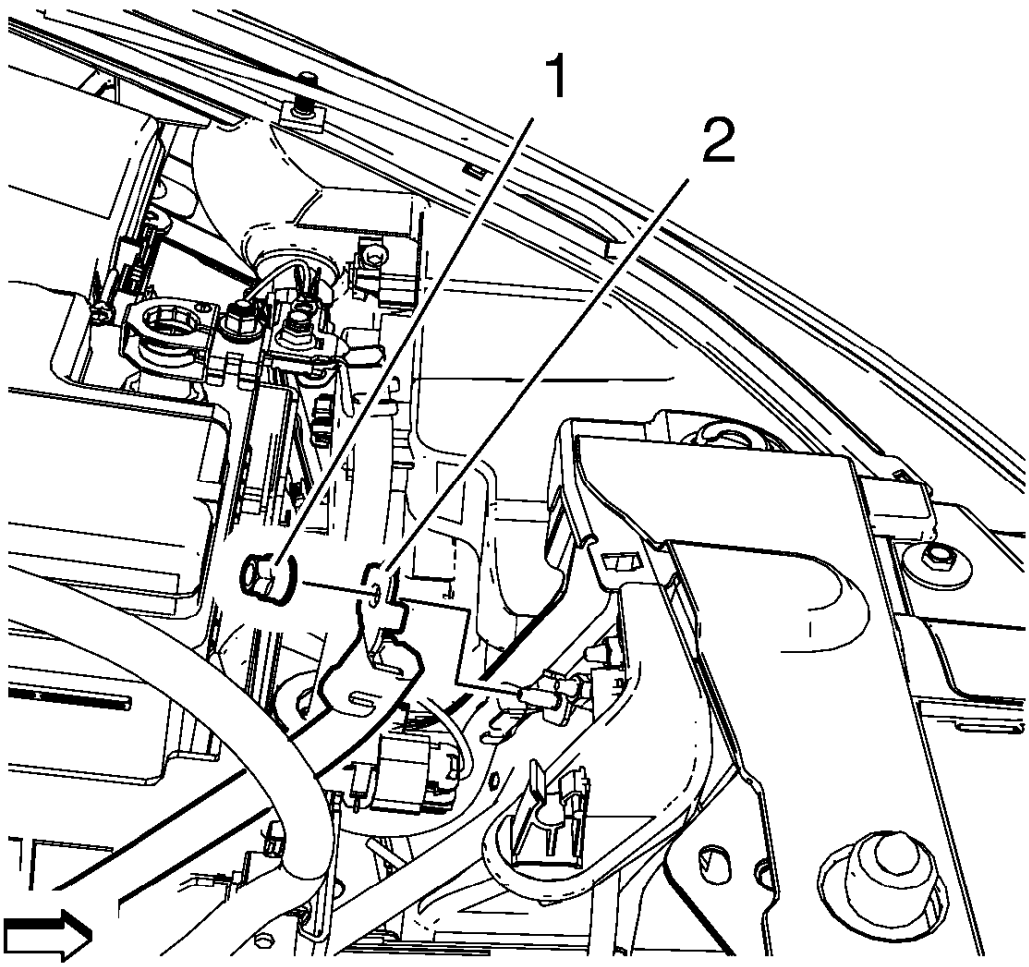

Fig. 26: Battery Negative Cable And Battery Ground Cable Nut
Courtesy of GENERAL MOTORS COMPANY

7. Install the battery negative cable (2).
8. Install the battery ground cable nut (1) and tighten to 9 N.m (80 lb in).
9. Connect the battery negative cable. Refer to **Battery Negative Cable Disconnection and Connection**.

BATTERY POSITIVE CABLE REPLACEMENT

Removal Procedure

1. Disconnect the battery negative cable. Refer to **Battery Negative Cable Disconnection and Connection**.

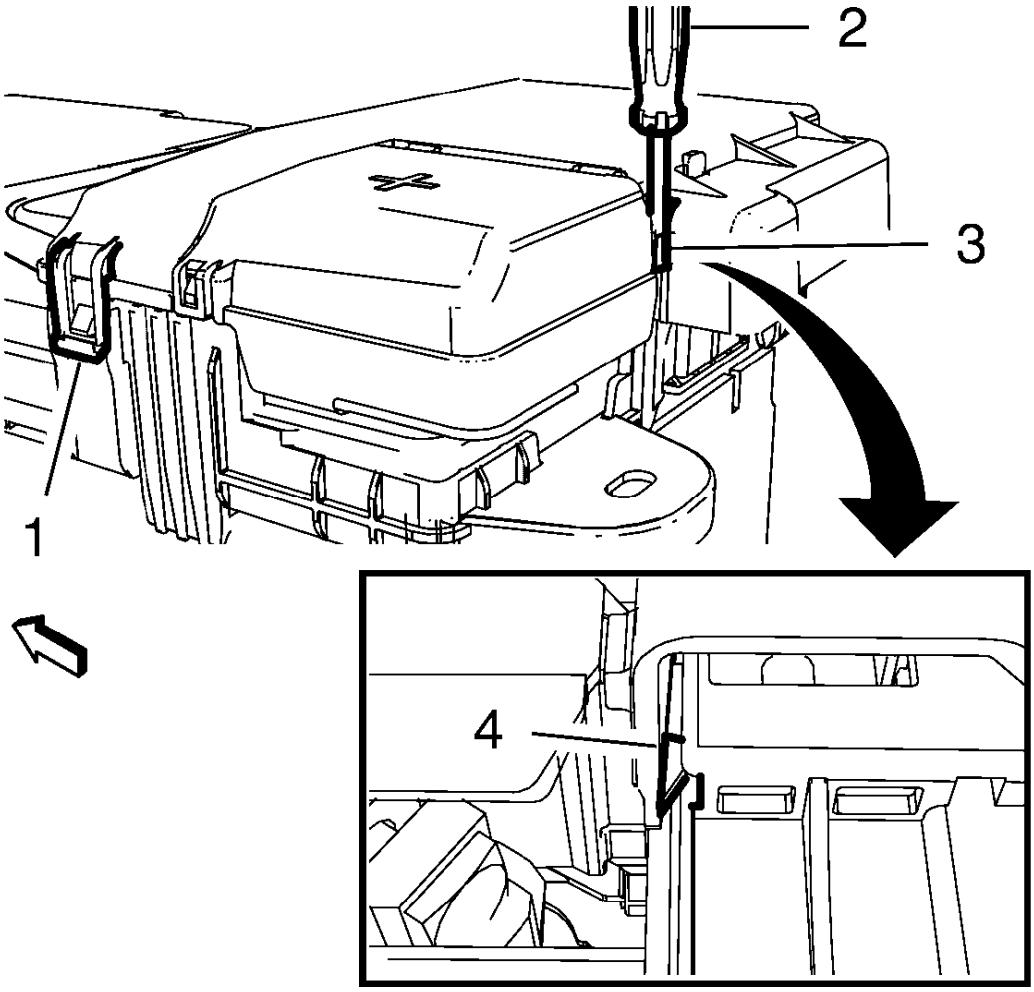

Fig. 27: Battery Fuse Box Cover
Courtesy of GENERAL MOTORS COMPANY

2. Unlock the retaining tab (1) on the battery fuse box cover.
3. Use a suitable screwdriver (2) to unlock the clip (4) through the window (3).

NOTE: Pull the battery fuse box housing, DO NOT pull the flap.

4. Open the battery fuse box cover.

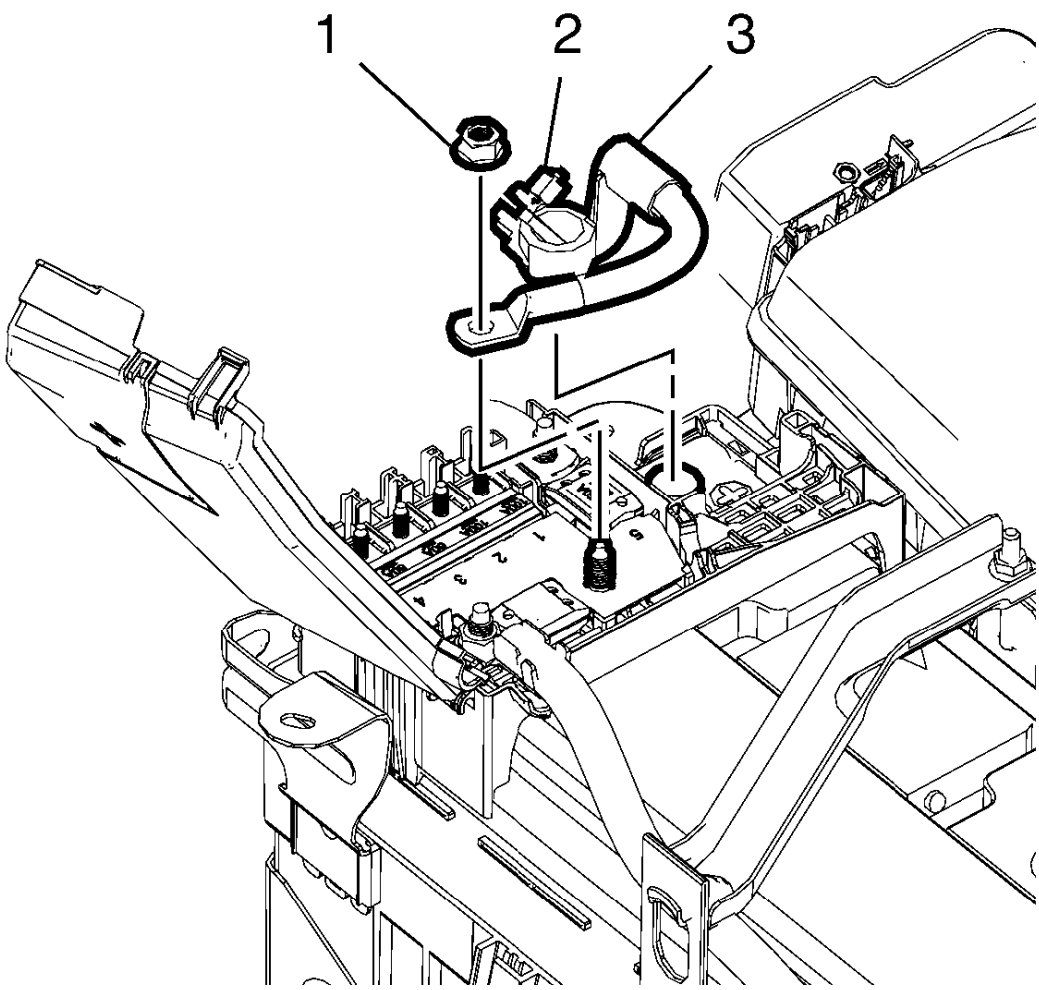

Fig. 28: Battery Positive Cable-To-Fuse Box Nut
Courtesy of GENERAL MOTORS COMPANY

5. Remove the battery positive cable to fuse box nut (1).
6. Remove the battery positive cable to battery nut (2).
7. Remove the battery positive cable to fuse box cable (3).

Installation Procedure

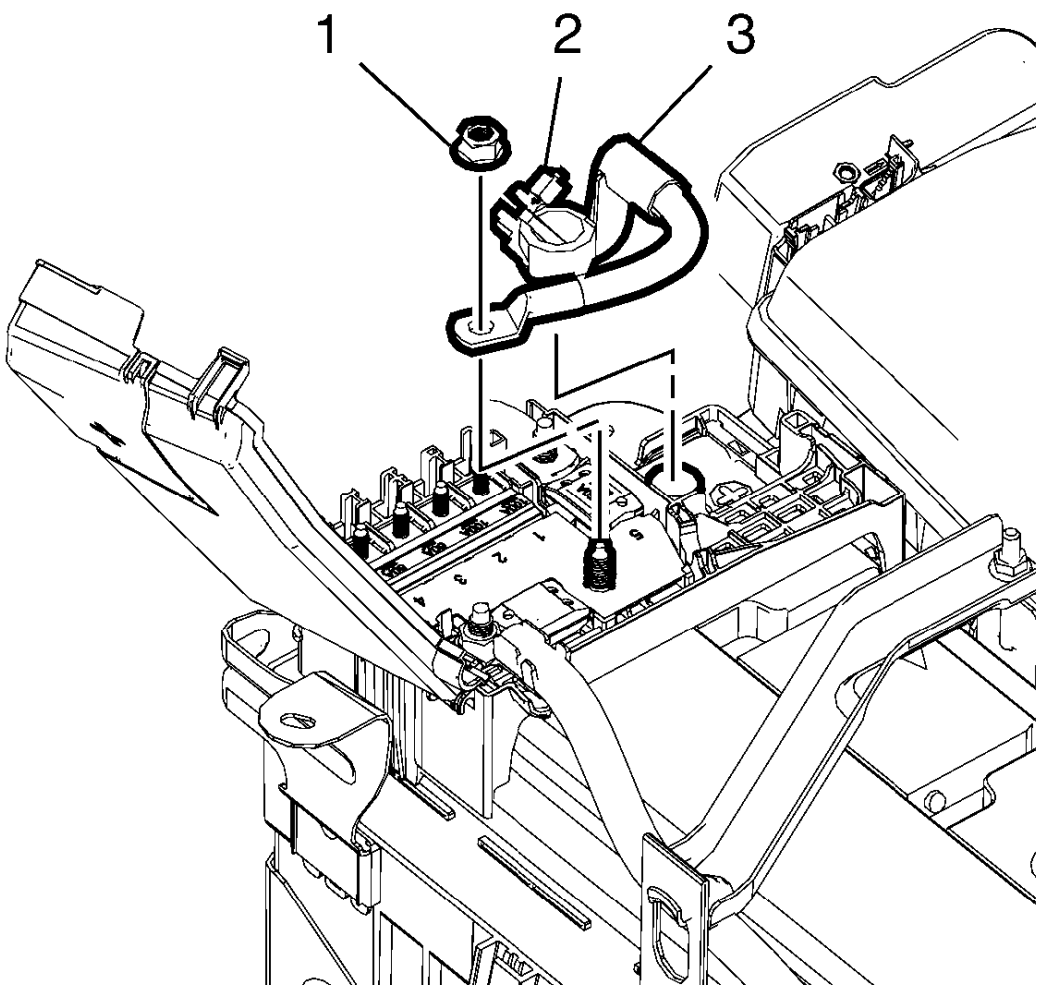

Fig. 29: Battery Positive Cable-To-Fuse Box Nut
Courtesy of GENERAL MOTORS COMPANY

1. Install the battery positive cable to fuse box cable (3).

CAUTION: Refer to Fastener Caution .

2. Install the battery positive cable to battery nut (2) and tighten to 4.5 N.m (40 lb in).
3. Install the battery positive cable to fuse box nut (1) and tighten to 9 N.m (80 lb in).

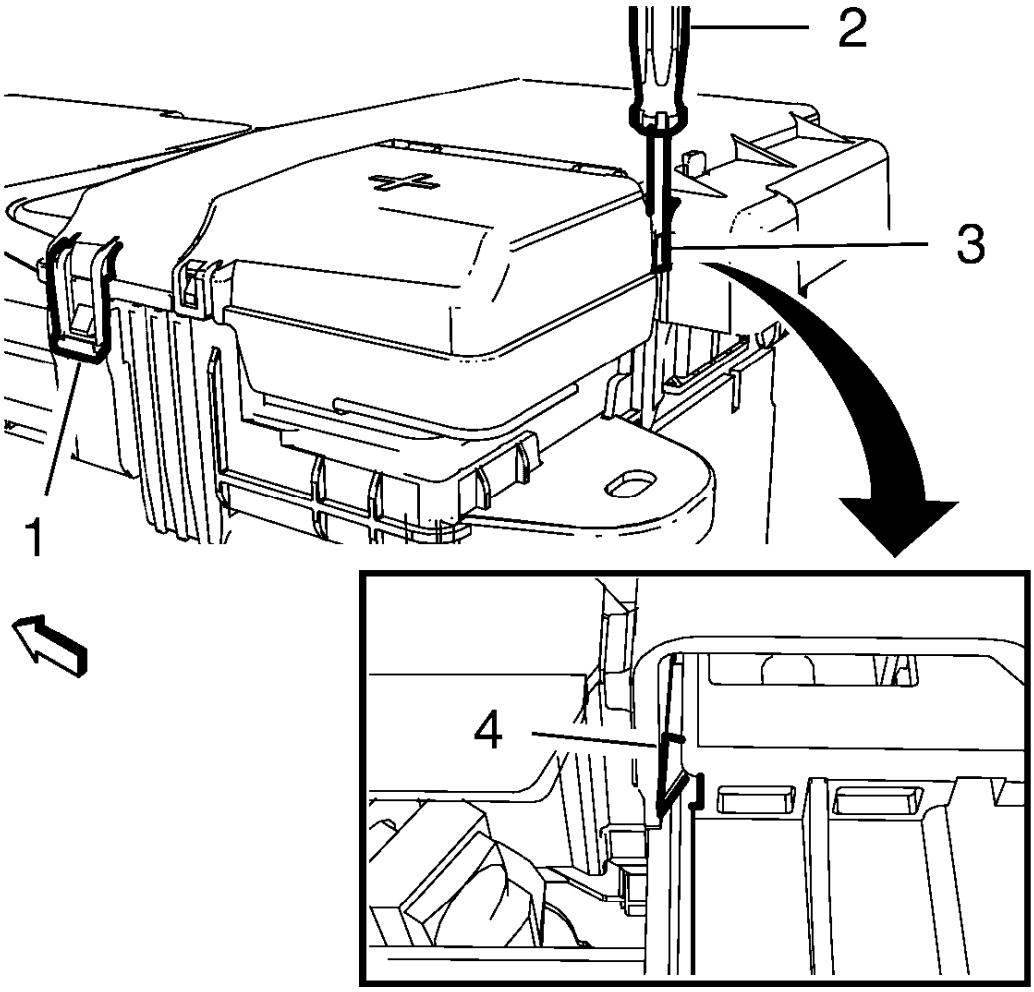

Fig. 30: Battery Fuse Box Cover
Courtesy of GENERAL MOTORS COMPANY

4. Close the battery fuse box cover and lock the retaining tabs (1) and (4).
5. Connect the battery negative cable. Refer to **Battery Negative Cable Disconnection and Connection**.

BATTERY REPLACEMENT

Removal Procedure

1. Open the hood.
2. Disconnect the battery negative cable. Refer to **Battery Negative Cable Disconnection and Connection**.

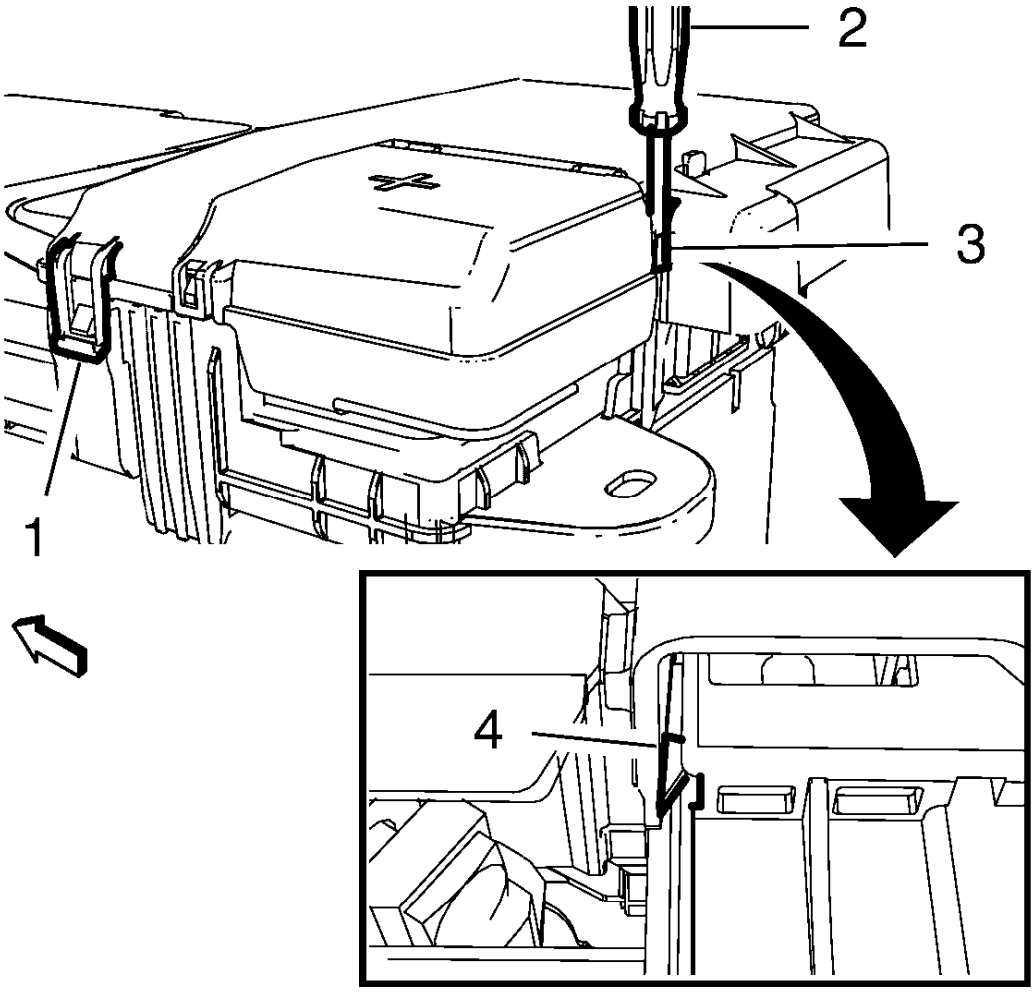

Fig. 31: Battery Fuse Box Cover
Courtesy of GENERAL MOTORS COMPANY

3. Unlock the retaining tab (1) on the battery fuse box cover.
4. Use a suitable screwdriver (2) to unlock the clip (4) through the window (3).

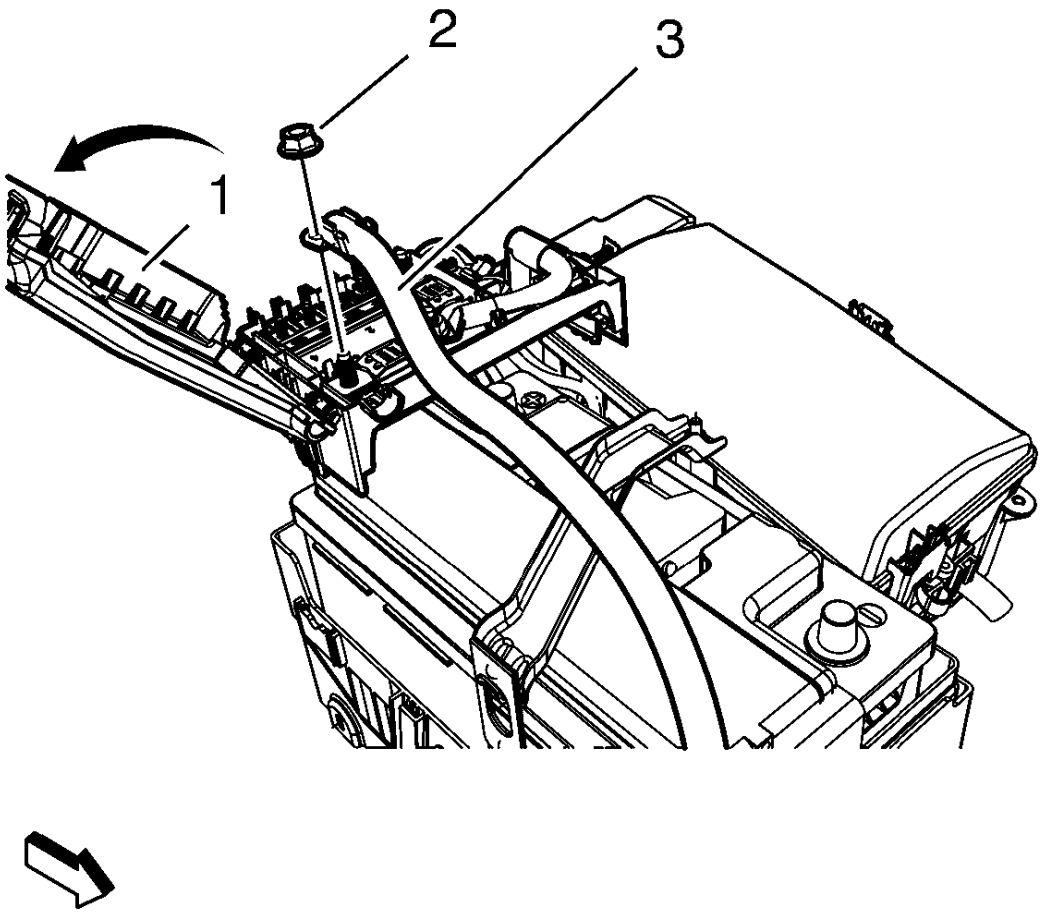

Fig. 32: View Of Fuse Box Cover, Battery Cable And Nut
Courtesy of GENERAL MOTORS COMPANY

NOTE: Pull the battery fuse box housing. DO NOT pull the flap.

5. Open the battery fuse box cover (1).

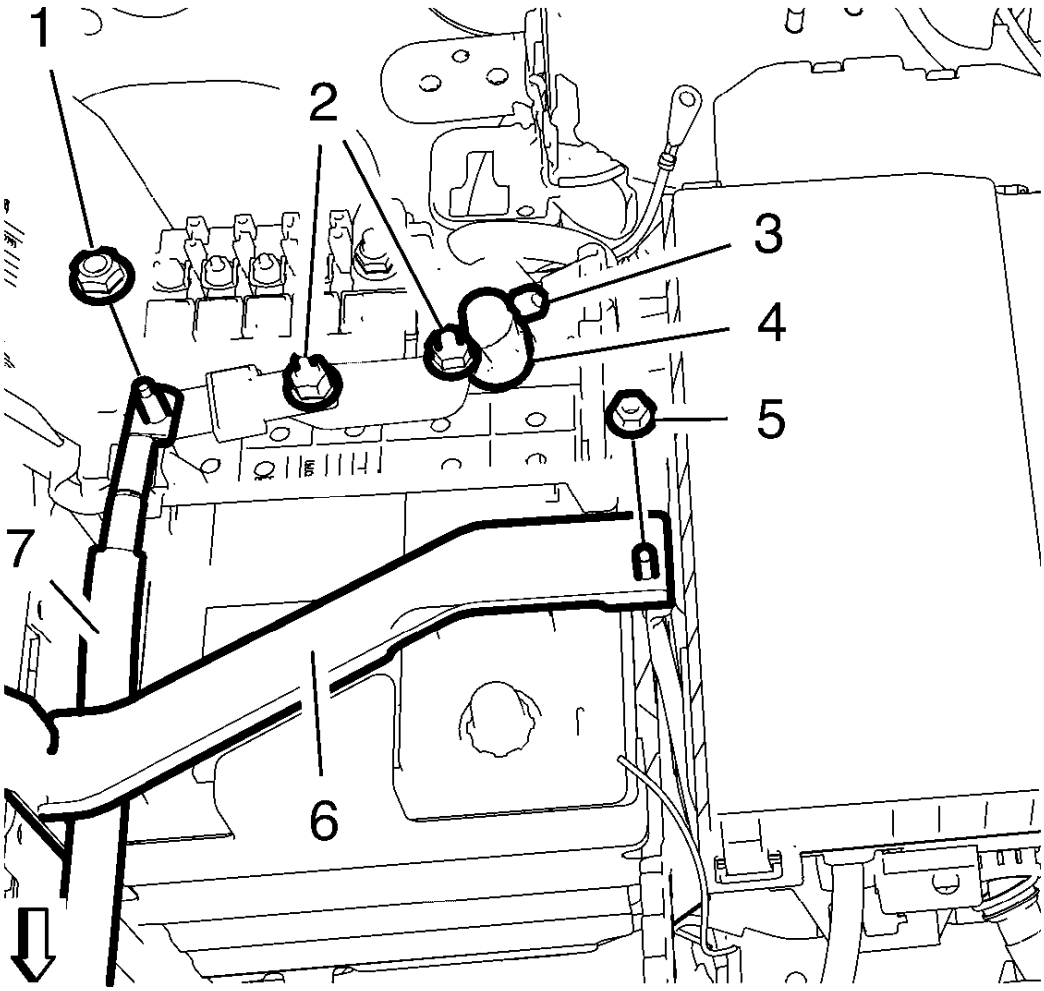

Fig. 33: Starter Cable, Battery Positive Cable And Retainer
Courtesy of GENERAL MOTORS COMPANY

6. Remove the battery hold down retainer nut (5).
7. Remove the battery hold down retainer (6).
8. Remove the battery positive cable to starter cable nut (1).
9. Remove the battery positive cable to starter cable (7).
10. Loosen the 2 battery positive plate nuts (2).
11. Loosen the battery positive cable nut (3).
12. Remove the battery positive cable (4).

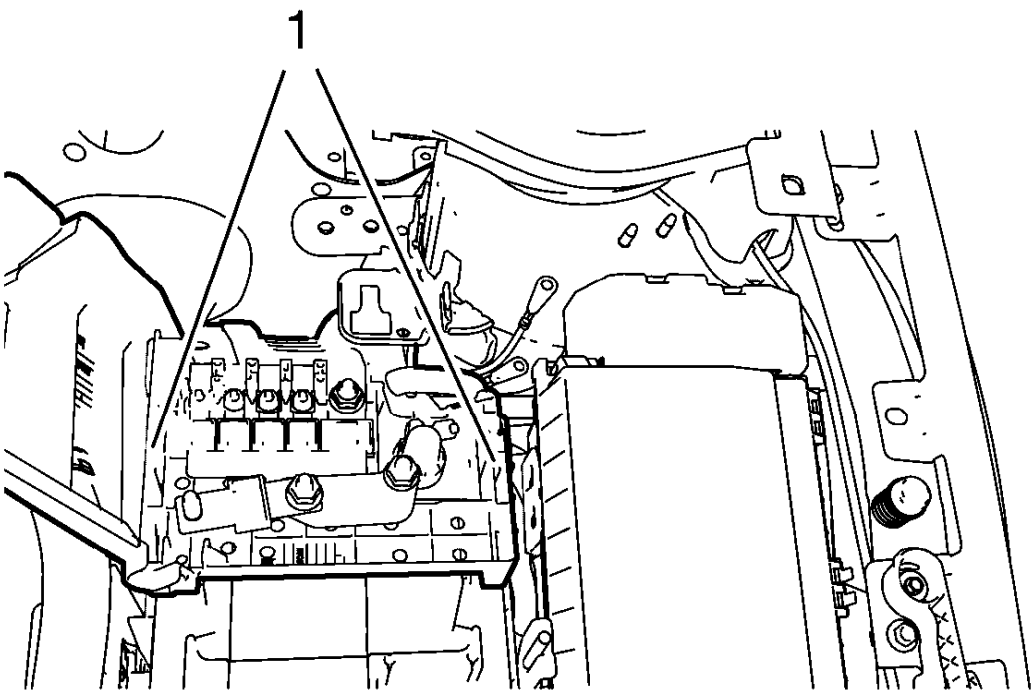

Fig. 34: Fuse Block Retainer Clips
Courtesy of GENERAL MOTORS COMPANY

13. Unclip the battery fuse block retainer clips (1) from the battery and reposition the battery fuse block along with the battery positive cable.

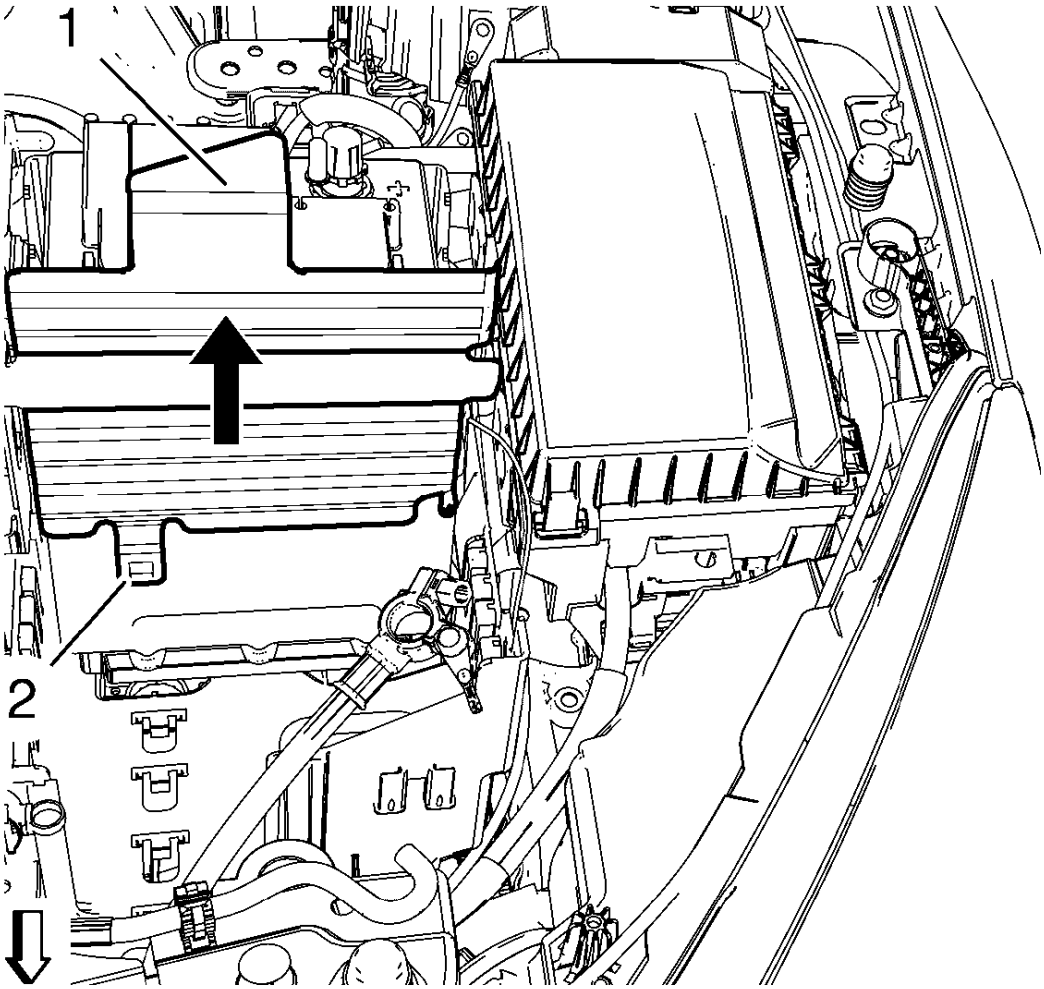

Fig. 35: Battery Tray Protector And Battery Tray Protector Retainer
Courtesy of GENERAL MOTORS COMPANY

NOTE: Only necessary if vehicle is equipped with a short battery.

14. Unclip the battery tray protector retainer (2) from battery tray.
15. Remove the battery tray protector (1) by moving rearward, in the direction of the arrow.

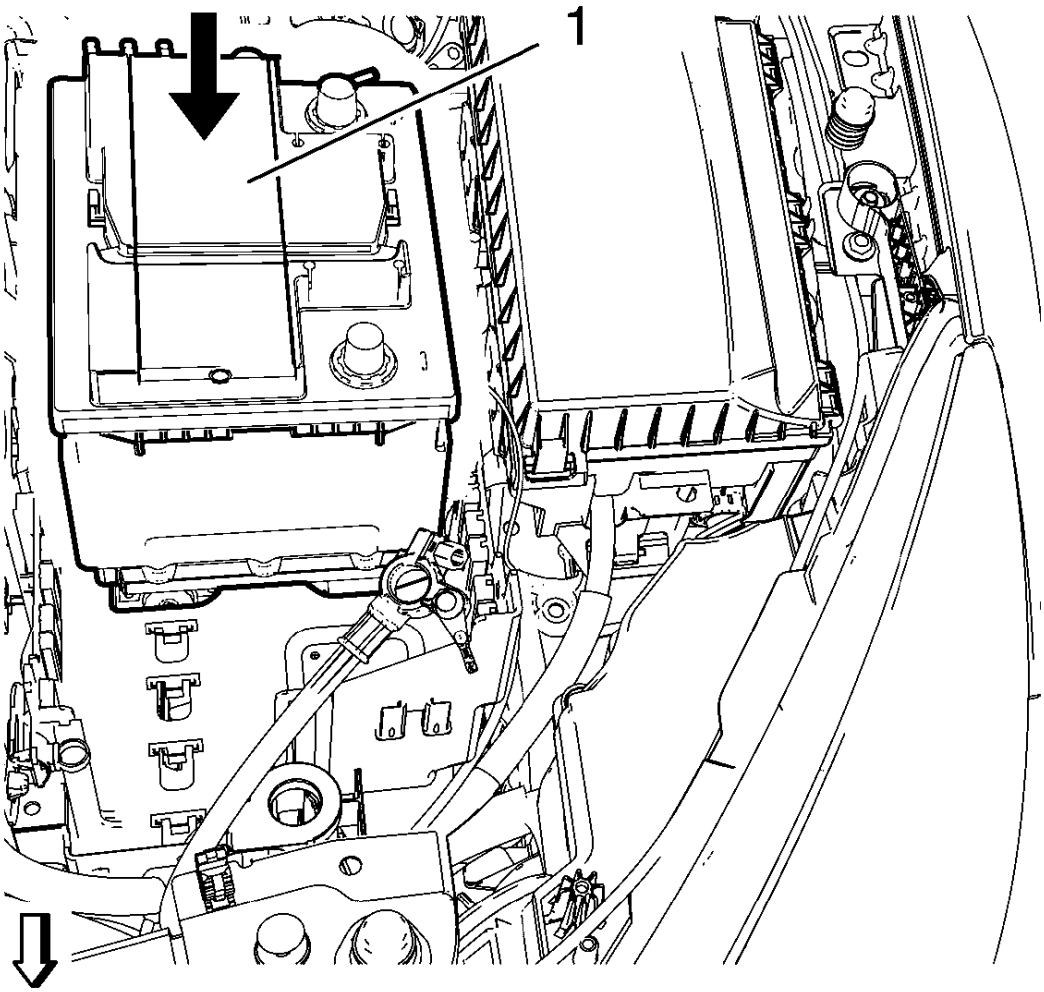

Fig. 36: Battery Position
Courtesy of GENERAL MOTORS COMPANY

16. Move the battery (1) forward, in the direction of the arrow and lift to remove.

Installation Procedure

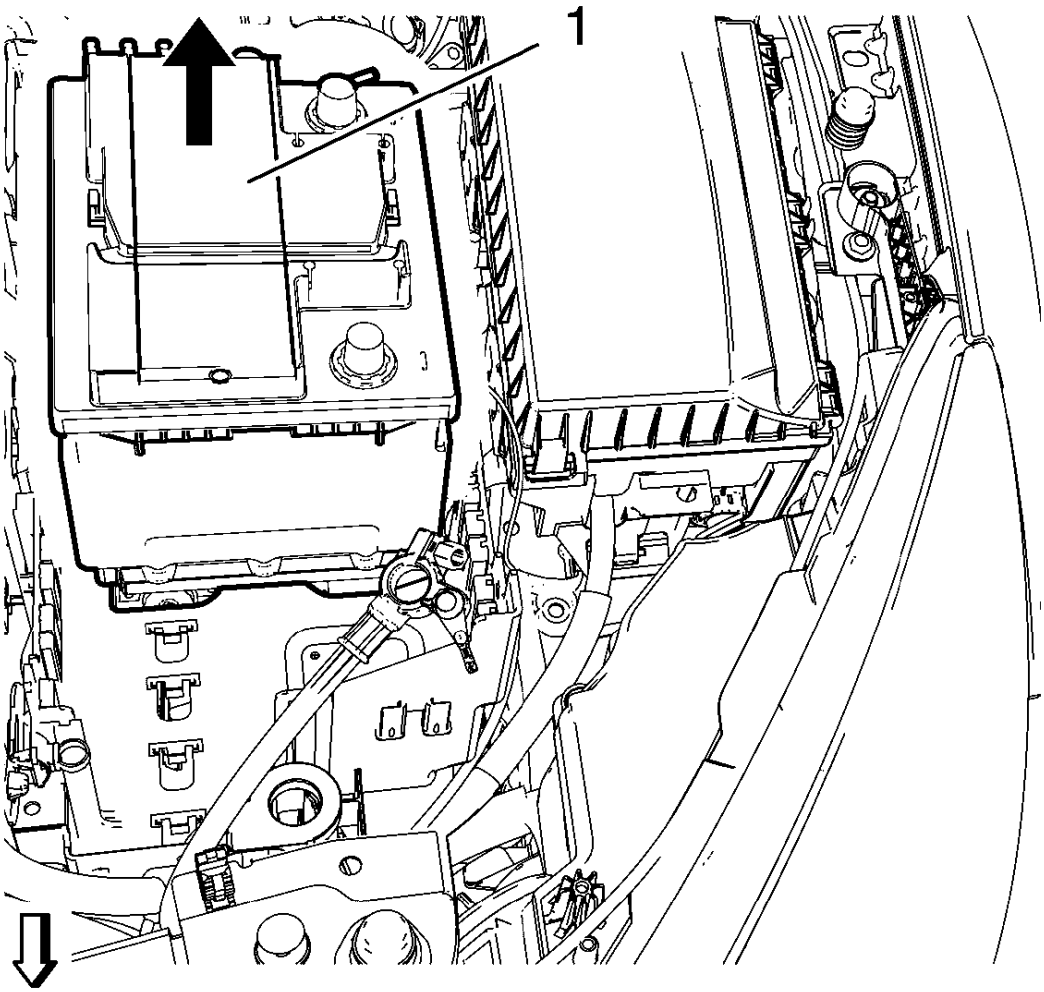

Fig. 37: Battery Position
Courtesy of GENERAL MOTORS COMPANY

1. Install battery (1) and move rearward, in direction of the arrow until it rests against the battery tray.

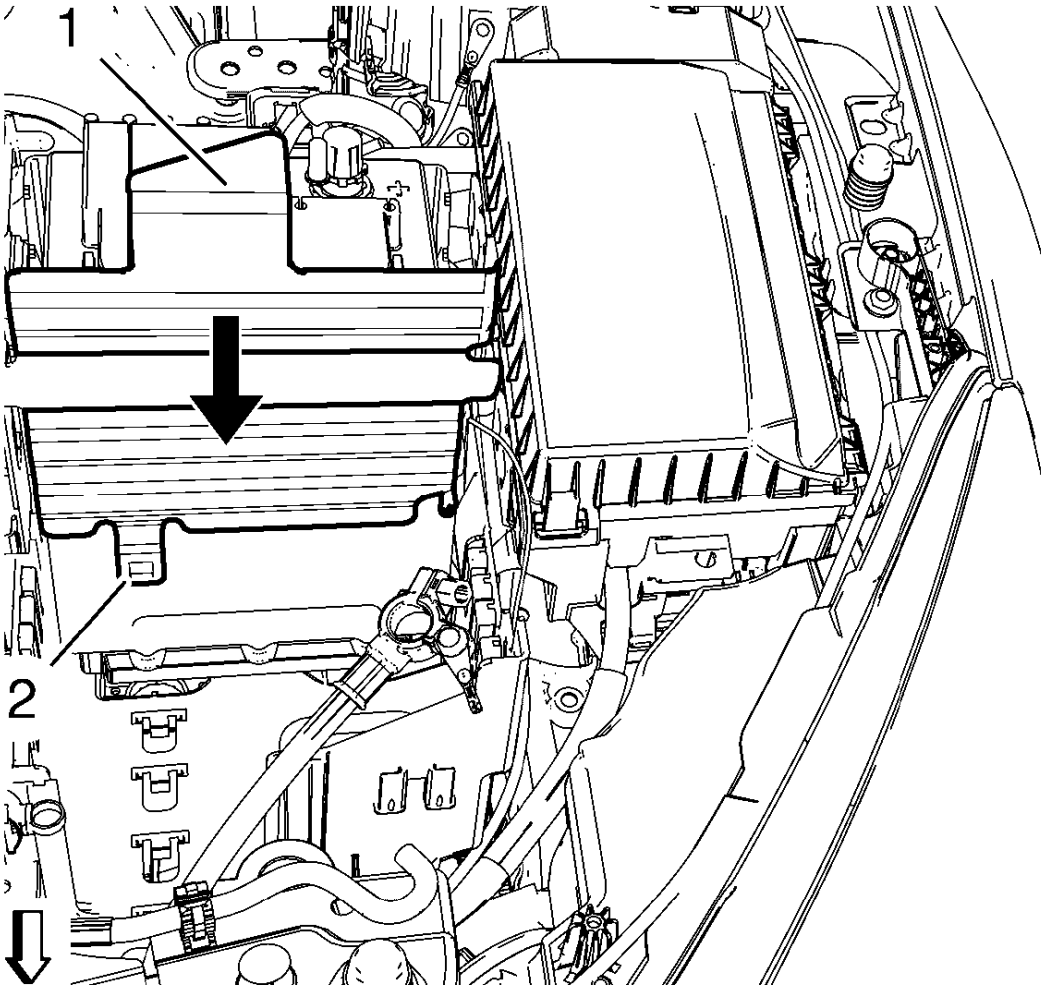

Fig. 38: Battery Tray Protector And Retainer
Courtesy of GENERAL MOTORS COMPANY

2. Install the battery tray protector (1) to battery tray and move forward, in the direction of the arrow until the retainer (2) engages with the battery tray.

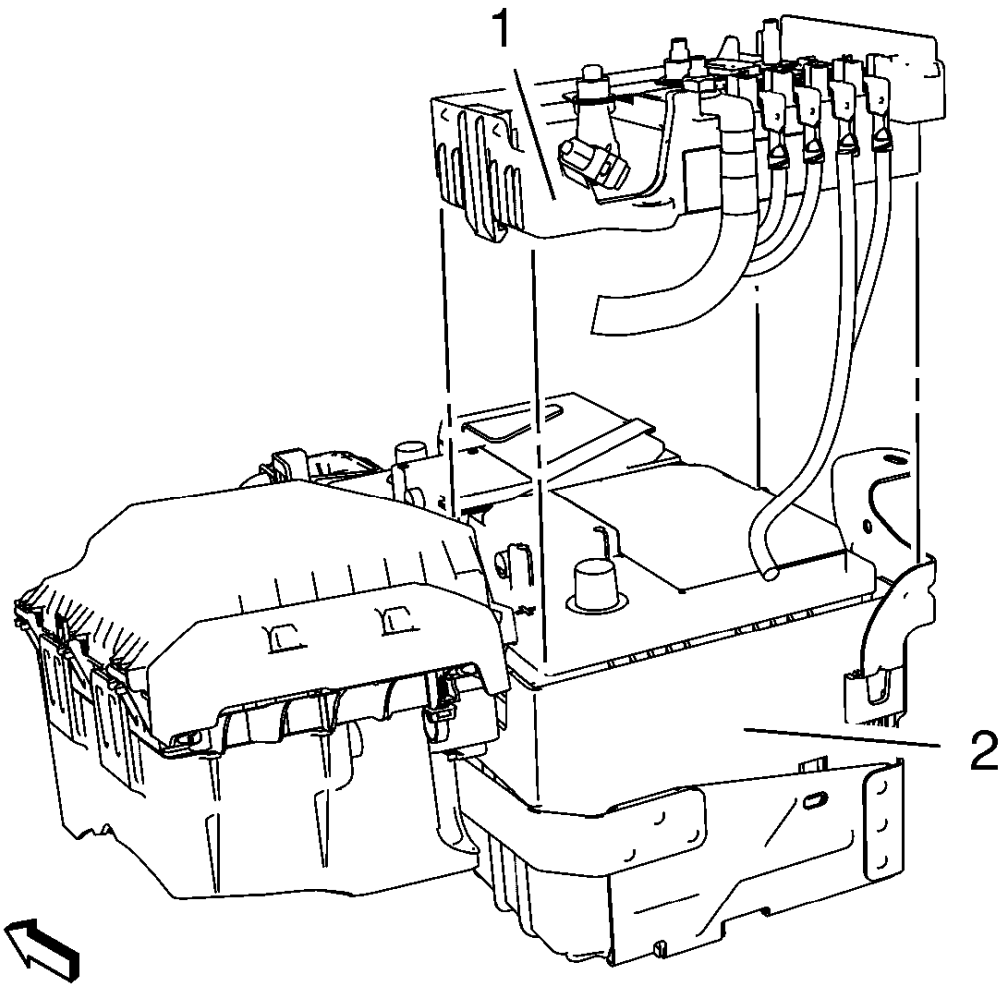

Fig. 39: Battery And Battery Fuse Box
Courtesy of GENERAL MOTORS COMPANY

3. Align the rear side of the battery fuse box (1) exactly to the rear side of the battery (2).

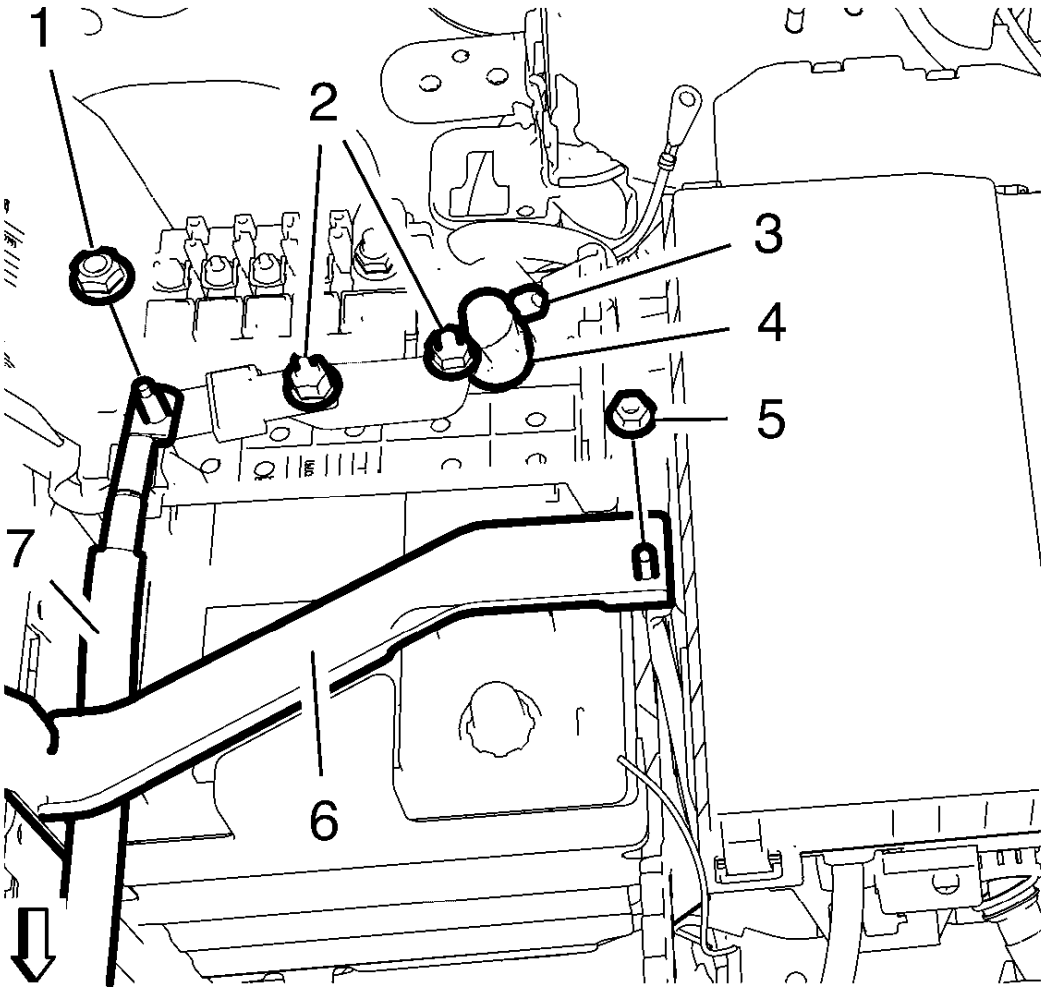

Fig. 40: Starter Cable, Battery Positive Cable And Retainer
Courtesy of GENERAL MOTORS COMPANY

4. Install the battery positive cable (4) to the battery.

CAUTION: Refer to Fastener Caution .

5. Tighten the battery positive cable nut (3) to 4.5 N.m (40 lb in).
6. Tighten the 2 battery positive plate nuts (2) to 12 N.m (106 lb in).
7. Install the battery positive cable to starter cable (7).
8. Install the battery positive cable to starter cable nut (1) and tighten to 12 N.m (106 lb in).
9. Install the battery hold down retainer (6).
10. Install the battery hold down retainer nut (5) and tighten to 9 N.m (80 lb in).

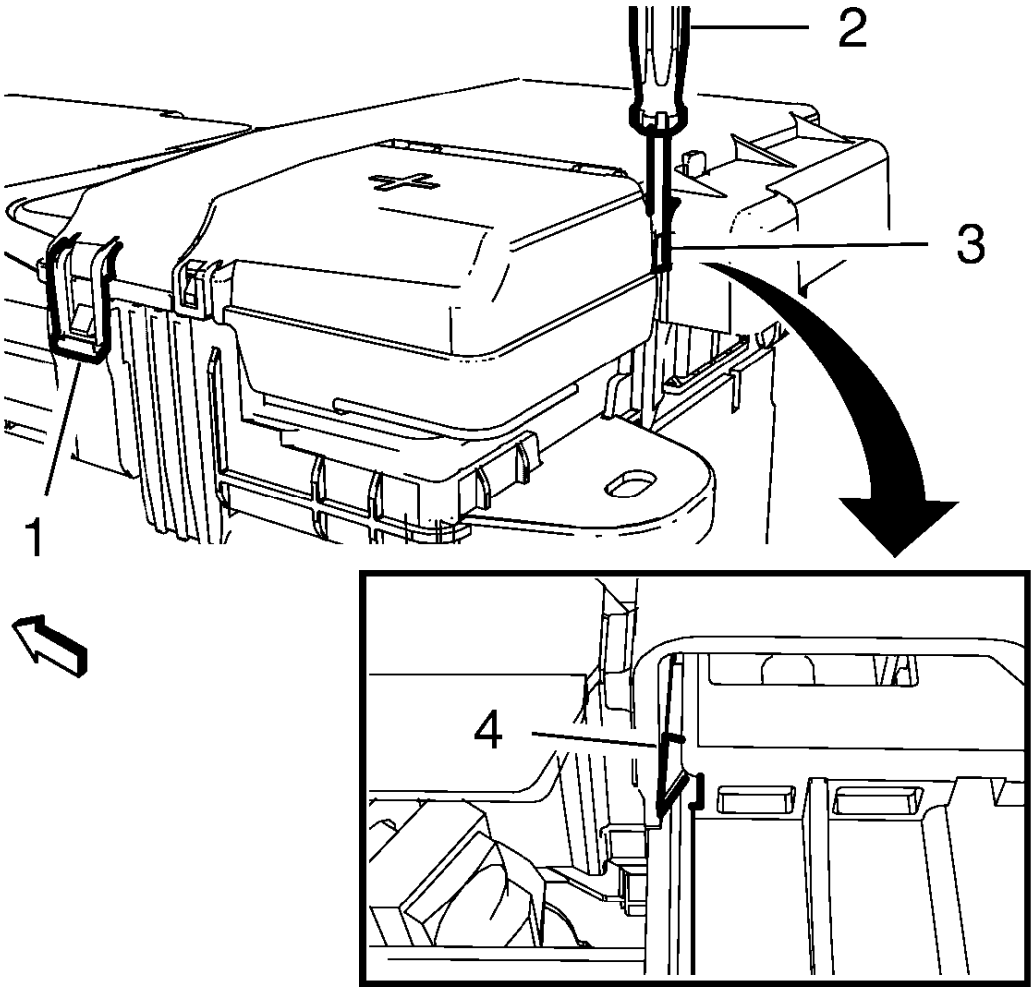

Fig. 41: Battery Fuse Box Cover
Courtesy of GENERAL MOTORS COMPANY

NOTE: Pull the battery fuse box housing, not the flap.

11. Close the battery fuse box cover and lock the retaining tabs (1, 4).
12. Connect the battery negative cable. Refer to **Battery Negative Cable Disconnection and Connection**.
13. Close the hood.

BATTERY TRAY REPLACEMENT

Removal Procedure

1. Open the hood.
2. Remove the battery. Refer to **Battery Replacement**.
3. Unclip all wiring harness from the battery tray.

4. Unclip the engine control module bracket from the battery tray.
5. If equipped, unclip the radiator surge tank engine hose from the battery tray.

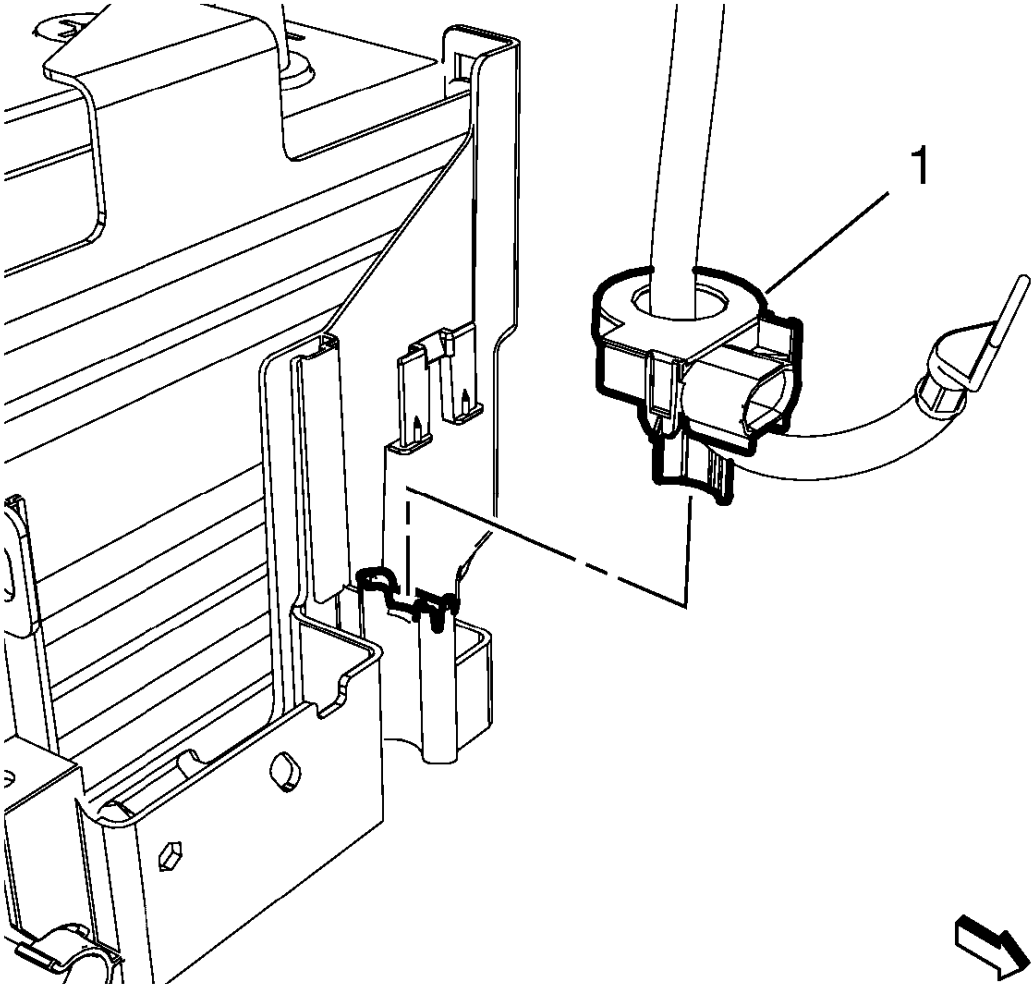

Fig. 42: Battery Current Sensor And Battery Tray
Courtesy of GENERAL MOTORS COMPANY

6. Unclip the battery current sensor (1) from the battery tray.

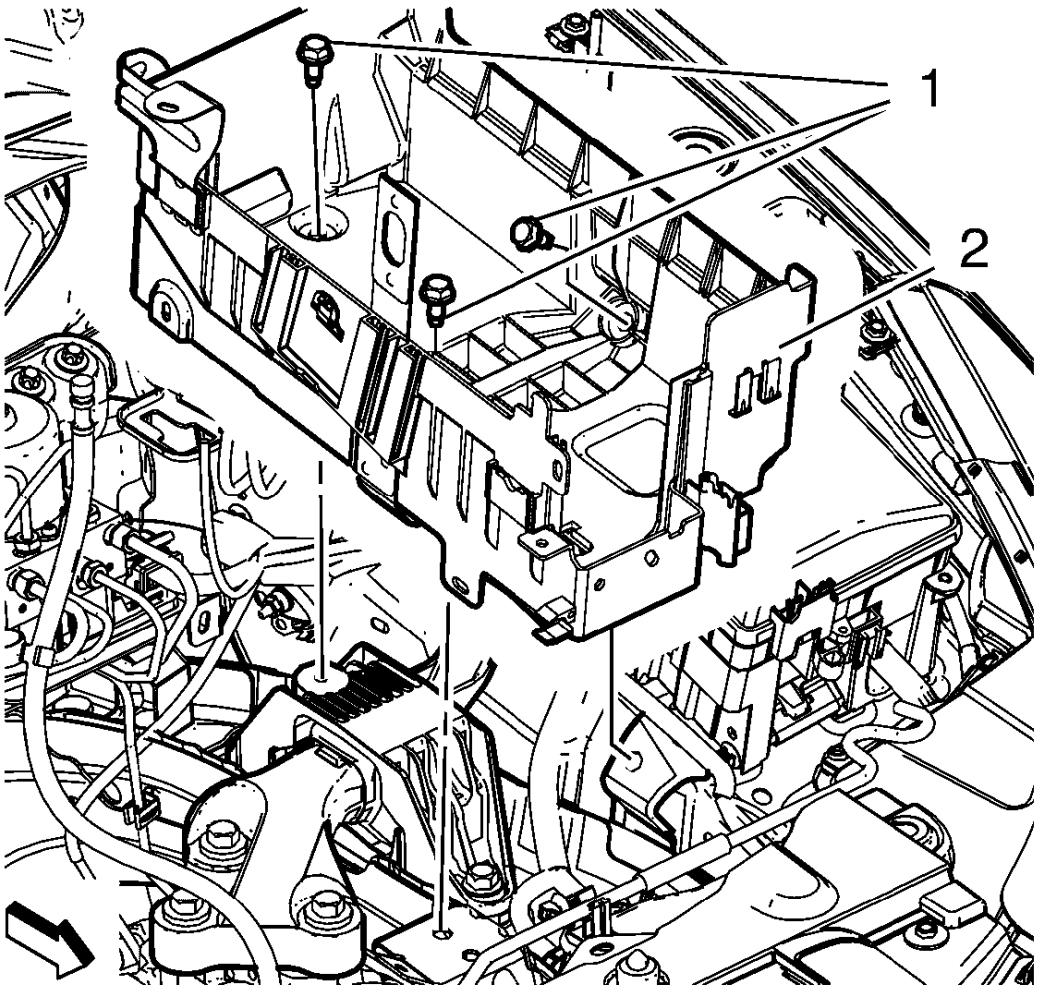

Fig. 43: Battery Tray Bolts
Courtesy of GENERAL MOTORS COMPANY

7. Remove the 3 battery tray bolts (1).
8. Remove the battery tray (2).

Installation Procedure

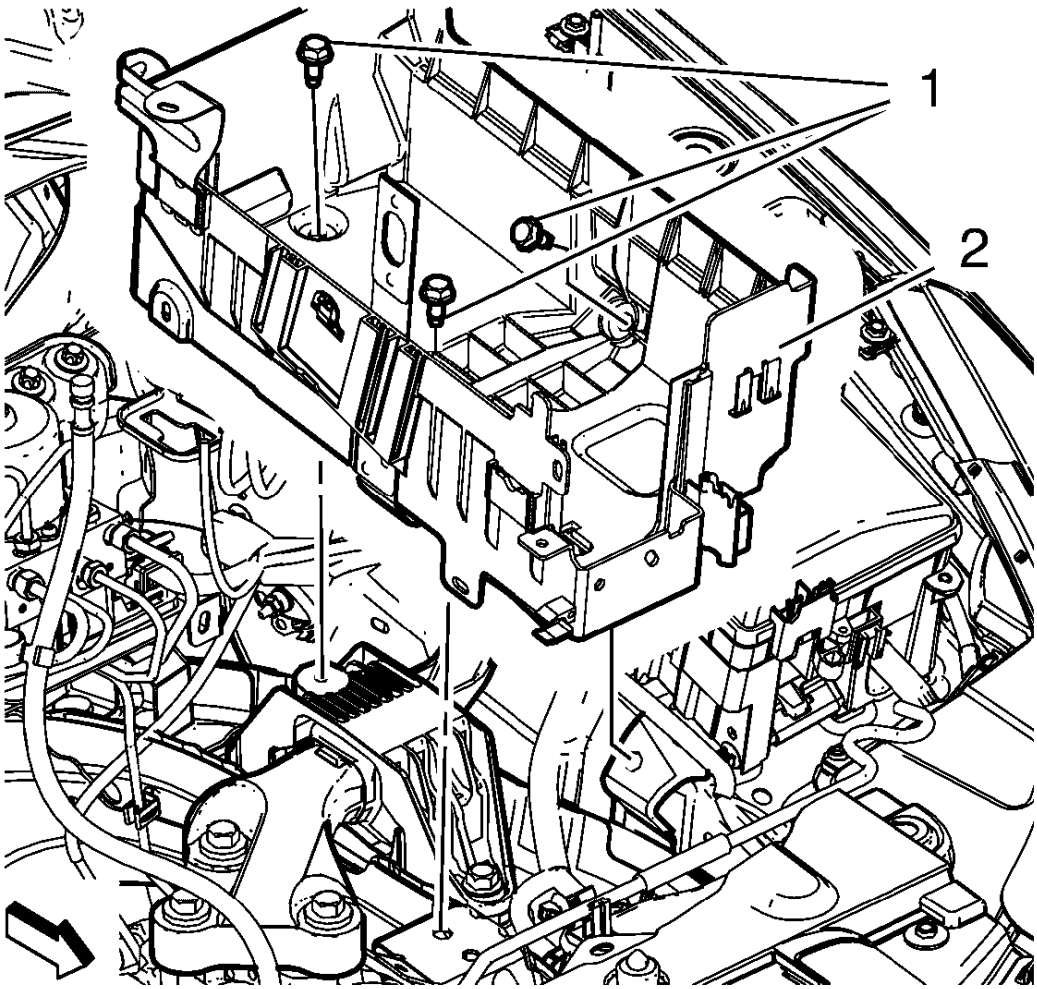

Fig. 44: Battery Tray Bolts
Courtesy of GENERAL MOTORS COMPANY

1. Install the battery tray (2).

CAUTION: Refer to Fastener Caution .

2. Install the 3 battery tray bolts (1) and tighten to 15 N.m (11 lb ft).

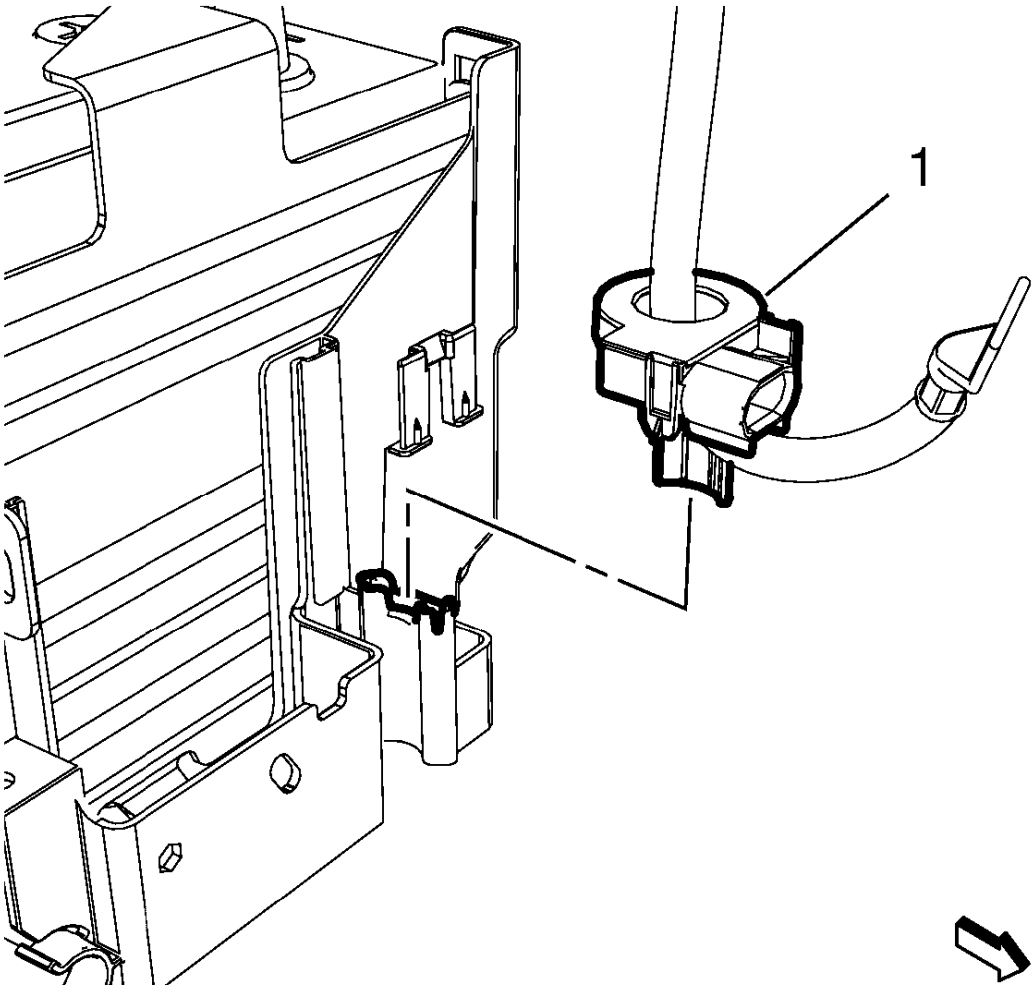

Fig. 45: Battery Current Sensor And Battery Tray
Courtesy of GENERAL MOTORS COMPANY

3. Clip in the battery current sensor (1) to the battery tray.
4. If equipped, clip in the radiator surge tank engine hose to the battery tray.
5. Install battery. Refer to **Battery Replacement**.
6. Clip in all wiring harness at the battery tray.
7. Clip in the engine control module bracket to the battery tray.
8. Close the hood.

STARTER REPLACEMENT (1.4L LUV)

Removal Procedure

1. Disconnect the battery negative cable. Refer to **Battery Negative Cable Disconnection and Connection**.
2. Raise and support the vehicle. Refer to **Lifting and Jacking the Vehicle** .

3. If equipped, remove the front compartment splash shield. Refer to **Front Compartment Insulator Replacement** .
4. If equipped, remove the engine shield. Refer to **Engine Shield Replacement** .

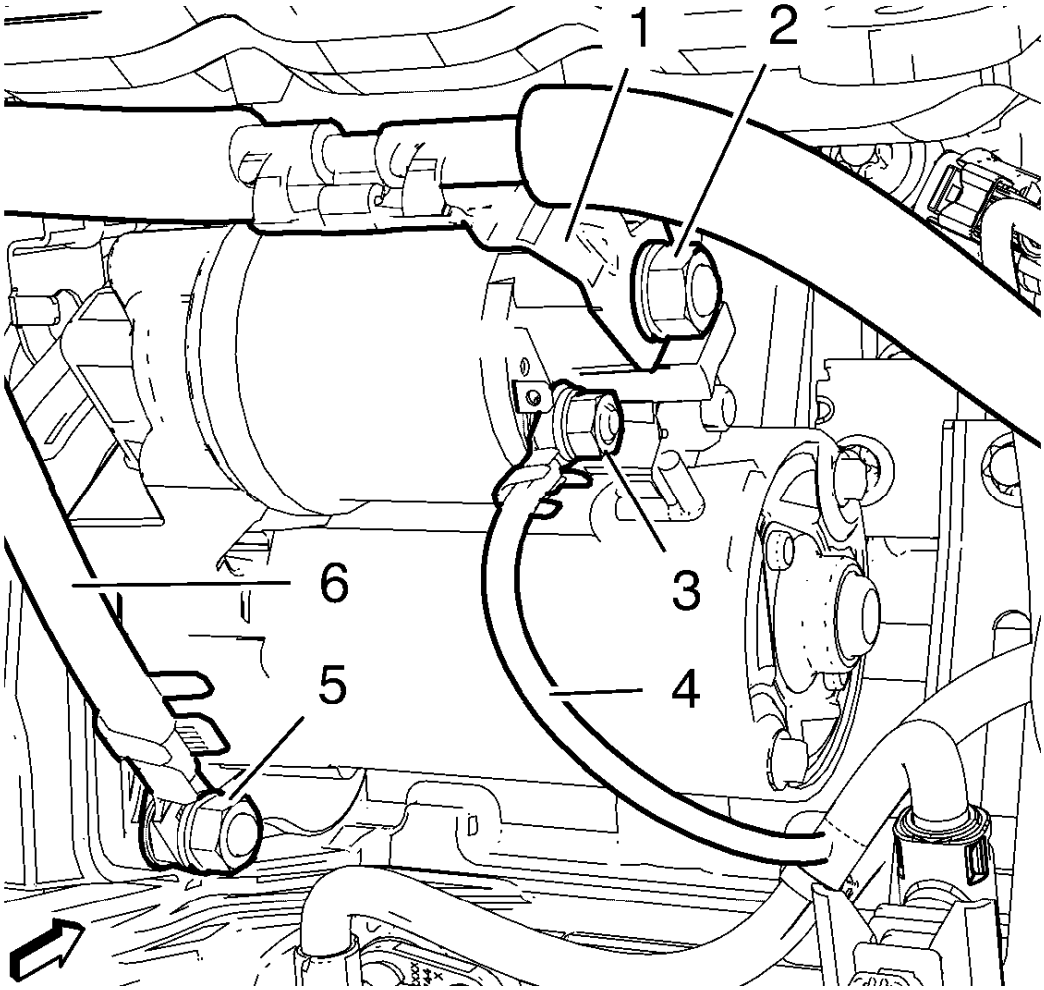

Fig. 46: Generator Positive Cable, Starter Positive Cable And Ground Cable
Courtesy of GENERAL MOTORS COMPANY

5. Remove the starter and generator positive cable nut (2).
6. Remove the starter and generator positive cable (1).
7. Remove the starter positive cable nut (3).
8. Remove the starter positive cable (4) from the starter.
9. Remove the starter ground cable nut (5).
10. Remove the ground cable (6).

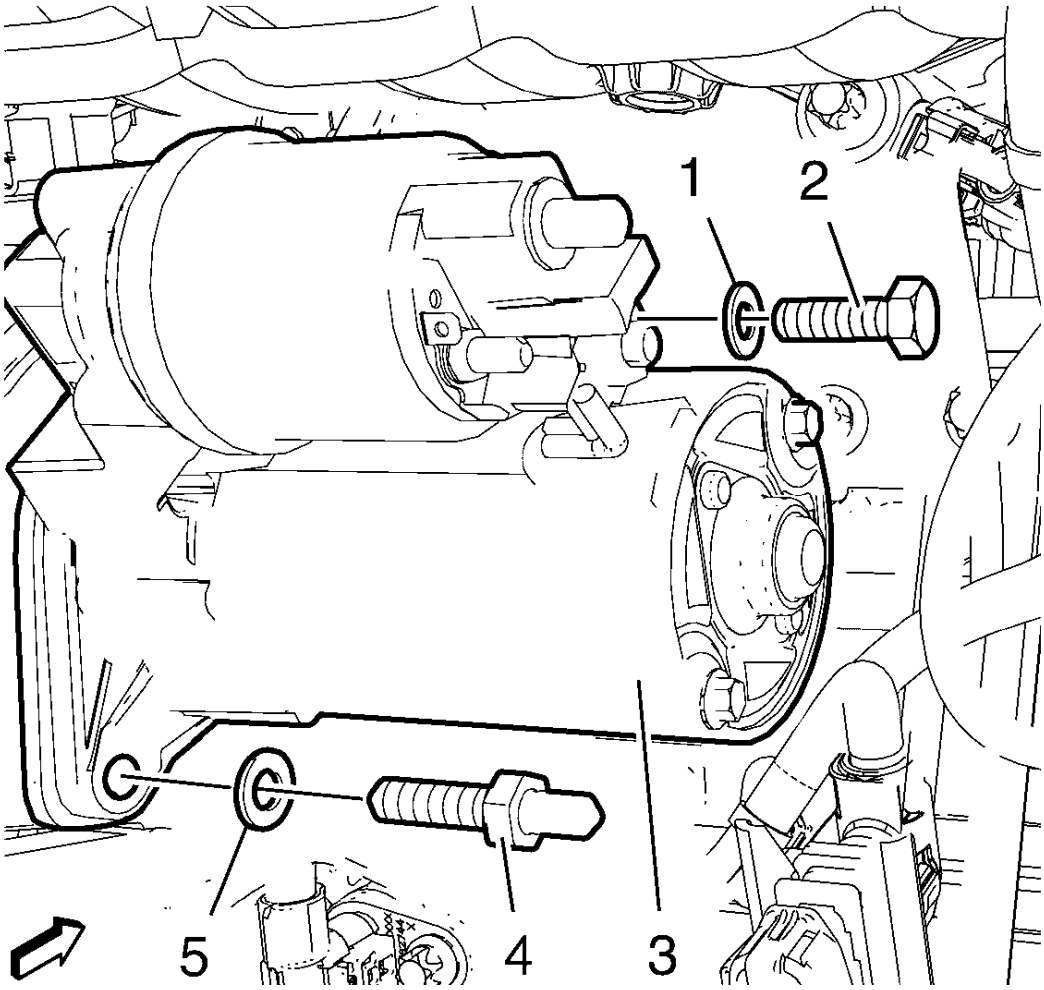

Fig. 47: Starter And Components
Courtesy of GENERAL MOTORS COMPANY

11. Remove the upper starter bolt (2) and the washer (1).
12. Remove the starter bolt stud (4) and the washer (5).
13. Remove the starter (3).

Installation Procedure

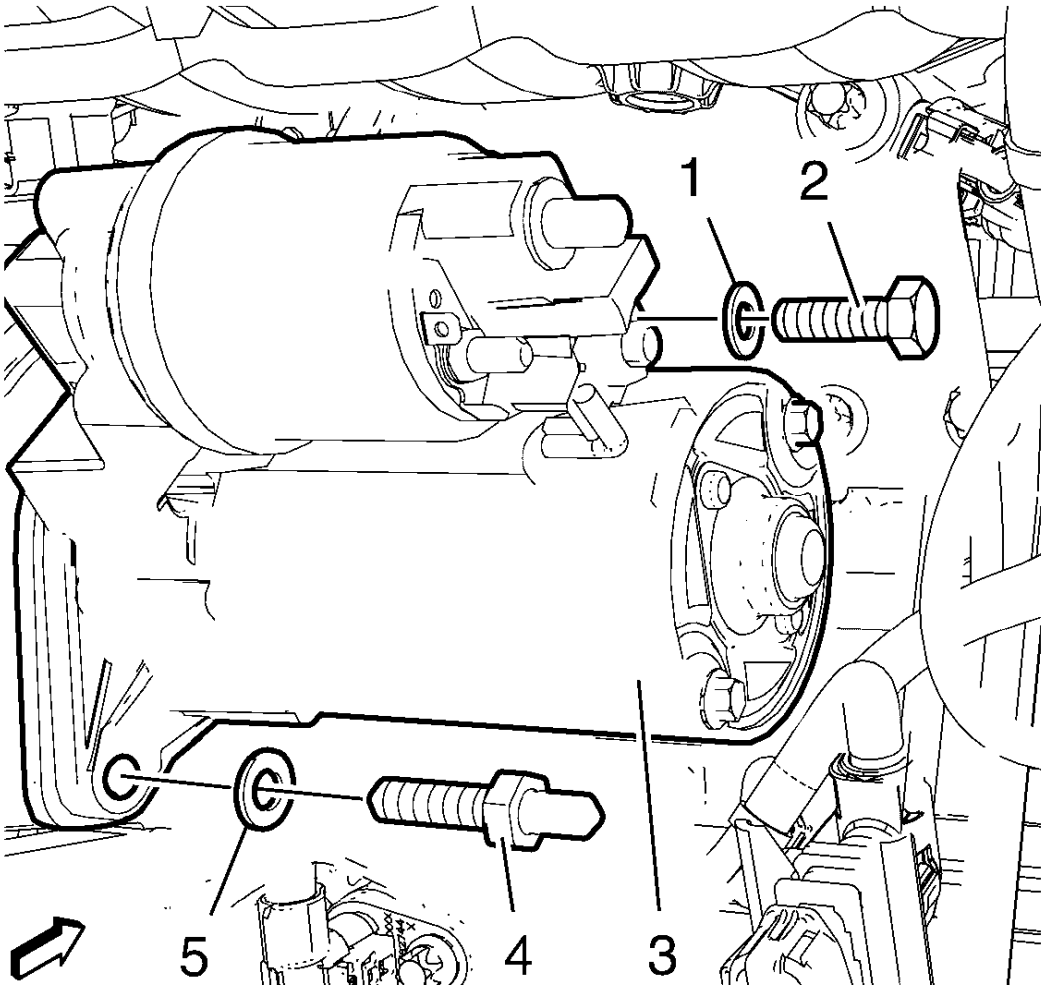

Fig. 48: Starter And Components
Courtesy of GENERAL MOTORS COMPANY

1. Install the starter (3).

CAUTION: Refer to Fastener Caution .

2. Install the washer (5) and the starter bolt stud (4) and tighten to 25 N.m (18 lb ft).
3. Install the upper starter bolt (2) and the washer (1) and tighten to 25 N.m (18 lb ft).

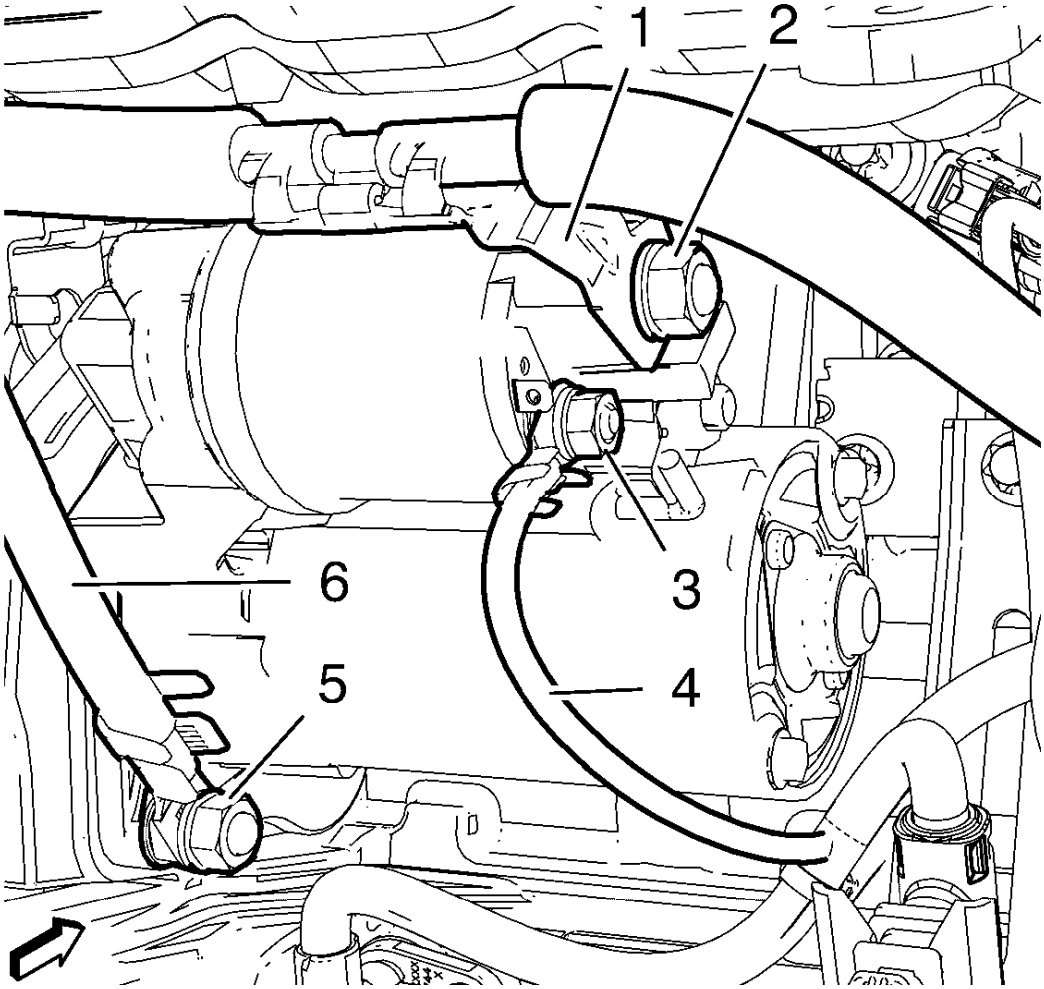

Fig. 49: Generator Positive Cable, Starter Positive Cable And Ground Cable
Courtesy of GENERAL MOTORS COMPANY

4. Install the ground cable (6).
5. Install the starter ground cable nut (5) and tighten to 12.5 N.m (111 lb in).
6. Install the starter positive cable (4) to starter.
7. Install the starter positive cable nut (3) and tighten.
8. Install the starter and generator positive cable (1).
9. Remove the starter and generator positive cable nut (2) and tighten to 12.5 N.m (111 lb in).
10. If equipped, remove the front compartment splash shield. Refer to **Front Compartment Insulator Replacement** .
11. If equipped, remove the engine shield. Refer to **Engine Shield Replacement** .
12. Lower the vehicle.
13. Connect the battery negative cable. Refer to **Battery Negative Cable Disconnection and Connection**.
14. Close the hood.

STARTER REPLACEMENT (1.8L LUW AND LWE)

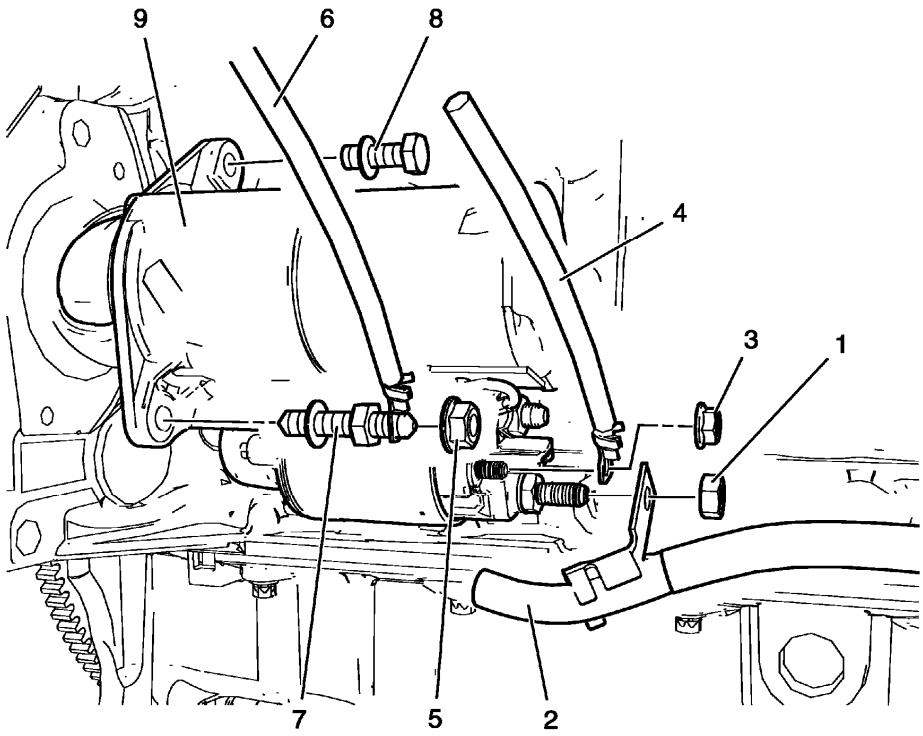

Fig. 50: Starter (LUW)
Courtesy of GENERAL MOTORS COMPANY

Starter Replacement (1.8L LUW and LWE)

Callout	Component Name
Preliminary Procedures 1. Disconnect the negative cable from the battery. Refer to **Battery Negative Cable Disconnection and Connection**. 2. Remove the intake manifold brace. Refer to **Intake Manifold Replacement** .	
1	Starter and Generator Positive Cable Nut **CAUTION:** **Refer to Fastener Caution .** **Tighten** 12.5 N.m (111 lb in)
2	Starter and Generator Positive Cable
3	Starter Positive Cable Nut **Tighten** 12.5 N.m (111 lb in)

4	Starter Positive Cable
5	Starter Ground Cable Nut **Tighten** 20 N.m (15 lb ft)
6	Starter Ground Cable
7	Starter Stud **Tighten** 25 N.m (18 lb ft)
8	Starter Bolt **Tighten** 25 N.m (18 lb ft)
9	Starter

GENERATOR REPLACEMENT (1.4L LUV)

Removal Procedure

1. Open the hood.
2. Disconnect the battery negative cable. Refer to **Battery Negative Cable Disconnection and Connection**.
3. Raise and support the vehicle. Refer to **Lifting and Jacking the Vehicle** .
4. If equipped, remove the front compartment splash shield. Refer to **Front Compartment Insulator Replacement** .
5. If equipped, remove the engine shield. Refer to **Engine Shield Replacement** .

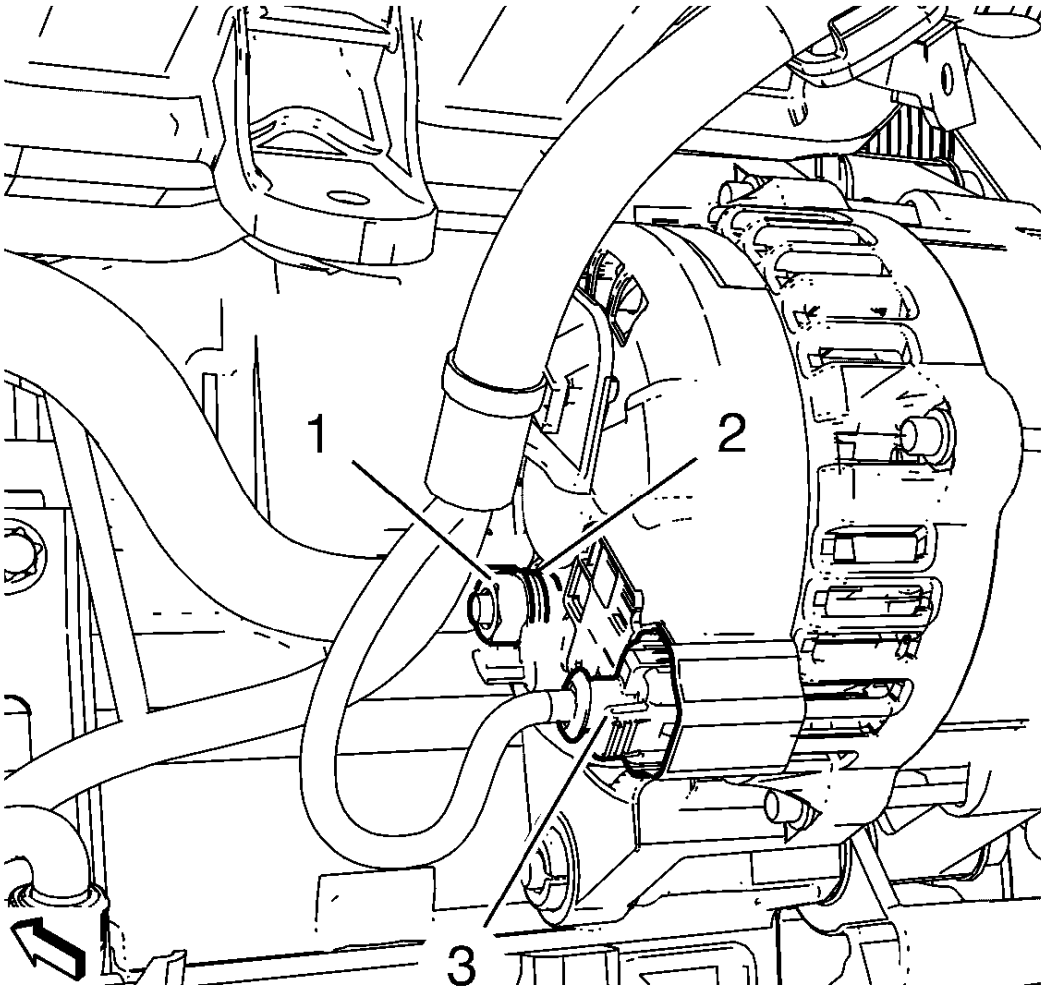

Fig. 51: Generator Positive Cable And Generator Wiring Harness Connector
Courtesy of GENERAL MOTORS COMPANY

6. Disconnect the generator wiring harness connector (3).
7. Remove the generator positive cable nut (1).
8. Remove the generator positive cable (2).
9. Remove the lower bolt and loosen the upper bolt of the drive belt tensioner. Refer to **Drive Belt Tensioner Replacement** .
10. Lower the vehicle.

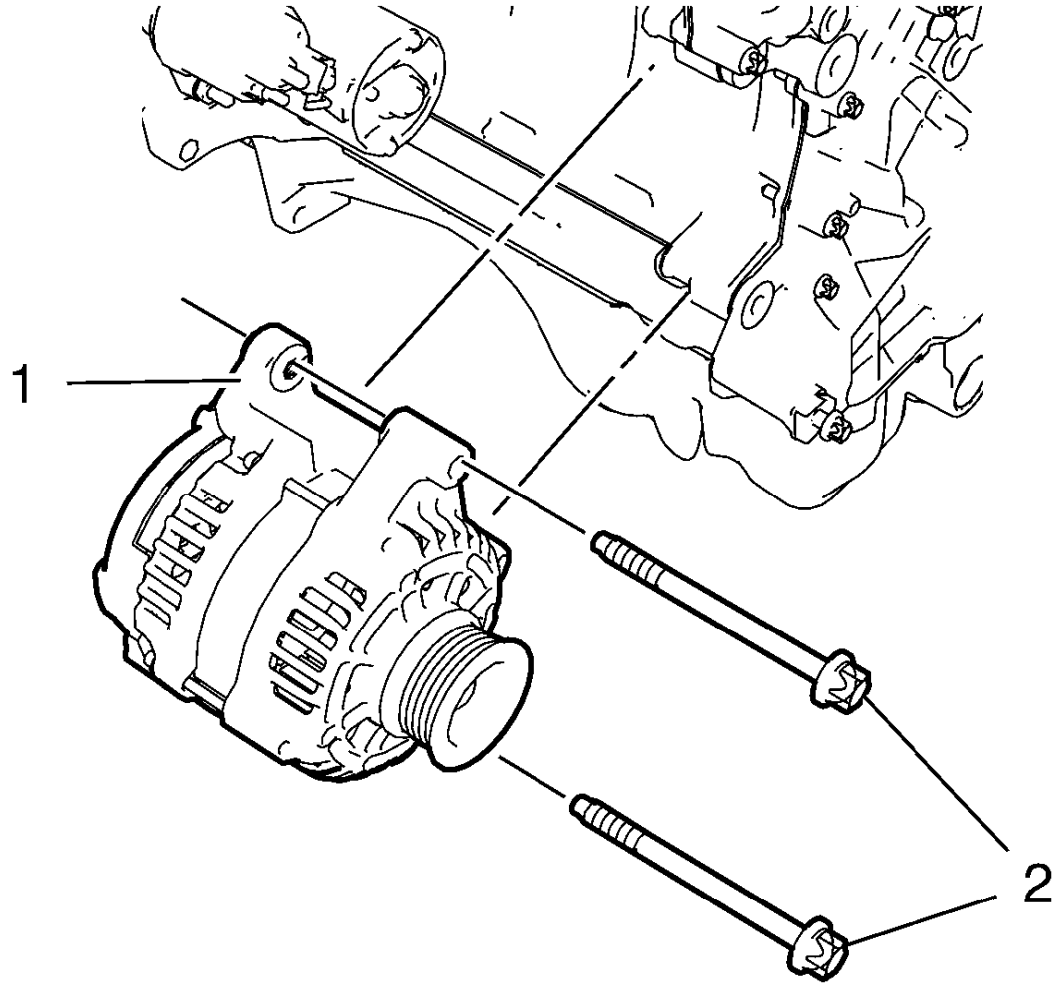

Fig. 52: Generator And Bolts
Courtesy of GENERAL MOTORS COMPANY

11. Remove the 2 generator bolts (2).
12. Remove the generator (1) from above.

Installation Procedure

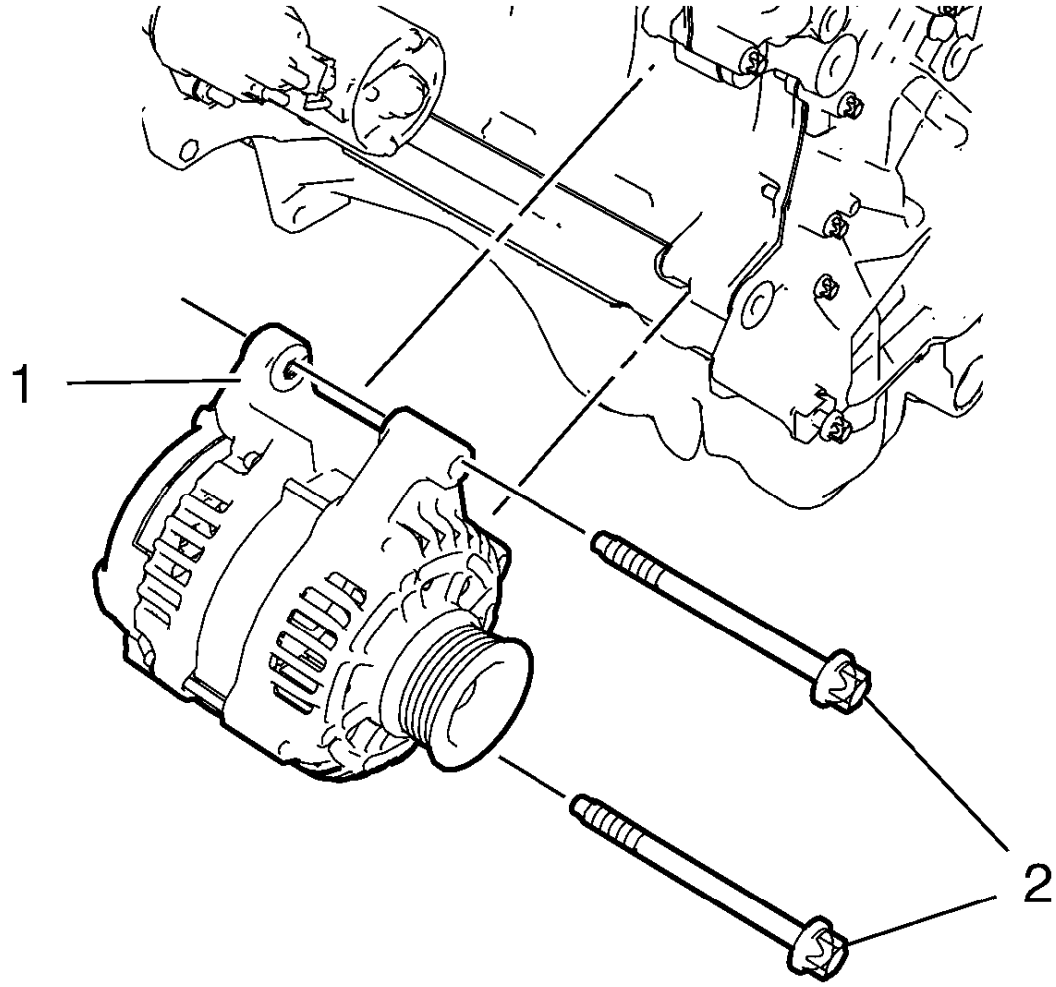

Fig. 53: Generator And Bolts
Courtesy of GENERAL MOTORS COMPANY

1. Install the generator (1) from above.

CAUTION: Refer to Fastener Caution .

2. Install the 2 generator bolts (2) and tighten to 35 N.m (26 lb ft).
3. Raise the vehicle.
4. Fasten the drive belt tensioner. Refer to **Drive Belt Tensioner Replacement** .

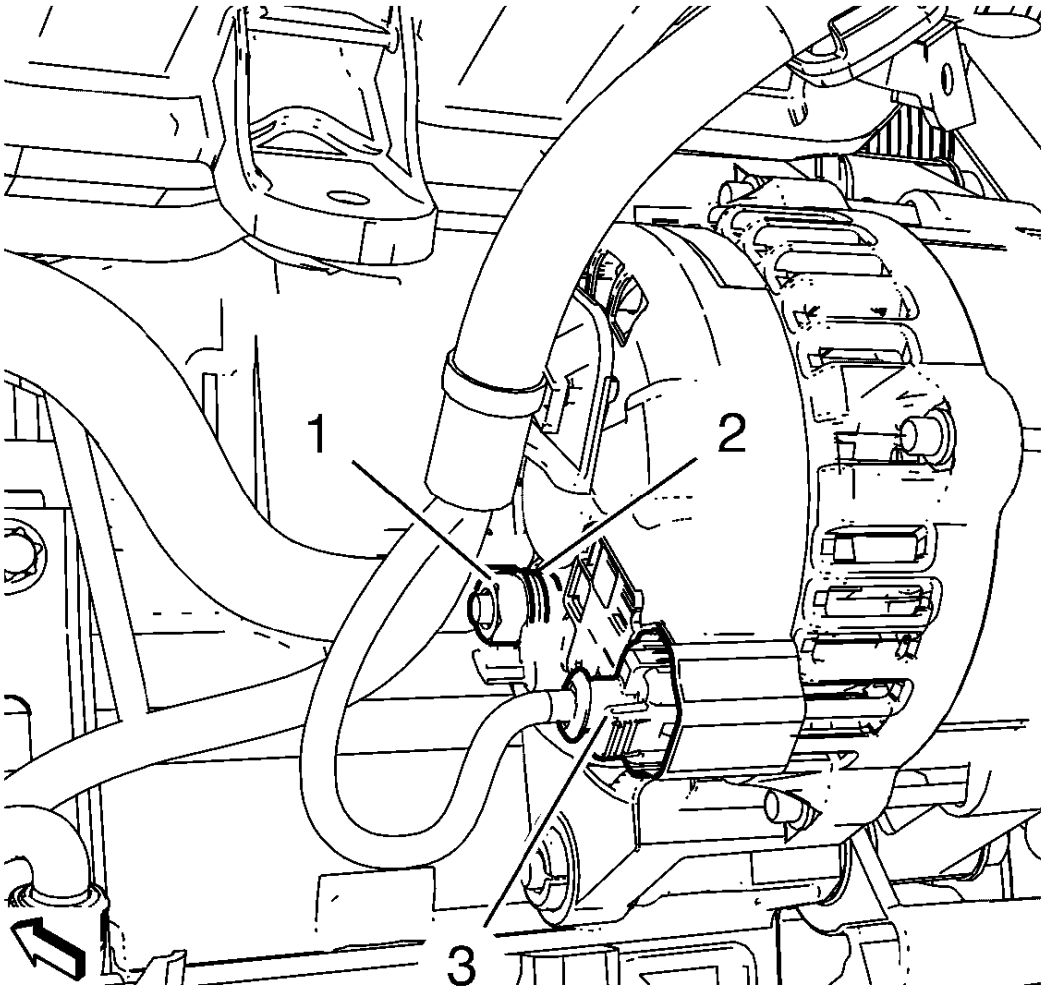

Fig. 54: Generator Positive Cable And Generator Wiring Harness Connector
Courtesy of GENERAL MOTORS COMPANY

5. Connect the generator wiring harness connector (3).
6. Install the generator positive cable (2).
7. Install the generator positive cable nut (1) and tighten to 17 N.m (13 lb ft).
8. If equipped, install the front compartment splash shield. Refer to **Front Compartment Insulator Replacement** .
9. If equipped, remove the engine shield. Refer to **Engine Shield Replacement** .
10. Lower the vehicle.
11. Connect the battery negative cable. Refer to **Battery Negative Cable Disconnection and Connection**.
12. Close the hood.

GENERATOR REPLACEMENT (1.8L LUW AND LWE)

Removal Procedure

1. Disconnect the battery negative cable. Refer to **Battery Negative Cable Disconnection and Connection**.
2. Remove the generator and air conditioning compressor belt. Refer to **Drive Belt Replacement** .

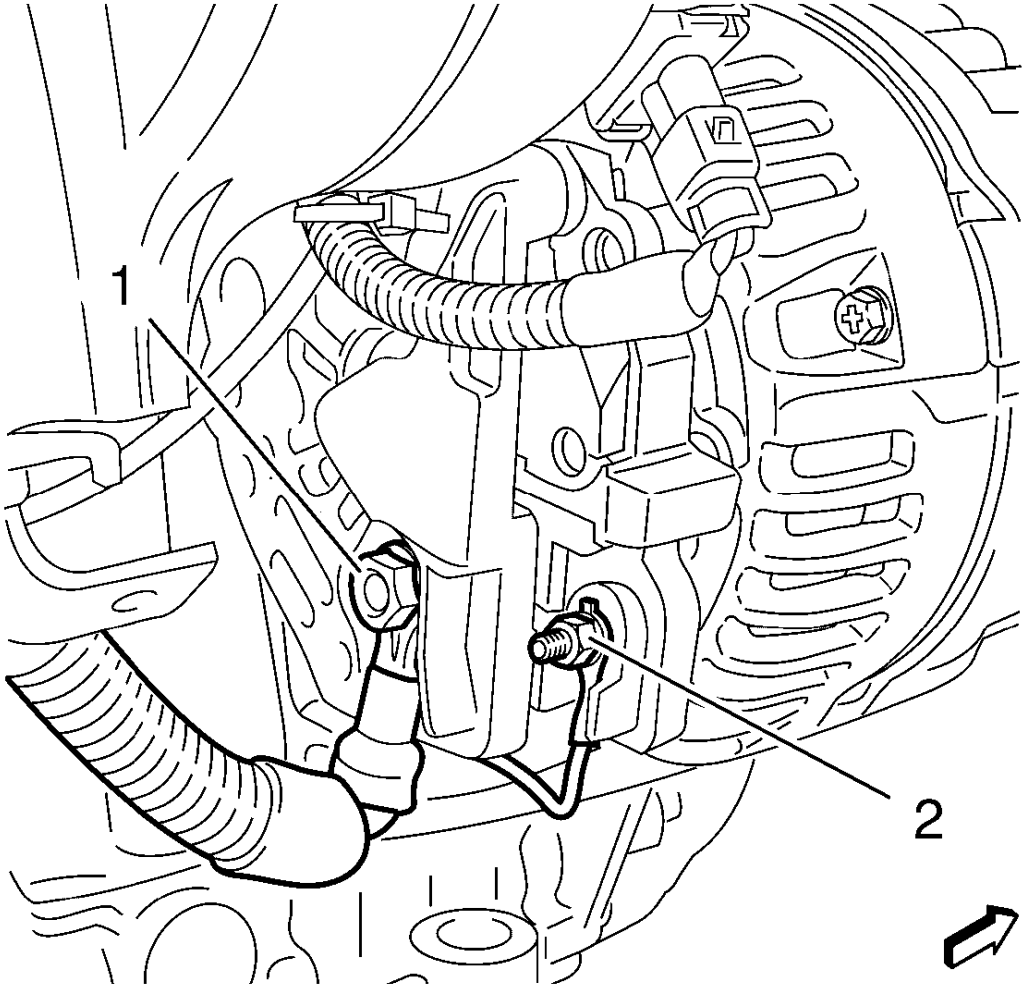

Fig. 55: Generator Positive Cable Nut And Generator Wiring Harness Nut
Courtesy of GENERAL MOTORS COMPANY

3. Remove the generator wiring harness nut (2).
4. Remove the generator positive cable nut (1).

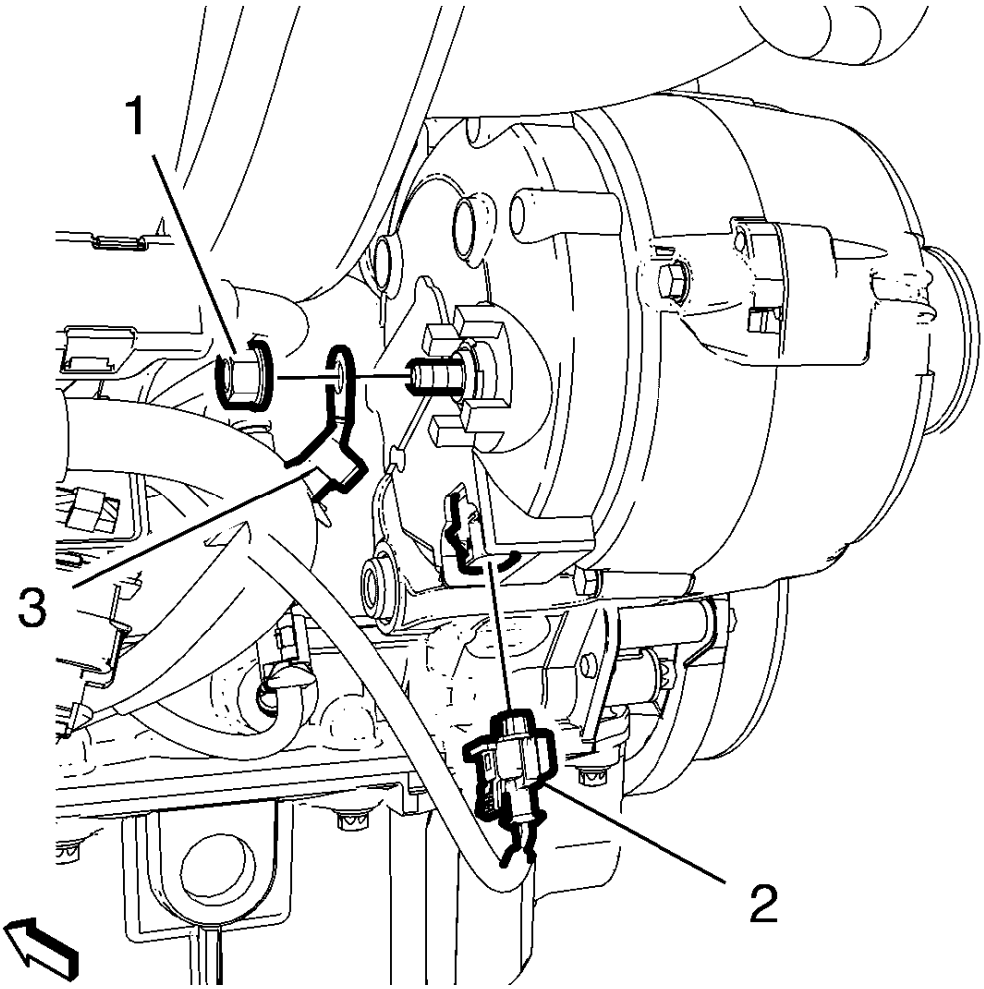

Fig. 56: Generator Positive Cable Nut And Nut
Courtesy of GENERAL MOTORS COMPANY

5. If equipped, remove the generator positive cable nut (1) and the generator positive cable (3).
6. If equipped, disconnect the generator wiring harness plug (2).

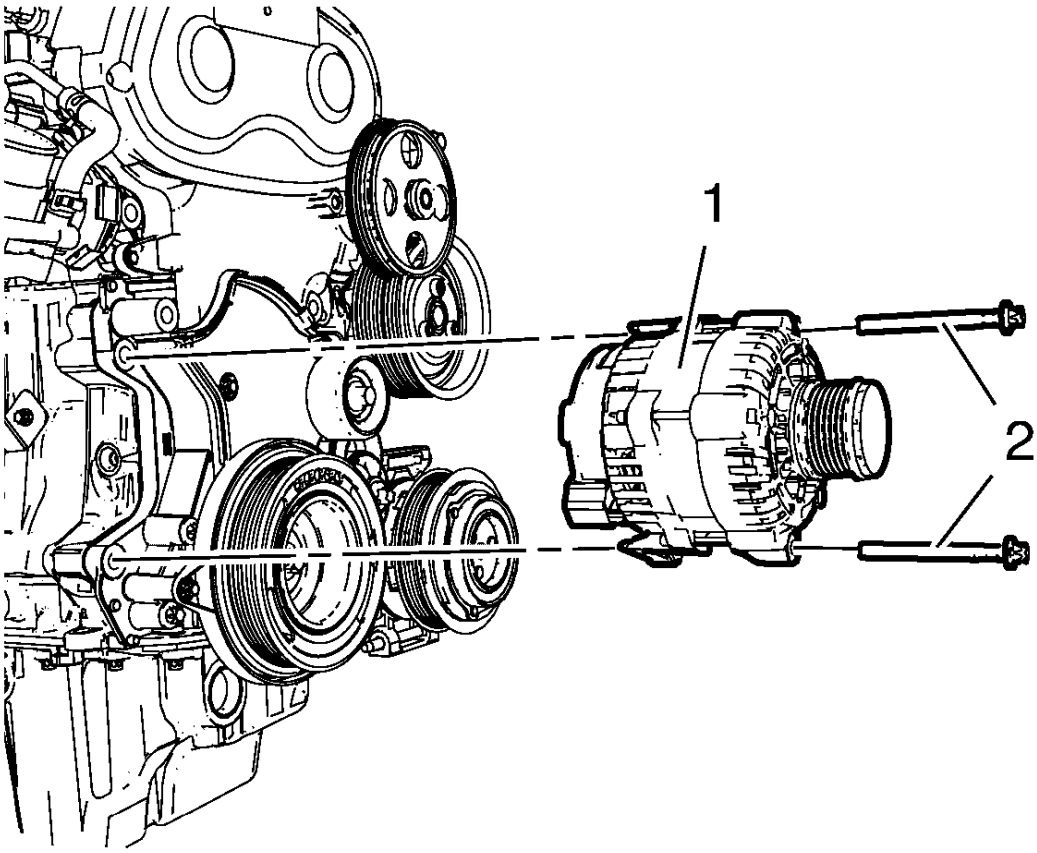

Fig. 57: Generator Bolts
Courtesy of GENERAL MOTORS COMPANY

7. Remove the 2 generator bolts (2).
8. Remove the generator (1).

Installation Procedure

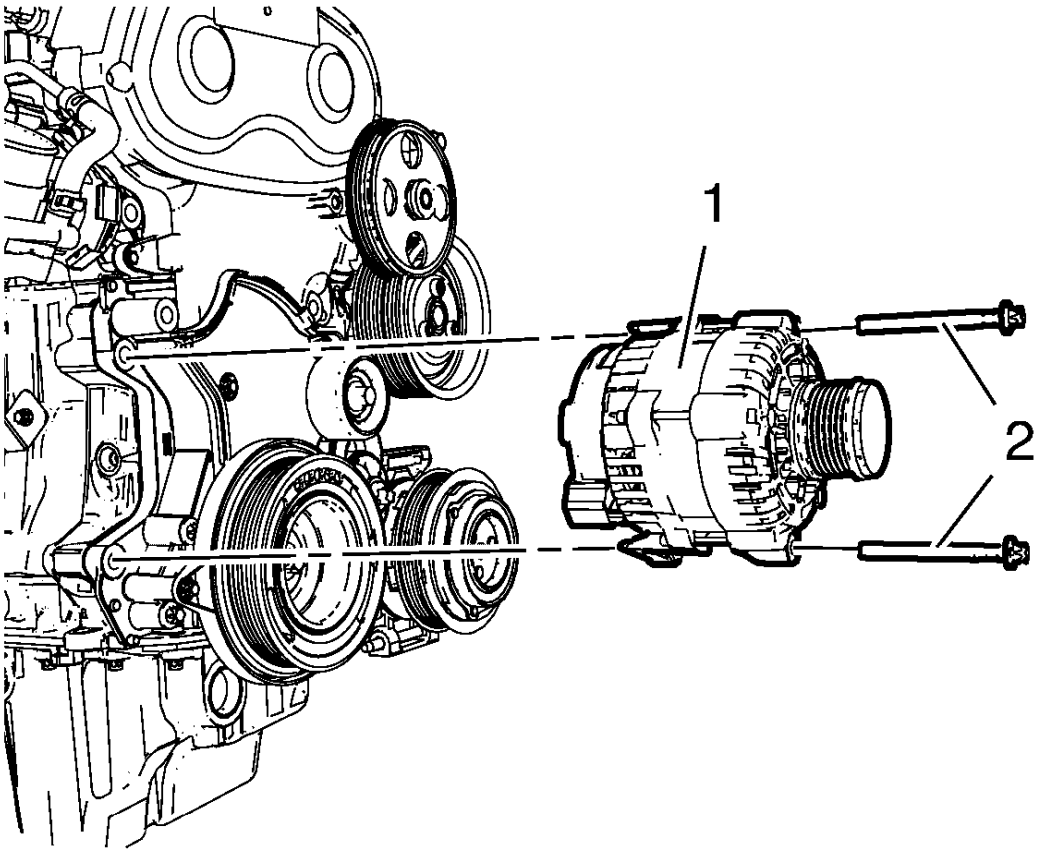

Fig. 58: Generator Bolts
Courtesy of GENERAL MOTORS COMPANY

1. Install the generator (1).

CAUTION: Refer to Fastener Caution .

2. Install the 2 generator bolts (2) and tighten to 35 N.m (26 lb ft).

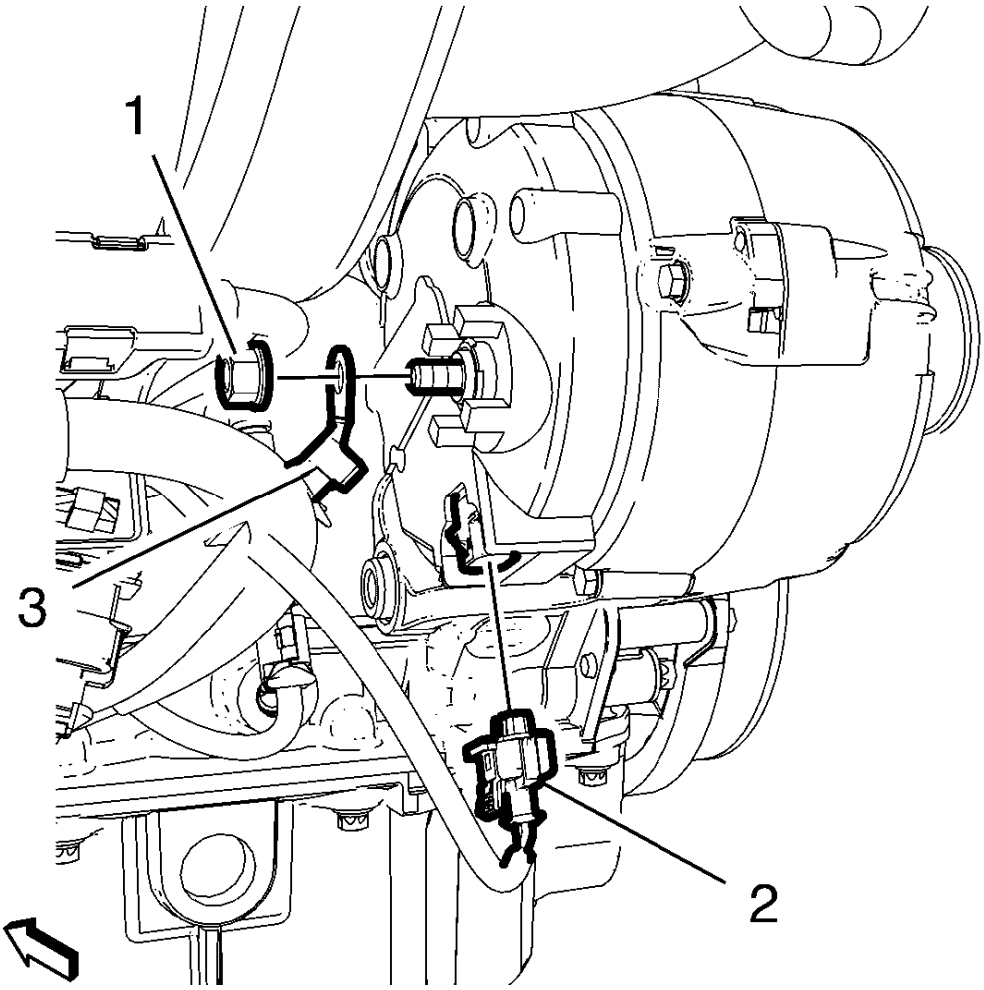

Fig. 59: Generator Positive Cable Nut And Nut
Courtesy of GENERAL MOTORS COMPANY

3. If equipped, install the generator positive cable (3) and the generator positive cable nut (1). Tighten the nut to 12.5 N.m (111 lb in).
4. If equipped, connect the generator wiring harness plug (2).

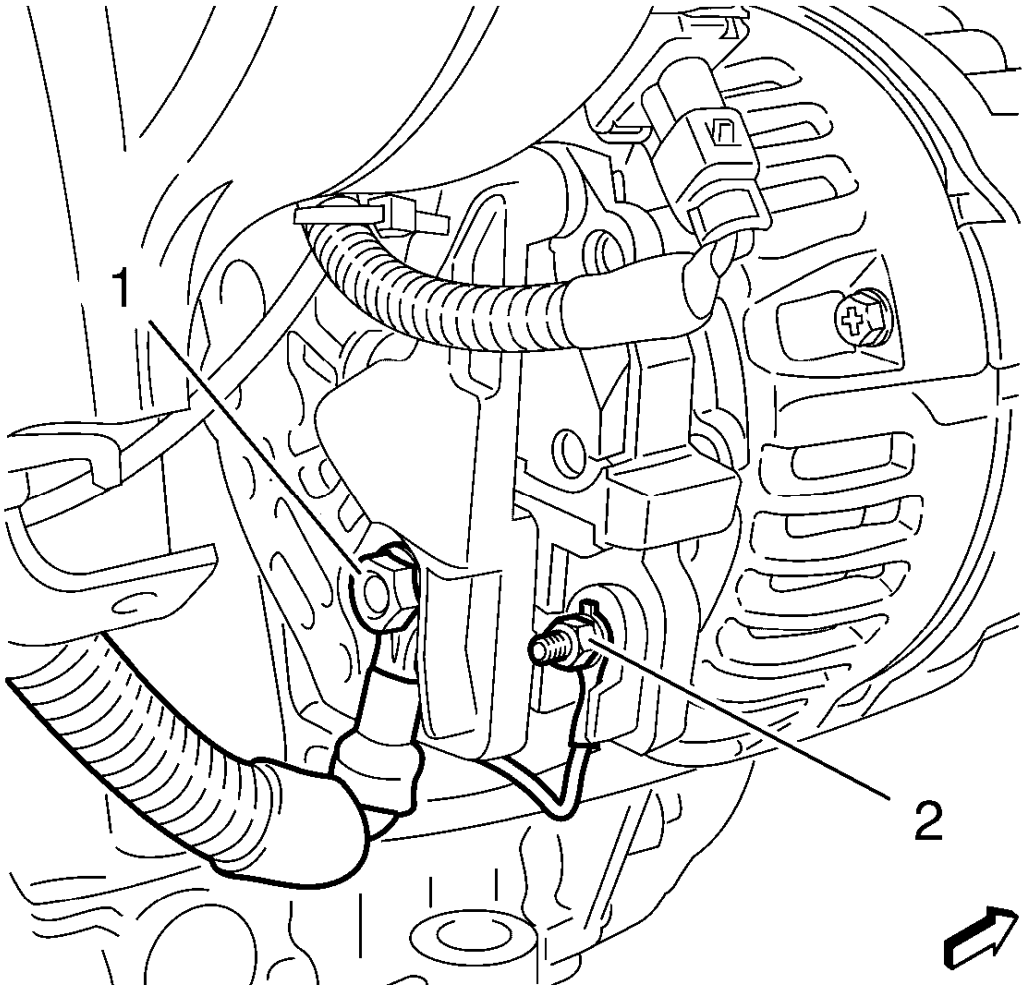

Fig. 60: Generator Positive Cable Nut And Generator Wiring Harness Nut
Courtesy of GENERAL MOTORS COMPANY

5. Install the generator wiring harness nut and tighten to 12.5 N.m (111 lb in).
6. Install the generator positive cable nut (1) and tighten to 7 N.m (62 lb in).
7. Install the generator and air conditioning compressor belt. Refer to **Drive Belt Replacement** .
8. Connect the battery negative cable. Refer to **Battery Negative Cable Disconnection and Connection**.
9. Close the hood.

DESCRIPTION AND OPERATION

BATTERY DESCRIPTION AND OPERATION

WARNING: Batteries produce explosive gases, contain corrosive acid, and supply levels of electrical current high enough to cause burns. Therefore, to reduce the risk of personal injury when working near a battery:

- **Always shield your eyes and avoid leaning over the battery whenever possible.**
- **Do not expose the battery to open flames or sparks.**
- **Do not allow the battery electrolyte to contact the eyes or the skin. Flush immediately and thoroughly any contacted areas with water and get medical help.**
- **Follow each step of the jump starting procedure in order.**
- **Treat both the booster and the discharged batteries carefully when using the jumper cables.**

NOTE: Because of the materials used in the manufacture of automotive lead acid batteries, dealers and service shops that handle them are subject to various regulations issued by OSHA, EPA, DOT, and various state or local agencies. Other regulations may also apply in other locations. Always know and follow these regulations when handling batteries.

Batteries that are no longer wanted must be disposed of by an approved battery recycler and must never be thrown in the trash or sent to a landfill.

Batteries that are not part of the vehicle itself, not the battery under the hood, must only be transported on public streets for business purposes via approved hazardous material transportation procedures.

Battery storage, charging and testing facilities in repair shops must meet various requirements for ventilation, safety equipment, material segregation, etc.

The maintenance free battery is standard. There are no vent plugs in the cover. The battery is completely sealed except for 2 small vent holes in the side. These vent holes allow the small amount of gas that is produced in the battery to escape.

The battery has 3 functions as a major source of energy:

- Engine cranking
- Voltage stabilizer
- Alternate source of energy with generator overload

Battery Low Start Vehicle Message

The body control module (BCM) monitors battery positive voltage to determine battery state of charge. If one or more of the BCM battery positive voltage terminals measure less than approximately 11.6V compared to the BCM ground circuits, this message will display and four chimes may sound. Start the vehicle immediately. If the vehicle is not started and the battery continues to discharge, the climate controls, heated seats, and audio systems will shut off and the vehicle may require a jump start. These systems will function again after the vehicle is started.

Battery Ratings

A battery has 2 ratings:

- Cold cranking amperage
- Amperage hours

When a battery is replaced use a battery with similar ratings. See battery specification label on the original battery.

Amperage Hours

The amperage hour rating tells you how much amperage is available when discharged evenly over a 20 hour period. The amperage hour rating is cumulative, so in order to know how many constant amperage the battery will output for 20 h, you have to divide the amperage hour rating by 20. Example: If a battery has an amperage hour rating of 74, dividing by 20 = 3.75. Such a battery can carry a 3.75 A load for 20 hours before dropping to 10.5 V. (10.5 V is the fully discharged level, at which point the battery needs to be recharged.) A battery with an amperage hour rating of 55 will carry a 2.75 A load for 20 hours before dropping to 10.5 V.

Cold Cranking Amperage

The cold cranking amperage is an indication of the ability of the battery to crank the engine at cold temperatures. The cold cranking amperage rating is the minimum amperage the battery must maintain for 30 seconds at -18°C (0°F) while maintaining at least 7.2 V. See battery label for the cold cranking amperage rating of this battery.

CHARGING SYSTEM DESCRIPTION AND OPERATION

Electrical Power Management Overview

The electrical power management system is designed to monitor and control the charging system and send diagnostic messages to alert the driver of possible problems with the battery and generator. This electrical power management system primarily utilizes existing on-board computer capability to maximize the effectiveness of the generator, to manage the load, improve battery state-of-charge and life, and minimize the system's impact on fuel economy. The electrical power management system performs 3 functions:

- It monitors the battery voltage and estimates the battery condition.
- It takes corrective actions by boosting idle speeds, and adjusting the regulated voltage.
- It performs diagnostics and driver notification.

The battery condition is estimated during ignition-off and during ignition-on. During ignition-off the state-of-charge of the battery is determined by measuring the open-circuit voltage. The state-of-charge is a function of the acid concentration and the internal resistance of the battery, and is estimated by reading the battery open circuit voltage when the battery has been at rest for several hours.

The state-of-charge can be used as a diagnostic tool to tell the customer or the dealer the condition of the battery. Throughout ignition-on, the algorithm continuously estimates state-of-charge based on adjusted net amp hours, battery capacity, initial state-of-charge, and temperature.

While running, the battery degree of discharge is primarily determined by a battery current sensor, which is integrated to obtain net amp hours.

In addition, the electrical power management function is designed to perform regulated voltage control to improve battery state-of-charge, battery life, and fuel economy. This is accomplished by using knowledge of the battery state-of-charge and temperature to set the charging voltage to an optimum battery voltage level for recharging without detriment to battery life.

The Charging System Description and Operation is divided into 3 sections. The first section describes the charging system components and their integration into the electrical power management. The second section describes charging system operation. The third section describes the instrument panel cluster operation of the charge indicator, driver information center messages, and voltmeter operation.

Charging System Components

Generator

The generator is a serviceable component. If there is a diagnosed failure of the generator it must be replaced as an assembly. The engine drive belt drives the generator. When the rotor is spun it induces an alternating current (AC) into the stator windings. The AC voltage is then sent through a series of diodes for rectification. The rectified voltage has been converted into a direct current (DC) for use by the vehicles electrical system to maintain electrical loads and the battery charge. The voltage regulator integral to the generator controls the output of the generator. It is not serviceable. The voltage regulator controls the amount of current provided to the rotor. If the generator has field control circuit failure, the generator defaults to an output voltage of 13.8 V.

Body Control Module (BCM)

The body control module (BCM) is a GMLAN device. It communicates with the engine control module (ECM) and the instrument panel cluster for electrical power management (electrical power management) operation. The BCM determines the output of the generator and sends the information to the ECM for control of the generator turn on signal circuit. It monitors the generator field duty cycle signal circuit information sent from the ECM for control of the generator. It monitors a battery current sensor, the battery positive voltage circuit, and estimated battery temperature to determine battery state of charge. The BCM performs idle boost.

Battery Current Sensor

The battery current sensor is a serviceable component that is connected to either the negative or positive battery cable at the battery. The battery current sensor is a 3-wire hall effect current sensor. The battery current sensor monitors the battery current. It directly inputs to the BCM. It creates a 5-volt pulse width modulation (PWM) signal of 128 Hz with a duty cycle of 0-100 percent. Normal duty cycle is between 5-95 percent. Between 0-5 percent and 95-100 percent are for diagnostic purposes.

Engine Control Module (ECM)

When the engine is running, the generator turn-on signal is sent to the generator from the ECM, turning on the regulator. The generator's voltage regulator controls current to the rotor, thereby controlling the output voltage. The rotor current is proportional to the electrical pulse width supplied by the regulator. When the engine is started, the regulator senses generator rotation by detecting AC voltage at the stator through an internal wire.

Once the engine is running, the regulator varies the field current by controlling the pulse width. This regulates the generator output voltage for proper battery charging and electrical system operation. The generator field duty terminal is connected internally to the voltage regulator and externally to the ECM. When the voltage regulator detects a charging system problem, it grounds this circuit to signal the ECM that a problem exists. The ECM monitors the generator field duty cycle signal circuit, and receives control decisions based on information from the BCM.

Instrument Panel Cluster

The instrument panel cluster provides the customer notification in case a concern with the charging system. There are 2 means of notification, a charge indicator and a driver information center message of SERVICE BATTERY CHARGING SYSTEM if equipped.

Charging System Operation

The purpose of the charging system is to maintain the battery charge and vehicle loads. There are 6 modes of operation and they include:

- Battery Sulfation Mode
- Charge Mode
- Fuel Economy Mode
- Headlamp Mode
- Start Up Mode
- Voltage Reduction Mode

The engine control module (ECM) controls the generator through the generator turn ON signal circuit. The ECM monitors the generator performance though the generator field duty cycle signal circuit. The signal is a pulse width modulation (PWM) signal of 128 Hz with a duty cycle of 0-100 percent. Normal duty cycle is between 5-95 percent. Between 0-5 percent and 95-100 percent are for diagnostic purposes. The following table shows the commanded duty cycle and output voltage of the generator:

Commanded Duty Cycle	Generator Output Voltage
10%	11 V
20%	11.56 V
30%	12.12 V
40%	12.68 V
50%	13.25 V
60%	13.81 V
70%	14.37 V
80%	14.94 V
90%	15.5 V

The generator provides a feedback signal of the generator voltage output through the generator field duty cycle signal circuit to the ECM. This information is sent to the body control module (BCM). The signal is PWM signal of 128 Hz with a duty cycle of 0-100 percent. Normal duty cycle is between 5-99 percent. Between 0-5

percent and 100 percent are for diagnostic purposes.

Battery Sulfation Mode

The BCM will enter this mode when the interpreted generator output voltage is less than 13.2 V for 45 minutes. When this condition exists the BCM will enter Charge Mode for 2-3 minutes. The BCM will then determine which mode to enter depending on voltage requirements.

Charge Mode

The BCM will enter Charge Mode when ever one of the following conditions are met.

- The wipers are ON for more than 3 seconds.
- GMLAN (Climate Control Voltage Boost Mode Request) is true, as sensed by the HVAC control head. High speed cooling fan, rear defogger and HVAC high speed blower operation can cause the BCM to enter the Charge Mode.
- The estimated battery temperature is less than 0°C (32°F).
- Battery State of Charge is less than 80 percent.
- Vehicle speed is greater than 145 km/h (90 mph)
- Current sensor fault exists.
- System voltage was determined to be below 12.56 V

When any one of these conditions is met, the system will set targeted generator output voltage to a charging voltage between 13.9-15.5 V, depending on the battery state of charge and estimated battery temperature.

Fuel Economy Mode

The BCM will enter Fuel Economy Mode when the estimated battery temperature is at least 0°C (32°F) but less than or equal to 80°C (176°F), the calculated battery current is less than 15 amperes and greater than -8 amperes, and the battery state-of-charge is greater than or equal to 80 percent. Its targeted generator output voltage is the open circuit voltage of the battery and can be between 12.5-13.1 V. The BCM will exit this mode and enter Charge Mode when any of the conditions described above are present.

Headlamp Mode

The BCM will enter Headlamp Mode when ever the headlamps are ON (high or low beams). Voltage will be regulated between 13.9-14.5 V.

Start Up Mode

When the engine is started the BCM sets a targeted generator output voltage of 14.5 V for 30 seconds.

Voltage Reduction Mode

The BCM will enter Voltage Reduction Mode when the calculated ambient air temperature is above 0°C (32°F). The calculated battery current is less than 1 ampere and greater than -7 amperes, and the generator field duty cycle is less than 99 percent. Its targeted generator output voltage is 12.9 V. The BCM will exit this mode once

the criteria are met for Charge Mode.

Instrument Panel Cluster Operation

Charge Indicator Operation

The instrument panel cluster illuminates the charge indicator and displays a warning message in the driver information center if equipped, when the one or more of the following occurs:

- The engine control module (ECM) detects that the generator output is less than 11 V or greater than 16 V. The instrument panel cluster receives a GMLAN message from the ECM requesting illumination.
- The instrument panel cluster determines that the system voltage is less than 11 V or greater than 16 V for more than 30 seconds. The instrument panel cluster receives a GMLAN message from the body control module (BCM) indicating there is a system voltage range concern.
- The instrument panel cluster performs the displays test at the start of each ignition cycle. The indicator illuminates for approximately 3 seconds.

Display Message: BATTERY NOT CHARGING SERVICE CHARGING SYSTEM or SERVICE BATTERY CHARGING SYSTEM

The BCM and the ECM will send a serial data message to the driver information center for the BATTERY NOT CHARGING SERVICE CHARGING SYSTEM or SERVICE BATTERY CHARGING SYSTEM message to be displayed. It is commanded ON when a charging system DTC is a current DTC. The message is turned OFF when the conditions for clearing the DTC have been met.

ELECTRICAL POWER MANAGEMENT DESCRIPTION AND OPERATION

Electrical Power Management

The electrical power management is used to monitor and control the charging system and alert the driver of possible problems within the charging system. The electrical power management system makes the most efficient use of the generator output, improves the battery state-of-charge, extends battery life, and manages system electrical loads.

The load shed operation is a means of reducing electrical loads during a low voltage or low battery state-of-charge condition.

The idle boost operation is a means of improving generator performance during a low voltage or low battery state-of-charge condition.

Each electrical power management function, either idle boost or load shed, is discrete. No two functions are active at the same time. Idle boost is activated in incremental steps, idle boost 1 must be active before idle boost 2 can be active. The criteria used by the body control module (BCM) to regulate electrical power management are outlined below:

	Battery Temperature	Battery Voltage	Amp-Hour	

Function	Calculation	Calculation	Calculation	Action Taken
Idle Boost 1 Start	Less Than -15°C (5° F)	Less Than 13 V	-	First level Idle boost requested
Idle Boost 1 Start	-	-	Battery has a net loss greater than 0.6 Ah	First level Idle boost requested
Idle Boost 1 Start	-	Less Than 10.9 V	-	First level Idle boost requested
Idle Boost 1 End	Greater Than -15°C (5°F)	Greater Than -12 V	Battery has a net loss less than 0.2 Ah	First level Idle boost request cancelled
Load Shed 1 Start	-	-	Battery has a net loss of 4 Ah	Rear Defrost, Heated Mirrors, Heated Seats cycled OFF for 20% of their cycle
Load Shed 1 Start	-	Less Than 10.9 V	-	Rear Defrost, Heated Mirrors, Heated Seats cycled OFF for 20% of their cycle
Load Shed 1 End	-	Greater Than 12 V	Battery has a net loss of less than 2 Ah	Clear Load Shed 1
Idle Boost 2 Start	-	-	Battery has a net loss greater than 1.6 Ah	Second level Idle boost requested
Idle Boost 2 Start	-	Less Than 10.9 V	-	Second level Idle boost requested
Idle Boost 2 End	-	Greater Than 12 V	Battery has a net loss less than 0.8 Ah	Second level Idle boost request cancelled
Idle Boost 3 Start	-	-	Battery has a net loss of 10 Ah	Third level Idle boost requested
Idle Boost 3 Start	-	Less Than 10.9 V	-	Third level Idle boost requested
Idle Boost 3 End	-	Greater Than 12 V	Battery has a net loss of less than 6.0 Ah	Third level Idle boost request cancelled
Load Shed 2 Start	-	Less Than 10 V	Battery has a net loss greater than 12 Ah	Rear Defrost, Heated Mirrors, Heated Seats cycled OFF for 50% of their cycle. The BATTERY SAVER ACTIVE message will be displayed on

				the DIC
Load Shed 2 Start	-	Less Than 10.9 V	-	Rear Defrost, Heated Mirrors, Heated Seats cycled OFF for 50% of their cycle. The BATTERY SAVER ACTIVE message will be displayed on the DIC
Load Shed 2 End	-	Greater Than 12.6 V	Battery has a net loss of less than 10.5 Ah	Clear Load Shed 2
Load Shed 3 Start	-	Less Than 11.9 V	Battery has a net loss greater than 20 Ah	Rear Defrost, Heated Mirrors, Heated Seats cycled OFF for 100% of their cycle. The BATTERY SAVER ACTIVE message will be displayed on the DIC
Load Shed 3 End	-	Greater Than 12.6 V	Battery has a net loss of less than 15 Ah	Clear Load Shed 3

STARTING SYSTEM DESCRIPTION AND OPERATION

The starter motors are non-repairable starter motors. They have pole pieces that are arranged around the armature. Both solenoid windings are energized. The pull-in winding circuit is completed to the ground through the starter motor. The windings work together magnetically to pull and hold in the plunger. The plunger moves the shift lever. This action causes the starter drive assembly to rotate on the armature shaft spline as it engages with the flywheel ring gear on the engine. Moving at the same time, the plunger also closes the solenoid switch contacts in the starter solenoid. Full battery voltage is applied directly to the starter motor and it cranks the engine.

As soon as the solenoid switch contacts close, current stops flowing thorough the pull-in winding because battery voltage is applied to both ends of the windings. The hold-in winding remains energized. Its magnetic field is strong enough to hold the plunger, shift lever, starter drive assembly, and solenoid switch contacts in place to continue cranking the engine. When the engine starts, pinion overrun protects the armature from excessive speed until the switch is opened.

When the ignition switch is released from the START position, the START relay opens and battery voltage is removed from the starter solenoid S terminal. Current flows from the motor contacts through both windings to the ground at the end of the hold-in winding. However, the direction of the current flow through the pull-in winding is now opposite the direction of the current flow when the winding was first energized.

The magnetic fields of the pull-in and hold-in windings now oppose one another. This action of the windings, along with the help of the return spring, causes the starter drive assembly to disengage and the solenoid switch contacts to open simultaneously. As soon as the contacts open, the starter circuit is turned off.

Circuit Description (Key Start)

When the ignition switch is placed in the Start position, a discrete signal is supplied to the body control module (BCM) notifying it that the ignition is in the Start position. The BCM then sends a message to the engine control module (ECM) notifying it that CRANK has been requested. The ECM verifies that the transmission is in Park or Neutral. If it is, the ECM then supplies 12 V to the control circuit of the crank relay. When this occurs, battery positive voltage is supplied through the switch side of the crank relay to the S terminal of the starter solenoid.

SPECIAL TOOLS AND EQUIPMENT

SPECIAL TOOLS

Illustration	Tool Number/Description
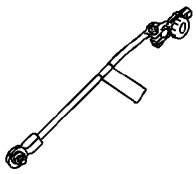	EL 38758 EL 50074 J 38758 Parasitic Draw Test Switch
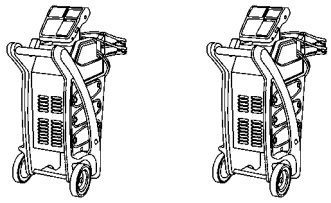	EL 50313 EL 42000 EL 50076 J 42000 Battery Tester

2013 ENGINE

Engine Exhaust - Cruze

SPECIFICATIONS

FASTENER TIGHTENING SPECIFICATIONS (1.4L LUV)

Fastener Tightening Specifications (1.4L LUV)

Application	Specification	
	Metric	English
Catalytic Converter to Warm Up Three Way Catalytic Converter (LUJ, LUH)	22 N.m	16 lb ft
Exhaust Front Hanger Bracket Bolt M8	20 N.m	15 lb ft
Exhaust Front Hanger Bracket Bolt M10	60 N.m +30° - 45° (1)	44 lb ft +30° - 45° (1)
Exhaust Front Hanger Bracket Nut	20 N.m	15 lb ft
Exhaust Manifold/Catalytic Converter to Bracket (LDD)	10 N.m	89 lb in
Exhaust Front Pipe to Exhaust Manifold/Catalytic Converter Flange Nut (LDD)	17 N.m (1)	13 lb ft (1)
Exhaust Front Pipe to Exhaust Muffler Flange Nut (LDD)	17 N.m (1)	13 lb ft (1)
Exhaust Manifold to Cylinder Head (LDD)	22 N.m	16 lb ft
Exhaust Manifold Heat Shield Bolts (LUJ, LUH)	8 N.m	71 lb in
Turbocharger to Cylinder Head	8 N.m	71 lb in
Warm Up Three Way Catalytic Converter Heat Shield Bolts	10 N.m	89 lb in
Warm Up Three Way Catalytic Converter Bracket to Cylinder Block (LUJ, LUH)	22 N.m	16 lb ft
Warm Up Three Way Catalytic Converter to Bracket LUJ, LUH)	22 N.m	16 lb ft
Warm Up Three Way Catalytic Converter to Turbocharger (V-Clamp) LUJ, LUH	13 N.m	115 lb in
1 = Use NEW Fastener.		

FASTENER TIGHTENING SPECIFICATIONS (1.8L LUW AND LWE)

Fastener Tightening Specifications (1.8L LUW and LWE)

Application	Specification	
	Metric	English
Catalytic Converter to Cylinder Head Nut	20	15 lb ft
Catalytic Converter to Exhaust Front Pipe Nut	22	16 lb ft
Engine Lift Bracket Bolt	25	19 lb ft
Engine Lift Bracket Stud and Nut	25	19 lb ft
Exhaust Front Hanger Bracket Bolt M8	22	16 lb ft

Exhaust Front Hanger Bracket Bolt M10 (1)		
First Pass	60	44 lb ft
Final Pass	30-45 Degrees	
Exhaust Front Hanger Insulator Nut	17	13 lb ft
Exhaust Front Pipe to Exhaust Muffler Nut	17	13 lb ft
Exhaust Front Pipe-to-Underbody Shield Nut	2.5	22 lb in
Exhaust Front/Rear Muffler Shield Nut	2.5	22 lb in
Exhaust Manifold Brace Bolt (Catalytic Converter To Brace)	20	15 lb ft
Exhaust Manifold Brace Bolt (Brace To Engine Block) (1)		
First Pass	20	15 lb ft
Final Pass	30 - 45 Degrees	
Exhaust Manifold Heat Shield Bolt (bottom)	8	71 lb in
Exhaust Manifold Heat Shield Bolt (top)	15	11 lb ft
Exhaust Manifold Nut (1)	20	15 lb ft
Exhaust Pipe Clamp	30	22 lb ft
Heated Oxygen Sensor (2)	42	31 lb ft
Tank Heat Shield Bolt	2.5	22 lb in
Wiring Harness Bracket Bolt	15	11 lb ft
1 = Use NEW Fastener. 2 = Use assembly paste (refer to Electronic Parts Catalog).		

DIAGNOSTIC INFORMATION AND PROCEDURES

SYMPTOMS - ENGINE EXHAUST

- Review the Exhaust System Description and Operation in order to familiarize yourself with the system functions. Refer to **Exhaust System Description (1.8L LUW and LWE)**.
- All diagnostics on a vehicle should follow a logical process. Strategy Based Diagnostics is a uniform approach for repairing all systems. The diagnostic flow is the place to start when repairs are necessary and may always be used in order to resolve a system problem.

Visual/Physical Inspection

- Inspect for aftermarket or non-OEM devices such as, but not including; tailpipe extensions, headers, and exhaust cutouts. This could affect the operation and proper performance of the exhaust system.
- Verify the exact operating conditions under which the concern exists. Note factors such as engine RPM, engine temperature, engine load, and frequency of concern.
- Inspect the easily accessible or visible system components for obvious damage or conditions, which could cause any symptom.

Intermittents

Test the vehicle under the same conditions that the customer reported in order to verify the system is operating

as designed.

Symptom List

- Loss of power-Refer to **Restricted Exhaust**.
- Poor acceleration-Refer to **Restricted Exhaust**.
- Poor fuel economy-Refer to **Restricted Exhaust**.
- Excessive smoke-diesel-Refer to **Restricted Exhaust**.
- Exhaust hissing noise-Refer to **Exhaust Leakage**.
- Exhaust popping noise-Refer to **Exhaust Leakage**.
- Exhaust rattle noise-Refer to **Exhaust Noise**.
- Loud Exhaust noise-Refer to **Exhaust Noise**.
- Exhaust buzz, groan, hum noise-Refer to **Exhaust Noise**.

RESTRICTED EXHAUST

Special Tools

EN-35314-A Exhaust Back Pressure Gage

For equivalent regional tools. Refer to **Special Tools**.

Diagnostic Aids

A quick check of exhaust flow will help determine for gasoline engines.

Test Description

The numbers below refer to the step numbers on the diagnostic table.

3

The exhaust system has very low back pressure under normal conditions. If the exhaust system is restricted, a significant increase in the exhaust pressure is noticed on the **EN-35314-A** gauge.

Removing the heated oxygen sensor may set a DTC. When finishing this diagnostic table, be sure to clear all codes.

4

This step will isolate the catalytic converter from the remainder of the exhaust system.

7

Confirming that the condition has been fixed is essential. If the symptom still exists and the vehicle has a dual exhaust system, proceed to Step 2 and repeat diagnostic procedure on the opposite exhaust pipe.

Restricted Exhaust

Step	Action	Value(s)	Yes	No
1	Did you verify the customers complaint?	-	Go to **Step 2**	-
2	Did you review the exhaust symptoms diagnostic information and perform the necessary inspections?	-	Go to **Step 3**	Go to **Symptoms - Engine Exhaust**
3	1. Remove the heated oxygen sensor 1. Refer to: • 1.4L LUJ **Heated Oxygen Sensor Replacement - Sensor 1** • 1.8L LUW **Heated Oxygen Sensor Replacement - Sensor 1** 2. Install the **EN-35314-A** gauge in place of the heated oxygen sensor 1. 3. Start the engine. 4. Increase and monitor the engine speed at 2, 000 RPM. 5. Observe the exhaust system back pressure reading on the gauge. Does the reading exceed the specified value?	14 kPa (2 psi)	Go to **Step 4**	Go to **Step 7**
4	1. Turn the engine off and place the ignition in the lock position. 2. Remove the **EN-35314-A** gauge. 3. Install the heated oxygen sensor 1. Refer to: • 1.4L LUJ **Heated Oxygen Sensor Replacement - Sensor 1** • 1.8L LUW **Heated Oxygen Sensor Replacement - Sensor 1** 4. Remove the heated oxygen sensor 2. Refer to: • 1.4L LUJ **Heated Oxygen Sensor Replacement - Sensor 2** • 1.8L LUW **Heated Oxygen Sensor Replacement - Sensor 2** 5. Install the **EN-35314-A** gauge in place of the heated oxygen sensor 2. 6. Start the engine. 7. Increase and monitor the engine speed at 2, 000 RPM. 8. Observe the exhaust system back pressure	-		

	reading on the gauge. Does the reading exceed the specified value?		Go to **Step 5**	Go to **Step 6**
5	Inspect the exhaust system for the following conditions: • Damage in the exhaust pipe. • Debris in the exhaust pipe. • Muffler or resonator internal failure. • Two-layer exhaust pipe separation. Did you find and correct the condition?	-	Go to **Step 7**	-
6	Replace the catalytic converter. Refer to **Catalytic Converter Replacement (1.4L LUV)**, **Catalytic Converter Replacement (1.8L LUW and LWE)**. Did you find and correct the condition?	-	Go to **Step 7**	-
7	1. Remove the **EN-35314-A** gauge. 2. Install the heated oxygen sensor 2. Refer to: • 1.4L LUJ **Heated Oxygen Sensor Replacement - Sensor 2** • 1.8L LUW **Heated Oxygen Sensor Replacement - Sensor 2** 3. Clear any DTCs. 4. Road test the vehicle in order to verify the repair. Did you correct the condition?	-	System OK	Go to **Step 2**

EXHAUST LEAKAGE

Exhaust Leakage

Problem	Action
WARNING: **While engine is operating, the exhaust system will become extremely hot. To prevent burns avoid contacting a hot exhaust system.** DEFINITION: An exhaust leak may show stains at the area of the leak. The leak may be felt by holding a hand close to the suspected areas or using a smoke pencil. The leak may make a popping or hissing noise.Refer to **Symptoms - Engine Exhaust** prior to beginning this table.	
Misaligned or improperly installed exhaust system components	Align and tighten the components to the specifications. Refer to **Fastener Tightening**

	Specifications (1.4L LUV), **Fastener Tightening Specifications (1.8L LUW and LWE)**.
Exhaust leaks at the following connections: • Exhaust manifold to pipe • Flanges • Pipe clamps	Tighten the components to the specifications. Refer to **Fastener Tightening Specifications (1.4L LUV)**, **Fastener Tightening Specifications (1.8L LUW and LWE)**.
Seals or gaskets leaking. • Exhaust manifold to cylinder head • Exhaust pipes to exhaust manifold • Catalytic converter connection • AIR connections to the exhaust manifold or cylinder head	Replace the leaking seal or gasket. Refer to the affected components procedure for service.
Irregularities at the mating surfaces on the flange connections	Repair as required or replace the affected component. Refer to the affected components procedure for service.
Exhaust manifold cracked or broken	Replace the exhaust manifold. Refer to **Exhaust Manifold Replacement**.
Exhaust system component connection welds leaking	Replace the leaking component. Refer to the affected component's procedure for service.

EXHAUST NOISE

Exhaust Noise

Conditions	Action
DEFINITION: An audible or physical noise due to a faulty component or damaged components causing a loose or misaligned exhaust system resulting in a rattle or vibration noise, i.e. buzz, groan, hum. Refer to **Symptoms - Engine Exhaust** prior to beginning this table.	
Popping or hissing noise	Exhaust leak. Refer to **Exhaust Leakage**.
Loud exhaust	1. Compare to a known good vehicle. 2. Inspect for a damaged or failed muffler. 3. Replace the faulty muffler. Refer to **Exhaust System Replacement**.
External rattle or vibration noise	1. Inspect for a bent or loose hanger, loose heat shield, or loose clamp. 2. Inspect for an exhaust pipe causing interference. 3. Repair or replace the affected component. Refer to the affected component's service procedure.
	1. Test the components by tapping with a rubber mallet to confirm a rattle.

Internal rattle	2. Replace the faulty catalytic converter, or muffler. Refer to one of the following procedures: • **Catalytic Converter Replacement (1.4L LUV)**, **Catalytic Converter Replacement (1.8L LUW and LWE)** • **Exhaust System Replacement**

REPAIR INSTRUCTIONS

EXHAUST MANIFOLD REPLACEMENT

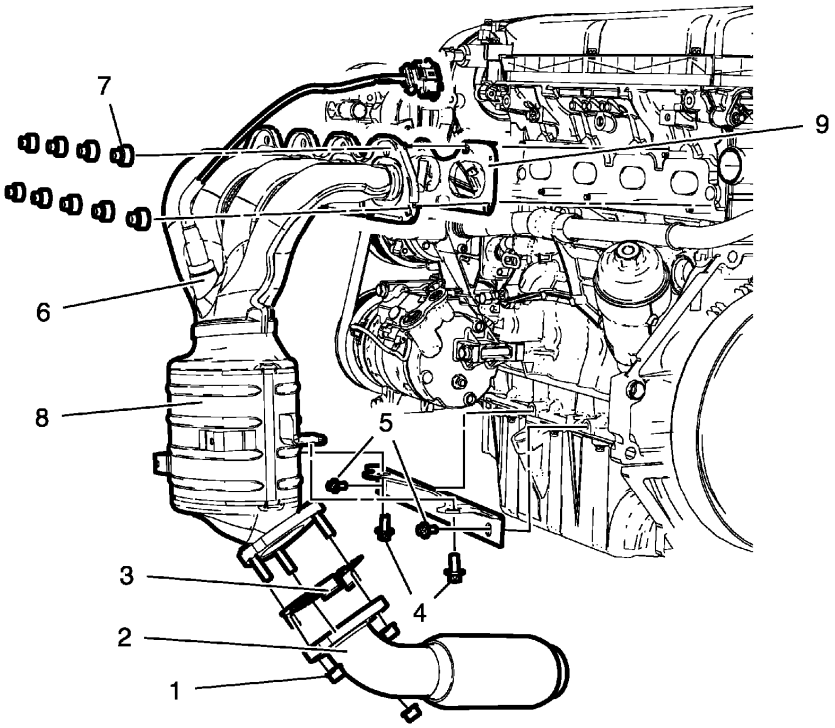

Fig. 1: Exhaust Manifold Replacement Components
Courtesy of GENERAL MOTORS COMPANY

Exhaust Manifold Replacement

Callout	Component Name
WARNING: **Refer to Exhaust Service Warning .** **WARNING:** **Refer to Protective Goggles and Glove Warning .** **Preliminary Procedure** Remove the catalytic converter heat shield. Refer to **Catalytic Converter Heat Shield Replacement (1.4L LUV)**, **Catalytic Converter Heat Shield Replacement (1.8L LUW and**	

LWE).

1	Catalytic Converter to Flexible Exhaust Pipe Nut (Qty: 3) **CAUTION:** **Refer to Fastener Caution** **Tighten** 22 (16 lb ft)
2	Flexible Exhaust Pipe
3	Catalytic Converter to Flexible Exhaust Pipe Gasket
4	Exhaust Manifold Brace Bolt (Catalytic Converter To Brace) (Qty: 2) **Tighten** 20 (15 lb ft)
5	Exhaust Manifold Brace Bolt (Brace To Engine Block) (Qty: 2) **Procedure** **NOTE:** **NOT necessary to remove the brace.** Loosen the exhaust manifold brace bolts. **Tighten** 20 (15 lb ft) + 30 degrees + 15 degrees
6	Heated Oxygen Sensor **Tighten** 42 (31 lb ft)
7	Catalytic Converter to Cylinder Head Nut (Qty: 9) **Tighten** 20 (15 lb ft)
8	Catalytic Converter
9	Catalytic Converter To Cylinder Head Gasket

EXHAUST FRONT PIPE REPLACEMENT

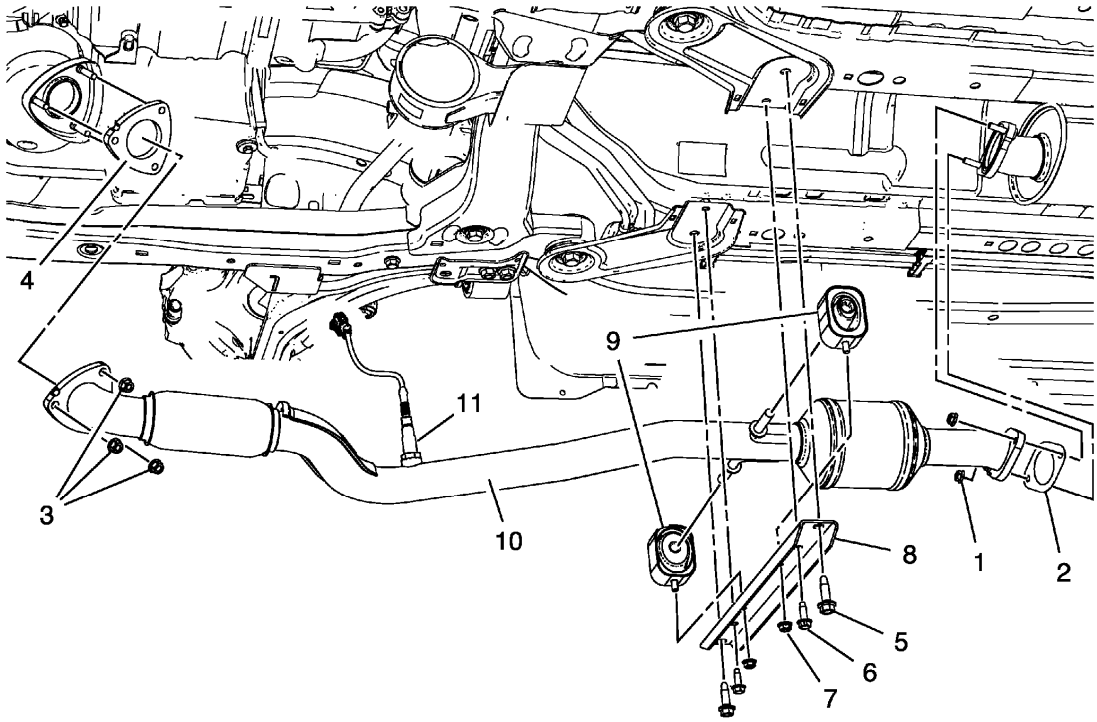

Fig. 2: Exhaust Front Pipe
Courtesy of GENERAL MOTORS COMPANY

Exhaust Front Pipe Replacement

Callout	Component Name
WARNING: **Refer to Exhaust Service Warning .** **WARNING:** **Refer to Protective Goggles and Glove Warning .** **Preliminary Procedures** 1. Raise and support the vehicle. Refer to **Lifting and Jacking the Vehicle** . 2. Disconnect the heated oxygen sensor.	
1	Exhaust Front Pipe to Exhaust Muffler Nut (Qty: 2) **CAUTION:** **Refer to Fastener Caution .** **Tighten** 17 N.m (13 lb ft)
2	Exhaust Front Pipe Gasket to Exhaust Muffler

3	Catalytic Converter to Exhaust Front Pipe Nut (Qty: 3) **Tighten** 22 N.m (16 lb ft)
4	Catalytic Converter to Exhaust Front Pipe Gasket
5	Drivetrain and Front Suspension Frame Support Bolts - M10 (Qty: 2) **CAUTION:** **Refer to Torque-to-Yield Fastener Caution .** **Procedure** Install NEW support bolts, do NOT reuse old bolts. **Tighten** 60 N.m (44 lb ft) +30°-45°
6	Exhaust Pipe Front Hanger Bracket Bolt - M8 (Qty: 2) **Tighten** 22 N.m (16 lb ft)
7	Exhaust Pipe Front Hanger Insulator Nut (Qty: 2) **Tighten** 17 N.m (13 lb ft)
8	Exhaust Pipe Front Hanger Bracket
9	Exhaust Muffler Insulator (Qty: 2)
10	Exhaust Front Pipe
11	Heated Oxygen Sensor **Tighten** 42 N.m (31 lb ft)

EXHAUST SYSTEM REPLACEMENT

Removal Procedure

WARNING: In order to avoid being burned, do not service the exhaust system while it is still hot. Service the system when it is cool.

WARNING: Always wear protective goggles and gloves when removing exhaust parts as falling rust and sharp edges from worn exhaust components could result in serious personal injury.

1. Read the exhaust system cutting instructions. .
2. Remove the exhaust rear muffler. Refer to **Exhaust Rear Muffler Replacement**.

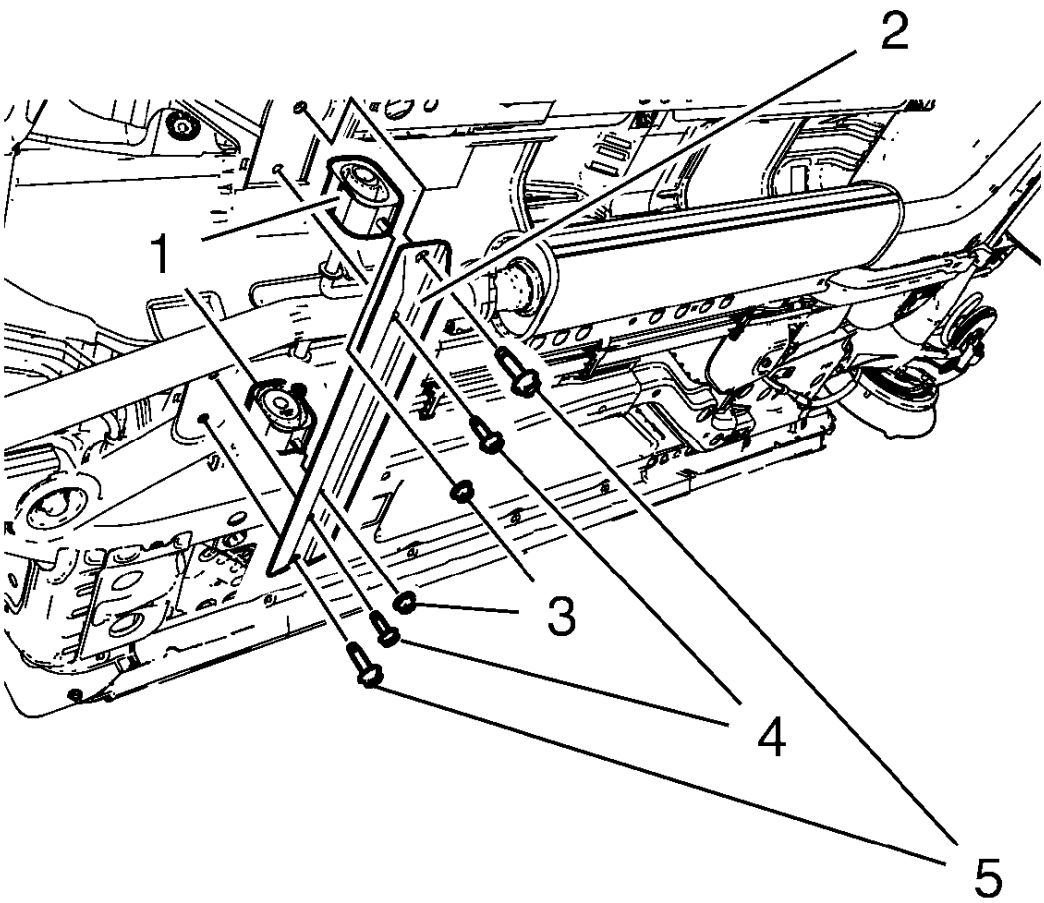

Fig. 3: Exhaust Pipe Front Hanger Bracket, Insulators, Nuts And Bolts
Courtesy of GENERAL MOTORS COMPANY

NOTE: A second technician is required.

3. Remove the 4 exhaust pipe front hanger bracket bolts (4, 5).
4. Remove the 2 exhaust pipe front hanger bracket insulator nuts (3).
5. Remove the exhaust pipe front hanger bracket (2).
6. Remove the 2 exhaust pipe front hanger bracket insulators (1).

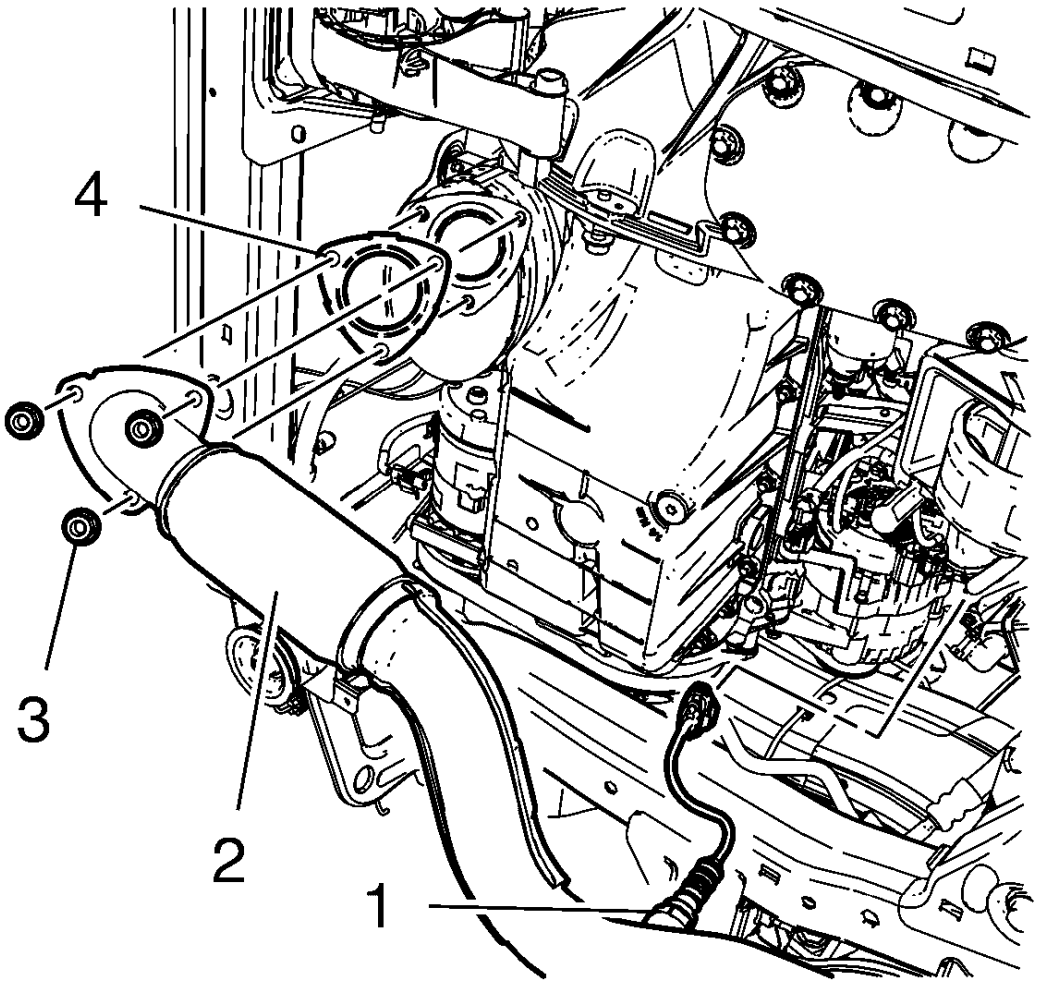

Fig. 4: Heated Oxygen Sensor
Courtesy of GENERAL MOTORS COMPANY

NOTE: A second technician is required.

7. Remove the heated oxygen sensor (1).
8. Remove and DISCARD the 3 catalytic converter nuts (3).
9. Remove the exhaust front pipe gasket (4) from the catalytic converter and exhaust front pipe (2).
10. Remove the exhaust system.

Installation Procedure

NOTE: A second technician is required.

1. Install the exhaust system.

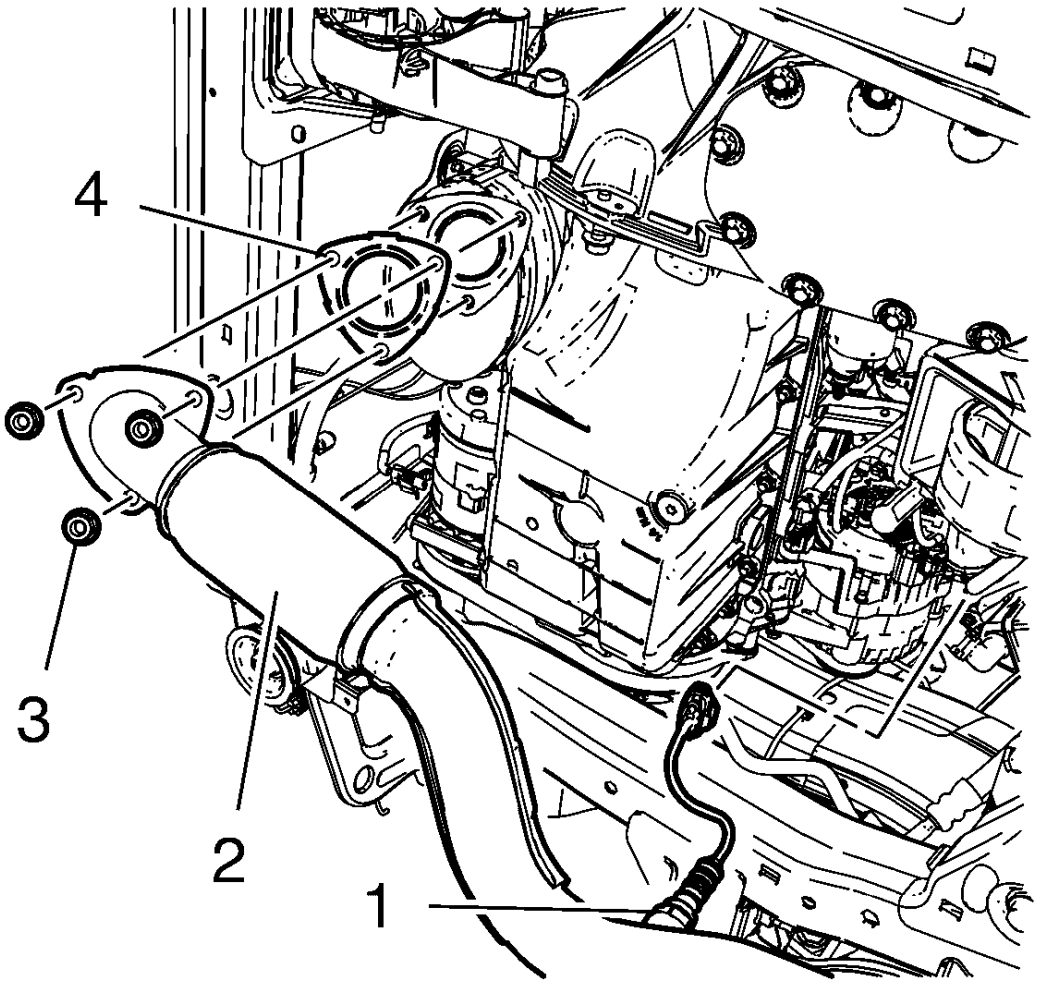

Fig. 5: Heated Oxygen Sensor
Courtesy of GENERAL MOTORS COMPANY

2. Install the NEW exhaust front pipe gasket (4).

CAUTION: Refer to Fastener Caution .

CAUTION: Refer to Torque-to-Yield Fastener Caution .

3. Install the 3 NEW catalytic converter nuts (3) to the exhaust front pipe (2) and tighten to 22 N.m (16 lb ft).
4. Install the heated oxygen sensor (1) and tighten to 42 N.m (31 lb ft).

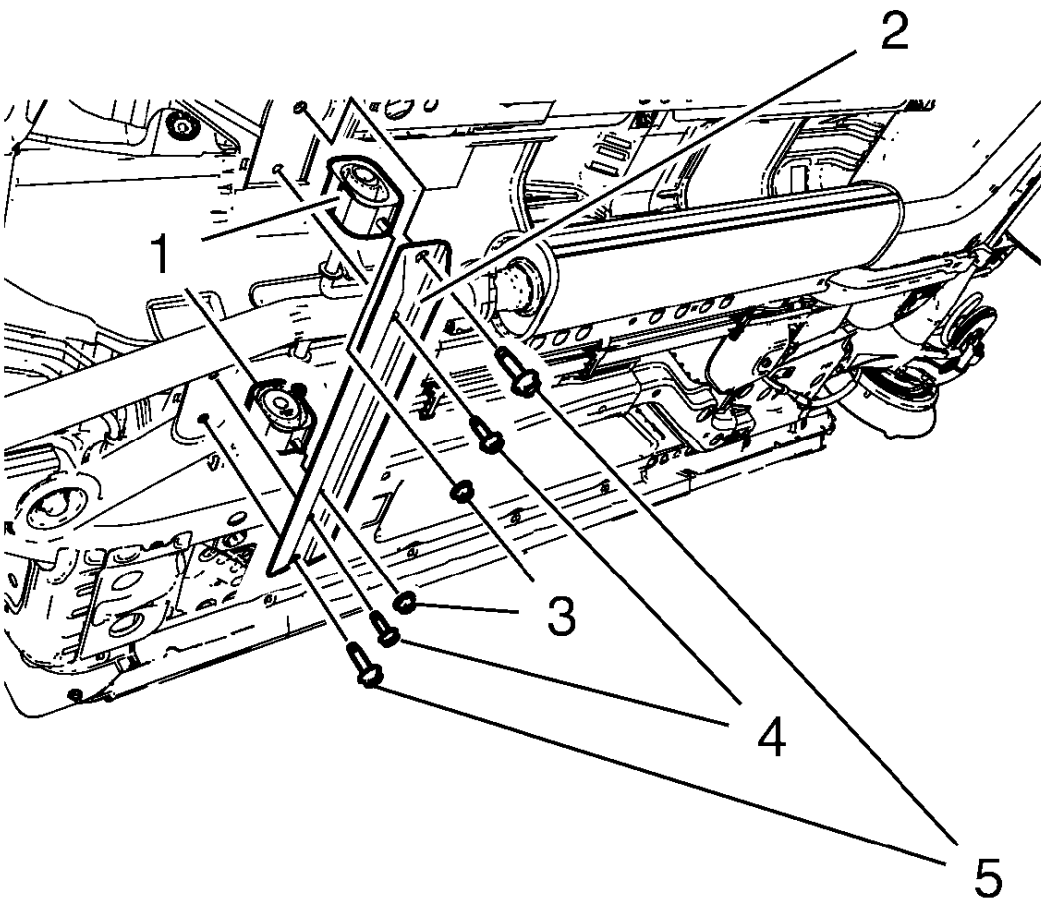

Fig. 6: Exhaust Pipe Front Hanger Bracket, Insulators, Nuts And Bolts
Courtesy of GENERAL MOTORS COMPANY

5. Install the 2 exhaust pipe front hanger bracket insulators (1).
6. Install the exhaust pipe front hanger bracket (2).
7. Install the 2 exhaust pipe front hanger bracket insulator nuts (3) and tighten to 17 N.m (13 lb ft).
8. Install the 4 exhaust pipe front hanger bracket bolts (4, 5) and tighten to 22 N.m (16 lb ft).
9. Install the 2 exhaust pipe front hanger bolts (5) - M10 and tighten to 60 N.m (44 lb ft).
10. Install the exhaust rear muffler. Refer to **Exhaust Rear Muffler Replacement**.

CATALYTIC CONVERTER REPLACEMENT (1.4L LUV)

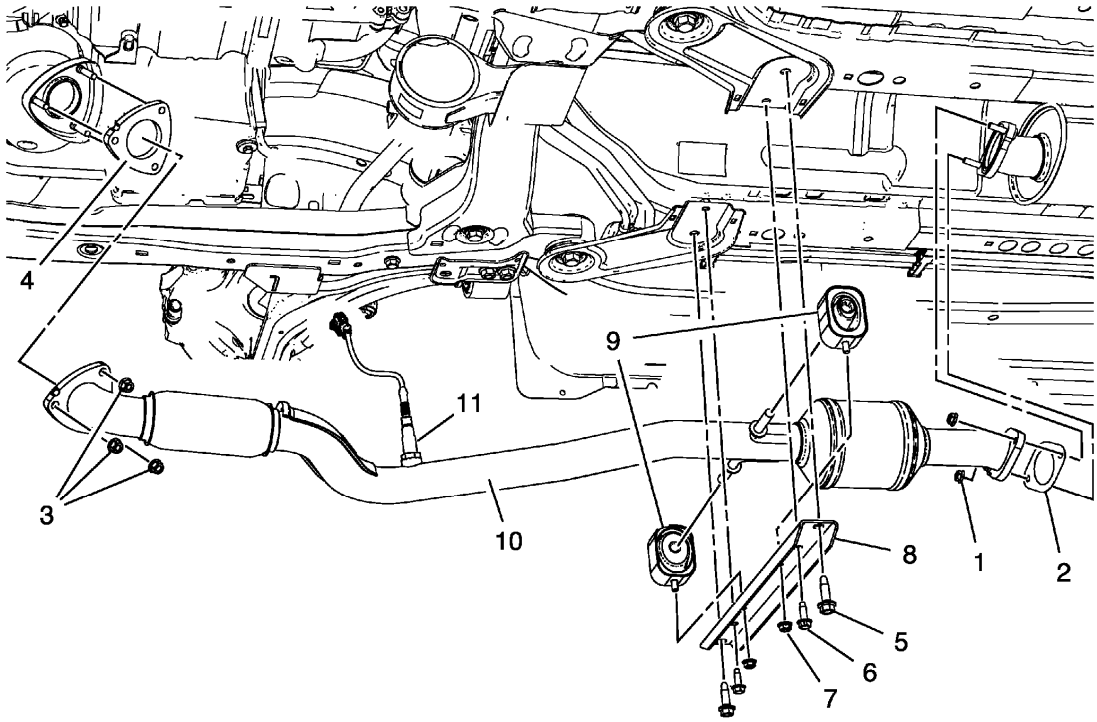

Fig. 7: Catalytic Converter (1.4L LUV)
Courtesy of GENERAL MOTORS COMPANY

Catalytic Converter Replacement (1.4L LUV)

Callout	Component Name
WARNING: **In order to avoid being burned, do not service the exhaust system while it is still hot. Service the system when it is cool.** **WARNING:** **Always wear protective goggles and gloves when removing exhaust parts as falling rust and sharp edges from worn exhaust components could result in serious personal injury.** **CAUTION:** **Do not bend the exhaust flex pipe more than 10 degrees in any direction. Bending of more than 10 degrees or twisting in a range of ±0.5 degrees will damage the exhaust flex decoupler.** **Preliminary Procedures** 1. Raise and support the vehicle. Refer to **Lifting and Jacking the Vehicle** . 2. Disconnect the heated oxygen sensor wiring harness plug.	
	Exhaust Front Pipe to Exhaust Muffler Nut (Qty: 2) **CAUTION:**

1	**Refer to Fastener Caution .** **CAUTION:** **Refer to Torque-to-Yield Fastener Caution .** **Procedure** 1. Support exhaust muffler with a jack. 2. Install NEW nuts, do NOT reuse old nuts. **Tighten** 17 N.m (13 lb ft)
2	Exhaust Front Pipe Gasket to Exhaust Muffler
3	Catalytic Converter to Exhaust Front Pipe Nuts (Qty: 3) **Procedure** Install NEW nuts, do NOT reuse old nuts. **Tighten** 22 N.m (16 lb ft)
4	Catalytic Converter to Exhaust Front Pipe Gasket
5	Drivetrain and Front Suspension Frame Support Bolts - M10 (Qty: 2) **Procedure** Install NEW bolts, do NOT reuse old bolts. **Tighten** 60 N.m (44 lb ft) +30°-45°
6	Exhaust Pipe Front Hanger Bracket Bolts - M8 (Qty: 2) **Tighten** 22 N.m (16 lb ft)
7	Exhaust Pipe Front Hanger Insulator Nuts (Qty: 2) **Tighten** 17 N.m (13 lb ft)
8	Exhaust Pipe Front Hanger Bracket
9	Exhaust Muffler Insulator (Qty: 2)
10	Exhaust Front Pipe Assembly
11	Heated Oxygen Sensor **Tighten** 42 N.m (31 lb ft)

CATALYTIC CONVERTER REPLACEMENT (1.8L LUW AND LWE)

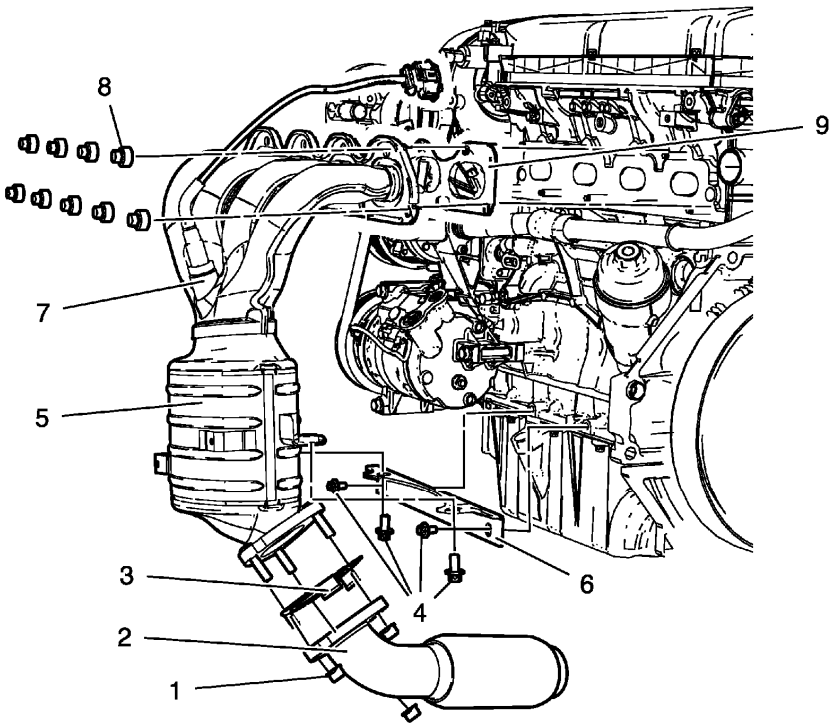

Fig. 8: Catalytic Converter (1.8L LUW and LWE)
Courtesy of GENERAL MOTORS COMPANY

Catalytic Converter Replacement (1.8L LUW and LWE)

Callout	Component Name
WARNING: **Refer to Exhaust Service Warning .** **WARNING:** **Refer to Protective Goggles and Glove Warning .** **Preliminary Procedure** Remove the catalytic converter heat shield. Refer to **Catalytic Converter Heat Shield Replacement (1.4L LUV)**, **Catalytic Converter Heat Shield Replacement (1.8L LUW and LWE)**	
1	Catalytic Converter to Flexible Exhaust Pipe Nut (Qty: 3) **CAUTION:** **Refer to Fastener Caution** **Tighten** 22 N.m (16 lb ft)
2	Flexible Exhaust Pipe
3	Catalytic Converter to Flexible Exhaust Pipe Gasket

4	Exhaust Manifold Brace Bolt (Qty: 4) **Tighten** 20 N.m (15 lb ft)
5	Catalytic Converter
6	Exhaust Manifold Brace
7	Heated Oxygen Sensor **Tighten** 42 N.m (31 lb ft)
8	Catalytic Converter to Cylinder Head Nut (Qty: 9) **Tighten** 20 N.m (15 lb ft)
9	Catalytic Converter to Cylinder Head Gasket

WARM UP THREE-WAY CATALYTIC CONVERTER REPLACEMENT

Removal Procedure

1. Disconnect battery negative cable. Refer to **Battery Negative Cable Disconnection and Connection** .
2. Disconnect the heated oxygen sensor 1 wiring harness connector. Refer to **Heated Oxygen Sensor Replacement - Sensor 1** .
3. Remove the exhaust manifold heat shield. Refer to **Exhaust Manifold Heat Shield Replacement (1.4L LUV)**, **Exhaust Manifold Heat Shield Replacement (1.8L LUW and LWE)**.

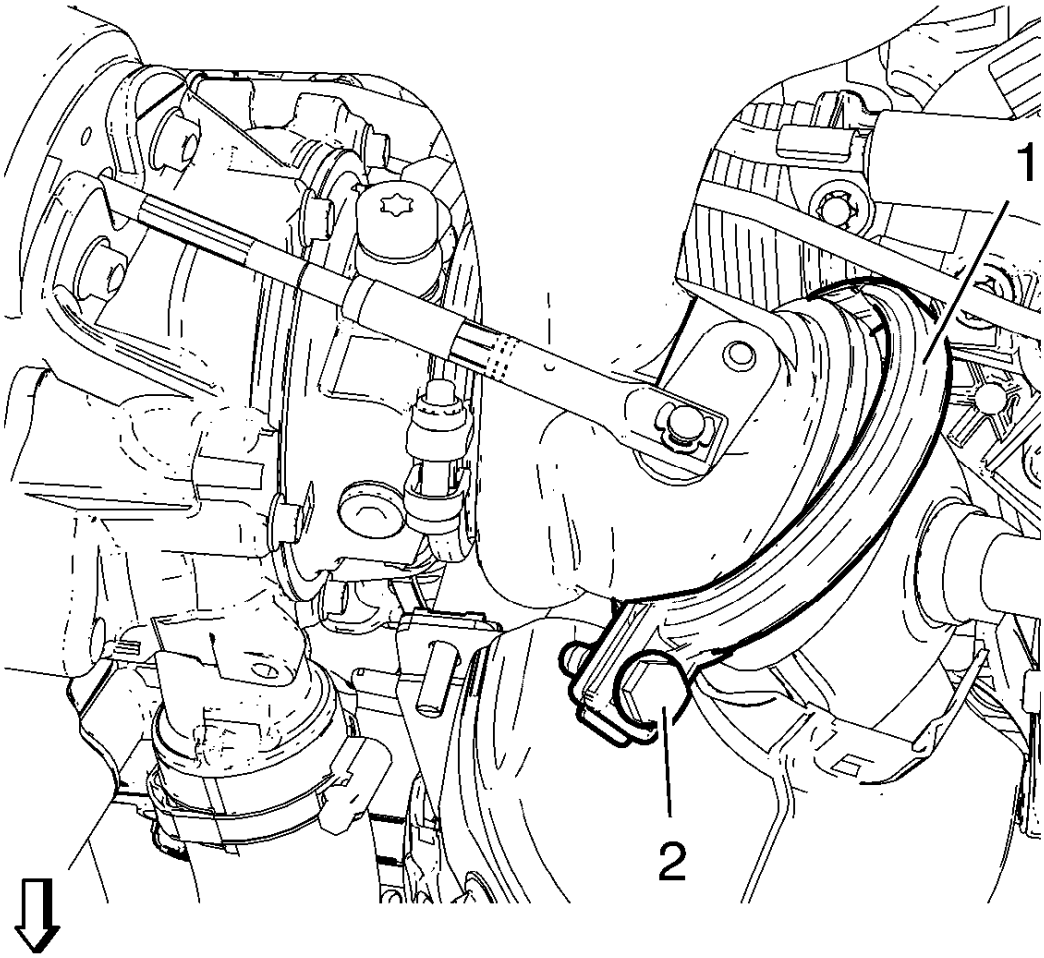

Fig. 9: V-Clamp And Bolt
Courtesy of GENERAL MOTORS COMPANY

4. Loosen the three way warm up catalytic converter V-clamp bolt (2) so that the three way warm up catalytic converter V-clamp (1) can be removed from catalytic converter to turbocharger flange.
5. Raise and support the vehicle. Refer to **Lifting and Jacking the Vehicle** .
6. Remove the engine front compartment insulator if equipped. Refer to **Front Compartment Insulator Replacement**

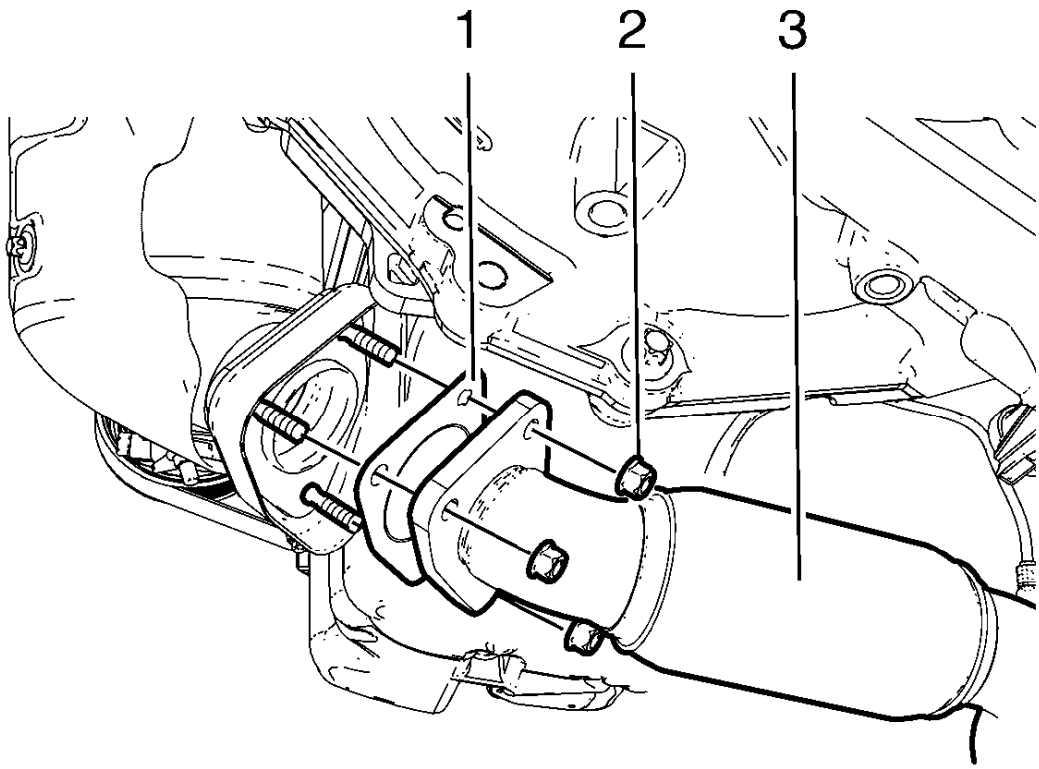

Fig. 10: Catalytic Converter
Courtesy of GENERAL MOTORS COMPANY

WARNING: Always wear protective goggles and gloves when removing exhaust parts as falling rust and sharp edges from worn exhaust components could result in serious personal injury.

CAUTION: Do not bend the exhaust flex pipe more than 10 degrees in any direction. Bending of more than 10 degrees or twisting in a range of ±0.5 degrees will damage the exhaust flex decoupler.

7. Remove and DISCARD the 3 catalytic converter flange nuts (2).
8. Remove the catalytic converter (3) from the three way warm up catalytic converter and hang aside.
9. Remove the catalytic converter gasket (1).

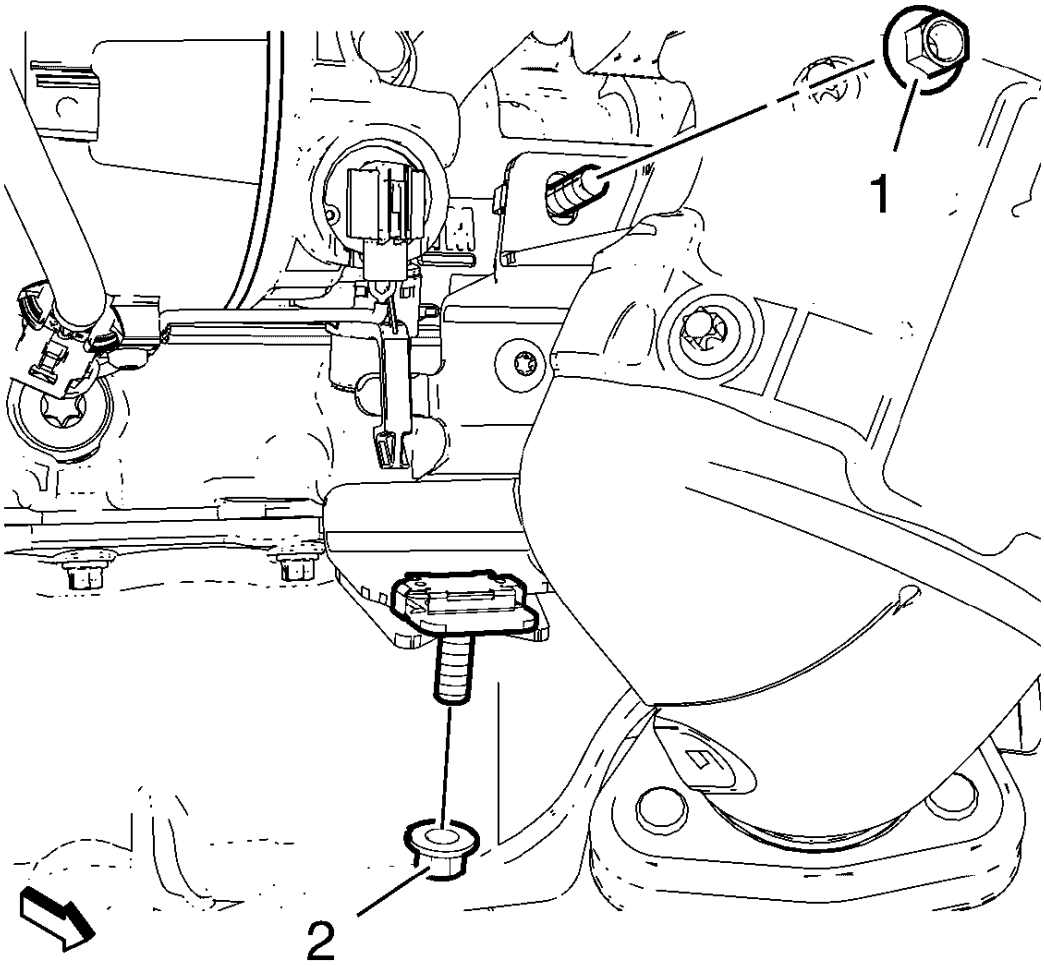

Fig. 11: Catalytic Converter Bracket Nuts
Courtesy of GENERAL MOTORS COMPANY

10. Remove the 2 three way warm up catalytic converter bracket nuts (1) and (2).
11. Remove the three way warm up catalytic converter and the three way warm up catalytic converter to turbocharger seal ring.
12. Remove the heated oxygen sensor 1 from the three way warm up catalytic converter. Refer to **Heated Oxygen Sensor Replacement - Sensor 1** .

Installation Procedure

1. Install the heated oxygen sensor 1 to the three way warm up catalytic converter. Refer to **Heated Oxygen Sensor Replacement - Sensor 1** .

NOTE: Never re-use the V-clamp.

2. Pre-install a NEW three way warm up catalytic converter V-clamp.

3. Install the three way warm up catalytic converter to the turbocharger and the three way warm up catalytic converter brackets. Install a NEW three way warm up catalytic converter to turbocharger seal ring.

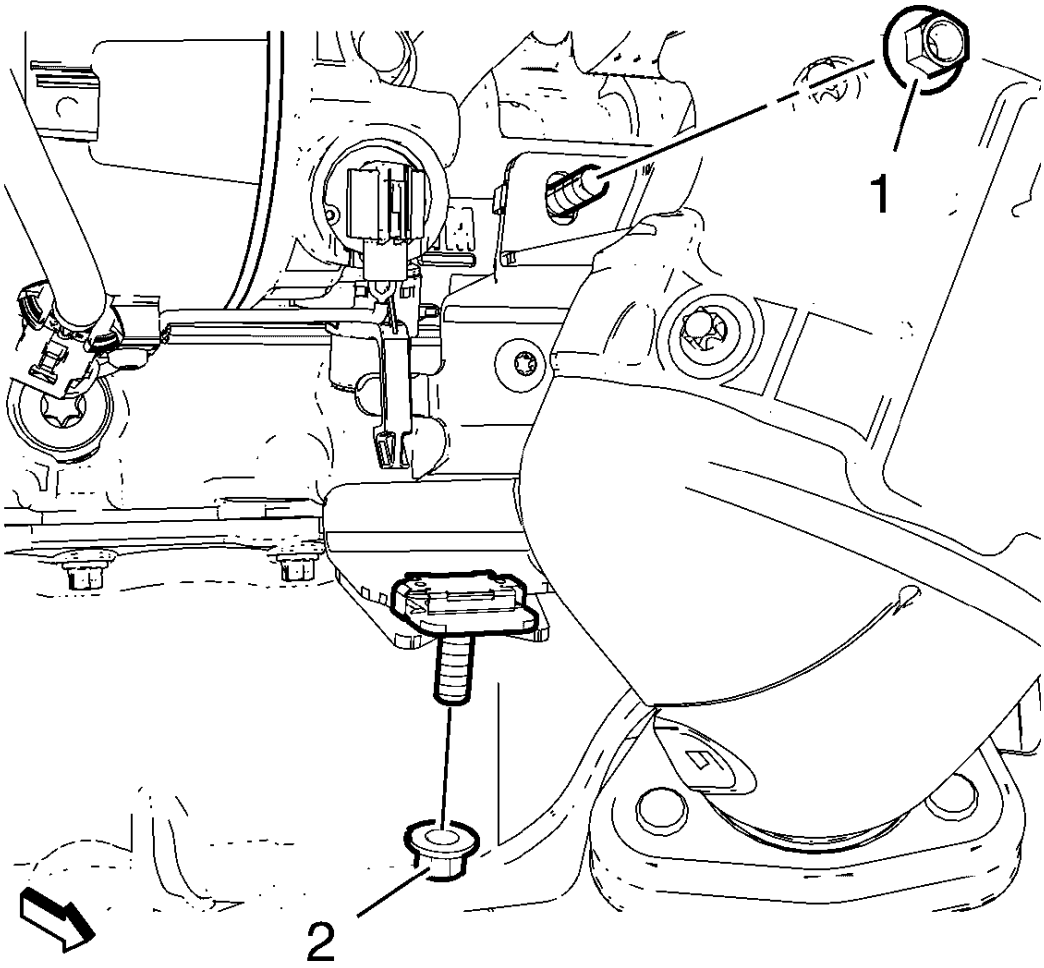

Fig. 12: Catalytic Converter Bracket Nuts
Courtesy of GENERAL MOTORS COMPANY

4. Install and hand-tighten the 2 three way warm up catalytic converter bracket nuts (1) and (2).
5. Lower the vehicle.
6. Install the three way warm up catalytic converter V-clamp to the catalytic converter to turbocharger flange.

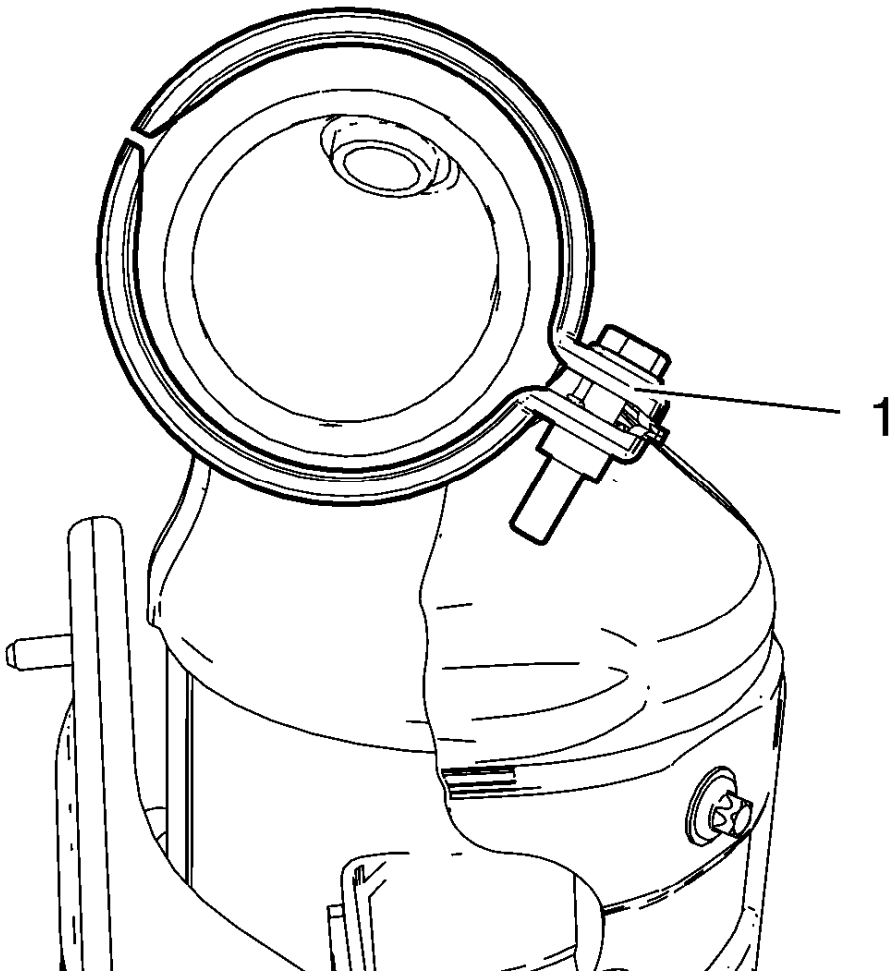

Fig. 13: Catalytic Converter V-Clamp
Courtesy of GENERAL MOTORS COMPANY

7. The three way warm up catalytic converter V-clamp (1) should be installed in the shown position.
8. Hand-tighten the three way warm up catalytic converter V-clamp.
9. Raise and support the vehicle.

CAUTION: Refer to Fastener Caution .

10. Tighten the 2 three way catalytic converter bracket nuts to 22 (16 lb ft).

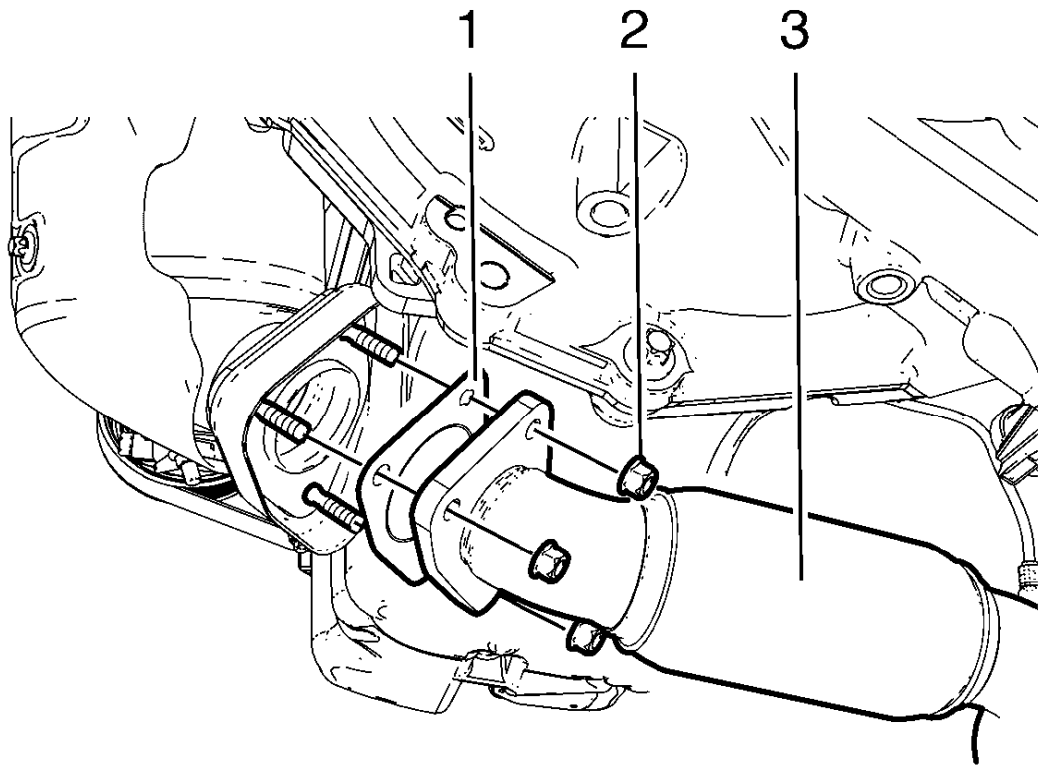

Fig. 14: Catalytic Converter
Courtesy of GENERAL MOTORS COMPANY

11. Install the catalytic converter (3) and a NEW catalytic converter gasket (1) to the three way warm up catalytic converter.
12. Install the 3 NEW catalytic converter flange nuts (2) and tighten to 22 (16 lb ft).
13. Install the engine front compartment insulator if equipped. Refer to **Front Compartment Insulator Replacement**
14. Lower the vehicle.
15. Tighten the three way catalytic converter V-clamp bolt to 13 (115 lb in).
16. Install the exhaust manifold heat shield. Refer to **Exhaust Manifold Heat Shield Replacement (1.4L LUV)**, **Exhaust Manifold Heat Shield Replacement (1.8L LUW and LWE)**.
17. Connect the heated oxygen sensor 1 wiring harness plug. Refer to **Heated Oxygen Sensor Replacement - Sensor 1** .
18. Connect battery negative cable. Refer to **Battery Negative Cable Disconnection and Connection** .

19. Close the hood.

EXHAUST PIPE FRONT HANGER BRACKET REPLACEMENT

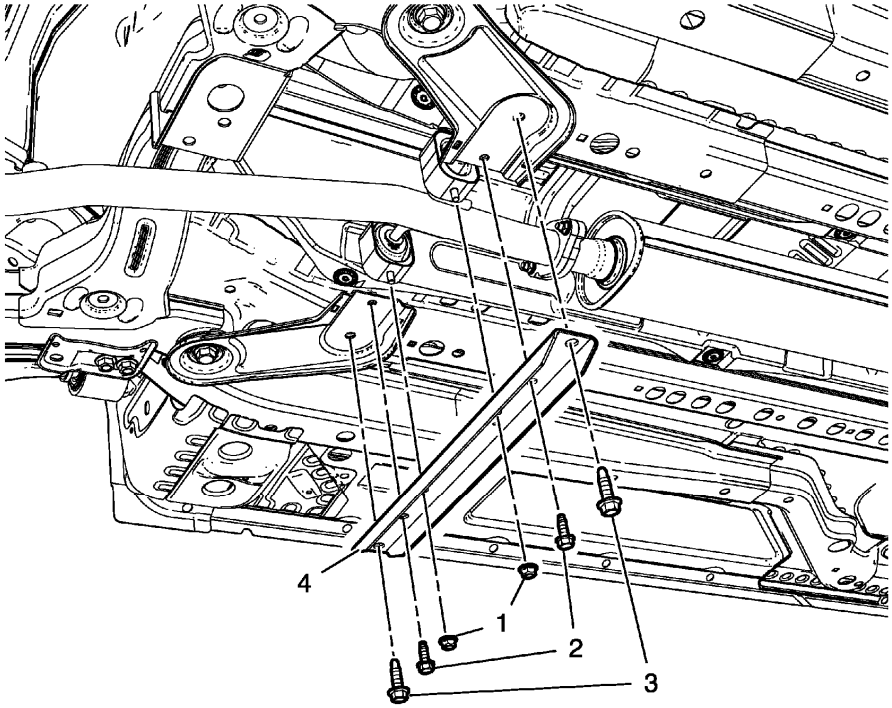

Fig. 15: Exhaust Pipe Front Hanger Bracket
Courtesy of GENERAL MOTORS COMPANY

Exhaust Pipe Front Hanger Bracket Replacement

Callout	Component Name
WARNING: **Refer to Exhaust Service Warning .** **WARNING:** **Refer to Protective Goggles and Glove Warning .** **Preliminary Procedure** Raise and support the vehicle. Refer to **Lifting and Jacking the Vehicle** .**Special Tools EN-45059** Angle MeterFor equivalent regional tools, refer to **Special Tools**.	
1	Exhaust Pipe Front Hanger Insulator Nut (Qty: 2) **CAUTION:** **Refer to Fastener Caution .** **Tighten**

	17 N.m (13 lb ft)
2	Exhaust Pipe Front Hanger Bracket Bolt (Qty: 2) **CAUTION:** **Refer to Torque-to-Yield Fastener Caution .** **Procedure** Install NEW bolts, do NOT reuse old bolts. **Tighten** • First Pass: 22 N.m (16 lb ft). • Final Pass: 30-45 degrees, using the **EN-45059** meter.
3	Drivetrain and Front Suspension Frame Support Bolt (Qty: 2) **Procedure** Install NEW bolts, do NOT reuse old bolts. **Tighten** • First Pass: 60 N.m (44 lb ft). • Final Pass: 30-45 degrees, using the **EN-45059** meter.
4	Exhaust Pipe Front Hanger Bracket

CATALYTIC CONVERTER HEAT SHIELD REPLACEMENT (1.4L LUV)

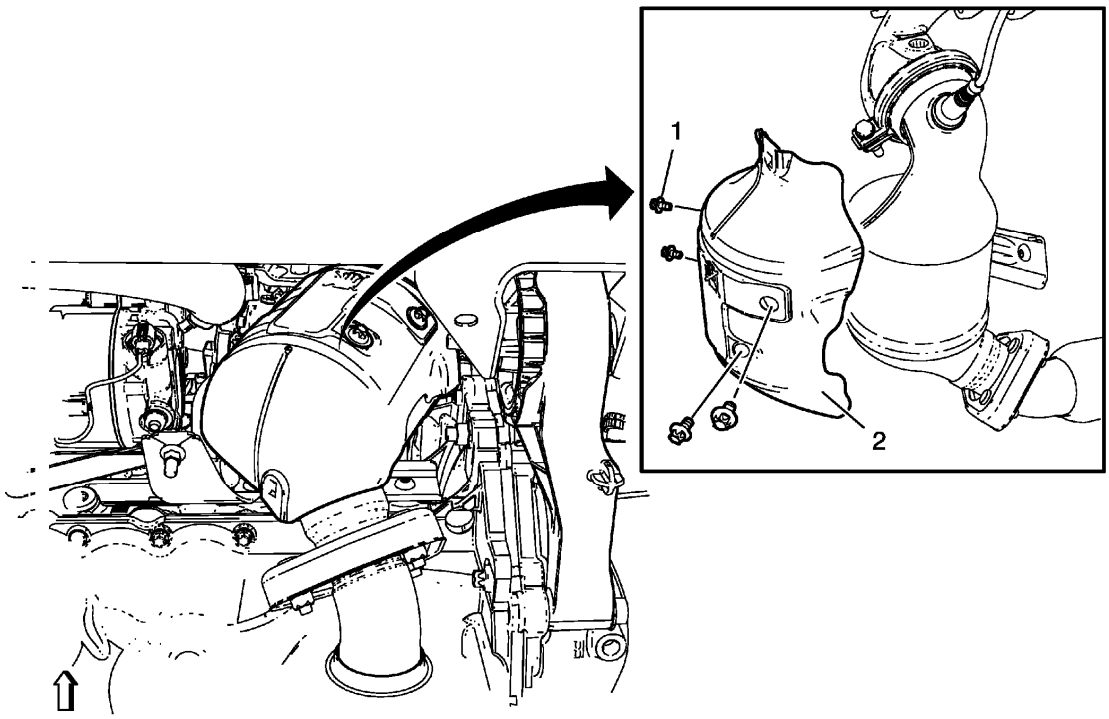

Fig. 16: Catalytic Converter Heat Shield (1.4L LUV)
Courtesy of GENERAL MOTORS COMPANY

Catalytic Converter Heat Shield Replacement (1.4L LUV)

Callout	Component Name
WARNING: **In order to avoid being burned, do not service the exhaust system while it is still hot. Service the system when it is cool.** **WARNING:** **Always wear protective goggles and gloves when removing exhaust parts as falling rust and sharp edges from worn exhaust components could result in serious personal injury.** **Preliminary Procedure** 1. Open the hood. 2. Raise and support the vehicle. Refer to **Lifting and Jacking the Vehicle**	
1	Catalytic Converter Heat Shield Bolt (Qty: 4) **CAUTION:** **Refer to Fastener Caution .** **Tighten:** 10 N.m (89 lb in)

2	Catalytic Converter Heat Shield

CATALYTIC CONVERTER HEAT SHIELD REPLACEMENT (1.8L LUW AND LWE)

Removal Procedure

WARNING: Refer to Exhaust Service Warning .

WARNING: Refer to Protective Goggles and Glove Warning .

1. Open the hood.
2. Disconnect the battery negative cable. Refer to **Battery Negative Cable Disconnection and Connection** .
3. Disconnect the heated oxygen sensor wiring harness plug.
4. Remove the oil level indicator tube. Refer to **Oil Level Indicator Tube Replacement** .

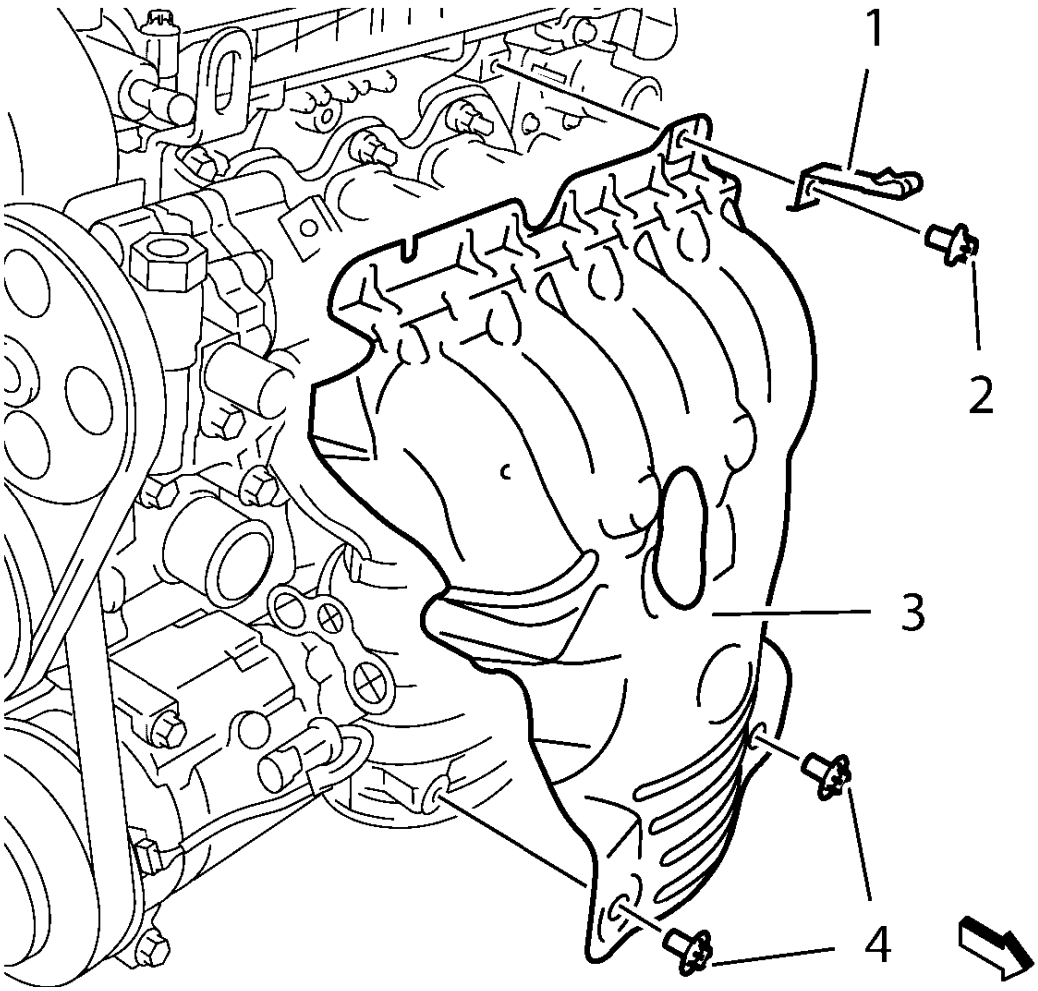

Fig. 17: Wiring Harness Bracket
Courtesy of GENERAL MOTORS COMPANY

5. Remove the wiring harness bracket bolt (2) and the wiring harness bracket (1).
6. Remove the 2 exhaust manifold heat shield bolts (4).
7. Remove the exhaust manifold heat shield (3).

Installation Procedure

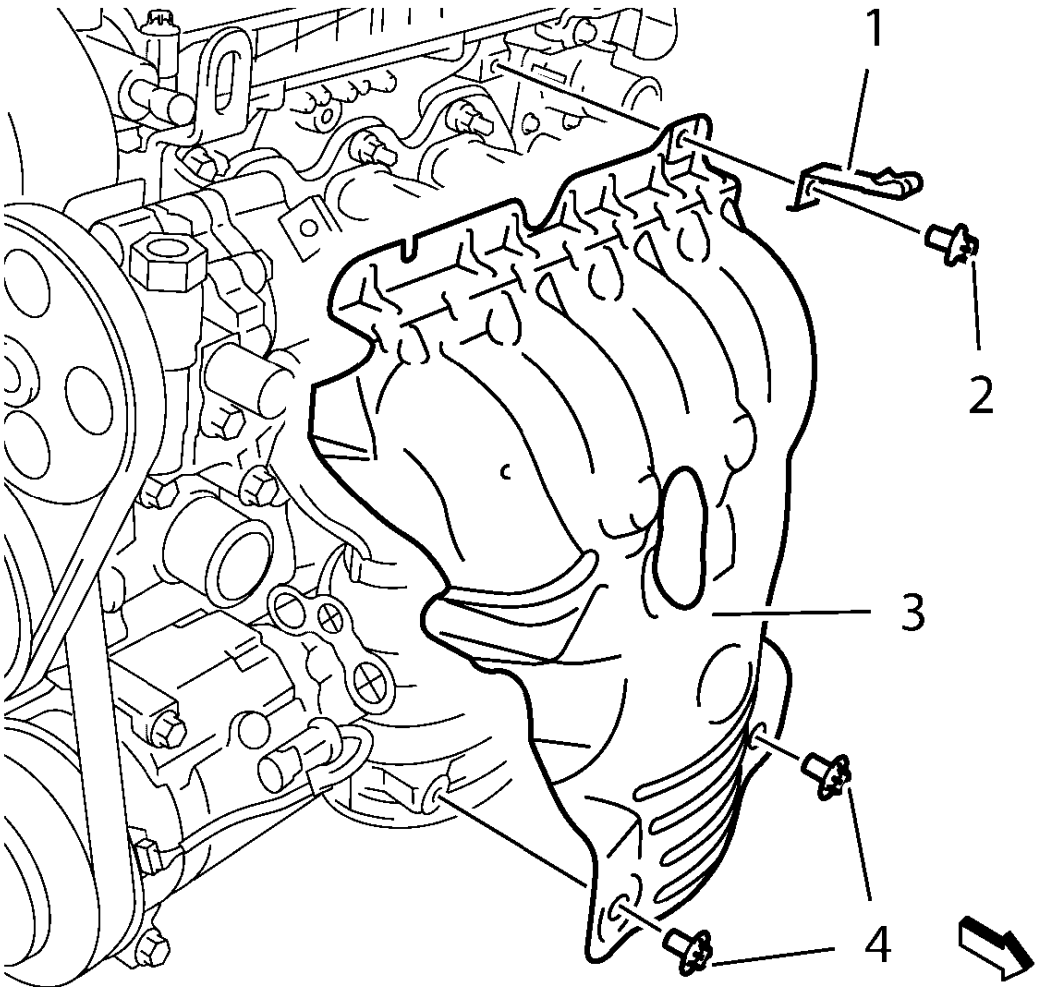

Fig. 18: Wiring Harness Bracket
Courtesy of GENERAL MOTORS COMPANY

1. Install the exhaust manifold heat shield (3).

CAUTION: Refer to Fastener Caution .

2. Install the 2 exhaust manifold heat shield bolts (4) and tighten to 8 N.m (71 lb in).
3. Install the wiring harness bracket (1) and the wiring harness bracket bolt (2) and tighten to 15 N.m (11 lb ft).
4. Install the oil level indicator tube. Refer to **Oil Level Indicator Tube Replacement** .
5. Connect the heated oxygen sensor wiring harness plug.
6. Connect the battery negative cable. Refer to **Battery Negative Cable Disconnection and Connection** .
7. Close the hood.

EXHAUST HEAT SHIELD REPLACEMENT

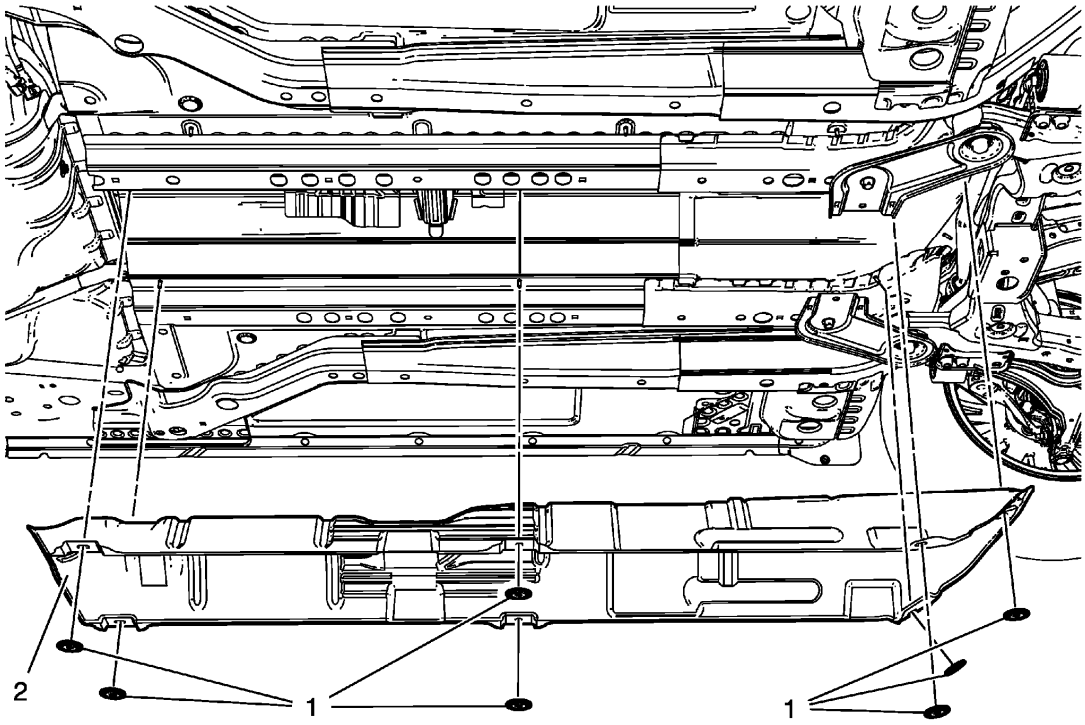

Fig. 19: Exhaust Heat Shield And Retainers
Courtesy of GENERAL MOTORS COMPANY

Exhaust Heat Shield Replacement

Callout	Component Name
WARNING: **In order to avoid being burned, do not service the exhaust system while it is still hot. Service the system when it is cool.** **WARNING:** **Always wear protective goggles and gloves when removing exhaust parts as falling rust and sharp edges from worn exhaust components could result in serious personal injury.** **Preliminary Procedure** Remove the exhaust front pipe. Refer to **Exhaust Front Pipe Replacement**.	
1	Heat Shield Retainer (Qty: 7)
2	Heat Shield

FUEL TANK HEAT SHIELD REPLACEMENT

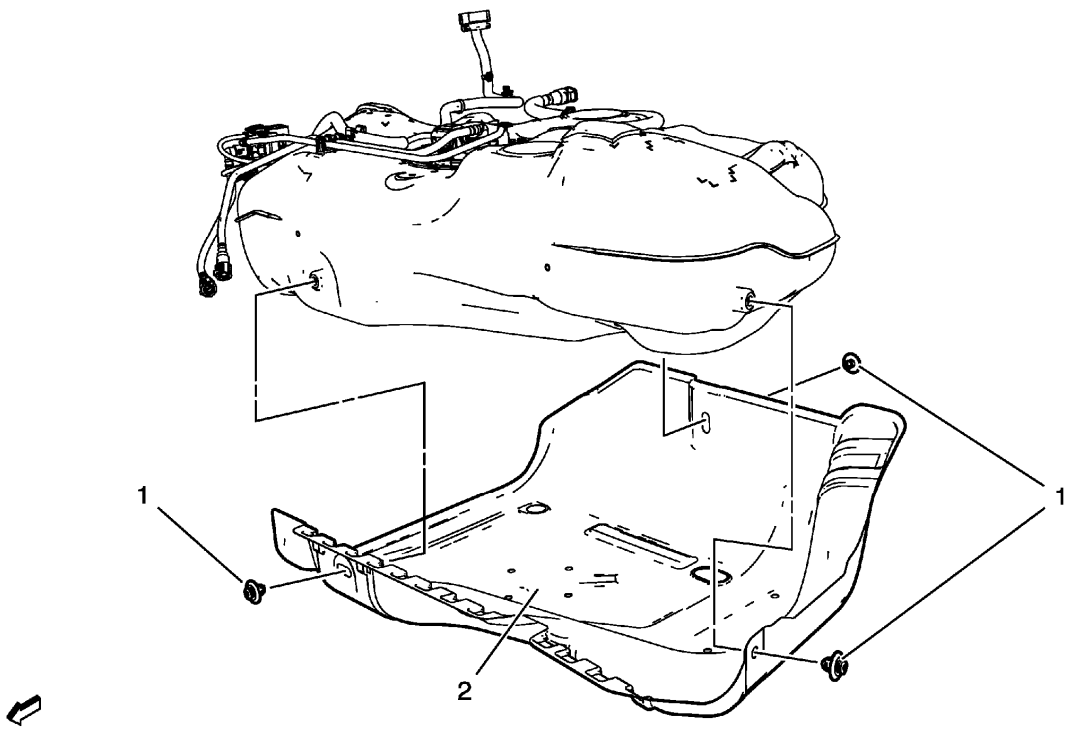

Fig. 20: Fuel Tank Heat Shield (Gasoline)
Courtesy of GENERAL MOTORS COMPANY

Fuel Tank Heat Shield Replacement

Callout	Component Name
WARNING: **Refer to Safety Goggles and Fuel Warning .** **WARNING:** **Refer to Actions to Take When Working with Fuel Warning .** **Preliminary Procedure** Remove the fuel tank. Refer to **Fuel Tank Replacement** .	
1	Fuel Tank Heat Shield Retaining Clamp (Qty: 3)
2	Fuel Tank Heat Shield

EXHAUST MANIFOLD HEAT SHIELD REPLACEMENT (1.4L LUV)

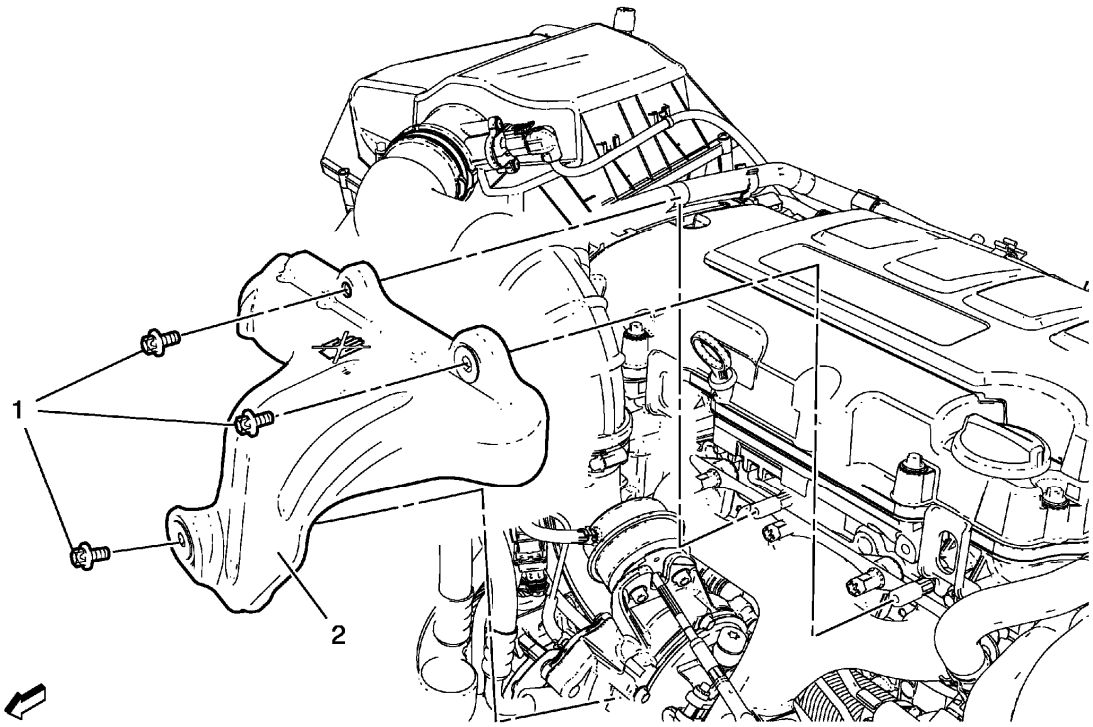

Fig. 21: Exhaust Manifold Heat Shield (1.4L LUV)
Courtesy of GENERAL MOTORS COMPANY

Exhaust Manifold Heat Shield Replacement (1.4L LUV)

Callout	Component Name
WARNING: **In order to avoid being burned, do not service the exhaust system while it is still hot. Service the system when it is cool.**	
1	Exhaust Manifold Heat Shield Bolts (Qty: 3) **CAUTION:** **Refer to Fastener Caution .** **Tighten** 8 N.m (71 lb in)
2	Exhaust Manifold Heat Shield

EXHAUST MANIFOLD HEAT SHIELD REPLACEMENT (1.8L LUW AND LWE)

Removal Procedure

WARNING: Refer to Exhaust Service Warning .

WARNING: Refer to Protective Goggles and Glove Warning .

1. Open the hood.
2. Disconnect the battery negative cable. Refer to **Battery Negative Cable Disconnection and Connection** .
3. Disconnect the heated oxygen sensor wiring harness plug.
4. Remove the oil level indicator tube. Refer to **Oil Level Indicator Tube Replacement** .

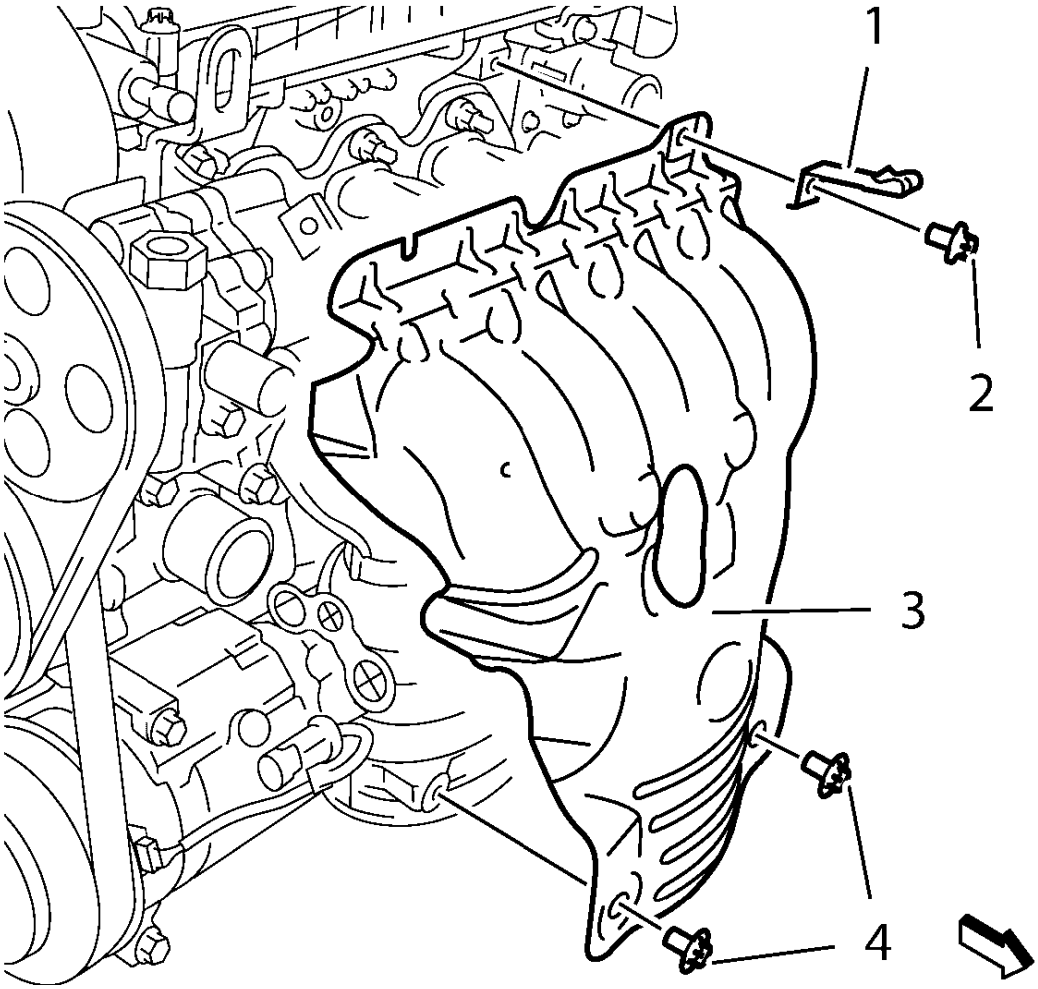

Fig. 22: Wiring Harness Bracket
Courtesy of GENERAL MOTORS COMPANY

5. Remove the wiring harness bracket bolt (2) and the wiring harness bracket (1).
6. Remove the 2 exhaust manifold heat shield bolts (4).
7. Remove the exhaust manifold heat shield (3).

Installation Procedure

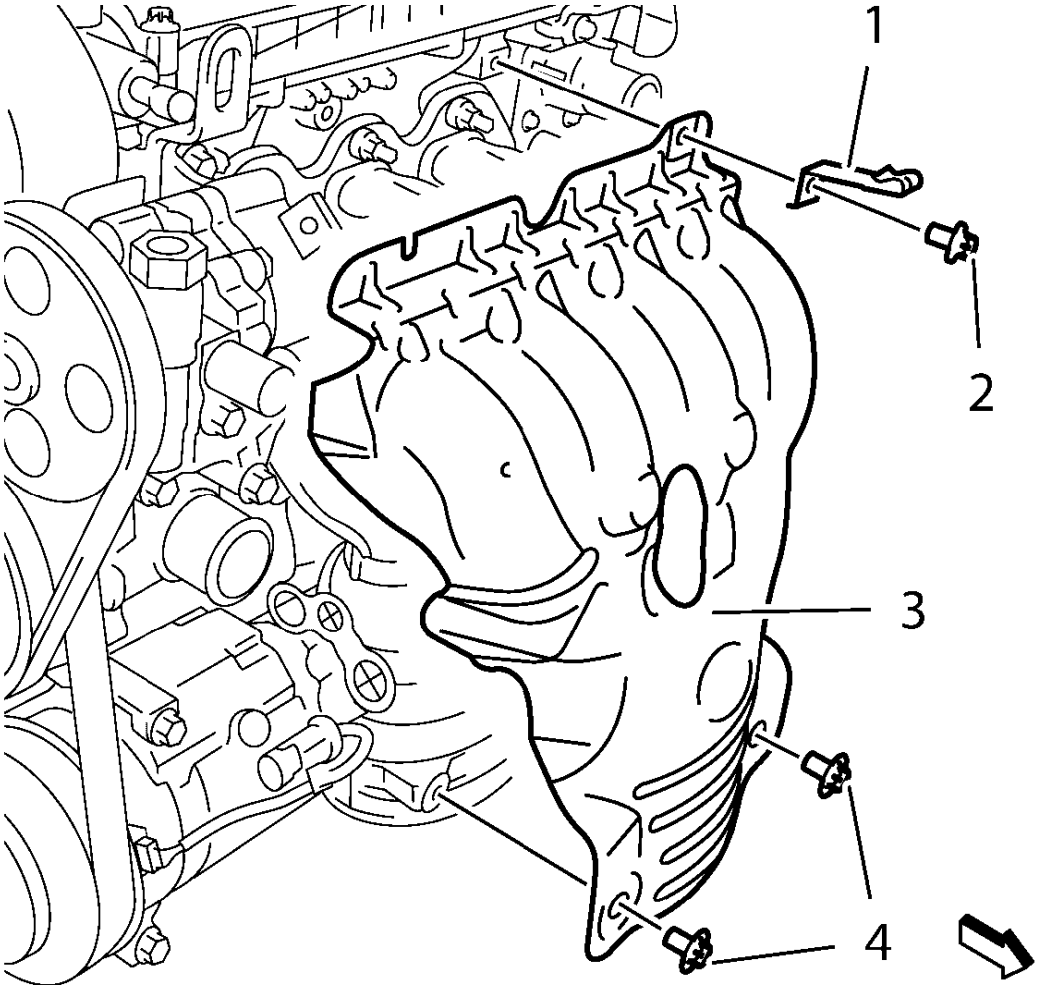

Fig. 23: Wiring Harness Bracket
Courtesy of GENERAL MOTORS COMPANY

1. Install the exhaust manifold heat shield (3).

CAUTION: Refer to Fastener Caution

2. Install the 2 exhaust manifold heat shield bolts (4) and tighten to 8 N.m (71 lb in).
3. Install the wiring harness bracket (1) and the wiring harness bracket bolt (2) and tighten to 15 N.m (11 lb ft).
4. Install the oil level indicator tube. Refer to **Oil Level Indicator Tube Replacement** .
5. Connect the heated oxygen sensor wiring harness plug.
6. Connect the battery negative cable. Refer to **Battery Negative Cable Disconnection and Connection** .

7. Close the hood.

EXHAUST REAR MUFFLER HEAT SHIELD REPLACEMENT

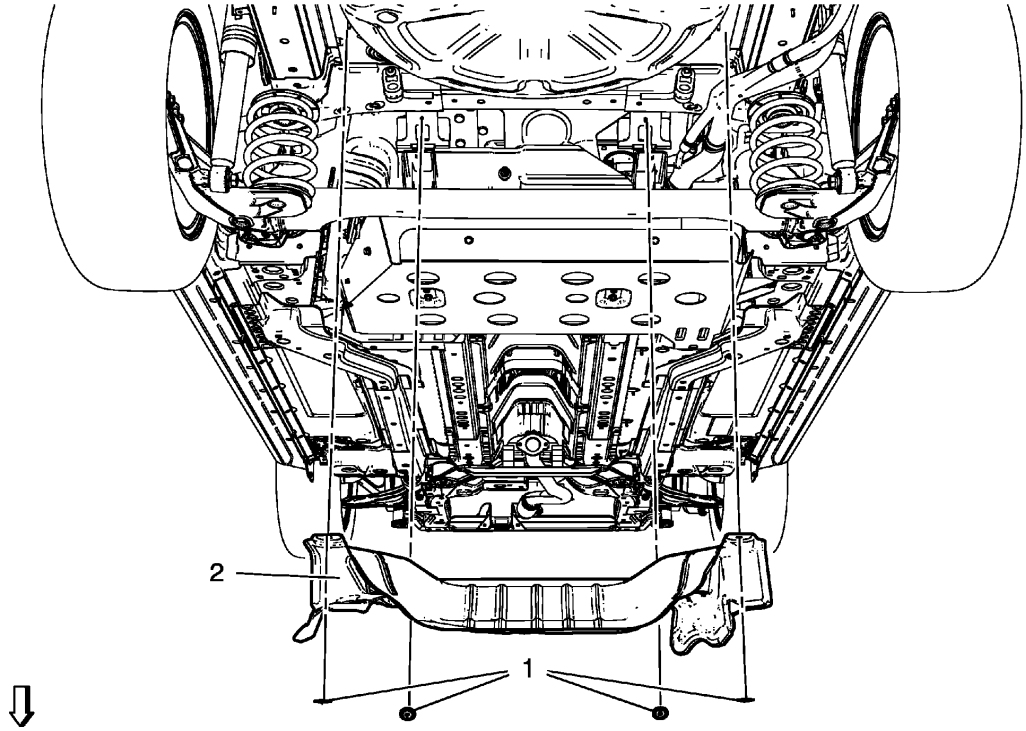

Fig. 24: Exhaust Rear Muffler Heat Shield
Courtesy of GENERAL MOTORS COMPANY

Exhaust Rear Muffler Heat Shield Replacement

Callout	Component Name
WARNING: **Refer to Exhaust Service Warning .** **WARNING:** **Refer to Protective Goggles and Glove Warning .** **Preliminary Procedures** 1. Raise and support the vehicle. Refer to **Lifting and Jacking the Vehicle** . 2. Separate the exhaust rear muffler from the underbody and support the exhaust system.	
1	Heat Shield Retainer (Qty: 4)
2	Exhaust Rear Muffler Heat Shield

EXHAUST REAR MUFFLER REPLACEMENT

Removal Procedure

WARNING: Refer to Exhaust Service Warning .

WARNING: Refer to Protective Goggles and Glove Warning .

1. Raise and support the vehicle. Refer to **Lifting and Jacking the Vehicle** .
2. Read the exhaust system cutting instructions before cutting the exhaust system. .

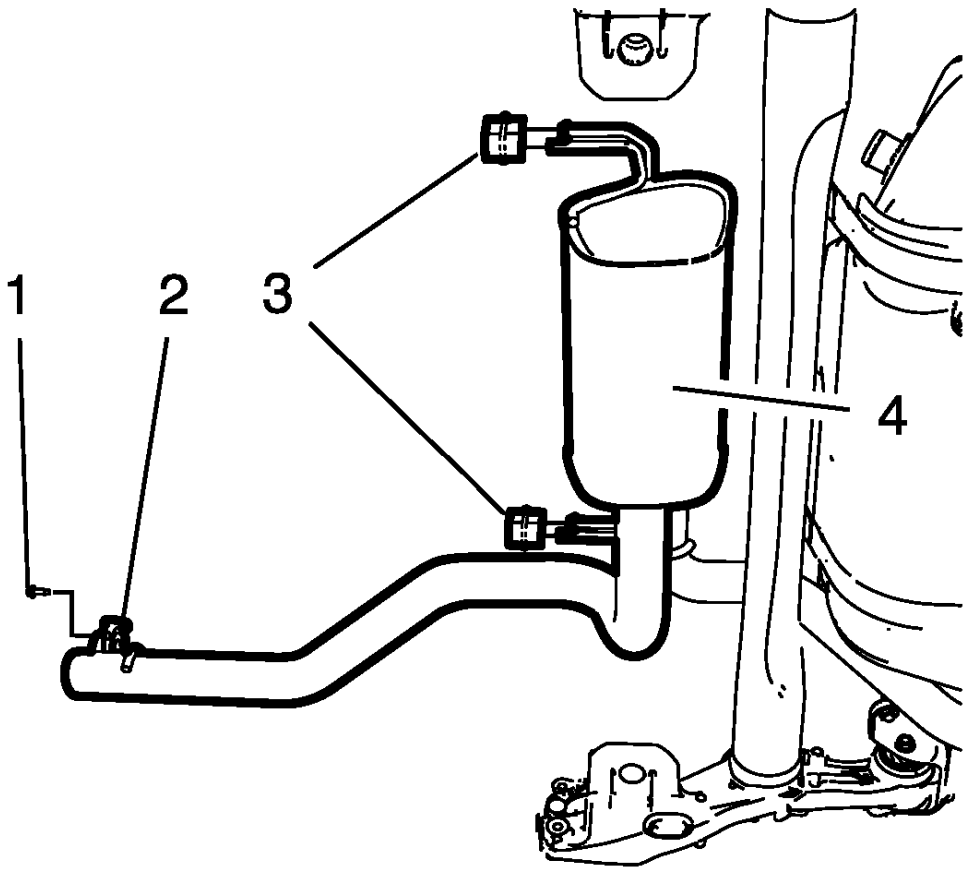

Fig. 25: Exhaust Rear Muffler, Exhaust Rear Muffler Hanger Insulators, Exhaust Rear Muffler End Pipe Bracket And Bolt
Courtesy of GENERAL MOTORS COMPANY

3. Remove the 2 exhaust rear muffler hanger insulators (3) from the exhaust rear muffler (4).

4. Remove the exhaust rear muffler end pipe bracket bolt (1) from the exhaust rear muffler end pipe bracket (2).
5. Remove the exhaust rear muffler end pipe bracket (2).

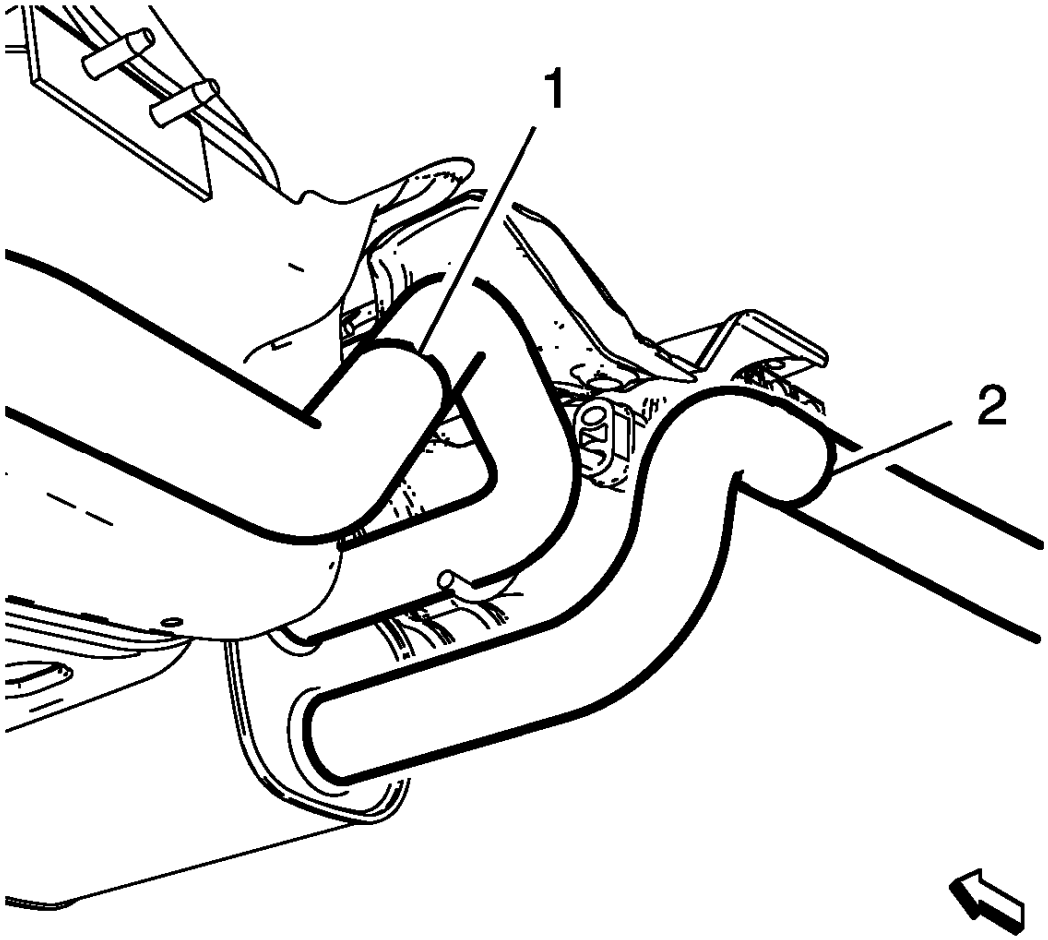

Fig. 26: Exhaust Rear Muffler Cutting Positions
Courtesy of GENERAL MOTORS COMPANY

NOTE: Support the exhaust rear muffler with a jack.

NOTE: The follow step is only necessary if the new exhaust rear muffler is not equipped with the exhaust rear muffler end pipe.

6. Cut the exhaust rear muffler at position (2) and remove the exhaust rear muffler end pipe.
7. Cut the exhaust rear muffler at position (1).
8. Remove the exhaust rear muffler.

Installation Procedure

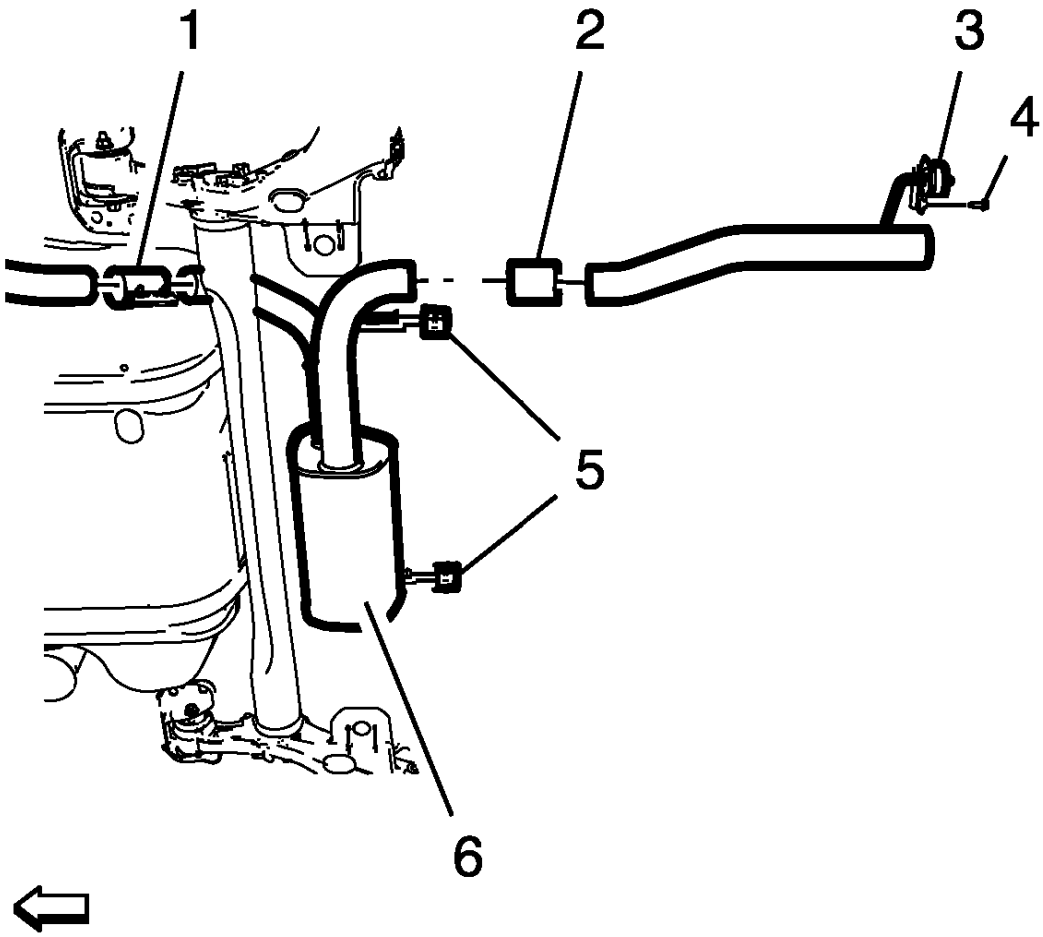

Fig. 27: Exhaust Rear Muffler Components
Courtesy of GENERAL MOTORS COMPANY

1. Install the exhaust rear muffler (6) and hang in the 2 exhaust rear muffler hanger insulators (5).
2. Install the exhaust pipe clamp (1) and loosely tighten.
3. Install the exhaust rear muffler end pipe bracket (3) to the exhaust rear muffler end pipe.

NOTE: The follow step is only necessary if the new exhaust rear muffler is not equipped with the exhaust rear muffler end pipe.

4. Install the exhaust rear muffler end pipe.

CAUTION: Refer to Fastener Caution .

5. Install the exhaust rear muffler end pipe bracket bolt (4) to the exhaust rear muffler end pipe bracket (3) and tighten to 22 N.m (16 lb ft).
6. Install the exhaust pipe clamp (2) and loosely tighten.
7. Position the exhaust rear muffler.
8. Tighten the exhaust pipe clamp (1) to 20 N.m (15 lb ft).
9. Position the exhaust rear muffler end pipe.
10. Tighten the exhaust pipe clamp (2) to 20 N.m (15 lb ft).
11. Lower the vehicle.

DESCRIPTION AND OPERATION

EXHAUST SYSTEM DESCRIPTION (1.8L LUW AND LWE)

Catalytic Converter

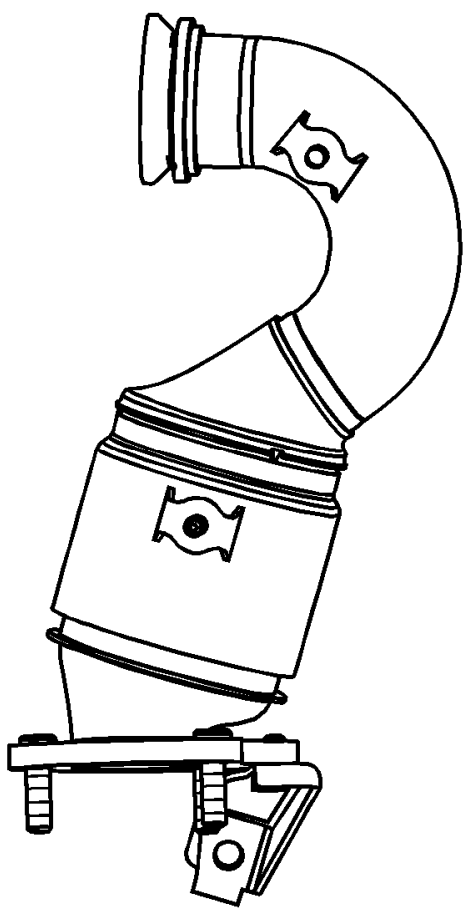

Fig. 28: View Of Pre-Catalyst
Courtesy of GENERAL MOTORS COMPANY

The catalytic converter is an emission control device added to the engine exhaust system in order to reduce hydrocarbons (HC), carbon monoxide (CO), and oxides of nitrogen (NOx) pollutants from the exhaust gas. The catalytic converter is comprised of a ceramic monolith substrate, supported in insulation and housed within a sheet metal shell. The substrate may be washcoated with 3 noble metals, Platium (Pt), Palladium (Pd) and Rhodium (Rh). The catalyst in the converter is not serviceable.

Exhaust Rear Muffler

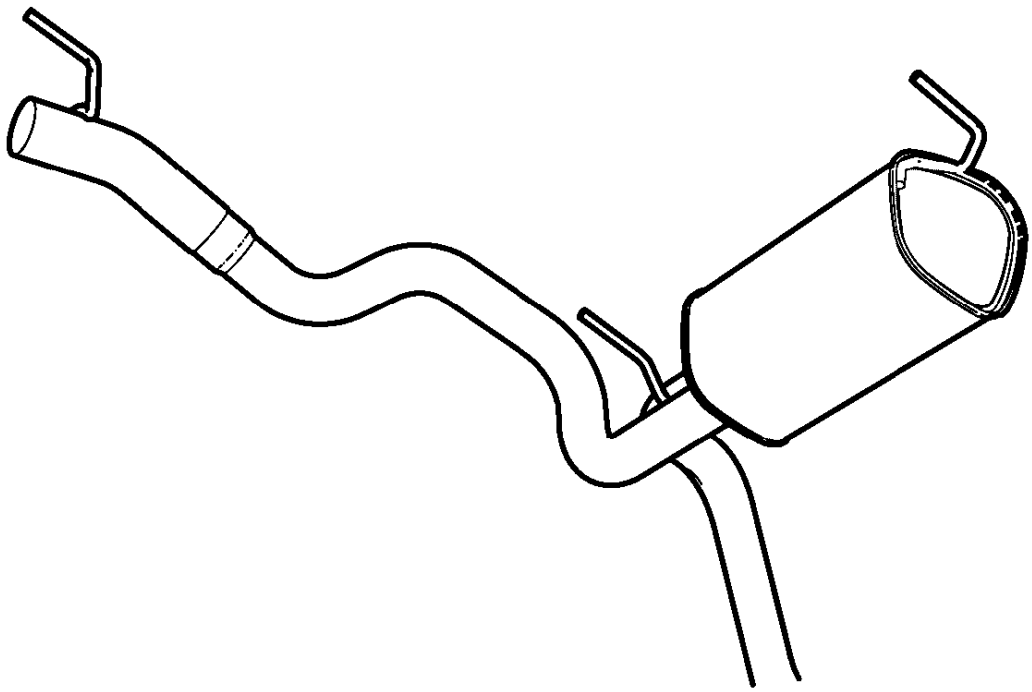

Fig. 29: Exhaust Rear Muffler
Courtesy of GENERAL MOTORS COMPANY

The rear muffler is to reduce broad band engine exhaust noise. It is comprised of a series of perforated tubes and baffles to break up the sound waves and reflect them.

It is made of stainless steel to protect the front muffler from corrosion.

It is mounted behind the rear wheel.

SPECIAL TOOLS AND EQUIPMENT

SPECIAL TOOLS

Special Tools

Illustration	Tool Number/Description
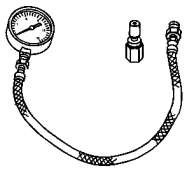	EN-35314-A J-35314-A Exhaust Back Pressure Gauge
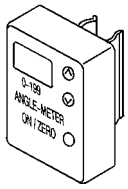	EN-45059 J 45059 Angle Meter
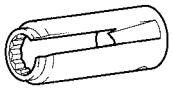	EN-6179 KM-6179 J-39174-C Heated Oxygen Sensor Remover/Installer

SPECIFICATIONS

FASTENER TIGHTENING SPECIFICATIONS

Fastener Tightening Specifications

Application	Specification	
	Metric	English
Air Conditioning Compressor Bracket Bolts	22 N.m	16 lb ft
Camshaft Actuator	50 N.m + 60 degrees	37 lb ft + 60 degrees
Camshaft Bearing Cap Bolts	8 N.m	71 lb in
Camshaft Cover Bolts	8 N.m	71 lb in
Camshaft Position Actuator Solenoid Valve	8 N.m	71 lb in
Camshaft Position Sensor Bolt	6 N.m	53 lb in
Camshaft Sprocket Bolt	50 N.m + 60 degrees (1)	37 lb ft + 60 degrees (1)
Catalytic Converter Bracket to Cylinder Block	22 N.m	16 lb ft
Catalytic Converter to Bracket	22 N.m	16 lb ft
Catalytic Converter to Turbocharger (V-clamp)	13 N.m	115 lb in
Connecting Rod Bearing Cap	25 N.m + 45 degrees (1)	18 lb ft + 45 degrees (1)
Crankshaft Balancer Bolt	150 N.m + 45 degrees + 15 degrees (1)	111 lb ft + 45 degrees + 15 degrees (1)
Crankshaft Bearing Tie Plate Bolts (M6)	10 N.m + 60 degrees + 15 degrees (1)	89 lb in + 60 degrees + 15 degrees (1)
Crankshaft Bearing Tie Plate Bolts (M8)	25 N.m + 60 degrees + 15 degrees (1)	18 lb ft + 60 degrees + 15 degrees (1)
Crankshaft Position Sensor Bolt	8 N.m	71 lb in
Cylinder Head Bolts	35 N.m + 180 degrees (1)	26 lb ft + 180 degrees (1)
Drive Belt Tensioner Bolt M8	22 N.m	16 lb ft
Drive Belt Tensioner Bolt M10	55 N.m	41 lb ft
Engine Cooling Thermostat Housing Bolts	8 N.m	71 lb in
Engine Front Cover Bolts M10	35 N.m	26 lb ft
Engine Front Cover Bolts M6	8 N.m	71 lb in
Engine Mount Bracket Bolts	60 N.m + 45-60 degrees (1)	44 lb ft + 45-60 degrees (1)
Engine Mount Right Side to Body	62 N.m	46 lb ft
Engine Mount Right Side to Engine Mount Bracket	50 N.m + 60-75 degrees (1)	37 lb ft + 60-75 degrees (1)
Engine Oil Filter Cap	25 N.m	18 lb ft
Exhaust Manifold Heat Shield Bolts	8 N.m	71 lb in
Flywheel Bolts (Two-Mass)	60 N.m + 45 degrees + 15 degrees (1)	44 lb ft + 45 degrees + 15 degrees (1)
Fuel Injection Rail to Intake Manifold	6 N.m	53 lb in
Generator to Cylinder Block and Engine Cover	35 N.m	26 lb ft

Ignition Coil Bolts	8 N.m	71 lb in
Intake Manifold Bolt	20 N.m	15 lb ft
Knock Sensor	20 N.m	15 lb ft
Oil Cooler Coolant Inlet Pipe to Oil Cooler	10 N.m	89 lb in
Oil Cooler to Engine Block	20 N.m	15 lb ft
Oil Cooler to Oil Filter Assembly (only bolts serviceable)	10 N.m	89 lb in
Oil Filler Plug to Engine Front Cover (M18)	30 N.m	22 lb ft
Oil Filter Assembly to Block	20 N.m	15 lb ft
Oil Gallery Plug in Engine Front Cover (M22)	60 N.m	44 lb ft
Oil Pan Bolt	10 N.m	89 lb in
Oil Pan Drain Plug	14 N.m	124 lb in
Oil Pressure Indicator	20 N.m	15 lb ft
Oil Pressure Relief Valve	50 N.m	37 lb ft
Oil Pump Cover Bolts	8 N.m	71 lb in
Oil Pump Housing Plug (M10)	10 N.m	89 lb in
Oxygen Sensor to Exhaust Manifold	42 N.m	31 lb ft
Oxygen Sensor to Exhaust Front Pipe	42 N.m	31 lb ft
Piston Oil Nozzles to Block	25 N.m	18 lb ft
Spark Plugs	25 N.m	18 lb ft
Starter Bolts	25 N.m	18 lb ft
Throttle Body Bolts	9 N.m	80 lb in
Timing Chain Guide	8 N.m	71 lb in
Timing Chain Tensioner	8 N.m	71 lb in
Timing Chain Tensioner Shoe	20 N.m	15 lb ft
Turbocharger Coolant Feed Pipe to Engine Block	30 N.m	22 lb ft
Turbocharger Coolant Feed Pipe to Turbocharger (Quick Fitting)	20 N.m	15 lb ft
Turbocharger Coolant Return Pipe to Turbocharger (Quick Fitting)	20 N.m	15 lb ft
Turbocharger Oil Feed Pipe to Oil Cooler/Filter	8 N.m	71 lb in
Turbocharger Oil Feed Pipe to Turbocharger	30 N.m	22 lb ft
Turbocharger Oil Return Pipe to Turbocharger	8 N.m	71 lb in
Turbocharger to Cylinder Head	8 N.m (1)	71 lb in (1)
Water Outlet	8 N.m	71 lb in
Water Pump Housing Bolts	8 N.m	71 lb in
Water Pump Drain Plug	15 N.m	11 lb ft
Water Pump Pulley Bolts	22 N.m	16 lb ft
1 = Use NEW Fastener.		

ENGINE MECHANICAL SPECIFICATIONS

Engine Mechanical Specifications

Application	Specification	
	Metric	English
General Data		
• Engine Type	4-Cylinder Inline	
• Displacement	1364 ccm	83.24 cu in
• Bore	72.5 mm	2.854 in
• Stroke	82.6 mm	3.3 in
• Compression Ratio	9.5:1	
• Number of Valves	16	
• Maximum Power @ engine speed KW/RPM	105 KW /4900	
• Maximum Torque @ engine speed / RPM / lb ft / RPM	200 / 1850	148 lb ft / 4000
Engine Block		
• Cylinder Bore Diameter Standard	72.492 mm - 72.508 mm	2.8540 in - 2.8546 in
• Cylinder Bore Diameter Oversize 0.5	72.992 mm - 73.008 mm	2.8737 in - 2.8743 in
Piston, Piston Rings and Piston Pins		
• Piston Diameter Standard	72.453 mm - 72.467 mm	2.8525 in - 2.8530 in
• Piston Diameter Oversize 0.5	72.953 mm - 72.967 mm	2.8722 in - 2.8727 in
• Piston Clearance to Bore	0.025 mm -0.055 mm	0.001 in - 0.0022 in
• Piston - Upper Compression Ring Thickness	1.17 mm - 1.195 mm	0.0461 in 0.047 in
• Piston - Upper Compression Ring Ring Gap	0.25 mm - 0.4 mm	0.0098 in - 0.0157 in
• Piston - Upper Compression Ring Side Clearance	0.025 mm - 0.07 mm	0.001 in - 0.0028 in
• Piston - Lower Compression Ring Thickness	1.17 mm - 1.195 mm	0.0461 in 0.047 in
• Piston - Lower Compression Ring Ring Gap	0.4 mm - 0.6 mm	0.0157 in - 0.0236 in
• Piston - Lower Compression Ring Side Clearance	0.025 mm - 0.07 mm	0.001 in - 0.0028 in
• Piston - Oil Ring Thickness	1.92 mm - 2 mm	0.0756 in - 0.0787 in
• Piston - Oil Ring Ring Gap	0.25 mm - 0.75 mm	0.0098 in - 0.0295 in
• Piston - Oil Ring Side Clearance	0.04 mm - 0.12 mm	0.0016 in - 0.0047 in
• Piston Pin Bore Diameter	18.006 mm - 18.012 mm	0.7089 in - 0.7091 in
• Piston Pin Outer Diameter	17.995 mm - 18 mm	0.7085 in - 0.7087 in
• Piston Pin Length	48 mm	1.8898 in

• Piston Pin Clearance to Piston Bore	0.005 mm - 0.010 mm	0.0002 in - 0.00039 in
• Piston Pin Clearance to Conrod Bore	0.010 mm - 0.018 mm	0.0039 in - 0.00070 in
Crankshaft		
• Crankshaft Bearing Journal Standard Diameter (brown or green)	50.004 mm -50.017 mm	1.9687 in - 1.9692 in
• Crankshaft Bearing Journal Undersize 0.25 Diameter (brown/blue or green/blue)	49.754 mm -49.767 mm	1.9588 in - 1.9593 in
• Crankshaft Bearing Journal Undersize 0.5 Diameter (brown/white or green/white)	49.504 mm -49.517 mm	1.949 in - 1.9495 in
• Crankshaft Bearing Journal Width Standard	23.000 mm -23.052 mm	0.9055 in - 0.9076 in
• Crankshaft Bearing Journal Width Undersize 0.25	23.200 mm -23.252 mm	0.9134 in - 0.9154 in
• Crankshaft Bearing Journal Width Undersize 0.4	23.400 mm -23.452 mm	0.9213 in - 0.9233 in
• Crankshaft Bearing Mark 328N (brown) - Thickness	1.989 mm -1.995 mm	0.0783 in - 0.0785 in
• Crankshaft Bearing Mark 329N (green) - Thickness	1.995 mm -2.001 mm	0.0785 in - 0.0788 in
• Crankshaft Bearing Mark 330N - Thickness Undersize 0.25 (brown/blue)	2.114 mm - 2.120 mm	0.0832 in - 0.0835 in
• Crankshaft Bearing Mark 331 - Thickness Undersize 0.25 (green/blue)	2.120 mm - 2.126 mm	0.0835 in - 0.0837 in
• Crankshaft Bearing Mark 332 - Thickness Undersize 0.5 (brown/white)	2.239 mm - 2.245 mm	0.0881 in - 0.0884 in
• Crankshaft Bearing Mark 332 - Thickness Undersize 0.5 (green/white)	2.245 mm - 2.251 mm	0.0884 in - 0.0886 in
• Crankshaft Bearing Clearance	0.007 mm - 0.031 mm	0.0003 in - 0.0012 in
• Crankshaft Bearing Clearance Axial	0.100 mm - 0.202 mm	0.0039 in - 0.008 in
• Crankshaft Bearing Out Of Round	0.03 mm	0.0012 in
• Connecting Rod Bearing Journal Diameter Standard	42.971 mm - 42.987 mm	1.6918 in - 1.6924 in
• Connecting Rod Bearing Journal Diameter Undersize 0.25 (blue)	42.721 mm -42.737 mm	1.6819 in - 1.6826 in
• Connecting Rod Bearing Journal Diameter Undersize 0.5 (white)	42.471 mm -42.487 mm	1.6721 in - 1.6727 in
• Connecting Rod Bearing Thickness Standard	1.490 mm - 1.500 mm	0.0587 in - 0.0591 in

• Connecting Rod Bearing Thickness Undersize 0.25	1.615 mm - 1.625 mm	0.0636 in - 0.064 in
• Connecting Rod Bearing Thickness Undersize 0.5	1.740 mm - 1.750 mm	0.0685 in - 0.0689 in
• Connecting Rod Bearing Diameter Standard (upper and lower)	1.490 mm - 1.500 mm	0.0587 in - 0.0591 in
• Connecting Rod Bearing Diameter Undersize 0.25 (upper and lower)	1.615 mm - 1.625 mm	0.0636 in - 0.064 in
• Connecting Rod Bearing Diameter Undersize 0.5 (upper and lower)	1.740 mm - 1.750 mm	0.0685 in - 0.0689 in
• Connecting Rod Bearing Clearance	0.013 mm - 0.061 mm	0.0005 in - 0.0024 in
Cylinder Head		
• Cylinder Head - Intake Valve Seat Width	1.4 mm - 1.8 mm	0.0551 in - 0.0709 in
• Cylinder Head - Exhaust Valve Seat Width	1 mm -1.4 mm	0.0394 in - 0.0551 in
• Cylinder Head - Valve Seat Angle	90° 30`	
• Cylinder Head - Valve Seat Angle Adjustment Upper	110°	
• Cylinder Head - Valve Seat Angle Adjustment Lower	60°	
• Cylinder Head - Intake Valve Guide Inner Diameter Standard	4.991 mm - 5.007 mm	0.1965 in - 0.1971 in
• Cylinder Head - Intake Valve Guide Inner Diameter + 0.075	5.066 mm - 5.082 mm	0.1994 in - 0.2001 in
• Cylinder Head - Intake Valve Guide Inner Diameter 0.150	5.141 mm -5.157 mm	0.2024 in - 0.203 in
• Cylinder Head - Exhaust Valve Guide Inner Diameter Standard	4.991 mm - 5.007 mm	0.1965 in - 0.1971 in
• Cylinder Head - Exhaust Valve Guide Inner Diameter + 0.075	5.066 mm - 5.082 mm	0.1994 in - 0.2001 in
• Cylinder Head - Exhaust Valve Guide Inner Diameter + 0.150	5.141 mm - 5.157 mm	0.2024 in - 0.203 in
• Cylinder Head - Valve Guide Length	38.7 mm - 39.3 mm	1.5236 in - 1.5472 in
• Cylinder Head - Surface Flatness (max) - Block Deck - longitude	0.05 mm	0.00197 in
• Cylinder Head - Surface Flatness (max) - Block Deck - transverse	0.03 mm	0.00118 in
Valve Train		
• Intake Valve Length Standard	92.9 mm	3.6575 in

• Exhaust Valve Length Standard	92.7 mm	3.6496 in
• Intake Valve Stem Diameter Standard	4.950 mm - 4.965 mm	0.1949 in - 0.1955 in
• Exhaust Valve Stem Diameter Standard	4.930 mm - 4.945 mm	0.1941 in - 0.1947 in
• Intake Valve Stem Diameter + 0.075	5.025 mm - 5.040 mm	0.1978 in - 0.1984 in
• Exhaust Valve Stem Diameter + 0.075	5.005 mm - 5.020 mm	0.197 in - 0.1976 in
• Intake Valve Stem Diameter + 0.150	5.100 mm - 5.115 mm	0.2008 in - 0.2014 in
• Exhaust Valve Stem Diameter + 0.150	5.080 mm - 5.095 mm	0.2 in - 0.2006 in
• Intake Valve Disc Diameter	27.9 mm - 28.1 mm	1.0984 in - 1.1063 in
• Exhaust Valve Disc Diameter	24.9 mm - 25.1	0.9803 in - 0.9882 in
• Valve Spring Height Free	40 mm	1.5748 in
• Valve Spring Height Under Load - Valve open	21.5 mm	0.8465 in
• Valve Spring Height Under Load - Valve closed	30 mm	1.1811 in
• Valve Clearance to Guide Intake	0.026 mm - 0.057 mm	0.001 in - 0.0022 in
• Valve Clearance to Guide Exhaust	0.046 mm - 0.077 mm	0.0015 in - 0.003 in
Engine Oil		
• Quality	Dexos I	
• Filling - With New Oil Filter	4 L	4.25 Quarts
• Viscosity	5W-30	
• Oil Pressure @ Idle Speed	150 kpa	22 psi
• Oil Pressure @ 3000 rpm - 3500 rpm	380 kpa - 650 kpa	55 psi - 94 psi
Oil Pump		
• Axial Clearance Vane Rotor to Cover	0.01 mm	0.0004 in
• Axial Clearance Vane to Cover	0.09 mm	0.0036 in
• Axial Clearance Vane Ring to Cover	0.04 mm	0.0016 in
• Axial Clearance Slide to Cover	0.08 mm	0.0031 in
• Axial Clearance Slide Seal to Cover	0.09 mm	0.0036 in
• Radial Clearance Vane to Vane Rotor	0.05 mm	0.002 in
• Radial Clearance Vane to Slide	0.2 mm	0.008 in

ADHESIVES, FLUIDS, LUBRICANTS, AND SEALERS

Adhesives, Fluids, Lubricants, and Sealers

Application	Type of Material	GM Part Number	
		United States	Canada
Bolt Connections	Screw Locking Compound	12345382	10953489
Camshaft Bearings	Dexos1 Engine Oil	19293000	19286321
Camshaft Cover Bolt	Pipe Sealant	12346004	10953480
Camshaft Front Oil Seal	Sealant	1052943	10953491
Camshafts	Dexos1 Engine Oil	19293000	19286321
Crankshaft Bearing Lubricant	Dexos1 Engine Oil	19293000	19286321
Engine Block Oil Gallery Plugs	Sealant	1052943	10953491
Engine Oil	Dexos1 Engine Oil	19293000	19286321
Intake and Exhaust Valves	Dexos1 Engine Oil	19293000	19286321
Oil Pan	Sealant	12378521	88901148
Oxygen Sensor	Assembly Paste - White	88862477	88862478
Oxygen Sensor Threads	Anti-seize	12397953	NA
Rear Crankshaft Main Bearing Cap	Sealant	12378521	88901148
Rear Crankshaft Oil Seal	Dexos1 Engine Oil	19293000	19286321
Rod Bearing - Rod Pins of Crankshaft	Dexos1 Engine Oil	19293000	19286321
Seal Rings	Silicone Grease - White	12345579	10953481
Turbo Heat Shield Fastener	Lubricant	12345996	10953501
Water Pump Bearing	Sealant	1052943	10953491

COMPONENT LOCATOR

DISASSEMBLED VIEWS

Accessory Drive Components

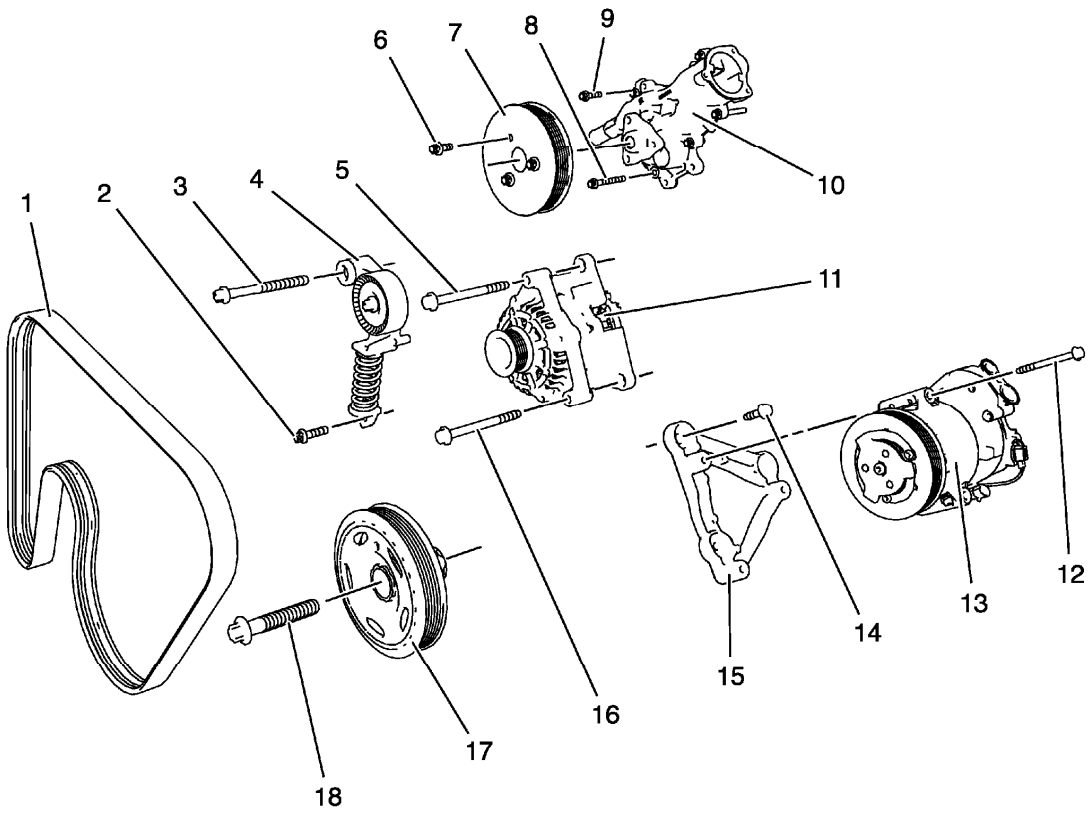

Fig. 1: Accessory Drive Components
Courtesy of GENERAL MOTORS COMPANY

Callout	Component Name
1	Generator And Air Conditioning Compressor Belt
2	Drive Belt Tensioner Bolt (short)
3	Drive Belt Tensioner Bolt (long)
4	Drive Belt Tensioner
5	Upper Generator Bolt
6	Water Pump Pulley Bolt
7	Water Pump Pulley
8	Water Pump Bolt (Long)
9	Water Pump Bolt (Short)
10	Water Pump
11	Generator
12	Air Conditioning Compressor Bolt

13	Air Conditioning Compressor
14	Air Conditioning Compressor Bracket Bolt
15	Air Conditioning Compressor Bracket
16	Lower Generator Bolt
17	Crankshaft Balancer
18	Crankshaft Balancer Bolt

Engine Front Cover And Oil Pump Assembly (1 of 2)

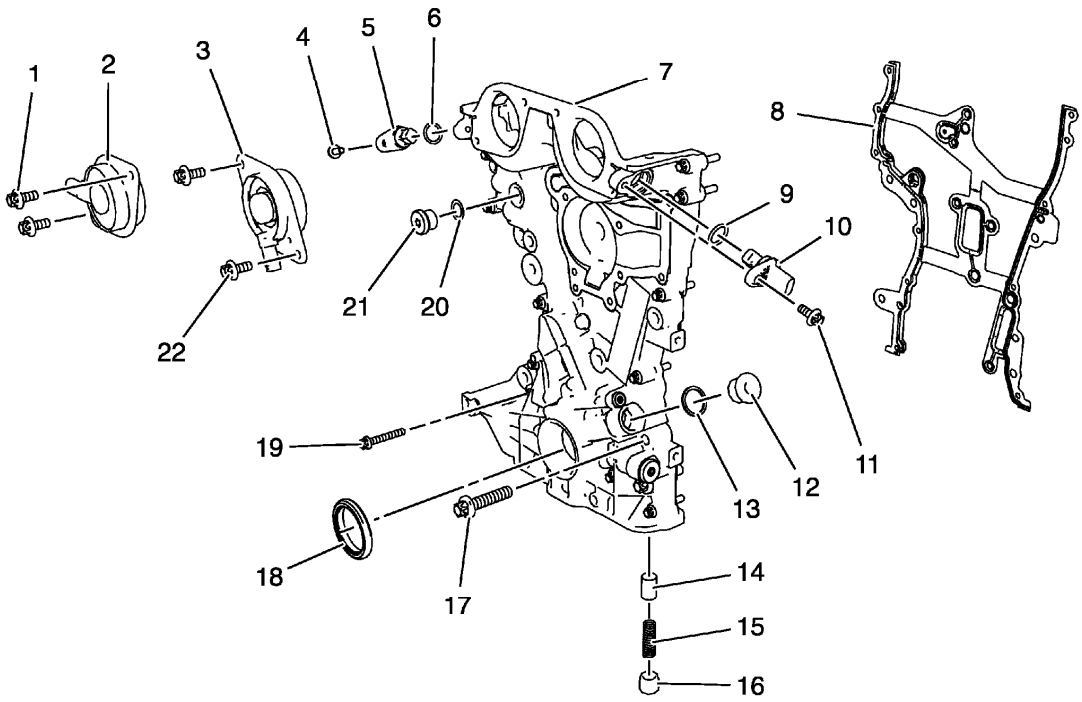

Fig. 2: Engine Front Cover And Oil Pump Assembly Components (1 Of 2)
Courtesy of GENERAL MOTORS COMPANY

Callout	Component Name
1	Camshaft Position Actuator Solenoid Valve Bolt
2	Intake Camshaft Position Actuator Solenoid Valve
3	Exhaust Camshaft Position Actuator Solenoid Valve
4	Intake Camshaft Position Sensor Bolt

5	Intake Camshaft Position Sensor
6	Intake Camshaft Position Sensor Seal Ring
7	Engine Front Cover
8	Engine Front Cover Gasket
9	Exhaust Camshaft Position Sensor Seal Ring
10	Exhaust Camshaft Position Sensor
11	Exhaust Camshaft Position Sensor Bolt
12	Engine Front Cover Oil Gallery Plug
13	Engine Front Cover Oil Gallery Plug Seal Ring
14	Oil Pressure Relief Valve Piston
15	Oil Pressure Relief Valve Spring
16	Oil Pressure Relief Valve Plug
17	Engine Front Cover Bolt (M10)
18	Crankshaft Front Oil Seal
19	Engine Front Cover Bolt (M6)
20	Water Drain Plug Seal Ring
21	Water Drain Plug
22	Exhaust Camshaft Position Actuator Solenoid Valve Bolt

Engine Front Cover And Oil Pump Assembly (2 of 2)

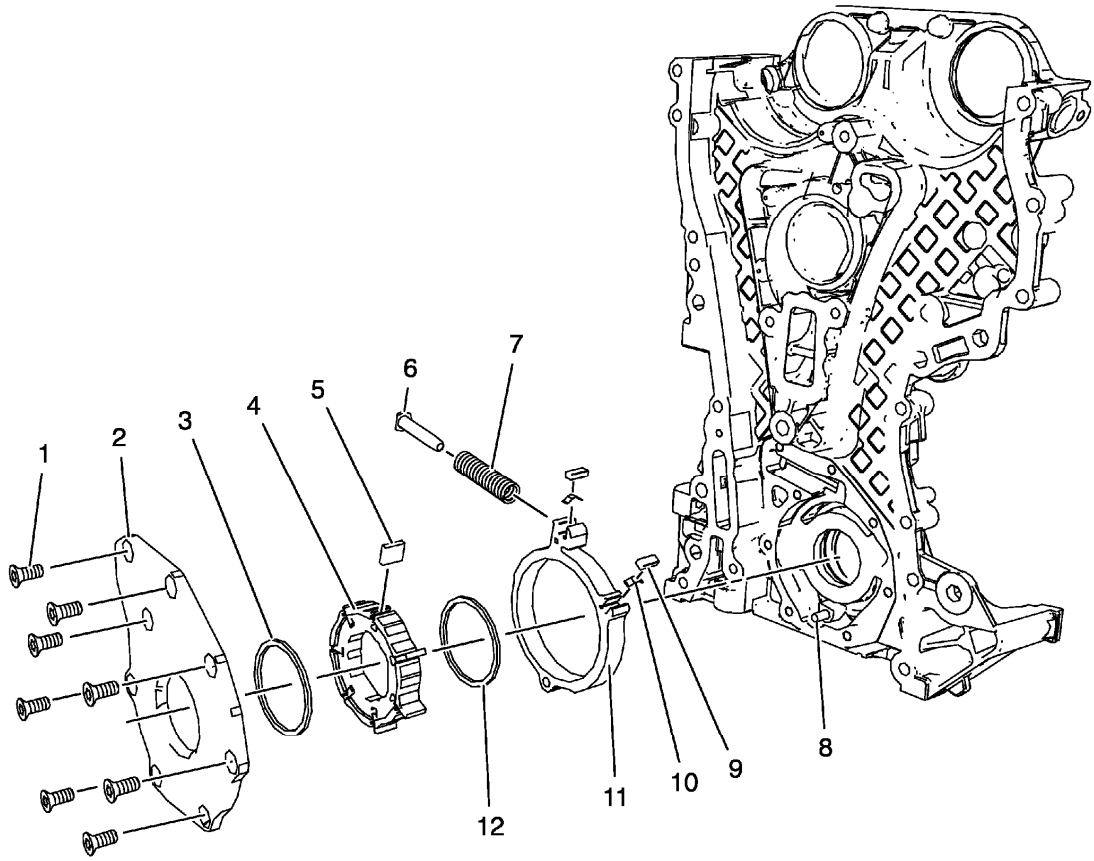

Fig. 3: Engine Front Cover And Oil Pump Assembly (2 of 2)
Courtesy of GENERAL MOTORS COMPANY

Callout	Component Name
1	Oil Pump Cover Bolt
2	Oil Pump Cover
3	Oil Pump Vane Ring
4	Oil Pump Vane Rotor
5	Oil Pump Vane
6	Oil Pump Slide Spring Pin
7	Oil Pump Slide Spring
8	Oil Pump Slide Pivot Pin
9	Oil Pump Slide Seal
10	Oil Pump Slide Seal Spring
11	Oil Pump Slide
12	Oil Pump Vane Ring

Timing Chain Components

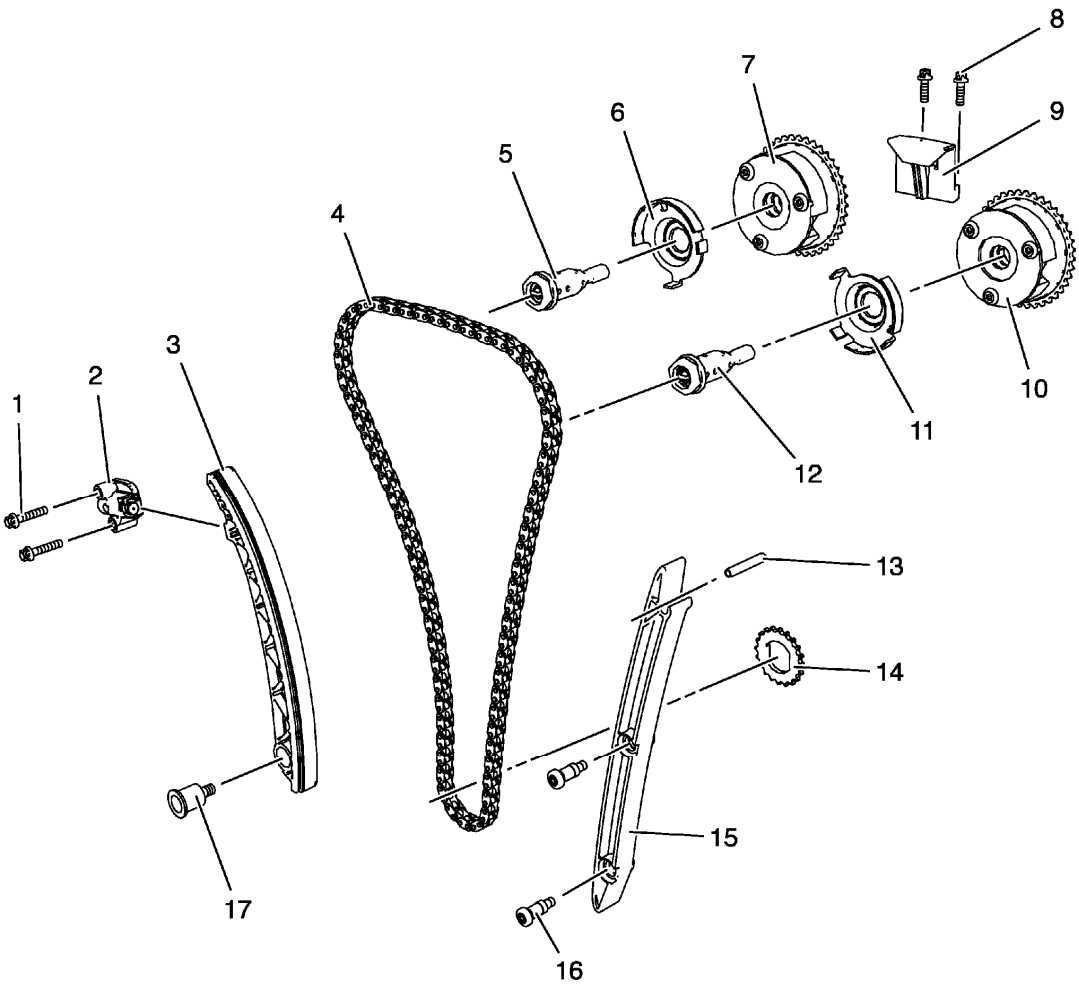

Fig. 4: Timing Chain Components
Courtesy of GENERAL MOTORS COMPANY

Callout	Component Name
1	Timing Chain Tensioner Bolt
2	Timing Chain Tensioner
3	Timing Chain Tensioner Shoe
4	Camshaft Timing Chain
5	Intake Camshaft Sprocket Bolt (With Actuator)
6	Intake Camshaft Position Sensor Exciter Wheel
7	Intake Camshaft Sprocket (With Position Actuator)
8	Upper Timing Chain Guide Bolt
9	Upper Timing Chain Guide
10	Exhaust Camshaft Sprocket (With Position Actuator)
11	Exhaust Camshaft Position Sensor Exciter Wheel

12	Exhaust Camshaft Sprocket Bolt (With Actuator)
13	Timing Chain Guide Pivot Pin
14	Crankshaft Sprocket
15	Timing Chain Guide Right Side
16	Timing Chain Guide Bolt
17	Timing Chain Tensioner Shoe Bolt

Intake Manifold Assembly- 1.4L LDD

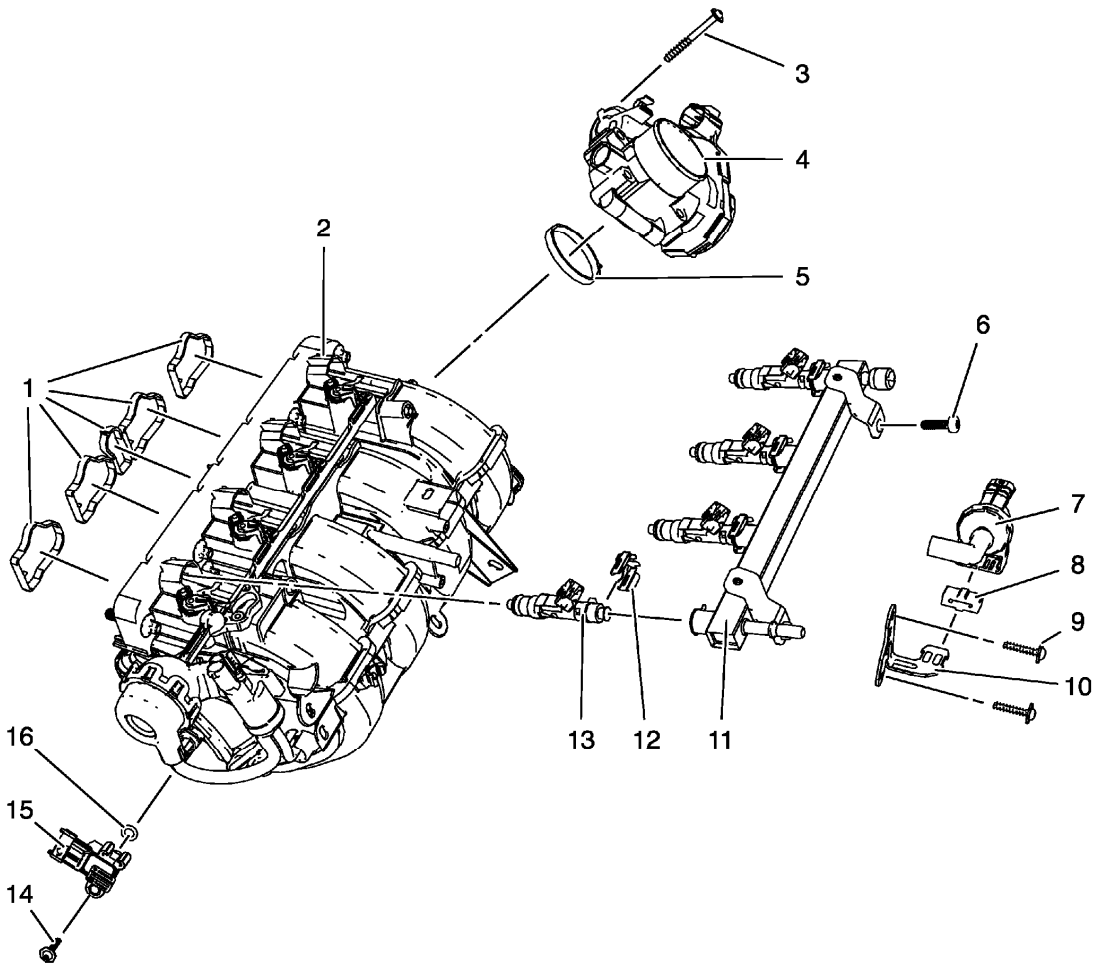

Fig. 5: Identifying Intake Manifold Assembly Components - 1.4L LDD
Courtesy of GENERAL MOTORS COMPANY

Callout	Component Name
1	Intake Manifold Sealings
2	Intake Manifold (With Intake Manifold Runner and Intake Manifold Runner Valve)
3	Throttle Body Bolt

4	Throttle Body
5	Throttle Body Seal Ring
6	Fuel Injection Fuel Rail Bolt
7	Evaporative Emission Canister Purge Solenoid Valve
8	Evaporative Emission Canister Purge Solenoid Valve Rubber
9	Evaporative Emission Canister Purge Solenoid Valve Bracket Bolt
10	Evaporative Emission Canister Purge Solenoid Valve Bracket
11	Fuel Injection Fuel Rail
12	Fuel Injector Retainer Clamp
13	Fuel Injector
14	Manifold Absolute Pressure Sensor Bolt
15	Manifold Absolute Pressure Sensor
16	Manifold Absolute Pressure Sensor Seal Ring

Cylinder Head Assembly

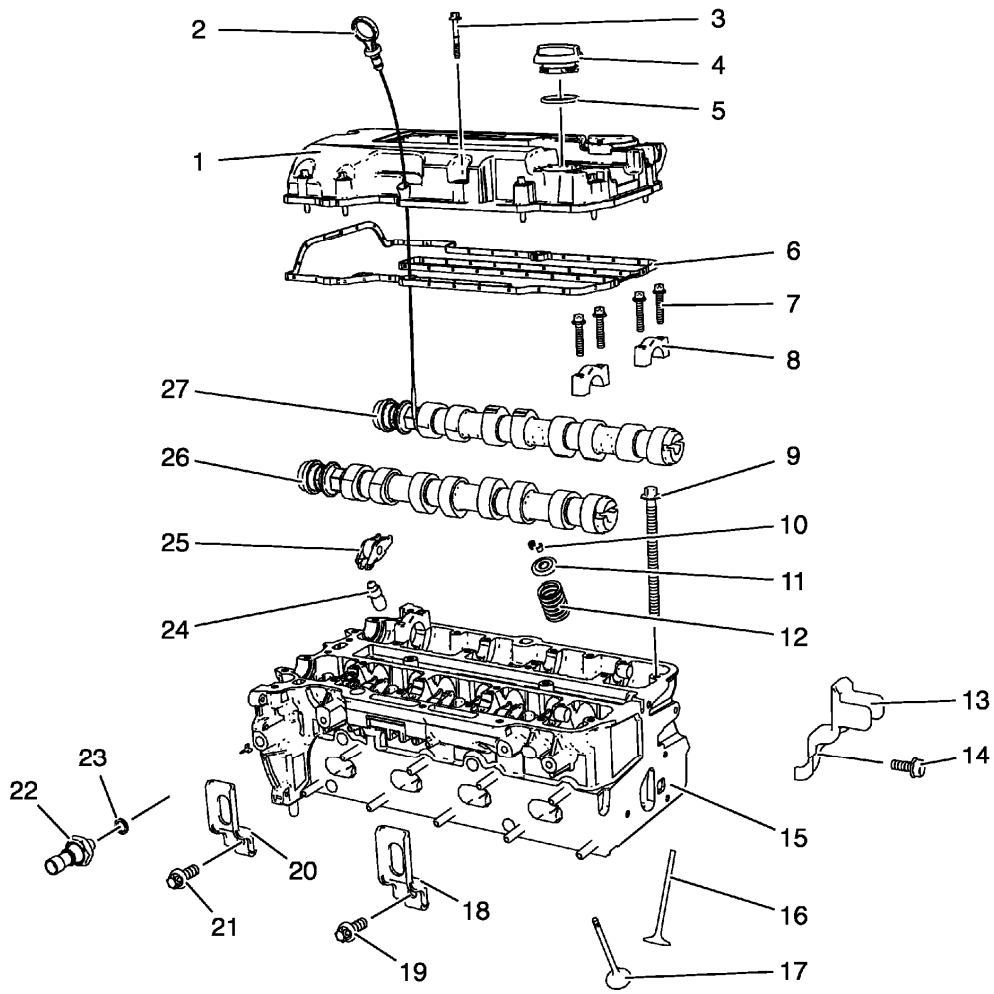

Fig. 6: Identifying Cylinder Head Assembly Components

Courtesy of GENERAL MOTORS COMPANY

Callout	Component Name
1	Camshaft Cover
2	Oil Level Indicator
3	Camshaft Cover Bolt
4	Oil Filler Cap
5	Oil Filler Cap Seal Ring
6	Camshaft Cover Gasket
7	Camshaft Bearing Cap Bolt
8	Camshaft Bearing Cap
9	Cylinder Head Bolt
10	Valve Keys
11	Valve Spring Retainer
12	Valve Spring
13	Engine Lift Bracket Left Side
14	Engine Lift Bracket Bolt
15	Cylinder Head
16	Intake Valve
17	Exhaust Valve
18	Engine Lift Bracket
19	Engine Lift Bracket Bolt
20	Engine Lift Bracket
21	Engine Lift Bracket Bolt
22	Oil Pressure Indicator Switch (only for 1.4L LDD)
23	Oil Pressure Indicator Switch Seal Ring (only for 1.4L LDD)
24	Hydraulic Valve Lash Adjuster
25	Hydraulic Valve Lash Adjuster Arm
26	Exhaust Camshaft
27	Intake Camshaft

Engine Block Assembly- 1.4L LDD

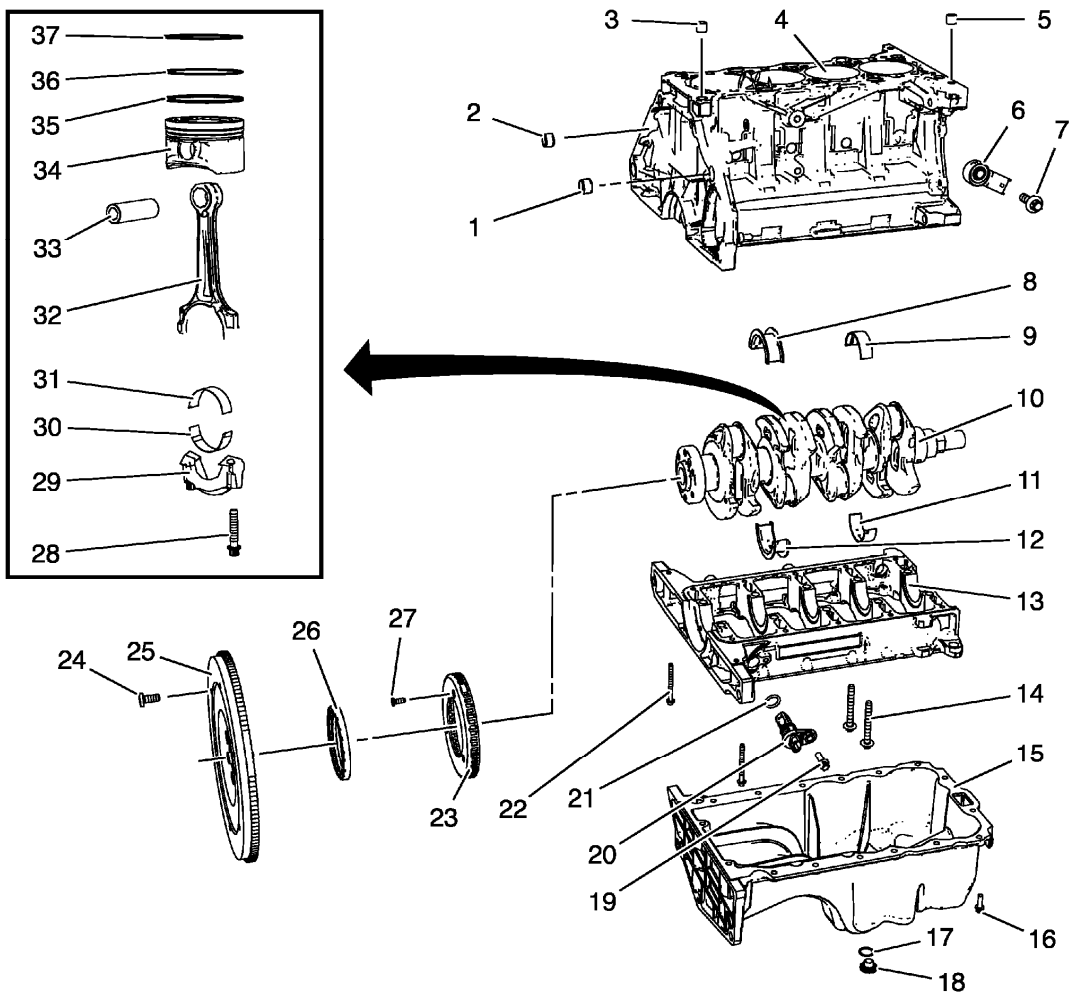

Fig. 7: Identifying Engine Block Assembly Components - 1.4L LDD
Courtesy of GENERAL MOTORS COMPANY

Callout	Component Name
1	Transmission Guide Sleeve
2	Transmission Guide Sleeve
3	Cylinder Head Guide Sleeve
4	Engine Block
5	Cylinder Head Guide Sleeve
6	Knock Sensor
7	Knock Sensor Bolt
8	Upper Crankshaft Thrust Bearing
9	Upper Crankshaft Bearing
10	Crankshaft
11	Lower Crankshaft Bearing
12	Lower Crankshaft Thrust Bearing

13	Crankshaft Bearing Cap Tie Plate
14	Crankshaft Bearing Cap Tie Plate Bolt (M10)
15	Oil Pan
16	Oil Pan Bolt
17	Oil Pan Drain Plug Seal Ring
18	Oil Pan Drain Plug
19	Crankshaft Position Sensor Bolt
20	Crankshaft Position Sensor
21	Crankshaft Position Sensor Seal Ring
22	Crankshaft Bearing Cap Tie Plate Bolt (M8)
23	Crankshaft Position Sensor Reluctor Ring
24	Flywheel Bolt
25	Engine Flywheel
26	Crankshaft Rear Oil Seal
27	Crankshaft Position Sensor Reluctor Ring Bolt
28	Connecting Rod Bearing Cap Bolt
29	Connecting Rod Bearing Cap
30	Lower Connecting Rod Bearing
31	Upper Connecting Rod Bearing
32	Connecting Rod
33	Piston Pin
34	Piston
35	Piston Oil Ring (With oil Ring Spacer)
36	Lower Compression Ring
37	Upper Compression Ring

Engine Block Assembly- 1.4L LUH and LUJ

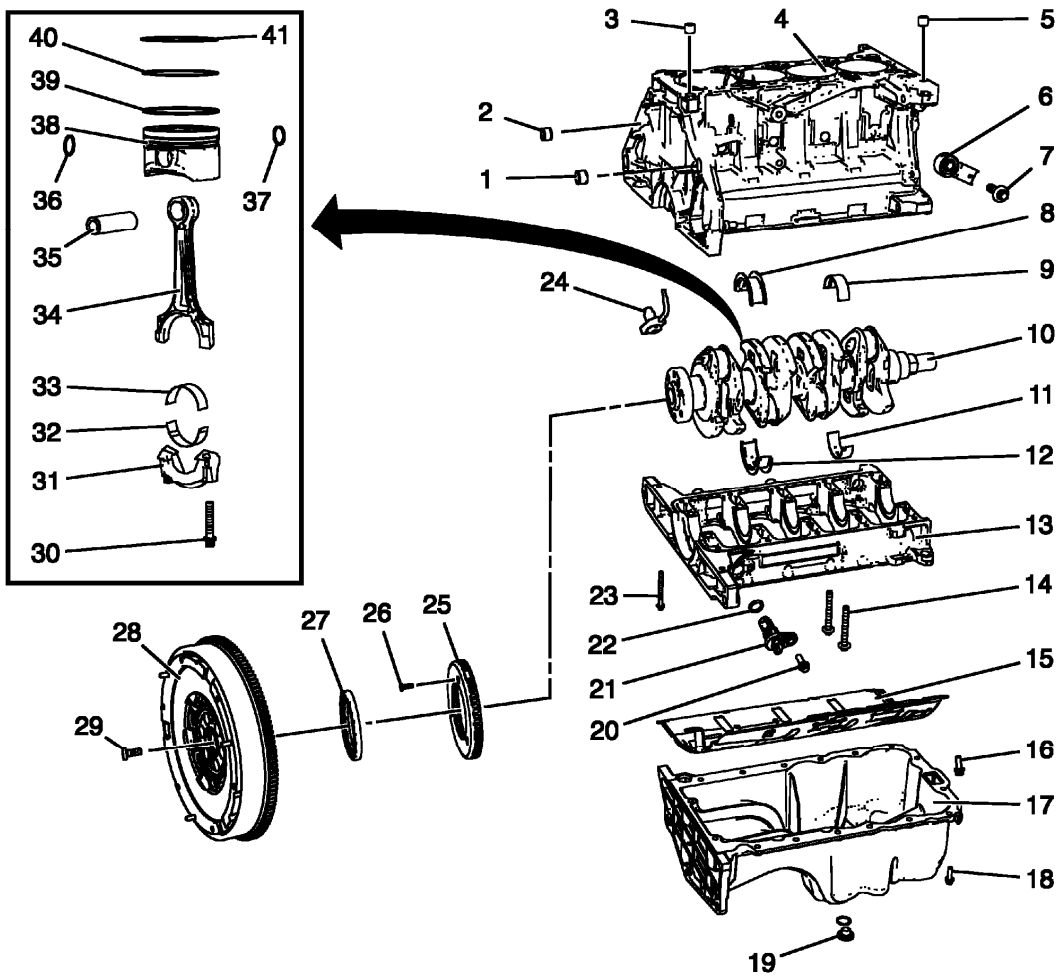

Fig. 8: Identifying Engine Block Assembly Components - 1.4L LUH and LUJ
Courtesy of GENERAL MOTORS COMPANY

Callout	Component Name
1	Transmission Guide Sleeve
2	Transmission Guide Sleeve
3	Cylinder Head Guide Sleeve
4	Cylinder Head
5	Cylinder Head Guide Sleeve
6	Knock Sensor
7	Knock Sensor Bolt
8	Upper Crankshaft Thrust Bearing
9	Upper Crankshaft Bearing
10	Crankshaft
11	Lower Crankshaft Bearing
12	Lower Crankshaft Thrust Bearing

13	Crankshaft Bearing Cap Tie Plate
14	Crankshaft Bearing Cap Tie Plate Bolt (M10)
15	Oil Pan Baffle
16	Oil Pan Baffle Bolt
17	Oil Pan
18	Oil Pan Bolt
19	Oil Pan Drain Plug
20	Crankshaft Position Sensor Bolt
21	Crankshaft Position Sensor
22	Crankshaft Position Sensor Seal Ring
23	Crankshaft Bearing Cap Tie Plate Bolt (M8)
24	Piston Oil Nozzle
25	Crankshaft Position Sensor Reluctor Ring
26	Crankshaft Position Sensor Reluctor Ring Bolt
27	Crankshaft Rear Oil Seal
28	Engine Flywheel (Two-Mass)
29	Engine Flywheel Bolt
30	Connecting Rod Bearing Cap Bolt
31	Connecting Rod Bearing Cap
32	Lower Connecting Rod Bearing
33	Upper Connecting Rod Bearing
34	Connecting Rod
35	Piston Pin
36	Piston Pin Retainer
37	Piston Pin Retainer
38	Piston
39	Piston Oil Ring (With Oil Ring Spacer)
40	Lower Compression Ring
41	Upper Compression Ring

Intake Manifold Assembly- 1.4L LUH and LUJ

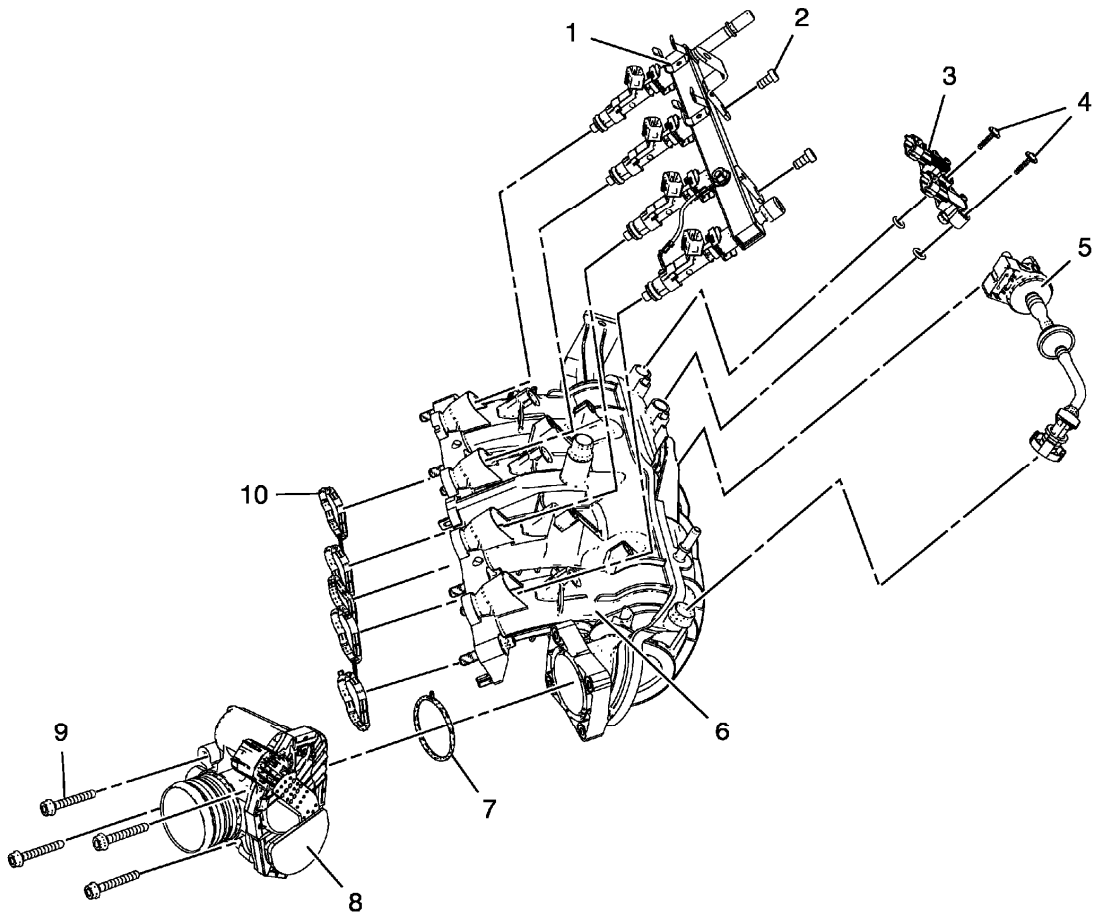

Fig. 9: Intake Manifold Assembly - 1.4L LUH and LUJ
Courtesy of GENERAL MOTORS COMPANY

Callout	Component Name
1	Fuel Injector Fuel Rail
2	Fuel Injector Fuel Rail Bolt
3	Manifold Absolute Pressure Sensor
4	Manifold Absolute Pressure Sensor Bolt
5	Evaporative Emission Canister Purge Solenoid Valve
6	Intake Manifold
7	Throttle Body Seal Ring
8	Throttle Body
9	Throttle Body Bolt
10	Intake Manifold Gasket

Exhaust Side- 1.4L LUH and LUJ

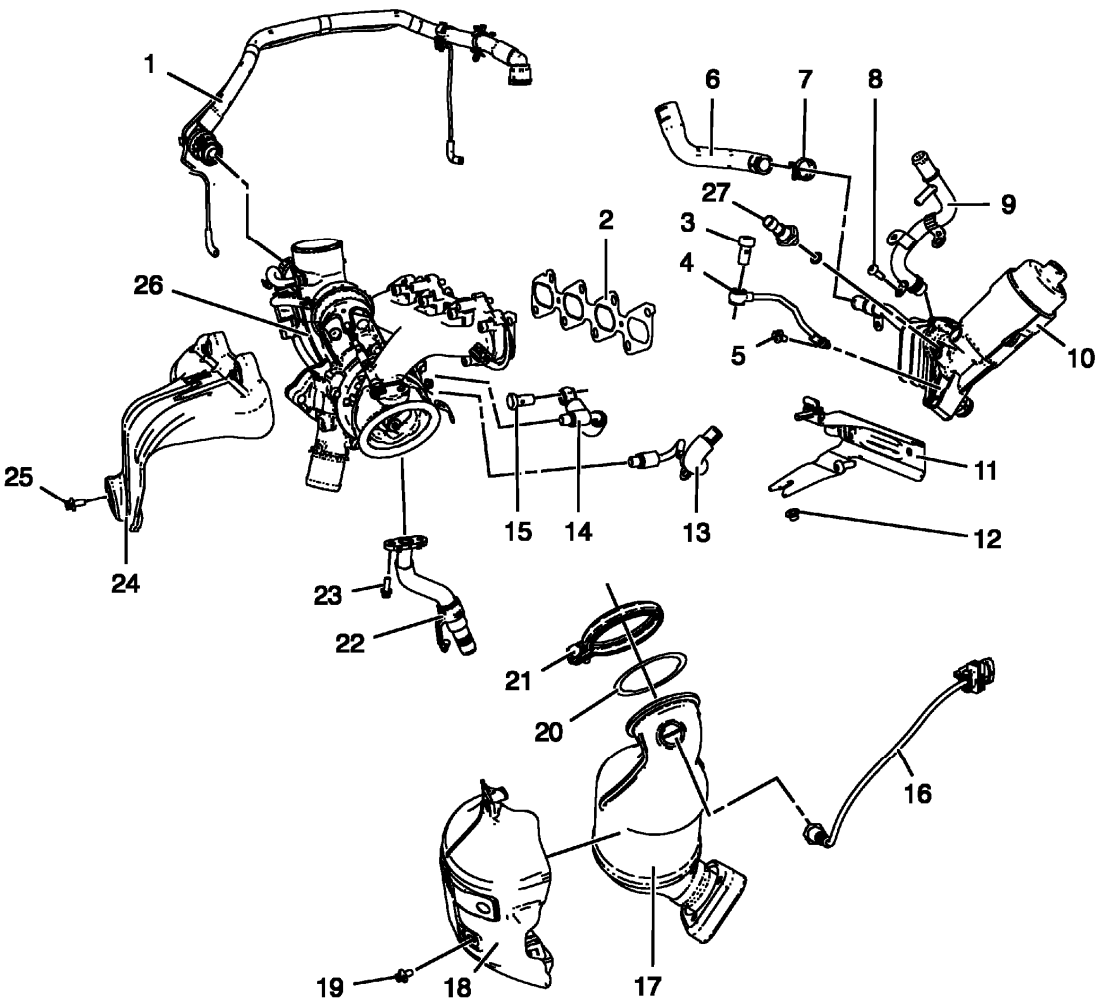

Fig. 10: Identifying Exhaust Side Components - 1.4L LUH and LUJ
Courtesy of GENERAL MOTORS COMPANY

Callout	Component Name
1	Positive Crankcase Ventilation Pipe Assembly
2	Exhaust Manifold Gasket
3	Turbo Charger Oil Feed Pipe Hollow Screw
4	Turbo Charger Oil Feed Pipe
5	Turbo Charger Oil Feed Pipe Bolt
6	Oil Cooler Coolant Outlet Hose
7	Oil Cooler Coolant Outlet Hose Clamp
8	Oil Cooler Coolant Feed Pipe Bolt
9	Oil Cooler Coolant Feed Pipe
10	Engine Oil Cooler Assembly
11	Catalytic Converter Bracket
12	Catalytic Converter to Catalytic Converter Bracket Nut

13	Turbocharger Coolant Return Pipe
14	Turbocharger Coolant Feed Pipe
15	Turbocharger Coolant Feed Pipe Hollow Screw
16	Heated Oxygen Sensor 1
17	Catalytic Converter
18	Catalytic Converter Heat Shield
19	Catalytic Converter Heat Shield Bolt
20	Catalytic Converter Seal
21	Catalytic Converter V-Clamp
22	Turbocharger Oil Return Pipe
23	Turbocharger Oil Return Pipe Bolt
24	Exhaust Manifold Heat Shield
25	Exhaust Manifold Heat Shield Bolt
26	Turbocharger (with Exhaust Manifold)
27	Engine Oil Pressure Switch

ENGINE IDENTIFICATION

Engine Number

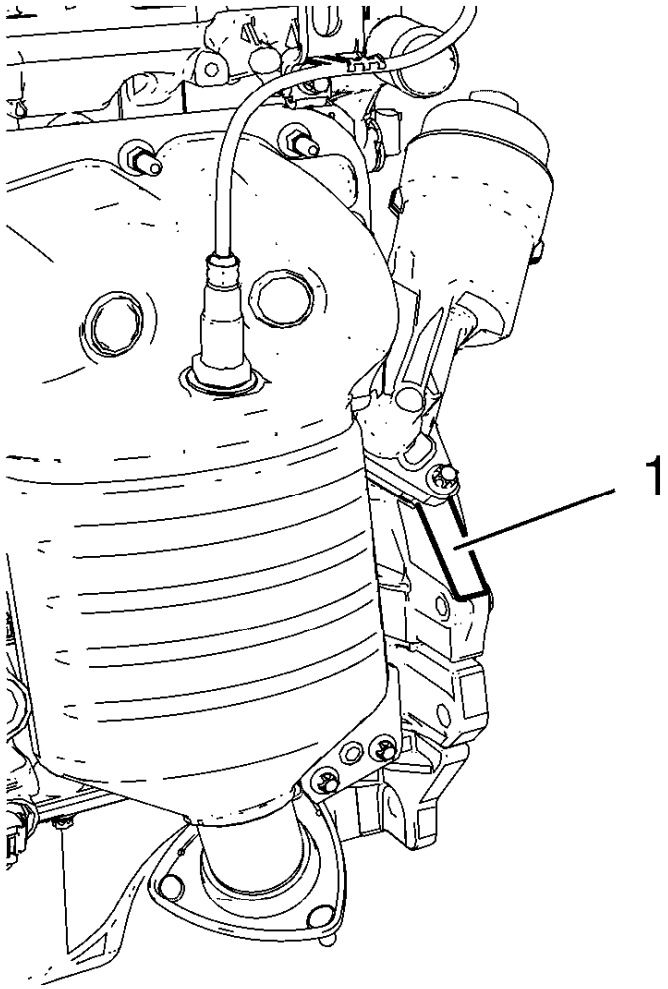

Fig. 11: Engine Number
Courtesy of GENERAL MOTORS COMPANY

NOTE: The engine identification number must be stamped to the cylinder block in case of engine replacement.

The engine number is stamped to the engine block (1).

DIAGNOSTIC INFORMATION AND PROCEDURES

SYMPTOMS - ENGINE MECHANICAL

Strategy Based Diagnostics

Perform a **Diagnostic System Check - Vehicle** .

All diagnosis on a vehicle should follow a logical process. Strategy based diagnostics is a uniform approach for

repairing all systems. The diagnostic flow may always be used in order to resolve a system condition. The diagnostic flow is the place to start when repairs are necessary.

Visual/Physical Inspection

- Inspect for aftermarket devices which could affect the operation of the engine.
- Inspect the easily accessible or visible system components for obvious damage or conditions which could cause the symptom.
- Inspect for the correct oil level, proper oil viscosity, and correct filter application.
- Verify the exact operating conditions under which the concern exists. Note factors such as engine RPM, ambient temperature, engine temperature, amount of engine warm-up time, and other specifics.
- Compare the engine sounds, if applicable, to a known good engine and make sure you are not trying to correct a normal condition.

Intermittent

Test the vehicle under the same conditions that the customer reported in order to verify the system is operating properly.

Symptom List

Refer to a symptom diagnostic procedure from the following list in order to diagnose the symptom:

- **Base Engine Misfire without Internal Engine Noises**
- **Base Engine Misfire with Abnormal Internal Lower Engine Noises**
- **Base Engine Misfire with Abnormal Valve Train Noise**
- **Base Engine Misfire with Coolant Consumption**
- **Base Engine Misfire with Excessive Oil Consumption**
- **Engine Noise on Start-Up, but Only Lasting a Few Seconds**
- **Upper Engine Noise, Regardless of Engine Speed**
- **Lower Engine Noise, Regardless of Engine Speed**
- **Engine Noise Under Load**
- **Engine Will Not Crank - Crankshaft Will Not Rotate**
- **Engine Compression Test**
- **Oil Consumption Diagnosis**
- **Oil Pressure Diagnosis and Testing**
- **Drive Belt Chirping, Squeal, and Whine Diagnosis**
- **Drive Belt Rumbling and Vibration Diagnosis**
- **Drive Belt Falls Off and Excessive Wear Diagnosis**

OIL PRESSURE DIAGNOSIS AND TESTING

Special Tools

- **EN-498-B** Oil Pressure Gauge
- **EN-498-3** Adapter

For equivalent regional tools, refer to **Special Tools**.

Removal Procedure

1. Disconnect the oil pressure indicator switch wiring harness plug.

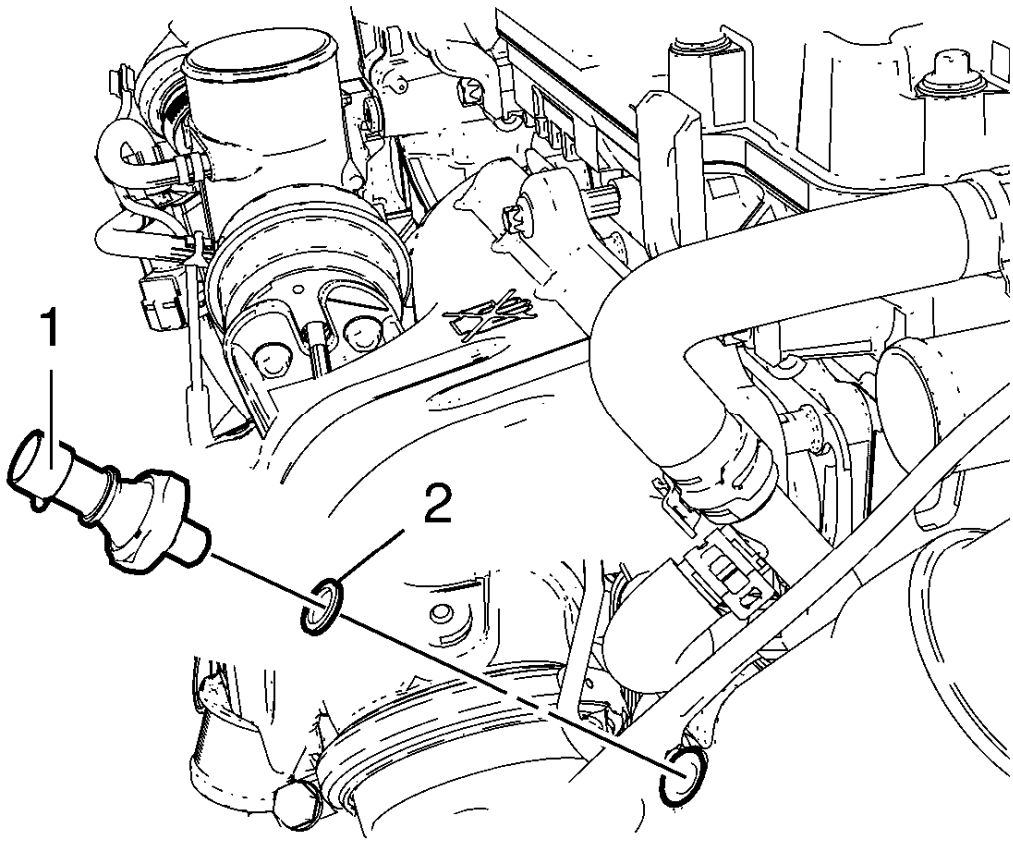

Fig. 12: Engine Oil Pressure Indicator Switch
Courtesy of GENERAL MOTORS COMPANY

2. Remove the oil pressure indicator switch (1) and the oil pressure indicator switch seal ring (2).

Measuring Procedure

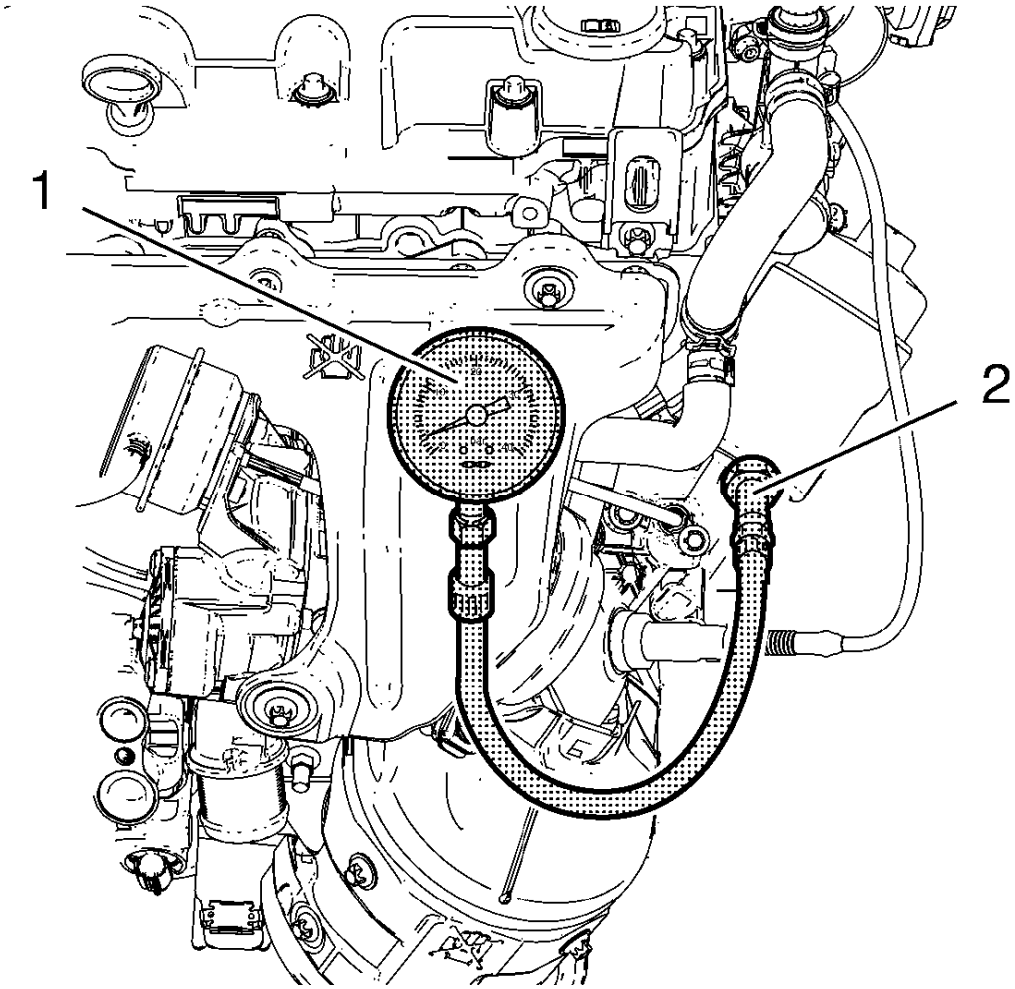

Fig. 13: Gauge And Adapter
Courtesy of GENERAL MOTORS COMPANY

1. Install **EN-498-B** gauge (1) along with **EN-498-3** adapter (2).
2. Start Engine.

NOTE: The oil temperature should be between 80°C (176°F)and 100°C (212°).

3. Measure the oil pressure:
   - The oil pressure at idle speed should be 150 kpa (22 psi).
   - The oil pressure between 3000 - 3500 rpmshould be 380 - 650 kpa (55 - 94 psi).
4. Stop engine.
5. If the engine oil pressure is below specifications, inspect the engine for 1 or more of the following conditions:
   - Oil pump worn or dirty. Refer to **Oil Pump Replacement**, and **Engine Front Cover and Oil**

Pump Cleaning and Inspection.

- Oil suction gallery clogged or dirty. Refer to **Oil Pan Cleaning and Inspection**
- Cracked, porous, or restricted oil galleries.
- Oil pressure relief valve malfunction.

6. Remove **EN-498-B** gauge and **EN-498-3** adapter.

Installation Procedure

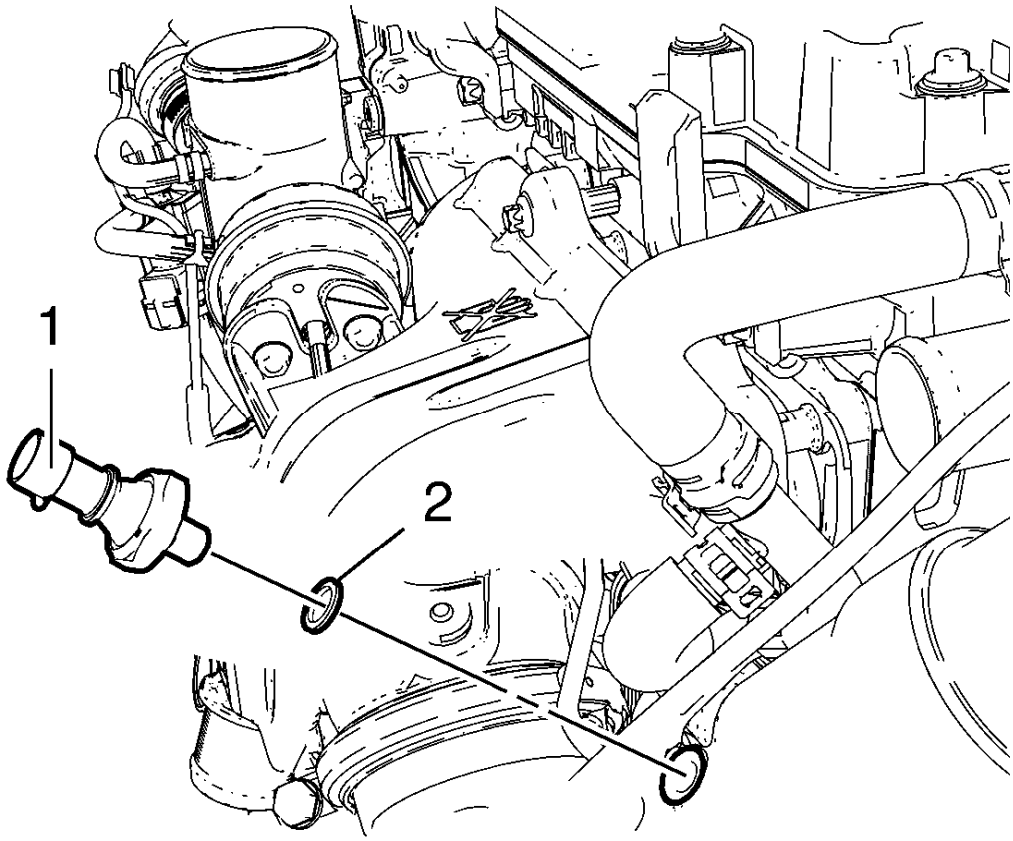

Fig. 14: Engine Oil Pressure Indicator Switch
Courtesy of GENERAL MOTORS COMPANY

1. Install the oil pressure indicator switch (1) and a NEW oil pressure indicator switch seal ring (2).

CAUTION: Refer to Fastener Caution .

2. Tighten the oil pressure indicator switch to 20 N.m (15 lb ft).

OIL LEAK DIAGNOSIS

Oil Leak Diagnosis

Step	Action	Yes	No
DEFINITION: You can repair most fluid leaks by first, visually locating the leak, repairing or replacing the component, or by resealing the gasket surface. Once the leak is identified, determine the cause of the leak. Repair the leak and the cause of the leak.			
1	1. Operate the vehicle until it reaches normal operating temperature. Refer to **Engine Mechanical Specifications**. 2. Park the vehicle on a level surface over a large sheet of paper or other clean surface. 3. Wait 15 minutes. 4. Inspect for drippings. Are drippings present?	Go to **Step 2**	System OK
2	Can you identify the type of fluid and the approximate location of the leak?	Go to **Step 10**	Go to **Step 3**
3	1. Visually inspect the suspected area. Use a small mirror to assist in looking at hard to see areas. 2. Inspect for leaks at the following locations: • Sealing surfaces • Fittings • Cracked or damaged components Can you identify the type of fluid and the approximate location of the leak?	Go to **Step 10**	Go to **Step 4**
4	1. Completely clean the entire engine and surrounding components. 2. Operate the vehicle for several miles at normal operating temperature and at varying speeds. 3. Park the vehicle on a level surface over a large sheet of paper or other clean surface. 4. Wait 15 minutes. 5. Identify the type of fluid and the approximate location of the leak. Can you identify the type of fluid and the approximate location of the leak?	Go to **Step 10**	Go to **Step 5**
	1. Visually inspect the suspected area. Use a small mirror		

5	to assist in looking at hard to see areas. 2. Inspect for leaks at the following locations: • Sealing surfaces • Fittings • Cracked or damaged components Can you identify the type of fluid and the approximate location of the leak?	Go to **Step 10**	Go to **Step 6**
6	1. Completely clean the entire engine and surrounding components. 2. Apply an aerosol-type powder, for example, baby powder or foot powder, to the suspected area. 3. Operate the vehicle for several miles at normal operating temperature and at varying speeds. 4. Identify the type of fluid and the approximate location of the leak from the discolorations in the powder surface. Can you identify the type of fluid and the approximate location of the leak?	Go to **Step 10**	Go to **Step 7**
7	1. Visually inspect the suspected area. Use a small mirror to assist in looking at hard to see areas. 2. Inspect for leaks at the following locations: • Sealing surfaces • Fittings • Cracked or damaged components Can you identify the type of fluid and the approximate location of the leak?	Go to **Step 10**	Go to **Step 8**
8	Identify the type of fluid and the approximate location of the leak. Can you identify the type of fluid and the approximate location of the leak?	Go to **Step 10**	Go to **Step 9**
9	1. Visually inspect the suspected area. Use a small mirror to assist in looking at hard to see areas. 2. Inspect for leaks at the following locations: • Sealing surfaces • Fittings • Cracked or damaged components Can you identify the type of fluid and the approximate location of the leak?	Go to **Step 10**	System OK

10	1. Inspect the engine for mechanical damage. Special interest should be shown to the following areas: • Higher than recommended fluid levels • Higher than recommended fluid pressures • Plugged or malfunctioning fluid filters or pressure bypass valves • Plugged or malfunctioning engine ventilation system • Improperly tightened or damaged fasteners • Cracked or porous components • Improper sealants or gaskets, where required • Improper sealant or gasket installation • Damaged or worn gaskets or seals • Damaged or worn sealing surfaces 2. Inspect the engine for customer modifications. Is there mechanical damage or customer modifications to the engine?	Go to **Step 11**	System OK
11	Repair or replace all damaged or modified components. Did you complete the repair?	Go to **Step 1**	-

OIL CONSUMPTION DIAGNOSIS

Oil Consumption Diagnosis

Checks	Causes
The causes of excessive oil consumption may include the following conditions:	
Preliminary	• External oil leaks. • Incorrect oil level or improper reading of the oil level indicator. With the vehicle on a level surface, run the engine for a few minutes, allow adequate drain down time (2-3 minutes) and check for the correct engine oil level. • Improper oil viscosity. Refer to the vehicle owners manual and use the recommended SAE grade and viscosity for the prevailing temperatures. • Continuous high speed driving and/or severe usage. • Crankcase ventilation system restrictions or malfunctioning

	components. • Worn valve guides and/or valve stems. • Worn, missing or improperly installed valve stem oil seals. • Piston rings broken, worn, not seated properly. Allow adequate time for the rings to seat. Replace worn piston rings as necessary. • Piston and rings improperly installed or miss-fitted to the cylinder bore.

ENGINE NOISE UNDER LOAD

Engine Noise Under Load

Cause	Correction
Low oil pressure	Insufficient or poor oil supply to components. 1. Perform oil pressure test. 2. Repair or replace all damaged components.
Loose torque converter bolts	1. Inspect the torque converter bolts and flywheel. 2. Repair or replace all damaged components.
Loose and/or damaged flywheel	1. Inspect the flywheel and flywheel attaching bolts. 2. Repair or replace all damaged components.
Excessive piston-to-cylinder bore clearance	1. Inspect the piston rings for low ring tension, broken or worn rings, inspect cylinder bore. 2. Repair or replace all damaged components.
Excessive crankshaft thrust bearing clearance	1. Inspect the crankshaft end play and crankshaft thrust bearings. 2. Repair or replace all damaged components.
Excessive crankshaft bearing clearance	1. Inspect the crankshaft bearings and crankshaft journals. 2. Repair or replace all damaged components.

ENGINE NOISE ON START-UP, BUT ONLY LASTING A FEW SECONDS

Engine Noise on Start-Up, but Only Lasting a Few Seconds

Cause	Correction
Incorrect oil filter without anti-drainback feature	Install the correct oil filter.
Incorrect oil viscosity	Drain the engine oil and replace with the correct viscosity oil.
High stationary hydraulic lash adjuster (SHLA),	Replace the SHLAs, valve lifters, as required.

valve lifter, leak down rate	
Worn crankshaft thrust bearing	• Inspect the thrust bearing and crankshaft. • Repair or replace as required.
Damaged or faulty oil filter by-pass valve	• Inspect the oil filter by-pass valve for proper operation. • Repair or replace as required.

BASE ENGINE MISFIRE WITHOUT INTERNAL ENGINE NOISES

Base Engine Misfire without Internal Engine Noises

Condition	Action
Abnormalities (severe cracking, bumps or missing areas) in the accessory drive belt. Also worn, damaged, or misaligned accessory drive components or excessive pulley runout.	Abnormalities in the accessory drive belt and/or components may cause engine RPM variations, noises similar to a faulty lower engine and also lead to a misfire condition. A misfire code may be present without an actual misfire condition. 1. Inspect the accessory drive components. 2. Repair or replace all damaged components.
Loose and/or damaged crankshaft pulley	A misfire code may be present without an actual misfire condition. 1. Inspect crankshaft pulley and pulley bolt. 2. Repair or replace all damaged components.
Loose torque converter bolts	A misfire code may be present without an actual misfire condition. 1. Inspect torque converter bolts and flywheel. 2. Repair or replace all damaged components.
Loose and/or damaged flywheel	A misfire code may be present without an actual misfire condition. 1. Inspect flywheel and flywheel attaching bolts. 2. Repair or replace all damaged components.
Restricted exhaust system	A severe restriction in the exhaust flow can cause significant loss of engine performance and may set a misfire code. Possible causes of restrictions include collapsed or dented pipes, plugged mufflers and/or catalytic converters. Repair or replace all damaged components.
Air in fuel system	1. Inspect fuel filter, fuel system for leaks and/or restrictions. 2. Repair or replace all damaged components.
Bent and/or worn valve bridge and finger-	1. Inspect valve bridge and valve finger-follower.

follower	2. Repair or replace all damaged components.
Sticking valve	Carbon on the valve stem or valve seat may cause the valve to stick. 1. Inspect valves and valve guides. 2. Repair or replace all damaged components.
Damaged or misaligned timing gears	1. Inspect timing gears. 2. Replace all damaged components.
Worn or faulty camshaft lobes	1. Inspect camshaft lobes. 2. Repair or replace all damaged components.
Excessive piston-to-cylinder bore clearance	1. Perform compression tests. 2. Inspect the piston, piston rings and cylinder bore. 3. Repair or replace all damaged components.
Faulty cylinder head gaskets and/or cracking or other damage to the cylinder heads and engine block cooling system passages. (Coolant consumption may or may not cause the engine to overheat.)	1. Perform compression tests. 2. Inspect the piston, piston rings and cylinder bore. 3. Repair or replace all damaged components.

BASE ENGINE MISFIRE WITH ABNORMAL INTERNAL LOWER ENGINE NOISES

Base Engine Misfire with Abnormal Internal Lower Engine Noises

Condition	Actions
Abnormalities (server cracking, bumps or missing areas) in the accessory drive belt	Abnormalities in the accessory drive belt and/or components may cause engine RPM variations, noises similar to faulty lower engine and also lead to a misfire condition. A misfire code may be present without an actual misfire condition. 1. Inspect the accessory drive components. 2. Repair or replace all damaged components.
Worn, damaged, or misaligned accessory drive components or excessive pulley runout	A misfire code may be present without an actual misfire condition. 1. Inspect the accessory drive components. 2. Repair or replace all damage components.
Loose and/or damaged crankshaft pulley	A misfire code may be present without an actual misfire condition. 1. Repair or replace all damaged components. 2. Inspect crankshaft pulley and pulley bolt.
	A misfire code may be present without an actual misfire

Loose torque converter bolts	condition. 1. Inspect torque converter bolts and flywheel. 2. Repair or replace all damaged components.
Loose and/or damaged flywheel	A misfire code may be present without an actual misfire condition. 1. Inspect flywheel and flywheel attaching bolts. 2. Repair or replace all damaged components.
Excessive piston-to-cylinder bore clearance	1. Perform cylinder leak down and compression tests. 2. Inspect the piston, piston rings and cylinder bore. 3. Repair or replace all damaged components.
Excessive crankshaft thrust bearing clearance	Severely worn thrust surfaces on the crankshaft and/or thrust bearing may permit for and aft movement of the crankshaft and create a misfire code without an actual misfire condition. 1. Inspect the crankshaft end play and crankshaft thrust bearings. 2. Repair or replace all damaged.

BASE ENGINE MISFIRE WITH ABNORMAL VALVE TRAIN NOISE

Base Engine Misfire with Abnormal Valve Train Noise

Condition	Action
Loose, worn or damaged valve bridge and finger-follower	1. Inspect valve bridge and finger-follower. 2. Repair or replace all damaged components.
Broken valve springs	1. Inspect valve springs. 2. Repair or replace all damaged components.
Sticking valve	Carbon on the valve stem or valve seat may cause the valve to stick. 1. Inspect valves and valve guides. 2. Repair or replace all damaged components.
Worn or faulty camshaft lobes	1. Inspect camshaft lobes. 2. Repair or replace all damaged components.

BASE ENGINE MISFIRE WITH COOLANT CONSUMPTION

Base Engine Misfire with Coolant Consumption

Inspection	Action
DEFINITION: Base engine misfire with coolant consumption	

Preliminary Inspection	Verify that there are no external coolant leaks.
Isolate Affected Cylinders	• Cylinder balance test with scan tool • Cooling system pressurization • Inspection of glow plugs • Compression test
EGR System Inspection	• Inspect EGR valve and intake system for evidence of coolant leakage. • Replace the EGR cooler if any problem is found.
Cylinder Head Gasket Leakage	• Remove cylinder heads of the affected cylinder bank and inspect for damage. • Replace components as necessary.
Cylinder Head or Engine Block Damage	• Inspect the cylinder head for cracks. • Inspect the cylinder block for damage. • Inspect the cylinder block to head mating surface for straightness. • Replace components as necessary.

BASE ENGINE MISFIRE WITH EXCESSIVE OIL CONSUMPTION

Base Engine Misfire with Excessive Oil Consumption

Condition	Action
Worn valve guides	1. Inspect the valves and valve guides. 2. Repair or replace all damaged components.
Worn valve stem oil seals	1. Inspect the valve stem oil seals. 2. Repair or replace all damaged components.
Excessive piston-to-cylinder bore clearance	1. Perform compression tests to determine the cause. 2. Inspect the piston rings for low ring tension, broken or worn rings. 3. Inspect cylinder bore. 4. Repair or replace all damaged components.

UPPER ENGINE NOISE, REGARDLESS OF ENGINE SPEED

Upper Engine Noise, Regardless of Engine Speed

Condition	Action
Low oil pressure	Insufficient or poor oil supply to valve train. 1. Perform oil pressure test. 2. Repair or replace all damaged components.

Improper lubrication to the valve finger-follower	1. Inspect valve finger-follower, valve bridge, valve finger follower lifter, oil pump and engine block oil galleries. 2. Repair or replace all damaged components.
Worn or damaged valve finger-follower	1. Inspect valve bridge and finger-follower. 2. Repair or replace all damaged components.
Sticking valve	Carbon on the valve stem or valve seat may cause the valve to stick. 1. Inspect valves and valve guides. 2. Repair or replace all damaged components.
Worn or faulty camshaft lobes	1. Inspect camshaft lobes. 2. If damaged replace camshaft and all valve finger-followers.
Damaged or misaligned timing gears	1. Inspect timing gears. 2. Replace all damaged components.

LOWER ENGINE NOISE, REGARDLESS OF ENGINE SPEED

Lower Engine Noise, Regardless of Engine Speed

Condition	Action
Worn accessory drive components (abnormalities such as severe cracking, bumps or missing areas in the accessory drive belt and/or misalignment of the system components.)	1. Inspect the accessory drive components. 2. Repair or replace all damaged components.
Low oil pressure	Insufficient or poor oil supply to crankshaft and connecting rod bearings. 1. Perform oil pressure test. 2. Repair or replace all damaged components.
Leaking and/or sticking fuel injection nozzle (A stuck fuel injection nozzle can cause a noise similar to a damaged piston, rod or rod bearing.)	1. Inspect the cylinder balance with scan tool to help locate the cylinder that is the source of the noise. 2. If you cannot locate the cylinder that is the source of the noise, diagnose the engine for mechanical damage. 3. If it has been determined that the fuel injection nozzle is causing the noise, replace the fuel injection nozzle.
Loose and/or damaged crankshaft pulley	1. Inspect crankshaft pulley and pulley bolt. 2. Repair or replace all damaged components.
Loose torque converter bolts	1. Inspect torque converter bolts and flywheel. 2. Repair or replace all damaged components.

Loose and/or damaged flywheel	1. Inspect flywheel and flyweel attaching bolts. 2. Repair or replace all damaged components.
Excessive piston pin-to-bore clearance	1. Inspect the piston, piston pin, and the connecting rod. 2. Repair or replace all damaged components.
Misaligned or bent connecting rod	1. Inspect connecting rod and connecting rod bearings. 2. Repair or replace all damaged components.
Excessive connecting rod bearing clearance	1. Inspect the connecting rod bearings, connecting rods, crankshaft and crankshaft journals. 2. Repair or replace all damaged components.
Excessive crankshaft bearing clearance	1. Inspect the crankshaft bearings and crankshaft journals. 2. Repair or replace all damaged components.

ENGINE WILL NOT CRANK - CRANKSHAFT WILL NOT ROTATE

Engine Will Not Crank - Crankshaft Will Not Rotate

Cause	Correction
Seized accessory drive system component	1. Inspect the accessory drive system components. 2. Repair or replace all damaged components.
Hydraulically locked cylinder • Coolant/antifreeze in cylinder • Oil in cylinder • Fuel in cylinder	1. Inspect for broken head gasket(s). 2. Inspect for cracked engine block or cylinder head. 3. Inspect for a sticking fuel injector.
Seized automatic transmission torque converter	1. Remove the engine assembly. The torque converter bolts are not accessible with the engine installed to the transmission. 2. Rotate the crankshaft at the pulley.
Seized manual transmission	1. Disengage the clutch. 2. Rotate crankshaft at the pulley.
Material in cylinder • Broken valve • Piston material • Foreign material	1. Inspect the cylinder for damaged components and/or foreign materials. 2. Repair or replace as required.
	1. Inspect the crankshaft and connecting

Seized crankshaft or connecting rod bearing	rod bearings. 2. Repair as required.
Bent or broken connecting rod	1. Inspect the connecting rods. 2. Repair as required.
Broken crankshaft	1. Inspect the crankshaft. 2. Repair as required.

ENGINE COMPRESSION TEST

Special Tools

EN-48248 Cylinder Compression Pressure Gauge

For equivalent regional tools, refer to **Special Tools**.

Removal Procedure

1. Remove the throttle body assembly. Refer to **Throttle Body Assembly Replacement** .
2. Remove the spark plugs. Refer to **Spark Plug Replacement** .
3. Remove the relay holder cover.
4. Remove the fuel pump relay.

NOTE: The engine cranking time for the compression test should be less then 10 seconds and at 30 second intervals.

5. Crank the engine with the starter motor for 5 seconds to remove any foreign substances from the cylinders.
6. Prior to taking a compression reading, verify the cranking speed is greater than 300 RPM. If the cranking speed is below 300 RPM, repair the slow cranking speed condition before continuing with the compression test.
7. Install **EN-48248** gauge in the spark plug bore for the cylinder that is being checked.
8. Using the vehicle's starter motor, rotate or crank the engine for 4 compression strokes, puffs, for the cylinder being tested.
9. Observe the compression gauge and note the reading as the compression test is being performed. A normal cylinder reading will be indicated if compression builds up quickly and evenly to the specified level. An abnormal reading will be indicated if compression is low on the first compression stroke, starts increasing on the following compression strokes but does not reach the specified level.
10. Record the compression reading for the cylinder just tested.
11. Repeat steps for all remaining cylinders. All 4 cylinders must be tested to obtain valid test results. Record the readings.
12. The maximum pressure differential should not exceed 100 kPa (14.5 psi).
13. The nominal cylinder compression value is

- for natural aspirated engines 1300 kPa - 1500 kPa (188.5 psi - 217.6 psi).
- for turbo engines 1200 kPa - 1400 kPa (174 psi - 203.1 psi).

Installation Procedure

1. Install the fuel pump relay.
2. Install the relay holder cover.
3. Install the spark plugs. Refer to **Spark Plug Replacement** .
4. Install the throttle body assembly. Refer to **Throttle Body Assembly Replacement** .

DRIVE BELT CHIRPING, SQUEAL, AND WHINE DIAGNOSIS

Diagnostic Aids

- A chirping or squeal noise may be intermittent due to moisture on the drive belts or the pulleys. It may be necessary to spray a small amount of water on the drive belts in order to duplicate the customers concern. If spraying water on the drive belt duplicates the symptom, cleaning the belt pulleys may be the probable solution.
- If the noise is intermittent, verify the accessory drive components by varying their loads making sure they are operated to their maximum capacity. An overcharged A/C system, power steering system with a pinched hose or wrong fluid, or a generator failing are suggested items to inspect.
- A chirping, squeal or whine noise may be caused by a loose or improper installation of a body or suspension component. Other items of the vehicle may also cause the noise.
- The drive belts will not cause a whine noise.

Test Description

The numbers below refer to the step numbers on the diagnostic table.

2

The noise may not be engine related. This step is to verify that the engine is making the noise. If the engine is not making the noise do not proceed further with this table.

3

The noise may be an internal engine noise. Removing the drive belts one at a time and operating the engine for a brief period will verify the noise is related to the drive belt. When removing the drive belt the water pump may not be operating and the engine may overheat. Also DTCs may set when the engine is operating with the drive belts removed.

4

Inspect all drive belt pulleys for pilling. Pilling is the small balls or pills or it can be strings in the drive belt grooves from the accumulation of rubber dust.

6

Misalignment of the pulleys may be caused from improper mounting of the accessory drive component, incorrect installation of the accessory drive component pulley, or the pulley bent inward or outward from a previous repair. Test for a misaligned pulley using a straight edge in the pulley grooves across two or three pulleys. If a misaligned pulley is found refer to that accessory drive component for the proper installation procedure for that pulley.

10

Inspecting of the fasteners can eliminate the possibility that a wrong bolt, nut, spacer, or washer was installed.

12

Inspecting the pulleys for being bent should include inspecting for a dent or other damage to the pulleys that would prevent the drive belt from not seating properly in all of the pulley grooves or on the smooth surface of a pulley when the back side of the belt is used to drive the pulley.

14

This test is to verify that the drive belt tensioner operates properly. If the drive belt tensioner is not operating properly, proper belt tension may not be achieved to keep the drive belt from slipping which could cause a squeal noise.

15

This test is to verify that the drive belt is not too long, which would prevent the drive belt tensioner from working properly. Also if an incorrect length drive belt was installed, it may not be routed properly and may be turning an accessory drive component in the wrong direction.

16

Misalignment of the pulleys may be caused from improper mounting of the accessory drive component, incorrect installation of the accessory drive component pulley, or the pulley bent inward or outward from a previous repair. Test for a misaligned pulley using a straight edge in the pulley grooves across two or three pulleys. If a misaligned pulley is found refer to that accessory drive component for the proper installation procedure for that pulley.

17

This test is to verify that the pulleys are the correct diameter or width. Using a known good vehicle compare the pulley sizes.

19

Replacing the drive belt when it is not damaged or there is not excessive pilling will only be a temporary

repair.

Drive Belt Chirping, Squeal, and Whine Diagnosis

Step	Action	Yes	No
CAUTION: **Do not use belt dressing on the drive belt. Belt dressing causes the breakdown of the composition of the drive belt. Failure to follow this recommendation will damage the drive belt.** DEFINITION: The following items are indications of chirping: • A high pitched noise that is heard once per revolution of the drive belt or a pulley. • Chirping may occur on cold damp start-ups and will subside once the vehicle reaches normal operating temp. DEFINITION: The following items are indications of drive belt squeal: • A loud screeching noise that is caused by a slipping drive belt. This is unusual for a drive belt with multiple ribs. • The noise occurs when a heavy load is applied to the drive belt, such as an air conditioning compressor engagement snapping the throttle, or slipping on a seized pulley or a faulty accessory drive component. DEFINITION: The following items are indications of drive belt whine: • A high pitched continuous noise. • The noise may be caused by an accessory drive component failed bearing.			
1	Did you review the Drive Belt Symptom operation and perform the necessary inspections?	Go to **Step 2**	Go to **Symptoms - Engine Mechanical**
2	Verify that there is a chirping, squeal or whine noise. Does the engine make the chirping squeal or whine noise?	Go to **Step 3**	Go to Diagnostic Aids
3	1. Remove the drive belt. If the engine has multiple drive belts, remove the belts one at a time and perform the test below each time a belt is removed. 2. Operate the engine for no longer than 30-40 seconds. 3. Repeat this test if necessary by removing the remaining belt(s).		

	Does the chirping, squeal or whine noise still exist?	Go to **Symptoms - Engine Mechanical**	Go to **Step 4**
4	If diagnosing a chirping noise, inspect for severe pilling exceeding 1/3 of the belt groove depth. If diagnosing a squeal or whine noise, proceed to **Step 13** . Do the belt grooves have pilling?	Go to **Step 5**	Go to **Step 6**
5	Clean the drive belt pulleys with a suitable wire brush. Did you complete the repair?	Go to **Step 20**	Go to **Step 6**
6	Inspect for misalignment of the pulleys. Are any of the pulleys misaligned?	Go to **Step 7**	Go to **Step 8**
7	Replace or repair any misaligned pulleys. Did you complete the repair?	Go to **Step 20**	Go to **Step 8**
8	Inspect for bent or cracked brackets. Did you find any bent or cracked brackets?	Go to **Step 9**	Go to **Step 10**
9	Replace any bent or cracked brackets. Did you complete the repair?	Go to **Step 20**	Go to **Step 10**
10	Inspect for improper, loose or missing fasteners. Did you find the condition?	Go to **Step 11**	Go to **Step 12**
11	**CAUTION:** **Refer to Fastener Caution .** 1. Tighten any loose fasteners. Refer to **Fastener Tightening Specifications**. 2. Replace any improper or missing fasteners. Did you complete the repair?	Go to **Step 20**	Go to **Step 12**
12	Inspect for a bent pulley. Did you find the condition?	Go to **Step 18**	Go to **Step 19**
13	Inspect for an accessory drive component seized bearing or a faulty accessory drive component. Did you find and correct the condition? If diagnosing a whine noise and the condition still exist, proceed to Diagnostic Aids.	Go to **Step 20**	Go to **Step 14**
14	Test the drive belt tensioner for proper operation. Did you find and correct the condition?	Go to **Step 20**	Go to **Step 15**
15	Inspect for the correct drive belt length. Did you find and correct the condition?	Go to **Step 20**	Go to **Step 16**

16	Inspect for misalignment of a pulley. Did you find and correct the condition?	Go to **Step 20**	Go to **Step 17**
17	Inspect for the correct pulley size. Did you find and correct the condition?	Go to **Step 20**	Go to Diagnostic Aids
18	Replace the bent pulley. Did you complete the repair?	Go to **Step 20**	Go to **Step 19**
19	Replace the drive belt. Refer to **Symptoms - Engine Mechanical**. Did you complete the repair?	Go to **Step 20**	Go to Diagnostic Aids
20	Operate the system in order to verify the repair. Did you correct the condition?	System OK	Go to **Step 3**

DRIVE BELT RUMBLING AND VIBRATION DIAGNOSIS

Diagnostic Aids

The accessory drive components can have an affect on engine vibration. Vibration from the engine operating may cause a body component or another part of the vehicle to make rumbling noise. Vibration can be caused by, but not limited to the A/C system over charged, the power steering system restricted or the incorrect fluid, or an extra load on the generator. To help identify an intermittent or an improper condition, vary the loads on the accessory drive components.

The drive belt may have a rumbling condition that can not be seen or felt. Sometimes replacing the drive belt may be the only repair for the symptom.

If replacing the drive belt, completing the diagnostic table, and the noise is only heard when the drive belts are installed, there might be an accessory drive component with a failure. Varying the load on the different accessory drive components may aid in identifying which component is causing the rumbling noise.

Test Description

The numbers below refer to the step numbers on the diagnostic table.

2

This test is to verify that the symptom is present during diagnosing. Other vehicle components may cause a similar symptom.

3

This test is to verify that one of the drive belts is causing the rumbling noise or vibration. Rumbling noise may be confused with an internal engine noise due to the similarity in the description. Remove only one drive belt at a time if the vehicle has multiple drive belts. When removing the drive belts the water pump may not be operating and the engine may overheat. Also DTCs may set when the engine is operating with the drive belts removed.

4

Inspecting the drive belts is to ensure that they are not causing the noise. Small cracks across the ribs of the drive belt will not cause the noise. Belt separation can be recognized at the edge of the belt or felt as a lump in the belt.

5

Small amounts of pilling is normal condition and acceptable. When the pilling is severe the drive belt does not have a smooth surface for proper operation.

9

Inspecting of the fasteners can eliminate the possibility that the wrong bolt, nut, spacer, or washer was installed.

11

This step should only be performed if the water pump is driven by the drive belt. Inspect the water pump shaft for being bent. Also inspect the water pump bearings for smooth operation and excessive play. Compare the water pump with a known good water pump.

12

Accessory drive component brackets that are bent, cracked, or loose may put extra strain on that accessory component causing it to vibrate.

Drive Belt Rumbling and Vibration Diagnosis

Step	Action	Yes	No

DEFINITION: The following items are indications of drive belt rumbling:
• A low pitch tapping, knocking, or thumping noise heard at or just above idle.
• Heard once per revolution of the drive belt or a pulley.
• Rumbling may be caused from:
  ○ Pilling, the accumulation of rubber dust that forms small balls (pills) or strings in the drive belt pulley groove
  ○ The separation of the drive belt
  ○ A damaged drive belt.
 	
DEFINITION: The following items are indications of drive belt vibration:
• The vibration is engine-speed related.
• The vibration may be sensitive to accessory load.			

	Did you review the Drive Belt Symptom		

1	operation and perform the necessary inspections?	Go to **Step 2**	Go to **Symptoms - Engine Mechanical**
2	Verify that there is a rumbling noise or that the vibration is engine related. Does the engine make the rumbling noise or vibration?	Go to **Step 3**	Go to Diagnostic Aids
3	1. Remove the drive belt. If the engine has multiple drive belts, remove the belts one at a time and perform the test below each time a belt is removed. 2. Operate the engine for no longer than 30-40 seconds. 3. Repeat this test if necessary by removing the remaining belt(s). Does the rumbling or vibration still exist?	Go to **Symptoms - Engine Mechanical**	Go to **Step 4**
4	Inspect the drive belts for wear, damage, separation, sections of missing ribs, and debris build-up. Did you find any of these conditions?	Go to **Step 7**	Go to **Step 5**
5	Inspect for severe pilling of more than 1/3 of the drive belt pulley grooves. Did you find severe pilling?	Go to **Step 6**	Go to **Step 7**
6	1. Clean the drive belt pulleys using a suitable wire brush. 2. Reinstall the drive belts. Did you correct the condition?	Go to **Step 8**	Go to **Step 7**
7	Install a new drive belt. Did you complete the replacement?	Go to **Step 8**	Go to **Step 9**
8	Operate the system in order to verify the repair. Did you correct the condition?	System OK	Go to **Step 9**
9	Inspect for improper, loose or missing fasteners. Did you find any of these conditions?	Go to **Step 10**	Go to **Step 11**
10	**CAUTION:** **Refer to Fastener Caution .** 1. Tighten any loose fasteners. Refer to **Fastener Tightening Specifications**.		

	2. Replace improper or missing fasteners. Did you complete the repair?	Go to **Step 12**	Go to **Step 11**
11	Inspect for bent or cracked brackets. Did you find and correct the condition?	Go to **Step 12**	Go to Diagnostic Aids
12	Operate the system in order to verify the repair. Did you correct the condition?	System OK	Go to **Step 3**

DRIVE BELT FALLS OFF AND EXCESSIVE WEAR DIAGNOSIS

Diagnostic Aids

If the drive belt repeatedly falls off the drive belt pulleys, this is because of pulley misalignment.

An extra load that is quickly applied on released by an accessory drive component may cause the drive belt to fall off the pulleys. Verify the accessory drive components operate properly.

If the drive belt is the incorrect length, the drive belt tensioner may not keep the proper tension on the drive belt.

Excessive wear on a drive belt is usually caused by an incorrect installation or the wrong drive belt for the application.

Minor misalignment of the drive belt pulleys will not cause excessive wear, but will probably cause the drive belt to make a noise or to fall off.

Excessive misalignment of the drive belt pulleys will cause excessive wear but may also make the drive belt fall off.

Test Description

The numbers below refer to the step numbers on the diagnostic table.

2

This inspection is to verify the condition of the drive belt. Damage may of occurred to the drive belt when the drive belt fell off. The drive belt may of been damaged, which caused the drive belt to fall off. Inspect the belt for cuts, tears or sections of ribs missing.

4

Misalignment of the pulleys may be caused from improper mounting of the accessory drive component, incorrect installation of the accessory drive component pulley, or the pulley bent inward or outward from a previous repair. Test for a misaligned pulley using a straight edge in the pulley grooves across two or three pulleys. If a misaligned pulley is found refer to that accessory drive component for the proper installation procedure of that pulley.

5

Inspecting the pulleys for being bent should include inspecting for a dent or other damage to the pulleys that would prevent the drive belt from not seating properly in all of the pulley grooves or on the smooth surface of a pulley when the back side of the belt is used to drive the pulley.

6

Accessory drive component brackets that are bent or cracked will let the drive belt fall off.

7

Inspecting of the fasteners can eliminate the possibility that a wrong bolt, nut, spacer, or washer was installed. Missing. loose, or the wrong fasteners may cause pulley misalignment from the bracket moving under load. Over tightening of the fasteners may cause misalignment of the accessory component bracket.

13

The inspection is to verify the drive belt is correctly installed on all of the drive belt pulleys. Wear on the drive belt may be caused by mis-positioning the drive belt by one groove on a pulley.

14

The installation of a drive belt that is two wide or two narrow will cause wear on the drive belt. The drive belt ribs should match all of the grooves on all of the pulleys.

15

This inspection is to verify the drive belt is not contacting any parts of the engine or body while the engine is operating. There should be sufficient clearance when the drive belt accessory drive components load varies. The drive belt should not come in contact with an engine or a body component when snapping the throttle.

Drive Belt Falls Off and Excessive Wear Diagnosis

Step	Action	Yes	No
DEFINITION: The drive belt falls off the pulleys or may not ride correctly on the pulleys. DEFINITION: Wear at the outside ribs of the drive belt due to an incorrectly installed drive belt.			
1	Did you review the Drive Belt Symptom operation and perform the necessary inspections?	Go to **Step 2**	Go to **Symptoms - Engine Mechanical**
2	If diagnosing high wear, proceed to **Step 13** . If diagnosing a drive belt that falls off, inspect for a damaged drive belt. Did you find the condition?	Go to **Step 3**	Go to **Step 4**
3	Install a new drive belt. Refer to **Drive Belt Replacement**.		

	Does the drive belt continue to fall off?	Go to **Step 4**	System OK
4	Inspect for misalignment of the pulleys. Did you find and repair the condition?	Go to **Step 12**	Go to **Step 5**
5	Inspect for a bent or dented pulley. Did you find and repair the condition?	Go to **Step 12**	Go to **Step 6**
6	Inspect for a bent or a cracked bracket. Did you find and repair the condition?	Go to **Step 12**	Go to **Step 7**
7	Inspect for improper, loose or missing fasteners. Did you find loose or missing fasteners?	Go to **Step 8**	Go to **Step 9**
8	**CAUTION:** **Refer to Fastener Caution .** 1. Tighten any loose fasteners. Refer to **Fastener Tightening Specifications**. 2. Replace improper or missing fasteners. Does the drive belt continue to fall off?	Go to **Step 9**	System OK
9	Test the drive belt tensioner for operating correctly. Does the drive belt tensioner operate correctly?	Go to **Step 11**	Go to **Step 10**
10	Replace the drive belt tensioner. Refer to **Drive Belt Tensioner Replacement**. Does the drive belt continue to fall off?	Go to **Step 11**	System OK
11	Inspect for failed drive belt idler and drive belt tensioner pulley bearings. Did you find and repair the condition?	Go to **Step 12**	Go to Diagnostic Aids
12	Operate the system in order to verify the repair. Did you correct the condition?	System OK	Go to **Step 2**
13	Inspect the drive belt for the proper installation. Refer to **Drive Belt Replacement**. Did you find this condition?	Go to **Step 16**	Go to **Step 14**
14	Inspect for the proper drive belt. Did you find this condition?	Go to **Step 16**	Go to **Step 15**
15	Inspect for the drive belt rubbing against a bracket, hose, or wiring harness. Did you find and repair the condition?	Go to **Step 17**	Go to Diagnostic Aids
16	Replace the drive belt. Refer to **Drive Belt Replacement**. Did you complete the replacement?	Go to **Step 17**	-
17	Operate the system in order to verify the repair. Did you correct the condition?	System OK	-

DRIVE BELT TENSIONER DIAGNOSIS

Special Tools

EN-48488 Holding Wrench

For equivalent regional tools, refer to **Special Tools**.

1. Diagnosis consists of a function check on the automatic belt tensioner and a visual check on the belt and the components linked to the belt.

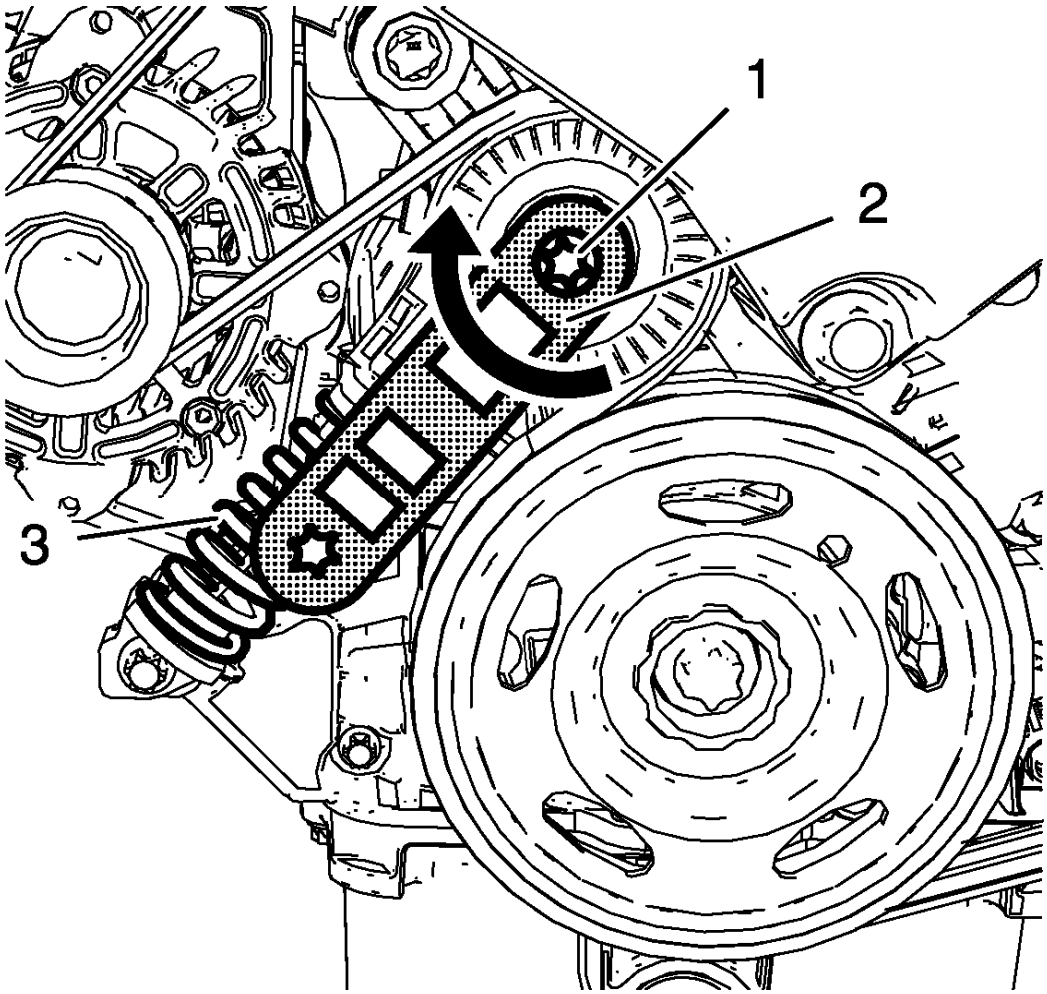

Fig. 15: Drive Belt Tensioner Spring, Drive Belt Tensioner Pulley Bolt And Wrench
Courtesy of GENERAL MOTORS COMPANY

2. Install the **EN-48488** wrench (2) to the drive belt tensioner pulley bolt (1).
3. Apply tension to the drive belt tensioner spring (3) by moving the drive belt tensioner pulley clockwise.
4. Allow the drive belt tensioner to slide back slowly and thereby inspect the drive belt tensioner mechanism for practicability.

DUAL MASS FLYWHEEL DIAGNOSIS

Check for Thermal Overload

NOTE: These quick information shall help to carry out a correct diagnosis in case of a customer complaint.

Through friction of clutch plate on the friction surface of the dual mass flywheel temperatures up to 200 °C can arise during normal driving. At sliding clutch or through operating errors much higher temperatures can arise. These temperatures must not cause mandatory a reduced lifetime of the dual mass flywheel.

Possible indications for a high thermal load are:

- Tarnish (bluish) as well as local hotspots on friction surface
- Tarnish (bluish) near of mounting area and riveting area of clutch

If all other checkable features are well, the dual mass flywheel can stay in the vehicle.

Possible indications for a too high thermal load are:

- Cracks
- Fusion zones on friction surface (material smear)
- Scores in friction surface (for example through clutch lining riveting at destroyed or worn clutch plate)
- Tarnish (bluish) which reaches up to bearing area of dual mass flywheel
- Bluish discoloration of locating pins (3 locating pins in outer zone of dual mass flywheel)

In these cases the dual mass flywheel has to be replaced.

Overview Dual Mass Flywheel

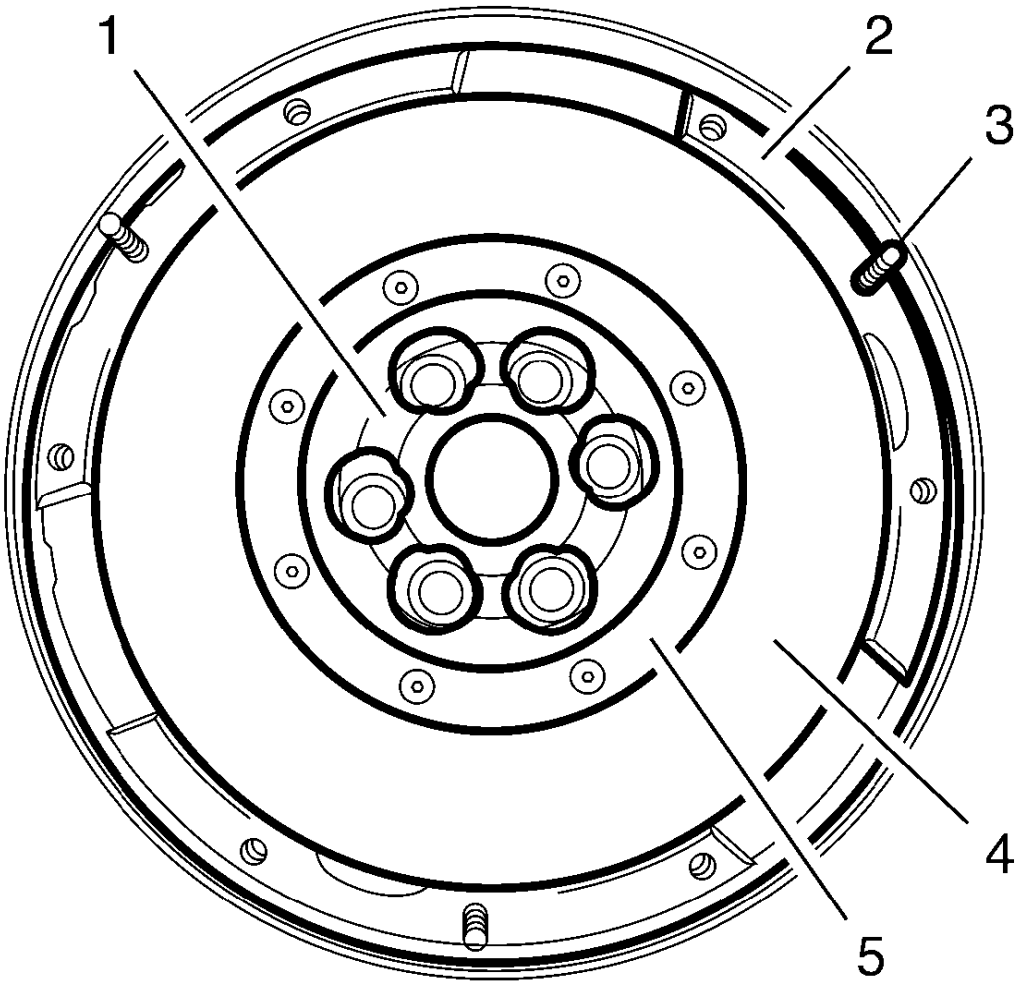

Fig. 16: Overview Dual Mass Flywheel
Courtesy of GENERAL MOTORS COMPANY

Callout	Component Name
1	Bearing Area
2	Mounting Area Pressure Plate
3	Locating Pins
4	Friction Surface
5	Riveting Area

Exploded View Dual Mass Flywheel with Additional Mass

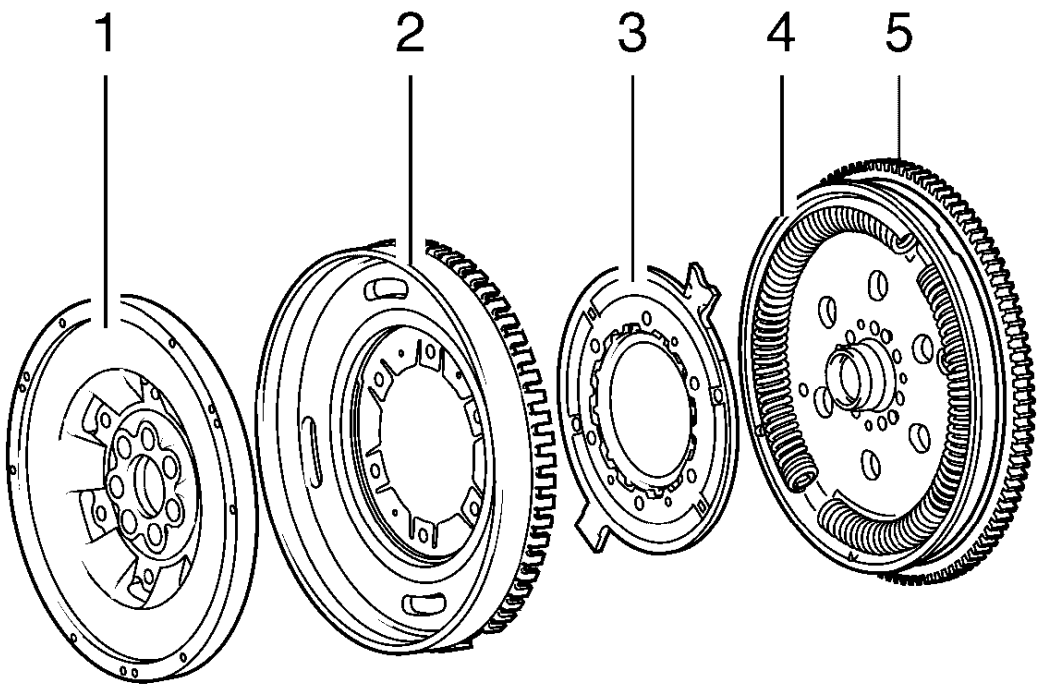

Fig. 17: Exploded View Dual Mass Flywheel with Additional Mass
Courtesy of GENERAL MOTORS COMPANY

Callout	Component Name
1	Secondary Flywheel Mass
2	Additional Mass, Coupled with Cover and Pulse-Generator Ring
3	Flange
4	Primary Flywheel Mass with Bowed Springs and Plain Bearing/Bearing Bolt
5	Toothed Ring

Check for Damaged Components

All following checking procedures have to be carried out at installed dual mass flywheel. For visual check at vehicle very bright light and a additional bright and small pocket lamp is necessary. Damages like grease on primary flywheel and loose ore missing balance weights cannot be checked at installed condition. During visual

check material alteration can be stated which eliminate a further operating suitability.

For comparison different damages at dual mass flywheel with the corresponding further procedure are presented here.

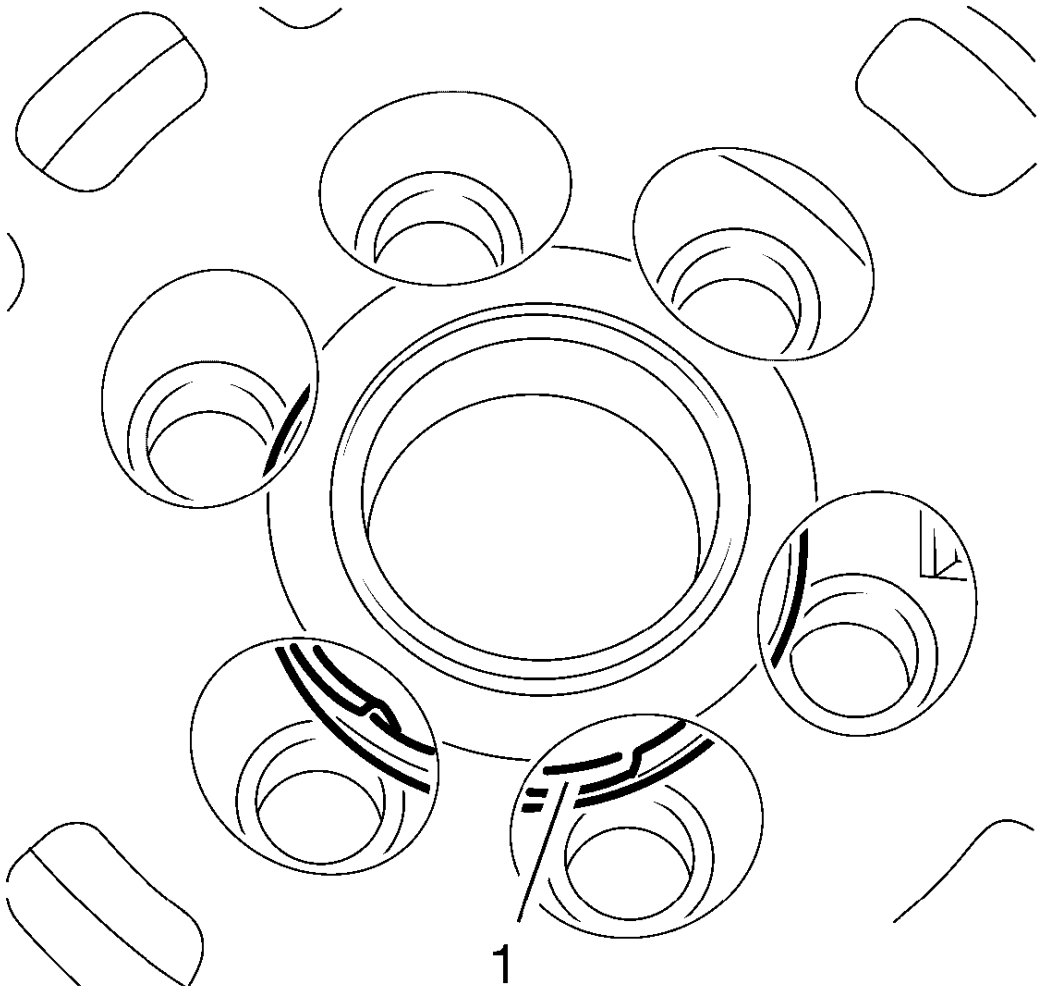

Fig. 18: Plain Bearing
Courtesy of GENERAL MOTORS COMPANY

NOTE: In case of mechanical damages at plain bearing the dual mass flywheel has to be replaced.

1. Inspect plain bearing (1) for damages.

   Dependent of the manufacturer damages can be detected through ventilation openings of secondary flywheel. Parts of the bearing (1) are detached or lie loose around the bearing bolt.

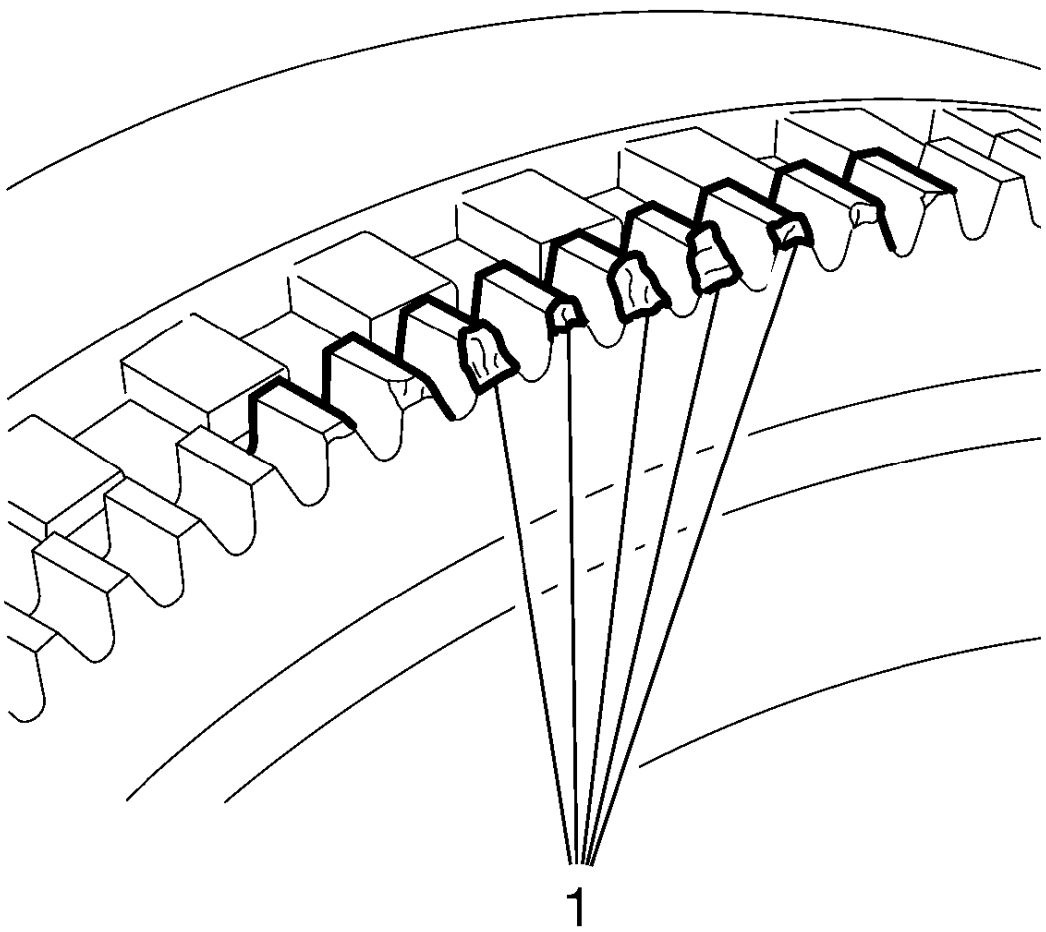

Fig. 19: Toothed Ring
Courtesy of GENERAL MOTORS COMPANY

NOTE: Light abrasion on frontal areas of teeth is allowed. If problems occur during starting the engine the dual mass flywheel has to be replaced.

2. Inspect toothed ring (1) for damages.

The toothed ring is needed to start the engine. Through a lot of starting procedures and/or an incorrect engaging starter signs of abrasion can occur on teeth of the toothed ring. The profile of damages can reach from only low signs of abrasion up to heavy material removal. The installation of a pulse-generator ring depends on the manufacturer.

The image shows signs of abrasion and mechanical damages at toothed ring (1), they occur through abrasion due to a lot of starting procedures. In this case the dual mass flywheel has to be replaced.

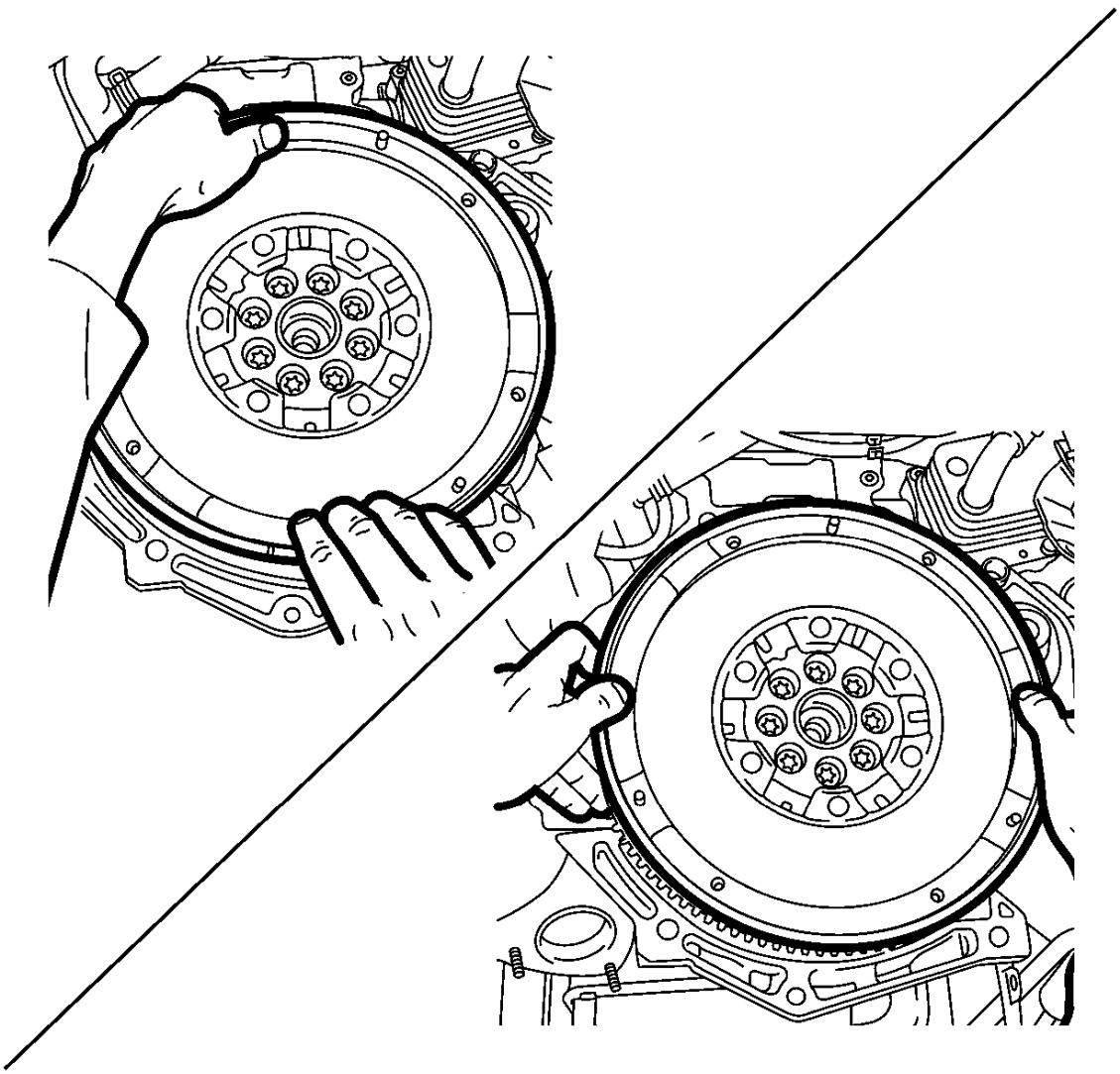

Fig. 20: Inspecting Tilt Clearance
Courtesy of GENERAL MOTORS COMPANY

NOTE: The check must be carried out only by hand without any tools.

3. Inspect tilt clearance.

   At dual mass flywheel the additional-mass ring looms over the gap between primary and secondary flywheel. It is not possible to carry out just a visual check.

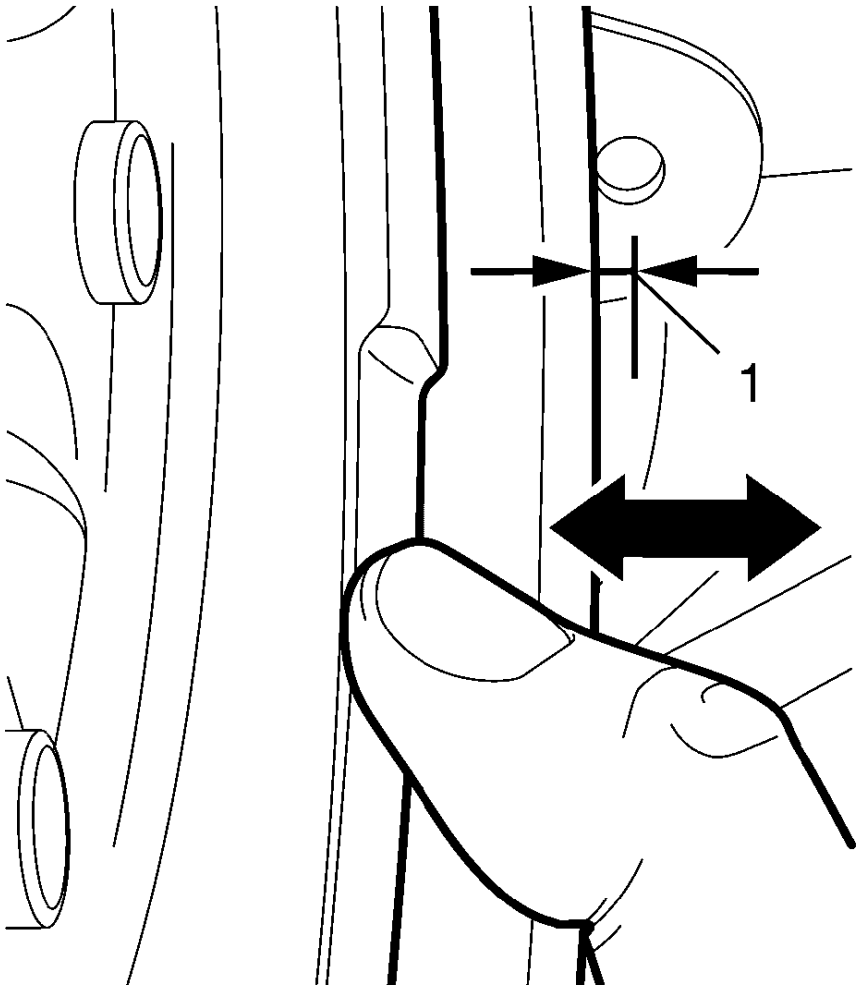

Fig. 21: Tilt Clearance Height
Courtesy of GENERAL MOTORS COMPANY

NOTE: An absolute clear measurement is not possible with this check due to the different applied forces of the several workshop employees during the check.

4. Embrace dual mass flywheel and apply thumbs onto the outer radius of secondary flywheel.
5. Apply pressure onto the secondary flywheel alternating on upper, lower, left and right side

During the tilt clearance check a functional metal rattling noise may occur.

If tilt clearance is higher than 3 mm (MUST be measured, DO NOT make an estimation) (1) the dual mass flywheel has to be replaced.

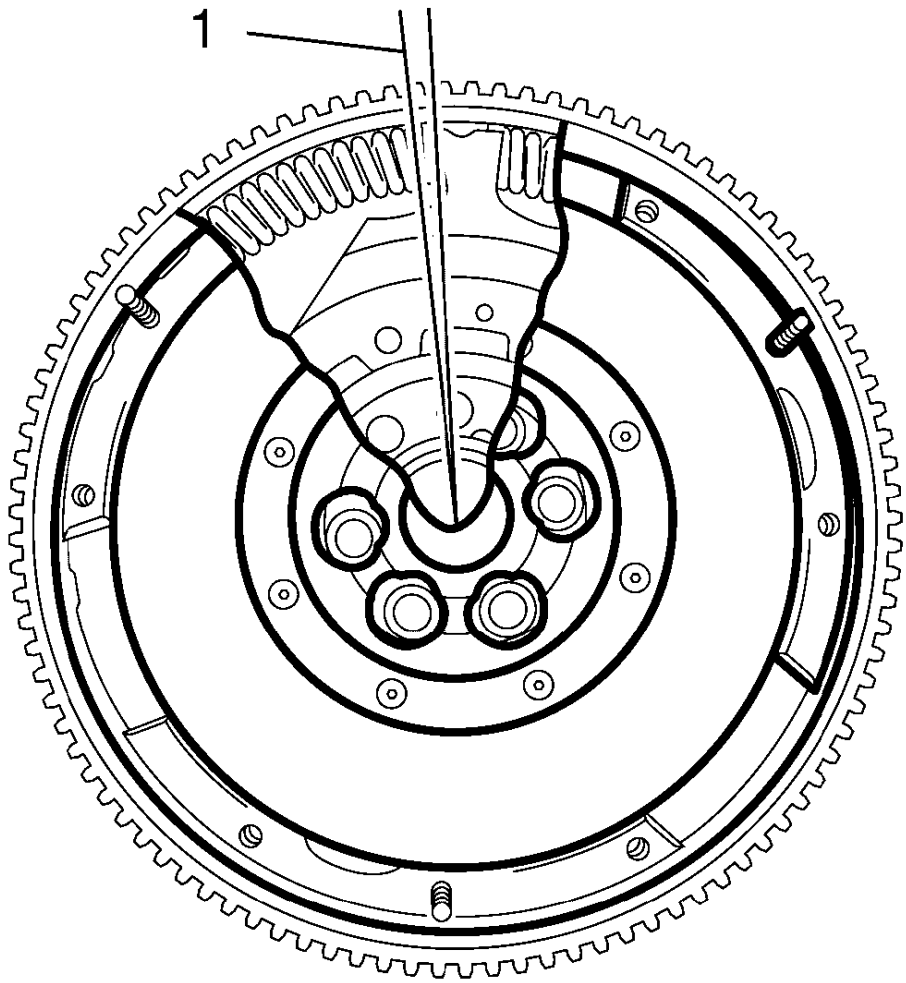

Fig. 22: Tilt Clearance Angle
Courtesy of GENERAL MOTORS COMPANY

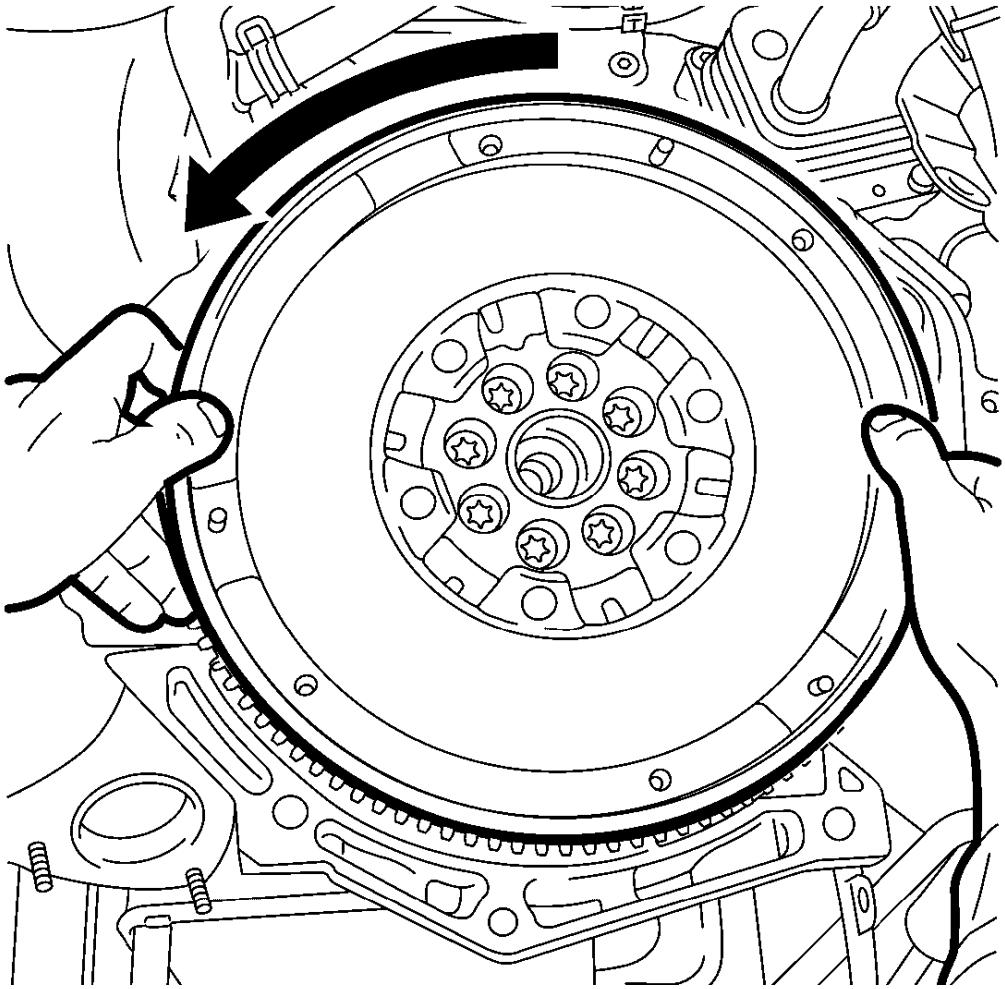

Fig. 23: Rotating Secondary Flywheel Anticlockwise
Courtesy of GENERAL MOTORS COMPANY

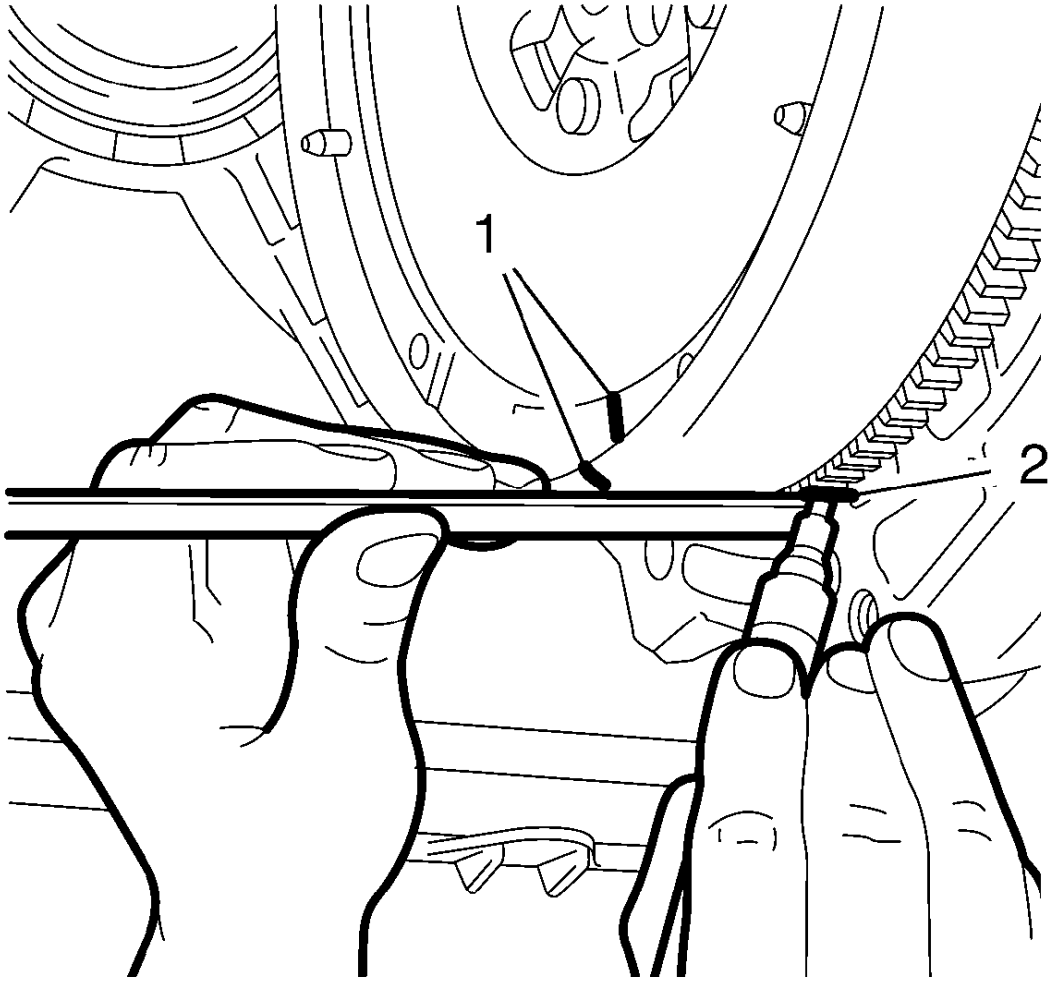

Fig. 24: Releasing Secondary Flywheel
Courtesy of GENERAL MOTORS COMPANY

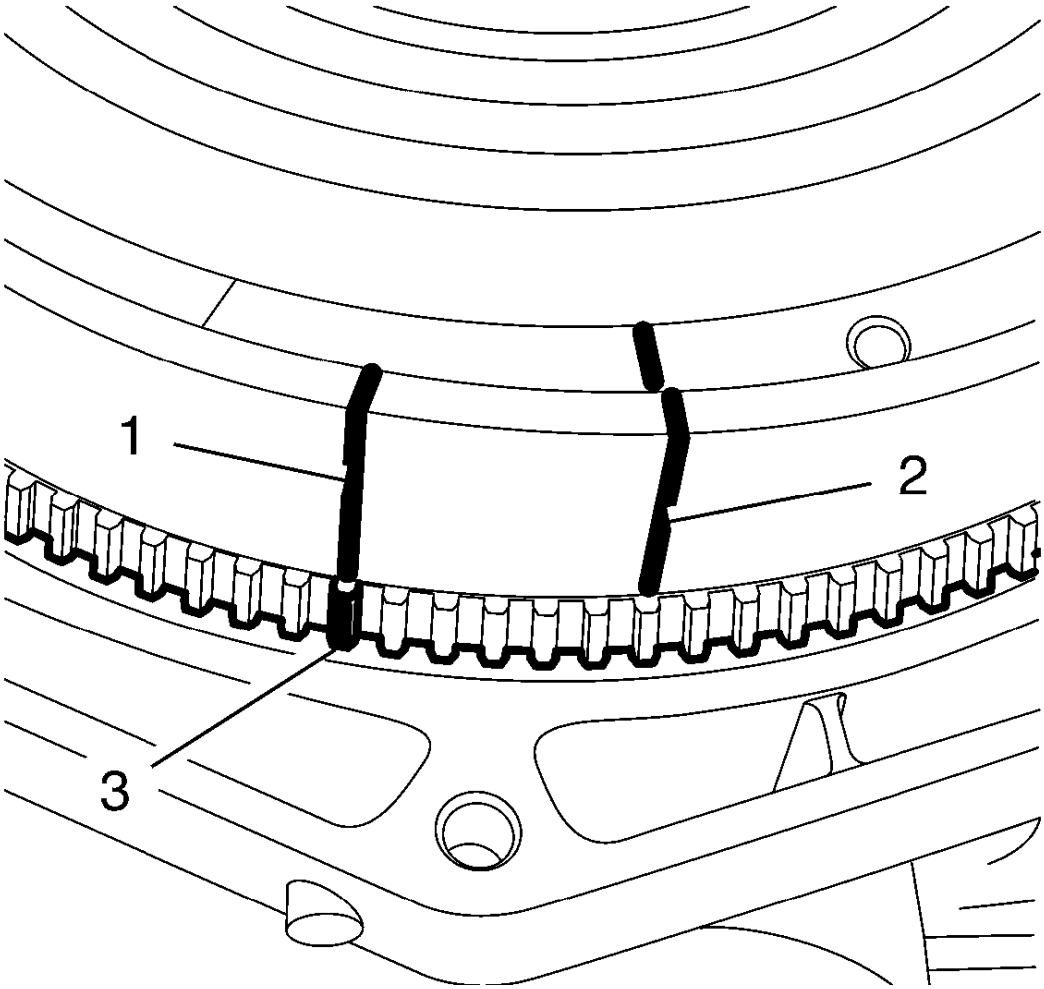

Fig. 25: Mark On Flywheel And Toothed Ring For Starter
Courtesy of GENERAL MOTORS COMPANY

6. Inspect clearance angle (1).

   Before the inspection of the clearance angle the dual mass flywheel should be rotated several times clockwise and anticlockwise to receive a feeling for the resistance of the springs. In addition unusual loud clicking noise or possible rattle, crunch, grinding noise can be sounded out during rotating the dual mass flywheel.

   If the rotation of the flywheel is impossible the flywheel is defective and has to be replaced.

   The clearance angle is the angle (1) about the secondary and the primary flywheel can be turned light against each other. Thereby the flange wings are moved in the duct of the bowed springs without adjoining the bowed springs. Dictated by functional factors the clearance angle is up to 8 teeth.

   Is the secondary flywheel rotated beyond this point the bowed springs in the duct are moved to spring

arrestor in the primary flywheel/cover. Now the both spring are tensioned.

- Rotate secondary flywheel anticlockwise (arrow) until the elastic counterforce (spring force) is clear noticeable.
- Release secondary flywheel slowly until the bowed springs are relaxed, so no counterforce acts onto the springs.
- Mark position with a vertical line by a white pencil on secondary flywheel (1) and on toothed ring for starter (2).
- Rotate secondary flywheel clockwise until the elastic counterforce is clear noticeable.
- Release secondary flywheel slowly until the bowed springs are relaxed.
- Apply new marking on secondary flywheel (1) on the height of the marking on the toothed ring for starter (3).
- Count amount of teeth on toothed ring for starter from marked tooth up to the height of the first marking on secondary flywheel (2). Dictated by functional factors up to 8 teeth are allowed.

7. ALWAYS replace the engine flywheel if following conditions are given:
   - The difference exceeds the amount of 8 teeth.
   - The dual mass flywheel cannot be rotated.
   - During rotating the dual mass flywheel a hard metallic arrestor is audible or noticeable.

REPAIR INSTRUCTIONS - ON VEHICLE

DRIVE BELT REPLACEMENT

Removal Procedure

1. Raise and support the vehicle. Refer to **Lifting and Jacking the Vehicle** .
2. Remove the right front wheelhouse liner. Refer to **Front Wheelhouse Liner Replacement** .

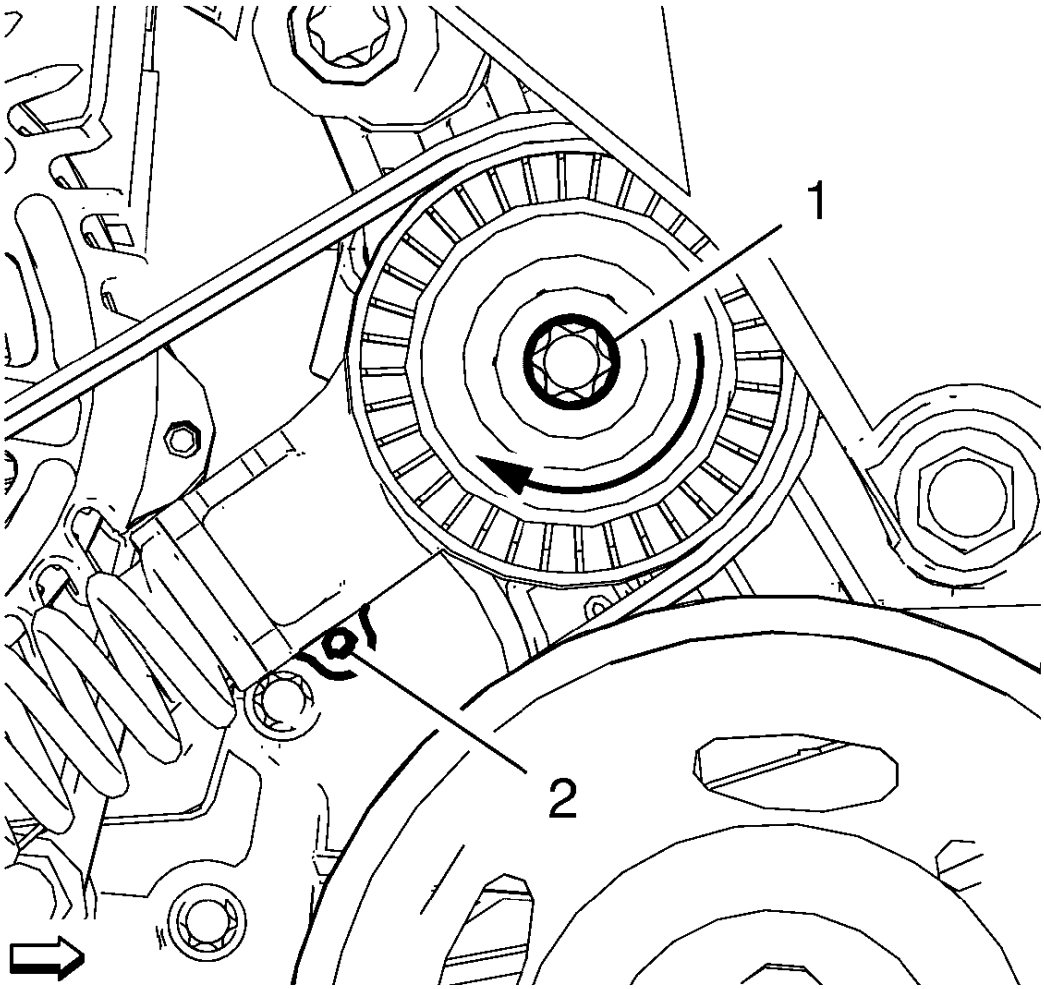

Fig. 26: Drive Belt Tensioner Pulley And Bolt
Courtesy of GENERAL MOTORS COMPANY

3. Rotate the drive belt tensioner pulley bolt (1) in the direction shown until the bore (2) aligns with the bore in the engine front cover, using a TORX wrench and hold in position.

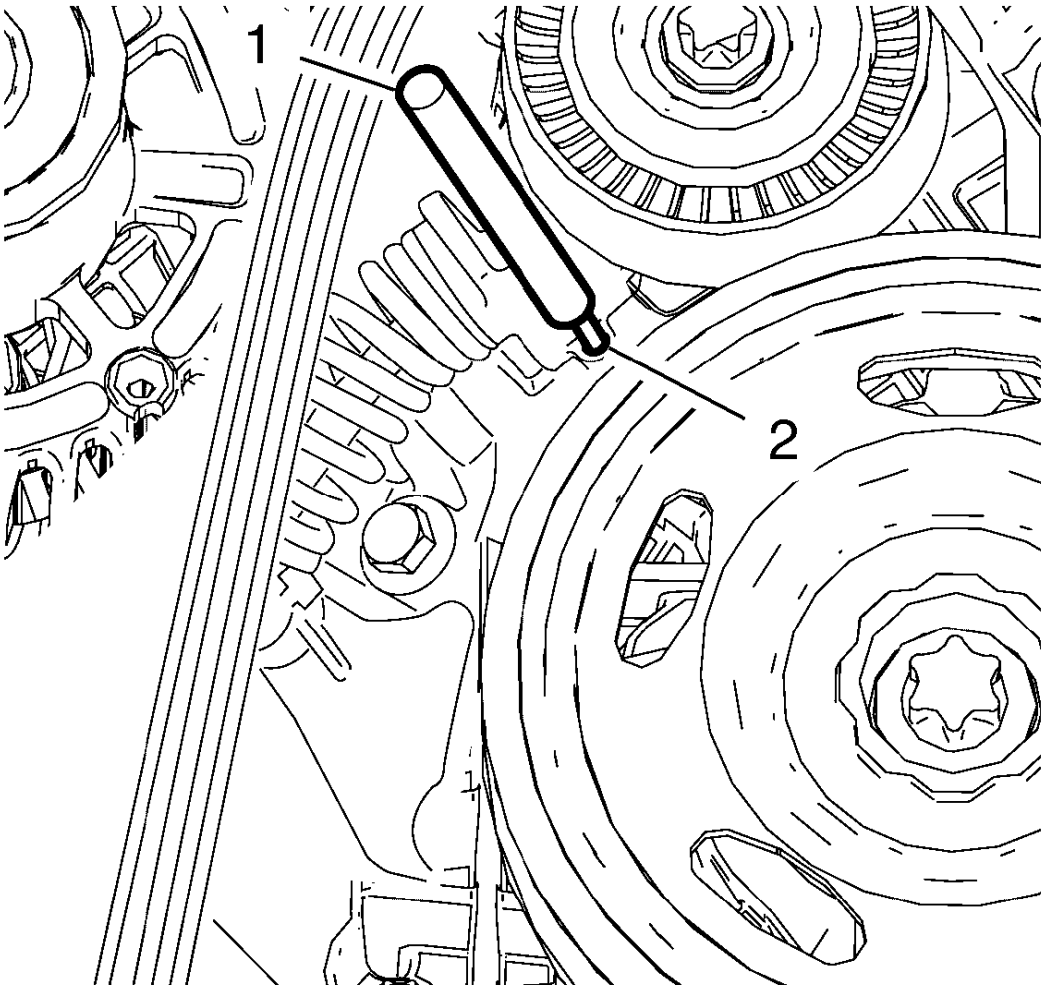

Fig. 27: Punch Inserted In Drive Belt Tensioner Bore
Courtesy of GENERAL MOTORS COMPANY

4. Install a suitable punch (1) through the drive belt tensioner bore (2) to the engine front cover bore to fix the tensioner in position.
5. Lower the vehicle.
6. Remove the right engine mount. Refer to **Engine Mount Replacement - Right Side**.

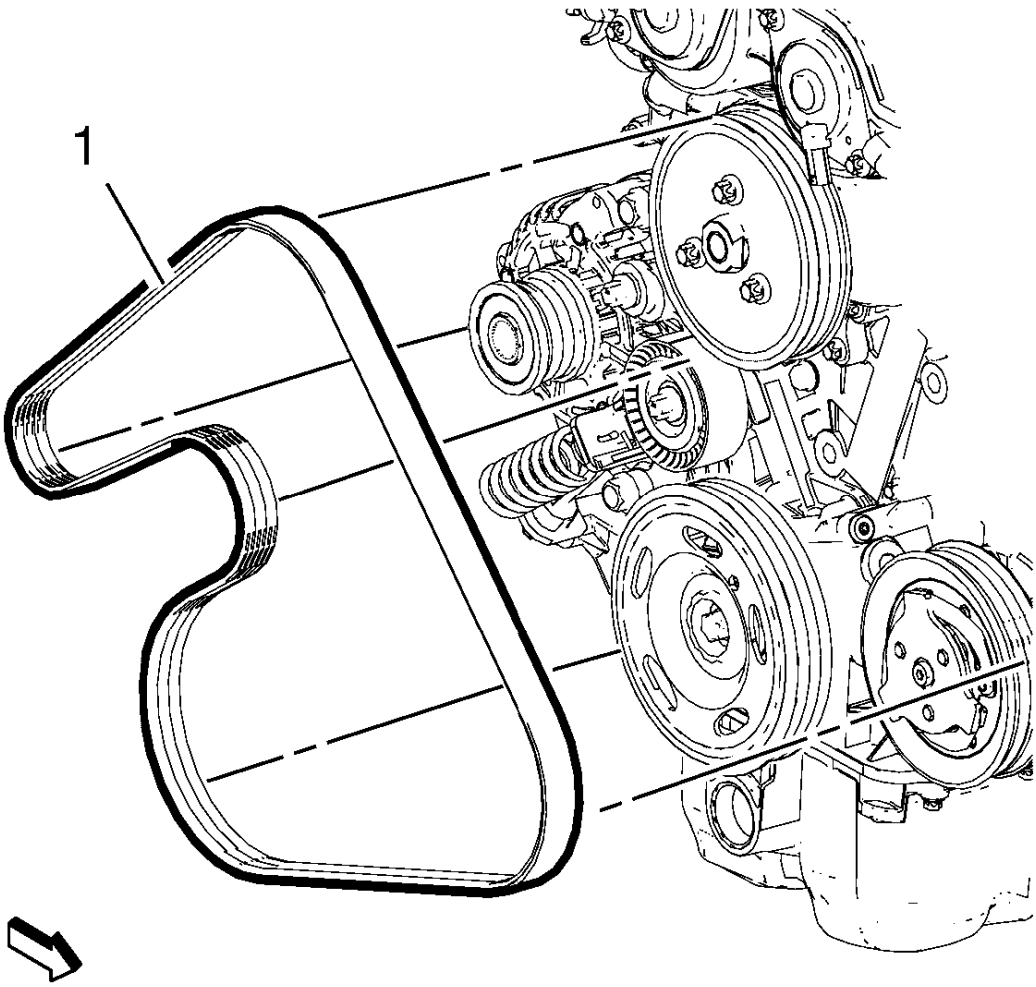

Fig. 28: Drive Belt Routing
Courtesy of GENERAL MOTORS COMPANY

7. Remove the drive belt (1).

Installation Procedure

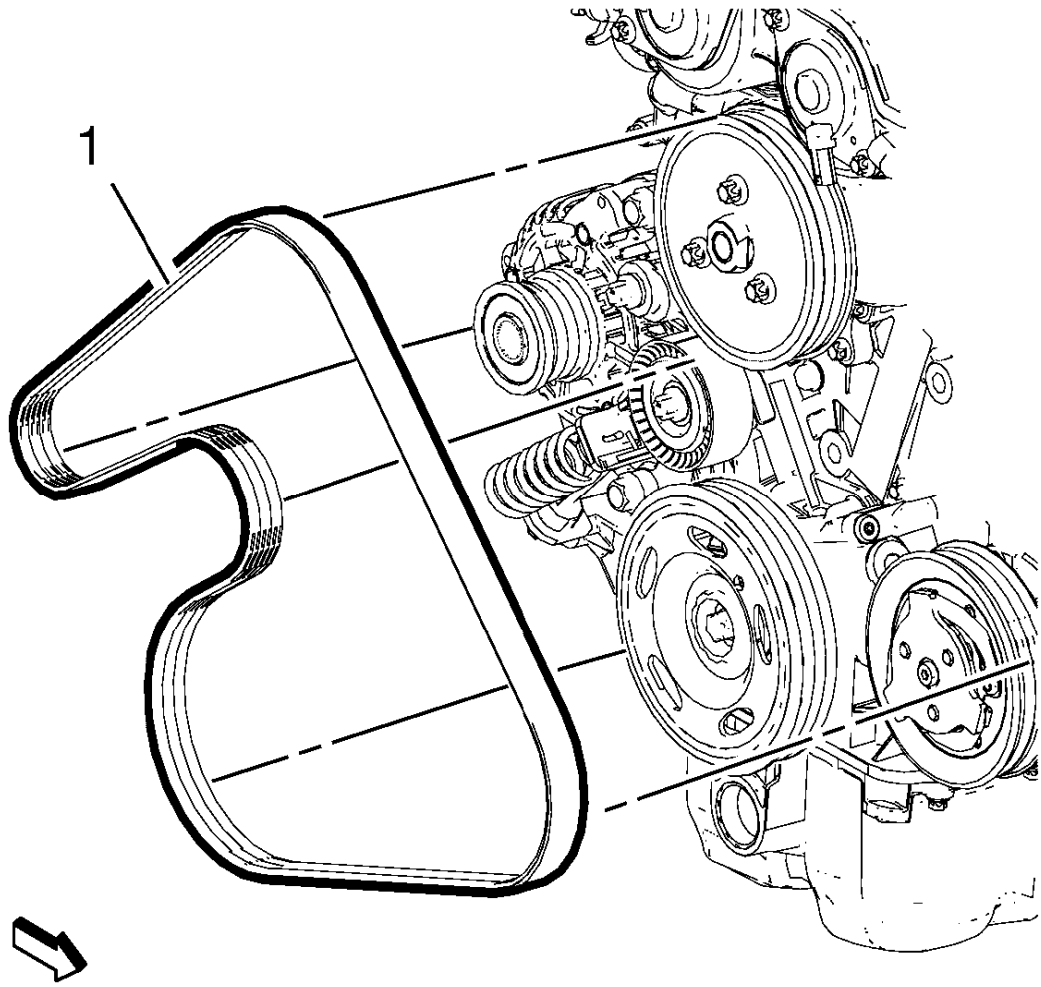

Fig. 29: Drive Belt Routing
Courtesy of GENERAL MOTORS COMPANY

1. Install the drive belt (1) according to the shown routing.
2. Install the right engine mount. Refer to **Engine Mount Replacement - Right Side**.
3. Raise the vehicle.

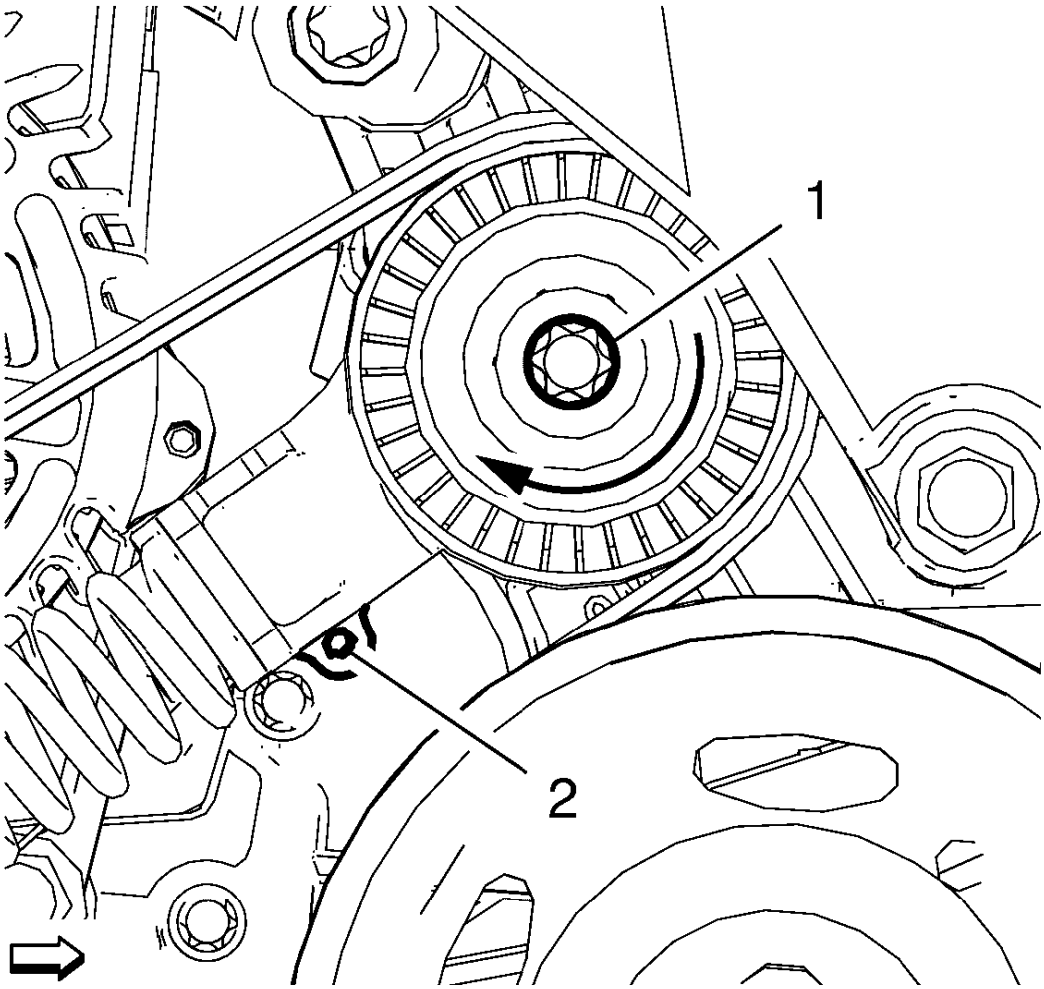

Fig. 30: Drive Belt Tensioner Pulley And Bolt
Courtesy of GENERAL MOTORS COMPANY

4. Rotate the drive belt tensioner pulley bolt (1) in the direction shown until the punch can be removed, using a TORX wrench and hold in position.

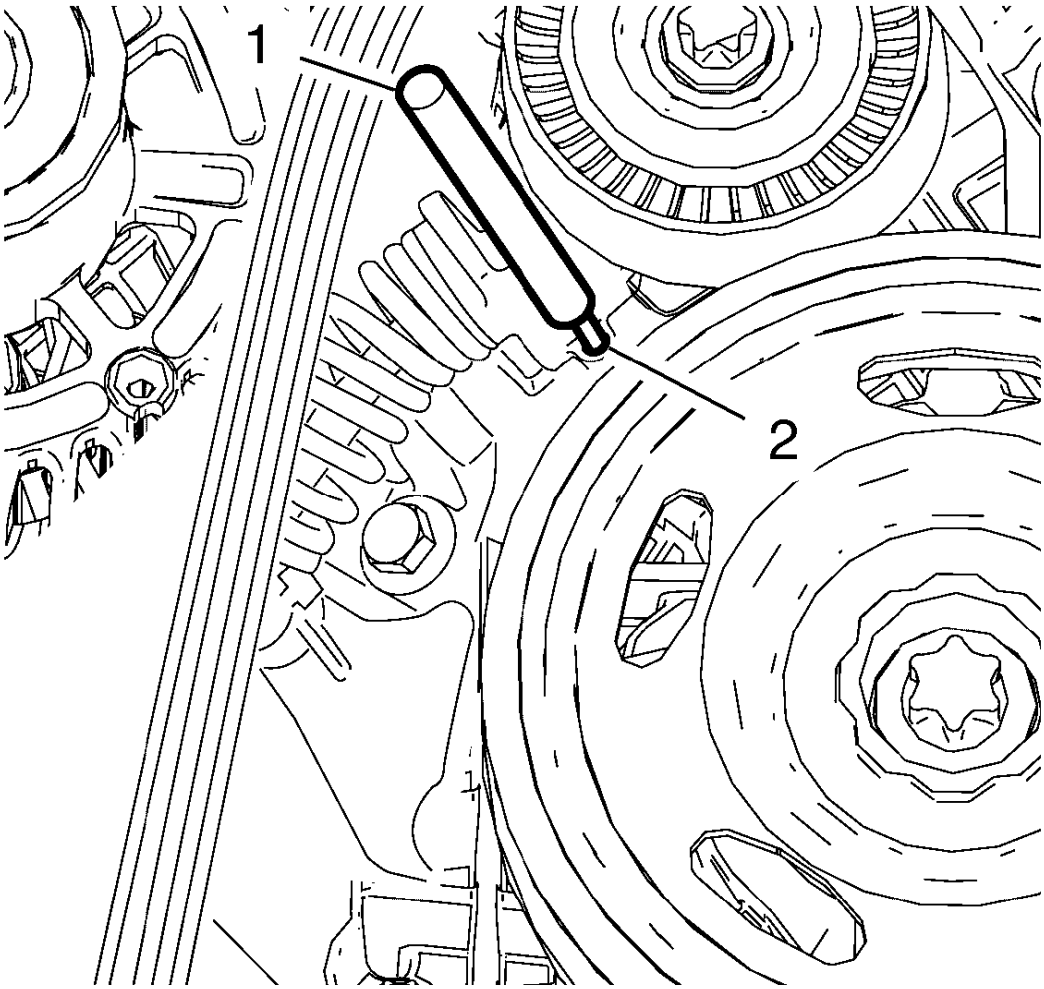

Fig. 31: Punch Inserted In Drive Belt Tensioner Bore
Courtesy of GENERAL MOTORS COMPANY

5. Remove the punch (1) from the engine front cover bore and the drive belt tensioner bore (2).
6. Allow the tensioner to slide back slowly.
7. Install the right front wheelhouse liner. Refer to **Front Wheelhouse Liner Replacement** .
8. Lower the vehicle.

DRIVE BELT TENSIONER REPLACEMENT

Removal Procedure

1. Remove the engine mount bracket. Refer to **Engine Mount Bracket Replacement - Right Side**.

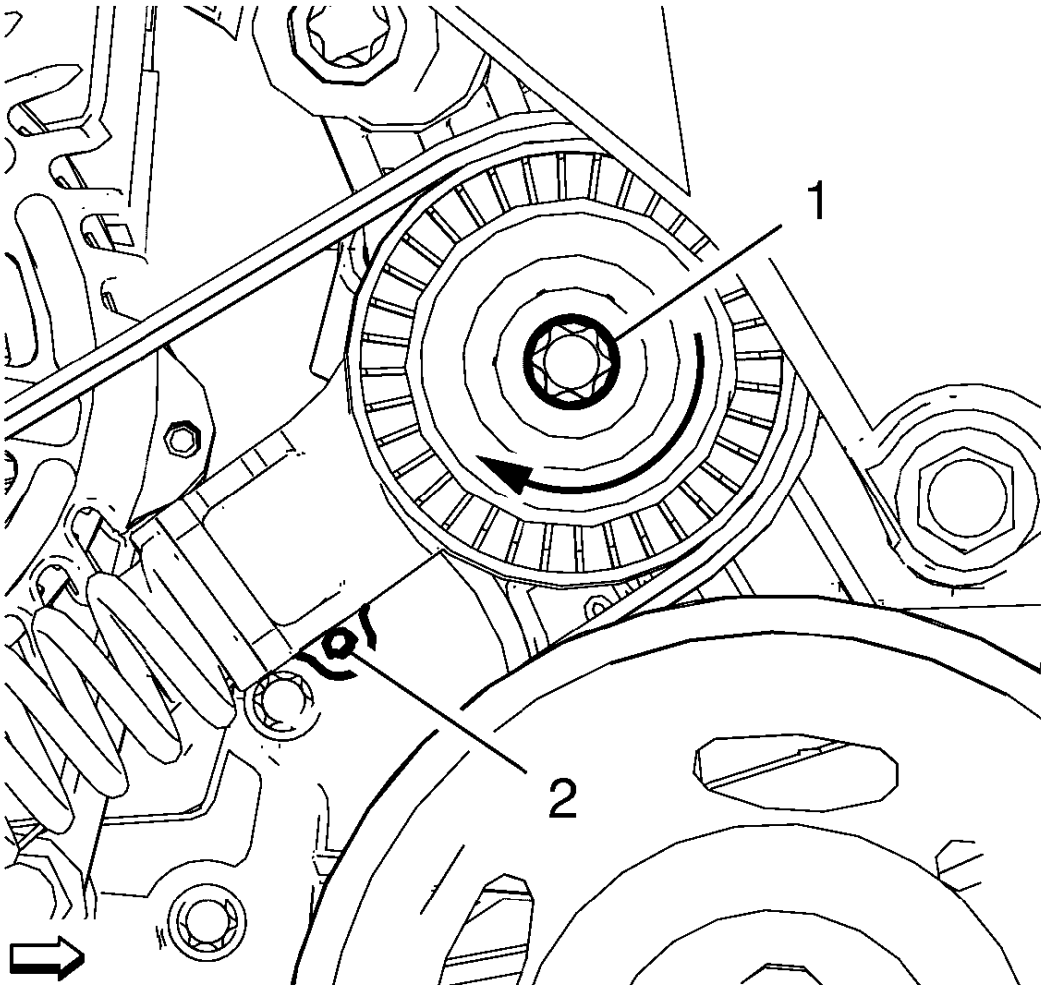

Fig. 32: Drive Belt Tensioner Pulley And Bolt
Courtesy of GENERAL MOTORS COMPANY

2. Rotate the drive belt tensioner pulley bolt (1) in the direction shown until the bore (2) aligns with the bore in the engine front cover, using a TORX wrench and hold in position.

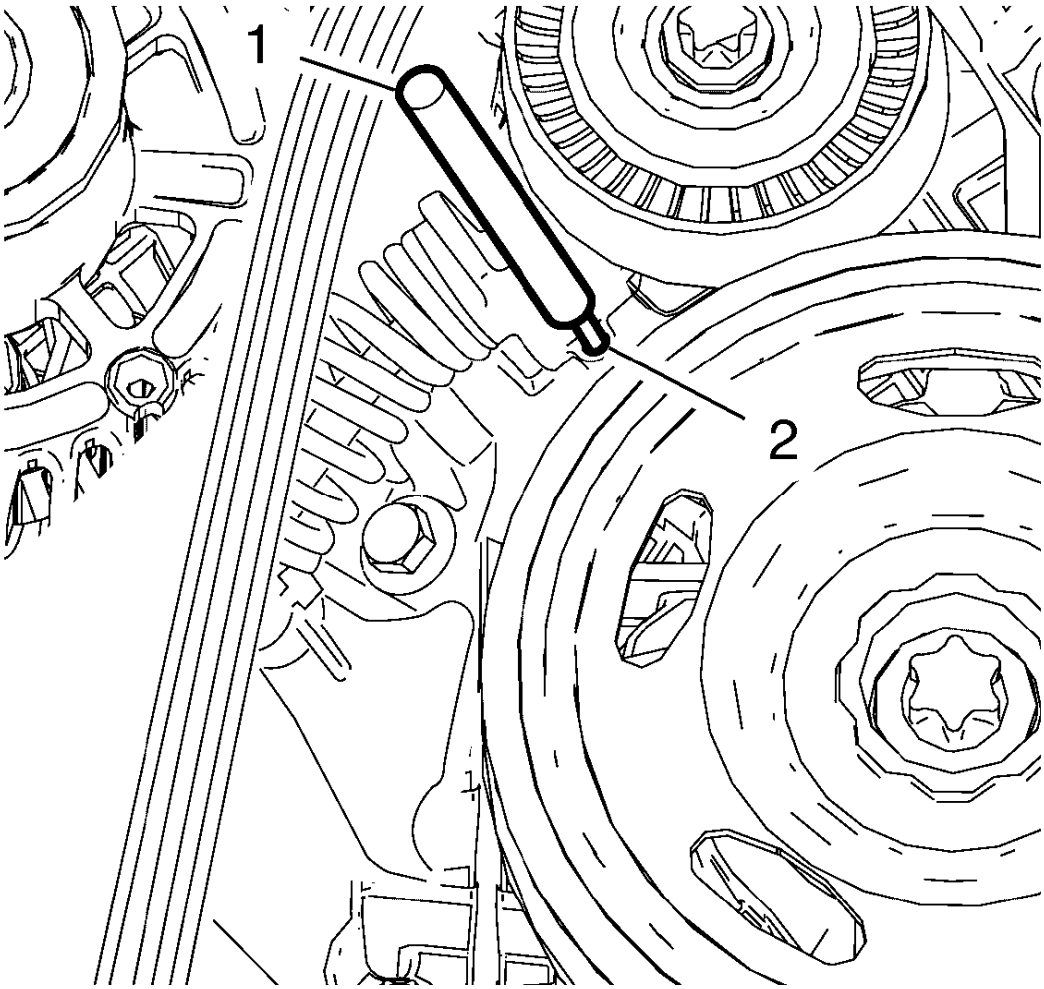

Fig. 33: Punch Inserted In Drive Belt Tensioner Bore
Courtesy of GENERAL MOTORS COMPANY

3. Install a suitable punch (1) through the drive belt tensioner bore (2) to the engine front cover bore to fix the tensioner in position.

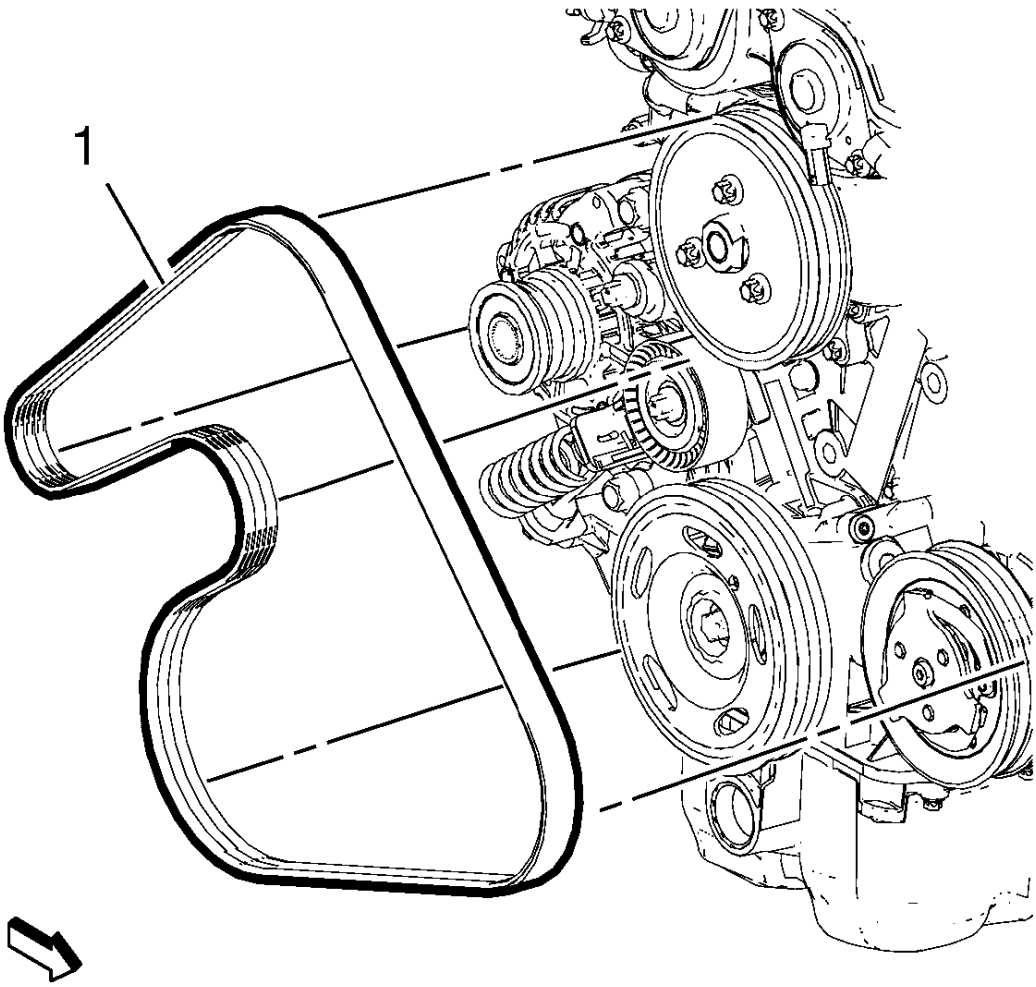

Fig. 34: Drive Belt Routing
Courtesy of GENERAL MOTORS COMPANY

4. Remove the drive belt (1).
5. Move the drive belt tensioner until the punch can be removed and remove the punch from the engine front cover bore and drive belt tensioner bore.

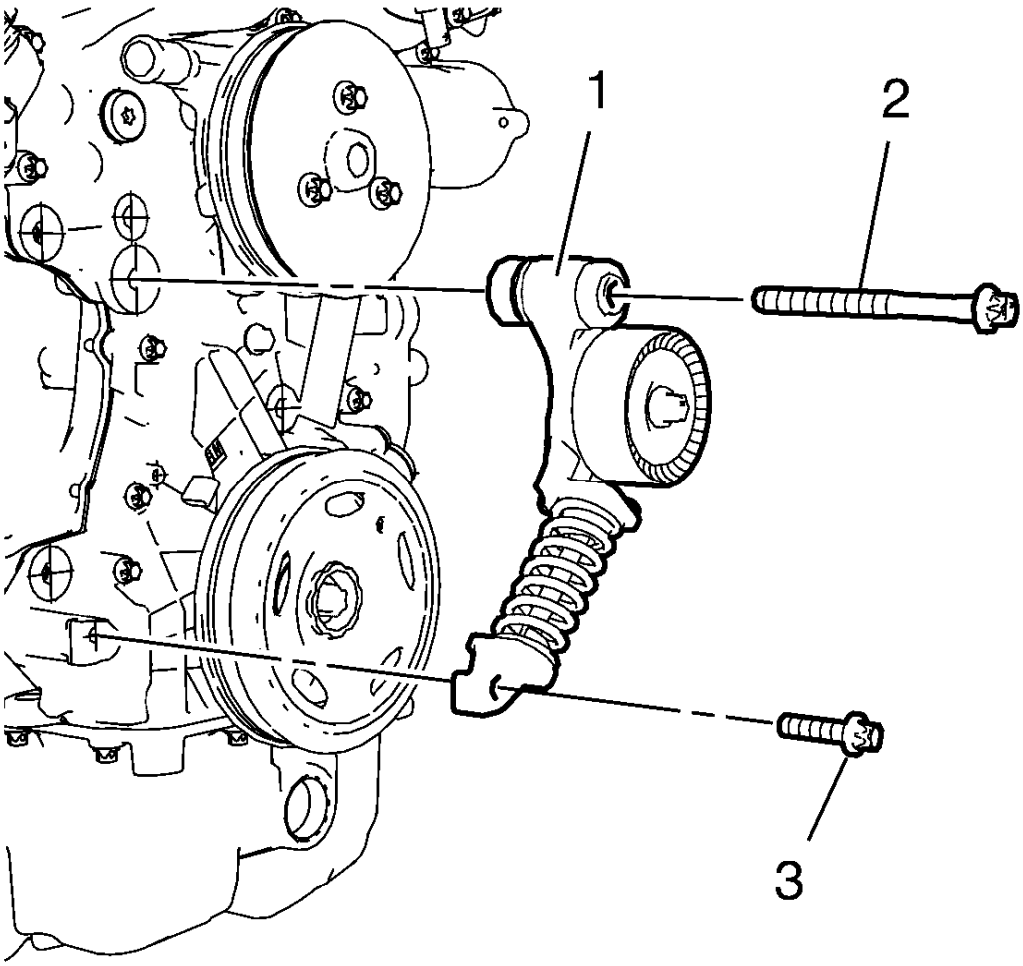

Fig. 35: Drive Belt Tensioner And Bolts
Courtesy of GENERAL MOTORS COMPANY

6. Remove the upper drive belt tensioner bolt (2).
7. Remove the lower drive belt tensioner bolt (3).
8. Remove the drive belt tensioner (1).

Installation Procedure

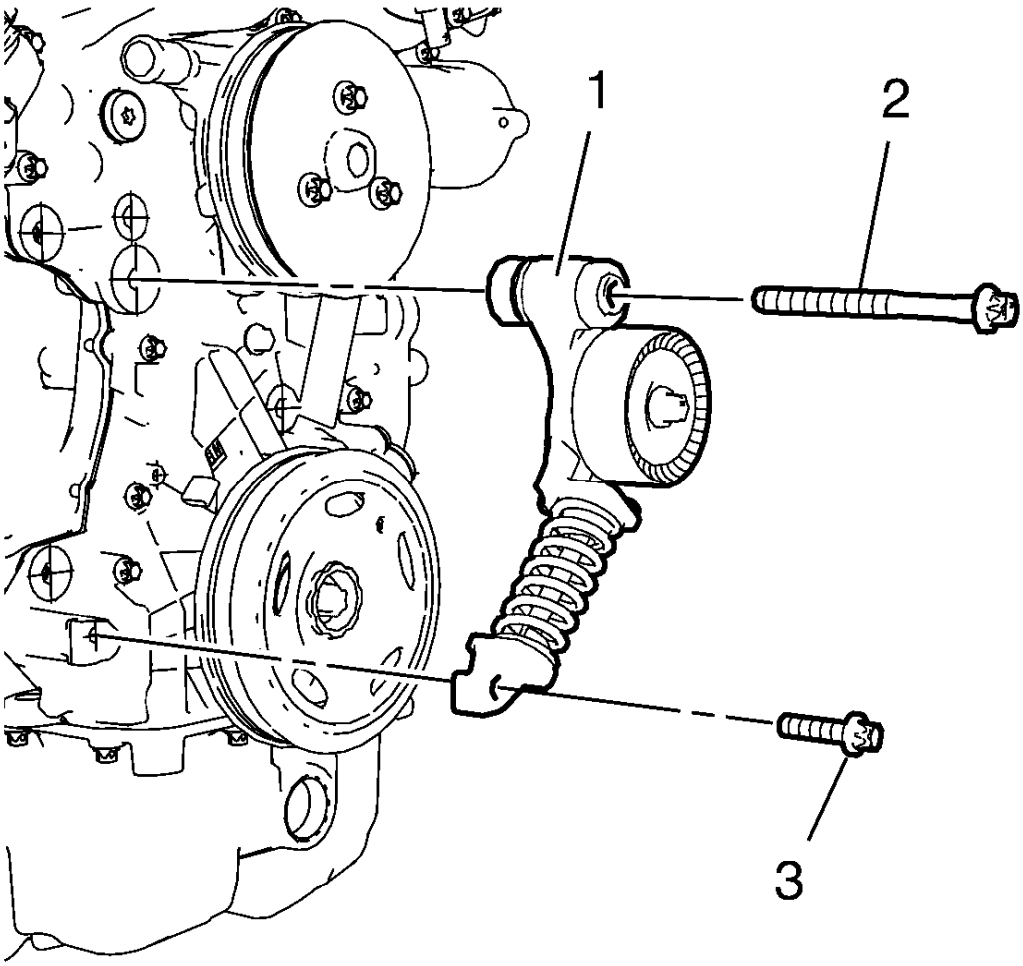

Fig. 36: Drive Belt Tensioner And Bolts
Courtesy of GENERAL MOTORS COMPANY

1. Install the drive belt tensioner (1).
2. Install the lower drive belt tensioner bolt (3).
3. Install the upper drive belt tensioner bolt (2).

CAUTION: Refer to Fastener Caution .

4. Tighten the lower drive belt tensioner bolt to 22 N.m (16 lb ft).
5. Tighten the upper drive belt tensioner bolt to 55 N.m (41 lb ft).

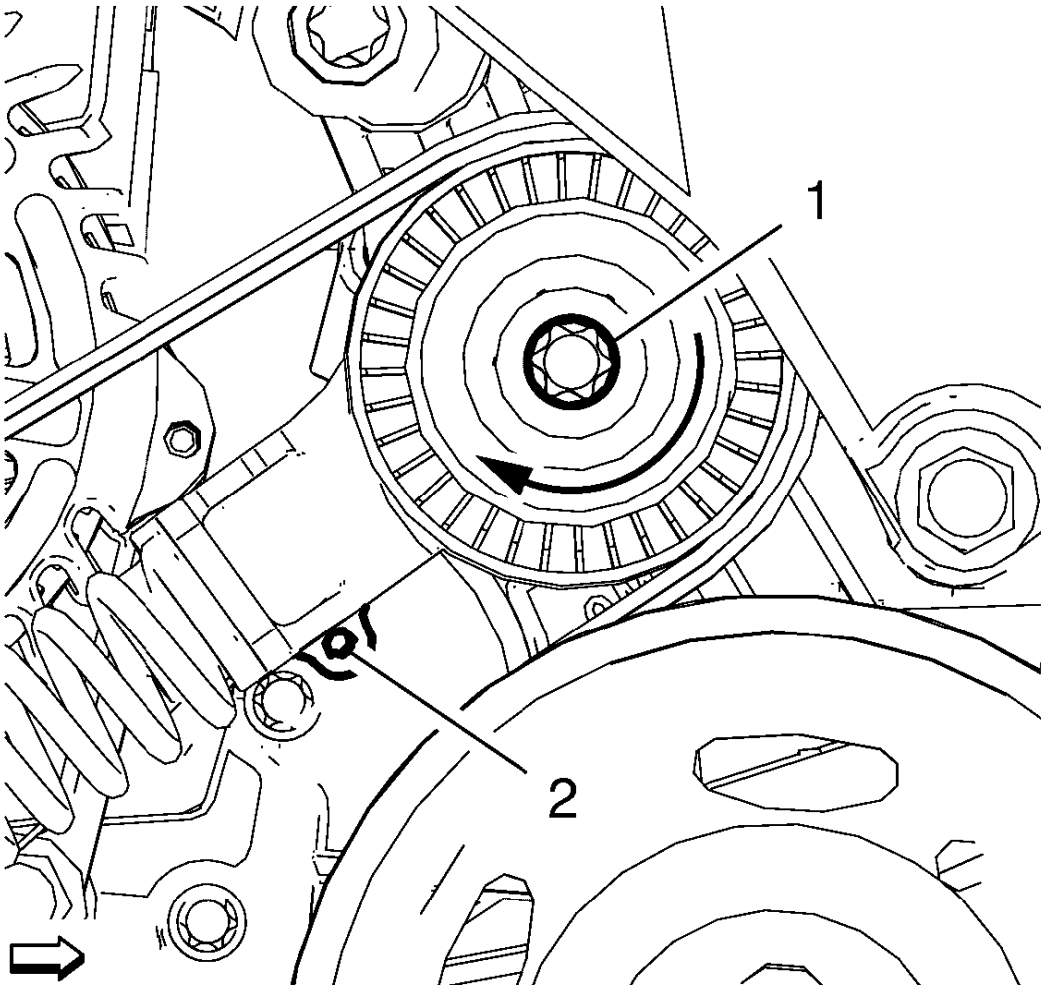

Fig. 37: Drive Belt Tensioner Pulley And Bolt
Courtesy of GENERAL MOTORS COMPANY

6. Rotate the drive belt tensioner pulley bolt (1) in the direction shown until the bore (2) aligns with the bore in the engine front cover, using a TORX wrench and hold in position.

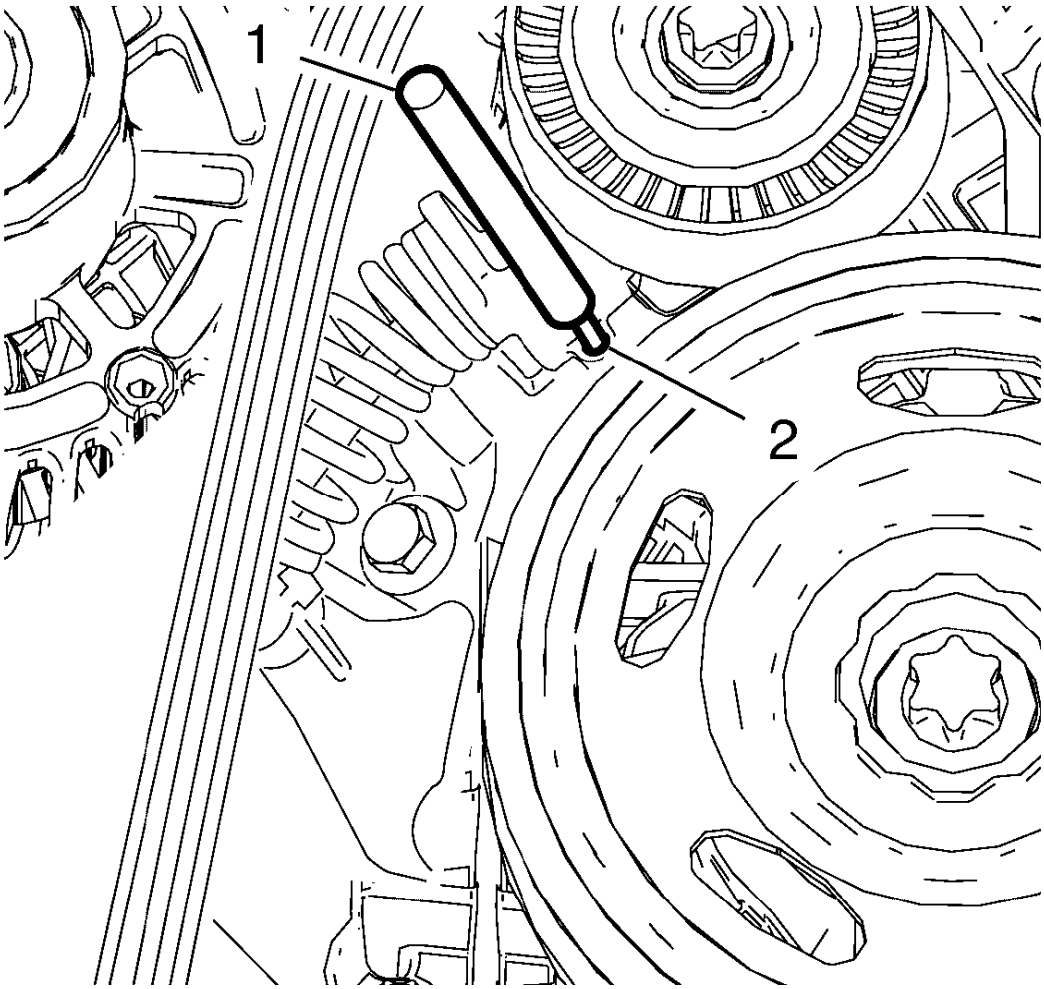

Fig. 38: Punch Inserted In Drive Belt Tensioner Bore
Courtesy of GENERAL MOTORS COMPANY

7. Install a suitable punch (1) through the drive belt tensioner bore (2) to the engine front cover bore to fix the tensioner in position.

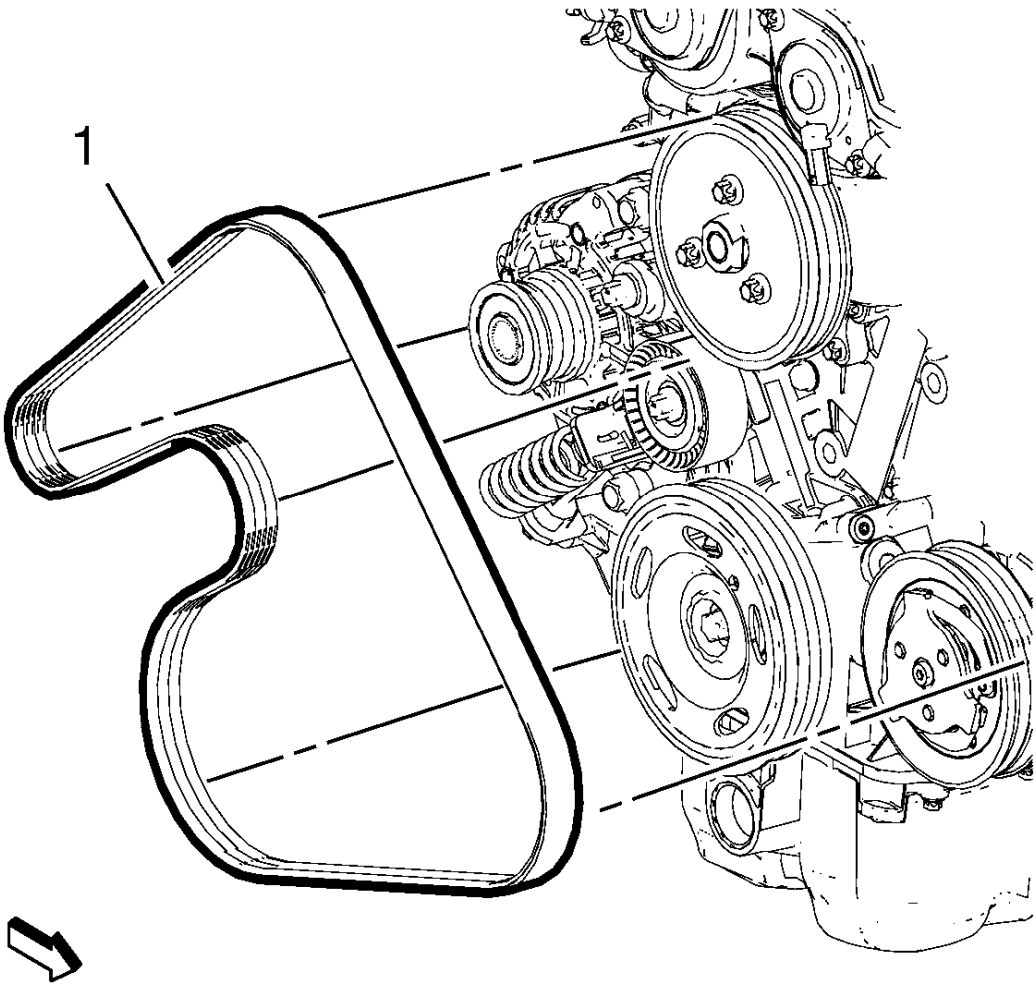

Fig. 39: Drive Belt Routing
Courtesy of GENERAL MOTORS COMPANY

8. Install the drive belt (1) according to the shown routing.
9. Move the drive belt tensioner until the punch can be removed (see step 6) and remove the punch from the engine front cover bore and drive belt tensioner bore.
10. Allow the tensioner to slide back slowly.
11. Install the engine mount bracket. Refer to **Engine Mount Bracket Replacement - Right Side**.

POWERTRAIN MOUNT BALANCING

NOTE: Follow the balance procedure steps listed below when no starting point has been established such as in a collision repair.

1. Raise and support the vehicle. Refer to **Lifting and Jacking the Vehicle** .

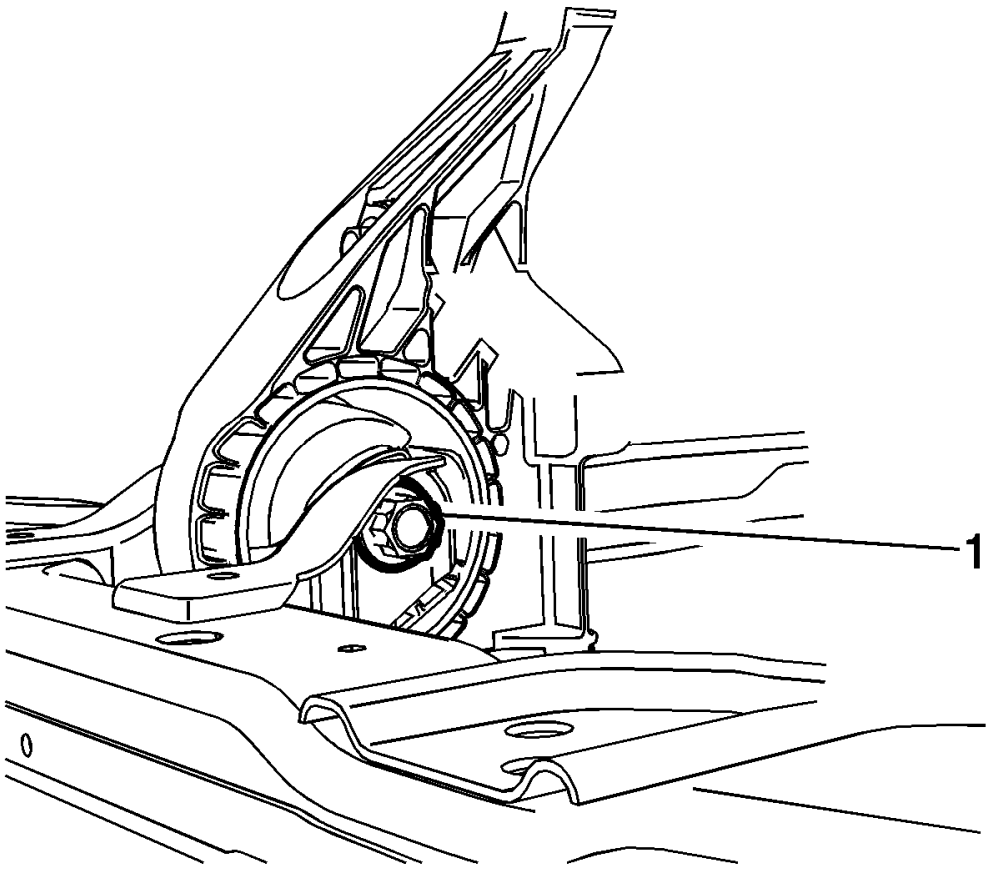

Fig. 40: Front Transaxle Mount Through Bolt
Courtesy of GENERAL MOTORS COMPANY

2. Loosen the front transaxle mount through bolt (1) until it is finger tight.

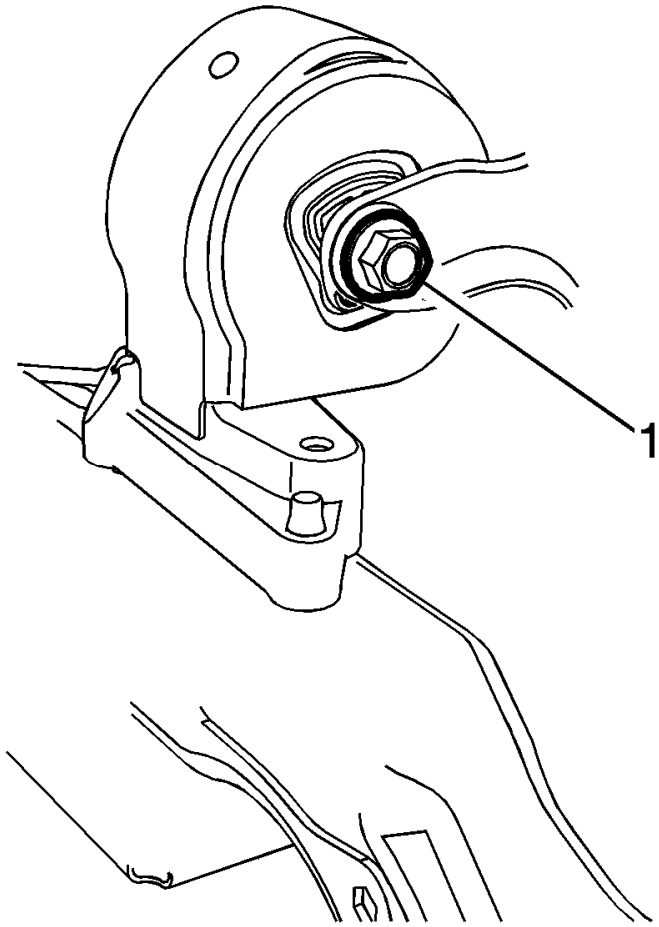

Fig. 41: Rear Transaxle Mount Through Bolt
Courtesy of GENERAL MOTORS COMPANY

3. Loosen the rear transaxle mount (1) through bolt until it is finger tight.
4. Lower the vehicle.

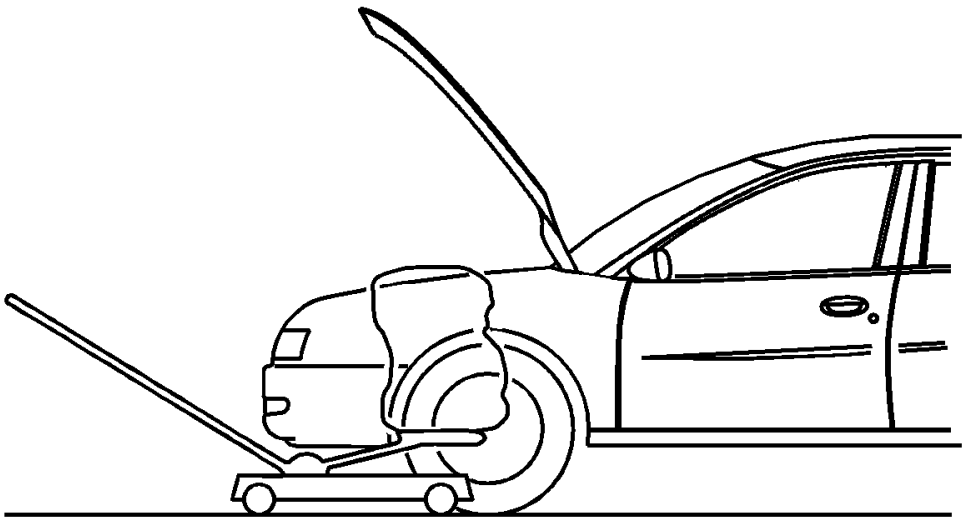

Fig. 42: Supporting Engine/Transmission With Hydraulic Floor Jack
Courtesy of GENERAL MOTORS COMPANY

5. Position two floor jacks with wood blocks under the engine and transaxle in order to support the powertrain assembly.

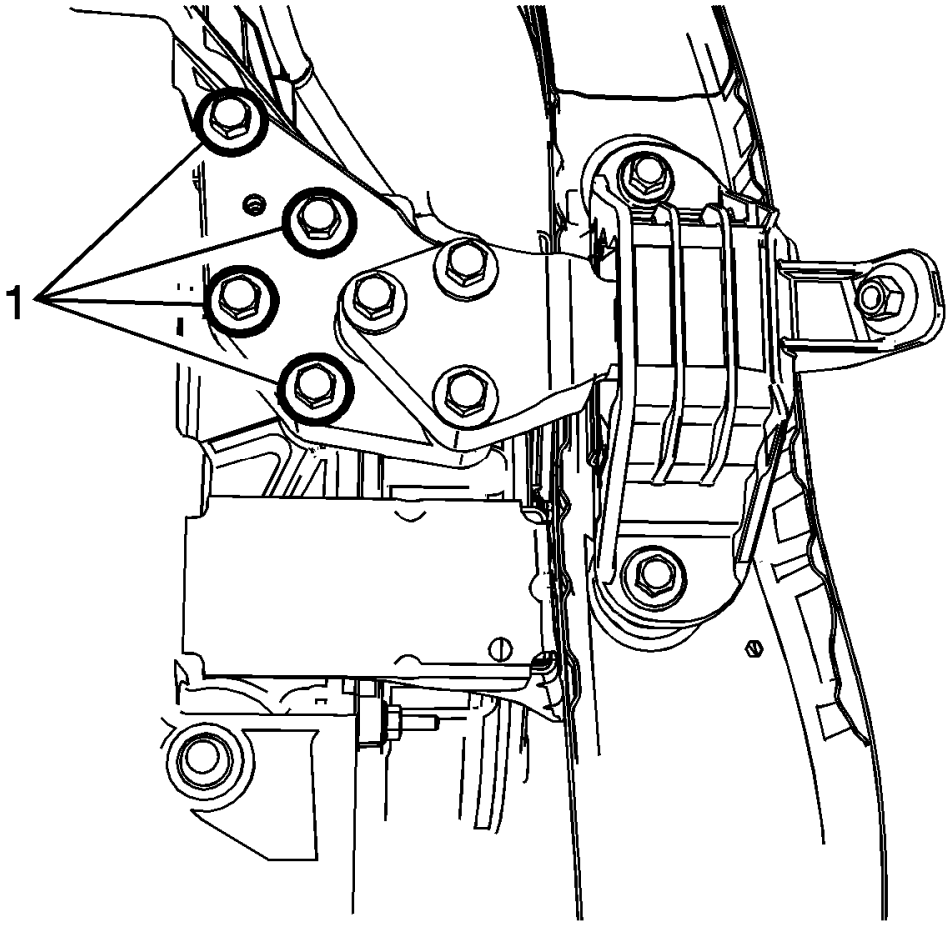

Fig. 43: Transaxle Bolts
Courtesy of GENERAL MOTORS COMPANY

6. Loosen the transaxle adapter to transaxle bolts (1).

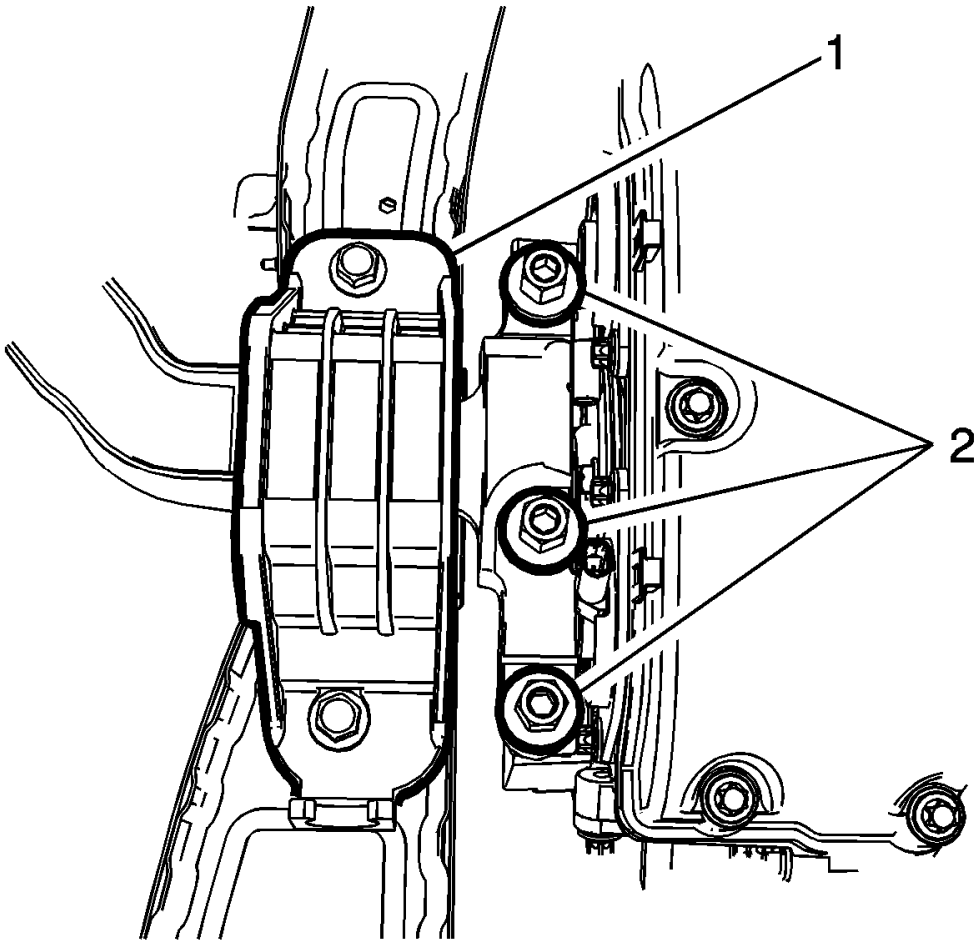

Fig. 44: Engine Mount And Bracket Bolts
Courtesy of GENERAL MOTORS COMPANY

7. Loosen the engine mount (1) to bracket bolts (2).
8. Lower the floor jacks in order to allow a 1/4 inch (6 mm) gap between the upper engine mount and engine mount bracket, and also between the transmission and left transmission mount.

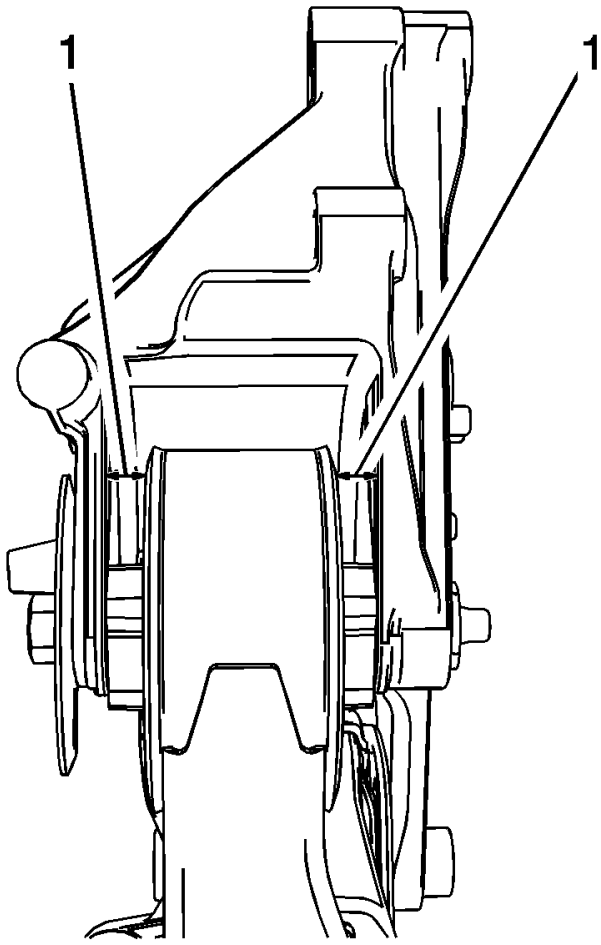

Fig. 45: Front And Rear Powertrain Mounts
Courtesy of GENERAL MOTORS COMPANY

9. Check that the front and rear mounts are centered (1) in the mount brackets, adjust if necessary.
10. Tighten the left hand (transaxle side) mount bolts, starting with the bolt nearest to the center of the mount. See the appropriate transmission mount replacement procedure for the fastener tightening specifications.

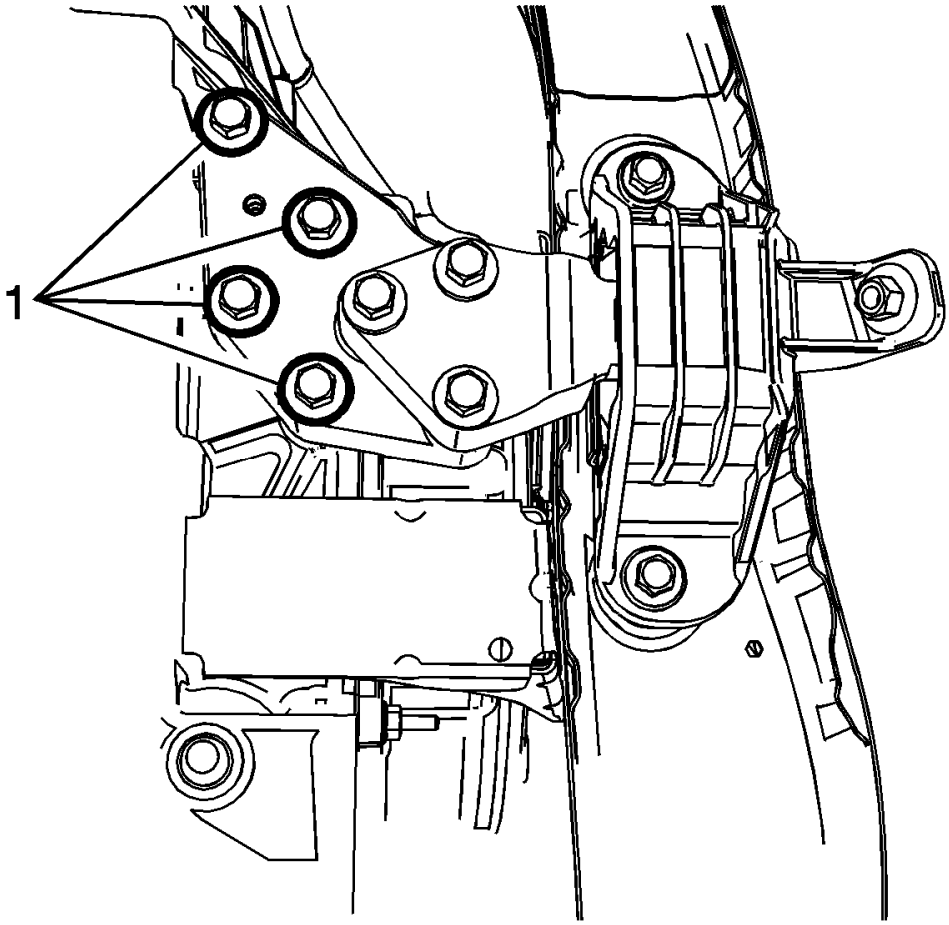

Fig. 46: Transaxle Bolts
Courtesy of GENERAL MOTORS COMPANY

11. Tighten the right hand (engine side) mount bolts (1), starting with the bolt nearest to the center of the mount. See the appropriate engine mount replacement procedure for the fastener tightening specifications.
12. Remove the floor jacks from under the oil pan and transmission.
13. Raise the vehicle.
14. Shake the powertrain from front to rear and allow the powertrain to settle.

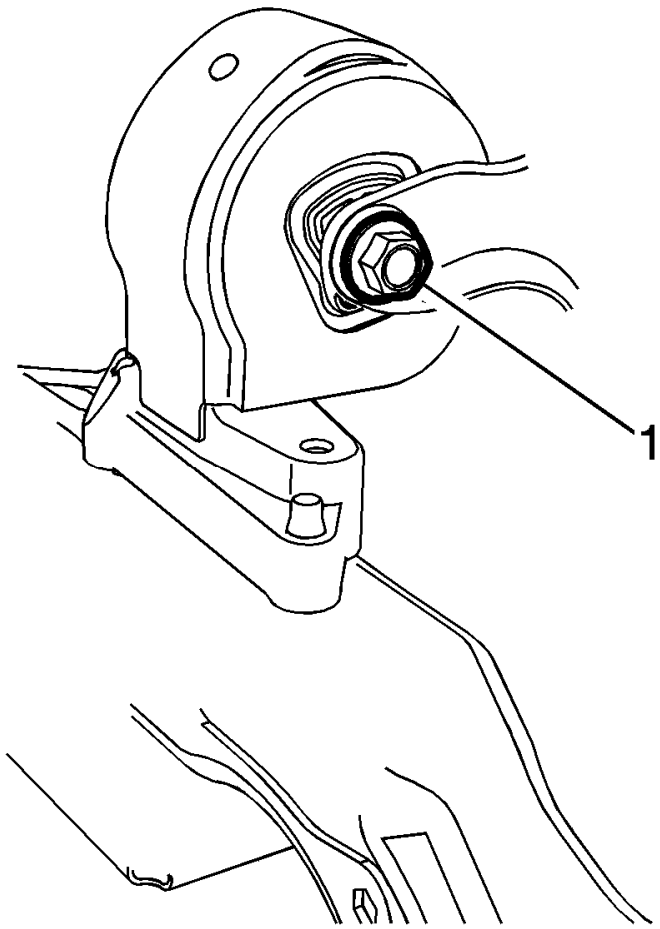

Fig. 47: Rear Transaxle Mount Through Bolt
Courtesy of GENERAL MOTORS COMPANY

NOTE: It is essential that the lower mount through bolts should be as close to centered as possible in the oversized mount insert holes before tightening to specification.

15. Tighten the rear transaxle mount through bolt (1). See the appropriate transmission mount replacement procedure for the fastener tightening specifications.

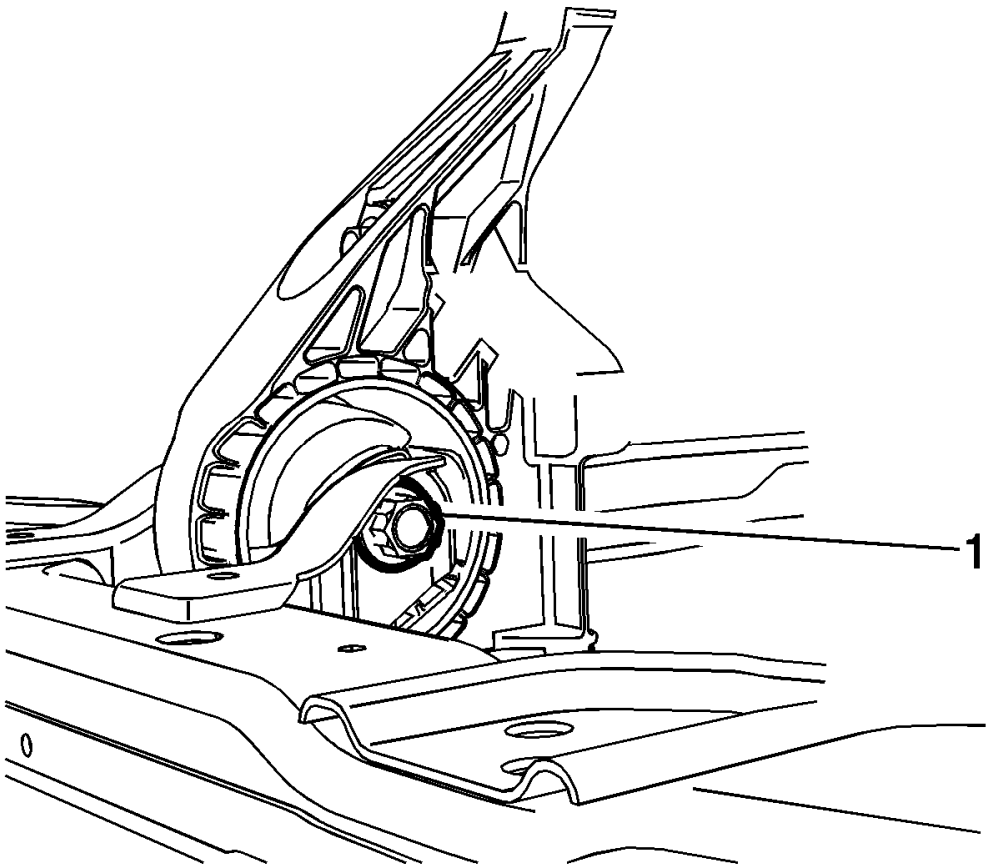

Fig. 48: Front Transaxle Mount Through Bolt
Courtesy of GENERAL MOTORS COMPANY

16. Tighten the front transaxle mount through bolt (1). See the appropriate transmission mount replacement procedure for the fastener tightening specifications.
17. Lower the vehicle.

POWERTRAIN MOUNT BALANCING - LOWER

NOTE: Follow the balance procedure steps listed below when front or rear mounts through bolts are loosened or removed during a repair procedure.

1. Raise and support the vehicle. Refer to **Lifting and Jacking the Vehicle** .

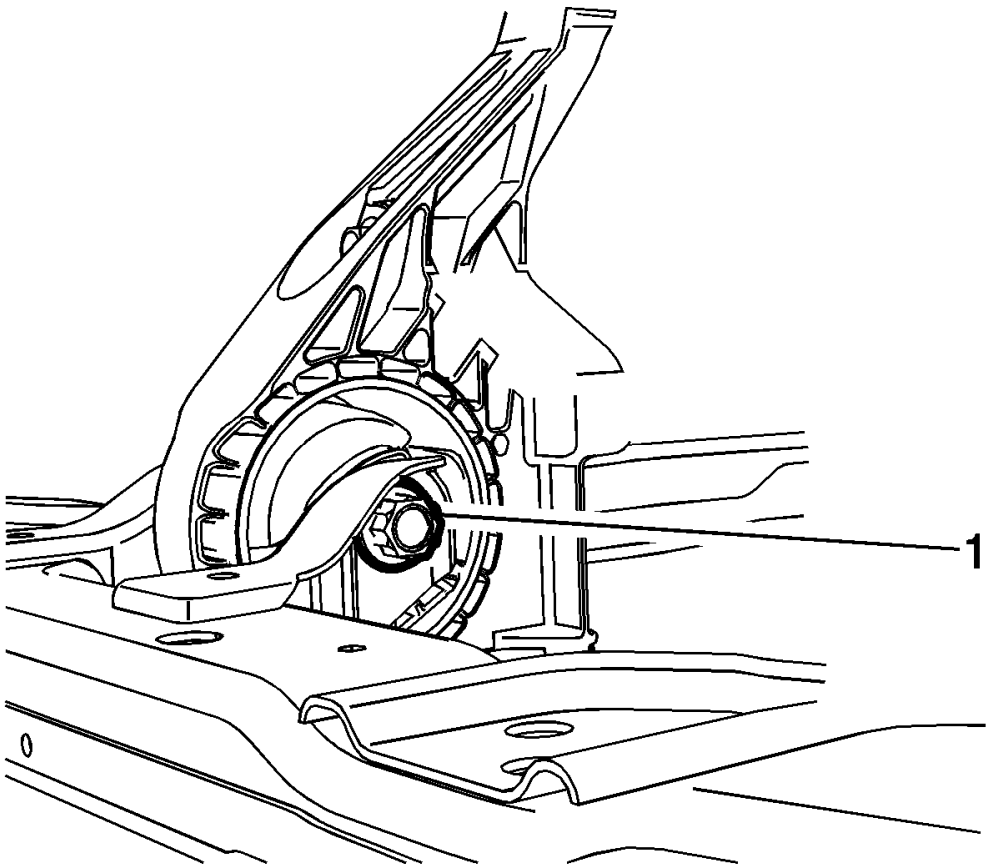

Fig. 49: Front Transaxle Mount Through Bolt
Courtesy of GENERAL MOTORS COMPANY

2. Loosen the front transaxle mount through bolt (1).

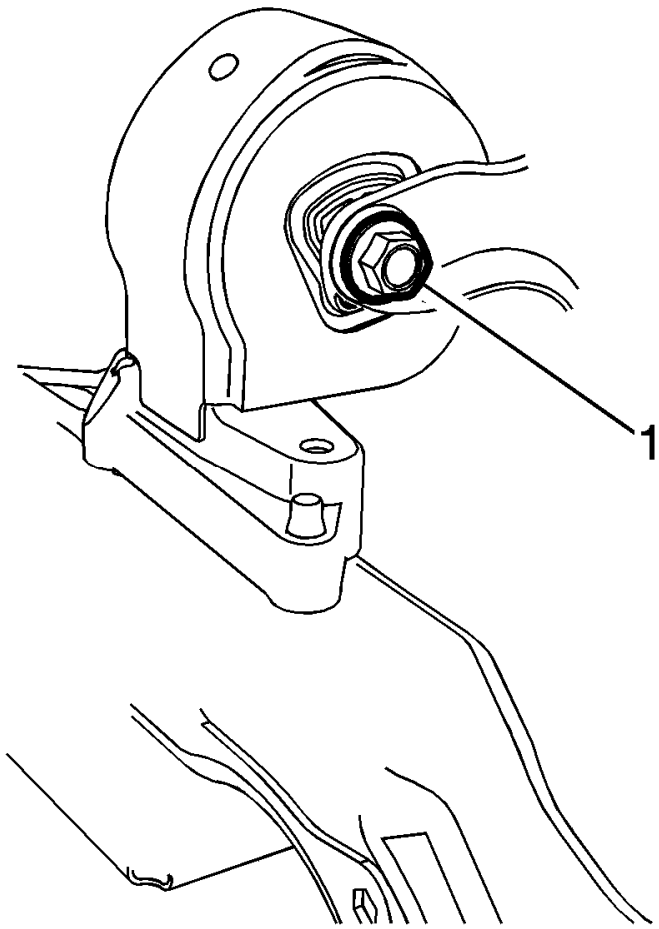

Fig. 50: Rear Transaxle Mount Through Bolt
Courtesy of GENERAL MOTORS COMPANY

3. Loosen the rear transaxle mount through bolt (1).
4. Shake the powertrain from front to rear and allow the powertrain to settle.

NOTE: It is essential that the through bolts are as close to centered as possible in the oversized mount insert holes before tightening to specification.

5. Tighten the rear transaxle mount through bolt (1). See the appropriate transmission mount replacement procedure for the fastener tightening specifications.

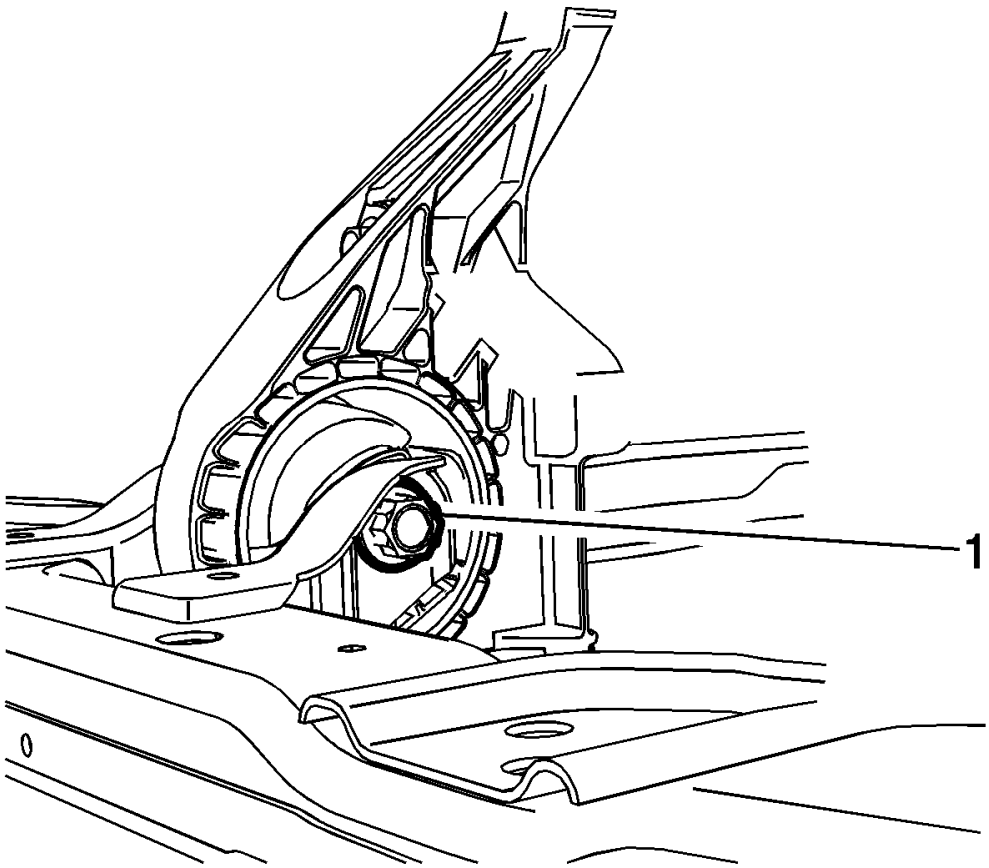

Fig. 51: Front Transaxle Mount Through Bolt
Courtesy of GENERAL MOTORS COMPANY

6. Tighten the front transaxle mount through bolt (1). See the appropriate transmission mount replacement procedure for the fastener tightening specifications.
7. Lower the vehicle.

ENGINE MOUNT REPLACEMENT - RIGHT SIDE

Removal Procedure

1. Open the hood.
2. Remove the air cleaner assembly. Refer to **Air Cleaner Assembly Replacement** .

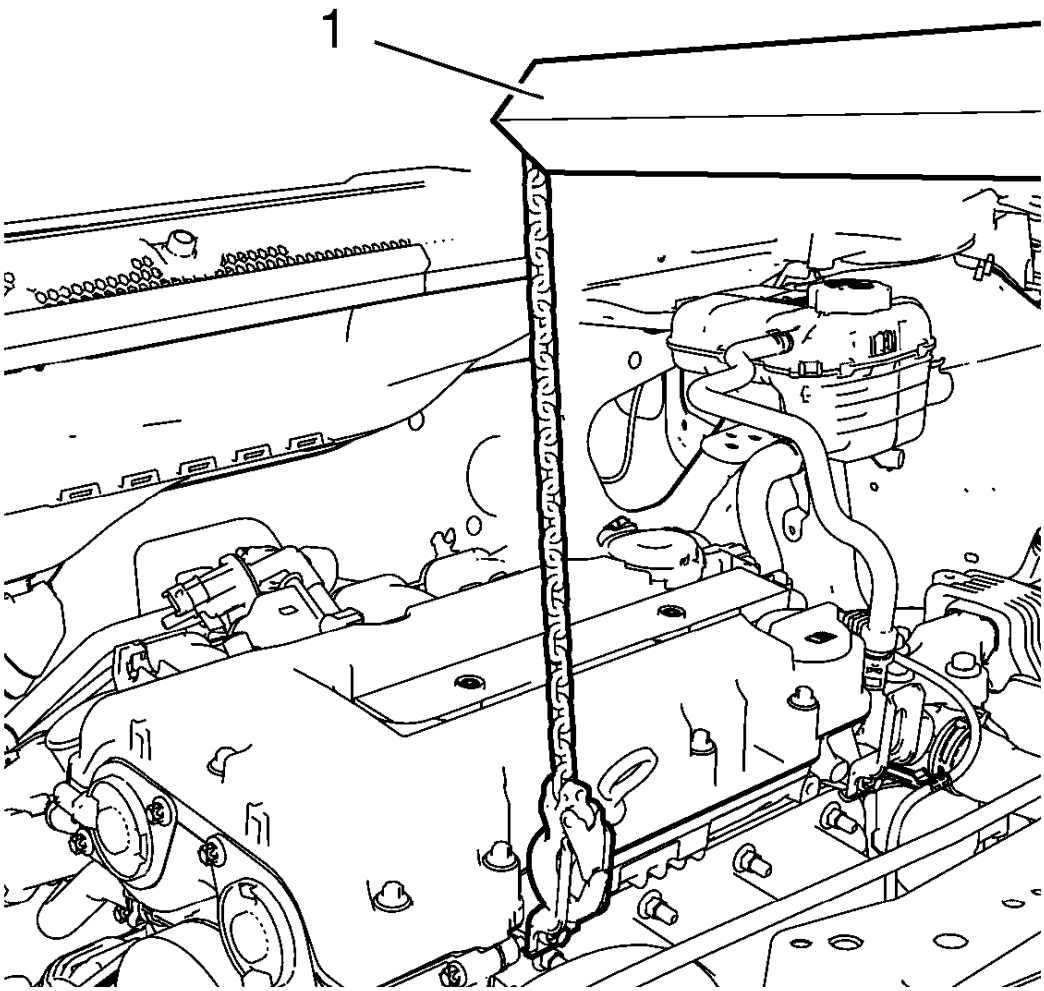

Fig. 52: Engine Lifter
Courtesy of GENERAL MOTORS COMPANY

3. Install an engine lifter (1) to the right engine lift bracket and apply tension to the engine lifter chain in order to support the engine.

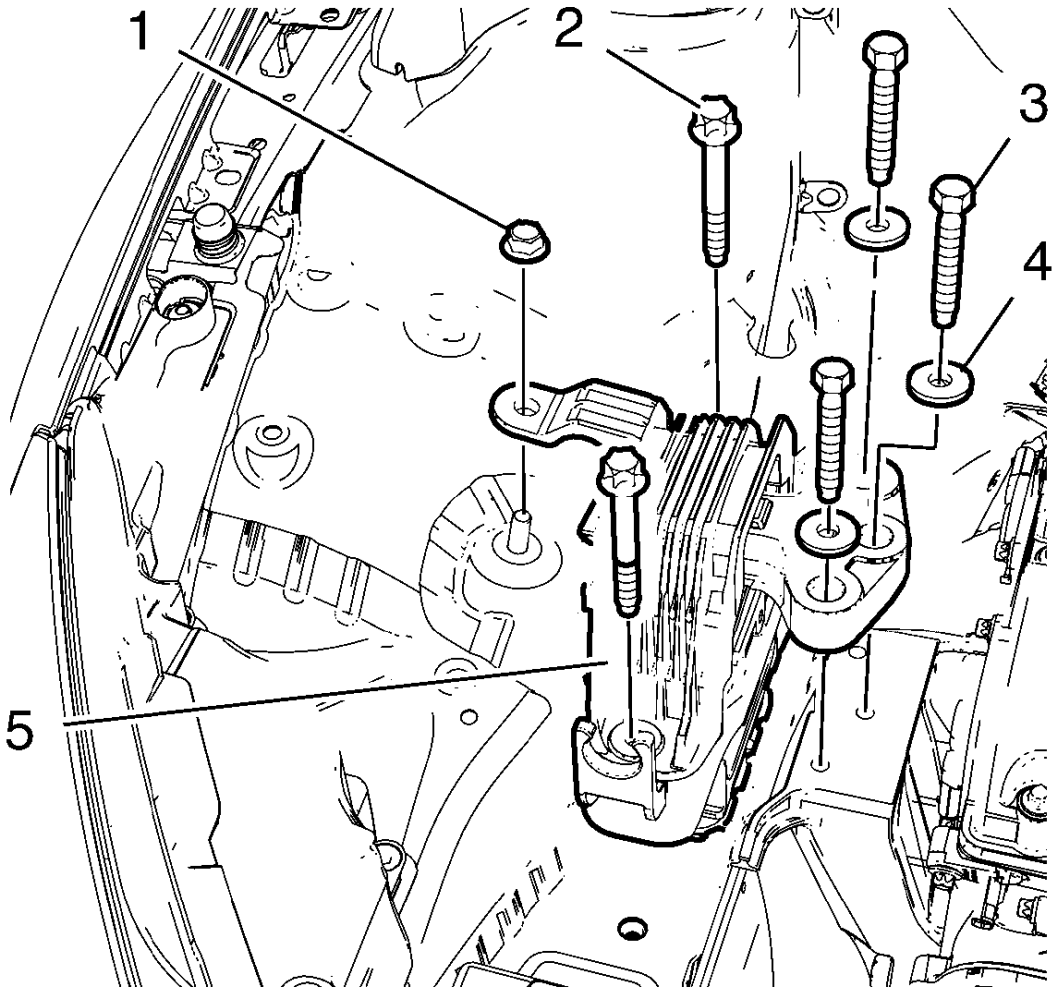

Fig. 53: Engine Mount, Bracket Bolts, Body Bolts, Mount Nuts And Washers
Courtesy of GENERAL MOTORS COMPANY

4. Remove and DISCARD the 3 engine mount to engine mount bracket bolts (3) and the 3 washers (4).
5. Remove the 2 engine mount to body bolts (2) and the engine mount nut (1).
6. Remove the engine mount (5).

Installation Procedure

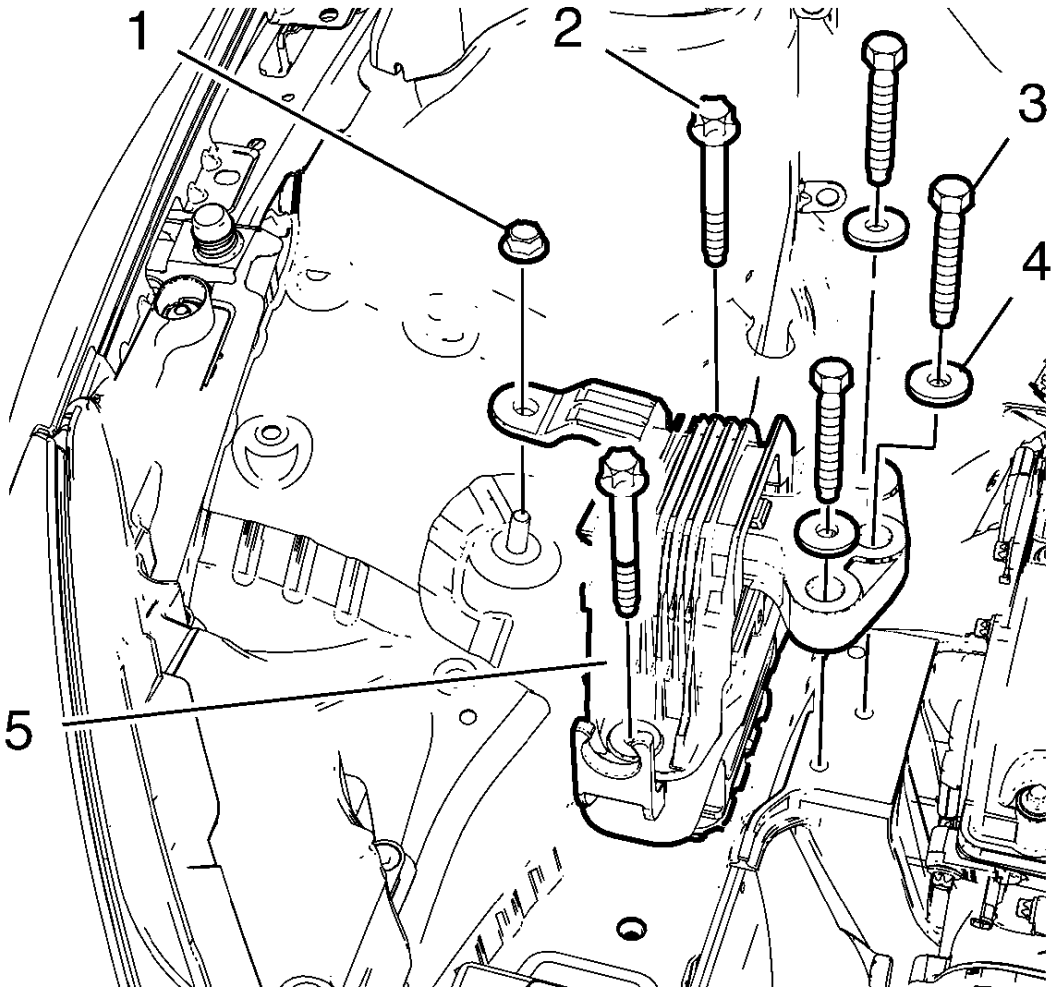

Fig. 54: Engine Mount, Bracket Bolts, Body Bolts, Mount Nuts And Washers
Courtesy of GENERAL MOTORS COMPANY

1. Install the engine mount (5).
2. Install the 2 engine mount to body bolts (2).
3. Install the engine mount nut (1).
4. Install the 3 NEW engine mount to engine mount bracket bolts (3) and the 3 washers (4).

CAUTION: Refer to Fastener Caution .

CAUTION: Refer to Torque-to-Yield Fastener Caution .

5. Tighten the 2 engine mount to body bolts (2) and the engine mount nut (1) to 62 N.m (46 lb ft).

6. Tighten the 3 engine mount to engine mount bracket bolts (3) to 50 N.m (37 lb ft) + 60-70°.
7. Remove the engine lifter from right engine lift bracket.
8. Install the air cleaner assembly. Refer to **Air Cleaner Assembly Replacement** .
9. Close the hood.

ENGINE MOUNT INSPECTION

1. Install the engine support fixture. Refer to **Engine Support Fixture**.
2. Observe the engine mount while raising the engine. Raising the engine removes the weight from the engine mount and creates slight tension on the rubber.
3. Replace the engine mount if the engine mount exhibits any of the following conditions:
   - The hard rubber is covered with heat check cracks.
   - The rubber is separated from the metal plate of the engine mount.
   - The rubber is split through the center of the engine mount.
4. For engine mount replacement, refer to **Engine Mount Replacement - Right Side**.
5. For rear transmission mount replacement, refer to:
   - Automatic transmission, refer to **Transmission Rear Mount Replacement** .
   - Manual transmission, refer to **Transmission Rear Mount Replacement** .
6. For left transmission mount replacement, refer to:
   - Automatic transmission, refer to **Transmission Mount Replacement - Left Side** .
   - Manual transmission, refer to **Transmission Mount Bracket Replacement - Left Side** .

ENGINE MOUNT BRACKET REPLACEMENT - RIGHT SIDE

Removal Procedure

1. Open the hood.
2. Remove the air cleaner assembly. Refer to **Air Cleaner Assembly Replacement** .
3. Remove the engine mount. Refer to **Engine Mount Replacement - Right Side**.

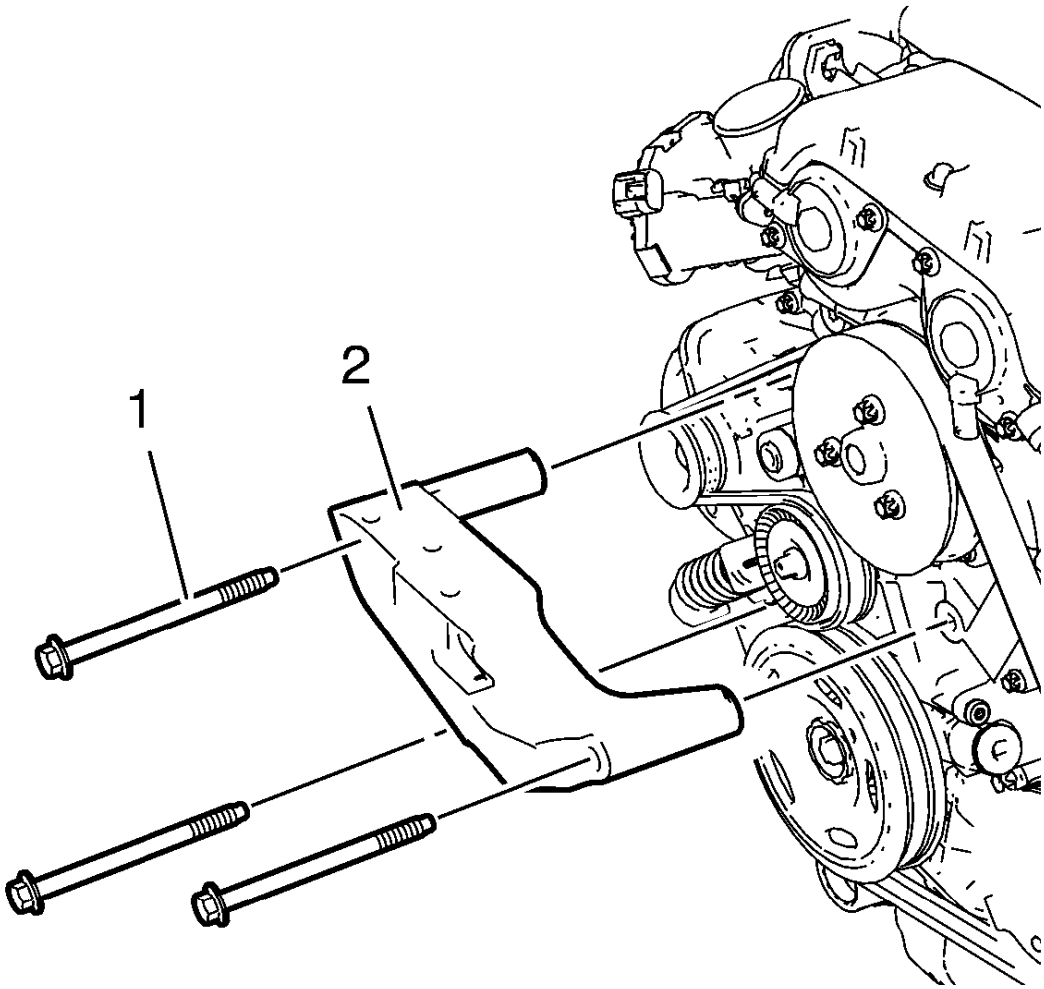

Fig. 55: Engine Mount Bracket And Bolts
Courtesy of GENERAL MOTORS COMPANY

4. Remove and DISCARD the 3 engine mount bracket bolts (1).
5. Remove the engine mount bracket (2).

Installation Procedure

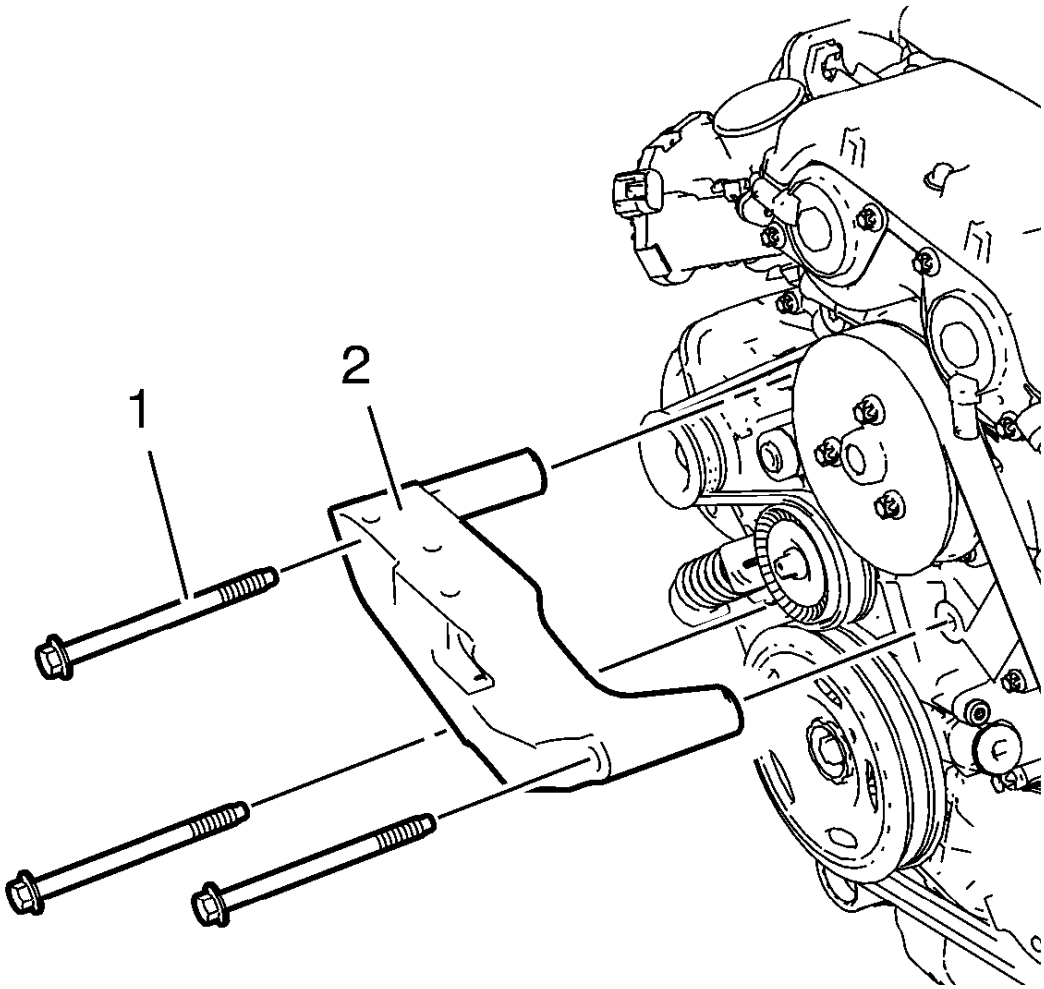

Fig. 56: Engine Mount Bracket And Bolts
Courtesy of GENERAL MOTORS COMPANY

1. Install the engine mount bracket (2).

CAUTION: Refer to Fastener Caution .

CAUTION: Refer to Torque-to-Yield Fastener Caution .

2. Install the 3 NEW engine mount bracket bolts (1) and tighten to 60 N.m (45 lb ft) + 45-60°.
3. Install the engine mount. Refer to **Engine Mount Replacement - Right Side**.
4. Install the air cleaner assembly. Refer to **Air Cleaner Assembly Replacement** .
5. Close the hood.

AIR CONDITIONING COMPRESSOR BRACKET REPLACEMENT

Removal Procedure

1. Open the hood.
2. Raise and support the vehicle. Refer to **Lifting and Jacking the Vehicle** .
3. Remove the right front wheelhouse liner. Refer to **Front Wheelhouse Liner Replacement** .
4. Remove the drive belt from crankshaft balancer, drive belt tensioner and air conditioning compressor. Refer to **Drive Belt Replacement**.

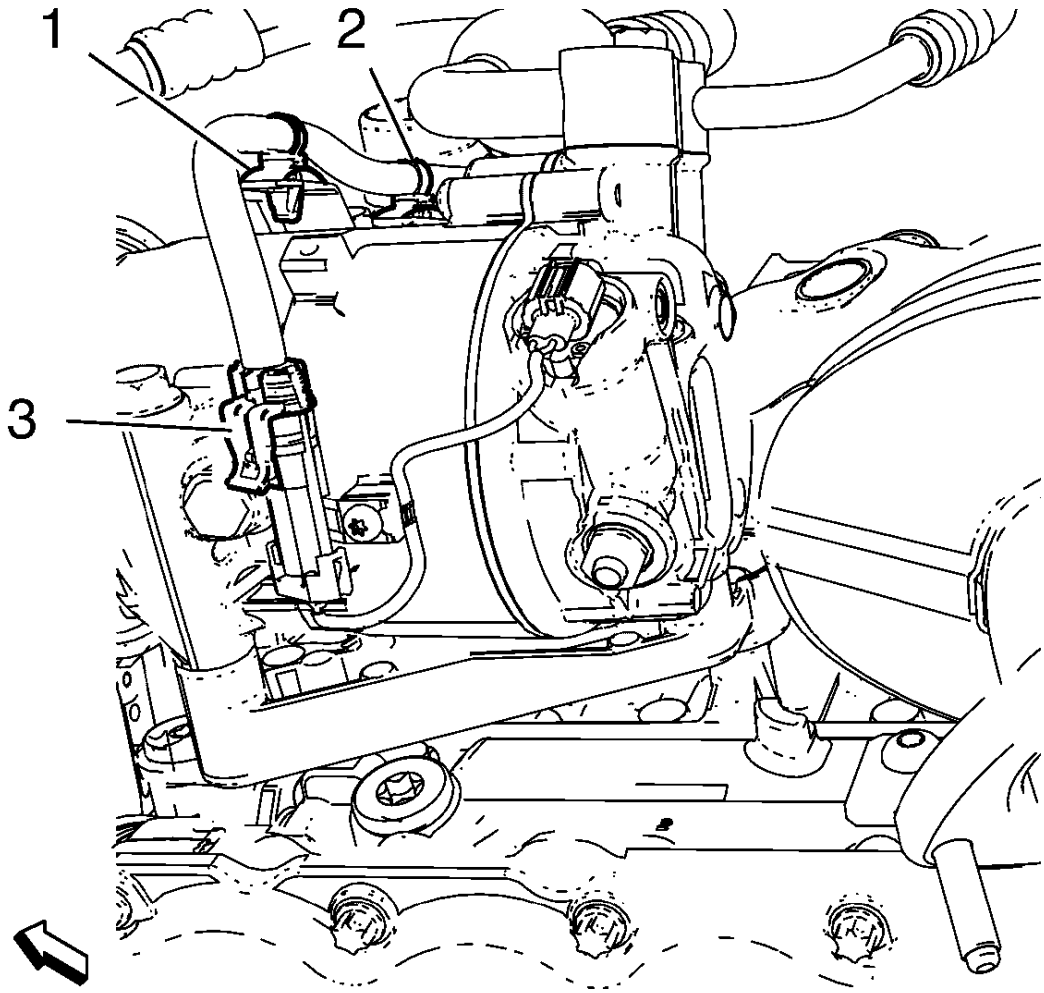

Fig. 57: Wiring Harness Retainer Clips And Plug
Courtesy of GENERAL MOTORS COMPANY

5. Disconnect the air conditioning compressor wiring harness plug (3).
6. Unclip the air conditioning compressor wiring harness from the 2 retainer clips (1) and (2).

NOTE: Do not remove the air conditioning compressor and condenser hose from air conditioning compressor.

7. Remove the air conditioning compressor from the air conditioning compressor bracket and hang aside. Refer to **Air Conditioning Compressor Replacement (1.8L LUW and LWE)** , **Air Conditioning Compressor Replacement (1.4L LUV)** .

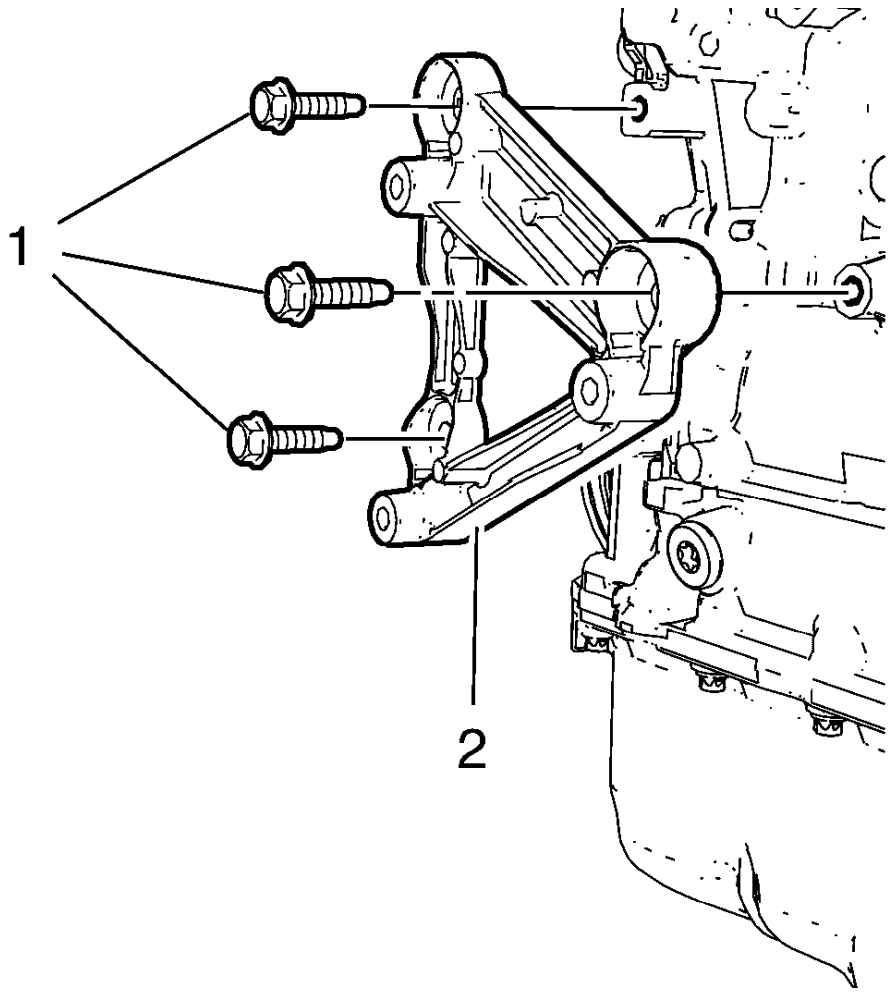

Fig. 58: Power Steering Pump Bracket/Air Conditioning Compressor Bracket And Bolts
Courtesy of GENERAL MOTORS COMPANY

8. Remove the 3 air conditioning compressor bracket bolts (1).
9. Remove the air conditioning compressor bracket (2).

Installation Procedure

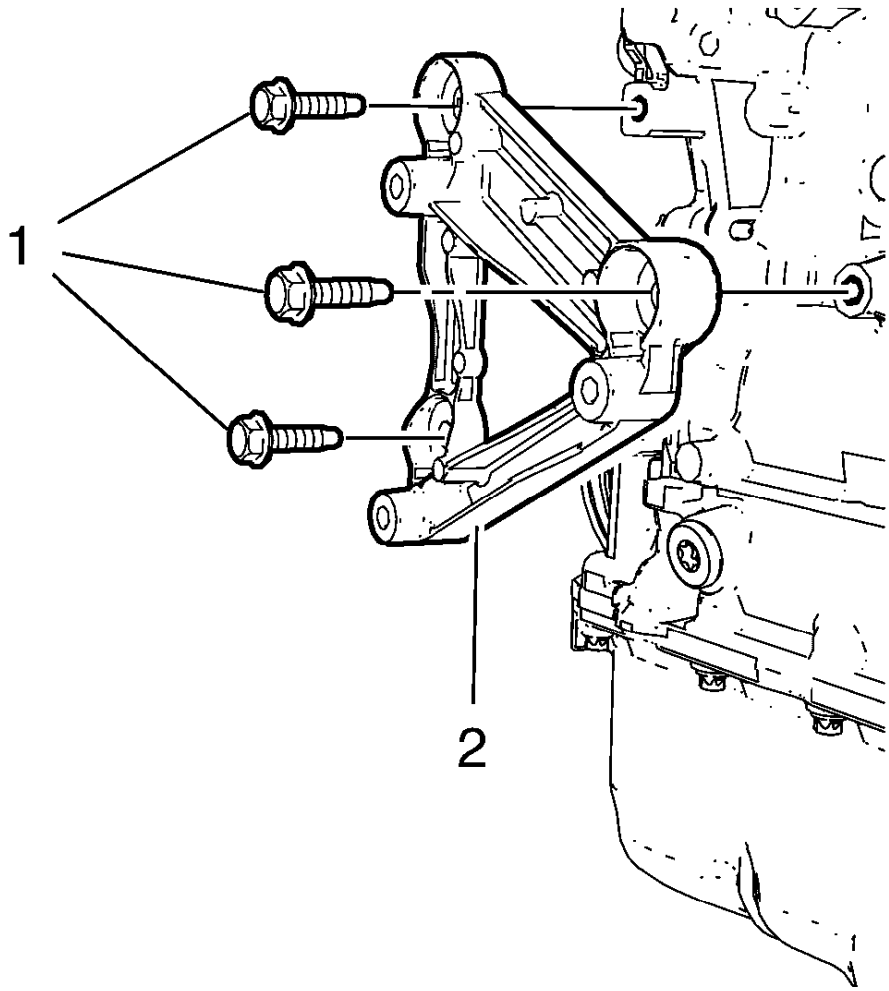

Fig. 59: Power Steering Pump Bracket/Air Conditioning Compressor Bracket And Bolts
Courtesy of GENERAL MOTORS COMPANY

1. Install the air conditioning compressor and power steering pump bracket (2).

CAUTION: Refer to Fastener Caution .

2. Install the 3 air conditioning compressor bracket bolts (1) and tighten to 22 N.m (16 lb ft).
3. Install the air conditioning compressor to air conditioning compressor bracket. Refer to **Air Conditioning Compressor Replacement (1.4L LUV)** .
4. Install the drive belt to crankshaft balancer, drive belt tensioner and air conditioning compressor. Refer to **Drive Belt Replacement**.
5. Install the right front wheelhouse liner. Refer to **Front Wheelhouse Liner Replacement** .
6. Lower the vehicle.

7. Close the hood.

INTAKE MANIFOLD REPLACEMENT

Special Tools

EN-34730-91 Pressure Tester

For equivalent regional tools, refer to **Special Tools**.

Removal Procedure

1. Open hood.
2. Disconnect battery negative cable. Refer to **Battery Negative Cable Disconnection and Connection** .
3. Remove engine sight shield.

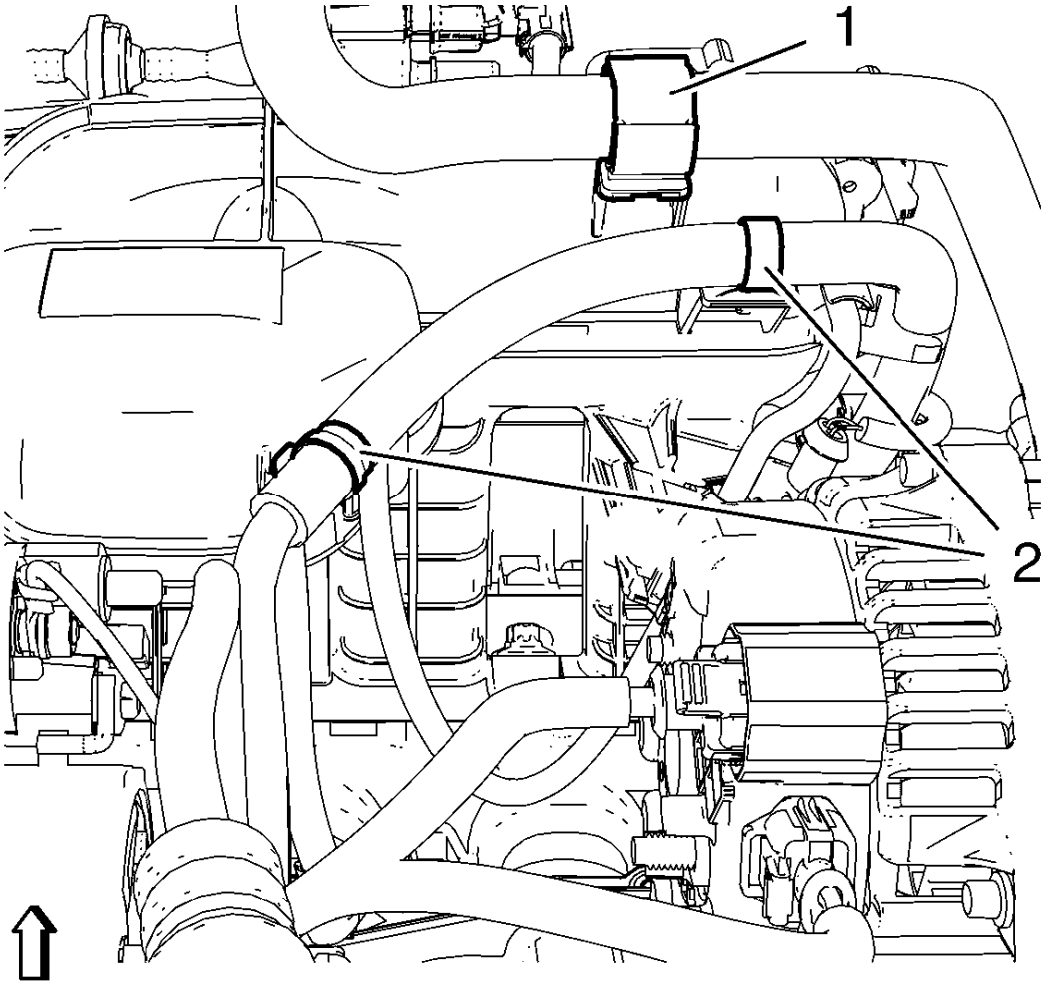

Fig. 60: Heater Outlet Hose And ECM Wiring Harness Retainer Clips

Courtesy of GENERAL MOTORS COMPANY

4. Unclip the heater outlet hose from retainer clip (1).
5. Unclip the engine control module wiring harness from 2 retainer clips (2).
6. Remove the charge air cooler outlet air hose from the throttle body. Refer to **Charge Air Cooler Outlet Air Hose Replacement (Automatic Transmission)** , **Charge Air Cooler Outlet Air Hose Replacement (Manual Transmission)** .

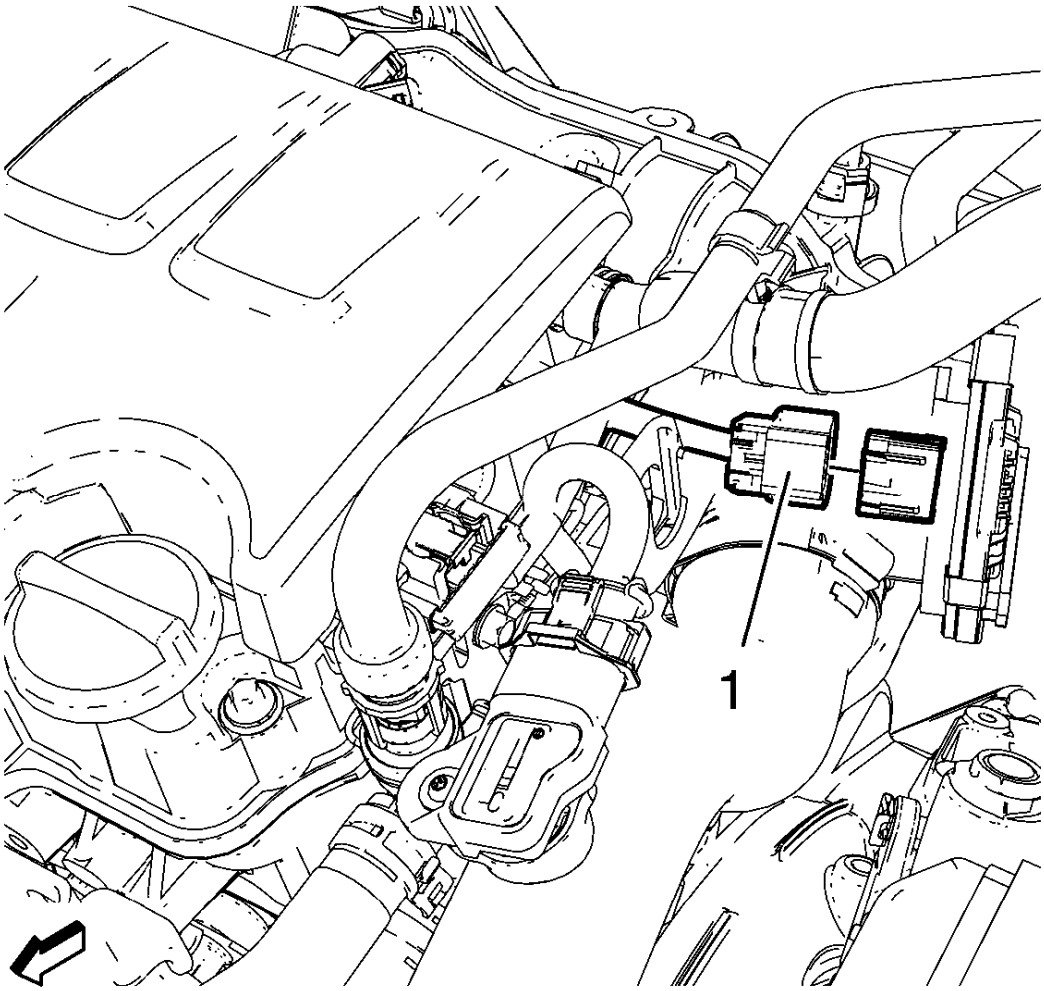

Fig. 61: Throttle Body Wiring Harness Plug
Courtesy of GENERAL MOTORS COMPANY

7. Disconnect the throttle body wiring harness plug (1).

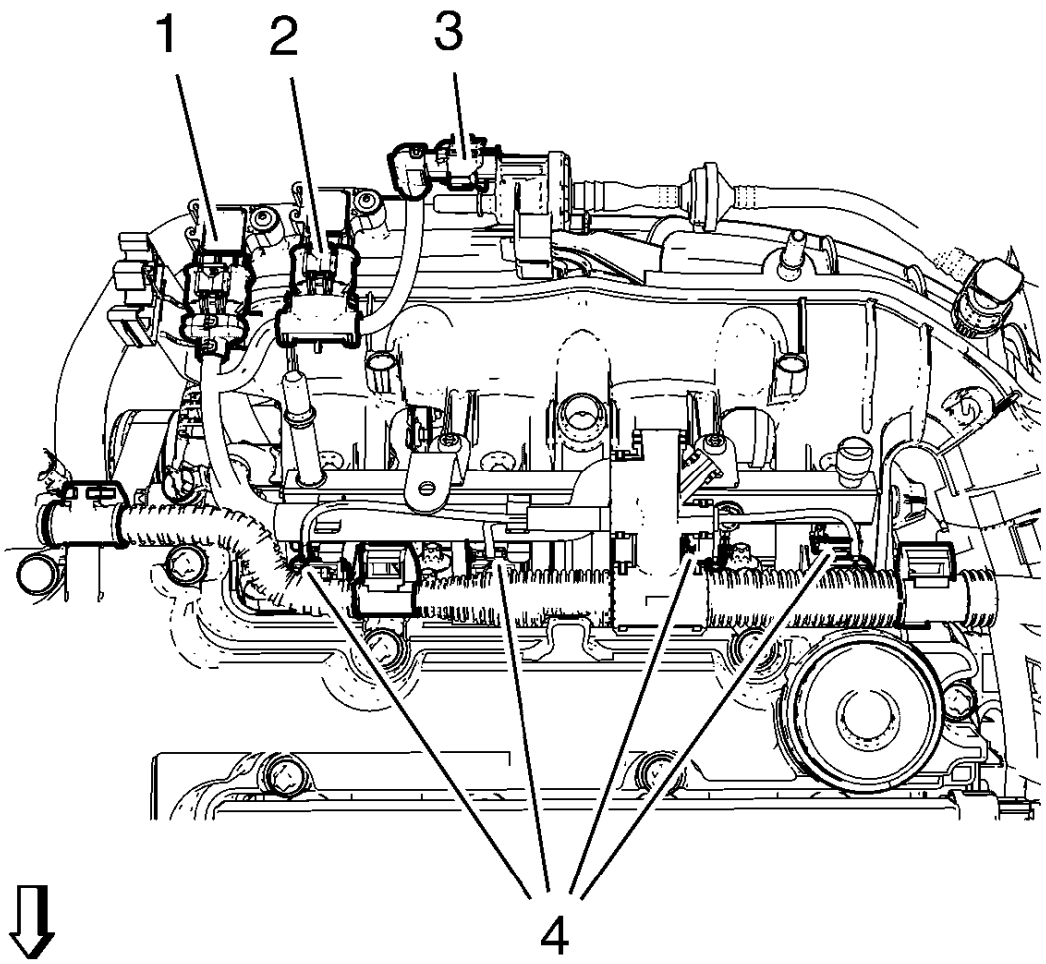

Fig. 62: Wiring Harness Plugs
Courtesy of GENERAL MOTORS COMPANY

8. Disconnect the evaporative emission canister purge solenoid valve wiring harness plug (3).

NOTE: Make note of the installed position of the manifold absolute pressure sensor wiring harness plugs to ensure they will be connected in their original position.

9. Disconnect the 2 manifold absolute pressure sensor wiring harness plugs (1) and (2).
10. Disconnect the 4 fuel injector wiring harness plugs (4).
11. Unclip the engine control module wiring harness from the camshaft cover.

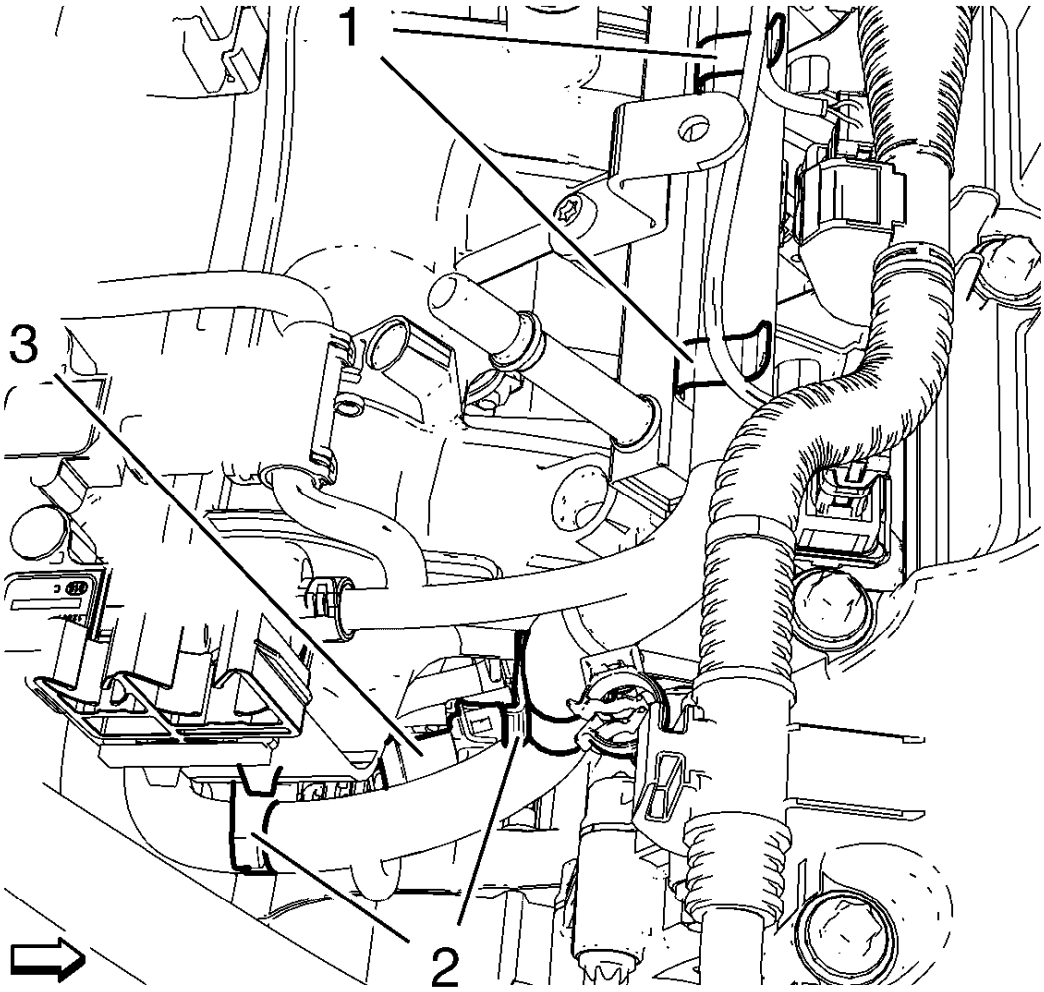

Fig. 63: Turbocharger Wastegate Regulator Solenoid Valve Wiring Harness Plug, Intake Manifold And Fuel Injection Rail Retainer Clips
Courtesy of GENERAL MOTORS COMPANY

12. Disconnect the turbocharger wastegate regulator solenoid valve wiring harness plug (3).
13. Unclip the engine control module wiring harness from 2 intake manifold retainer clips (2) and from 2 fuel injection rail retainer clips (1).

WARNING: Gasoline or gasoline vapors are highly flammable. A fire could occur if an ignition source is present. Never drain or store gasoline or diesel fuel in an open container, due to the possibility of fire or explosion. Have a dry chemical (Class B) fire extinguisher nearby.

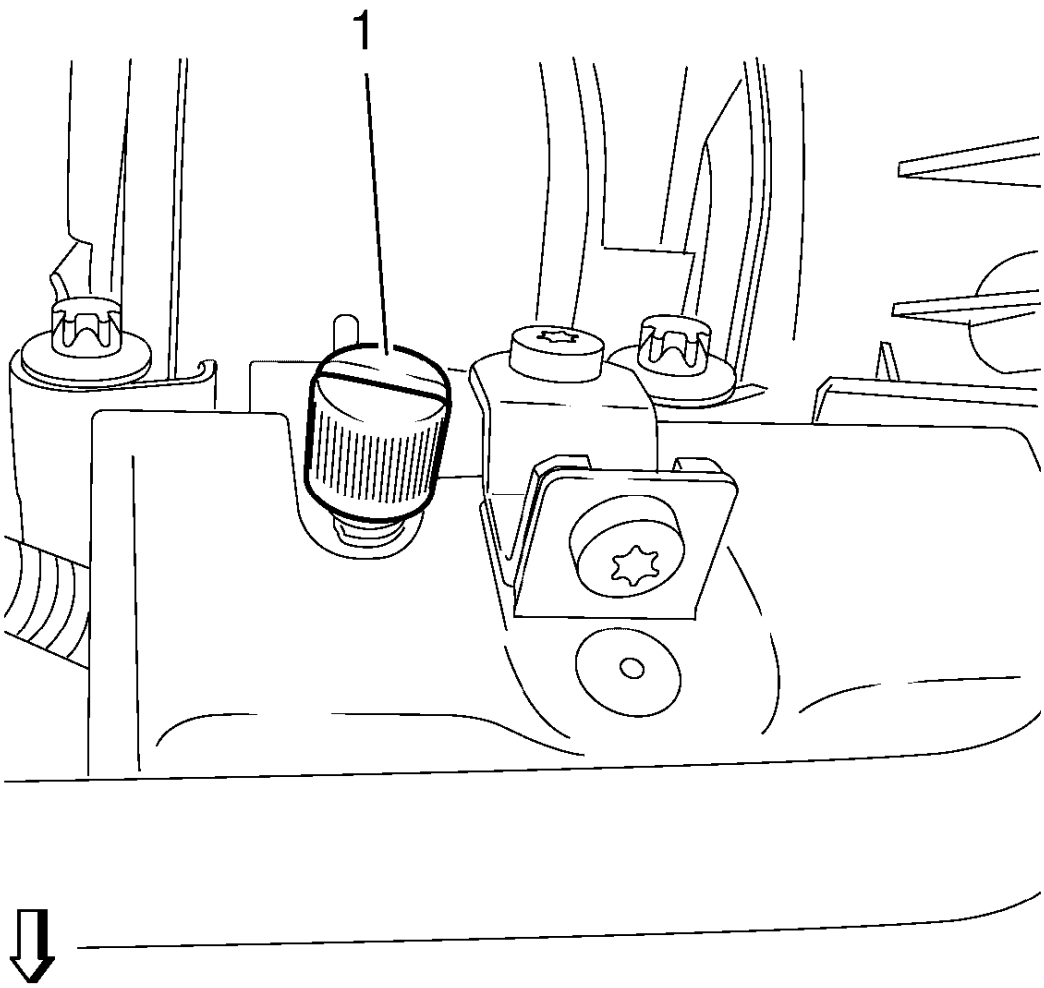

Fig. 64: Fuel Injector Rail Cap
Courtesy of GENERAL MOTORS COMPANY

14. Remove fuel injector rail cap (1).

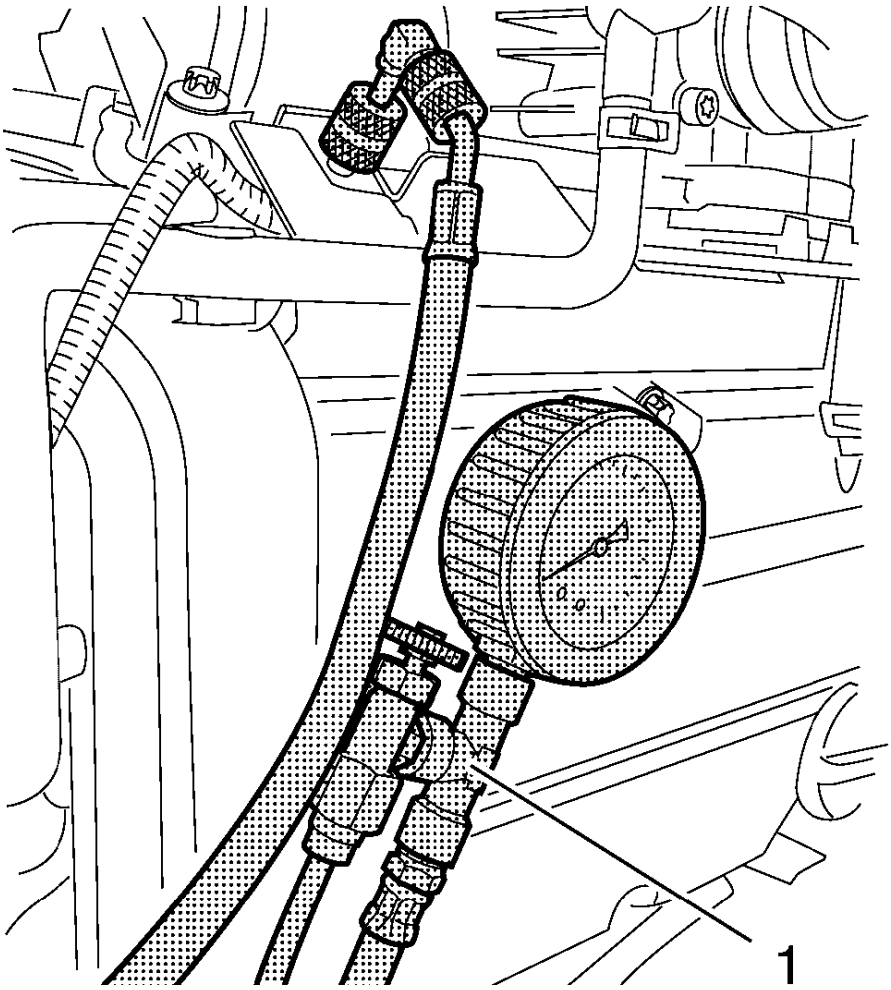

Fig. 65: Pressure Tester
Courtesy of GENERAL MOTORS COMPANY

15. Relieve the fuel system pressure. Use **EN-34730-91** pressure tester (1).

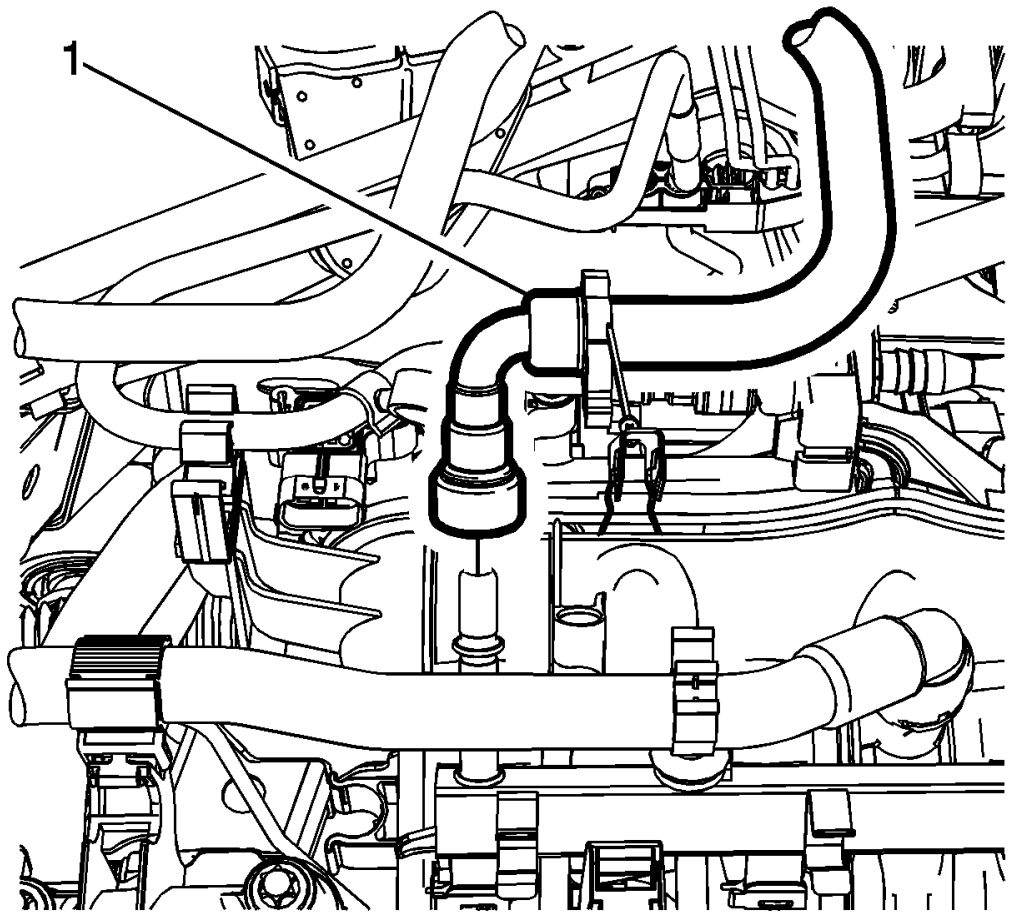

Fig. 66: Fuel Feed Pipe
Courtesy of GENERAL MOTORS COMPANY

16. Disconnect the fuel feed pipe (1) from the fuel rail. Refer to **Metal Collar Quick Connect Fitting Service** .
17. Unclip fuel feed pipe from the retainer clip.
18. Disconnect the positive crankcase ventilation pipe from the intake manifold. Refer to **Positive Crankcase Ventilation Hose/Pipe/Tube Replacement**

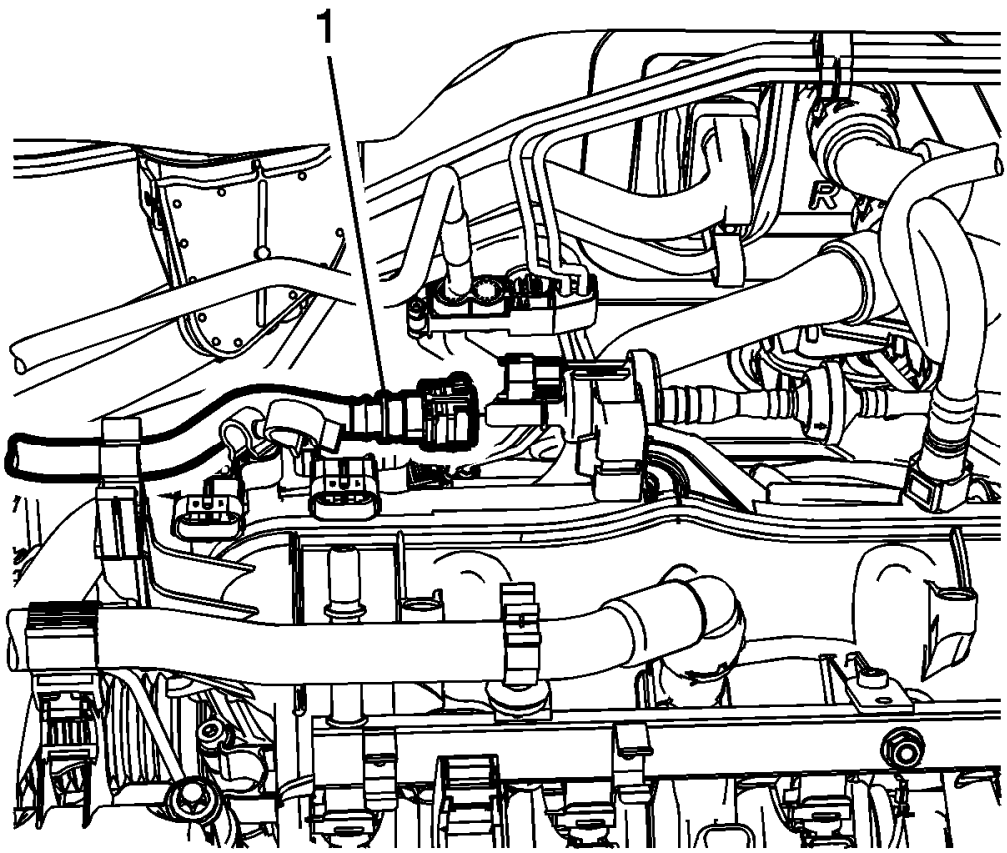

Fig. 67: Fuel Ventilation Pipe
Courtesy of GENERAL MOTORS COMPANY

19. Disconnect the fuel ventilation pipe (1) from the evaporative emission canister purge solenoid valve.
20. Unclip the fuel ventilation pipe from the retainer clip.

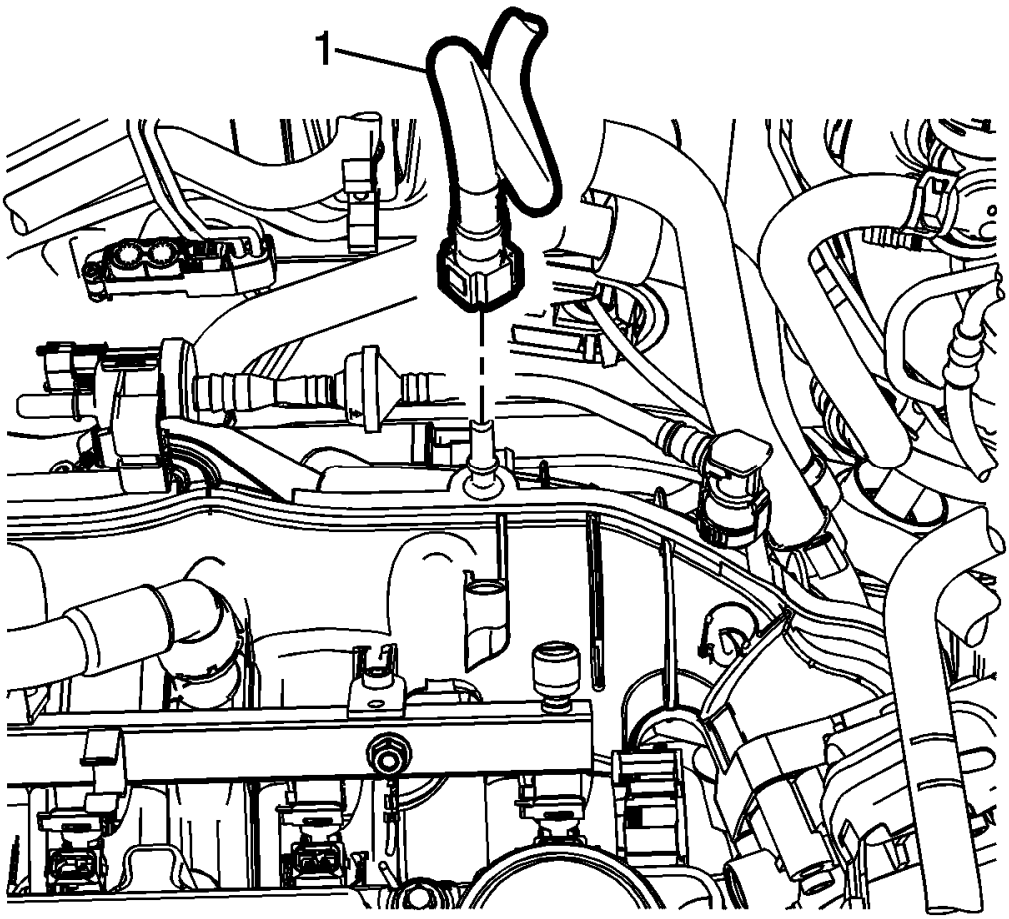

Fig. 68: Brake Booster Vacuum Pipe
Courtesy of GENERAL MOTORS COMPANY

21. Disconnect the brake booster vacuum pipe (1) from intake manifold.

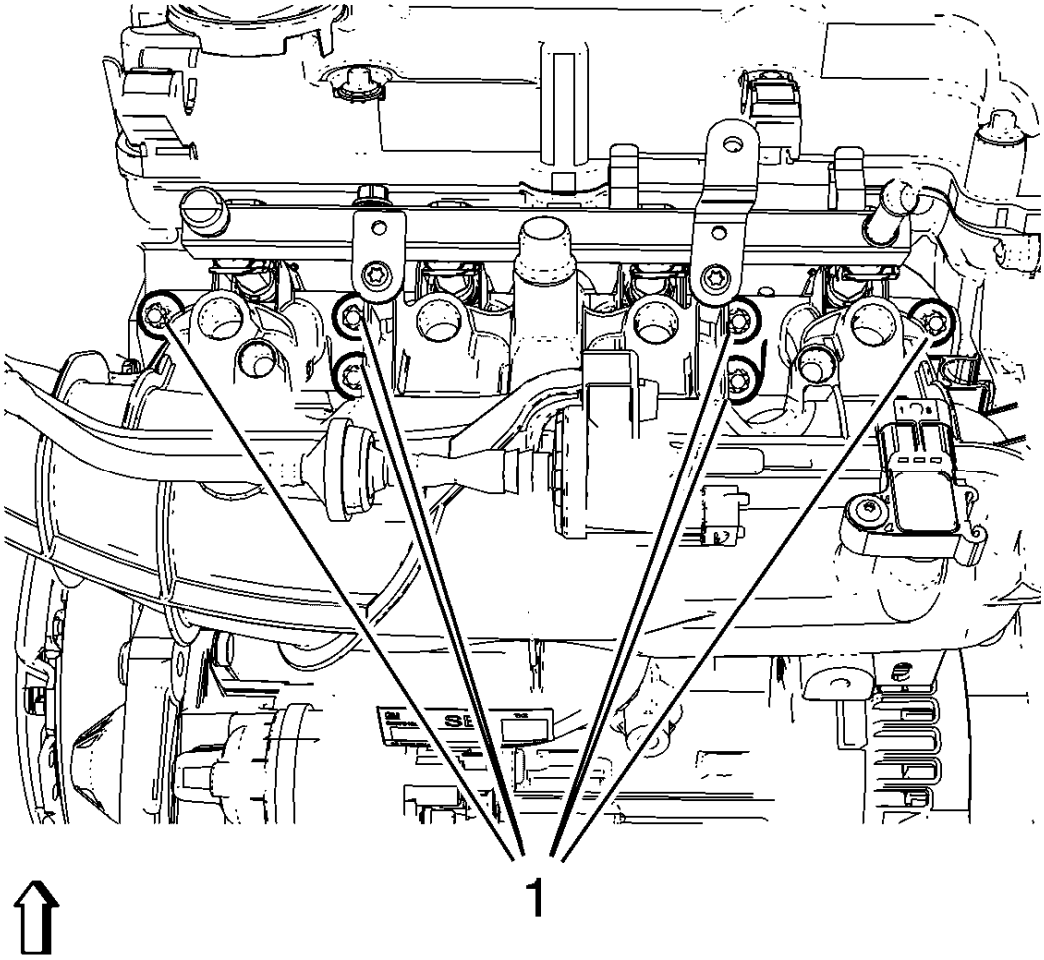

Fig. 69: Intake Manifold Bolts
Courtesy of GENERAL MOTORS COMPANY

NOTE: Intake manifold bolts remain in intake manifold. Note the installation of the fuel rail ground strap for proper installation.

22. Remove the 6 intake manifold bolts (1).

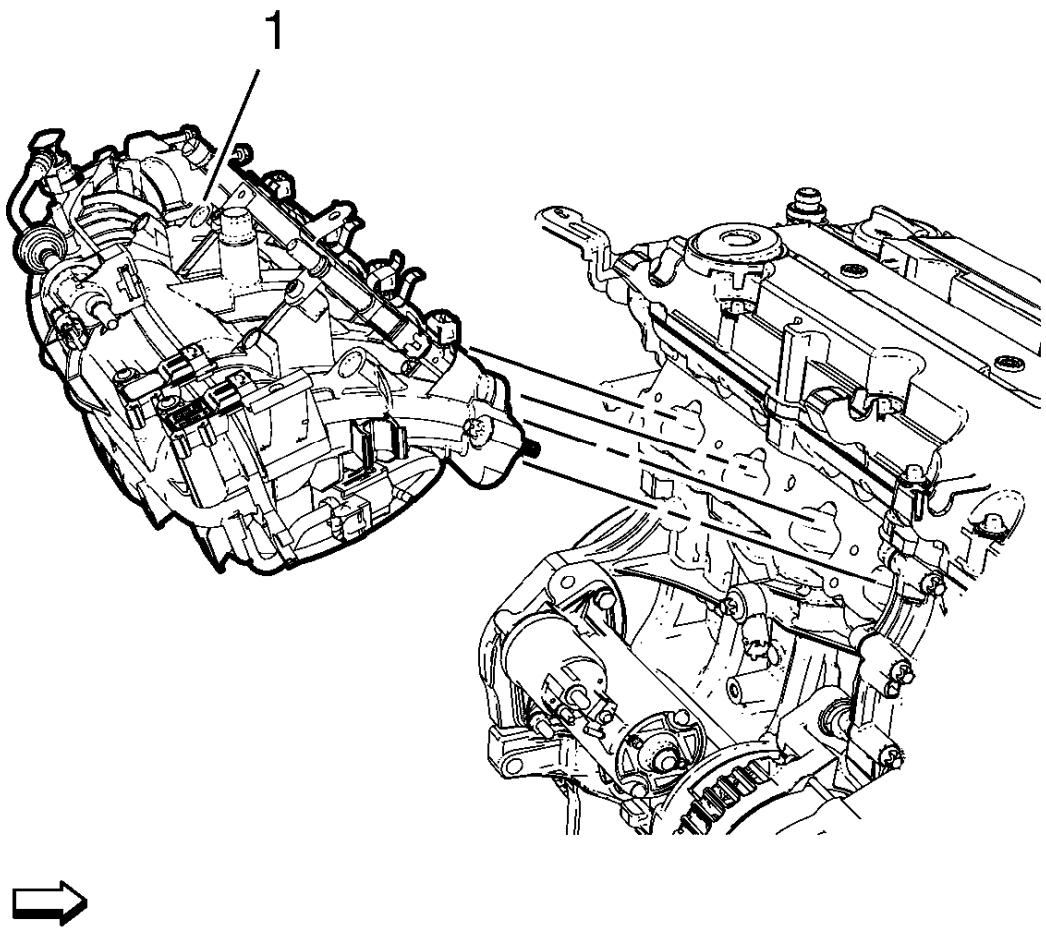

Fig. 70: Intake Manifold
Courtesy of GENERAL MOTORS COMPANY

23. Remove the intake manifold (1).
24. Remove and DISCARD the intake manifold gasket.
25. Remove the assembly parts from the intake manifold as necessary. Refer to **Intake Manifold Disassemble**.

Installation Procedure

1. Install the assembly parts to the intake manifold as necessary. Refer to **Intake Manifold Assemble**.
2. Clean the sealing surfaces.

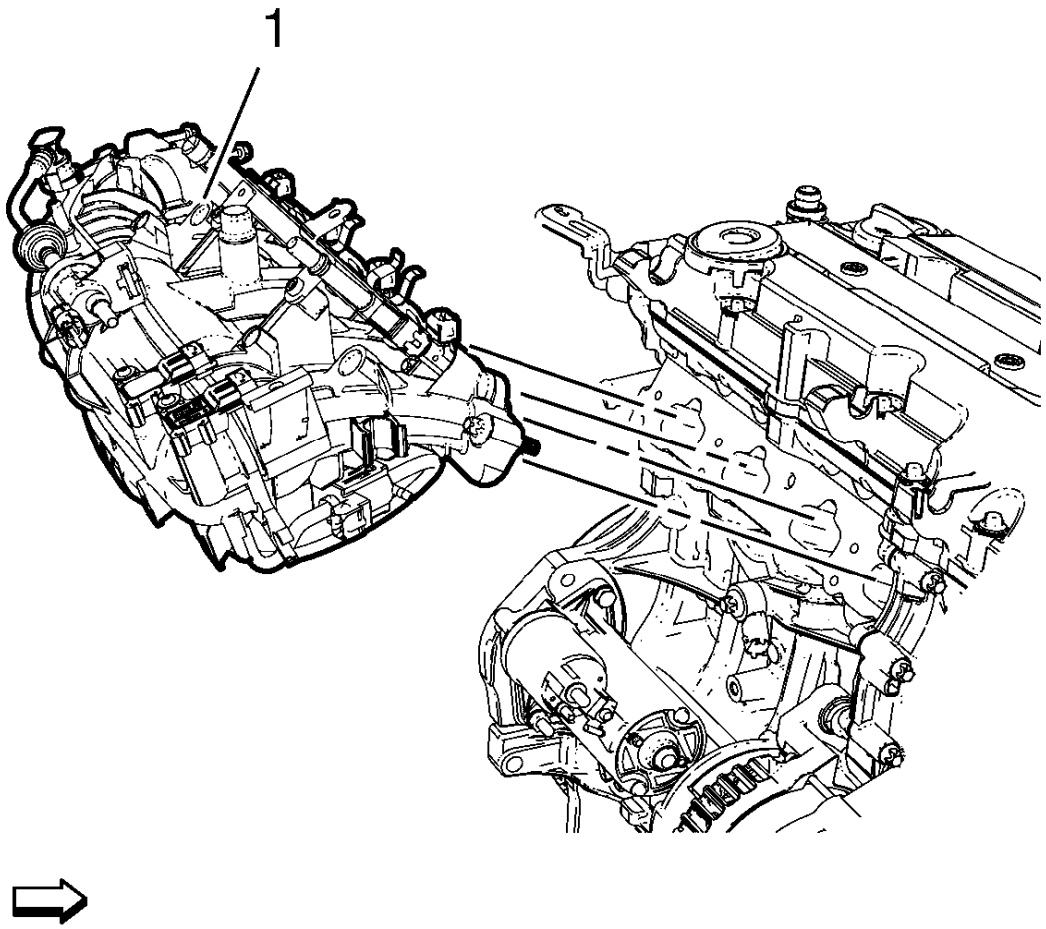

Fig. 71: Intake Manifold
Courtesy of GENERAL MOTORS COMPANY

3. Install the intake manifold (1) along with a NEW intake manifold gasket.

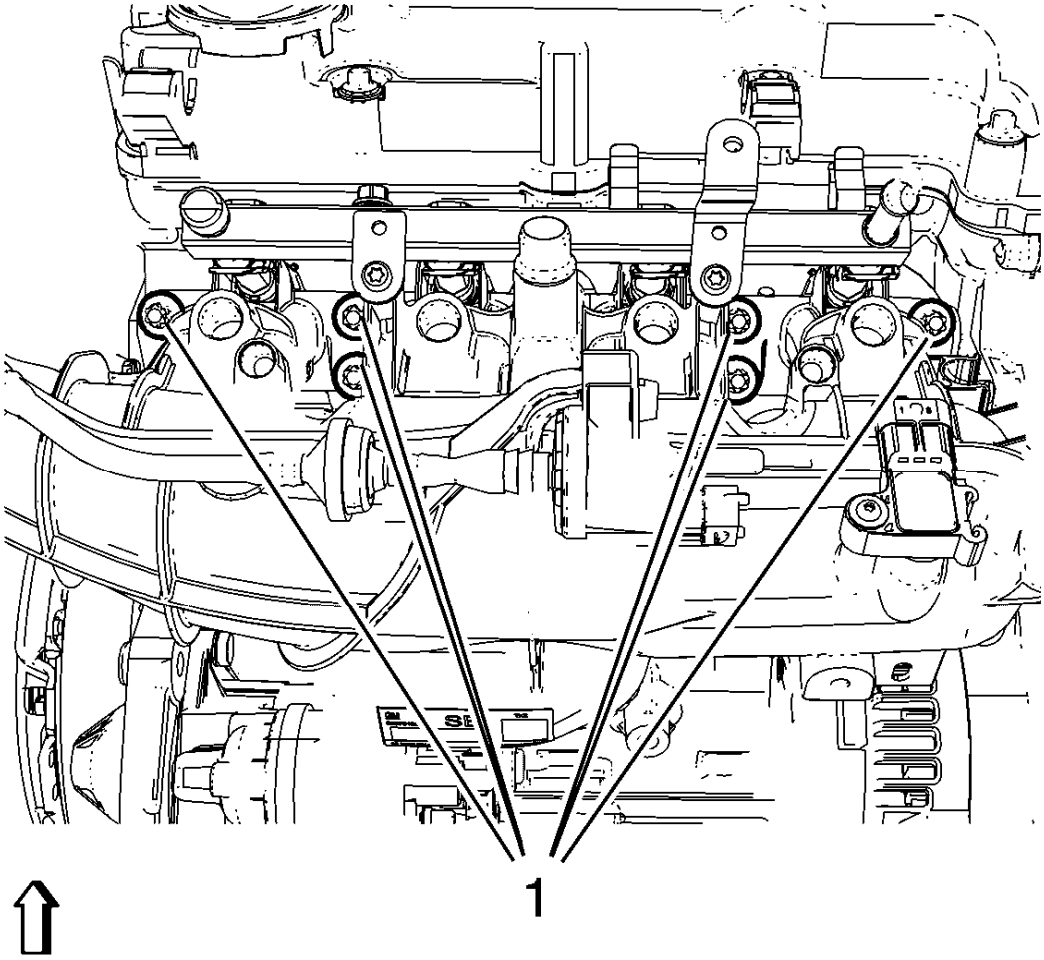

Fig. 72: Intake Manifold Bolts
Courtesy of GENERAL MOTORS COMPANY

CAUTION: Refer to Fastener Caution .

NOTE: Install the fuel rail ground strap to the appropriate intake manifold bolt.

4. Install the 6 intake manifold bolts (1) and tighten to 20 N.m(15 lb ft).

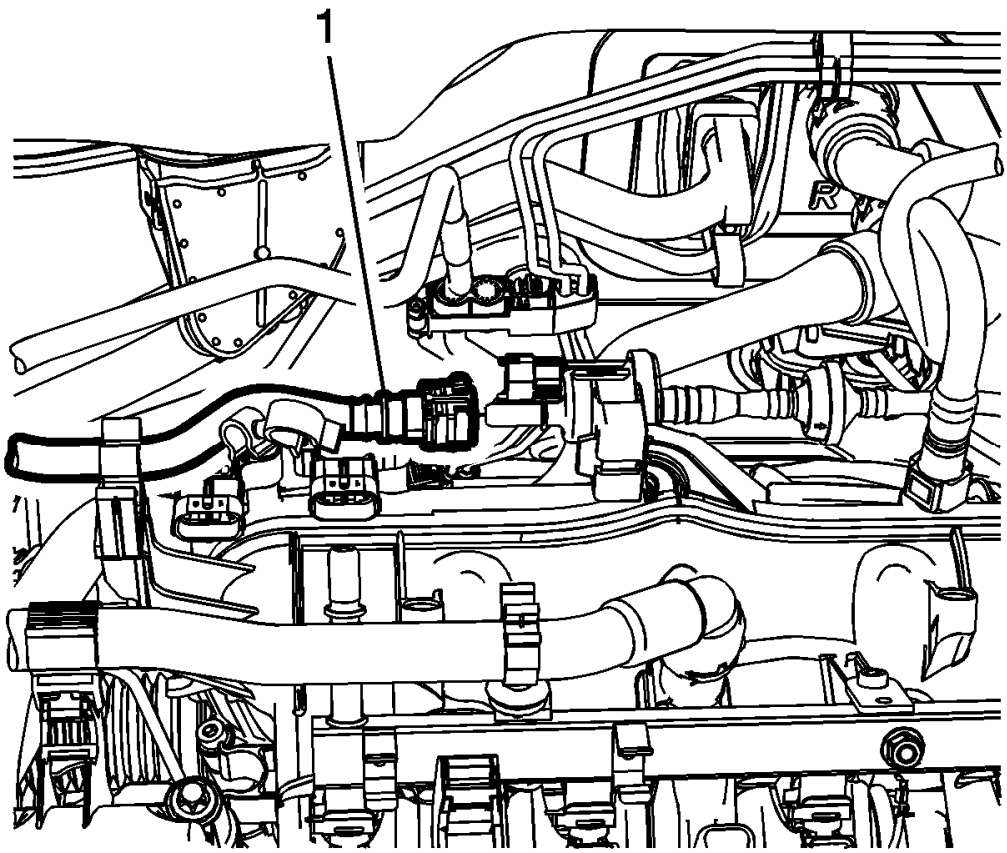

Fig. 73: Fuel Ventilation Pipe
Courtesy of GENERAL MOTORS COMPANY

5. Connect the fuel ventilation pipe (1) to the evaporative emission canister purge solenoid valve.
6. Clip in the fuel ventilation pipe to retainer clip.
7. Connect the positive crankcase ventilation pipe to the intake manifold. Refer to **Positive Crankcase Ventilation Hose/Pipe/Tube Replacement**

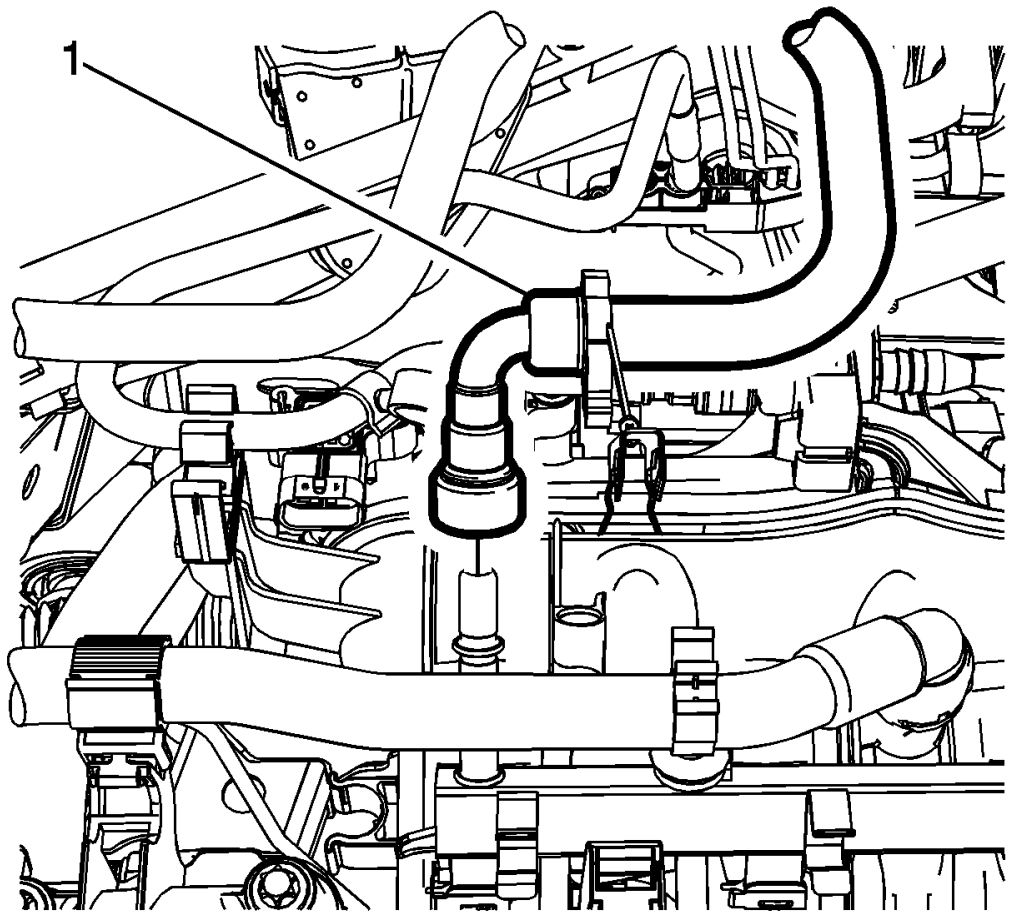

Fig. 74: Fuel Feed Pipe
Courtesy of GENERAL MOTORS COMPANY

8. Connect the fuel feed pipe (1) to the fuel rail. Refer to **Metal Collar Quick Connect Fitting Service** .
9. Clip in the fuel feed pipe to retainer clip.

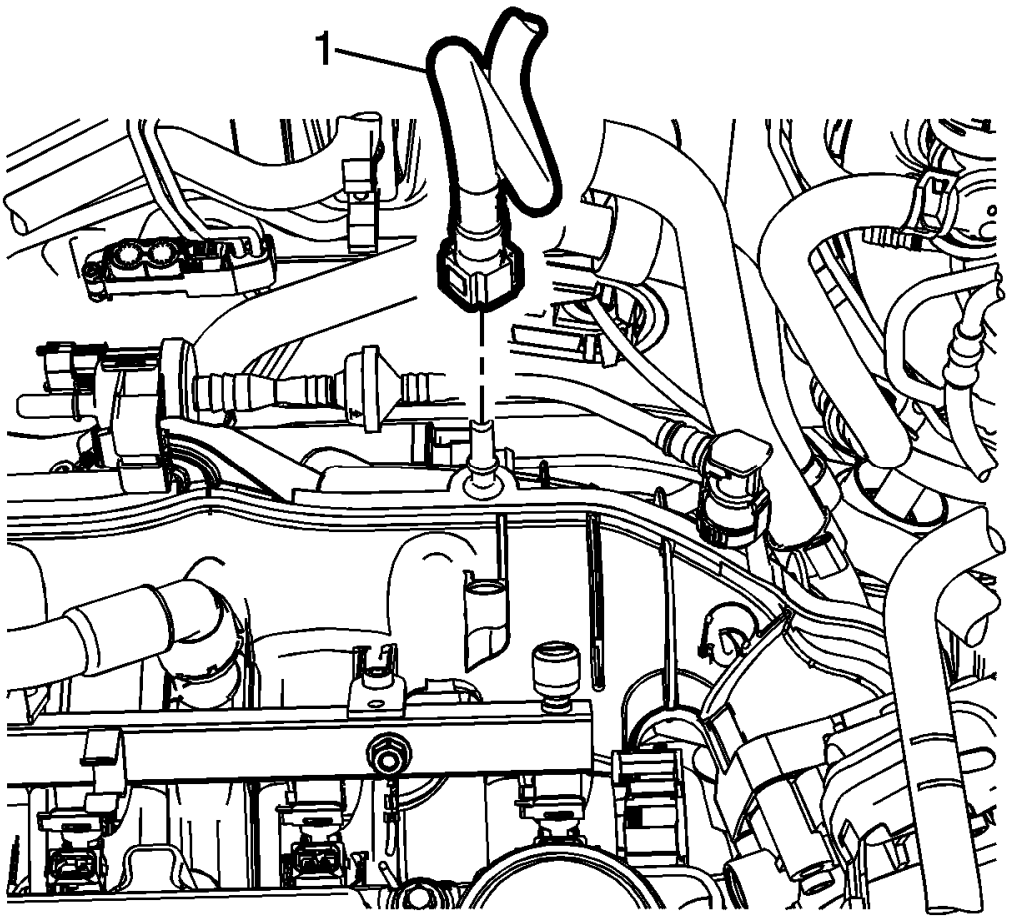

Fig. 75: Brake Booster Vacuum Pipe
Courtesy of GENERAL MOTORS COMPANY

10. Connect the brake booster vacuum pipe (1) to the intake manifold.

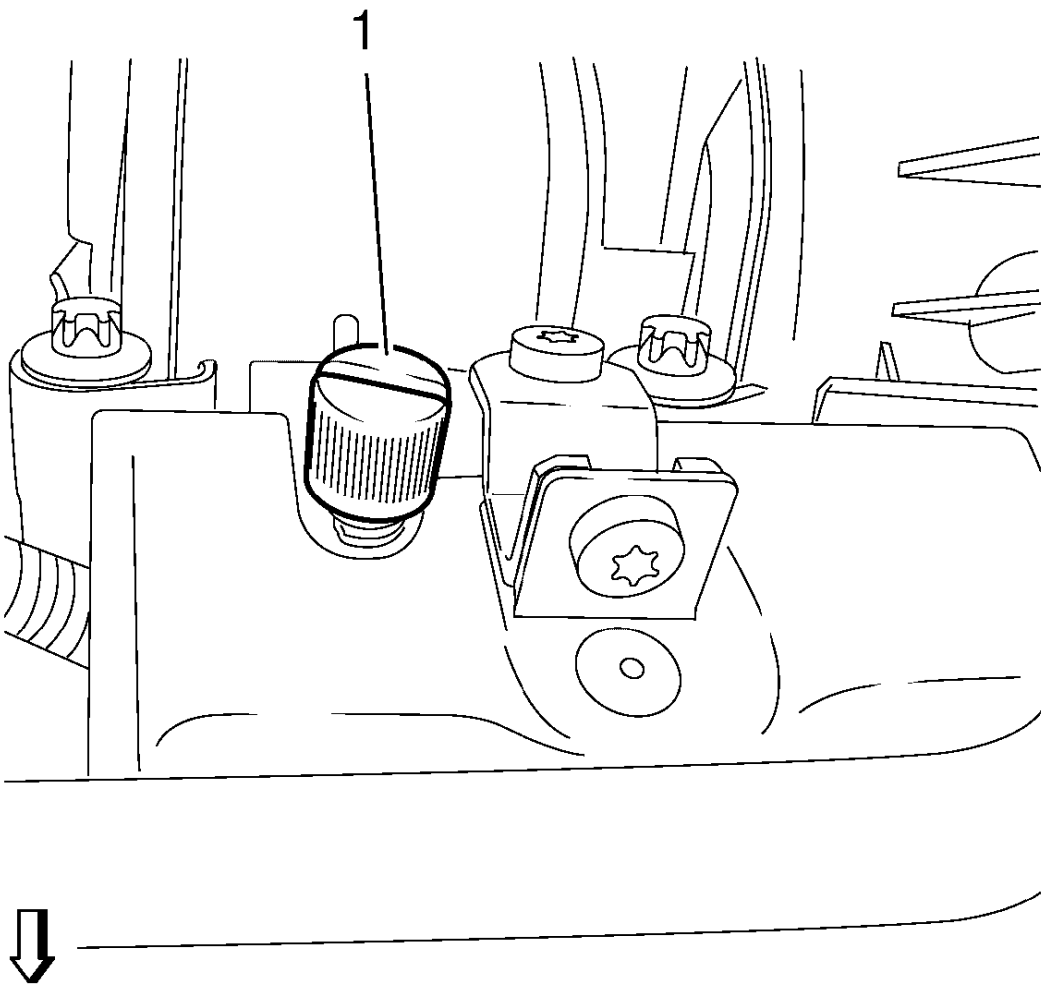

Fig. 76: Fuel Injector Rail Cap
Courtesy of GENERAL MOTORS COMPANY

11. Install fuel injector rail cap (1).

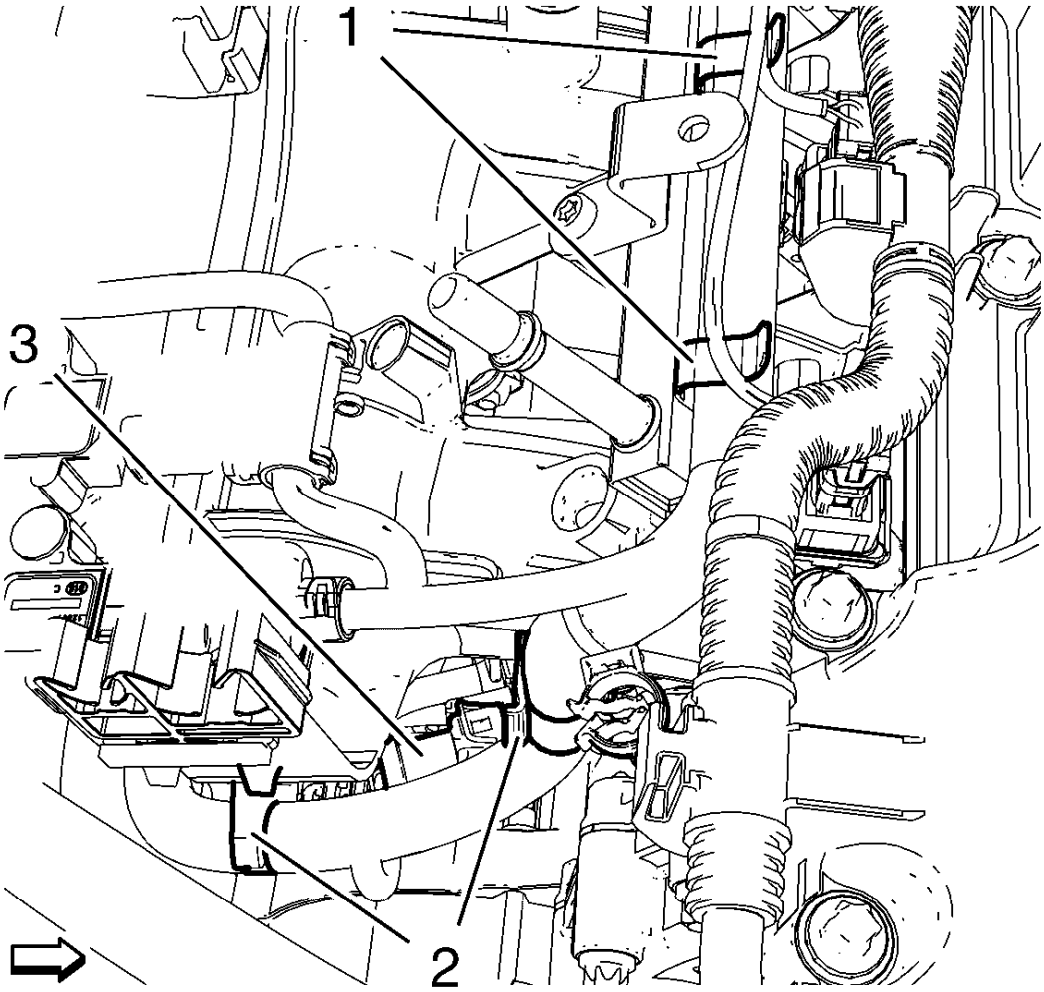

Fig. 77: Turbocharger Wastegate Regulator Solenoid Valve Wiring Harness Plug, Intake Manifold And Fuel Injection Rail Retainer Clips
Courtesy of GENERAL MOTORS COMPANY

12. Connect the turbocharger wastegate regulator solenoid valve wiring harness plug (3).
13. Clip in the engine control module wiring harness to 2 intake manifold retainer clips (2) and from 2 fuel injection rail retainer clips (1).

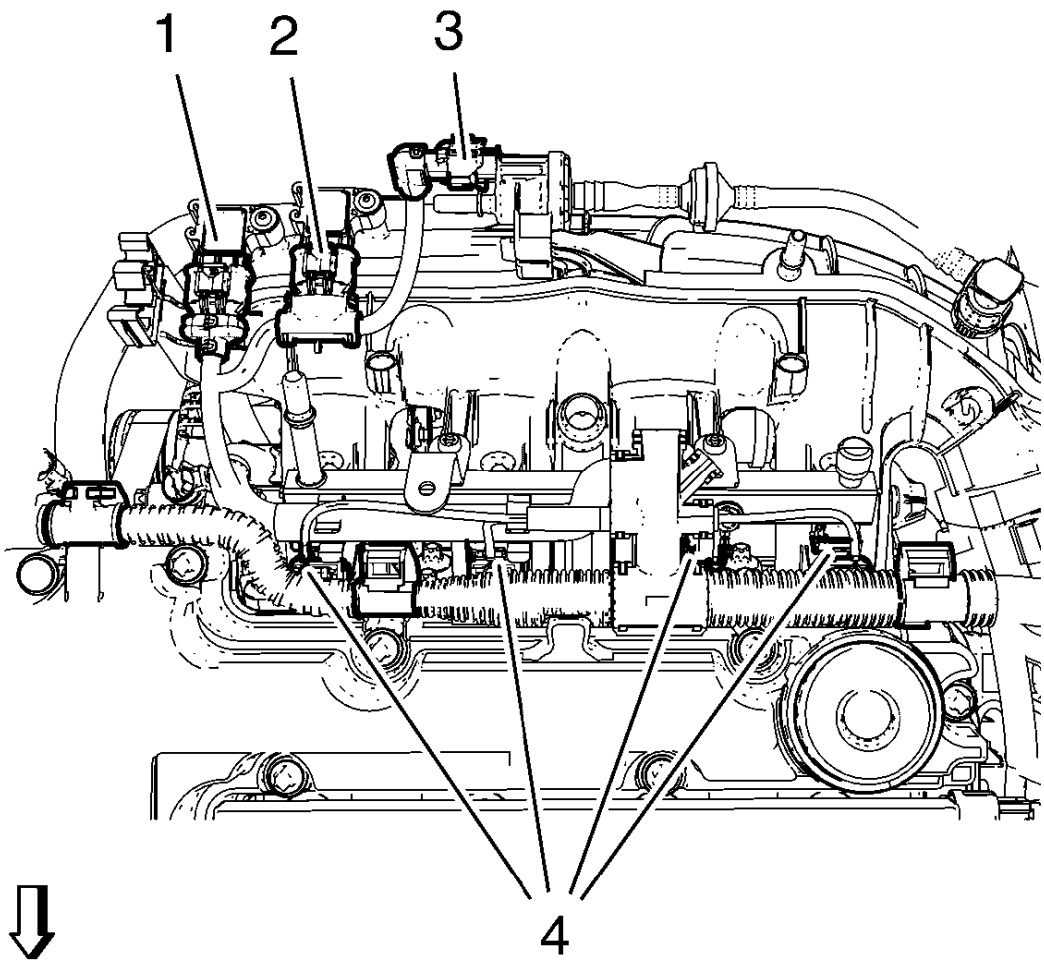

Fig. 78: Wiring Harness Plugs
Courtesy of GENERAL MOTORS COMPANY

14. Clip in the engine control module wiring harness to the camshaft cover.
15. Connect the 4 fuel injector wiring harness plugs (4).
16. Connect the 2 manifold absolute pressure sensor wiring harness plugs (1) and (2).
17. Disconnect the evaporative emission canister purge solenoid valve wiring harness plug (3).

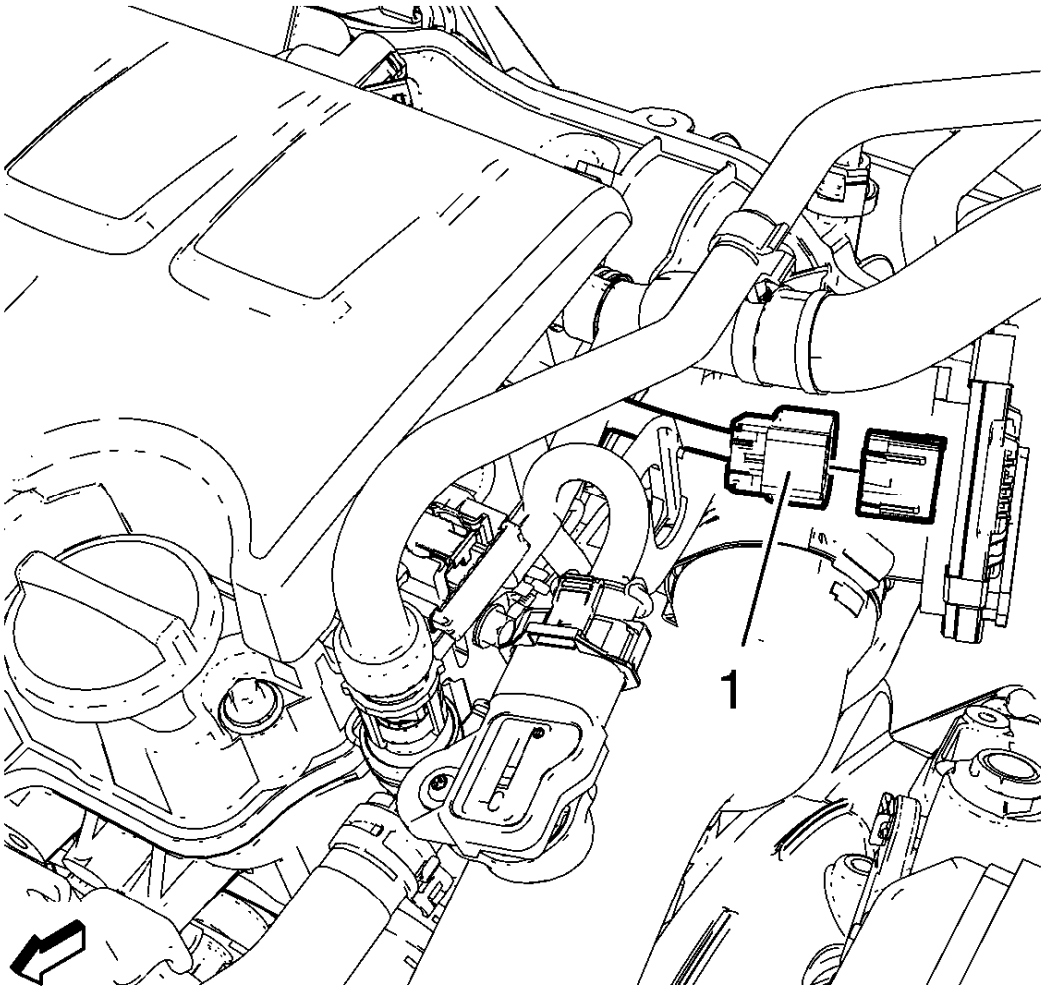

Fig. 79: Throttle Body Wiring Harness Plug
Courtesy of GENERAL MOTORS COMPANY

18. Connect the throttle body wiring harness plug (1).
19. Install the charge air cooler outlet air hose to the throttle body. Refer to **Charge Air Cooler Outlet Air Hose Replacement (Automatic Transmission)** , **Charge Air Cooler Outlet Air Hose Replacement (Manual Transmission)** .

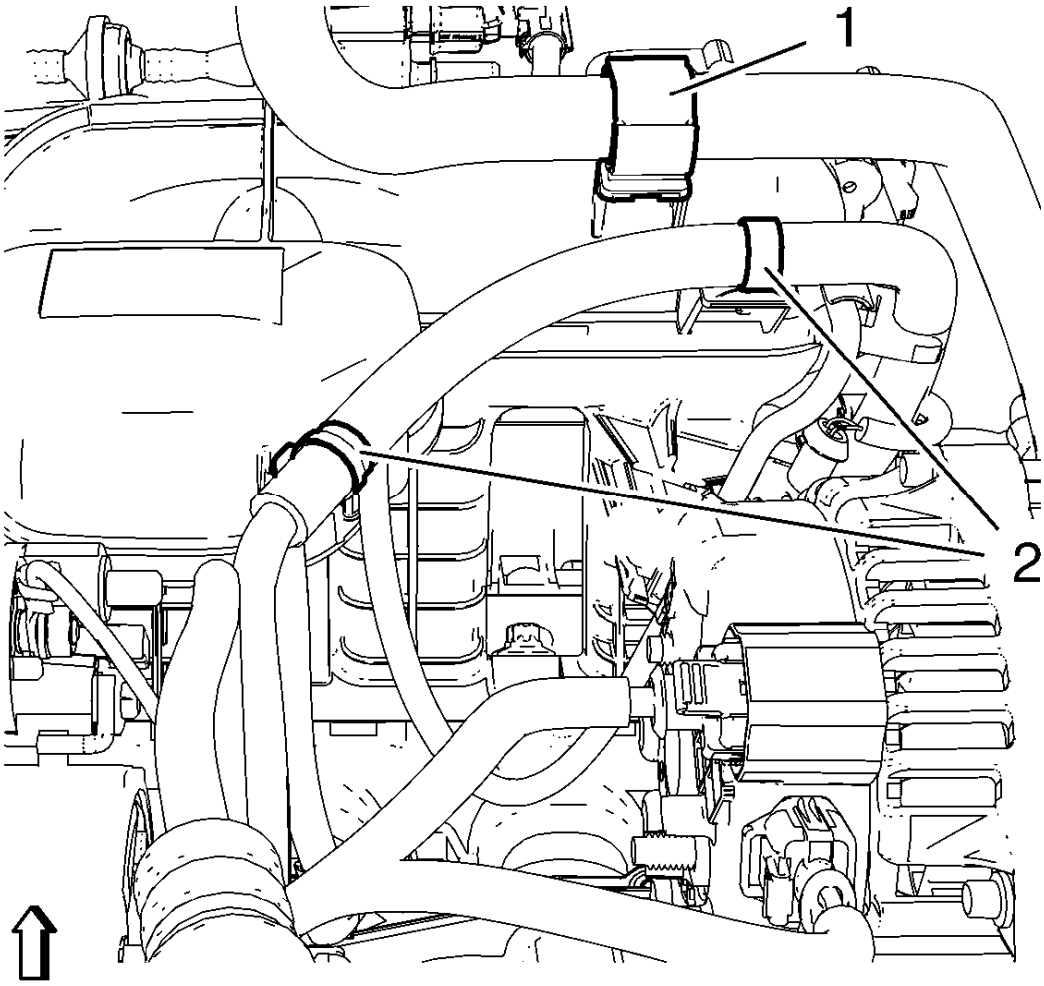

Fig. 80: Heater Outlet Hose And ECM Wiring Harness Retainer Clips
Courtesy of GENERAL MOTORS COMPANY

20. Clip in the heater outlet hose to retainer clip (1).
21. Clip in the engine control module wiring harness to 2 retainer clips (2).
22. Install the engine sight shield.
23. Connect the battery negative cable. Refer to **Battery Negative Cable Disconnection and Connection** .
24. Close the hood.

CAMSHAFT TIMING CHAIN REPLACEMENT

Special Tools

EN-955-10 Fixing Pin from **EN-955** Kit

For equivalent regional tools, refer to **Special Tools**.

Removal Procedure

1. Open the hood.
2. Remove the engine front cover with oil pump. Refer to **Engine Front Cover with Oil Pump Replacement**.

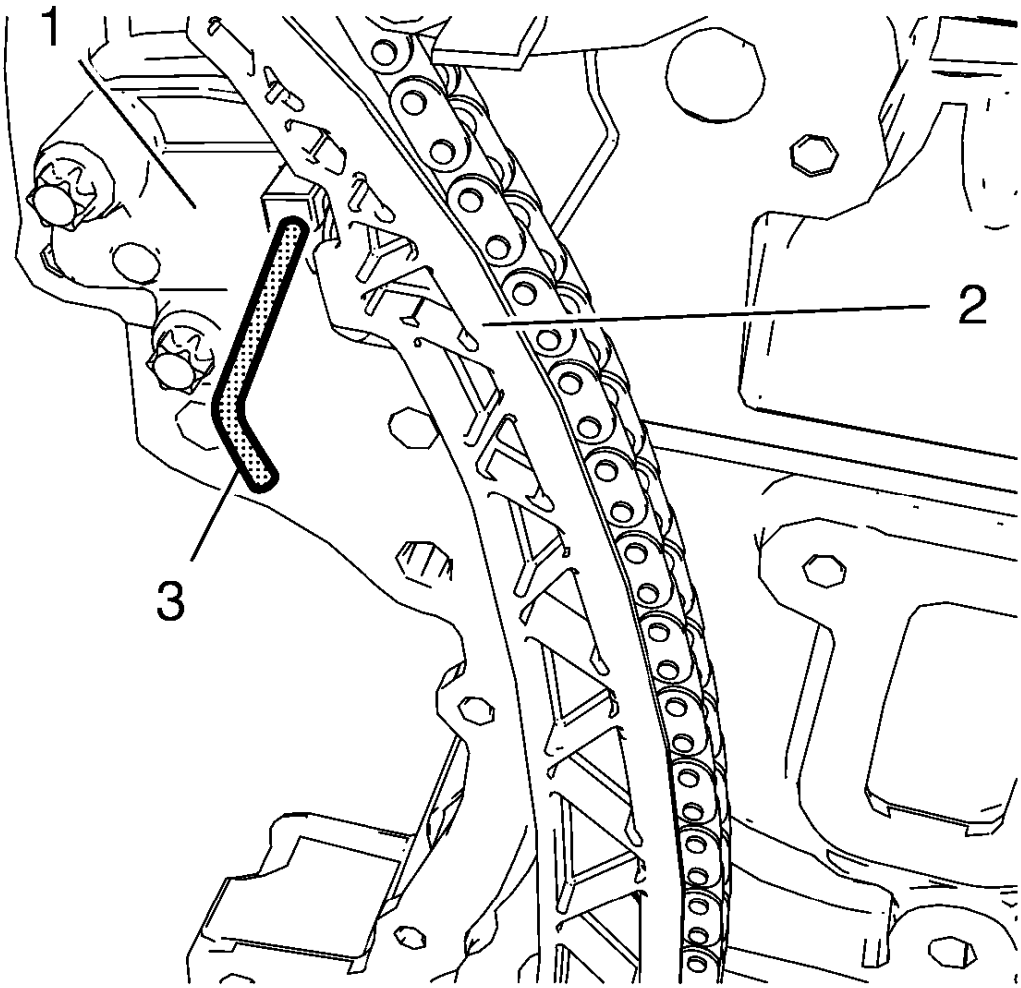

Fig. 81: Timing Chain And Timing Chain Tensioner
Courtesy of GENERAL MOTORS COMPANY

NOTE: **If EN-955-10 fixing pin can not be inserted, compress the timing chain tensioner further with the aid of a flat bladed tool to allow complete insertion of the pin.**

3. Push the timing chain (2) in direction to the timing chain tensioner (1) and secure the tensioner with **EN-955-10** fixing pin (3).

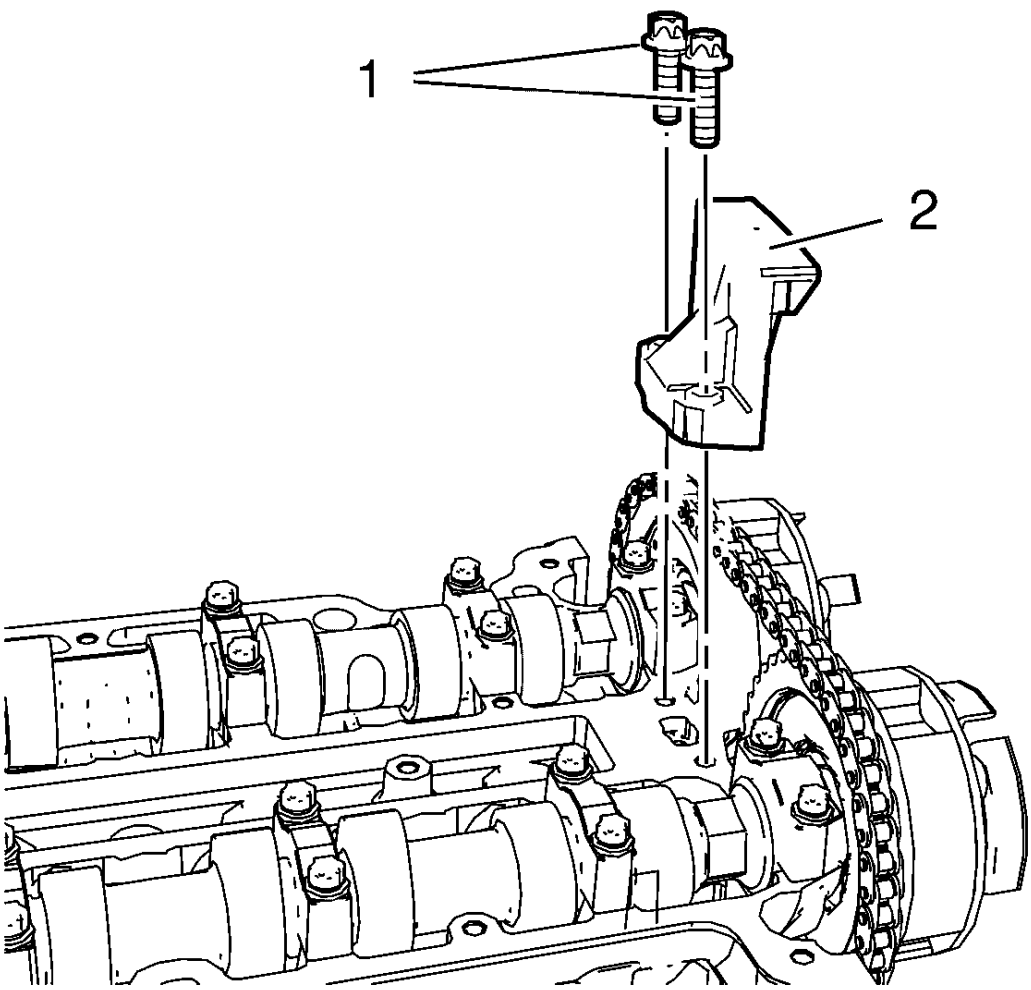

Fig. 82: Upper Timing Chain Guide And Bolts
Courtesy of GENERAL MOTORS COMPANY

4. Remove the 2 upper timing chain guide bolts (1).
5. Remove the upper timing chain guide (2).

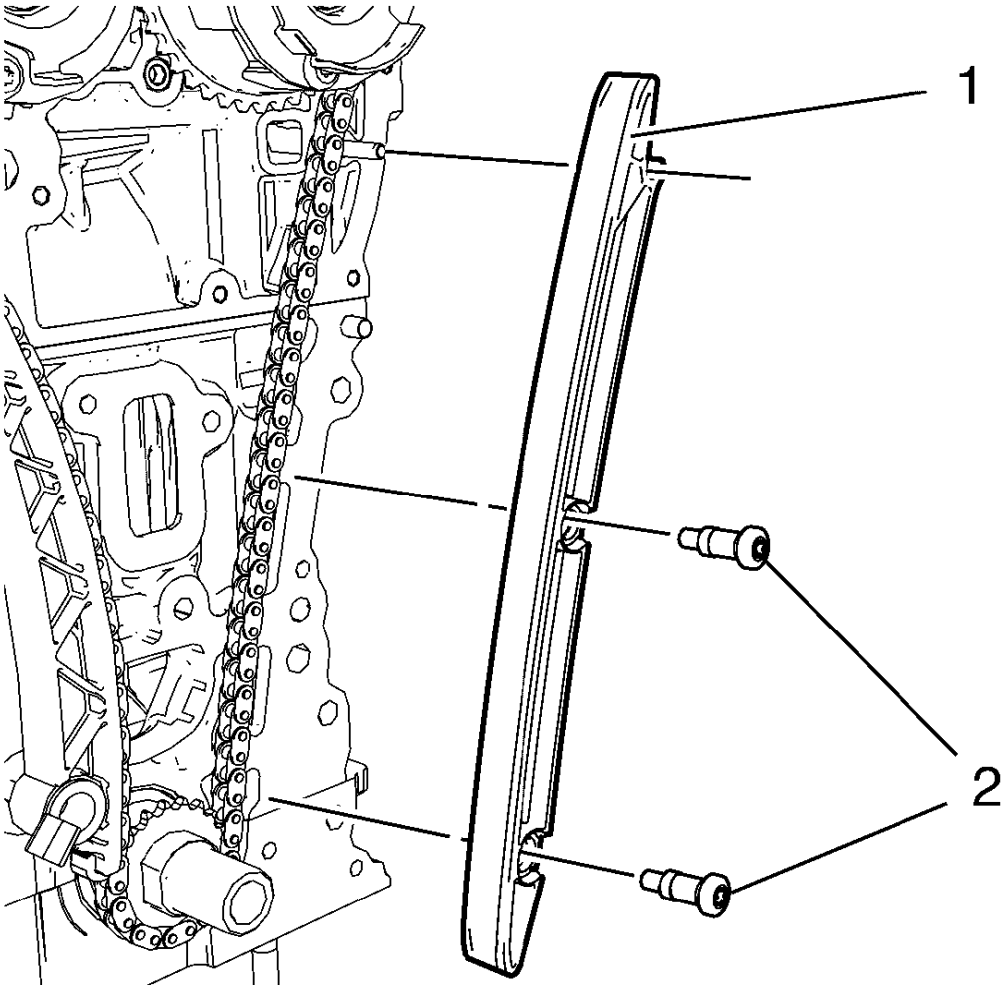

Fig. 83: Timing Chain Guide Right Side
Courtesy of GENERAL MOTORS COMPANY

6. Remove the 2 timing chain guide right side bolts (2).
7. Remove the timing chain guide right side (1).

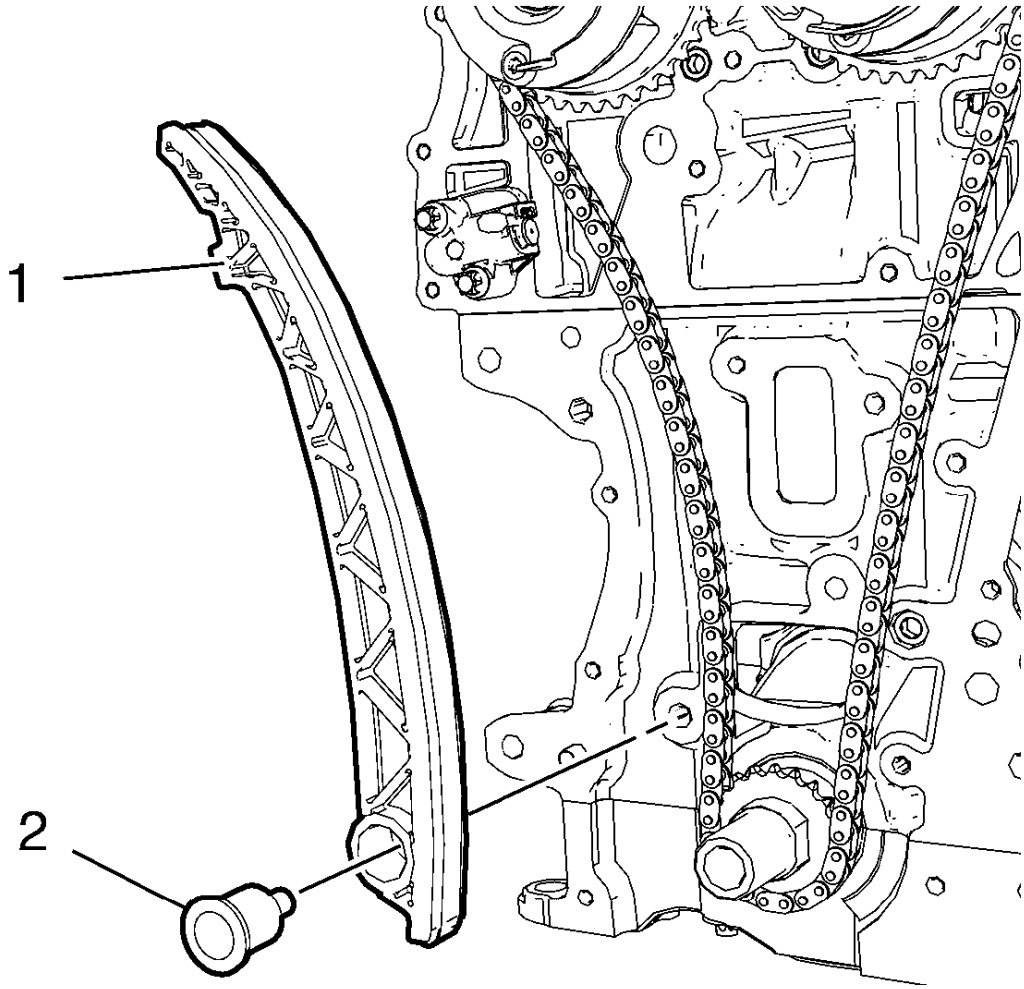

Fig. 84: Timing Chain Tensioner Shoe And Bolt
Courtesy of GENERAL MOTORS COMPANY

8. Remove the timing chain tensioner shoe bolt (2).
9. Remove the timing chain tensioner shoe (1).

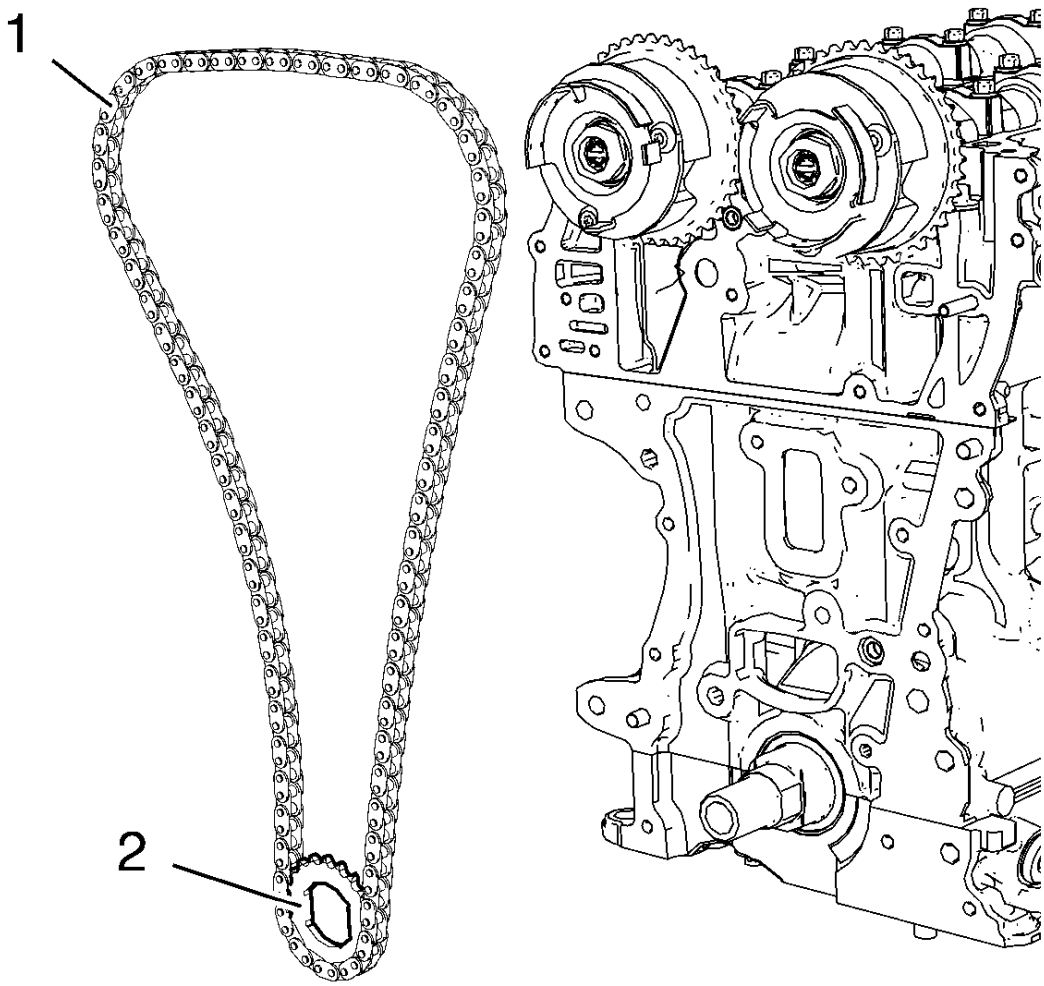

Fig. 85: Timing Chain And Crankshaft Sprocket
Courtesy of GENERAL MOTORS COMPANY

10. Remove the timing chain (1) along with the crankshaft sprocket (2).

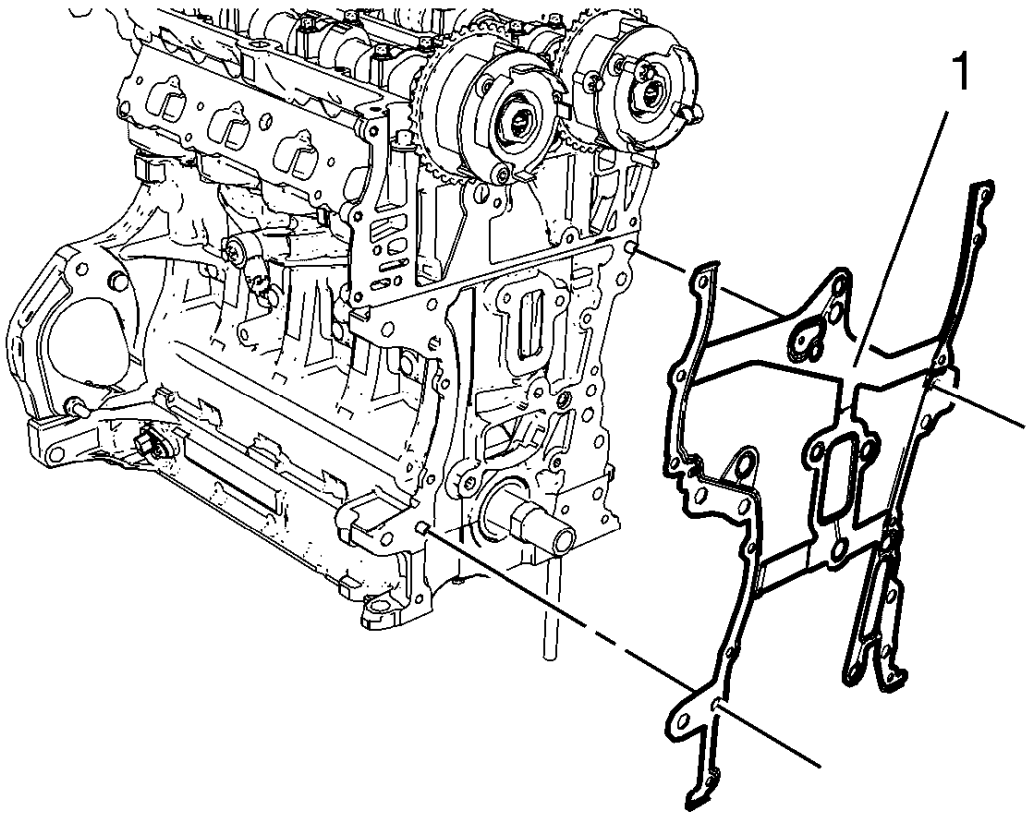

Fig. 86: Engine Front Cover Gasket
Courtesy of GENERAL MOTORS COMPANY

11. Remove the engine front cover gasket (1).

Installation Procedure

1. Clean the engine front cover sealing surfaces on the engine block and the cylinder head.

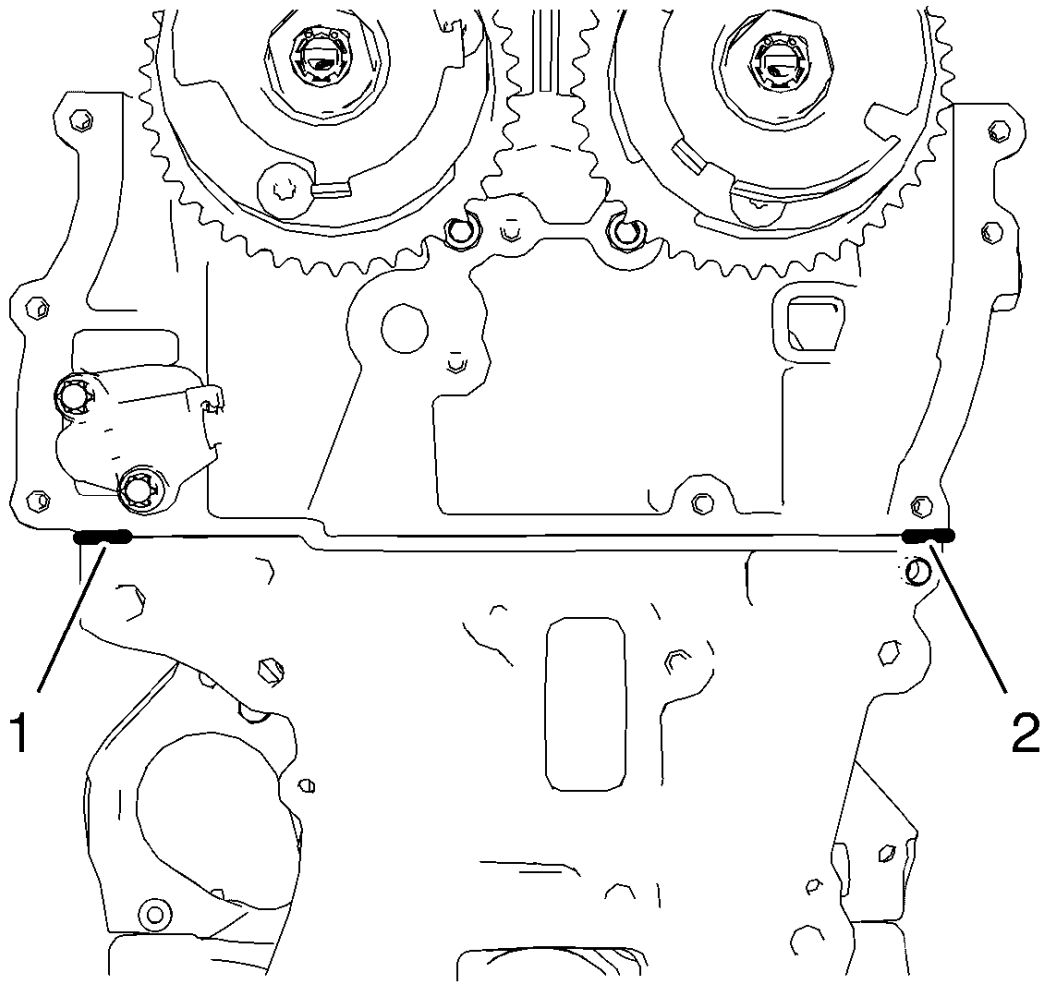

Fig. 87: Sealing Compound Application Areas
Courtesy of GENERAL MOTORS COMPANY

NOTE: The thickness of the sealing bead should be 2 mm (0.0787 in).

2. Apply sealing compound to the shown areas (1) and (2). Refer to **Adhesives, Fluids, Lubricants, and Sealers**.

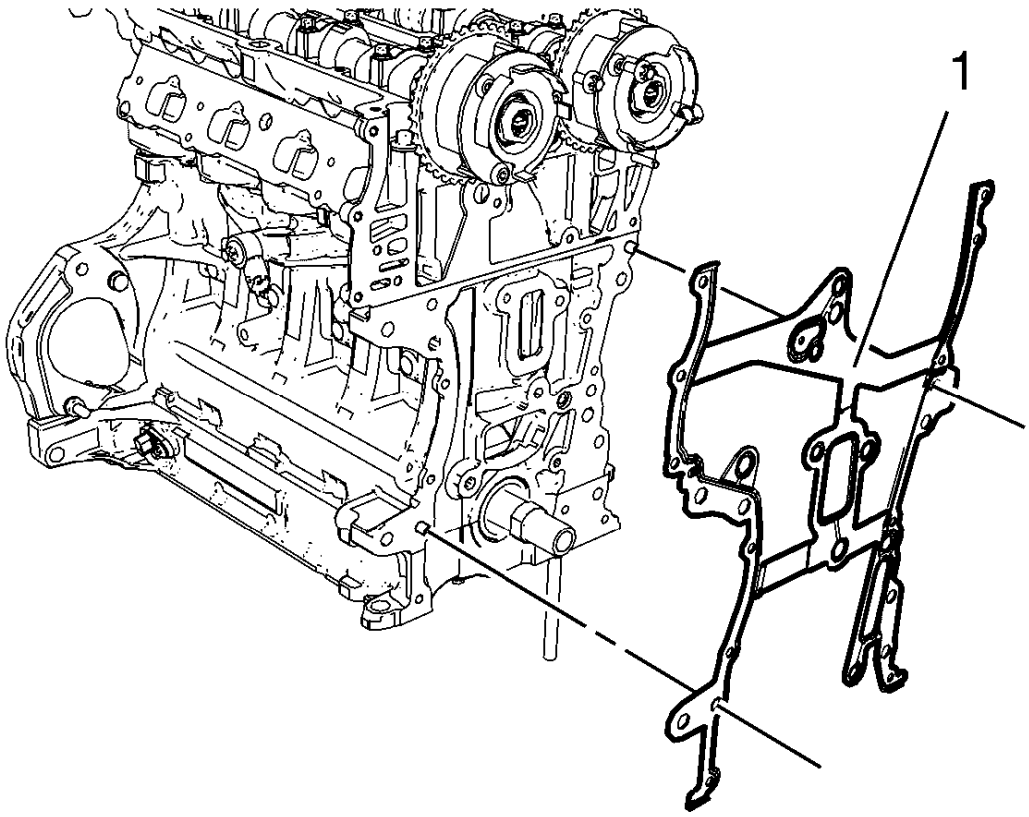

Fig. 88: Engine Front Cover Gasket
Courtesy of GENERAL MOTORS COMPANY

NOTE: Mind the guide sleeves.

3. Install the engine front cover gasket (1).

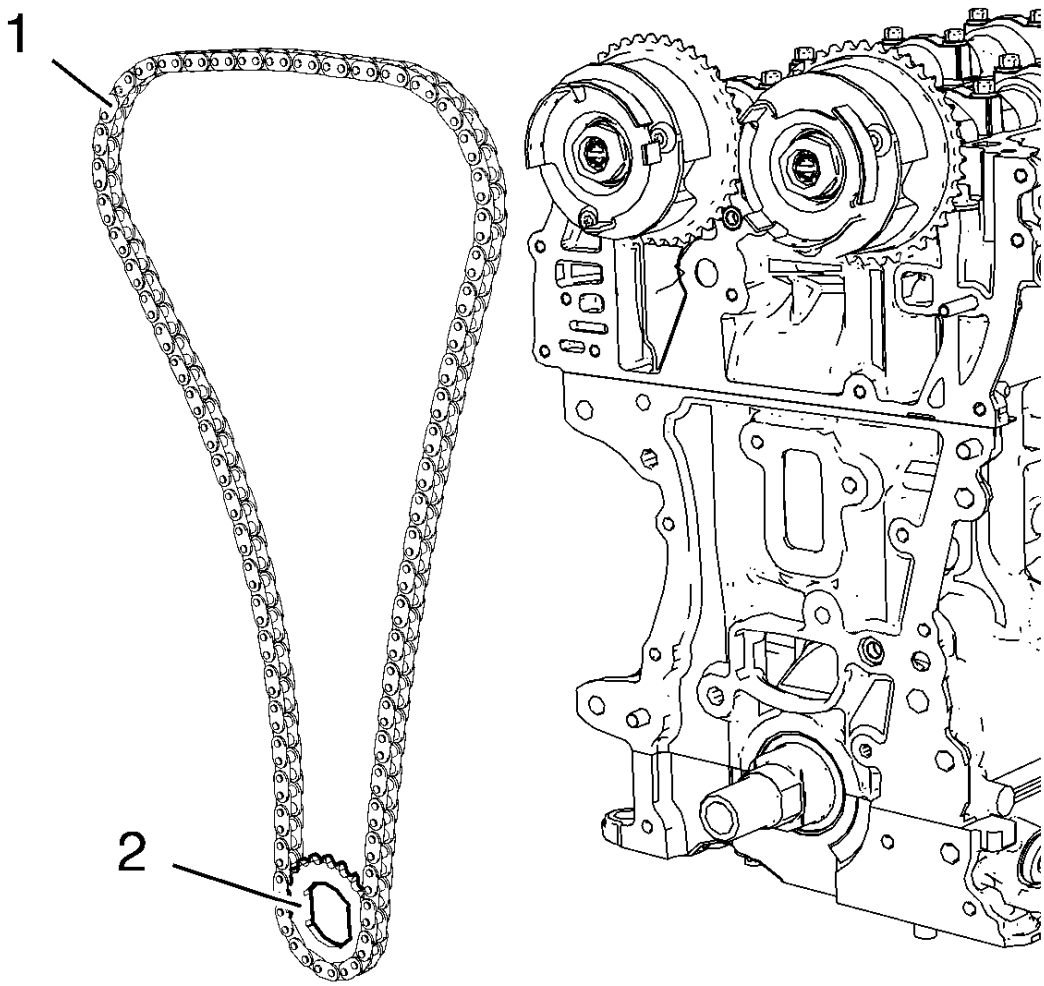

Fig. 89: Timing Chain And Crankshaft Sprocket
Courtesy of GENERAL MOTORS COMPANY

4. Install the timing chain (1) along with the crankshaft sprocket (2).

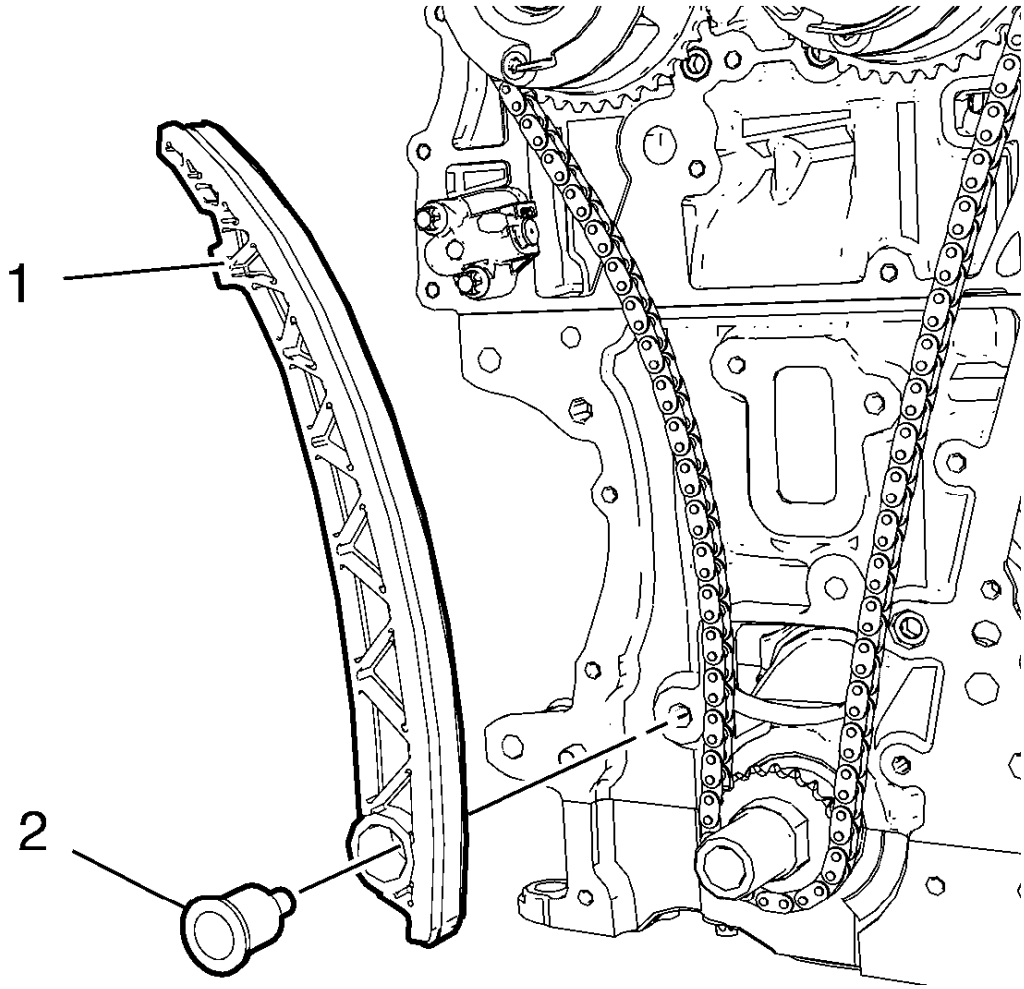

Fig. 90: Timing Chain Tensioner Shoe And Bolt
Courtesy of GENERAL MOTORS COMPANY

5. Install the timing chain tensioner shoe (1).

CAUTION: Refer to Fastener Caution .

6. Install the timing chain tensioner shoe bolt (2) and tighten to 20 N.m (15 lb ft).

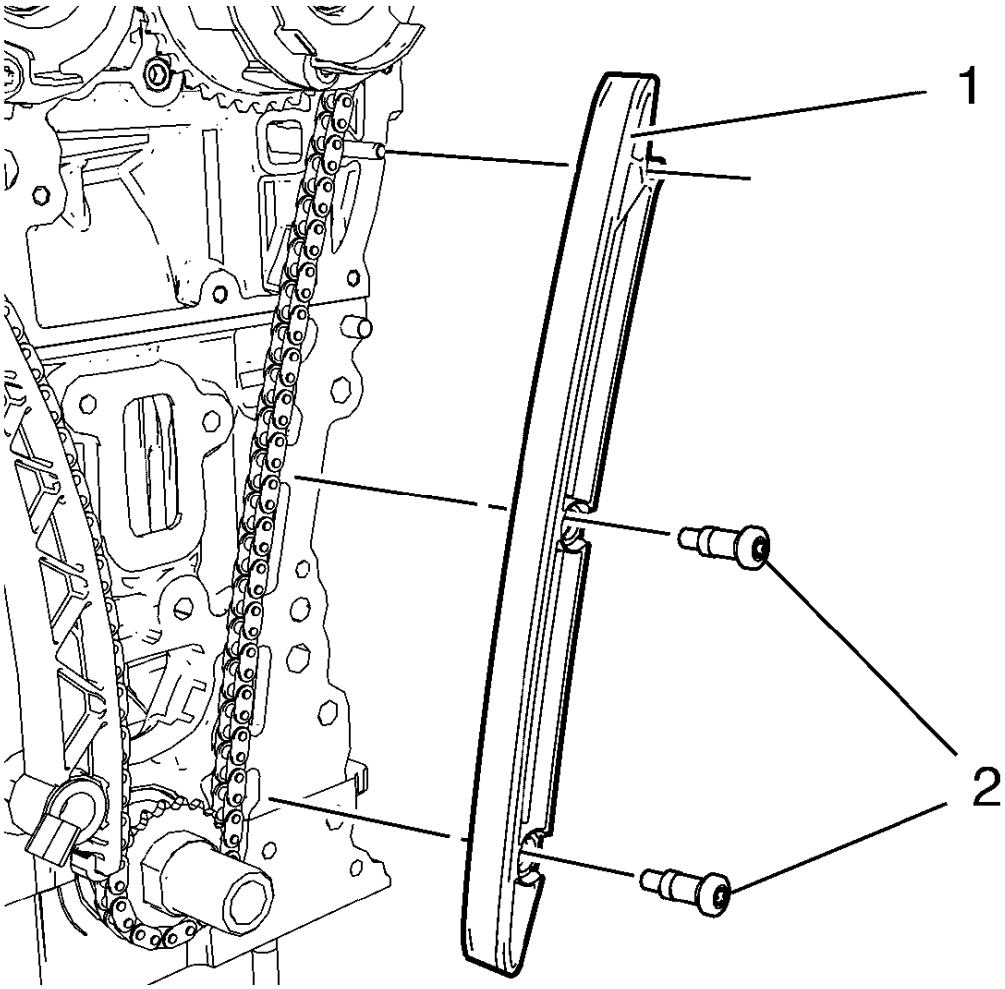

Fig. 91: Timing Chain Guide Right Side
Courtesy of GENERAL MOTORS COMPANY

7. Install the timing chain guide right side (1).
8. Install the 2 timing chain guide right side bolts (2) and tighten to 8 N.m (71 lb in).

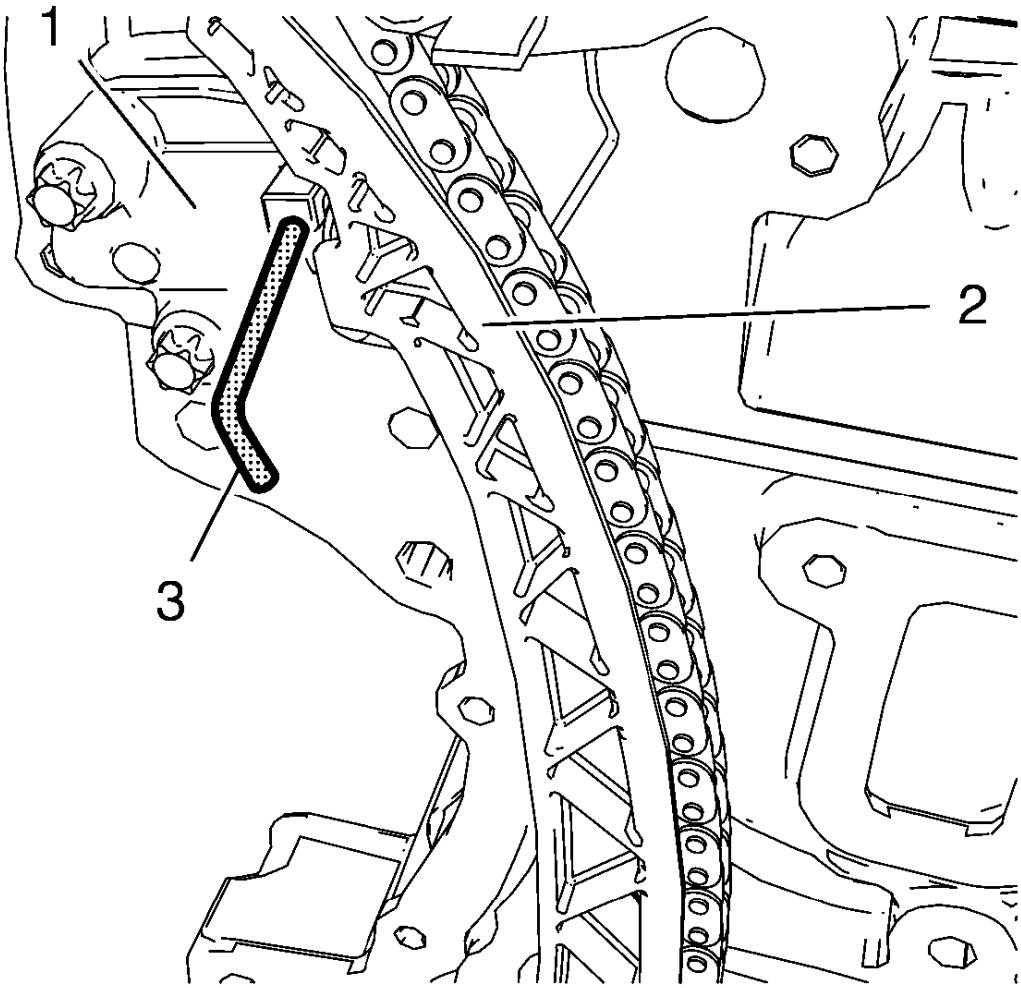

Fig. 92: Timing Chain And Timing Chain Tensioner
Courtesy of GENERAL MOTORS COMPANY

9. Push the timing chain (2) in direction to the timing chain tensioner (1) and remove **EN-955-10** fixing pin (3).
10. Install the engine front cover with oil pump. Refer to **Engine Front Cover with Oil Pump Replacement**.
11. Close the hood.

TIMING CHAIN TENSIONER REPLACEMENT

Special Tools

EN-955-10 Fixing Pin from **EN-955** Kit

For equivalent regional tools, refer to **Special Tools**.

Removal Procedure

1. Remove the engine front cover with oil pump. Refer to **Engine Front Cover with Oil Pump Replacement**.

   NOTE: Removal of timing chain is necessary to get access to the engine front cover gasket.

2. Remove the camshaft timing chain. Refer to **Camshaft Timing Chain Replacement**.

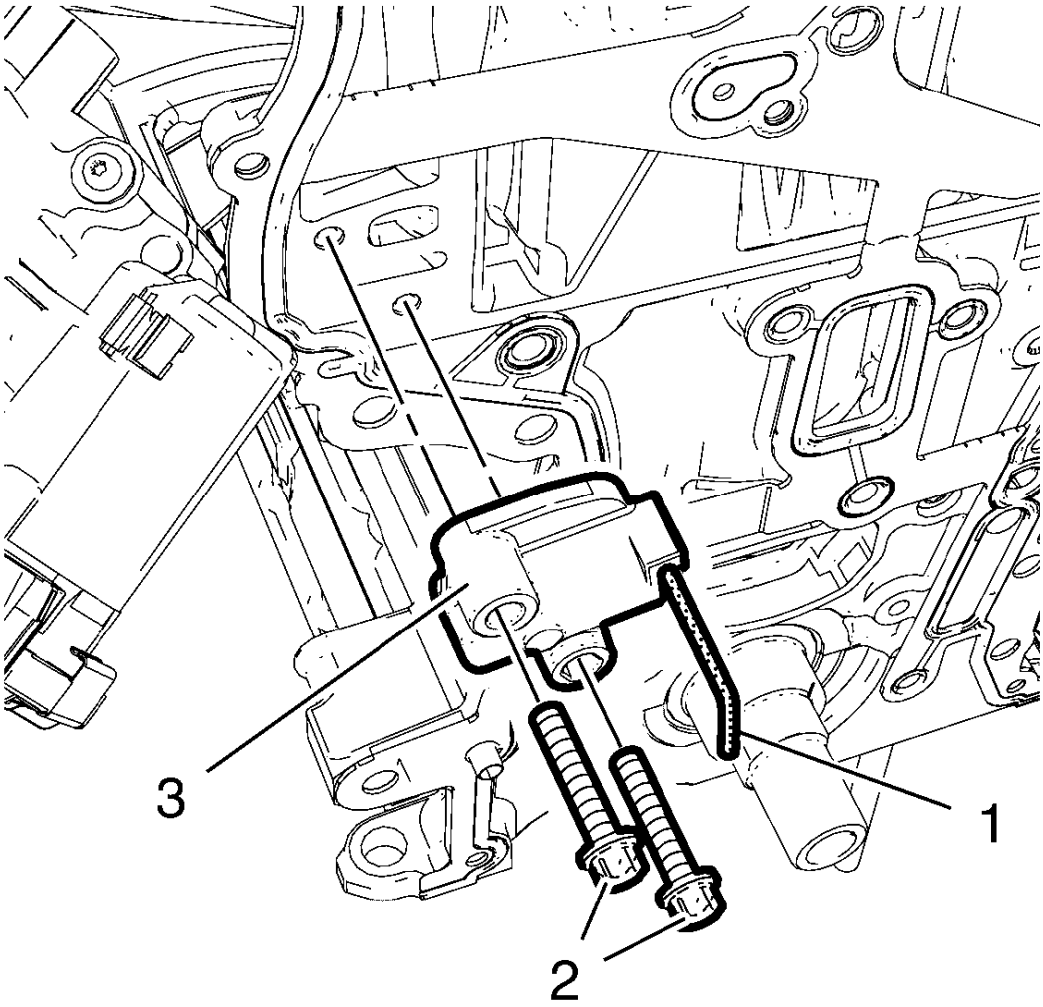

Fig. 93: Timing Chain Tensioner, Bolts And Pin
Courtesy of GENERAL MOTORS COMPANY

3. Remove the **EN-955-10** pin (1) from timing chain tensioner.
4. Remove the 2 timing chain tensioner bolts (2).
5. Remove the timing chain tensioner (3).

Installation Procedure

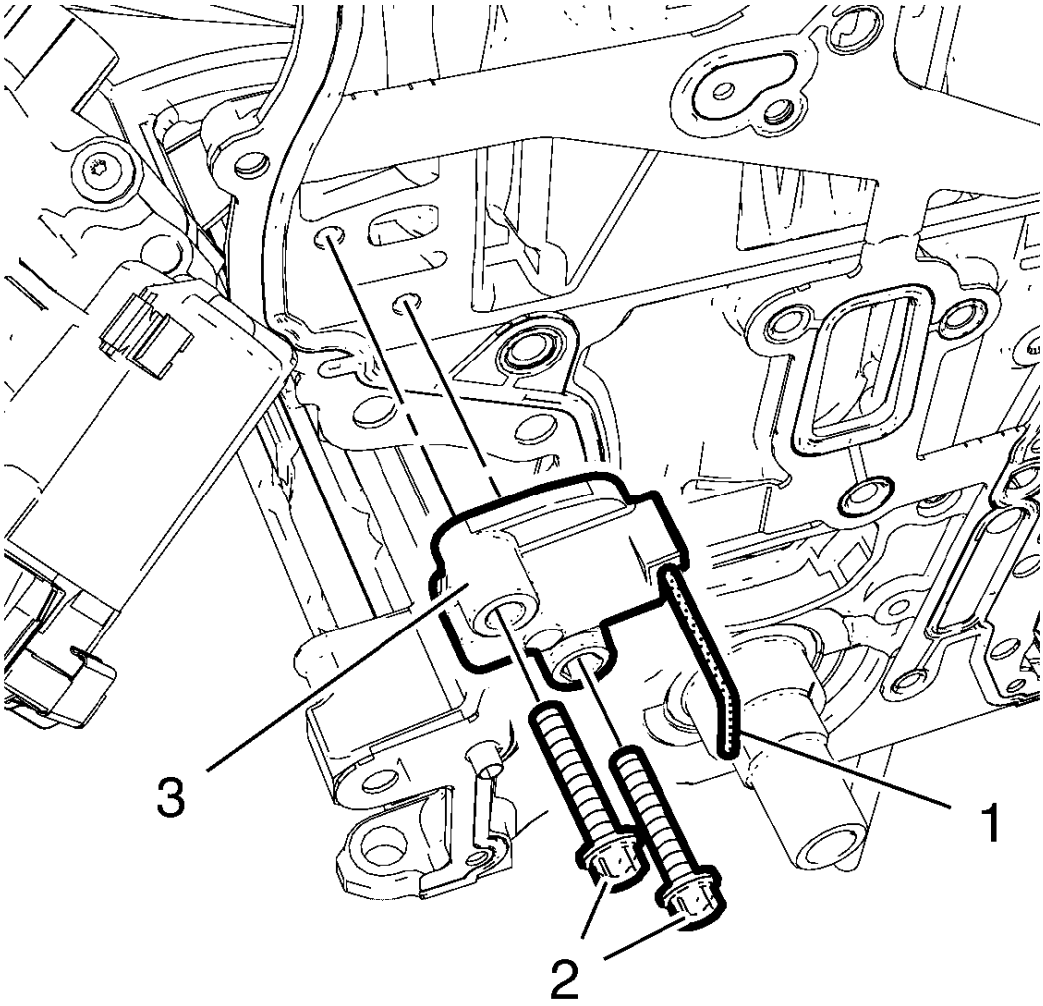

Fig. 94: Timing Chain Tensioner, Bolts And Pin
Courtesy of GENERAL MOTORS COMPANY

1. Install the timing chain tensioner (3).

CAUTION: Refer to Fastener Caution .

2. Install the 2 timing chain tensioner bolts (2) and tighten to 8 (71 lb in).
3. Fix the timing chain tensioner with **EN-955-10** pin (1)
4. Install the engine front cover gasket and the camshaft timing chain. Refer to **Camshaft Timing Chain Replacement**.
5. Install the engine front cover with oil pump. Refer to **Engine Front Cover with Oil Pump Replacement**.

HYDRAULIC VALVE LASH ADJUSTER ARM REPLACEMENT

Removal Procedure

1. Remove the intake camshaft. Refer to **Intake Camshaft Replacement**.
2. Remove the exhaust camshaft. Refer to **Exhaust Camshaft Replacement**.

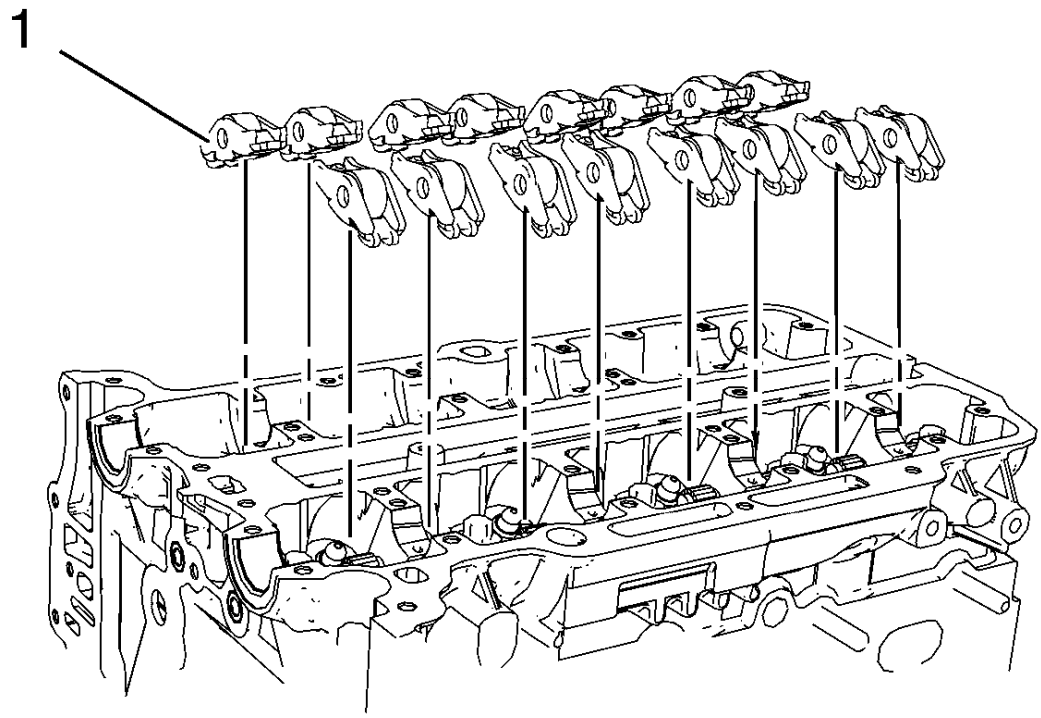

Fig. 95: Hydraulic Valve Lash Adjuster Arms
Courtesy of GENERAL MOTORS COMPANY

NOTE: Mind the installation position of the hydraulic valve lash adjuster arms.

3. Remove the 16 hydraulic valve lash adjuster arms (1).

Installation Procedure

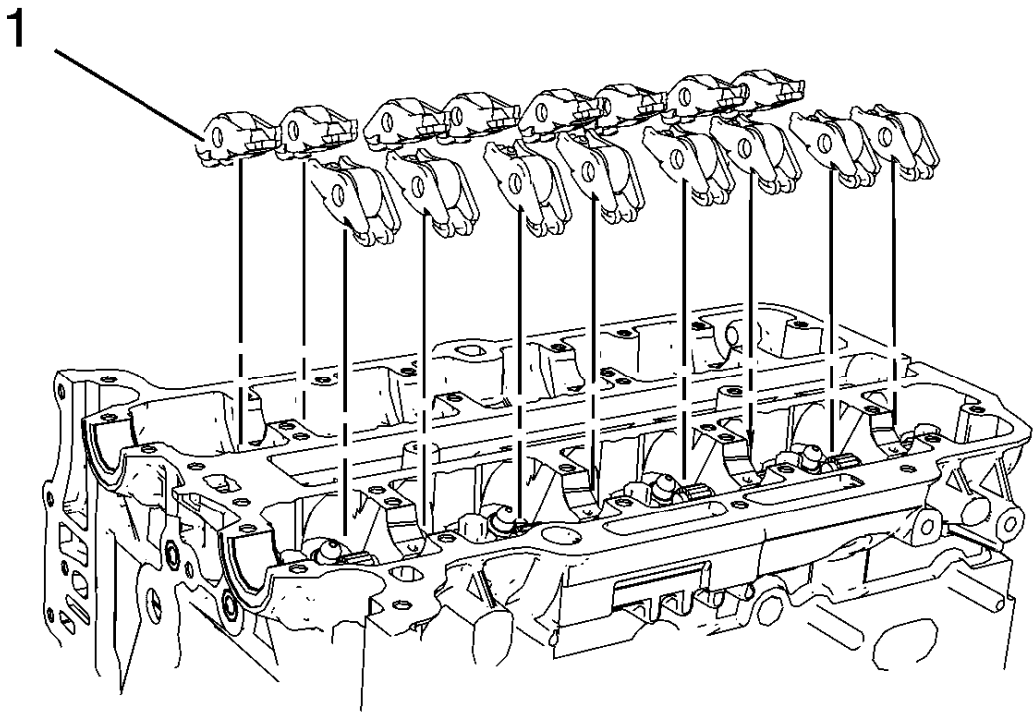

Fig. 96: Hydraulic Valve Lash Adjuster Arms
Courtesy of GENERAL MOTORS COMPANY

NOTE: Hydraulic valve lash adjuster arms should be installed in their original position

1. Lubricate the hydraulic valve lash adjuster arms with engine oil.
2. Install the 16 hydraulic valve lash adjuster arms (1).
3. Install the exhaust camshaft. Refer to **Exhaust Camshaft Replacement**.
4. Install the intake camshaft. Refer to **Intake Camshaft Replacement**.

HYDRAULIC VALVE LASH ADJUSTER REPLACEMENT

Removal Procedure

1. Remove the 16 hydraulic valve lash adjuster arms. Refer to **Hydraulic Valve Lash Adjuster Arm**

Replacement.

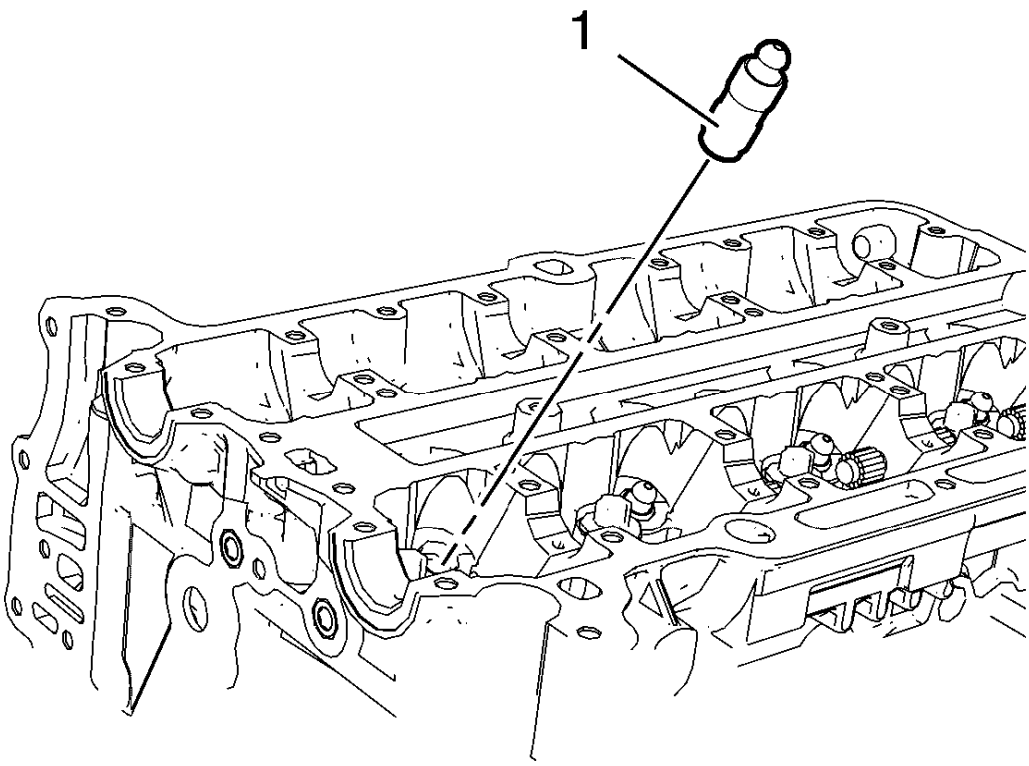

Fig. 97: Hydraulic Valve Lash Adjusters
Courtesy of GENERAL MOTORS COMPANY

NOTE: Mind the installation position of the hydraulic valve lash adjusters.

2. Remove the 16 hydraulic valve lash adjusters (1).

Installation Procedure

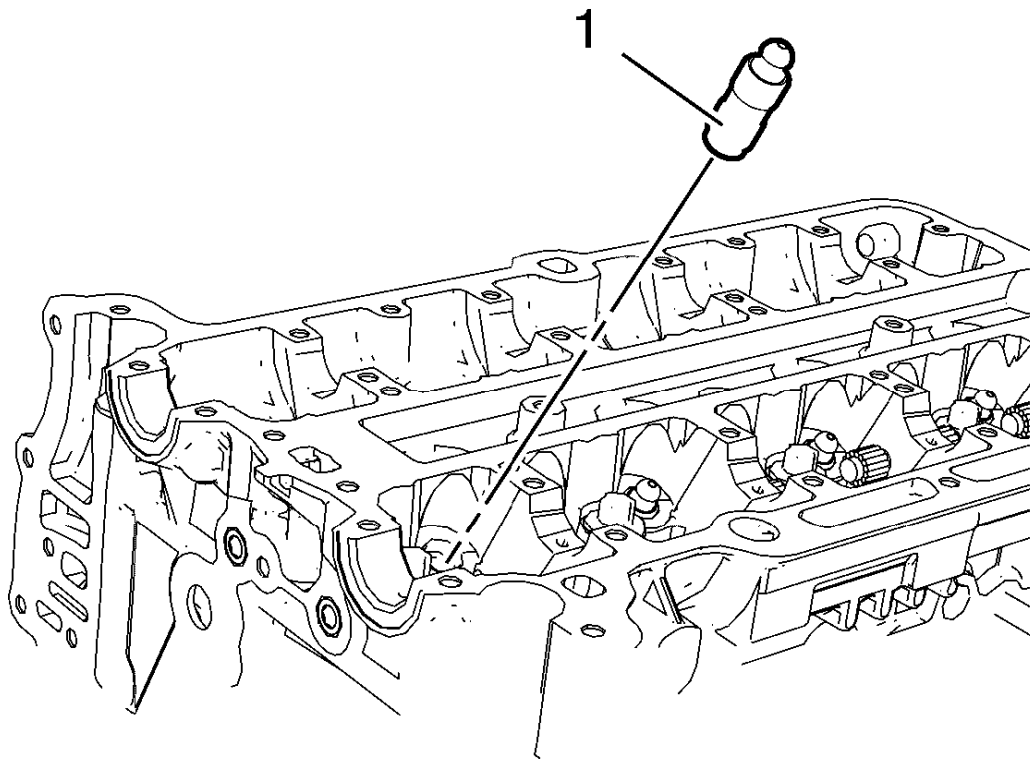

Fig. 98: Hydraulic Valve Lash Adjusters
Courtesy of GENERAL MOTORS COMPANY

NOTE: Mind the installation position of the hydraulic valve lash adjusters.

1. Lubricate the hydraulic valve lash adjusters with engine oil.
2. Install the 16 hydraulic valve lash adjusters (1).
3. Install the 16 hydraulic valve lash adjuster arms. Refer to **Hydraulic Valve Lash Adjuster Arm Replacement**.

CAMSHAFT INTAKE SPROCKET REPLACEMENT

Special Tool

EN-955-10 Fixing Pin from **EN-955** Kit

For equivalent regional tools, refer to **Special Tools**.

Removal Procedure

1. Open the hood.
2. Remove the air cleaner assembly. Refer to **Air Cleaner Assembly Replacement** .
3. Remove the camshaft cover. Refer to **Camshaft Cover Replacement**.
4. Remove the 2 camshaft position actuator solenoid valves. Refer to **Camshaft Position Actuator Solenoid Valve Removal**.
5. Adjust the engine to TDC. Refer to **Camshaft Timing Chain Inspection**.

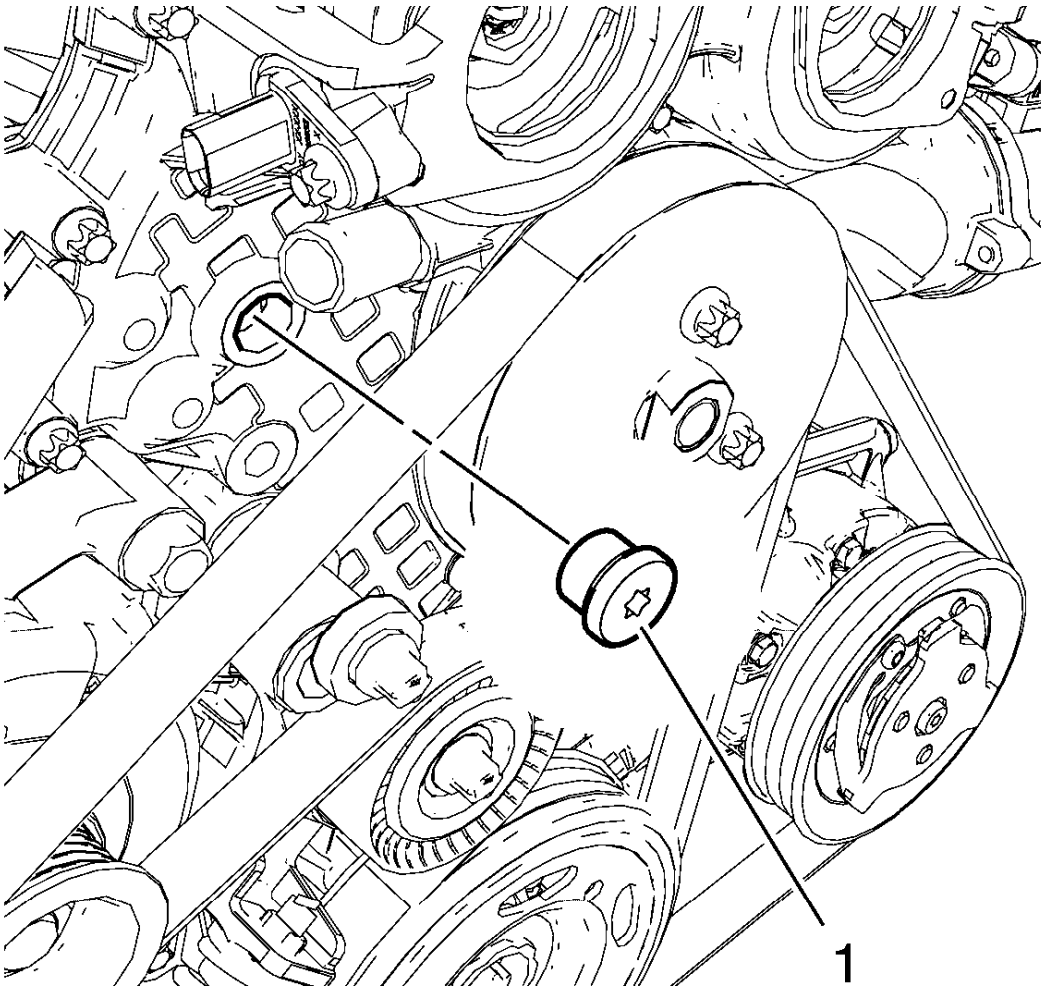

Fig. 99: Timing Chain Tensioner Plug
Courtesy of GENERAL MOTORS COMPANY

6. Remove the timing chain tensioner plug (1) from the engine front cover.

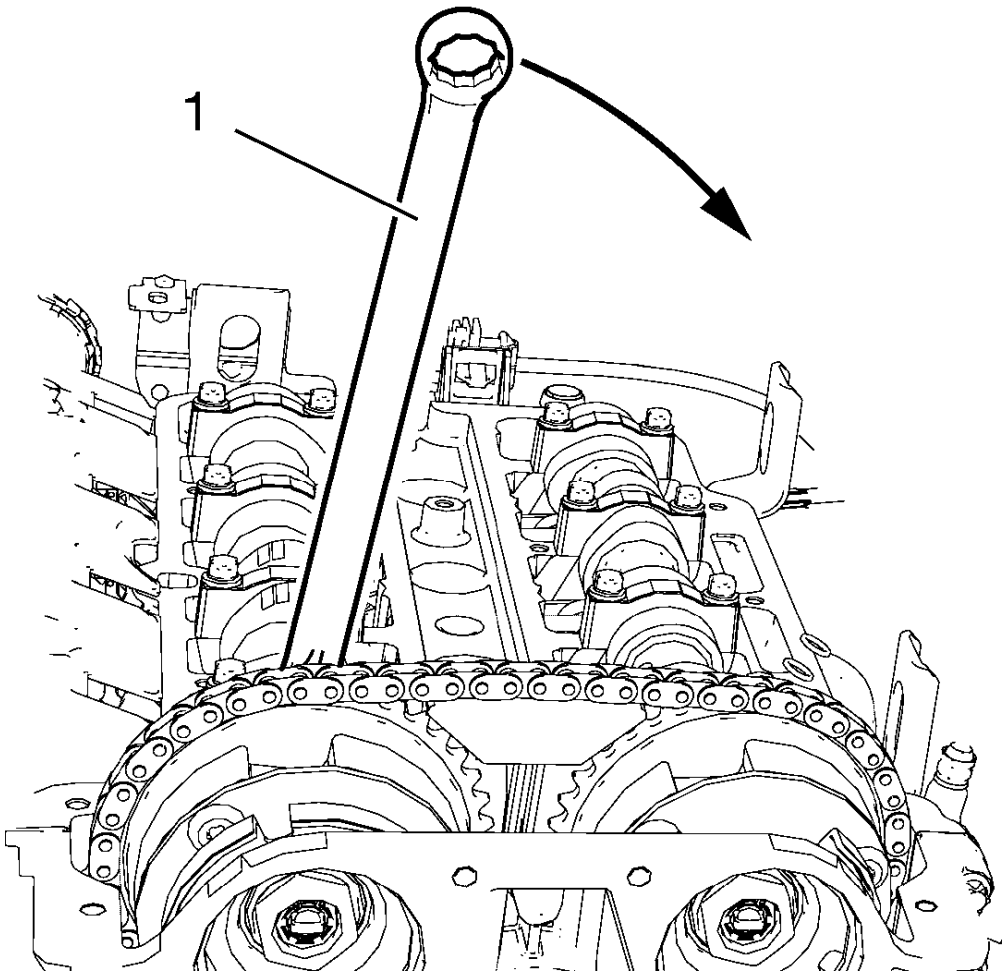

Fig. 100: Hexagonal Wrench Rotation Direction
Courtesy of GENERAL MOTORS COMPANY

7. Install a wrench (1) to the hexagon of the intake camshaft and rotate it in direction of the arrow in order to apply tension to the timing chain and hold.

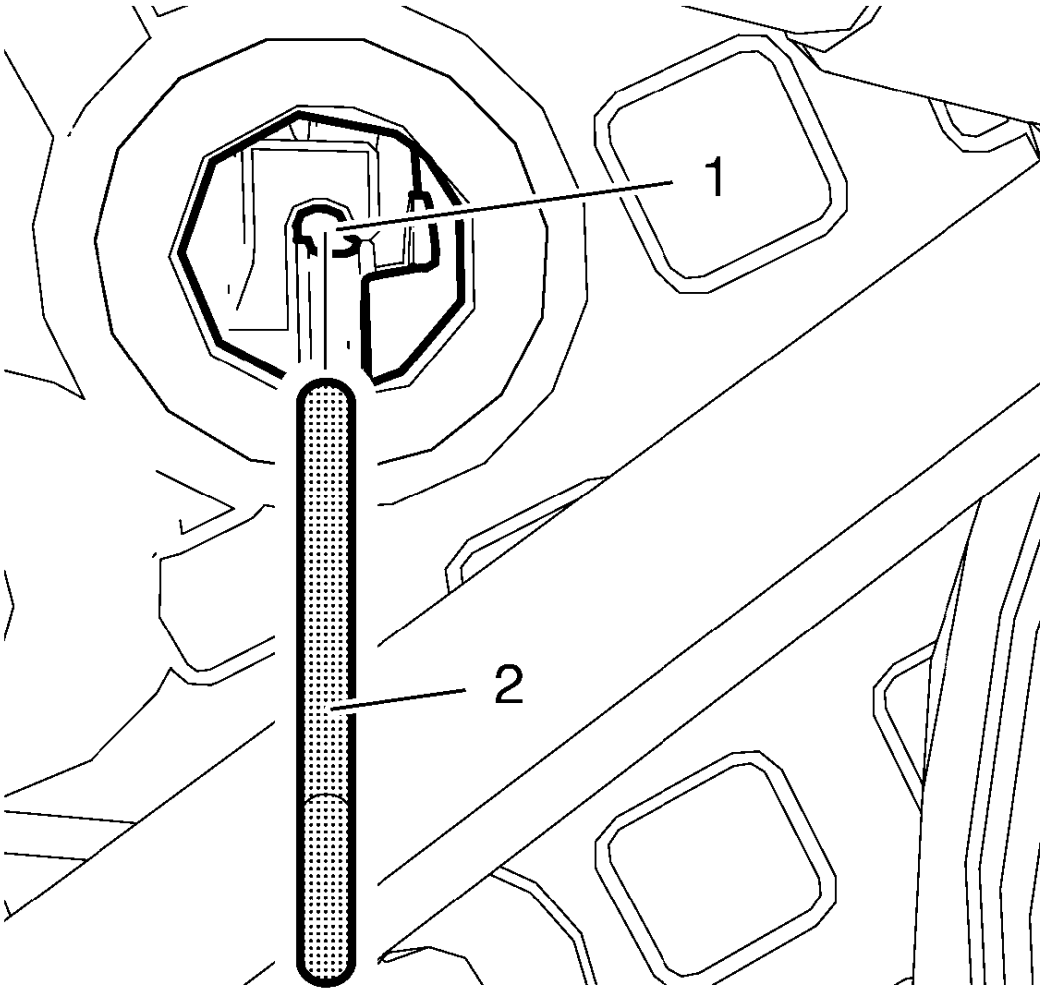

Fig. 101: Timing Chain Tensioner Bore And Pin
Courtesy of GENERAL MOTORS COMPANY

8. Install the **EN-955-10** pin (2) to the timing chain tensioner bore (1) to secure it in place.
9. Remove the wrench from the intake camshaft.

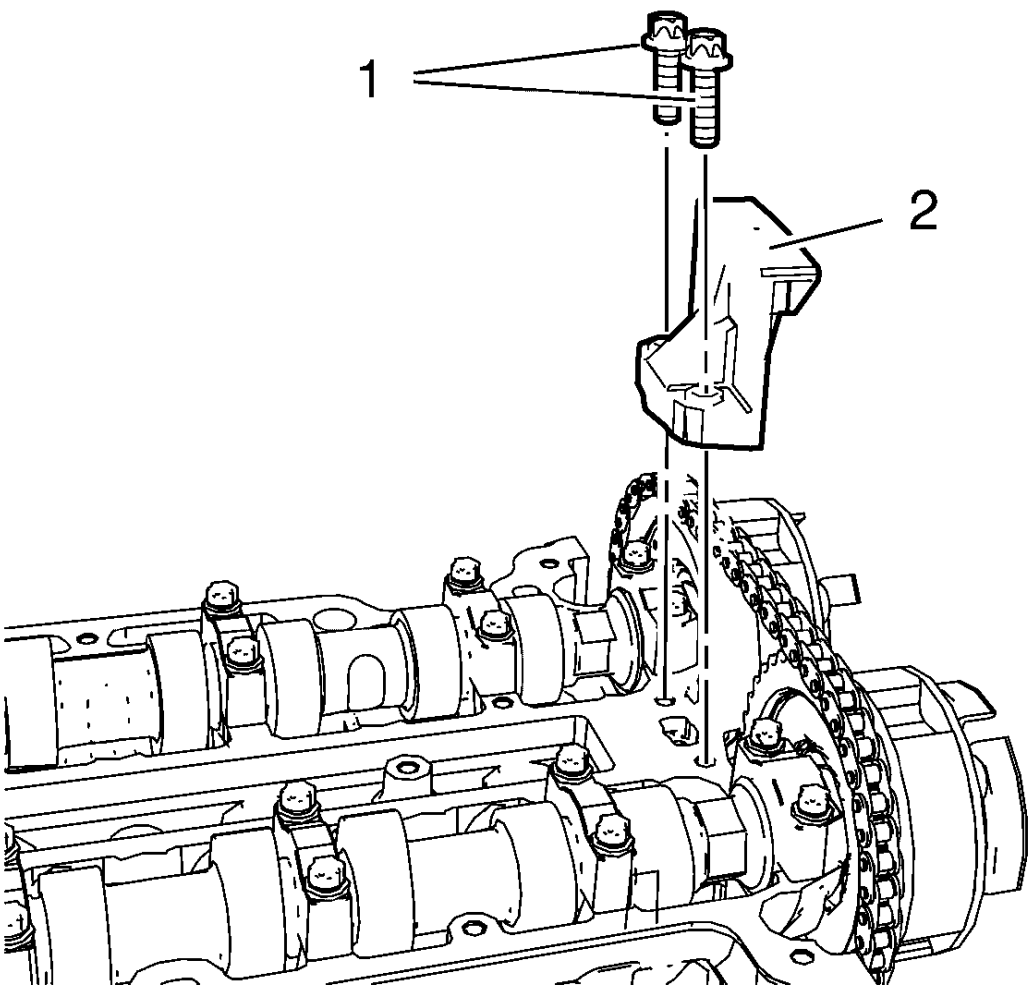

Fig. 102: Upper Timing Chain Guide And Bolts
Courtesy of GENERAL MOTORS COMPANY

10. Remove the 2 upper timing chain guide bolts (1).
11. Remove the upper timing chain guide (2).

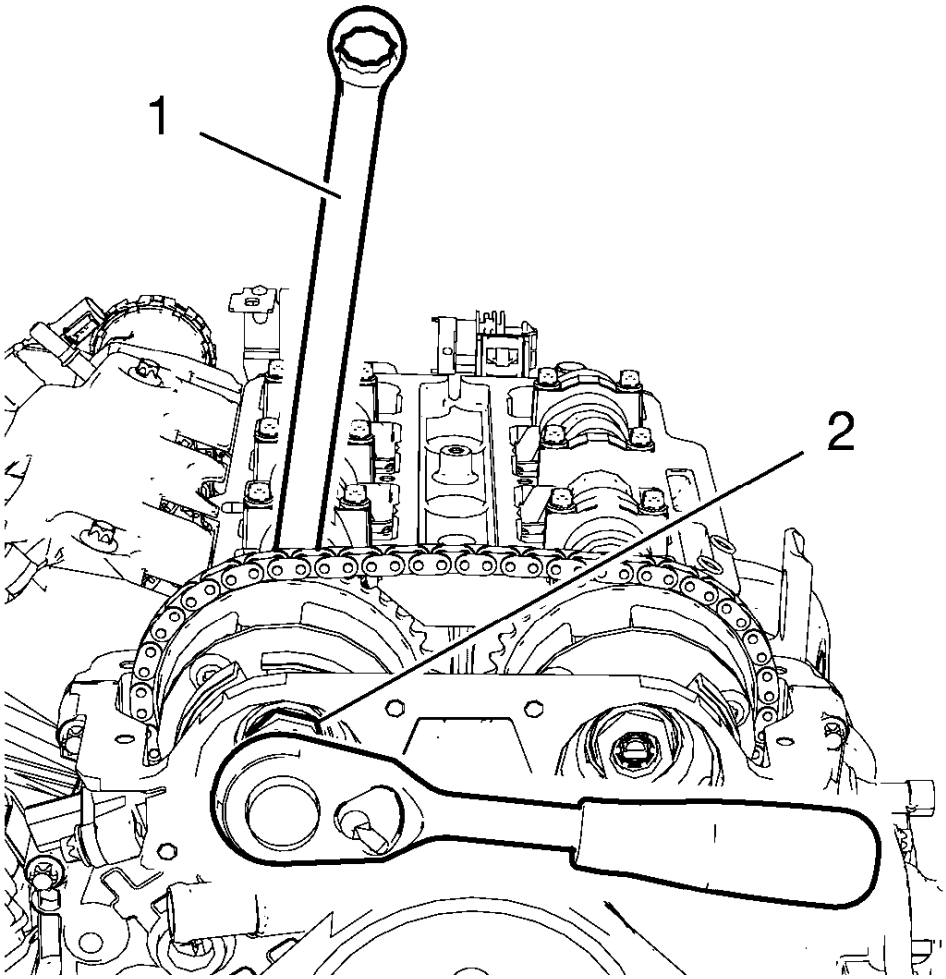

Fig. 103: Intake Camshaft Sprocket Bolt And Hexagonal Wrench
Courtesy of GENERAL MOTORS COMPANY

12. Loosen the intake camshaft sprocket bolt (2) while holding the hexagon of the intake camshaft with a wrench (1).
13. Loosen the exhaust camshaft sprocket bolt while holding the hexagon of the exhaust camshaft with a wrench.

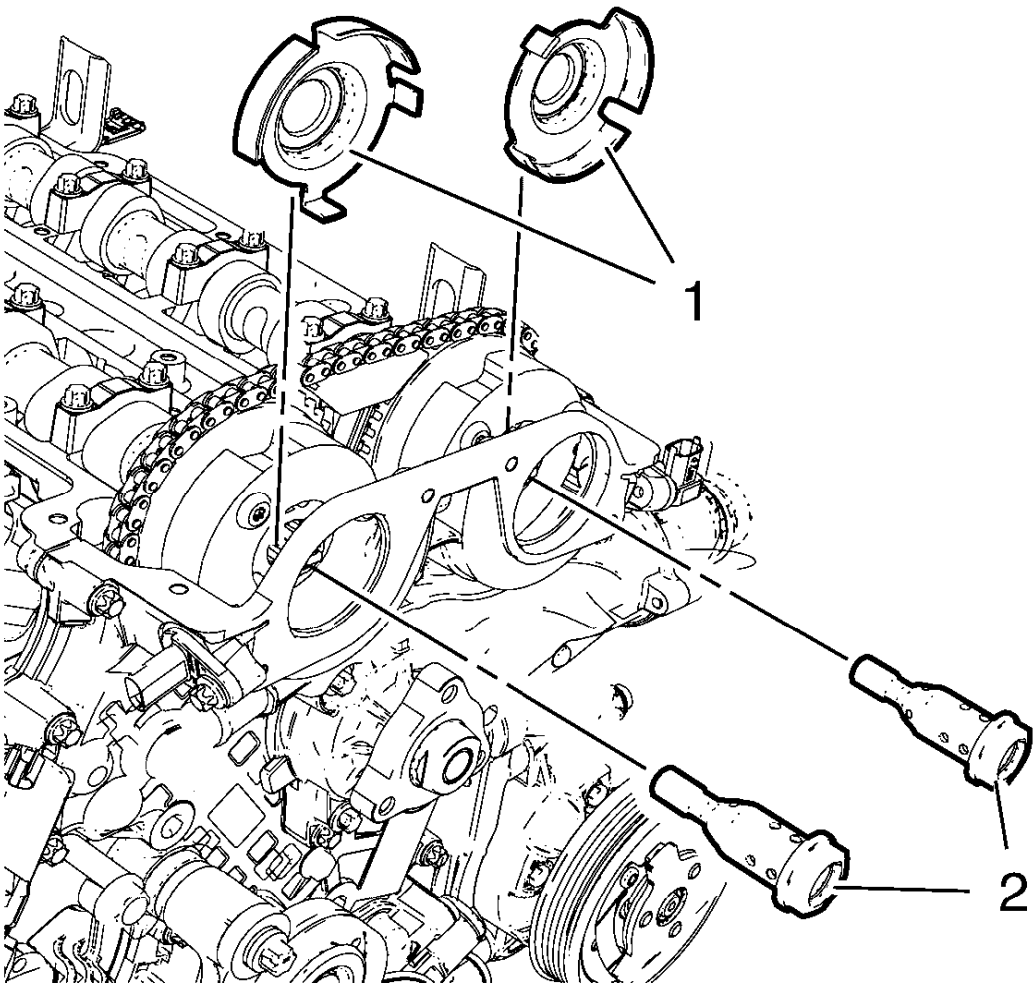

Fig. 104: Camshaft Position Exciter Wheels And Camshaft Sprocket Bolts
Courtesy of GENERAL MOTORS COMPANY

14. Remove the 2 camshaft sprocket bolts (2) and the 2 camshaft position exciter wheels (1).

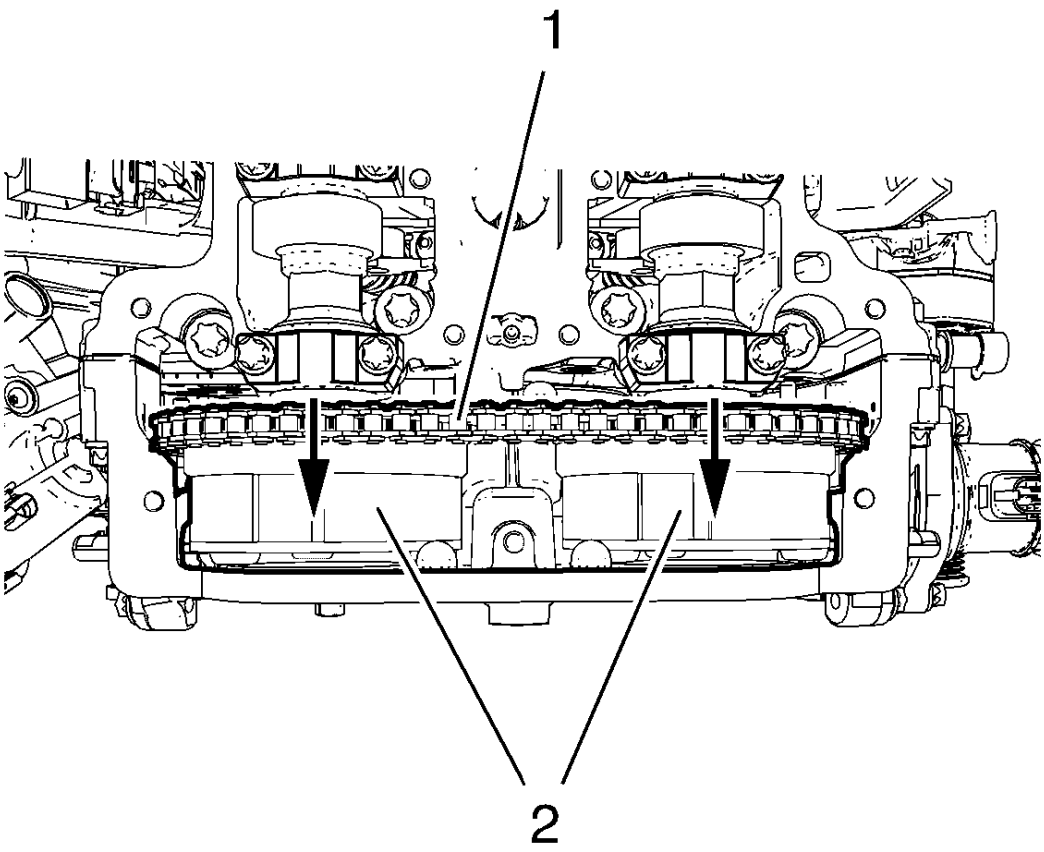

Fig. 105: Timing Chain And Camshaft Sprockets
Courtesy of GENERAL MOTORS COMPANY

15. Remove the 2 camshaft sprockets (2) along with the timing chain (1) and place it in the engine front cover.
16. Remove the intake camshaft sprocket.

Installation Procedure

1. Insert the intake camshaft sprocket to the engine to engine front cover and timing chain.

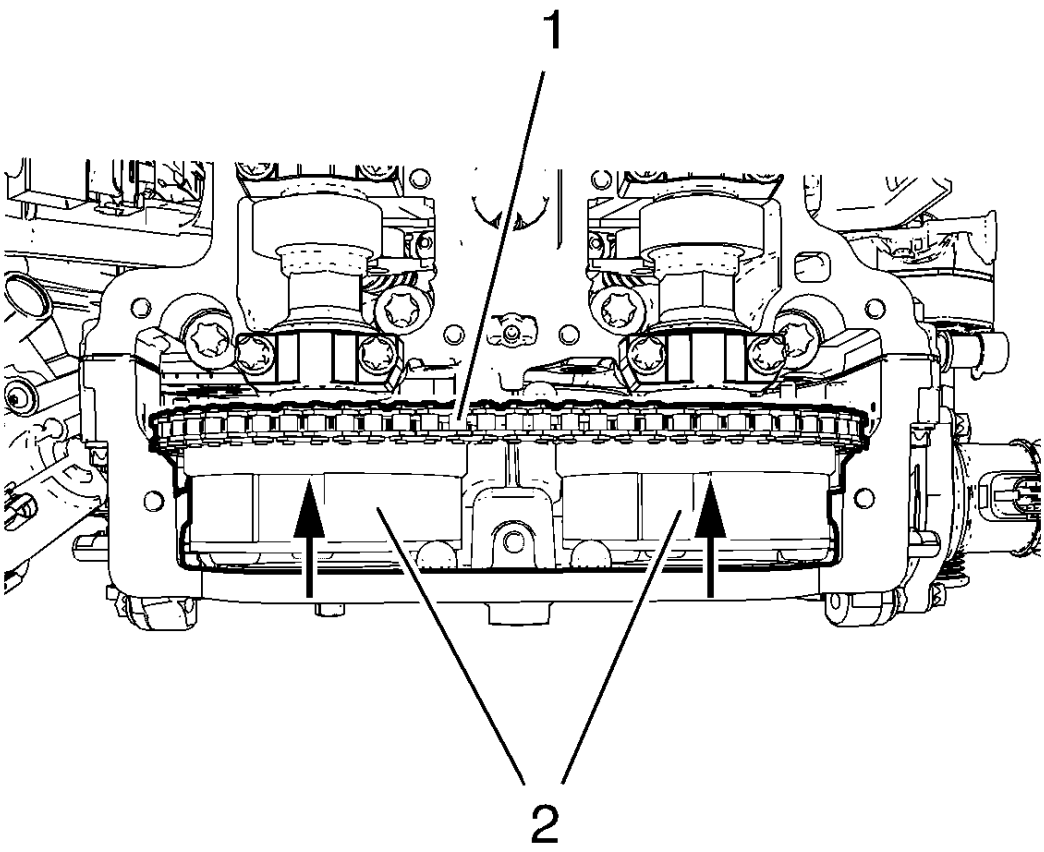

Fig. 106: Timing Chain And Camshaft Sprockets
Courtesy of GENERAL MOTORS COMPANY

2. Install the 2 camshaft sprockets (2) along with the timing chain (1) to the camshafts.

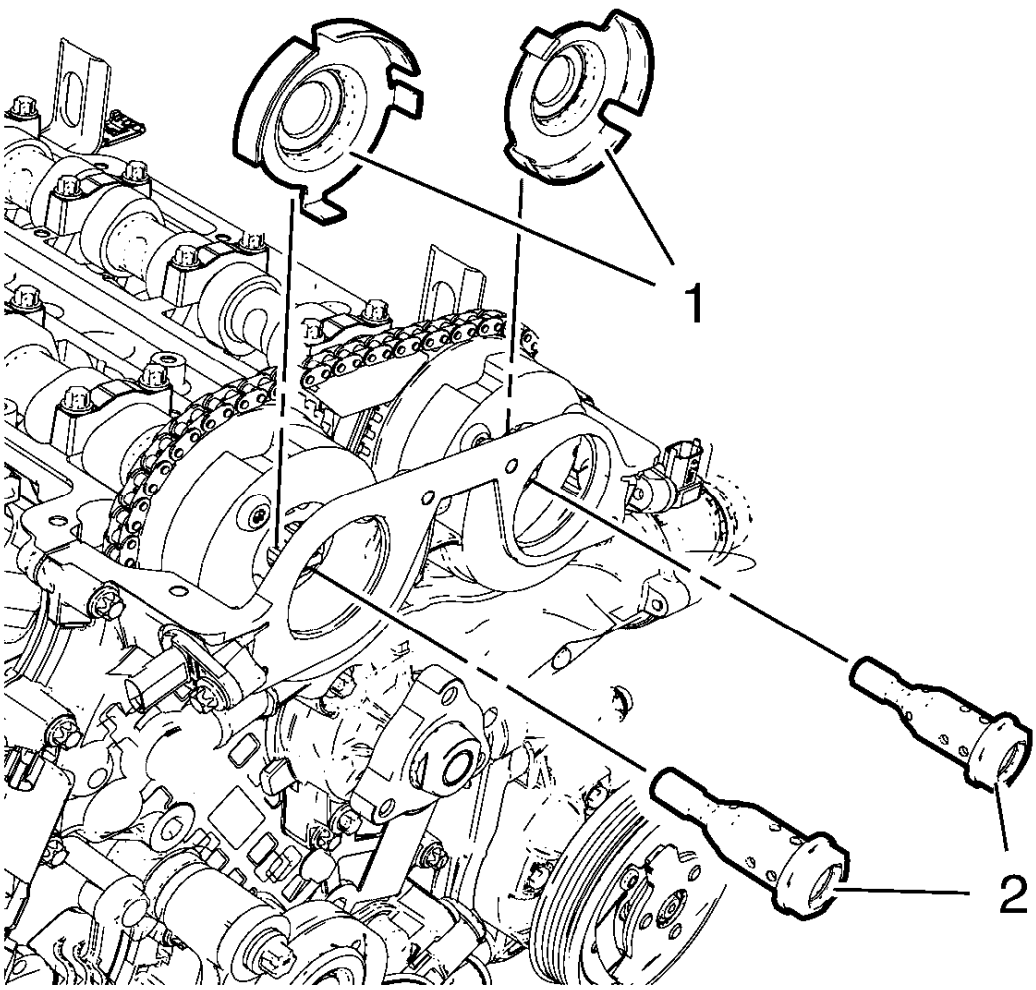

Fig. 107: Camshaft Position Exciter Wheels And Camshaft Sprocket Bolts
Courtesy of GENERAL MOTORS COMPANY

3. Install the 2 camshaft sprocket bolts (2) and the 2 camshaft position exciter wheels (1).
4. Remove **EN-955-10** pin to apply tension to the timing chain.

NOTE: Engine must be adjusted to TDC.

5. Tighten the 2 camshaft sprockets. Refer to **Camshaft Timing Chain Adjustment**.
6. Remove all special tools for timing chain adjustment. Refer to **Camshaft Timing Chain Adjustment**.

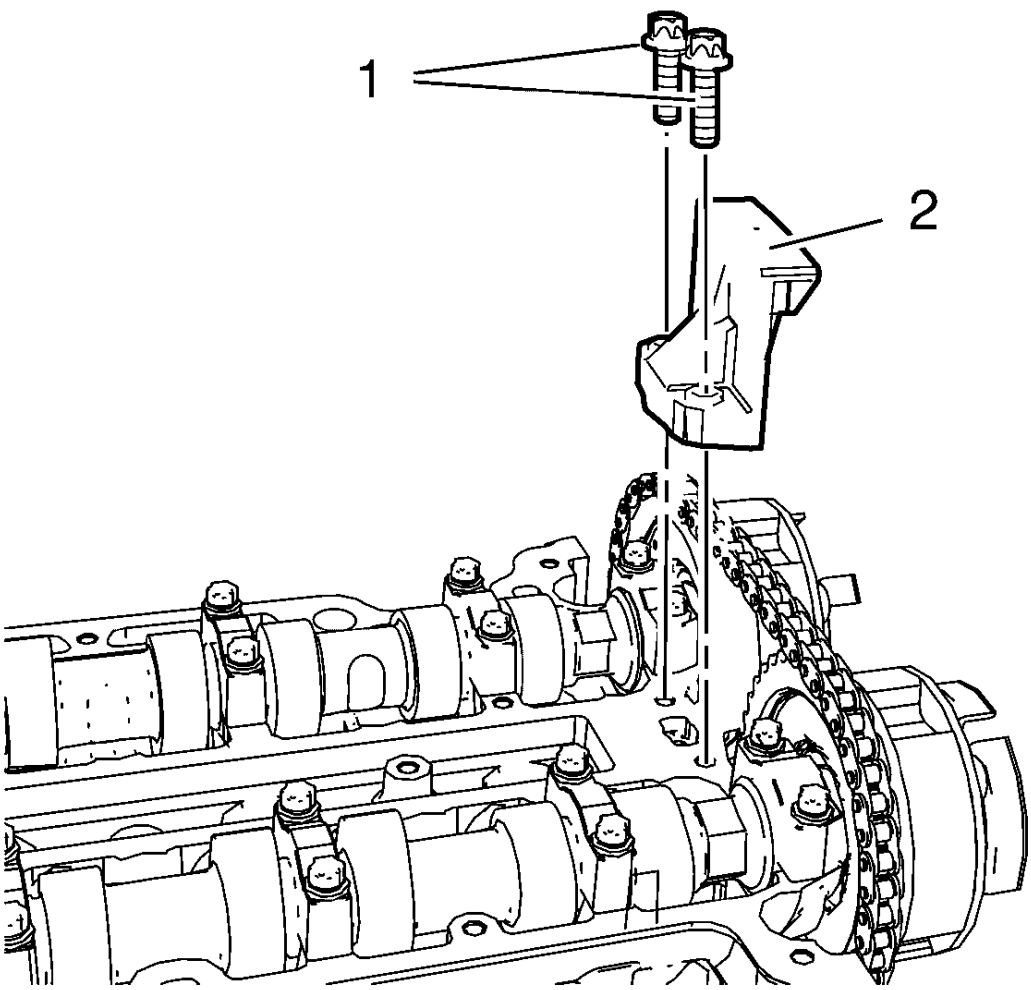

Fig. 108: Upper Timing Chain Guide And Bolts
Courtesy of GENERAL MOTORS COMPANY

7. Install the upper timing chain guide (2).

CAUTION: Refer to Fastener Caution .

8. Install the 2 upper timing chain guide bolts (1) and tighten to 8 N.m (71 lb in).
9. Install the 2 camshaft position actuator solenoid valves. Refer to **Camshaft Position Actuator Solenoid Valve Installation**.
10. Install the camshaft cover. Refer to **Camshaft Cover Replacement**.
11. Install the timing chain tensioner plug and tighten to 50 N.m (37 lb ft).
12. Install the air cleaner assembly. Refer to **Air Cleaner Assembly Replacement** .
13. Check and correct engine oil level.

14. Close the hood.

CAMSHAFT EXHAUST SPROCKET REPLACEMENT

Special Tool

EN-955-10 Fixing Pin from **EN-955** Kit

For equivalent regional tools, refer to **Special Tools**.

Removal Procedure

1. Open the hood.
2. Remove the air cleaner assembly. Refer to **Air Cleaner Assembly Replacement** .
3. Remove the camshaft cover. Refer to **Camshaft Cover Replacement**.
4. Remove the 2 camshaft position actuator solenoid valves. Refer to **Camshaft Position Actuator Solenoid Valve Removal**.
5. Adjust the engine to TDC. Refer to **Camshaft Timing Chain Inspection**.

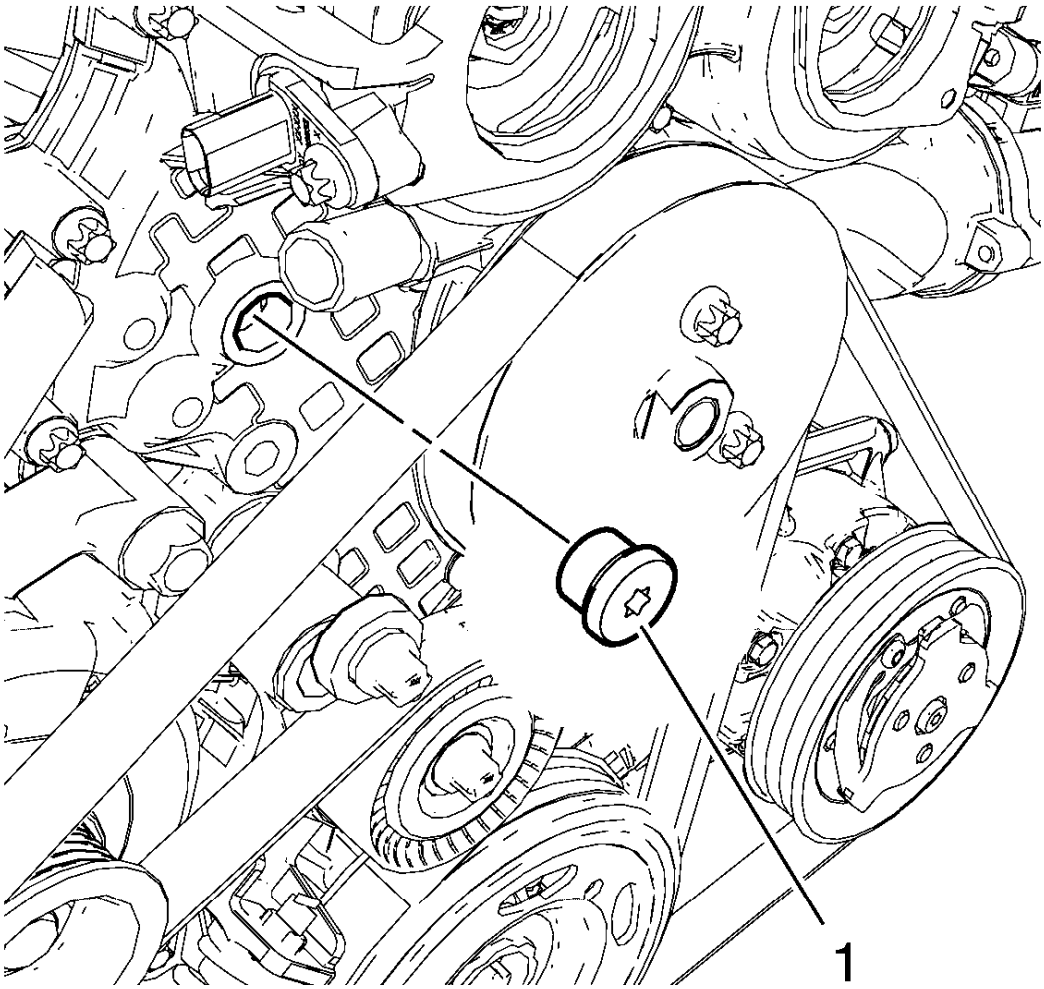

Fig. 109: Timing Chain Tensioner Plug
Courtesy of GENERAL MOTORS COMPANY

6. Remove the timing chain tensioner plug (1) from the engine front cover.

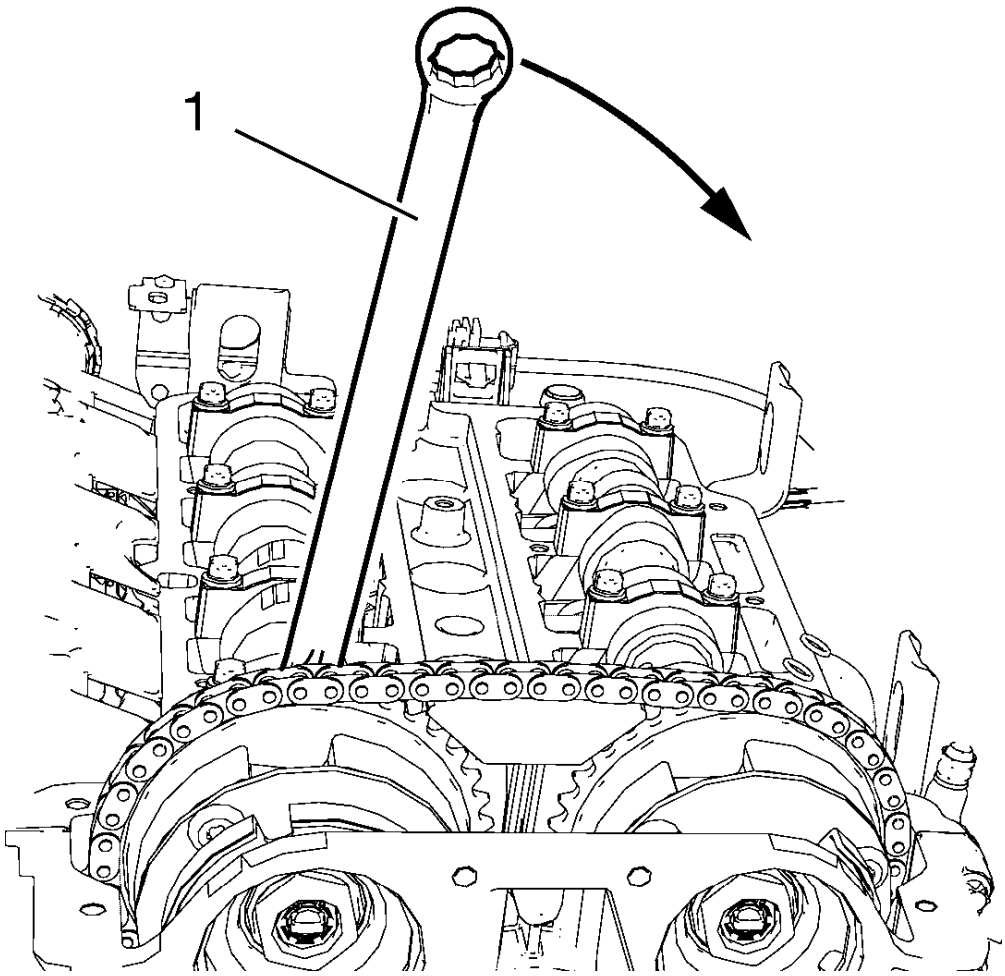

Fig. 110: Hexagonal Wrench Rotation Direction
Courtesy of GENERAL MOTORS COMPANY

7. Install a wrench (1) to the hexagon of the intake camshaft and rotate it in direction of the arrow in order to apply tension to the timing chain and hold.

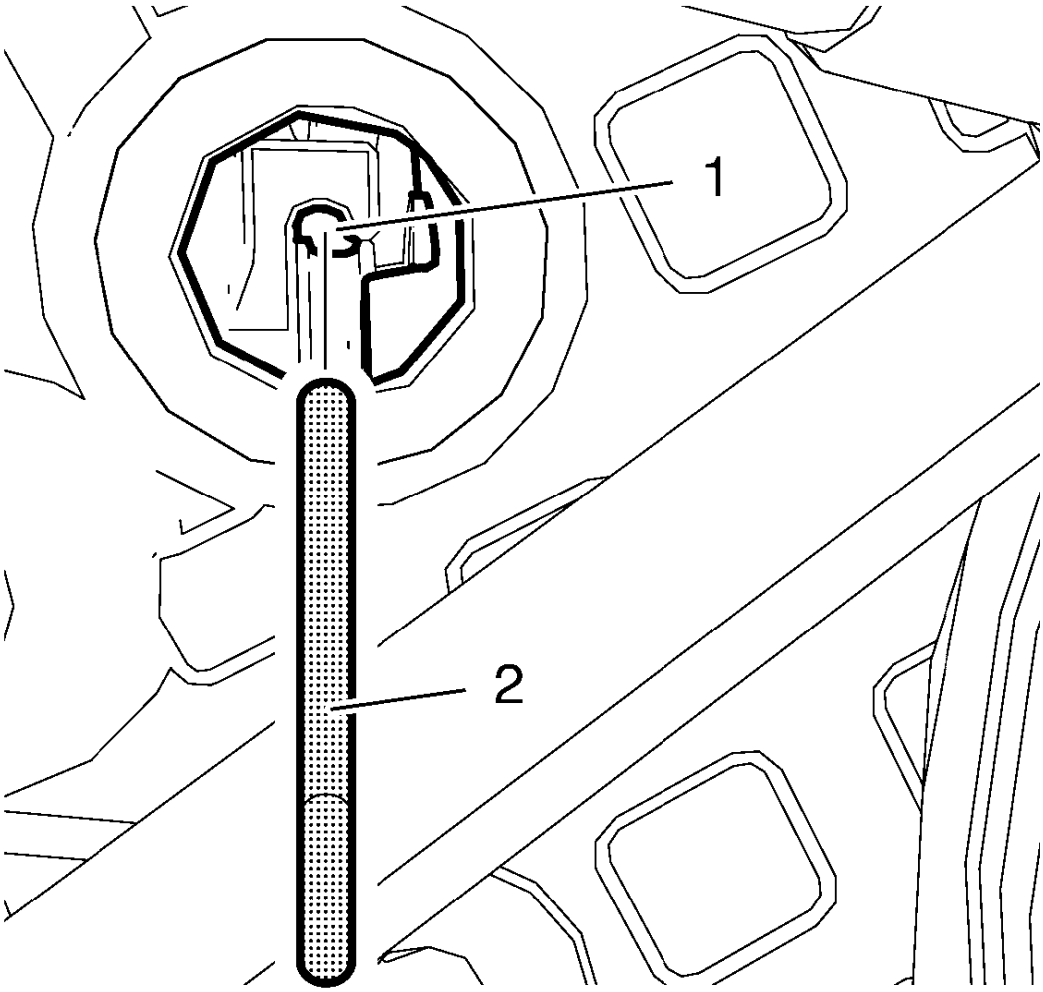

Fig. 111: Timing Chain Tensioner Bore And Pin
Courtesy of GENERAL MOTORS COMPANY

8. Install the **EN-955-10** pin (2) to the timing chain tensioner bore (1) to secure it in place.
9. Remove the wrench from the intake camshaft.

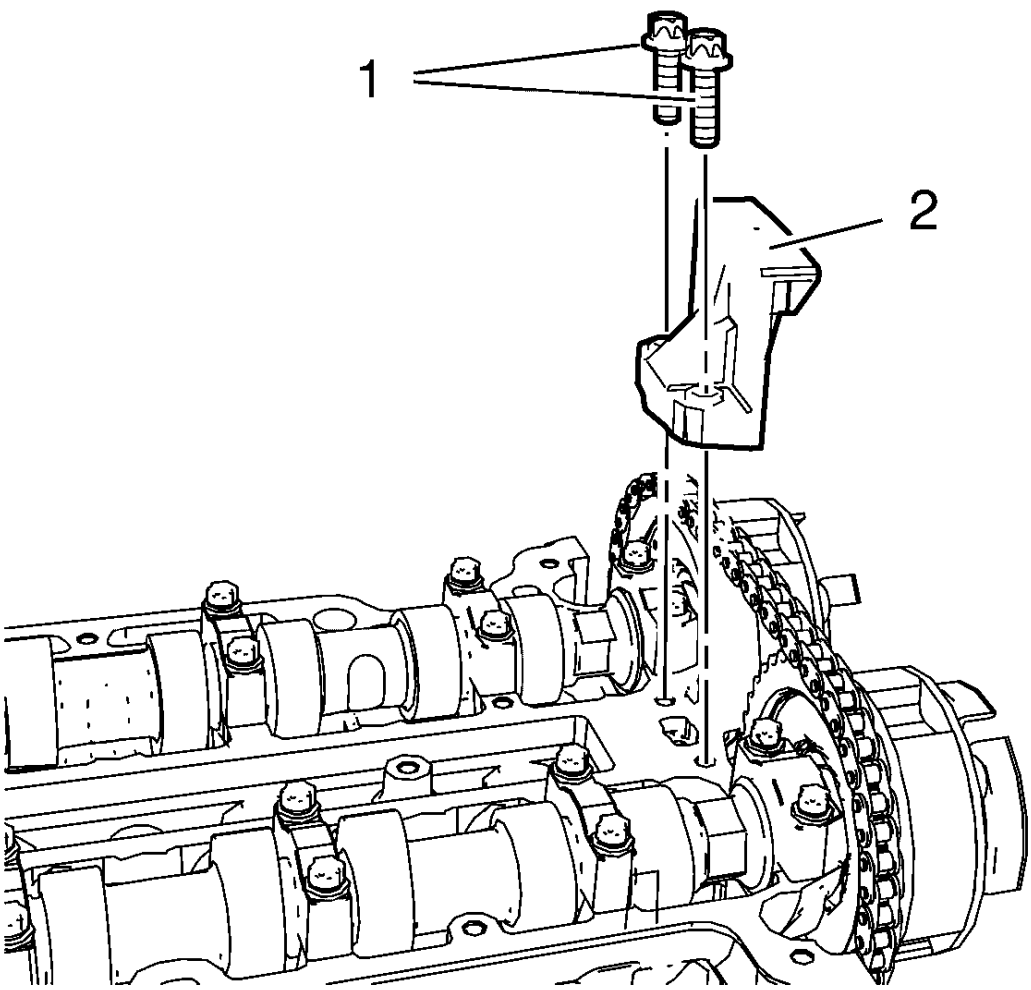

Fig. 112: Upper Timing Chain Guide And Bolts
Courtesy of GENERAL MOTORS COMPANY

10. Remove the 2 upper timing chain guide bolts (1).
11. Remove the upper timing chain guide (2).

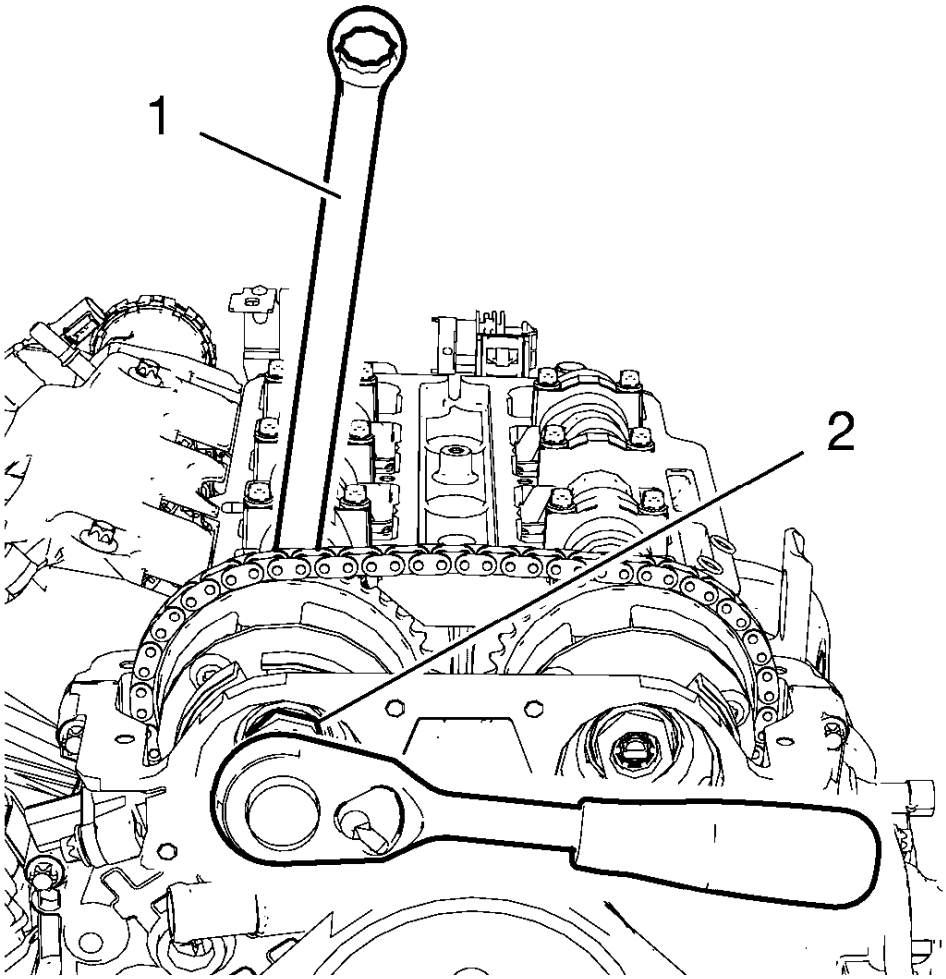

Fig. 113: Intake Camshaft Sprocket Bolt And Hexagonal Wrench
Courtesy of GENERAL MOTORS COMPANY

12. Loosen the intake camshaft sprocket bolt (2) while holding the hexagon of the intake camshaft with a wrench (1).
13. Loosen the exhaust camshaft sprocket bolt while holding the hexagon of the exhaust camshaft with a wrench.

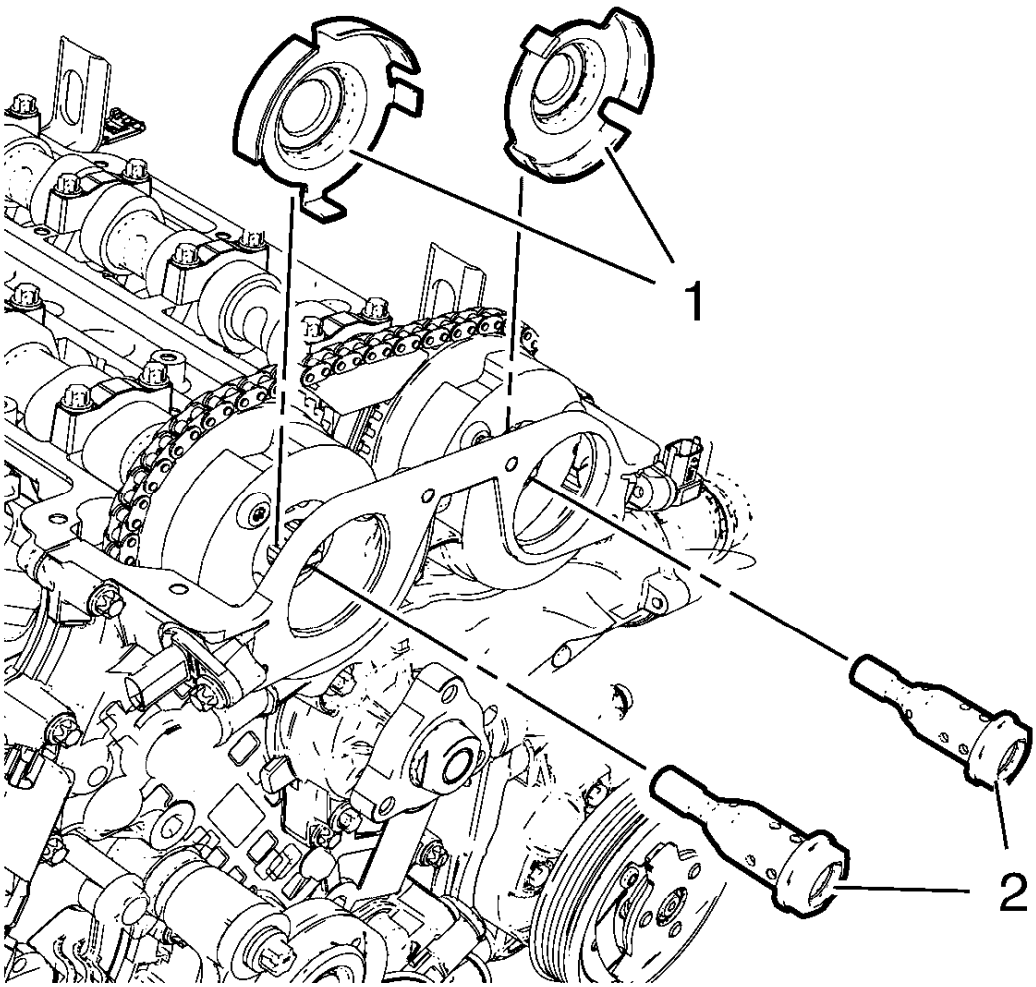

Fig. 114: Camshaft Position Exciter Wheels And Camshaft Sprocket Bolts
Courtesy of GENERAL MOTORS COMPANY

14. Remove the 2 camshaft sprocket bolts (2) and the 2 camshaft position exciter wheels (1).

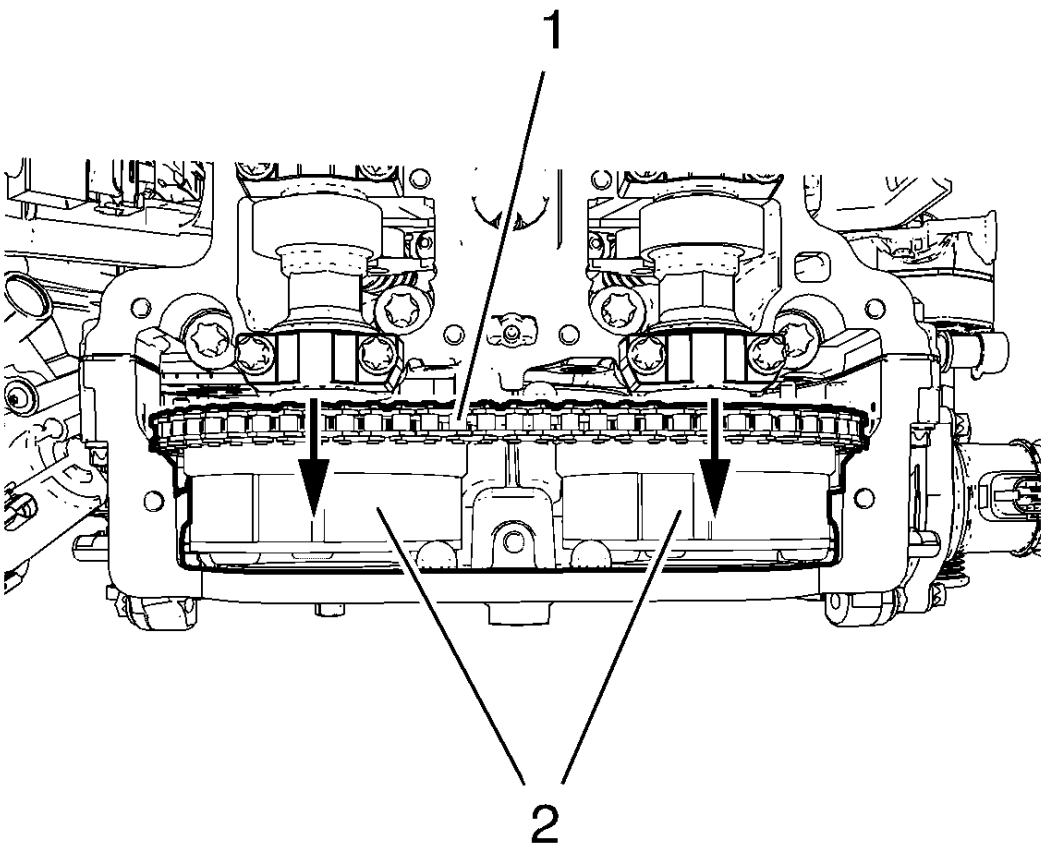

Fig. 115: Timing Chain And Camshaft Sprockets
Courtesy of GENERAL MOTORS COMPANY

15. Remove the 2 camshaft sprockets (2) along with the timing chain (1) and place it in the engine front cover.
16. Remove the exhaust camshaft sprocket.

Installation Procedure

1. Insert the exhaust camshaft sprocket to the engine front cover and timing chain.

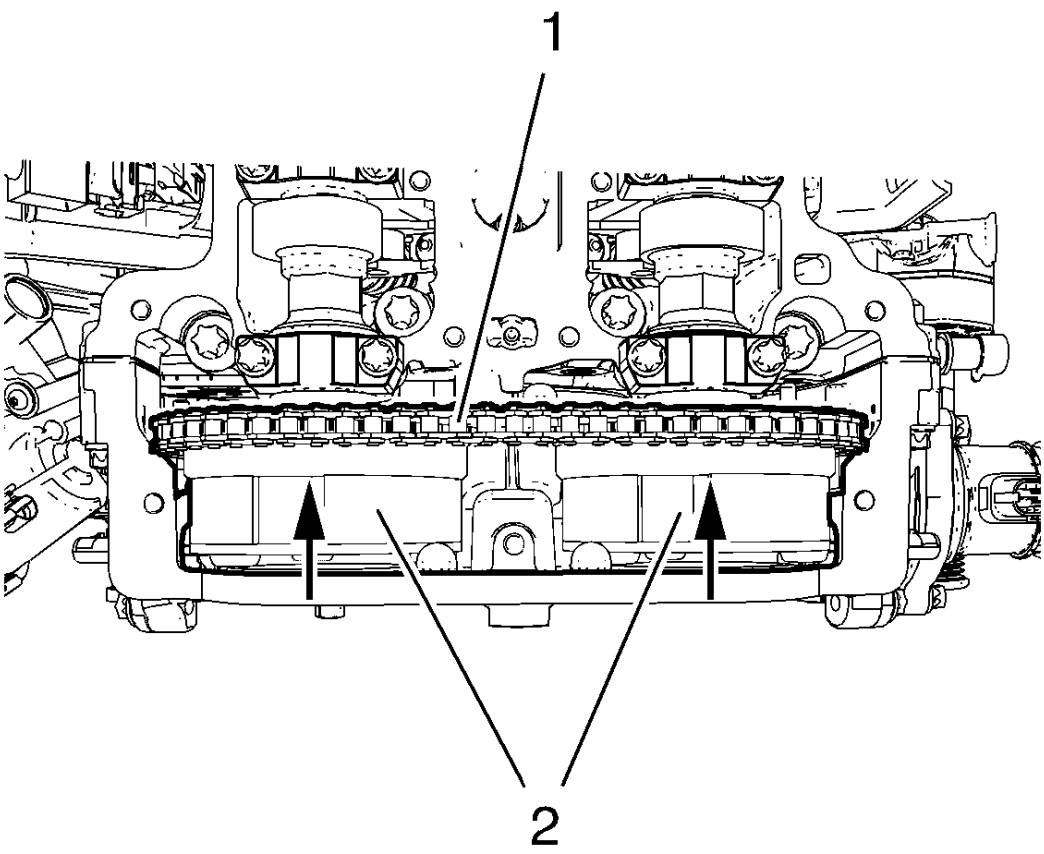

Fig. 116: Timing Chain And Camshaft Sprockets
Courtesy of GENERAL MOTORS COMPANY

2. Install the 2 camshaft sprockets (2) along with the timing chain (1) to the camshafts.

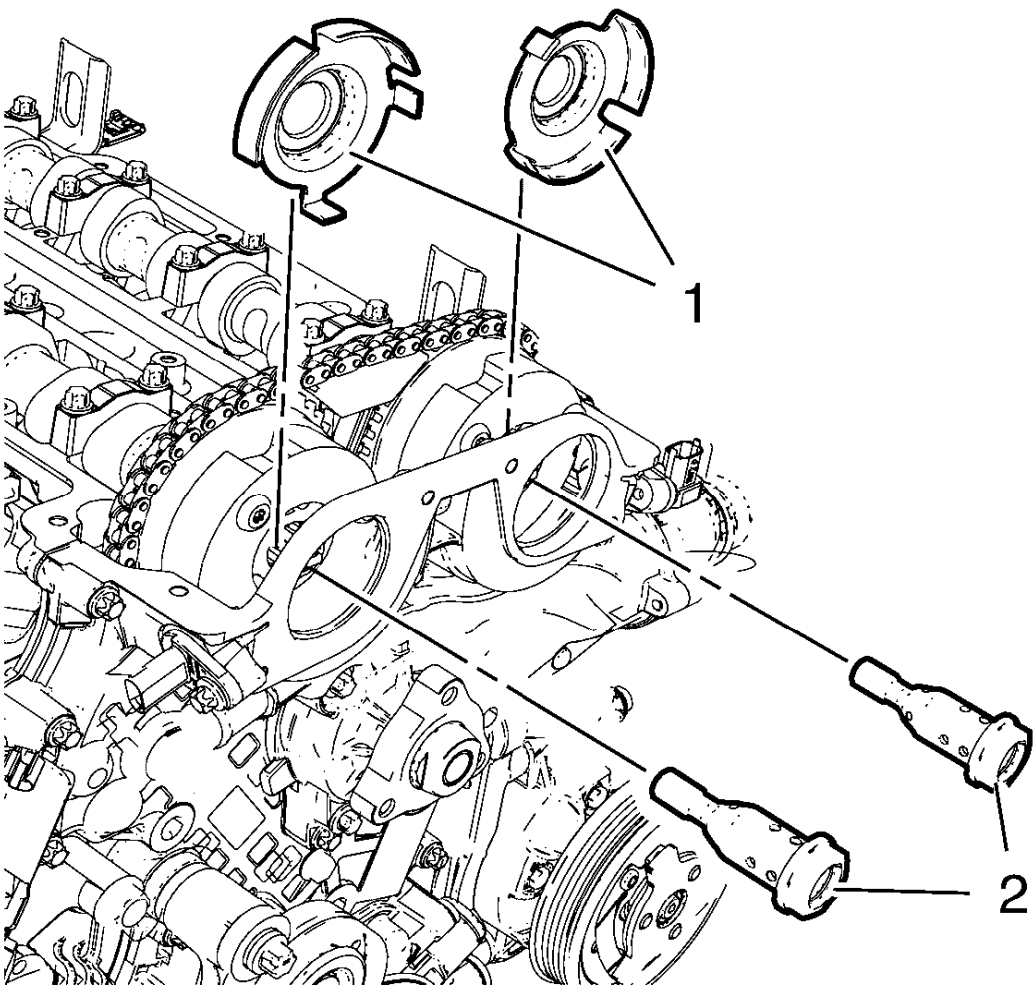

Fig. 117: Camshaft Position Exciter Wheels And Camshaft Sprocket Bolts
Courtesy of GENERAL MOTORS COMPANY

3. Install the 2 camshaft sprocket bolts (2) and the 2 camshaft position exciter wheels (1).
4. Remove the **EN-955-10** pin to apply tension to the timing chain.

NOTE: Engine must be adjusted to TDC.

5. Tighten the 2 camshaft sprockets. Refer to **Camshaft Timing Chain Adjustment**.
6. Remove all special tools for timing chain adjustment. Refer to **Camshaft Timing Chain Adjustment**.

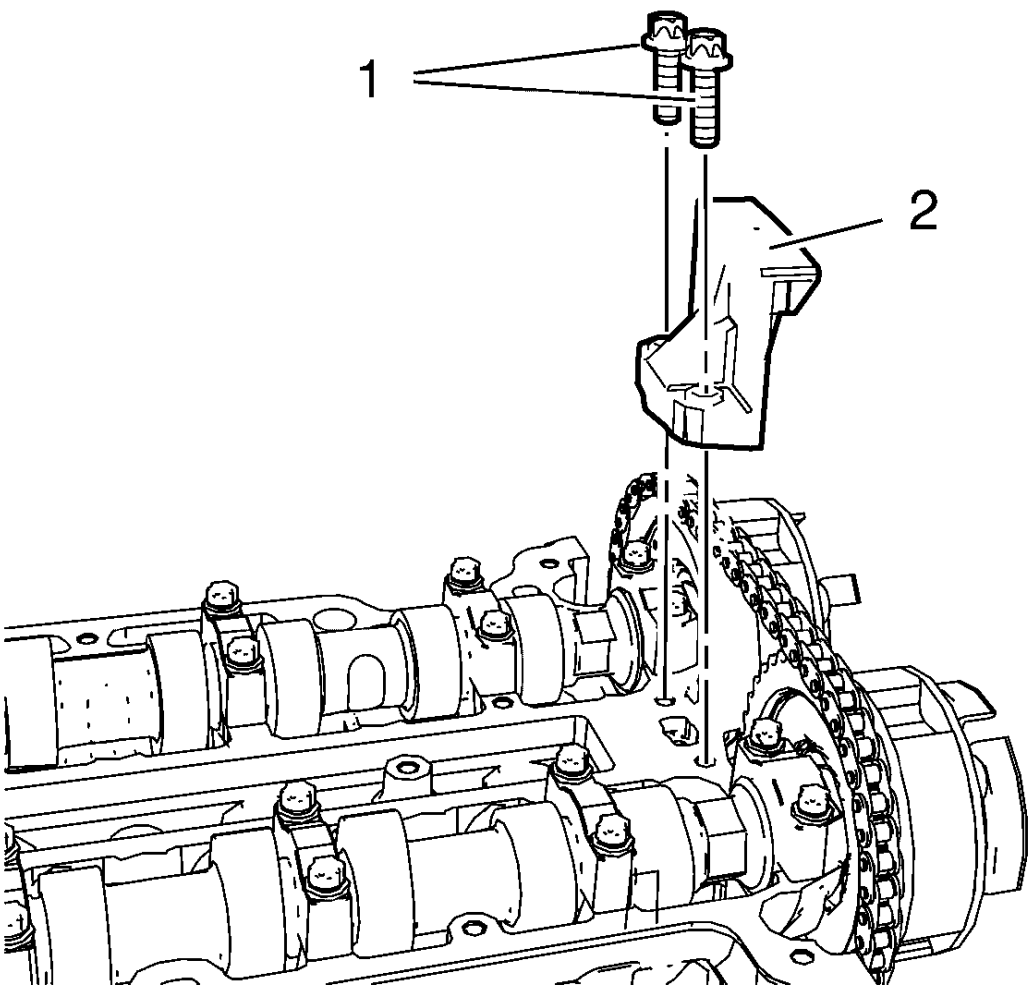

Fig. 118: Upper Timing Chain Guide And Bolts
Courtesy of GENERAL MOTORS COMPANY

7. Install the upper timing chain guide (2).

CAUTION: Refer to Fastener Caution .

8. Install the 2 upper timing chain guide bolts (1) and tighten to 8 N.m (71 lb in).
9. Install the 2 camshaft position actuator solenoid valves. Refer to **Camshaft Position Actuator Solenoid Valve Installation**.
10. Install the camshaft cover. Refer to **Camshaft Cover Replacement**.
11. Install the timing chain tensioner plug and tighten to 50 N.m (37 lb ft).
12. Install the air cleaner assembly. Refer to **Air Cleaner Assembly Replacement** .
13. Check and correct engine oil level.

14. Close the hood.

CYLINDER HEAD REPLACEMENT

Special Tools

- **EN-470-B** Angular Torque Wrench
- **EN-953-A** Fixing Tool
- **EN-955-10** Fixing Pin from **EN-955** Kit

For equivalent regional tools, refer to **Special Tools**.

Removal Procedure

1. Disconnect the battery negative cable. Refer to **Battery Negative Cable Disconnection and Connection** .
2. Remove the engine sight shield.
3. Remove the air cleaner assembly along with the air cleaner outlet duct. Refer to **Air Cleaner Assembly Replacement** , and **Air Cleaner Outlet Duct Replacement** .
4. Remove the positive crankcase ventilation pipe. Refer to **Positive Crankcase Ventilation Hose/Pipe/Tube Replacement**.
5. Remove the intake manifold. Refer to **Intake Manifold Replacement**.
6. Remove the turbocharger. Refer to **Turbocharger Replacement**.

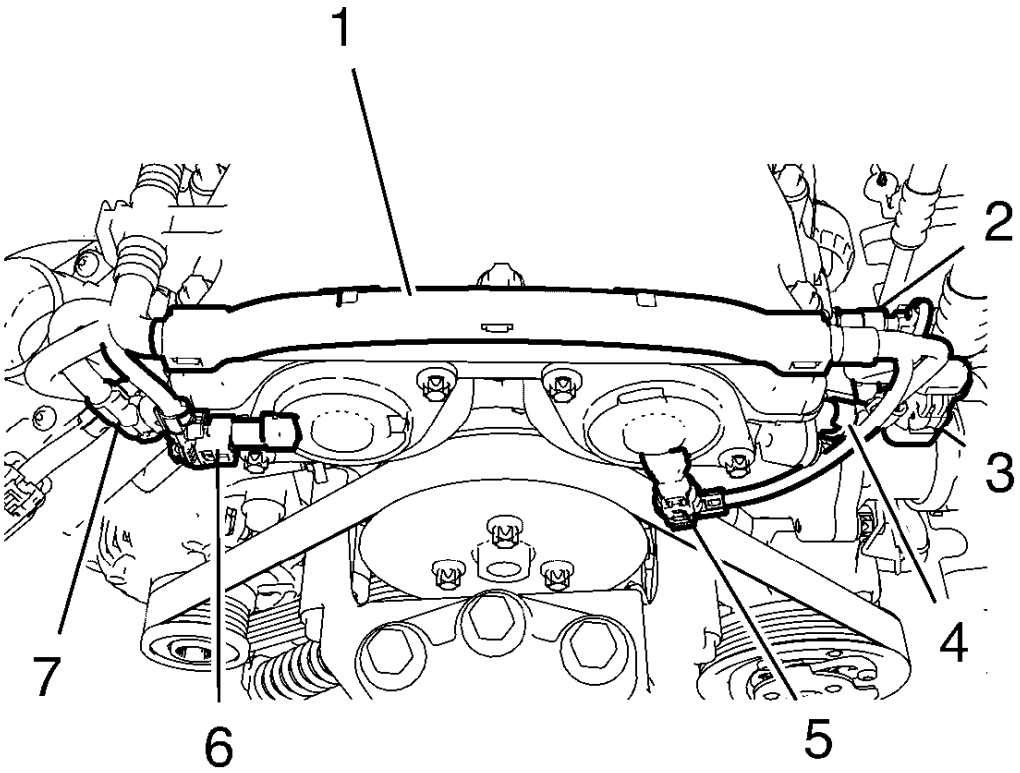

Fig. 119: Wiring Harnesses And Plugs
Courtesy of GENERAL MOTORS COMPANY

7. Remove the engine control module wiring harness (1) from camshaft cover:
    - Disconnect the intake camshaft position sensor wiring harness plug (7).
    - Disconnect the intake camshaft position actuator solenoid valve wiring harness plug (6).
    - Disconnect the exhaust camshaft position sensor wiring harness plug (4).
    - Disconnect the exhaust camshaft position actuator solenoid valve wiring harness plug (5).
    - Disconnect the engine coolant temperature sensor wiring harness plug (3).

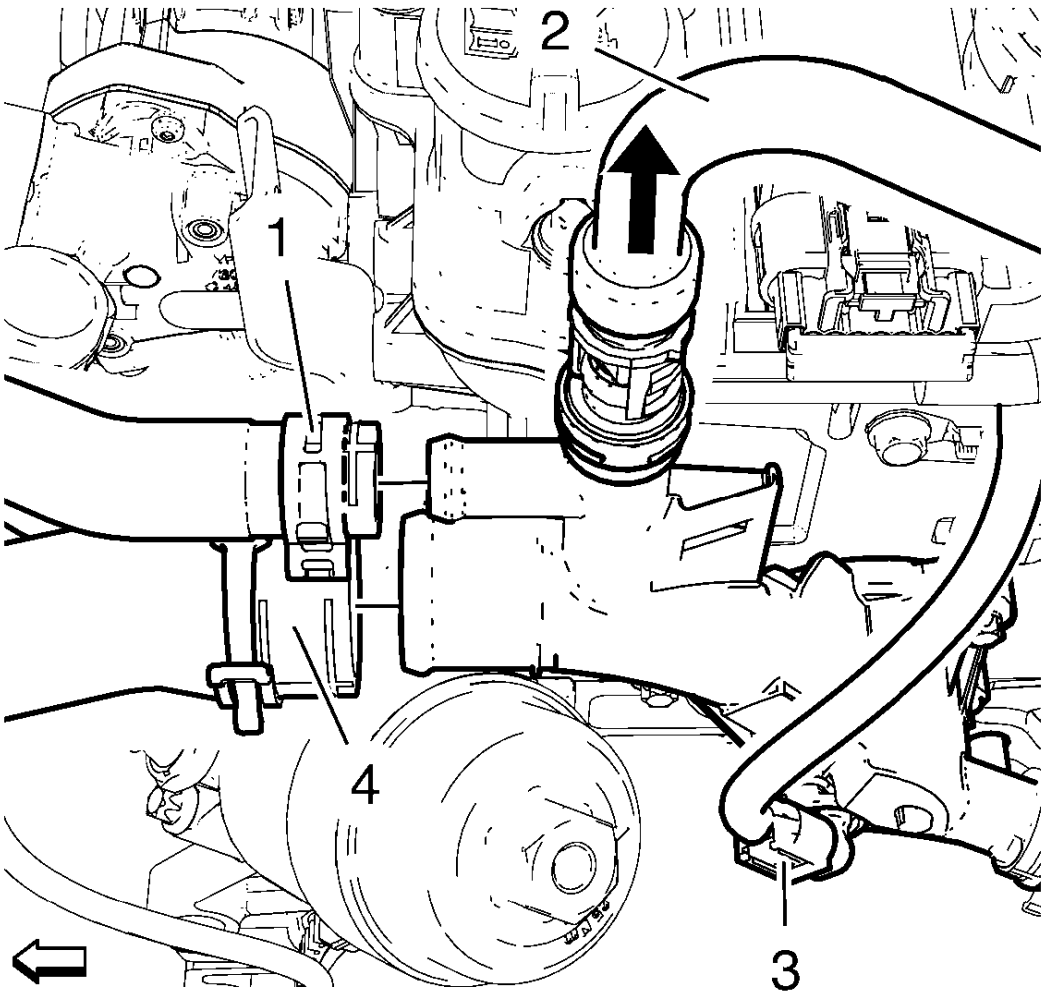

Fig. 120: Oil Cooler Inlet Hose, Engine Coolant Air Bleed Hose, Temperature Sensor Wiring Harness Plug And Radiator Inlet Hose
Courtesy of GENERAL MOTORS COMPANY

8. Place a drain pan underneath the vehicle.
9. Remove the oil cooler inlet hose clamp and the oil cooler inlet hose (1).
10. Remove the radiator inlet hose clamp and the radiator inlet hose (4).
11. Remove the engine coolant air bleed hose (2).
12. Disconnect the engine coolant temperature sensor wiring harness plug (3).
13. Remove the heater inlet hose from the water outlet. Refer to **Heater Inlet Hose Replacement (1.8L LUW and LWE)** , **Heater Inlet Hose Replacement (1.4L LUV)** .

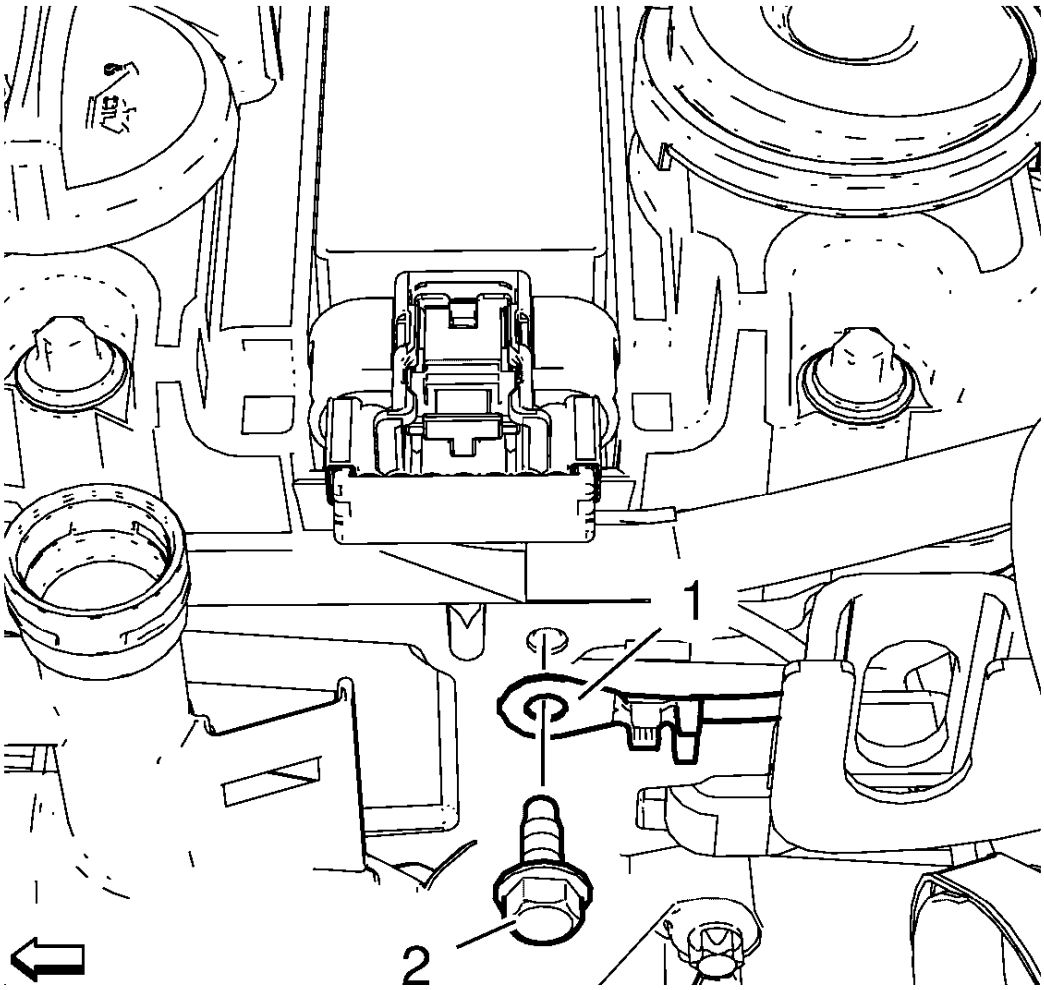

Fig. 121: Ground Cable And Bolt
Courtesy of GENERAL MOTORS COMPANY

14. Remove the ground cable bolt (2) and the ground cable (1).

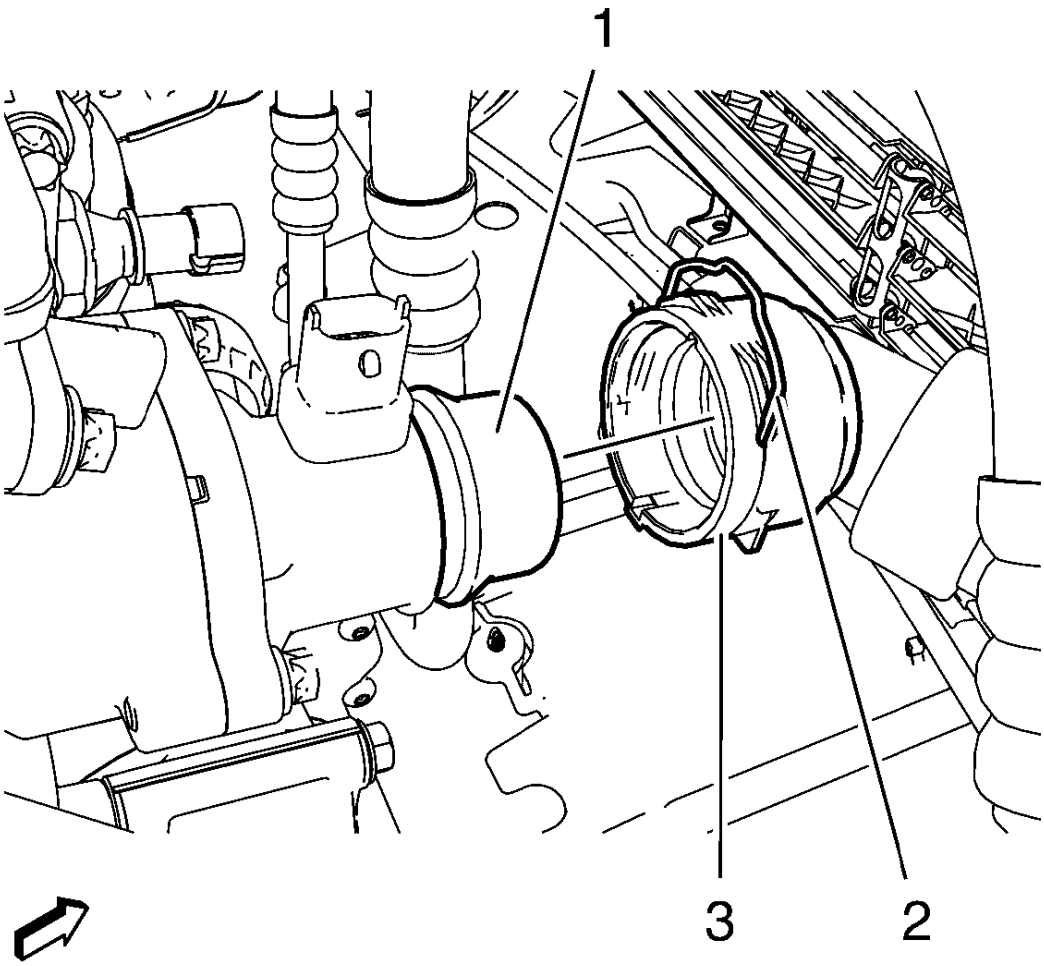

Fig. 122: Engine Coolant Thermostat Housing, Radiator Outlet House And Quick Connector Clamp
Courtesy of GENERAL MOTORS COMPANY

15. Unclip the radiator outlet hose quick connector clamp (2).
16. Remove the radiator outlet hose (3) from the engine coolant thermostat housing (1).
17. Remove the engine mount bracket. Refer to **Engine Mount Bracket Replacement - Right Side**.
18. Remove the drive belt. Refer to **Drive Belt Replacement**.
19. Remove the water pump pulley. Refer to **Water Pump Pulley Removal**.

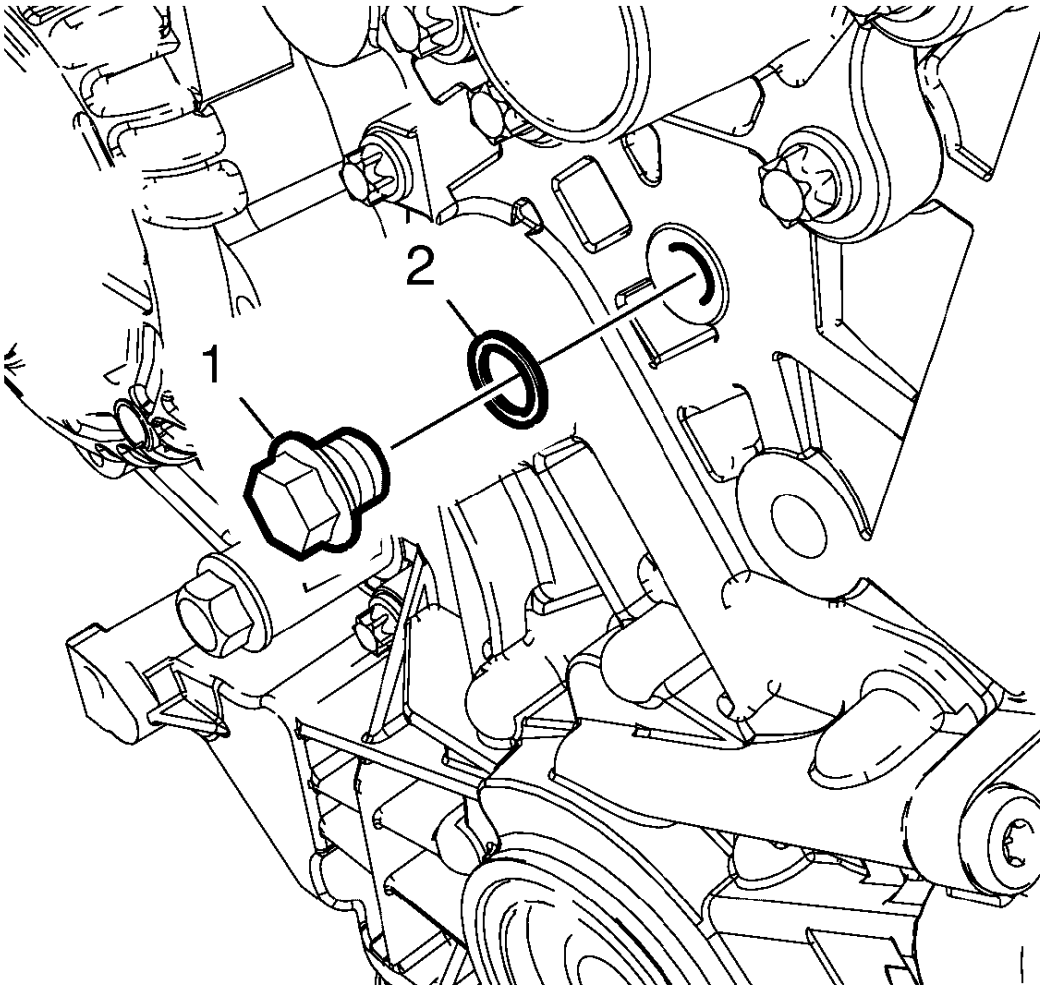

Fig. 123: Drain Plug And Seal Ring
Courtesy of GENERAL MOTORS COMPANY

20. Remove the drain plug (1) and the seal ring (2) and allow the remaining coolant fluid to drain out of the engine block. DISCARD the seal ring.
21. Install the drain plug (1) and a NEW seal ring (2) and tighten the plug to 15 N.m (11 lb ft).

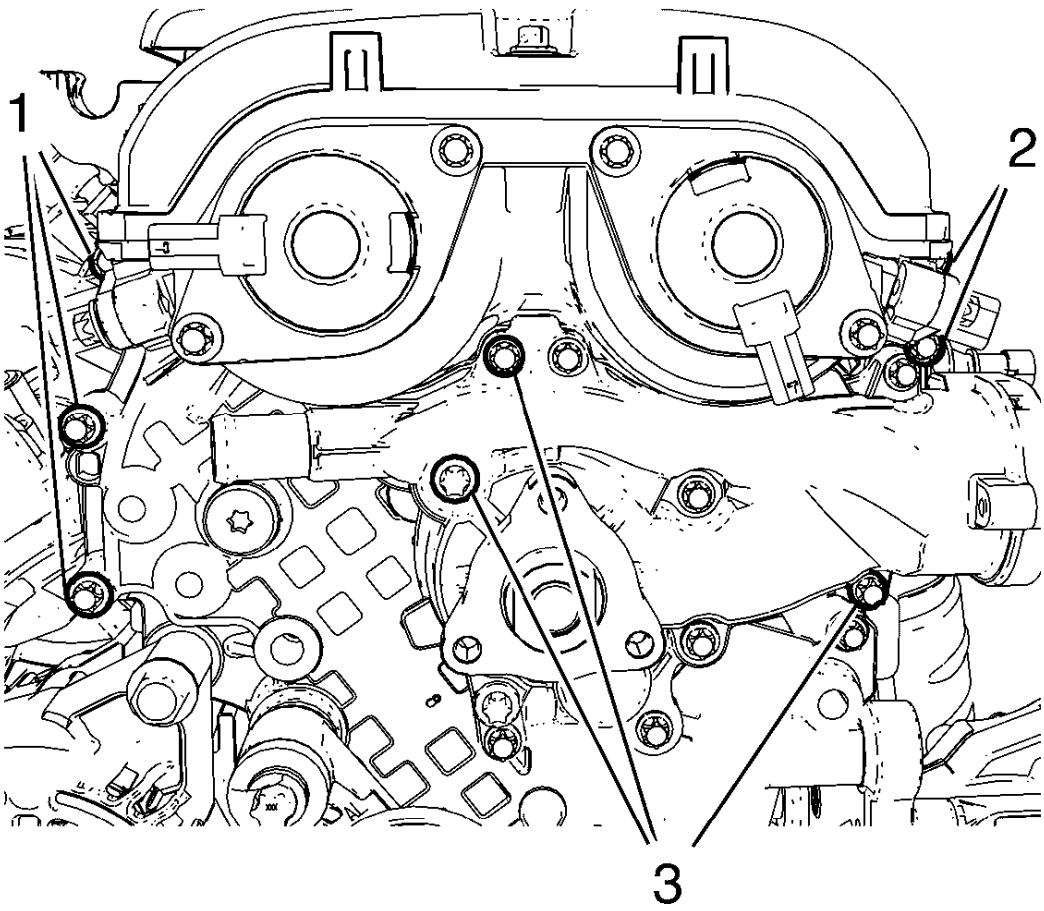

Fig. 124: Engine Front Cover Bolts And Water Pump Bolts
Courtesy of GENERAL MOTORS COMPANY

22. Remove 5 engine front cover bolts (1, 2).
23. Remove 3 water pump bolts (3).
24. Install the engine mount bracket. Refer to **Engine Mount Bracket Replacement - Right Side**.
25. Install the engine mount. Refer to **Engine Mount Replacement - Right Side**.
26. Remove the ignition coil. Refer to **Ignition Coil Replacement** .
27. Remove the camshaft cover. Refer to **Camshaft Cover Replacement**.
28. Set engine to TDC. Refer to **Camshaft Timing Chain Adjustment**.
29. Remove the 2 camshaft position actuator solenoid valves. Refer to **Camshaft Position Actuator Solenoid Valve Removal**.

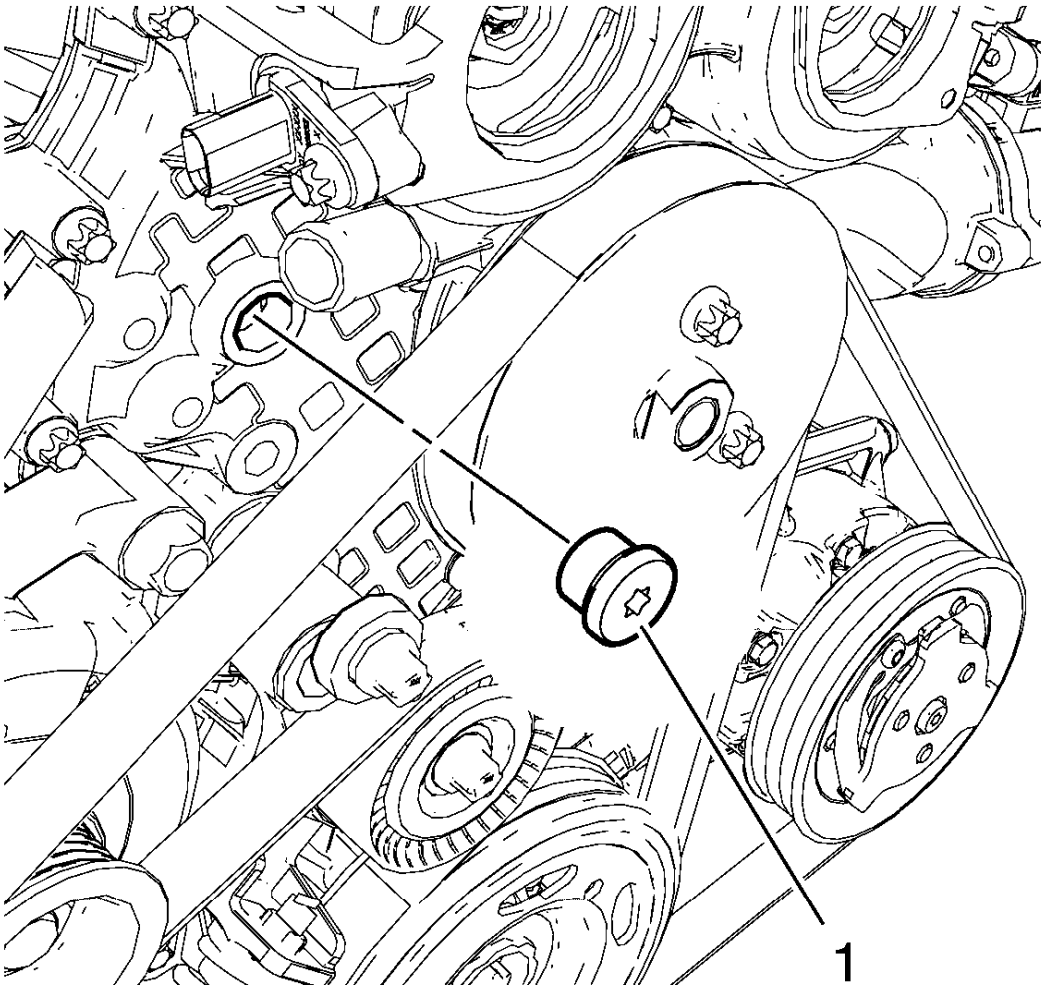

Fig. 125: Timing Chain Tensioner Plug
Courtesy of GENERAL MOTORS COMPANY

30. Remove the timing chain tensioner plug (1) from the engine front cover.

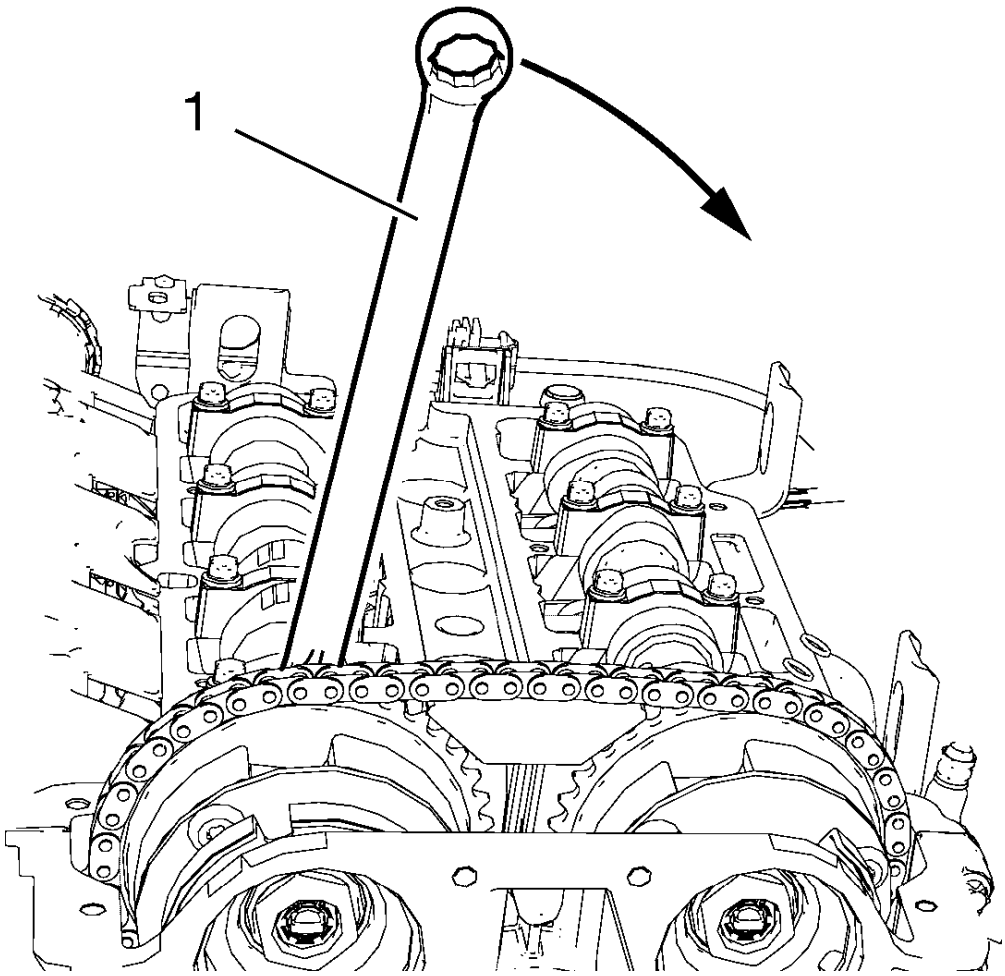

Fig. 126: Hexagonal Wrench Rotation Direction
Courtesy of GENERAL MOTORS COMPANY

NOTE: Remove and reinstall the EN-953-A fixing tool for this step.

31. Install a wrench (1) to the hexagon of the intake camshaft and rotate it in direction of the arrow to apply tension to the timing chain and hold.

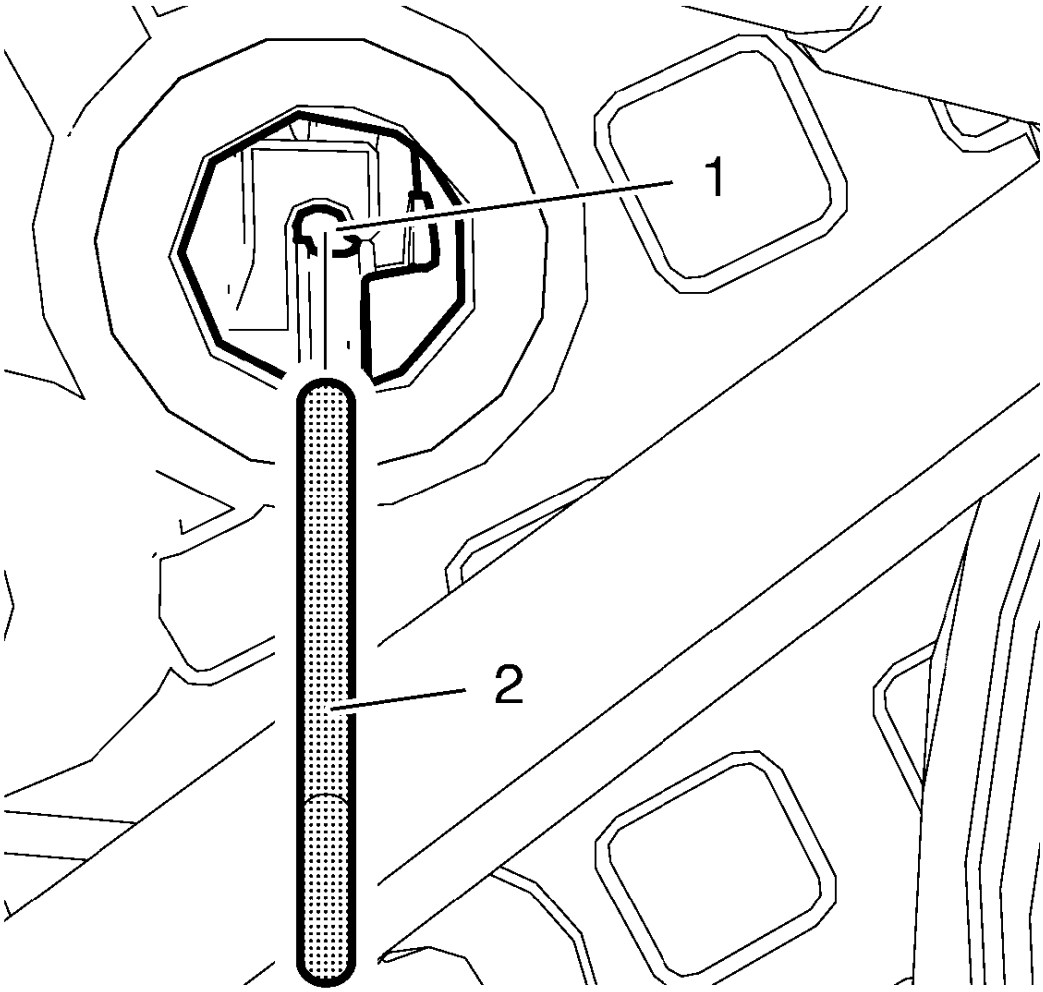

Fig. 127: Timing Chain Tensioner Bore And Pin
Courtesy of GENERAL MOTORS COMPANY

32. Install **EN-955-10** pin (2) to the timing chain tensioner bore (1) to secure it in place.
33. Remove the wrench from the intake camshaft.

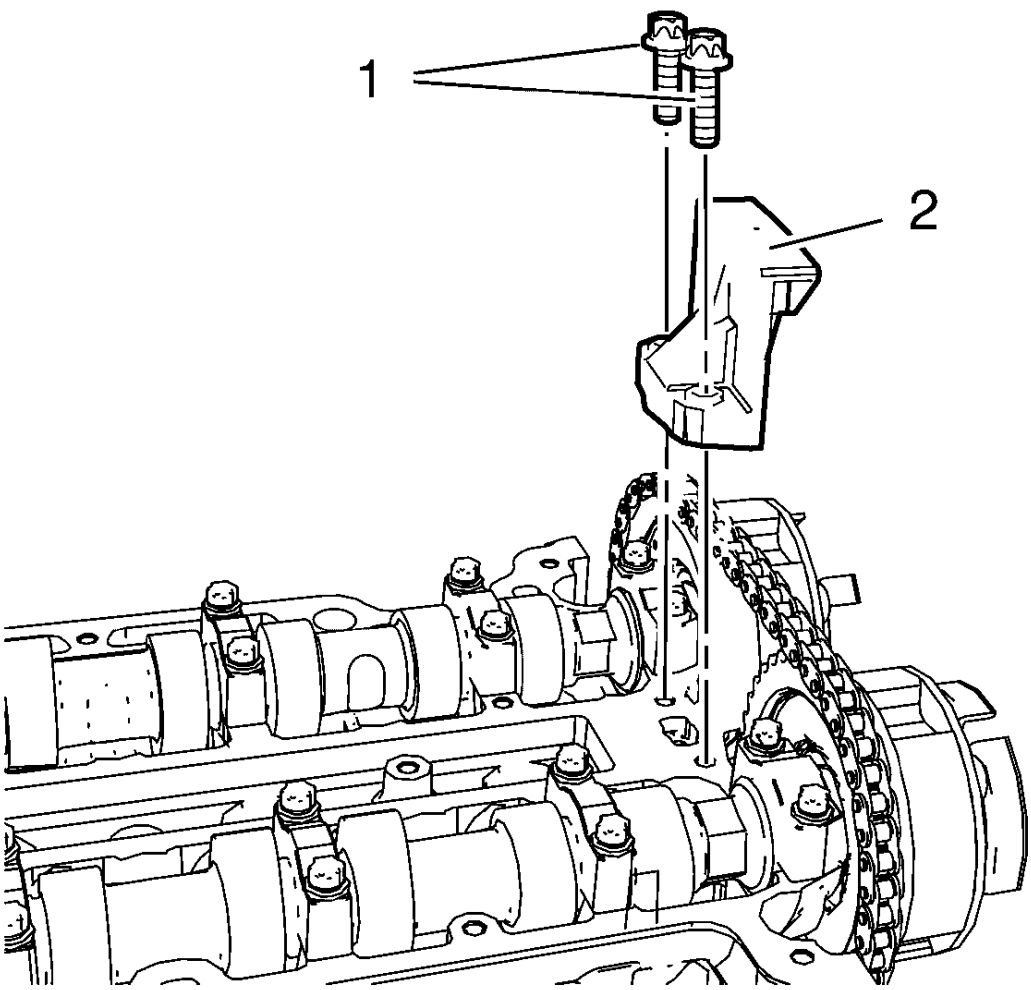

Fig. 128: Upper Timing Chain Guide And Bolts
Courtesy of GENERAL MOTORS COMPANY

34. Remove 2 upper timing chain guide bolts (1).
35. Remove upper timing chain guide (2).

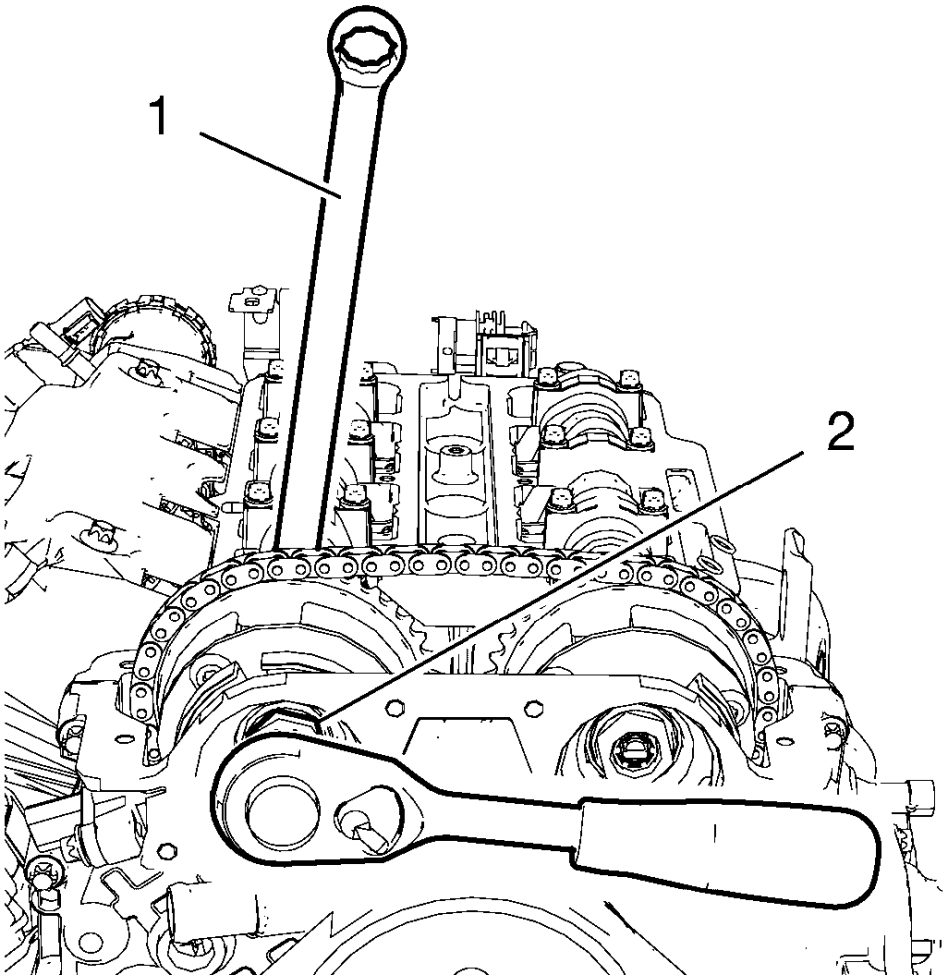

Fig. 129: Intake Camshaft Sprocket Bolt And Hexagonal Wrench
Courtesy of GENERAL MOTORS COMPANY

36. Loosen the intake camshaft sprocket bolt (2) while holding the hexagon of intake camshaft sprocket with a wrench (1).
37. Loosen the exhaust camshaft sprocket bolt while holding with a wrench.

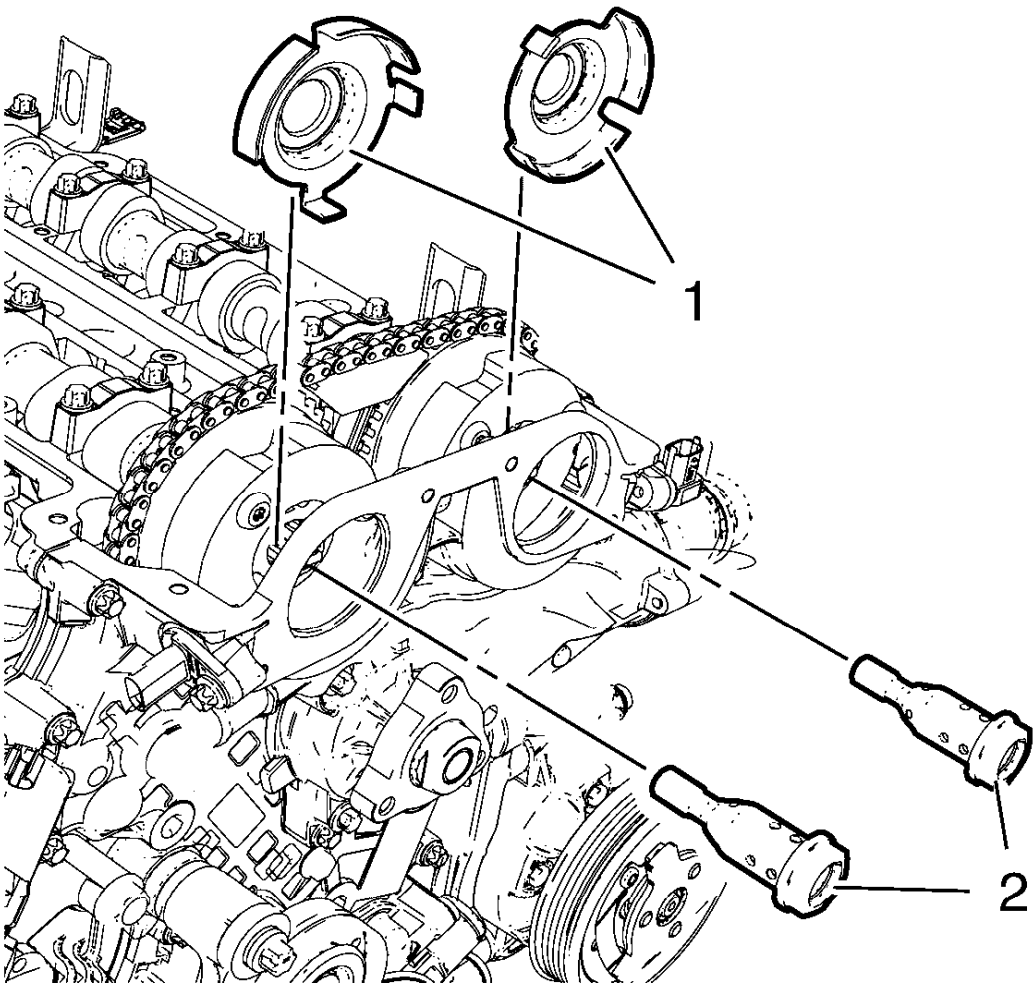

Fig. 130: Camshaft Position Exciter Wheels And Camshaft Sprocket Bolts
Courtesy of GENERAL MOTORS COMPANY

38. Remove the 2 camshaft sprocket bolts (2) and the 2 camshaft position exciter wheels (1).

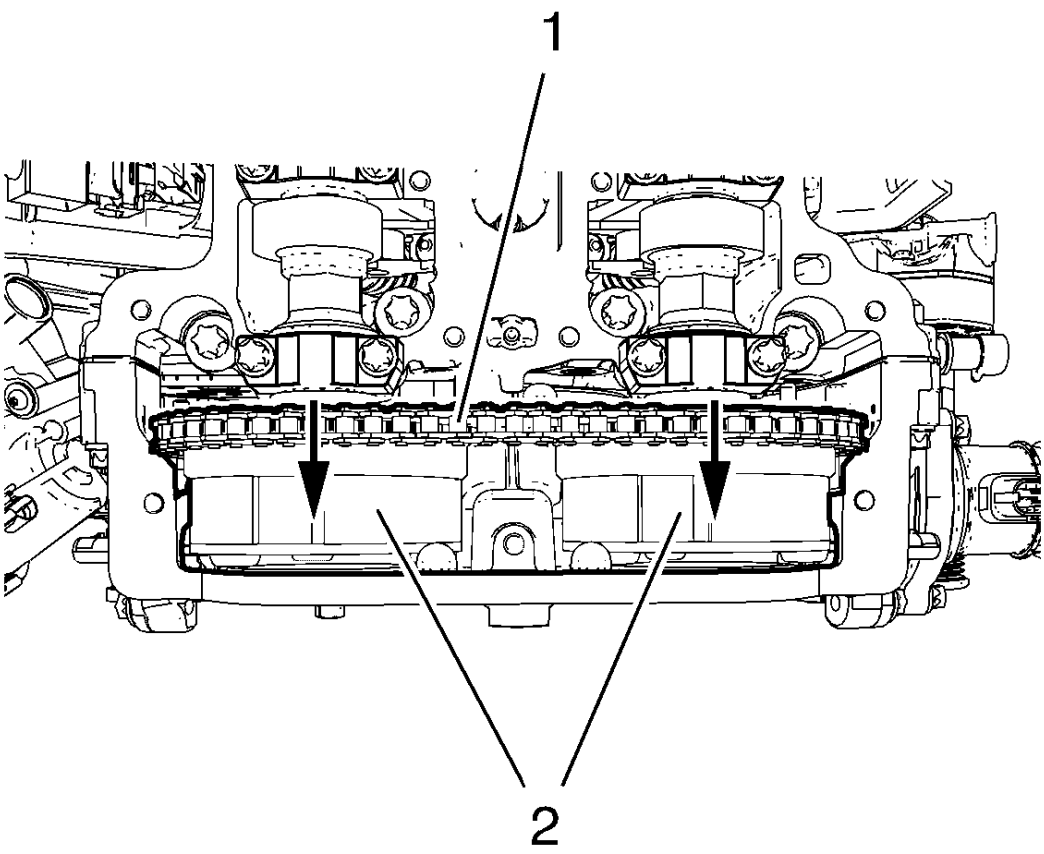

Fig. 131: Timing Chain And Camshaft Sprockets
Courtesy of GENERAL MOTORS COMPANY

39. Remove the 2 camshaft sprockets (2) along with the timing chain (1) and place it in the engine front cover.

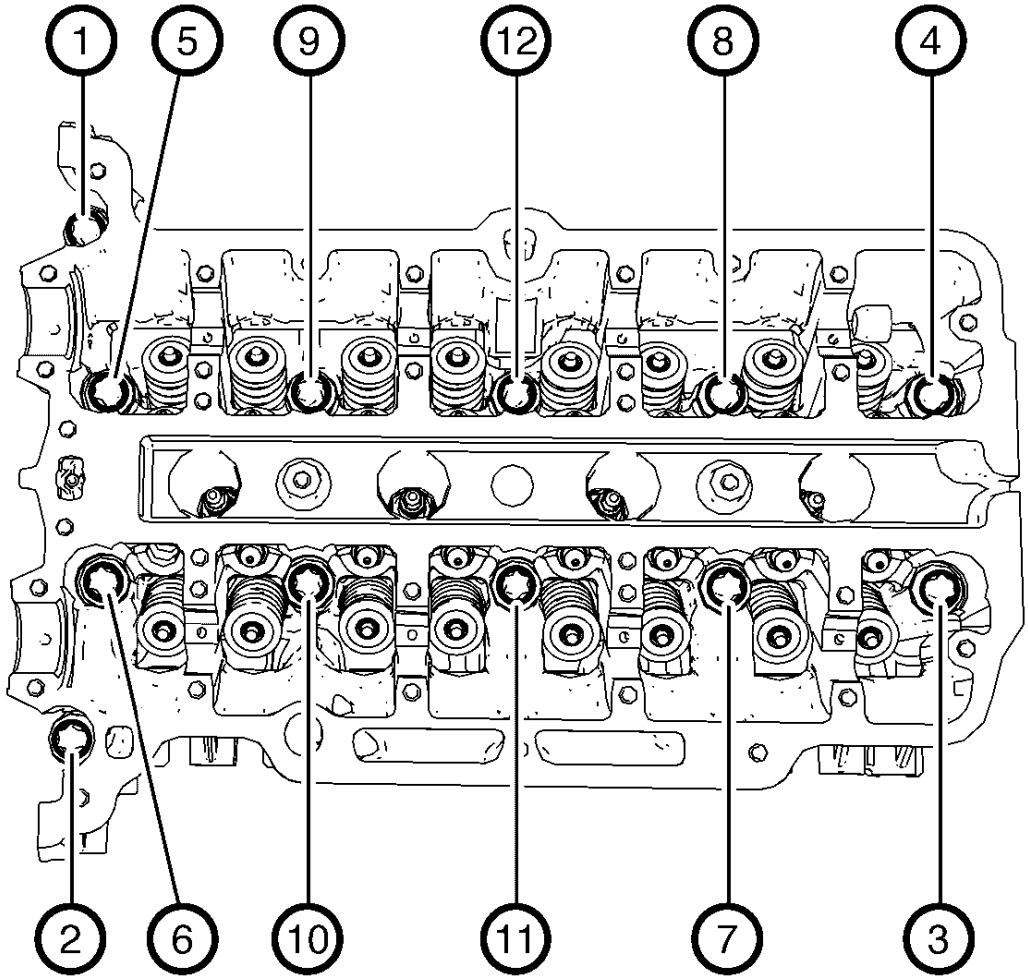

Fig. 132: Cylinder Head Bolts Loosening Sequence
Courtesy of GENERAL MOTORS COMPANY

40. Loosen the 12 cylinder head bolts in the sequence as shown. Use the following procedure:
    1. Loosen the cylinder head bolts 90°.
    2. Loosen the cylinder head bolts 180°.
41. Remove and DISCARD the 12 cylinder head bolts.
42. Move the cylinder head assembly slightly in direction of the transmission.

NOTE: Mind the timing chain tensioner and the timing chain guide pin.

NOTE: A second technician is required.

43. Remove the cylinder head assembly.
44. Remove the cylinder head gasket.

45. Remove the assembly parts from cylinder head:
    - Remove the **EN-953-A** fixing tool.
    - Remove the engine coolant thermostat housing. Refer to **Engine Coolant Thermostat Housing Removal**.
    - Remove the water outlet. Refer to **Water Outlet Removal**.
    - Remove the intake camshaft. Refer to **Intake Camshaft Removal**.
    - Remove exhaust camshaft. Refer to **Exhaust Camshaft Removal**.
    - Remove the hydraulic valve lash adjuster arms. Refer to **Hydraulic Valve Lash Adjuster Arm Removal**.
    - Remove the hydraulic valve lash adjusters. Refer to **Hydraulic Valve Lash Adjuster Removal**.
    - Remove the 3 engine lift brackets.

Installation Procedure

1. Install the cylinder head assembly parts:
    - Install the 3 engine lift brackets.

CAUTION: Refer to Fastener Caution .

    - Install the 3 engine lift bracket bolts and tighten to 22 N.m (16 lb ft).
    - Install the hydraulic valve lash adjusters. Refer to **Hydraulic Valve Lash Adjuster Installation**.
    - Install the hydraulic valve lash adjuster arms. Refer to **Hydraulic Valve Lash Adjuster Arm Installation**.
    - Install the exhaust camshaft. Refer to **Exhaust Camshaft Installation**.
    - Install the intake camshaft. Refer to **Intake Camshaft Installation**.
    - Install the water outlet. Refer to **Water Outlet Installation**.
    - Install the engine coolant thermostat housing. Refer to **Engine Coolant Thermostat Housing Installation**.

NOTE: Adjust the camshafts using the hexagon and a wrench.

    - Install the **EN-953-A** fixing tool.

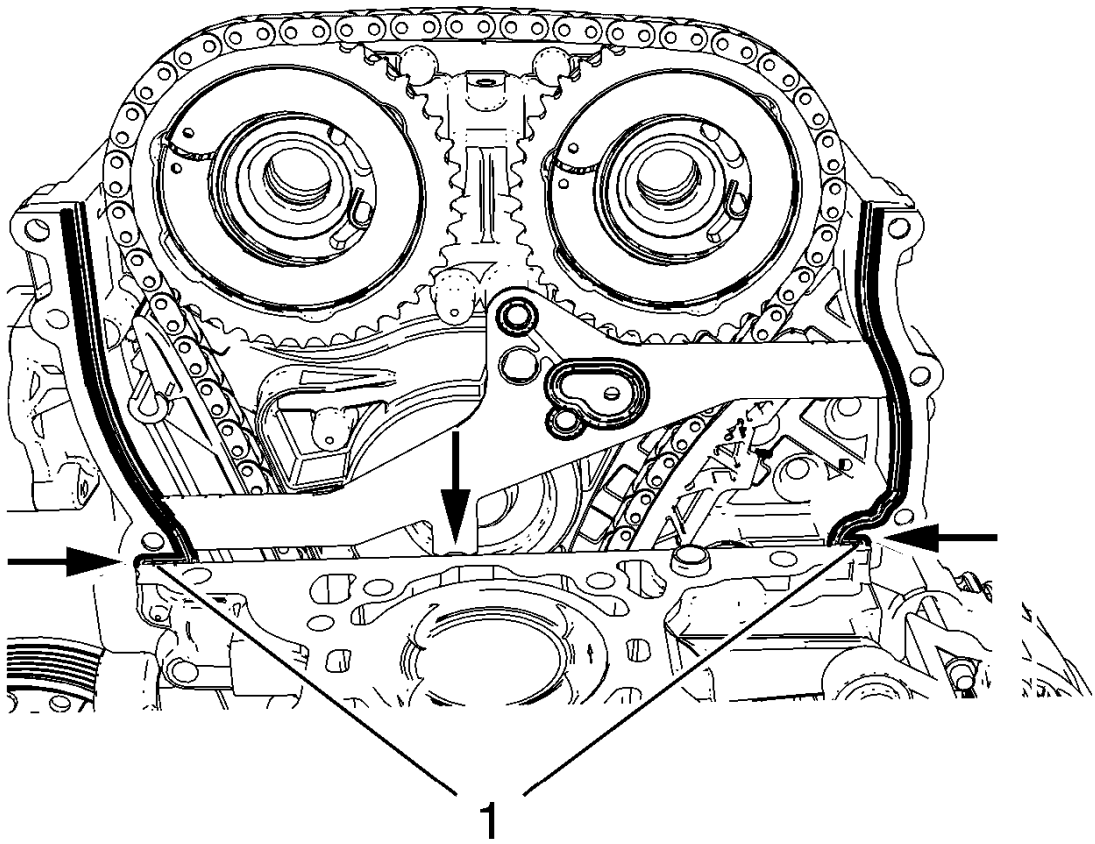

Fig. 133: Elastomer Sealing Strips
Courtesy of GENERAL MOTORS COMPANY

2. Cut the 2 elastomer sealing lips (1) from engine front cover gasket.
3. Bend down the engine front cover gasket at the predetermined breaking points (arrows).
4. Clean sealing surfaces of engine front cover and engine block from grease and old gasket material.
5. Inspect cylinder block and cylinder head for flatness. Refer to **Cylinder Head Cleaning and Inspection**, and **Engine Block Cleaning and Inspection**.

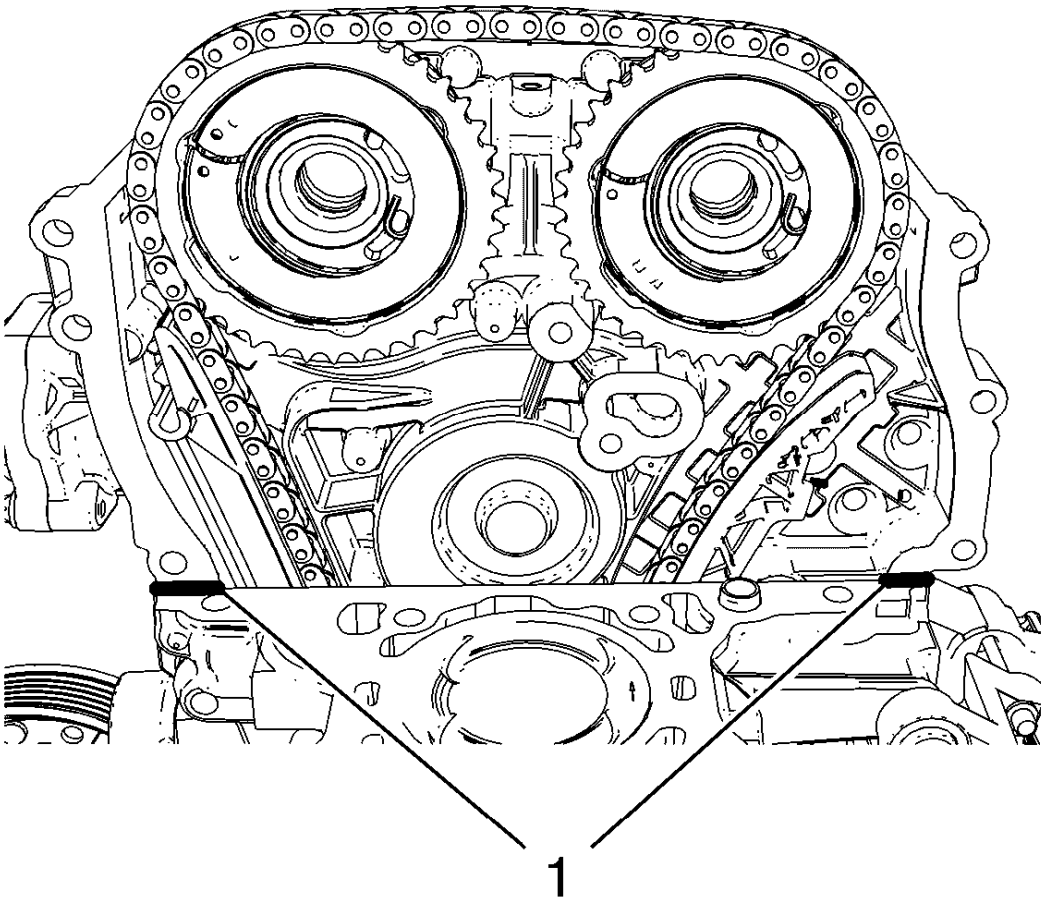

Fig. 134: Sealing Compound Application Area
Courtesy of GENERAL MOTORS COMPANY

NOTE: The thickness of the sealing bead should be 2 mm (0.0787 in).

6. Apply sealing compound to the shown areas (1). Refer to **Adhesives, Fluids, Lubricants, and Sealers**.

NOTE: Mind the marking on the cylinder head gasket for top side.

7. Install the cylinder head gasket to engine block.

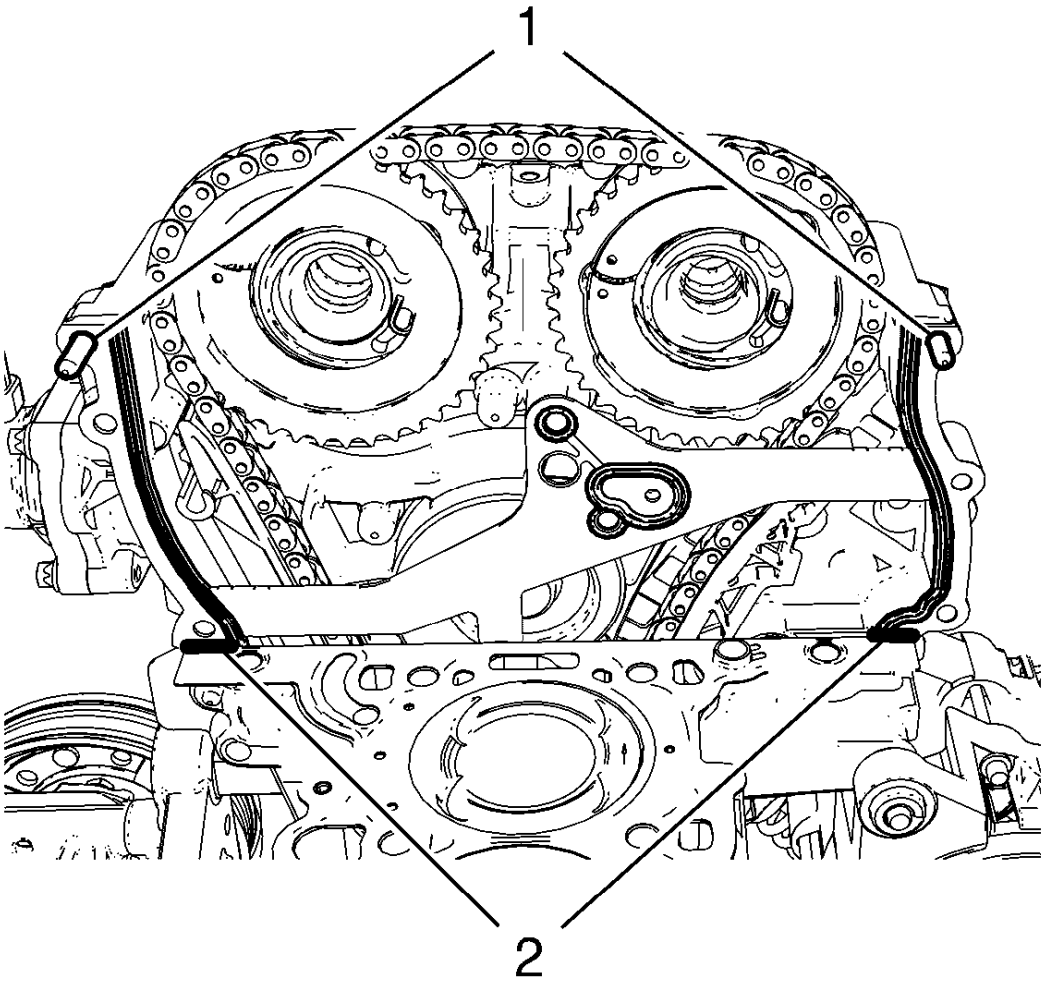

Fig. 135: Engine Front Cover Bolts And Sealing Compound Application Areas
Courtesy of GENERAL MOTORS COMPANY

8. Install 2 engine front cover bolts (1) in order to guide the NEW upper engine front cover gasket.
9. Install the NEW upper engine front cover gasket.
10. Apply sealing compound to the shown areas (2). The thickness of the sealing bead should be 2 mm (0.0787 in).

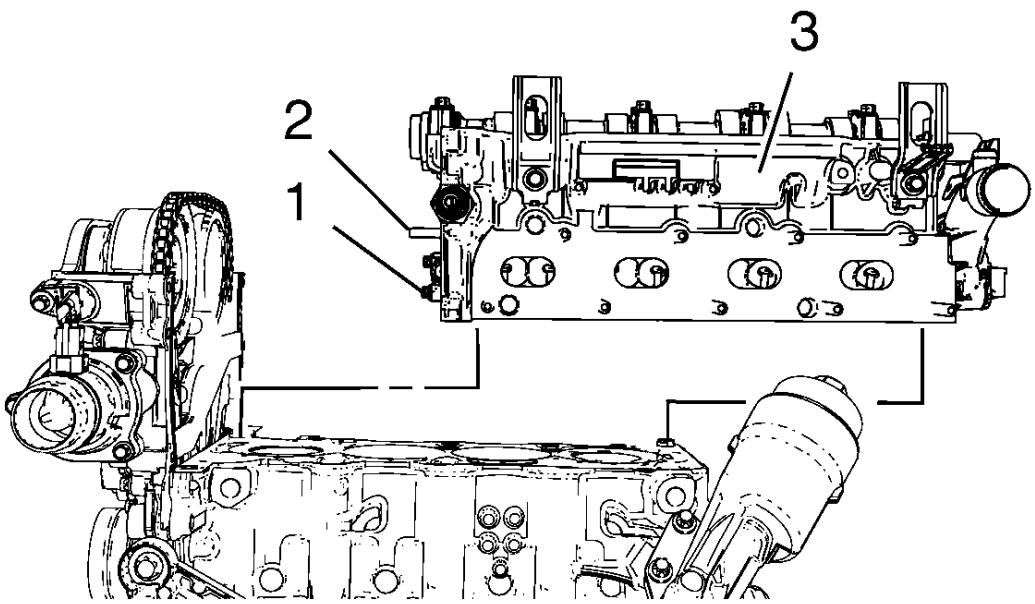

Fig. 136: Timing Chain Tensioner, Guide Pin And Cylinder Head
Courtesy of GENERAL MOTORS COMPANY

NOTE: A second technician is required. Guide the timing chain guide pin (2) to the timing chain guide and the timing chain tensioner (1) with the installed fixing pin through the timing chain tensioner plug bore in engine front cover.

11. Install the cylinder head (3).
12. Loosely install 12 NEW cylinder head bolts.

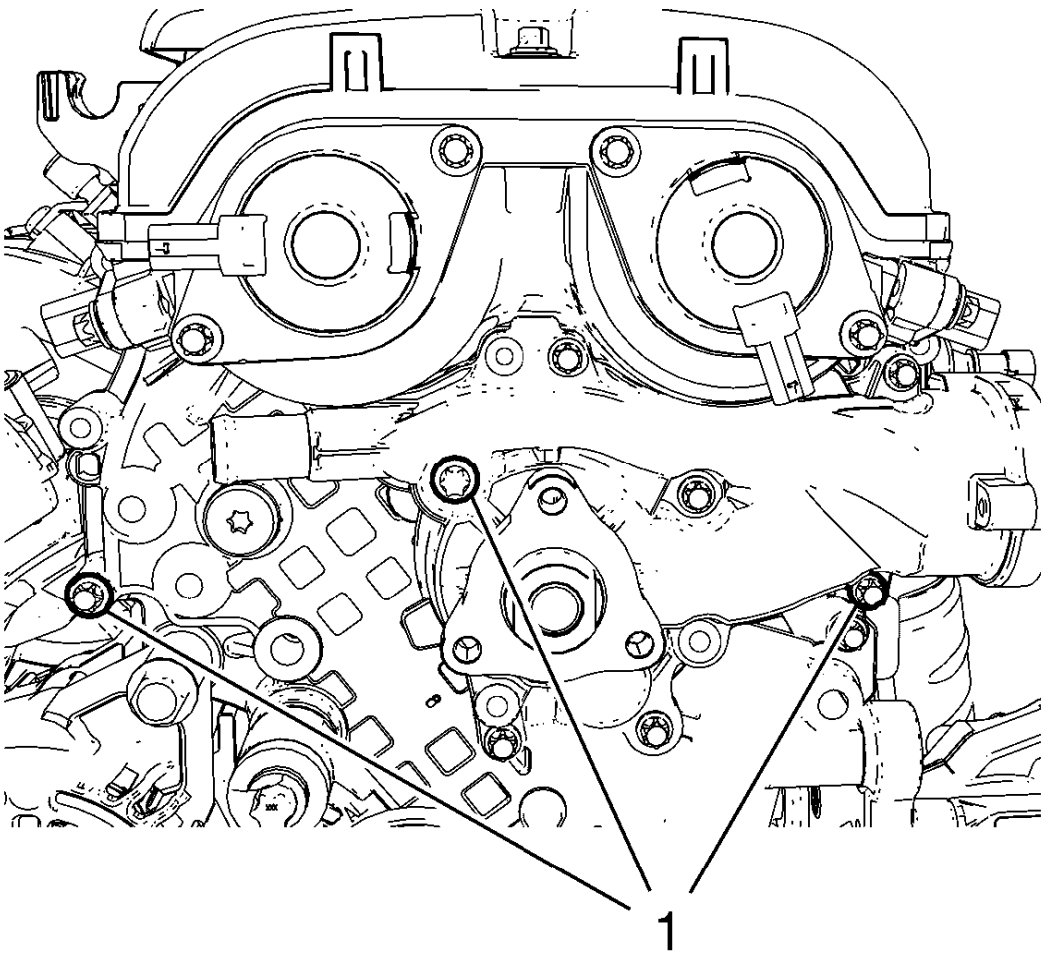

Fig. 137: Engine Front Cover Bolts
Courtesy of GENERAL MOTORS COMPANY

13. Adjust the cylinder head to the engine front cover. Use a rubber mallet.
14. Locate the engine front cover to cylinder head by installing 3 bolts (1).
15. Tighten the 3 bolts (1) to 8 N.m (71 lb in).

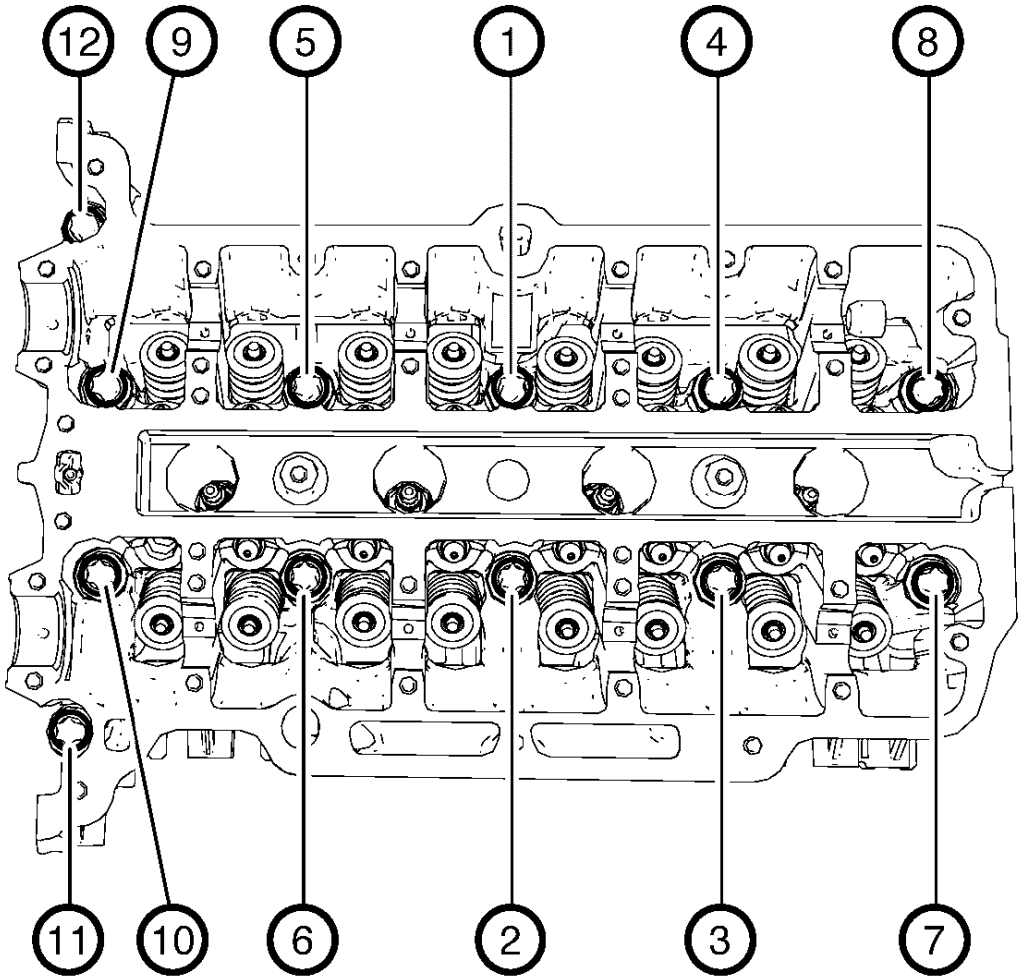

Fig. 138: Cylinder Head Bolts Tightening Sequence
Courtesy of GENERAL MOTORS COMPANY

CAUTION: Refer to Torque-to-Yield Fastener Caution .

16. Tighten the cylinder head bolts in the sequence as shown and in the following order:
    1. Tighten the cylinder head bolts a first pass to 35 N.m (26 lb ft).
    2. Tighten the cylinder head bolts a final pass to an additional 180°, using **EN-470-B** wrench.
17. Loosen the 3 bolts from engine front cover.

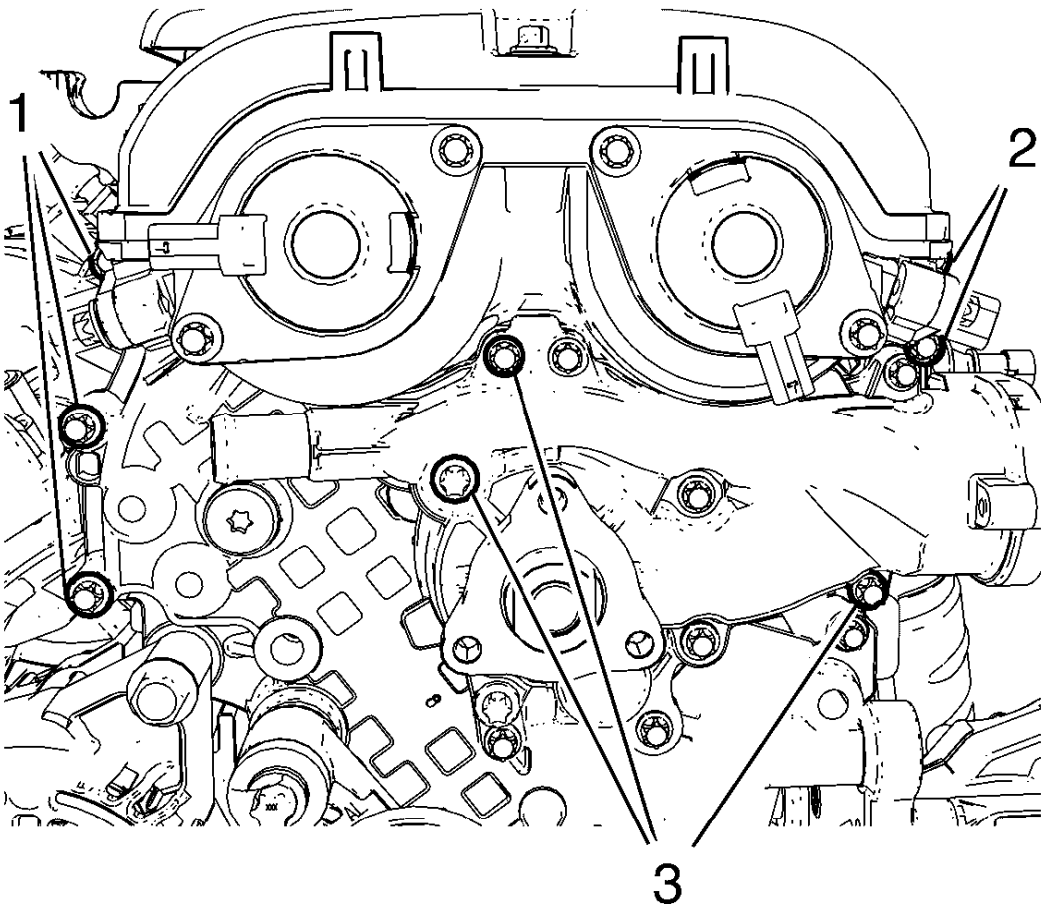

Fig. 139: Engine Front Cover Bolts And Water Pump Bolts
Courtesy of GENERAL MOTORS COMPANY

18. Install the 5 remaining bolts to engine front cover and water pump.
19. Tighten the 5 engine front cover bolts (1, 2) to 8 N.m (71 lb in).
20. Tighten the 3 water pump bolts (3) to 8 N.m (71 lb in).
21. Remove the engine mount bracket. Refer to **Engine Mount Bracket Replacement - Right Side**.
22. Install the water pump pulley. Refer to **Water Pump Pulley Installation**.
23. Install the drive belt. Refer to **Drive Belt Replacement**.
24. Install engine mount bracket. Refer to **Engine Mount Bracket Replacement - Right Side**.
25. Install the engine mount. Refer to **Engine Mount Replacement - Right Side**.

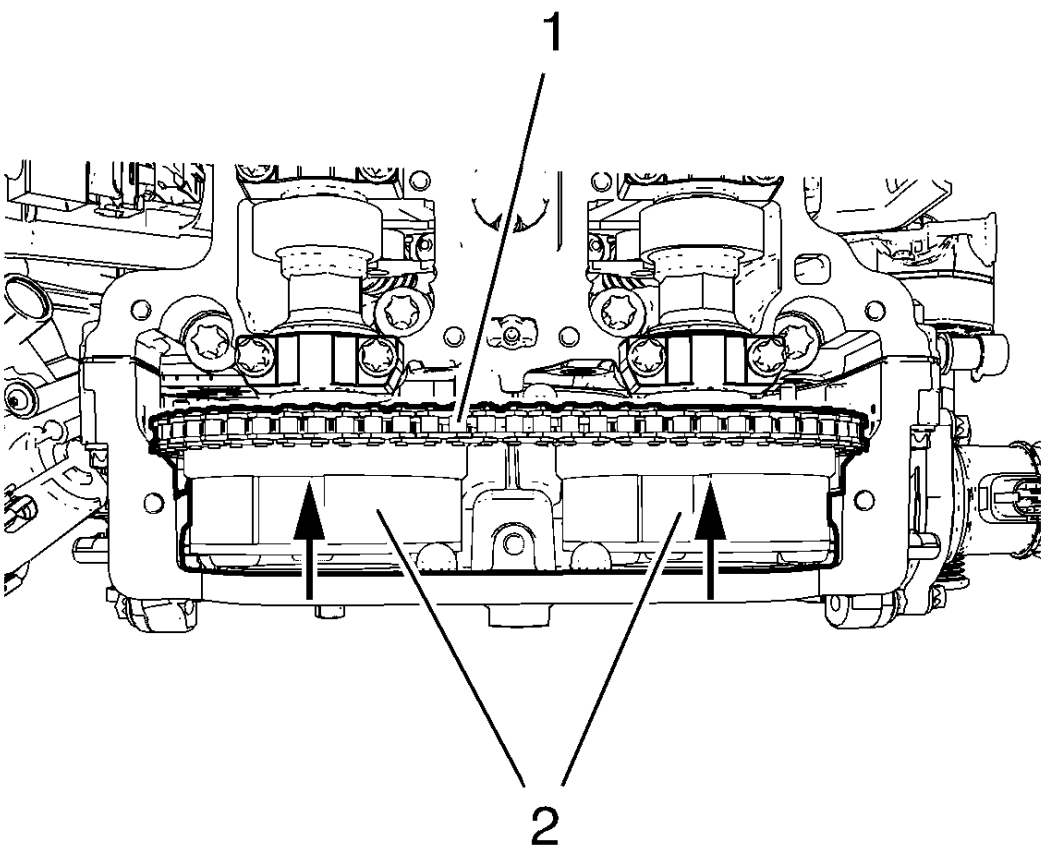

Fig. 140: Timing Chain And Camshaft Sprockets
Courtesy of GENERAL MOTORS COMPANY

26. Install the 2 camshaft sprockets (2) along with the timing chain (1).

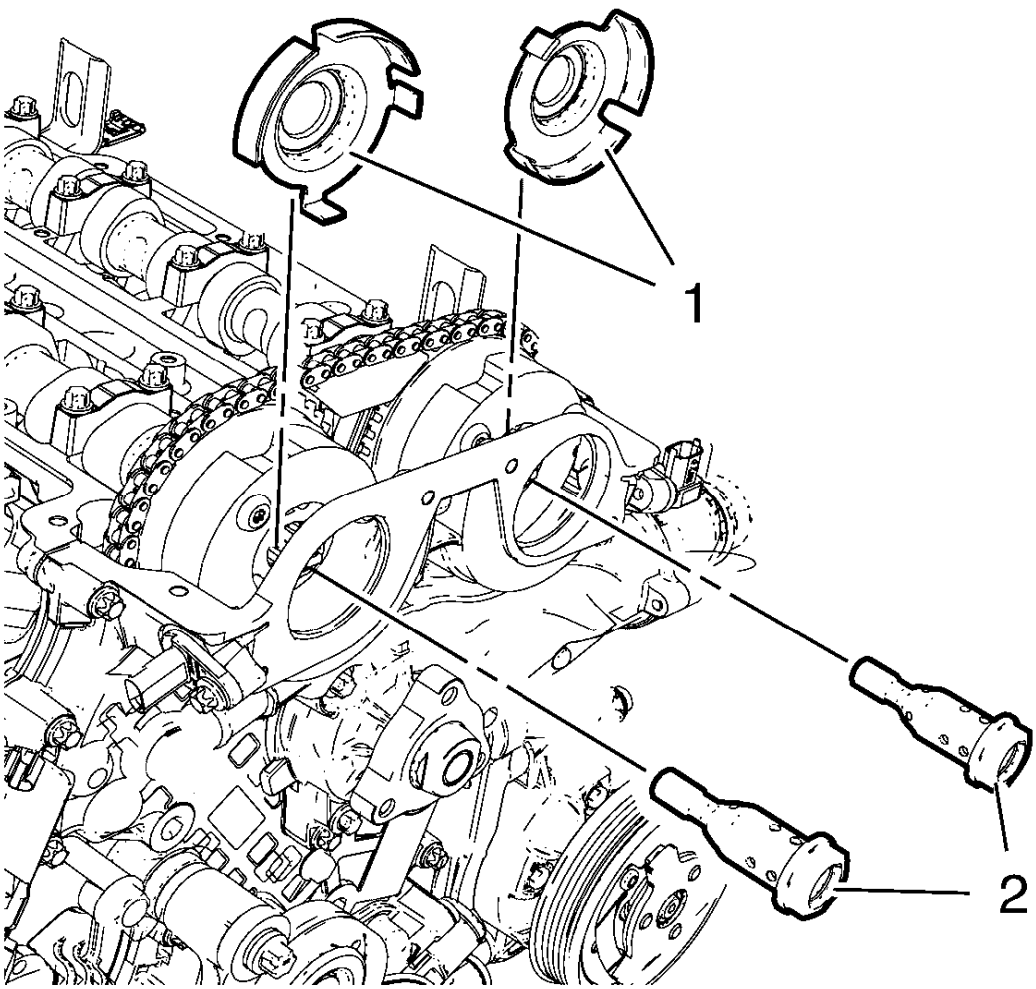

Fig. 141: Camshaft Position Exciter Wheels And Camshaft Sprocket Bolts
Courtesy of GENERAL MOTORS COMPANY

NOTE: Camshaft position exciter wheels should stay rotatable.

27. Install the 2 camshaft position exciter wheels (1) and the 2 camshaft sprocket bolts (2).
28. Adjust engine to TDC and tighten the camshaft sprockets and install upper timing chain tensioner guide. Refer to **Camshaft Timing Chain Adjustment**.
29. Rotate the crankshaft for 720° and check the engine timing again. Repeat the adjustment procedure if necessary.
30. Remove all special tools for timing chain adjustment and install and tighten the timing chain tensioner plug. Refer to **Camshaft Timing Chain Adjustment**.
31. Install the 2 camshaft position actuator solenoid valves. Refer to **Camshaft Position Actuator Solenoid Valve Installation**.
32. Install the camshaft cover. Refer to **Camshaft Cover Replacement**.
33. Install the ignition coil and connect the ignition coil wiring harness plug. Refer to **Ignition Coil**

Replacement .

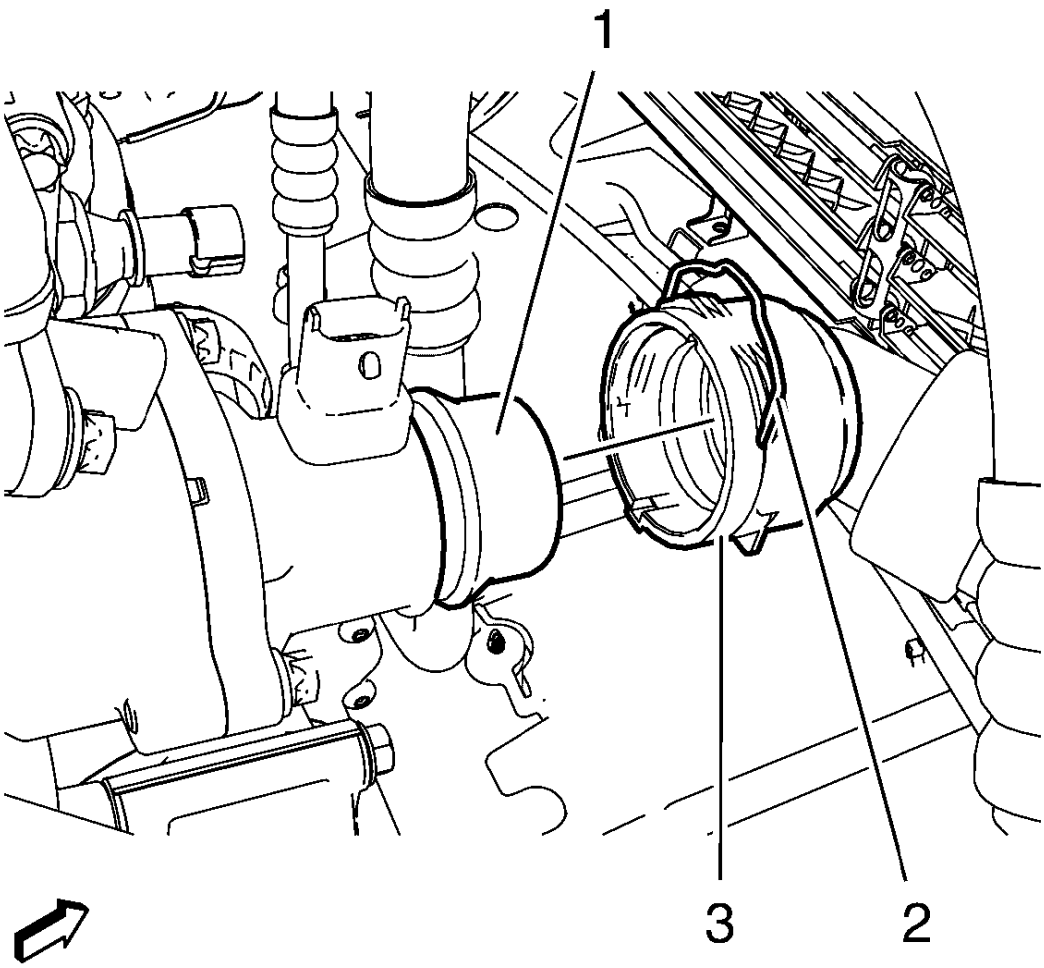

Fig. 142: Engine Coolant Thermostat Housing, Radiator Outlet House And Quick Connector Clamp
Courtesy of GENERAL MOTORS COMPANY

34. Connect radiator outlet hose (3) to engine coolant thermostat housing (1). Clip quick connector (2).

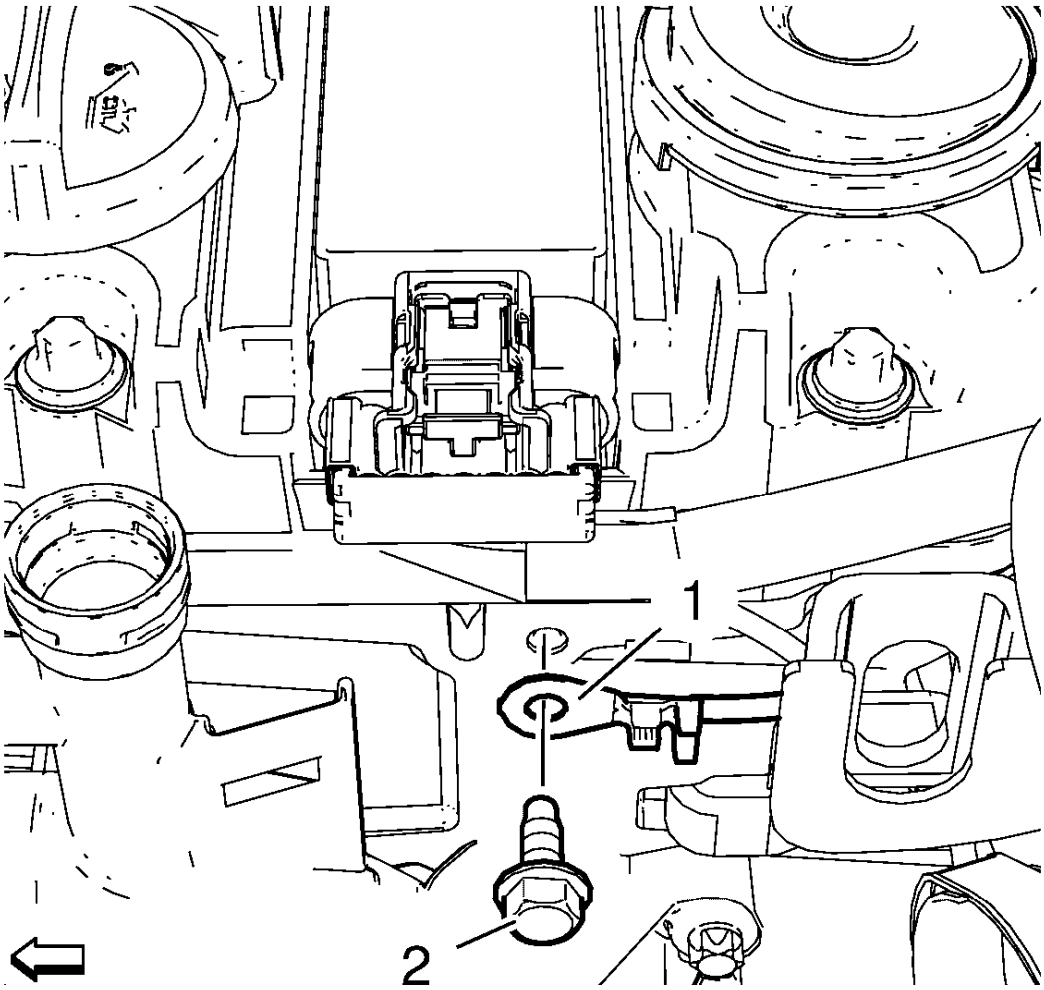

Fig. 143: Ground Cable And Bolt
Courtesy of GENERAL MOTORS COMPANY

35. Install the ground cable (1) and the ground cable bolt (2) and tighten to 20 N.m (15 lb ft).

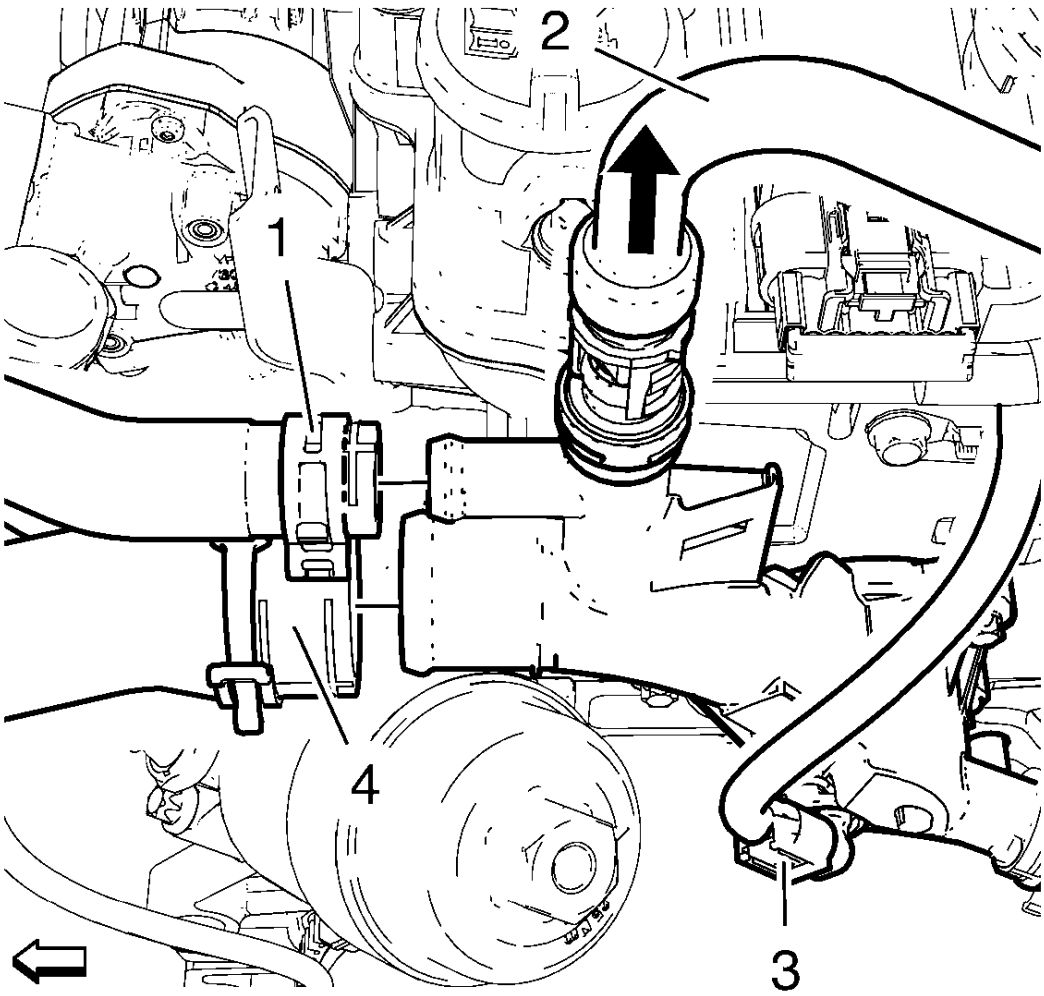

Fig. 144: Oil Cooler Inlet Hose, Engine Coolant Air Bleed Hose, Temperature Sensor Wiring Harness Plug And Radiator Inlet Hose
Courtesy of GENERAL MOTORS COMPANY

36. Install the radiator inlet hose (4) and the radiator inlet hose clamp to the water outlet.
37. Install the oil cooler inlet hose (1) and the oil cooler inlet hose clamp to the water outlet.
38. Connect the engine coolant air bleed hose (2) to the water outlet.
39. Connect the engine coolant temperature sensor wiring harness plug (3).
40. Install the heater inlet hose to the water outlet. Refer to **Heater Inlet Hose Replacement (1.4L LUV)** .

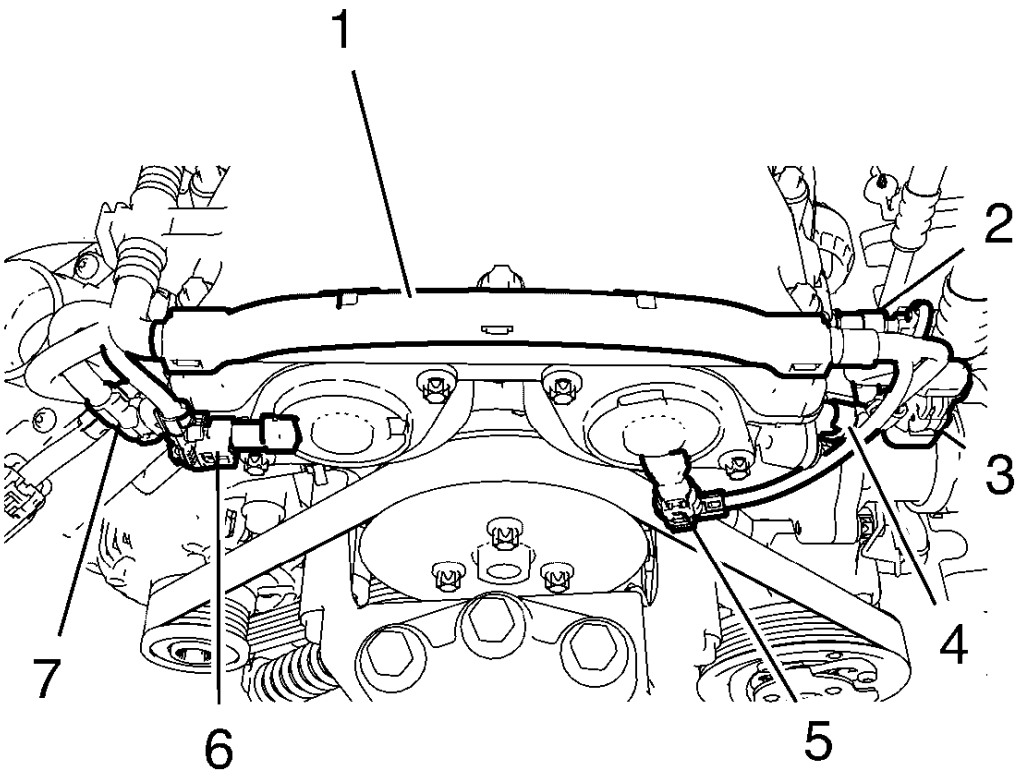

Fig. 145: Wiring Harnesses And Plugs
Courtesy of GENERAL MOTORS COMPANY

41. Install the engine control module wiring harness to the camshaft cover:
    - Connect the engine coolant temperature sensor wiring harness plug (3).
    - Connect the exhaust camshaft position actuator solenoid valve wiring harness plug (5).
    - Connect the exhaust camshaft position sensor wiring harness plug (4).
    - Connect the intake camshaft position actuator solenoid valve wiring harness plug (6).
    - Connect the intake camshaft position sensor wiring harness plug (7).
42. Install the turbocharger. Refer to **Turbocharger Replacement**.
43. Install the intake manifold. Refer to **Intake Manifold Replacement**.
44. Install the air cleaner assembly in compound with the air cleaner outlet duct. Refer to **Air Cleaner Assembly Replacement** , and **Air Cleaner Outlet Duct Replacement** .
45. Install the engine sight shield.
46. Connect battery negative cable. Refer to **Battery Negative Cable Disconnection and Connection** .

47. Fill coolant fluid. Refer to **Cooling System Draining and Filling (Static Fill)** , **Cooling System Draining and Filling (GE-47716 Fill)** .
48. Check and correct engine oil.
49. Close the hood.

OIL PAN REPLACEMENT

Special Tools

EN-49980 Guidance Pins

For equivalent regional tools, refer to **Special Tools**.

Removal Procedure

1. Raise and support the vehicle. Refer to **Lifting and Jacking the Vehicle** .
2. Drain engine oil. Refer to **Engine Oil and Oil Filter Replacement**.
3. Remove the catalytic converter. Refer to **Catalytic Converter Replacement (1.4L LUV)** .
4. Remove the warm up three way catalytic converter. Refer to **Warm Up Three-Way Catalytic Converter Replacement** .
5. Remove the engine oil heater, if equipped. Refer to **Engine Oil Heater Replacement**

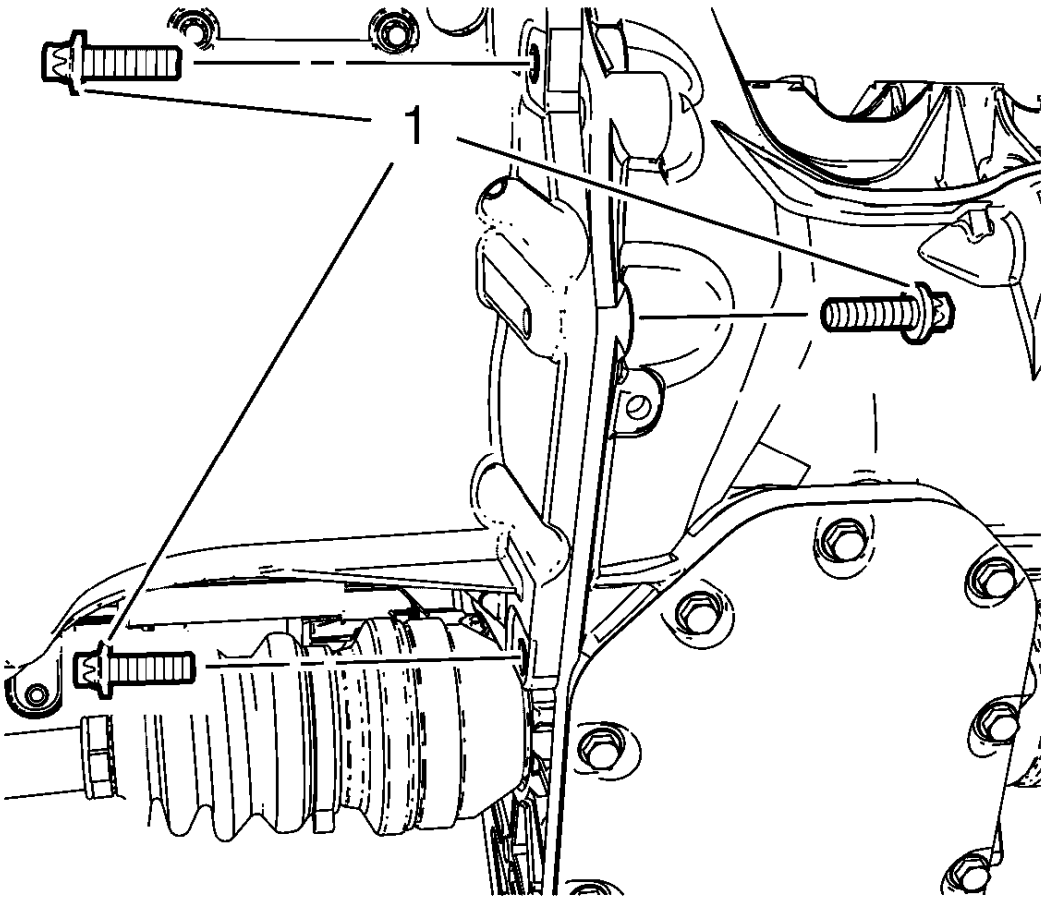

Fig. 146: Transmission-To-Oil Pan Bolts
Courtesy of GENERAL MOTORS COMPANY

6. Remove the transmission to oil pan bolts (1).
    - For vehicles with manual transmission remove 3 bolts.
    - For vehicles with automatic transmission remove 2 bolts.

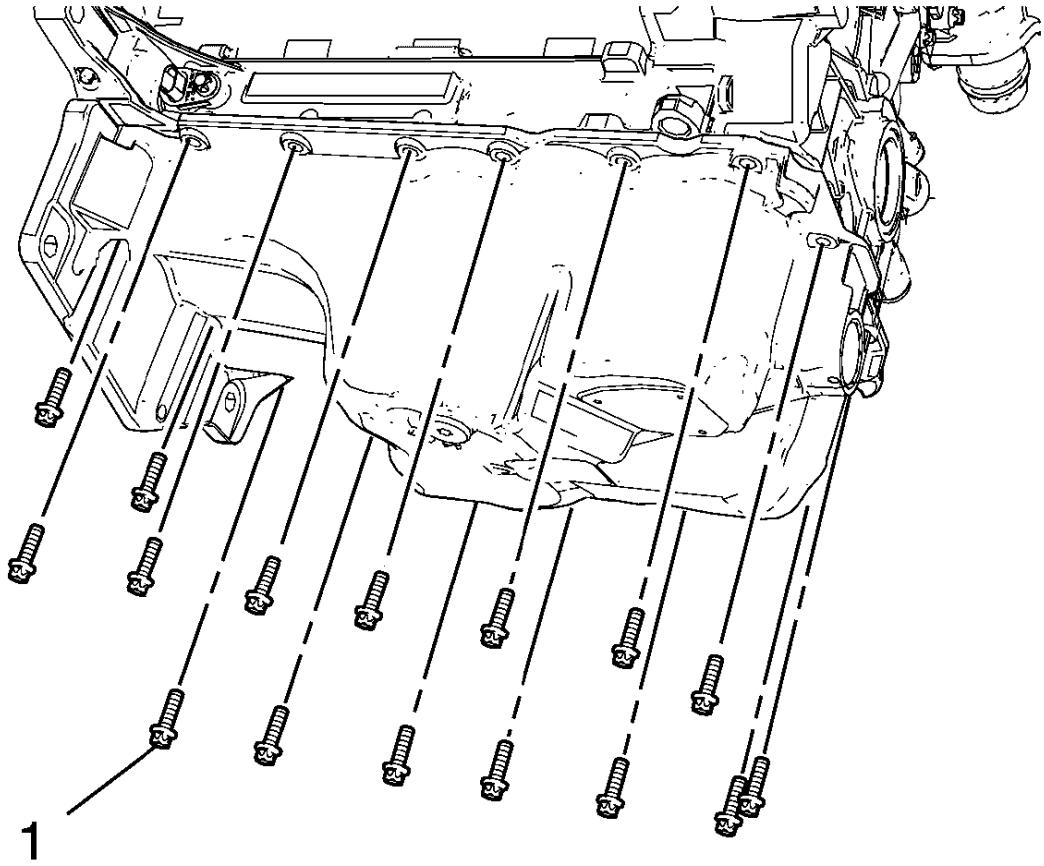

Fig. 147: Oil Pan Bolts
Courtesy of GENERAL MOTORS COMPANY

7. Remove the 16 oil pan bolts (1).

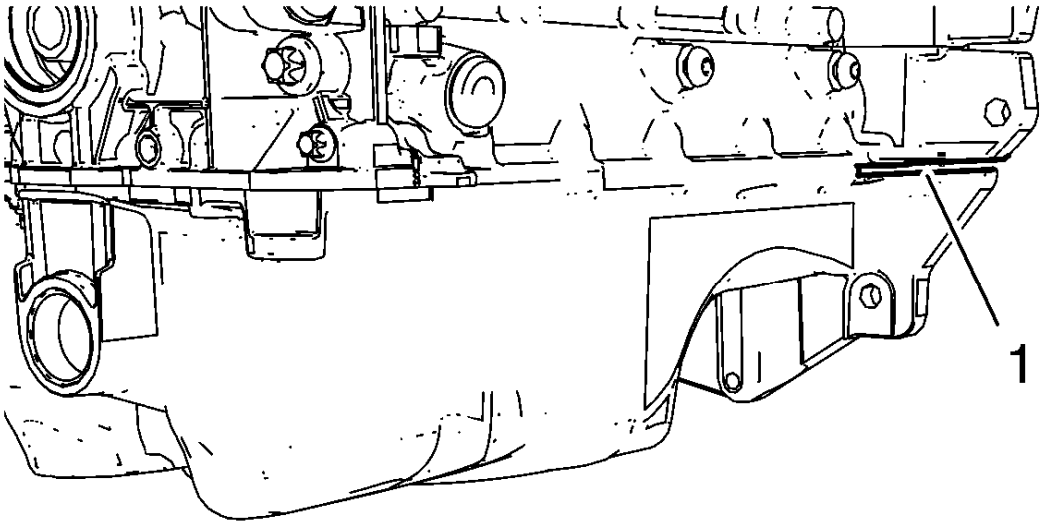

Fig. 148: Oil Pan Prying Area
Courtesy of GENERAL MOTORS COMPANY

CAUTION: Pry the oil pan carefully in order to prevent damage to the transaxle case or the oil pan sealing surfaces.

8. Position a prying tool to the area (1) shown, and gently pry the oil pan loose.

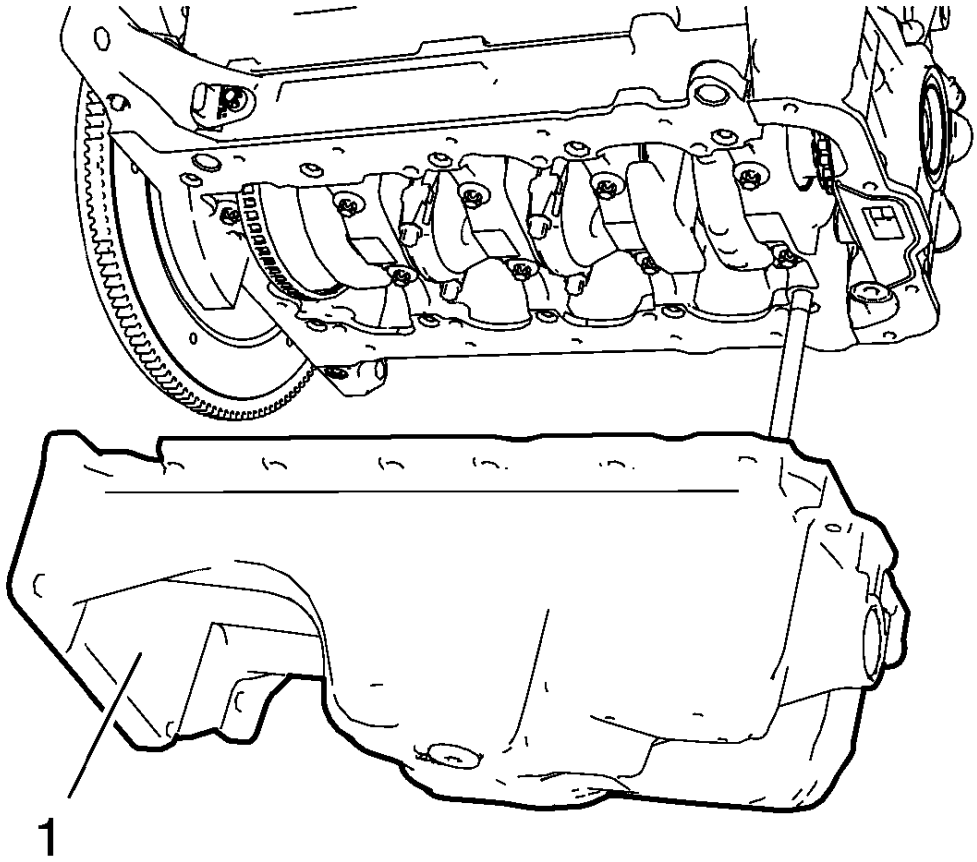

Fig. 149: Oil Pan
Courtesy of GENERAL MOTORS COMPANY

9. Remove the oil pan (1).

Installation Procedure

1. Clean the sealing surface of the crankshaft bearing cap tie plate and the groove in the engine front cover from old gasket material, oil, dirt and grease.
2. If the oil pan is being reused, refer to **Oil Pan Cleaning and Inspection**.

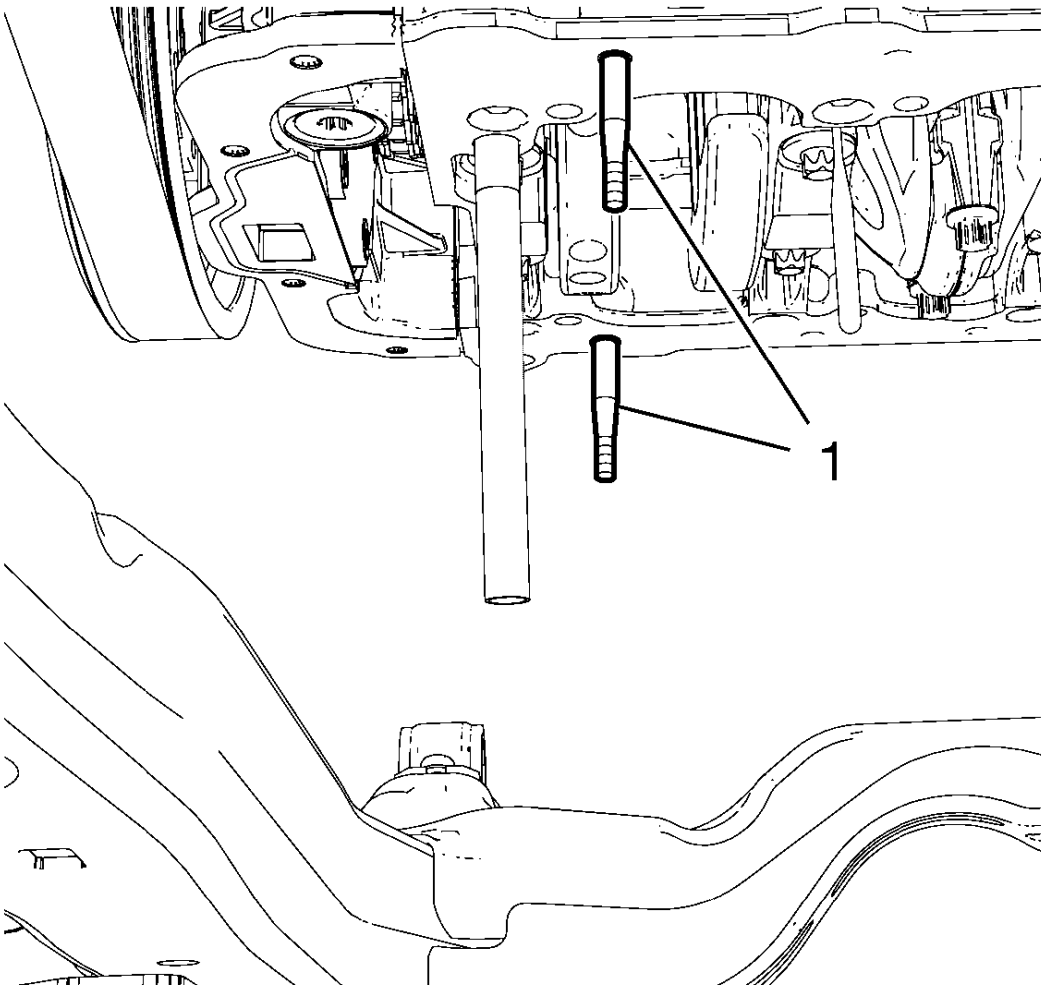

Fig. 150: Oil Pan Pins
Courtesy of GENERAL MOTORS COMPANY

3. Install the 2 **EN-49980** pins (1) to the shown oil pan screw bores.

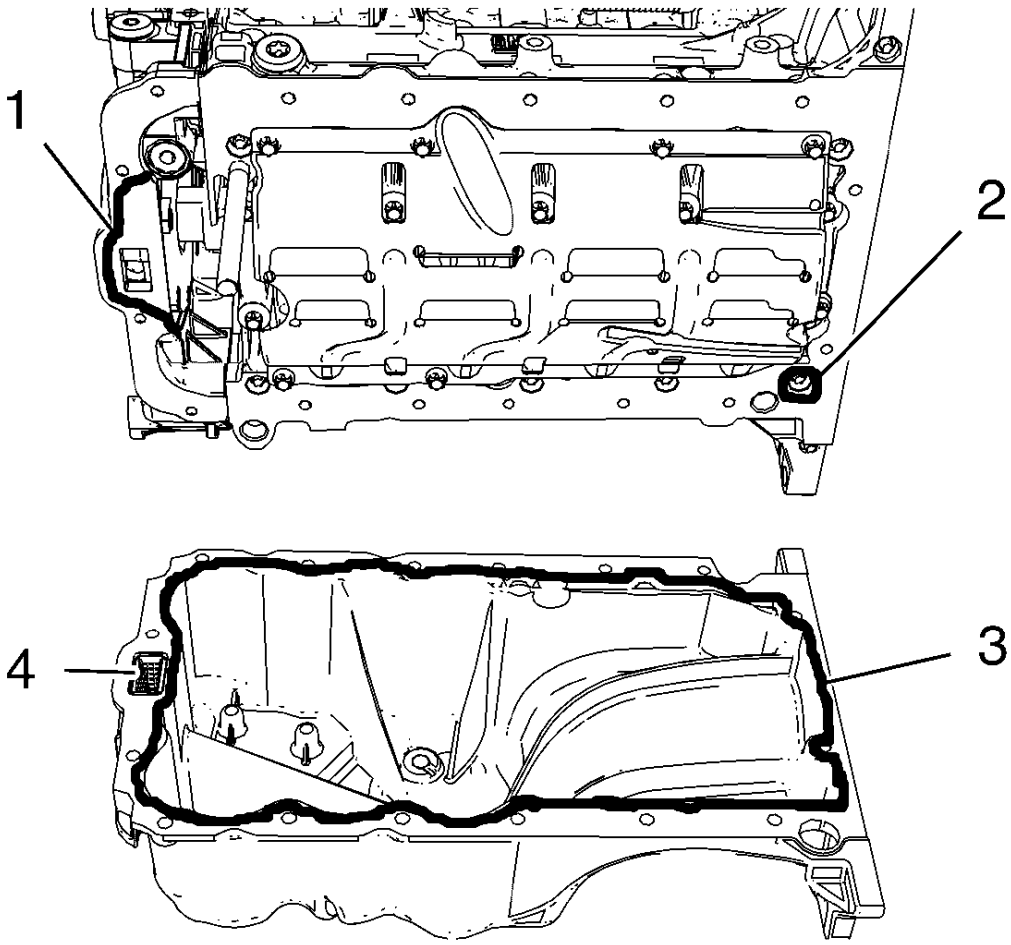

Fig. 151: Engine Front Cover, Oil Suction Gallery And Screw Bore
Courtesy of GENERAL MOTORS COMPANY

NOTE: The sealing bead should be applied close to the inner edge of the oil pan. Take care that the oil suction gallery (4) will not get contaminated with sealing compound or dirt. The thickness of the sealing bead (3) should be 2 mm (0.0787 in).

4. Apply sealing compound to the oil pan. Refer to **Adhesives, Fluids, Lubricants, and Sealers**.
5. Apply sealing compound to the groove of the engine front cover (1).

NOTE: The complete installation procedure of the oil pan should not take longer than 10 minutes.

6. Apply sealing compound around the screw bore (2) of the crankshaft bearing cap tie plate.

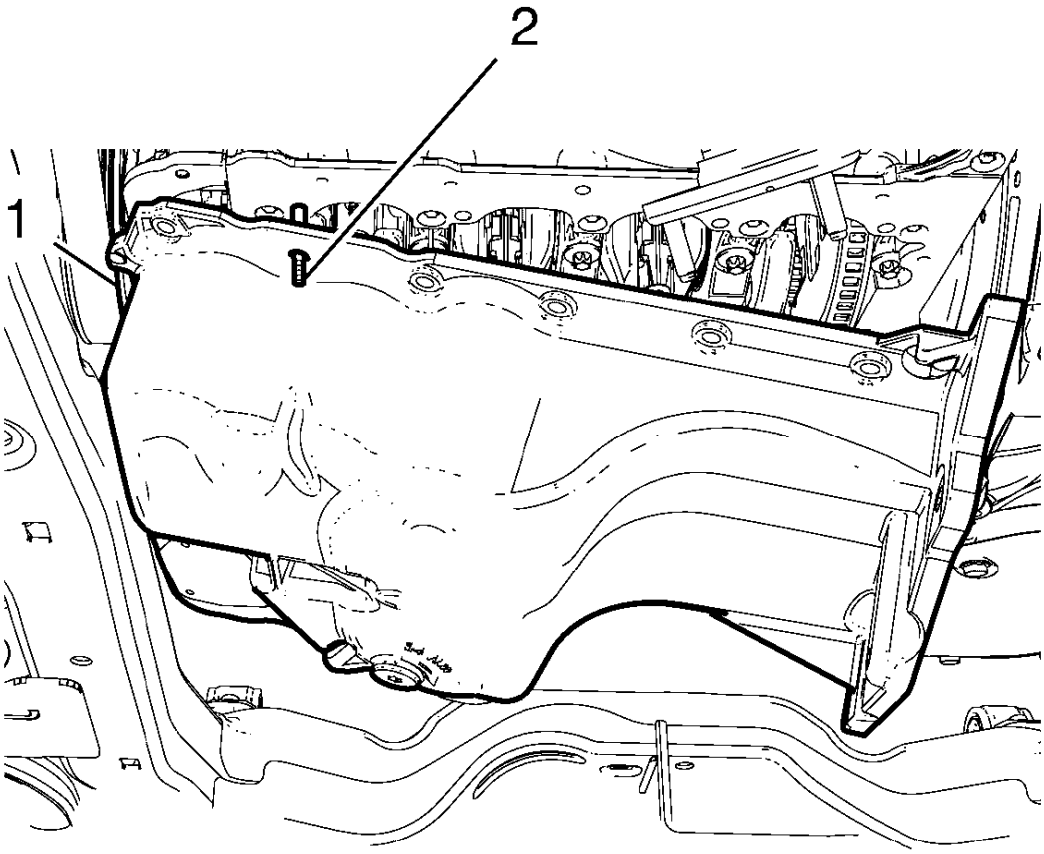

Fig. 152: Oil Pan Pins
Courtesy of GENERAL MOTORS COMPANY

CAUTION: Use care when installing the oil pan to prevent disruption of the sealing bead. The sealing bead should remain consistent until the oil pan is mated with the engine. An inconsistent sealing bead can cause an insufficient seal and result in engine damage.

7. Carefully install the oil pan. Use the following procedure:
    1. Lay the oil pan on drive train and front suspension frame.
    2. Hang in the oil pan to crankshaft balancer (1).
    3. Guide the oil pan with the 2 **EN-49980** pins (2) and the equivalent screw bores to the engine.
    4. Secure the oil pan with 4 oil pan bolts.
    5. Remove the 2 **EN-49980** pins.

CAUTION: Refer to Fastener Caution .

6. Install the remaining 12 oil pan bolts and hand tighten to approximately 2 (18 lb in).

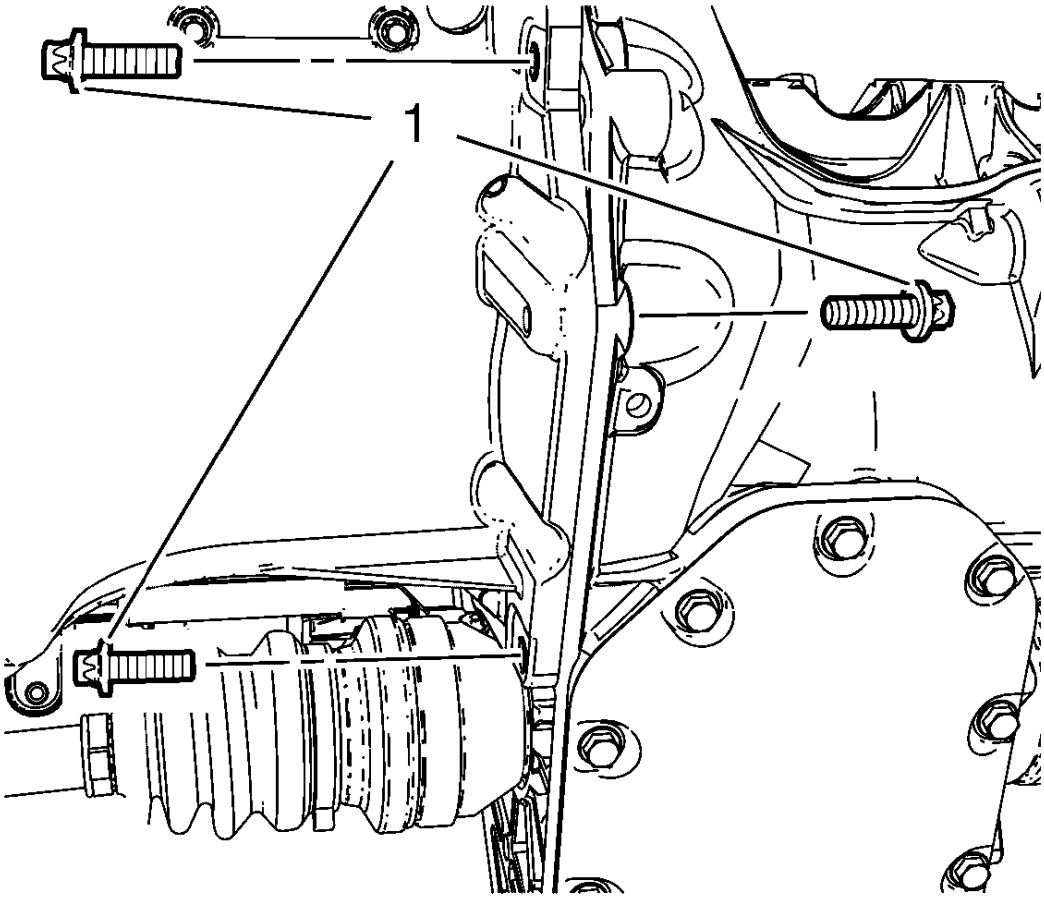

Fig. 153: Transmission-To-Oil Pan Bolts
Courtesy of GENERAL MOTORS COMPANY

7. Install the transmission to oil pan bolts (1).
   - For vehicles with manual transmission tighten 3 bolts to 40 (30 lb ft).
   - For vehicles with automatic transmission tighten 2 bolts to 58 (43 lb ft).
8. Tighten the 16 oil pan bolts to 10 (89 lb in).
8. Install the engine oil heater, if equipped. Refer to **Engine Oil Heater Replacement**.
9. Install the warm up three way catalytic converter. Refer to **Warm Up Three-Way Catalytic Converter Replacement** .
10. Install the catalytic converter. Refer to **Catalytic Converter Replacement (1.4L LUV)** .

11. Lower the vehicle.
12. Fill engine oil. Refer to **Engine Oil and Oil Filter Replacement**.

AUTOMATIC TRANSMISSION FLEX PLATE REPLACEMENT

Special Tools

- **EN-470-B** Angular Torque Wrench
- **EN-652** Flywheel Holder

For equivalent regional tools, refer to **Special Tools**.

Removal Procedure

1. Open hood.
2. Remove the automatic transmission. Refer to **Transmission Replacement** .

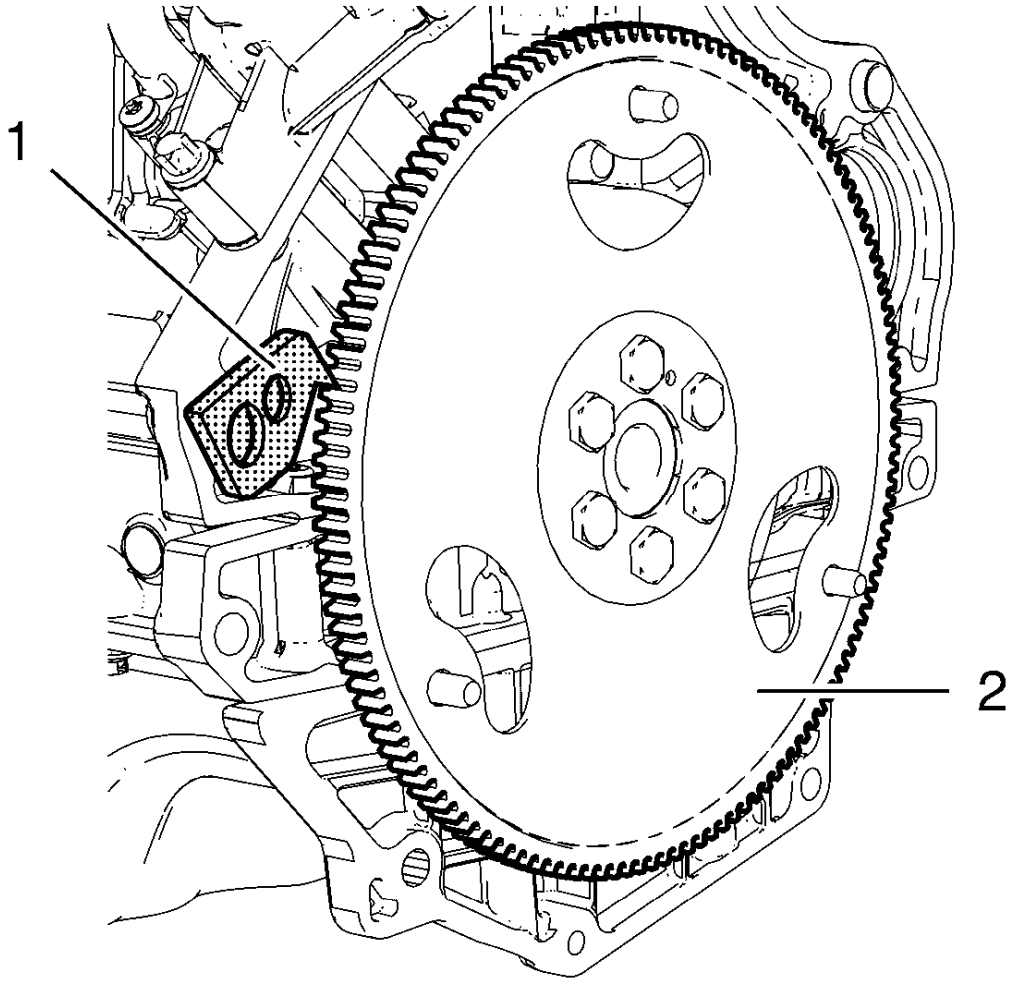

Fig. 154: Automatic Transmission Flex Plate
Courtesy of GENERAL MOTORS COMPANY

3. Install **EN-652** flywheel holder (1) in order to fix the automatic transmission flex plate (2).

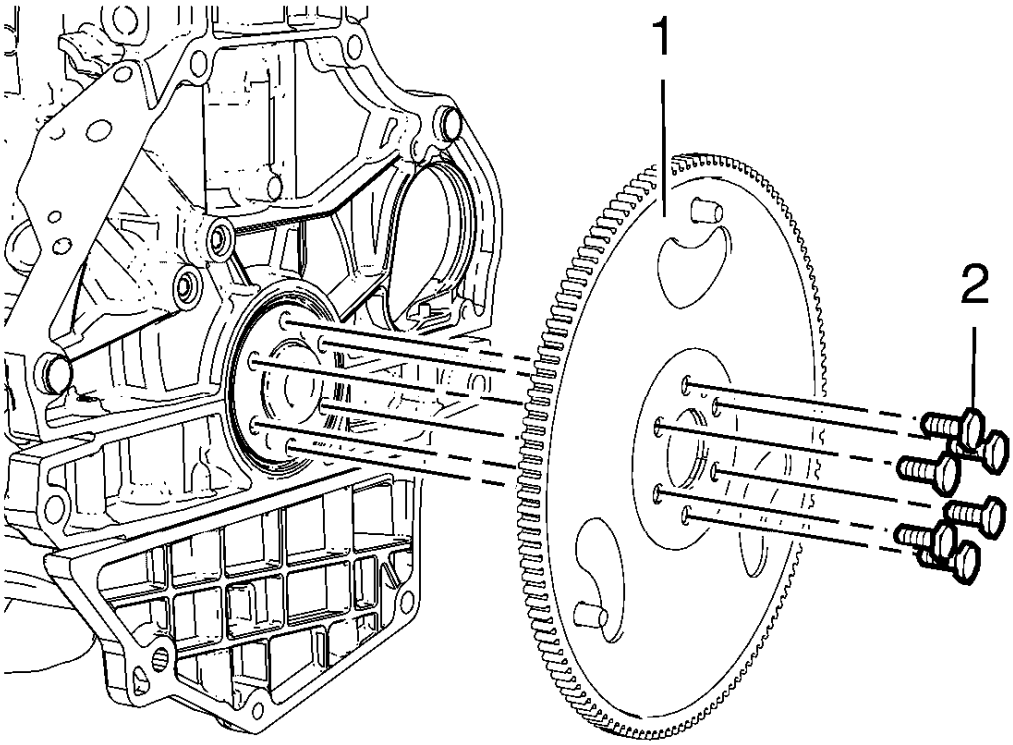

Fig. 155: Automatic Transmission Flex Plate And Bolts
Courtesy of GENERAL MOTORS COMPANY

4. Remove and DISCARD the 6 automatic transmission flex plate bolts (2).
5. Remove the automatic transmission flex plate (1).

Installation Procedure

1. Clean the 6 screw bores. Rework if necessary.

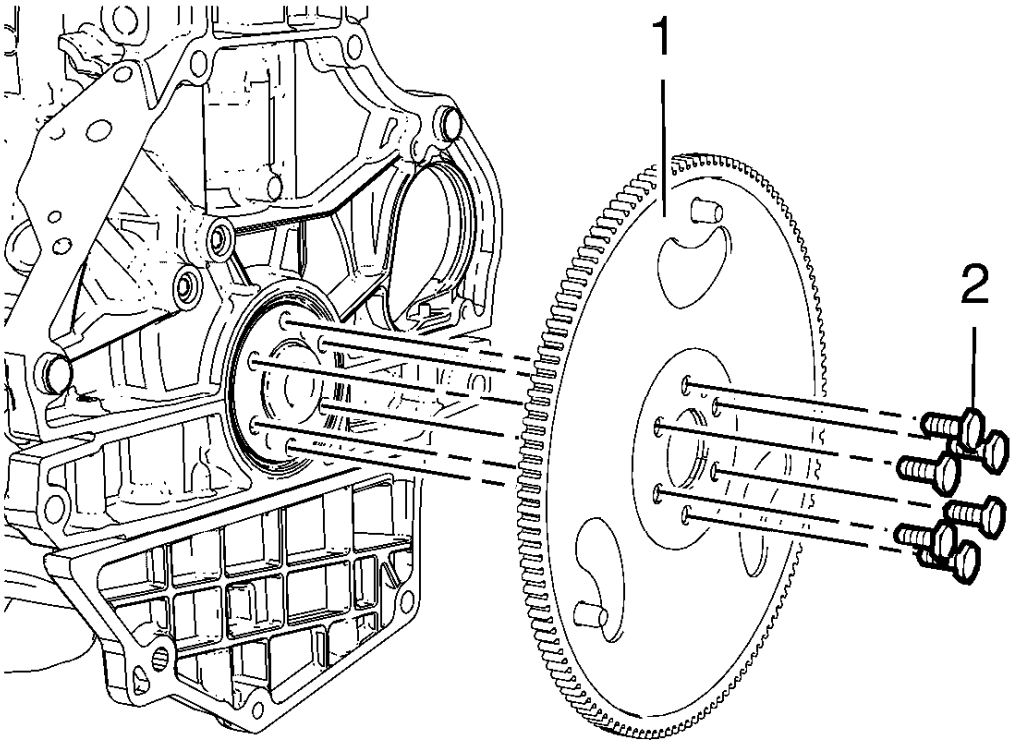

Fig. 156: Automatic Transmission Flex Plate And Bolts
Courtesy of GENERAL MOTORS COMPANY

2. Install the automatic transmission flex plate (1).
3. Install 6 NEW automatic transmission flex plate bolts (2).

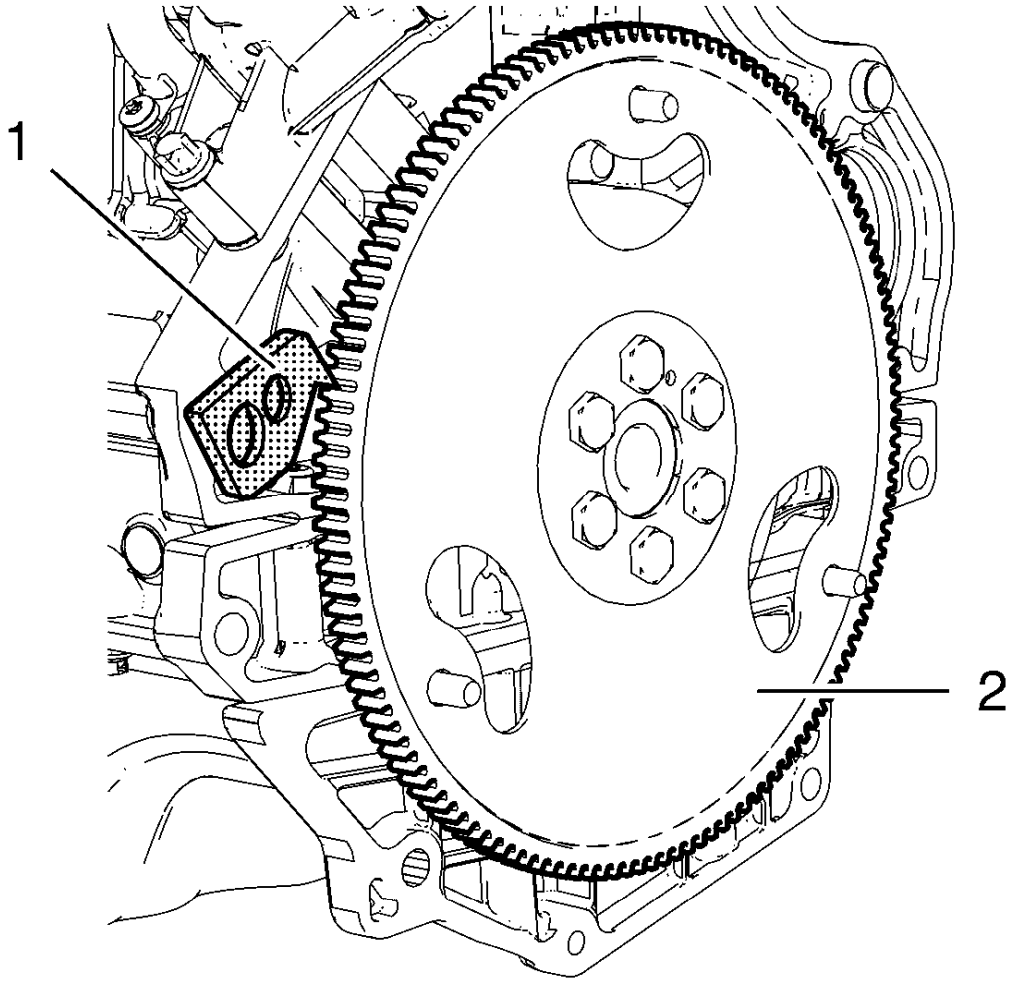

Fig. 157: Automatic Transmission Flex Plate
Courtesy of GENERAL MOTORS COMPANY

4. Install **EN-652** flywheel holder (1) in order to fix the automatic transmission flex plate (2).

CAUTION: Refer to Fastener Caution .

CAUTION: Refer to Torque-to-Yield Fastener Caution .

5. Tighten the 6 automatic transmission flex plate bolts in a cross sequence to 35 N.m(26 lb ft).
6. Tighten the 6 automatic transmission flex plate bolts in a cross sequence to an additional 30°.Use **EN-470-B** wrench.
7. Tighten the 6 automatic transmission flex plate bolts in a cross sequence to an additional 15°.Use **EN-**

470-B wrench.

8. Install automatic transmission. Refer to **Transmission Replacement** .
9. Close the hood.

ENGINE FLYWHEEL REPLACEMENT

Special Tools

- **EN-470-B** Angular Torque Wrench
- **EN-652** Flywheel Holder

For equivalent regional tools, refer to **Special Tools**.

Removal Procedure

1. Remove clutch pressure and driven plate from engine flywheel. Refer to **Clutch Pressure and Driven Plate Replacement (1.8L LUW and LWE)** .

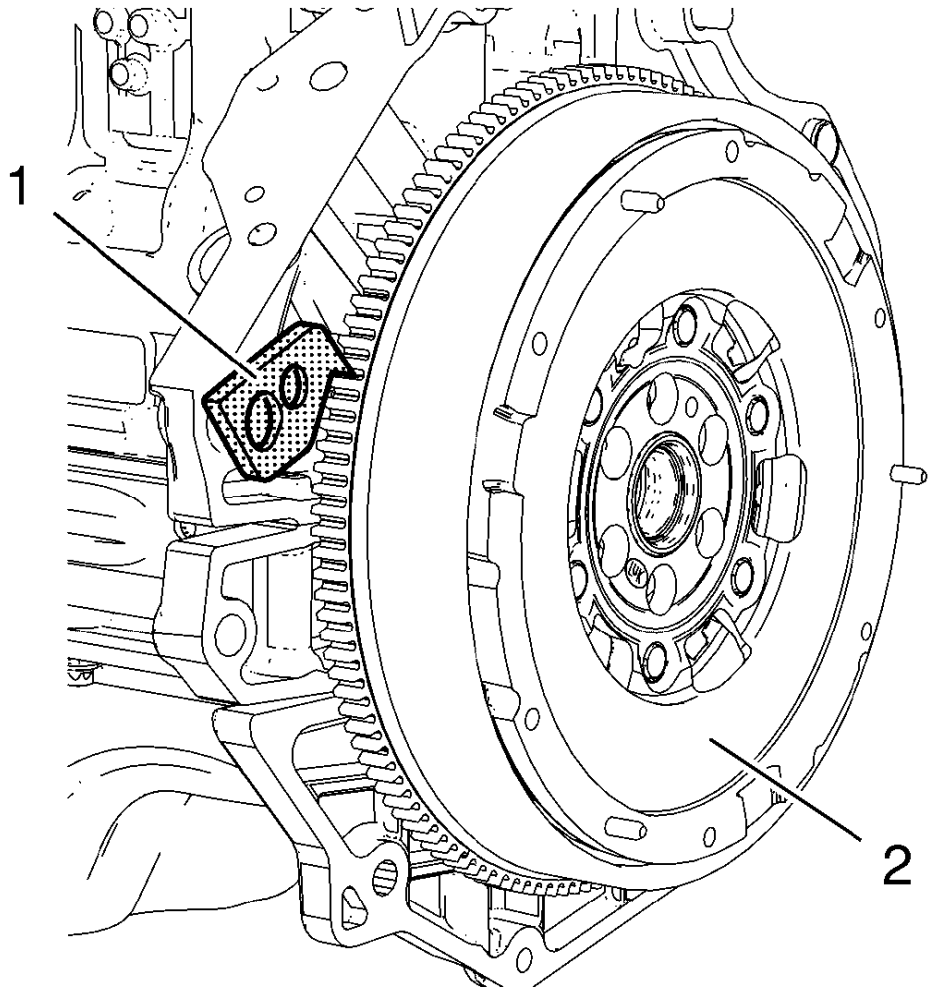

Fig. 158: Engine Flywheel And Holder
Courtesy of GENERAL MOTORS COMPANY

2. Install **EN-652** flywheel holder (1) in order to fix the engine flywheel (2).

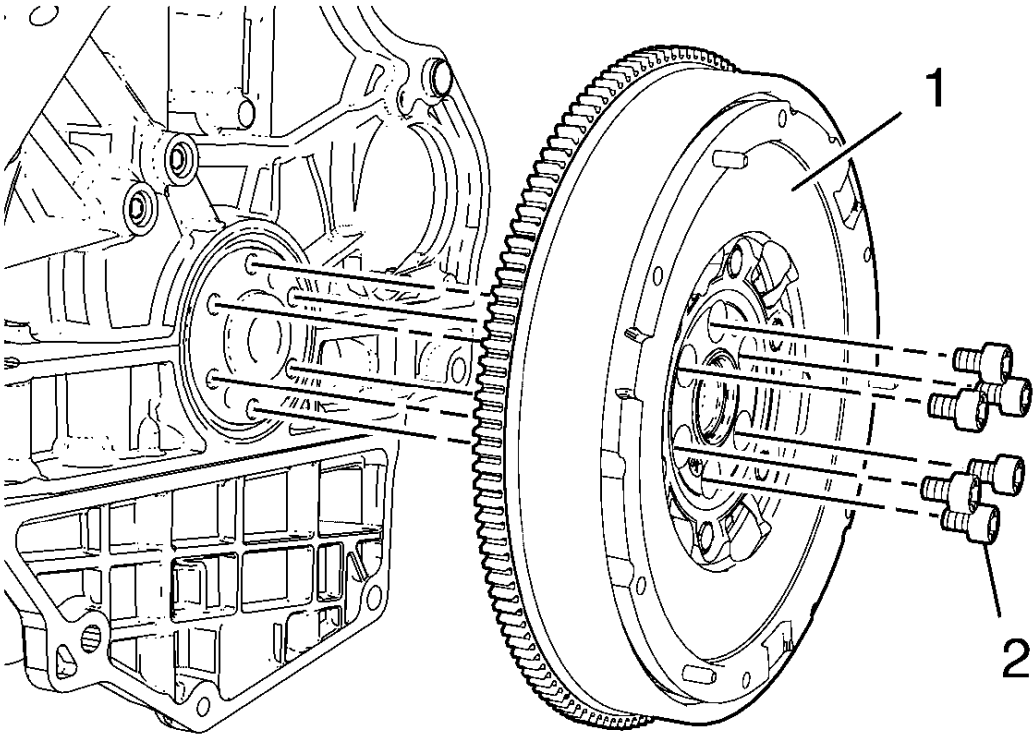

Fig. 159: Engine Flywheel And Bolts
Courtesy of GENERAL MOTORS COMPANY

3. Remove and DISCARD the 6 engine flywheel bolts (2).
4. Remove the engine flywheel (1).

Installation Procedure

1. Clean the 6 screw bores. Rework if necessary.

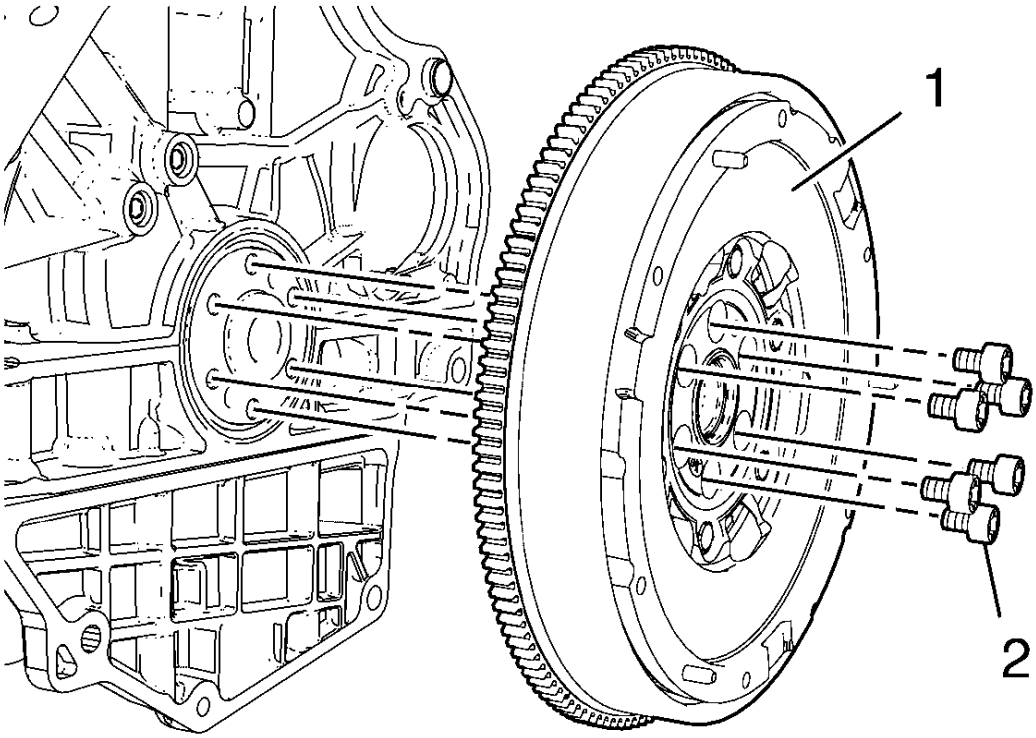

Fig. 160: Engine Flywheel And Bolts
Courtesy of GENERAL MOTORS COMPANY

2. Install the engine flywheel (1).
3. Install 6 NEW engine flywheel bolts (2).

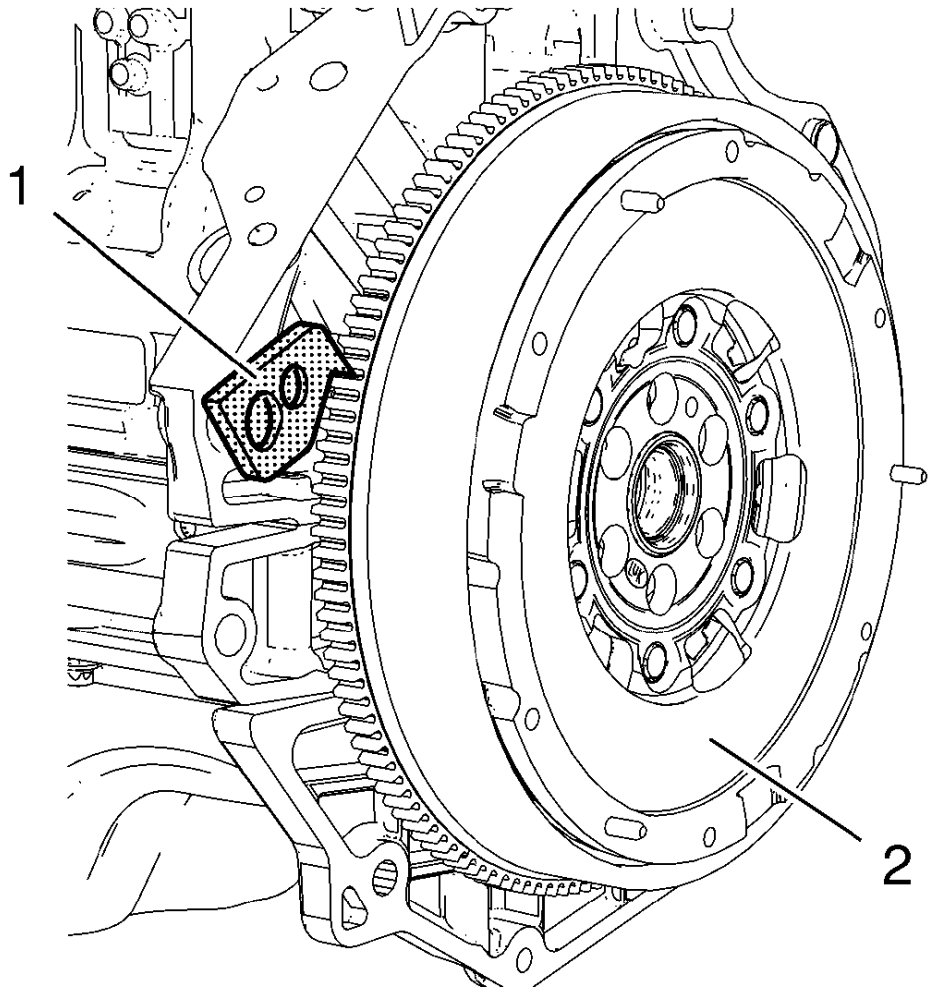

Fig. 161: Engine Flywheel And Holder
Courtesy of GENERAL MOTORS COMPANY

4. Install **EN-652** flywheel holder (1) in order to fix the engine flywheel (2).

CAUTION: Refer to Fastener Caution .

CAUTION: Refer to Torque-to-Yield Fastener Caution .

5. Tighten the 6 engine flywheel bolts in a cross sequence a first pass to 60 N.m (44 lb ft).
6. Tighten the 6 engine flywheel bolts in a cross sequence a second pass to an additional 45°, using **EN-470-B** wrench.
7. Tighten the 6 engine flywheel bolts in a cross sequence a final pass to an additional 15°, using **EN-470-B**

wrench.

8. Install clutch pressure and driven plate. Refer to **Clutch Pressure and Driven Plate Replacement (1.4L LUV)** .
9. Install transmission. Refer to **Transmission Replacement** .

CRANKSHAFT BALANCER REPLACEMENT

Special Tools

- **EN-470-B** Angular Torque Wrench
- **EN-956-1** Extension
- **EN-49979** Crankshaft Shock Mount Retainer

For equivalent regional tools, refer to **Special Tools**.

Removal Procedure

1. Raise and support the vehicle. Refer to **Lifting and Jacking the Vehicle** .
2. Remove the right wheelhouse liner. Refer to **Front Wheelhouse Liner Replacement** .
3. Fix the drive belt tensioner, remove the drive belt from crankshaft balancer and lay aside. Refer to **Drive Belt Replacement**.

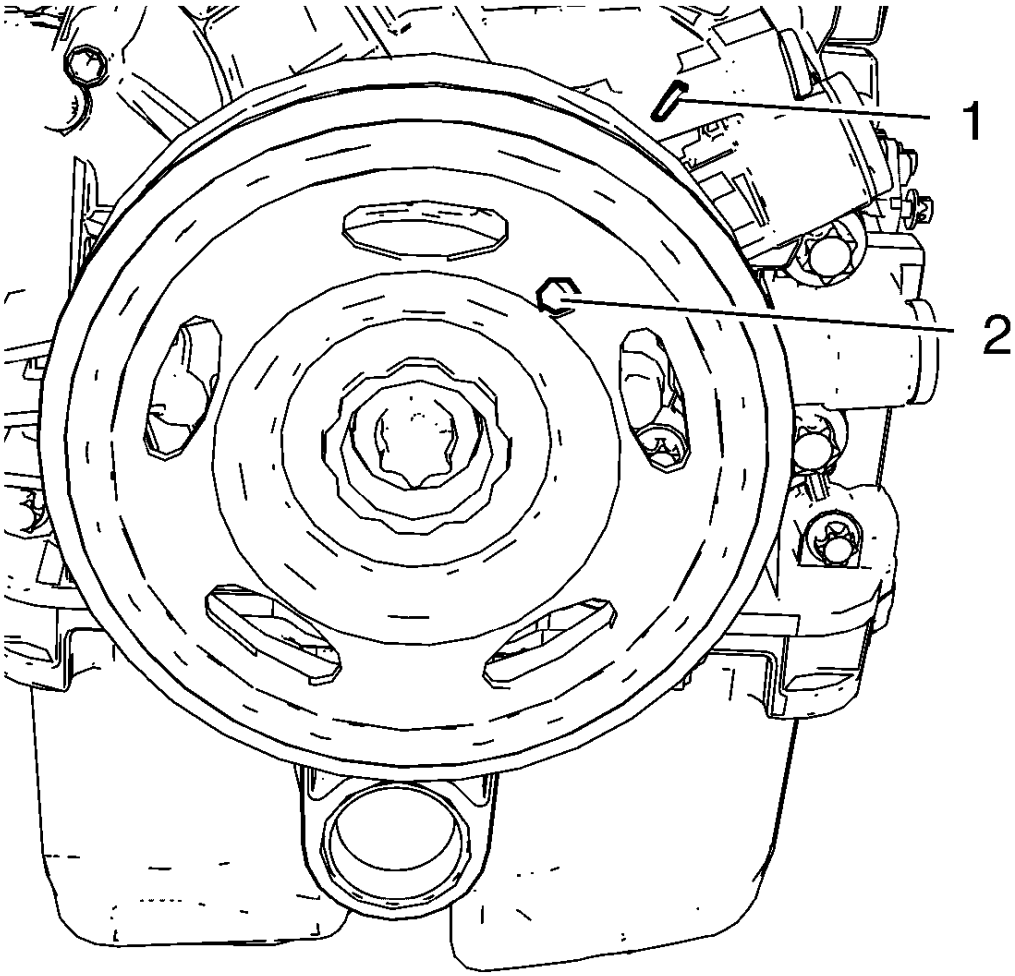

Fig. 162: Bore And Mark
Courtesy of GENERAL MOTORS COMPANY

NOTE: The crankshaft balancer can be incorrectly installed 180° from the required position. Be sure to note the location of the alignment hole on the crankshaft balancer prior to removing the crankshaft balancer from the engine.

4. Rotate the engine clockwise until the bore (2) in the crankshaft balancer aligns with the mark (1) on the engine front cover.
5. Install **EN-49979** crankshaft shock mount retainer to **EN-956-1** extension.

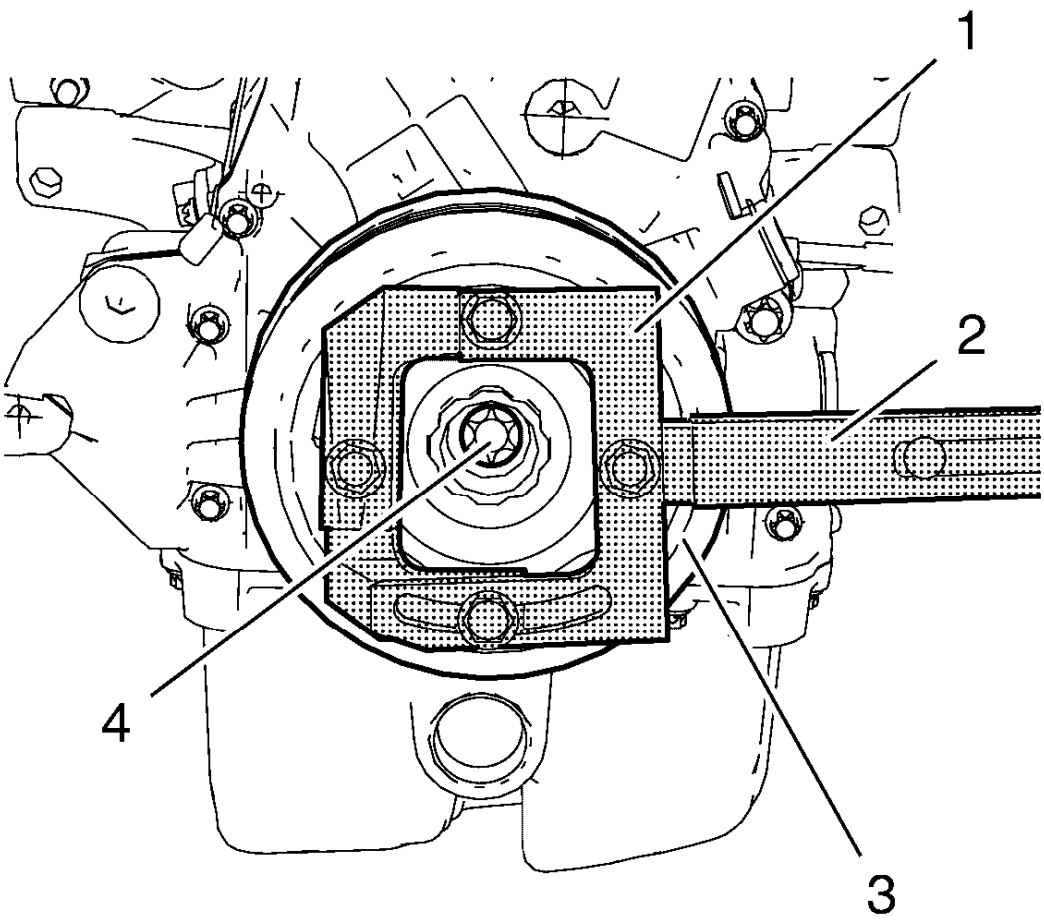

Fig. 163: Crankshaft Balancer, Retainer And Extension
Courtesy of GENERAL MOTORS COMPANY

6. Loosen the crankshaft balancer bolt (4) while fixing the crankshaft balancer (3) with **EN-49979** crankshaft shock mount retainer (1) and **EN-956-1** extension (2).

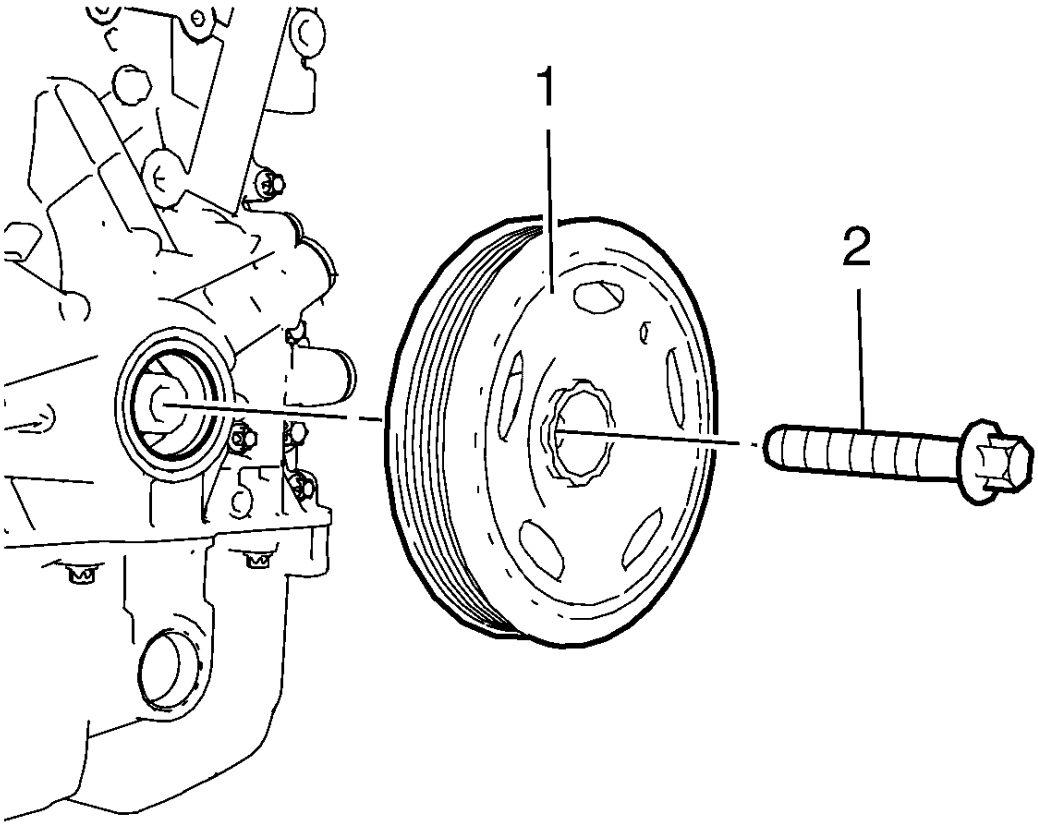

Fig. 164: Crankshaft Balancer And Bolt
Courtesy of GENERAL MOTORS COMPANY

7. Remove and DISCARD the crankshaft balancer bolt (2).
8. Remove the crankshaft balancer (1).

Installation Procedure

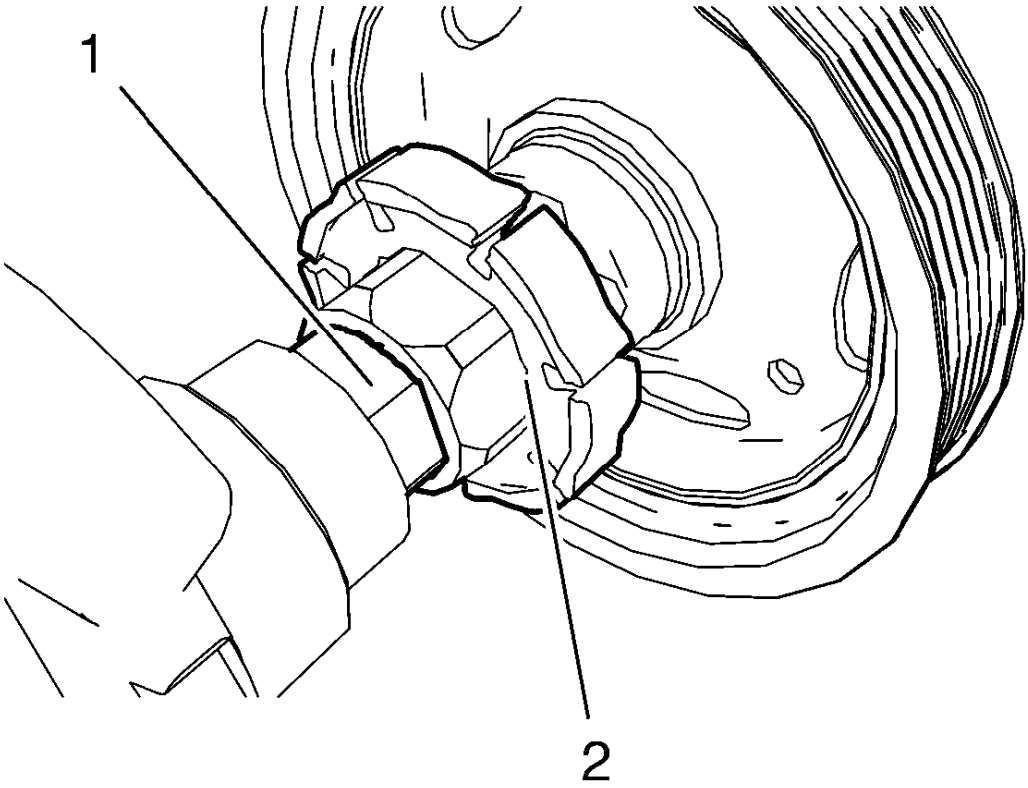

Fig. 165: Engine Oil Pump Rotor And Crankshaft
Courtesy of GENERAL MOTORS COMPANY

NOTE: The crankshaft balancer flange must fit to the hexagon of the oil pump rotor (2) and to the two-flat of the crankshaft (1). The TDC markings on crankshaft balancer and engine front cover must match.

1. Install the crankshaft balancer carefully by pressing into position.

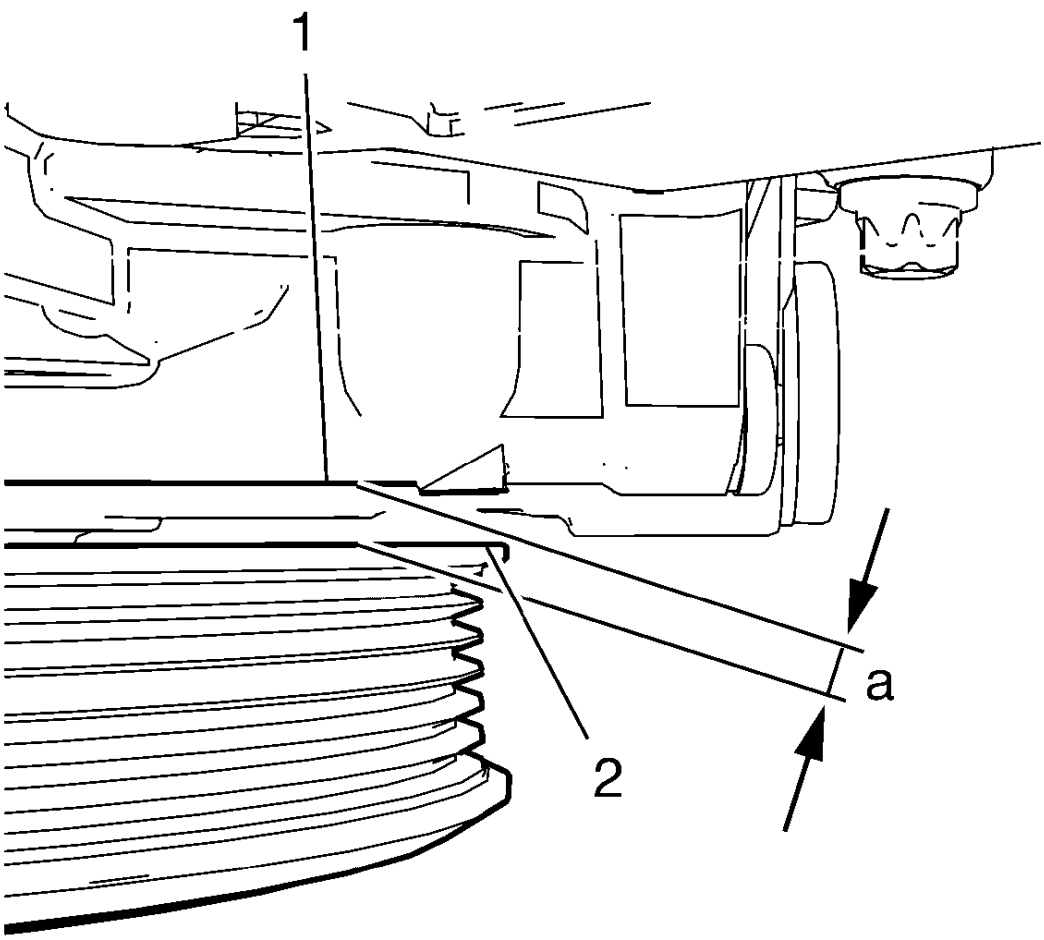

Fig. 166: Engine Front Cover And Crankshaft Balancer
Courtesy of GENERAL MOTORS COMPANY

2. Measure the distance (a) between the crankshaft balancer (2) and the mark on the engine front cover (1). The distance (a) should be 5.5 mm (0.21654 in).

NOTE: Never re-use the crankshaft balancer bolt.

3. Install a NEW crankshaft balancer bolt.

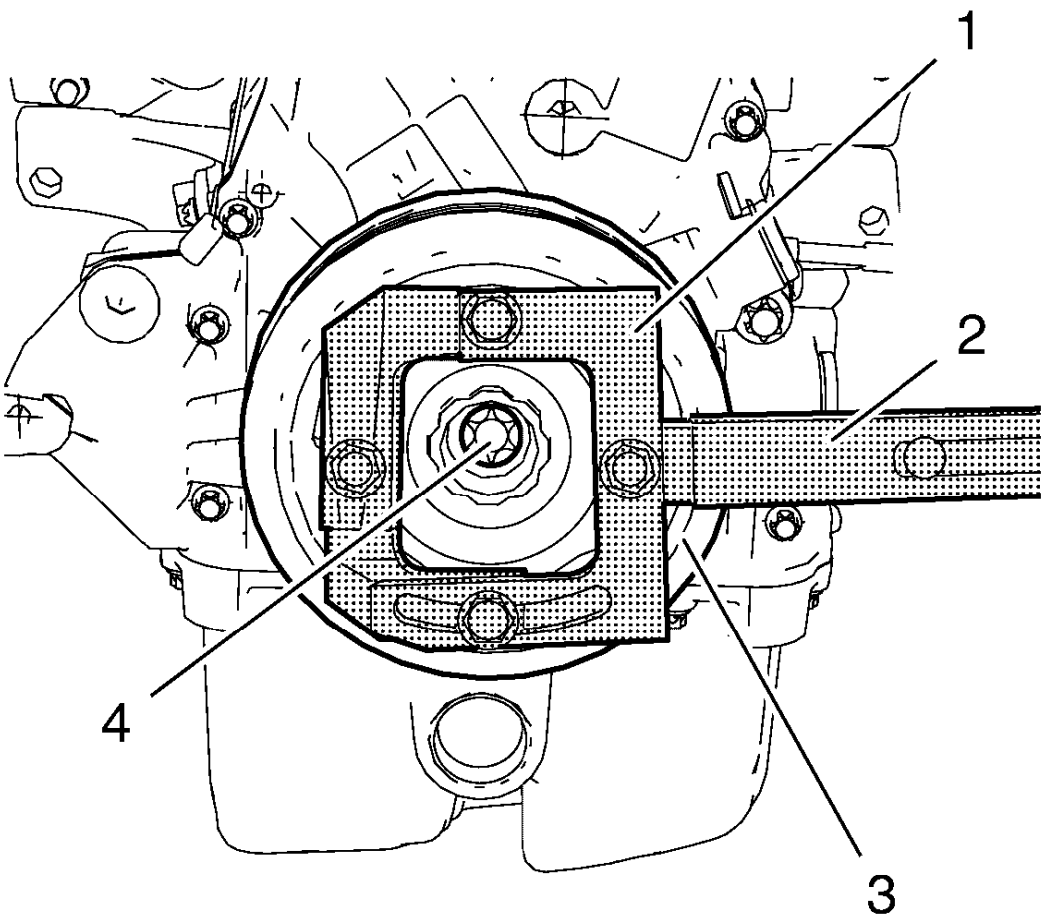

Fig. 167: Crankshaft Balancer, Retainer And Extension
Courtesy of GENERAL MOTORS COMPANY

CAUTION: Refer to Fastener Caution .

CAUTION: Refer to Torque-to-Yield Fastener Caution .

4. Tighten the crankshaft balancer bolt (4) to 150 N.m (111 lb ft) while fixing the crankshaft balancer (3) with **EN-49979** crankshaft shock mount retainer (1) and **EN-956-1** extension (2). Use **EN-470-B** wrench.
5. Tighten the crankshaft balancer bolt to an additional 60° while fixing the crankshaft balancer (3) with **EN-49979** crankshaft shock mount retainer (1) and **EN-956-1** extension (2).
6. Install the drive belt to the crankshaft balancer and remove the fixing pin. Refer to **Drive Belt Replacement**.

7. Install the right wheelhouse liner. Refer to **Front Wheelhouse Liner Replacement** .
8. Lower the vehicle.
9. Check and correct engine oil level.

CRANKSHAFT FRONT OIL SEAL REPLACEMENT

Special Tools

EN-960 Installer

For equivalent regional tools, refer to **Special Tools**.

Removal Procedure

1. Remove the crankshaft balancer. Refer to **Crankshaft Balancer Replacement**.
2. Place collecting basin underneath.

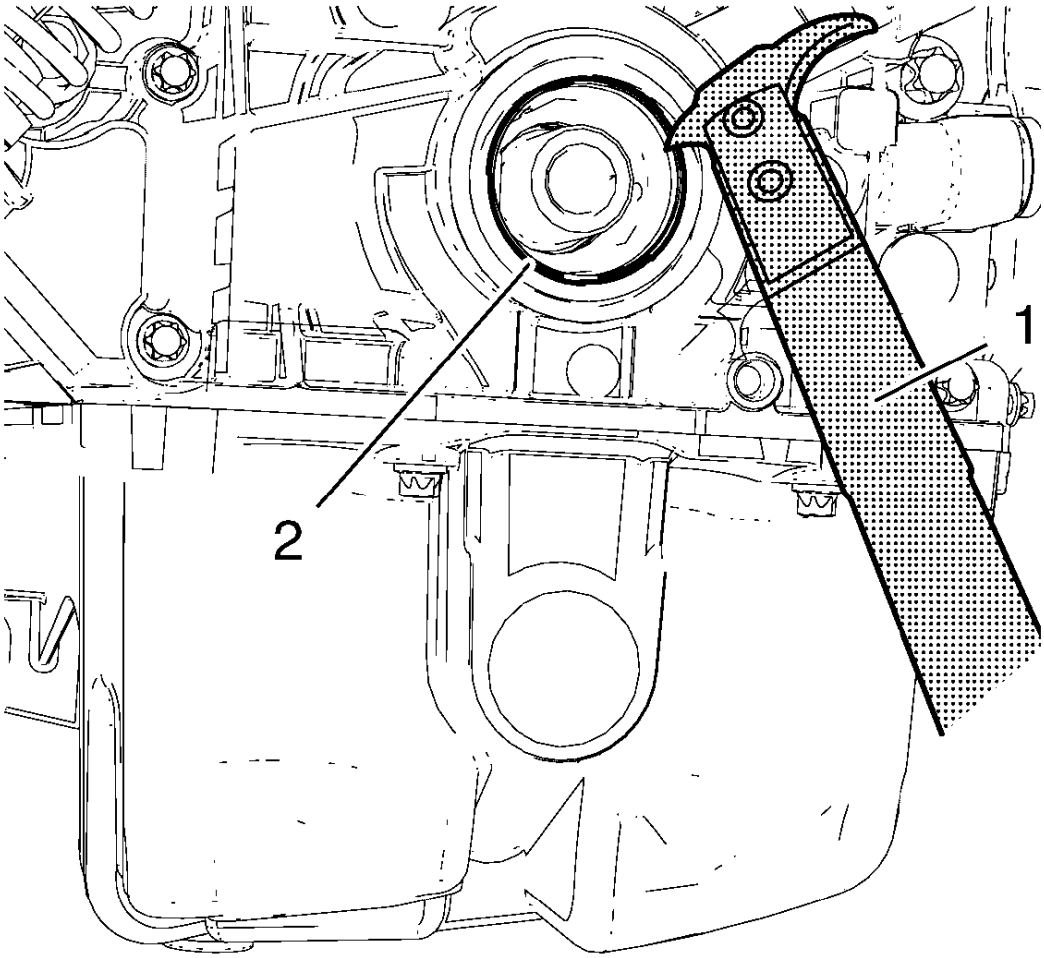

Fig. 168: Crankshaft Front Oil Seal And Remover
Courtesy of GENERAL MOTORS COMPANY

3. Remove the crankshaft front oil seal (1) from the engine front cover.

Installation Procedure

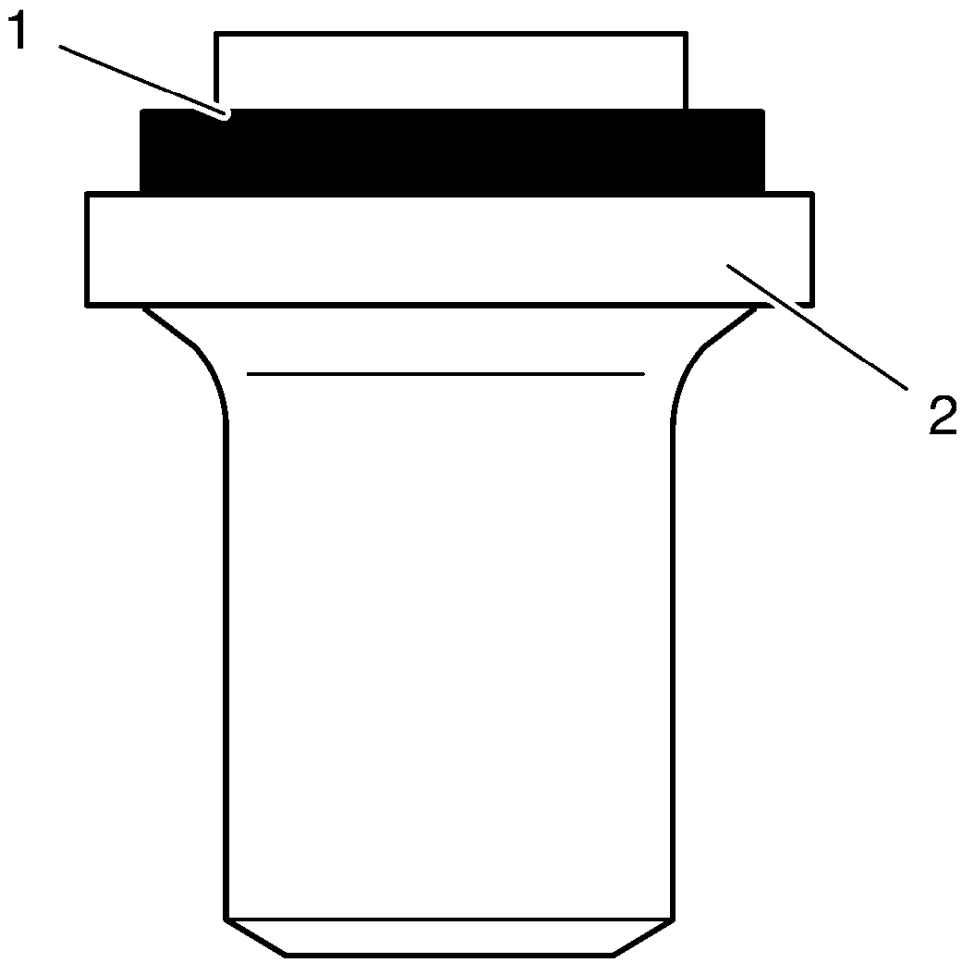

Fig. 169: Crankshaft Front Oil Seal And Installer
Courtesy of GENERAL MOTORS COMPANY

1. Install NEW crankshaft front oil seal (1) to **EN-960** installer (2).

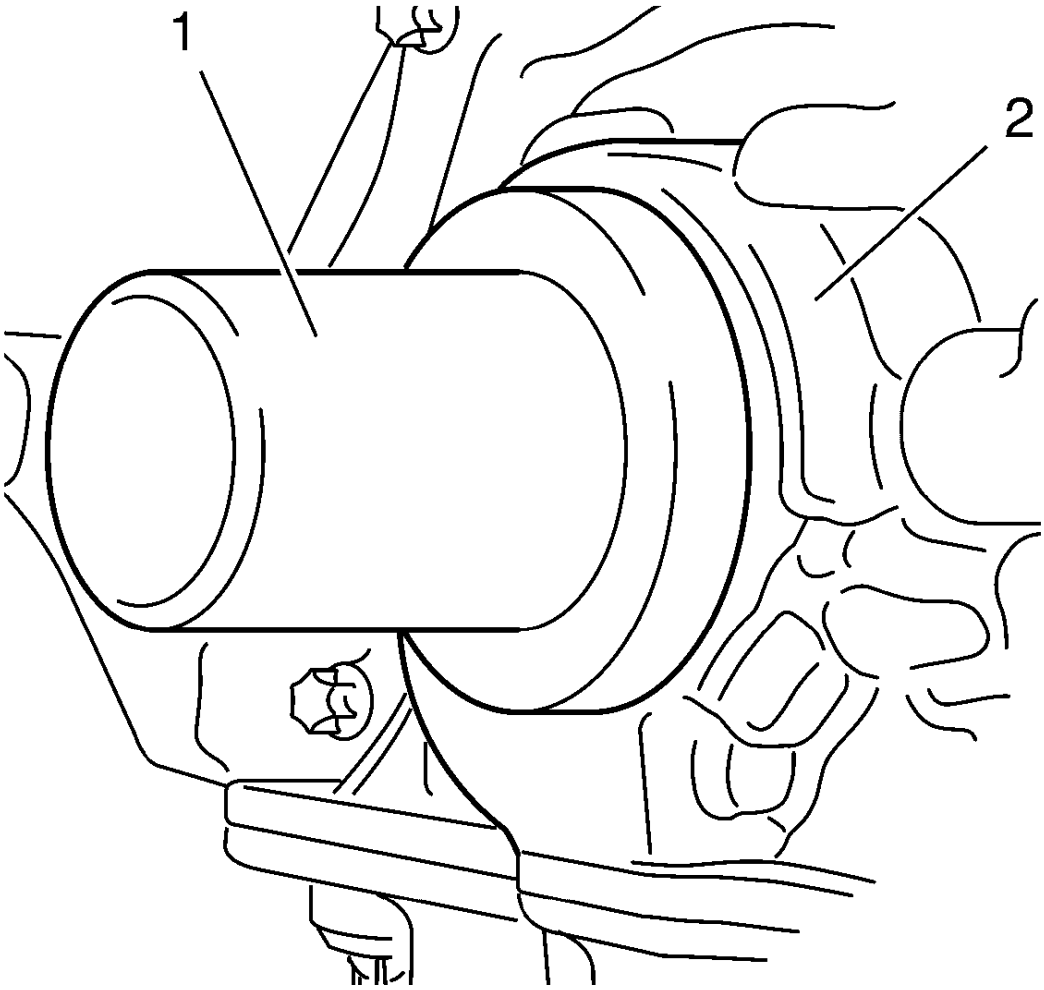

Fig. 170: Crankshaft Front Oil Seal Installer And Engine Front Cover
Courtesy of GENERAL MOTORS COMPANY

2. Install crankshaft front oil seal by means of **EN-960** installer (1) to engine front cover (2).

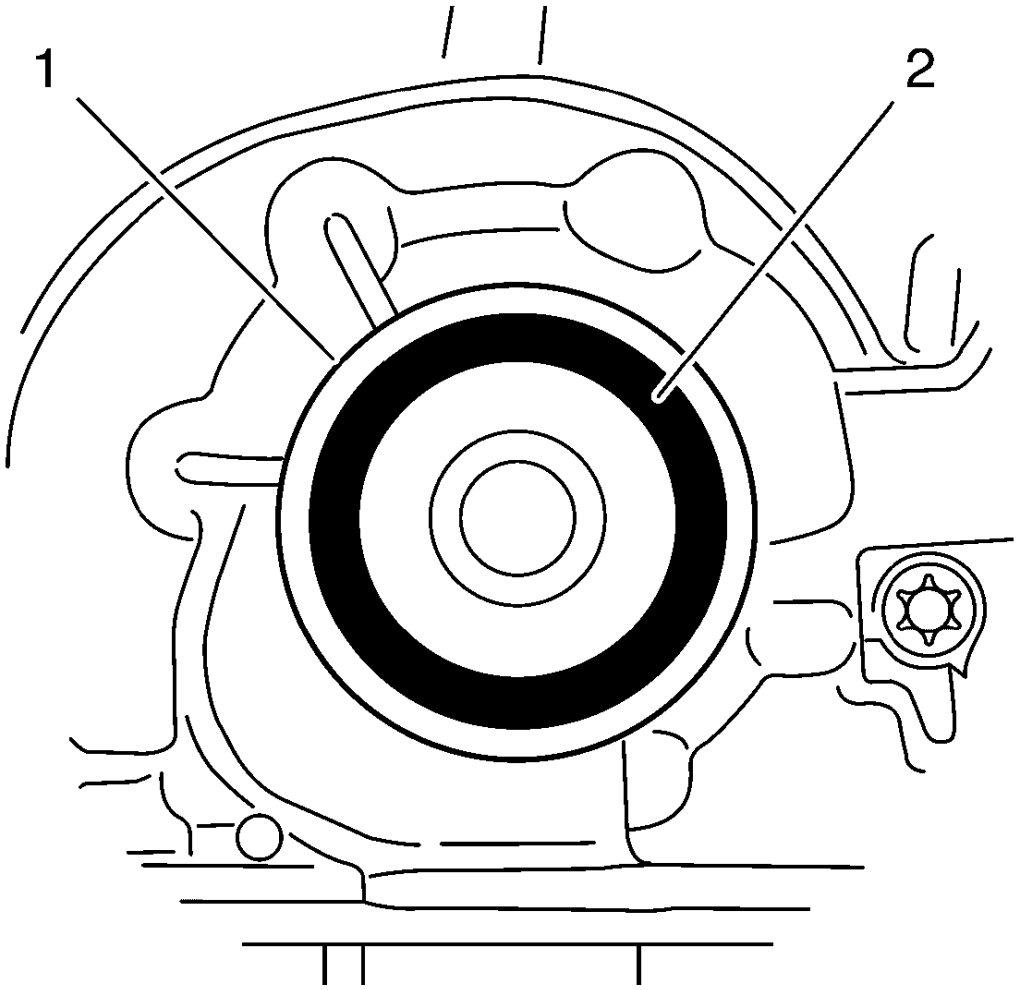

Fig. 171: Engine Front Cover And Crankshaft Front Oil Seal
Courtesy of GENERAL MOTORS COMPANY

3. Ensure that the crankshaft front oil seal (2) is flush with the engine front cover (1).
4. Install the crankshaft balancer. Refer to **Crankshaft Balancer Replacement**.
5. Remove the collecting basin.
6. Check and correct the engine oil level.

CRANKSHAFT REAR OIL SEAL REPLACEMENT (AUTOMATIC TRANSMISSION)

Special Tools

- **EN-235-6** Installer
- **EN-658-1** Installer

For equivalent regional tools, refer to **Special Tools** .

Removal Procedure

1. Remove the automatic transmission flex plate. Refer to **Automatic Transmission Flex Plate Replacement**.
2. Place the collecting basin underneath.
3. Remove the crankshaft rear oil seal.

Installation Procedure

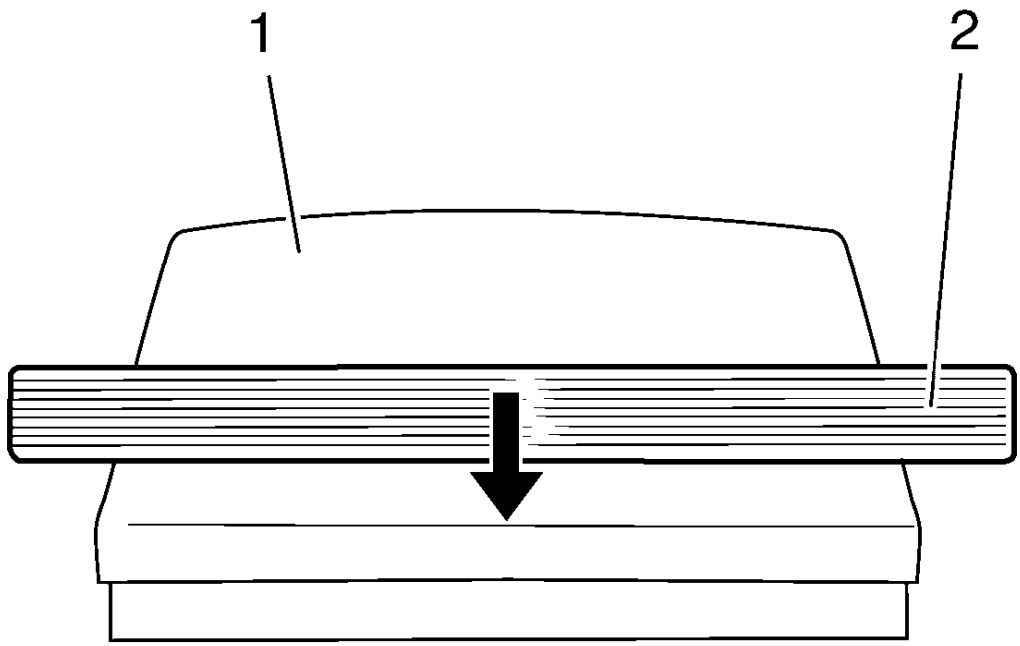

Fig. 172: Crankshaft Rear Oil Seal
Courtesy of GENERAL MOTORS COMPANY

1. Slide the crankshaft rear oil seal (2) across the **EN-235-6** installer (1).

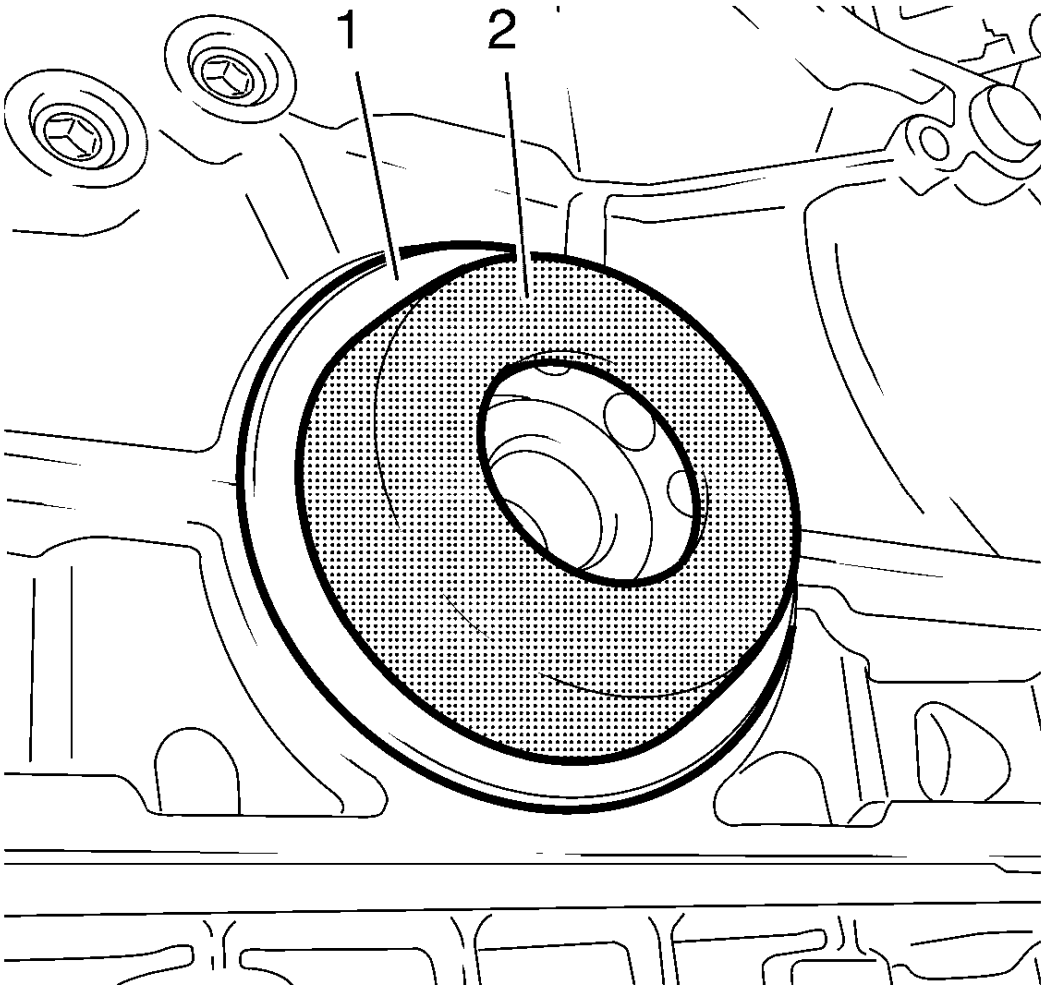

Fig. 173: Crankshaft Rear Oil Seal And Installer
Courtesy of GENERAL MOTORS COMPANY

2. Install the crankshaft rear oil seal (1) with **EN-235-6** installer (2) to the crankshaft.

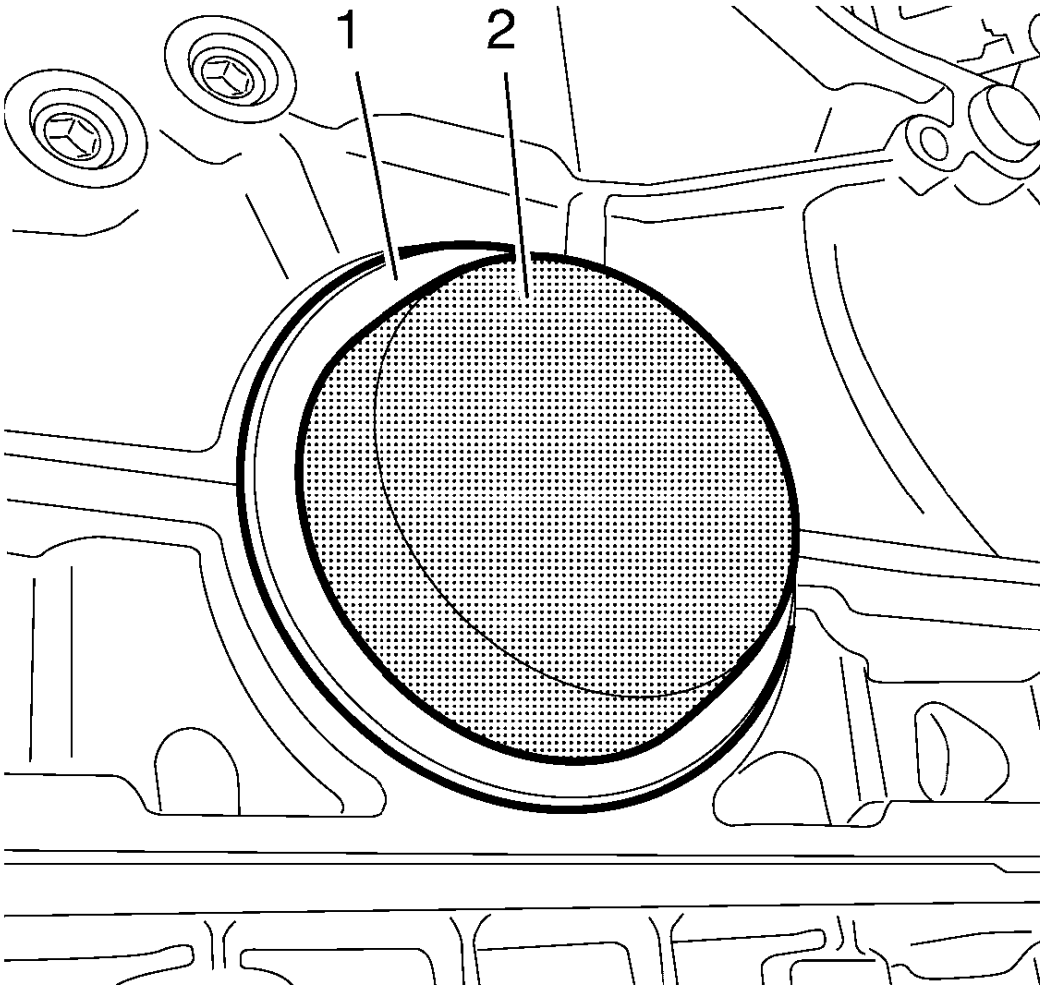

Fig. 174: Oil Seal Installer
Courtesy of GENERAL MOTORS COMPANY

NOTE: Ensure that the crankshaft rear oil seal fits proper.

3. Use **EN-658-1** installer (2) to strike the crankshaft rear oil seal (1)
4. Remove the collecting basin.
5. Install the automatic transmission flex plate. Refer to **Automatic Transmission Flex Plate Replacement**.

CRANKSHAFT REAR OIL SEAL REPLACEMENT (MANUAL TRANSMISSION)

Special Tools

- **EN-235-6** Installer
- **EN-658-1** Installer

For equivalent regional tools, refer to **Special Tools** .

Removal Procedure

1. Remove the engine flywheel. Refer to **Engine Flywheel Replacement**.
2. Place the collecting basin underneath.
3. Remove the crankshaft rear oil seal.

Installation Procedure

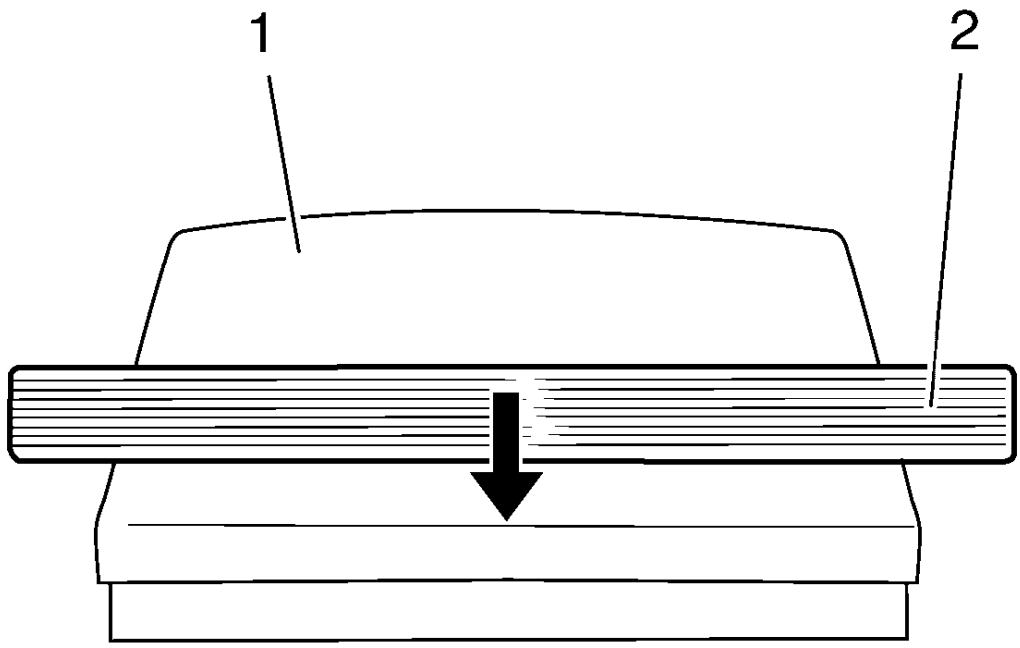

Fig. 175: Crankshaft Rear Oil Seal
Courtesy of GENERAL MOTORS COMPANY

1. Slide the crankshaft rear oil seal (2) across the **EN-235-6** installer (1).

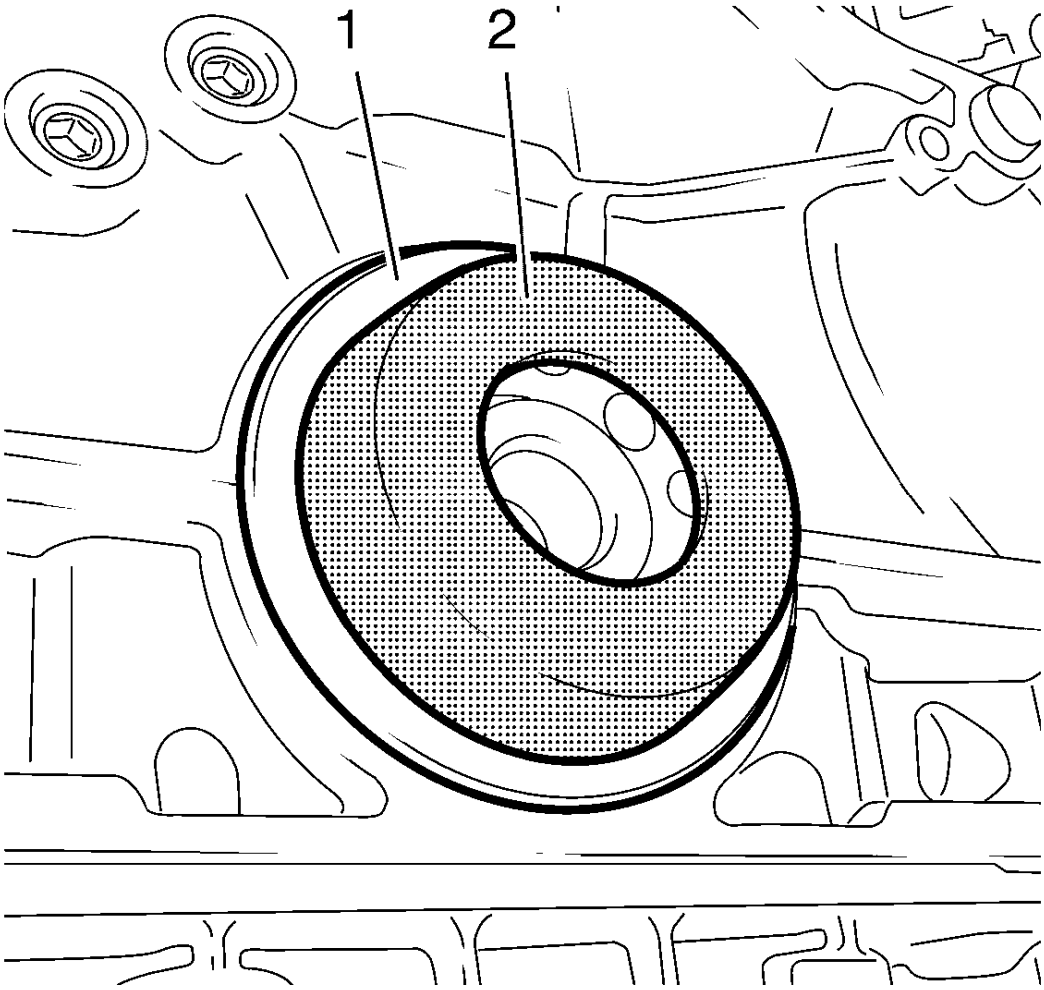

Fig. 176: Crankshaft Rear Oil Seal And Installer
Courtesy of GENERAL MOTORS COMPANY

2. Install the crankshaft rear oil seal (1) with **EN-235-6** installer (2) to the crankshaft.

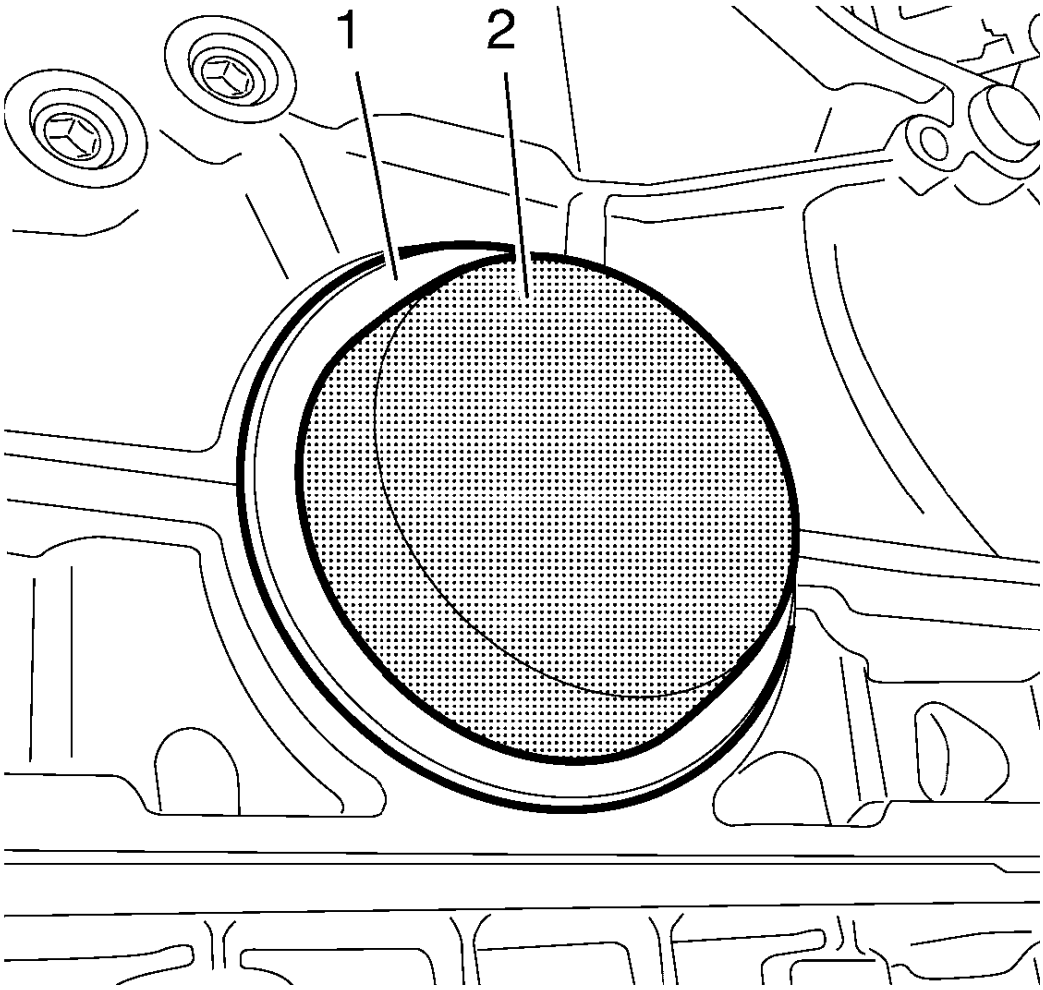

Fig. 177: Oil Seal Installer
Courtesy of GENERAL MOTORS COMPANY

NOTE: Ensure that the crankshaft rear oil seal fits proper.

3. Use **EN-658-1** installer (2) to strike the crankshaft rear oil seal (1)
4. Remove the collecting basin.
5. Install the engine flywheel. Refer to **Engine Flywheel Replacement**.

POSITIVE CRANKCASE VENTILATION HOSE/PIPE/TUBE REPLACEMENT

Removal Procedure

1. Open the hood.
2. Remove the air cleaner outlet duct. Refer to **Air Cleaner Outlet Duct Replacement** .

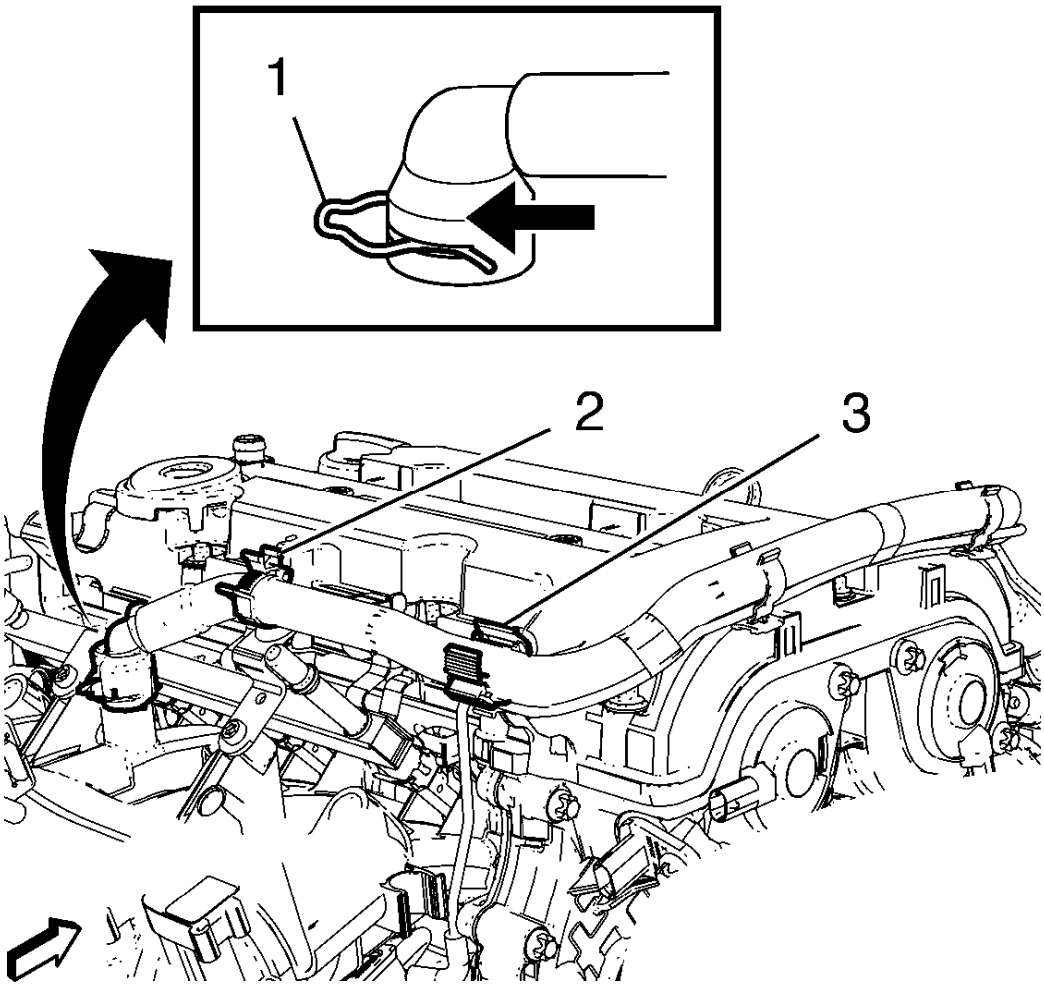

Fig. 178: Positive Crankcase Ventilation Pipe Retainer Clips And Clamp
Courtesy of GENERAL MOTORS COMPANY

3. Open the 2 positive crankcase ventilation pipe retainer clips (2) and (3).

NOTE: Move retainer clamp (1) in direction of the arrow.

4. Remove the positive crankcase ventilation pipe from the intake manifold.

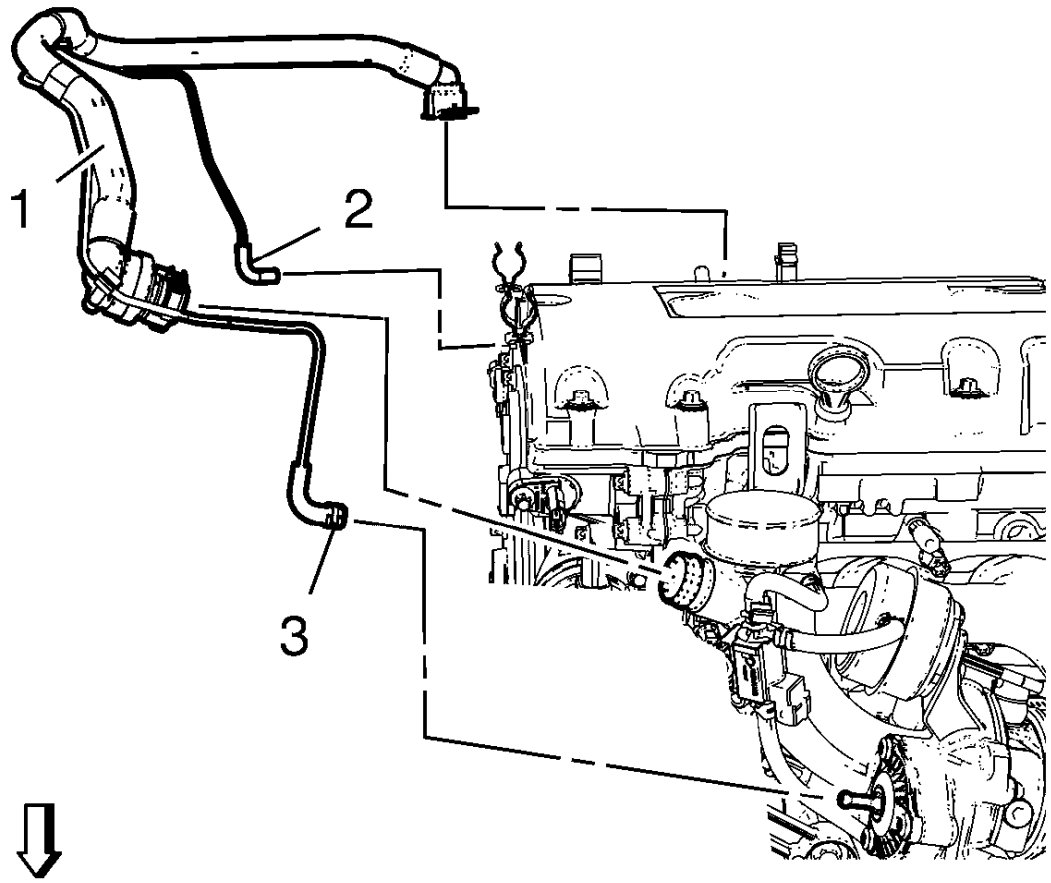

Fig. 179: Positive Crankcase Ventilation Pipe, Charger Air Bypass Valve Pipe And Clamp
Courtesy of GENERAL MOTORS COMPANY

5. Loosen the charger air bypass valve pipe clamp (3).
6. Remove the charger air bypass valve pipe from turbocharger.
7. Remove the charger air bypass valve pipe (2) from turbo charger wastegate regulator solenoid valve.
8. Disconnect the positive crankcase ventilation pipe from turbocharger.
9. Unclip and remove the positive crankcase ventilation pipe assembly (1) from the camshaft cover retainer clips.

Installation Procedure

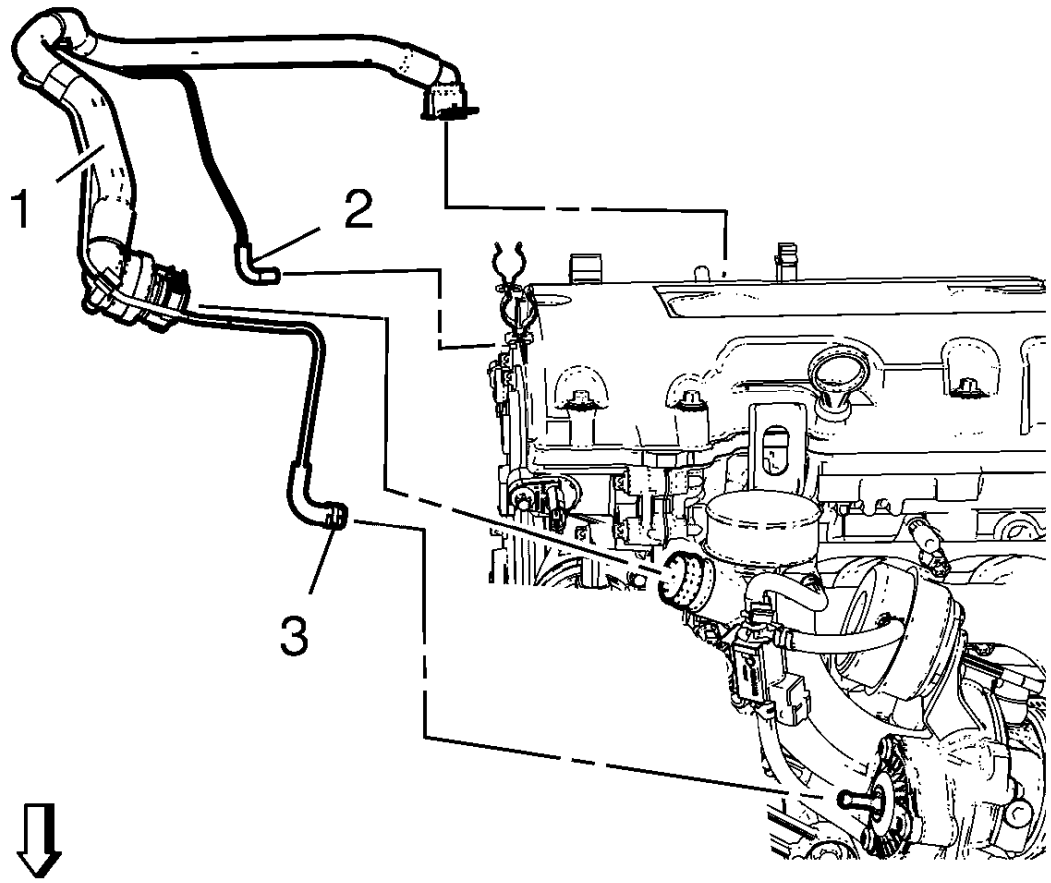

Fig. 180: Positive Crankcase Ventilation Pipe, Charger Air Bypass Valve Pipe And Clamp
Courtesy of GENERAL MOTORS COMPANY

1. Install the positive crankcase ventilation pipe assembly (1) to the camshaft cover retainer clips.
2. Connect the positive crankcase ventilation pipe to turbocharger.
3. Install the charger air bypass valve pipe (2) to turbo charger wastegate regulator solenoid valve.
4. Install the charger air bypass valve pipe to turbocharger.
5. Fasten the charger air bypass valve pipe clamp (3).

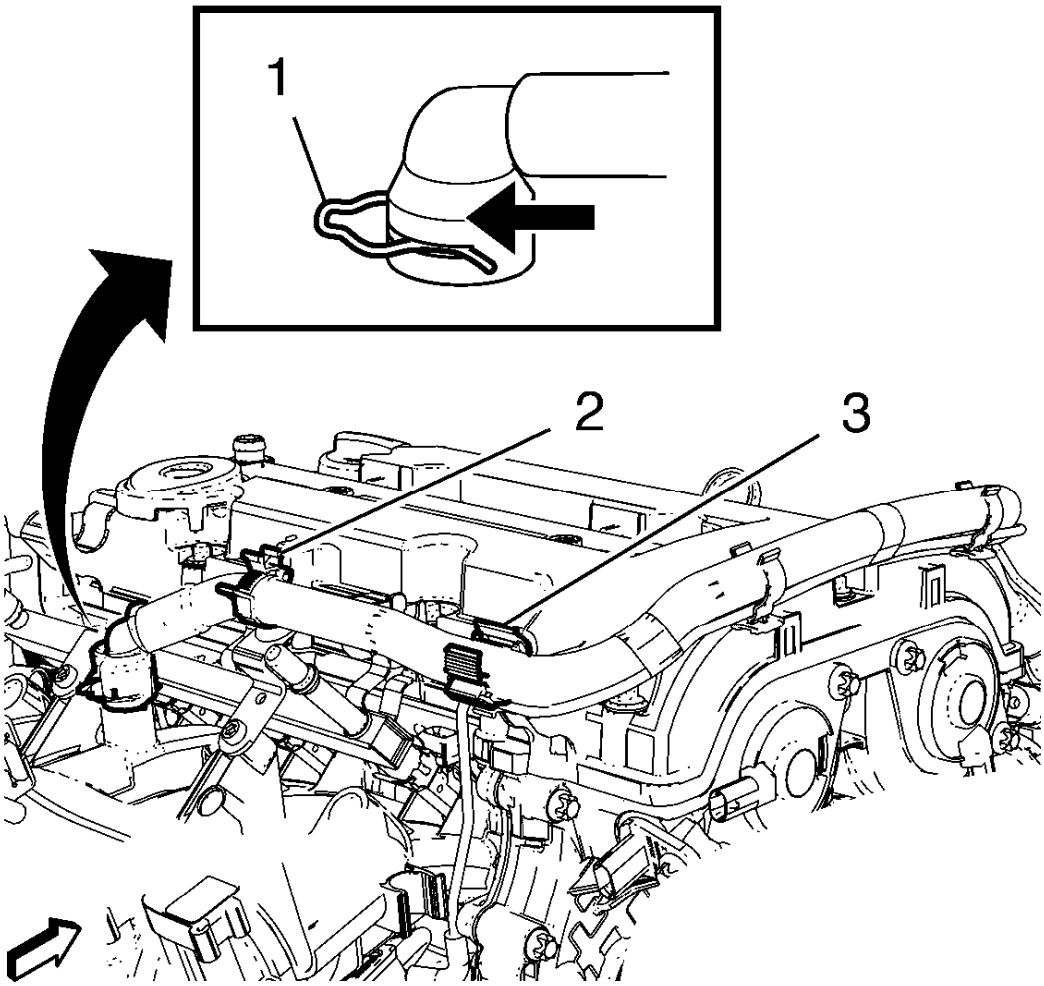

Fig. 181: Positive Crankcase Ventilation Pipe Retainer Clips And Clamp
Courtesy of GENERAL MOTORS COMPANY

6. Install the positive crankcase ventilation pipe to the intake manifold and fix with retainer clamp (1).
7. Clip in the positive crankcase ventilation pipe to the 2 retainer clips (2) and (3).
8. Install the air cleaner outlet duct. Refer to **Air Cleaner Outlet Duct Replacement** .

ENGINE OIL HEATER REPLACEMENT

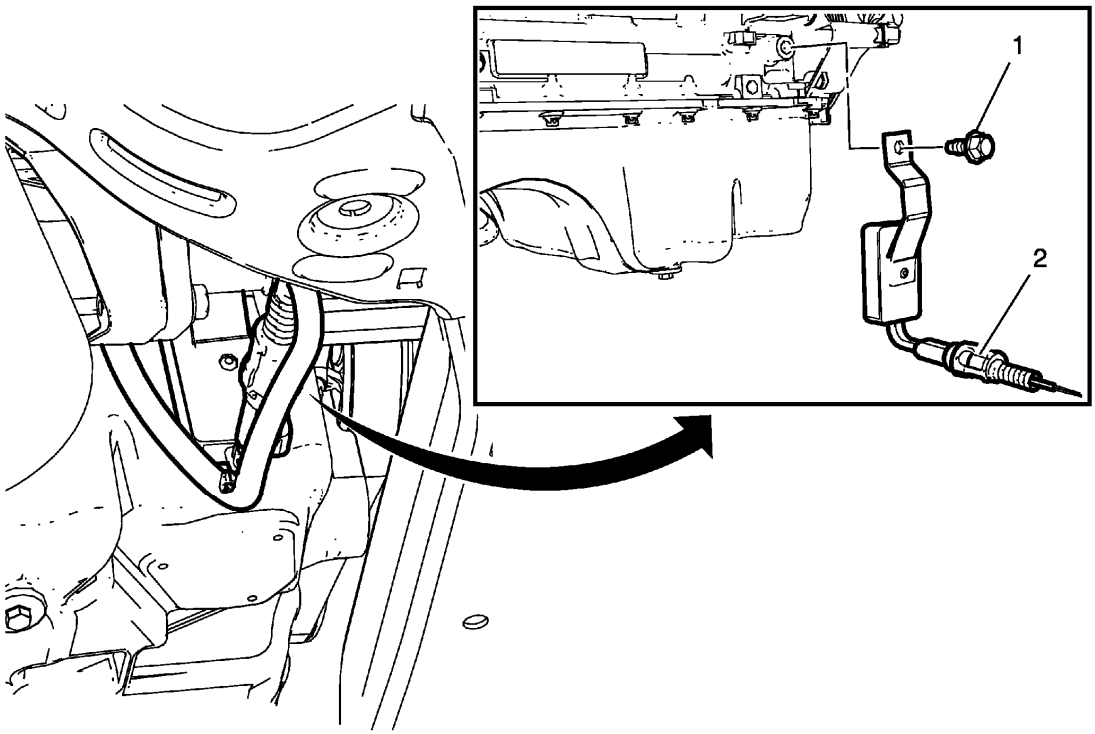

Fig. 182: Engine Oil Heater And Bolt
Courtesy of GENERAL MOTORS COMPANY

Engine Oil Heater Replacement

Callout	Component Name
Preliminary Procedures Raise and support the vehicle. Refer to **Lifting and Jacking the Vehicle**	
1	Engine Oil Heater Bolt **CAUTION:** **Refer to Fastener Caution .** **Tighten** 40 Y (30 lb ft)
2	Engine Oil Heater **Procedure** Disconnect the electrical connector.

ENGINE FRONT COVER WITH OIL PUMP REPLACEMENT

Removal Procedure

1. Open the hood.
2. Disconnect the battery negative cable. Refer to **Battery Negative Cable Disconnection and**

Connection .

3. Set the engine to TDC. Refer to **Camshaft Timing Chain Inspection**.
4. Raise and support the vehicle. Refer to **Lifting and Jacking the Vehicle** .
5. Remove the front compartment insulator. Refer to **Front Compartment Insulator Replacement** .
6. Remove the right front wheelhouse liner. Refer to **Front Wheelhouse Liner Replacement** .
7. Disconnect all electrical connectors from the generator. Refer to **Generator Replacement (1.4L LUV)** .
8. Fix the drive belt tensioner and remove the drive belt from crankshaft balancer, drive belt tensioner and air conditioning compressor. Refer to **Drive Belt Replacement**.
9. Remove the air conditioning compressor bracket. Refer to **Air Conditioning Compressor Bracket Replacement**.
10. Place a collecting basin underneath.
11. Remove the crankshaft balancer. Refer to **Crankshaft Balancer Replacement**.
12. Remove the oil pan. Refer to **Oil Pan Replacement**.
13. Lower vehicle.
14. Remove the engine mount bracket. Refer to **Engine Mount Bracket Replacement - Right Side**.
15. Remove the drive belt tensioner. Refer to **Drive Belt Tensioner Replacement**.
16. Remove the generator from above. Refer to **Generator Replacement (1.4L LUV)** .
17. Remove the water pump pulley and the water pump. Refer to **Water Pump Replacement (1.4L LUV)** .
18. Remove the camshaft position actuator solenoid valves and disconnect electrical connectors. Refer to **Camshaft Position Actuator Solenoid Valve Removal**.
19. Remove the camshaft position sensors. Refer to **Camshaft Position Sensor Replacement** .
20. Loosen the camshaft sprocket bolts until the camshaft position exciter wheels are free rotatable. Refer to **Camshaft Timing Chain Adjustment**.

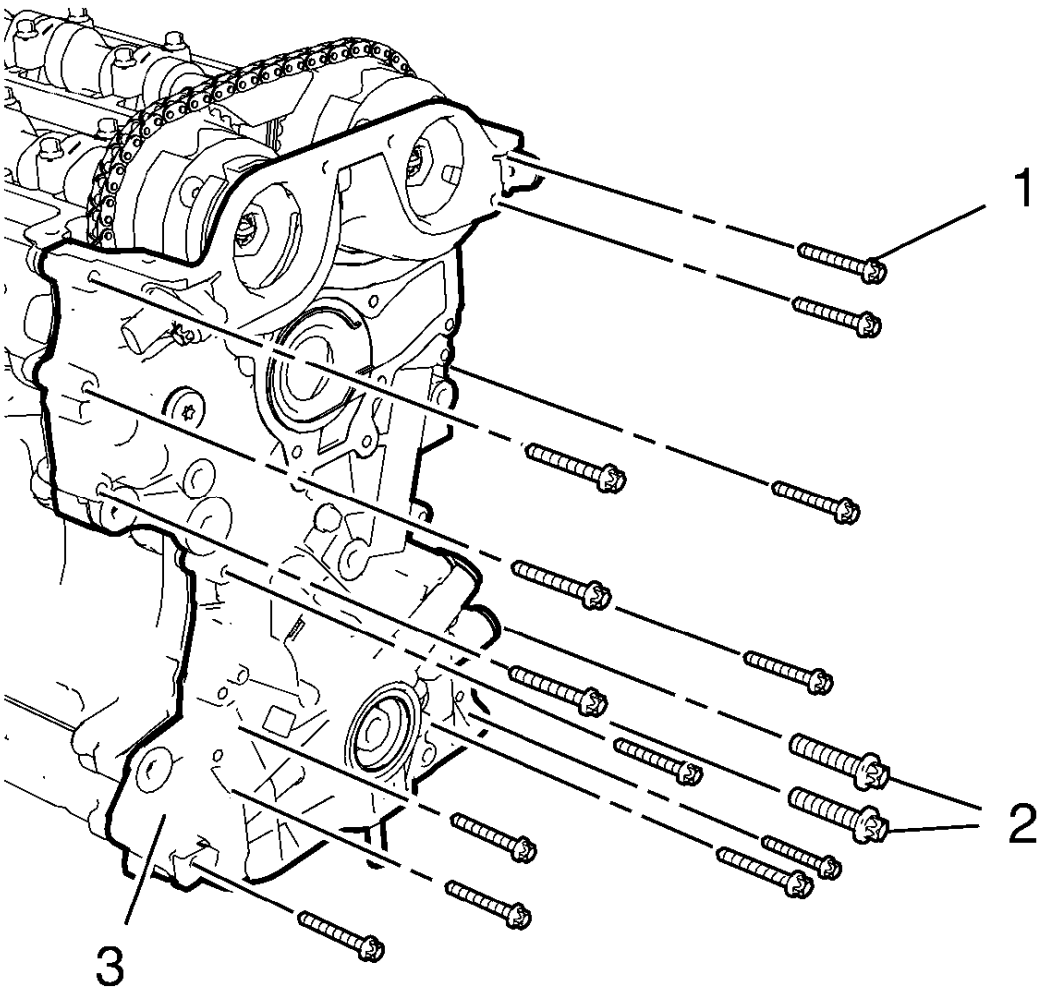

Fig. 183: M6, M10 Front Cover Bolts And Engine Front Cover
Courtesy of GENERAL MOTORS COMPANY

21. Remove the 13 engine front cover bolts M6 (1).
22. Remove the 2 engine front cover bolts M10 (2).
23. Remove the engine front cover (3).

NOTE: Removal of timing chain is necessary to get access to engine front cover gasket.

24. Remove the camshaft timing chain. Refer to **Camshaft Timing Chain Replacement**.

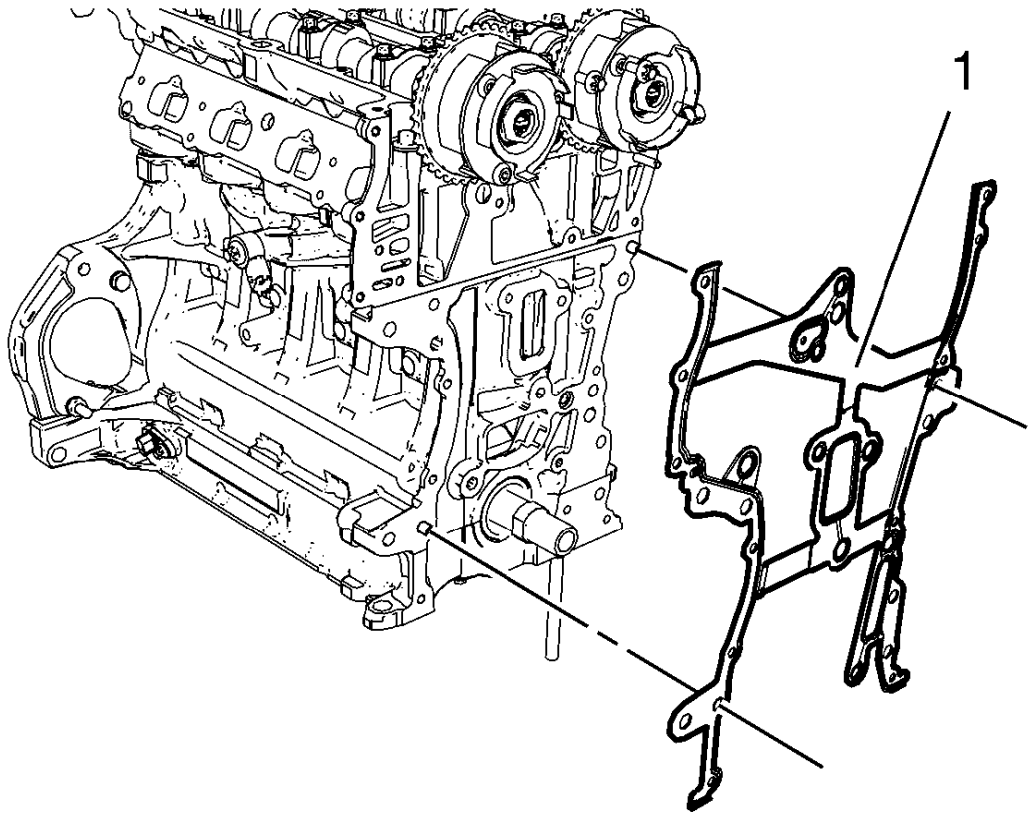

Fig. 184: Engine Front Cover Gasket
Courtesy of GENERAL MOTORS COMPANY

25. Remove the engine front cover gasket (1).
26. Remove the intake and exhaust camshaft position sensors from the engine front cover. Refer to **Engine Front Cover and Oil Pump Disassemble**.

Installation Procedure

1. Install the intake and exhaust camshaft position sensors to the engine front cover. Refer to **Engine Front Cover and Oil Pump Assemble**.
2. Clean the engine front cover sealing surfaces on engine block and cylinder head.

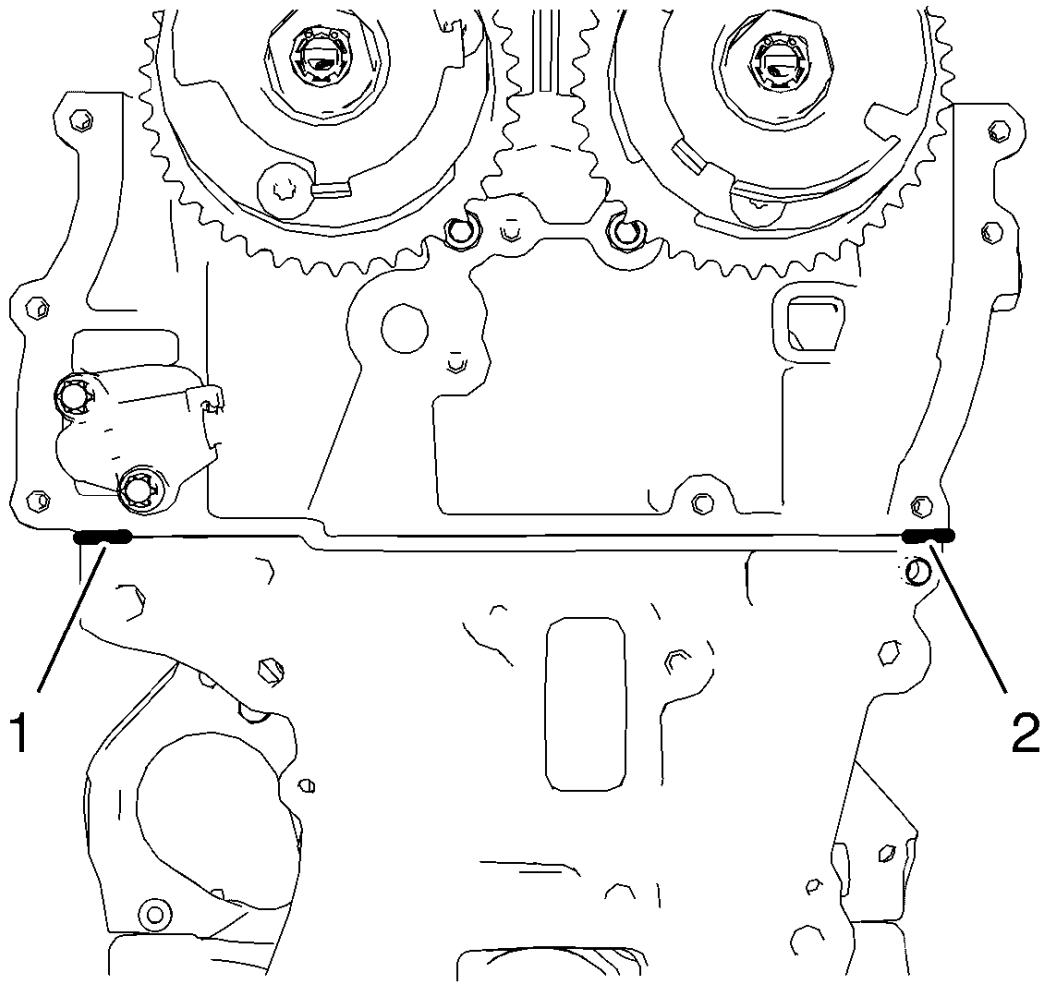

Fig. 185: Sealing Compound Application Areas
Courtesy of GENERAL MOTORS COMPANY

NOTE: The thickness of the sealing bead should be 2 mm (0.0787 in).

3. Apply sealing compound to the shown areas (1) and (2). Refer to **Adhesives, Fluids, Lubricants, and Sealers**.

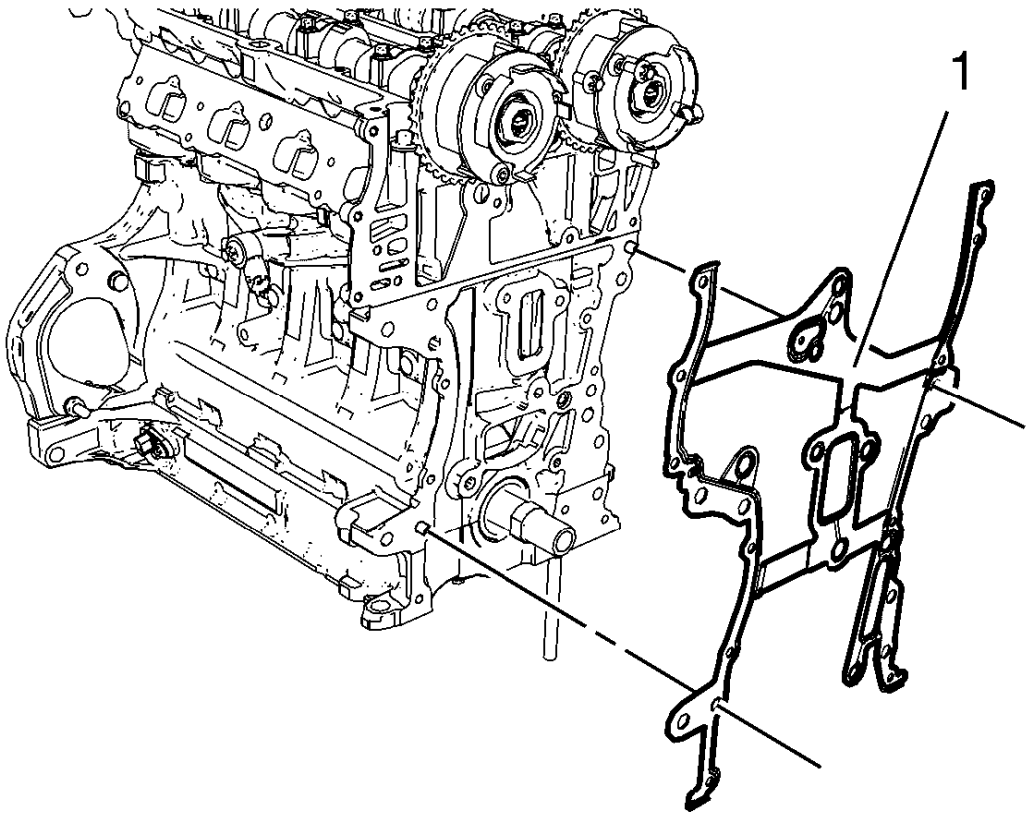

Fig. 186: Engine Front Cover Gasket
Courtesy of GENERAL MOTORS COMPANY

NOTE: Mind the guide sleeves.

4. Install a NEW engine front cover gasket (1).
5. Install the timing chain. Refer to **Camshaft Timing Chain Replacement**.

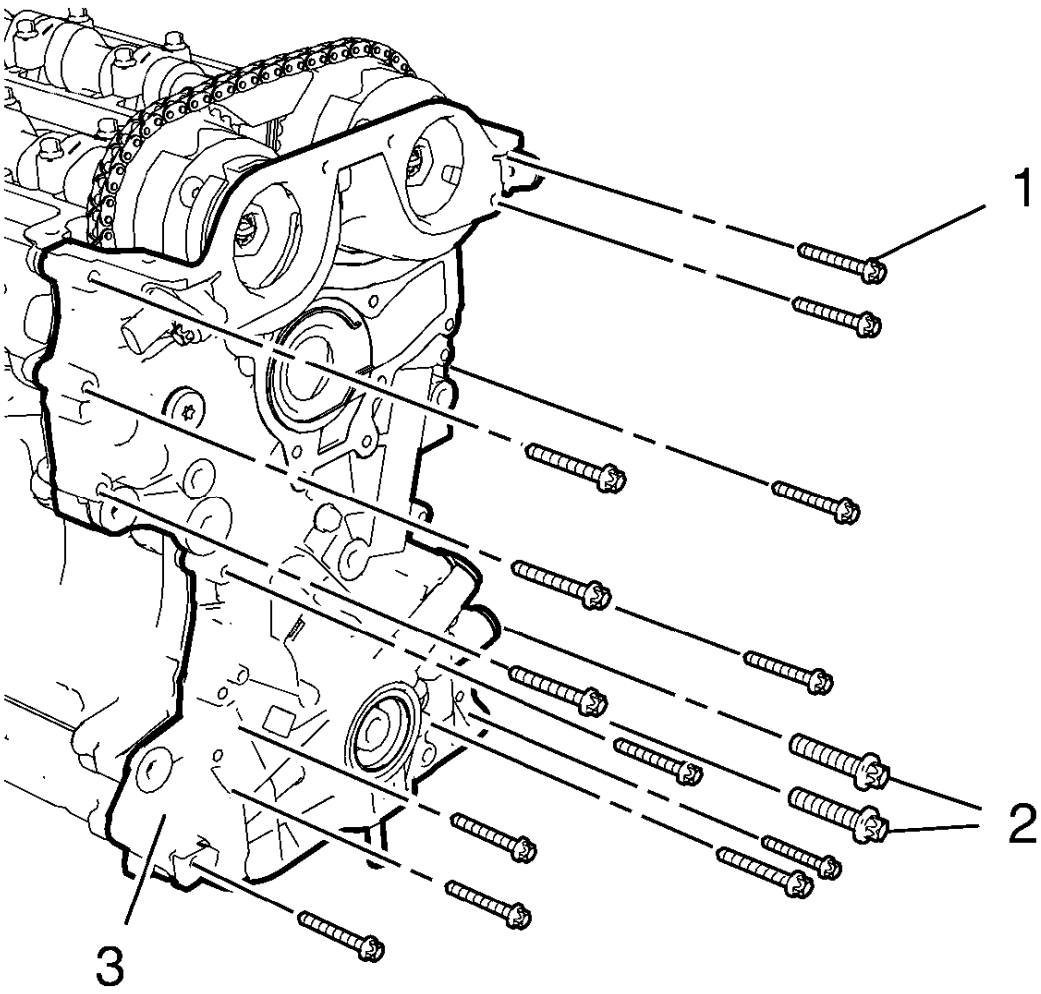

Fig. 187: M6, M10 Front Cover Bolts And Engine Front Cover
Courtesy of GENERAL MOTORS COMPANY

NOTE: Mind the guide sleeves when installing the engine front cover. The complete installation procedure of the engine front cover should not take longer than 10 minutes.

6. Install the engine front cover (3).
7. Install the 13 engine front cover bolts M6 (1).
8. Install the 2 engine front cover bolts M10 (2).

CAUTION: Refer to Fastener Caution .

9. Tighten the 13 engine front cover bolts M6 to 8 N.m (71 lb in).

10. Tighten the 2 engine front cover bolts M10 to 35 N.m (26 lb ft).

NOTE: Engine should be adjusted and fixed in TDC position.

11. Tighten the camshaft sprockets, install the upper timing chain guide and remove all special tools. Refer to **Camshaft Timing Chain Adjustment**.
12. Install the camshaft position sensors. Refer to **Camshaft Position Sensor Replacement** .
13. Install the 2 camshaft position actuator solenoid valves and connect electrical connectors. Refer to **Camshaft Position Actuator Solenoid Valve Replacement** .
14. Install the water pump and the water pump pulley. Refer to **Water Pump Replacement (1.4L LUV)** .
15. Install the generator from above. Refer to **Generator Replacement (1.4L LUV)** .
16. Install the drive belt tensioner. Refer to **Drive Belt Tensioner Replacement**.
17. Install the engine mount bracket. Refer to **Engine Mount Bracket Replacement - Right Side**.
18. Loosely install the drive belt to water pump pulley and generator pulley.
19. Install the engine mount. Refer to **Engine Mount Replacement - Right Side**.
20. Remove engine lifter from engine lift bracket.
21. Install the camshaft cover. Refer to **Camshaft Cover Replacement**.
22. Install the air cleaner assembly. Refer to **Air Cleaner Assembly Replacement** .
23. Raise the vehicle.
24. Install the crankshaft balancer. Refer to **Crankshaft Balancer Replacement**.
25. Install the oil pan. Refer to **Oil Pan Replacement**.
26. Install the air conditioning compressor bracket. Refer to **Air Conditioning Compressor Bracket Replacement**.
27. Install the drive belt to crankshaft balancer, drive belt tensioner and air conditioning compressor. Refer to **Drive Belt Replacement**.
28. Connect all electrical connectors to the generator. Refer to **Generator Replacement (1.4L LUV)** .
29. Install the right front wheelhouse liner. Refer to **Front Wheelhouse Liner Replacement** .
30. Install the front compartment insulator. Refer to **Front Compartment Insulator Replacement** .
31. Lower the vehicle
32. Connect the battery negative cable. Refer to **Battery Negative Cable Disconnection and Connection** .
33. Fill up engine oil. Refer to **Engine Oil and Oil Filter Replacement**.
34. Close the hood.

OIL PUMP REPLACEMENT

Removal Procedure

1. Measure the oil pressure and compare with the specified values. Refer to **Oil Pressure Diagnosis and Testing**.
2. Remove the engine front cover. Refer to **Engine Front Cover with Oil Pump Replacement**.

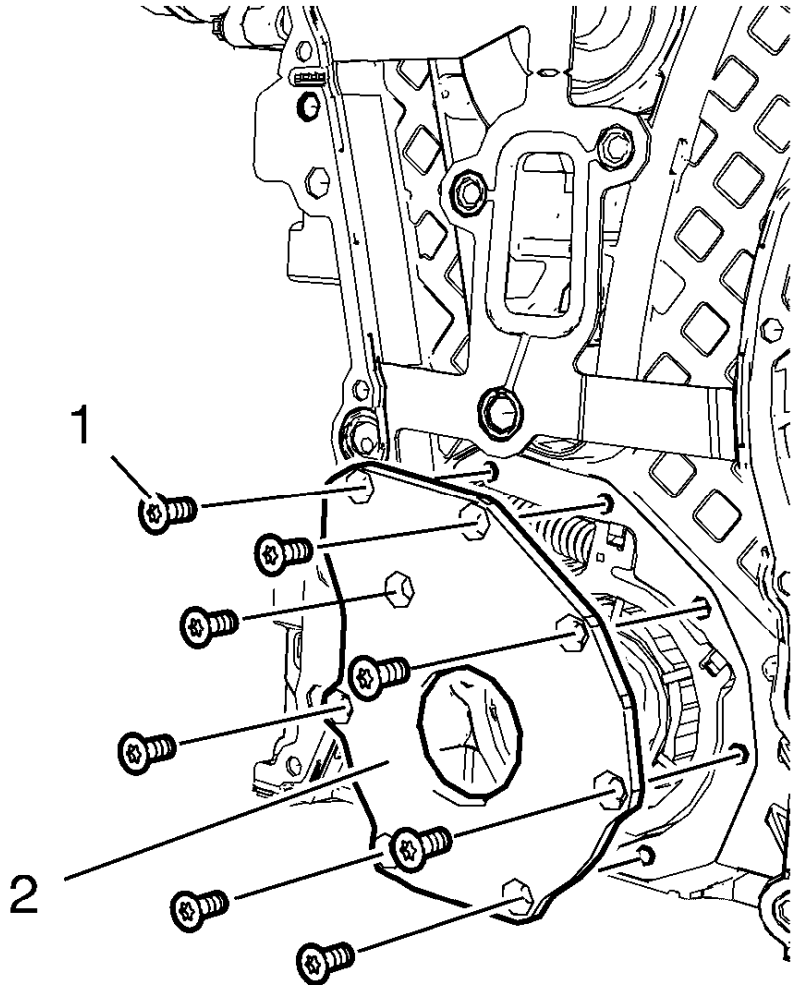

Fig. 188: Engine Oil Pump Cover And Bolts
Courtesy of GENERAL MOTORS COMPANY

3. Remove the 8 oil pump cover bolts (1).
4. Remove the oil pump cover (2).

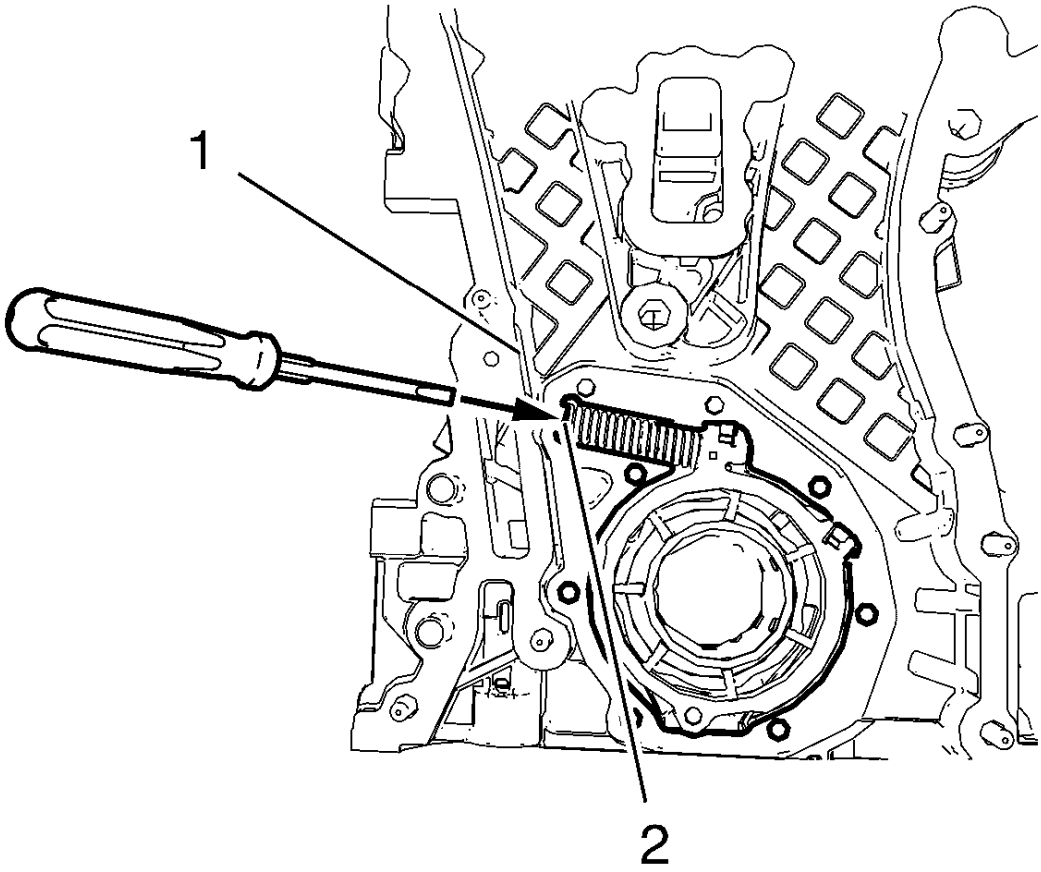

Fig. 189: Oil Pump Slide Spring Windings And Engine Front Cover Edge
Courtesy of GENERAL MOTORS COMPANY

WARNING: Before removing the spring, cover the spring with a towel to prevent the spring from flying and possibly causing damage or personal injury.

NOTE: Add the screw driver between the oil pump slide spring windings (2).

5. Protect the engine front cover edge (1) with a suitable piece of plastics.
6. Compress the oil pump slide spring with a screw driver and remove the oil pump slide spring in compound with the oil pump slide spring pin.

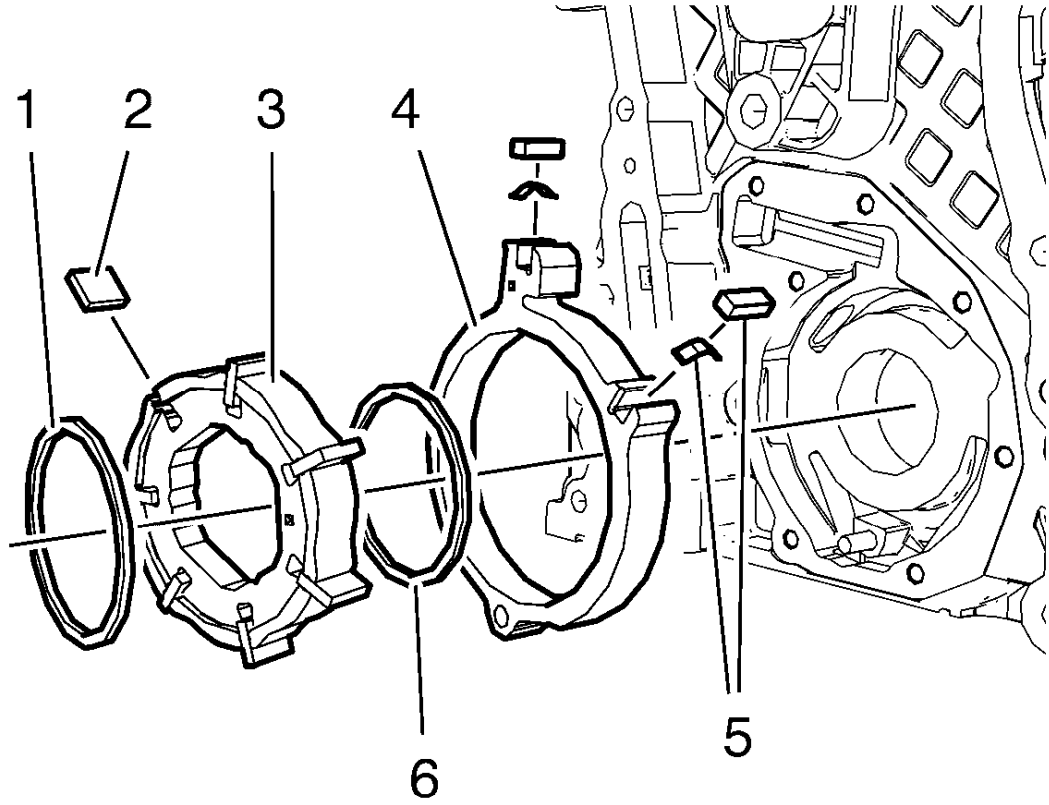

Fig. 190: Engine Oil Pump Components
Courtesy of GENERAL MOTORS COMPANY

NOTE: Mind the installation position of the oil pump components.

7. Remove the oil pump components in the following order:
    1. Outer oil pump vane ring (1).
    2. Oil pump vane rotor (3) and the 7 oil pump vanes (2).
    3. Inner oil pump vane ring (6).
    4. Oil pump slide (4) and the 2 oil pump slide seals with the 2 oil pump slide seal springs (5).

Cleaning And Inspection Procedure

1. Inspect the engine front cover for cracks, scratches and damage.
2. Inspect the oil pump cover and the engine front cover for flatness.
3. Inspect the oil pump vanes, the oil pump vane rotor, the oil pump vane rings and the oil pump slide for

localized flatting.

4. Inspect the oil pump slide pivot pin for firm seat.

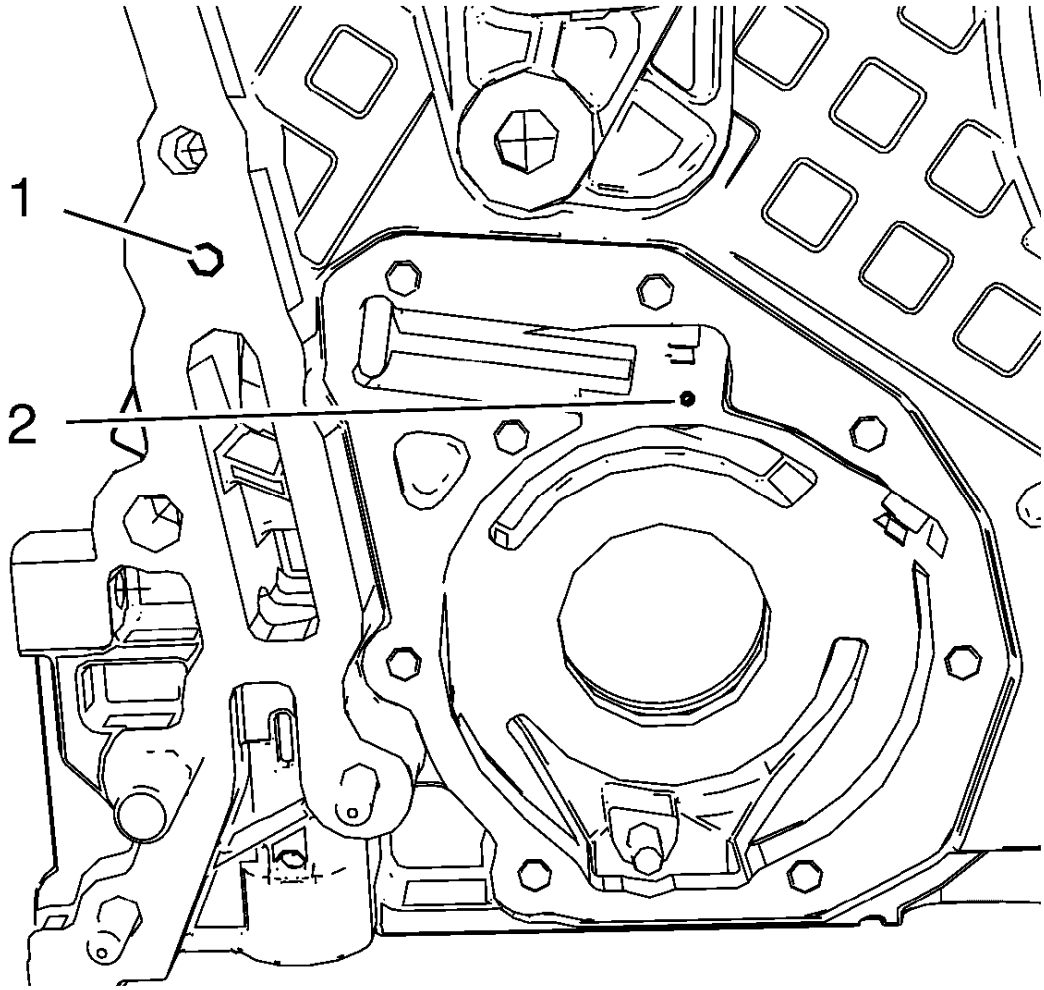

Fig. 191: Oil Gallery Bores
Courtesy of GENERAL MOTORS COMPANY

WARNING: Wear safety glasses when using compressed air in order to prevent eye injury.

CAUTION: To ensure proper engine lubrication, clean clogged or contaminated oil galleries in an approved solvent and with compressed air. Failure to clean oil galleries may cause engine damage.

5. Clean the oil galleries with solvent and compressed air. Blow compressed air from bore (2) to bore (1).

Installation Procedure

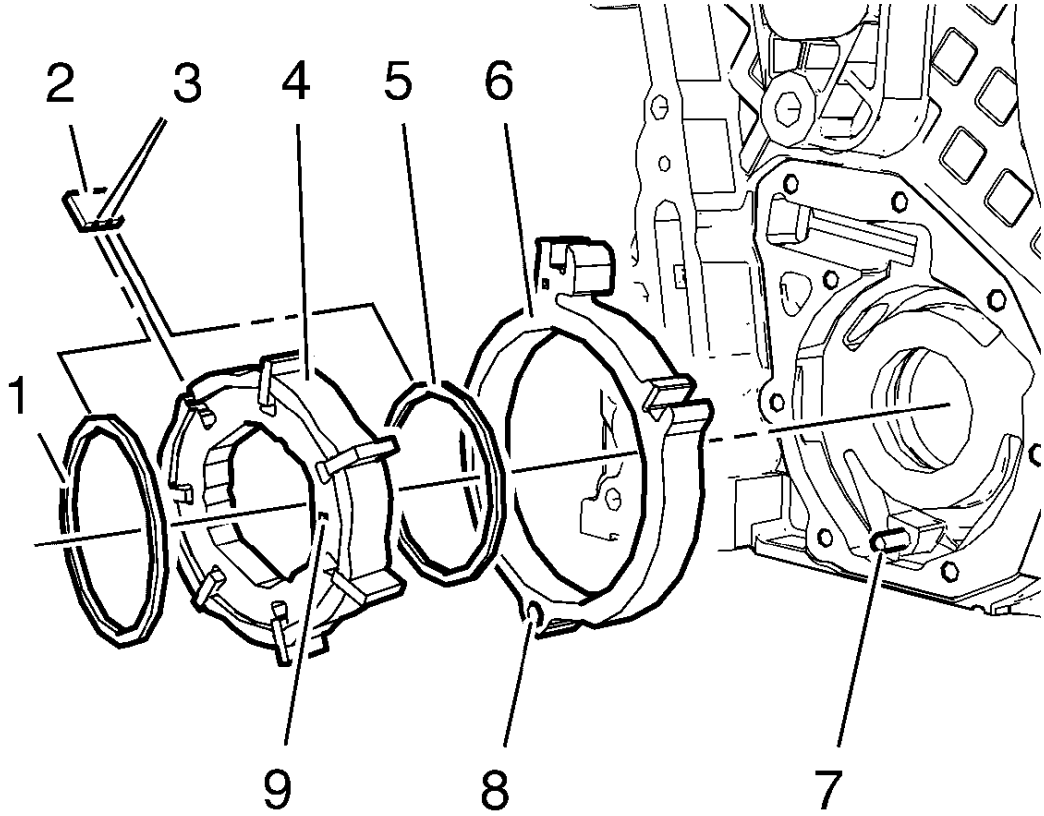

Fig. 192: Oil Pump Components
Courtesy of GENERAL MOTORS COMPANY

NOTE: Oil pump slide spring pin and oil pump slide spring, as well as slide seal and slide seal spring can be ordered as single parts. All other oil pump components can only be ordered as a replacement kit.

1. Install the oil pan components in the following order:

NOTE: The bore (8) in the oil pump slide must fit smooth-running and without clearance to the oil pump slide pivot pin (7).

1. Install the oil pump slide (6).
2. Install the inner oil pump vane ring (5).

NOTE: Mind the installation position of the oil pump vane rotor (4). The mark

(9) must point to direction of the oil pump cover.

3. Install the oil pump vane rotor (4).

NOTE: **Mind the localized flattings (3) on the oil pump vanes (2) caused by the oil pump vane rings. The localized flattings must point to the oil pump vane rotor.**

4. Install the 7 oil pump vanes (2).
5. Install the outer oil pump vane ring (1).

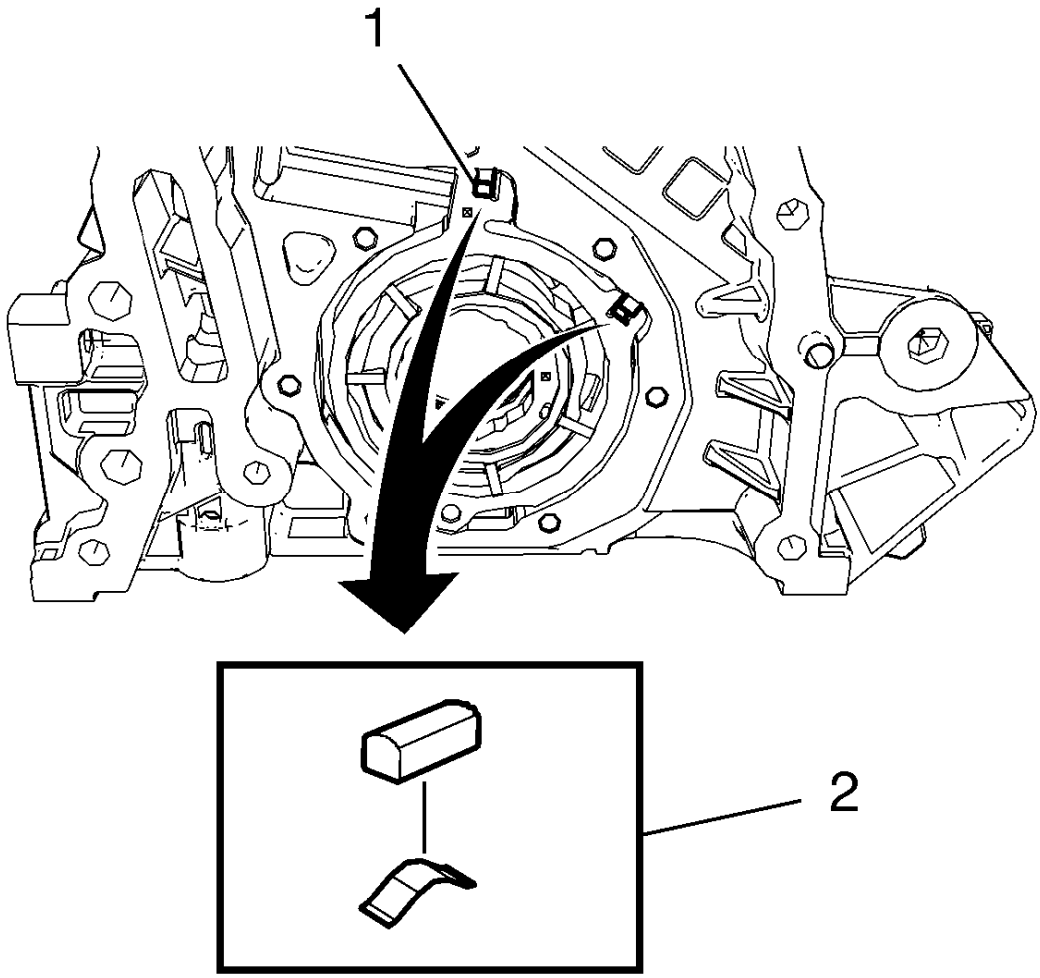

Fig. 193: Oil Pump Slide Seal Springs And Grooves
Courtesy of GENERAL MOTORS COMPANY

2. Install the 2 oil pump slide seals and the 2 oil pump slide seal springs (2) in the position as shown to the 2 grooves (1) of the oil pump slide.

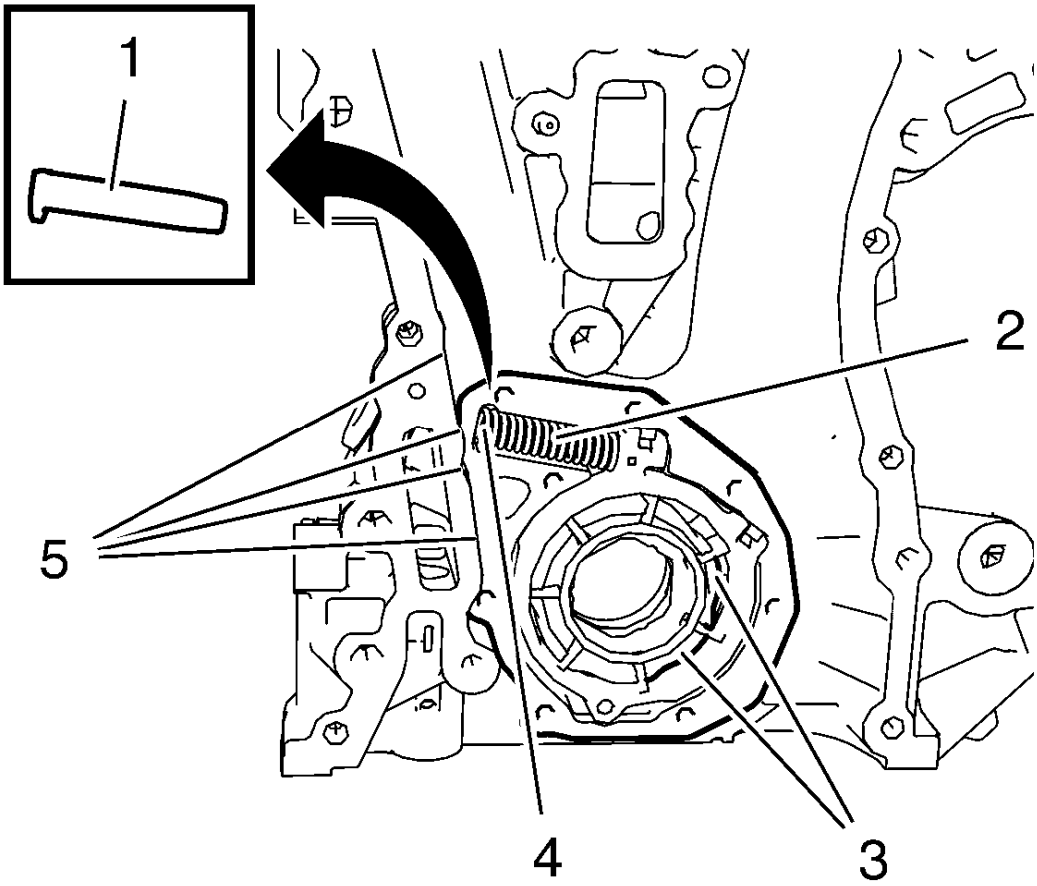

Fig. 194: Oil Pump Slide Spring, Pin, Chambers And Front Cover Edge
Courtesy of GENERAL MOTORS COMPANY

3. Protect the engine front cover edge (5) with a suitable piece of plastics.

NOTE: The length of the removed oil pump slide spring (2) should be 76.5 mm (3.0118 in) for suction engines and 61 mm (2.4016 in) for turbo engines.

4. Install the oil pump slide spring pin (1) in compound with the oil pump slide spring (4). Use a scewdriver to compress the oil pump slide spring. The flat side of oil pump slide spring pin must face upwards.
5. Lubricate the oil pump vanes, the oil pump vane rotor, the oil pump slide spring and the chambers (3) with engine oil.
6. Inspect the oil pump slide spring mechanism for practicability.
7. Measure the oil pump axial and radial clearances and compare with the specified values. Refer to **Engine Front Cover and Oil Pump Cleaning and Inspection**

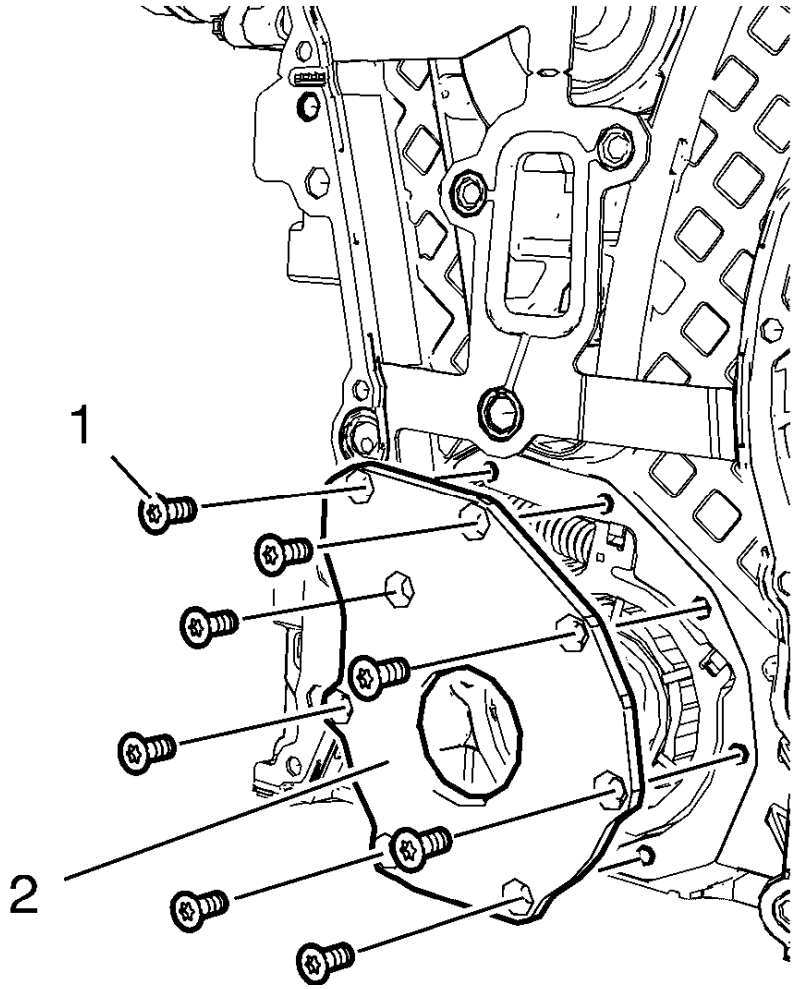

Fig. 195: Engine Oil Pump Cover And Bolts
Courtesy of GENERAL MOTORS COMPANY

8. Install the oil pump cover (2) and the 8 oil pump cover bolts (1).

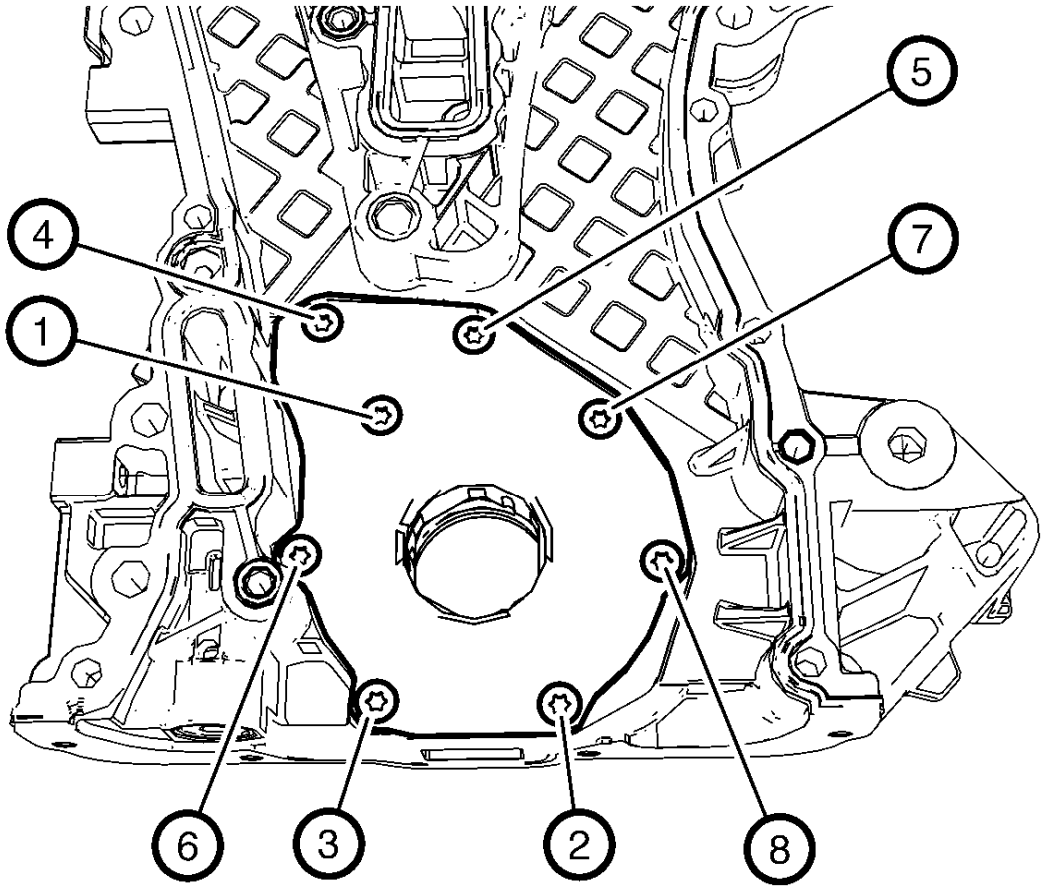

Fig. 196: Oil Pump Cover Bolts Tightening Sequence
Courtesy of GENERAL MOTORS COMPANY

CAUTION: Refer to Fastener Caution

9. Tighten the oil pump cover bolts in a sequence as shown to 8 N.m (71 lb in).

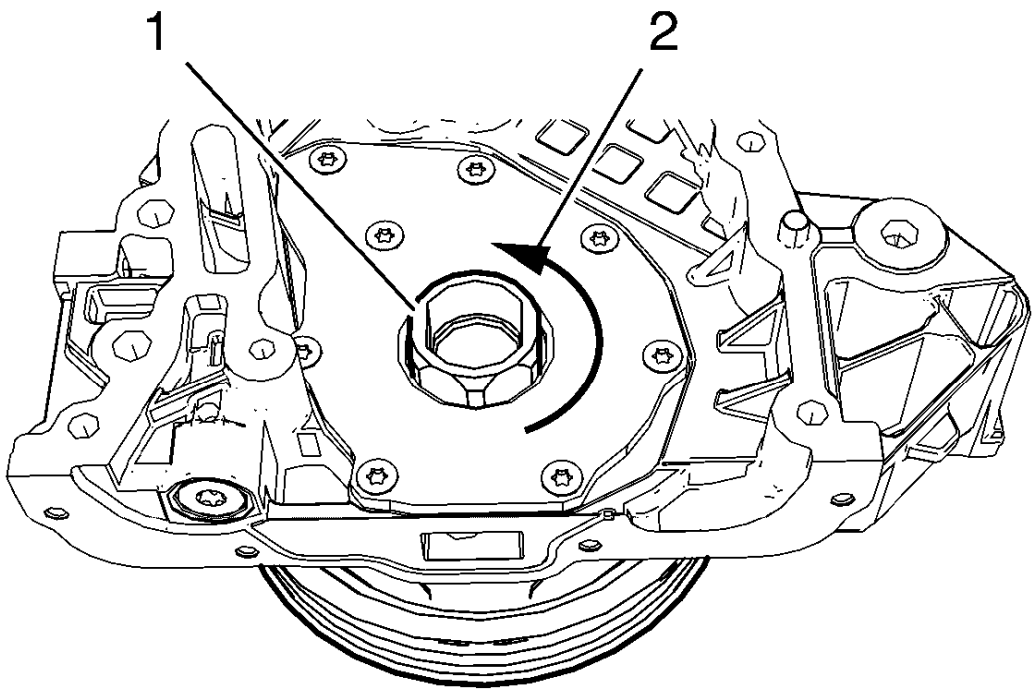

Fig. 197: Crankshaft Balancer
Courtesy of GENERAL MOTORS COMPANY

10. Install the crankshaft balancer (1) and rotate in shown direction (2) in order to inspect the function of the oil pump mechanism. Crankshaft balancer should rotate easily.
11. Remove the timing chain and replace the engine front cover gasket. Refer to **Camshaft Timing Chain Replacement**.
12. Install the timing chain. Refer to **Camshaft Timing Chain Replacement**.
13. Install the engine front cover. Refer to **Engine Front Cover with Oil Pump Replacement**.
14. Measure the oil pressure and compare with the specified values. Refer to **Oil Pressure Diagnosis and Testing**.

ENGINE REPLACEMENT

Removal Procedure

1. Disconnect the negative battery cable from the battery. Refer to **Battery Negative Cable Disconnection and Connection** .
2. Drain the engine cooling system. Refer to **Cooling System Draining and Filling (Static Fill)** , **Cooling System Draining and Filling (GE-47716 Fill)** .
3. Recover the air conditioning refrigerant. Refer to **Refrigerant Recovery and Recharging** .

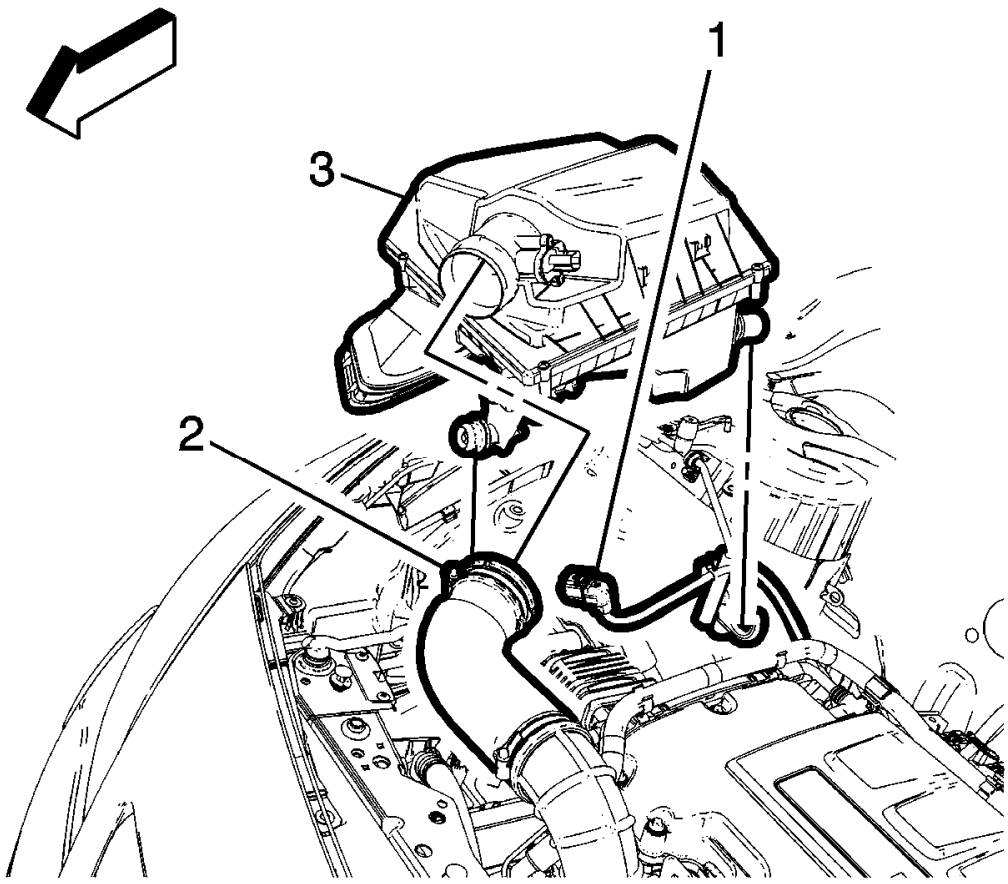

Fig. 198: Air Cleaner Assembly, Electrical Connector And Clamp
Courtesy of GENERAL MOTORS COMPANY

4. Disconnect the electrical connector (1).
5. Loosen the clamp (2) and remove air cleaner from air cleaner assembly (3).

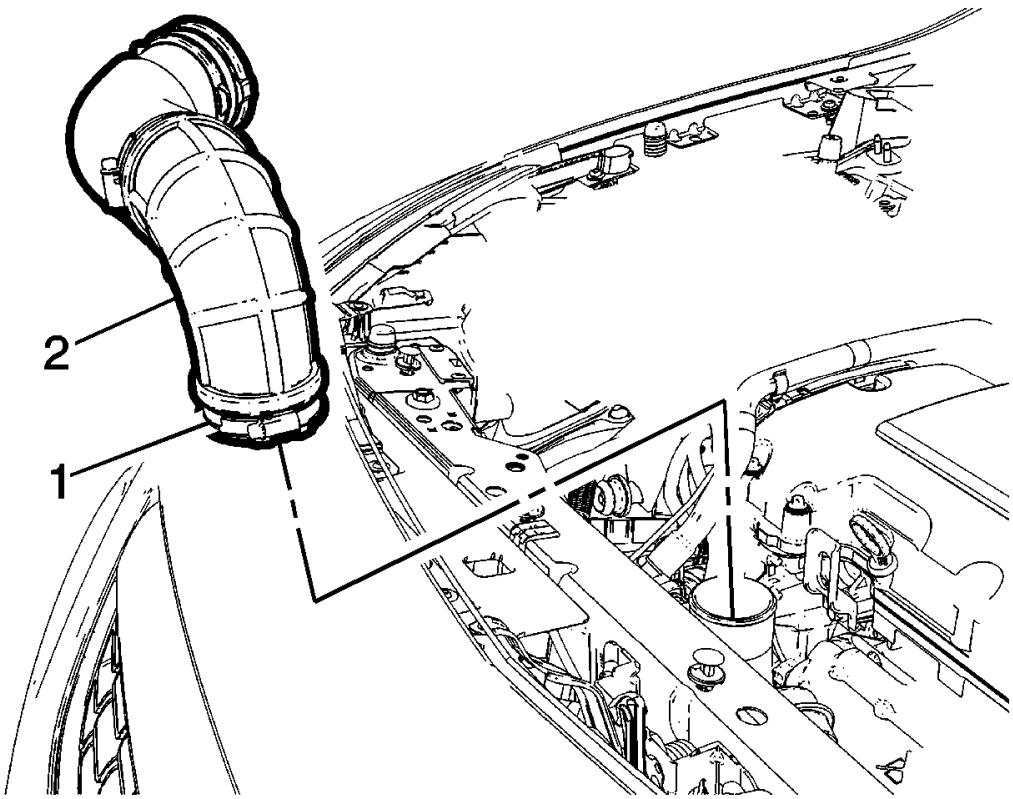

Fig. 199: Air Cleaner Outlet Duct And Clamp
Courtesy of GENERAL MOTORS COMPANY

6. Loosen the clamp (1) and remove the outlet duct (2).
7. Remove the charge air cooler inlet air hose. Refer to **Charge Air Cooler Inlet Air Hose Replacement** .
8. Remove the charge air cooler outlet air hose. Refer to **Charge Air Cooler Outlet Air Hose Replacement (Automatic Transmission)** , **Charge Air Cooler Outlet Air Hose Replacement (Manual Transmission)** .

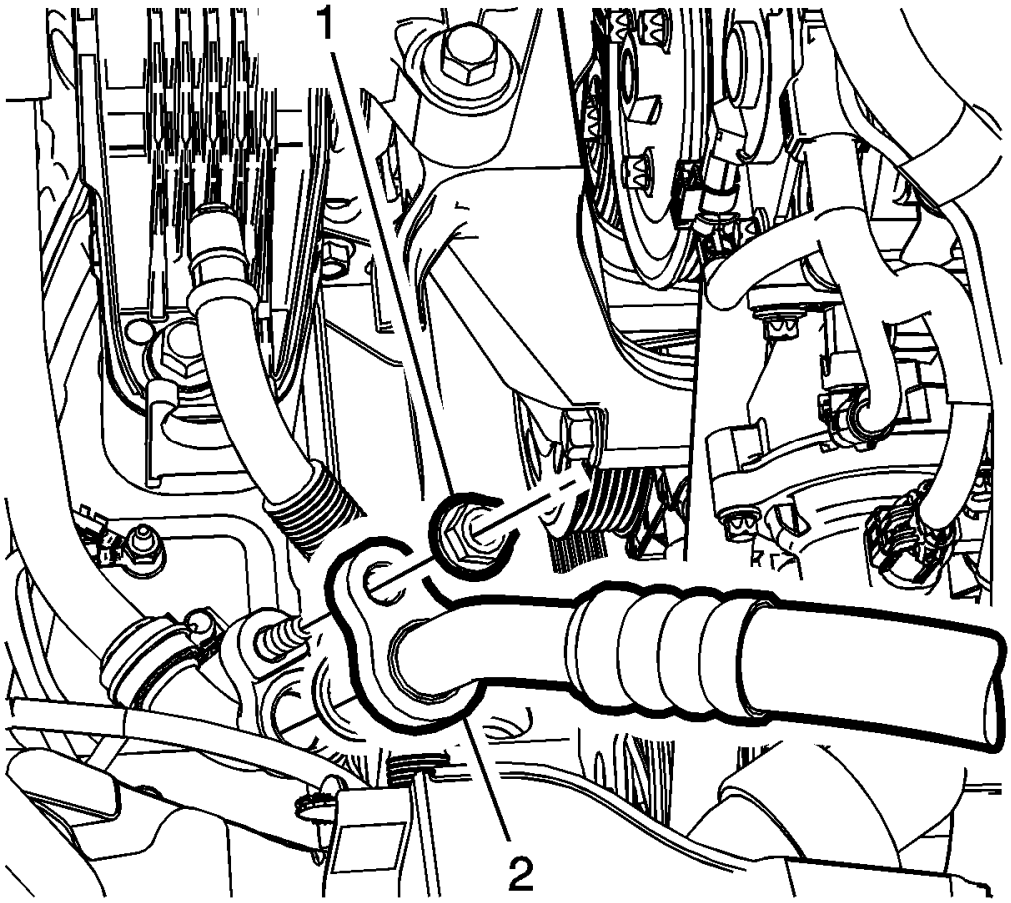

Fig. 200: Refrigerant Hose And Nut
Courtesy of GENERAL MOTORS COMPANY

9. Remove refrigerant hose nut (1) from refrigerant hose (2).

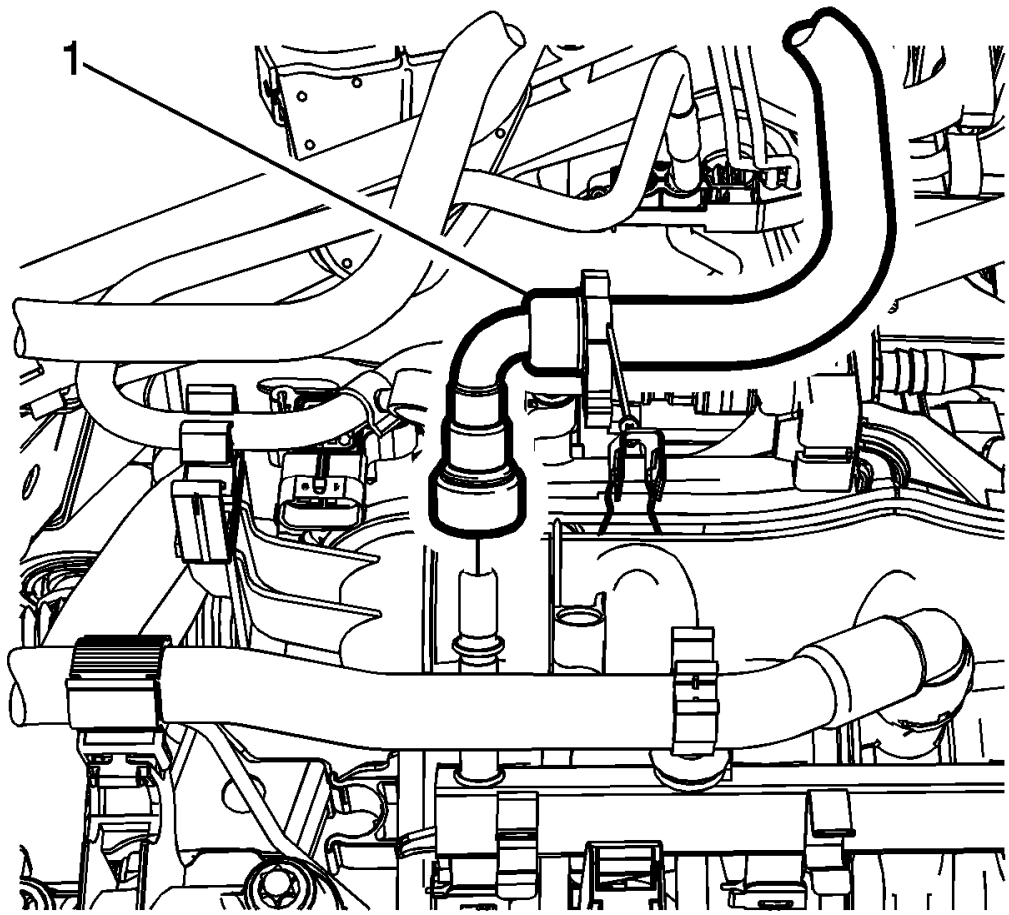

Fig. 201: Fuel Feed Pipe
Courtesy of GENERAL MOTORS COMPANY

10. Disconnect the fuel feed line (1) and reposition away from the engine. Refer to **Fuel Pressure Relief** .

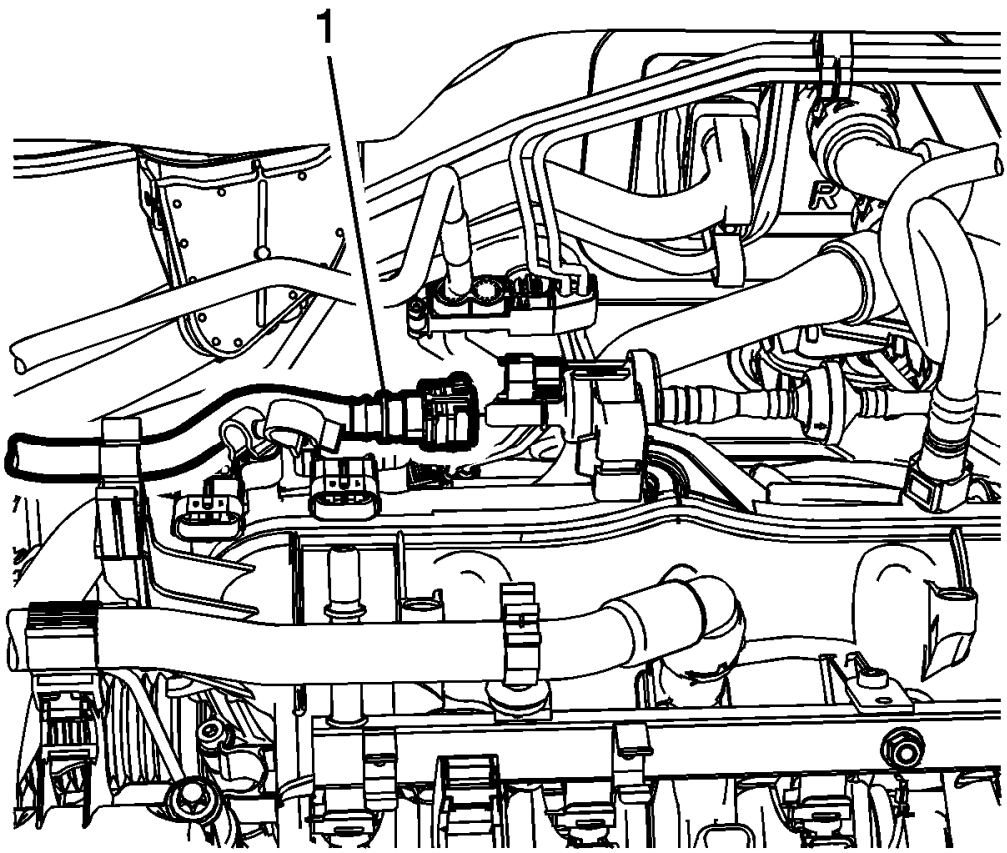

Fig. 202: Fuel Ventilation Pipe
Courtesy of GENERAL MOTORS COMPANY

11. Disconnect the EVAP hose (1). Refer to **Plastic Collar Quick Connect Fitting Service** .

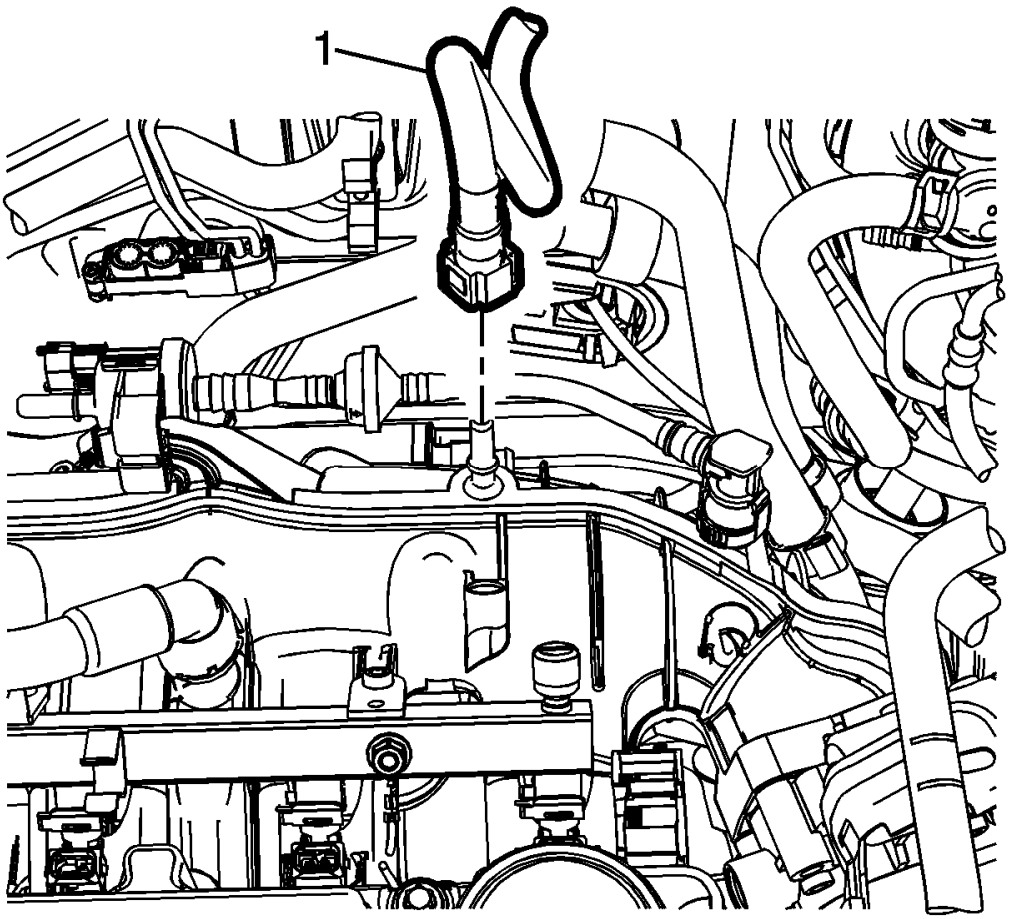

Fig. 203: Brake Booster Vacuum Pipe
Courtesy of GENERAL MOTORS COMPANY

12. Disconnect the power brake booster vacuum pipe (1).

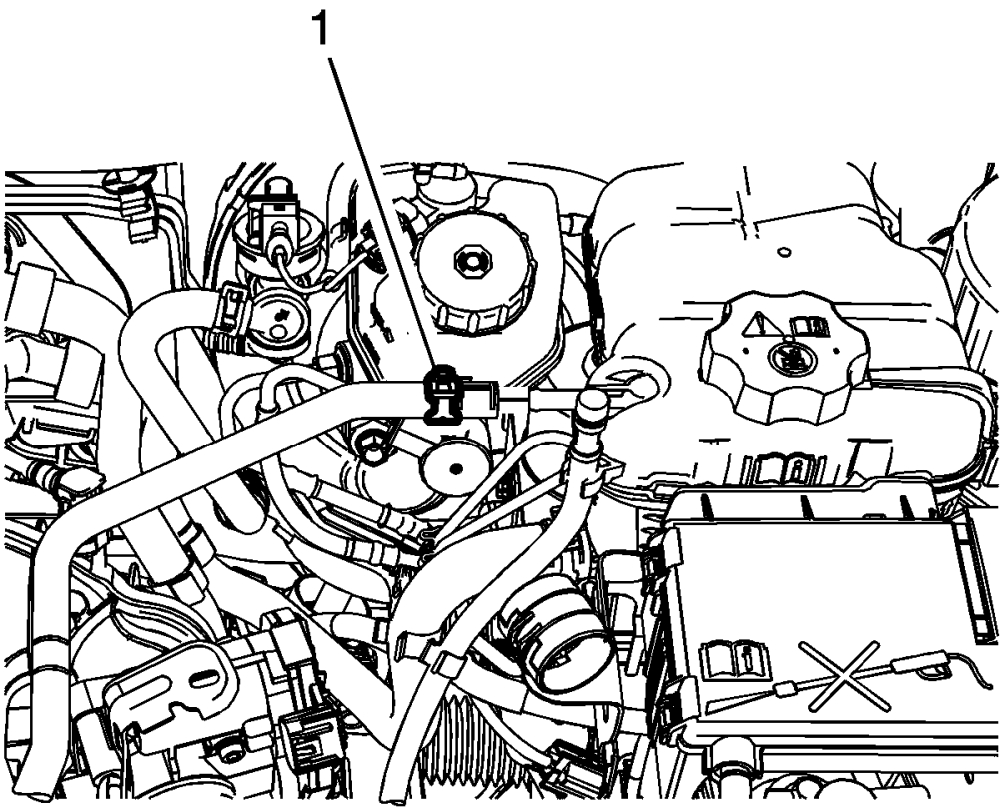

Fig. 204: Radiator Surge Tank Outlet Hose Clamp
Courtesy of GENERAL MOTORS COMPANY

13. Reposition the hose clamp (1) and remove the radiator surge tank outlet hose.

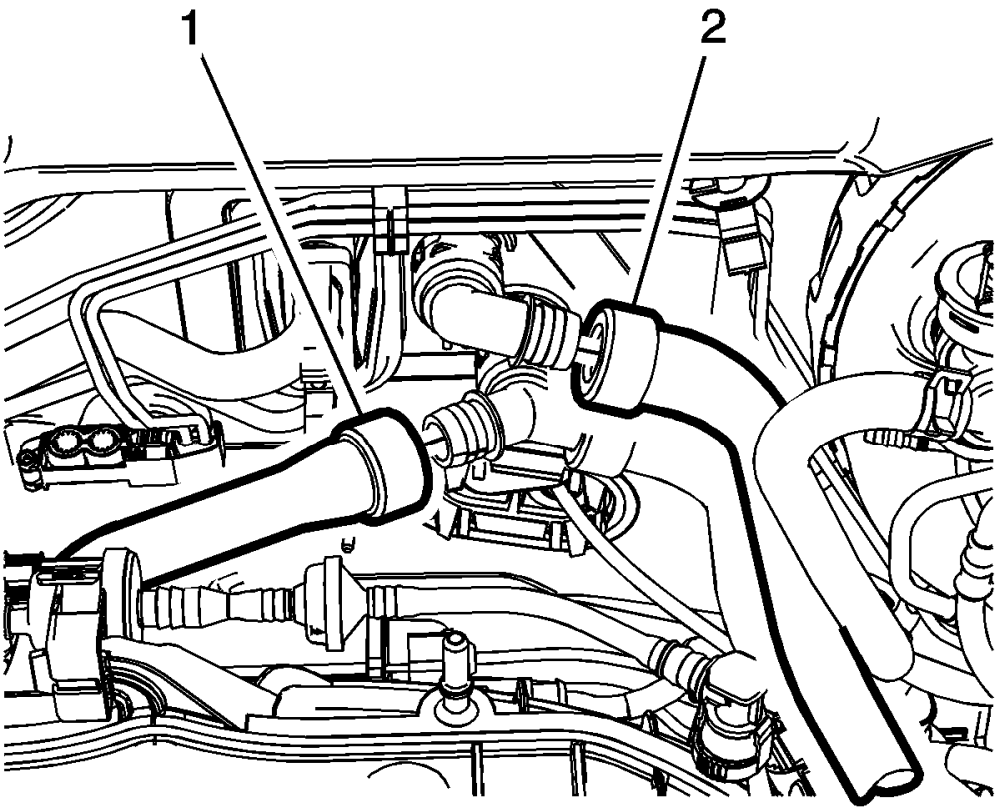

Fig. 205: Heater Core Inlet And Outlet Hoses
Courtesy of GENERAL MOTORS COMPANY

14. Disconnect inlet (2) and outlet (1) heater core hoses.

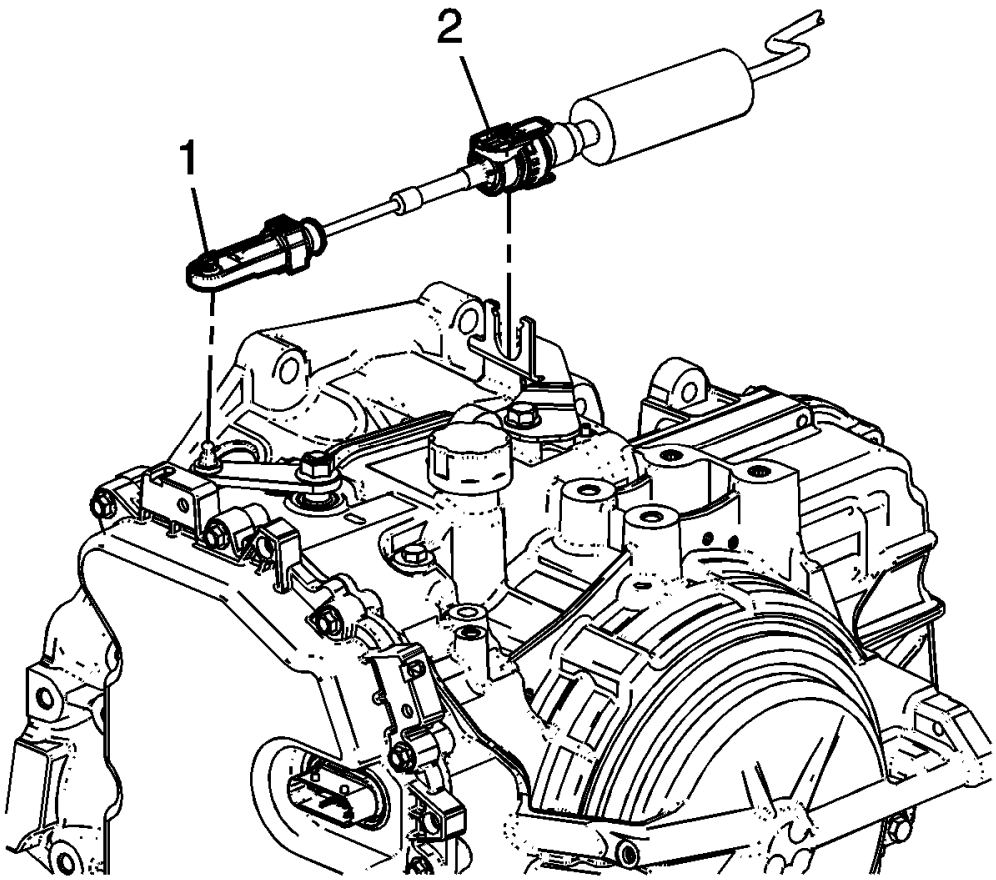

Fig. 206: View Of Transmission Range Selector Lever & Cable Connection
Courtesy of GENERAL MOTORS COMPANY

15. On vehicles equipped with a automatic transmission, disconnect the transmission range selector lever cable terminal (1) from the transmission manual shift lever pin.
16. On vehicles equipped with a automatic transmission, press the locking tabs inward in order to release the transmission range selector lever cable (2) from the cable bracket.

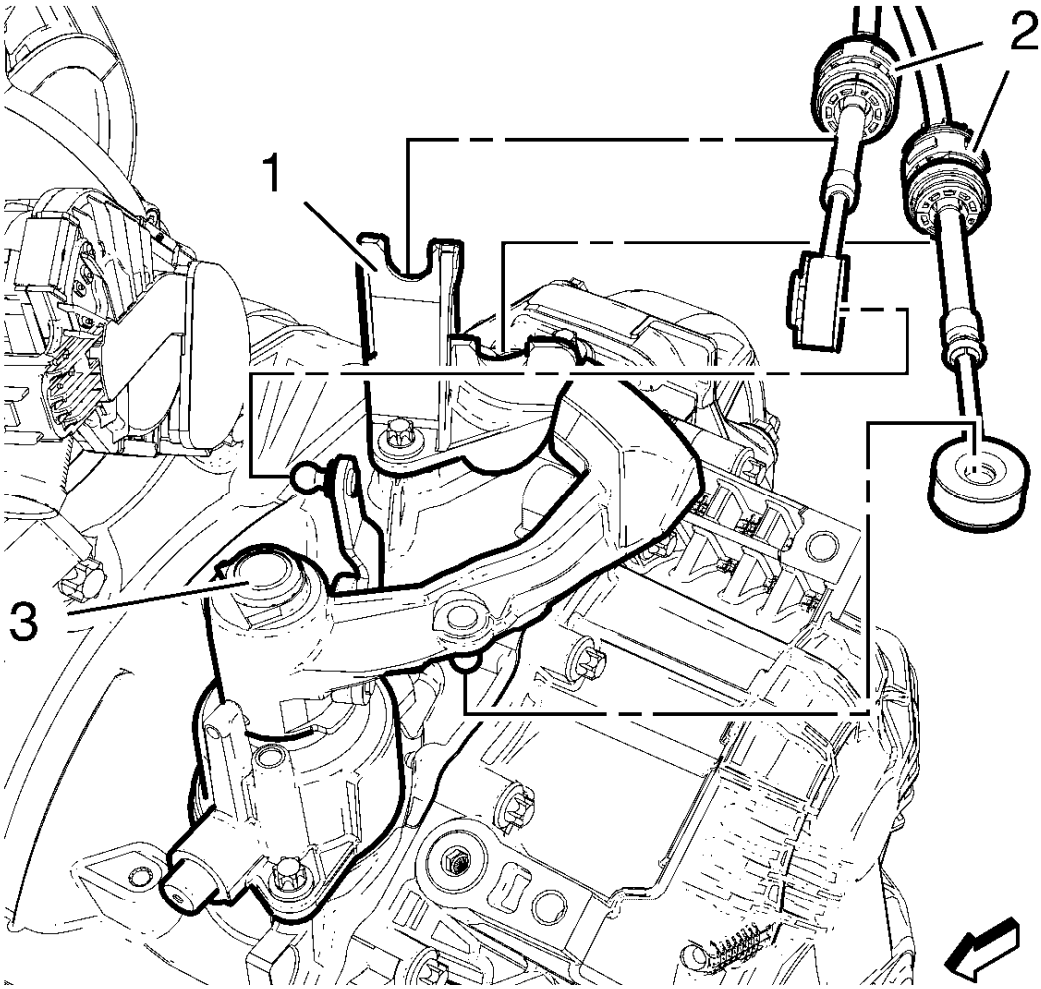

Fig. 207: Selector Lever Cable, Bracket And Transmission Control Housing
Courtesy of GENERAL MOTORS COMPANY

17. On vehicles equipped with a manual transmission, using a suitable pry tool, disconnect the shift lever cables (2) from the shift levers (3)
18. On vehicles equipped with a manual transmission, remove the shift lever cables (2) from the cable bracket (1).

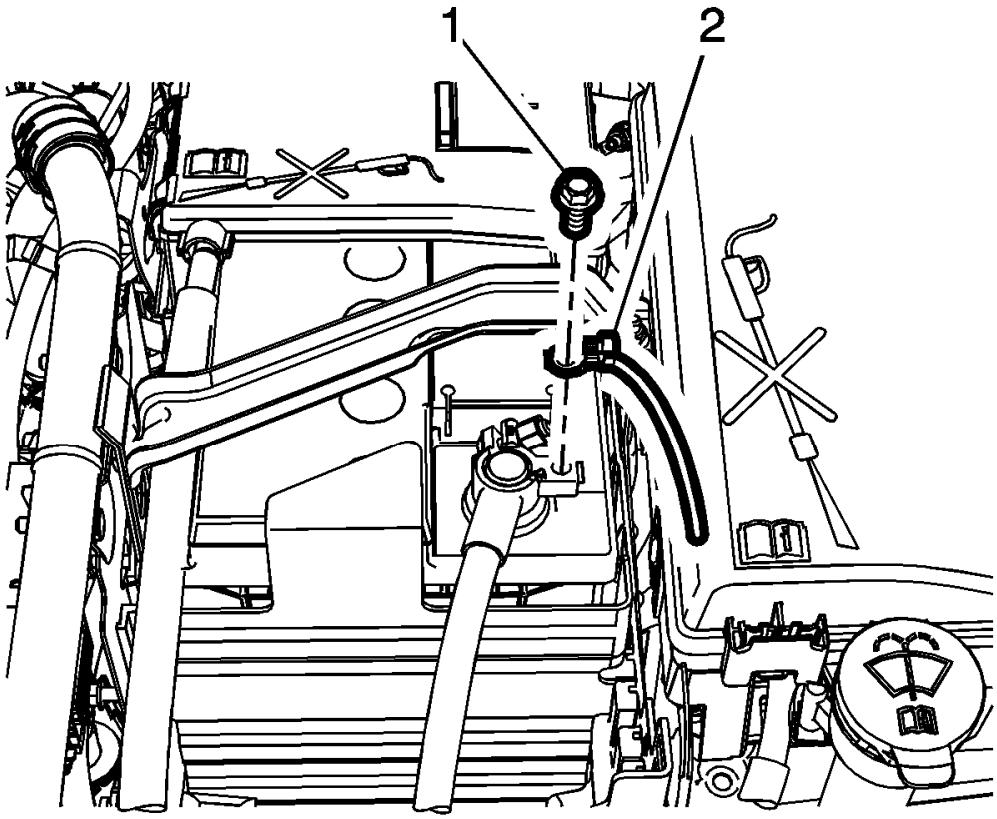

Fig. 208: Ground Strap And Bolt
Courtesy of GENERAL MOTORS COMPANY

19. Remove the ground strap bolt (1) from the battery cable and reposition the strap (2) a side.
20. Remove the battery tray. Refer to **Battery Tray Replacement** .

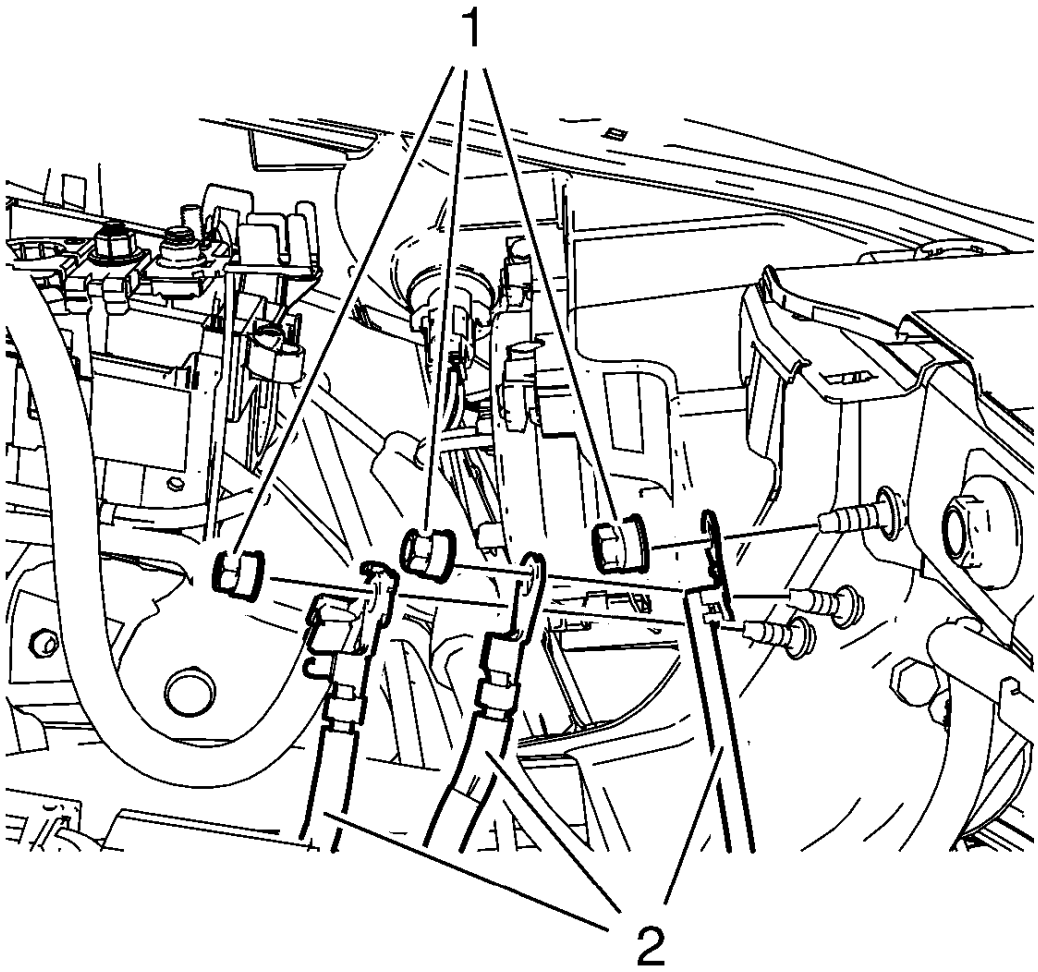

Fig. 209: Wiring Harnesses And Ground Nuts
Courtesy of GENERAL MOTORS COMPANY

21. Remove the ground nuts (1) and put the wiring harness (2) aside.
22. Disconnect the electrical connectors from the engine control module (ECM). Refer to **Engine Control Module Replacement** .
23. Disconnect the wiring harness from the accessory wiring junction block.

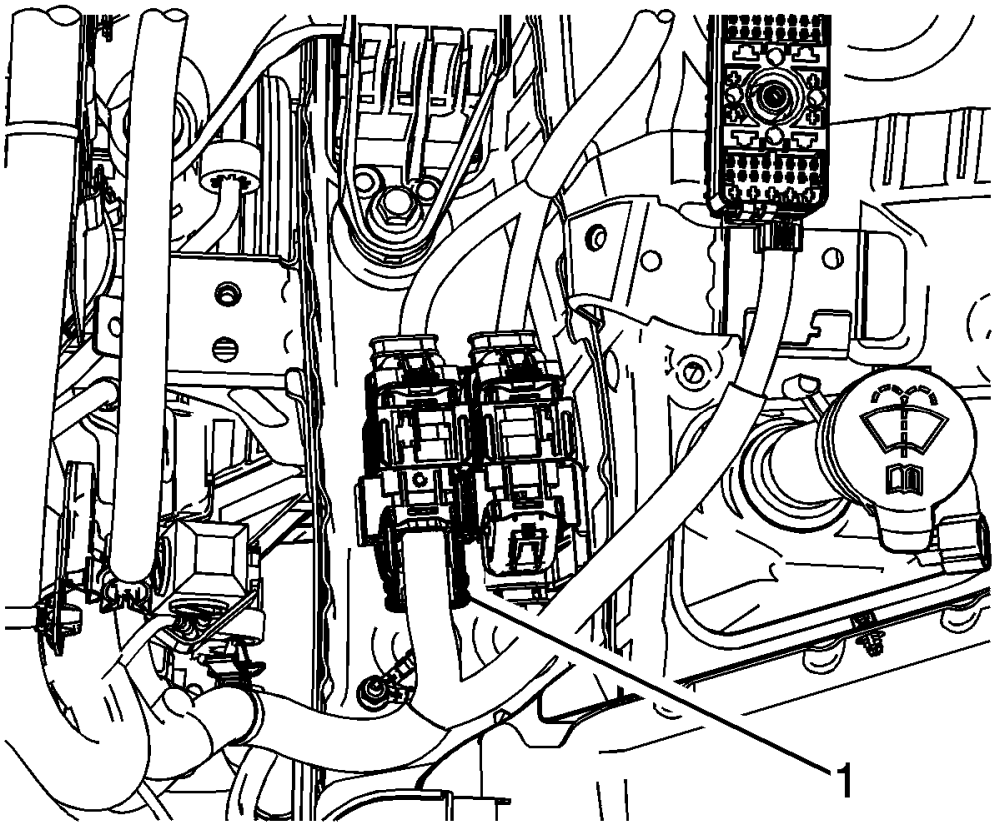

Fig. 210: Junction Connector
Courtesy of GENERAL MOTORS COMPANY

24. Disconnect the wiring harness from the junction connector (1).
25. Place the ECM, transmission and the accessory wiring junction block wiring harnesses on the top of engine assembly.
26. Install the engine support fixture.

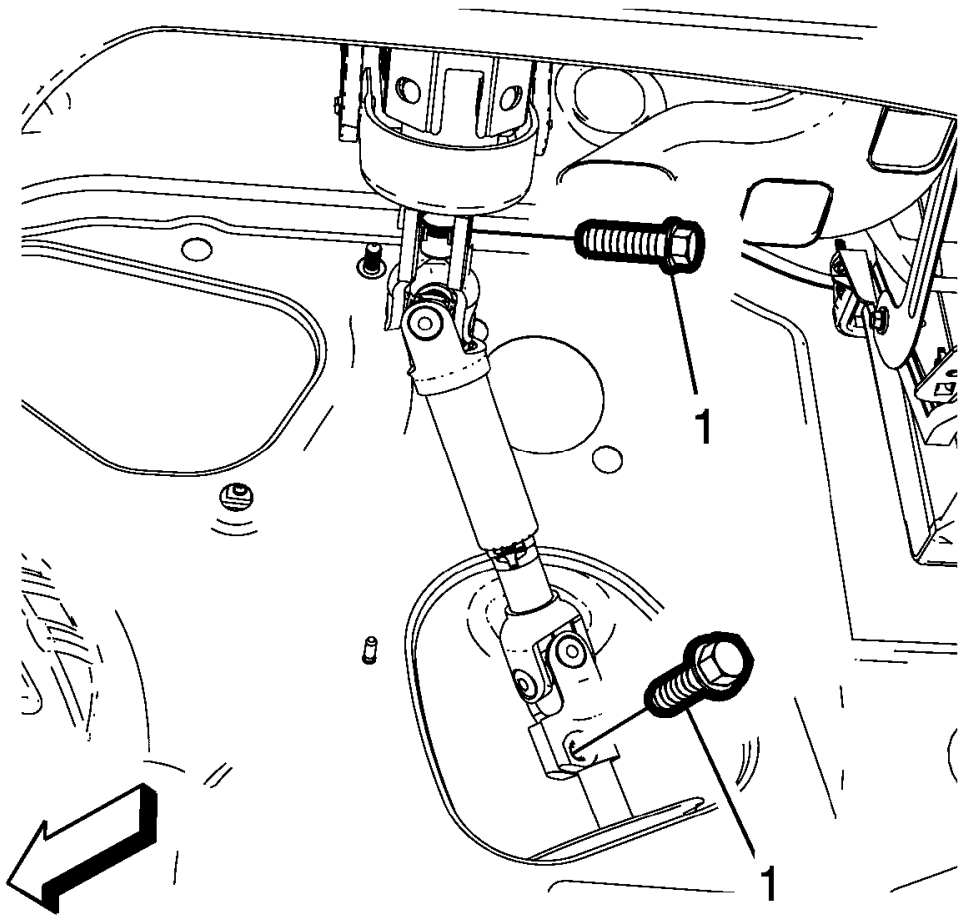

Fig. 211: Lower Steering Intermediate Shaft Bolt
Courtesy of GENERAL MOTORS COMPANY

27. Remove and DISCARD the lower steering intermediate shaft bolt (1).

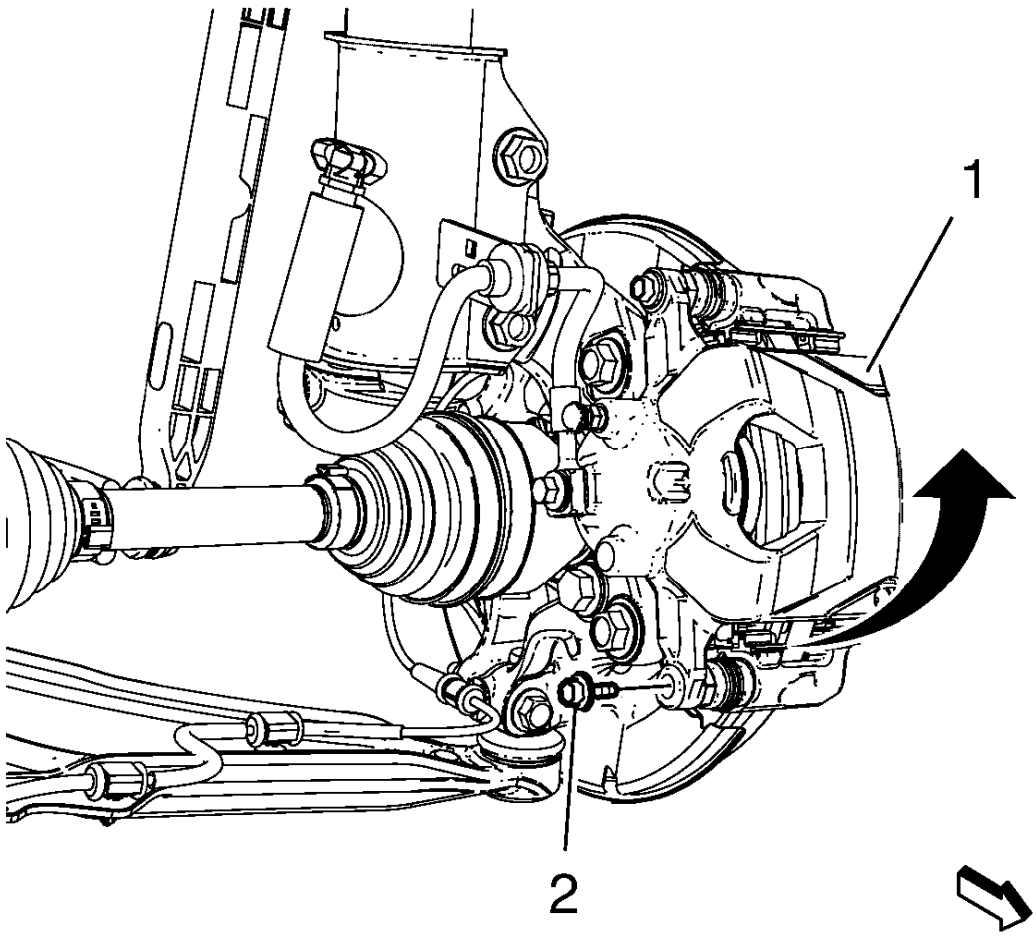

Fig. 212: View Of Brake Caliper And Brake Caliper Guide Pin Bolt
Courtesy of GENERAL MOTORS COMPANY

NOTE: Do Not disconnect the brake hoses from the calipers.

28. Remove the front brake calipers (1) and caliper bolts (2) from the caliper brackets, and then suspend the calipers with mechanics wire to the body.
29. Remove the exhaust system. Refer to **Exhaust System Replacement** .

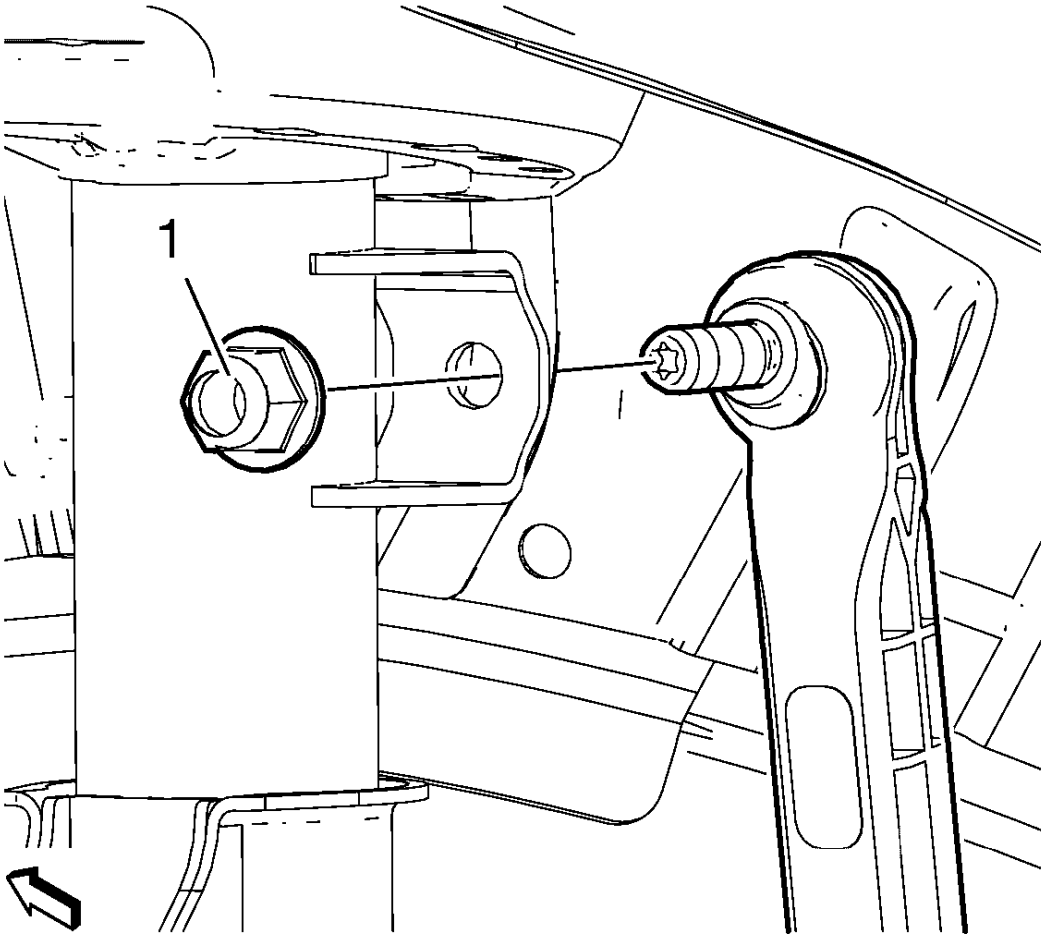

Fig. 213: Stabilizer Link Nut
Courtesy of GENERAL MOTORS COMPANY

30. Remove and DISCARD the stabilizer link nut (1) from the strut assemblies. Refer to **Stabilizer Shaft Link Replacement** .
31. Disconnect the right wheel drive shaft from the intermediate shaft.
32. Disconnect the front steering knuckles from the strut assemblies. Refer to **Steering Knuckle Replacement** .
33. Disconnect the electronic power steering connectors from the electronic power steering assembly. Refer to **FEP Connectors (Steering Gear)** .

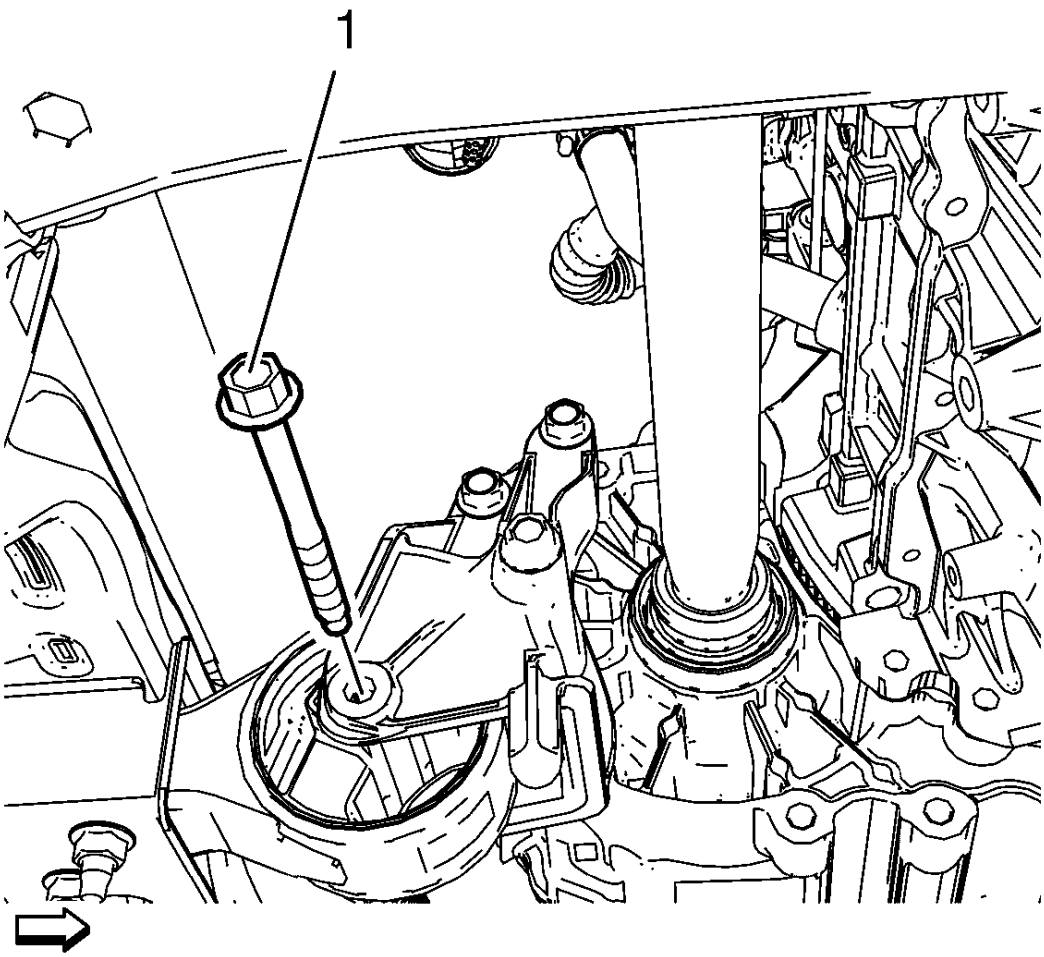

Fig. 214: Transmission Bracket Mount To Mount Through Bolt
Courtesy of GENERAL MOTORS COMPANY

34. Remove the rear transmission mount bracket to rear mount through bolt (1).

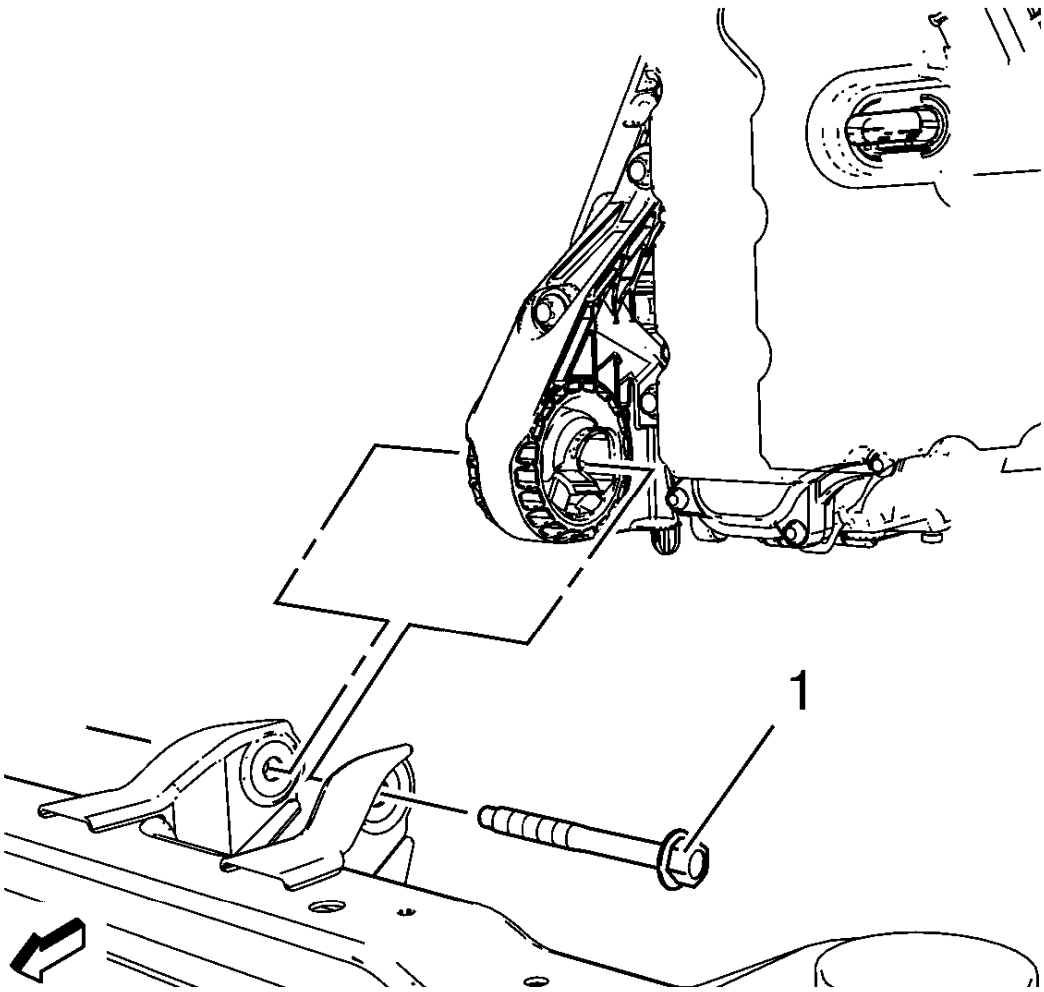

Fig. 215: Front Transmission Mount Through Bolt
Courtesy of GENERAL MOTORS COMPANY

35. Remove the transmission front mount through bolt (1).
36. Using suitable straps or chains, secure the front of vehicle to the hoist arms.

NOTE: Use the engine support fixture to slightly raise the powertrain assembly to aid in the removal of the engine and transmission mount bolts.

37. Use the engine support fixture to slightly raise the powertrain assembly to aid in the removal of the engine and transmission mount bolts.

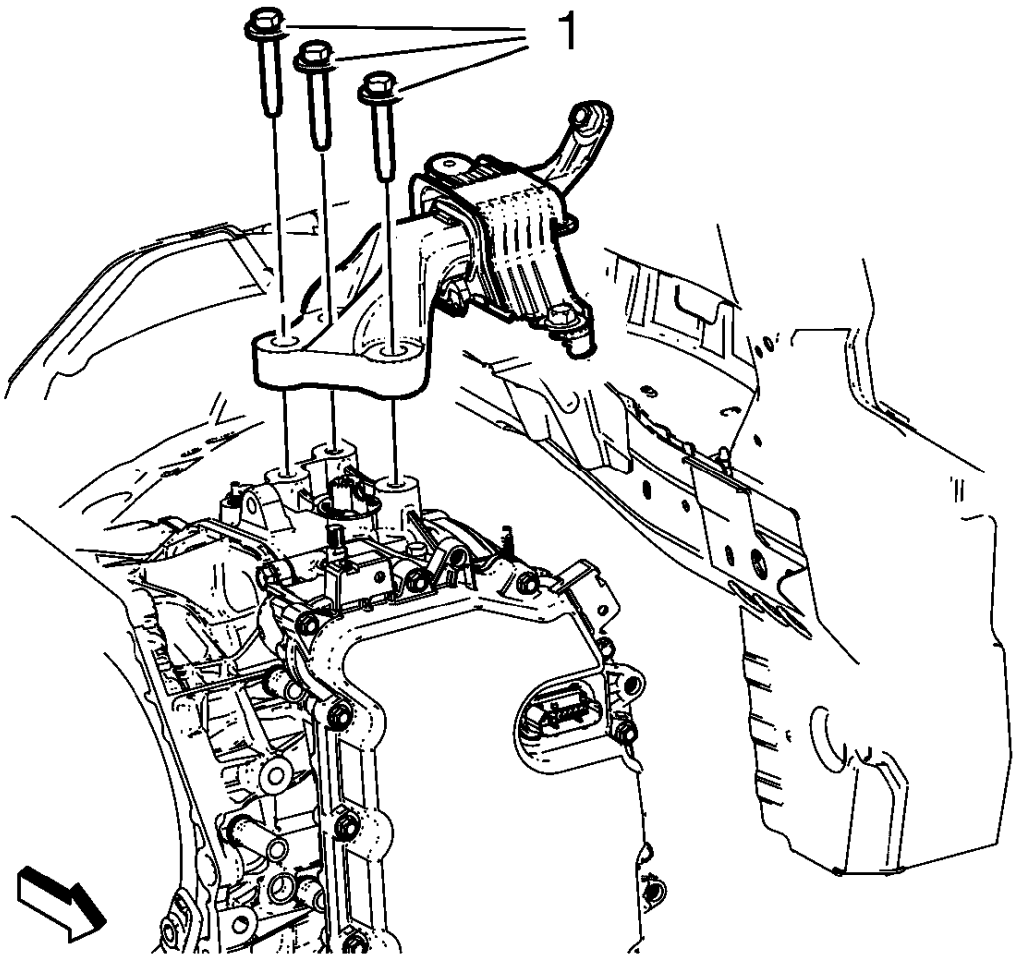

Fig. 216: Left Transmission Mount Bolts
Courtesy of GENERAL MOTORS COMPANY

38. Remove and DISCARD the left transmission mount to bracket bolts (1).

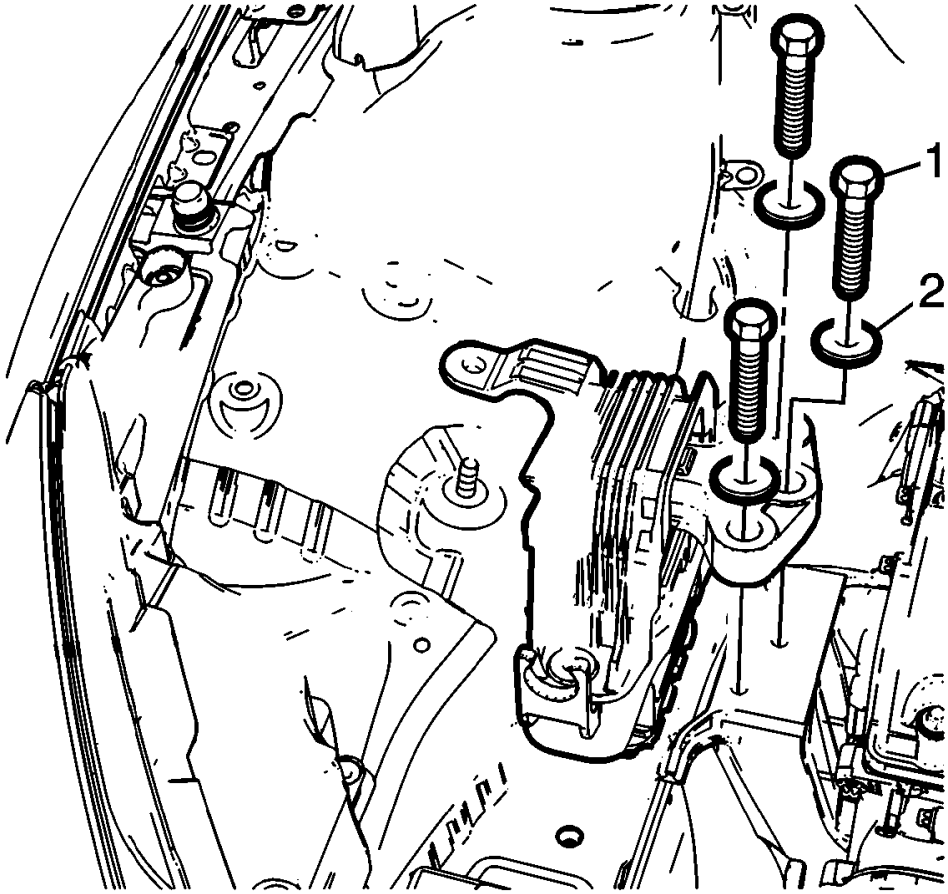

Fig. 217: Engine Mount Bracket Bolts And Washers
Courtesy of GENERAL MOTORS COMPANY

39. Remove the engine mount to engine mount bracket bolts (1) and the washers (2).
40. Using a suitable engine support table, lower the vehicle until the drivetrain and front suspension frame contacts the engine support table.
41. Position blocks of wood below the oil pan and transmission to stabilize the powertrain on the support table.
42. Using the engine support fixture, lower the powertrain down until it is resting on the engine support table.

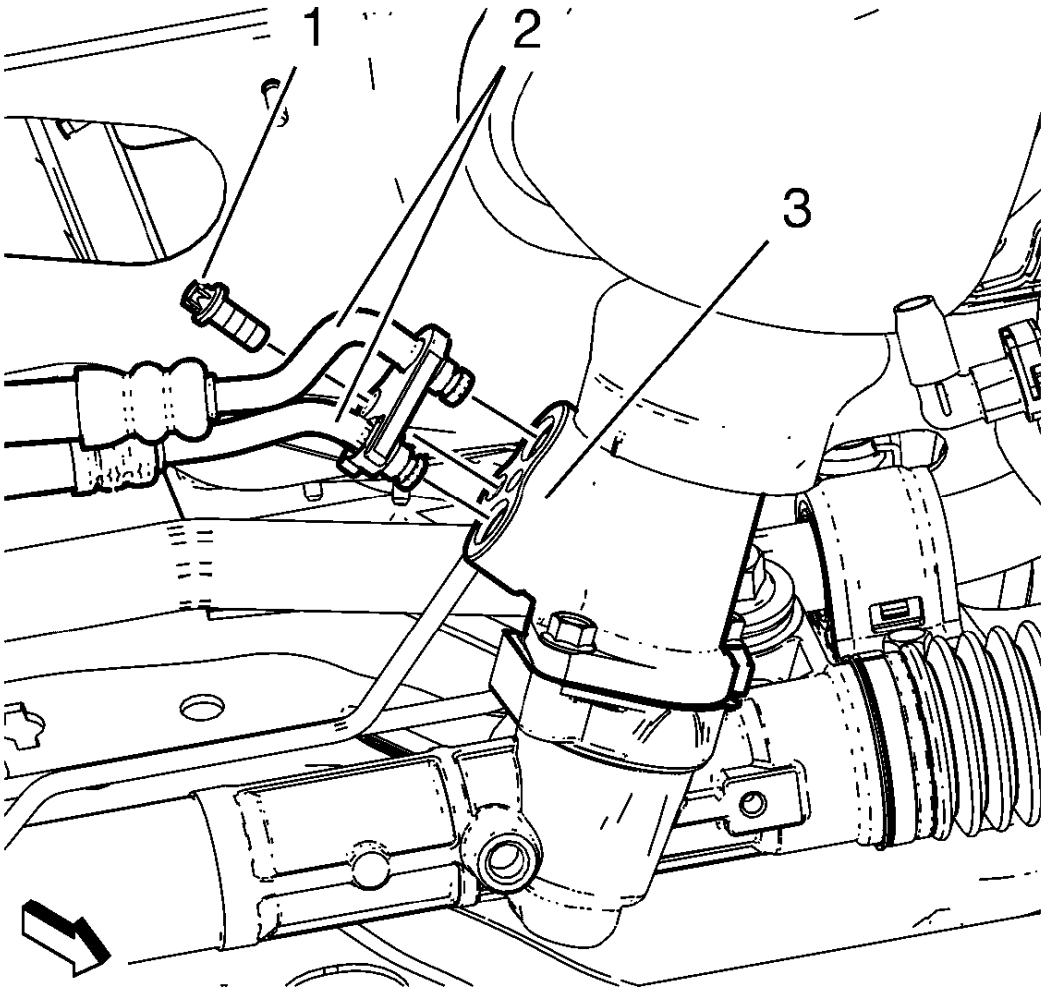

Fig. 218: Power Steering Gear, Inlet And Outlet Hose And Bolts
Courtesy of GENERAL MOTORS COMPANY

43. Remove the power steering gear inlet and outlet hose bolts (1). Remove the inlet and outlet hose (2) from the steering gear (3).
44. Remove the engine support fixture.
45. Remove the drivetrain and front suspension frame reinforcements from the rear of the frame.
46. Remove the front drivetrain and front suspension frame retaining bolts.
47. Slowly and carefully raise the vehicle, ensure the engine, transmission, radiator assembly and drivetrain suspension frame are free from wiring, hoses and other engine compartment components.
48. Separate the transmission from the engine assembly.
49. Disconnect engine coolant hoses as necessary.
50. Disconnect electrical connectors as necessary.
51. Transfer components as necessary.

Installation Procedure

1. Position the engine to the transmission assembly.
2. Position the engine, transmission, radiator assembly and drivetrain suspension frame under the vehicle.
3. Slowly and carefully lower the vehicle, ensure the engine, transmission, radiator assembly and drivetrain suspension frame are free from wiring, hoses and other engine compartment components.

CAUTION: Refer to Fastener Caution .

4. Install the four front drivetrain and front suspension frame retaining bolts, then tighten to the fasteners to 160 N.m (118 lb ft).
5. Install the drivetrain and front suspension frame reinforcements to the rear of the frame, then tighten the reinforcement fasteners to 22 N.m (16 lb ft).

NOTE: Use the engine support fixture to slightly raise the powertrain assembly to aid in the installation of the engine and transmission mount bolts.

6. Install the engine support fixture. Refer to **Engine Support Fixture**.

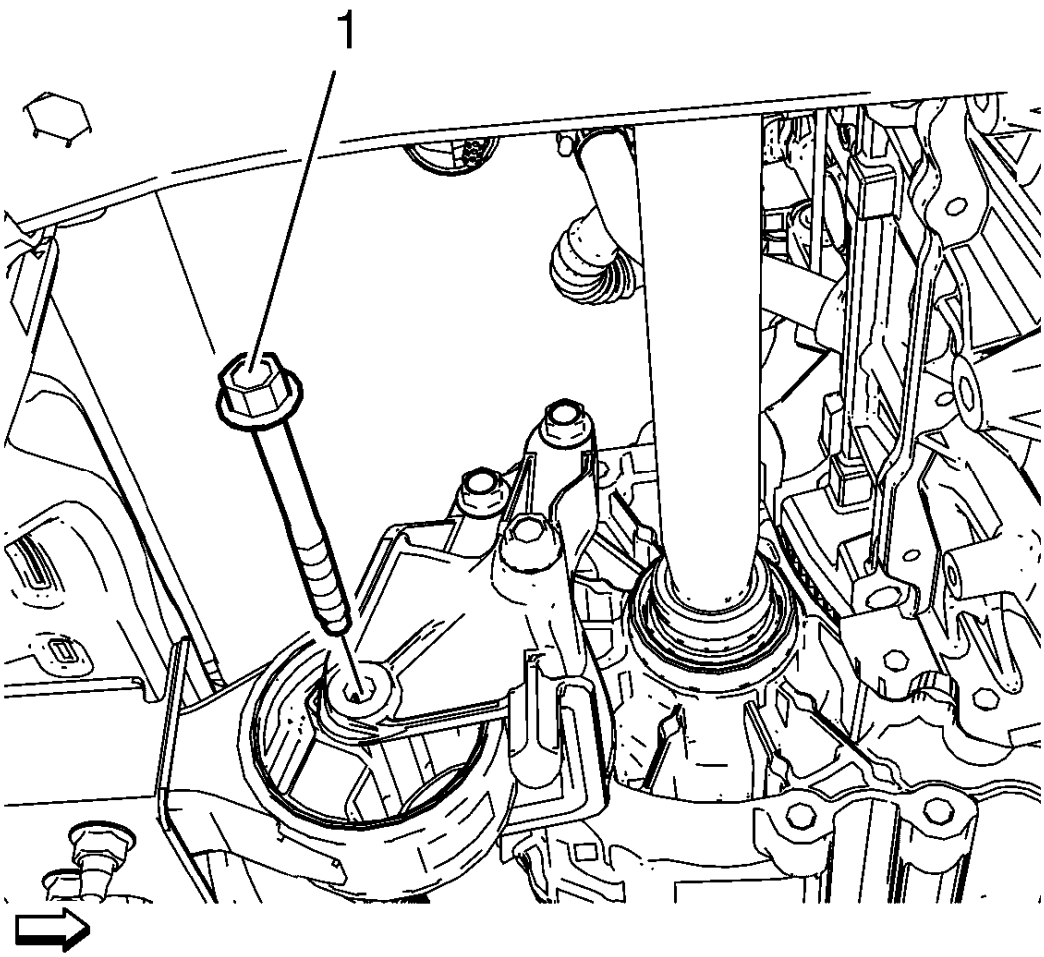

Fig. 219: Transmission Bracket Mounting Bolts
Courtesy of GENERAL MOTORS COMPANY

7. Install the transmission bracket mount to mount through bolt (1) and tighten to 100 N.m (74 lb ft).

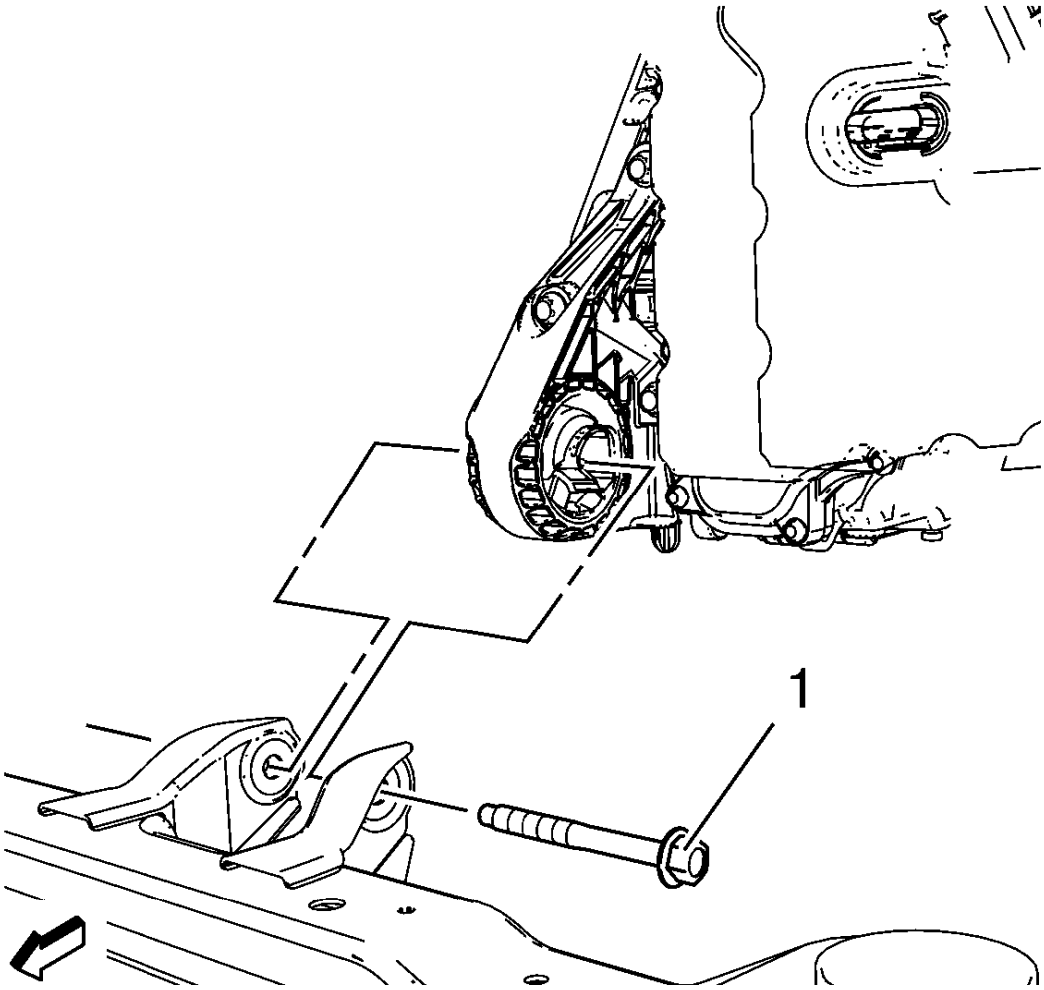

Fig. 220: Front Transmission Mounting Bolts
Courtesy of GENERAL MOTORS COMPANY

8. Install the transmission mount through bolt (1) and tighten to 58 N.m (43 lb ft).
9. Install the engine mount. Refer to **Engine Mount Replacement - Right Side**.

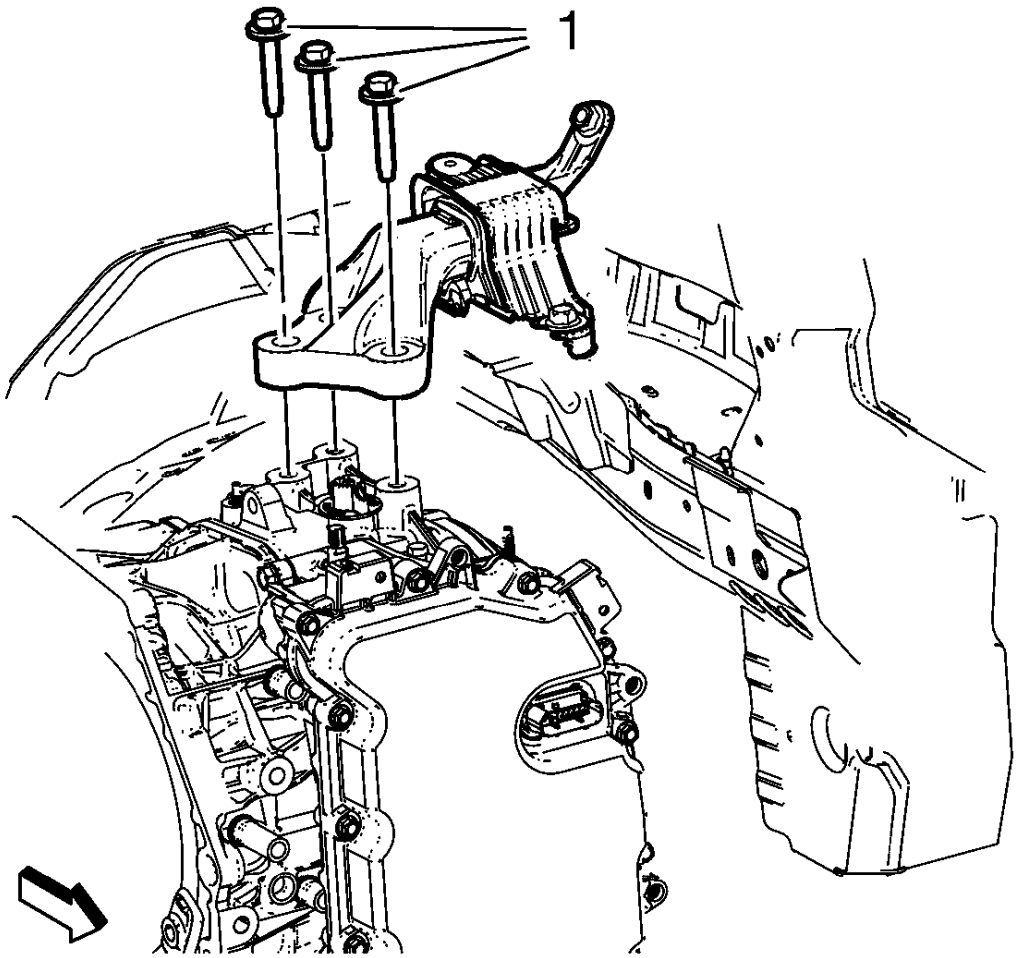

Fig. 221: Left Transmission Mount Bolts
Courtesy of GENERAL MOTORS COMPANY

WARNING: Refer to Torque-to-Yield Fastener Warning .

10. Install the NEW left transmission mount to transmission bolts (1) and tighten to 50 N.m (37 lb ft) plus 60-75 degrees.

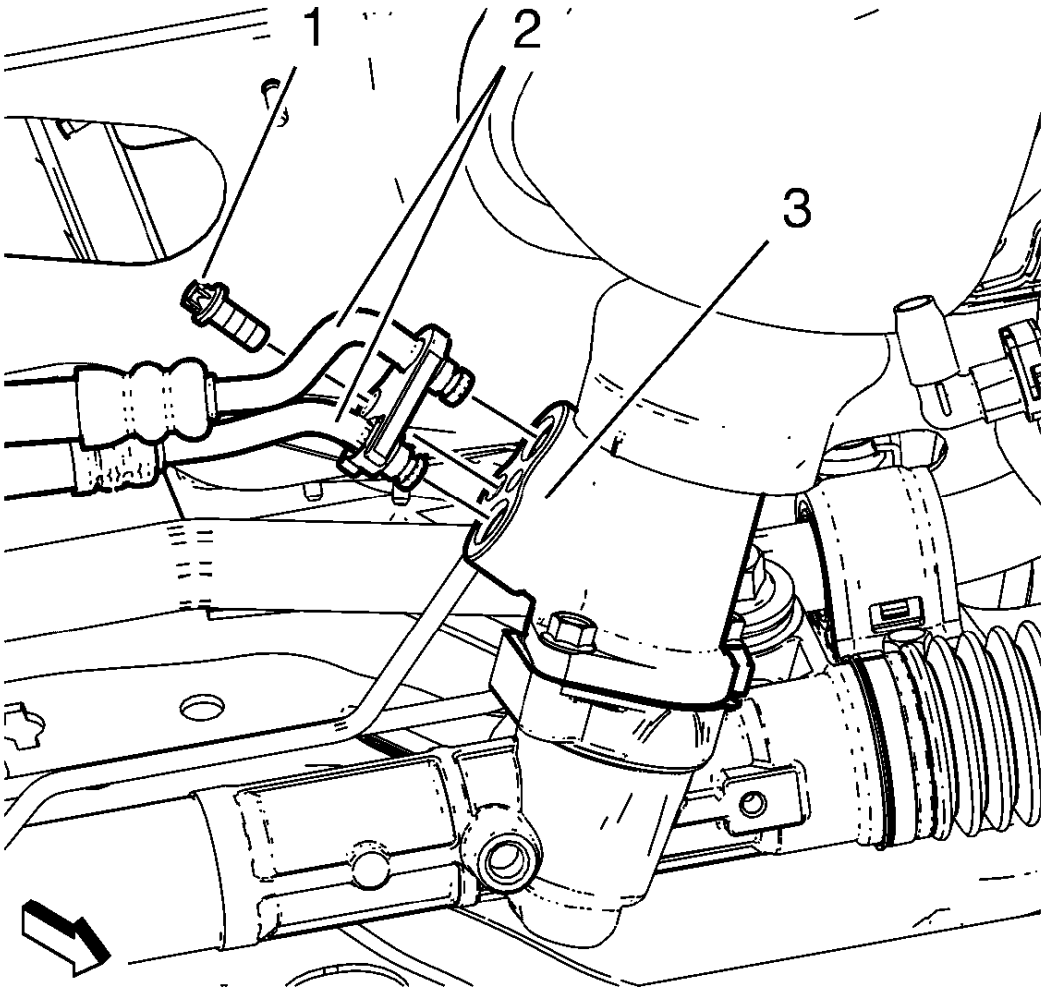

Fig. 222: Power Steering Gear, Inlet And Outlet Hose And Bolts
Courtesy of GENERAL MOTORS COMPANY

11. Install the inlet and outlet hose (2) to the steering gear (3).
12. Install power steering gear inlet and outlet hose bolts (1) and tighten to 11 N.m (97 lb in).

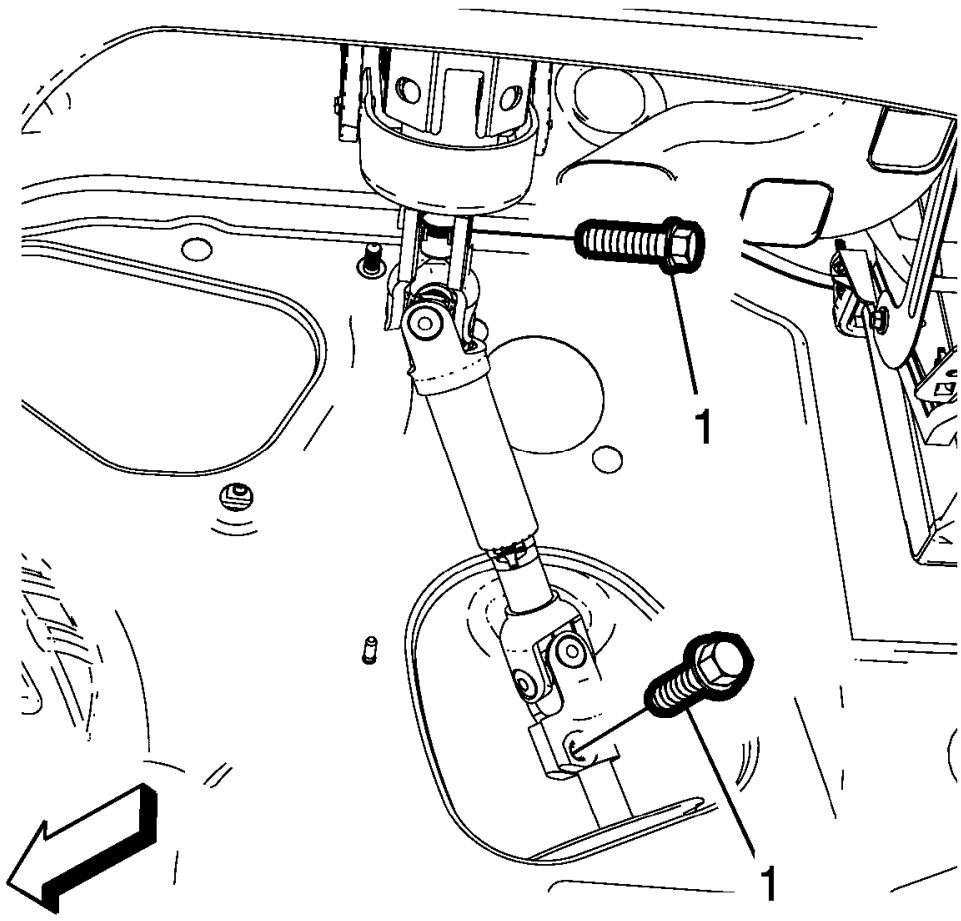

Fig. 223: Lower Steering Intermediate Shaft Bolt
Courtesy of GENERAL MOTORS COMPANY

13. Instal NEW the lower steering intermediate shaft (1) bolt and tighten to 34 N.m (25 lb ft).
14. Connect the front steering knuckles to the strut assemblies. Refer to **Steering Knuckle Replacement** .

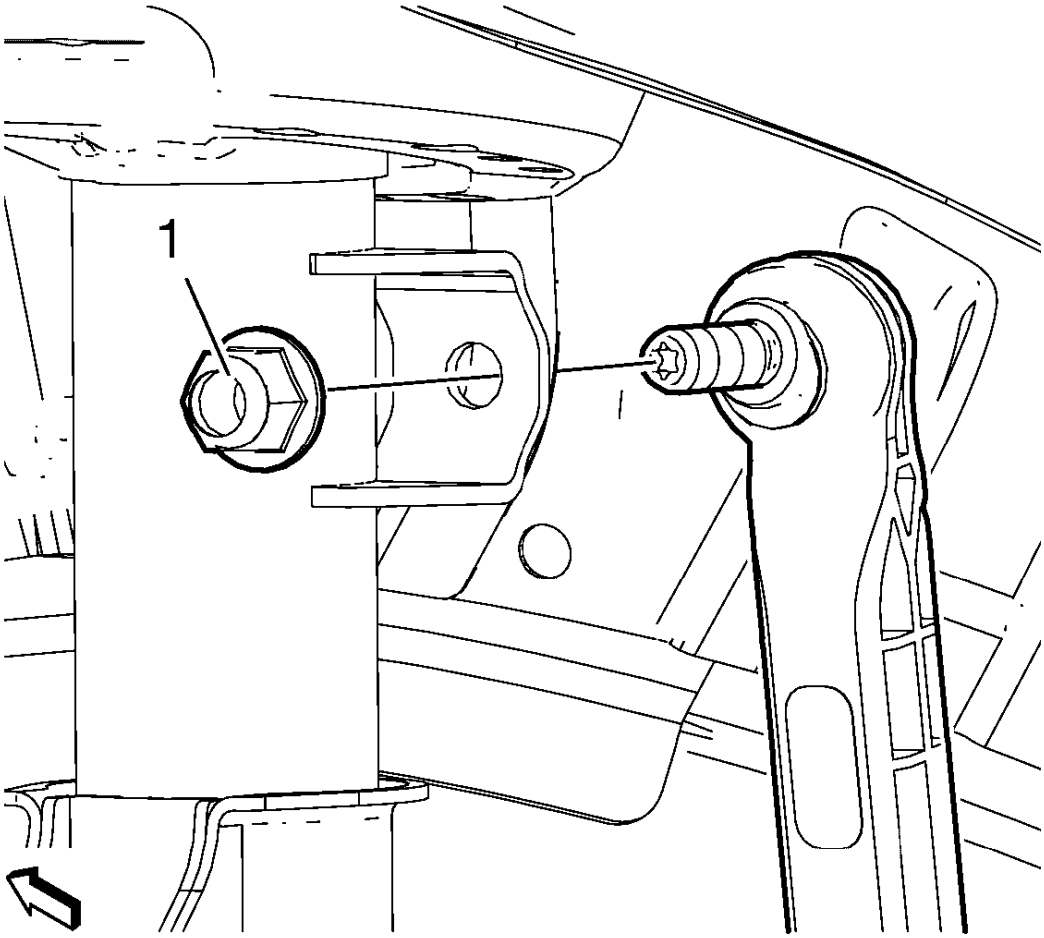

Fig. 224: Stabilizer Link Nut
Courtesy of GENERAL MOTORS COMPANY

15. Install NEW the stabilizer link nut (1) to the strut assemblies. Refer to **Stabilizer Shaft Link Replacement** .
16. Connect the right wheel drive shaft from the intermediate shaft.

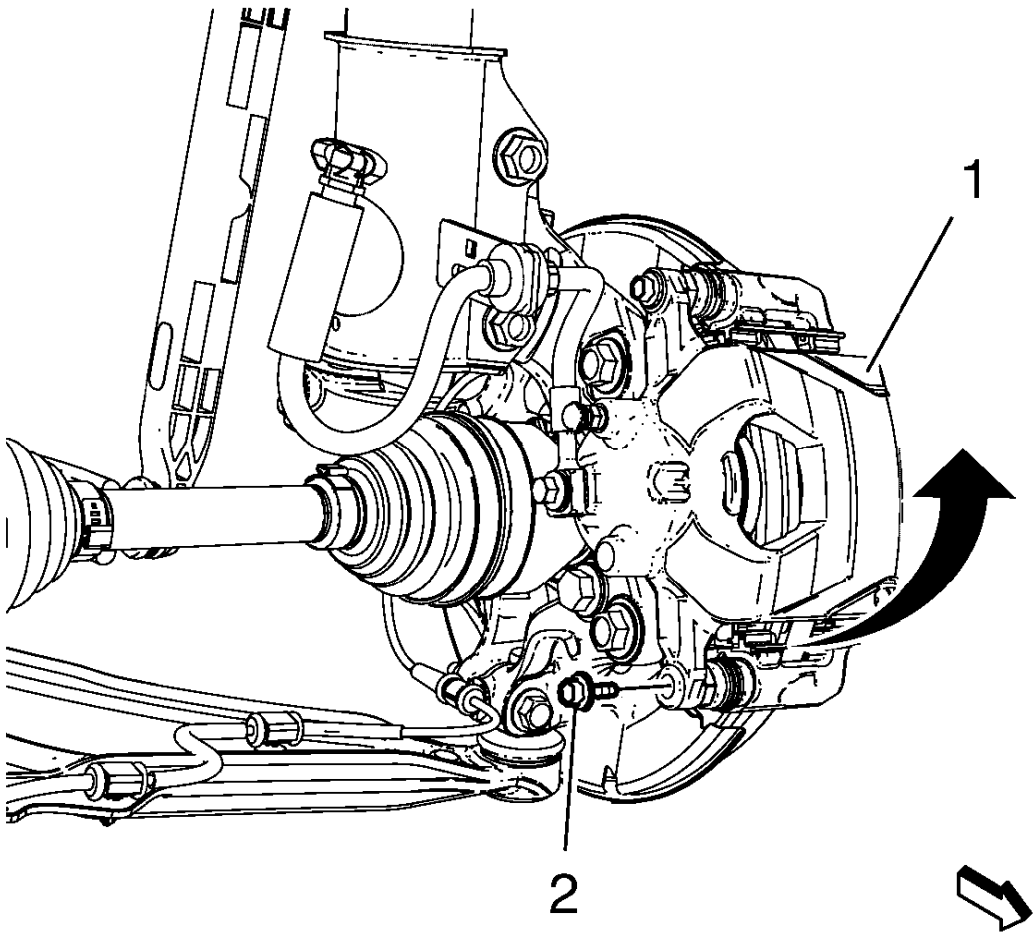

Fig. 225: View Of Brake Caliper And Brake Caliper Guide Pin Bolt
Courtesy of GENERAL MOTORS COMPANY

17. Install the front brake caliper (1) and tighten the brake caliper guide pin bolt (2) to 28 N.m (21 lb ft).
18. Install the exhaust system. Refer to **Exhaust System Replacement** .
19. Connect the wheel speed connectors to the steering knuckles.
20. Remove the engine support fixture.
21. Connect the wiring connectors and ground strap to the transmission.
22. Connect the wiring harness to the accessory wiring junction block.
23. Connect the electrical connectors to the ECM. Refer to **Engine Control Module Replacement** .

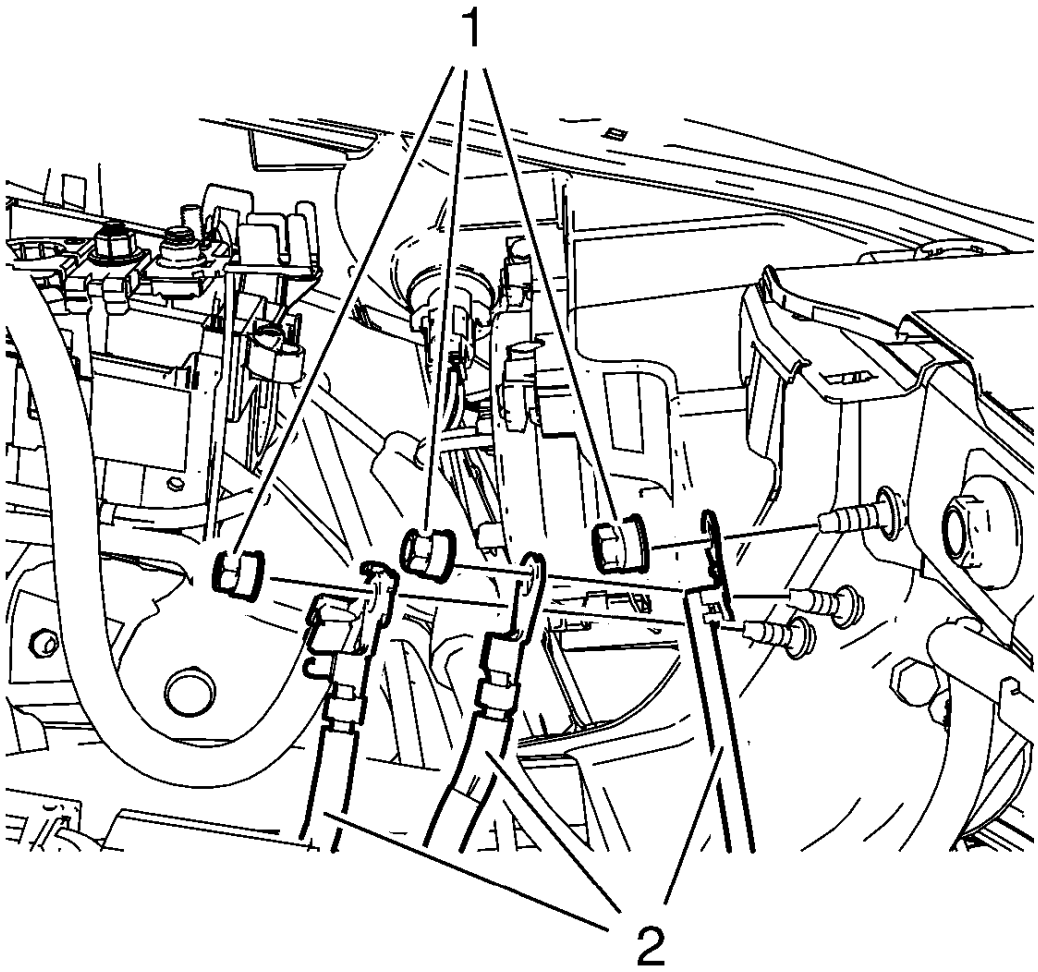

Fig. 226: Wiring Harnesses And Ground Nuts
Courtesy of GENERAL MOTORS COMPANY

24. Install the wiring harnesses (2).
25. Install the ground nuts (1) and tighten to 9 N.m (80 lb in).

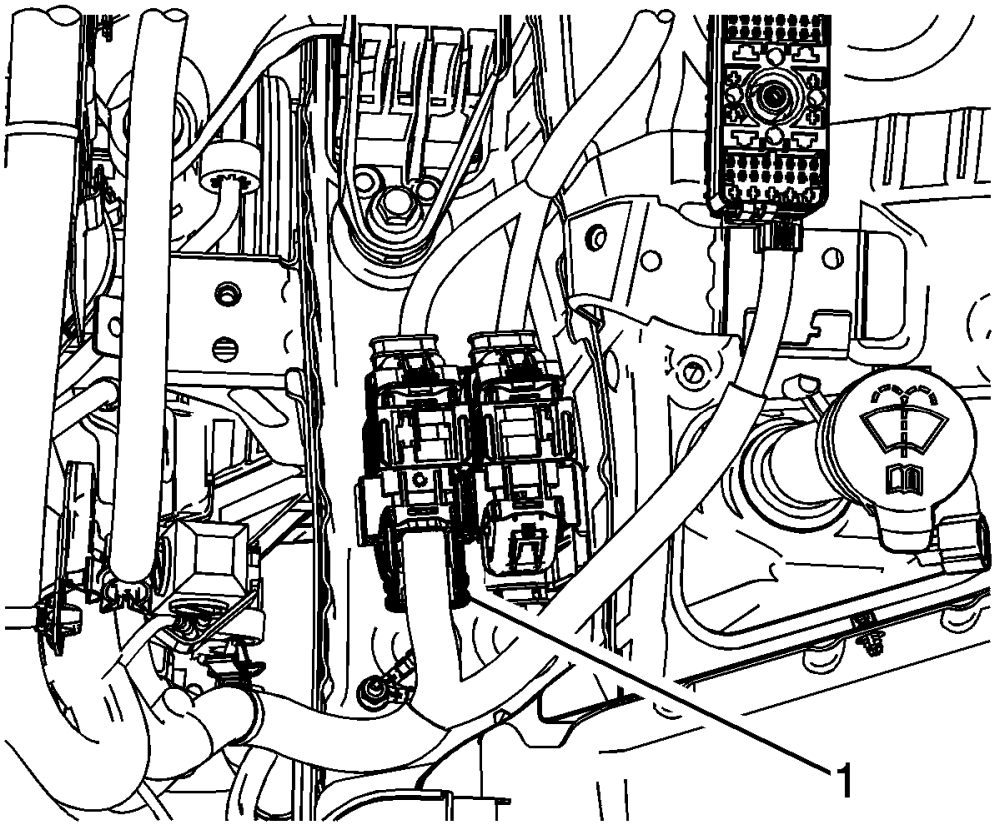

Fig. 227: Junction Connector
Courtesy of GENERAL MOTORS COMPANY

26. Connect the wiring harness plugs (1).

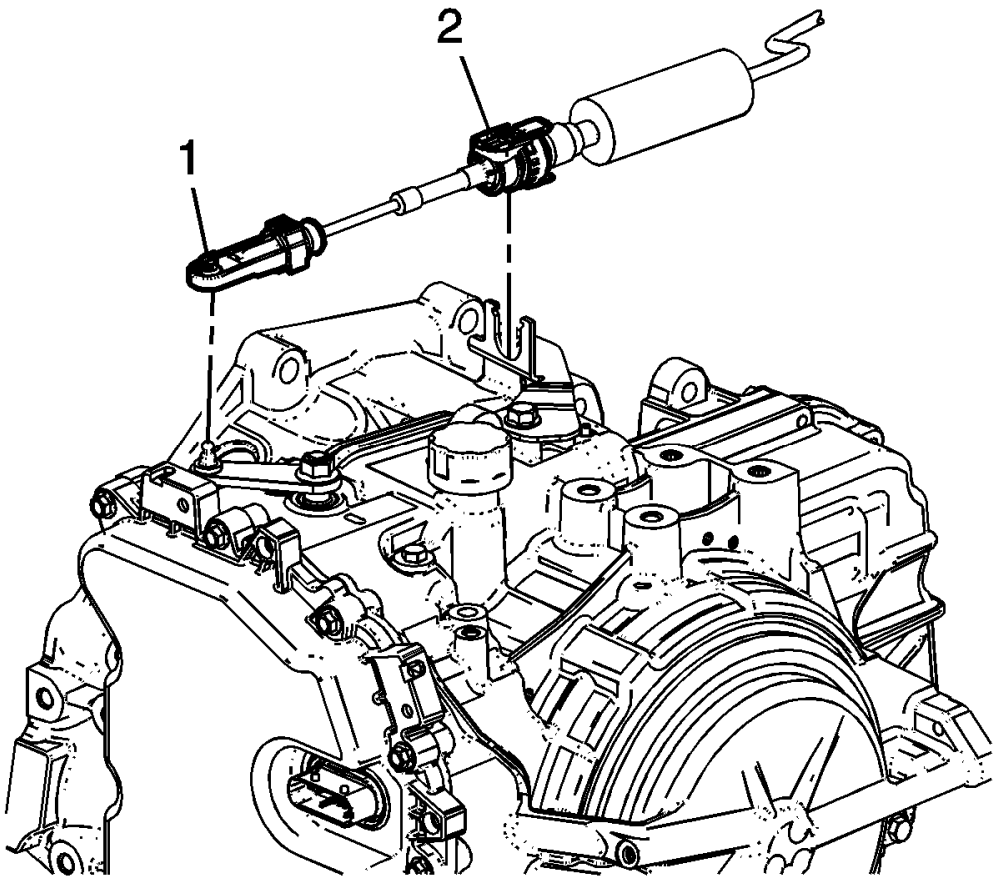

Fig. 228: View Of Transmission Range Selector Lever & Cable Connection
Courtesy of GENERAL MOTORS COMPANY

27. On vehicles equipped with a automatic transmission, connect the transmission range selector lever cable terminal (1) to the transmission manual shift lever pin.
28. On vehicles equipped with a automatic transmission, press the locking tabs outward in order to lock the transmission range selector lever cable (2) to the cable bracket.

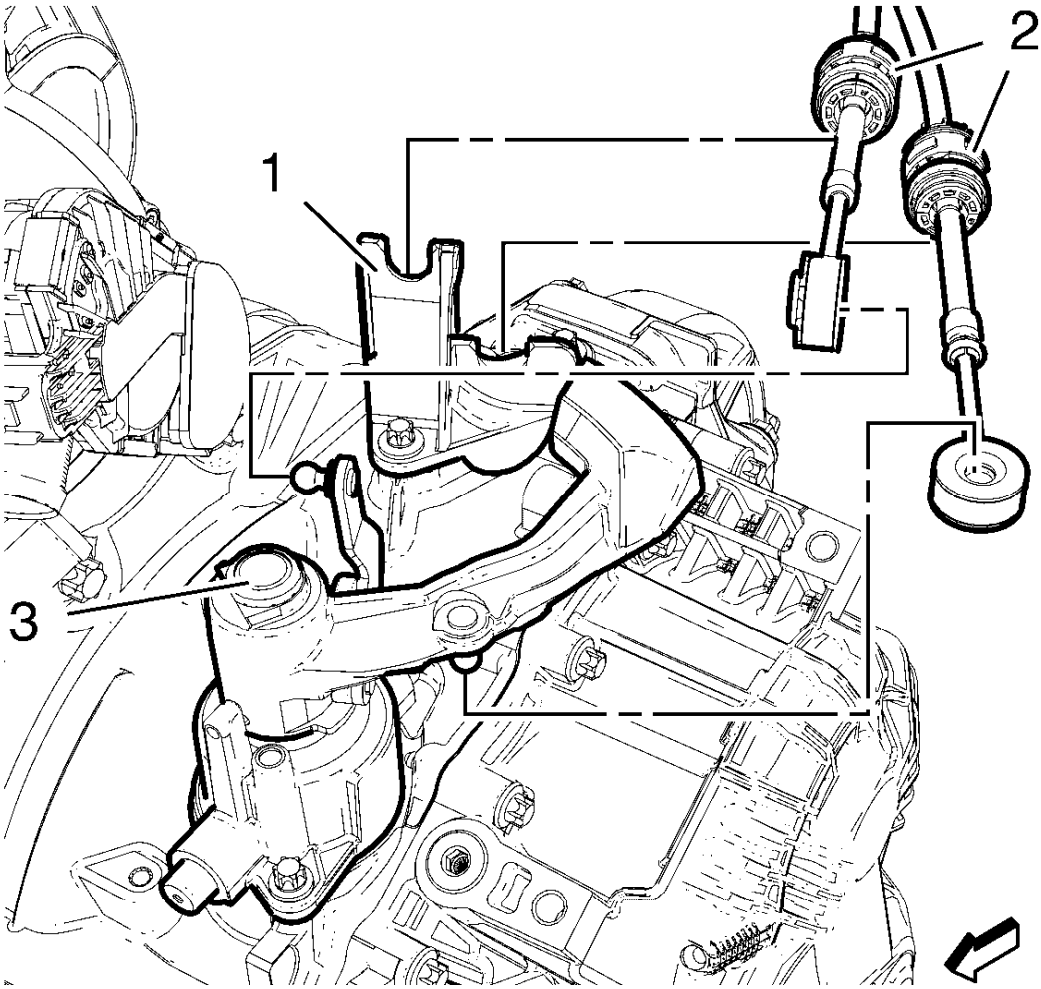

Fig. 229: Selector Lever Cable, Bracket And Transmission Control Housing
Courtesy of GENERAL MOTORS COMPANY

29. On vehicles equipped with a manual transmission, connect the shift lever cables (2) to the shift levers (3)
30. On vehicles equipped with a manual transmission, install the shift lever cables (2) to the cable bracket (1).
31. Install the battery tray. Refer to **Battery Tray Replacement** .

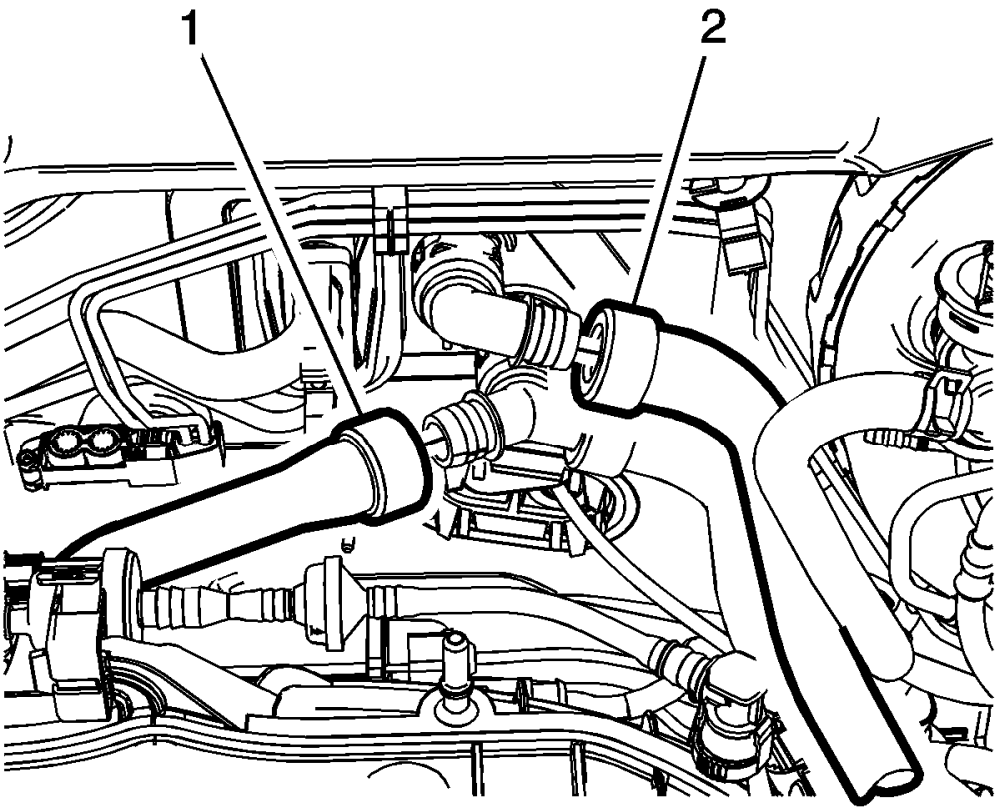

Fig. 230: Heater Core Inlet And Outlet Hoses
Courtesy of GENERAL MOTORS COMPANY

32. Connect inlet (2) and outlet (1) heater core hoses.

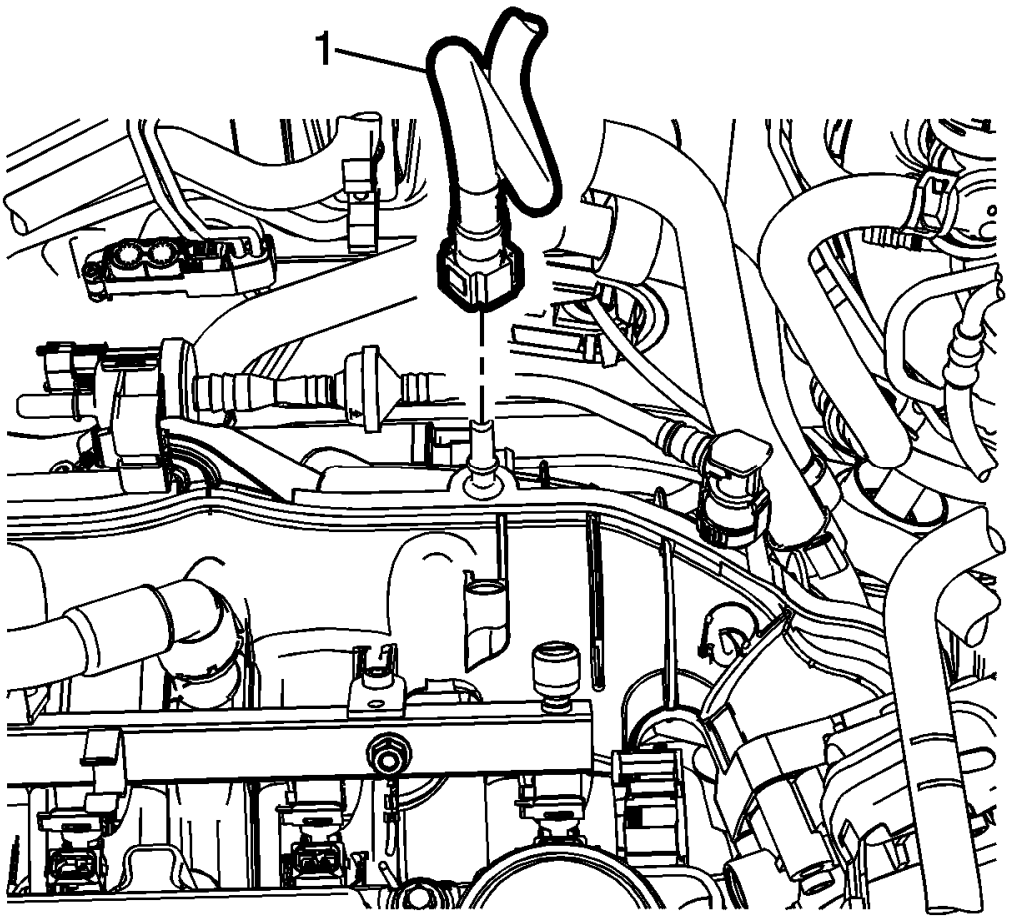

Fig. 231: Brake Booster Vacuum Pipe
Courtesy of GENERAL MOTORS COMPANY

33. Connect the power brake booster vacuum pipe (1).

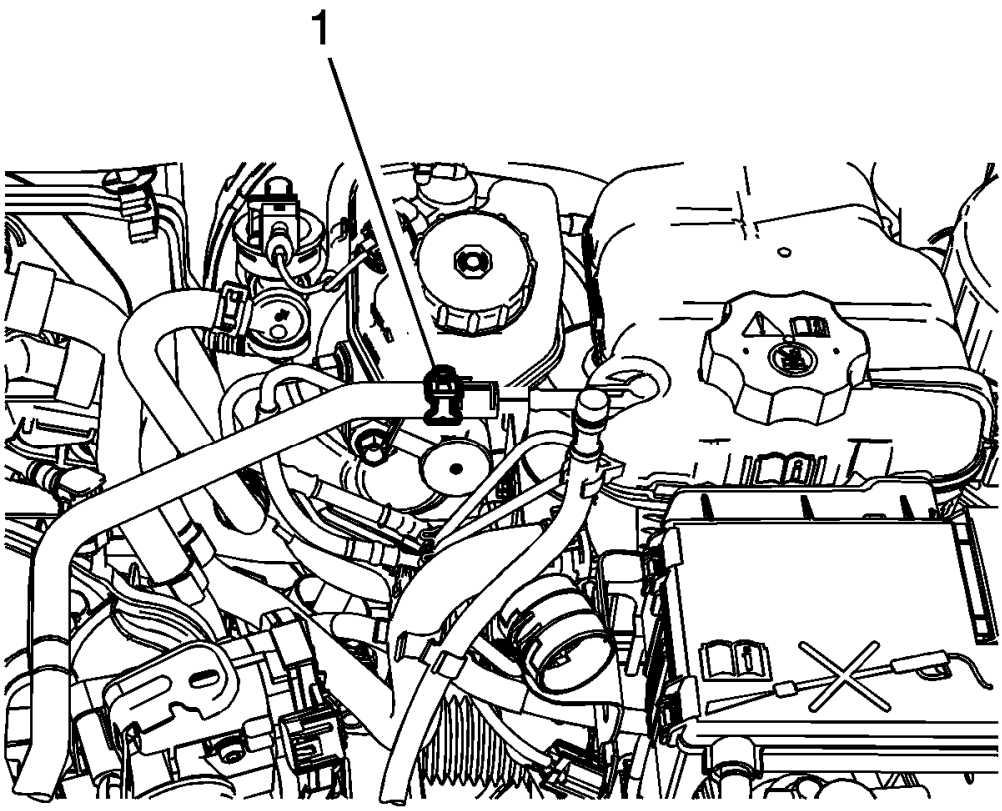

Fig. 232: Radiator Surge Tank Outlet Hose Clamp
Courtesy of GENERAL MOTORS COMPANY

34. Connect the coolant hose and reposition the clamp (1).

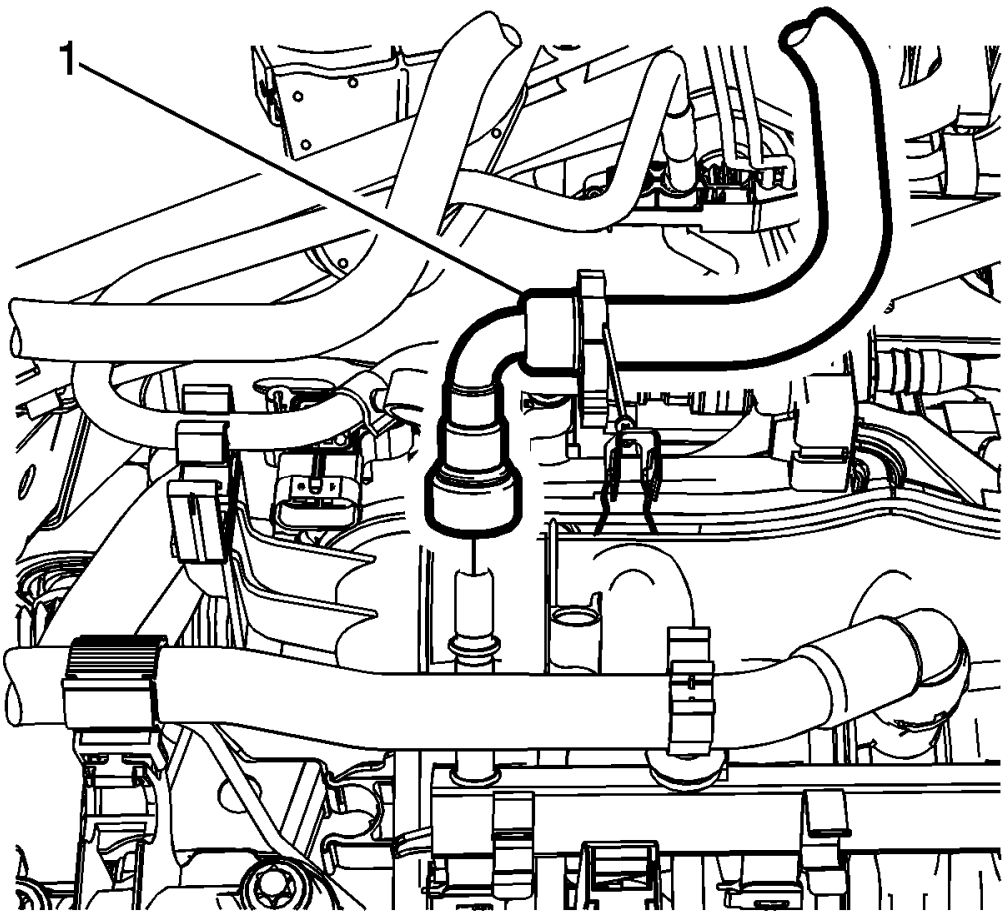

Fig. 233: Fuel Feed Pipe
Courtesy of GENERAL MOTORS COMPANY

35. Connect the fuel feed line (1) and reposition away from the engine. Refer to **Fuel Pressure Relief** .

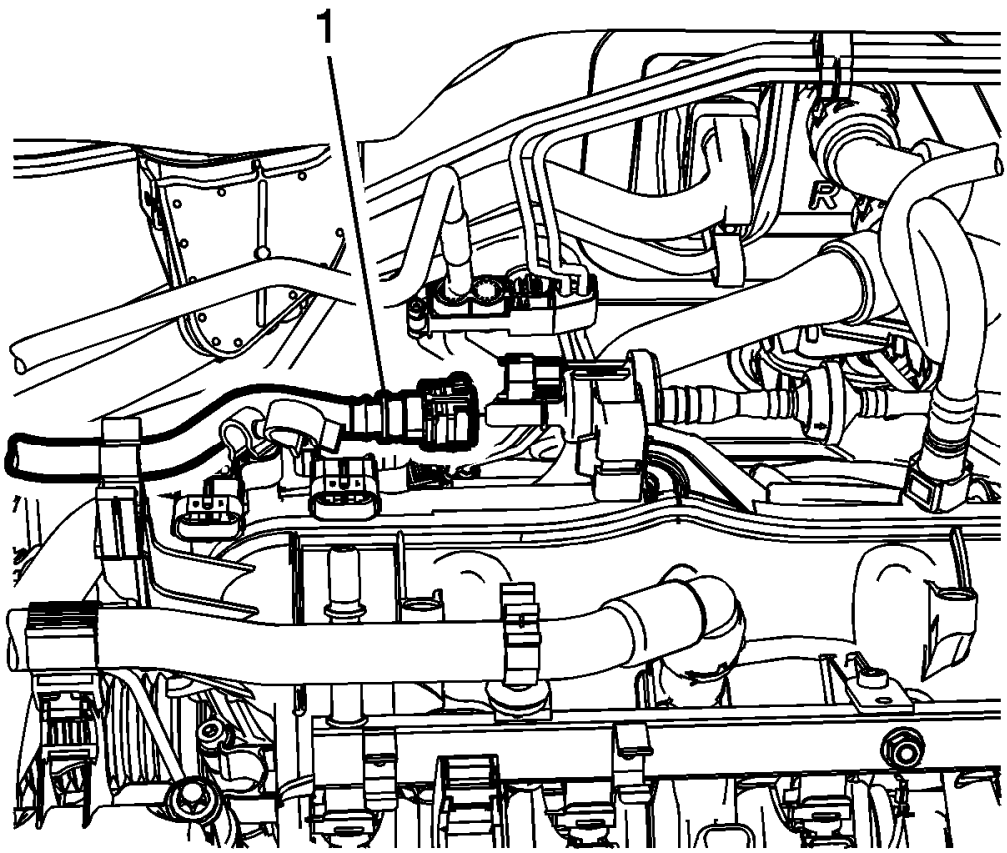

Fig. 234: Fuel Ventilation Pipe
Courtesy of GENERAL MOTORS COMPANY

36. Connect the EVAP hose (1). Refer to **Plastic Collar Quick Connect Fitting Service** .

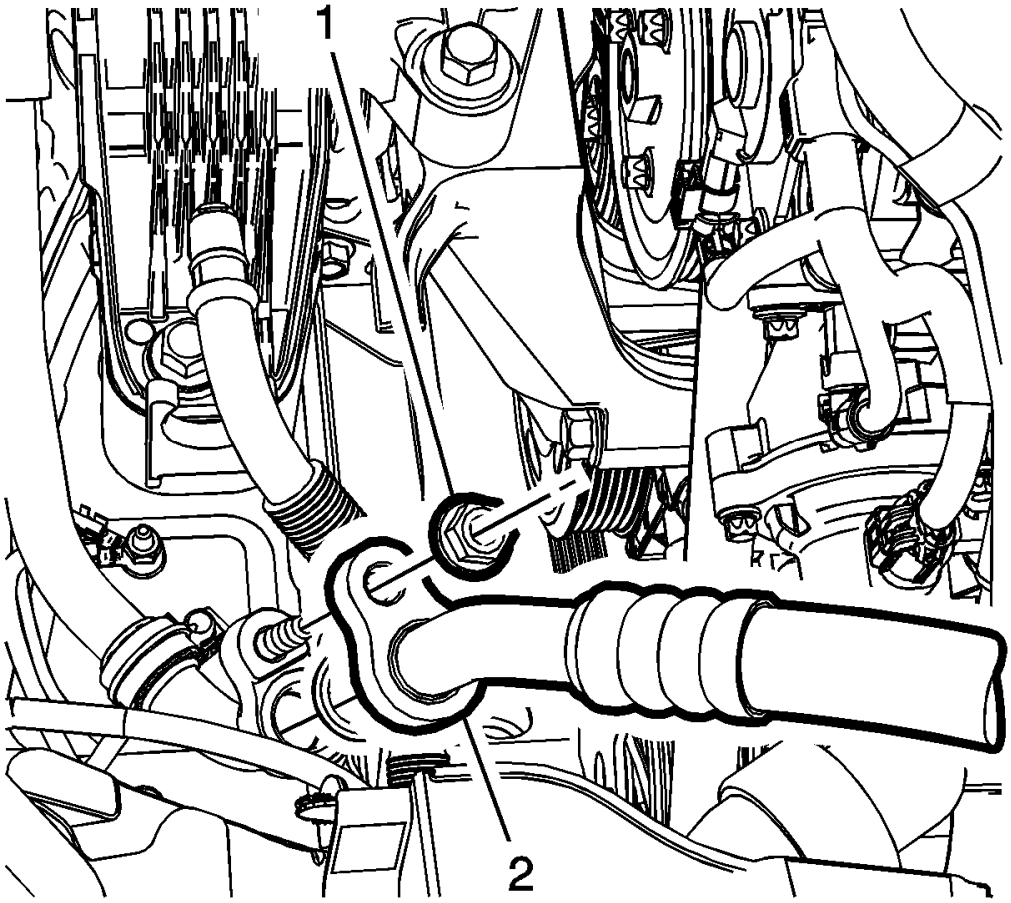

Fig. 235: Refrigerant Hose And Nut
Courtesy of GENERAL MOTORS COMPANY

NOTE: **Use NEW O-ring seals. Refer to Air Conditioning O-Ring Seal Replacement .**

37. Install refrigerant hose (2) and tighten the nut (1) to 19 N.m (14 lb ft).
38. Install the charge air cooler inlet air hose. Refer to **Charge Air Cooler Inlet Air Hose Replacement** .
39. Install the charge air cooler outlet air hose. Refer to **Charge Air Cooler Outlet Air Hose Replacement (Automatic Transmission)** , **Charge Air Cooler Outlet Air Hose Replacement (Manual Transmission)** .
40. Connect engine coolant hoses as necessary.
41. Connect electrical connectors as necessary.
42. Install the front fascia.
43. Install the front wheelhouse front liners.
44. Install the air cleaner assembly. Refer to **Air Cleaner Assembly Replacement** .
45. Fill the engine cooling system. Refer to **Cooling System Draining and Filling (Static Fill)** , **Cooling**

System Draining and Filling (GE-47716 Fill) .

46. Charge the air conditioning system. Refer to **Refrigerant Recovery and Recharging** .
47. Check engine oil level. Refer to **Engine Oil and Oil Filter Replacement**.
48. Connect the negative battery cable to the battery. Refer to **Battery Negative Cable Disconnection and Connection** .

ENGINE OIL AND OIL FILTER REPLACEMENT

Removal Procedure

1. Open hood.
2. Place a drain pan below the vehicle.

CAUTION: To prevent damage to oil filter cap ensure proper tool is used. Do not use an open end wrench which may cause damage to filter cap.

3. Using a 24mm socket or closed end wrench loosen oil filter cap. Unscrew filter cap 3 turns and let oil filter and cap assembly drain in housing for 30 seconds.

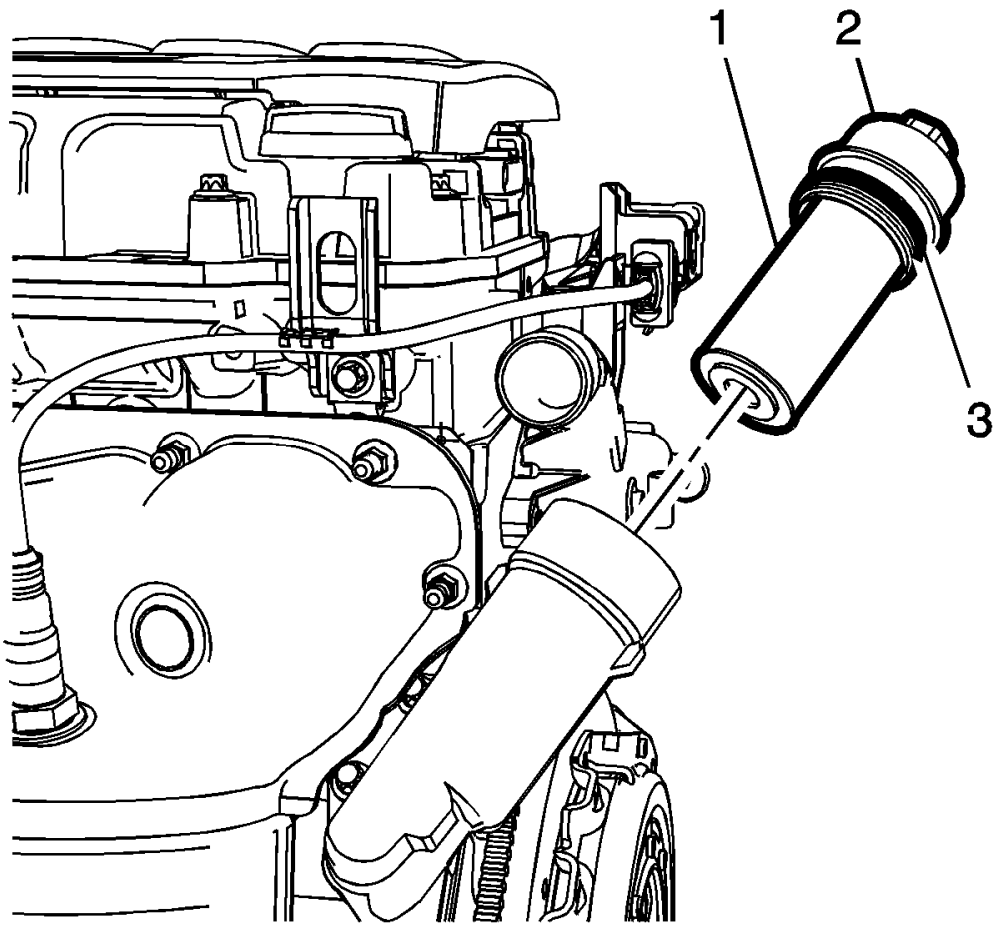

Fig. 236: Engine Oil Filter Cap, Cap Seal Ring And Oil Filter Element
Courtesy of GENERAL MOTORS COMPANY

NOTE: Use care when removing engine oil filter cap and filter to minimize fluid spillage. If fluid spillage occurs it must be cleaned with appropriate cleaner.

NOTE: Inspect oil filter cap for any cracks or damage. If oil filter cap is damaged it must be replaced.

4. Remove the engine oil filter cap (2) with the engine oil filter cap seal ring (3) and the oil filter element (1).
5. Raise and support the vehicle. Refer to **Lifting and Jacking the Vehicle** .
6. Remove the oil pan drain plug and allow the oil to drain into the drain pan.

Installation Procedure

1. Clean the oil pan drain plug thread in the oil pan.

2. Install a NEW seal ring to the oil pan drain plug.

CAUTION: Refer to Component Fastener Tightening Caution .

3. Install the oil pan drain plug and tighten to 14 N.m (10 lb ft).
4. Lower the vehicle.

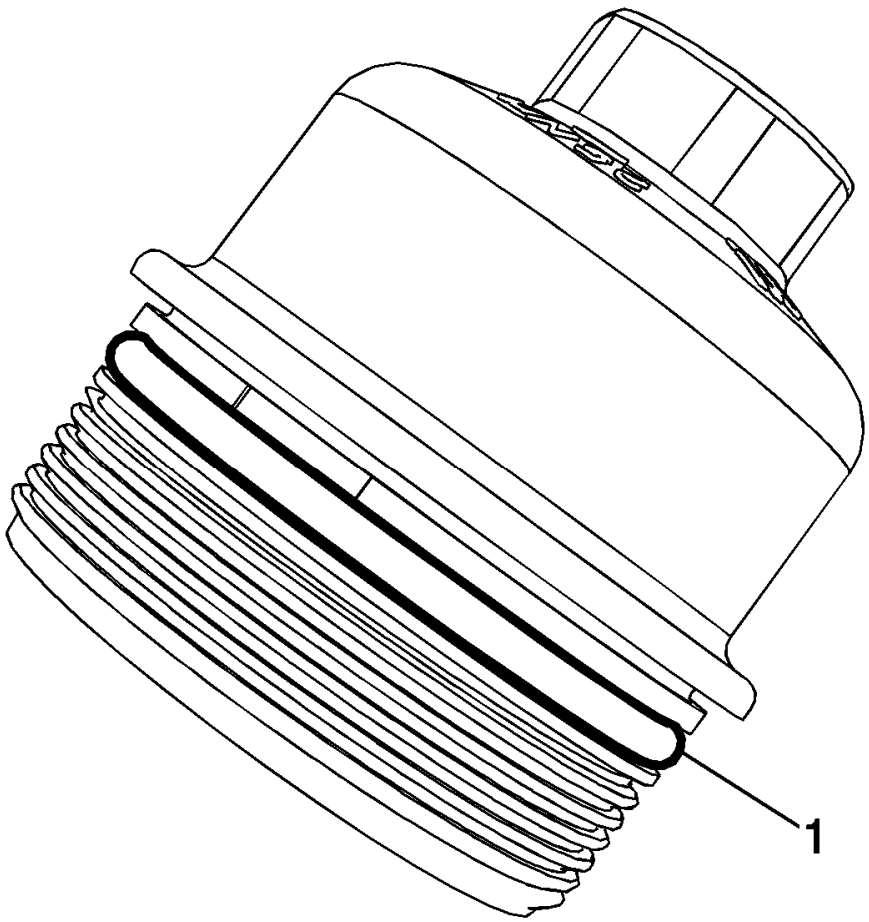

Fig. 237: Oil Filter Cap Seal Ring
Courtesy of GENERAL MOTORS COMPANY

NOTE: Clean oil filter cap and lubricate the NEW oil filter cap seal ring with clean engine oil. Ensure oil filter cap seal ring is in proper position as shown.

5. Install a NEW oil filter cap seal ring (1).

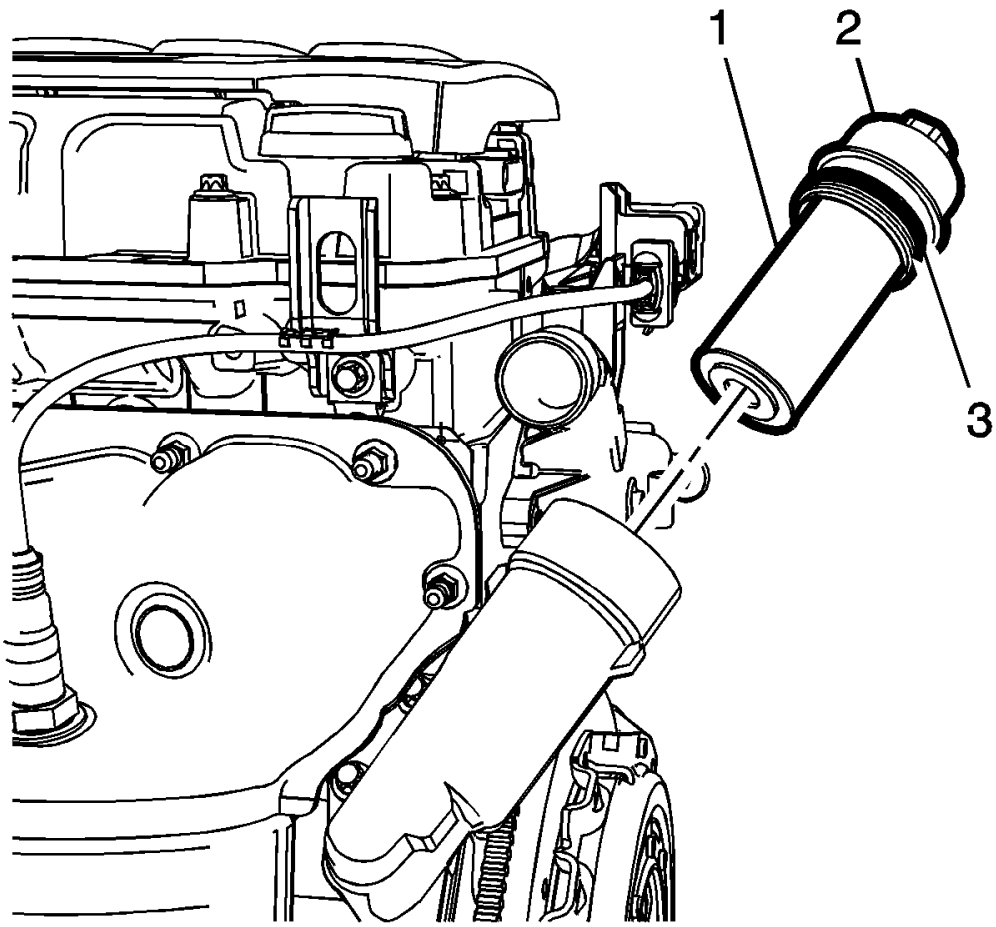

Fig. 238: Engine Oil Filter Cap, Cap Seal Ring And Oil Filter Element
Courtesy of GENERAL MOTORS COMPANY

6. Install the engine oil filter cap (2) with NEW engine oil filter cap seal ring (3) and NEW oil filter element (1) hand tight.

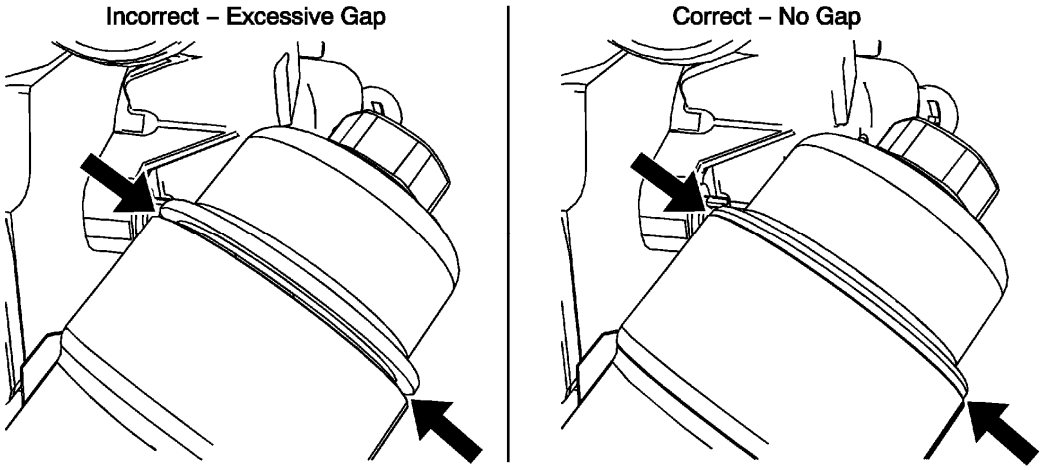

Fig. 239: Oil Filter Cap Seal Ring
Courtesy of GENERAL MOTORS COMPANY

CAUTION: Ensure oil filter cap is completely seated on oil filter housing. If not completely seated an oil leak may occur.

CAUTION: Over torquing the oil filter cap may cause damage to the oil filter cap resulting in an oil leak.

7. Using a 24mm socket or closed end wrench tighten the engine oil filter cap to 25 N.m (18 lb ft).

CAUTION: Using engine oils of any viscosity other than those viscosities recommended could result in engine damage.

NOTE: Do not overfill the engine with engine oil.

NOTE: Anytime engine oil is added (top off or oil changes) ensure all engine surfaces are completely free of residual oil. If there is oil on any engine surface clean as necessary.

8. Fill engine with NEW oil using Dexos™1 5W-30 specification.

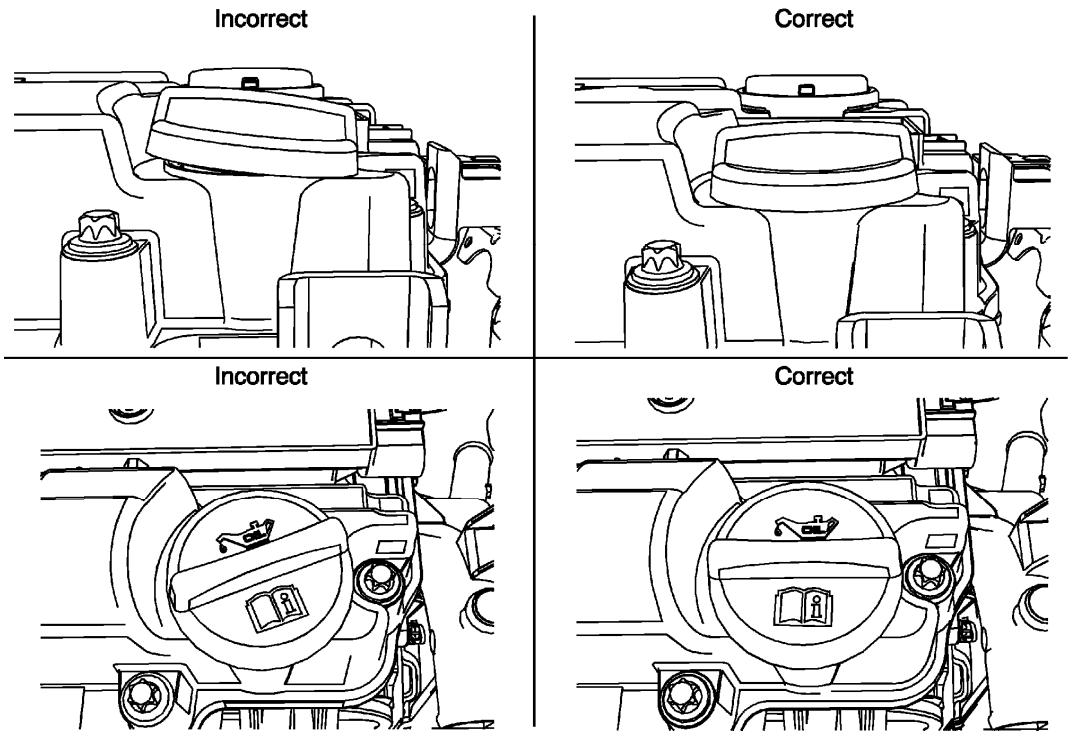

Fig. 240: Proper Oil Filler Cap Seating
Courtesy of GENERAL MOTORS COMPANY

NOTE: Oil fill cap must be properly seated and tightened during installation.

9. Install oil fill cap.
10. Start the engine and allow it to run until the oil pressure control indicator goes off. Inspect for any oil leaks around the drain plug, oil filter and oil fill cap.

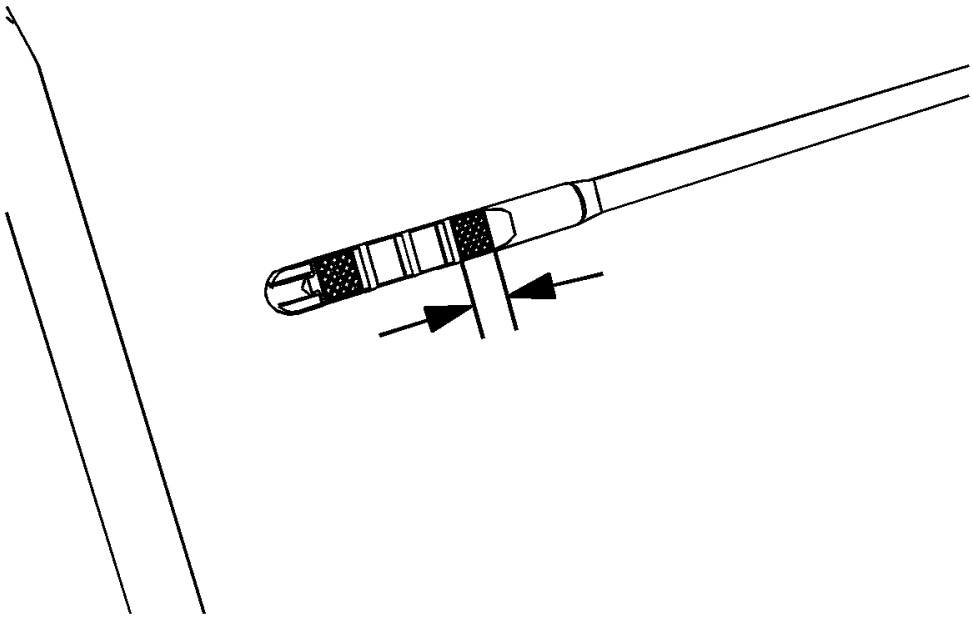

Fig. 241: Engine Oil Level Indicator
Courtesy of GENERAL MOTORS COMPANY

11. Inspect the engine oil level. The oil level should be in the cross-hatched section of the oil level indicator as shown.
12. Close hood.
13. Reset the engine oil life system monitor.

ENGINE SIGHT SHIELD REPLACEMENT

Removal Procedure

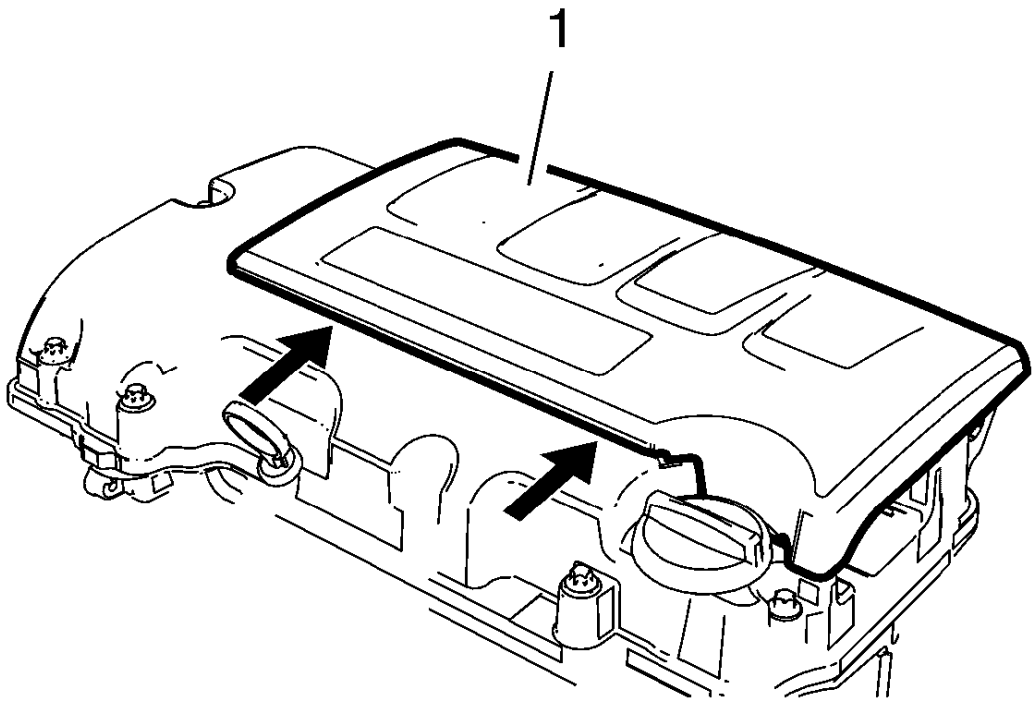

Fig. 242: Engine Sight Shield
Courtesy of GENERAL MOTORS COMPANY

1. Using a screwdriver or similar tool, unclip the engine sight shield (1) at the shown positions (arrows).

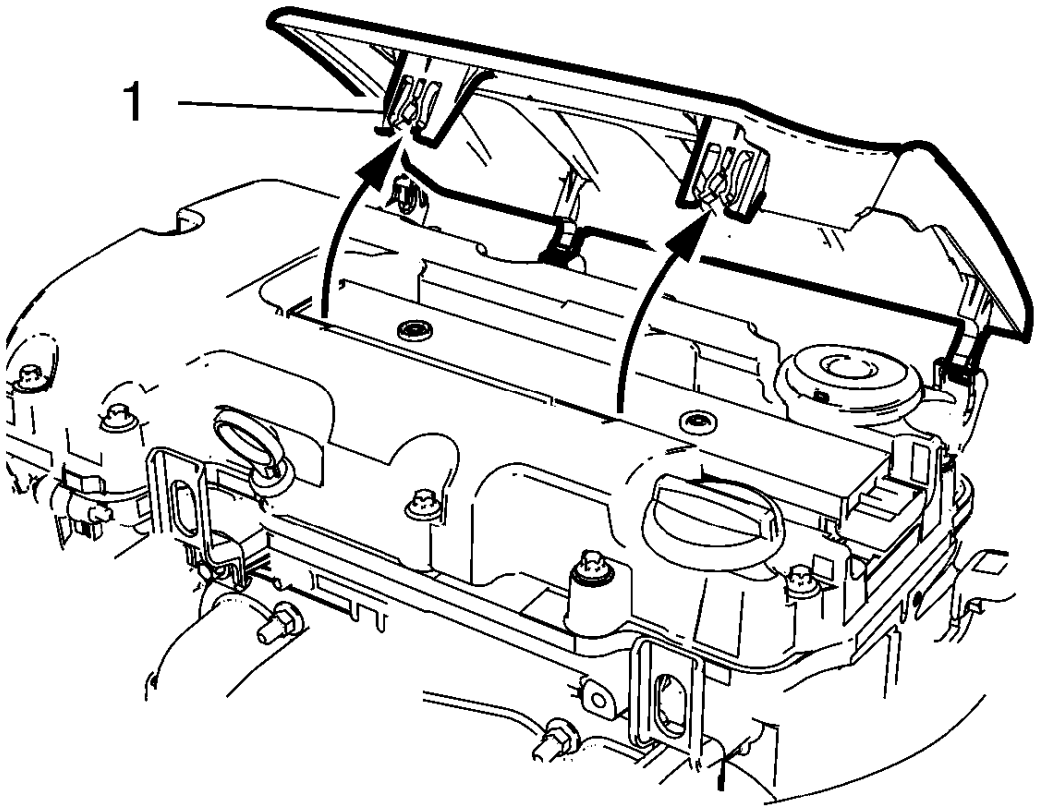

Fig. 243: Engine Sight Shield
Courtesy of GENERAL MOTORS COMPANY

2. Rotate the engine sight shield in arrow direction and unclip it from the camshaft cover.

Installation Procedure

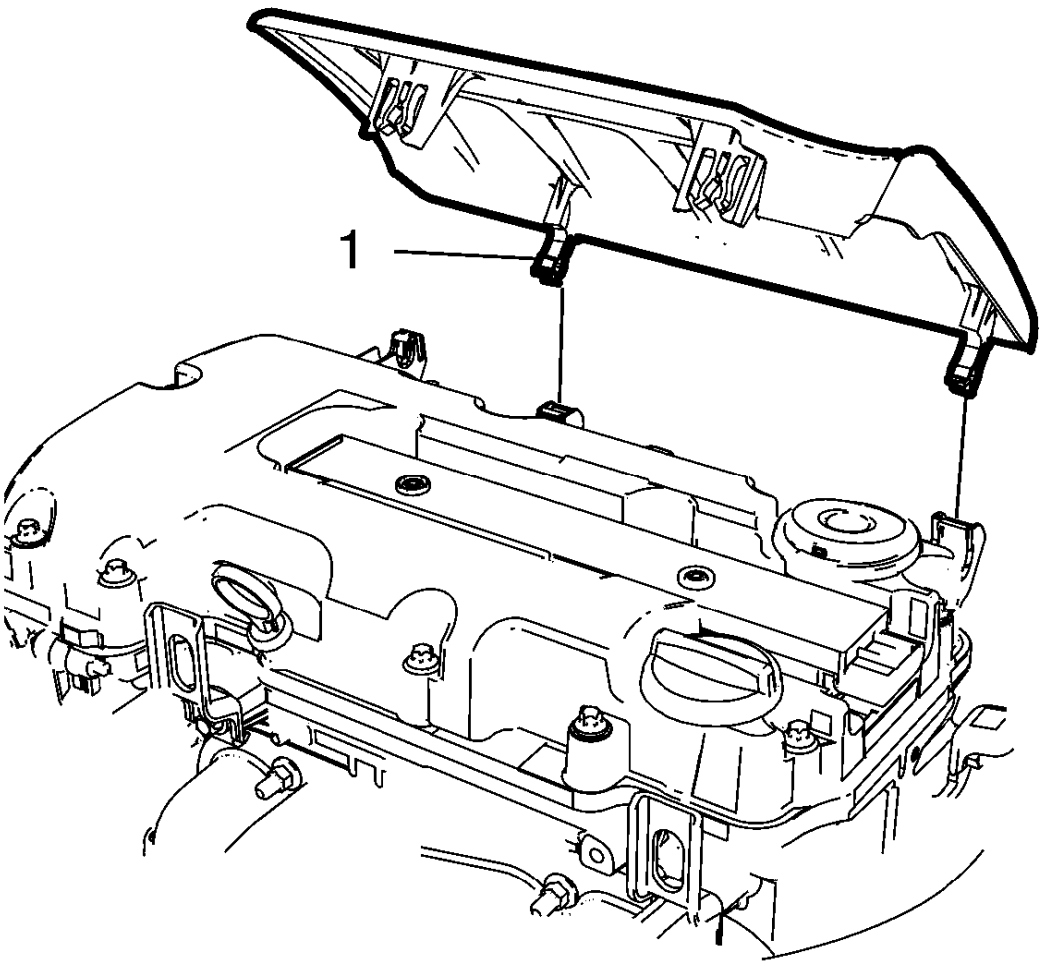

Fig. 244: Rear Clips And Camshaft Cover
Courtesy of GENERAL MOTORS COMPANY

1. Clip the rear clips (1) to the camshaft cover.

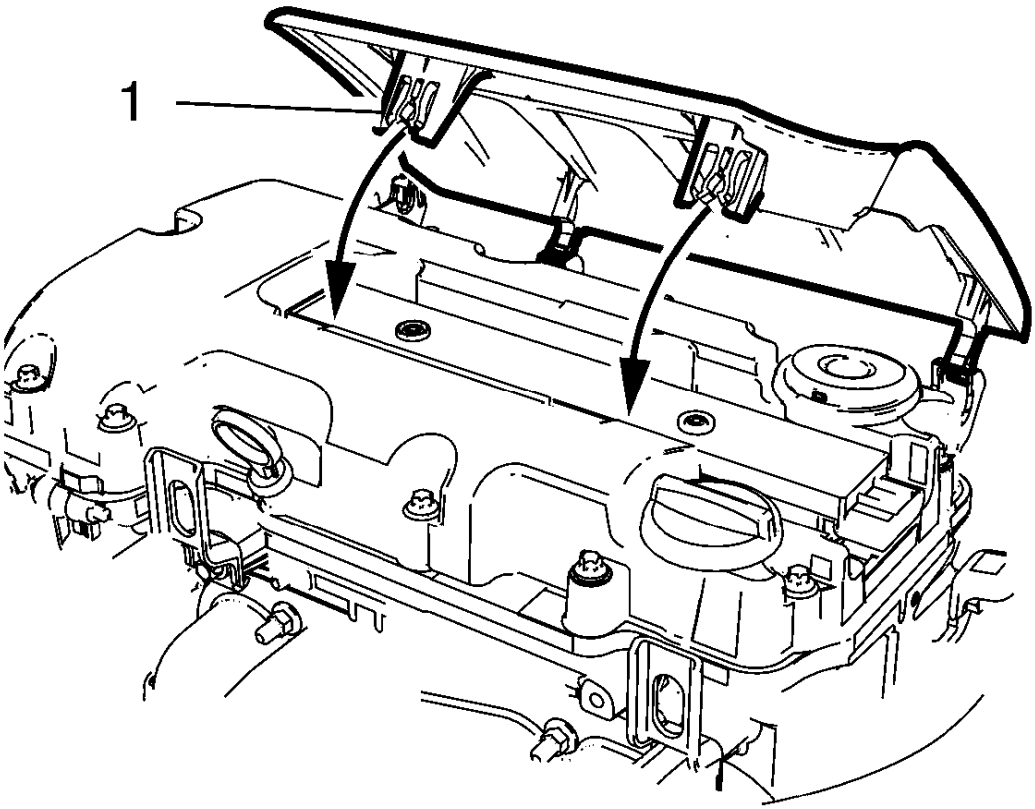

Fig. 245: Rear Clips And Camshaft Cover
Courtesy of GENERAL MOTORS COMPANY

2. Rotate the engine sight shield as shown until the clips (1) engage audible in the camshaft cover.

TURBOCHARGER REPLACEMENT

Special Tools

EN-49942 Holding Wrench

For equivalent regional tools, refer to **Special Tools**.

Removal Procedure

1. Open the hood.
2. Disconnect battery negative cable. Refer to **Battery Negative Cable Disconnection and Connection** .

3. Drain the cooling system. Refer to **Cooling System Draining and Filling (Static Fill)** , **Cooling System Draining and Filling (GE-47716 Fill)** .
4. Remove the air cleaner outlet duct. Refer to **Air Cleaner Outlet Duct Replacement** .
5. Disconnect the positive crankcase ventilation pipe from turbocharger. Refer to **Positive Crankcase Ventilation Hose/Pipe/Tube Replacement**.
6. Remove the exhaust manifold heat shield. Refer to **Exhaust Manifold Heat Shield Replacement (1.4L LUV)** .

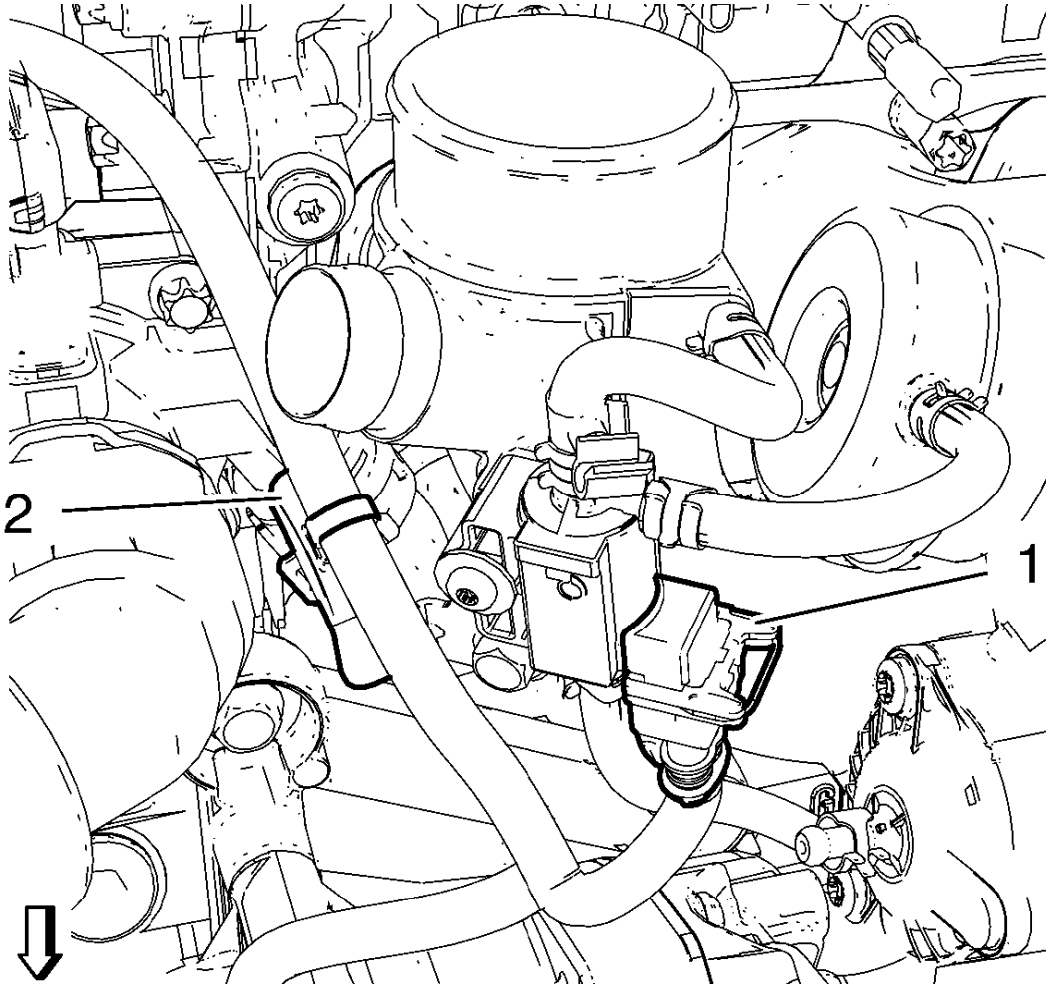

Fig. 246: Turbocharger Wastegate Regulator Solenoid Valve Wiring Harness Connector And Retaining Clip
Courtesy of GENERAL MOTORS COMPANY

7. Disconnect the turbocharger wastegate regulator solenoid valve wiring harness connector (1) and unclip wiring harness from retainer clip (2).

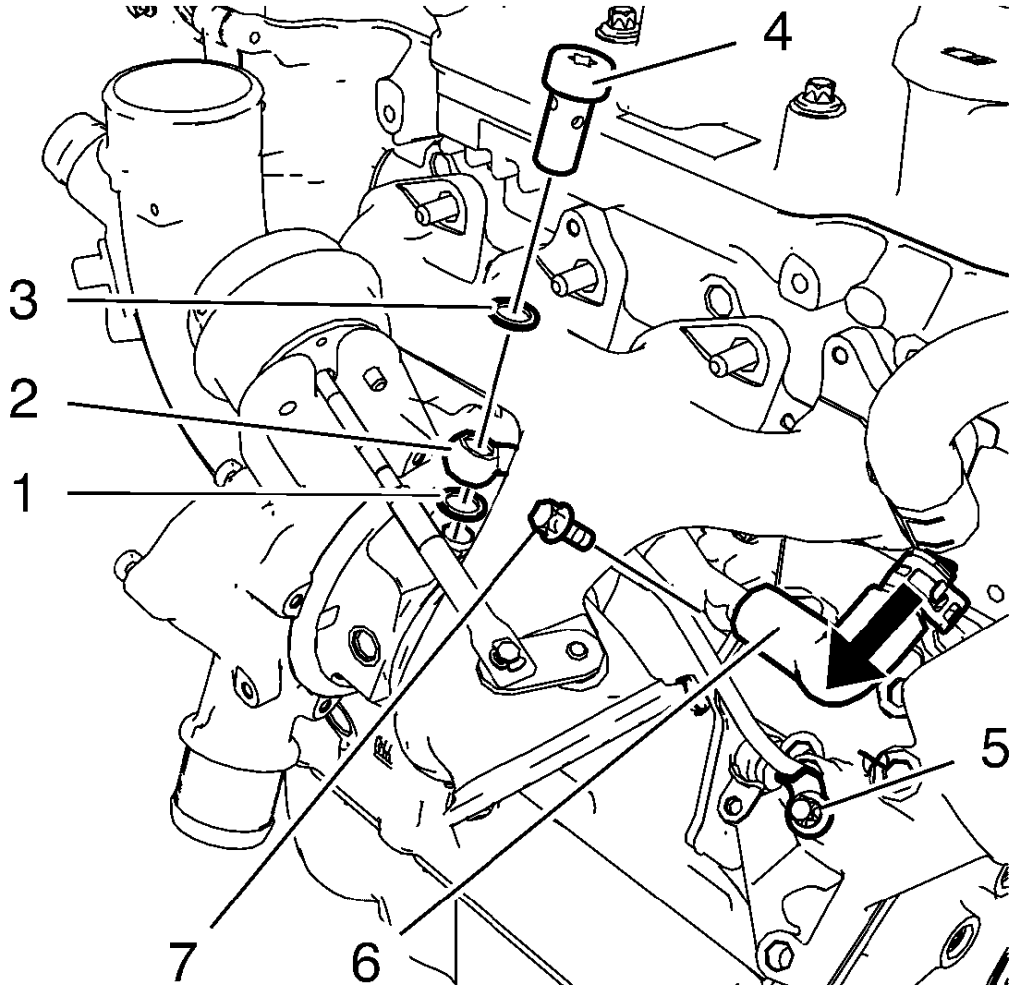

Fig. 247: Turbocharger Oil Feed Pipe Components
Courtesy of GENERAL MOTORS COMPANY

8. Remove the turbocharger oil feed pipe hollow screw (4).
9. Remove and DISCARD the 2 seal rings (1) and (3).
10. Remove the turbocharger oil feed pipe bolt (5).

NOTE: Close the screw bore in the turbocharger in order to avoid contamination.

11. Remove the turbocharger oil feed pipe (2).
12. Loosen the turbocharger coolant return hose clamp and remove the turbocharger coolant return hose (6) from the oil cooler inlet pipe.
13. Remove the turbocharger coolant return pipe bolt (7).
14. Remove the charge air cooler inlet air hose from the turbocharger. Refer to **Charge Air Cooler Inlet Air Hose Replacement** .

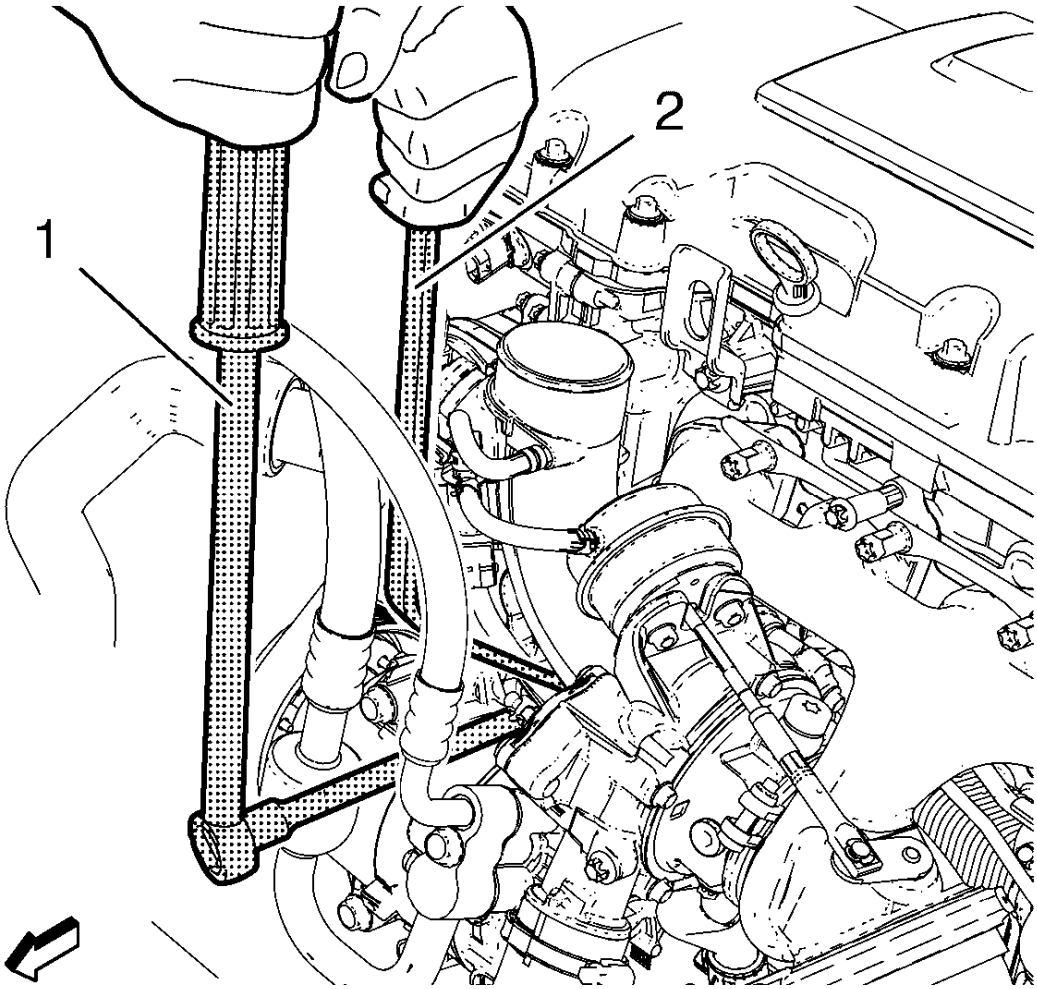

Fig. 248: Ratchet Wrench And Holding Wrench
Courtesy of GENERAL MOTORS COMPANY

15. Install the **EN-49942** holding wrench (2) to the turbocharger coolant feed pipe. Guide a ratchet wrench (1) along with an extension through **EN-49942** holding wrench to the turbocharger coolant feed pipe hollow screw.

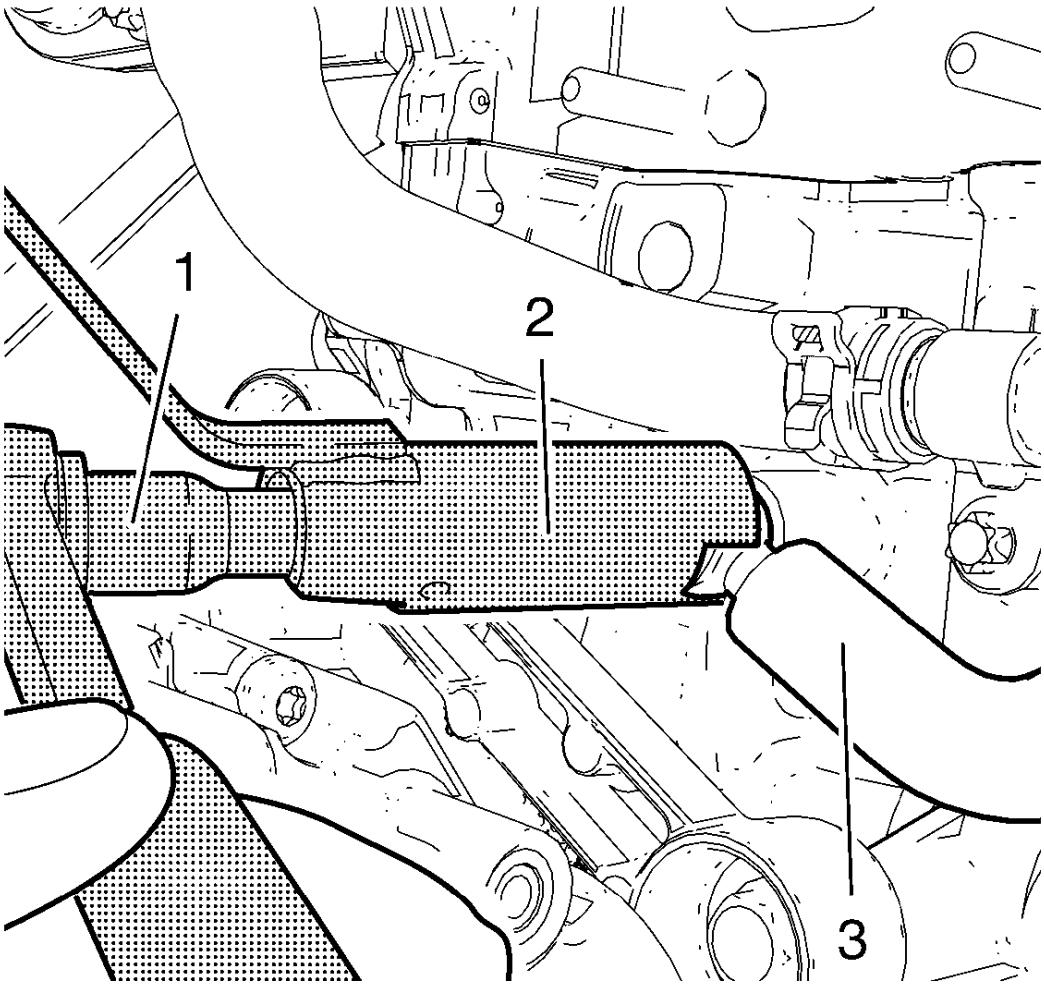

Fig. 249: Ratchet Wrench, Holding Wrench And Coolant Feed Pipe
Courtesy of GENERAL MOTORS COMPANY

NOTE: EN-49942 holding wrench (2) should be installed to turbocharger coolant feed pipe as shown. The holding wrench should be installed to avoid twist of the turbocharger coolant feed pipe during the loosening procedure.

16. Loosen the turbocharger coolant feed pipe hollow screw with ratchet wrench and extension (1).
17. Remove the turbocharger coolant feed pipe hollow screw.
18. Remove and DISCARD the 2 seal rings.
19. Remove the three way warm catalytic converter. Refer to **Warm Up Three-Way Catalytic Converter Replacement** .

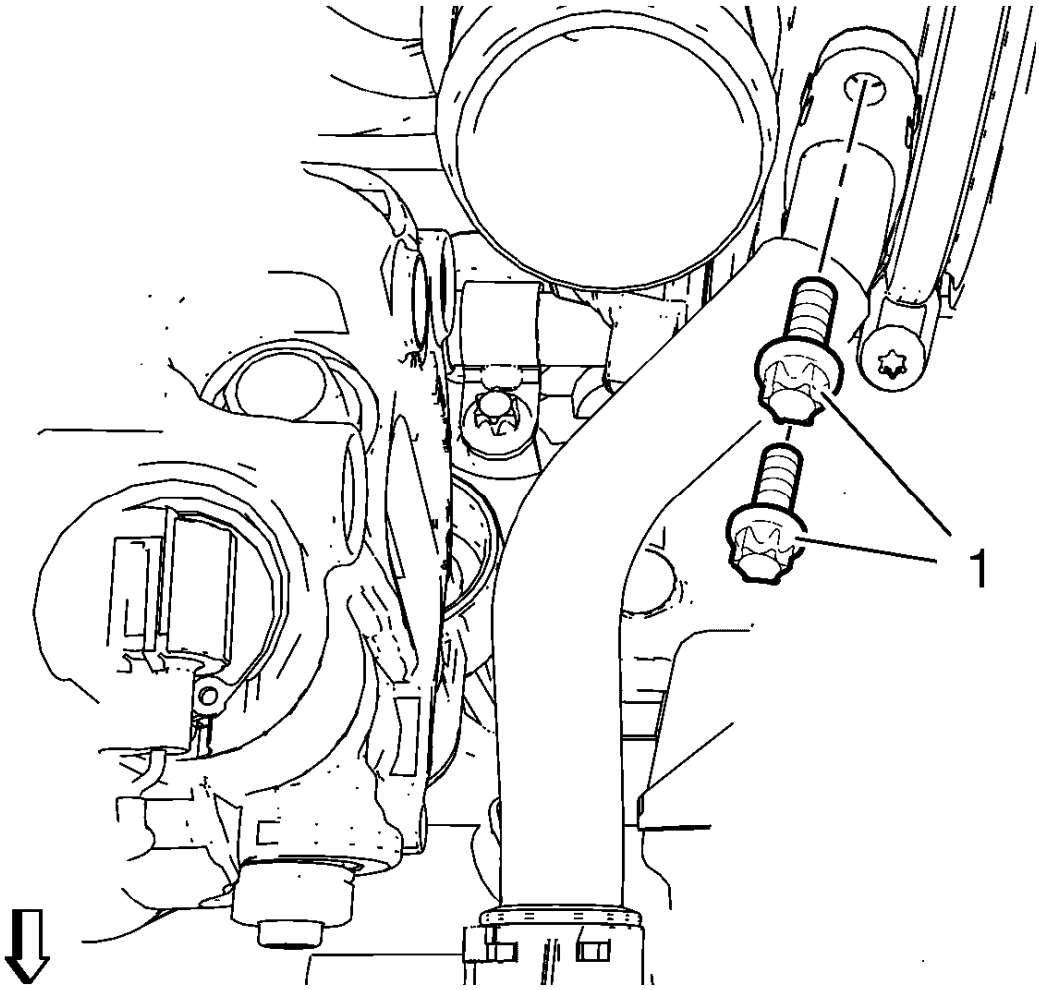

Fig. 250: Turbocharger Oil Return Pipe Bolts
Courtesy of GENERAL MOTORS COMPANY

20. Remove the 2 turbocharger oil return pipe bolts (1) from turbocharger.
21. Remove the turbocharger oil return pipe from the turbocharger.
22. Remove and DISCARD the gasket.

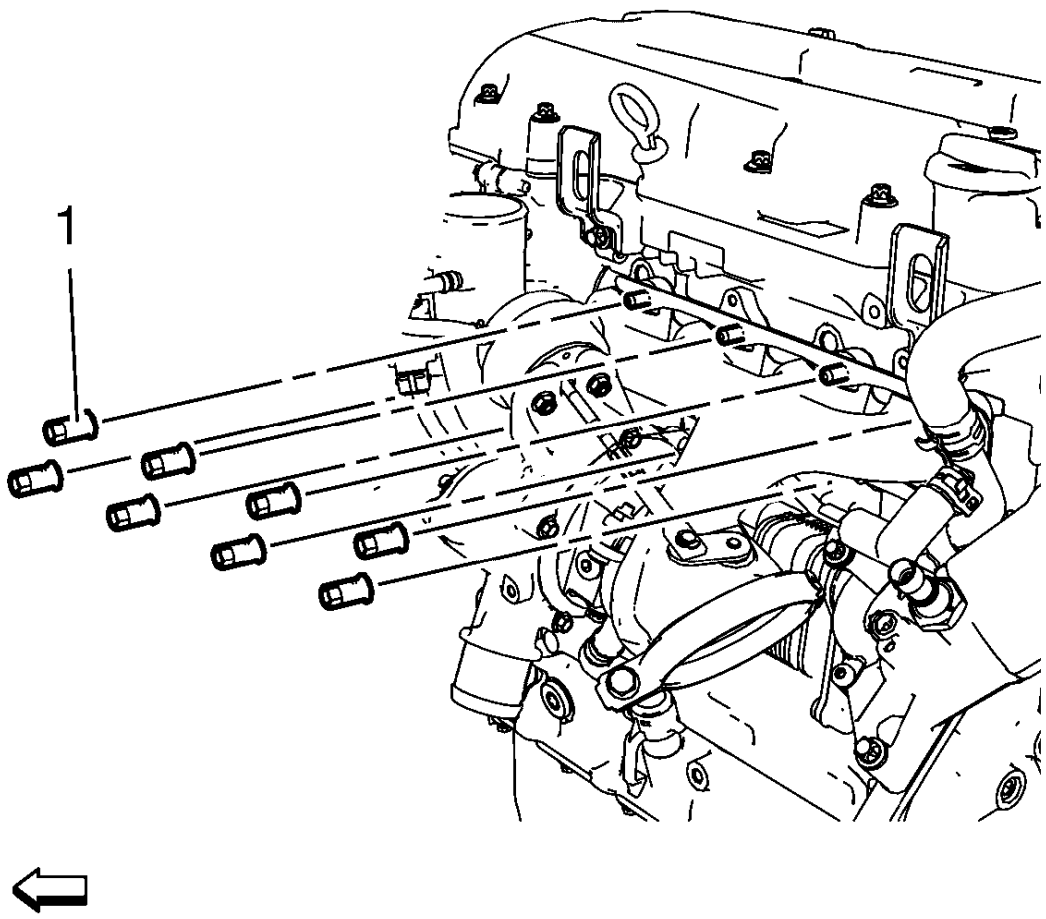

Fig. 251: Turbocharger Nuts
Courtesy of GENERAL MOTORS COMPANY

23. Remove and DISCARD the 8 turbocharger nuts (1).

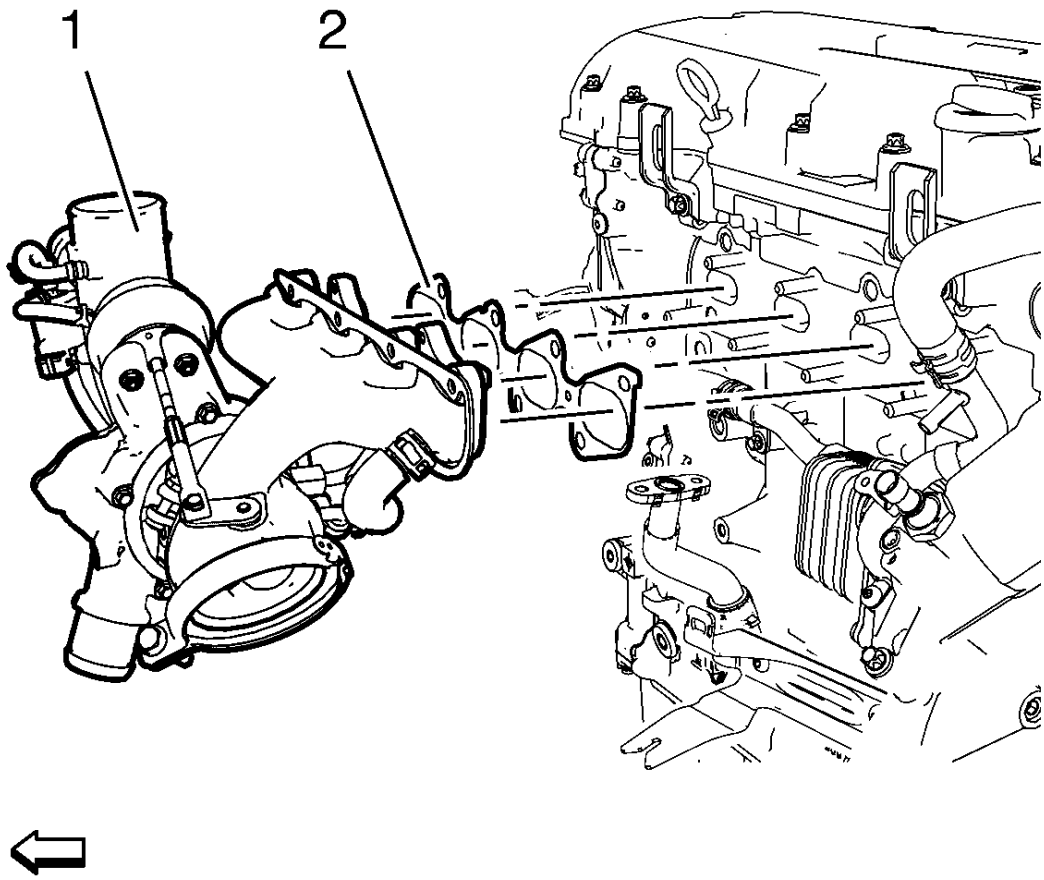

Fig. 252: Turbocharger Assembly And Gasket
Courtesy of GENERAL MOTORS COMPANY

24. Remove the turbocharger assembly (1).
25. Remove and DISCARD the turbocharger gasket (2).
26. Remove the assembly parts from the turbocharger as necessary. Refer to **Turbocharger Disassemble**.
27. If the turbocharger is being reused, refer to **Turbocharger Cleaning and Inspection**.

Installation Procedure

1. Install the assembly parts to the turbocharger as necessary. Refer to **Turbocharger Assemble**.
2. Clean the sealing surfaces.

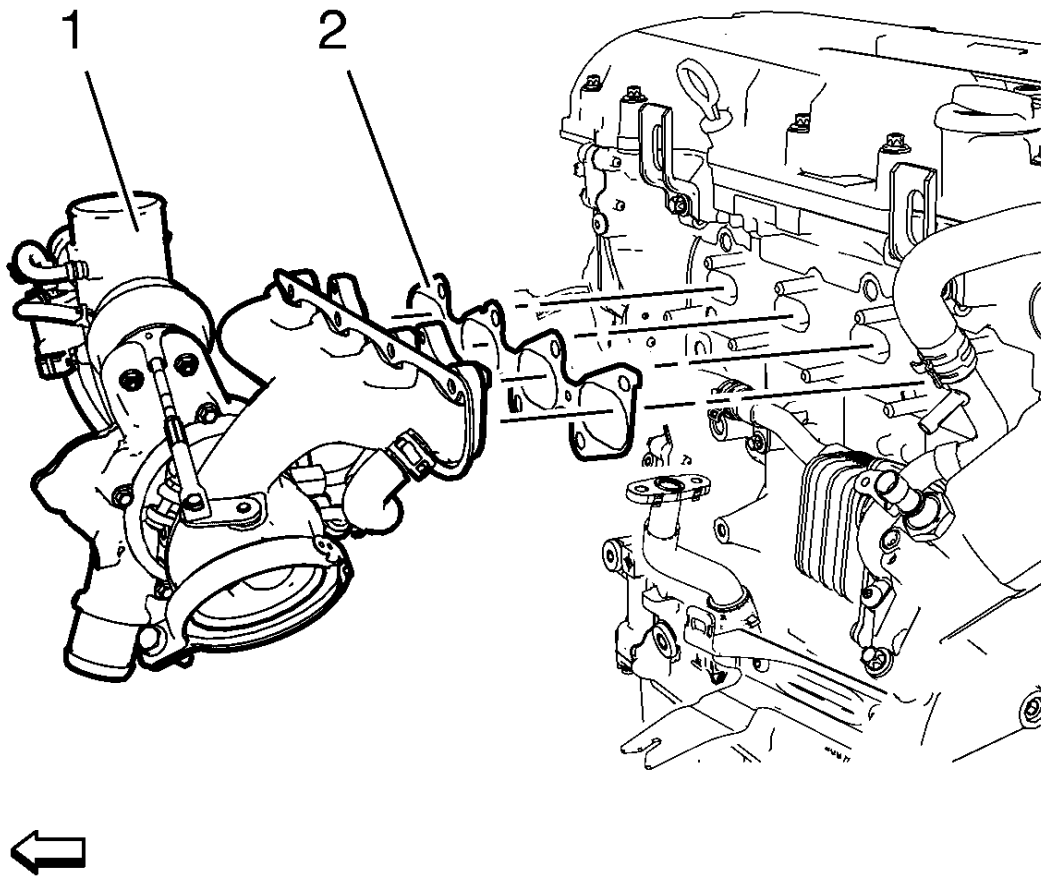

Fig. 253: Turbocharger Assembly And Gasket
Courtesy of GENERAL MOTORS COMPANY

3. Install a NEW turbocharger gasket.
4. Install the turbocharger assembly (1).

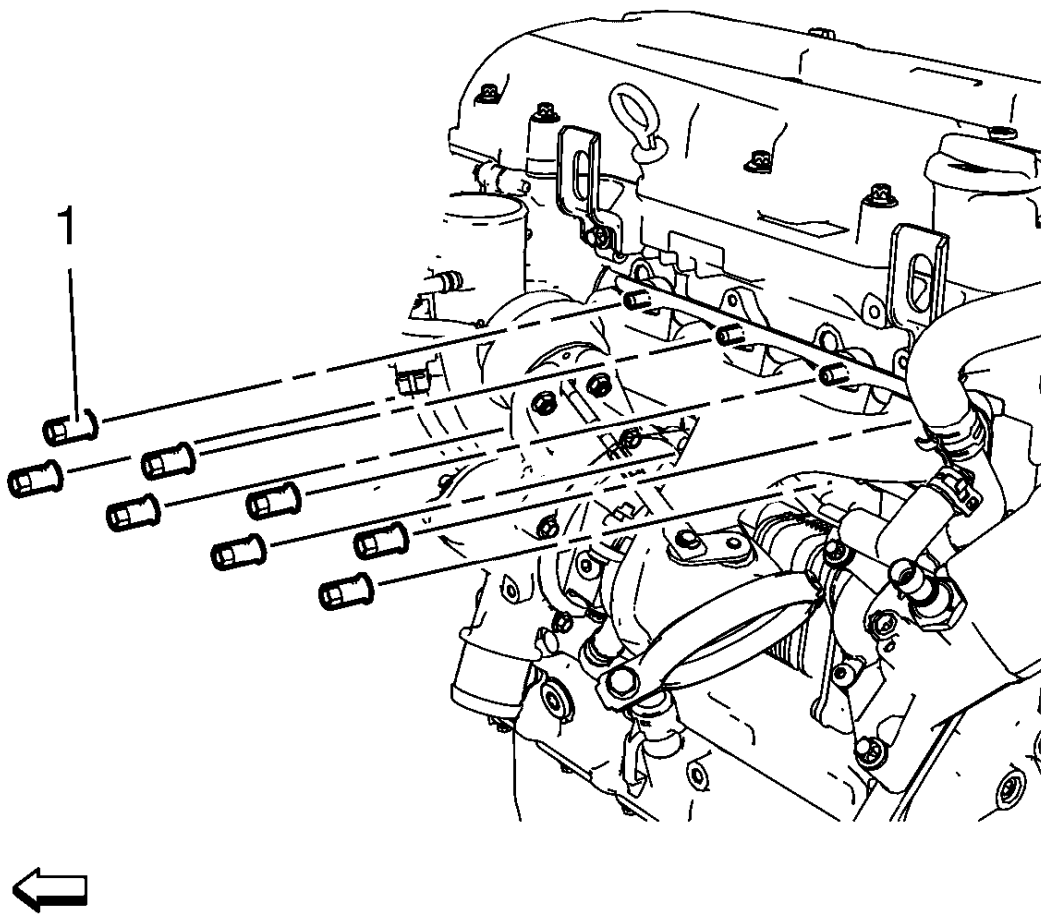

Fig. 254: Turbocharger Nuts
Courtesy of GENERAL MOTORS COMPANY

5. Install the 8 NEW turbocharger nuts (1).

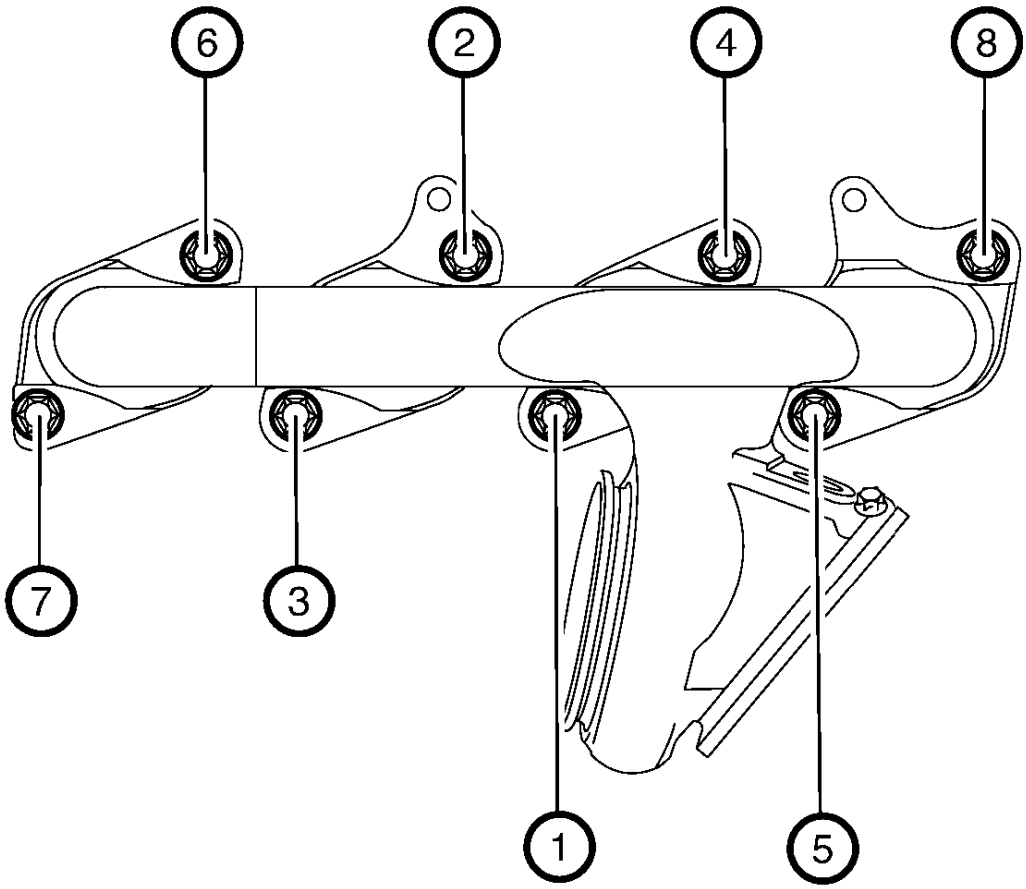

Fig. 255: Turbocharger Nuts Tightening Sequence
Courtesy of GENERAL MOTORS COMPANY

CAUTION: Refer to Fastener Caution .

CAUTION: Refer to Torque-to-Yield Fastener Caution .

6. Tighten the 8 turbocharger nuts in a sequence as shown to 8 N.m (71 lb in).
7. Repeat the tightening procedure to ensure a proper fastening of the turbocharger nuts.

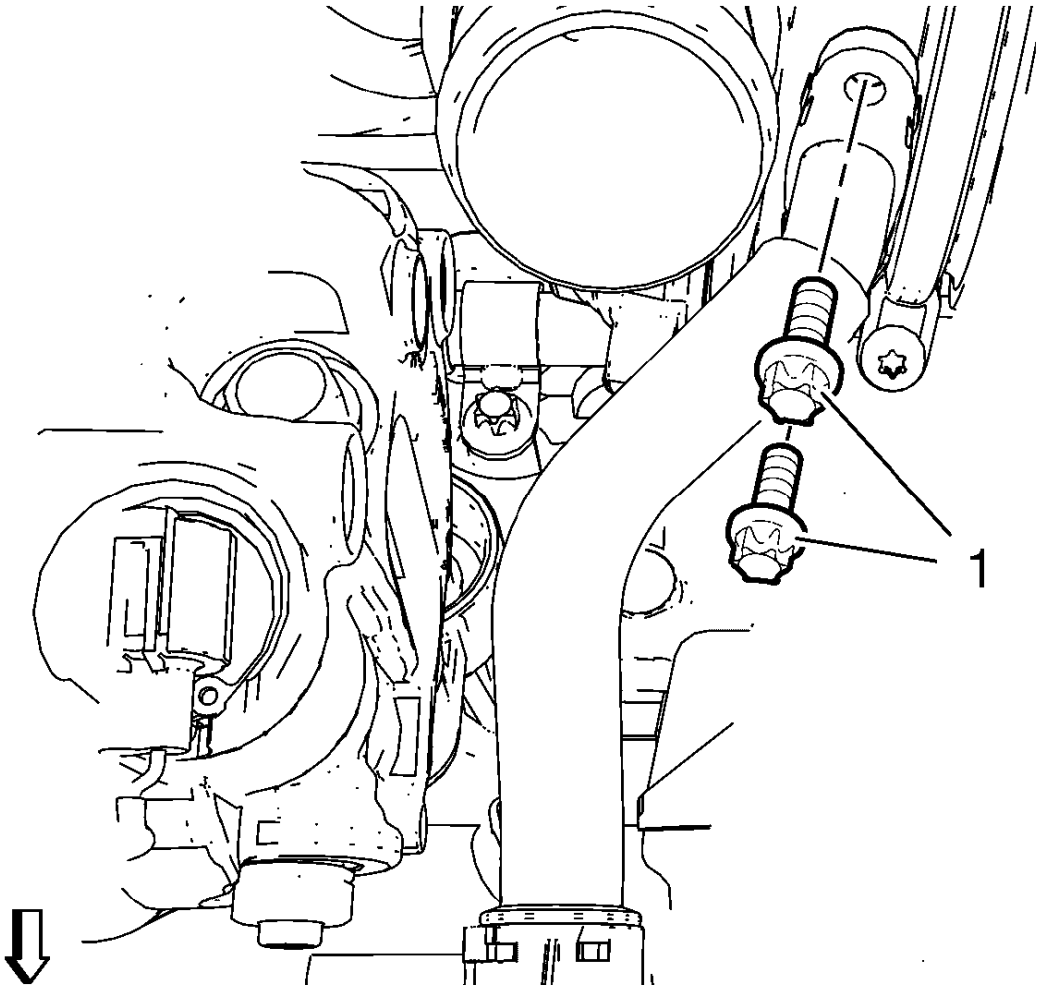

Fig. 256: Turbocharger Oil Return Pipe Bolts
Courtesy of GENERAL MOTORS COMPANY

8. Install a NEW gasket and the 2 turbocharger oil return pipe bolts (1) and tighten to 8 N.m (71 lb in).
9. Install the three way warm up catalytic converter. Refer to **Warm Up Three-Way Catalytic Converter Replacement** .

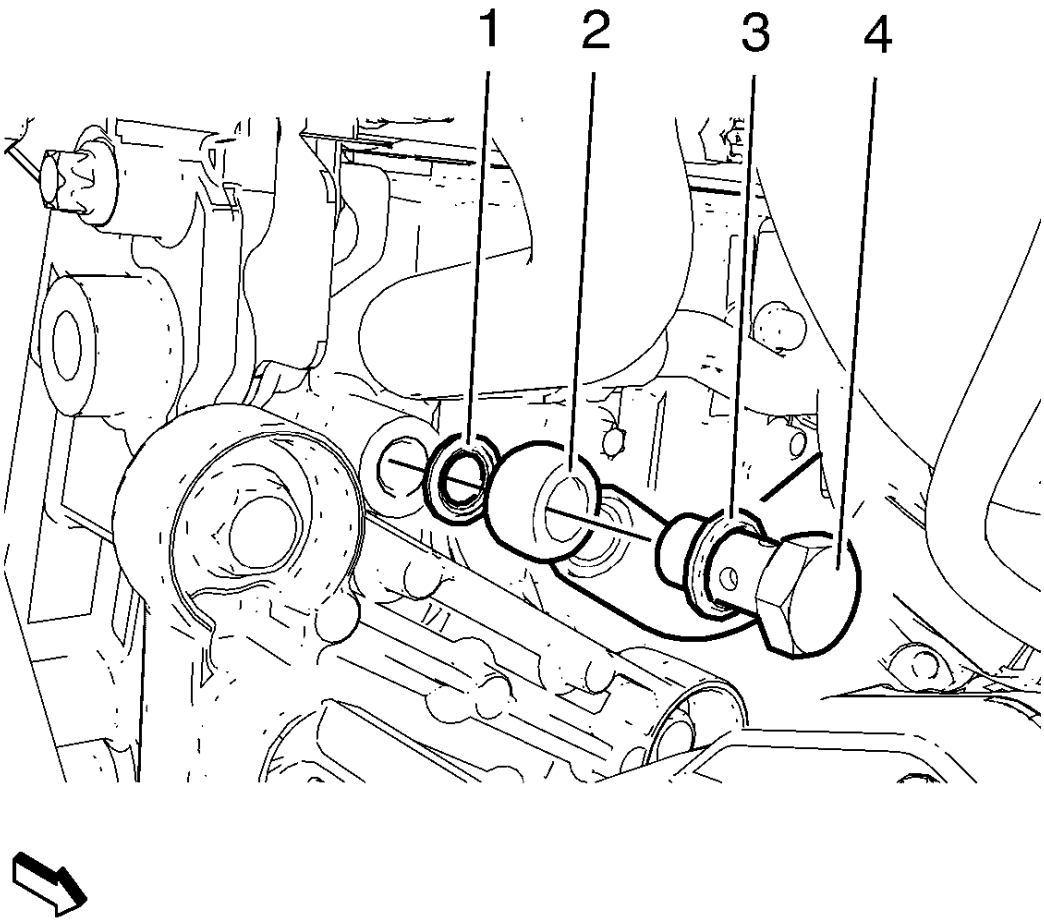

Fig. 257: Turbocharger Coolant Feed Pipe Components
Courtesy of GENERAL MOTORS COMPANY

10. Install the turbocharger coolant feed pipe to the engine block. Use the following procedure:
    - Install a NEW seal ring (3) to the turbocharger coolant feed pipe hollow screw (4).
    - Install the turbocharger coolant feed pipe hollow screw along with the seal ring to the turbocharger coolant feed pipe (2).
    - Install a NEW seal ring (1) to the turbocharger coolant feed pipe hollow screw.
    - Install the turbocharger coolant feed pipe hollow screw along with the turbocharger coolant feed pipe and the 2 seal rings to the engine.

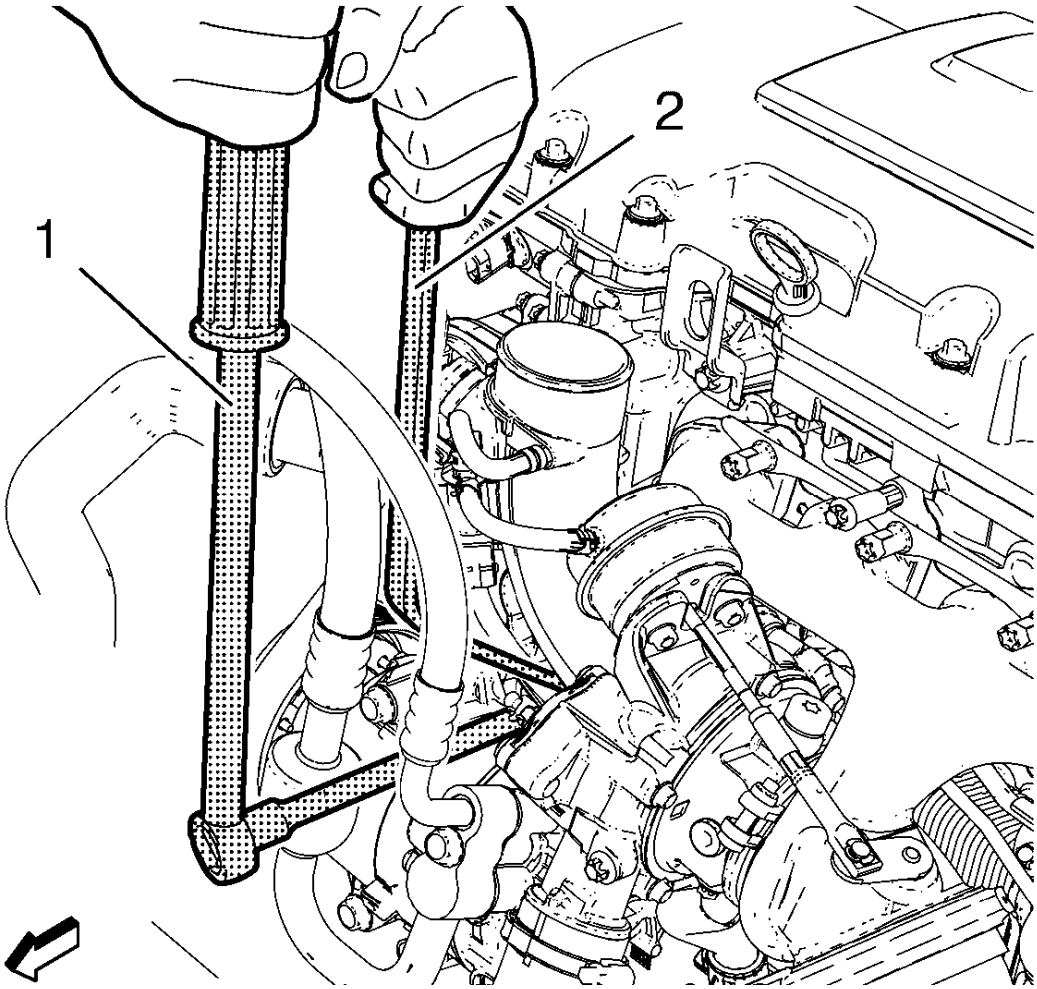

Fig. 258: Ratchet Wrench And Holding Wrench
Courtesy of GENERAL MOTORS COMPANY

NOTE: The EN-49942 holding wrench should be installed in a perpendicular position as shown to ensure a proper installation position of the turbocharger coolant feed pipe.

11. Install the **EN-49942** holding wrench (2) to the turbocharger coolant feed pipe. Guide a ratchet wrench (1) along with an extension through **EN-49942** holding wrench to the turbocharger coolant feed pipe hollow screw.

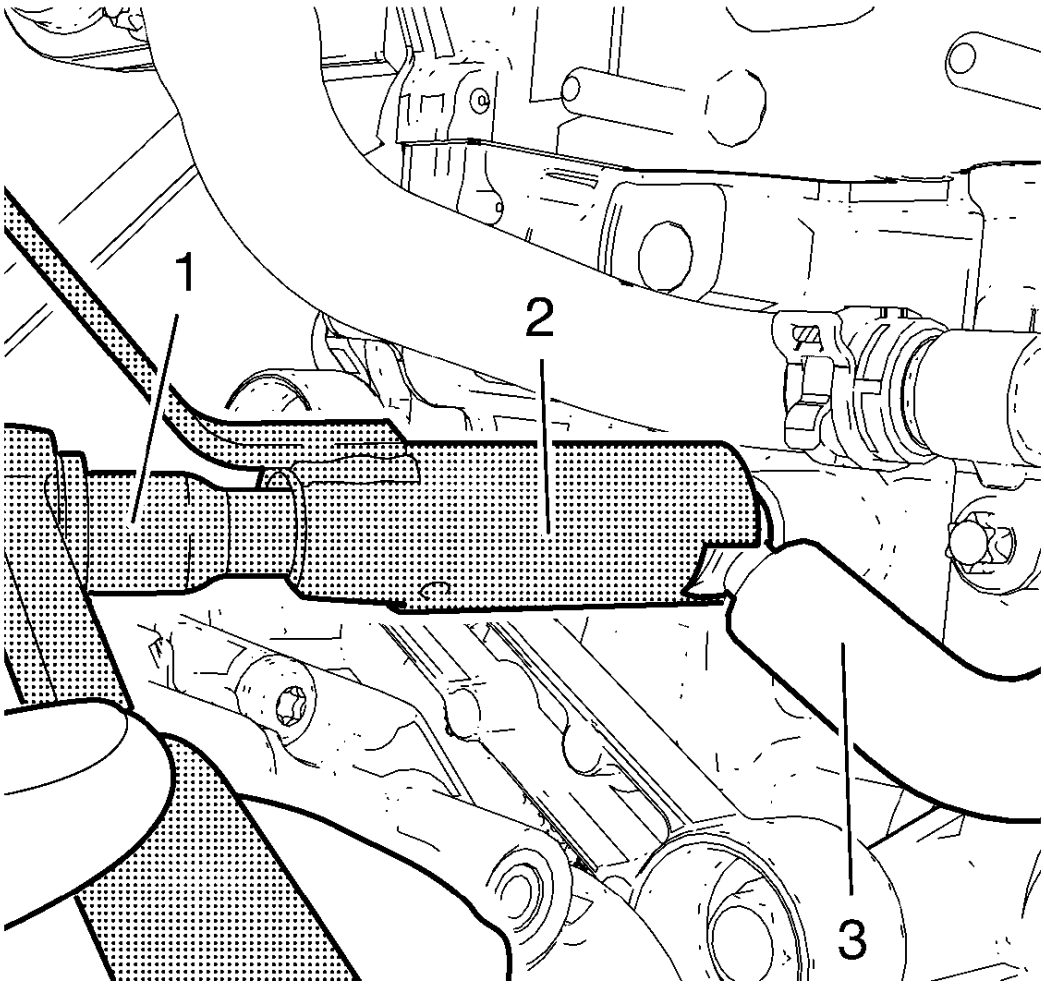

Fig. 259: Ratchet Wrench, Holding Wrench And Coolant Feed Pipe
Courtesy of GENERAL MOTORS COMPANY

NOTE: **EN-49942 holding wrench (2) should be installed to the turbocharger coolant feed pipe as shown. The holding wrench should be installed to avoid twist of the turbocharger coolant feed pipe during the fastening procedure.**

12. Tighten the turbocharger coolant feed pipe hollow screw with ratchet wrench and extension (1) to 30 N.m (22 lb ft).
13. Install the charge air cooler inlet air hose to the turbocharger. Refer to **Charge Air Cooler Inlet Air Hose Replacement** .

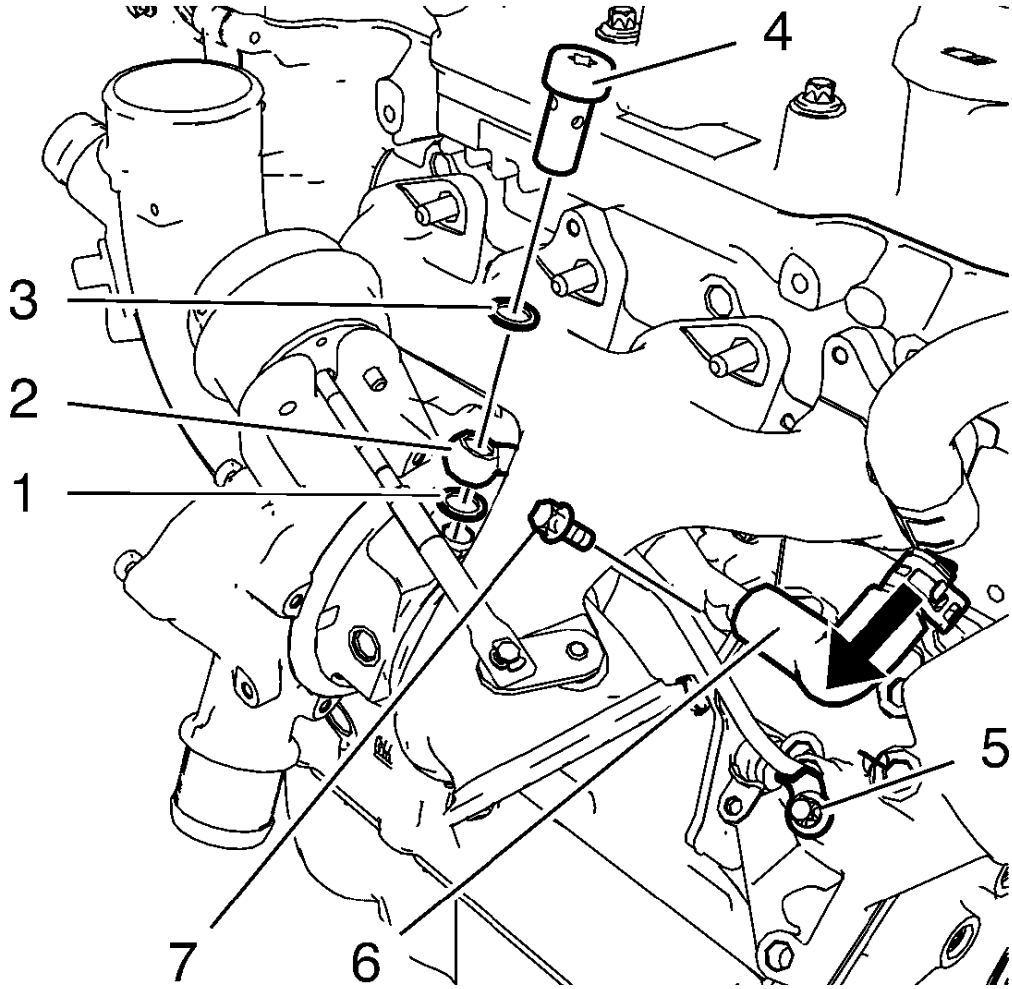

Fig. 260: Turbocharger Oil Feed Pipe Components
Courtesy of GENERAL MOTORS COMPANY

14. Install the turbocharger coolant return pipe bolt (7) and tighten to 8 N.m (71 lb in).
15. Install the turbocharger coolant return hose (6) to the oil cooler inlet pipe.
16. Install the turbocharger coolant return hose clamp.
17. Install the turbocharger oil feed pipe (2) to the oil cooler and the turbocharger.
18. Install the turbocharger oil feed pipe bolt (5).
19. Install the turbocharger oil feed pipe hollow screw (4) along with the 2 NEW seal rings (1) and (3) and tighten to 30 N.m (22 lb ft).
20. Tighten the turbocharger oil feed pipe bolt to 10 N.m (89 lb in).

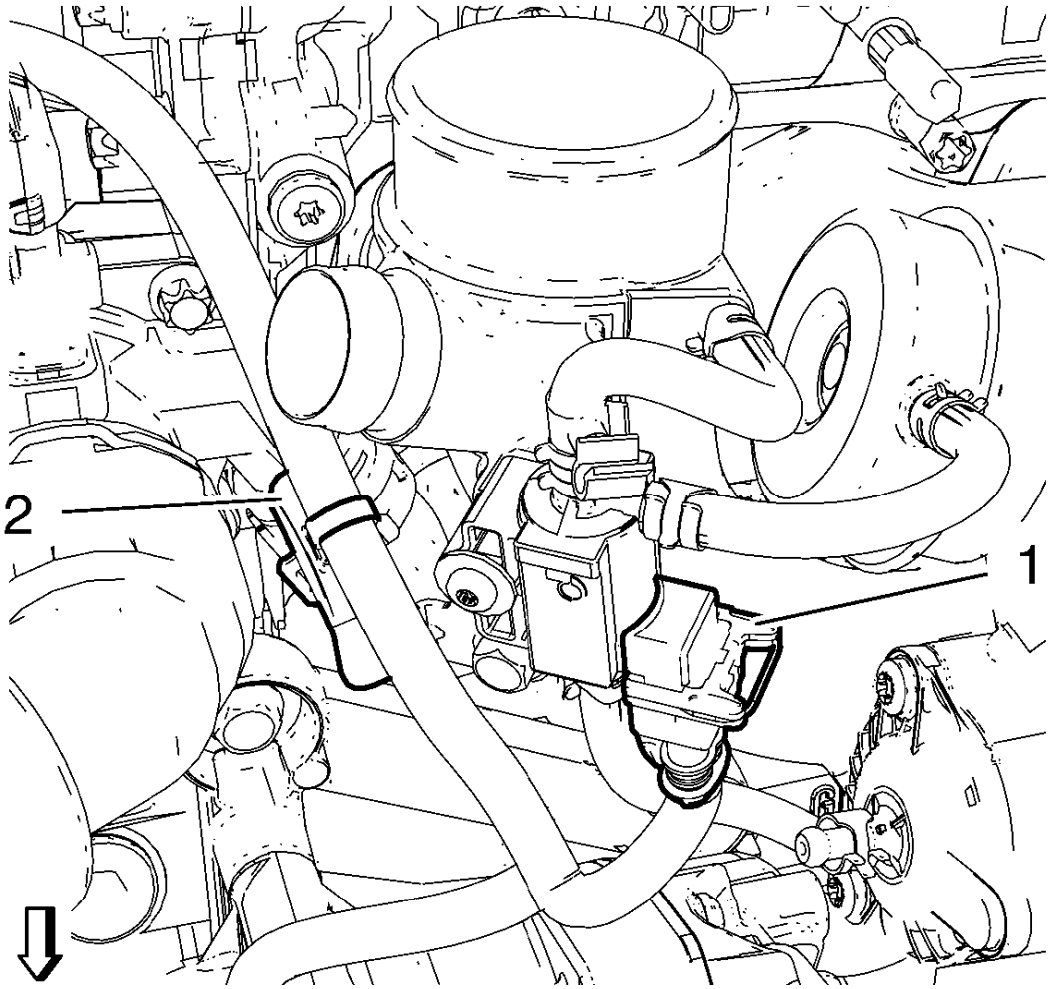

Fig. 261: Turbocharger Wastegate Regulator Solenoid Valve Wiring Harness Connector And Retaining Clip
Courtesy of GENERAL MOTORS COMPANY

21. Connect the turbocharger wastegate regulator solenoid valve wiring harness connector (1) and clip in wiring harness to retainer clip (2).
22. Install the exhaust manifold heat shield. Refer to **Exhaust Manifold Heat Shield Replacement (1.4L LUV)** .
23. Connect the positive crankcase ventilation pipe to the turbocharger. Refer to **Positive Crankcase Ventilation Hose/Pipe/Tube Replacement**.
24. Install the air cleaner outlet duct. Refer to **Air Cleaner Outlet Duct Replacement** .
25. Connect battery negative cable. Refer to **Battery Negative Cable Disconnection and Connection** .
26. Fill the cooling system. Refer to **Cooling System Draining and Filling (Static Fill)** , **Cooling System Draining and Filling (GE-47716 Fill)** .
27. Close the hood.

TURBOCHARGER OIL FEED PIPE REPLACEMENT

Removal Procedure

1. Disconnect the battery negative cable. **Battery Negative Cable Disconnection and Connection** .
2. Remove the exhaust manifold heat shield. Refer to **Exhaust Manifold Heat Shield Replacement (1.4L LUV)** .

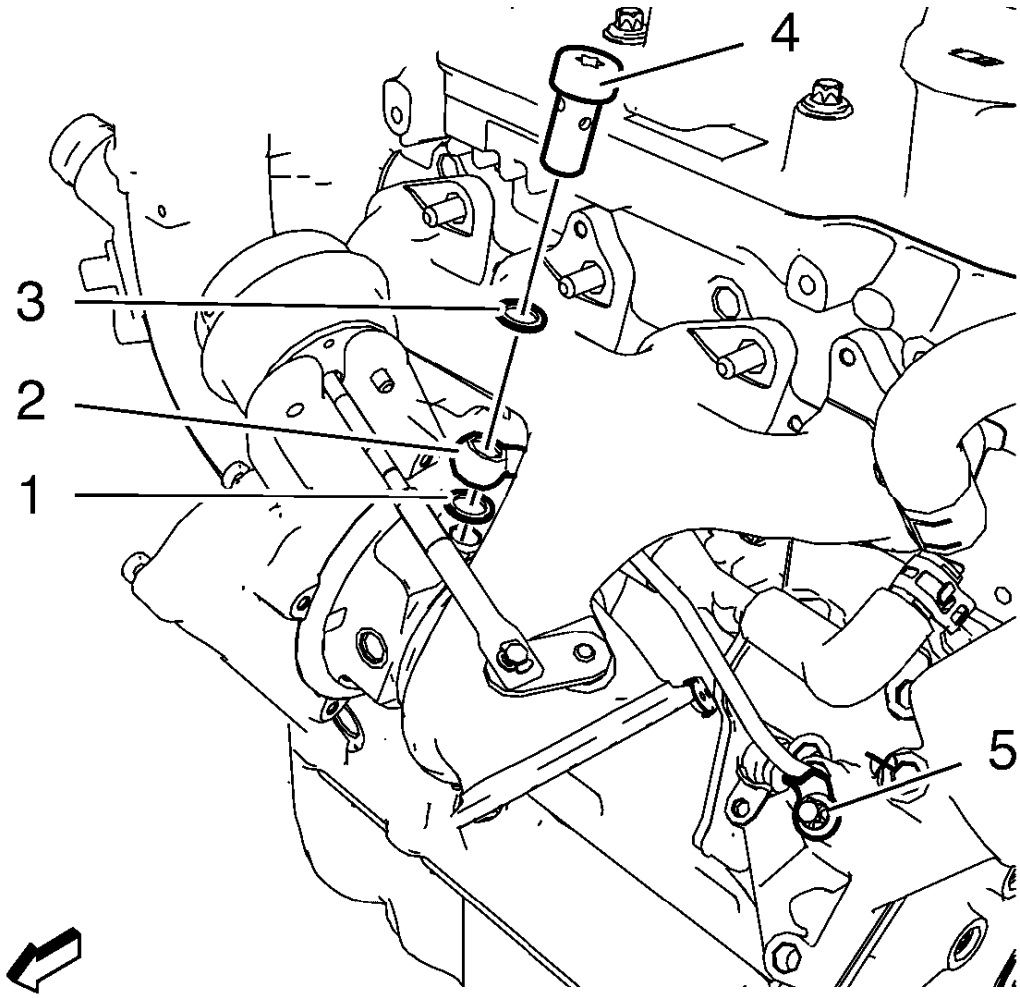

Fig. 262: Turbocharger Oil Feed Pipe Components
Courtesy of GENERAL MOTORS COMPANY

3. Remove the turbocharger oil feed pipe bolt (5).
4. Remove the turbocharger oil feed pipe hollow screw (4) and the 2 seal rings (1, 3).
5. Remove the turbocharger oil feed pipe (2) and the rubber seal ring.
6. Inspect the turbocharger oil feed pipe for damage or restriction. Do NOT attempt to clean or repair the pipe. Replace the pipe if it has damage or a restriction.

Installation Procedure

1. Clean all sealing surfaces.

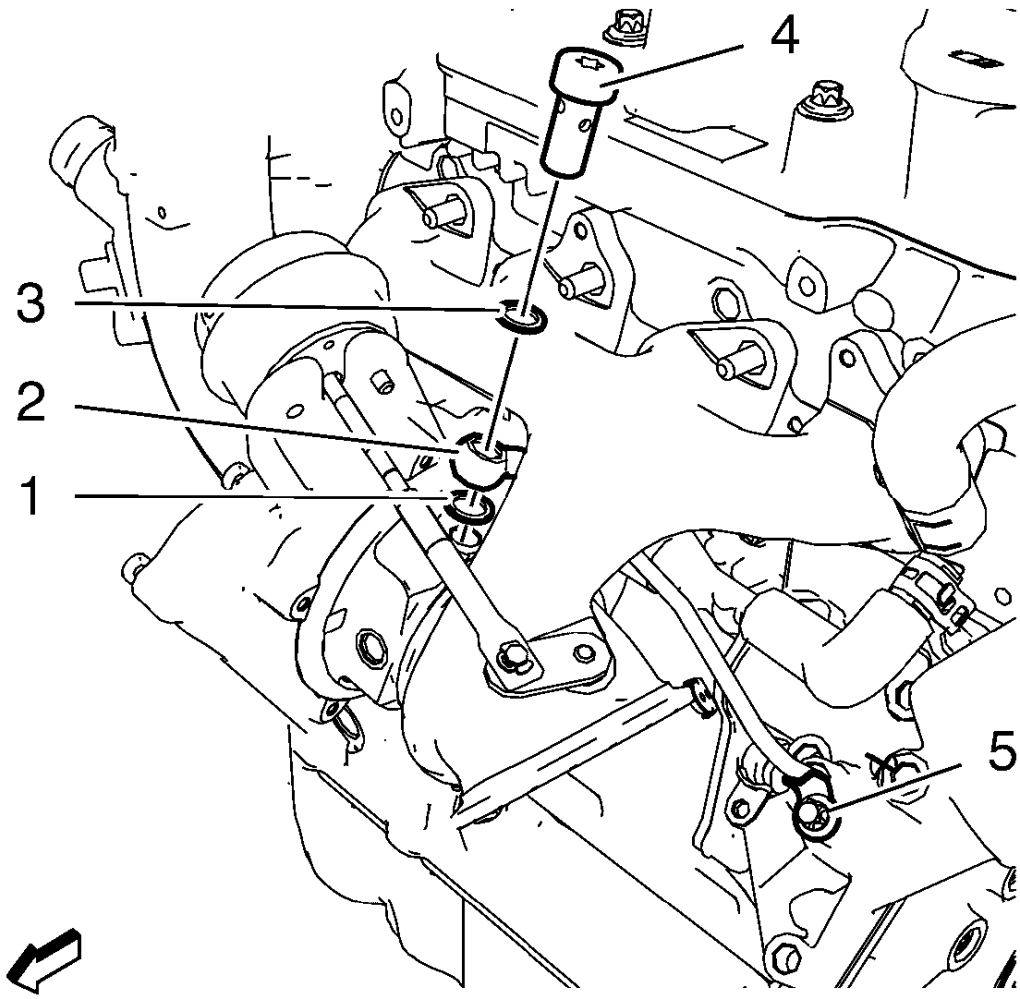

Fig. 263: Turbocharger Oil Feed Pipe Components
Courtesy of GENERAL MOTORS COMPANY

2. Install the turbocharger oil feed pipe (2) along with a NEW rubber seal ring.
3. Install the turbocharger oil feed pipe hollow screw (4) and 2 NEW seal rings (1, 3).

CAUTION: Refer to Fastener Caution .

4. Install the turbocharger oil feed pipe bolt (5) and tighten to 10 N.m (89 lb in).
5. Tighten the turbocharger oil feed pipe hollow screw (4) to 30 N.m (22 lb ft).
6. Install the exhaust manifold heat shield. Refer to **Exhaust Manifold Heat Shield Replacement (1.4L**

LUV) .

7. Connect the battery negative cable. **Battery Negative Cable Disconnection and Connection** .

TURBOCHARGER OIL RETURN PIPE REPLACEMENT

Removal procedure

1. Raise and support the vehicle. **Lifting and Jacking the Vehicle** .

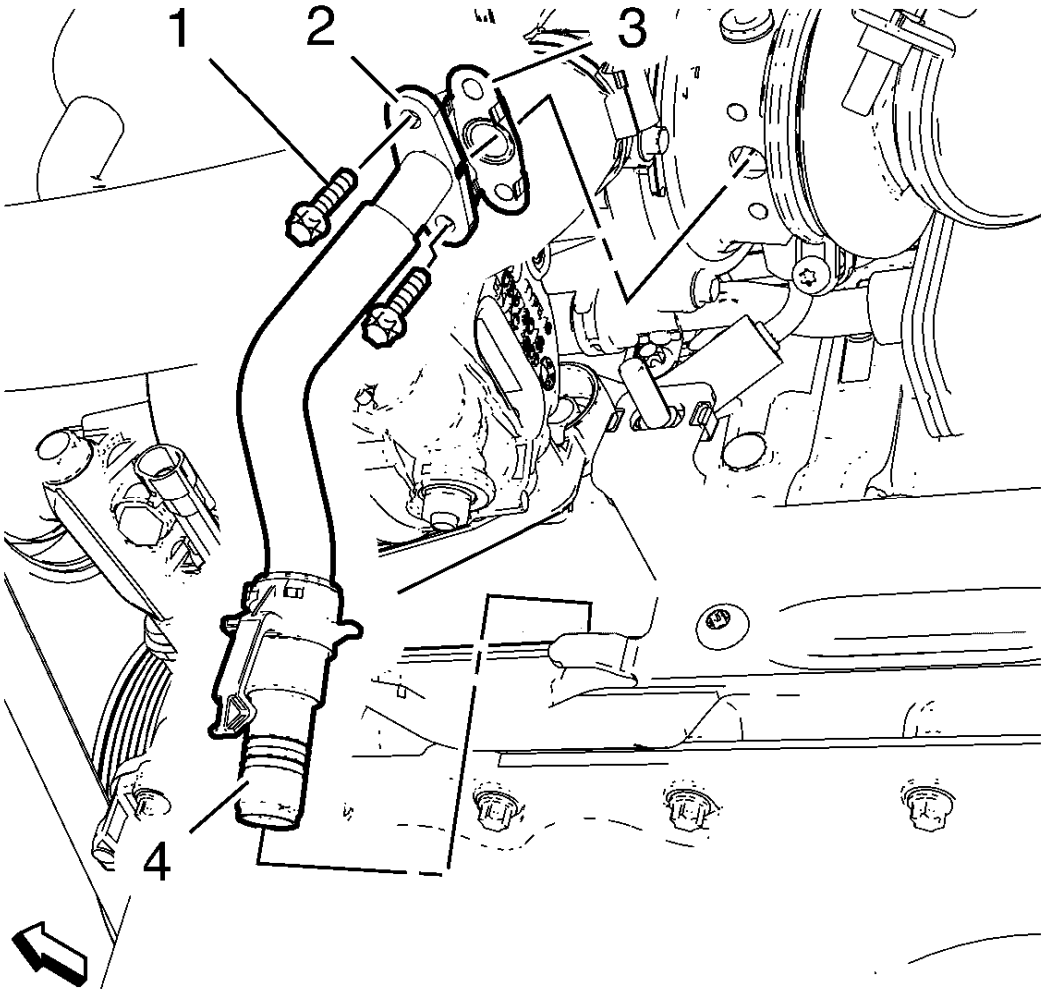

Fig. 264: Turbocharger Oil Return Pipe Components
Courtesy of GENERAL MOTORS COMPANY

NOTE: Simplified Graphic. DO NOT remove the warm up three way catalytic converter.

2. Remove the 2 turbocharger oil return pipe bolts (1).
3. Place a drain pan below the vehicle.

4. Release the turbocharger oil return pipe connector (4) and disconnect the turbocharger oil return pipe from the engine block.
5. Remove the turbocharger oil return pipe (2) and the gasket (3).
6. Inspect the turbocharger oil return pipe for damage or restriction. Do NOT attempt to clean or repair the pipe. Replace the pipe if it has damage or a restriction.

Installation Procedure

1. Clean all sealing surfaces.

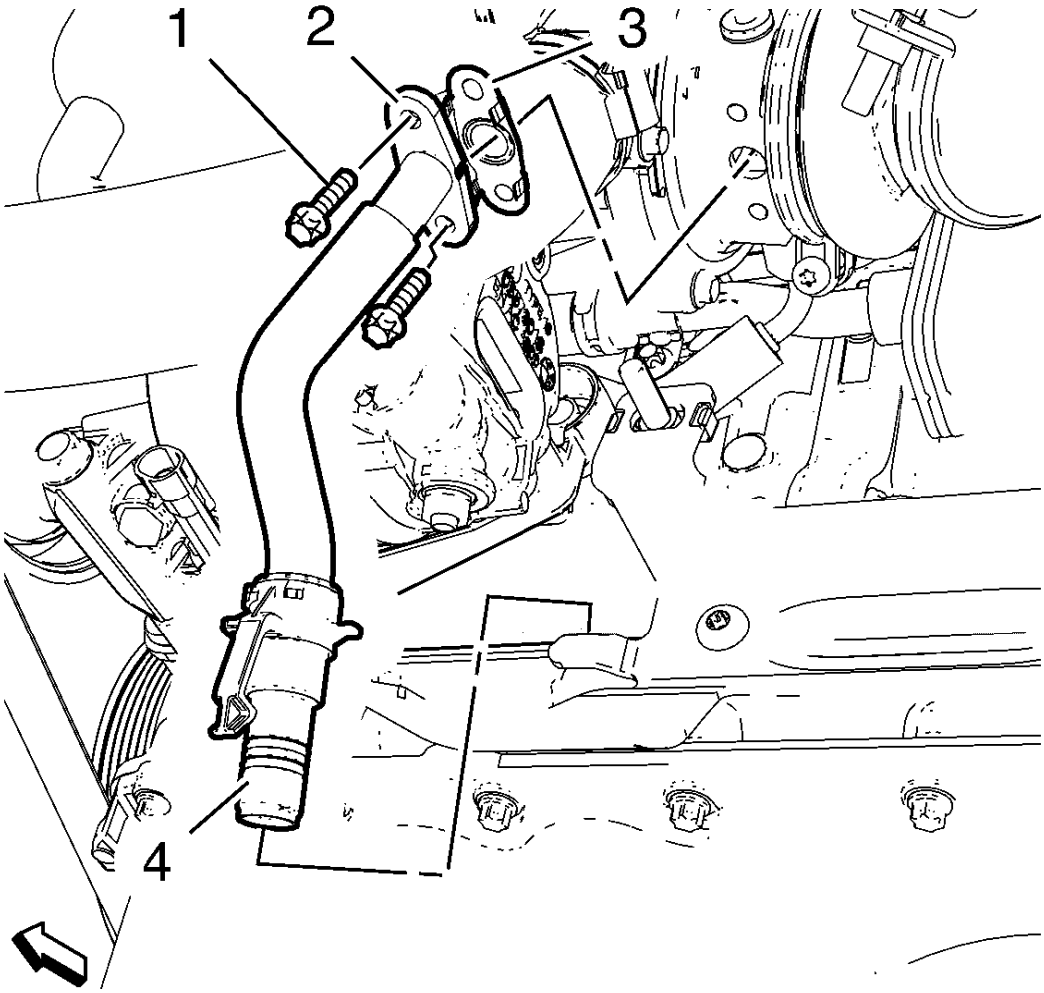

Fig. 265: Turbocharger Oil Return Pipe Components
Courtesy of GENERAL MOTORS COMPANY

2. Install the turbocharger oil return pipe (2) in compound with a NEW gasket (3) and connect to the engine block.

CAUTION: Refer to Fastener Caution .

3. Install the 2 turbocharger oil return pipe bolts (1) and tighten to 8 N.m (71 lb in).
4. Lower and unsupport the vehicle. Refer to **Lifting and Jacking the Vehicle** .
5. Check engine oil level.

PISTON, CONNECTING ROD, AND BEARING REPLACEMENT

Special Tools

EN-470-B Angular Torque Wrench

For equivalent regional tools, refer to **Special Tools**.

Removal Procedure

1. Open the hood.
2. Remove the cylinder head. Refer to **Cylinder Head Replacement**.
3. Raise and support the vehicle. Refer to **Lifting and Jacking the Vehicle** .
4. Remove the oil pan. Refer to **Oil Pan Replacement**.

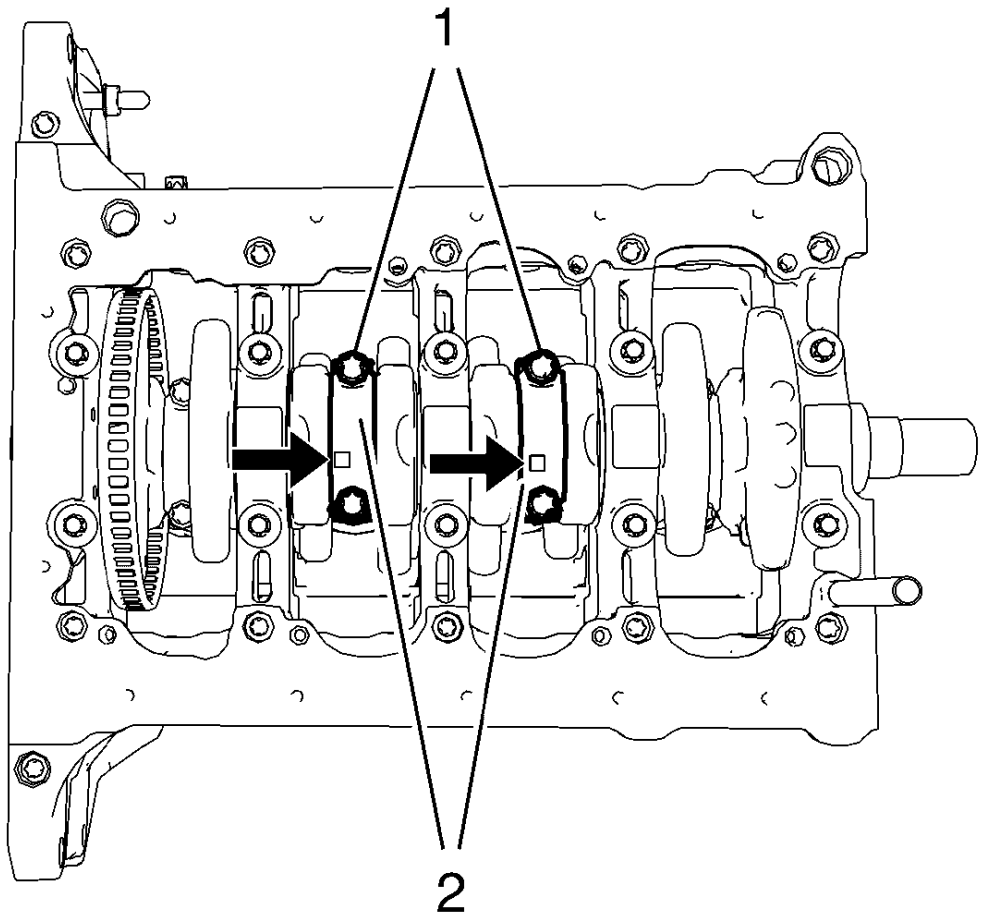

Fig. 266: Rod Bearing Caps And Bolts
Courtesy of GENERAL MOTORS COMPANY

NOTE: Mark the installation position of the connecting rod bearing caps. The connecting rod bearings and bearing caps must not be interchanged with other connecting rods.

5. Remove and DISCARD the 4 connecting rod bearing cap bolts (1) of cylinder 2 and 3.
6. Remove the 2 connecting rod bearing caps (2) and the 2 connecting rod bearings of cylinder 2 and 3.
7. Rotate the crankshaft 180 degrees.

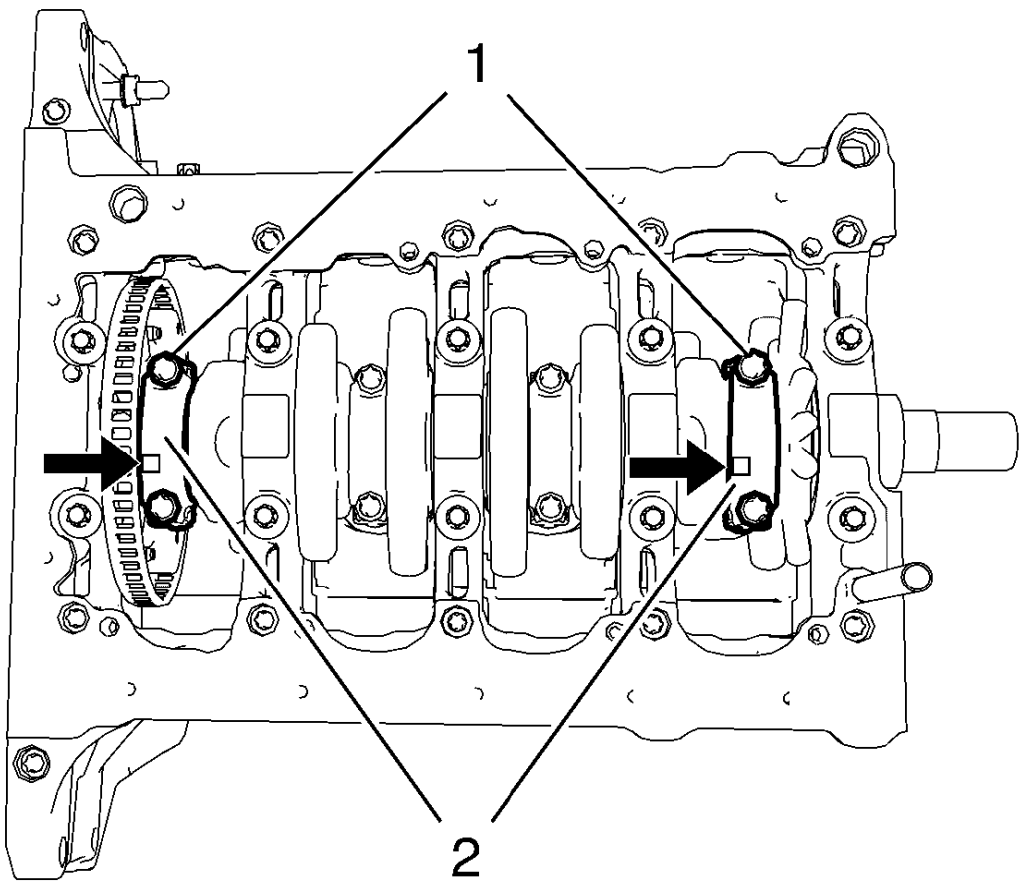

Fig. 267: Rod Bearing Caps And Bolts
Courtesy of GENERAL MOTORS COMPANY

8. Remove and DISCARD the 4 connecting rod bearing cap bolts (1) of cylinder 1 and 4.
9. Remove the 2 connecting rod bearing caps (2) and the 2 connecting rod bearings of cylinder 1 and 4.

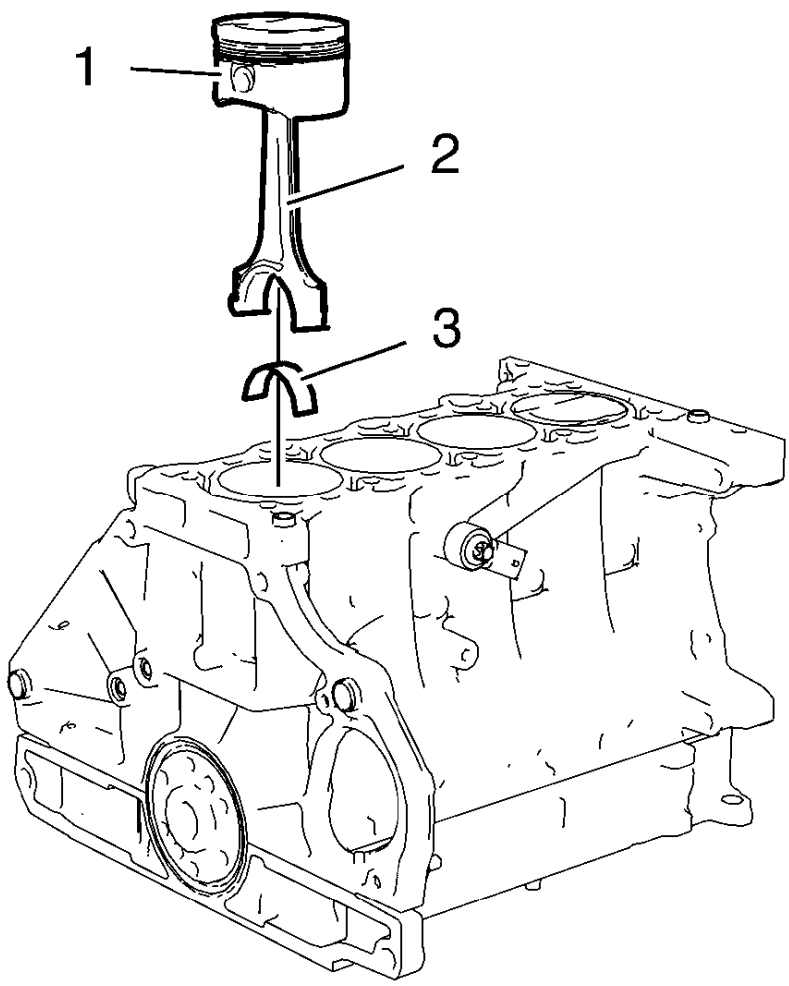

Fig. 268: Pistons, Connecting Rods And Bearings
Courtesy of GENERAL MOTORS COMPANY

10. Remove the 4 pistons (1) and connecting rods (2) and the 4 upper connecting rod bearings (3) from the cylinder block.

Installation Procedure

1. For cleaning and inspection procedure, refer to **Piston, Connecting Rod, and Bearing Cleaning and Inspection**.
2. Assemble the NEW piston and connecting rod. Refer to **Piston and Connecting Rod Assemble**.

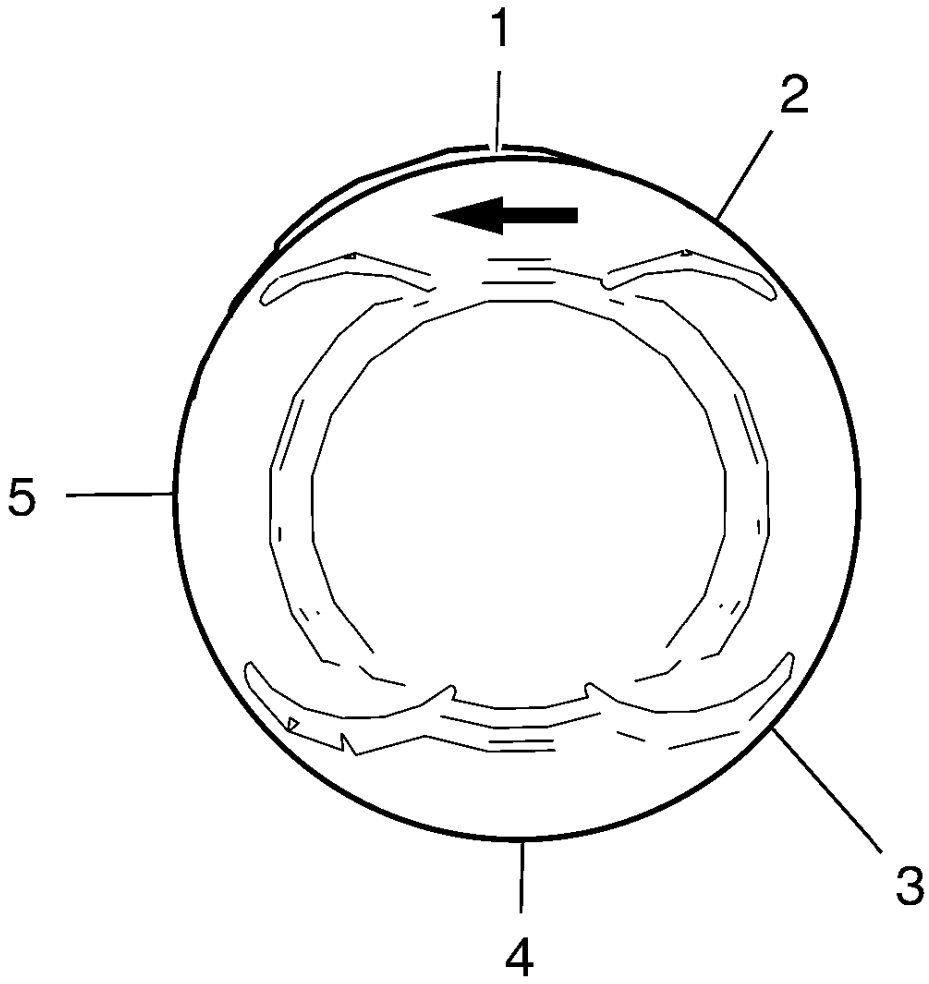

Fig. 269: Piston Ring Joint Adjustment Points
Courtesy of GENERAL MOTORS COMPANY

3. Adjust the piston ring joints as followed:
    1. Upper compression ring (1)
    2. Lower compression ring (4)
    3. Oilring (2) or (3)
    4. Oilring spacer (5)

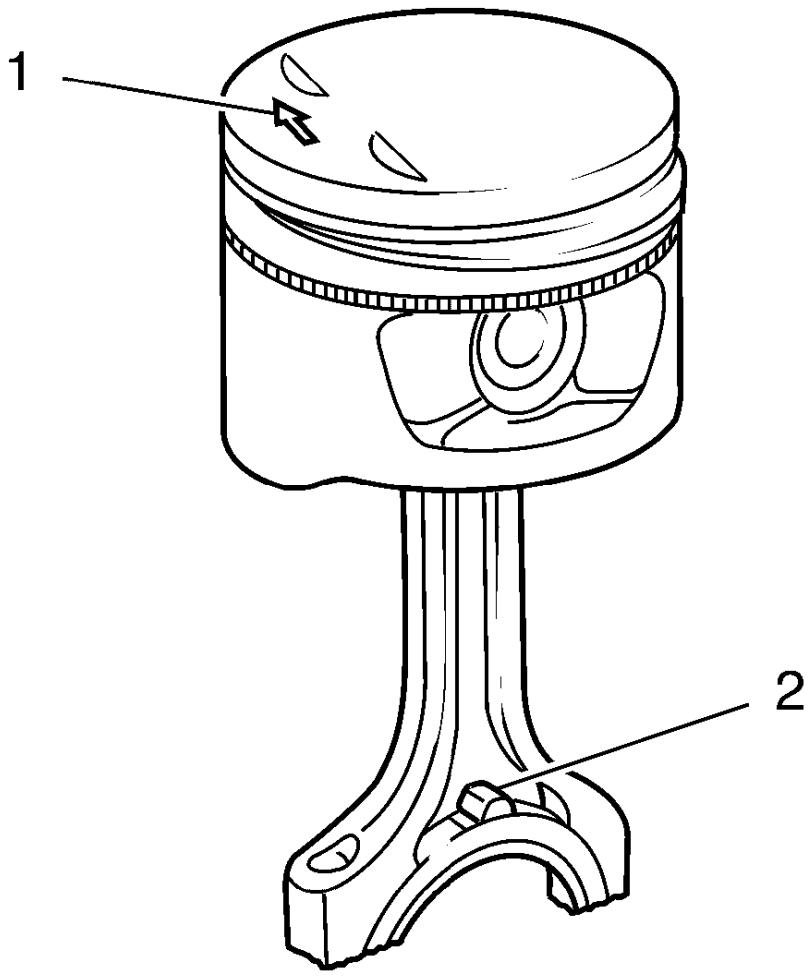

Fig. 270: Rods And Arrow On Piston Head
Courtesy of GENERAL MOTORS COMPANY

4. The arrow (1) on the piston head must point to the timing side.
5. The markings on the connecting rods (2) must point to the transmission side.

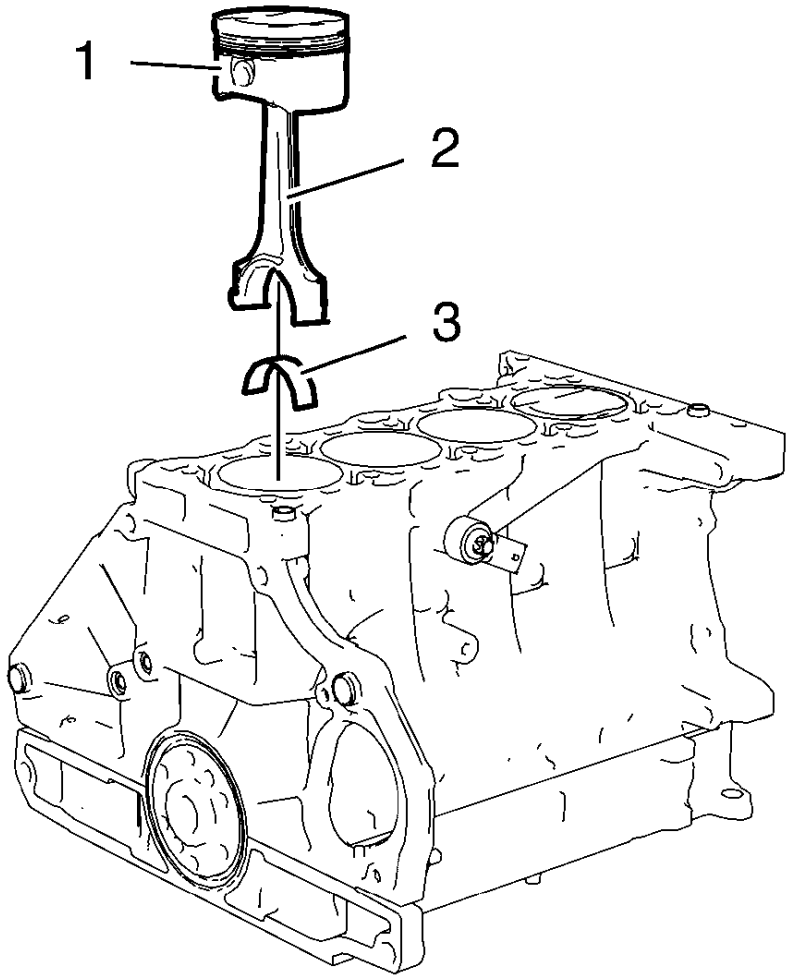

Fig. 271: Pistons, Connecting Rods And Bearings
Courtesy of GENERAL MOTORS COMPANY

6. Lubricate the piston rings, piston, inner cylinder bore surface and a piston ring compressor with clean engine oil.
7. Install the piston ring compressor in order to compress the piston rings.
8. Install the pistons (1) in compound with connecting rods (2) and upper connecting rod bearings (3) to the engine block and to the crankshaft.

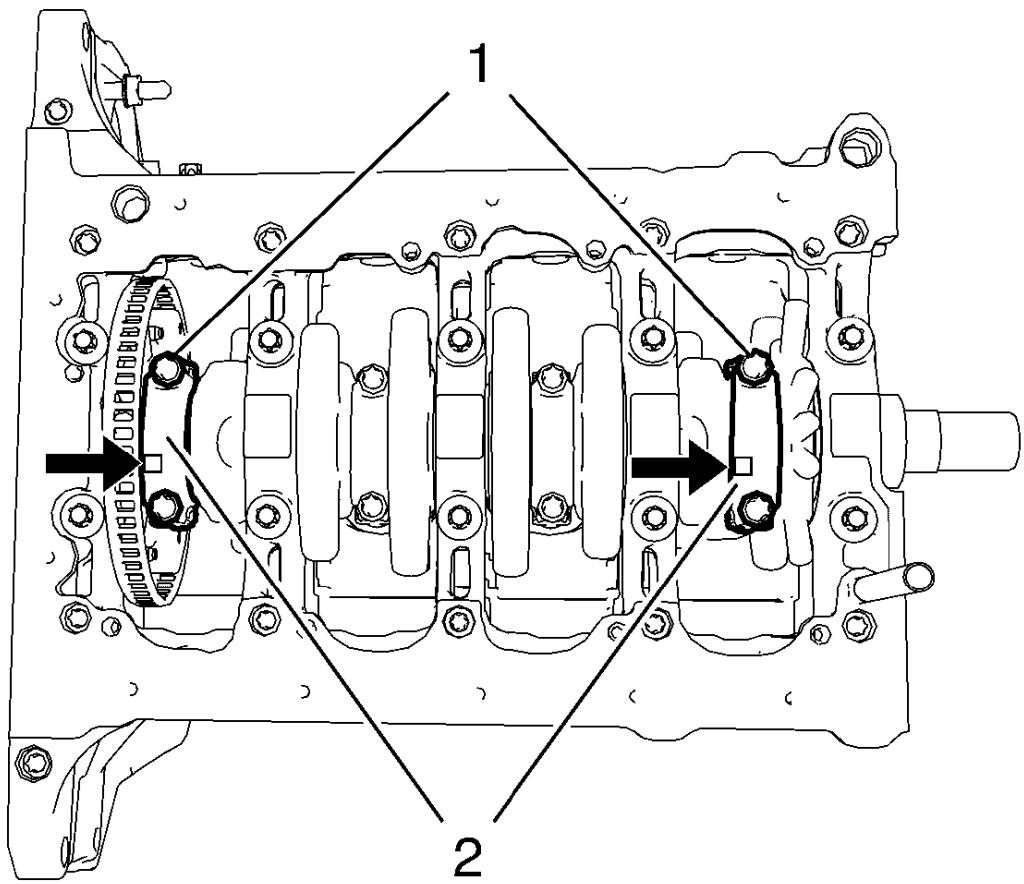

Fig. 272: Rod Bearing Caps And Bolts
Courtesy of GENERAL MOTORS COMPANY

NOTE: The flarings (arrows) on the connecting rod bearing caps must point to the transmission side. The connecting rod bearing caps must be installed in their original position.

9. Install the 2 connecting rod bearings and the 2 connecting rod bearing caps (2) of cylinder 1 and 4.

CAUTION: Refer to Fastener Caution .

CAUTION: Refer to Torque-to-Yield Fastener Caution .

10. Install the 4 NEW connecting rod bearing cap bolts (1) and tighten in the following sequence:

1. Tighten the connecting rod bearing cap bolts to 25 N.m (18 lb ft).
2. Tighten the connecting rod bearing cap bolts an additional 45 degrees. Use **EN-470-B** wrench.

11. Rotate the crankshaft 180 degrees.

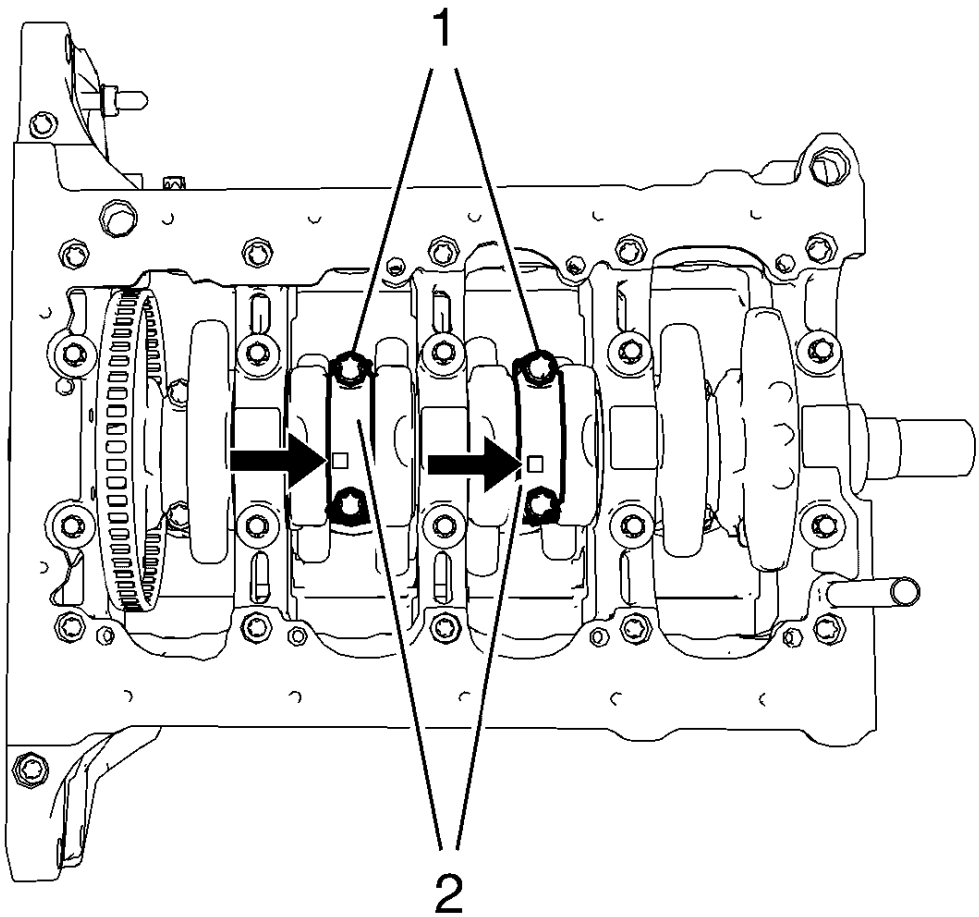

Fig. 273: Rod Bearing Caps And Bolts
Courtesy of GENERAL MOTORS COMPANY

NOTE: The flarings (arrows) on the connecting rod bearing caps must point to the transmission side. The connecting rod bearing caps must be installed in their original position.

12. Install the 2 connecting rod bearings and the 2 connecting rod bearing caps (2) of cylinder 3 and 2.

CAUTION: Refer to Fastener Caution .

13. Install the 4 NEW connecting rod bearing cap bolts (1) and tighten in the following sequence:
    1. Tighten the connecting rod bearing cap bolts to 25 N.m (18 lb ft).
    2. Tighten the connecting rod bearing cap bolts an additional 45 degrees. Use **EN-470-B** wrench.
14. Install the oil pan. Refer to **Oil Pan Replacement**.
15. Lower the vehicle.
16. Install the cylinder head. Refer to **Cylinder Head Replacement**.
17. Close the hood.

CAMSHAFT COVER REPLACEMENT

Removal Procedure

1. Open the hood.
2. Remove ignition coil. Refer to **Ignition Coil Replacement** .
3. Remove the positive crankcase ventilation pipe from camshaft cover. Refer to **Positive Crankcase Ventilation Hose/Pipe/Tube Replacement**.

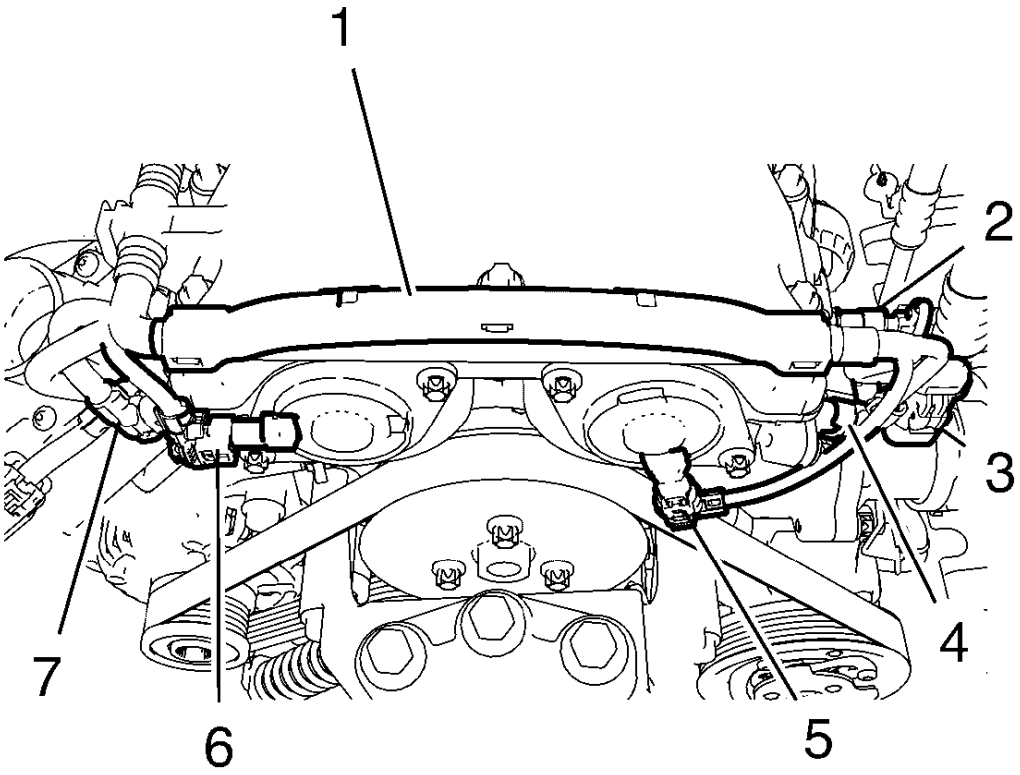

Fig. 274: Wiring Harnesses And Plugs
Courtesy of GENERAL MOTORS COMPANY

4. Remove engine control module wiring harness (1) from camshaft cover.
    - Disconnect intake camshaft position sensor wiring harness plug (7).
    - Disconnect intake camshaft position actuator solenoid valve wiring harness plug (6).
    - Disconnect exhaust camshaft position sensor wiring harness plug (4).
    - Disconnect exhaust camshaft position actuator solenoid valve wiring harness plug (5).
    - Disconnect engine coolant temperature sensor wiring harness plug (3).
    - Disconnect engine oil pressure indicator switch wiring harness plug (2).
    - Unclip engine control module wiring harness plug from camshaft cover and lay aside.

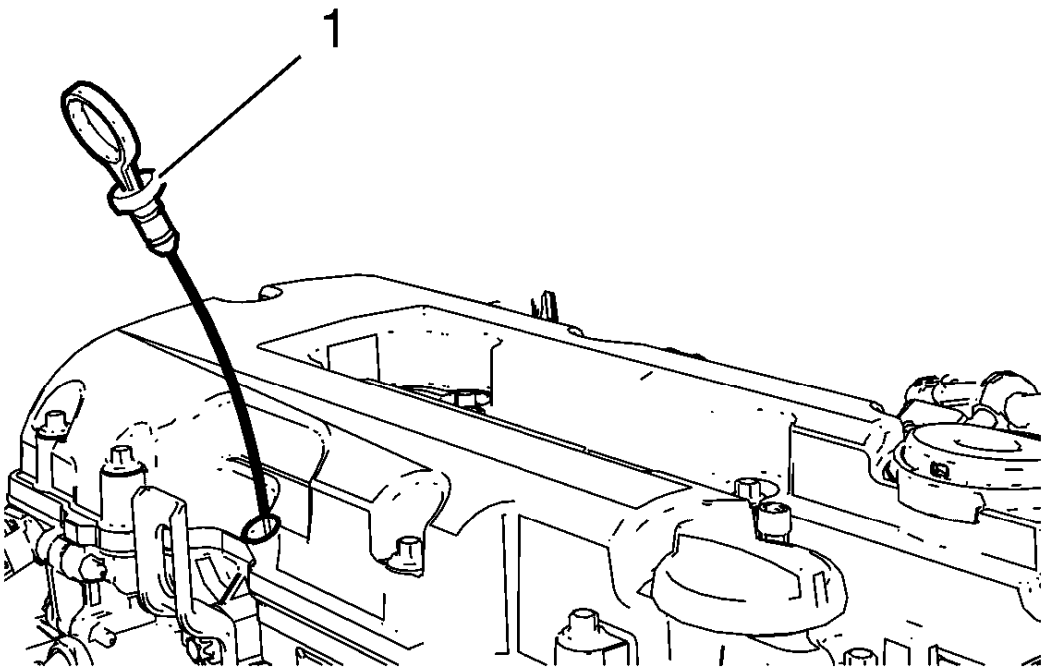

Fig. 275: Engine Oil Level Indicator
Courtesy of GENERAL MOTORS COMPANY

5. Remove the oil level indicator (1).

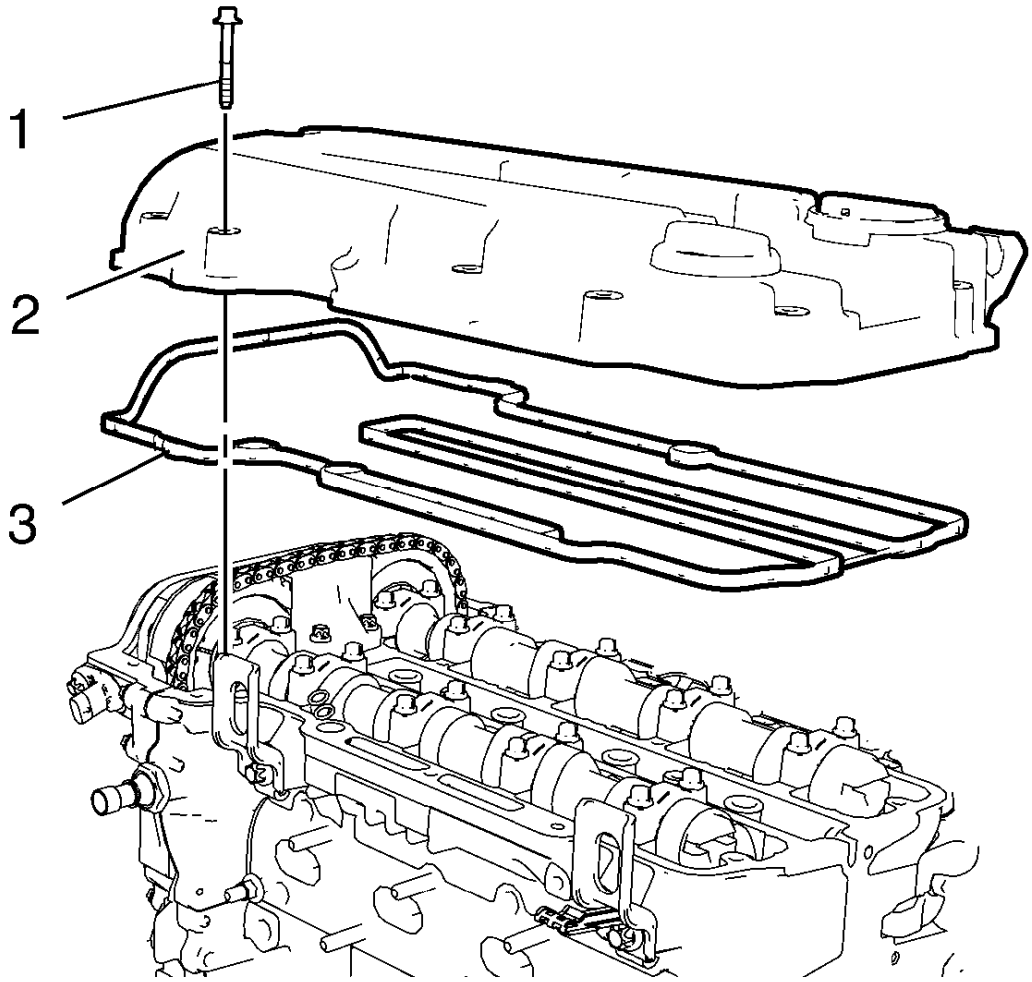

Fig. 276: Camshaft Cover And Gasket
Courtesy of GENERAL MOTORS COMPANY

6. Remove the 15 camshaft cover bolts (1).
7. Remove the camshaft cover (2) and the camshaft cover gasket (3).

Installation Procedure

1. Clean the sealing surfaces.

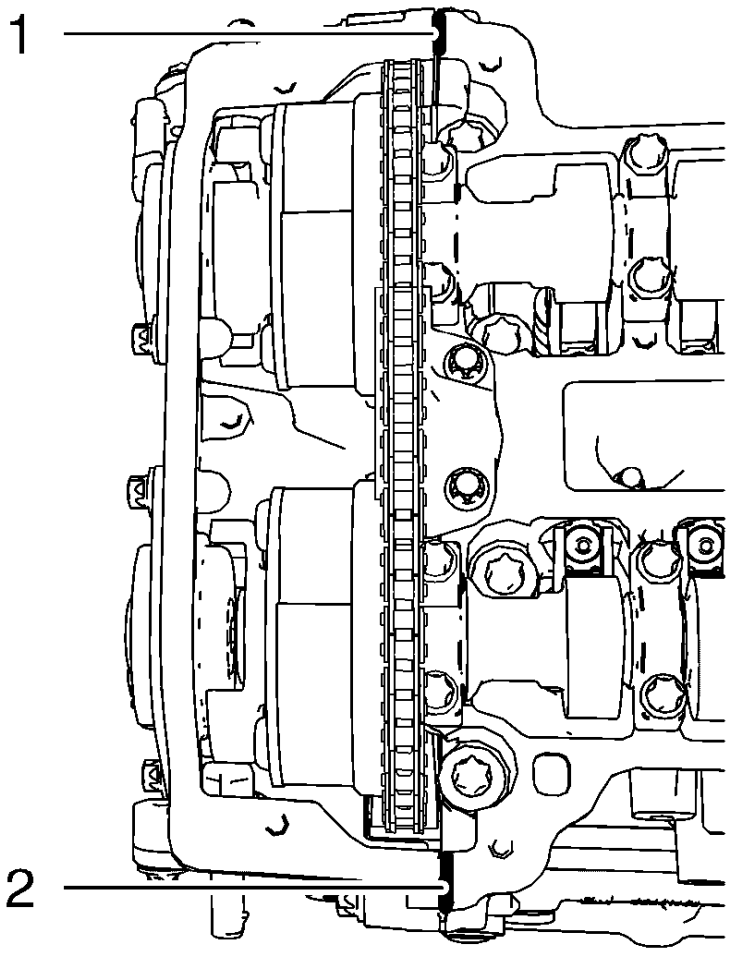

Fig. 277: Sealing Compound Application Areas
Courtesy of GENERAL MOTORS COMPANY

NOTE: The thickness of the sealing bead should be 2 mm (0.0787 in).

2. Apply sealing compound to areas (1) and (2). Refer to **Adhesives, Fluids, Lubricants, and Sealers**.

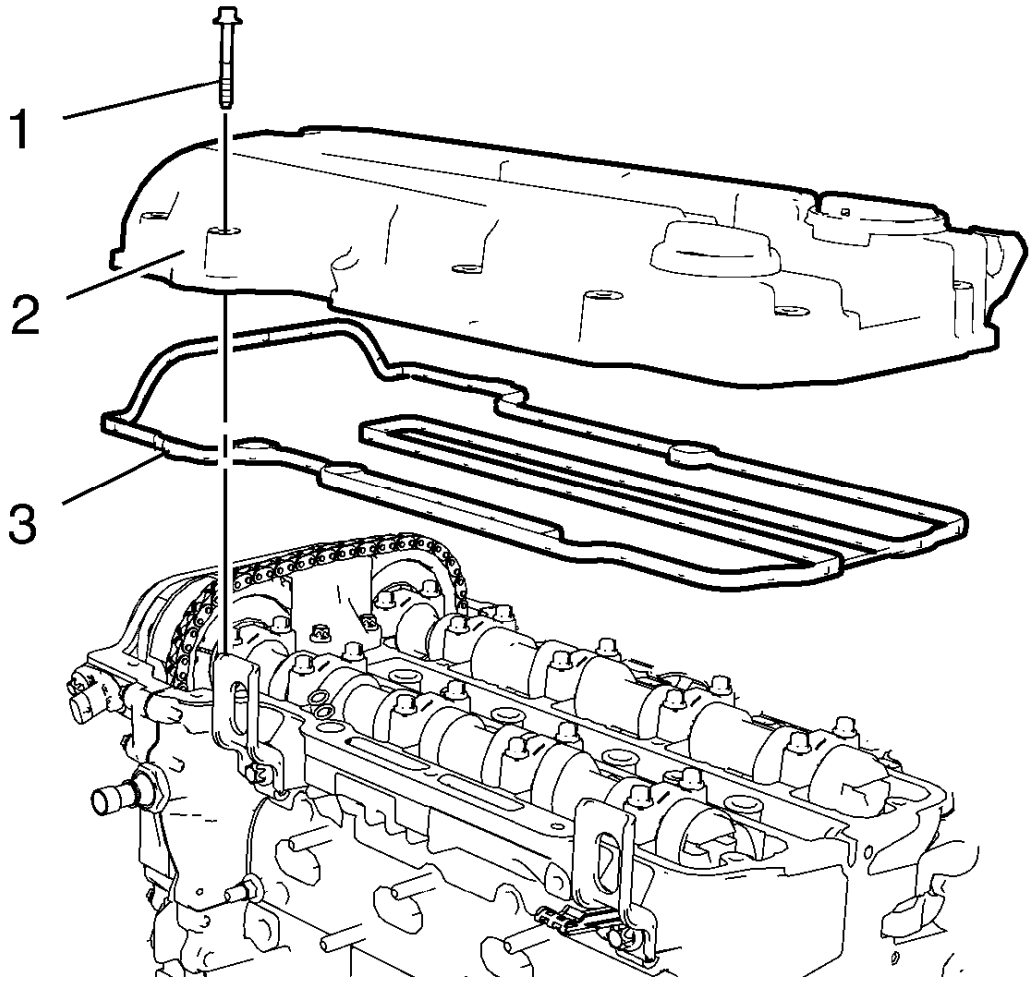

Fig. 278: Camshaft Cover And Gasket
Courtesy of GENERAL MOTORS COMPANY

NOTE: The installation procedure should not take longer than 10 minutes.

3. Install the camshaft cover (2) and a NEW gasket (3).
4. Install the 15 camshaft cover bolts (1).

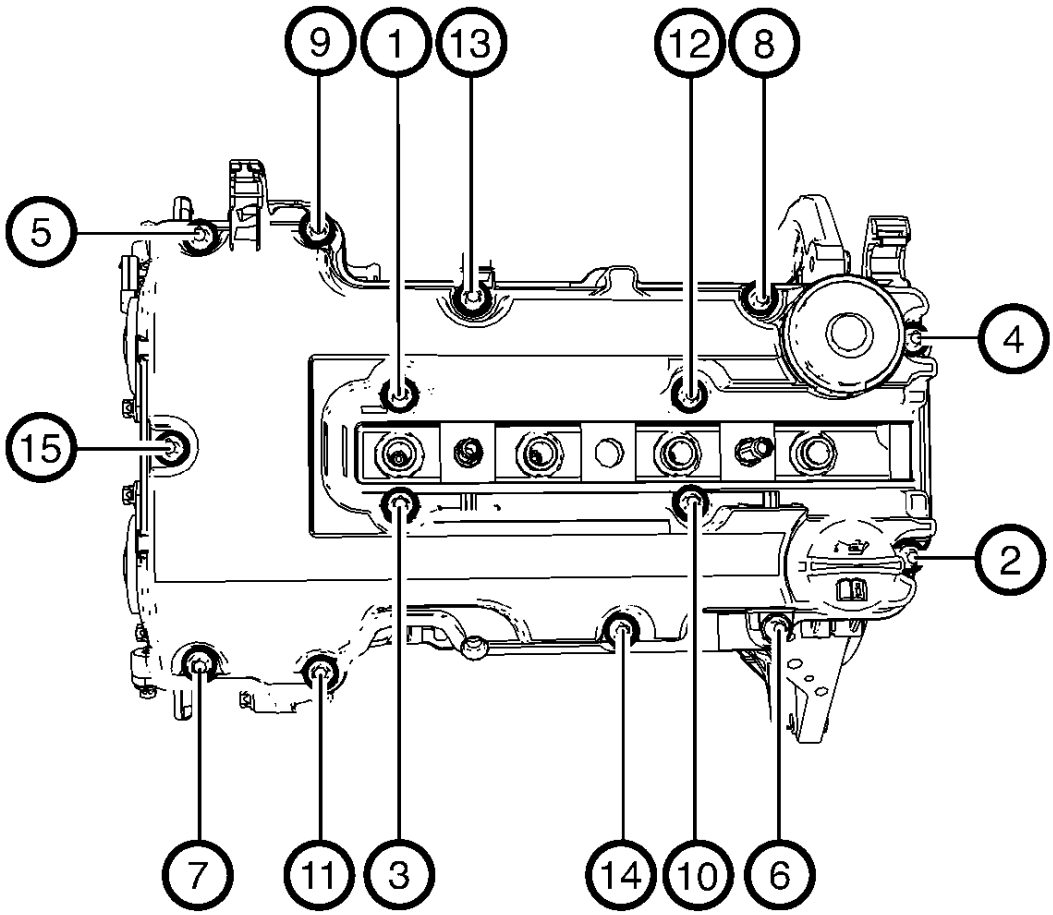

Fig. 279: Camshaft Cover Bolts Tightening Sequence
Courtesy of GENERAL MOTORS COMPANY

CAUTION: Refer to Fastener Caution .

5. Tighten the 15 camshaft cover bolts in a sequence as shown to 8 N.m (71 lb in).

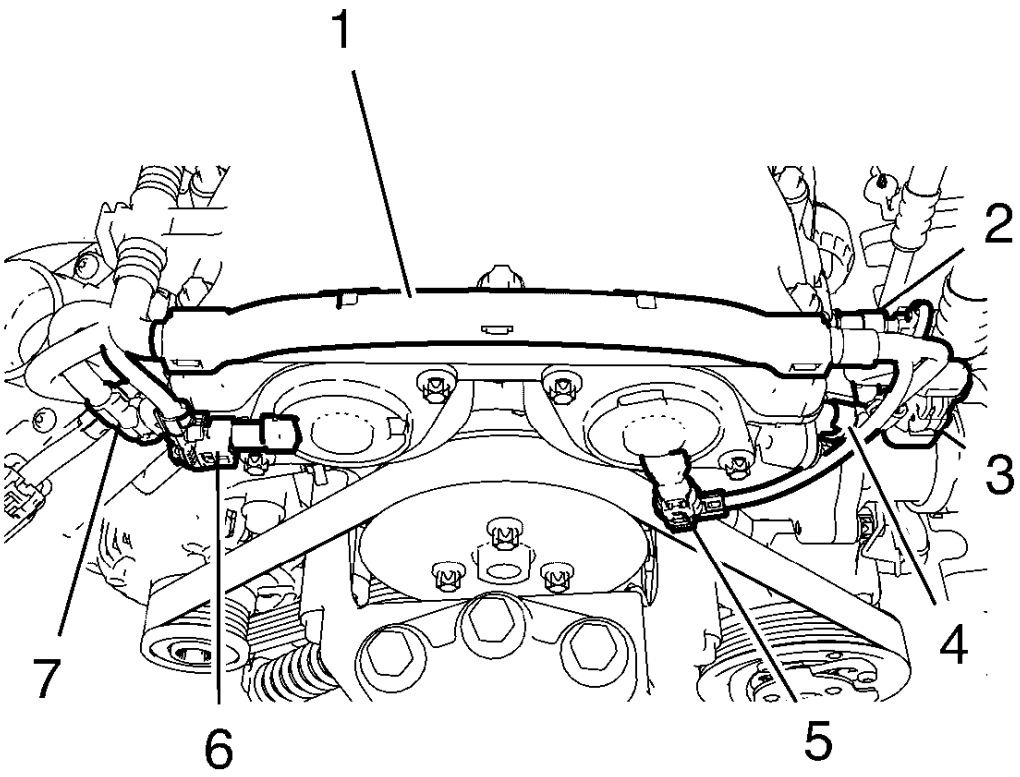

Fig. 280: Wiring Harnesses And Plugs
Courtesy of GENERAL MOTORS COMPANY

6. Install engine control module wiring harness (1) to camshaft cover.
    - Clip engine control module wiring harness plug to camshaft cover.
    - Connect intake camshaft position sensor wiring harness plug (7).
    - Connect intake camshaft position actuator solenoid valve wiring harness plug (6).
    - Connect exhaust camshaft position sensor wiring harness plug (4).
    - Connect exhaust camshaft position actuator solenoid valve wiring harness plug (5).
    - Connect engine coolant temperature sensor wiring harness plug (3).
    - Connect engine oil pressure indicator switch wiring harness plug (2).
7. Install ignition coil. Refer to **Ignition Coil Replacement** .
8. Install the positive crankcase ventilation pipe to camshaft cover. Refer to **Positive Crankcase Ventilation Hose/Pipe/Tube Replacement**.
9. Check and correct engine oil level.

10. Close the hood.

INTAKE CAMSHAFT REPLACEMENT

Removal Procedure

1. Remove the camshaft intake sprocket. Refer to **Camshaft Intake Sprocket Replacement**.

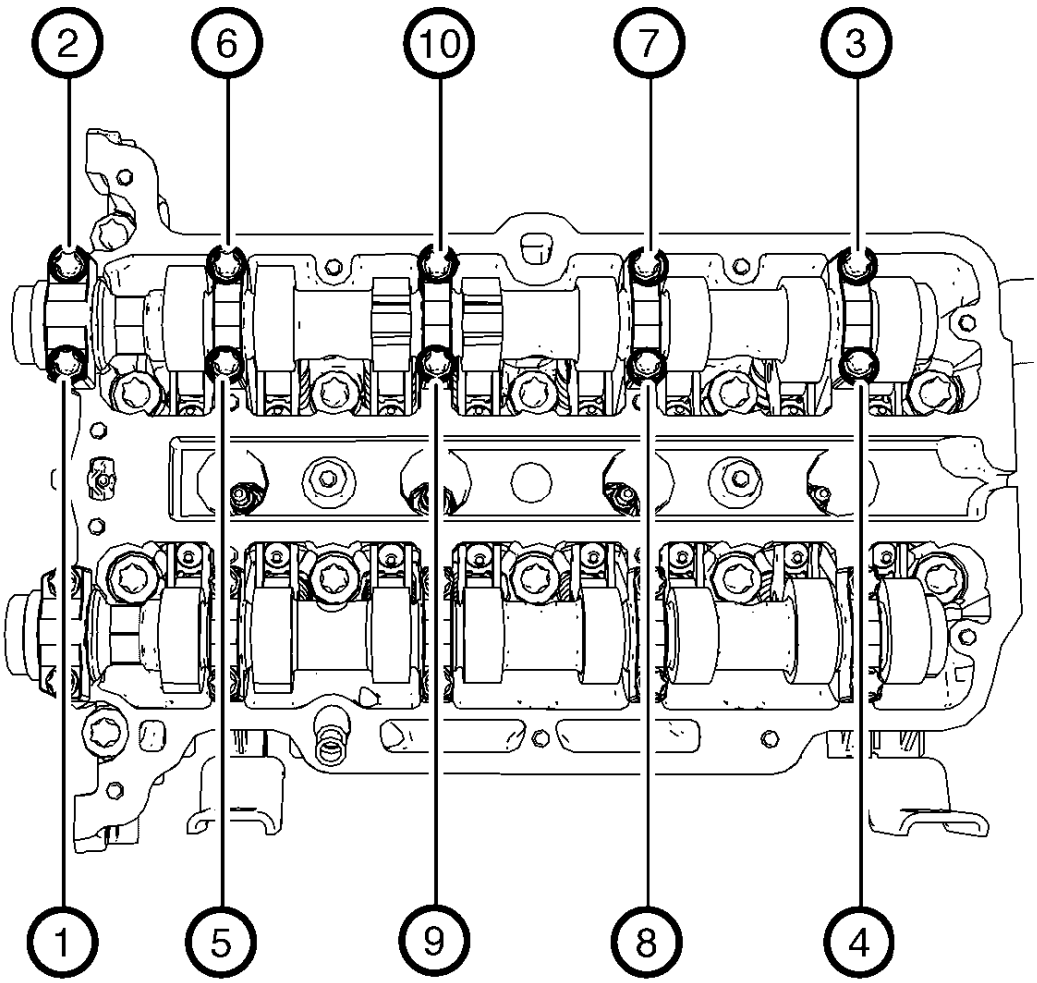

Fig. 281: Intake Camshaft Bearing Cap Bolts Removal Sequence
Courtesy of GENERAL MOTORS COMPANY

2. Remove the camshaft bearing cap bolts in a spiral sequence as shown one turn at a time until there is no spring tension pushing on the camshaft.

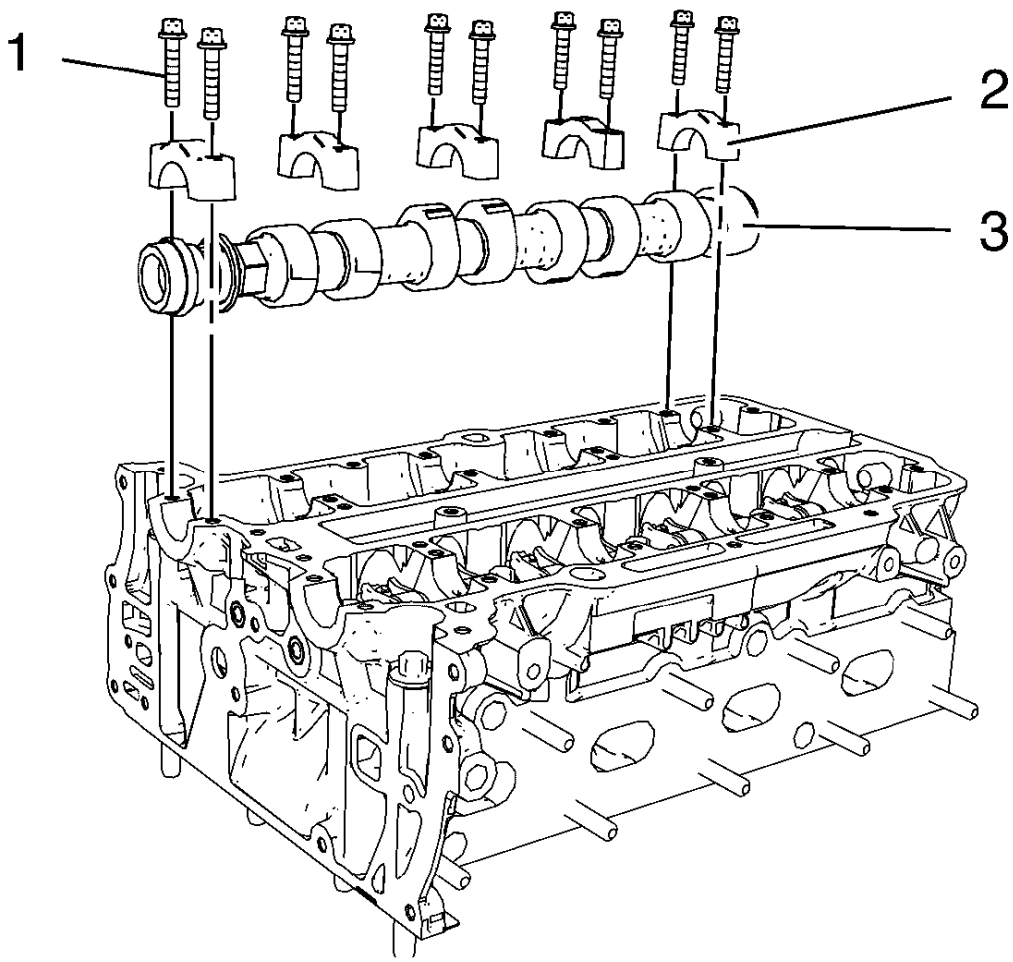

Fig. 282: Intake Camshaft, Camshaft Bearing Caps And Bolts
Courtesy of GENERAL MOTORS COMPANY

NOTE: Mind the markings on the camshaft bearing caps to ensure they will be installed in the same position.

3. Remove the 10 camshaft bearing cap bolts (1).
4. Remove the 5 camshaft bearing caps (2).
5. Remove the intake camshaft (3).

Installation Procedure

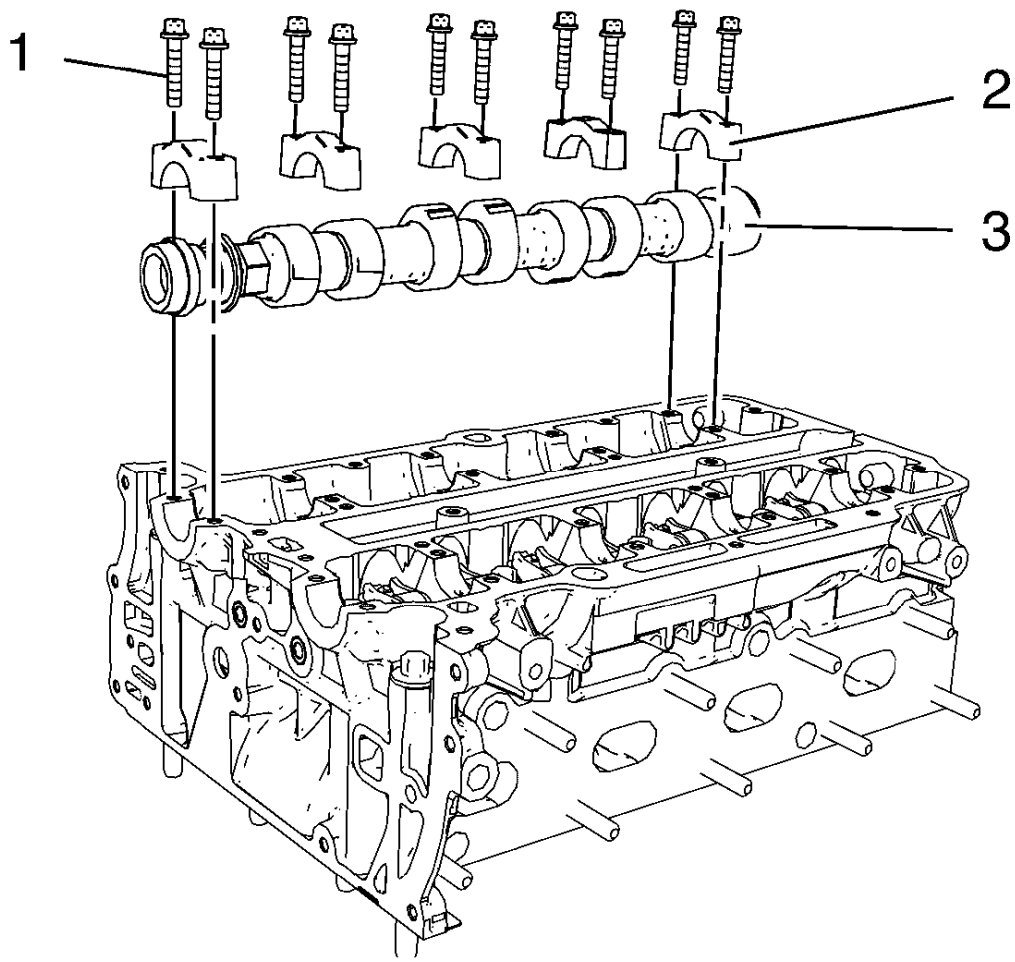

Fig. 283: Intake Camshaft, Camshaft Bearing Caps And Bolts
Courtesy of GENERAL MOTORS COMPANY

NOTE: Mind the markings on the camshaft bearing caps. Camshaft bearing caps should be installed in their original position.

1. Lubricate camshaft and camshaft bearing caps with engine oil.
2. Install the intake camshaft (3).
3. Install the 5 camshaft bearing caps (2).
4. Install the 10 camshaft bearing cap bolts (1) and handtighten.

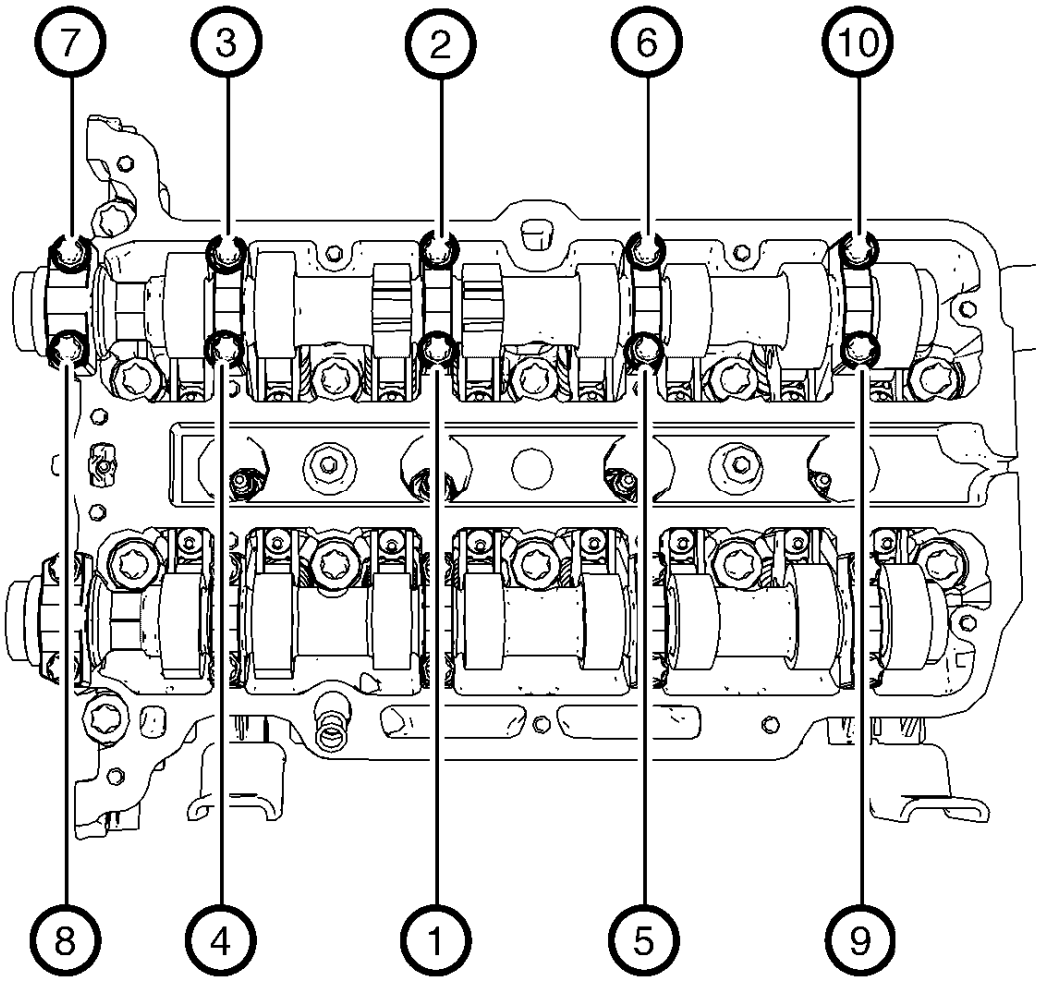

Fig. 284: Intake Camshaft Bearing Cap Bolts Tightening Sequence
Courtesy of GENERAL MOTORS COMPANY

CAUTION: Refer to Fastener Caution .

NOTE: Tighten the camshaft bearing cap bolts one turn a time to avoid shape distortion of the camshaft.

5. Tighten the camshaft bearing cap bolts one turn at a time in a spiral sequence as shown to 8 N.m (71 lb in).
6. Install camshaft intake sprocket. Refer to **Camshaft Intake Sprocket Replacement**.

EXHAUST CAMSHAFT REPLACEMENT

Removal Procedure

1. Remove the camshaft exhaust sprocket. Refer to **Camshaft Exhaust Sprocket Replacement**.

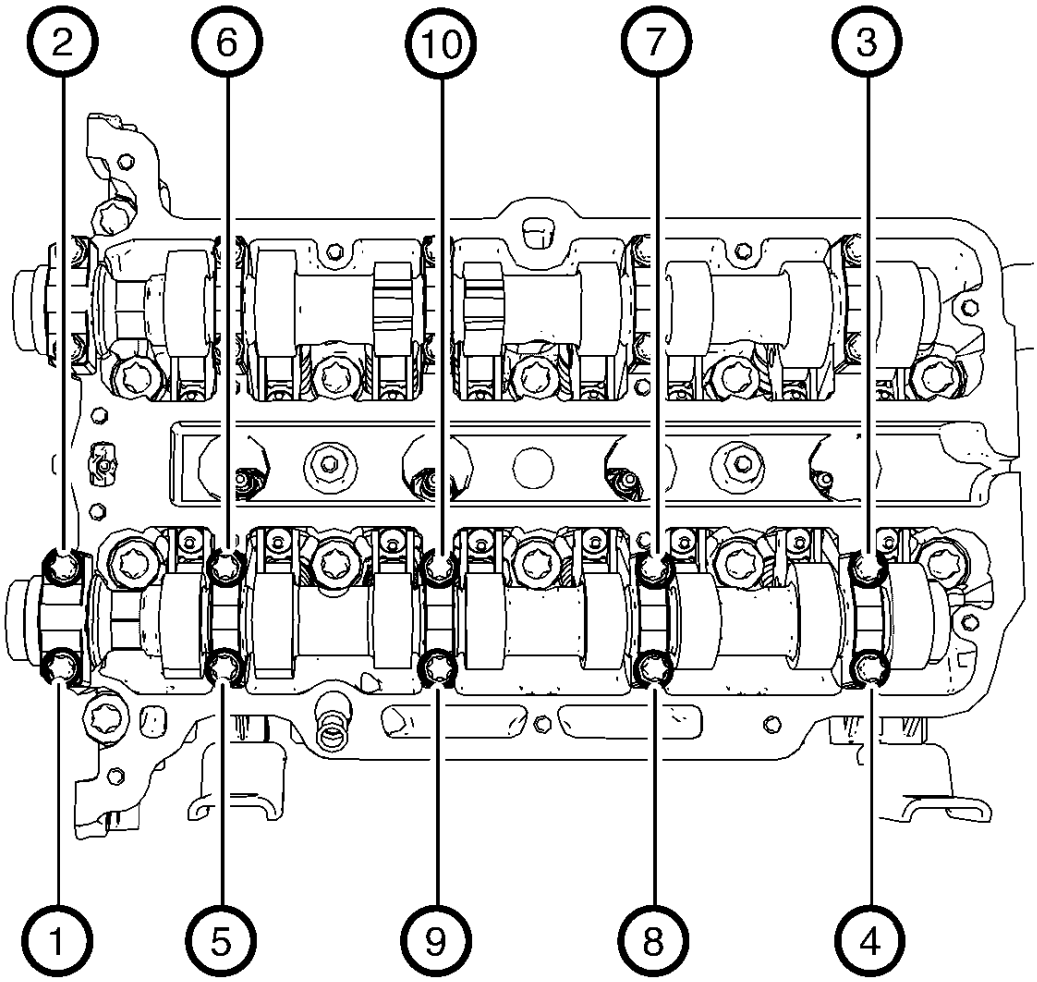

Fig. 285: Exhaust Camshaft Bearing Cap Bolts Removal Sequence
Courtesy of GENERAL MOTORS COMPANY

2. Remove the camshaft bearing cap bolts in a spiral sequence as shown one turn at a time until there is no spring tension pushing on the camshaft.

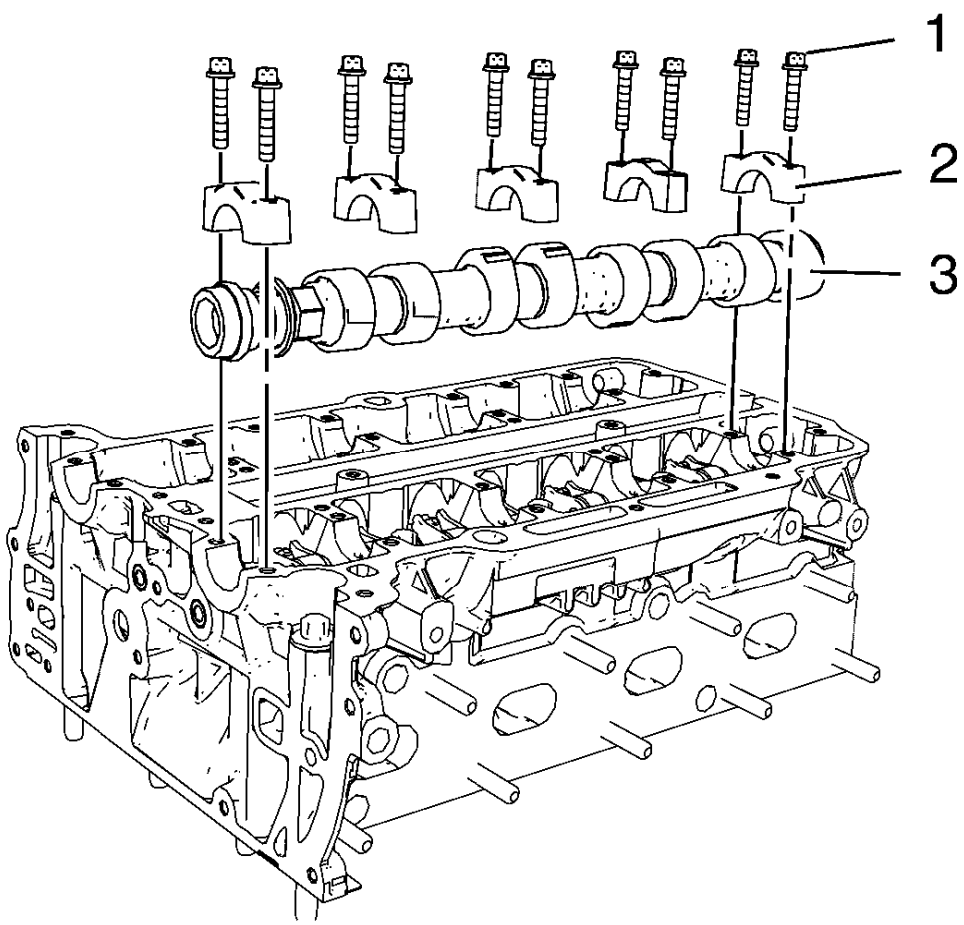

Fig. 286: Exhaust Camshaft, Camshaft Bearing Caps And Bolts
Courtesy of GENERAL MOTORS COMPANY

NOTE: Mind the markings on the camshaft bearing caps to ensure they will be installed in the same position.

3. Remove the 10 camshaft bearing cap bolts (1).
4. Remove the 5 camshaft bearing caps (2).
5. Remove the exhaust camshaft (3).

Installation Procedure

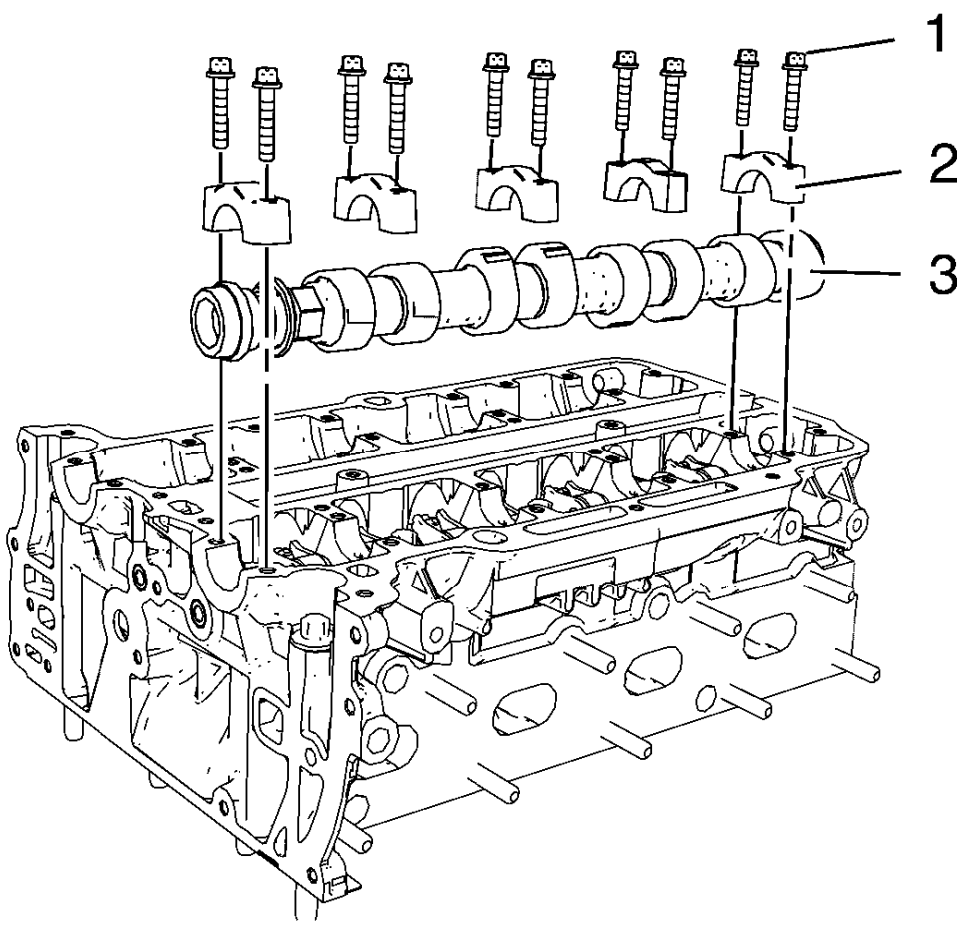

Fig. 287: Exhaust Camshaft, Camshaft Bearing Caps And Bolts
Courtesy of GENERAL MOTORS COMPANY

NOTE: Mind the markings on the camshaft bearing caps. Camshaft bearing caps should be installed in their original position.

1. Lubricate camshaft and camshaft bearing caps with engine oil.
2. Install the exhaust camshaft (3).
3. Install the 5 camshaft bearing caps (2).
4. Install the 10 camshaft bearing cap bolts (1) and handtighten.

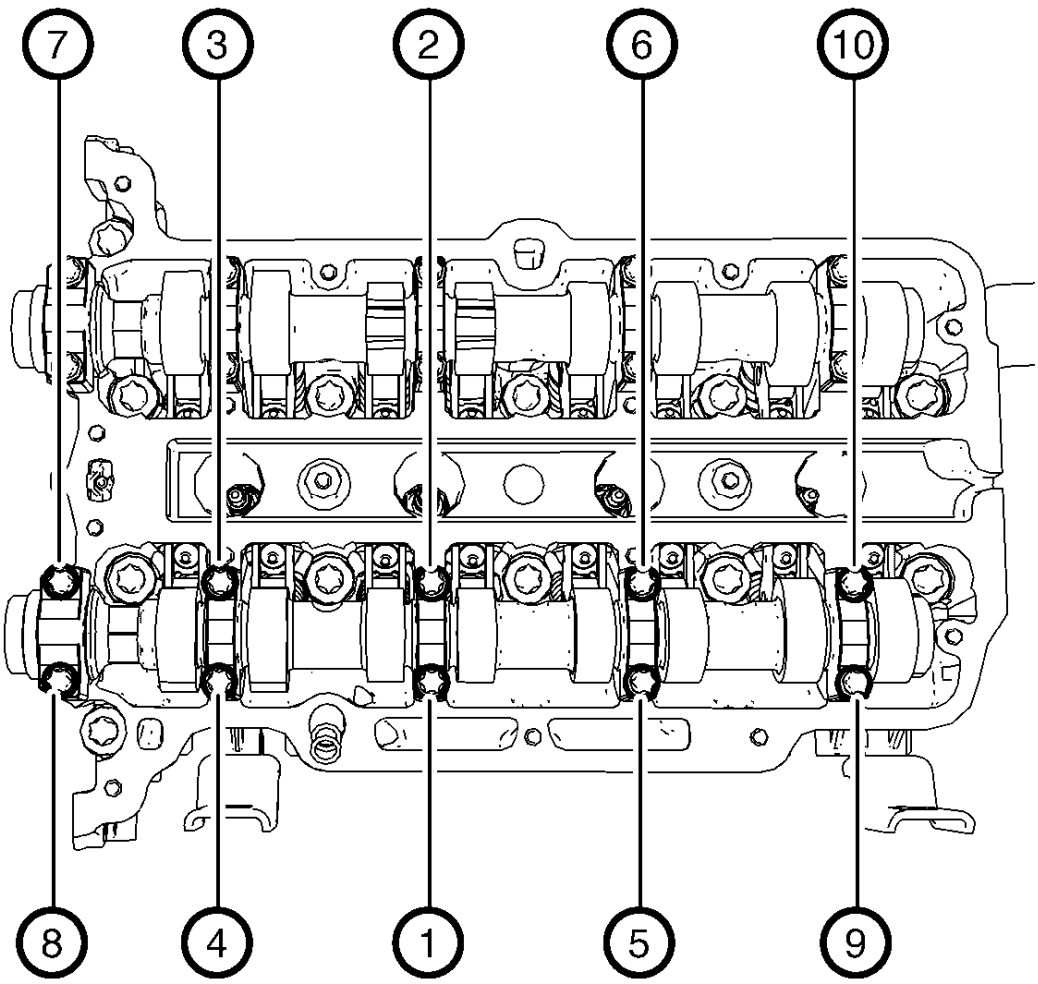

Fig. 288: Exhaust Camshaft Bearing Cap Bolts Tightening Sequence
Courtesy of GENERAL MOTORS COMPANY

CAUTION: Refer to Fastener Caution .

NOTE: Tighten the camshaft bearing cap bolts one turn a time to avoid shape distortion of the camshaft.

5. Tighten the camshaft bearing cap bolts one turn at a time in a spiral sequence as shown to 8 N.m (71 lb in).
6. Install the camshaft exhaust sprocket. Refer to **Camshaft Exhaust Sprocket Replacement**.

VALVE STEM OIL SEAL AND VALVE SPRING REPLACEMENT

Special Tools

- **207649** Rod Hairpin Clips
- **547324** Flange Screws
- **EN-958** Installer
- **EN-840** Pliers / Remover
- **EN-952** Fixing Pin
- **EN-50717** Kit
- **J-43649-2** Rods

For equivalent regional tools, refer to **Special Tools**.

Removal Procedure

1. Raise and support the vehicle. Refer to **Lifting and Jacking the Vehicle** .
2. Remove the right front wheel house liner. Refer to **Front Wheelhouse Liner Replacement** .
3. Lower the vehicle.
4. Remove the hydraulic valve lash adjuster arms. Refer to **Hydraulic Valve Lash Adjuster Arm Replacement**.
5. Remove the spark plugs. Refer to **Spark Plug Replacement** .
6. Adjust the engine to TDC of cylinder 1 and fix the crankshaft. Refer to **Camshaft Timing Chain Adjustment**.

   NOTE: Wheels must contact the ground.

7. Shift to 5. gear (MT) or park position (AT) and apply the park brake.

Valve Stem Oil Seal Removal

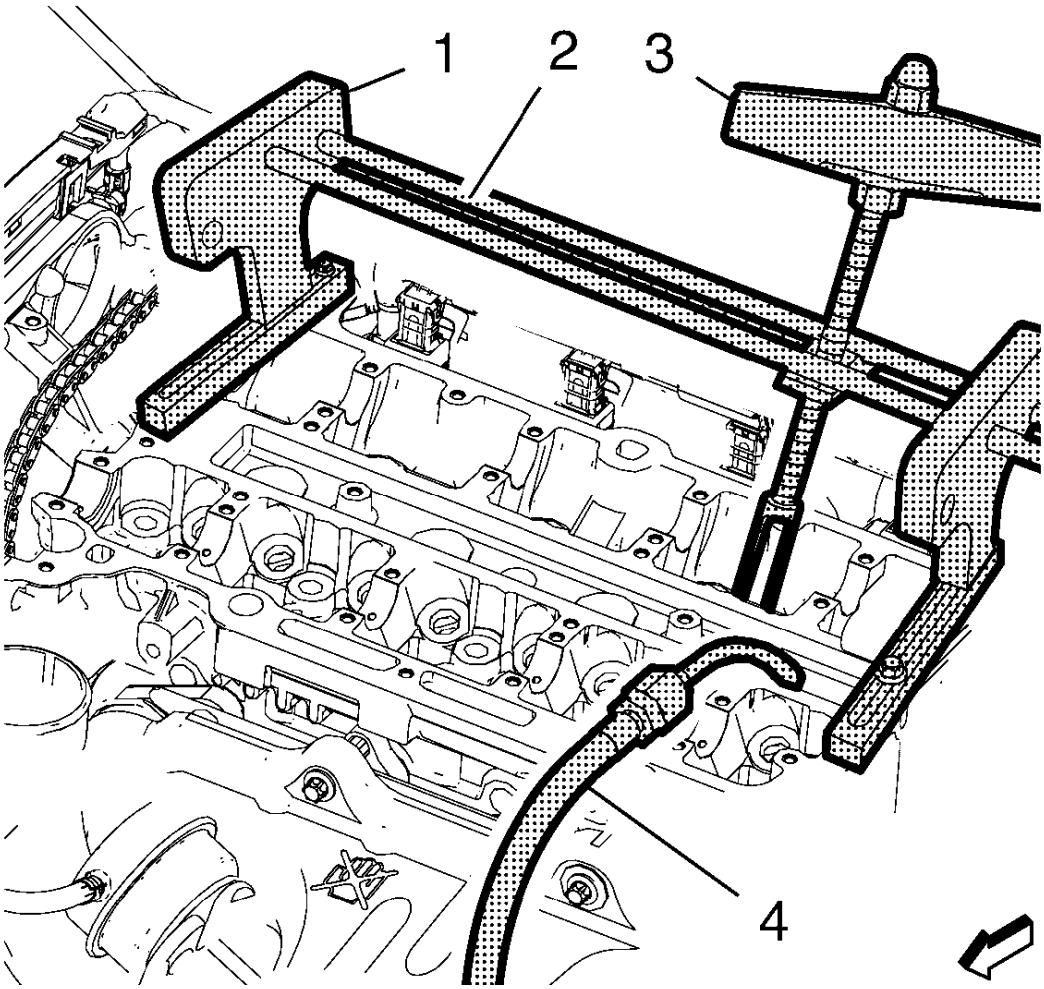

Fig. 289: Special Seal Removal Tools
Courtesy of GENERAL MOTORS COMPANY

1. Install the 2 **EN-50717-1** stands (1) to the cylinder head and fix them with the **547324** screws.
2. Install the 2 **J-43649-2** rods (2) and the **EN-51717-2** compressor (3) to the **EN-50717-1** stands. Secure the rods with the **207649** clips then.
3. Install an suitable air pressure adapter (4) to the spark plug hole.
4. Apply air pressure to the corresponding cylinder.
5. Position the **EN-51717-2** compressor (3) so that its adapter proper contacts the valve spring retainer and pretension the compressor.

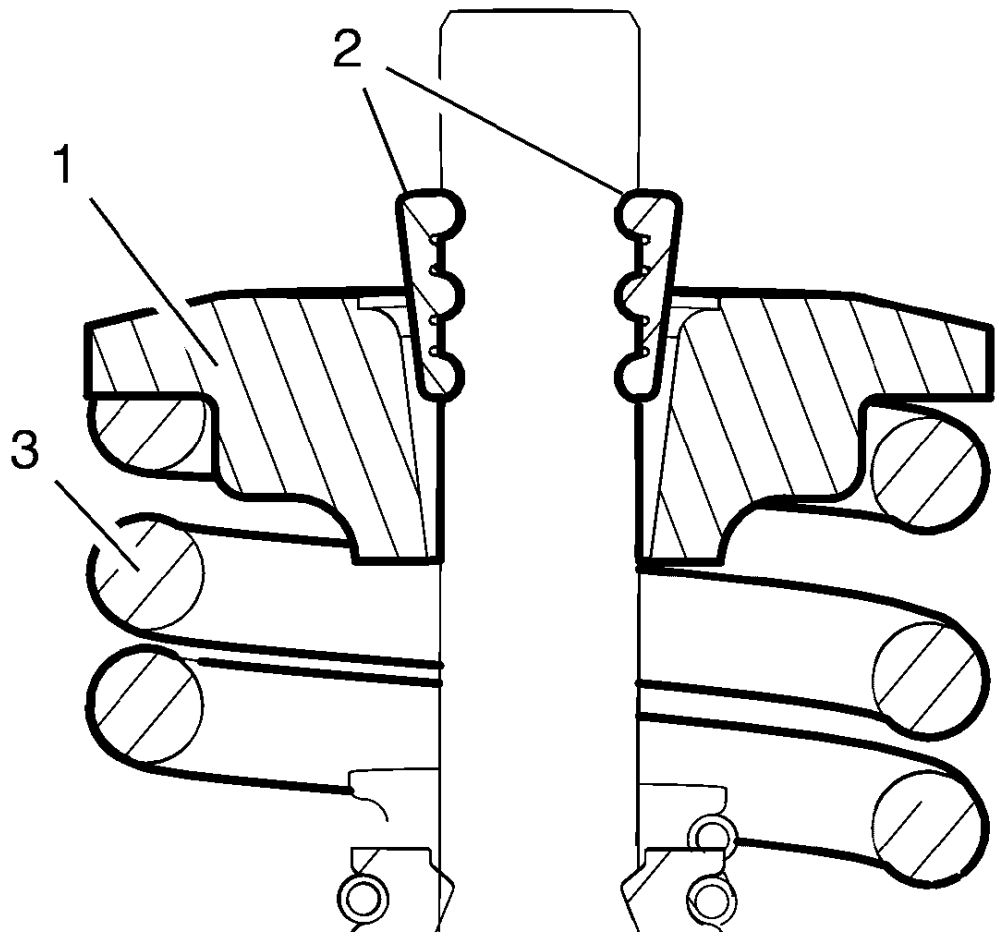

Fig. 290: Valve Spring Retainer And Valve Spring
Courtesy of GENERAL MOTORS COMPANY

WARNING: Valve springs can be tightly compressed. Use care when removing the retainers and plugs. Personal injury could result.

6. Apply pressure to the **EN-50717-2** compressor to push down the vale spring retainer (1) and compress the valve spring (3) until the valve keys (2) are free from tension. Carefully remove the valve keys then.
7. Release the tension from the **EN-50717-2** compressor.
8. Remove the valve spring retainer (1) and the valve spring (3).

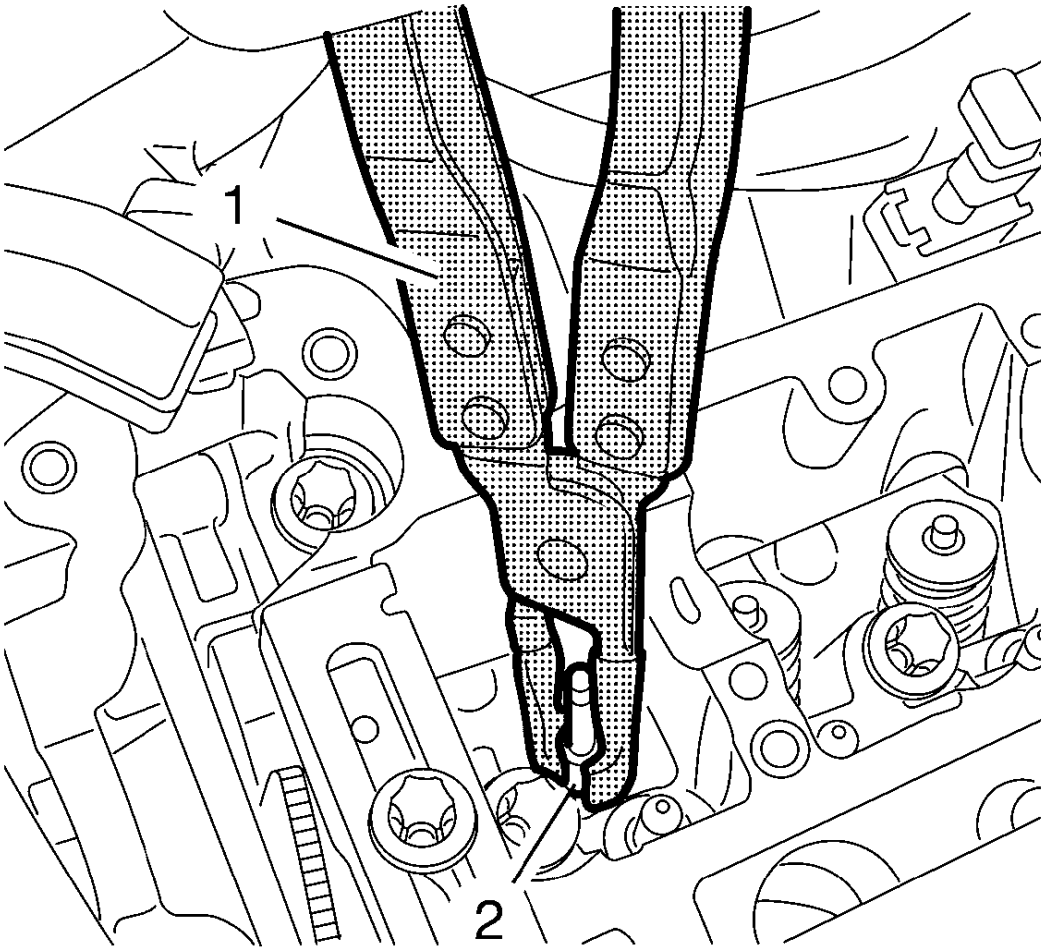

Fig. 291: Pliers And Intake Valve Stem Oil Seals
Courtesy of GENERAL MOTORS COMPANY

9. Remove and DISCARD the valve stem oil seal (2), using the **EN-840** pliers (1).

Valve Stem Oil Seal Installation

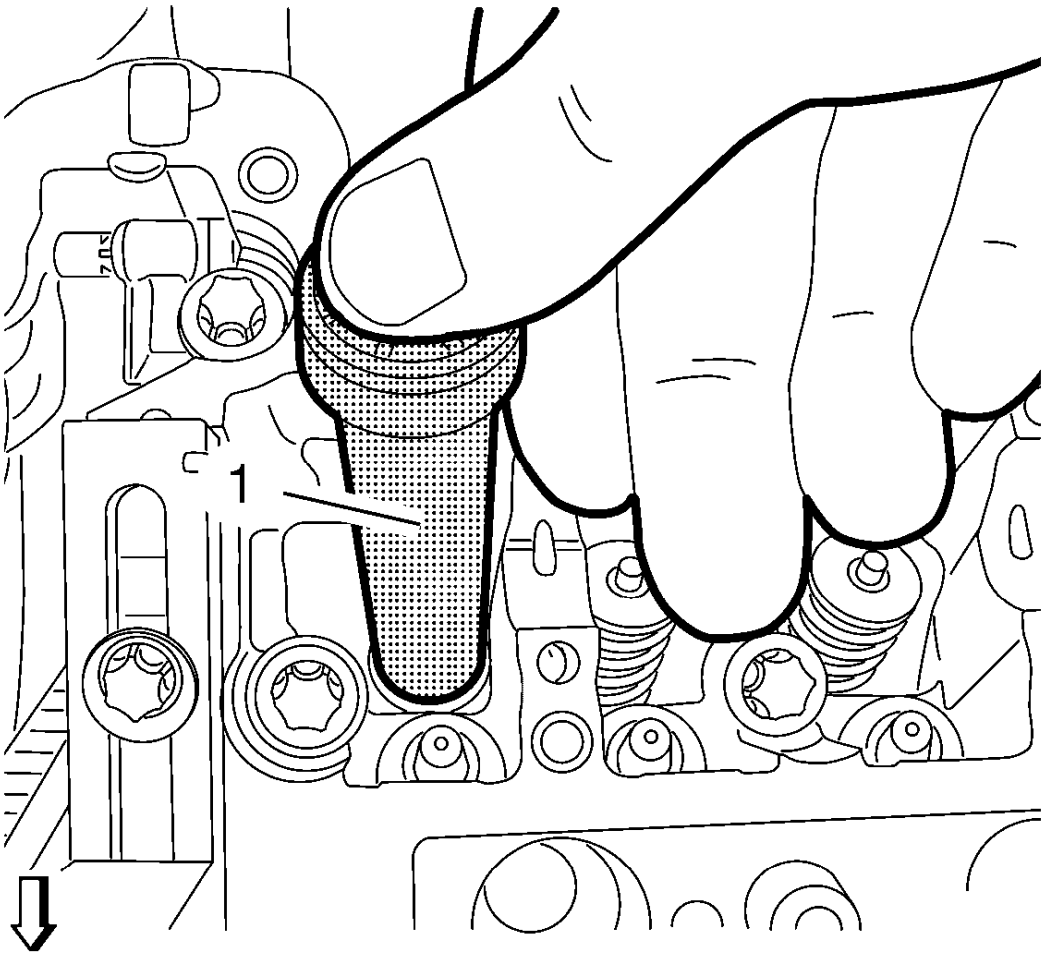

Fig. 292: Intake Valve Stem Oil Seal Installation Tool
Courtesy of GENERAL MOTORS COMPANY

NOTE: Lubricate the NEW valve stem oil seal with clean engine oil.

1. Install the NEW valve stem oil seal, using the **EN-958** installer (1).
2. Loosely install the valve spring and the valve spring retainer.

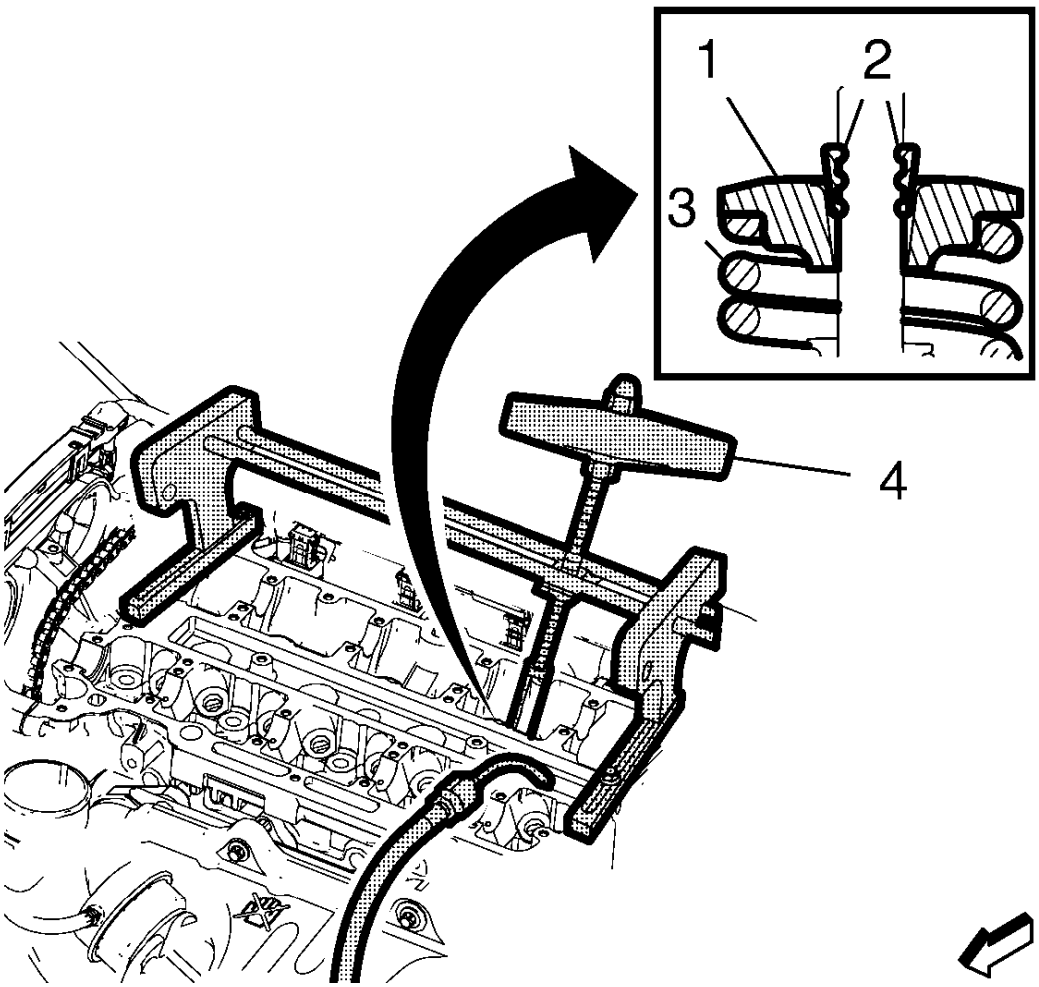

Fig. 293: Special Valve Spring Compression Tool
Courtesy of GENERAL MOTORS COMPANY

CAUTION: The valve stem keys must correctly seat in the valve spring cap. Engine damage may occur by not installing properly.

3. Using the **EN-51717-2** compressor (4), push down the valve spring retainer (1) and compress the valve spring (3) until the valve keys (2) can be inserted. Carefully insert the valve keys then, so that they are proper installed to the valve stem grooves.
4. Carefully release the tension from the **EN-50717-2** compressor.
5. Inspect the valve keys and valve spring retainer for proper seat.
6. Repeat the procedure with the remaining valves and cylinders. Transfer the **EN-50717-1** stands and the **EN-51717-2** compressor as needed.
7. Take care that air pressure is always applied to the combustion chamber of the treated cylinder.

Installation Procedure

1. Remove the tools from the cylinder head.
2. Release the air pressure and remove the air pressure adapter form the spark plug hole.
3. Shift to neutral gear and release the park brake.
4. Install the spark plugs. Refer to **Spark Plug Replacement** .
5. Install the hydraulic valve lash adjuster arms. Refer to **Hydraulic Valve Lash Adjuster Arm Replacement**.
6. Raise the vehicle.
7. Remove the **EN-952** fixing pin and install the crankshaft bearing cap tie plate hole plug. Refer to **Camshaft Timing Chain Adjustment**.
8. Install the right front wheelhouse liner. Refer to **Front Wheelhouse Liner Replacement** .
9. Lower the vehicle.

REPAIR INSTRUCTIONS - OFF VEHICLE

ENGINE SUPPORT FIXTURE

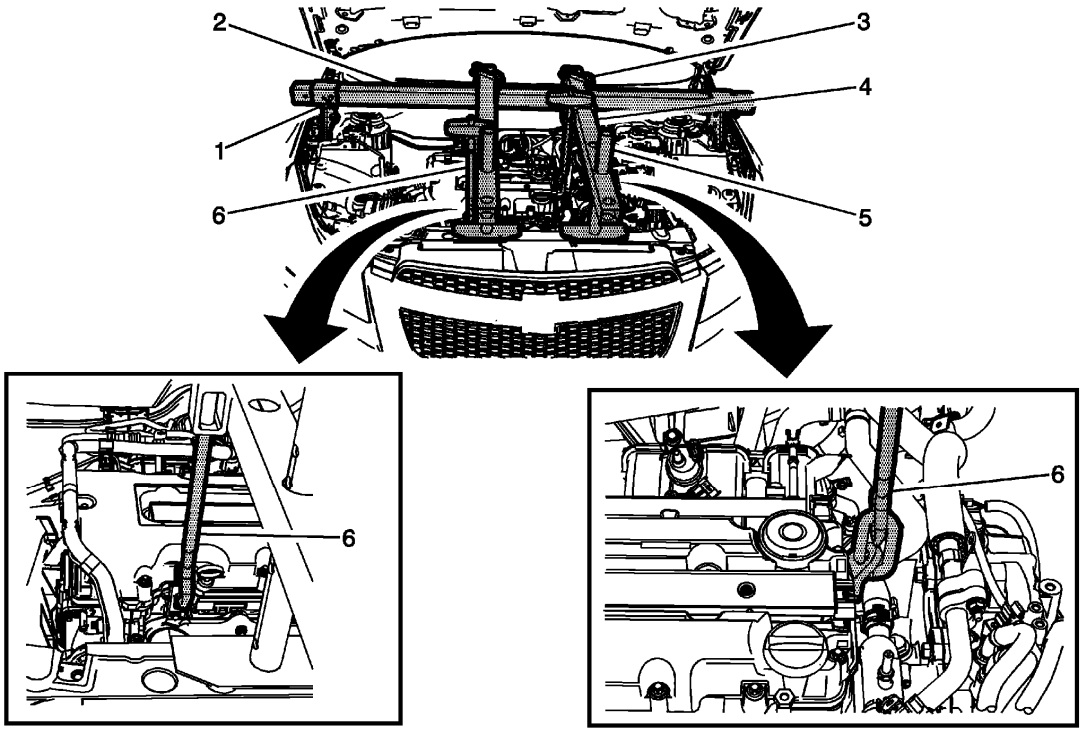

Fig. 294: Engine Support Fixture
Courtesy of GENERAL MOTORS COMPANY

Engine Support Fixture

Callous	Component Name
Preliminary Procedure Remove the front fender shipping cover. Refer to **Front Fender Shipping Cover Replacement** . **Special Tools** • **J-28467-1A** Cross Bracket • **J-28467-2A** Radiator Tube Shelf Assembly • **J-28467-5A** Strut Tower Support Assembly • **J-28467-8A** Hook Assembly • **J-28467-518** Main Support Beam • **J-36857** Engine Lift Bracket • **J-43405** Engine Support Fixture Adapter For equivalent regional tools, refer to **Special Tools**.	

1	Engine Support Fixture Adapter Leg (Qty: 2) **Procedure** Install the bracket to fender frame. Do not install on top of fender lip.
2	Main Support Beam
3	Cross Bracket (Qty: 2)
4	Strut Tower Support Assembly (Qty: 2) **Procedure** Adjust the length of the strut tower support assembly.
5	Radiator Tube Shelf Assembly (Qty: 2)
6	Engine Lift Bracket **Procedure** Use a grade 10.9 bolt to install the engine lift bracket. **TIP:** If the engine is not equipped with engine lift bracket, install **J-36857** bracket in place.

ENGINE MOUNT BRACKET REMOVAL

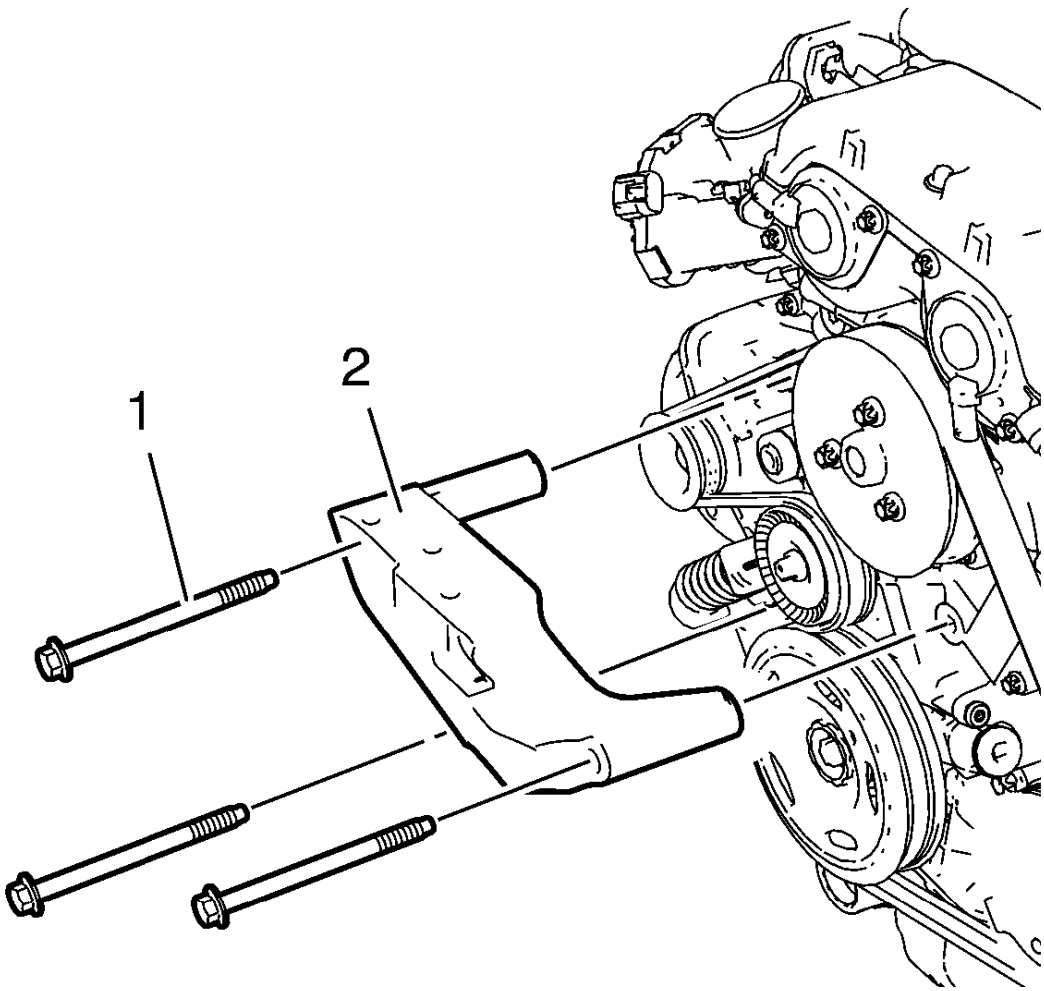

Fig. 295: Engine Mount Bracket And Bolts
Courtesy of GENERAL MOTORS COMPANY

1. Remove the 3 engine mount bracket bolts (1).
2. Remove the engine mount bracket (2).

CAMSHAFT TIMING CHAIN INSPECTION

Special Tools

- **EN-952** Fixing Pin
- **EN-953-A** Fixing Tool
- **EN-49977-100** Transmitter Disc Fixation

For equivalent regional tools, refer to **Special Tools**.

1. Remove the ignition coil. Refer to **Ignition Coil Replacement** .
2. Remove the camshaft cover. Refer to **Camshaft Cover Replacement**.

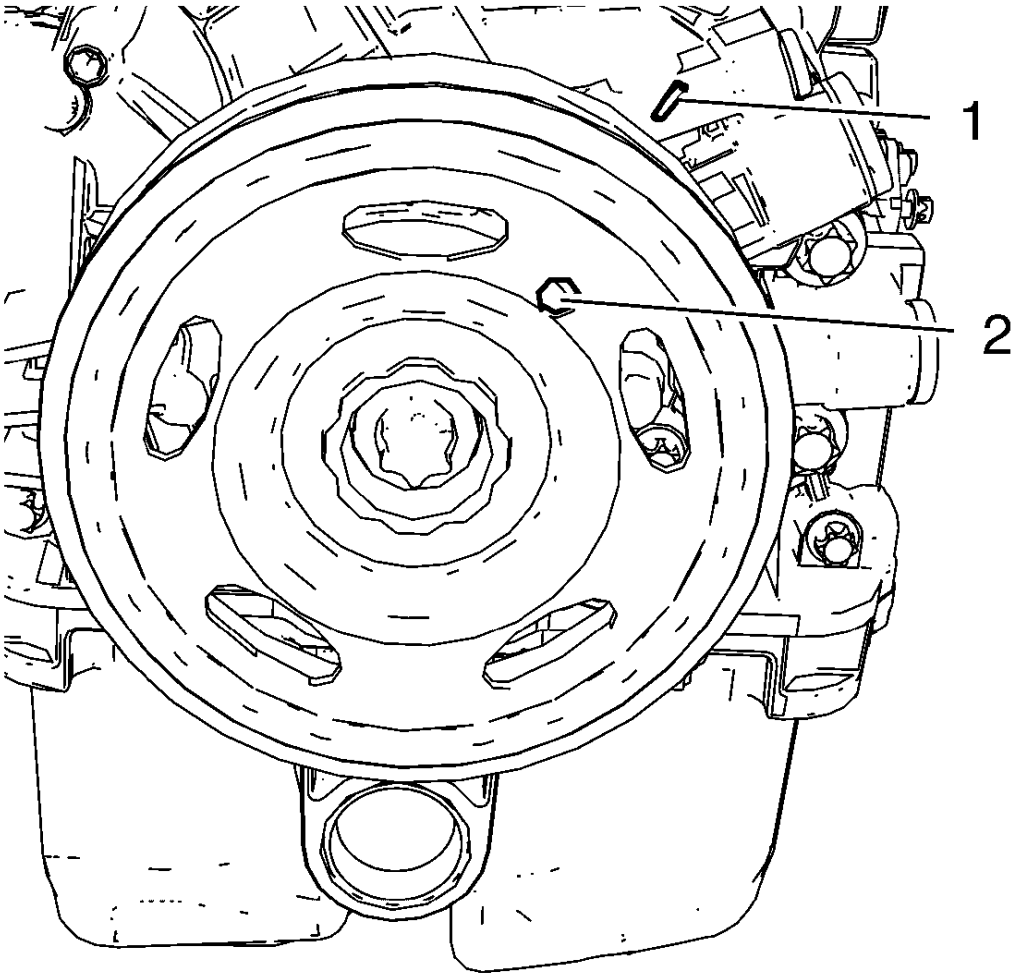

Fig. 296: Bore And Mark
Courtesy of GENERAL MOTORS COMPANY

3. Remove the right front wheelhouse liner. Refer to **Front Wheelhouse Liner Replacement**
4. Remove the front compartment insulator. Refer to **Front Compartment Insulator Replacement**
5. Rotate the engine clockwise until the bore (2) in the crankshaft balancer aligns with the mark (1) on the engine front cover.

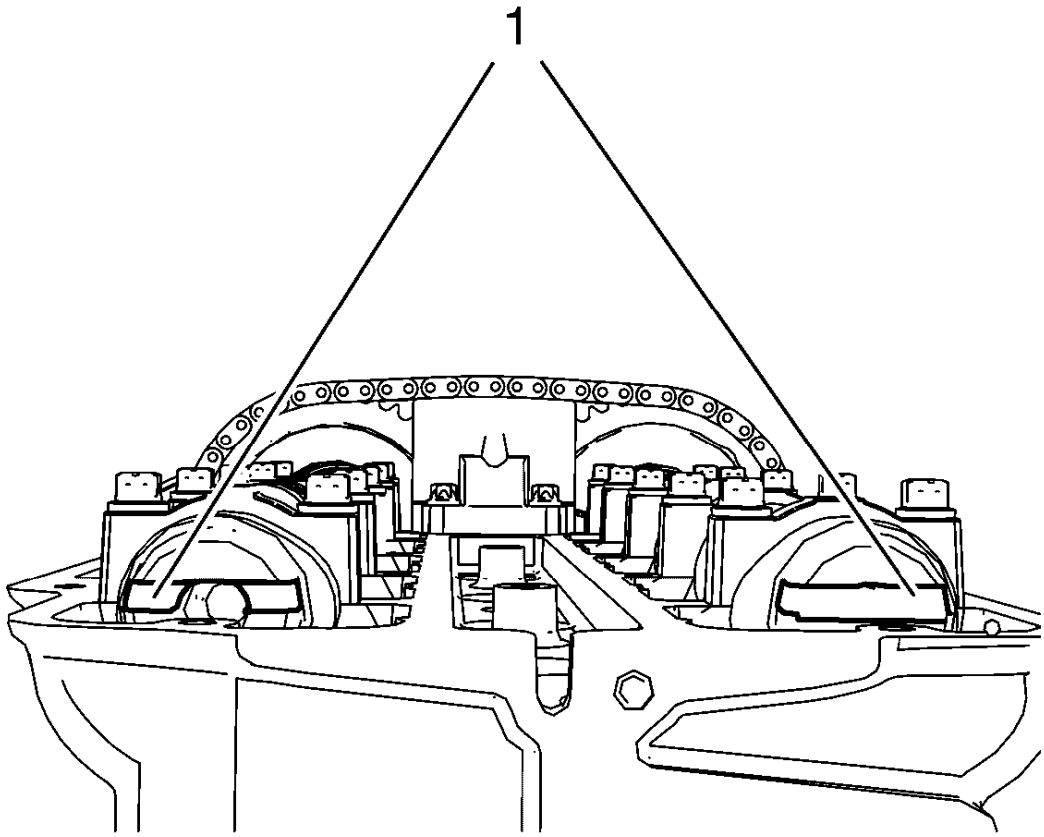

Fig. 297: Camshaft Grooves
Courtesy of GENERAL MOTORS COMPANY

6. Examine that the camshaft grooves (1) are visible as shown. If the camshaft grooves are not visible rotate the crankshaft 360°.

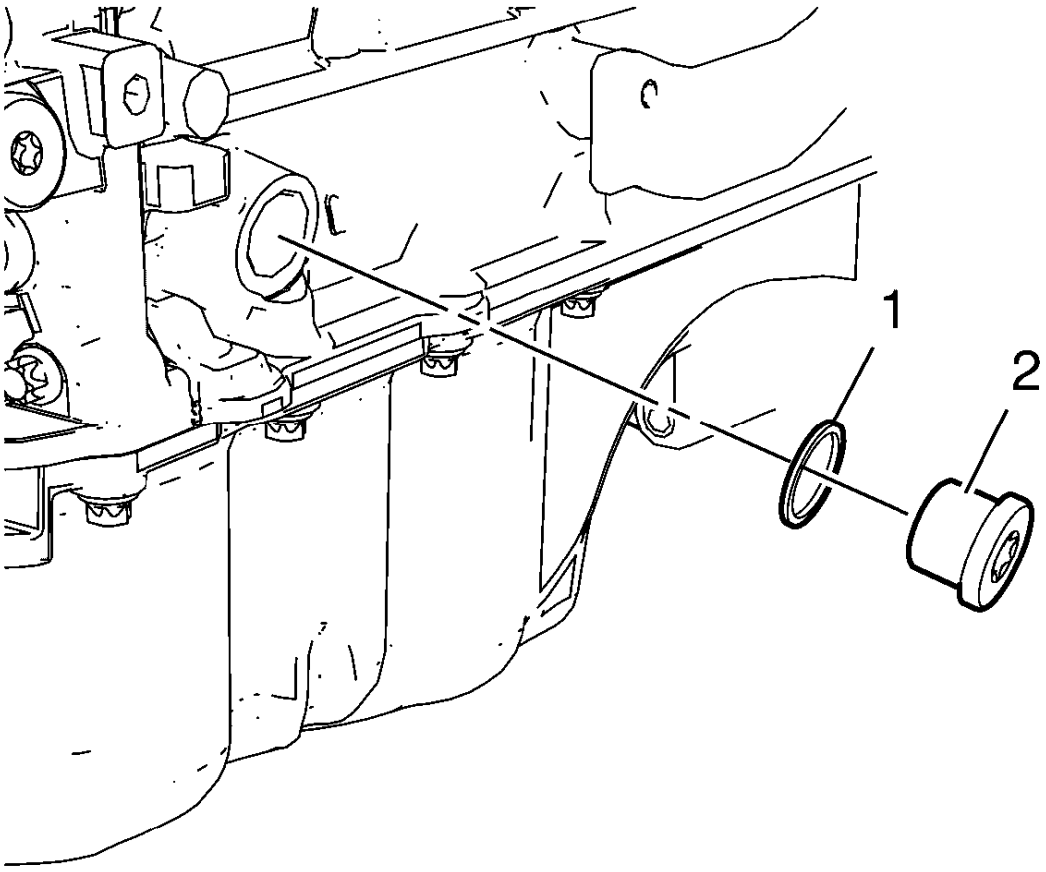

Fig. 298: Crankshaft Bearing Cap Tie Plate Hole Plug And Seal Ring
Courtesy of GENERAL MOTORS COMPANY

7. Remove the crankshaft bearing cap tie plate hole plug (2) and the seal ring (1).

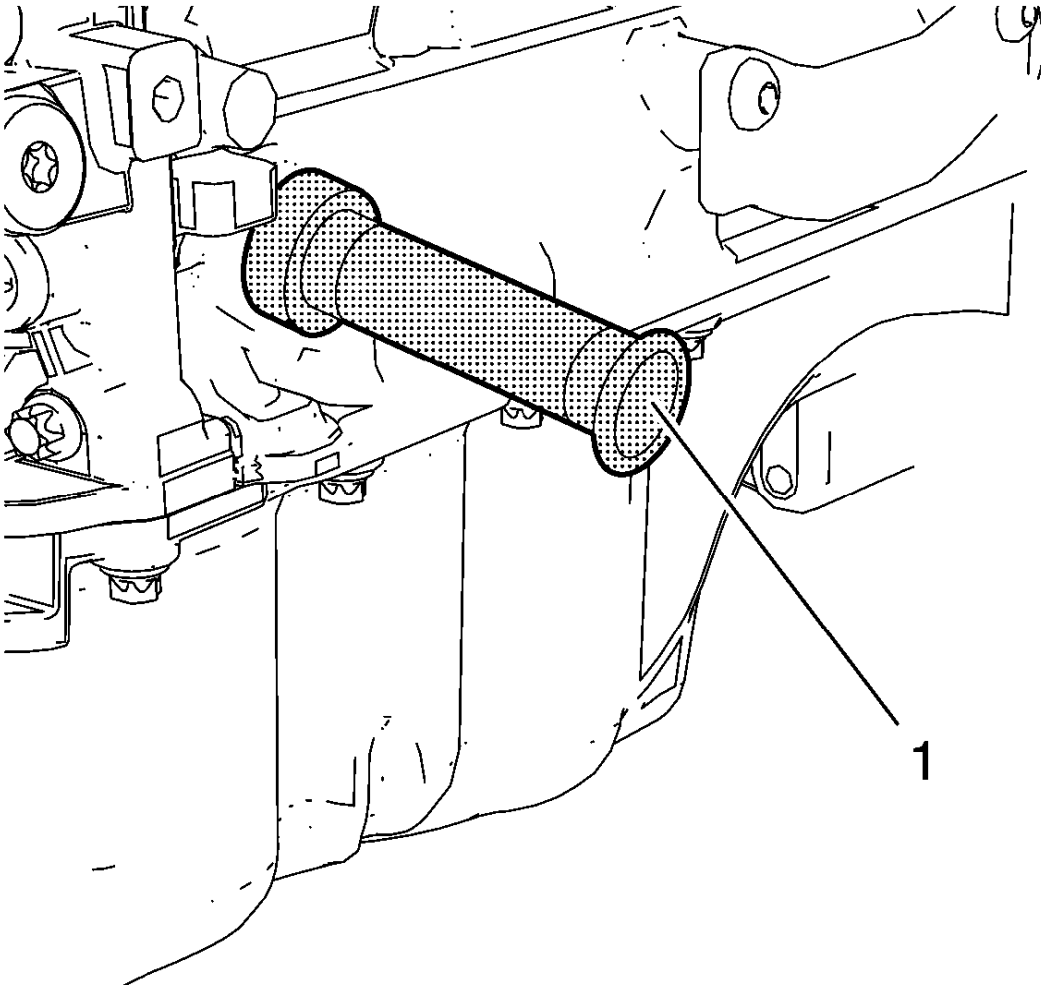

Fig. 299: Fixing Pin
Courtesy of GENERAL MOTORS COMPANY

CAUTION: To ensure proper crankshaft top dead center (TDC) alignment, the retention pin should fit easily through the bore in the crankshaft tie plate and into the crankshaft. Binding of the retention pin could affect proper engine timing.

8. Install **EN-952** fixing pin (1) to hold the crankshaft in TDC position.

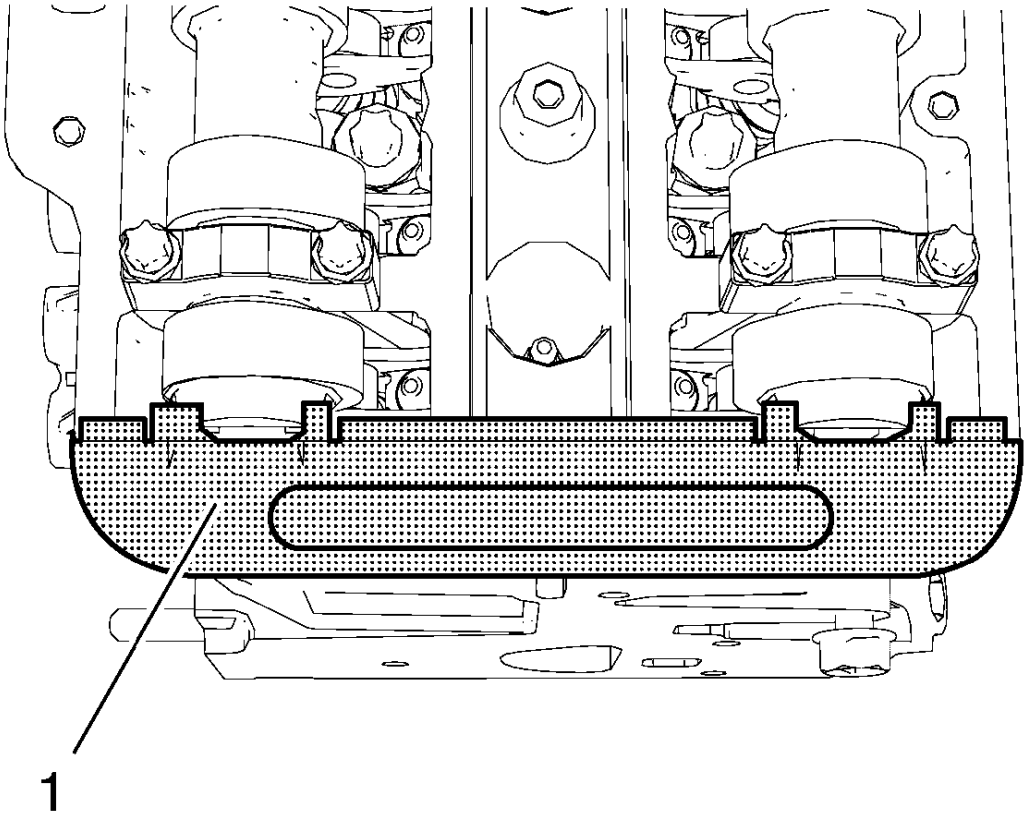

Fig. 300: Fixing Tool
Courtesy of GENERAL MOTORS COMPANY

NOTE: The fixing tool should be installed completely to both camshaft grooves without high effort.

9. Install **EN-953-A** fixing tool (1) to the camshafts.

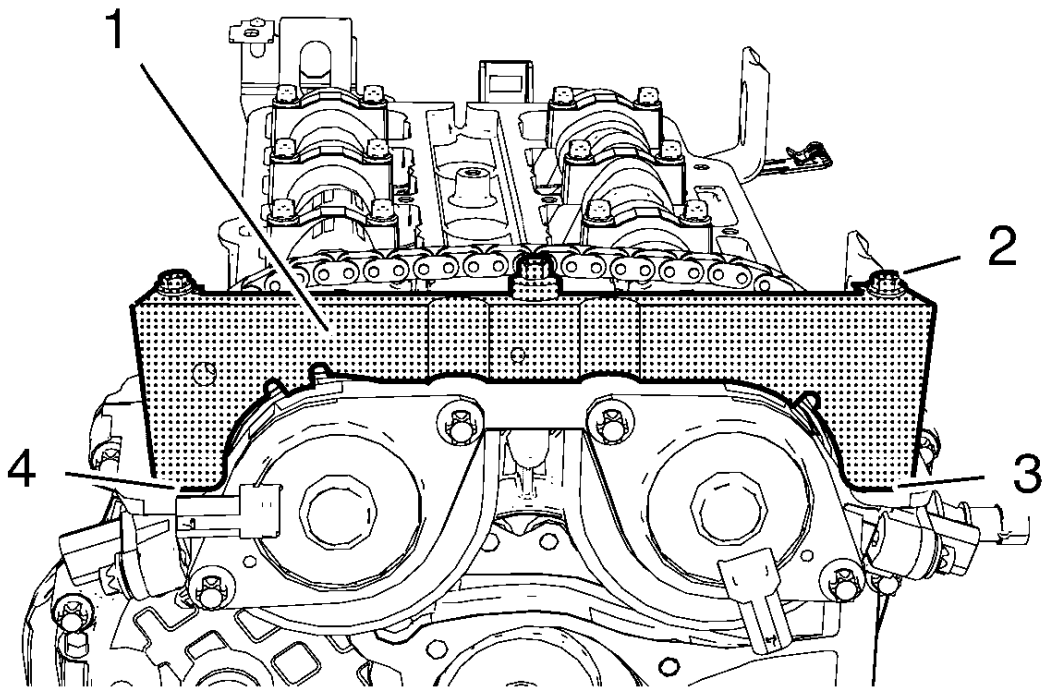

Fig. 301: Transmitter Disc Fixation And Bolts
Courtesy of GENERAL MOTORS COMPANY

NOTE: A wrong installation position is possible. Make sure that the fixation tool is installed without clearance to the cylinder head in areas (3) and (4).

10. Install **EN-49977-100** transmitter disc fixation (1) to inspect the correct position of the camshaft position exciter wheels.
11. Tighten the bolts (2) of **EN-49977-100** transmitter disc fixation.
12. If **EN-953-A** fixing tool or **EN-49977-100** transmitter disc fixation can not be installed, refer to **Camshaft Timing Chain Adjustment**.
13. Remove **EN-49977-100** transmitter disc fixation.
14. Remove **EN-953-A** fixing tool.
15. Remove **EN-952** fixing pin.

CAUTION: Refer to Fastener Caution .

16. Install crankshaft bearing cap tie plate hole plug and seal ring and tighten to 40 N.m (30 lb ft).
17. Install the front compartment insulator. Refer to **Front Compartment Insulator Replacement**
18. Install the right front wheelhouse liner. Refer to **Front Wheelhouse Liner Replacement**
19. Install the camshaft cover. Refer to **Camshaft Cover Installation**.
20. Install the ignition coil. Refer to **Ignition Coil Installation**.

CAMSHAFT TIMING CHAIN ADJUSTMENT

Special Tools

- **EN-952** Fixing Pin
- **EN-953-A** Fixing Tool
- **EN-49977-100** Fixation Sensor Discs

For equivalent regional tools, refer to **Special Tools**.

1. Remove the ignition coil. Refer to **Ignition Coil Replacement** .
2. Remove the camshaft cover. Refer to **Camshaft Cover Replacement**.
3. Remove the camshaft position actuator solenoid valves. Refer to **Camshaft Position Actuator Solenoid Valve Replacement** .
4. Remove the right front wheelhouse liner. Refer to **Front Wheelhouse Liner Replacement** .
5. Remove the front compartment insulator. Refer to **Front Compartment Insulator Replacement** .

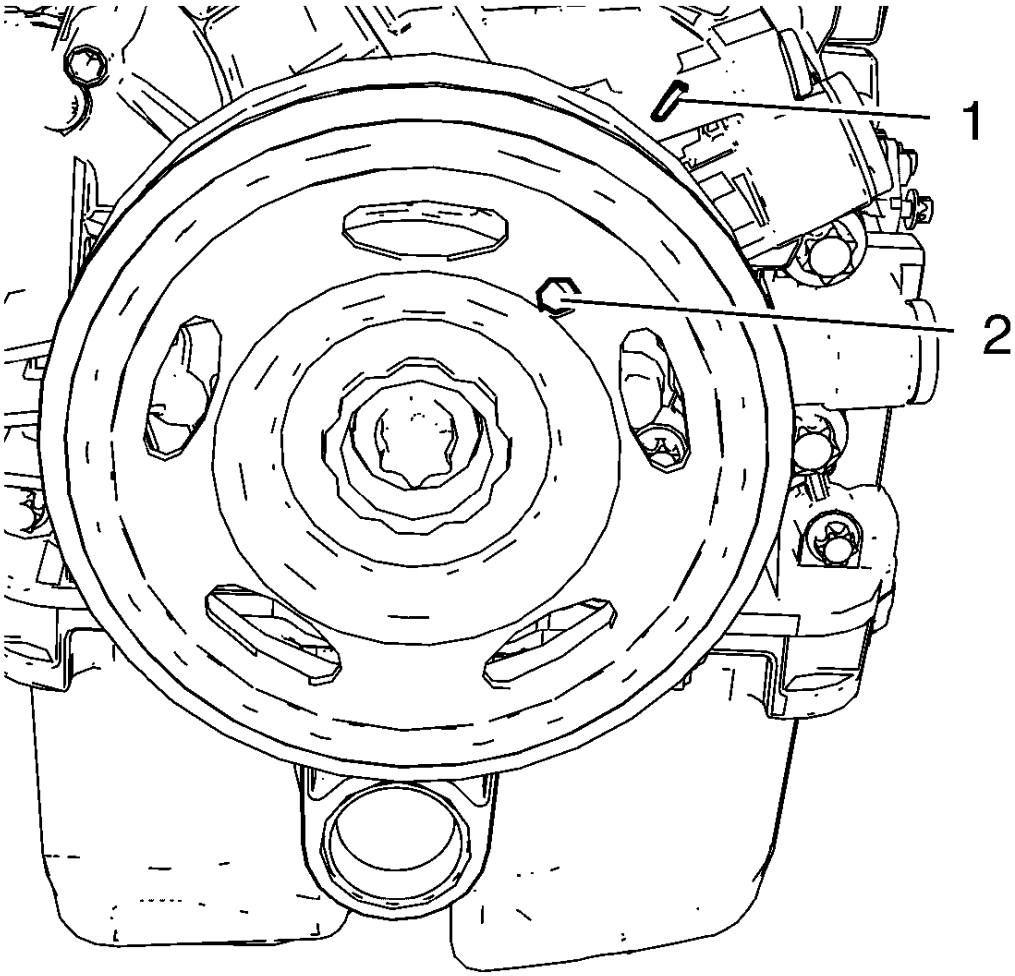

Fig. 302: Bore And Mark
Courtesy of GENERAL MOTORS COMPANY

6. Rotate the engine clockwise until the bore (2) in the crankshaft balancer aligns with the mark (1) on the engine front cover.

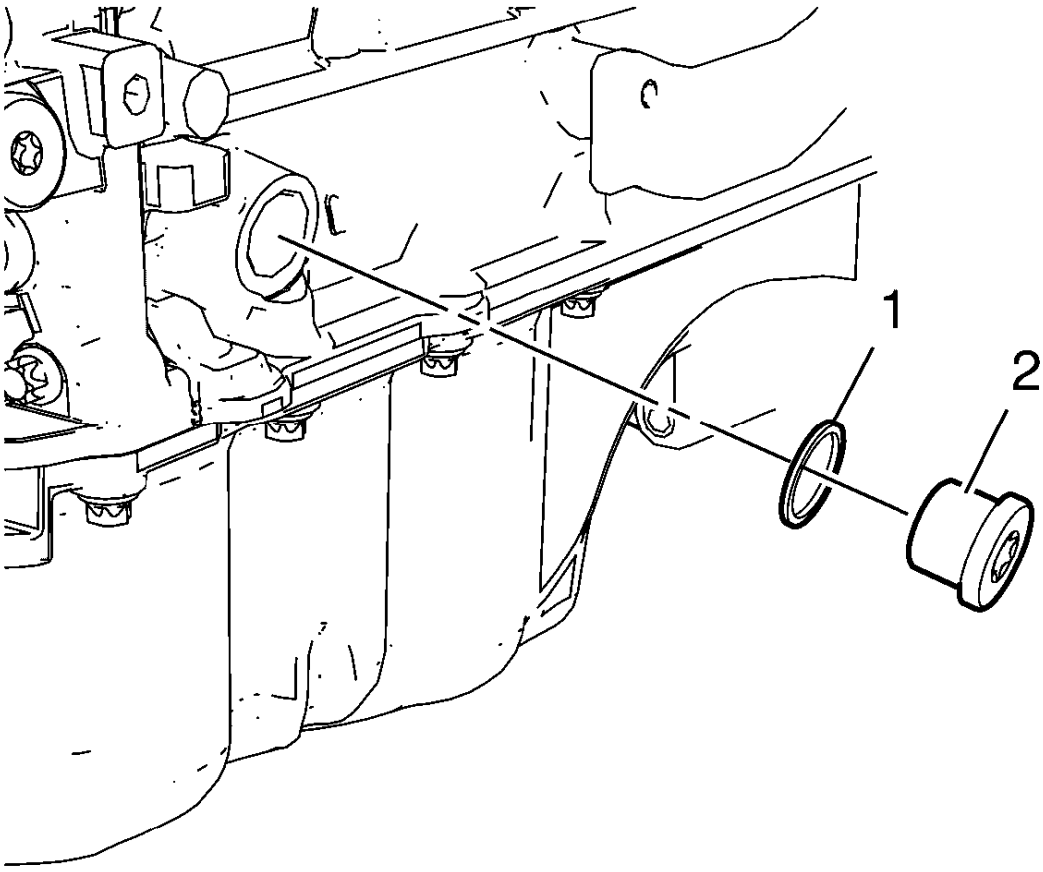

Fig. 303: Crankshaft Bearing Cap Tie Plate Hole Plug And Seal Ring
Courtesy of GENERAL MOTORS COMPANY

7. Remove the crankshaft bearing cap tie plate hole plug (2) and the seal ring (1).

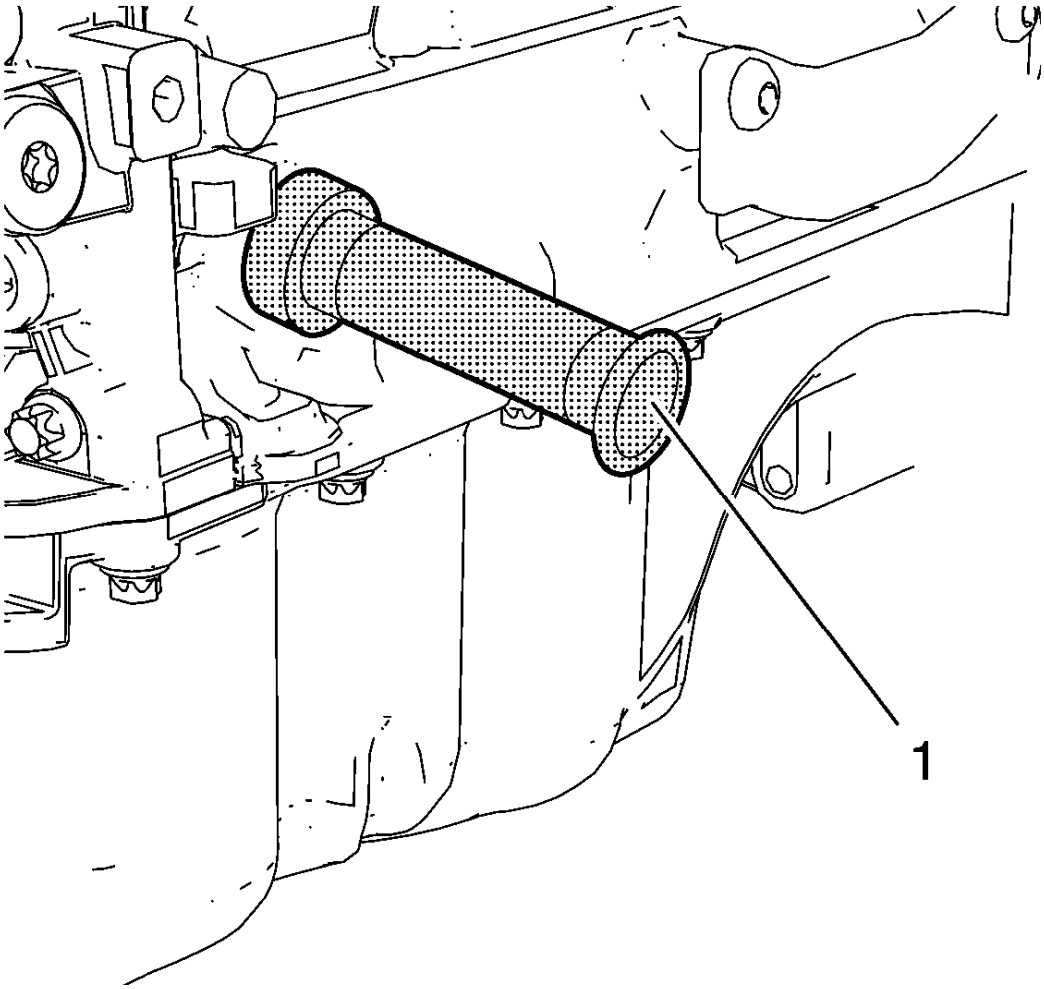

Fig. 304: Fixing Pin
Courtesy of GENERAL MOTORS COMPANY

CAUTION: To ensure proper crankshaft top dead center (TDC) alignment, the retention pin should fit easily through the bore in the crankshaft tie plate and into the crankshaft. Binding of the retention pin could affect proper engine timing.

8. Install the **EN-952** fixing pin (1) to hold the crankshaft in TDC position.

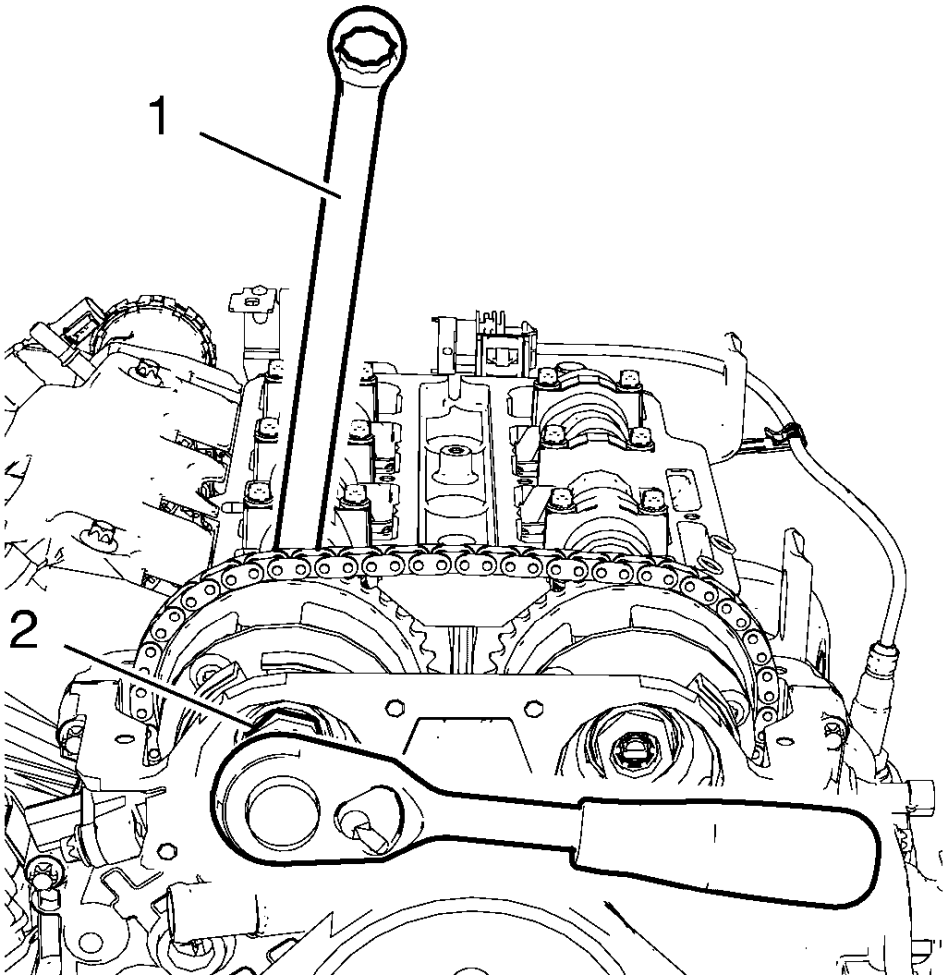

Fig. 305: Intake Camshaft Sprocket Bolt And Wrench
Courtesy of GENERAL MOTORS COMPANY

9. Loosen the intake camshaft sprocket bolt (2) while holding the hexagon of the intake camshaft with a wrench (1) until the camshaft position exciter wheel is clearly rotatable.
10. Loosen the exhaust camshaft sprocket bolt while holding the hexagon of the exhaust camshaft with a wrench until the camshaft position exciter wheel is clearly rotatable.

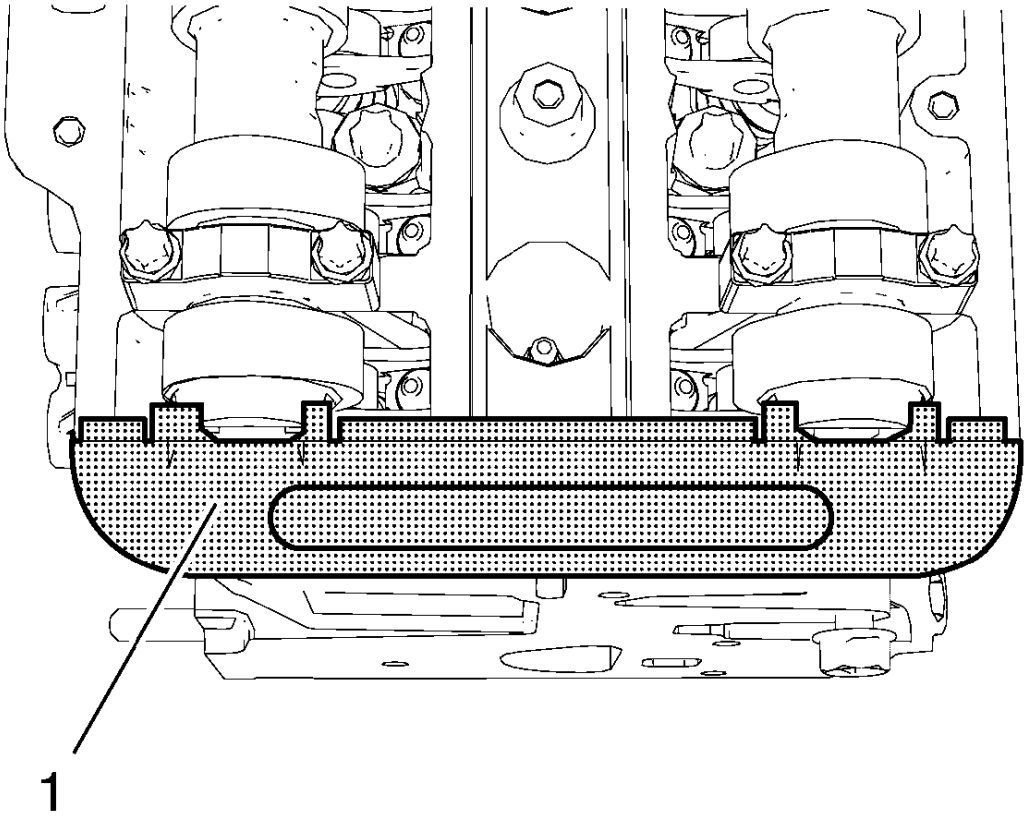

Fig. 306: Fixing Tool
Courtesy of GENERAL MOTORS COMPANY

NOTE: The fixing tool should be installed completely to both camshaft grooves without high effort.

11. Adjust the camshafts so that the **EN-953-A** fixing tool (1) can be installed.

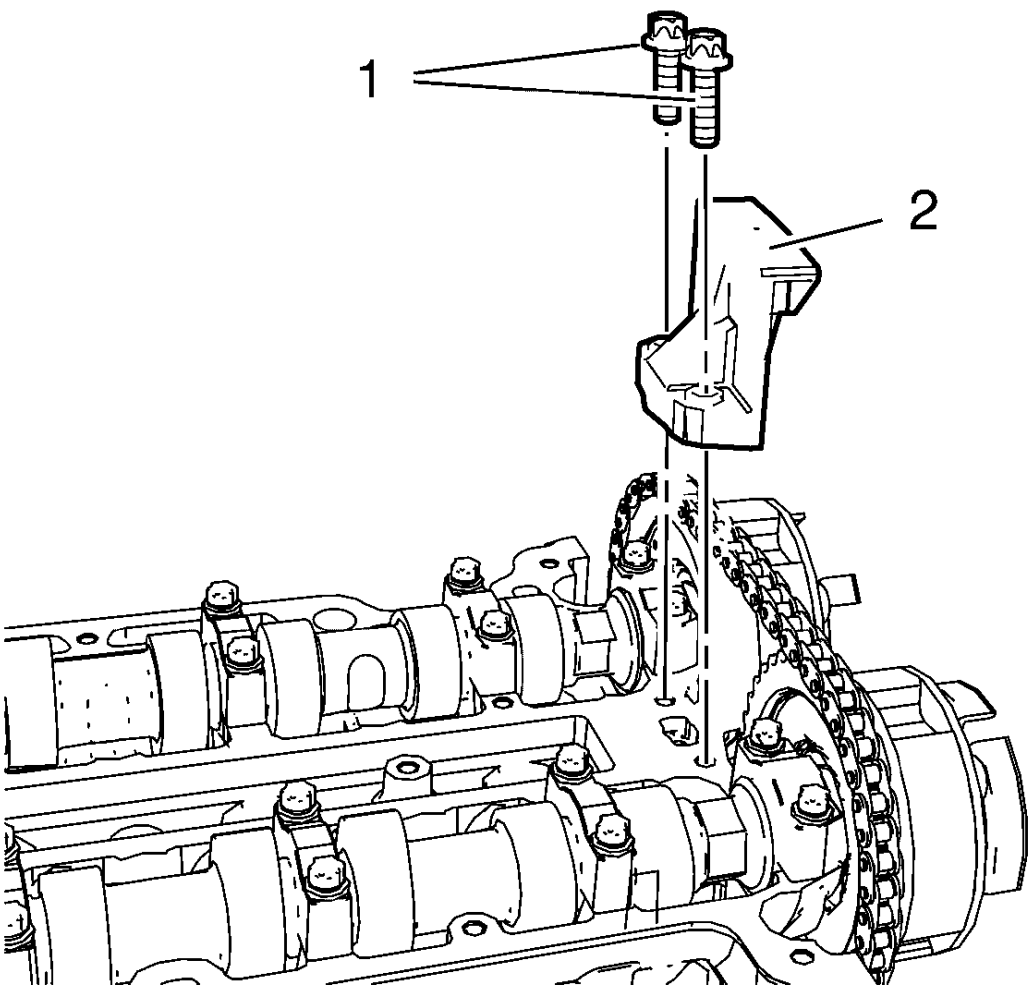

Fig. 307: Upper Timing Chain Guide And Bolts
Courtesy of GENERAL MOTORS COMPANY

12. Remove the 2 upper timing chain guide bolts (1).
13. Remove the upper timing chain guide (2).

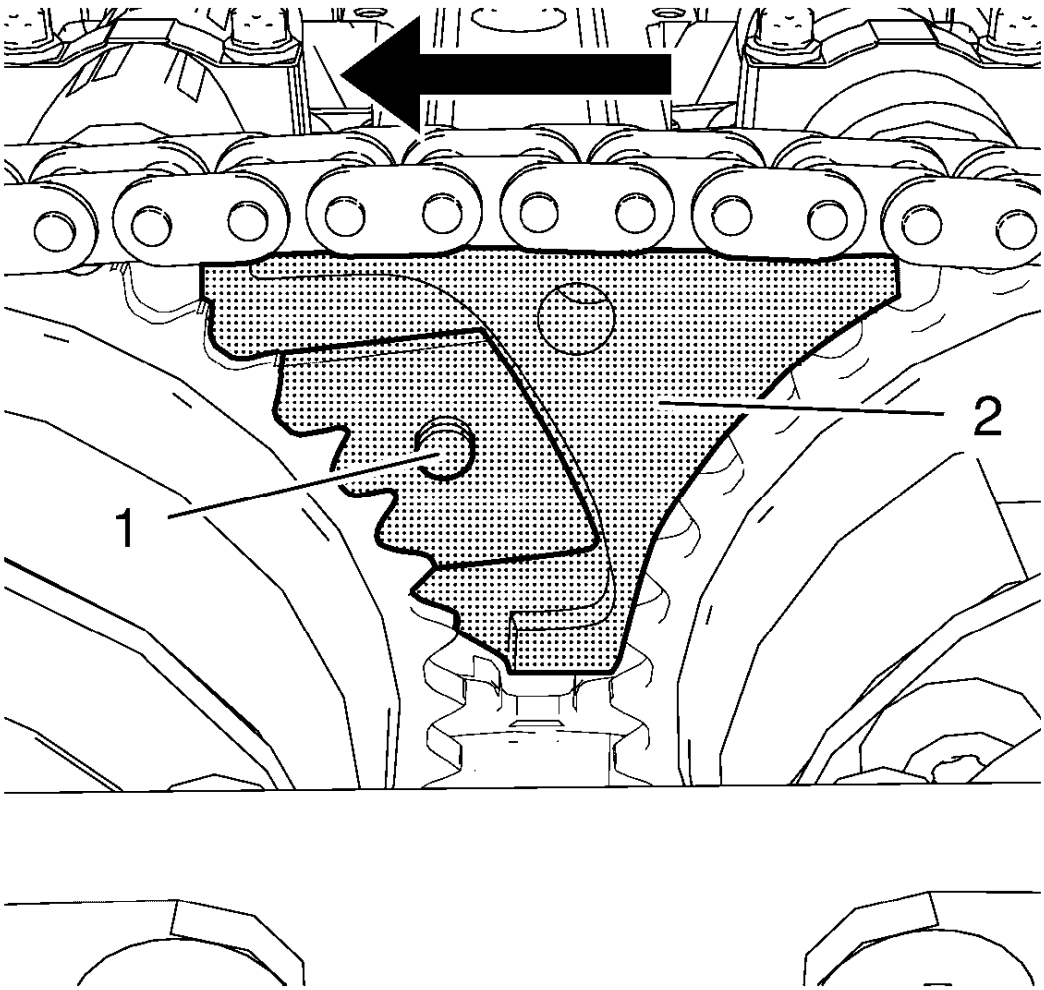

Fig. 308: Intake Camshaft Sprocket Gearing And Special Tool
Courtesy of GENERAL MOTORS COMPANY

NOTE: Push the fixing tool in the direction of the arrow to ensure it engages without clearance.

14. Install the **EN-49977-200** fixing tool (2) and adjust the gearing of the fixing tool so it engages with the intake camshaft sprocket gearing (1).

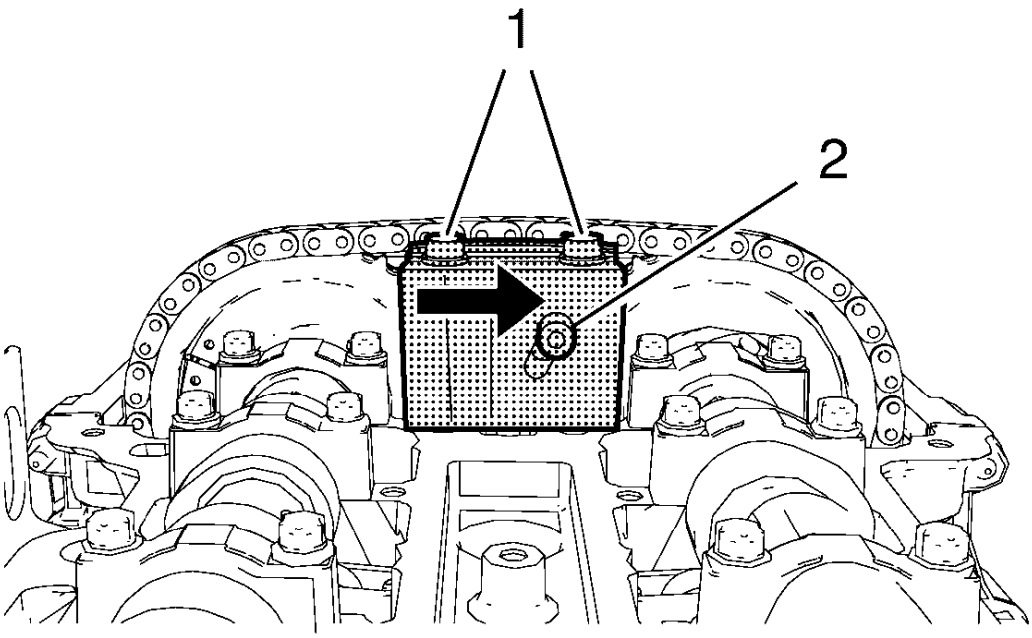

Fig. 309: Adjuster Bolt And Fastening Bolts
Courtesy of GENERAL MOTORS COMPANY

15. Tighten the 2 fastening bolts (1) of the **EN-49977-200** fixing tool while pushing the fixing tool in direction of the arrow.
16. Tighten the adjuster bolt (2).

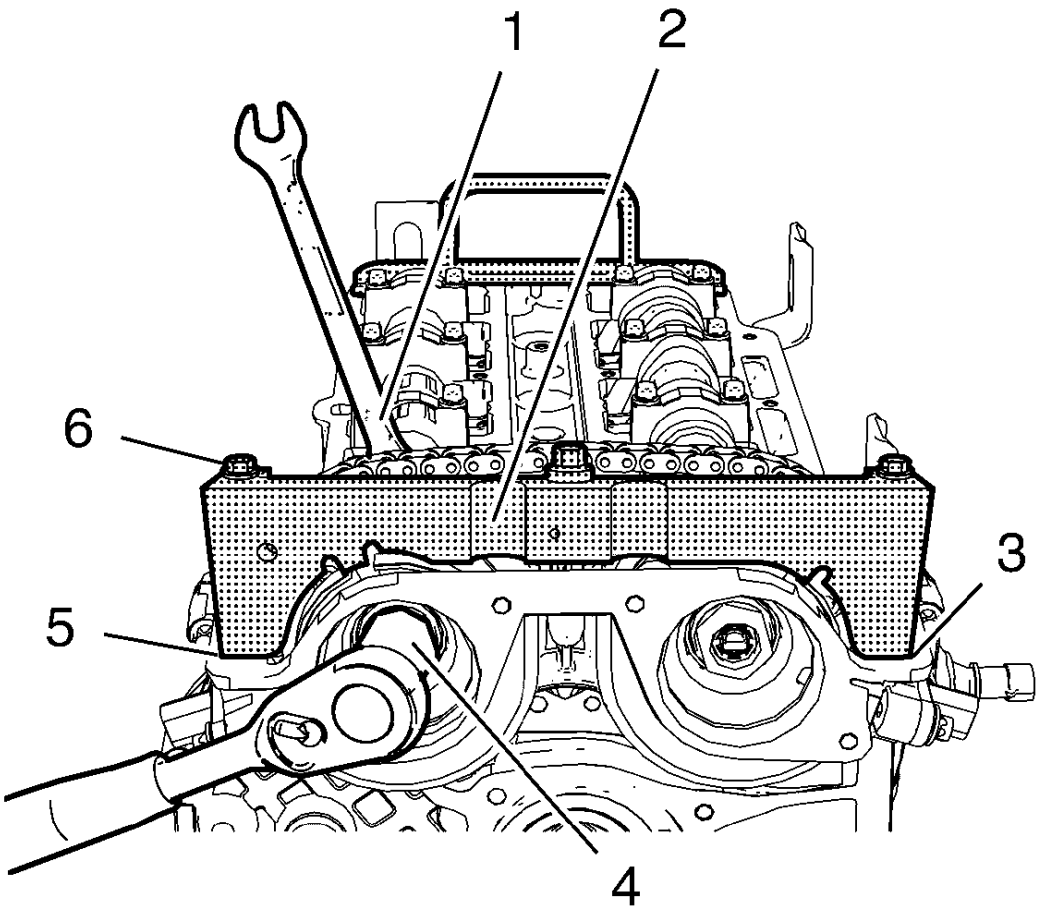

Fig. 310: Fastening Bolts And Fixation Tool
Courtesy of GENERAL MOTORS COMPANY

NOTE: A wrong installation position is possible. Make sure that the fixation tool is installed without clearance to the cylinder head in areas (3) and (5).

17. Install the **EN-49977-100** fixation (2) to find and hold the camshaft position exciter wheels in the correct position.
18. Tighten the 2 fastening bolts (6) of the **EN-49977-100** fixation.

CAUTION: Refer to Fastener Caution .

19. Tighten the intake camshaft sprocket bolt (4) while holding the hexagon (1) of the intake camshaft to 50 N.m (37 lb ft).
20. Tighten the intake camshaft sprocket bolt (4) while holding the hexagon (1) of the intake camshaft an

additional 60°.

21. Tighten the exhaust camshaft sprocket bolt while holding the hexagon of the exhaust camshaft to 50 N.m (37 lb ft).
22. Tighten the exhaust camshaft sprocket bolt while holding the hexagon of the exhaust camshaft an additional 60°.
23. Remove the **EN-49977-100** fixation and the **EN-49977-200** fixing tool.

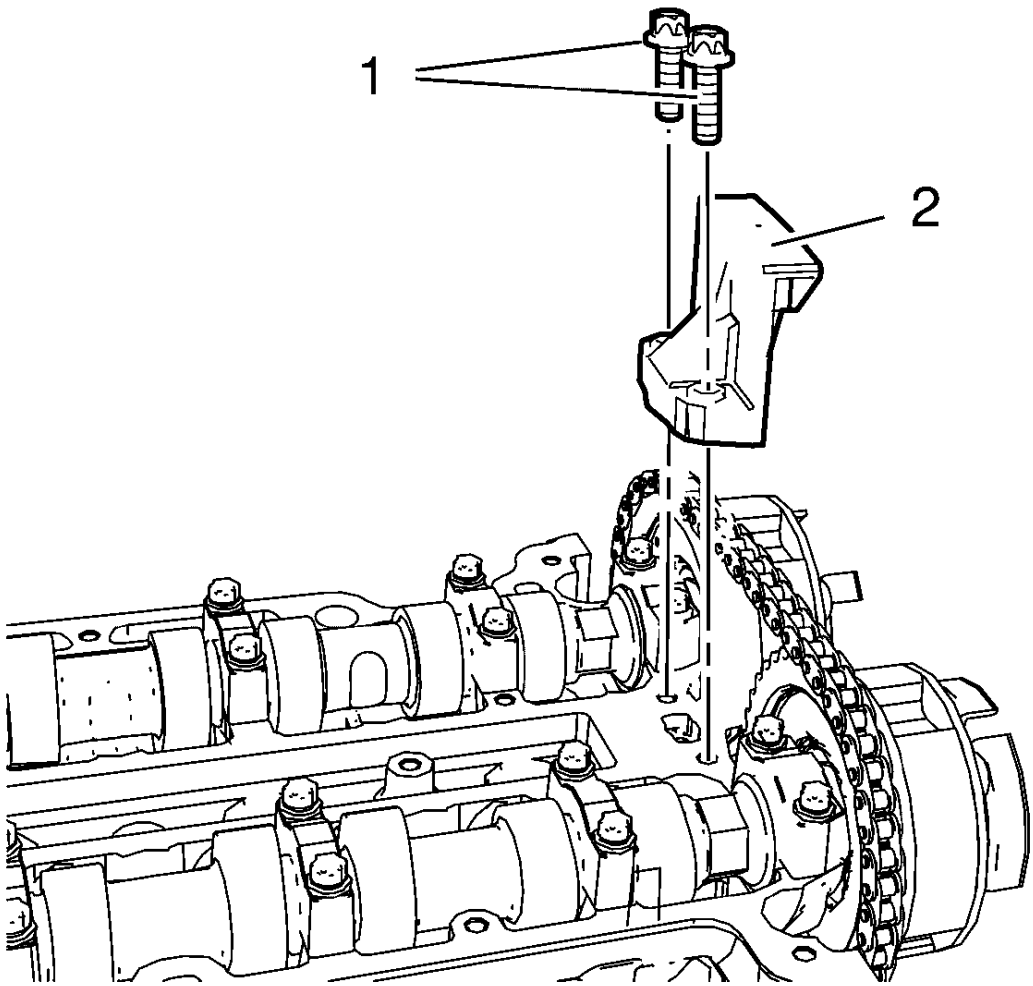

Fig. 311: Upper Timing Chain Guide And Bolts
Courtesy of GENERAL MOTORS COMPANY

24. Install the upper timing chain guide (2).
25. Install the 2 upper timing chain guide bolts (1) and tighten to 8 N.m (71 lb in).
26. Remove the **EN-953-A** fixing tool.
27. Remove the **EN-952** fixing pin.
28. Rotate the crankshaft for 720° and check the engine timing again. Repeat the adjustment procedure if necessary.

29. Install the crankshaft bearing cap tie plate hole plug and seal ring and tighten to 40 N.m (30 lb ft).
30. Install the front compartment insulator. Refer to **Front Compartment Insulator Replacement**
31. Install the right front wheelhouse liner. Refer to **Front Wheelhouse Liner Replacement**
32. Install the camshaft position actuator solenoid valves. Refer to **Camshaft Position Actuator Solenoid Valve Replacement** .
33. Install the camshaft cover. Refer to **Camshaft Cover Replacement**.
34. Install the ignition coil. Refer to **Ignition Coil Replacement** .

DRAINING FLUIDS AND OIL FILTER REMOVAL

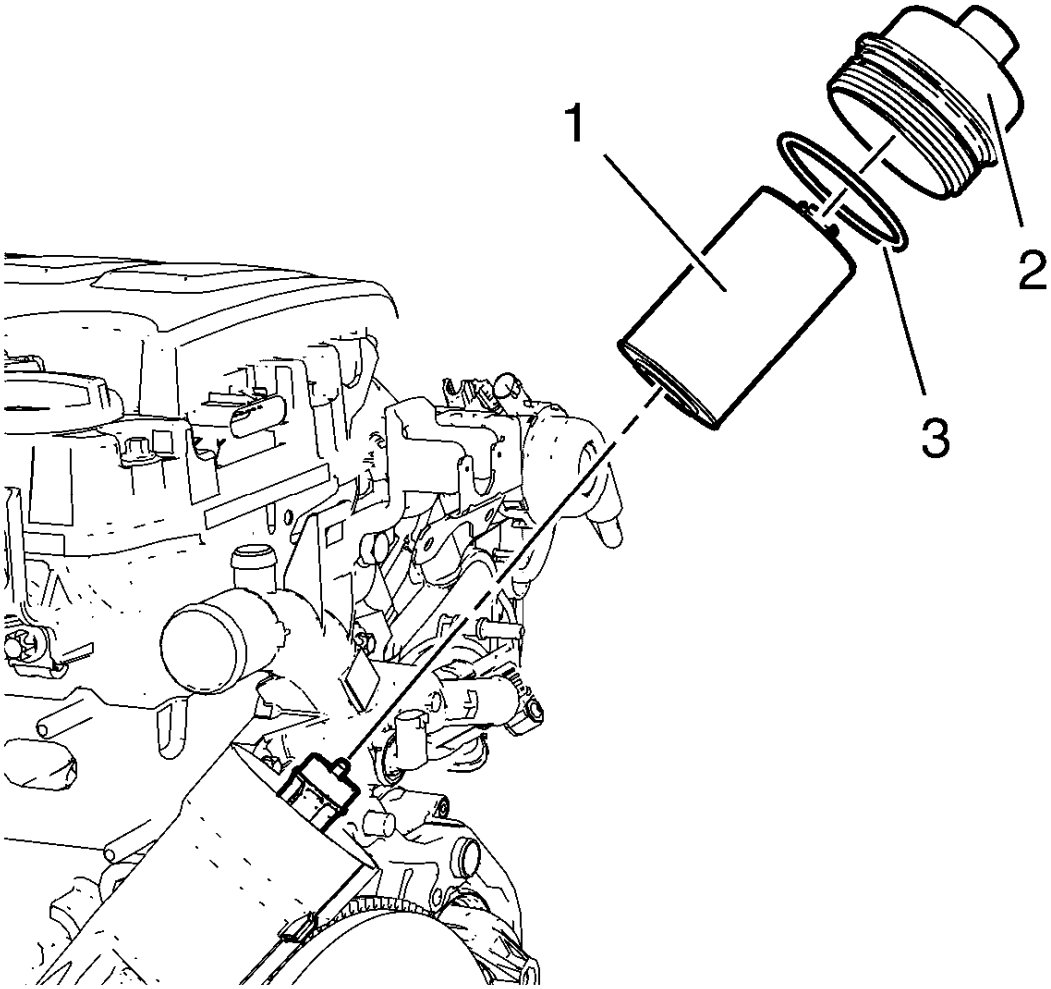

Fig. 312: Engine Oil Filter Element, Cap And Seal Ring
Courtesy of GENERAL MOTORS COMPANY

1. Remove the engine oil filter cap (2) along with the engine oil filter cap seal ring (3) and the oil filter element (1).
2. Remove the oil pan drain plug and allow the oil to drain out.

CAUTION: Refer to Fastener Caution .

3. Install the oil pan drain plug and a NEW seal ring and tighten to 14 N.m (124 lb in).
4. Install the engine oil filter cap along with a NEW engine oil filter cap seal ring and a NEW oil filter element.
5. Tighten the engine oil filter cap to 25 N.m (18 lb ft).

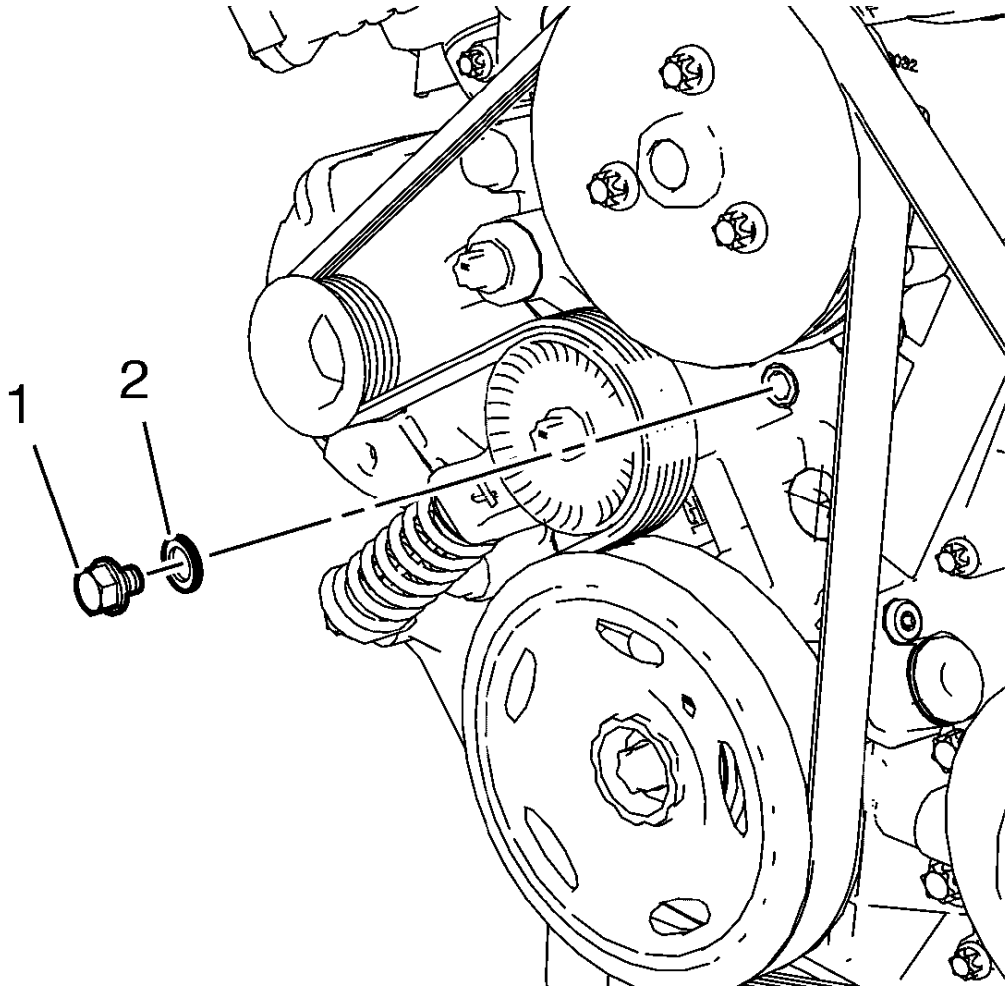

Fig. 313: Water Pump Drain Plug And Seal Ring
Courtesy of GENERAL MOTORS COMPANY

6. Remove the water pump drain plug (1) and the water pump drain plug seal ring (2) and allow the remaining coolant to drain out.
7. Install the water pump drain plug and a NEW seal ring and tighten to 15 N.m (11 lb ft).

POSITIVE CRANKCASE VENTILATION PIPE REMOVAL

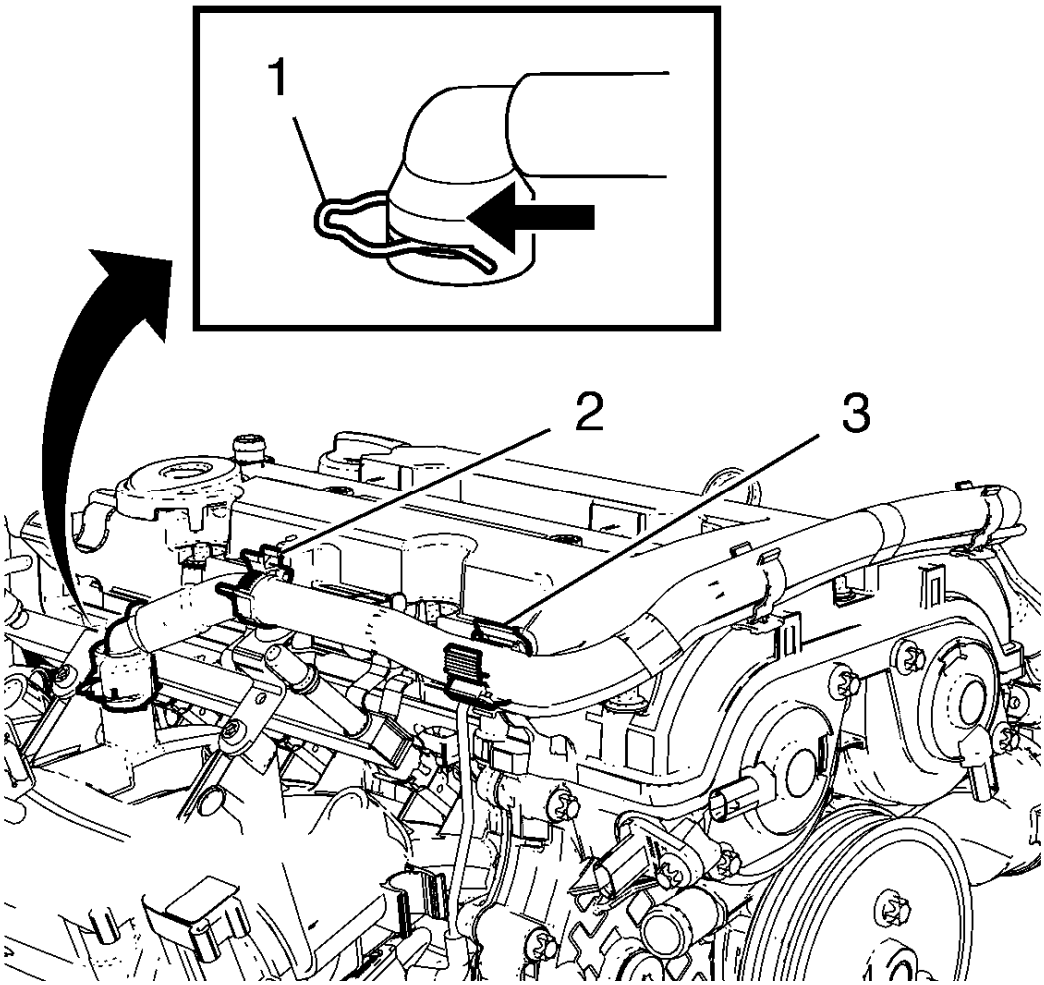

Fig. 314: Positive Crankcase Ventilation Pipe Retainer Clips And Retainer Clamp
Courtesy of GENERAL MOTORS COMPANY

1. Open the 2 positive crankcase ventilation pipe retainer clips (2) and (3).

NOTE: Move retainer clamp (1) in direction of the arrow.

2. Remove the positive crankcase ventilation pipe from the intake manifold.

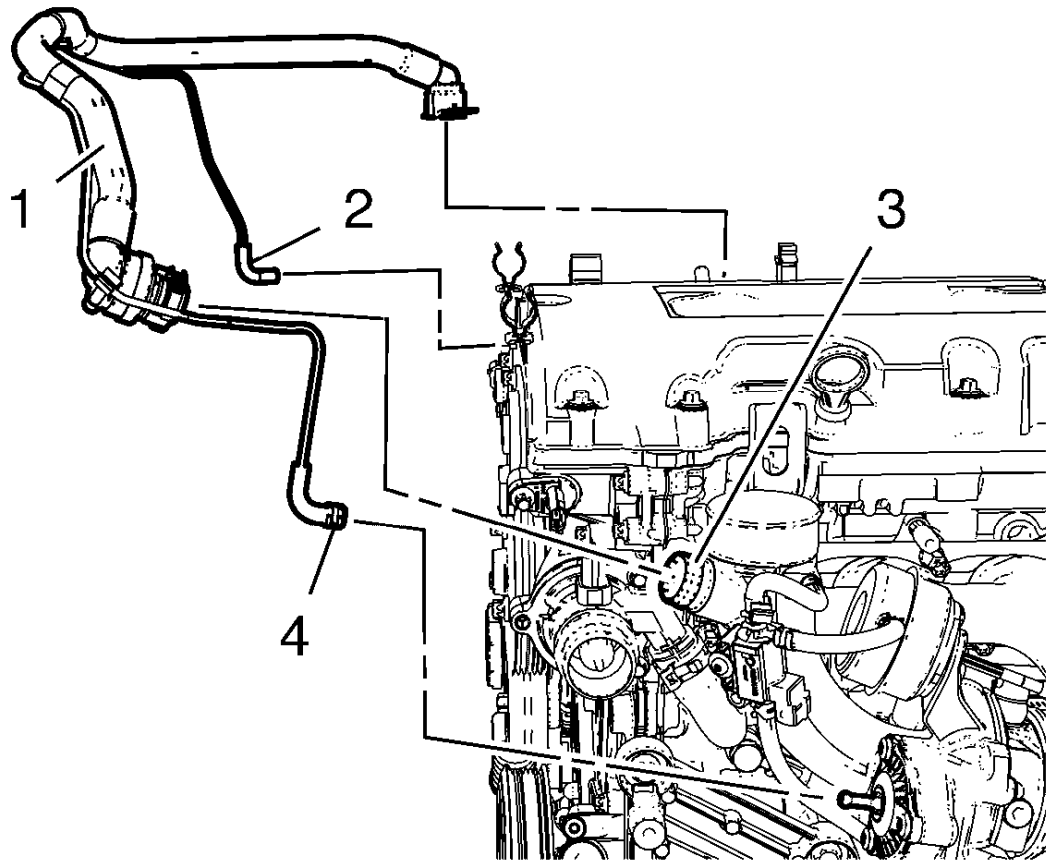

Fig. 315: Turbocharger, Positive Crankcase Ventilation Pipe Assembly And Charger Air Bypass Valve Pipe
Courtesy of GENERAL MOTORS COMPANY

3. Loosen the charger air bypass valve pipe clamp (4).
4. Remove the charger air bypass valve pipe from turbocharger.
5. Remove the charger air bypass valve pipe (2) from turbo charger waste regulator solenoid valve.
6. Disconnect the positive crankcase ventilation pipe from turbocharger (3).
7. Unclip and remove the positive crankcase ventilation pipe assembly (1) from the camshaft cover retainer clips.

EXHAUST MANIFOLD HEAT SHIELD REMOVAL

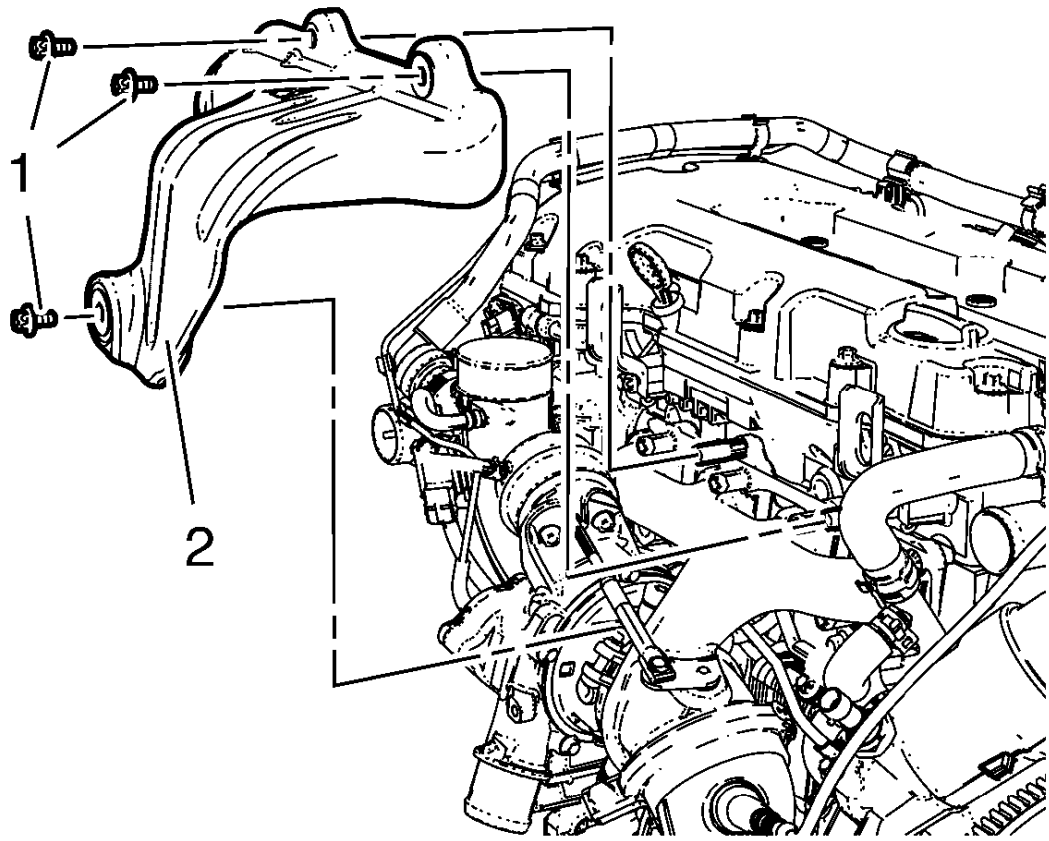

Fig. 316: Exhaust Manifold Heat Shield
Courtesy of GENERAL MOTORS COMPANY

1. Remove the 3 exhaust manifold heat shield bolts (1) and the washers.
2. Remove the exhaust manifold heat shield (2).

WARM UP THREE-WAY CATALYTIC CONVERTER REMOVAL

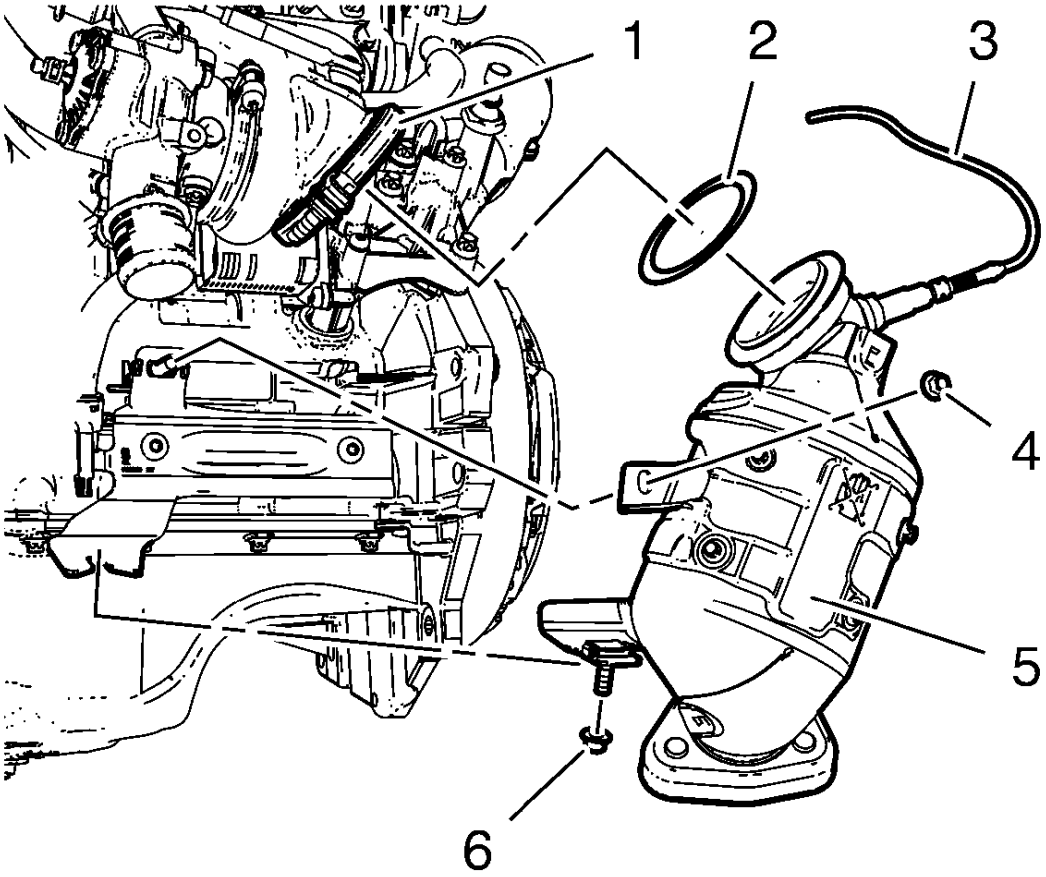

Fig. 317: Catalytic Converter Components
Courtesy of GENERAL MOTORS COMPANY

1. Disconnect the heated oxygen sensor wiring harness (3) from retainer clip.
2. Remove the 2 catalytic converter to catalytic converter bracket nuts (4) and (6).
3. Loosen the three way warm up catalytic converter V-clamp (1).
4. Remove the three way warm up catalytic converter (5) and the catalytic converter seal (2).

TURBOCHARGER REMOVAL

Special Tool

EN-49942 Holding Wrench

For equivalent regional tools, refer to **Special Tools**.

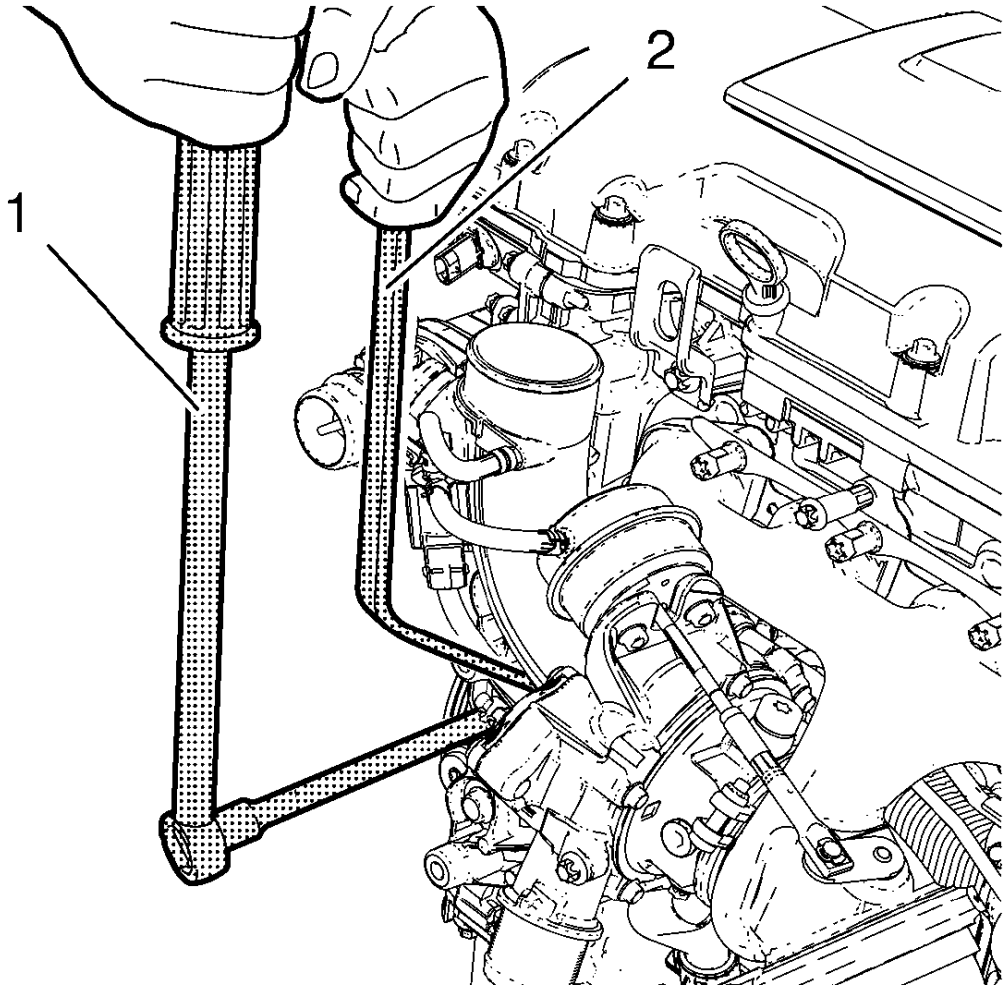

Fig. 318: Holding Wrench And Ratchet Wrench
Courtesy of GENERAL MOTORS COMPANY

1. Install the **EN-49942** holding wrench (2) to the turbocharger coolant feed pipe. Guide a ratchet wrench (1) along with an extension through **EN-49942** holding wrench to the turbocharger coolant feed pipe hollow screw.

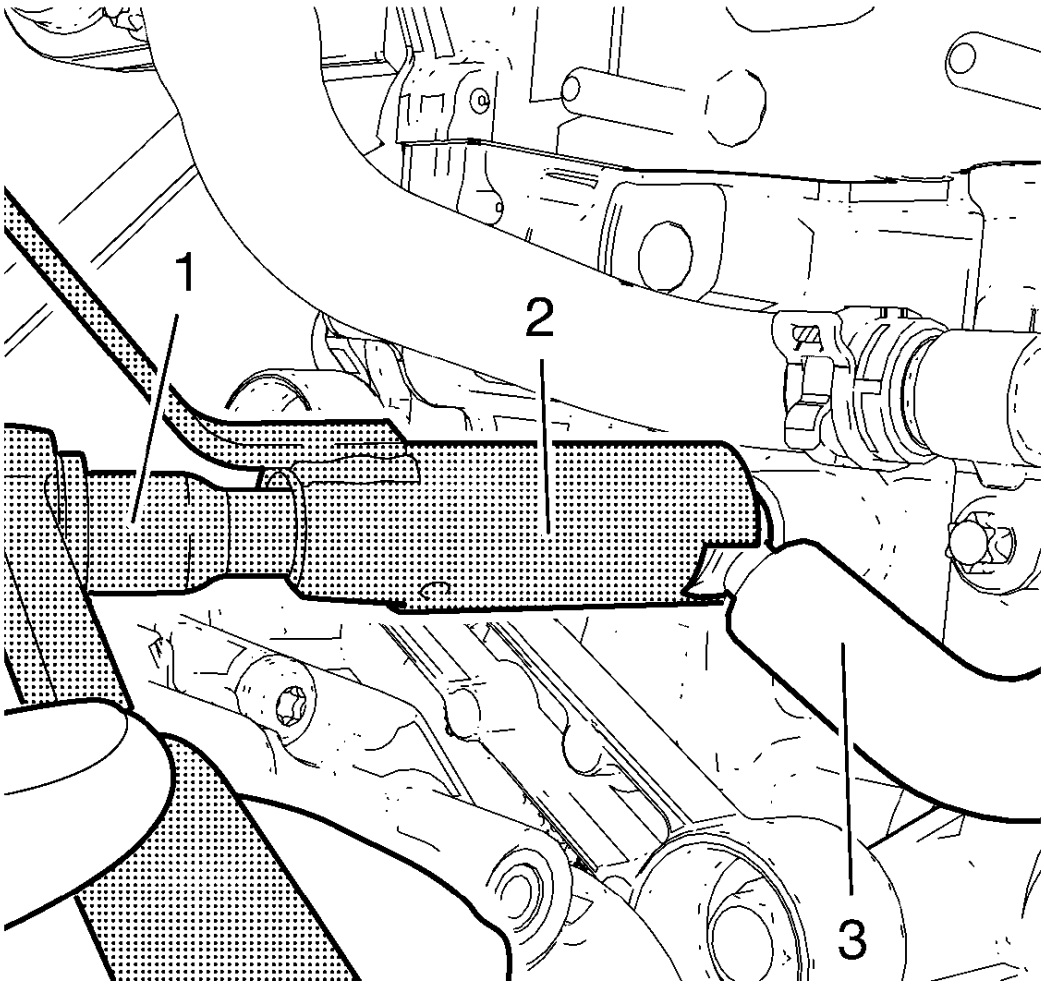

Fig. 319: Ratchet Wrench, Holding Wrench And Coolant Feed Pipe
Courtesy of GENERAL MOTORS COMPANY

NOTE: EN-49942 holding wrench (2) should be installed to turbocharger coolant feed pipe as shown. The holding wrench should be installed to avoid twist of the turbocharger coolant feed pipe during the loosening procedure.

2. Loosen the turbocharger coolant feed pipe hollow screw with ratchet wrench and extension (1).

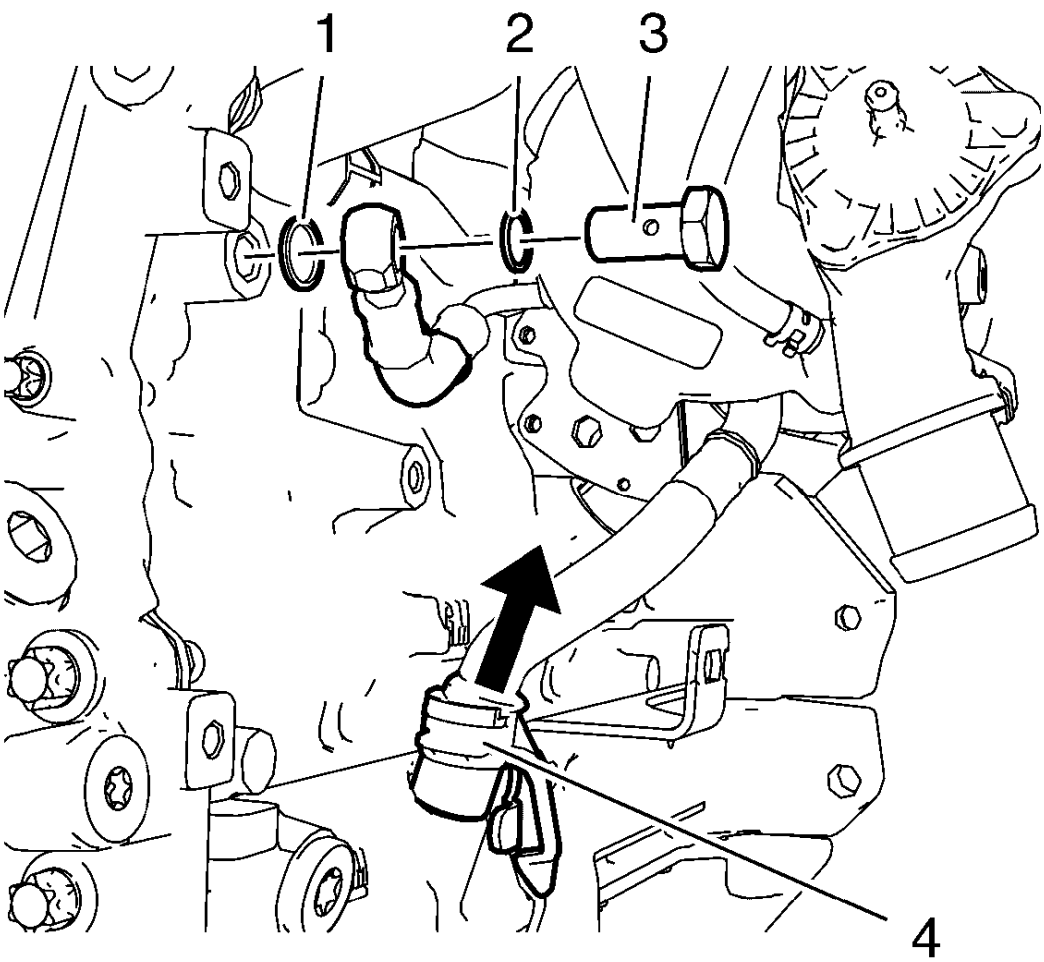

Fig. 320: Turbocharger Oil Return Pipe
Courtesy of GENERAL MOTORS COMPANY

3. Remove the turbocharger coolant feed pipe hollow screw (3) and the 2 seal rings (1) and (2).
4. Disconnect the turbocharger oil return pipe (4) from the engine block.

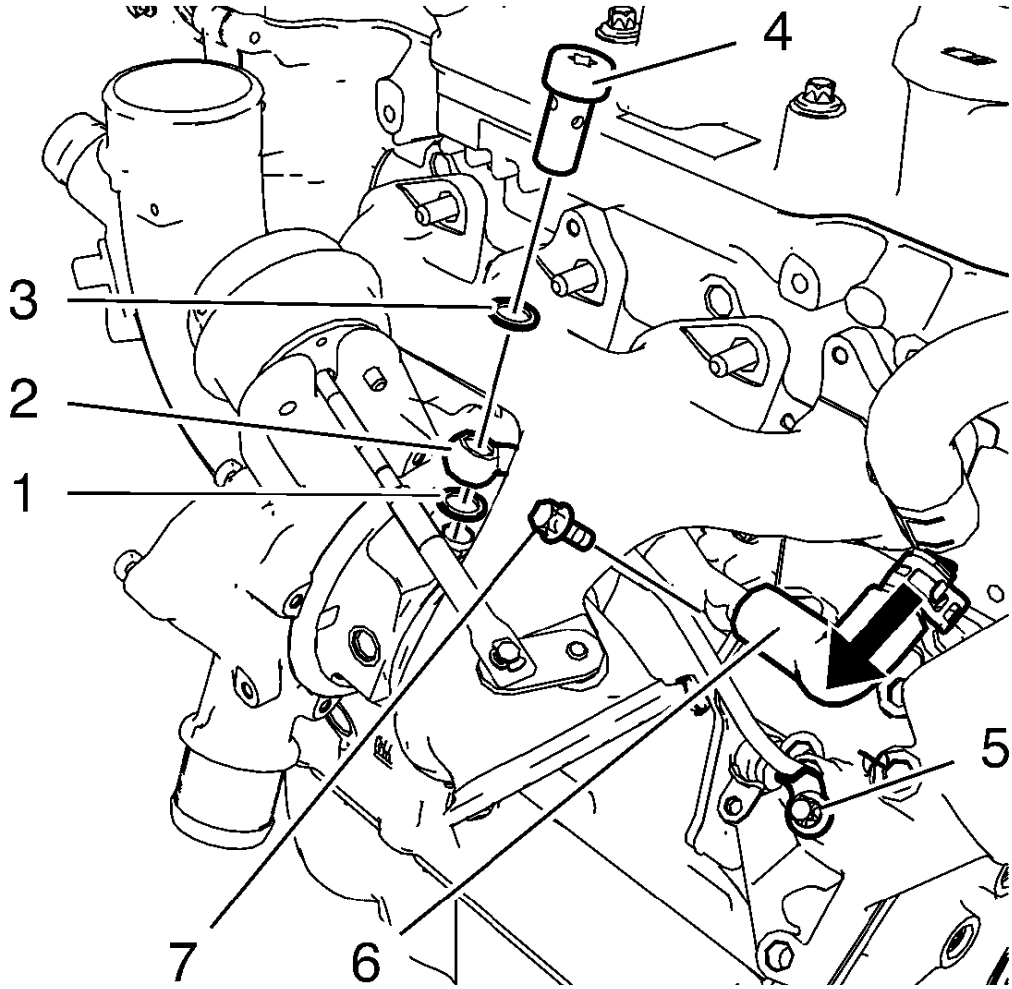

Fig. 321: Turbocharger Oil Feed Pipe Components
Courtesy of GENERAL MOTORS COMPANY

5. Remove the turbocharger oil feed pipe bolt (5) from the oil cooler.
6. Remove the turbocharger oil feed pipe hollow screw (4) and the 2 seal rings (1) and (3) and close the screw bore in the turbocharger.
7. Remove the turbocharger oil feed pipe (2) and the rubber seal ring.
8. Disconnect the turbocharger coolant return hose (6) from the oil cooler coolant inlet pipe and remove the turbocharger coolant return pipe bolt (7) from the oil cooler.

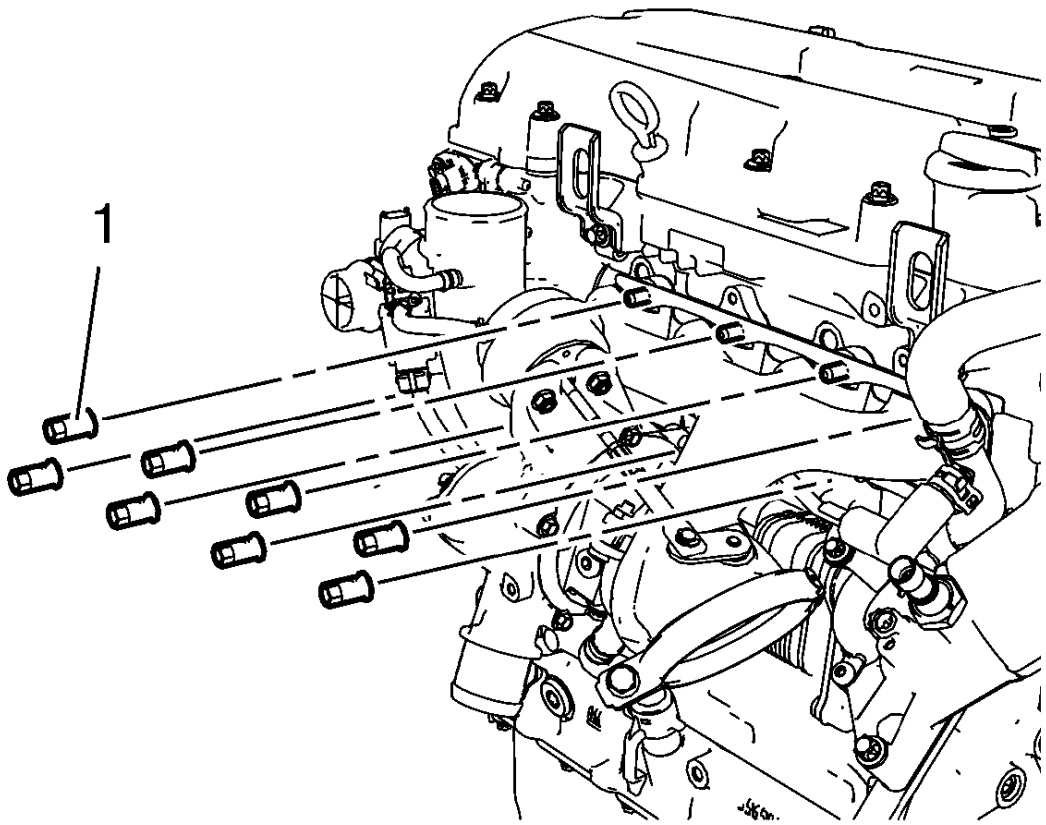

Fig. 322: Turbocharger Nuts
Courtesy of GENERAL MOTORS COMPANY

9. Remove the 8 turbocharger nuts (1).

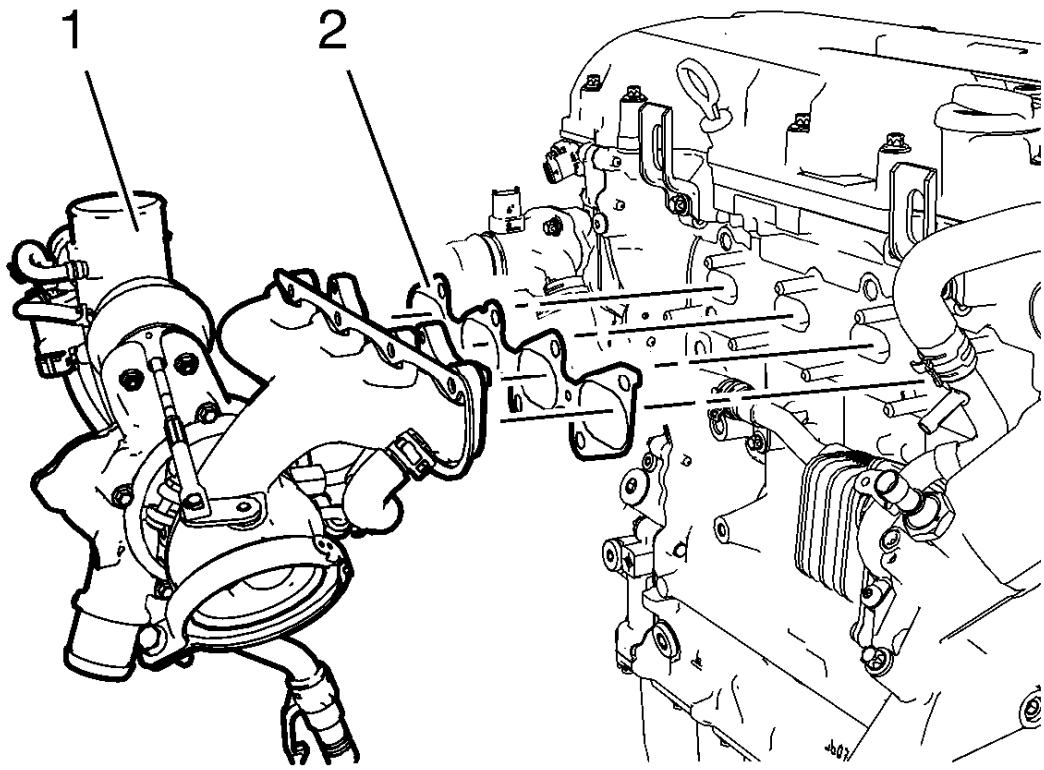

Fig. 323: Turbocharger Assembly And Turbocharger Gasket
Courtesy of GENERAL MOTORS COMPANY

10. Remove the turbocharger assembly (1) and the turbocharger gasket (2).

ENGINE OIL COOLER REMOVAL

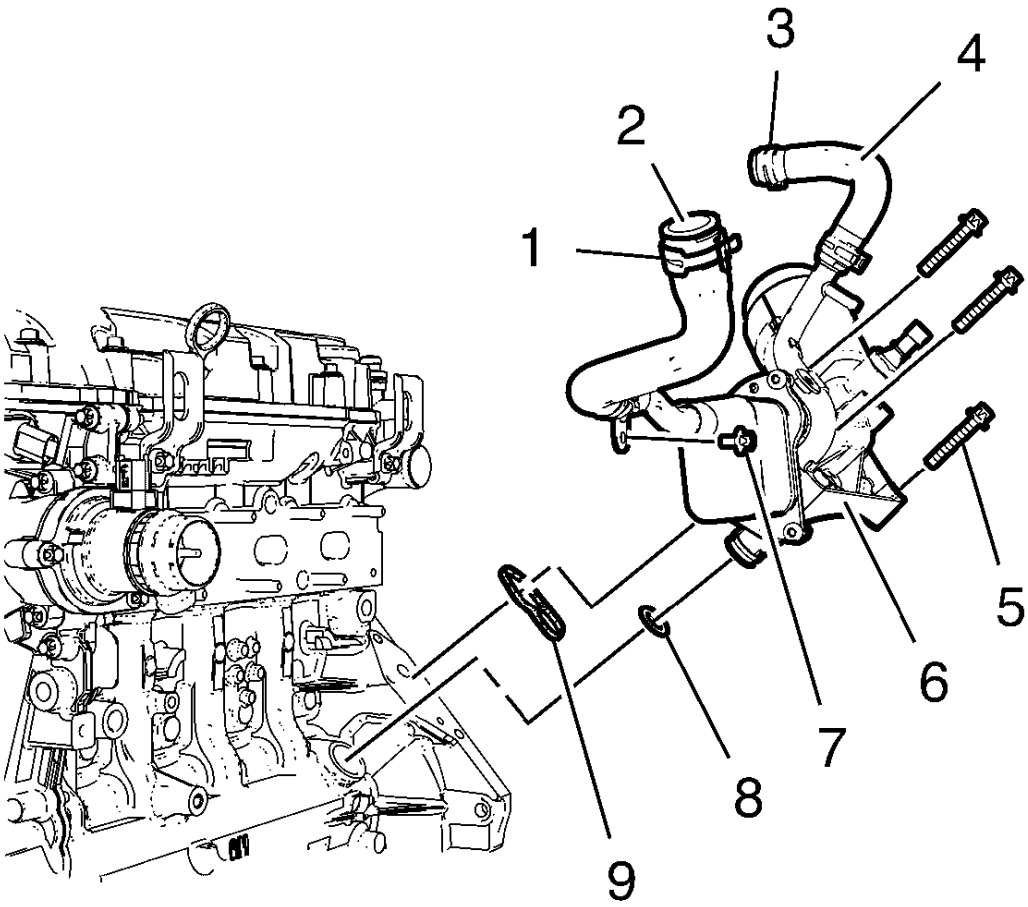

Fig. 324: Engine Oil Cooler
Courtesy of GENERAL MOTORS COMPANY

1. Remove the oil cooler coolant outlet hose clamp (1).
2. Remove the oil cooler coolant outlet hose (2) from engine coolant thermostat housing.
3. Remove the oil cooler coolant inlet hose clamp (3).
4. Remove the oil cooler coolant inlet hose (4) from water outlet.
5. Remove the oil cooler coolant outlet pipe bolt (7).
6. Remove the 3 oil cooler bolts (5).
7. Remove the engine oil cooler assembly (6) and the 2 oil cooler sealings (8) and (9).

ENGINE COOLANT THERMOSTAT HOUSING REMOVAL

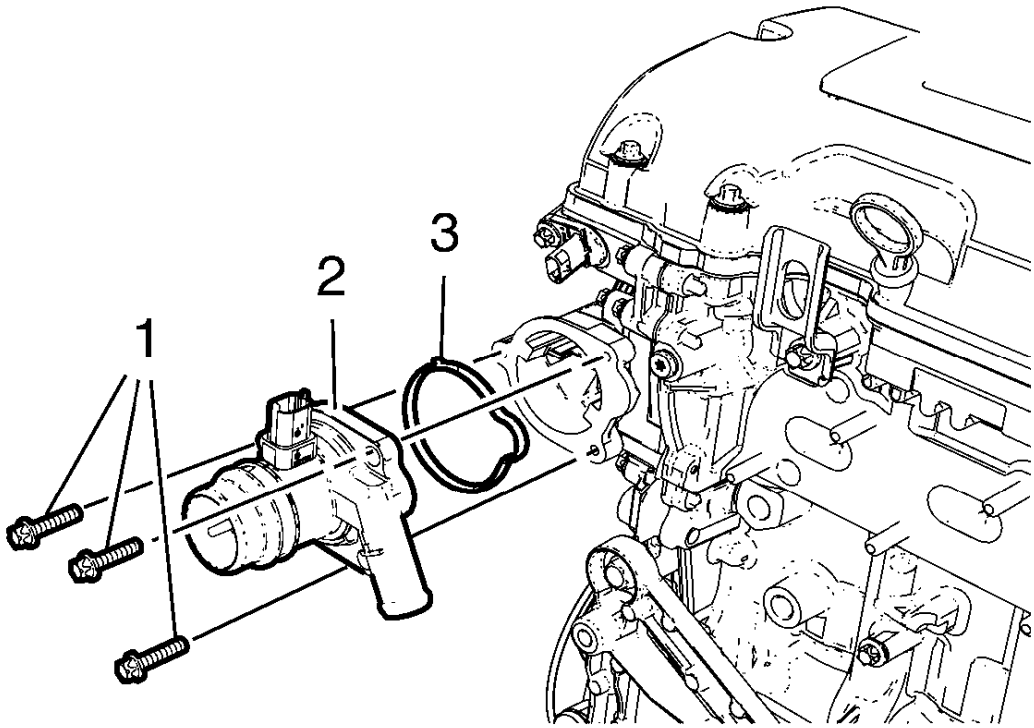

Fig. 325: Engine Coolant Thermostat Housing
Courtesy of GENERAL MOTORS COMPANY

1. Remove the 3 engine coolant thermostat housing bolts (1).
2. Remove the engine coolant thermostat housing (2) and the engine coolant thermostat housing seal ring (3).

WATER OUTLET REMOVAL

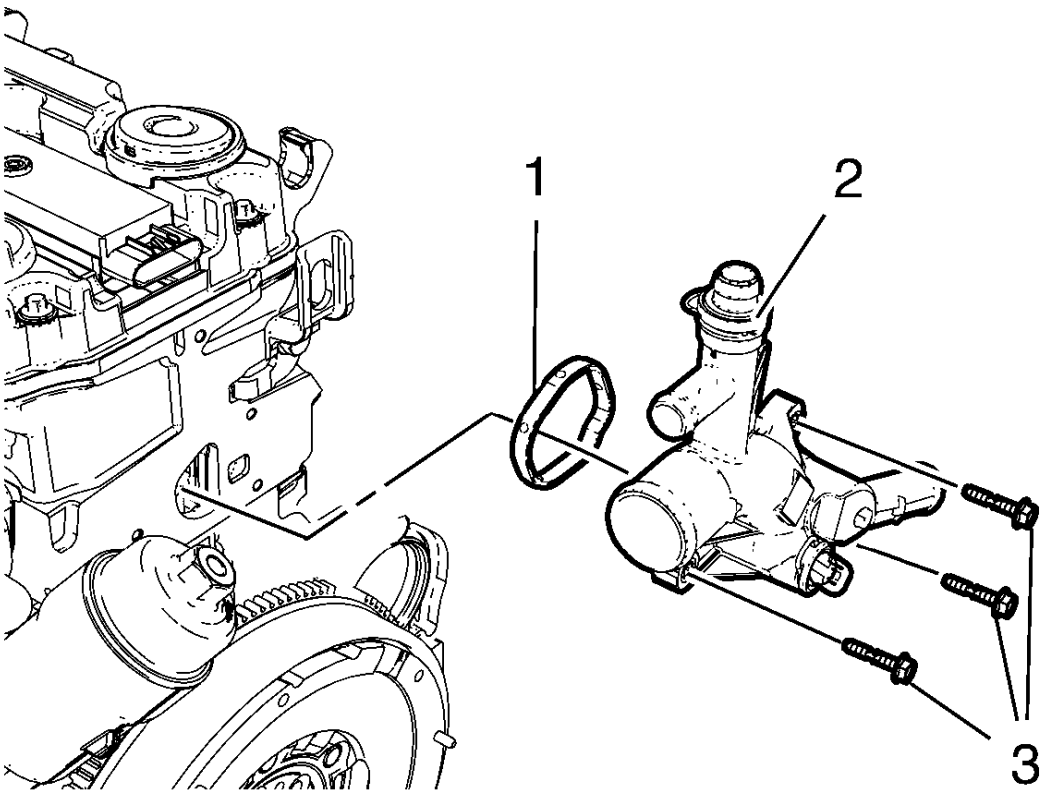

Fig. 326: Water Outlet, Bolts And Seal Ring
Courtesy of GENERAL MOTORS COMPANY

1. Remove the 3 water outlet bolts (3).
2. Remove the water outlet (2) and the water outlet seal ring (1).

DRIVE BELT TENSIONER REMOVAL

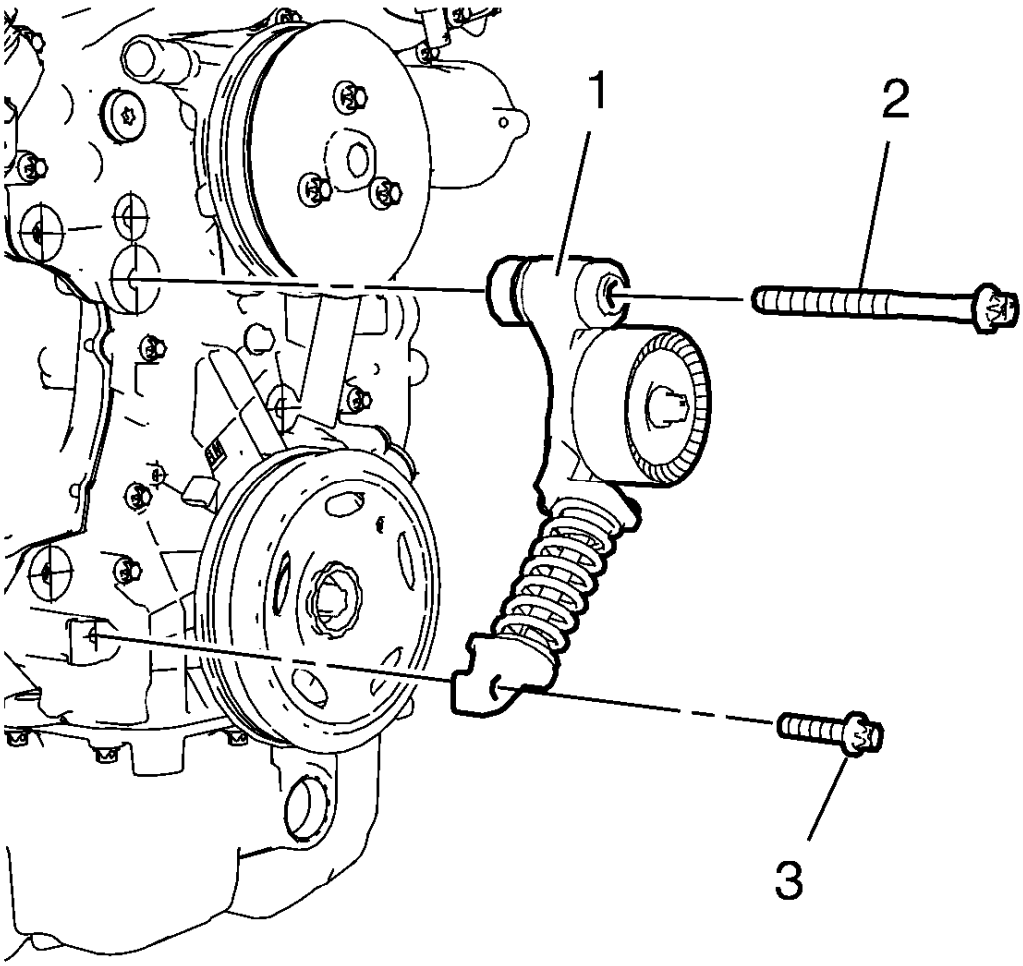

Fig. 327: Drive Belt Tensioner And Bolts
Courtesy of GENERAL MOTORS COMPANY

CAUTION: The drive belt tensioner must always be in a pre-tensioned state and must never be free from tension. If the drive belt tensioner is free from the belt tension, it must always stay fixed with an appropriate locking pin. Failure to follow this instruction will lead to a damage of the drive belt tensioner.

1. Remove the upper drive belt tensioner bolt (2).
2. Remove the lower drive belt tensioner bolt (3).
3. Remove the drive belt tensioner (1).

AIR CONDITIONING COMPRESSOR BRACKET REMOVAL

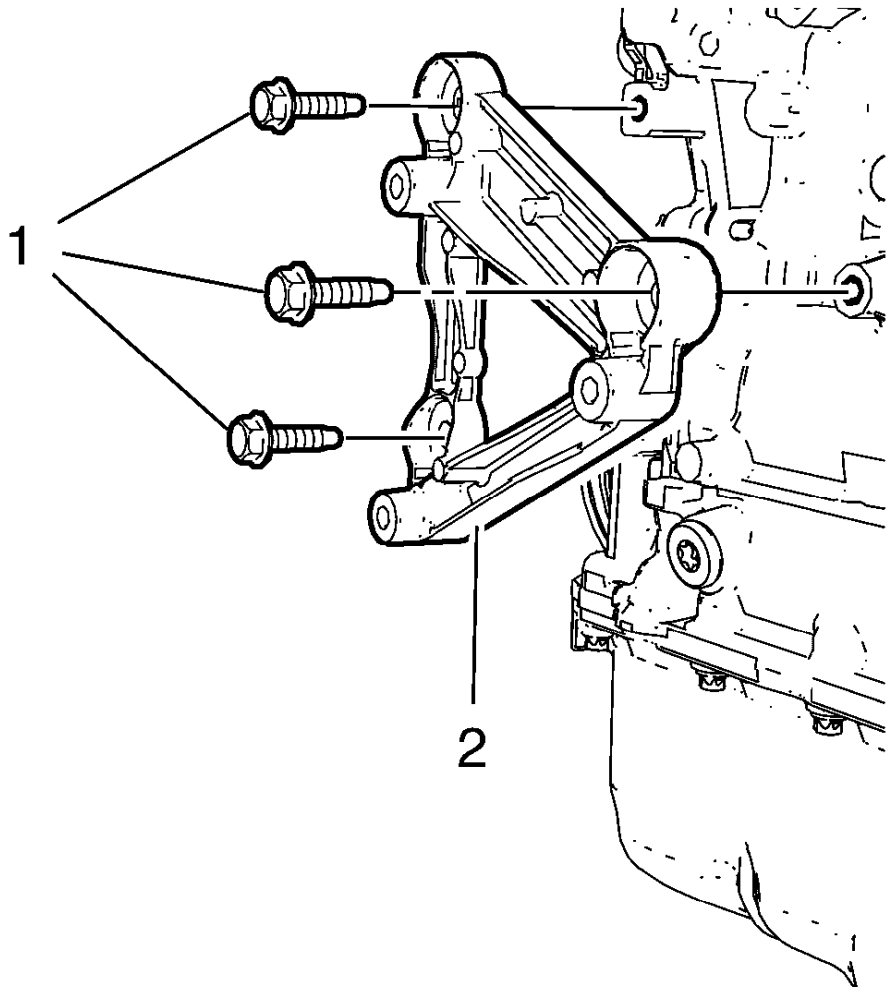

Fig. 328: Power Steering Pump Bracket/Air Conditioning Compressor Bracket And Bolts
Courtesy of GENERAL MOTORS COMPANY

1. Remove the 3 air conditioning compressor bracket bolts (1).
2. Remove the air conditioning compressor bracket (2).

WATER PUMP PULLEY REMOVAL

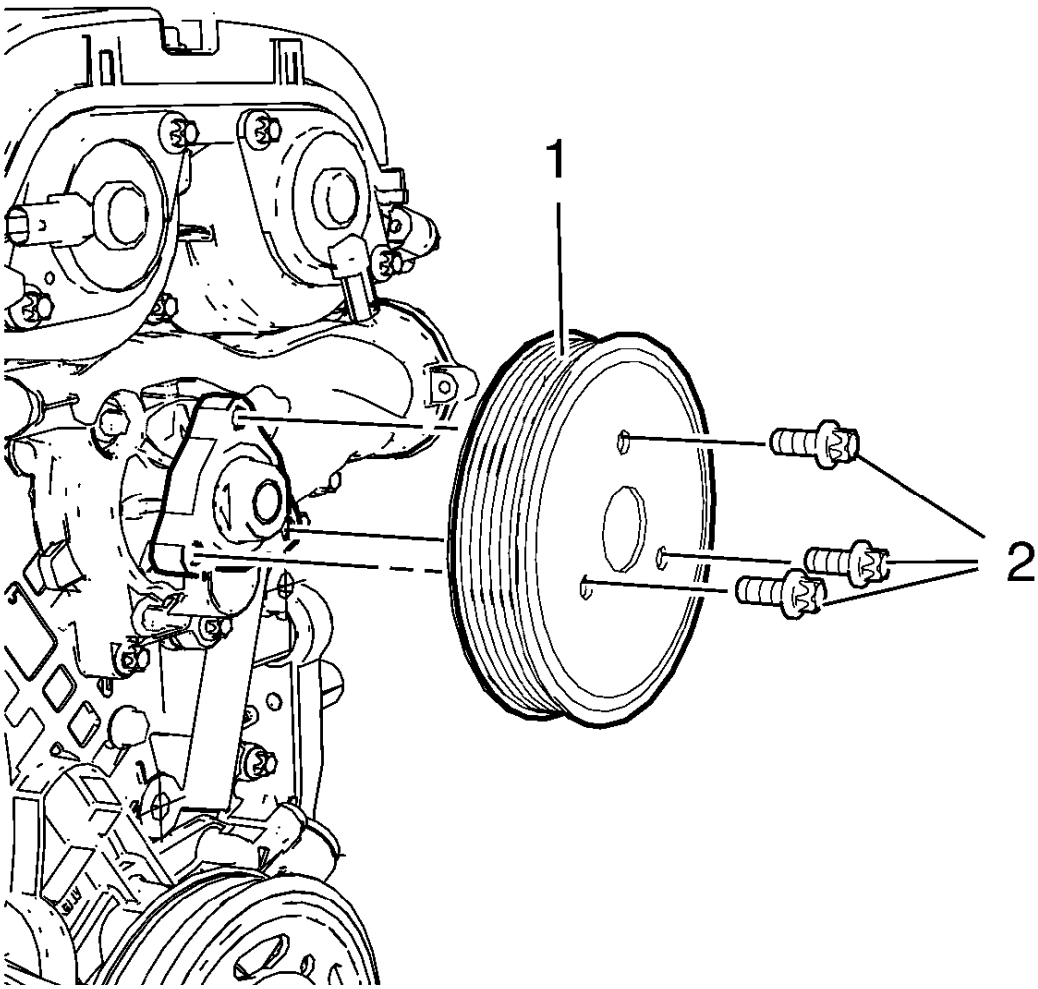

Fig. 329: Water Pump Pulley
Courtesy of GENERAL MOTORS COMPANY

1. Loosen the 3 water pump pulley bolts (2) while holding up the water pump pulley hub with a wrench.
2. Remove the 3 water pump pulley bolts (2).
3. Remove the water pump pulley (1).

CRANKSHAFT BALANCER REMOVAL

Special Tools

- **EN-956-1** Extension
- **EN-49979** Crankshaft Shock Mount Retainer

For equivalent regional tools, refer to **Special Tools**.

1. Install **EN-49979** retainer to **EN-956-1** extension.

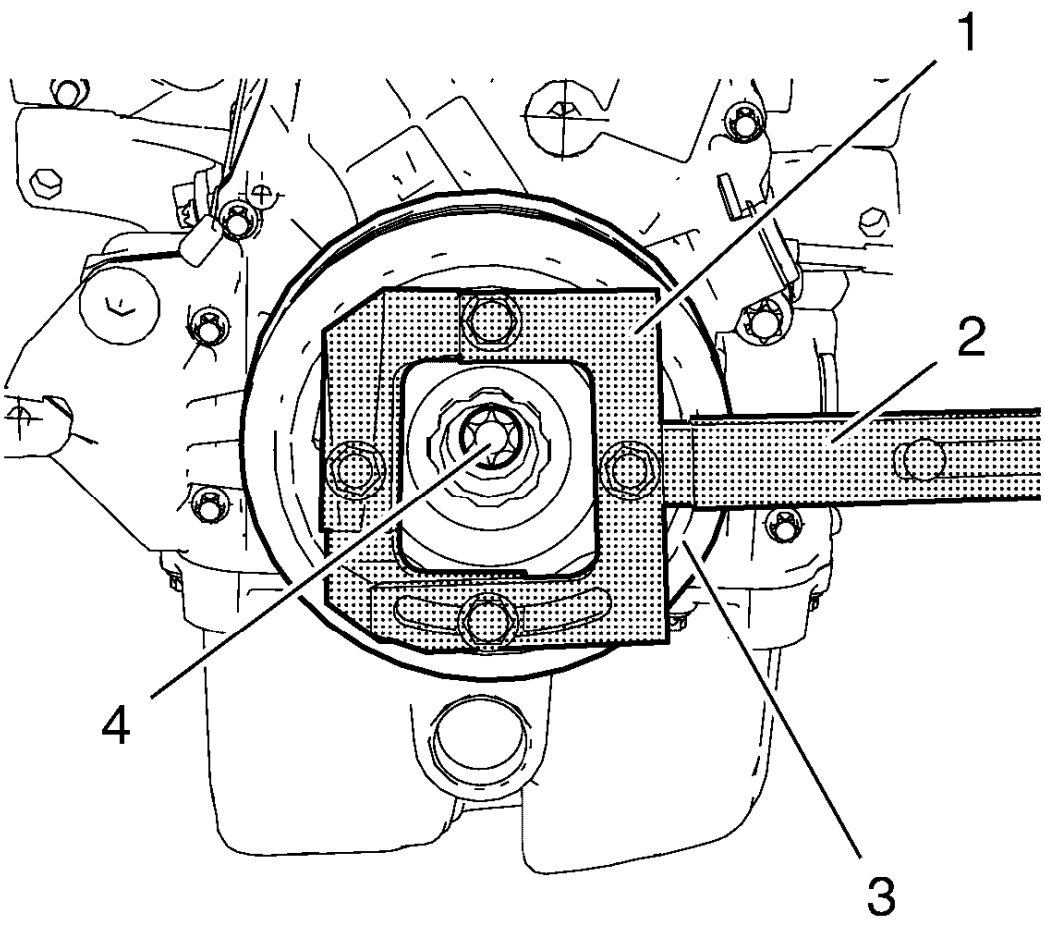

Fig. 330: Crankshaft Balancer, Retainer And Extension
Courtesy of GENERAL MOTORS COMPANY

NOTE: **The crankshaft balancer can be incorrectly installed 180° from the required position. Be sure to note the location of the alignment hole on the crankshaft balancer prior to removing the crankshaft balancer from the engine.**

2. Loosen the crankshaft balancer bolt (4) while fixing the crankshaft balancer (3) with **EN-49979** retainer (1) and **EN-956-1** extension (2).

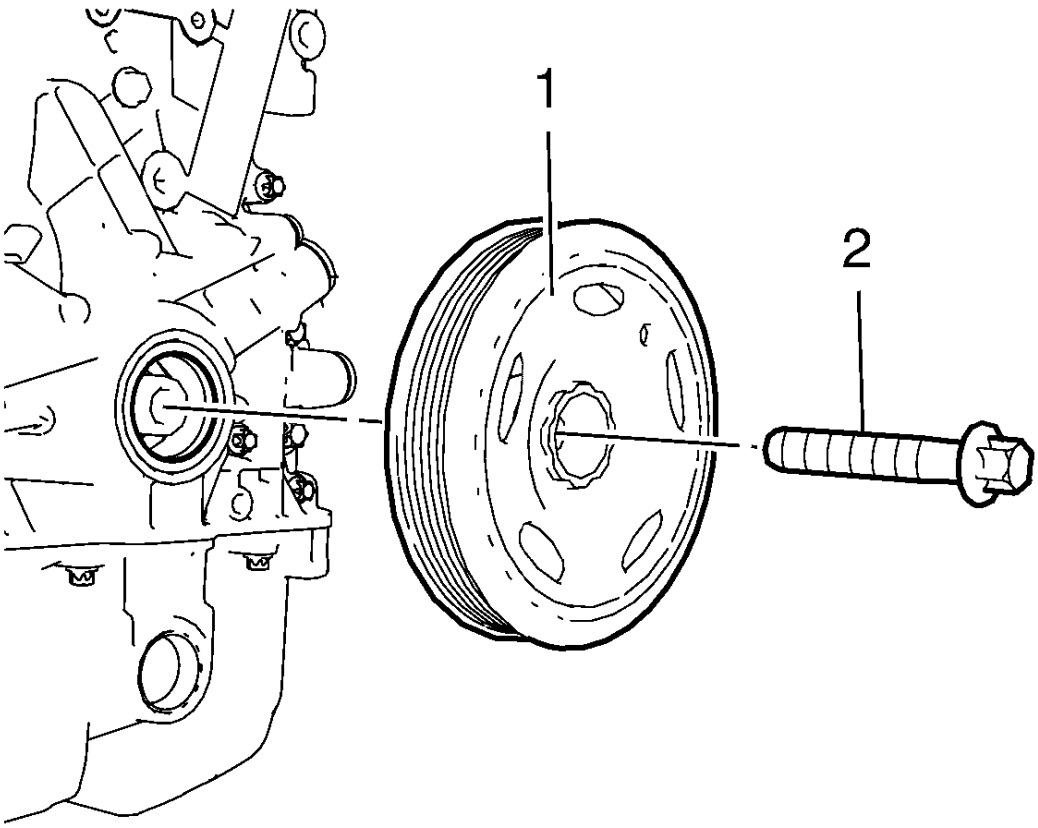

Fig. 331: Crankshaft Balancer And Bolt
Courtesy of GENERAL MOTORS COMPANY

3. Remove and DISCARD the crankshaft balancer bolt (2).
4. Remove the crankshaft balancer (1).

WATER PUMP REMOVAL

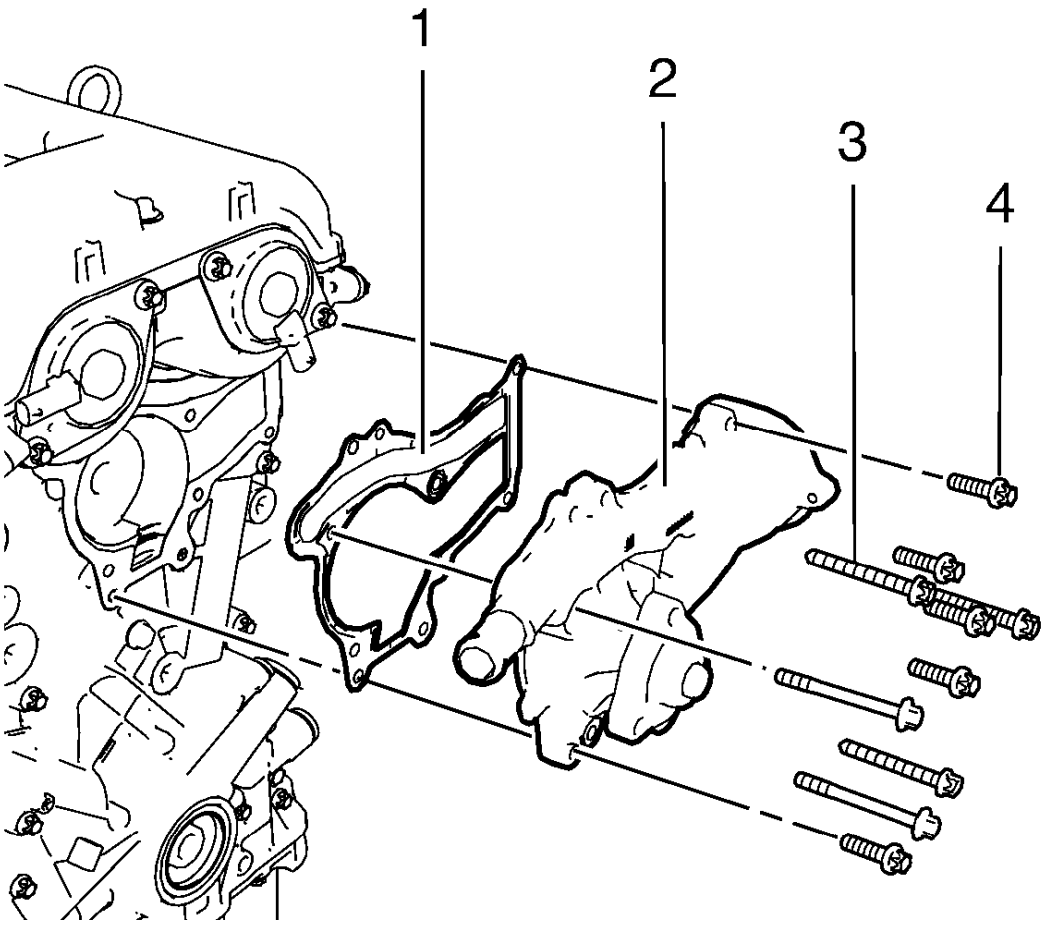

Fig. 332: Water Pump, Gasket And Bolts
Courtesy of GENERAL MOTORS COMPANY

1. Remove the 5 short water pump bolts (4) and the 5 long water pump bolts (3).
2. Remove the water pump (2).
3. Remove the water pump gasket (1).

THROTTLE BODY REMOVAL

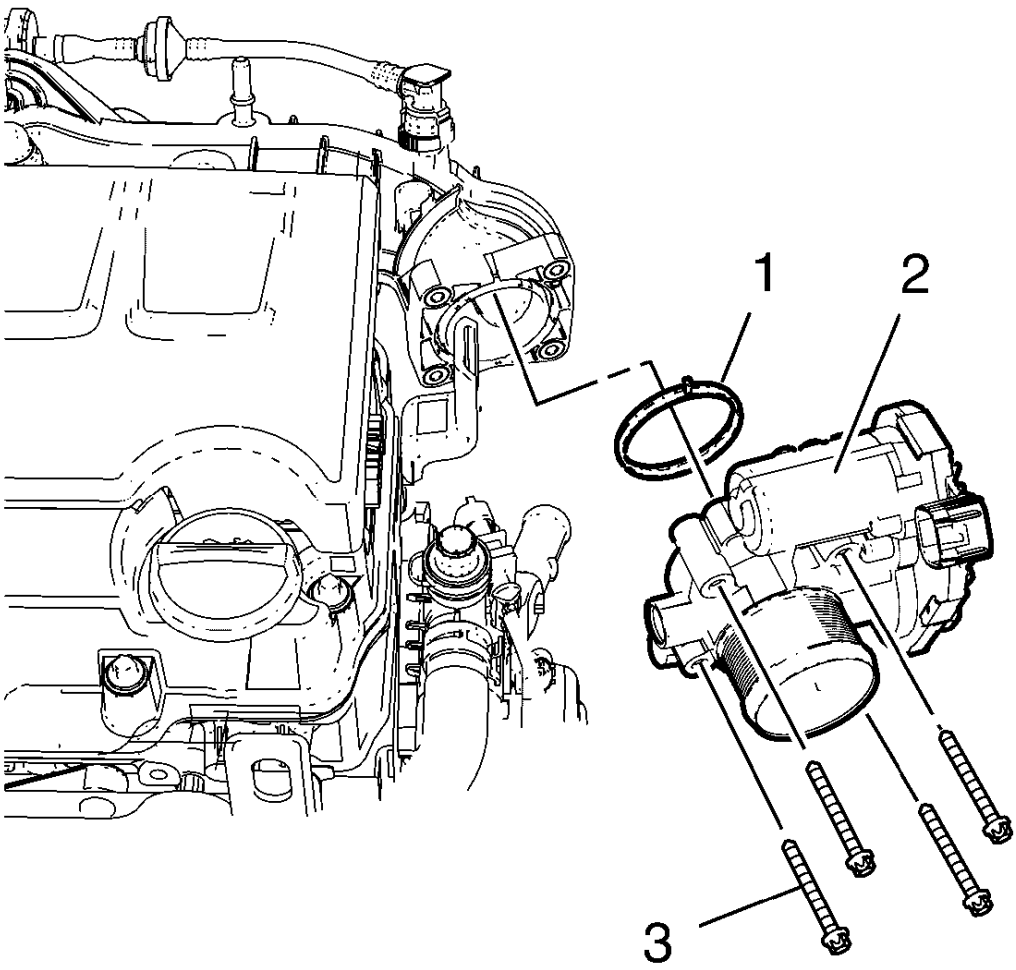

Fig. 333: Throttle Body And Bolts
Courtesy of GENERAL MOTORS COMPANY

1. Remove the 4 throttle body bolts (3).
2. Remove the throttle body (2) and the throttle body seal ring (1).

INTAKE MANIFOLD REMOVAL

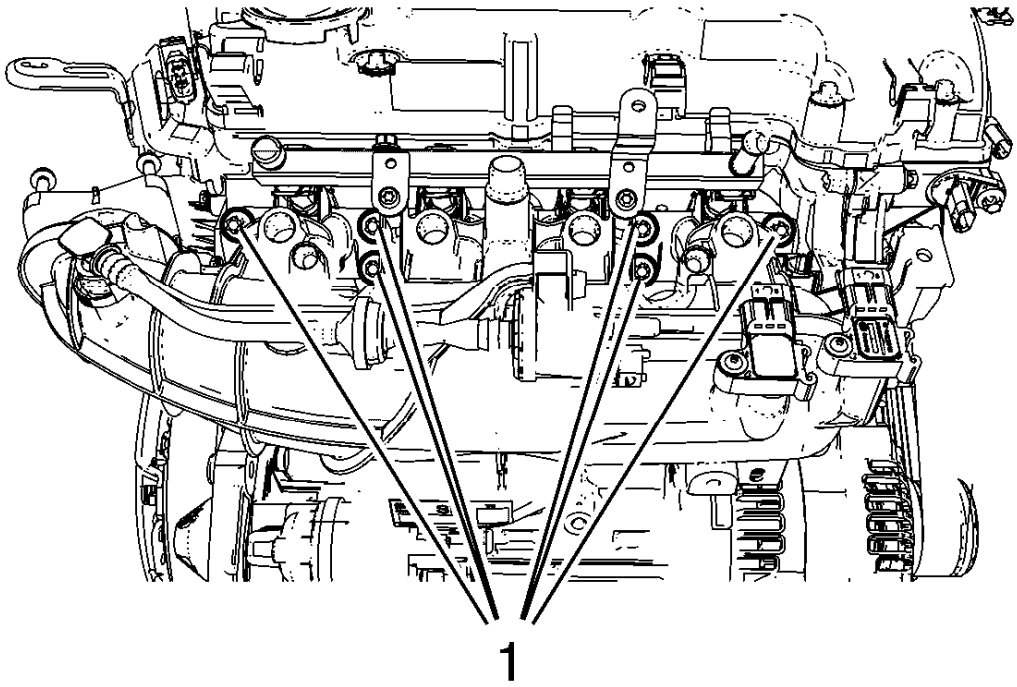

Fig. 334: Intake Manifold Bolts
Courtesy of GENERAL MOTORS COMPANY

NOTE: Intake manifold bolts remain in intake manifold screw bores.

1. Remove the 6 intake manifold bolts (1).

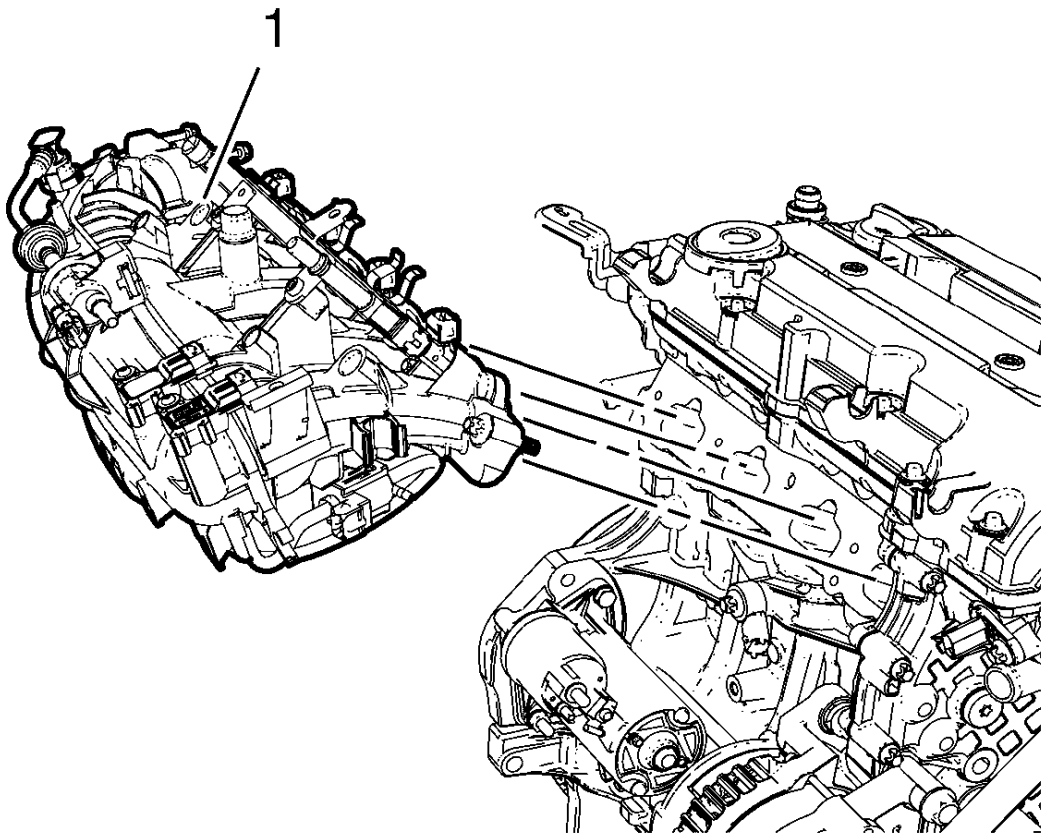

Fig. 335: Intake Manifold
Courtesy of GENERAL MOTORS COMPANY

2. Remove the intake manifold (1) along with the intake manifold gasket.

GENERATOR REMOVAL

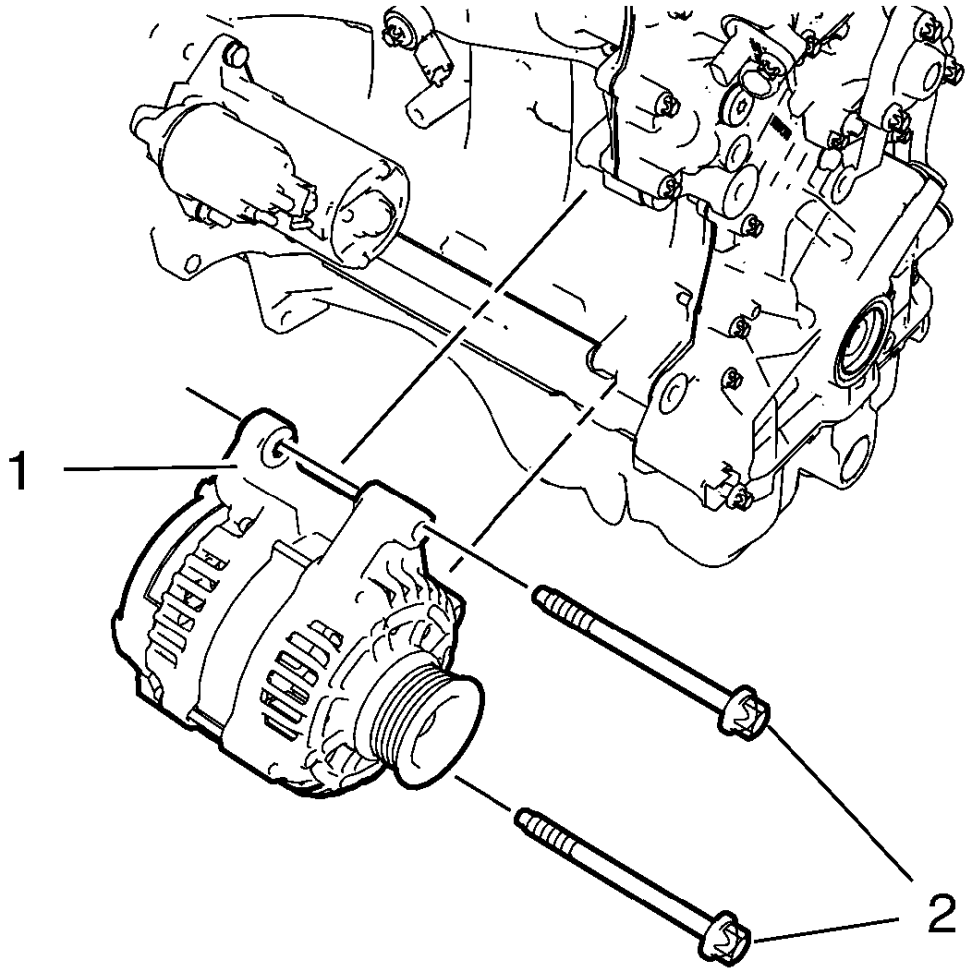

Fig. 336: Generator And Bolts
Courtesy of GENERAL MOTORS COMPANY

1. Remove the 2 generator bolts (2).
2. Remove the generator (1).

STARTER REMOVAL

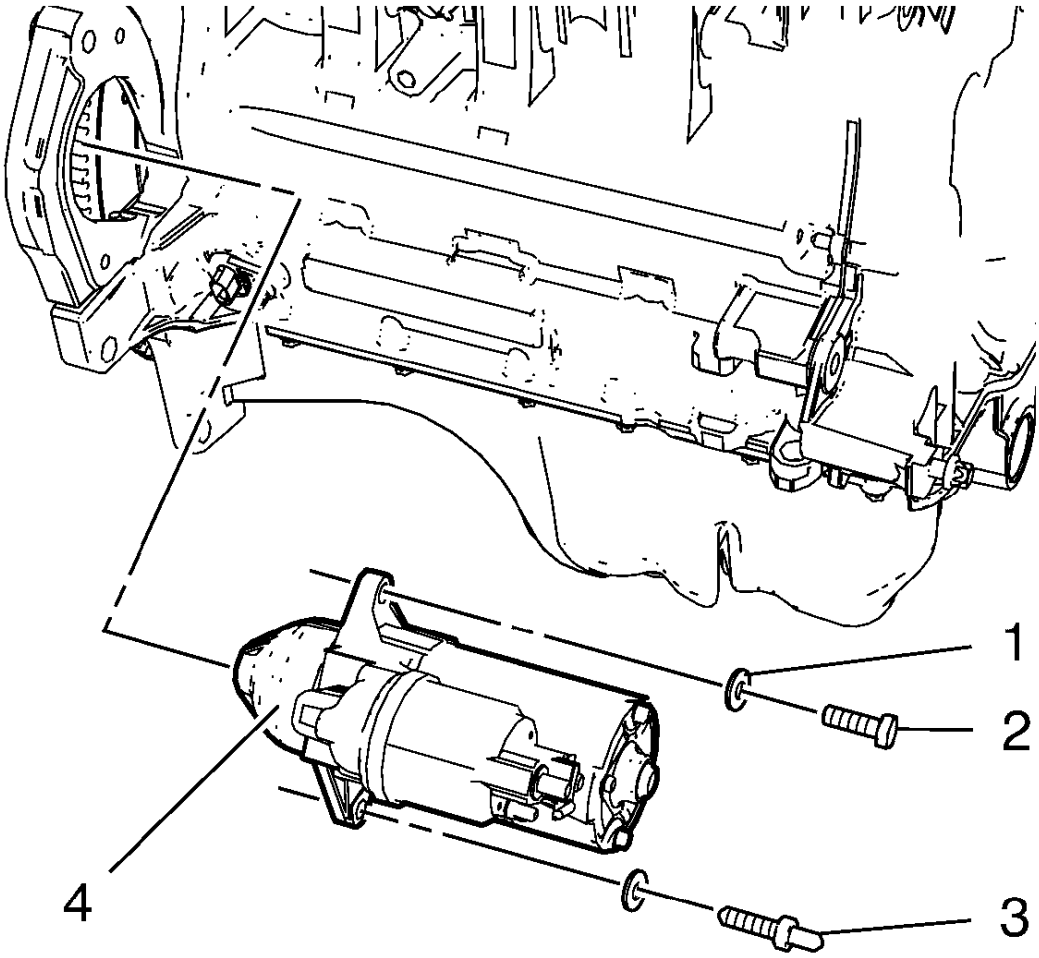

Fig. 337: Starter, Bolt, Stud And Washer
Courtesy of GENERAL MOTORS COMPANY

1. Remove the upper starter bolt (2) and if equipped the washer (1).
2. Remove the lower starter bolt stud (3) and if equipped the washer.
3. Remove the starter (4).

ENGINE FLYWHEEL REMOVAL

Special Tools

EN-652 Flywheel Holder

For equivalent regional tools, refer to **Special Tools**.

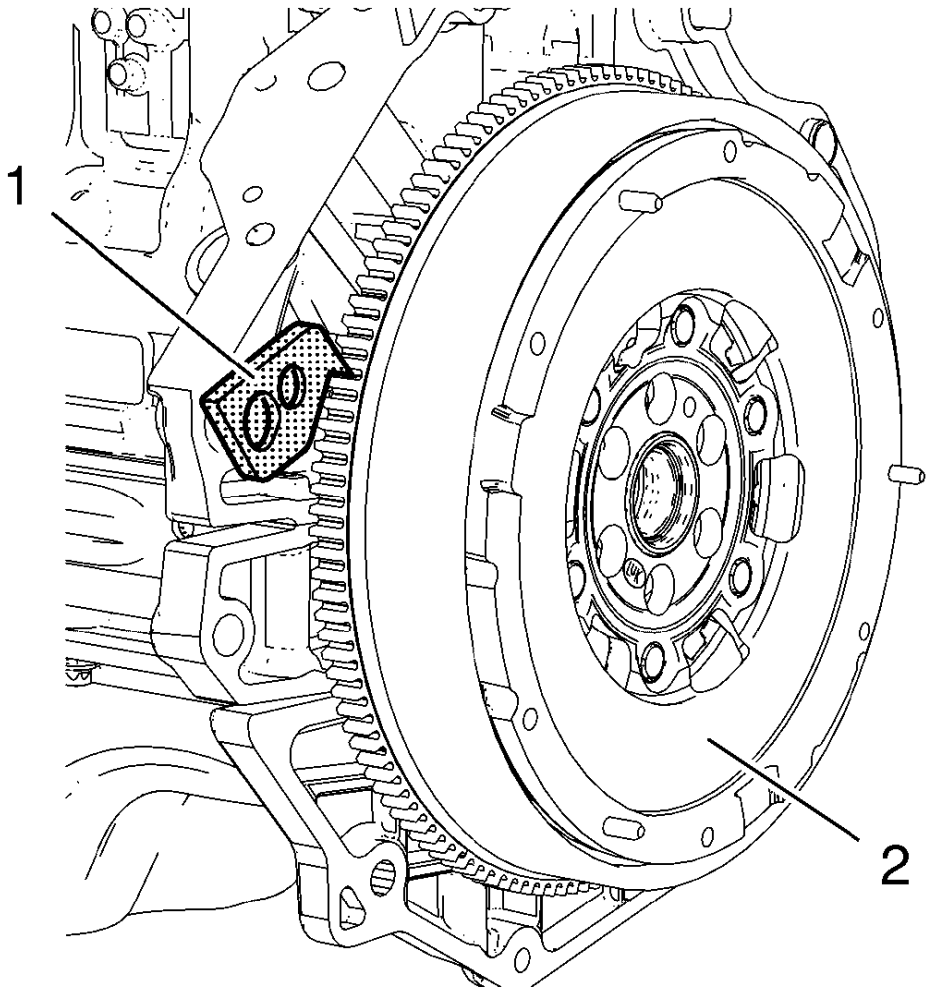

Fig. 338: Engine Flywheel And Holder
Courtesy of GENERAL MOTORS COMPANY

1. Install **EN-652** holder (1) to hold the engine flywheel (2).

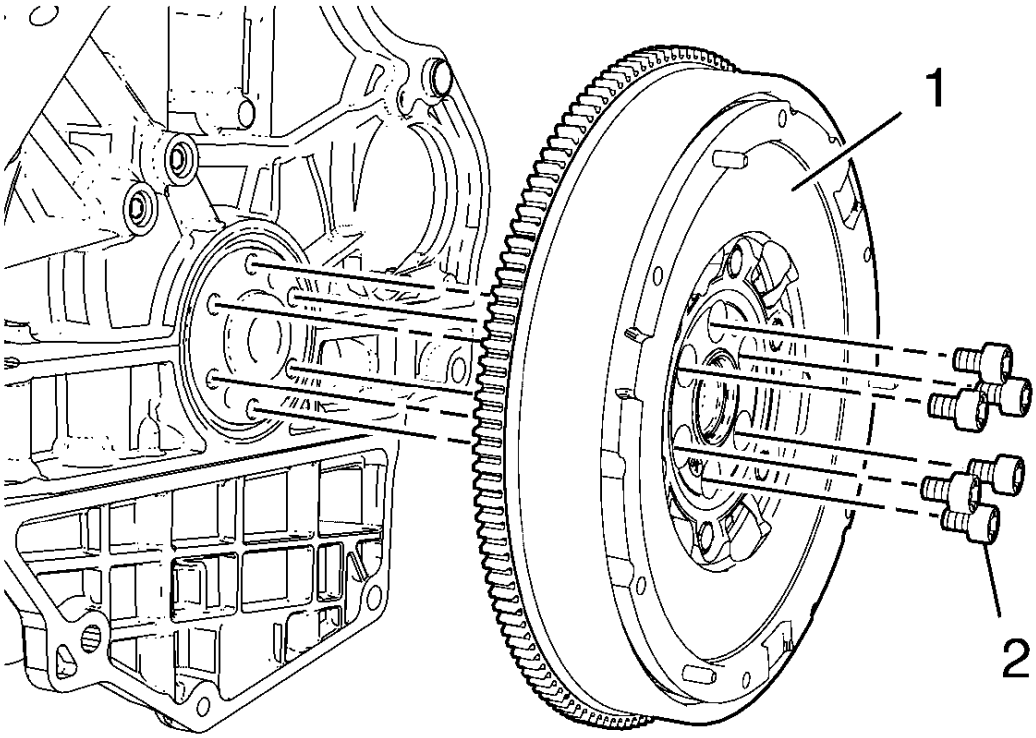

Fig. 339: Engine Flywheel And Bolts
Courtesy of GENERAL MOTORS COMPANY

2. Remove and DISCARD the 6 engine flywheel bolts (2).
3. Remove the engine flywheel (1).

IGNITION COIL REMOVAL

Special Tools

EN-6009 Remover and Installer Ignition Module

For equivalent regional tools, refer to **Special Tools**.

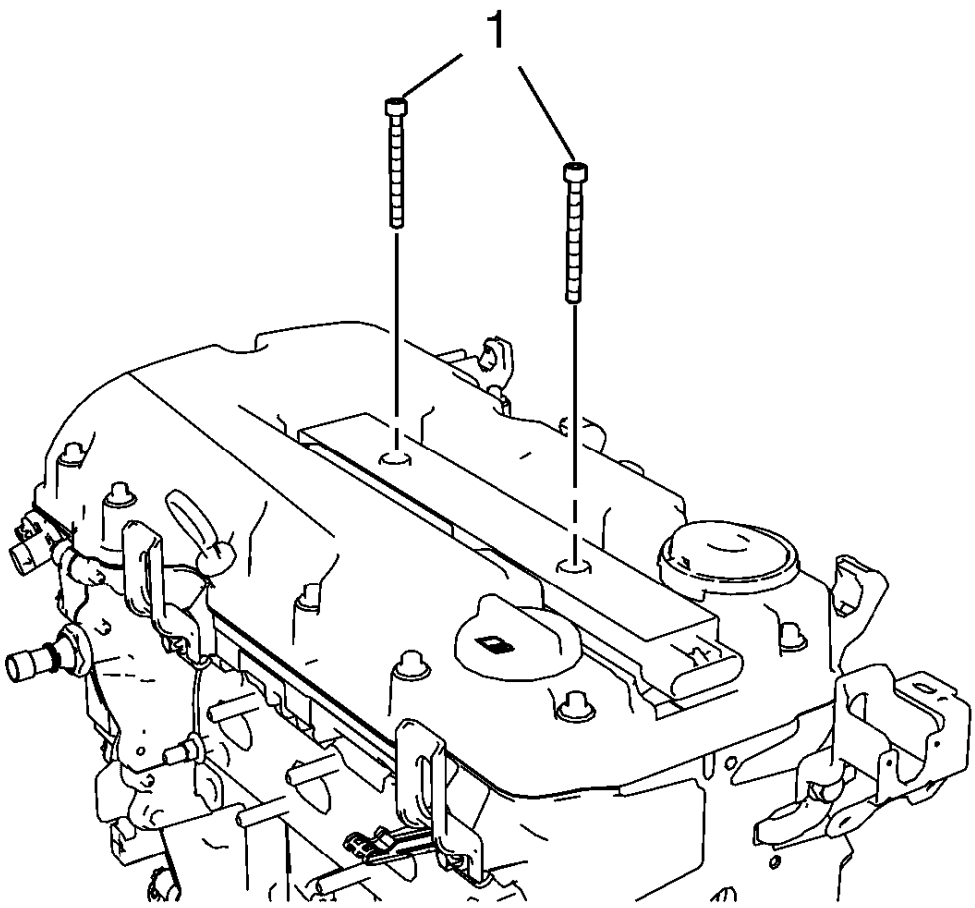

Fig. 340: Ignition Coil Bolts
Courtesy of GENERAL MOTORS COMPANY

1. Remove the 2 ignition coil bolts (1).

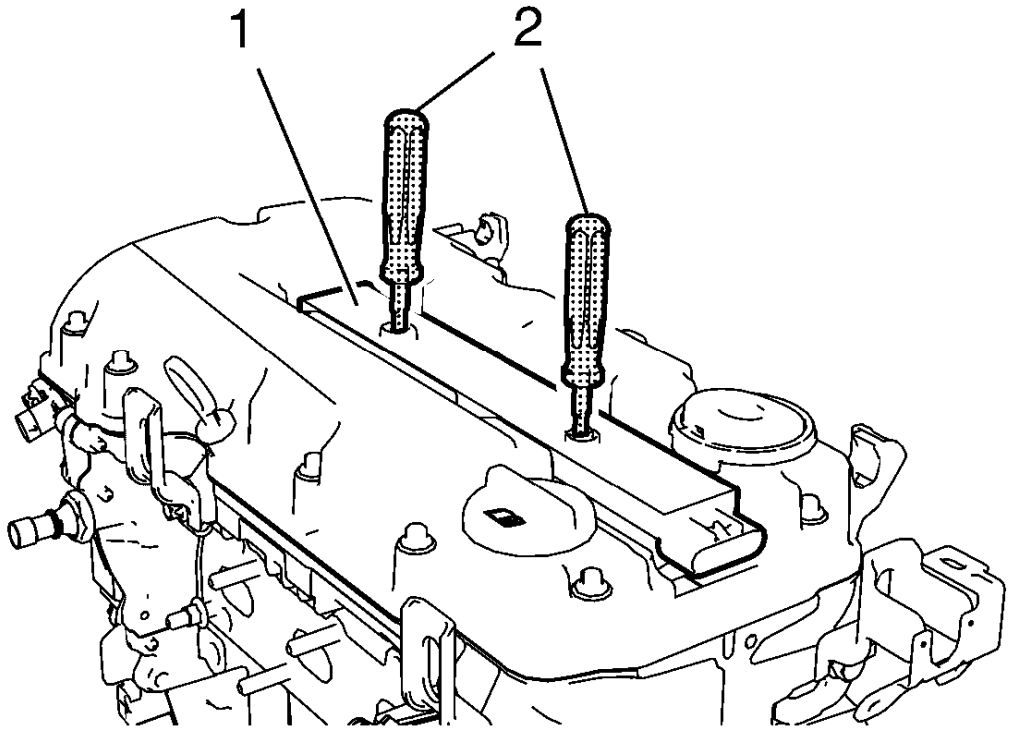

Fig. 341: Ignition Coil And Remover/Installer
Courtesy of GENERAL MOTORS COMPANY

2. Install **EN-6009** remover and installer (2) and remove the ignition coil (1).

CAMSHAFT COVER REMOVAL

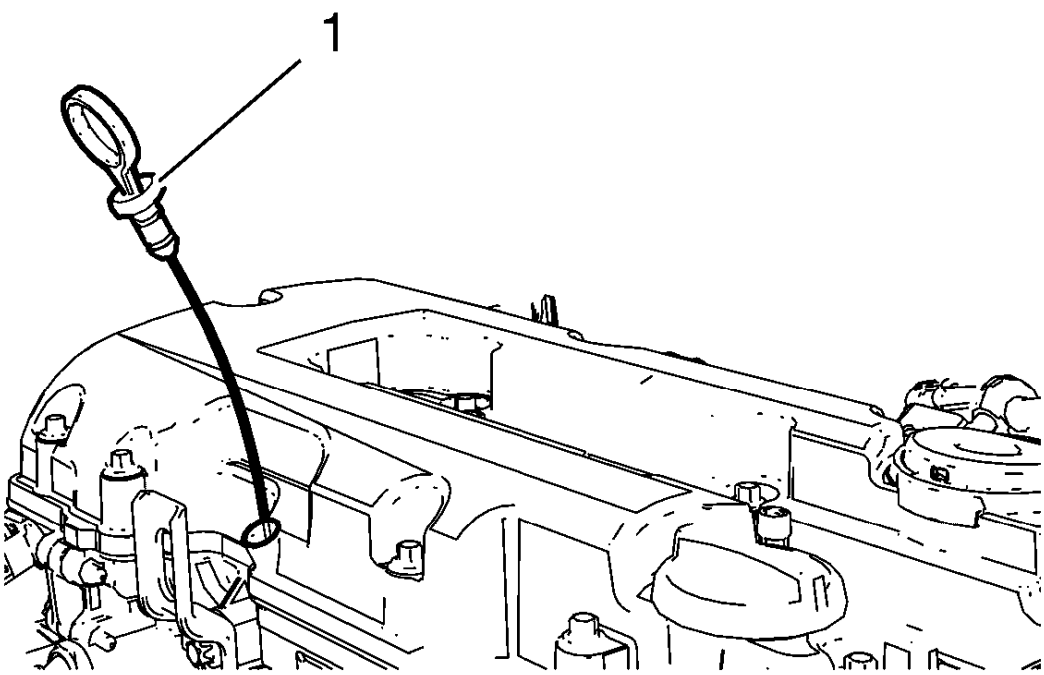

Fig. 342: Engine Oil Level Indicator
Courtesy of GENERAL MOTORS COMPANY

1. Remove the oil level indicator (1).

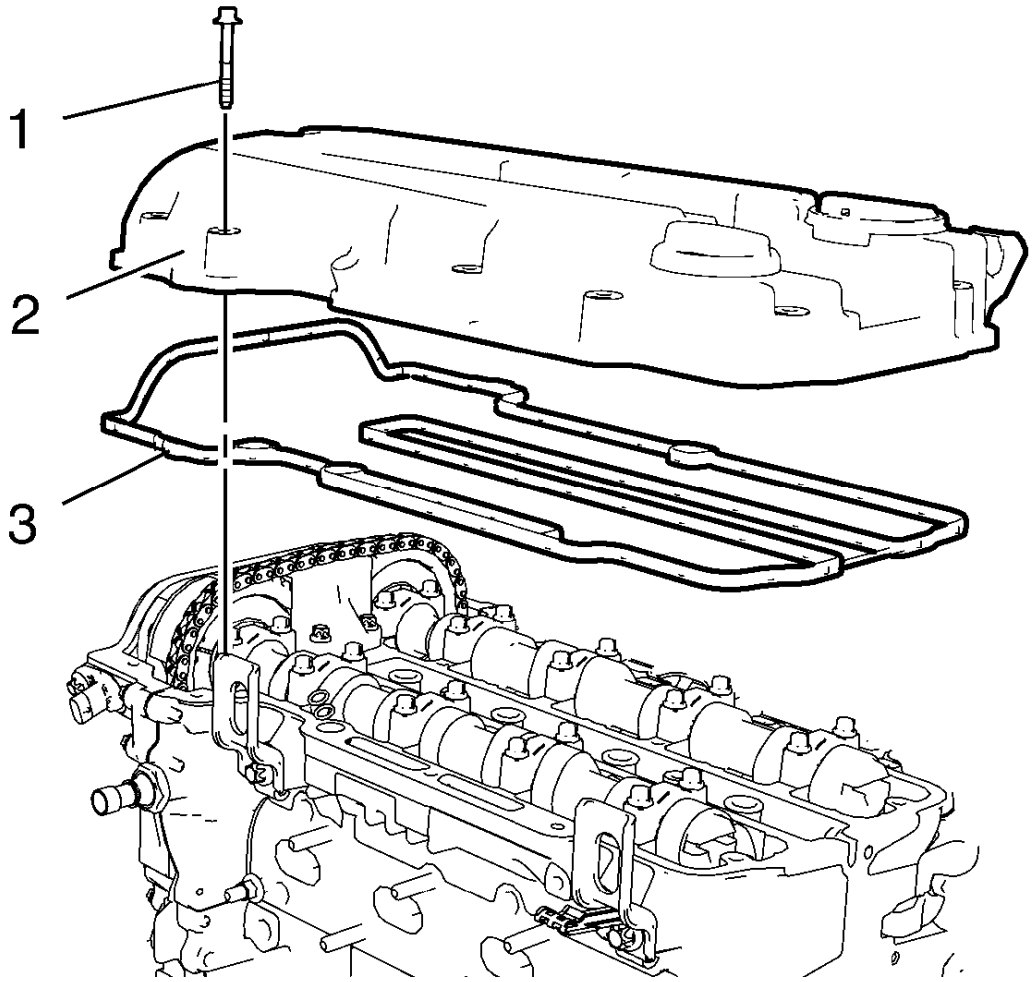

Fig. 343: Camshaft Cover And Gasket
Courtesy of GENERAL MOTORS COMPANY

2. Remove the 15 camshaft cover bolts (1).
3. Remove the camshaft cover (2) and the camshaft cover gasket (3).

CAMSHAFT POSITION ACTUATOR SOLENOID VALVE REMOVAL

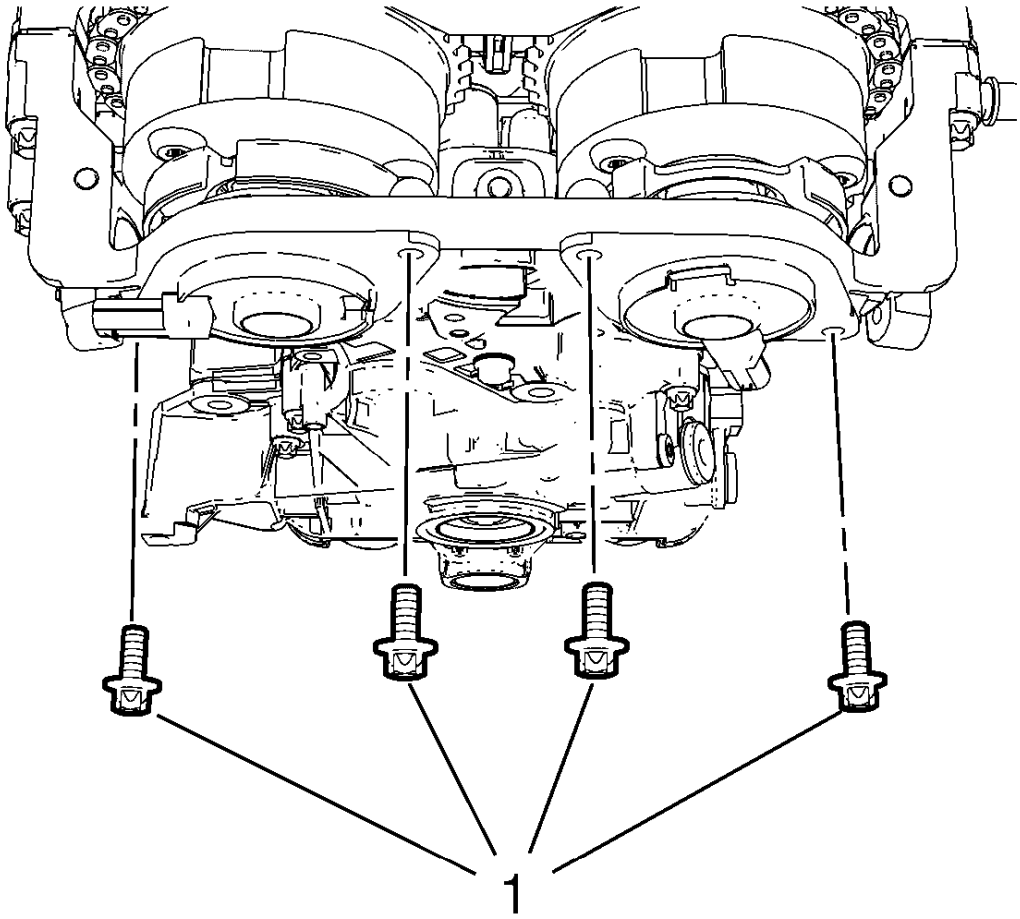

Fig. 344: Camshaft Position Actuator Solenoid Valve Bolts
Courtesy of GENERAL MOTORS COMPANY

1. Remove the 4 camshaft position actuator solenoid valve bolts (1).

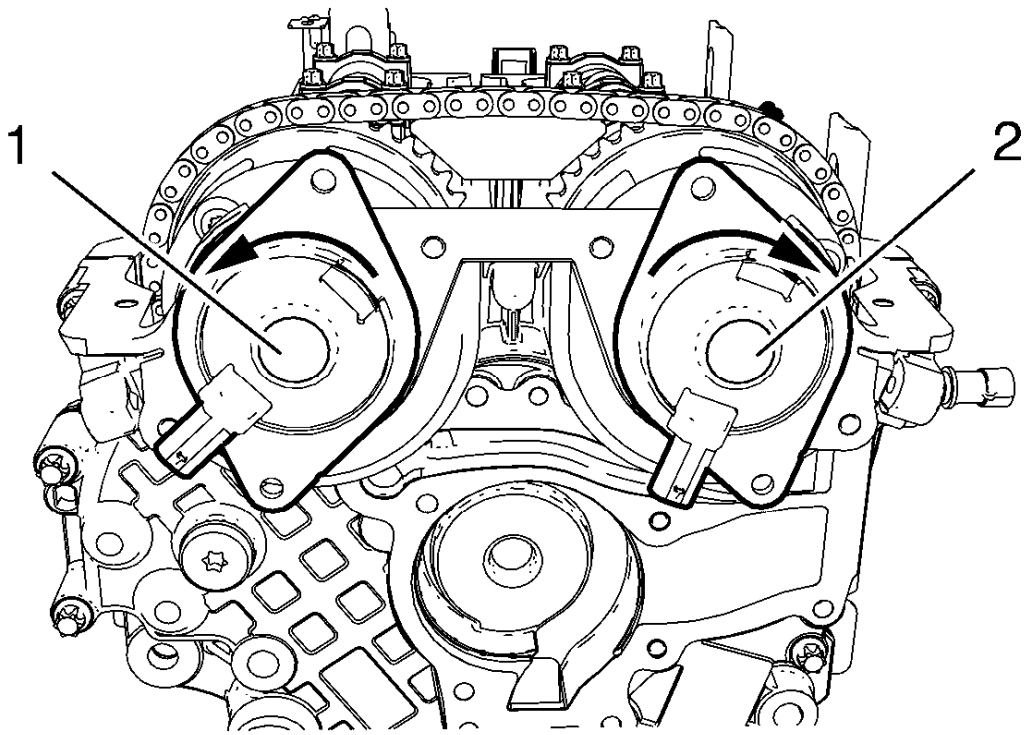

Fig. 345: Intake Camshaft Position Actuator Solenoid Valve And Exhaust Camshaft Position Actuator Solenoid Valve
Courtesy of GENERAL MOTORS COMPANY

2. Move the intake camshaft position actuator solenoid valve (1) carefully counter clockwise in the position shown.
3. Move the exhaust camshaft position actuator solenoid valve (2) carefully clockwise in the position shown in the graphic.

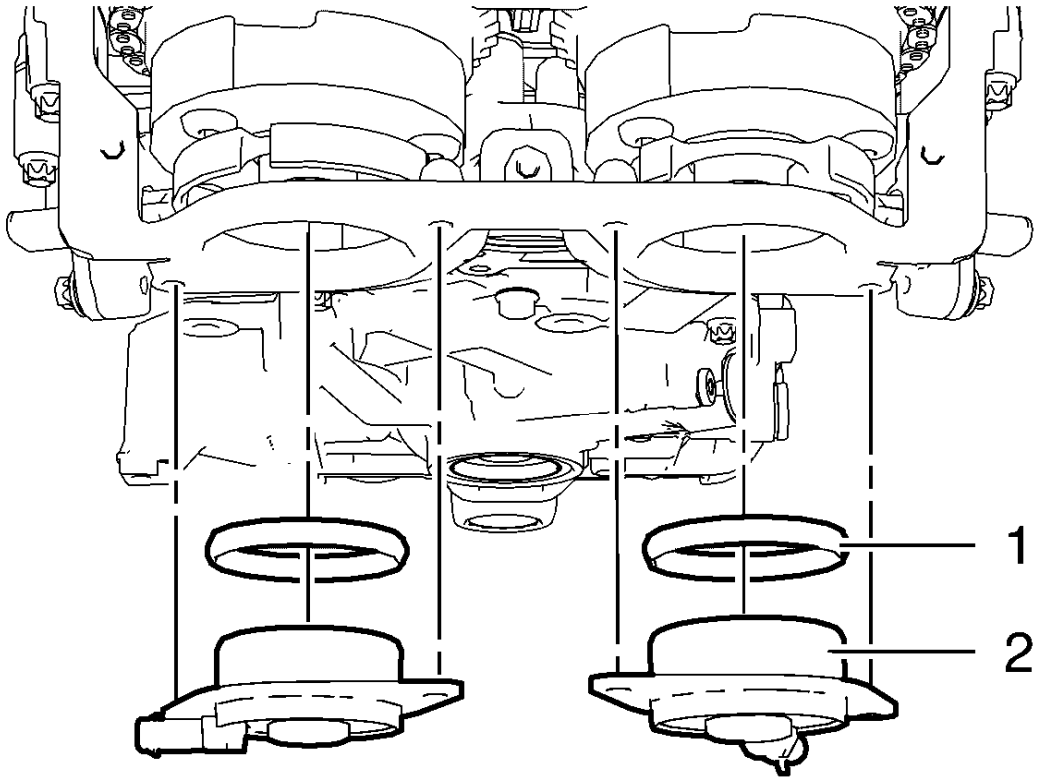

Fig. 346: Camshaft Position Actuator Solenoid Valves And Seal Rings
Courtesy of GENERAL MOTORS COMPANY

CAUTION: The camshaft position actuator solenoid valves must be kept parallel to the engine front cover during removal and installation. The camshaft position actuator solenoid valves can be damaged if they become wedged or stuck during this process.

4. Carefully remove the 2 camshaft position actuator solenoid valves (2) and the seal rings (1).

ENGINE OIL HEATER REMOVAL

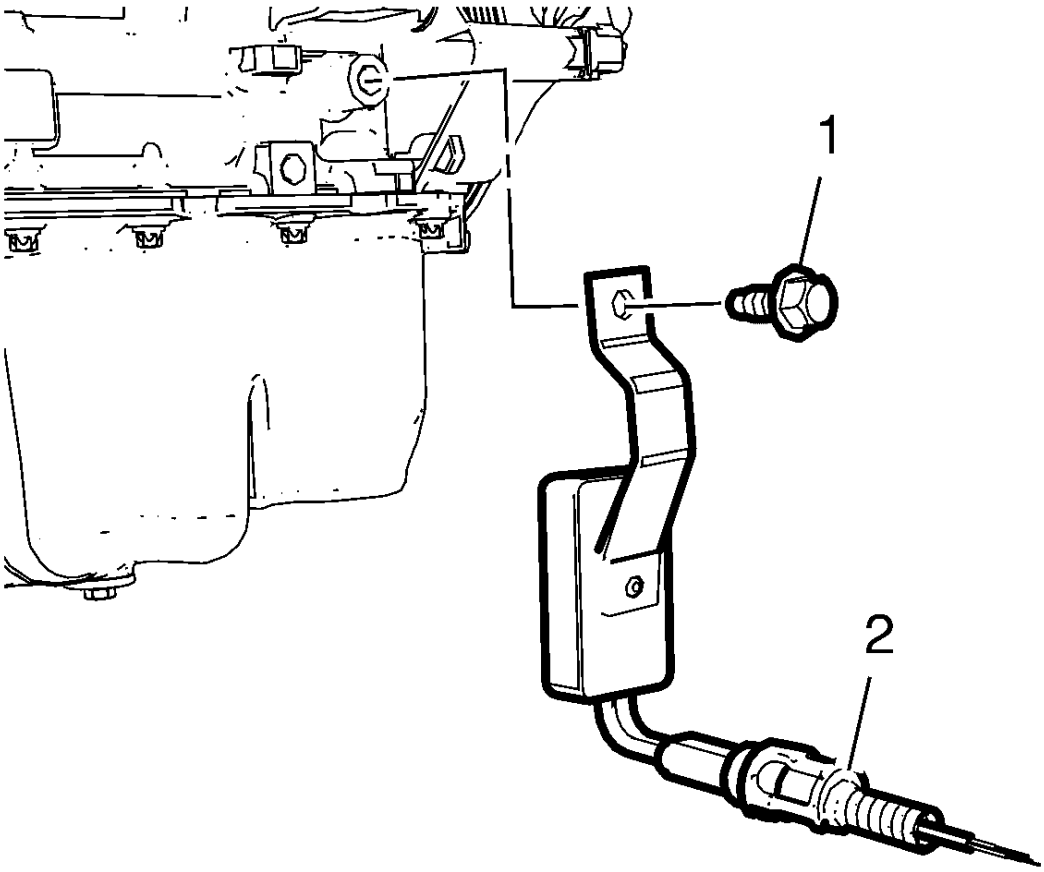

Fig. 347: Engine Oil Heater
Courtesy of GENERAL MOTORS COMPANY

1. Remove the engine oil heater bolt (1).
2. Remove the engine oil heater (2).

OIL PAN REMOVAL

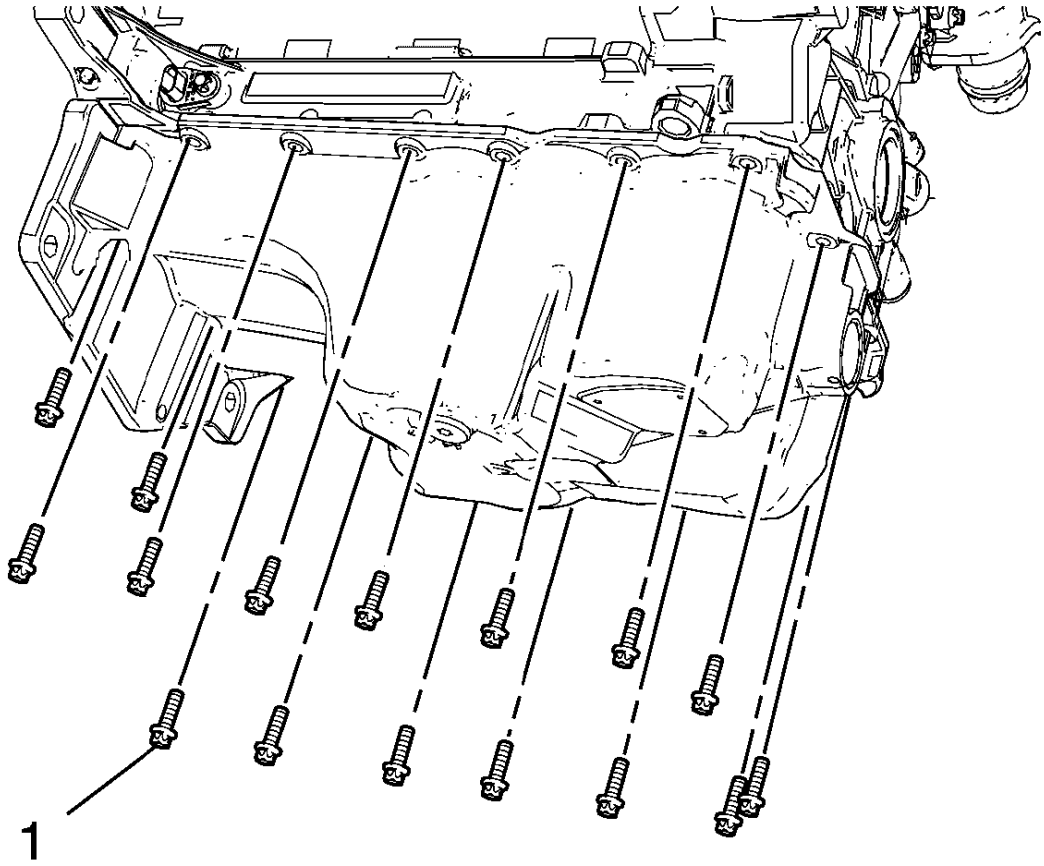

Fig. 348: Oil Pan Bolts
Courtesy of GENERAL MOTORS COMPANY

1. Remove the 16 oil pan bolts (1).

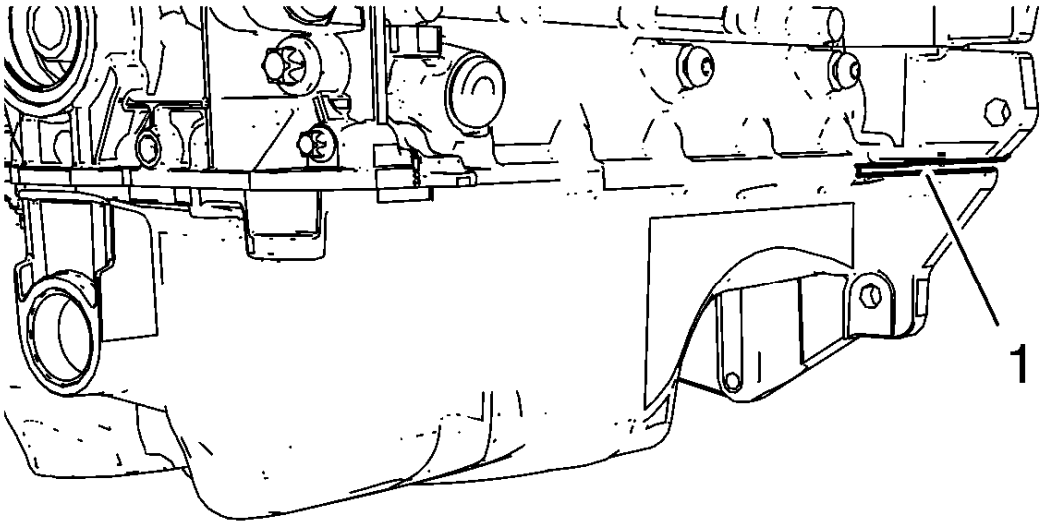

Fig. 349: Oil Pan Prying Area
Courtesy of GENERAL MOTORS COMPANY

CAUTION: Pry the oil pan carefully in order to prevent damage to the transaxle case or the oil pan sealing surfaces.

2. Place a suitable prying tool to the area shown (1) and carefully pry the oil pan loose.

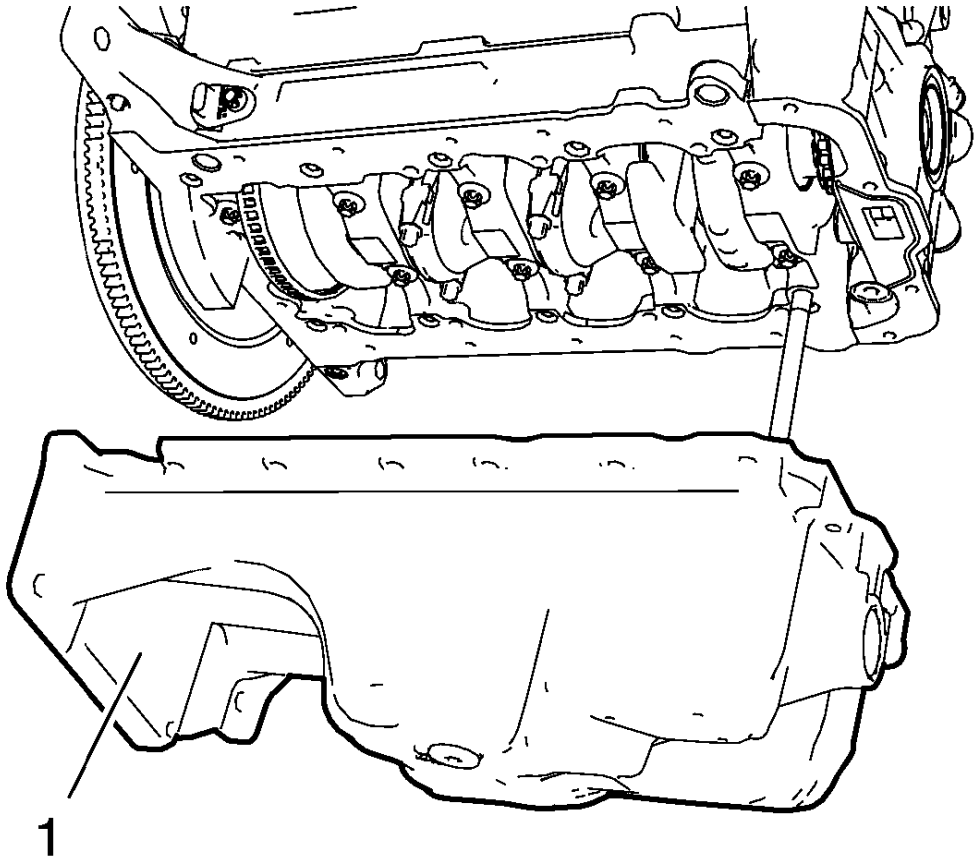

Fig. 350: Oil Pan
Courtesy of GENERAL MOTORS COMPANY

3. Remove the oil pan (1).

ENGINE FRONT COVER AND OIL PUMP REMOVAL

1. Set engine to TDC. Refer to **Camshaft Timing Chain Inspection**.

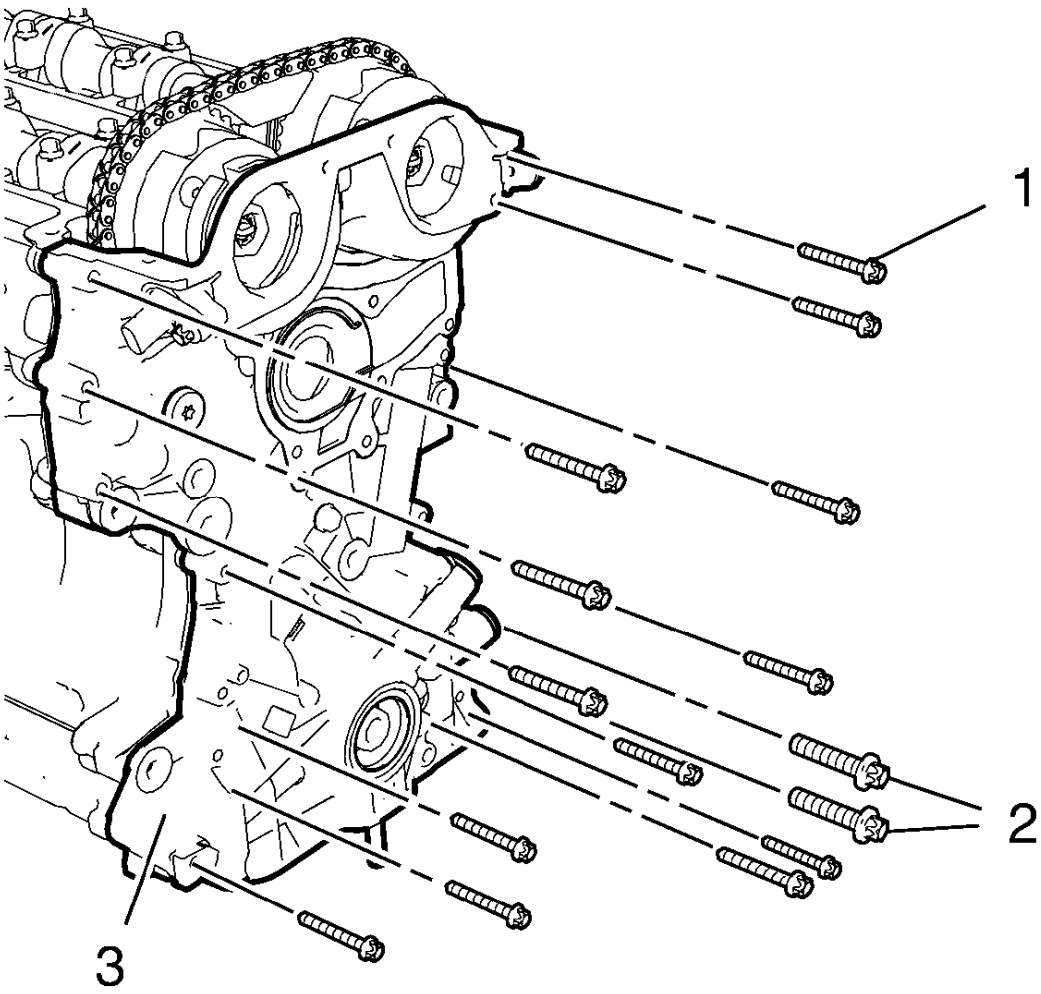

Fig. 351: M6, M10 Front Cover Bolts And Engine Front Cover
Courtesy of GENERAL MOTORS COMPANY

2. Remove the 13 engine front cover bolts M6 (1).
3. Remove the 2 engine front cover bolts M10 (2).
4. Remove the engine front cover.

CAMSHAFT TIMING CHAIN REMOVAL

Special Tools

- **EN-952** Fixing Pin
- **EN-953-A** Fixing Tool
- **EN-955-10** Fixing Pin from **EN-955** Kit

For equivalent regional tools, refer to **Special Tools**.

1. The engine should be adjusted to TDC.
2. The crankshaft should be fixed with **EN-952** fixing pin.
3. The camshaft should be fixed with **EN-953-A** fixing tool.

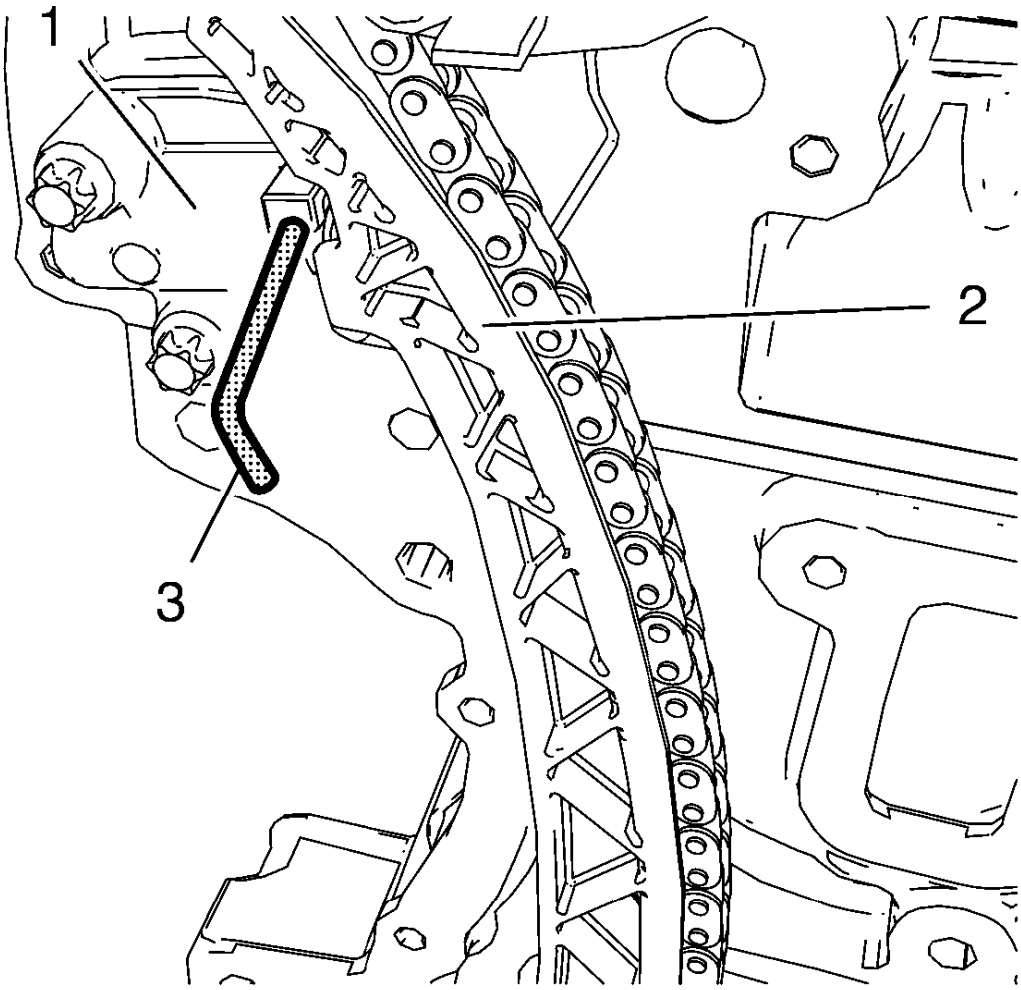

Fig. 352: Timing Chain And Timing Chain Tensioner
Courtesy of GENERAL MOTORS COMPANY

4. Push the timing chain (2) in direction to the timing chain tensioner (1) and fix the tensioner with **EN-955-10** fixing pin (3).

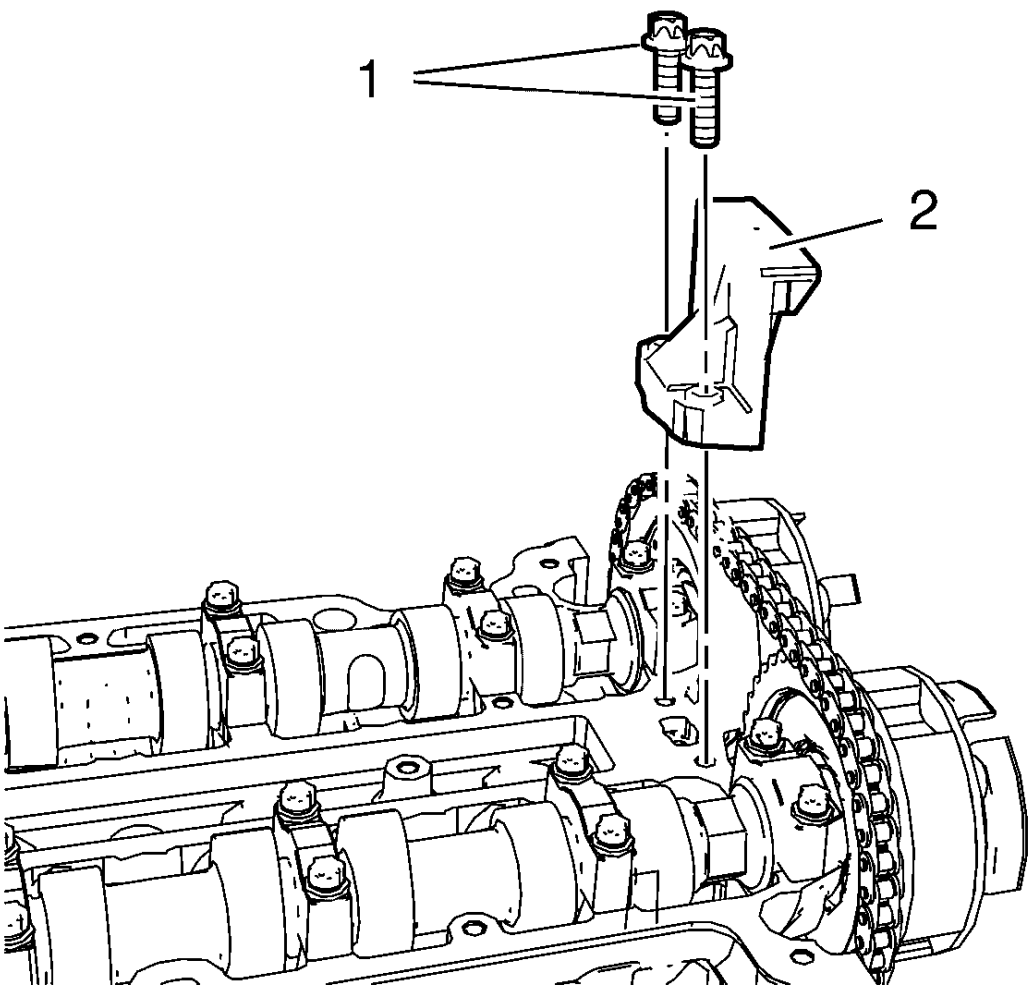

Fig. 353: Upper Timing Chain Guide And Bolts
Courtesy of GENERAL MOTORS COMPANY

5. Remove the 2 upper timing chain guide bolts (1).
6. Remove the upper timing chain guide (2).

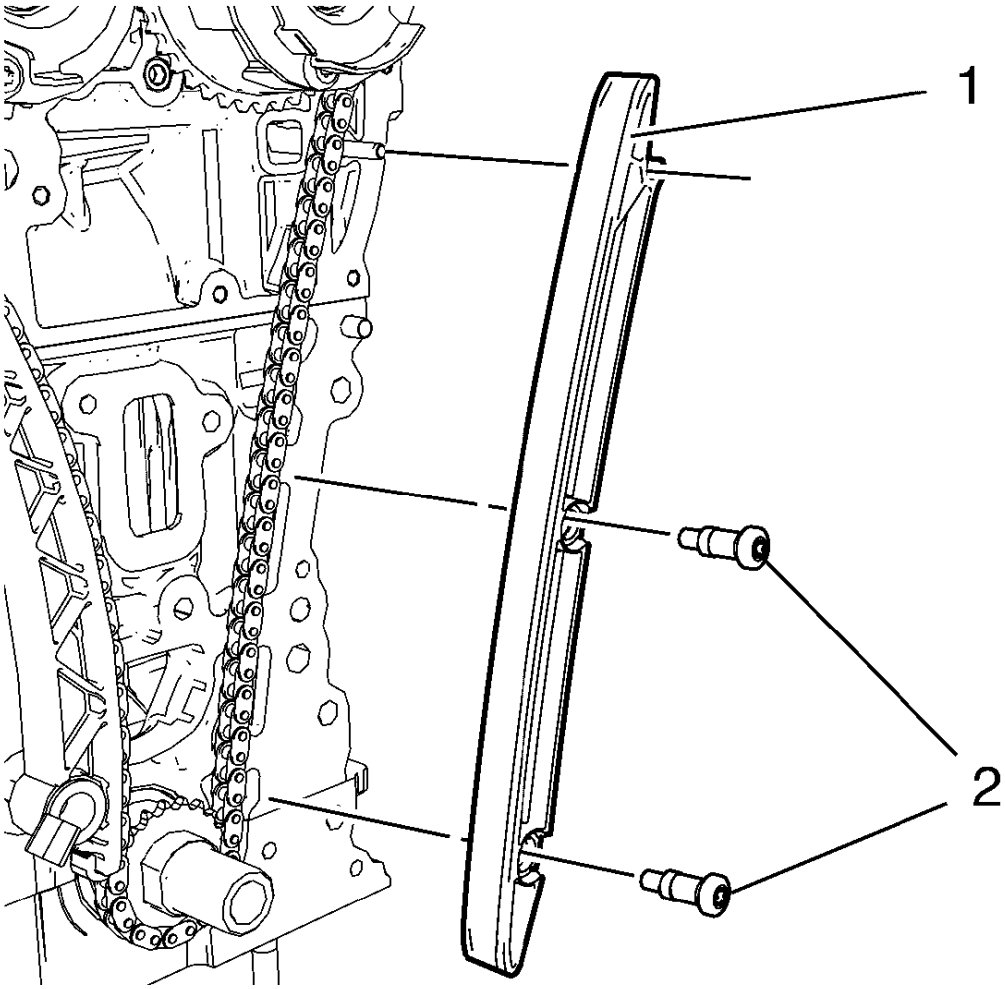

Fig. 354: Timing Chain Guide Right Side
Courtesy of GENERAL MOTORS COMPANY

7. Remove the 2 timing chain guide right side bolts (2).
8. Remove the timing chain guide right side (1).

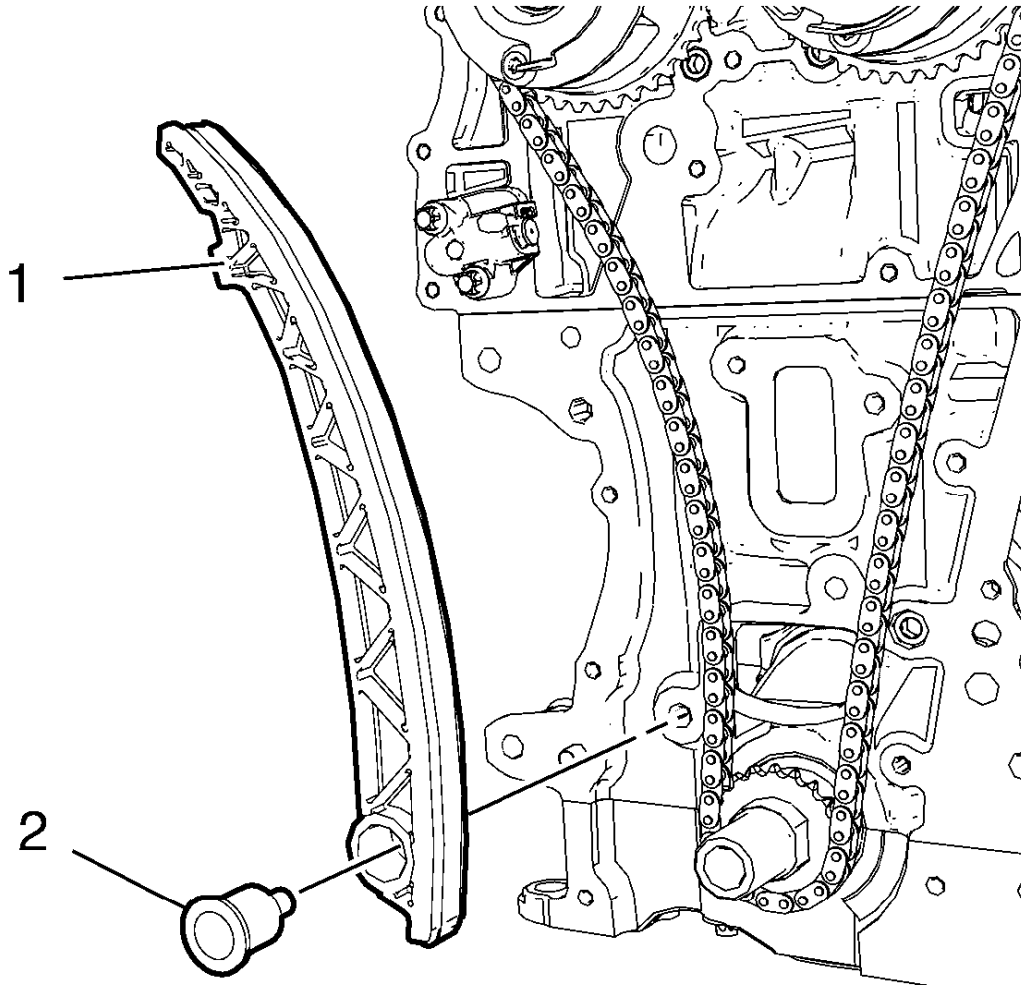

Fig. 355: Timing Chain Tensioner Shoe And Bolt
Courtesy of GENERAL MOTORS COMPANY

9. Remove the timing chain tensioner shoe bolt (2).
10. Remove the timing chain tensioner shoe (1).

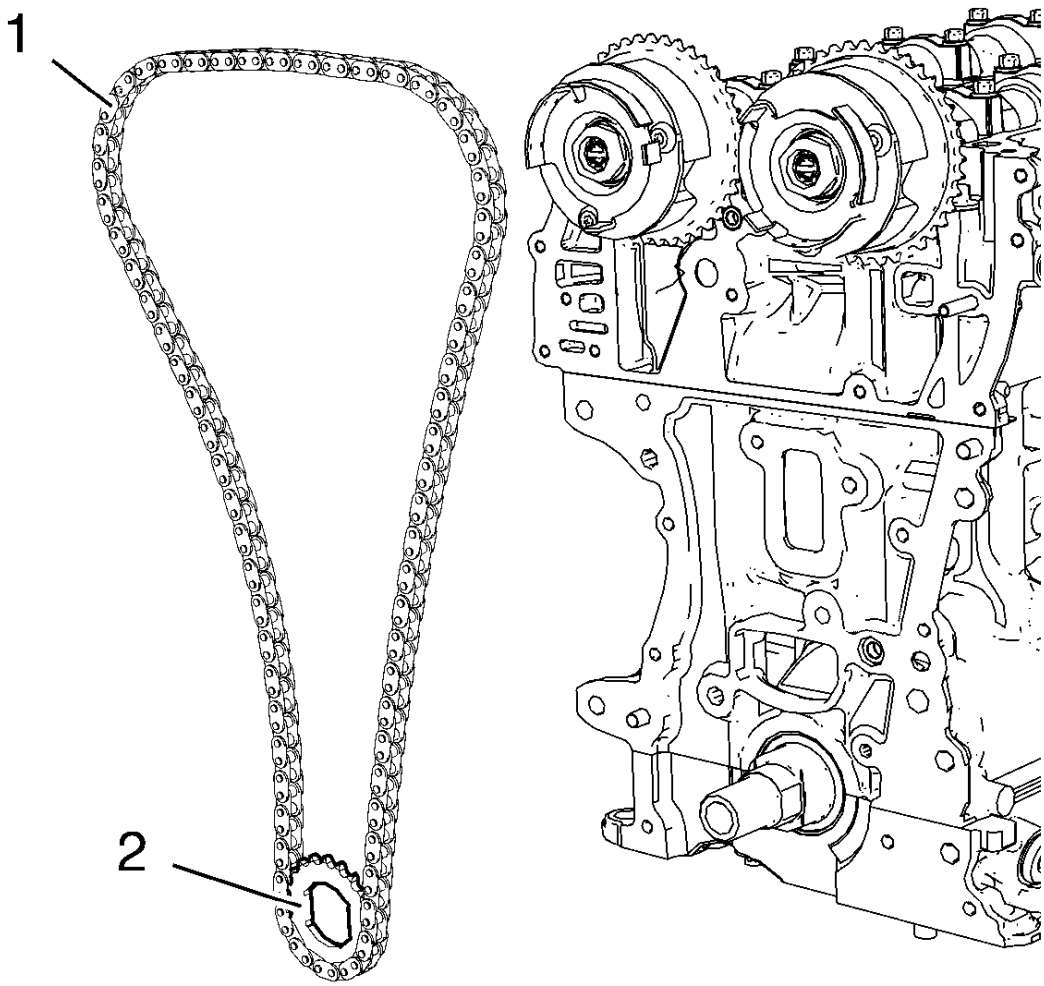

Fig. 356: Timing Chain And Crankshaft Sprocket
Courtesy of GENERAL MOTORS COMPANY

11. Remove the timing chain (1) in compound with the crankshaft sprocket (2).

TIMING CHAIN TENSIONER REMOVAL

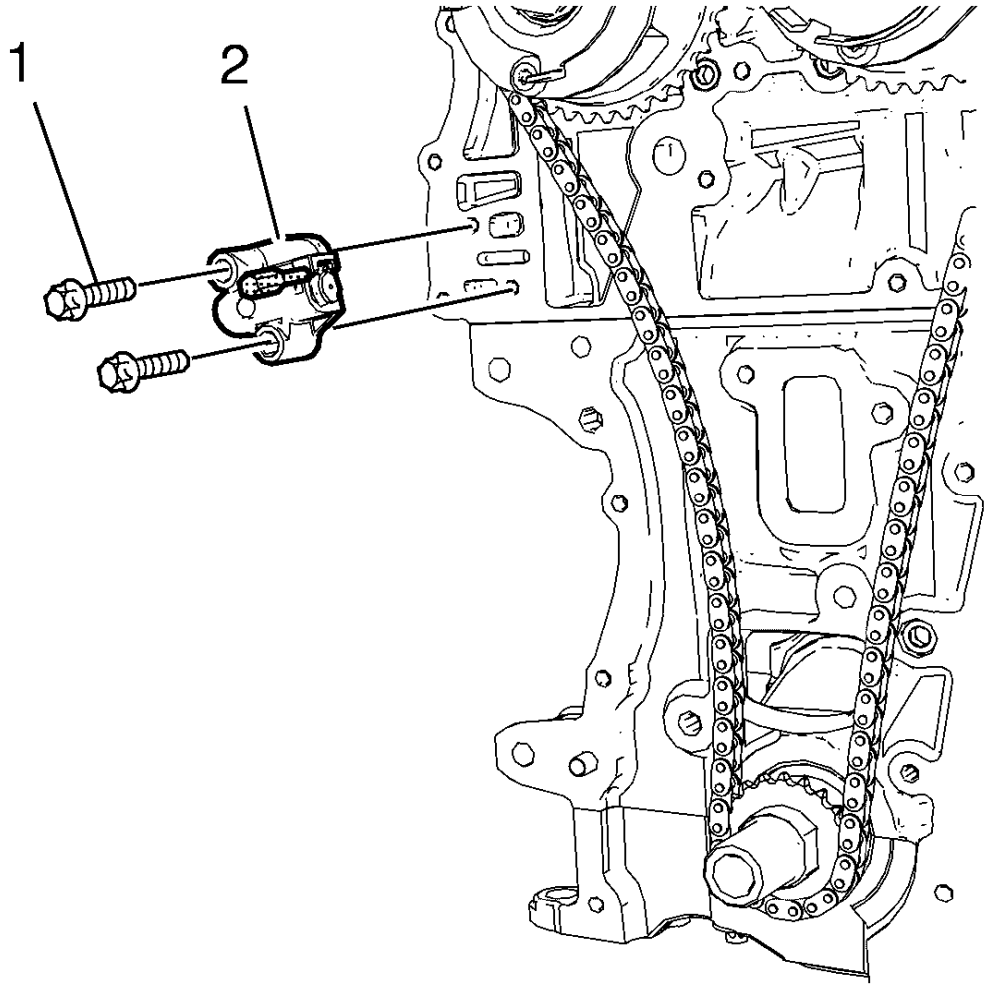

Fig. 357: Timing Chain Tensioner And Bolts
Courtesy of GENERAL MOTORS COMPANY

1. Remove the 2 timing chain tensioner bolts (1).
2. Remove the timing chain tensioner (2).

ENGINE FRONT COVER GASKET REMOVAL

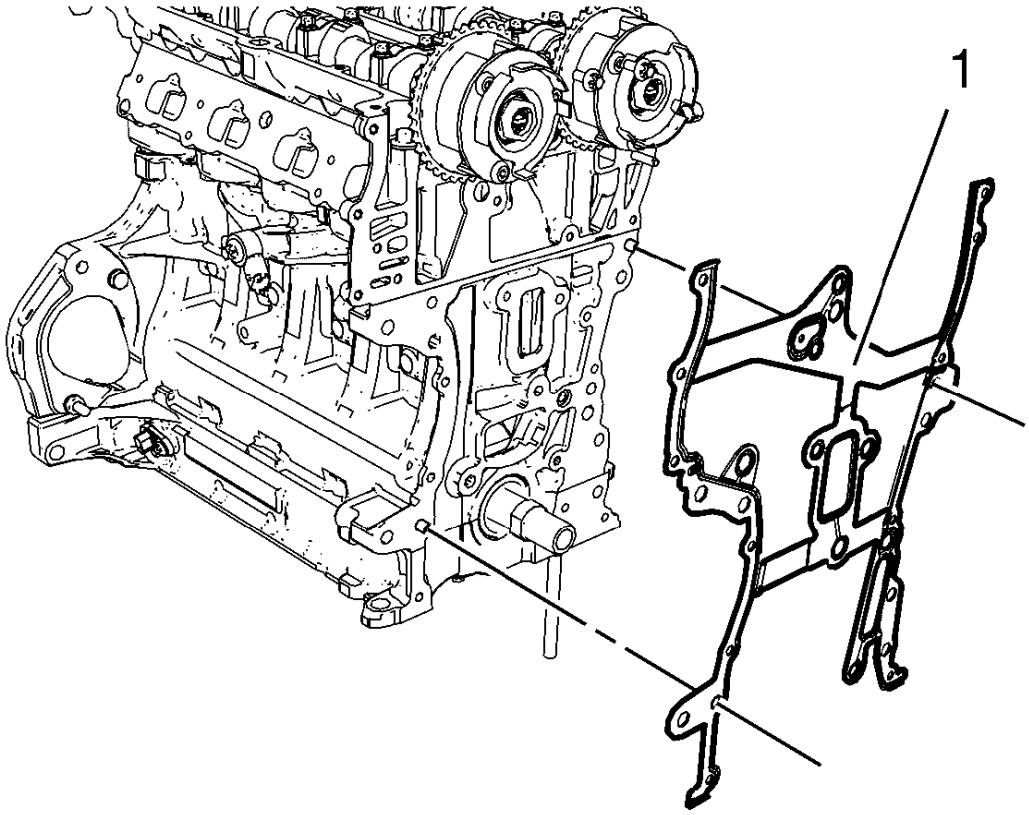

Fig. 358: Engine Front Cover Gasket
Courtesy of GENERAL MOTORS COMPANY

Remove and DISCARD the engine front cover gasket (1).

CAMSHAFT SPROCKET REMOVAL

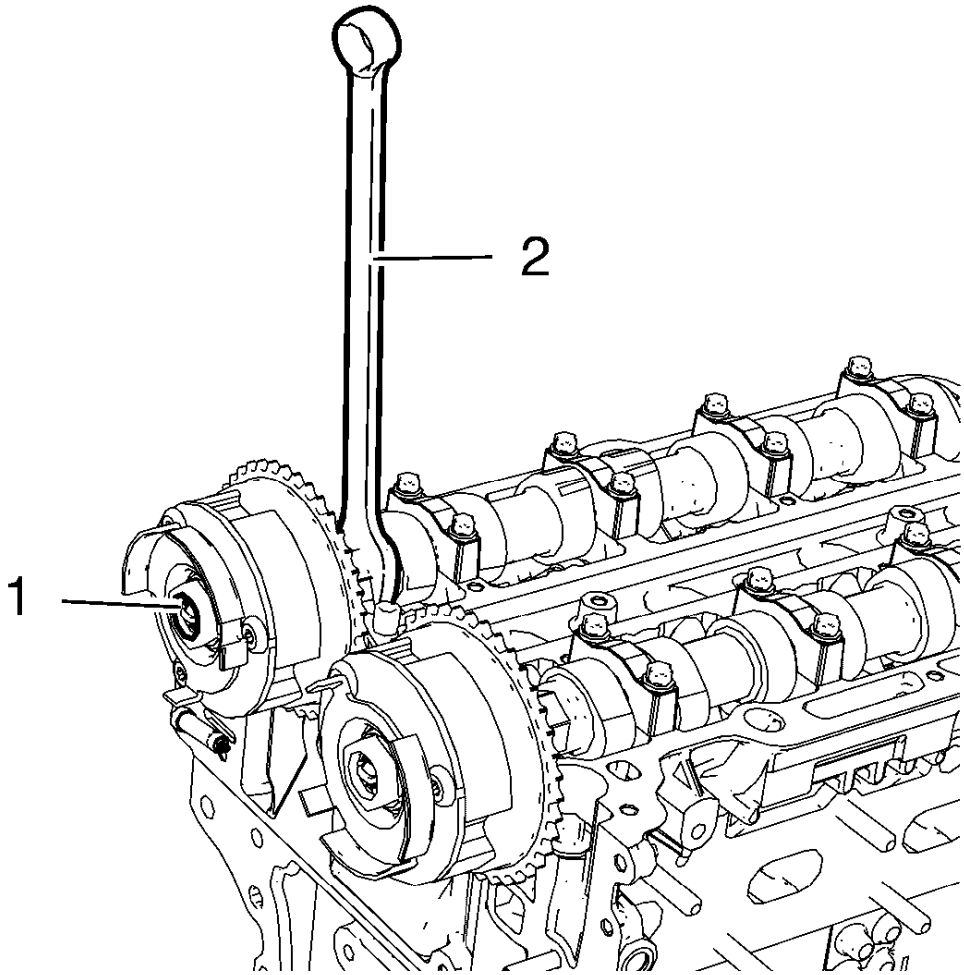

Fig. 359: Intake Camshaft And Intake Camshaft Sprocket Bolt
Courtesy of GENERAL MOTORS COMPANY

1. Loosen the intake camshaft sprocket bolt (1) while holding the hexagon of intake camshaft (2) with a wrench.

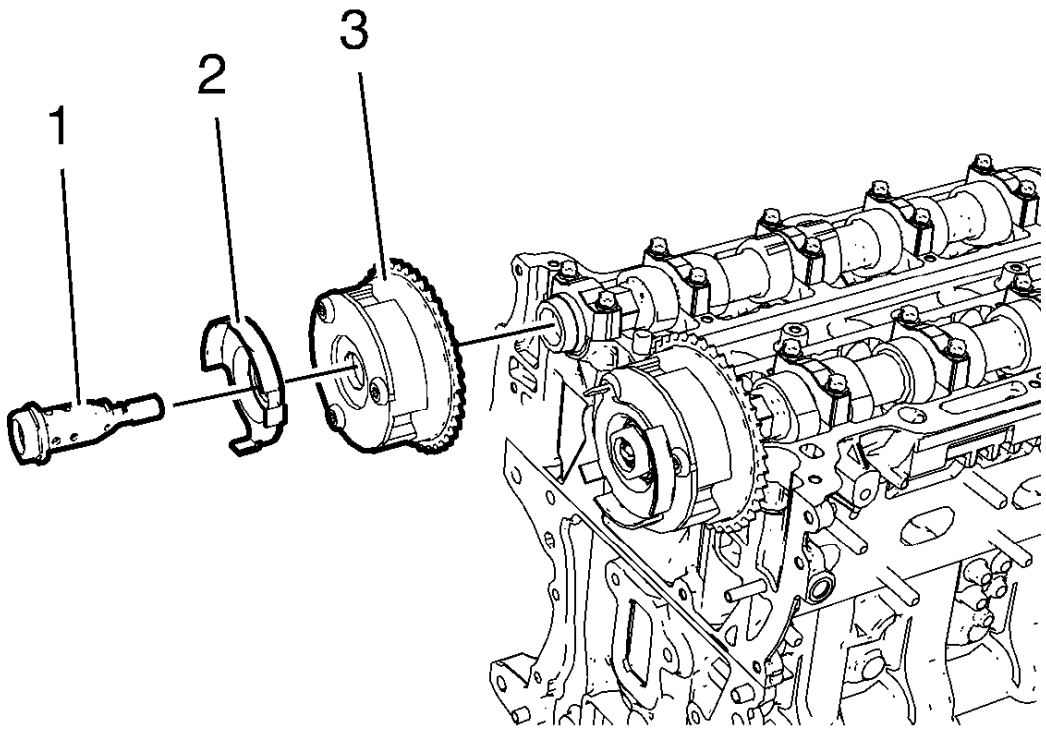

Fig. 360: Intake Camshaft Sprocket, Bolt And Intake Camshaft Position Exciter Wheel
Courtesy of GENERAL MOTORS COMPANY

2. Remove the intake camshaft sprocket bolt (1) and the intake camshaft position exciter wheel (2).
3. Remove the intake camshaft sprocket (3).
4. Loosen the exhaust camshaft sprocket bolt while holding the hexagon of exhaust camshaft with a wrench.
5. Remove the exhaust camshaft sprocket bolt and the exhaust camshaft position exciter wheel.
6. Remove the exhaust camshaft sprocket.

INTAKE CAMSHAFT REMOVAL

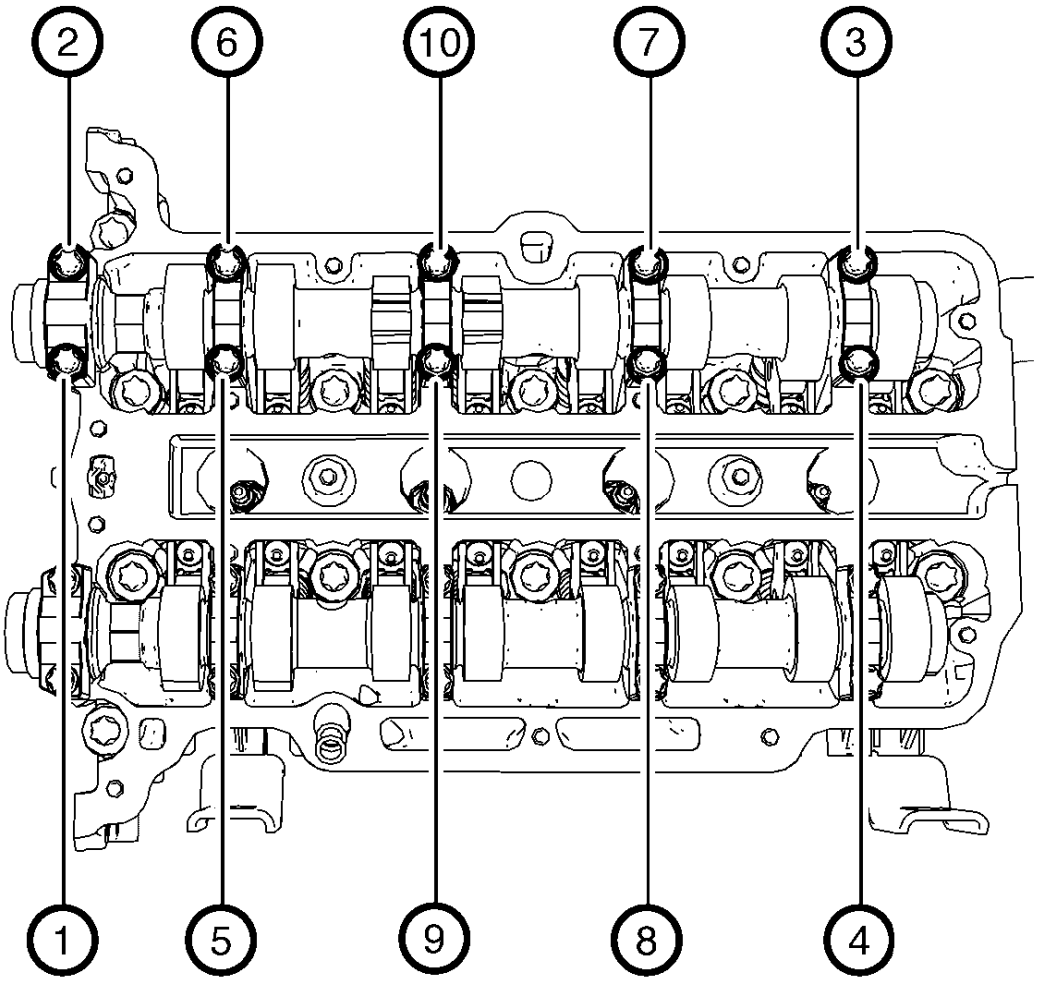

Fig. 361: Intake Camshaft Bearing Cap Bolts Removal Sequence
Courtesy of GENERAL MOTORS COMPANY

1. Remove the camshaft bearing cap bolts in a spiral sequence as shown one turn at a time until there is no spring tension pushing on the camshaft.

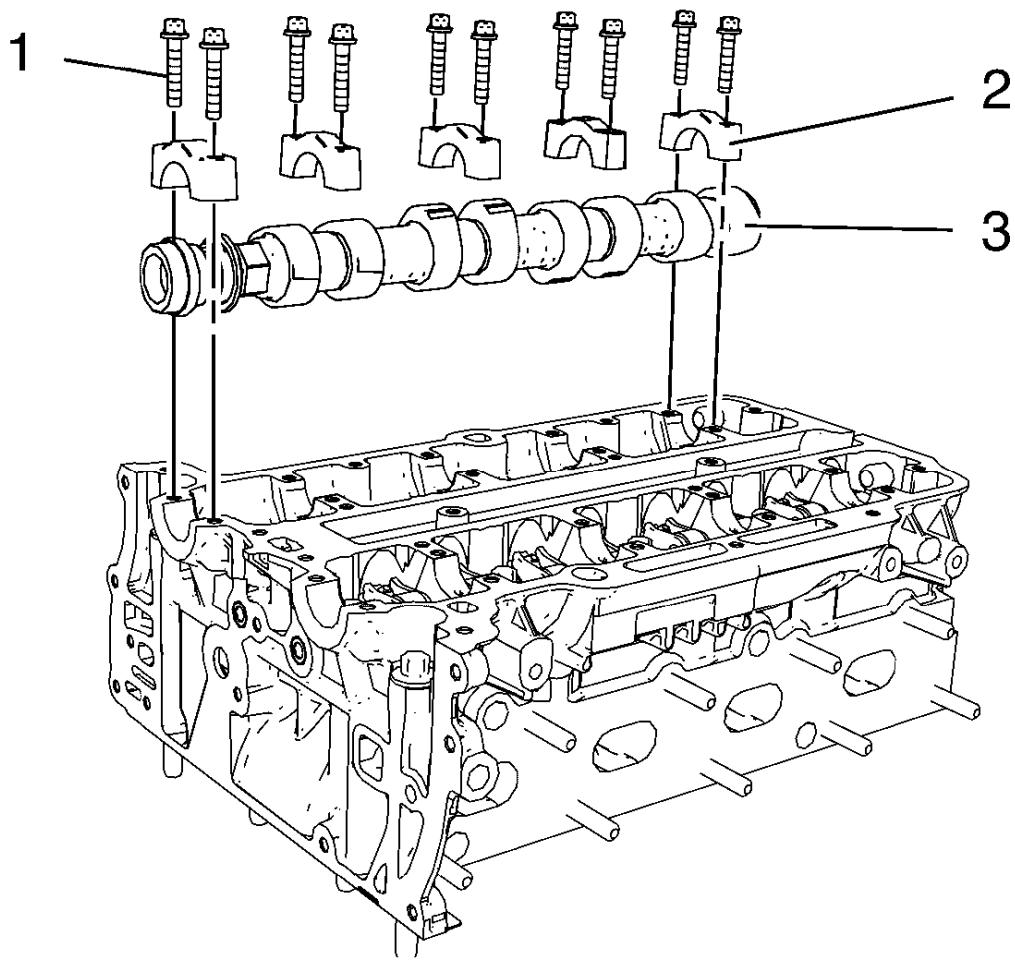

Fig. 362: Intake Camshaft, Camshaft Bearing Caps And Bolts
Courtesy of GENERAL MOTORS COMPANY

NOTE: Mind the markings on the camshaft bearing caps to ensure they will be installed in the same position.

2. Remove the 10 camshaft bearing cap bolts (1).
3. Remove the 5 camshaft bearing caps (2).
4. Remove the intake camshaft (3).

EXHAUST CAMSHAFT REMOVAL

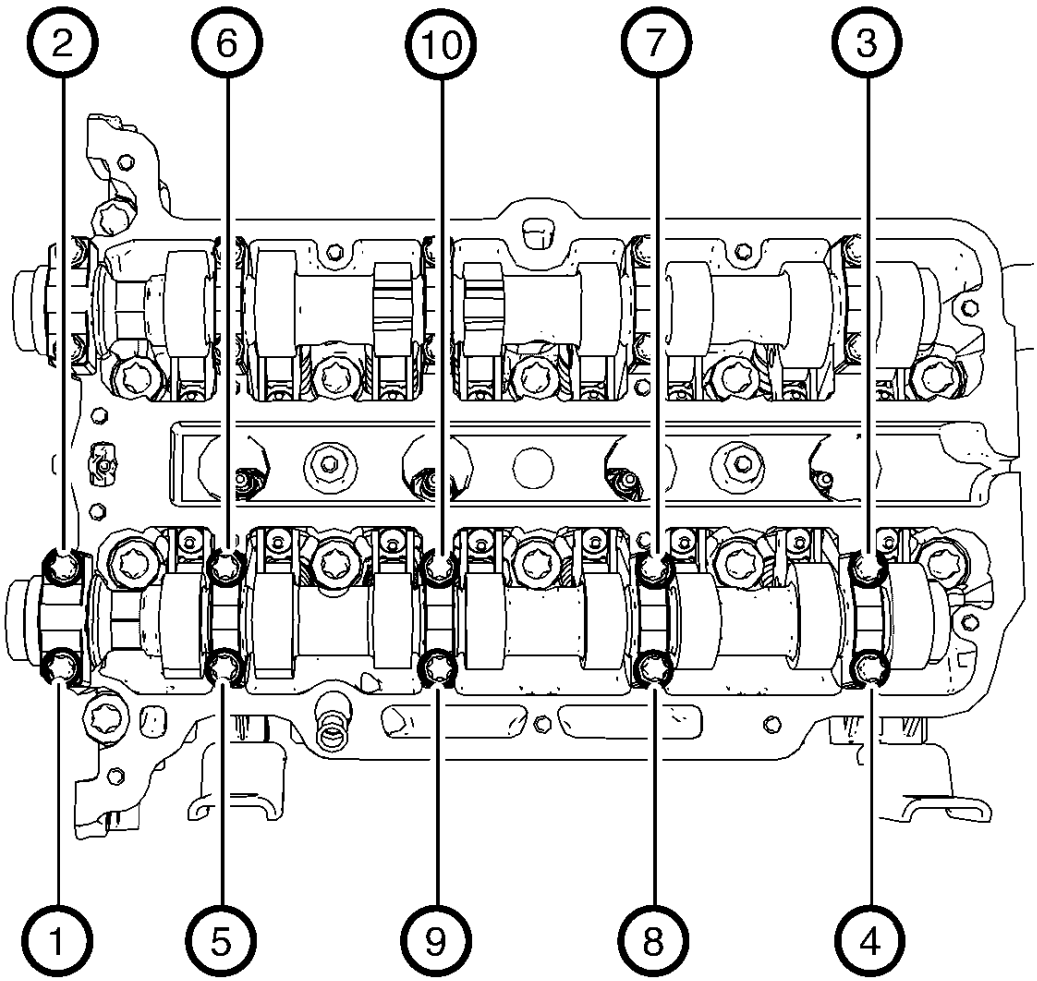

Fig. 363: Exhaust Camshaft Bearing Cap Bolts Removal Sequence
Courtesy of GENERAL MOTORS COMPANY

1. Remove the camshaft bearing cap bolts in a spiral sequence as shown one turn at a time until there is no spring tension pushing on the camshaft.

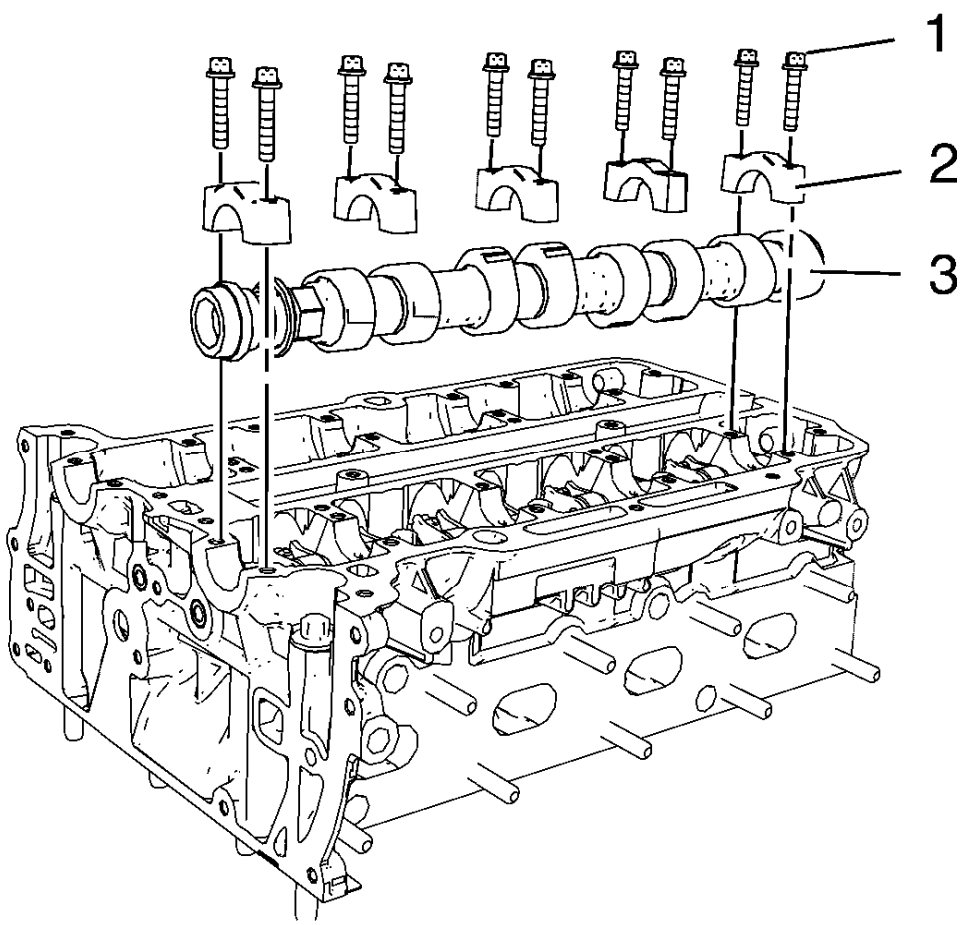

Fig. 364: Exhaust Camshaft, Camshaft Bearing Caps And Bolts
Courtesy of GENERAL MOTORS COMPANY

NOTE: Mind the markings on the camshaft bearing caps to ensure they will be installed in the same position.

2. Remove the 10 camshaft bearing cap bolts (1).
3. Remove the 5 camshaft bearing caps (2).
4. Remove the exhaust camshaft (3).

HYDRAULIC VALVE LASH ADJUSTER ARM REMOVAL

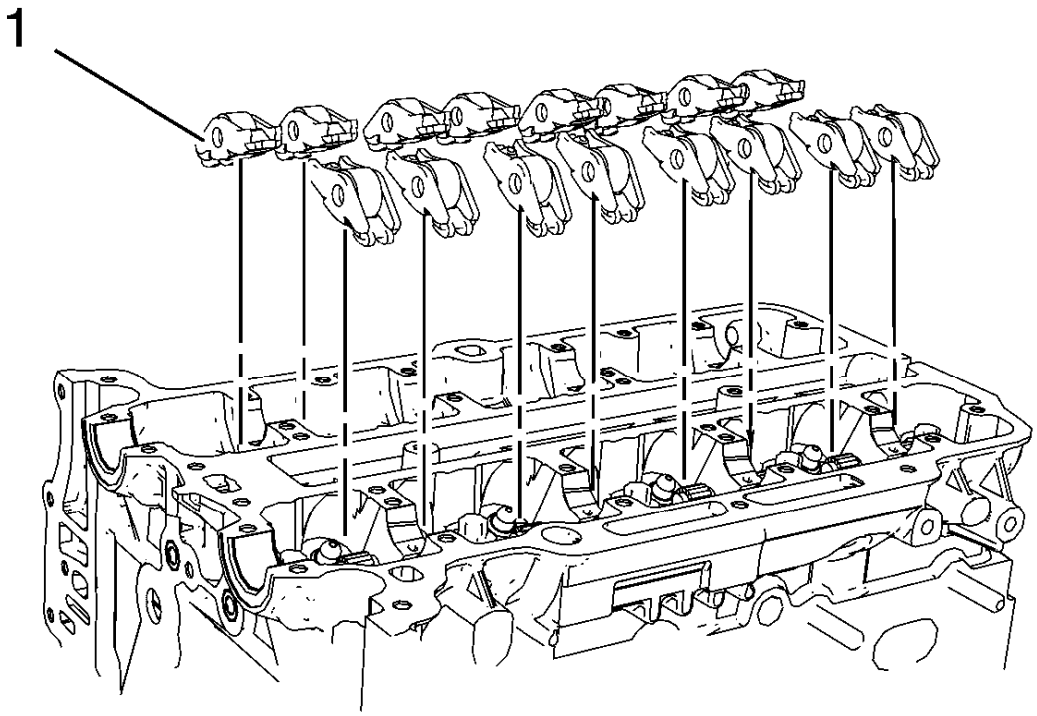

Fig. 365: Hydraulic Valve Lash Adjuster Arms
Courtesy of GENERAL MOTORS COMPANY

NOTE: Mind the installation position of the hydraulic valve lash adjuster arms.

Remove the 16 hydraulic valve lash adjuster arms (1).

HYDRAULIC VALVE LASH ADJUSTER REMOVAL

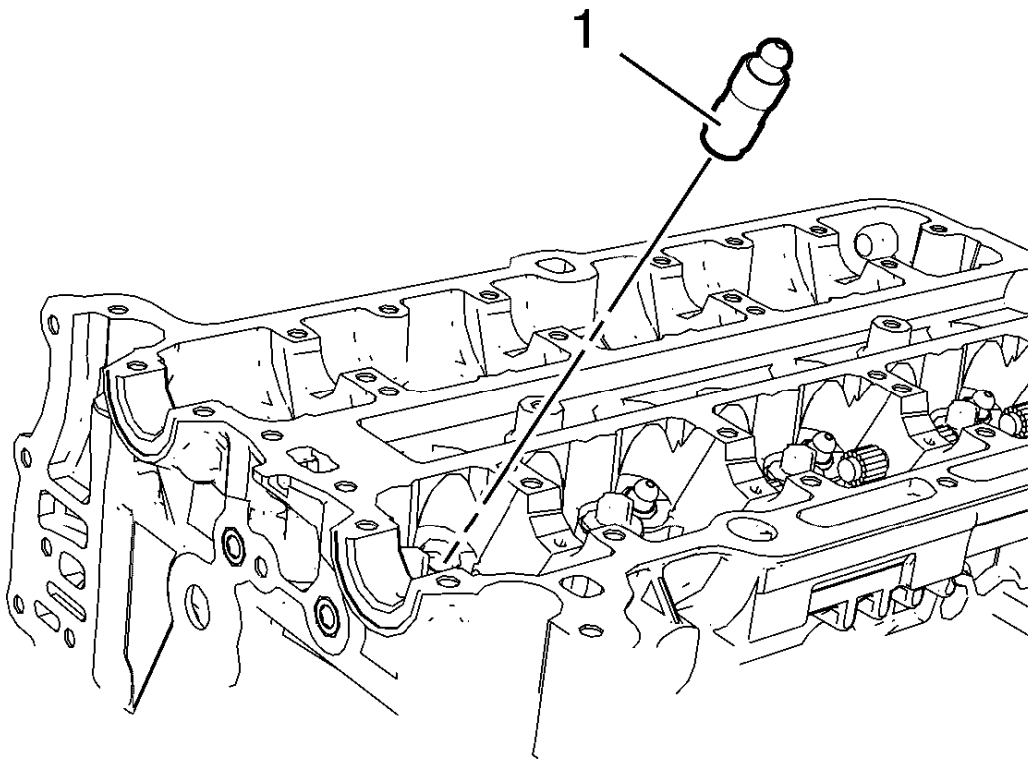

Fig. 366: Hydraulic Valve Lash Adjusters
Courtesy of GENERAL MOTORS COMPANY

NOTE: Mind the installation position of the hydraulic valve lash adjusters.

Remove the 16 hydraulic valve lash adjusters (1).

CYLINDER HEAD REMOVAL

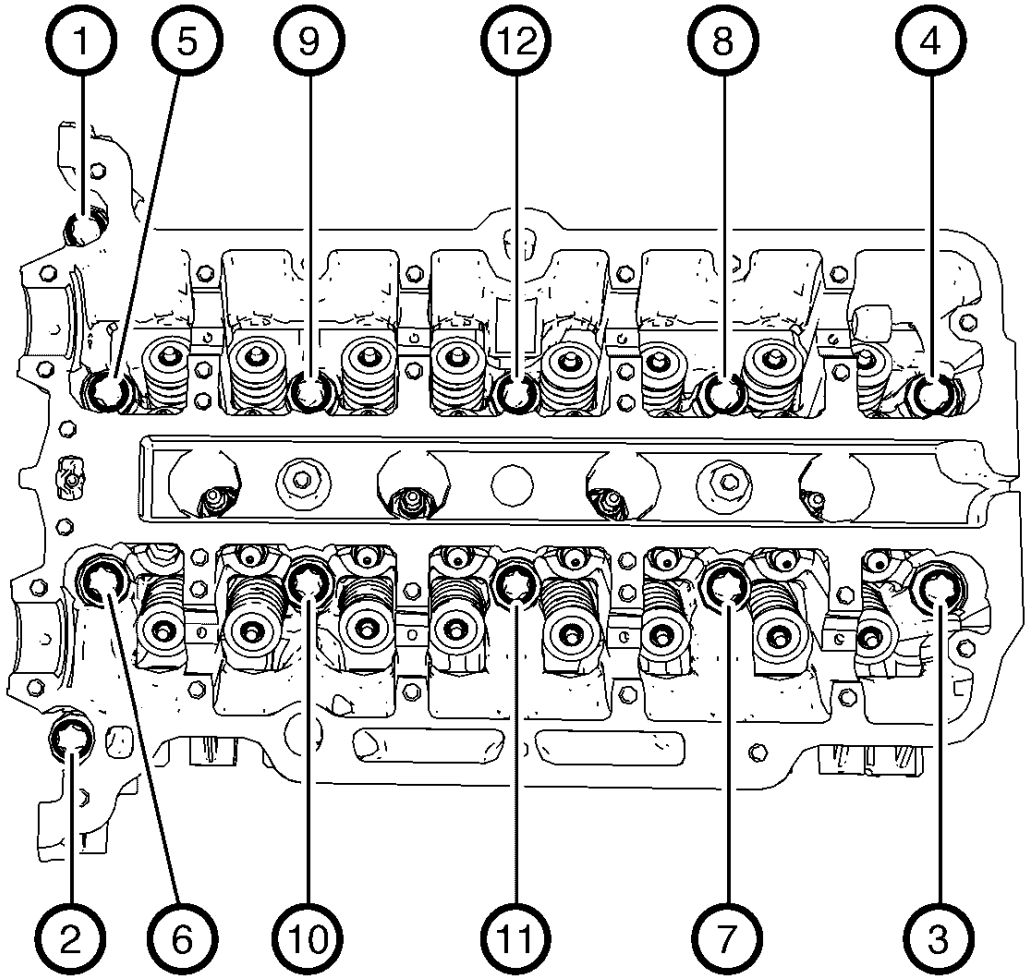

Fig. 367: Cylinder Head Bolts Loosening Sequence
Courtesy of GENERAL MOTORS COMPANY

1. Loosen the 12 cylinder head bolts in the sequence as shown. Use the following procedure:
    1. Loosen the cylinder head bolts 90 degrees.
    2. Loosen the cylinder head bolts 180 degrees.

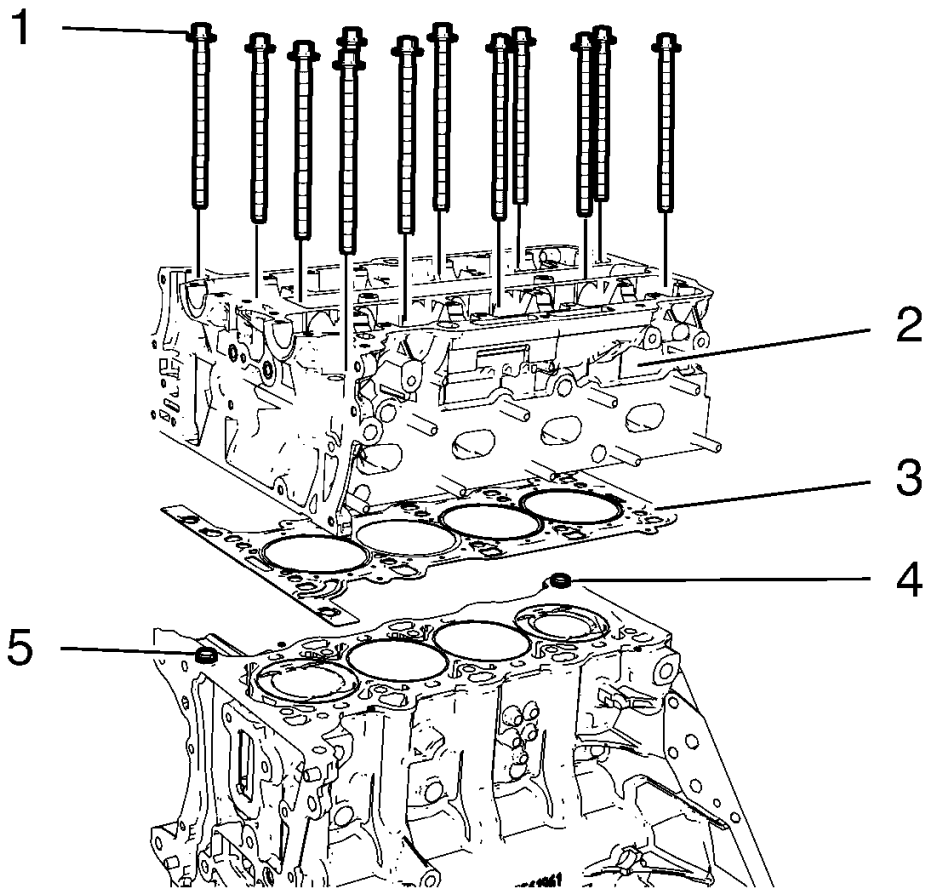

Fig. 368: Cylinder Head, Gasket, Bolts And Guide Sleeves
Courtesy of GENERAL MOTORS COMPANY

NOTE: Do not damage the guide sleeves (4) and (5).

2. Remove the 12 cylinder head bolts (1).
3. Remove the cylinder head (2).
4. Remove the cylinder head gasket (3).

PISTON, CONNECTING ROD, AND BEARING REMOVAL

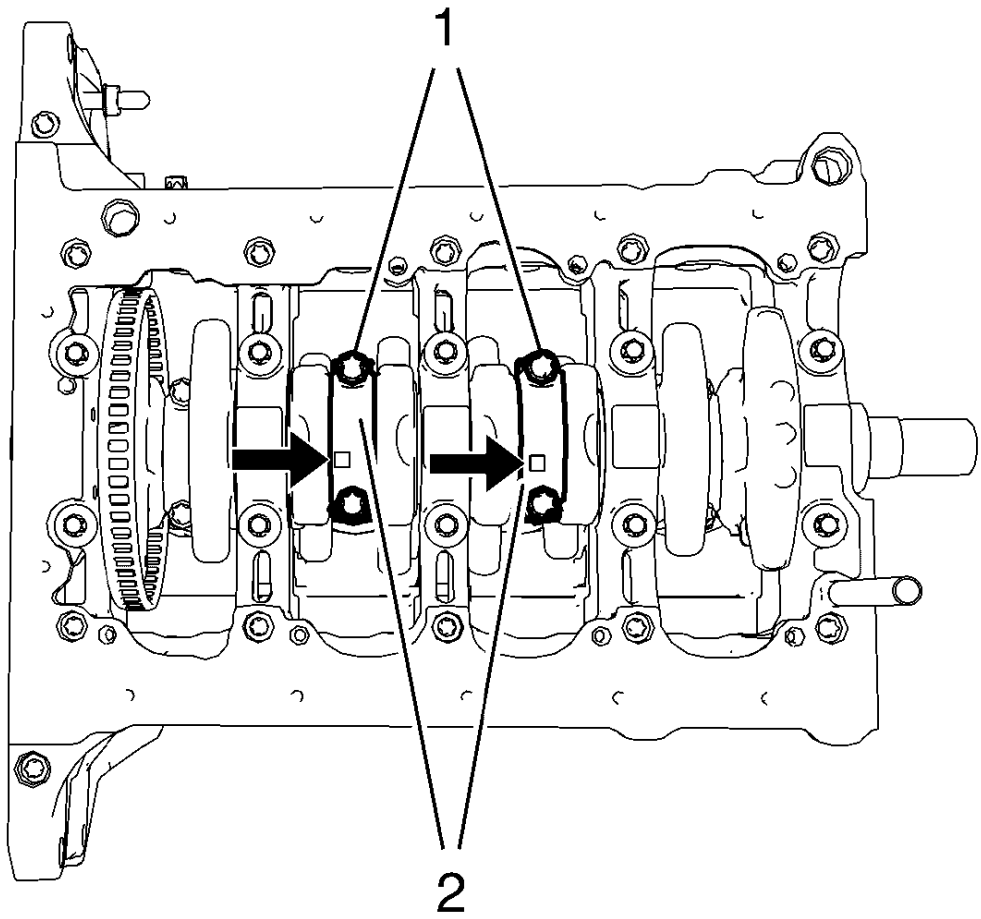

Fig. 369: Rod Bearing Caps And Bolts
Courtesy of GENERAL MOTORS COMPANY

NOTE: Mark the installation position of the connecting rod bearing caps. The connecting rod bearings and bearing caps must not be interchanged with other connecting rods.

1. Remove the 4 connecting rod bearing cap bolts (1) of cylinder 2 and 3.
2. Remove the 2 connecting rod bearing caps (2) and the 2 connecting rod bearings of cylinder 2 and 3.
3. Rotate the crankshaft 180 degrees.

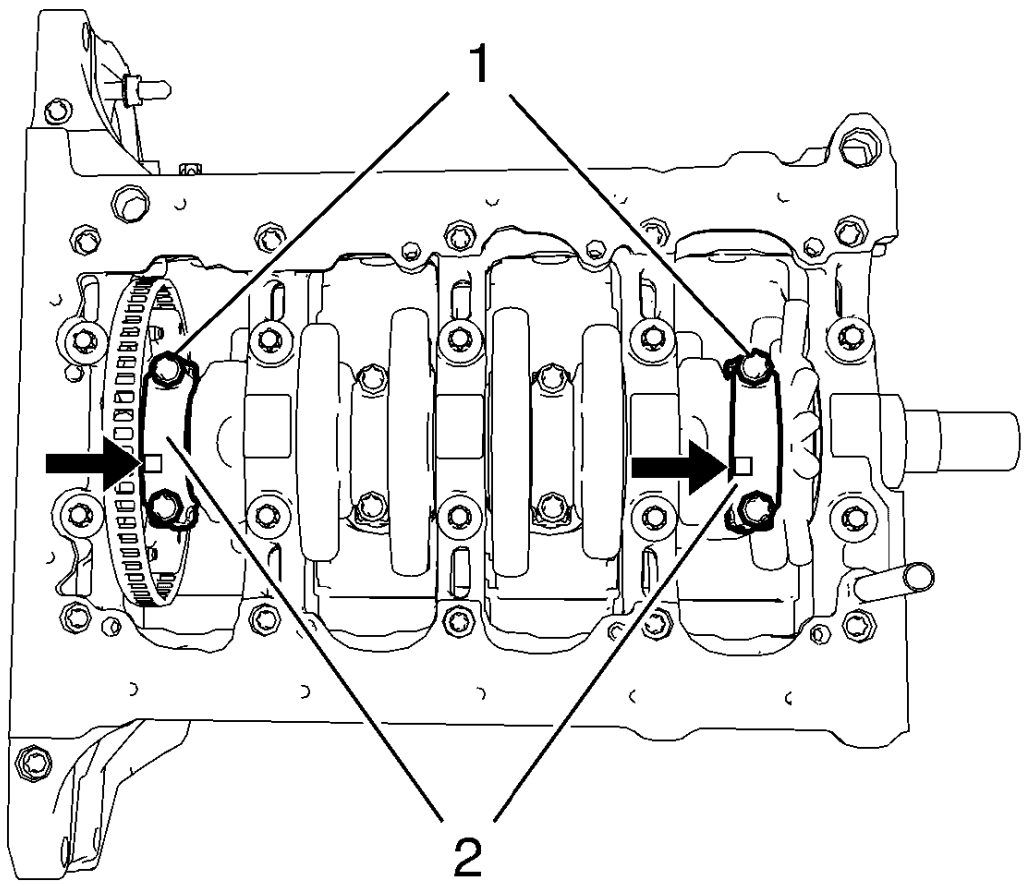

Fig. 370: Rod Bearing Caps And Bolts
Courtesy of GENERAL MOTORS COMPANY

4. Remove the 4 connecting rod bearing cap bolts (1) of cylinder 1 and 4.
5. Remove the 2 connecting rod bearing caps (2) and the 2 connecting rod bearings of cylinder 1 and 4.

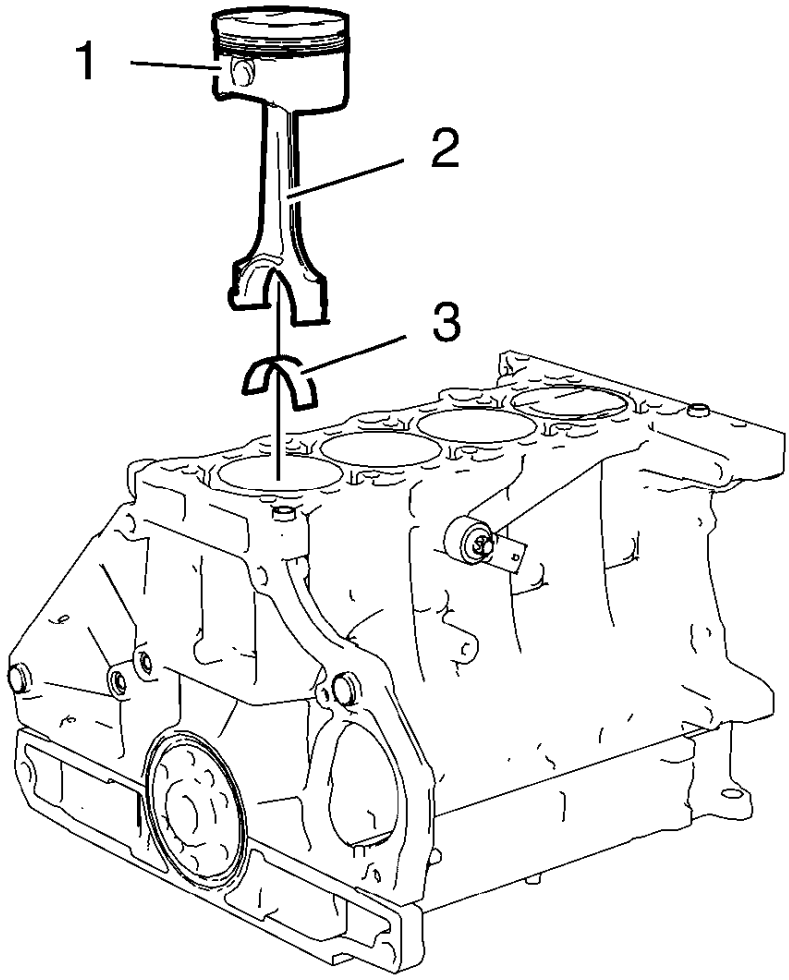

Fig. 371: Pistons, Connecting Rods And Bearings
Courtesy of GENERAL MOTORS COMPANY

6. Remove the 4 pistons (1) and connecting rods (2) and the 4 upper connecting rod bearings (3) from the cylinder block.

CRANKSHAFT AND BEARING REMOVAL

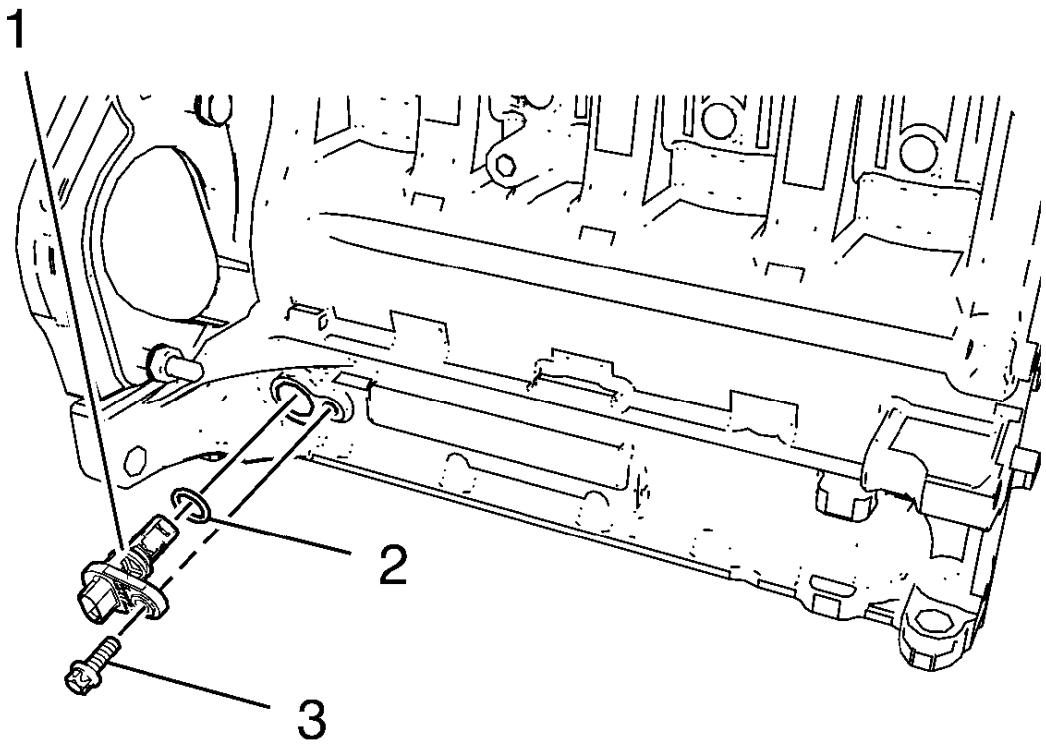

Fig. 372: Crankshaft Position Sensor, Bolt And Seal Ring
Courtesy of GENERAL MOTORS COMPANY

1. Remove the crankshaft position sensor bolt (3).
2. Remove the crankshaft position sensor (1) and the crankshaft position sensor seal ring (2).

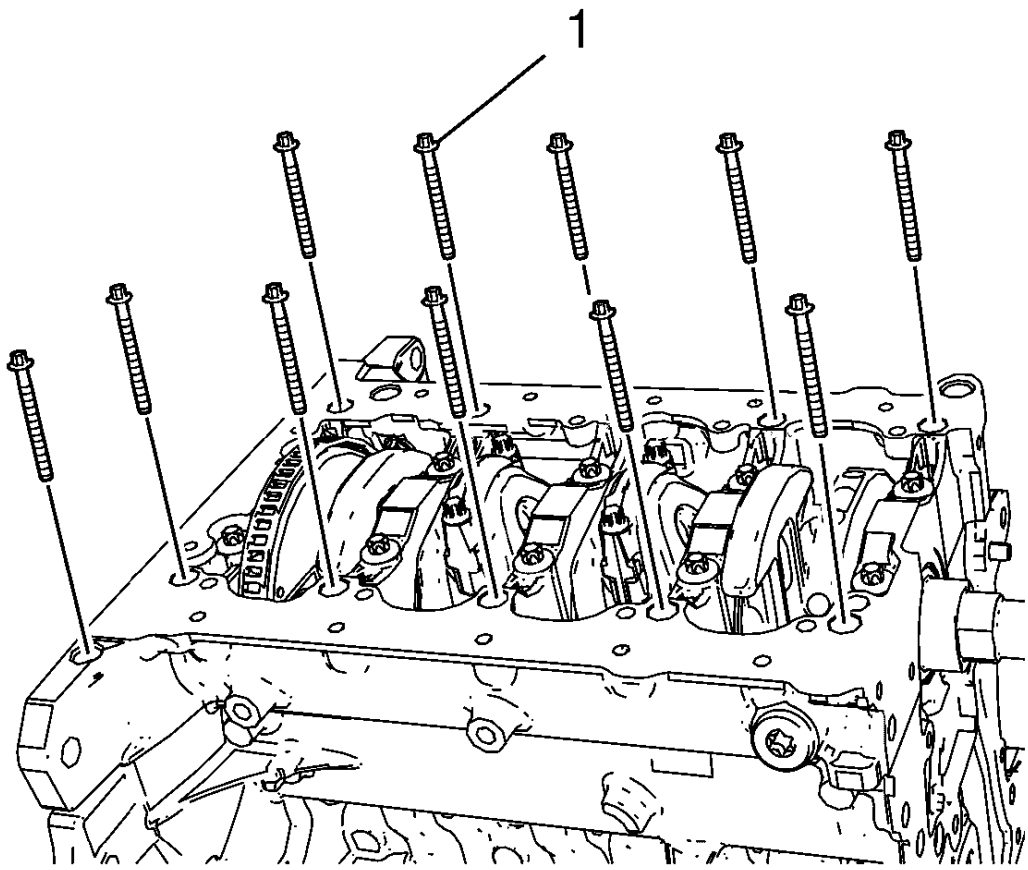

Fig. 373: Outer Crankshaft Bearing Cap Tie Plate Bolts
Courtesy of GENERAL MOTORS COMPANY

3. Remove the 12 outer crankshaft bearing cap tie plate bolts (1).

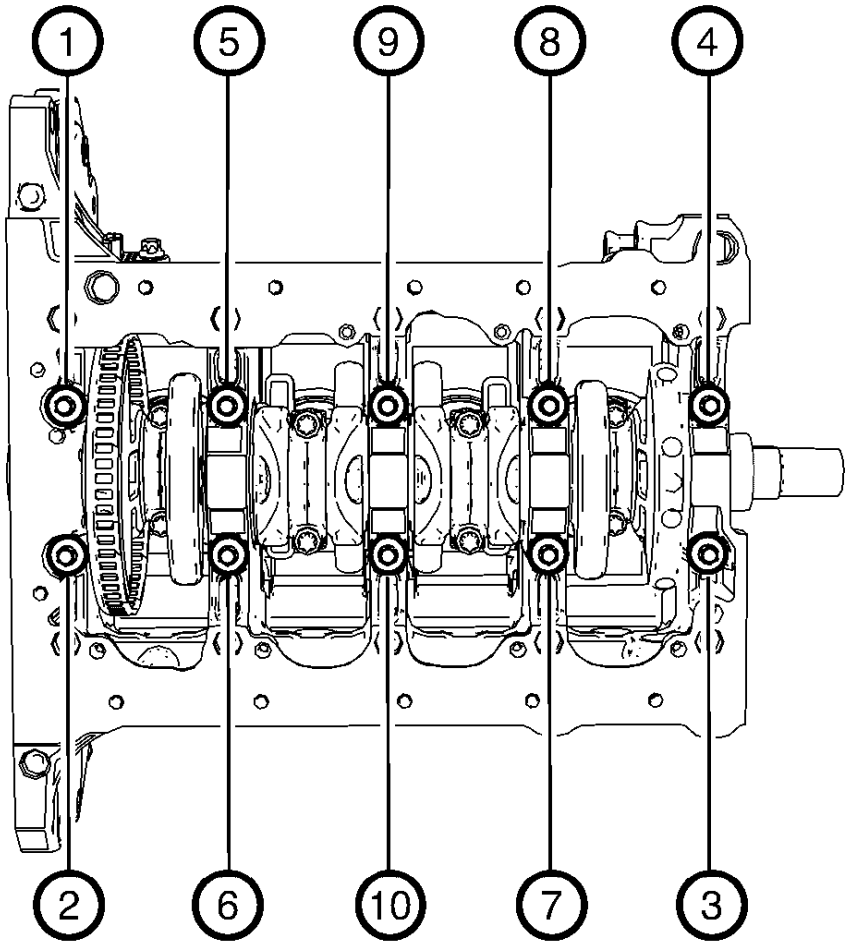

Fig. 374: Inner Crankshaft Bearing Cap Tie Plate Bolts Loosening Sequence
Courtesy of GENERAL MOTORS COMPANY

4. Loosen the 10 inner crankshaft bearing cap tie plate bolts in a sequence as shown.

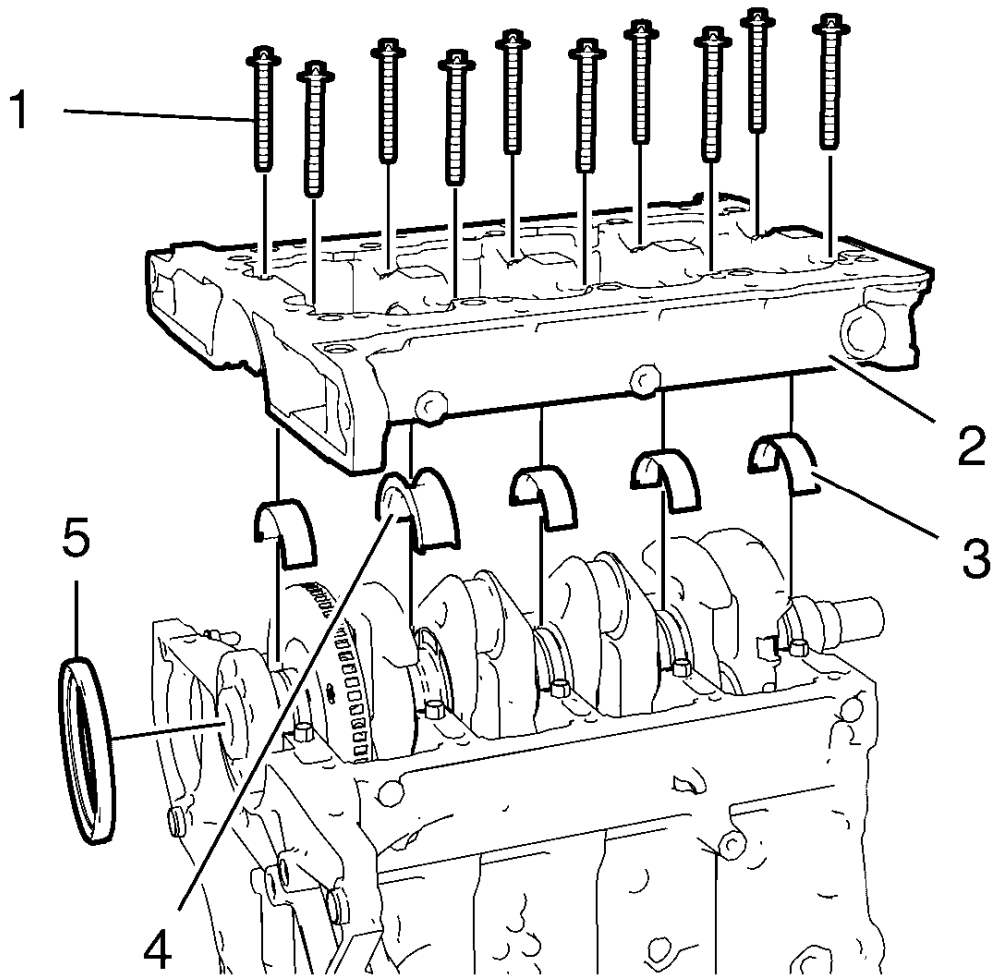

Fig. 375: Crankshaft Bearing Cap Tie Plate, Bolts, Lower Crankshaft Bearings, Lower Crankshaft Thrust Bearing And Crankshaft Rear Oil Seal
Courtesy of GENERAL MOTORS COMPANY

5. Remove and DISCARD the 10 crankshaft bearing cap tie plate bolts (1)

   Remove the crankshaft bearing cap tie plate (2).

6. Remove the 4 lower crankshaft bearings (3) an the lower crankshaft thrust bearing (4).
7. Remove the crankshaft rear oil seal (5).

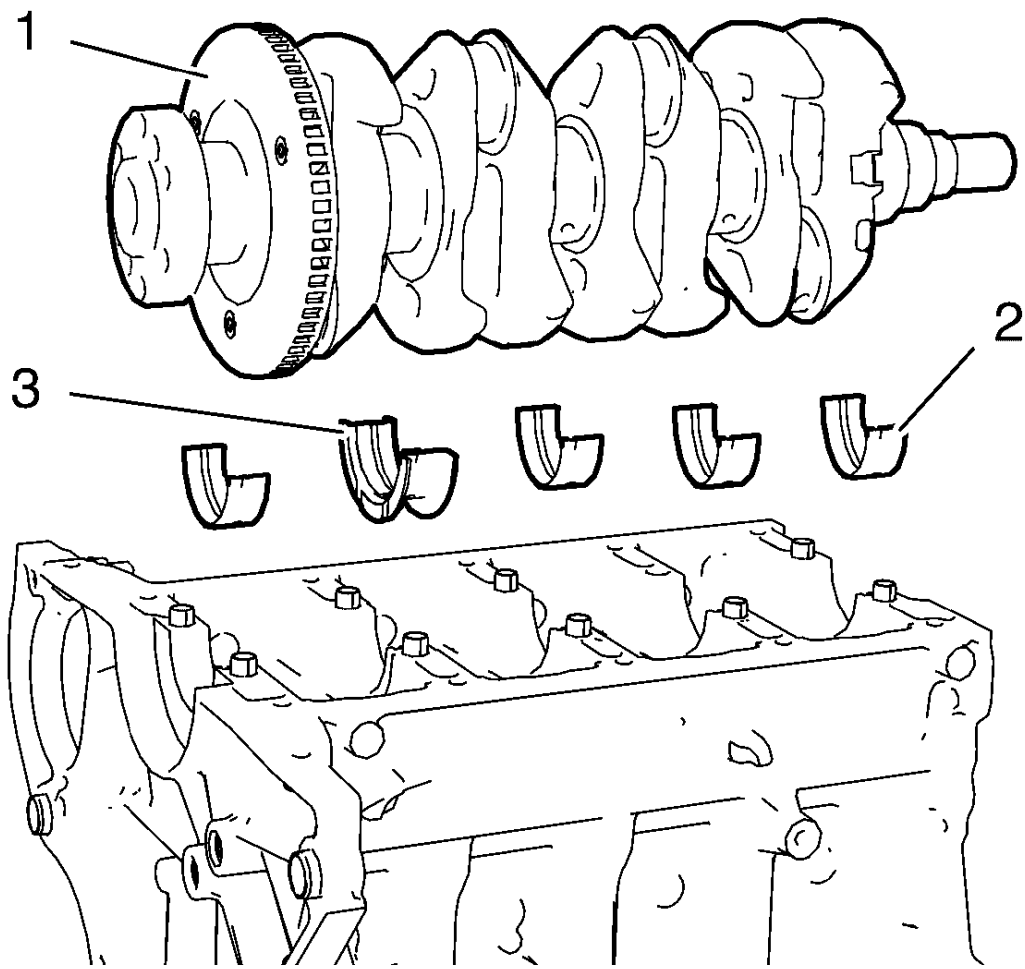

Fig. 376: Crankshaft, Upper Crankshaft Bearings And Upper Crankshaft Thrust Bearing
Courtesy of GENERAL MOTORS COMPANY

8. Remove the crankshaft (1), the 4 upper crankshaft bearings (2) and the upper crankshaft thrust bearing (3).

CYLINDER HEAD DISASSEMBLE

Special Tools

- **EN-840** Pliers/Remover
- **EN-8062** Valve Spring Compressor
- **EN-8062-5** Adapter
- **EN-50717-2** Compressor Assembly of **EN-50717** Kit

For equivalent regional tools, refer to **Special Tools**.

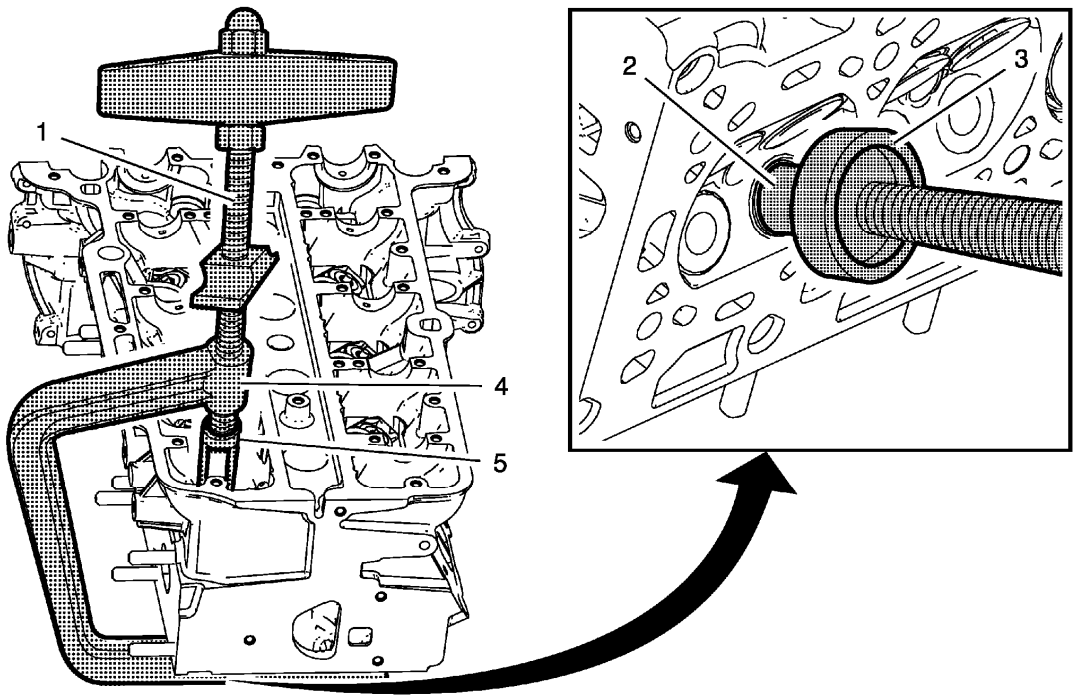

Fig. 377: Valve Spring Compressor And Adapter Assembly
Courtesy of GENERAL MOTORS COMPANY

1. Install the **EN-50717-2** assembly (1) to the **EN-8062** compressor (4).
2. Install the **EN-8062-5** adapter (3) to the **EN-8062** compressor.
3. Install the compressor assembly to the cylinder head, so that the adapter (5) of the **EN-50717-2** assembly (1) contacts the valve spring retainer properly and the **EN-8062-5** adapter (3) contacts the valve disc (2). Prefix the **EN-8062** compressor (4).

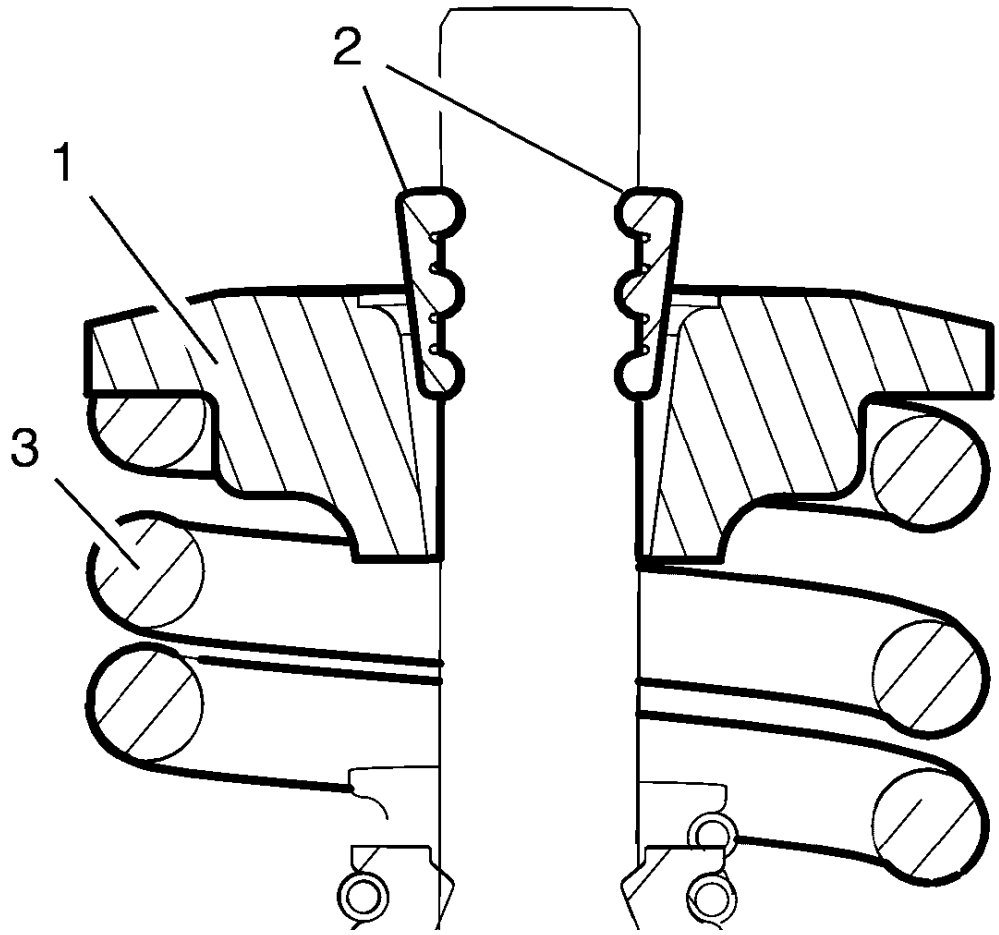

Fig. 378: Valve Spring Retainer And Valve Spring
Courtesy of GENERAL MOTORS COMPANY

WARNING: Valve springs can be tightly compressed. Use care when removing the retainers and plugs. Personal injury could result.

4. Apply pressure to the **EN-50717-2** assembly to push down the vale spring retainer (1) and compress the valve spring (3) until the valve keys (2) are free from tension. Carefully remove the valve keys.

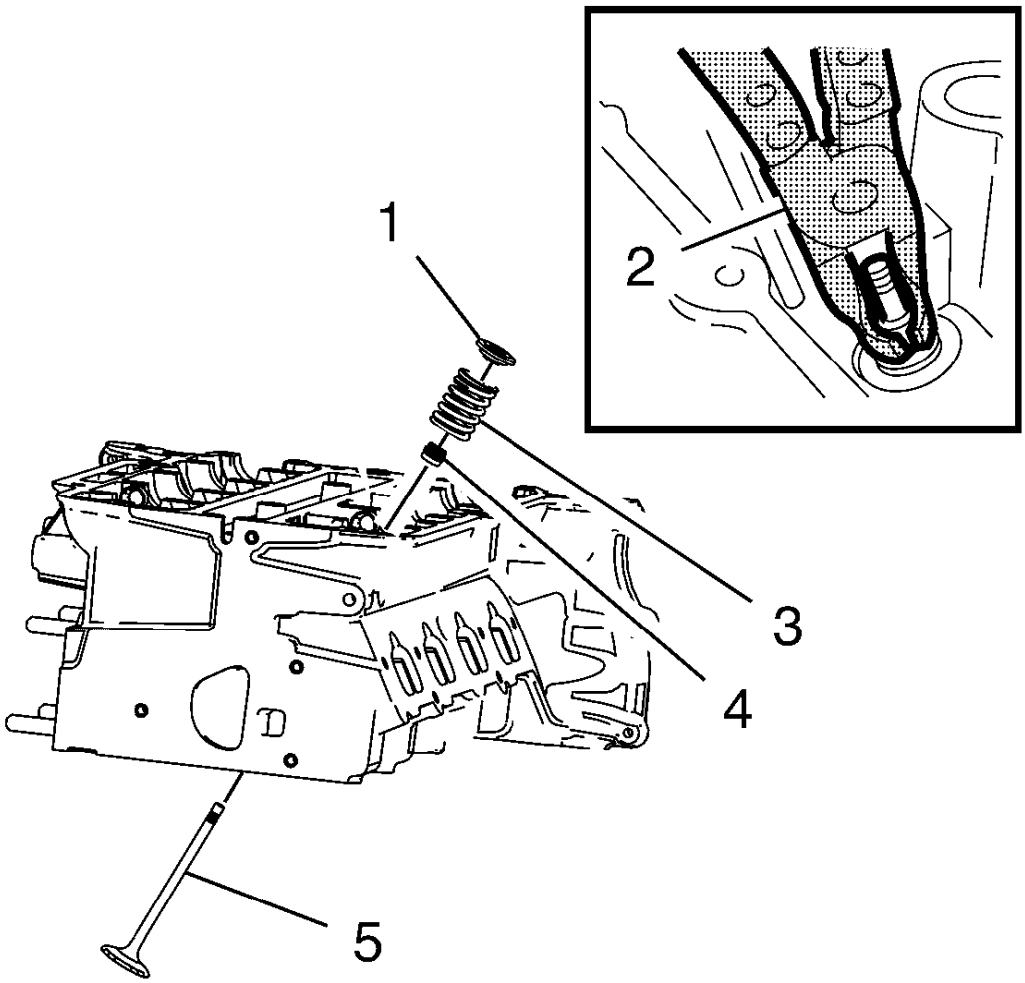

Fig. 379: Spring Compressor
Courtesy of GENERAL MOTORS COMPANY

5. Slowly and carefully loosen the **EN-50717-2** assembly until the valve spring is entirely expanded.
6. Remove the compressor assembly from the cylinder head.
7. Remove the valve spring retainer (1) and the valve spring (3).
8. Remove and DISCARD the valve stem oil seal (4), using the **EN-840** pliers (2).
9. Remove the valve (5).

NOTE: Ensure that the valve train components are kept together and identified in order for proper installation in their original position.

10. Repeat the procedure with the remaining valves.
11. In case of re-using the cylinder head, refer to **Cylinder Head Cleaning and Inspection**.

CYLINDER HEAD CLEANING AND INSPECTION

Cleaning Procedure

1. Remove any old thread sealant, gasket material or sealant.
2. Clean all cylinder head surfaces with non-corrosive sealant.

WARNING: Refer to Safety Glasses Warning .

3. Blow out all the oil galleries using compressed air.
4. Remove any carbon deposits from the combustion chamber.

Visual Inspection

1. Inspect the cylinder head camshaft bearing surfaces for the following conditions:
   - Excessive scoring or pitting
   - Discoloration from overheating
   - Deformation from excessive wear
   - If the camshaft bearing journals appear to be scored or damaged, you must replace the cylinder head. DO NOT machine the camshaft bearing journals.
2. If any of the above conditions exist on the camshaft bearing surfaces, replace the cylinder head.
3. Inspect the cylinder head for the following:
   - Cracks, damage or pitting in the combustion chambers.
   - Debris in the oil galleries - Continue to clean the galleries until all debris is removed.
   - Coolant leaks or damage to the deck face sealing surface - If coolant leaks are present, measure the surface war page as described under cylinder head measurement - deck flatness inspection.
   - Damage to any gasket surfaces.
   - Burnt or eroded areas in the combustion chamber.
   - Cracks in the exhaust ports and combustion chambers.
   - External cracks in the water passages.
   - Restrictions in the intake or exhaust passages.
   - Restrictions in the cooling system passages.
   - Rusted, damaged or leaking core plugs.
4. If the cylinder head is cracked or damaged, it must be replaced. No welding or patching of the cylinder head is allowed.

Valve Inspection And Measurement

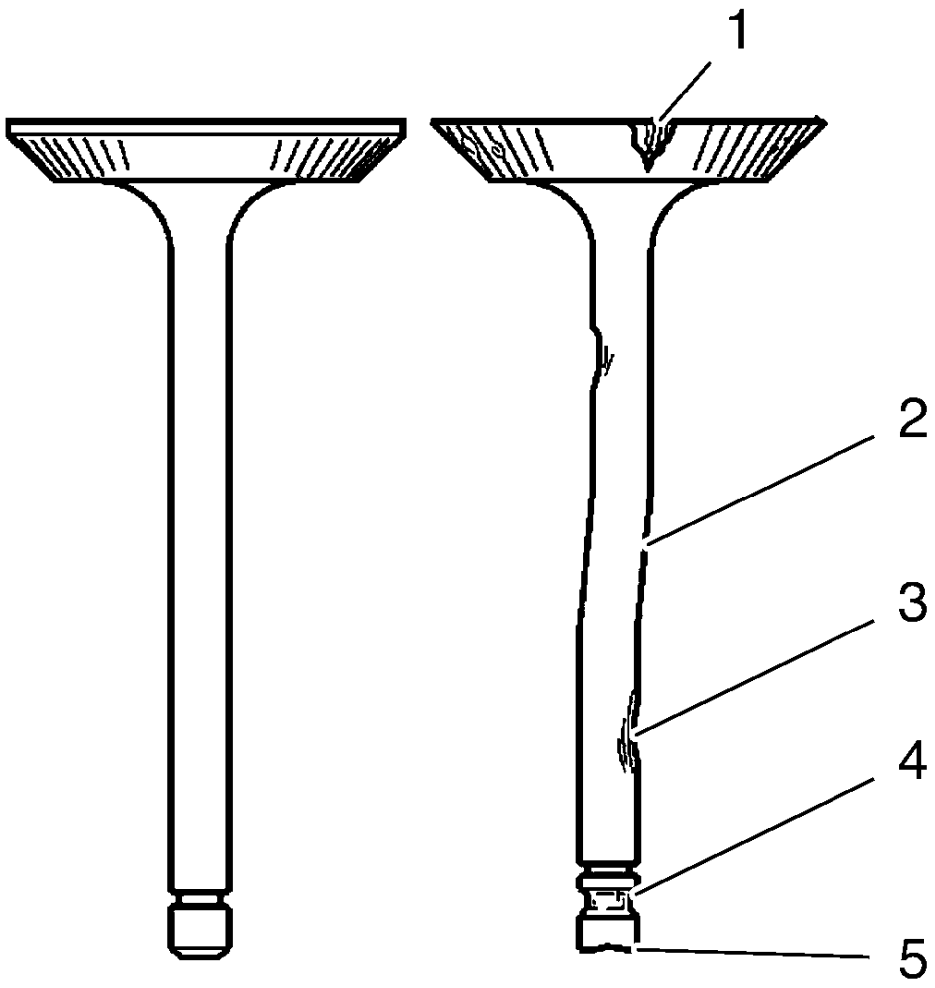

Fig. 380: Valve Inspection And Measurement
Courtesy of GENERAL MOTORS COMPANY

1. Clean the valves of carbon and oil. Carbon can be removed with a wire brush.
2. Inspect the valves for the following conditions:
    1. Inspect the valve faces for burning and cracking (1). If pieces are broken, replace the valve and inspect the corresponding piston and cylinder head area for damage.
    2. Inspect the valve for straightness and distortion (2). Distorted valve must be replaced.
    3. Inspect the valve stem for wear (3).
    4. Inspect the valve key grooves for chipping and wear (5). Replace the valve if chipped or worn.

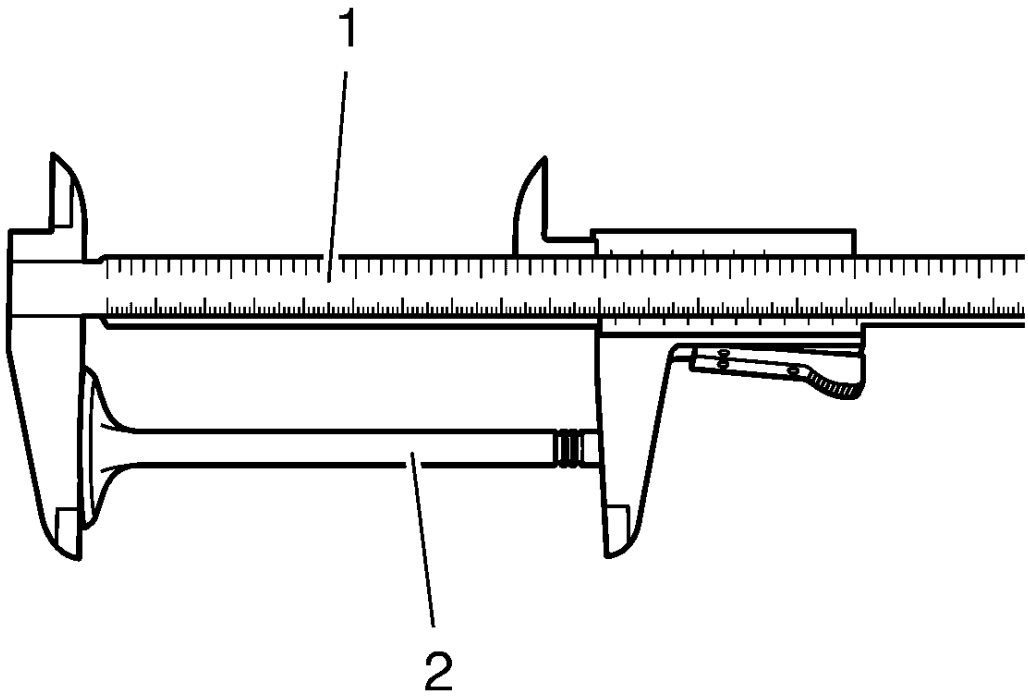

Fig. 381: Measuring Valve Length Using Slide Gauge
Courtesy of GENERAL MOTORS COMPANY

3. Measure the valve length (2). Use a slide gauge (1). Refer to **Engine Mechanical Specifications** to find the permitted values.

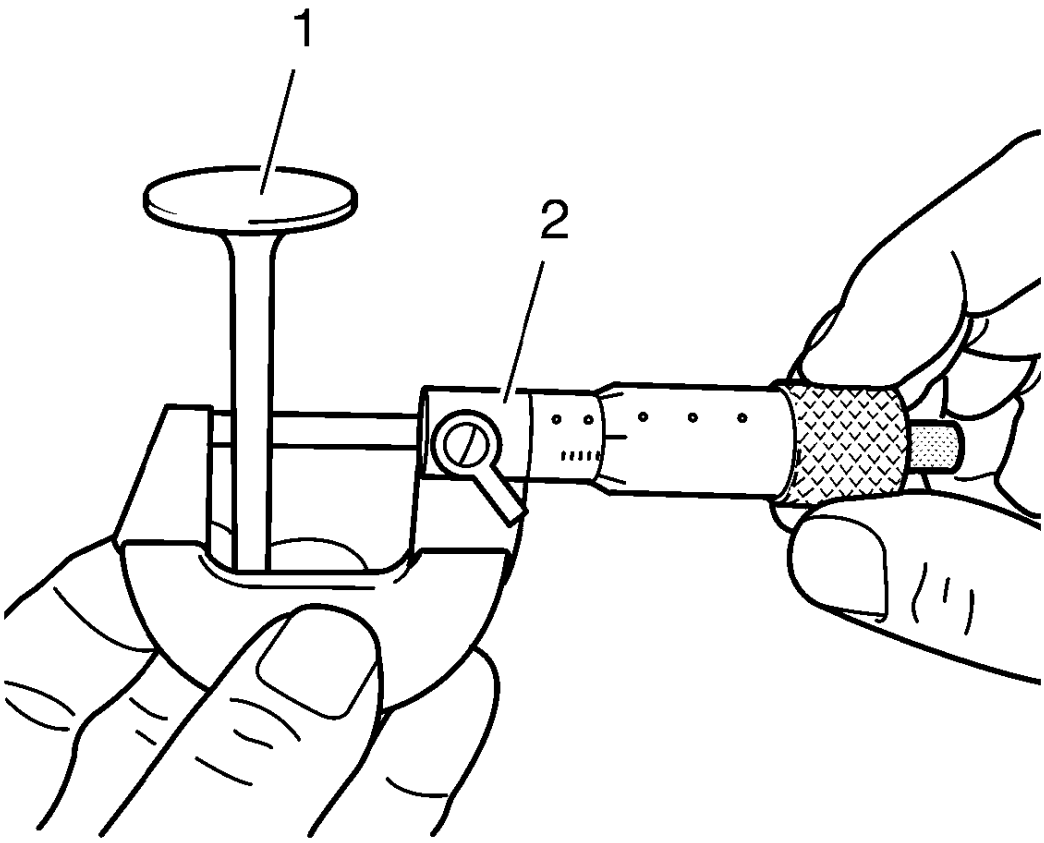

Fig. 382: Measuring Valve Stem Diameter Using Micrometer Gauge
Courtesy of GENERAL MOTORS COMPANY

4. Measure the valve stem diameter. Use a micrometer gauge (2). Refer to **Engine Mechanical Specifications** to find the permitted values. Note the measurement results.

Cylinder Head Measurement

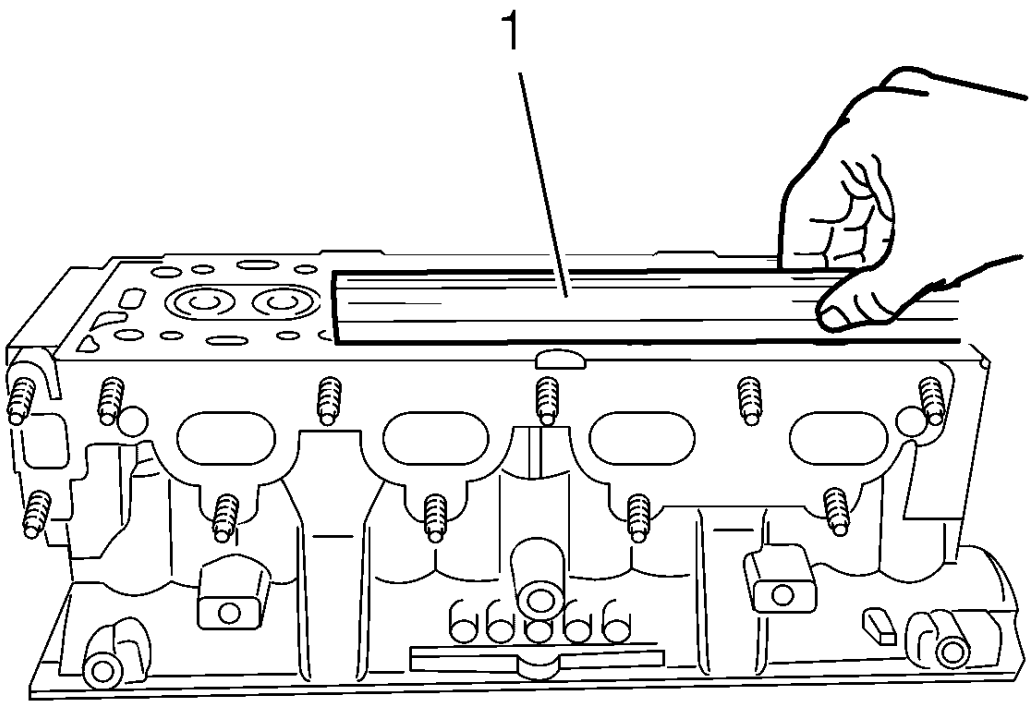

Fig. 383: Using Straightedge To Inspect Cylinder Head Sealing Surface For Flatness
Courtesy of GENERAL MOTORS COMPANY

1. Inspect the cylinder head sealing surface for flatness. Use a straightedge (1). Refer to **Engine Mechanical Specifications** to find the permitted values. If the measurement does not show the permitted value, replace the cylinder head. Machining is NOT allowed.
2. Measure the valve guide inner diameter. Note the measurement results. Refer to **Engine Mechanical Specifications** to find the permitted values.
3. Substract the valve stem diameter from valve guide inner diameter to calculate the valve stem to guide clearance. Refer to **Engine Mechanical Specifications** to find the permitted values.
4. Turn the cylinder head upside down.

CYLINDER HEAD ASSEMBLE

Special Tools

- **EN-958** Valve Stem Seal Installer

- **EN-8062** Valve Spring Compressor
- **EN-8062-5** Adapter
- **EN-50717-2** Compressor Assembly of **EN-50717** Kit

For equivalent regional tools, refer to **Special Tools**.

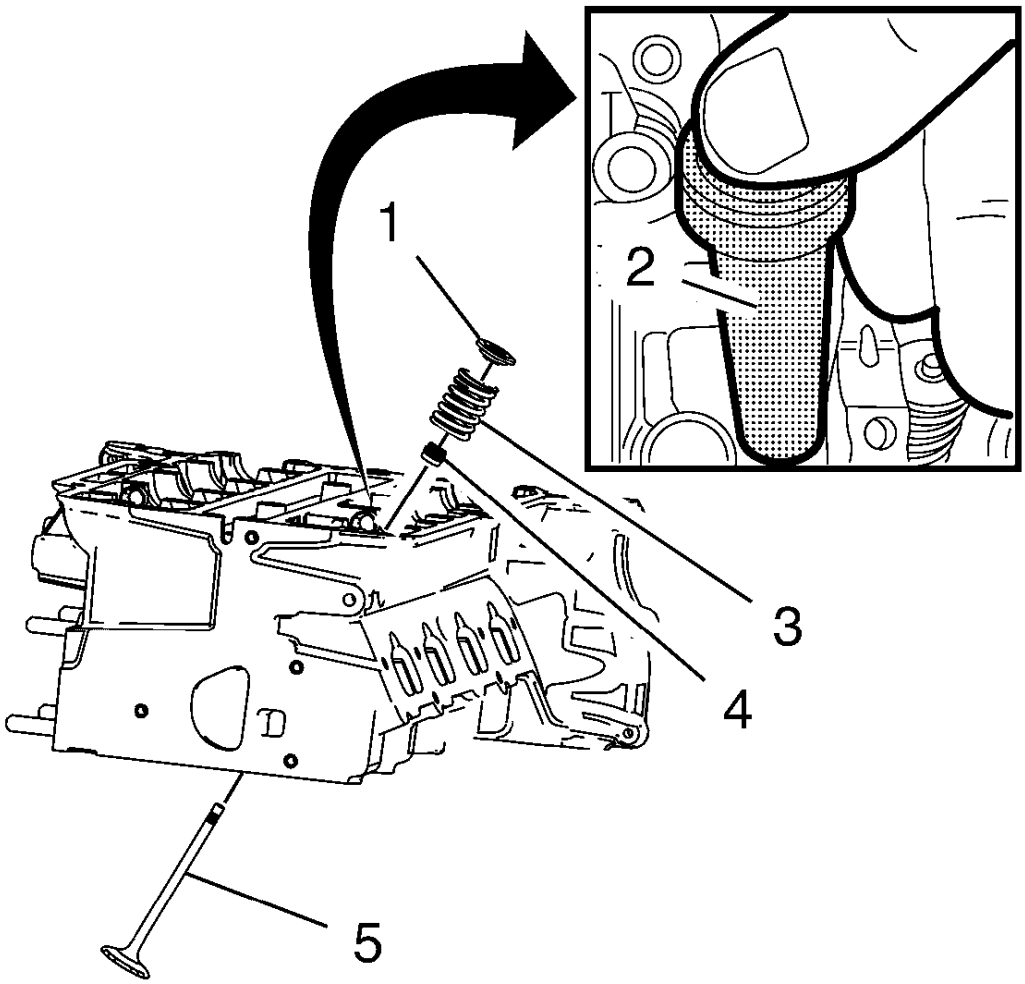

Fig. 384: Valve Stem Oil Seal And Installer
Courtesy of GENERAL MOTORS COMPANY

1. Lubricate the valve stem and the valve guide with clean engine oil.

NOTE: Ensure all valve train components will be installed in their original position.

2. Install the valve (5).
3. Install the NEW valve stem oil seal (4), using the **EN-958** installer (2).

4. Loosely install the valve spring (3) and the valve spring retainer (1).

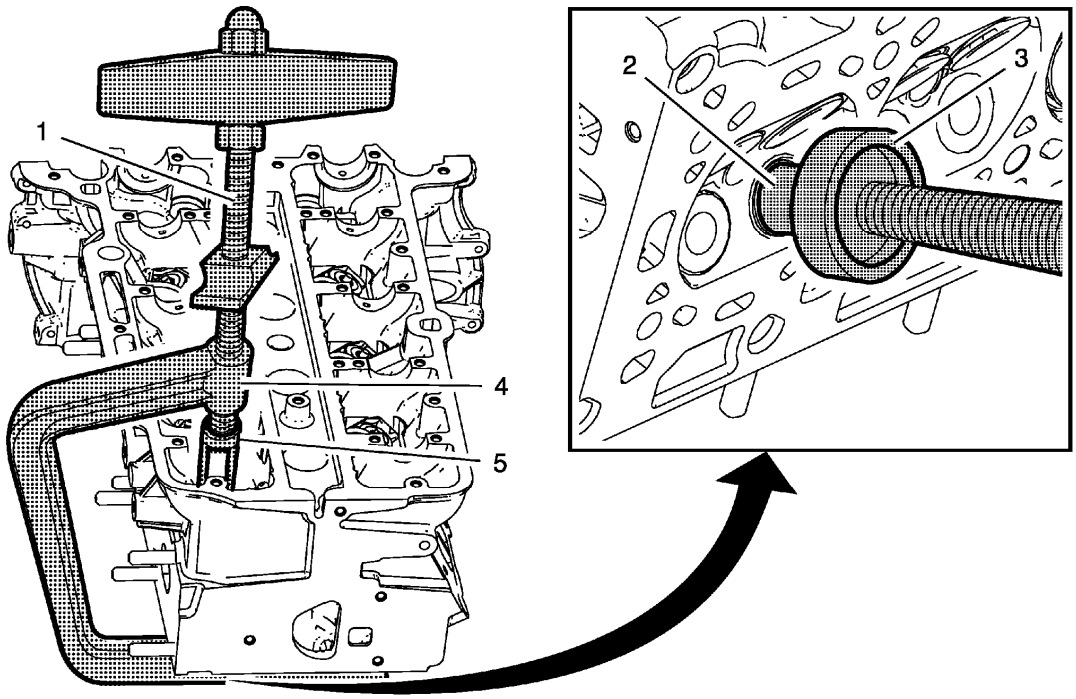

Fig. 385: Valve Spring Compressor And Adapter Assembly
Courtesy of GENERAL MOTORS COMPANY

5. Install the **EN-50717-2** assembly (1) to the **EN-8062** compressor (4).
6. Install the **EN-8062-5** adapter (3) to the **EN-8062** compressor.
7. Install the compressor assembly to the cylinder head, so that the adapter (5) of the **EN-50717-2** assembly (1) contacts the valve spring retainer properly and the **EN-8062-5** adapter (3) contacts the valve disc (2). Prefix the **EN-8062** compressor (4).

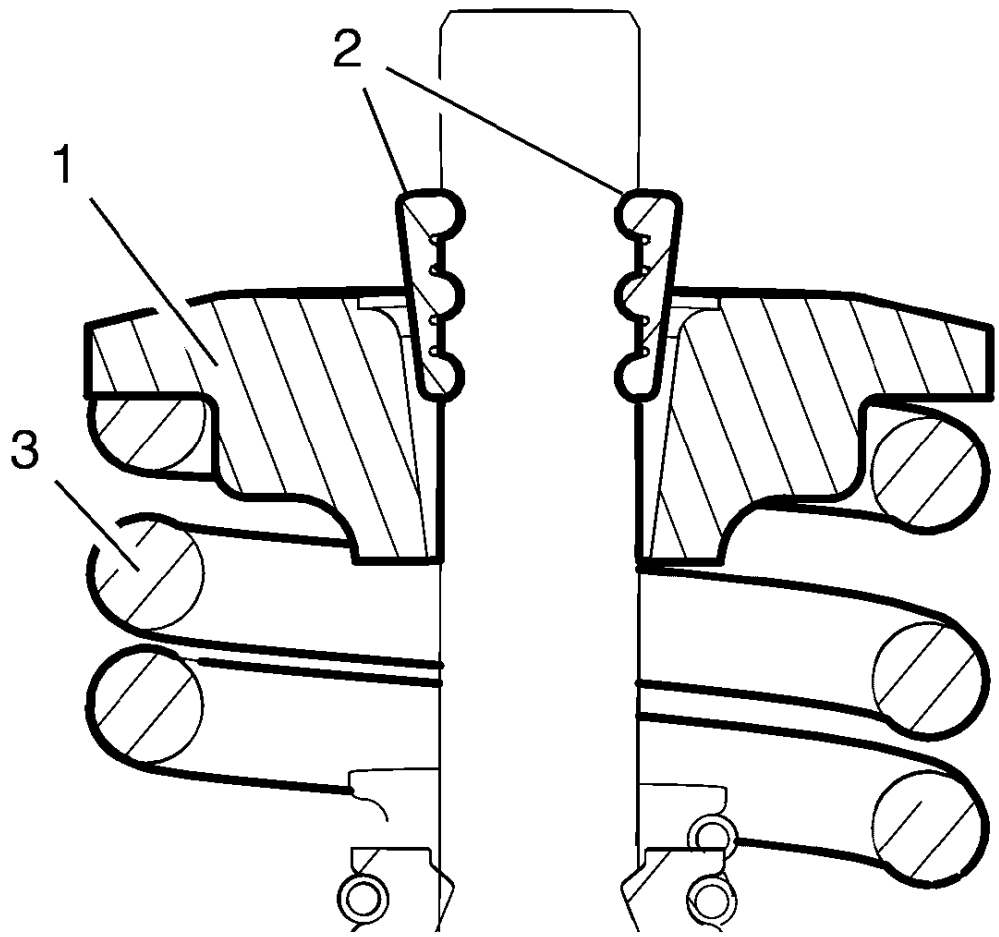

Fig. 386: Valve Spring Retainer And Valve Spring
Courtesy of GENERAL MOTORS COMPANY

CAUTION: The valve stem keys must correctly seat in the valve spring cap. Engine damage may occur by not installing properly.

8. Apply pressure to the **EN-50717-2** assembly to push down the vale spring retainer (1) and compress the valve spring (3) until the valve keys (2) can be inserted. Carefully insert the valve keys then, so that they are proper installed to the valve stem grooves.
9. Carefully release the tension from the **EN-50717-2** assembly.
10. Inspect the valve keys and valve spring retainers for proper seat.
11. Remove the compressor assembly from the cylinder head.
12. Repeat the procedure with the remaining valves.

ENGINE BLOCK DISASSEMBLE

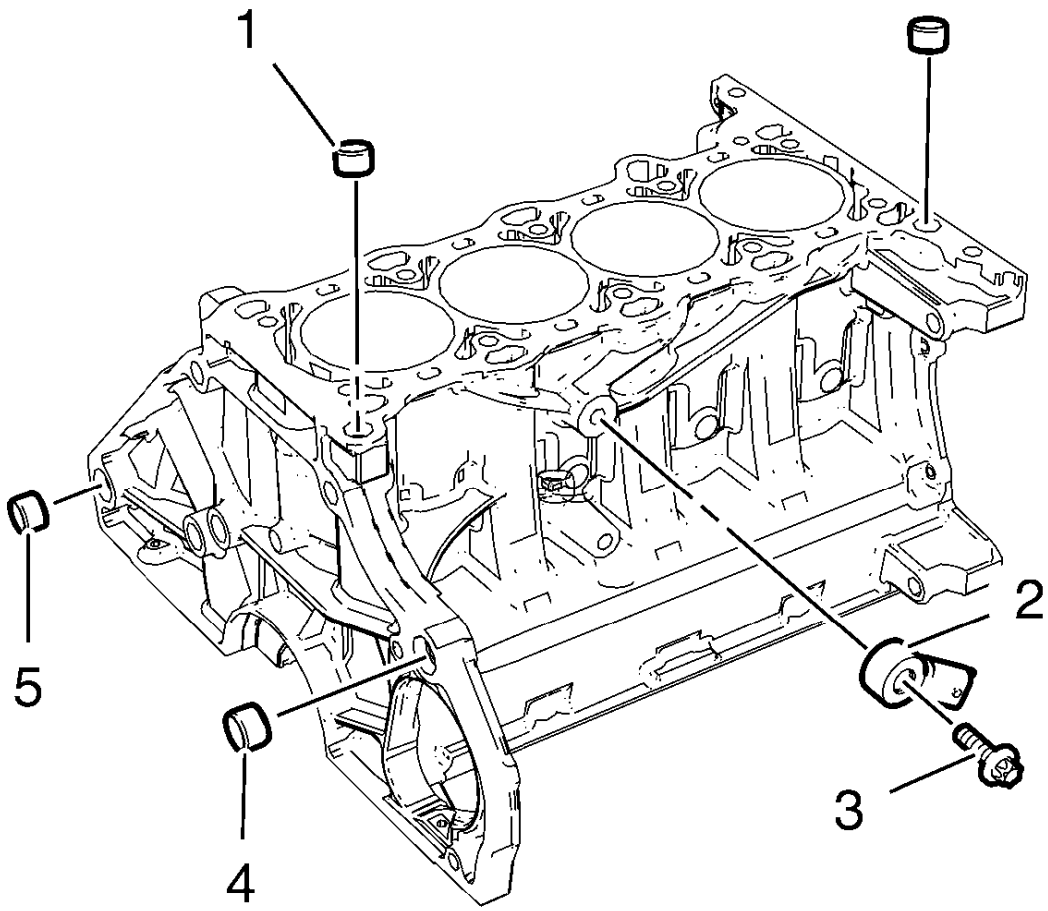

Fig. 387: Knock Sensor, Bolt, Cylinder Head Guide Sleeves And Transmission Guide Sleeves
Courtesy of GENERAL MOTORS COMPANY

1. Remove the knock sensor bolt (3).
2. Remove the knock sensor (2).
3. Remove the 2 cylinder head guide sleeves (1). Use suitable pliers.
4. Remove the 2 transmission guide sleeves (4) and (5). Use suitable pliers.

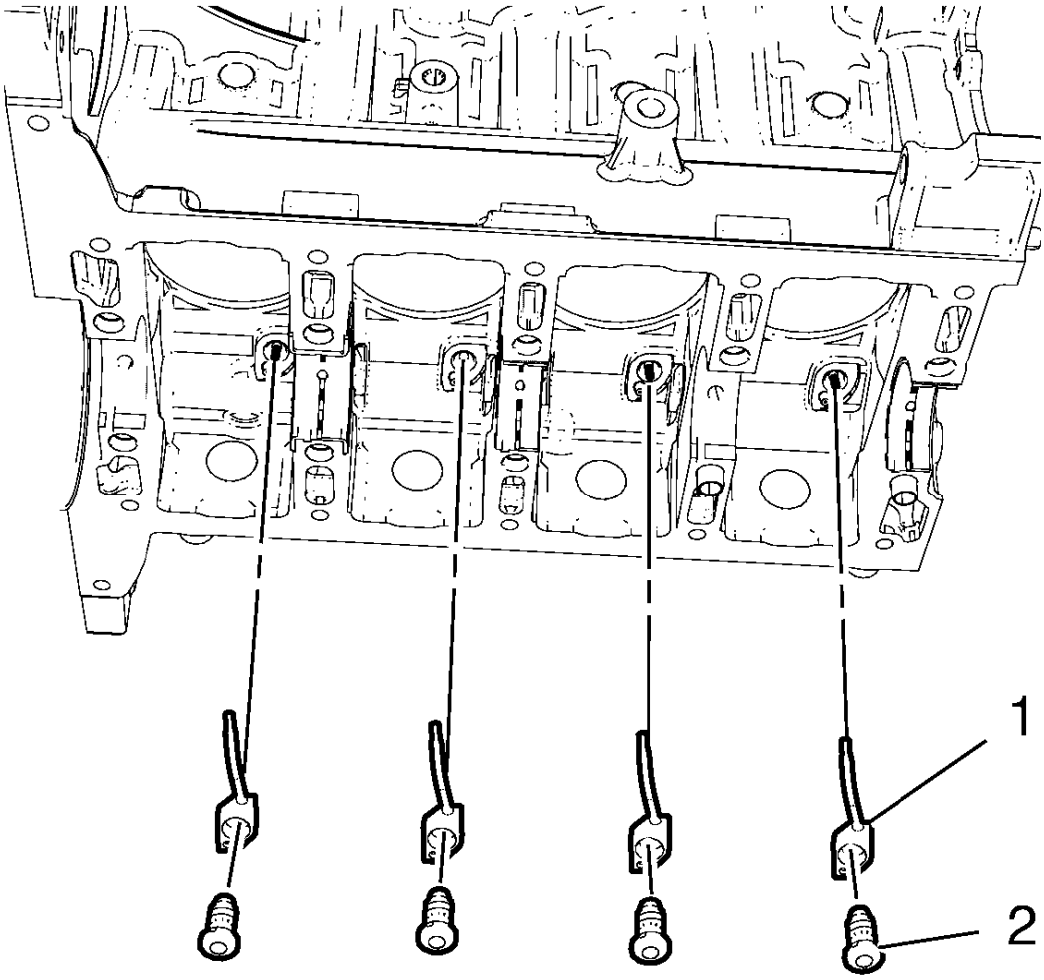

Fig. 388: Piston Oil Nozzles And Bolts
Courtesy of GENERAL MOTORS COMPANY

5. Remove the 4 piston oil nozzle bolts (2).
6. Remove the 4 piston oil nozzles (1).

ENGINE BLOCK ASSEMBLE

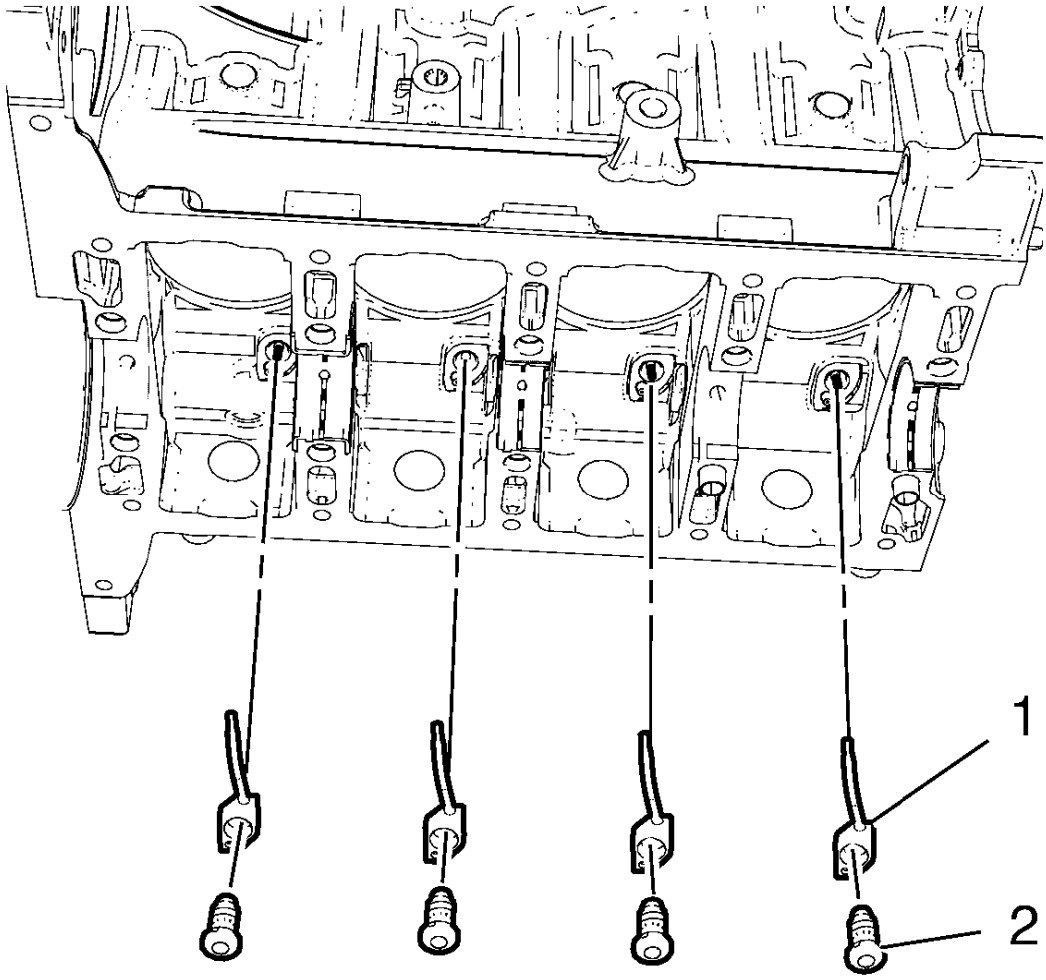

Fig. 389: Piston Oil Nozzles And Bolts
Courtesy of GENERAL MOTORS COMPANY

1. Install the 4 piston oil nozzles (1).

CAUTION: Refer to Fastener Caution .

2. Install the 4 piston oil nozzle bolts (2) and tighten to 25 N.m (18 lb ft).

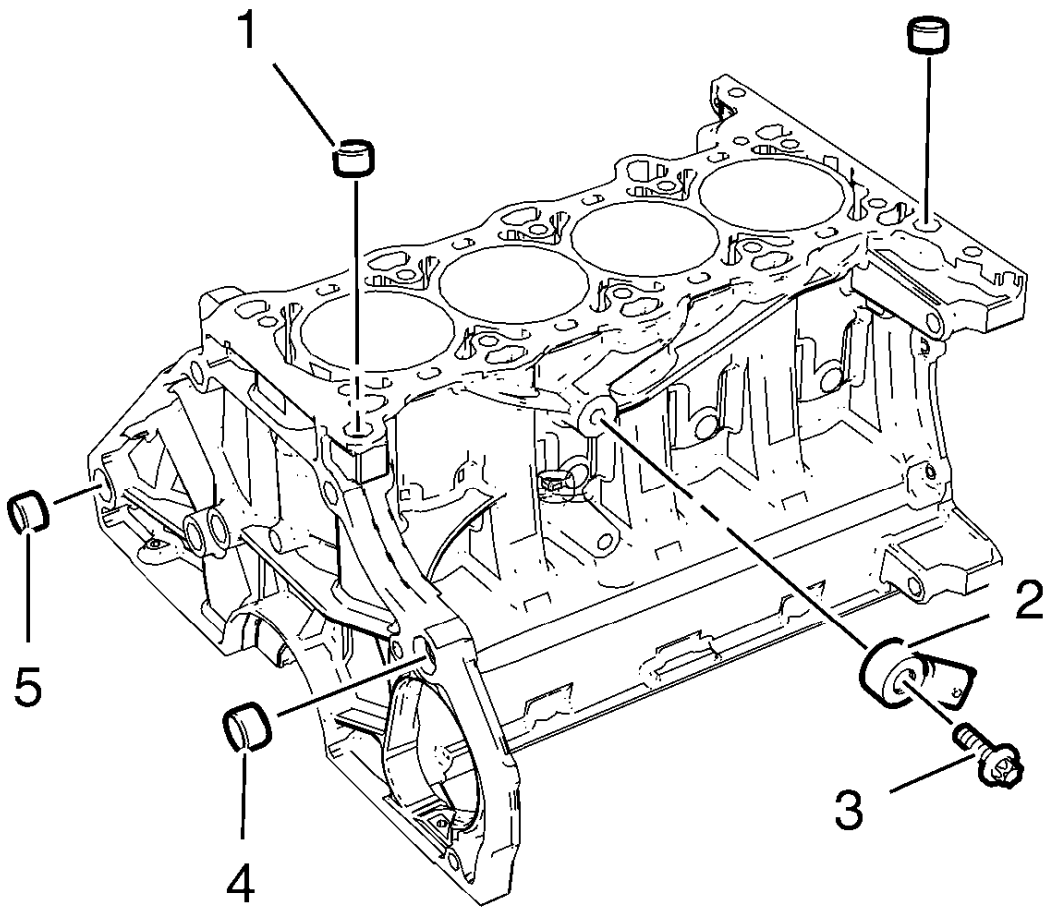

Fig. 390: Knock Sensor, Bolt, Cylinder Head Guide Sleeves And Transmission Guide Sleeves
Courtesy of GENERAL MOTORS COMPANY

3. Install the knock sensor (2).
4. Install the knock sensor bolt (3) and tighten to 20 N.m (15 lb ft).
5. Install the 2 cylinder head guide sleeves (1). Use a rubber mallet.
6. Install the 2 transmission guide sleeves (4) and (5). Use a rubber mallet.

PISTON AND CONNECTING ROD DISASSEMBLE

Special Tool

EN-49941 Remover / Installer Piston Retainer Ring

For equivalent regional tools, refer to **Special Tools**.

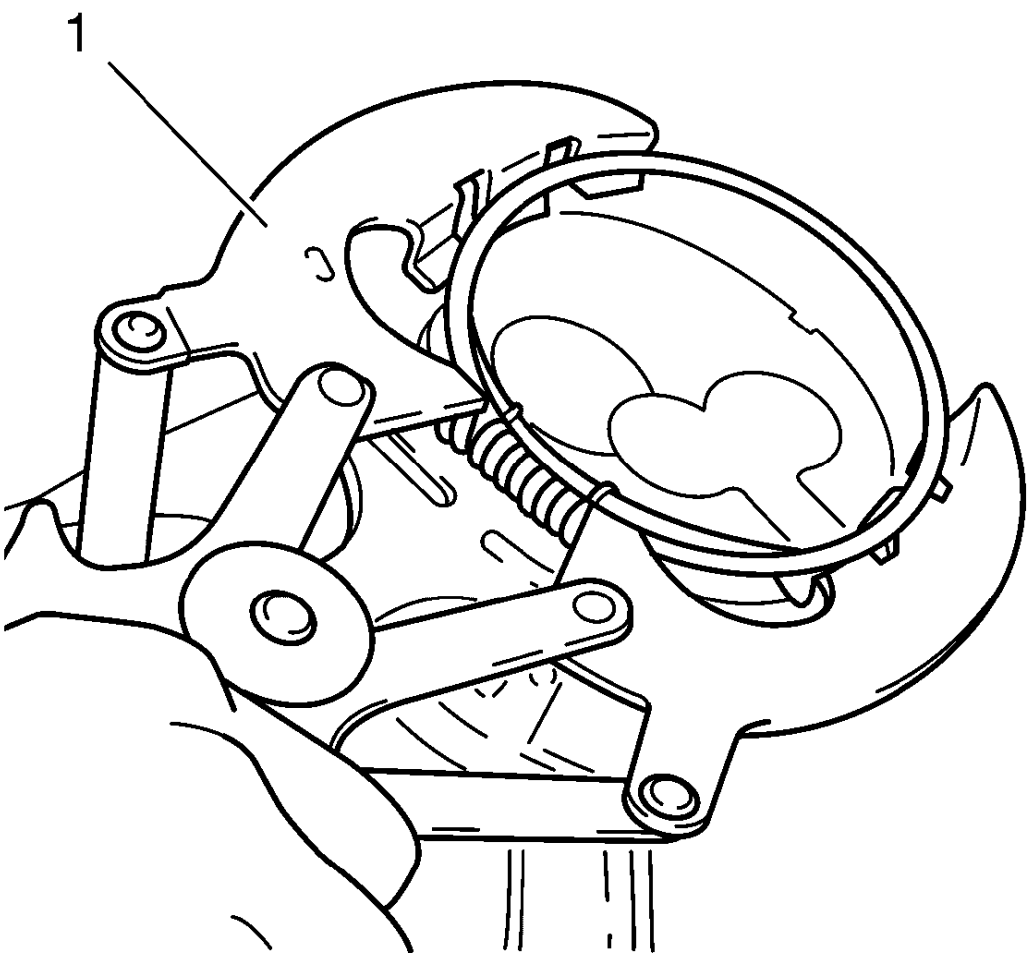

Fig. 391: Using Piston Ring Pliers
Courtesy of GENERAL MOTORS COMPANY

WARNING: Handle the piston carefully. Worn piston rings are sharp and may cause bodily injury.

1. Remove the piston rings. Use piston ring pliers (1)

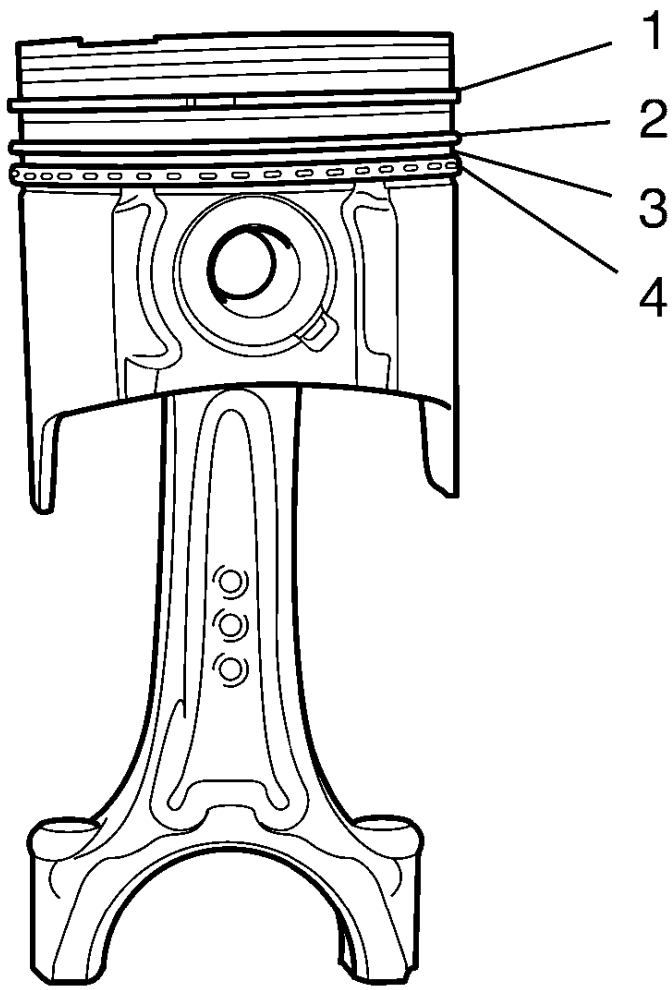

Fig. 392: Upper Compression Ring, Lower Compression Ring, Oil Rings And Oil Ring Spacer
Courtesy of GENERAL MOTORS COMPANY

2. The piston rings are ordered as followed:
    - Upper compression ring (1)
    - Lower compression ring (2)
    - Oil rings and oil ring spacer (3) and (4)
3. Install the piston and connecting rod assembly to a bench vise. Use aluminium braces

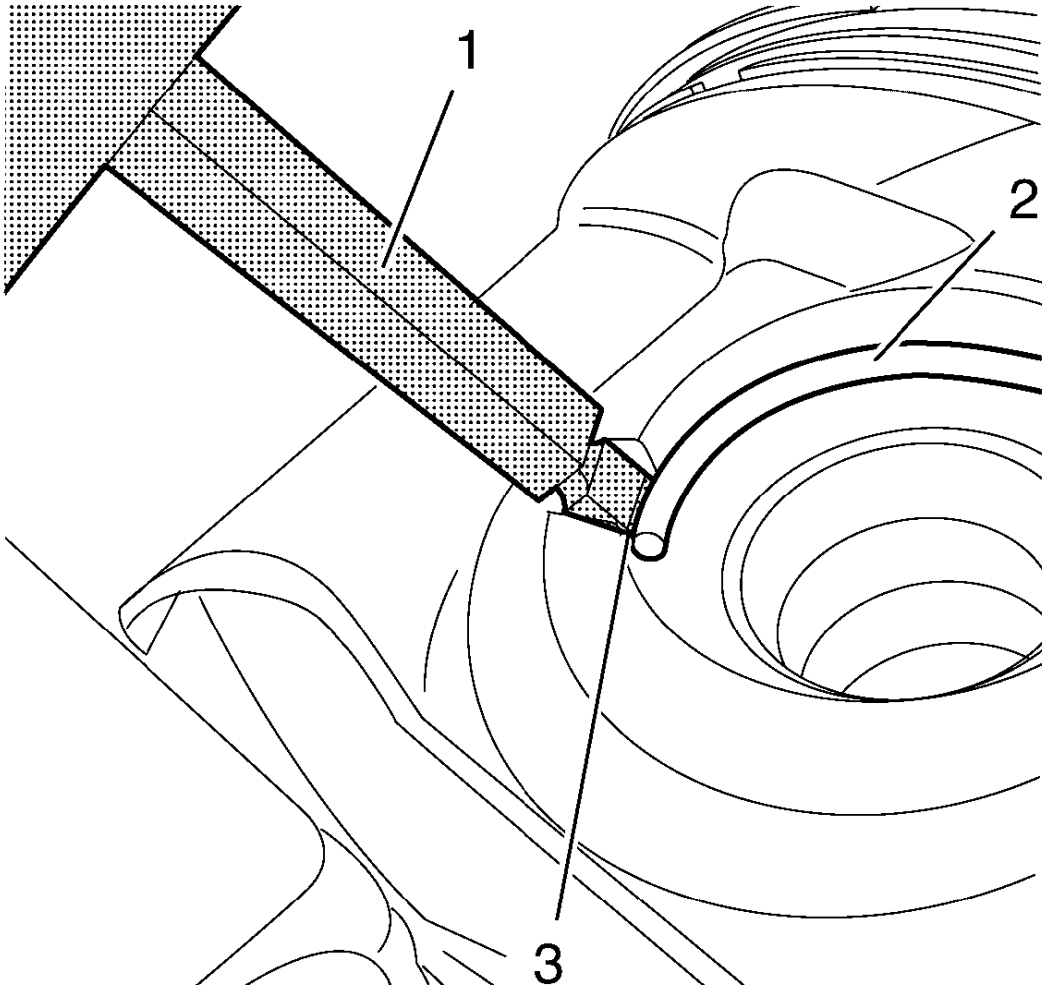

Fig. 393: Piston Pin Retainer, Remover And Notch
Courtesy of GENERAL MOTORS COMPANY

WARNING: Use extreme care when removing snap rings. Always wear adequate eye protection in order to avoid personal injury.

4. Apply the **EN-49941** remover (1) in the notch (3) to the piston pin retainer (2) and remove it.

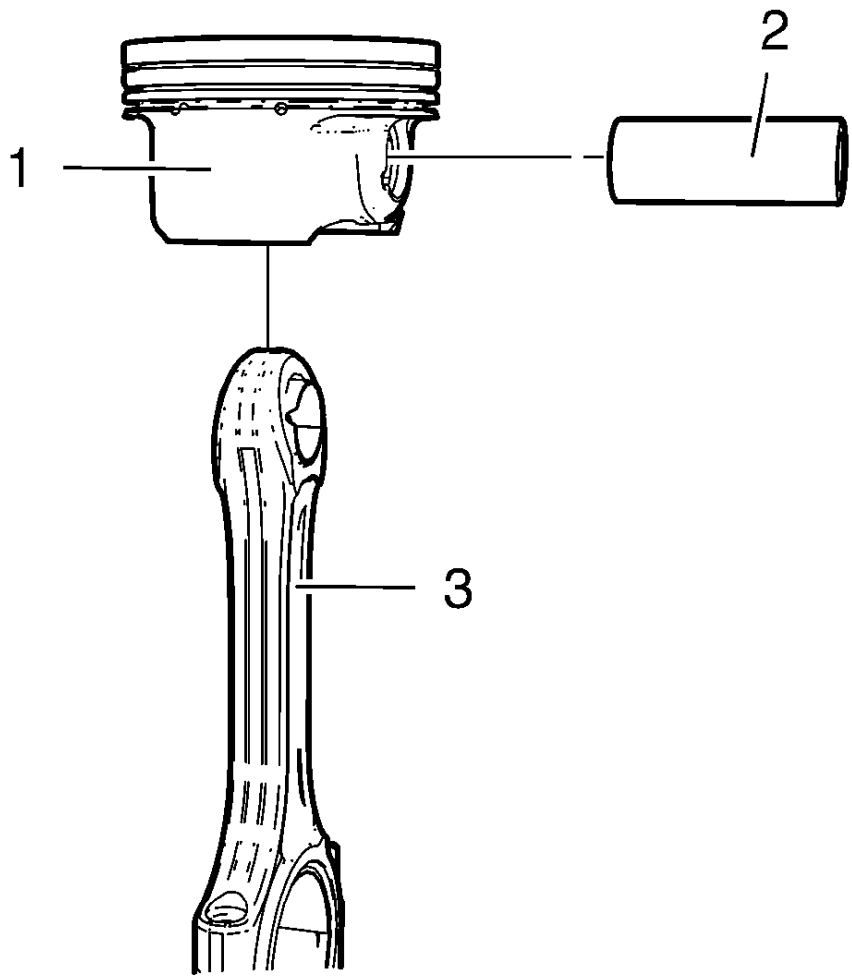

Fig. 394: Connecting Rod, Piston And Piston Pin
Courtesy of GENERAL MOTORS COMPANY

5. Remove the piston pin (2) and the connecting rod (3) from the piston (1).

PISTON, CONNECTING ROD, AND BEARING CLEANING AND INSPECTION

Special Tools

EN-470-B Angular Torque Wrench

For equivalent regional tools, refer to **Special Tools**.

Visual Inspection And Cleaning Procedure

Connecting Rod

WARNING: Wear safety glasses when using compressed air in order to prevent eye injury.

1. Clean the connecting rods in solvent and dry with compressed air.
2. Inspect the connecting rod for the following:
   - Signs of being twisted, bent, nicked or cracked
   - Scratches or abrasion on the connecting rod bearing seating surfaces

Piston

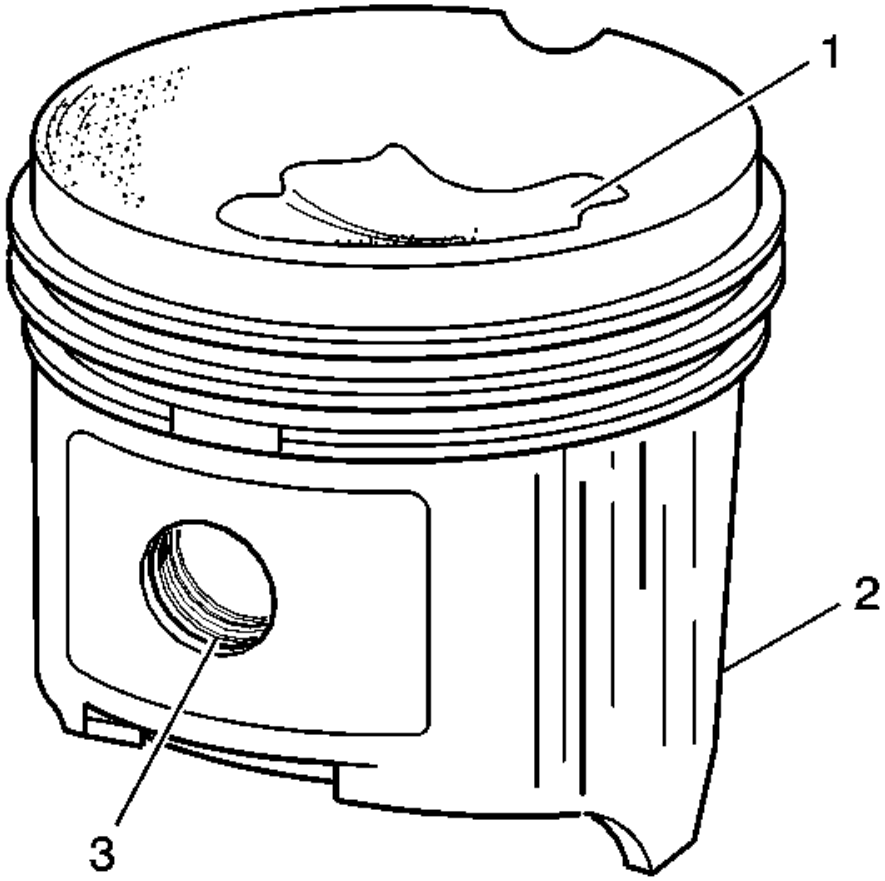

Fig. 395: Identifying Piston Damage Inspection Areas
Courtesy of GENERAL MOTORS COMPANY

1. Clean the piston with a cleaning solvent. DO NOT wire brush any parts of the piston.
2. Clean the piston ring grooves.
3. Inspect the piston on the following:

- Cracked ring lands, skirts or pin bosses
- Ring grooves for nicks
- Eroded areas on the top of the piston (1)
- Scuffed or damaged skirts (2)
- Worn piston pin bores (3)

4. If there is any excessive wear, replace the piston.
5. Measure the clearance between piston pin and piston bore.

Piston And Connecting Rod Measurement Procedure

Piston Ring Clearance

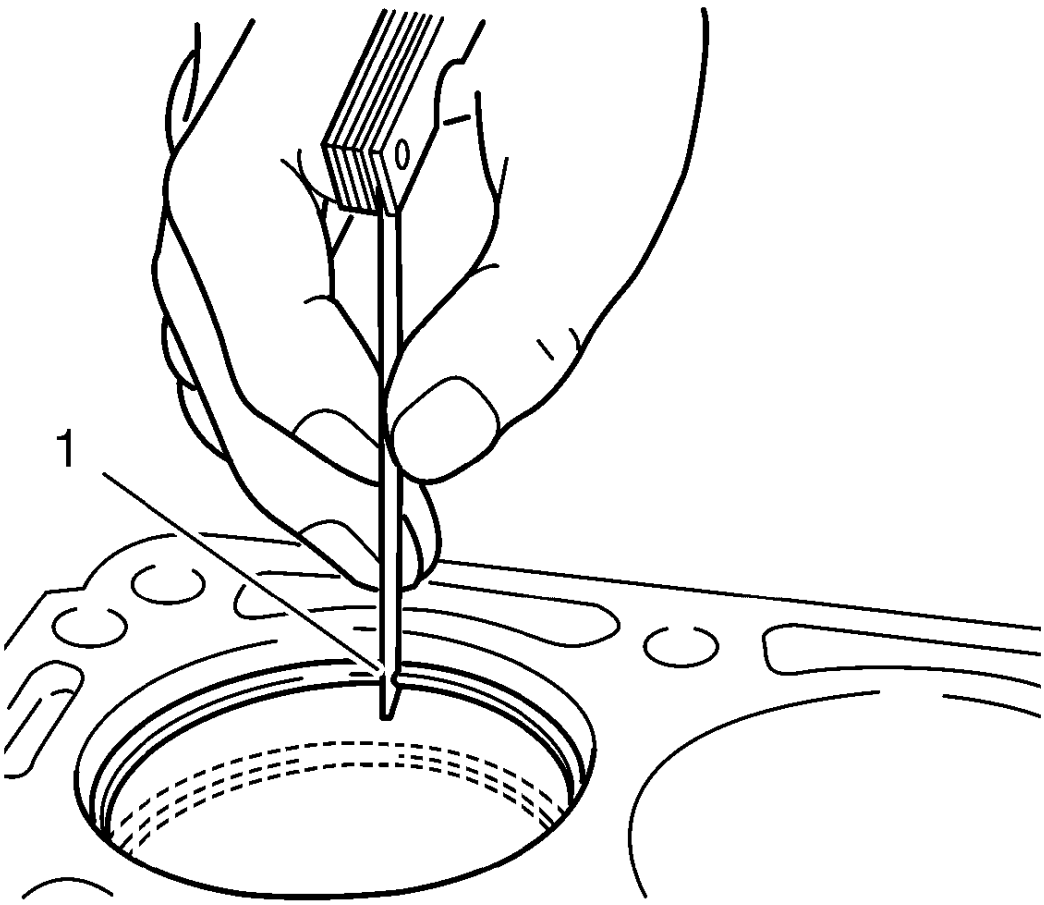

Fig. 396: Measuring Piston Ring End Clearance
Courtesy of GENERAL MOTORS COMPANY

1. Install the piston rings to the cylinder as shown (1) and measure the piston ring end gap. Compare the

measurements with those provided below:

- The upper compression ring end gap should be 0.4-0.6 mm (0.0157-0.0236 in).
- The lower compression ring end gap should be 0.4-0.6 mm (0.0157-0.0236 in).
- The oil ring end gap should be 0.2-0.9 mm (0.0079-0.0354 in).

2. If the clearance is greater than the provided specifications, the piston rings must be replaced.

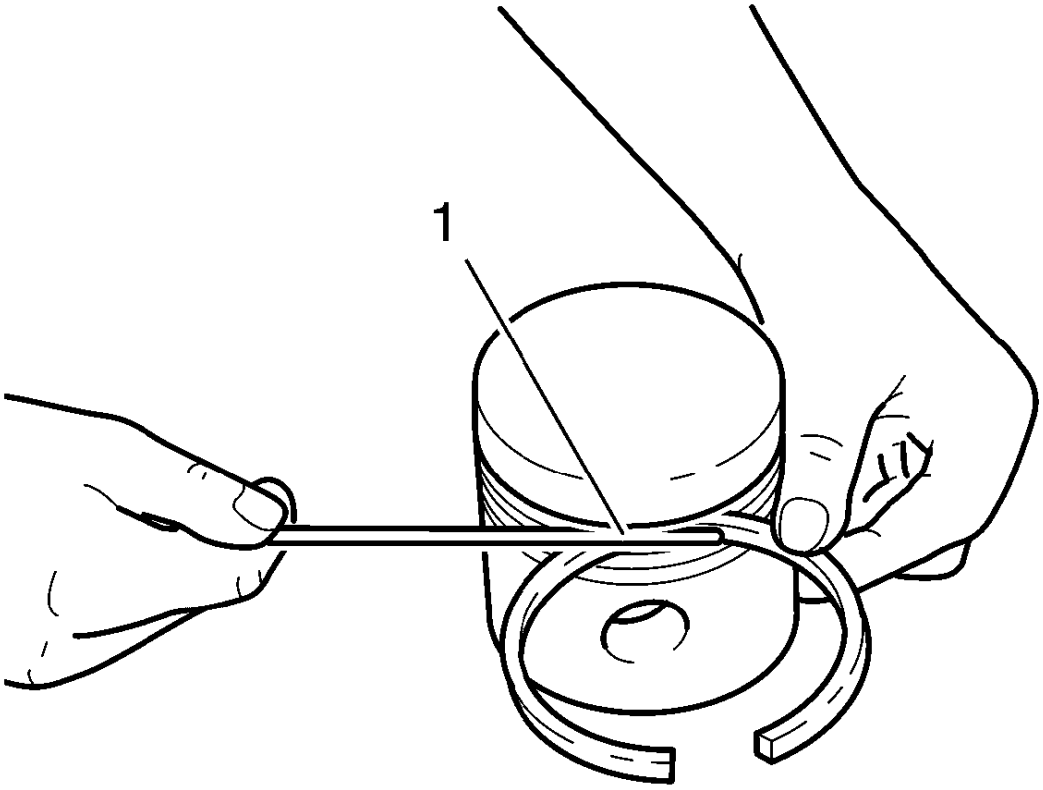

Fig. 397: Measuring Piston Ring Side Clearance
Courtesy of GENERAL MOTORS COMPANY

3. Measure the piston ring side clearance as shown (1). Compare the measurements with those provided below:
   - The upper compression ring side clearance should be 0.025-0.07 mm (0.001-0.0028 in).
   - The lower compression ring side clearance should be 0.025-0.07 mm (0.001-0.0028 in).
   - The oil ring side clearance should be 0.04-0.12 mm (0.0016-0.0047 in).
4. If the clearance is greater than the provided specifications, replace the piston rings.

5. If the clearance is still to great, replace the pistons.

Connecting Rod Bearing Clearance (With Micrometer Gauge Internal Measuring Device)

1. Install the connecting bearings and the connecting rod bearing caps.
2. Tighten the connecting rod bearing cap bolts in the following sequence:

CAUTION: Refer to Fastener Caution

NOTE: The old bolts can be reused for the measuring procedure.

1. Tighten the connecting rod bearing cap bolts to 10 N.m (89 lb in).
2. Tighten the bolts to an additional 60 degrees using **EN-470-B** wrench.
3. Tighten the bolts to an additional 15 degrees using **EN-470-B** wrench.

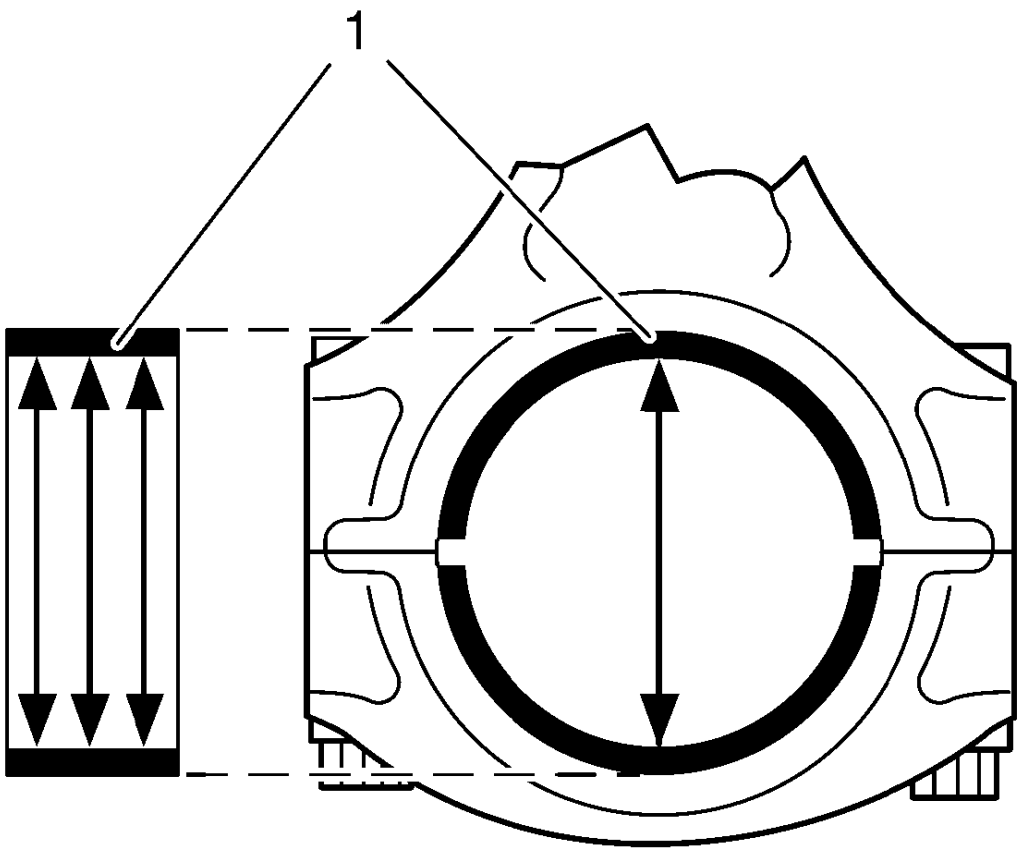

Fig. 398: Measuring Connecting Rod Bearing Diameters
Courtesy of GENERAL MOTORS COMPANY

3. Measure the connecting rod bearing diameters at 3 points as shown (1). Use a internal measuring device.
4. Calculate the average connecting rod inner diameter.

   Formula: 1. result + 2. result + 3. result / 3

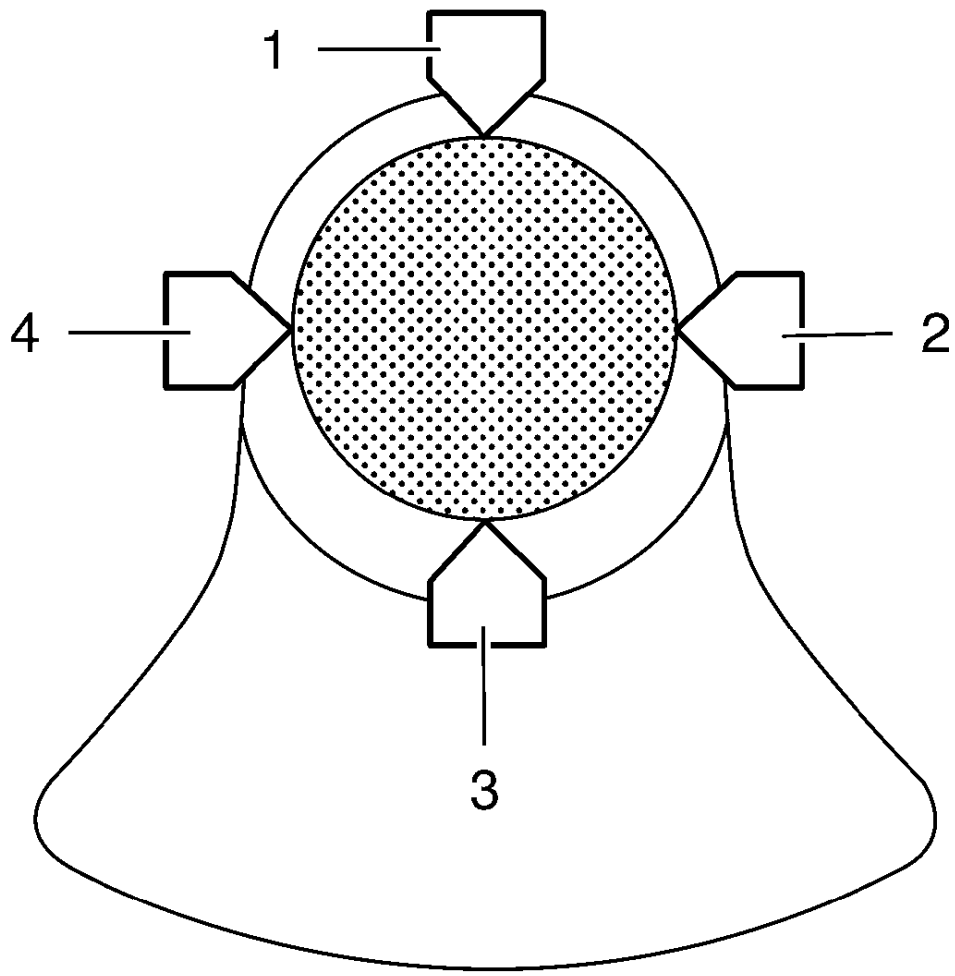

Fig. 399: Connecting Rod Journal Diameter Points
Courtesy of GENERAL MOTORS COMPANY

5. Measure the connecting rod journal diameter at 2 points between (1) and (3) and between (2) and (4). Use a micrometer gauge.
6. Calculate the average connecting rod journal diameter.

   Formula: 1. result + 2. result / 2.

7. Substract the average connecting rod journal diameter from the average connecting rod bearing diameter in order to determine the connecting rod bearing clearance.

   The clearance should be 0.013-0.061 mm (0.0005-0.0024 in).

PISTON AND CONNECTING ROD ASSEMBLE

Special Tools

EN-49941 Remover / Installer Piston Retainer Ring

For equivalent regional tools, refer to **Special Tools**.

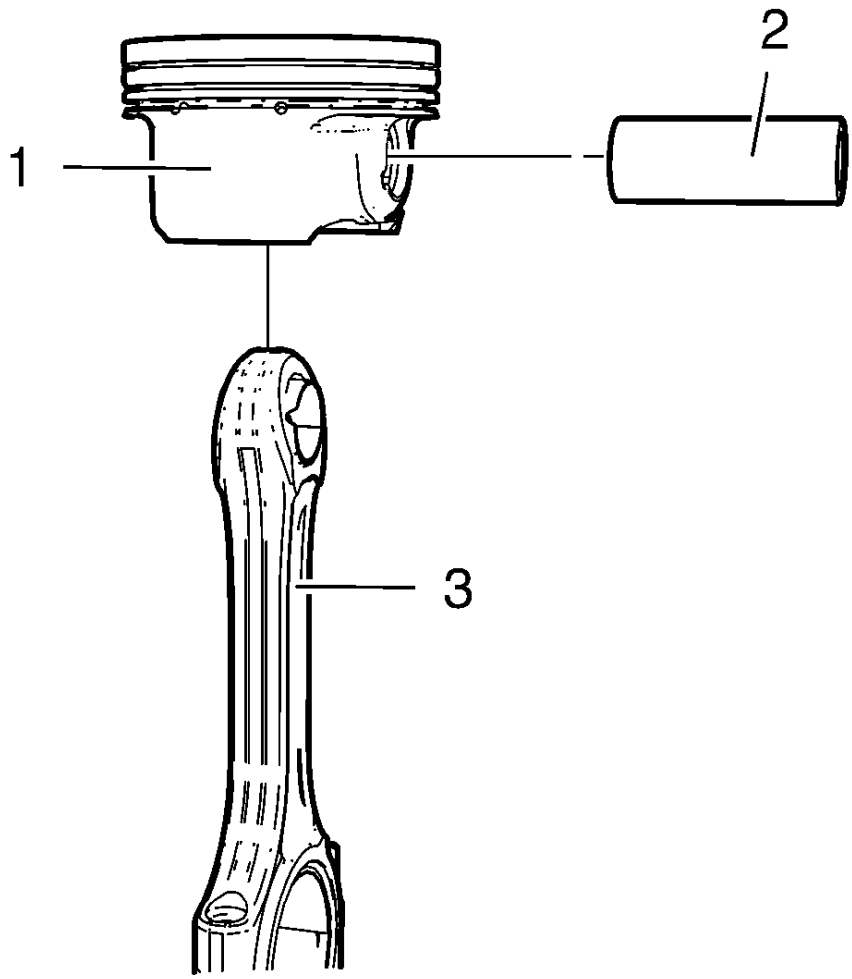

Fig. 400: Connecting Rod, Piston And Piston Pin
Courtesy of GENERAL MOTORS COMPANY

NOTE: Lubricate the piston pin with clean engine oil.

1. Install the connecting rod (3) and the piston pin (2) to the piston (1).
2. Install the piston and connecting rod assembly to a bench vise. Use aluminium braces.

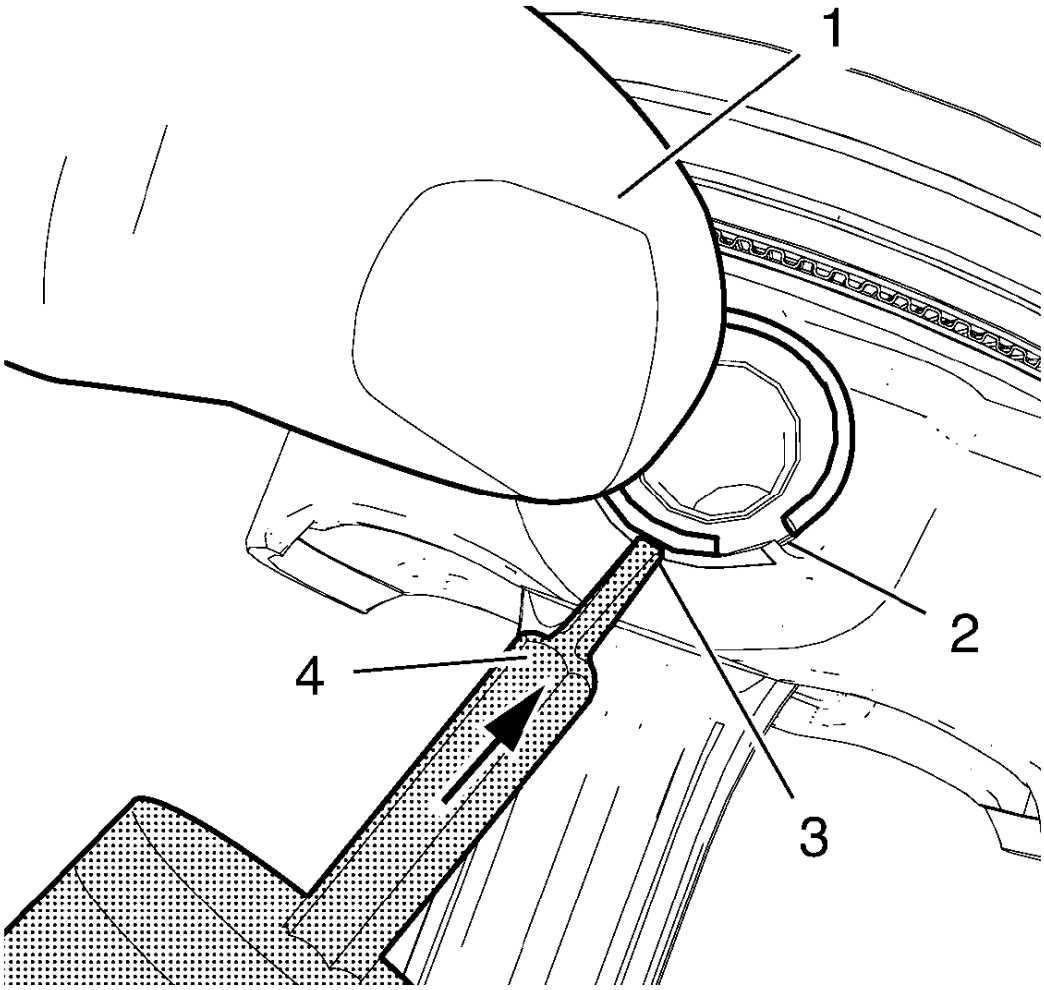

Fig. 401: Pushing Piston Pin Retainer Down With Thumb
Courtesy of GENERAL MOTORS COMPANY

WARNING: Use extreme care when removing snap rings. Always wear adequate eye protection in order to avoid personal injury.

WARNING: Use care when removing or installing the piston retainer ring. Ensure the EN-49941 remover/installer is installed properly onto the retainer ring and that hands and fingers are kept clear from the front of the tool. Otherwise, bodily injury may occur.

NOTE: Notch (2) on right side.

3. Place the piston pin retainer in the piston pin retainer groove so that the ring gap lays on the notch (2).
4. Push the piston pin retainer down with the thumb in the shown position (1) and hold.

NOTE: The EN-49941 installer should be applied in a perpendicular position to the piston pin retainer.

5. Apply the **EN-49941** installer (4) to the piston pin retainer in the position shown (3) and push in direction of the arrow while pushing down with the thumb.

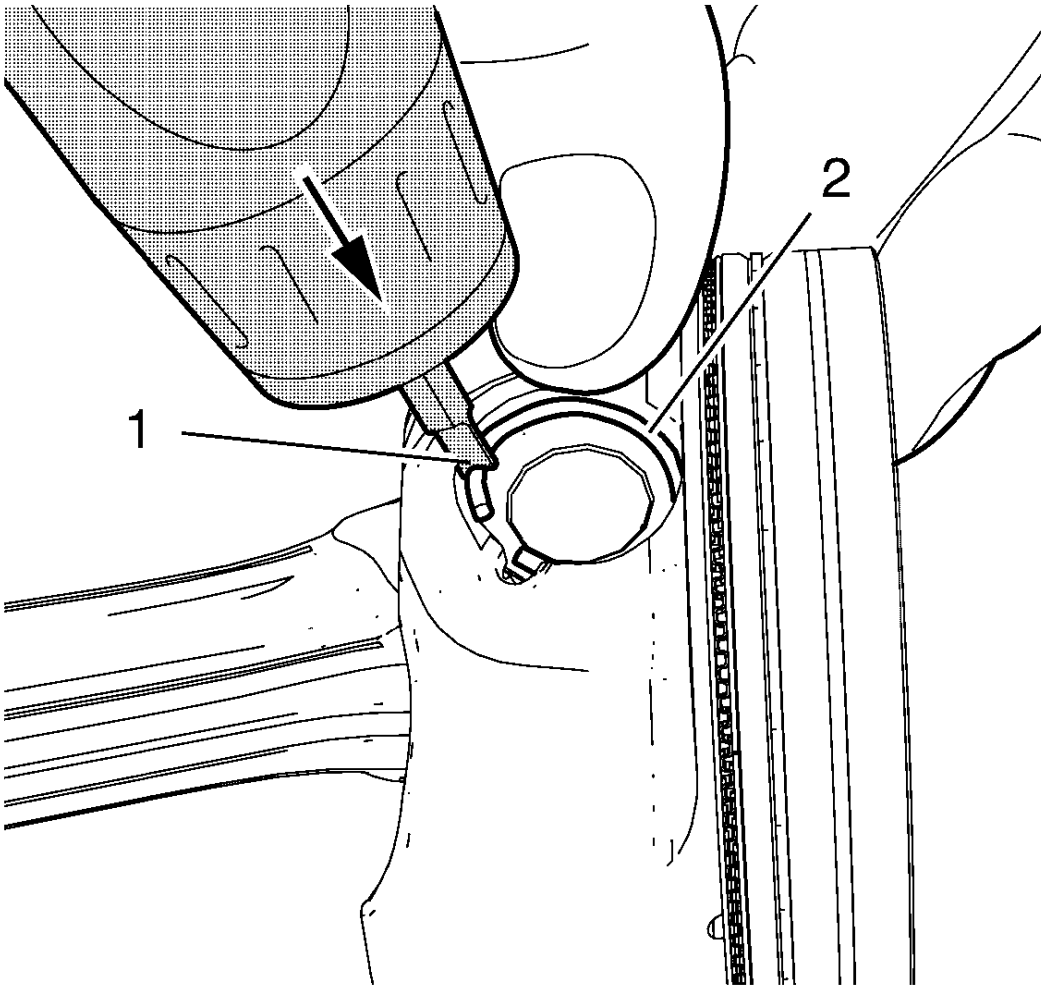

Fig. 402: Pushing Piston Pin Retainer Down
Courtesy of GENERAL MOTORS COMPANY

NOTE: Push the piston pin retainer down in the position shown (2).

6. Move the **EN-49941** installer (1) carefully to the position shown while pushing in direction of the arrow until the piston pin retainer engages in the piston pin retainer groove.
7. Push down the piston ring retainer to get a proper seat in the groove.

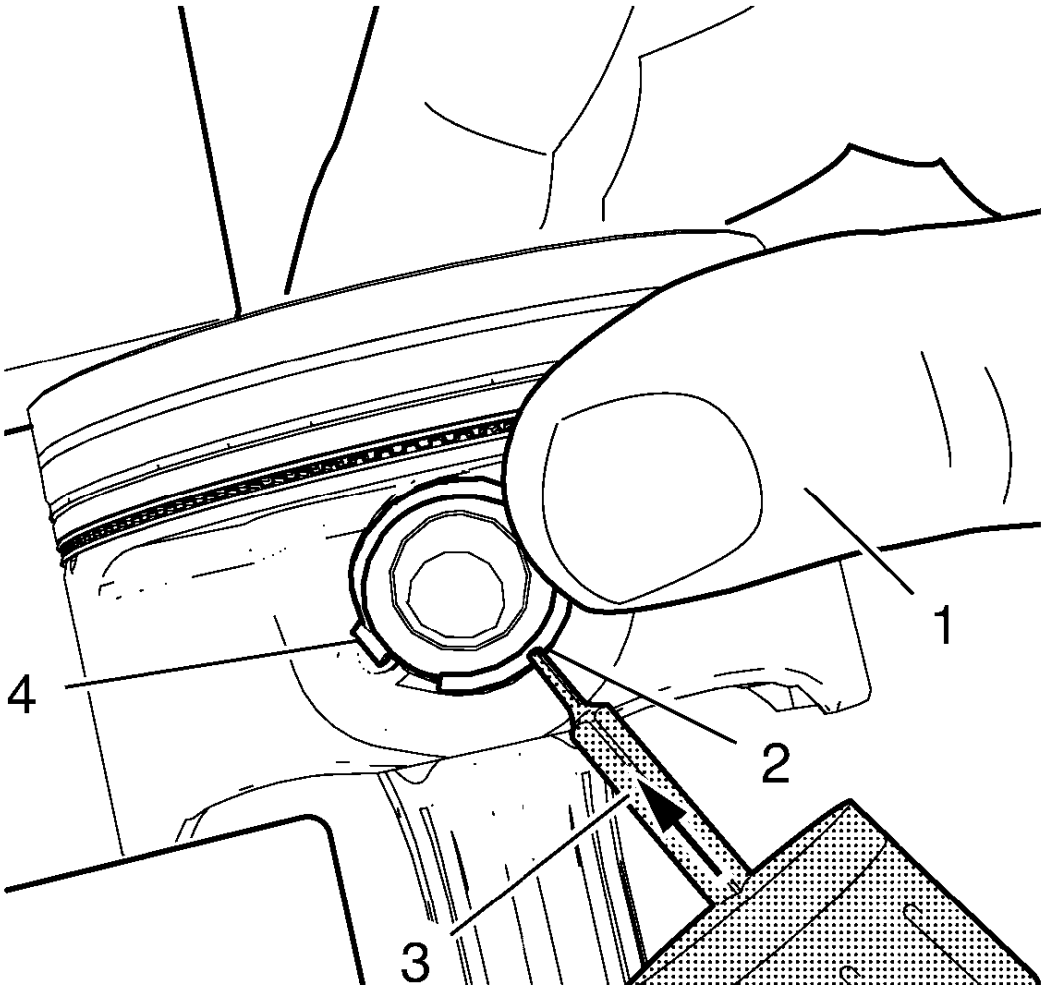

Fig. 403: Pushing Piston Pin Retainer Down With Thumb
Courtesy of GENERAL MOTORS COMPANY

NOTE: Notch (4) on left side. EN-49941 installer should be used with left hand.

8. Place the piston pin retainer in the piston pin retainer groove so that the ring gap lays on the notch (4).
9. Push the piston pin retainer down with the thumb in the position shown (1) and hold.

NOTE: The EN-49941 installer should be applied in a perpendicular position to the piston pin retainer.

10. Apply the **EN-49941** installer (3) to the piston pin retainer in the position shown (2) and push in direction of the arrow while pushing down with the thumb.

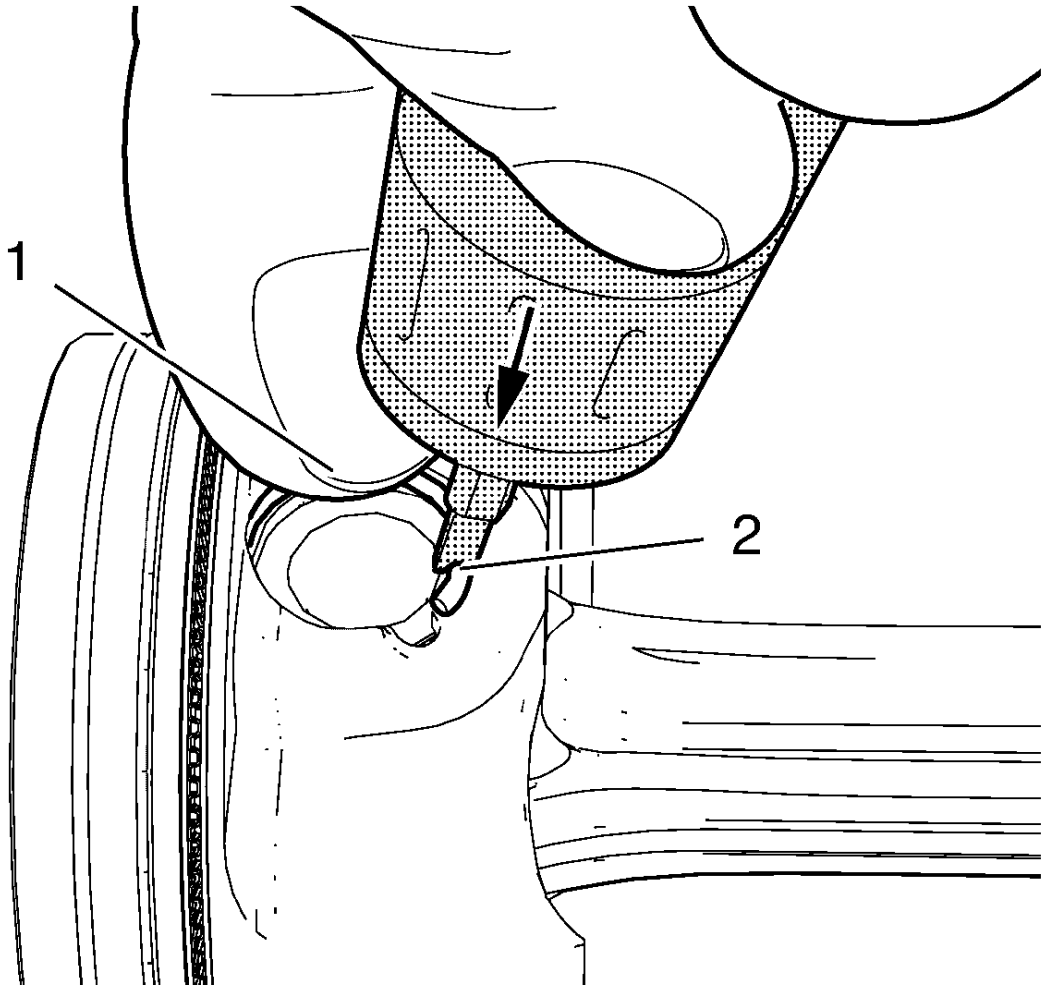

Fig. 404: Pushing Piston Pin Retainer Down
Courtesy of GENERAL MOTORS COMPANY

NOTE: Push the piston pin retainer down in the position shown (1).

11. Move the **EN-49941** installer (2) carefully to the position shown while pushing in direction of the arrow until the piston pin retainer engages in the piston pin retainer groove.
12. Push down the piston ring retainer to get a proper seat in the groove.
13. Remove the piston and connecting rod assembly from the bench vise.

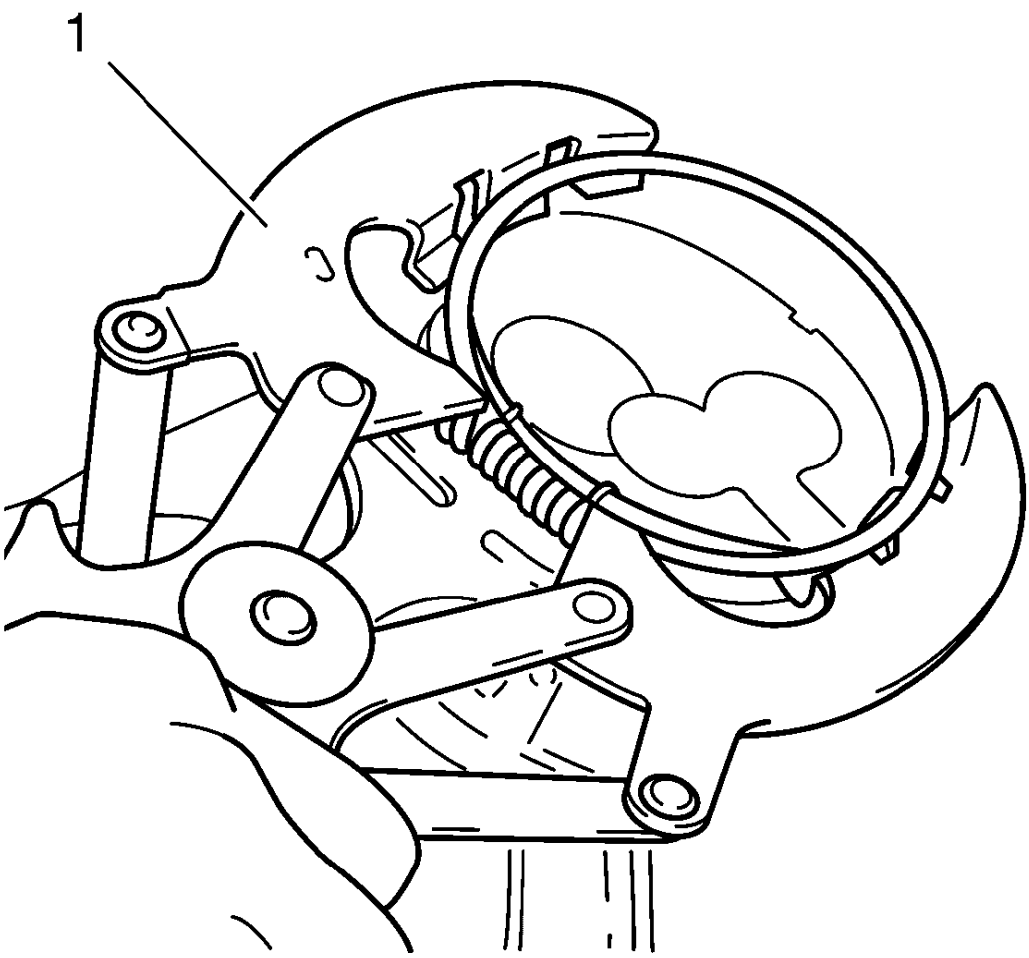

Fig. 405: Using Piston Ring Pliers
Courtesy of GENERAL MOTORS COMPANY

14. Install the piston rings. Use piston ring pliers (1).

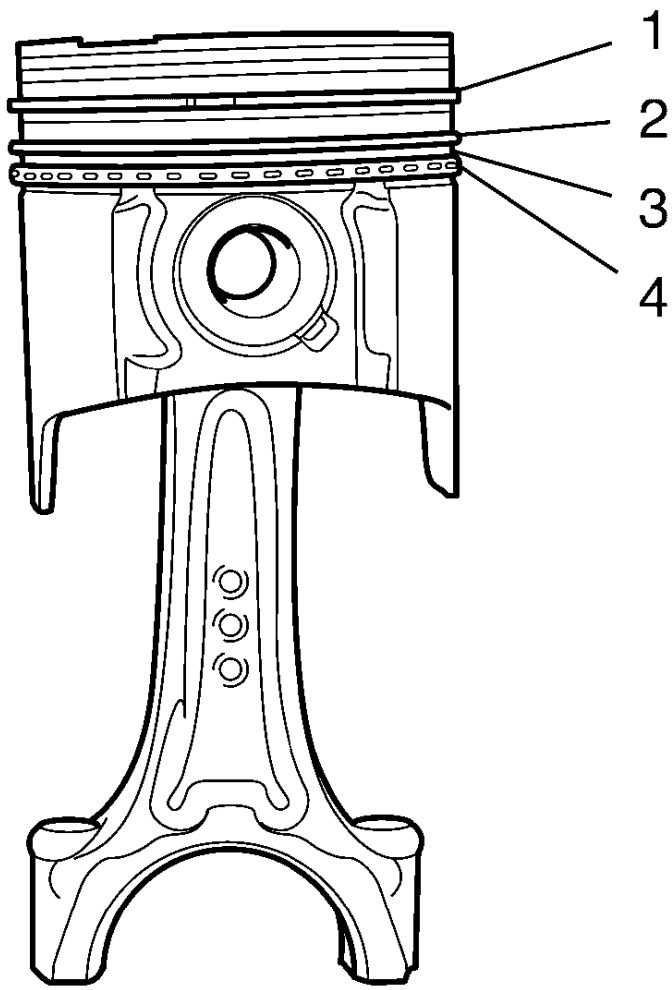

Fig. 406: Upper Compression Ring, Lower Compression Ring, Oil Rings And Oil Ring Spacer
Courtesy of GENERAL MOTORS COMPANY

NOTE: Mind the TOP marking on the piston rings.

15. The piston rings must be ordered as followed:
    - Upper compression ring (1)
    - Lower compression ring (2)
    - Piston oil ring with spacer (3), (4)

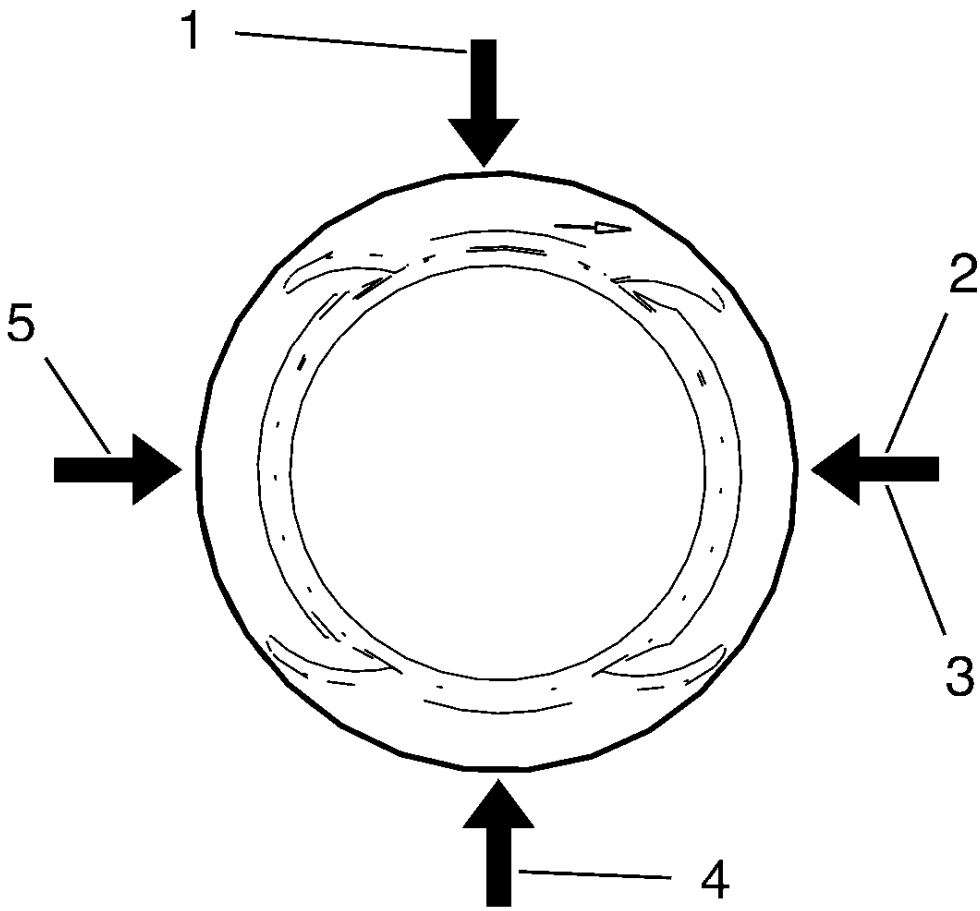

Fig. 407: Oil Ring Joints, Lower Compression Ring Joint, Upper Compression Ring Joint And Oil Ring Spacer Joint
Courtesy of GENERAL MOTORS COMPANY

16. The piston ring joints must be positioned 90 degrees to each other.
    - Upper compression ring joint (2)
    - Lower compression ring joint (5)
    - Oil ring joint, upper part (1)
    - Oil ring joint, lower part (4)
    - Oil ring spacer joint (3)

INTAKE MANIFOLD DISASSEMBLE

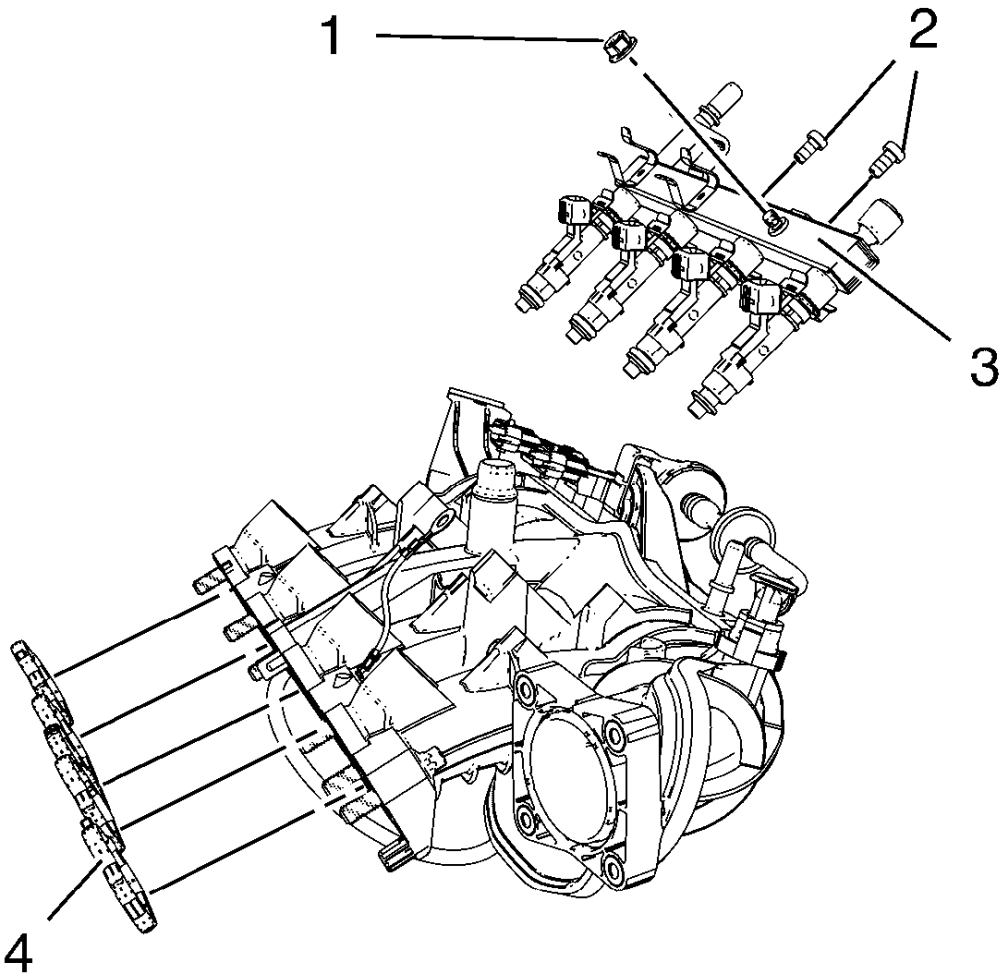

Fig. 408: Fuel Injection Fuel Rail Assembly And Intake Manifold Gasket
Courtesy of GENERAL MOTORS COMPANY

1. Remove the fuel injection rail ground cable nut (1).
2. Remove the 2 fuel injection rail bolts (2).
3. Remove the fuel injection fuel rail assembly (3).
4. Remove the intake manifold gasket (4).

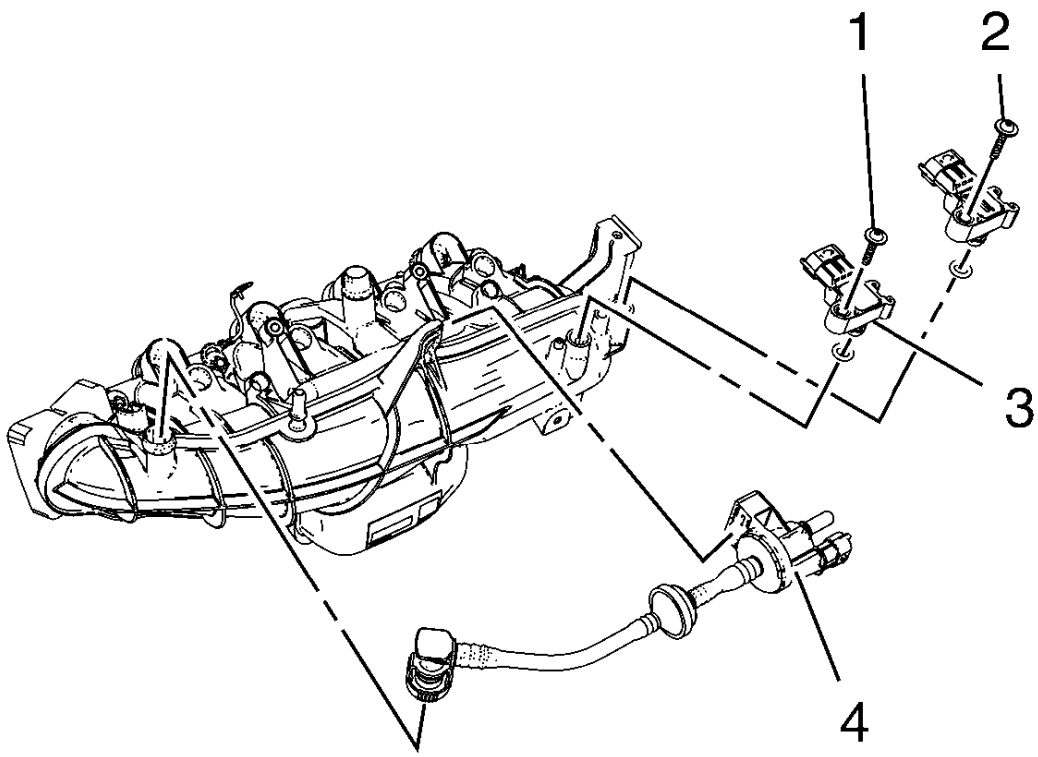

Fig. 409: Evaporative Emission Canister Purge Solenoid Valve And Manifold Absolute Pressure Sensors
Courtesy of GENERAL MOTORS COMPANY

5. Remove the 2 manifold absolute pressure sensor bolts (1).
6. Remove the 2 manifold absolute pressure sensors (2).
7. Remove the evaporative emission canister purge solenoid valve (3).

INTAKE MANIFOLD CLEANING AND INSPECTION

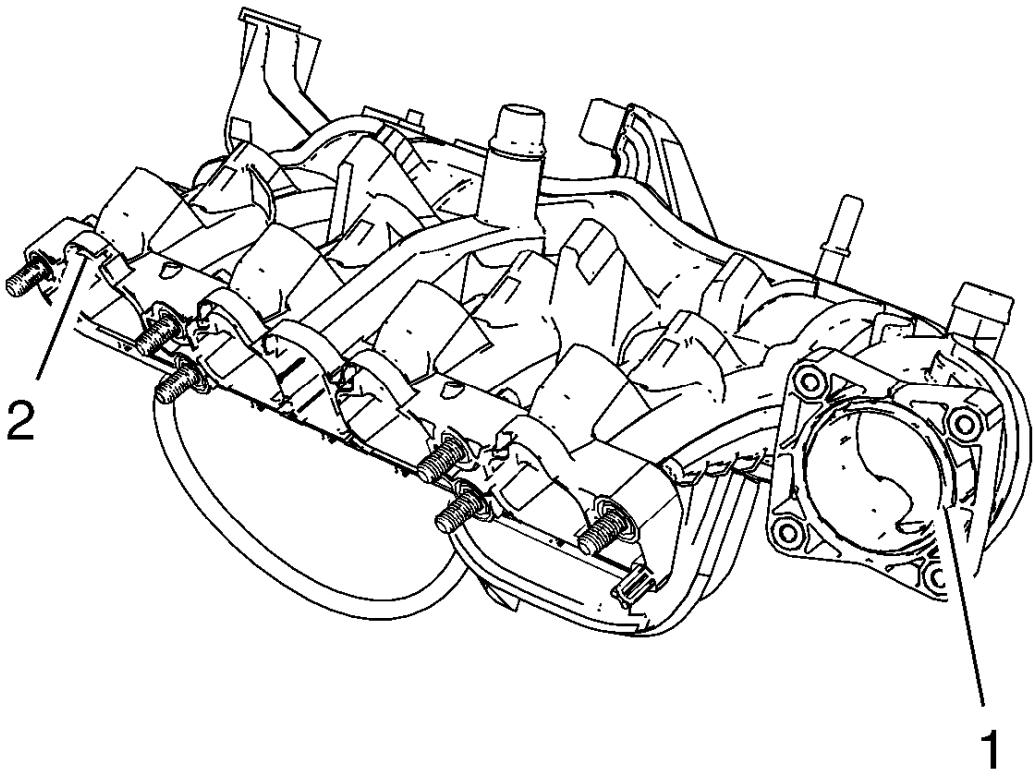

Fig. 410: Sealing Surfaces
Courtesy of GENERAL MOTORS COMPANY

1. Clean the sealing surfaces (1) and (2).
2. Inspect the intake manifold for cracks and fractures.

INTAKE MANIFOLD ASSEMBLE

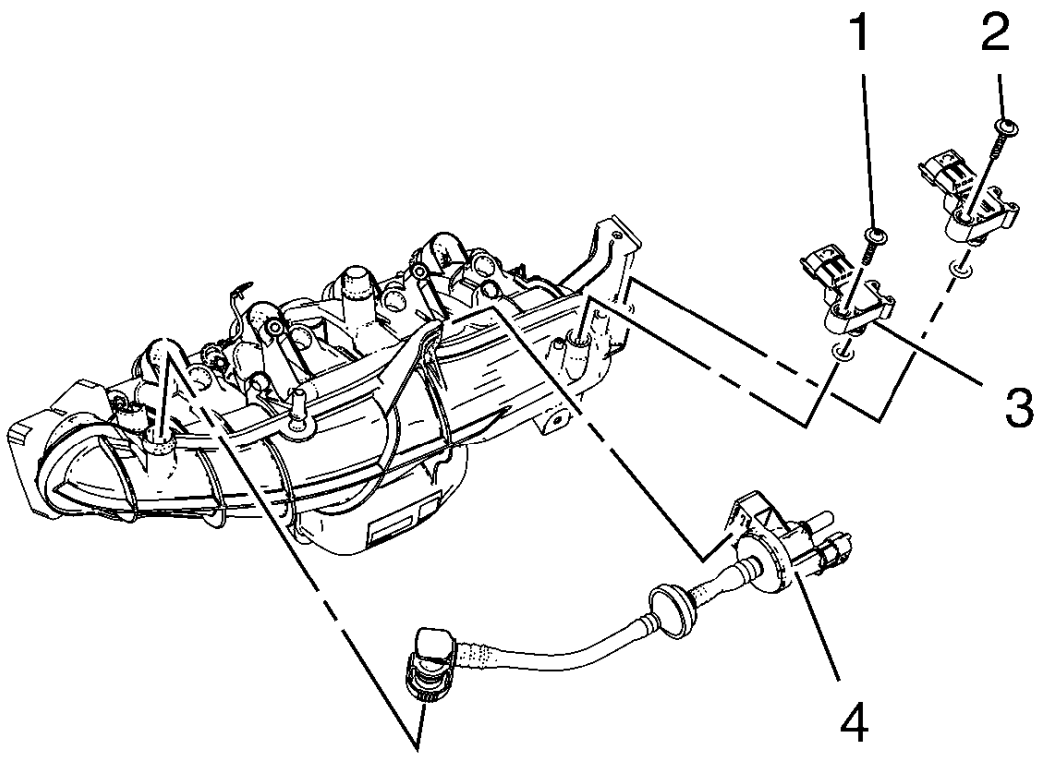

Fig. 411: Evaporative Emission Canister Purge Solenoid Valve And Manifold Absolute Pressure Sensors
Courtesy of GENERAL MOTORS COMPANY

1. Install the evaporative emission canister purge solenoid valve (3).
2. Install the 2 manifold absolute pressure sensors (2).
3. Install the 2 manifold absolute pressure sensor bolts (1) and tighten.

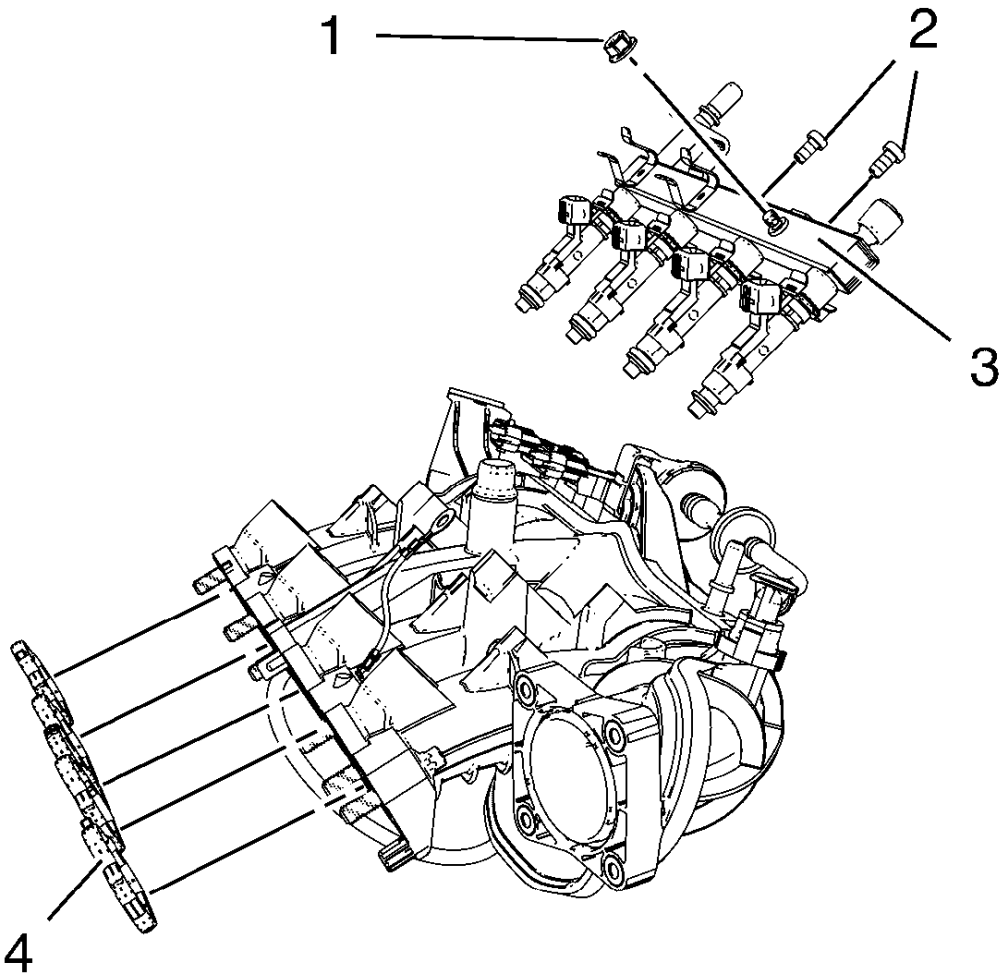

Fig. 412: Fuel Injection Fuel Rail Assembly And Intake Manifold Gasket
Courtesy of GENERAL MOTORS COMPANY

4. Install the fuel injection fuel rail assembly (3).

CAUTION: Refer to Fastener Caution .

5. Install the 2 fuel injection rail bolts (2) and tighten to 8 N.m (71 lb in).
6. Install the fuel injection rail ground cable nut (1) and tighten.
7. Install a NEW intake manifold gasket (4).

CRANKSHAFT AND BEARING CLEANING AND INSPECTION

Special Tools

- **EN-470-B** Angular Torque Wrench
- **GE-571-B** Dial Gauge

For equivalent regional tools, refer to **Special Tools**.

Crankshaft End Play, Check

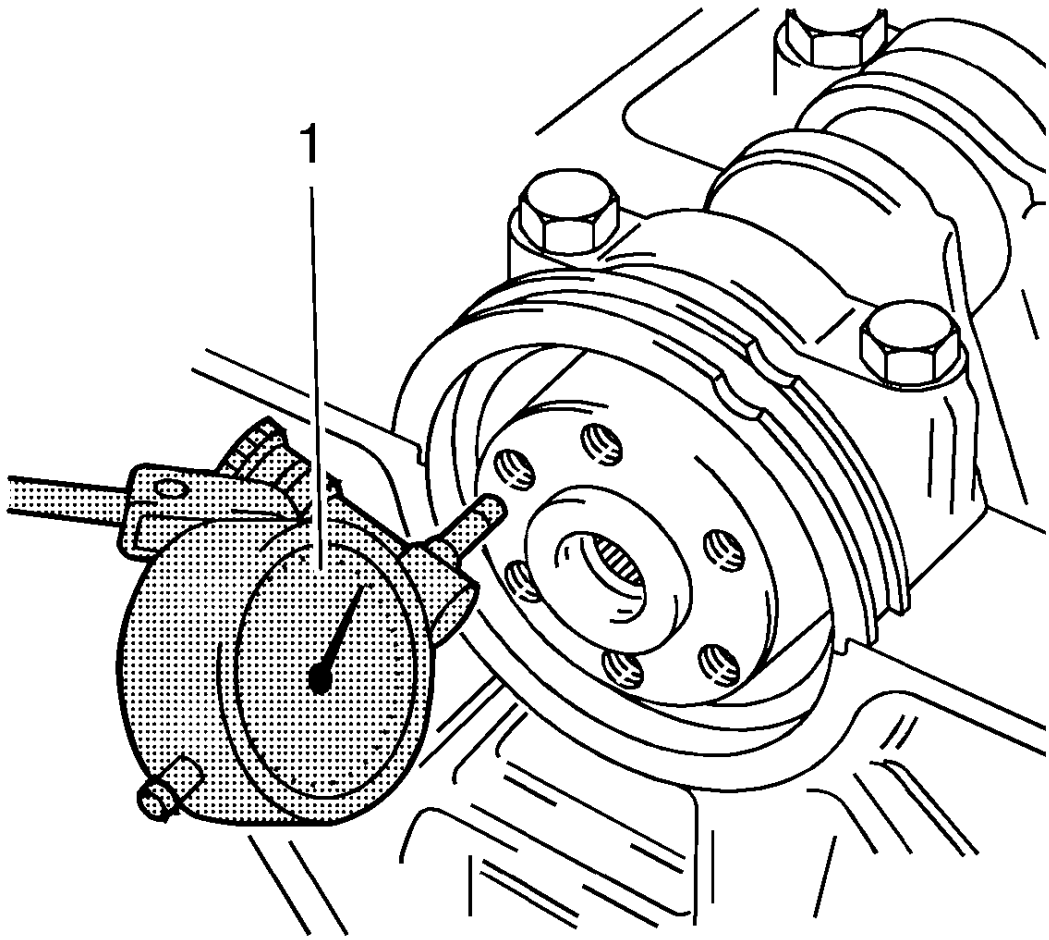

Fig. 413: Gauge Tool
Courtesy of GENERAL MOTORS COMPANY

NOTE: Crankshaft attached with crankshaft bearing caps.

1. Install the **GE-571-B** gauge (1).
   - Install the holder on the front of the engine block.
   - Place the dial gauge plunger against the crankshaft and adjust.
2. Measure the longitudinal play of the crankshaft.

- Move the crankshaft in the longitudinal direction.
- Permissible crankshaft end play 0.100-0.202 mm (0.0039-0.0080 in).

3. Remove the **GE-571-B** gauge.

Crankshaft Out-of-Round, Check

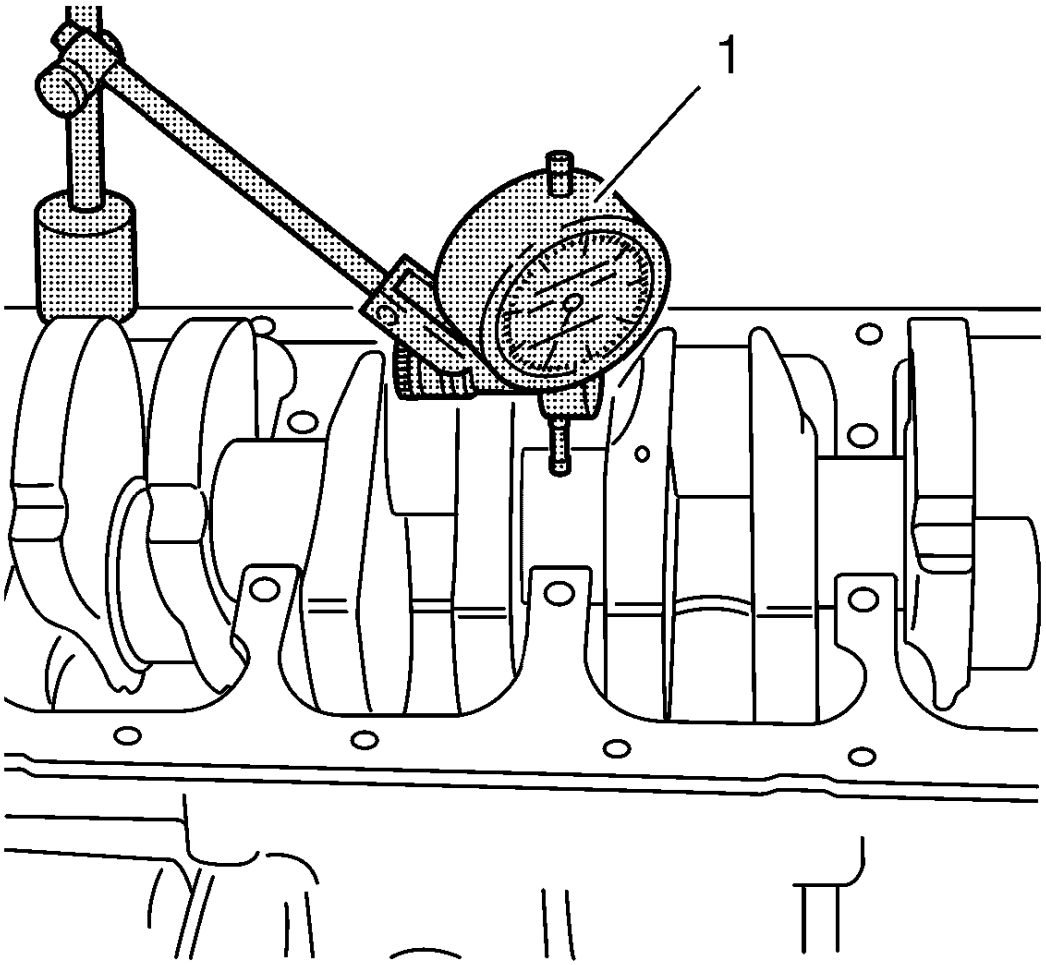

Fig. 414: Gauge Tool
Courtesy of GENERAL MOTORS COMPANY

NOTE: Crankshaft removed.

1. Insert the crankshaft in the engine block.
2. Install the **GE-571-B** gauge (1).
   - Attach holder to the engine block.
   - Place the dial gauge plunger against the crankshaft bearing journal and adjust.

3. Check the rotational play of the crankshaft.
   - Turn the crankshaft evenly.
   - Maximum permissible rotational play 0.03 mm (0.001 in).
4. Remove the **GE-571-B** gauge.

Check Crankshaft Bearing Clearance (With Plastigage)

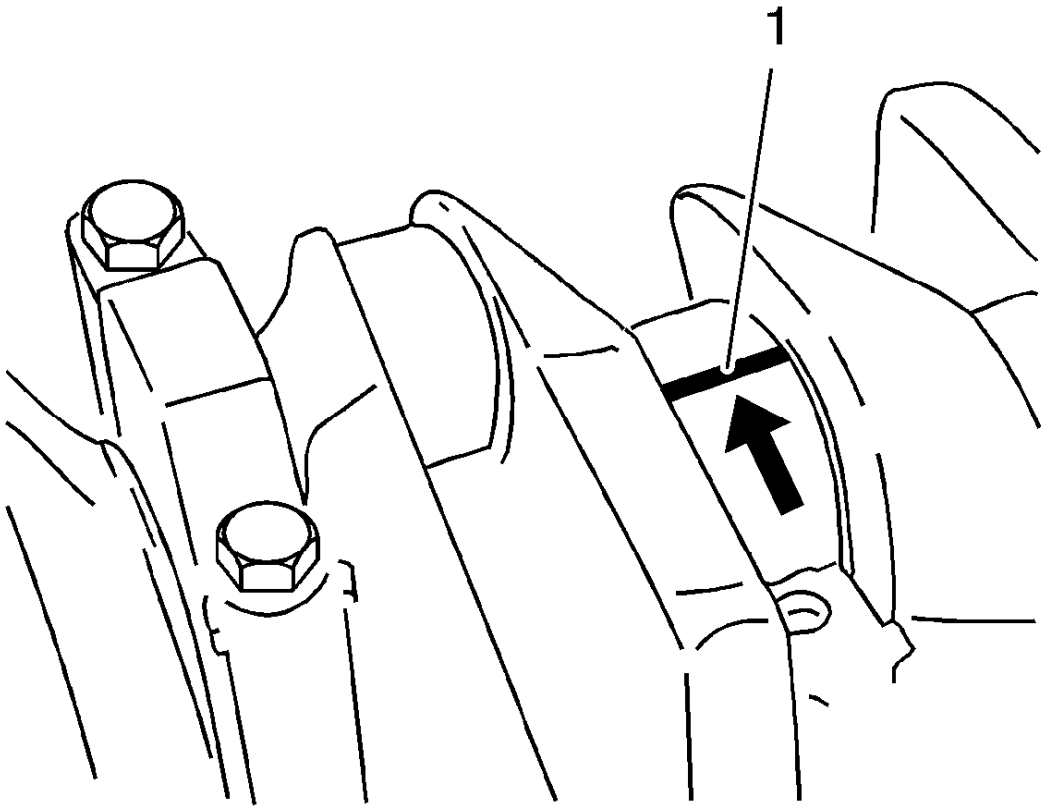

Fig. 415: Plastigage On Bearing Journal
Courtesy of GENERAL MOTORS COMPANY

NOTE:
- **Crankshaft removed.**
- **Do not rotate the crankshaft.**

1. Lay out plastigage.

Lay out plastigage (flexible plastic thread) around the entire width of the crankshaft bearing journal (1).

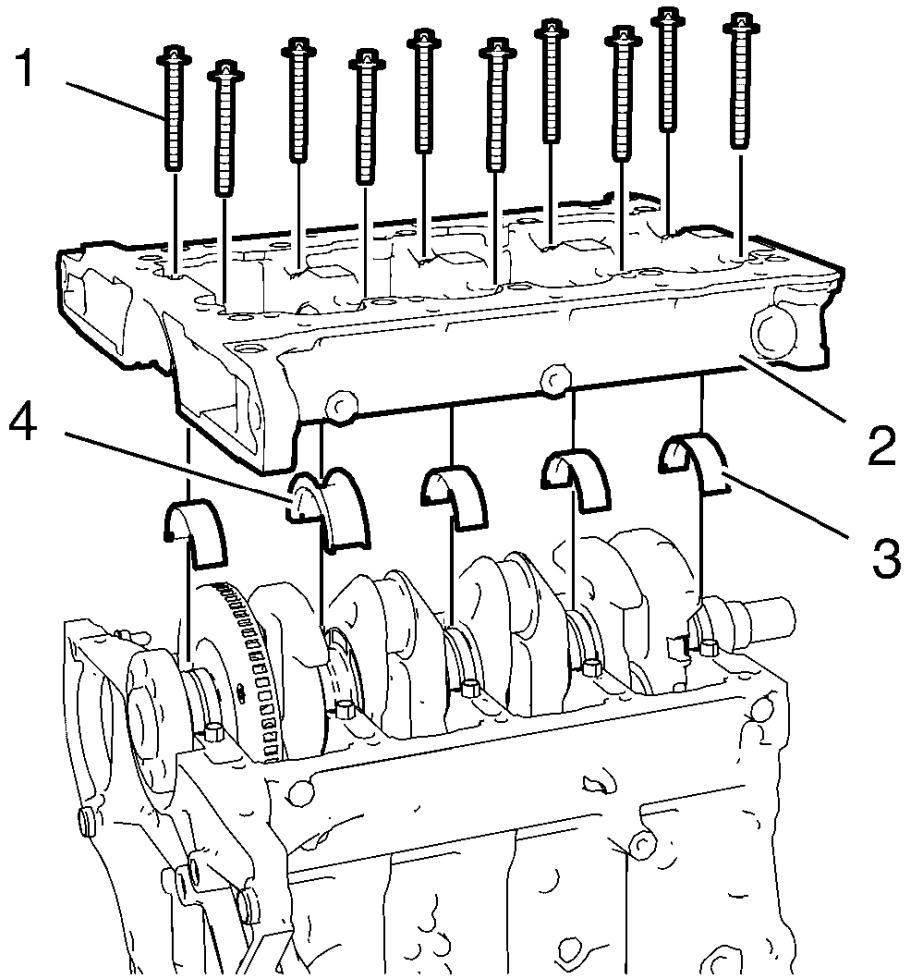

Fig. 416: Crankshaft Bearing Cap Tie Plate
Courtesy of GENERAL MOTORS COMPANY

NOTE: The bolts can be reused for checking the crankshaft bearing play.

2. Install the 4 lower crankshaft bearings (3) and the lower crankshaft thrust bearing (4).
3. Install the crankshaft bearing cap tie plate (2).
4. Install the 10 inner crankshaft bearing cap tie plate bolts (1).

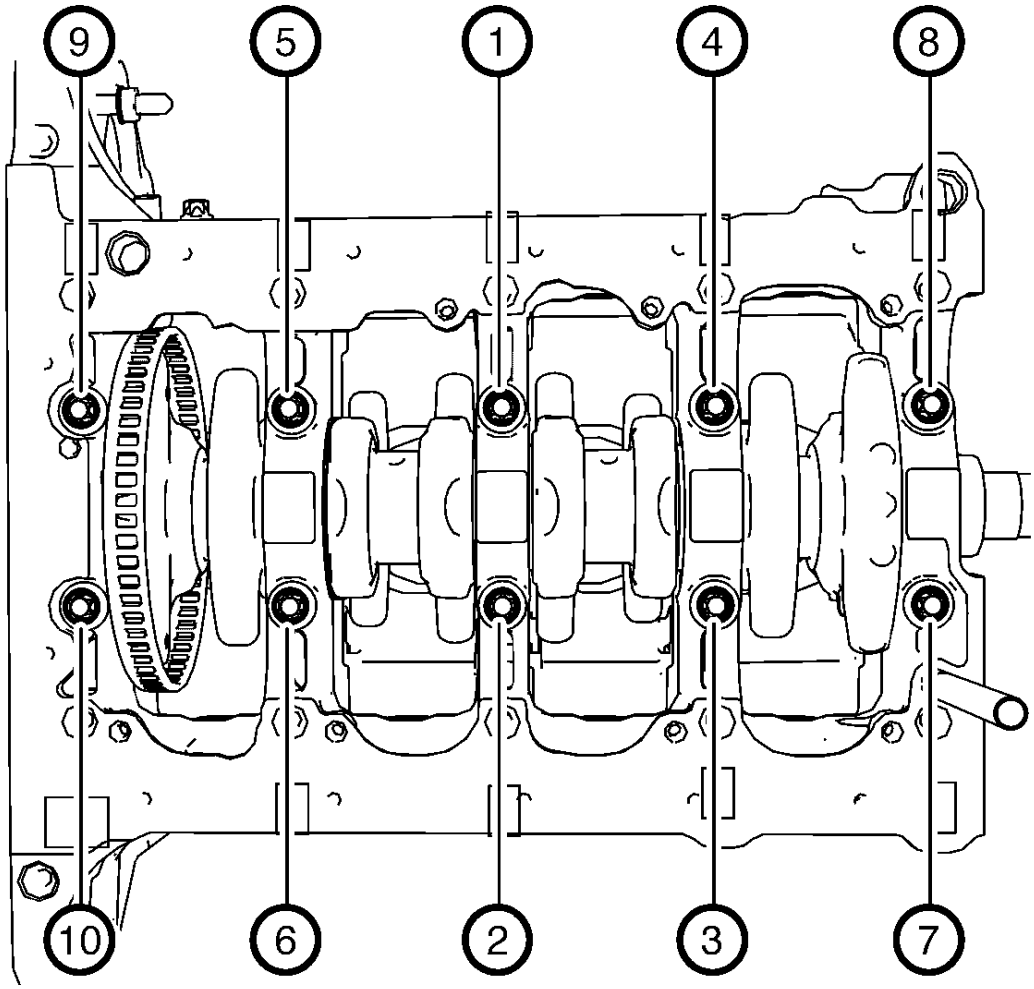

Fig. 417: Inner Crankshaft Bearing Cap Tie Plate Bolts Tightening Sequence
Courtesy of GENERAL MOTORS COMPANY

CAUTION: Refer to Fastener Caution .

5. Tighten the 10 inner crankshaft bearing cap tie plate bolts in a sequence as shown and in the following order:
    1. Tighten the inner crankshaft bearing cap tie plate bolts to 25 N.m (18 lb ft).
    2. Tighten the inner crankshaft bearing cap tie plate bolts an additional 60°. Use **EN-470-B** wrench.
    3. Tighten the inner crankshaft bearing cap tie plate bolts an additional 15°. Use **EN-470-B** wrench.
6. Remove the crankshaft bearing cap tie plate bolts and the crankshaft bearing cap tie plate.

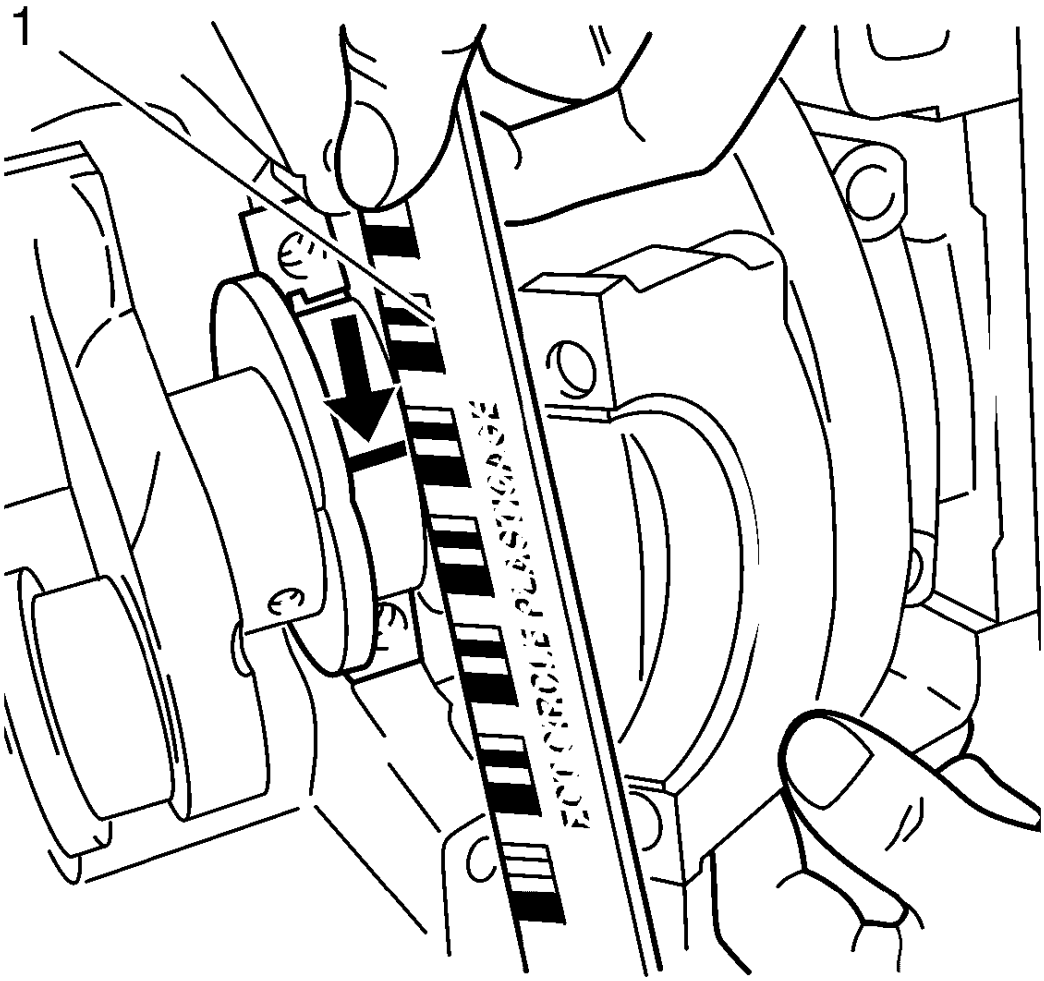

Fig. 418: Measuring Crankshaft Bearing Play Using Measuring Scale
Courtesy of GENERAL MOTORS COMPANY

NOTE: When reading the value, do not confuse millimeters and inches on the measuring scale.

7. Measure the crankshaft bearing play.
   - Compare the width of the flattened plastic thread (arrow) to the measuring scale (1).
   - The crankshaft bearing play should be 0.007-0.031 mm (0.00028-0.00122 in).

Check Crankshaft Bearing Clearance (With Micrometer Gauge Internal Measuring Device)

NOTE: The bolts can be reused for checking the crankshaft bearing play.

1. Install and tighten the crankshaft bearing cap tie plate and the crankshaft bearings as shown above.

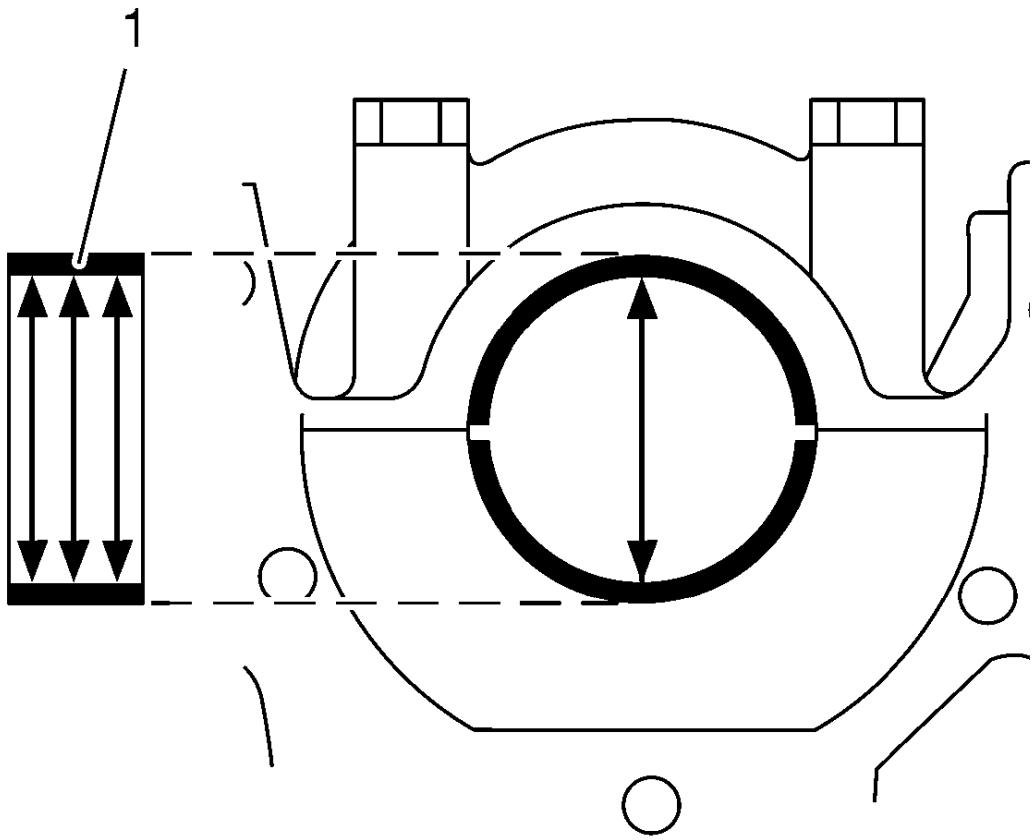

Fig. 419: Crankshaft Bearing Diameter Measuring Points
Courtesy of GENERAL MOTORS COMPANY

2. Measure the crankshaft bearing diameter at 3 points.

   Measure in areas as shown (1) with an internal measuring device.

   Calculate the average crankshaft bearing diameter.

   Formula: 1. result + 2. result + 3. result / 3.

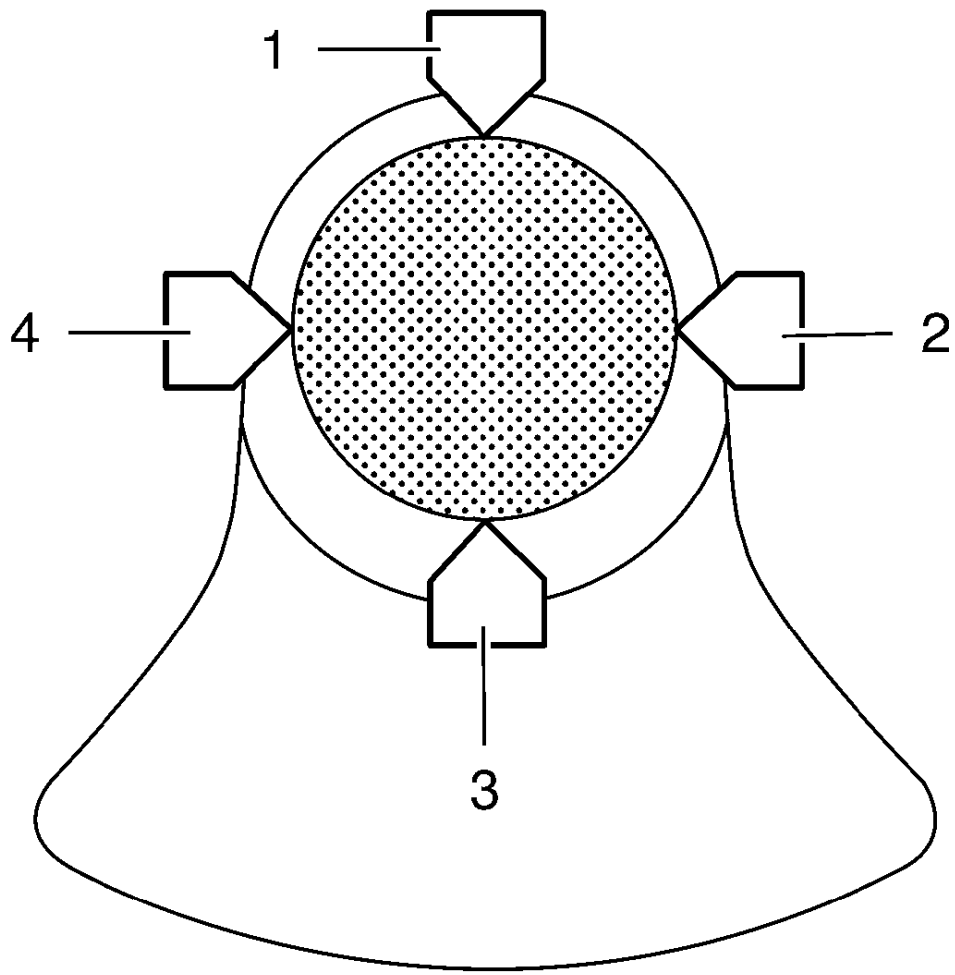

Fig. 420: Connecting Rod Journal Diameter Points
Courtesy of GENERAL MOTORS COMPANY

3. Measure the crankshaft bearing journal diameter at 2 points between (1) and (3) and between (2) and (4) with the micrometer gauge.
4. Calculate the average crankshaft bearing journal diameter.

   Formula: 1. result + 2. result / 2.

5. Determine the crankshaft bearing play.

   Calculation formula: average crankshaft bearing diameter minus average crankshaft bearing journal diameter.

6. The crankshaft bearing play should be 0.007-0.031 mm (0.00028-0.00122 in).

ENGINE FRONT COVER AND OIL PUMP CLEANING AND INSPECTION

Engine Front Cover Cleaning Procedure

1. Clean the engine front cover sealing surface.

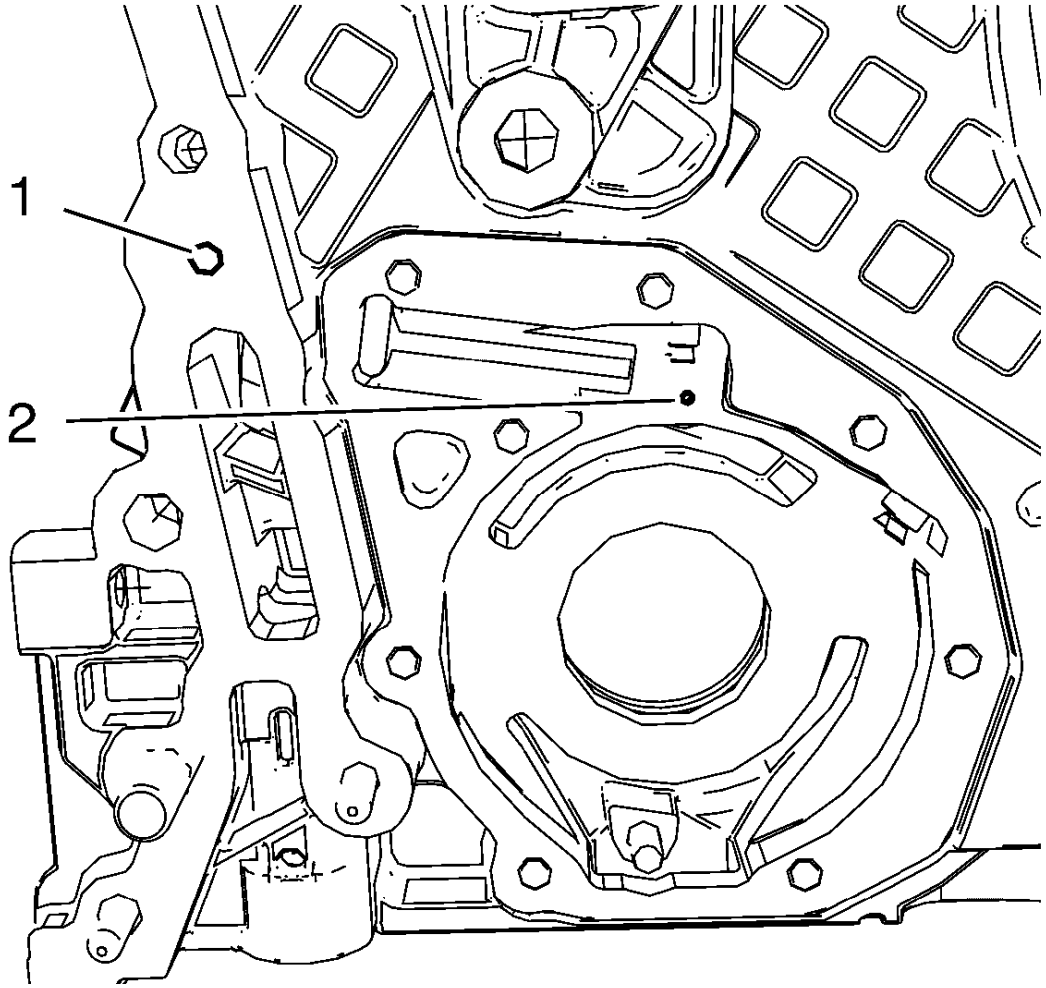

Fig. 421: Oil Gallery Bores
Courtesy of GENERAL MOTORS COMPANY

WARNING: Wear safety glasses when using compressed air in order to prevent eye injury.

CAUTION: To ensure proper engine lubrication, clean clogged or contaminated oil galleries in an approved solvent and with compressed air. Failure to clean oil galleries may cause engine damage.

2. Clean the shown oil gallery with solvent and compressed air. Blow compressed air from bore (2) to bore (1).

Engine Front Cover Visual Inspection

Inspect the engine front cover for cracks, scratches and damage.

Oil Pump Visual Inspection and Measurement

1. Inspect the oil pump cover and the engine front cover for flatness.
2. Inspect the oil pump vanes, the oil pump vane rotor, the oil pump vane rings and the oil pump slide for localized flatting.
3. Inspect the oil pump slide pivot pin for firm seat.

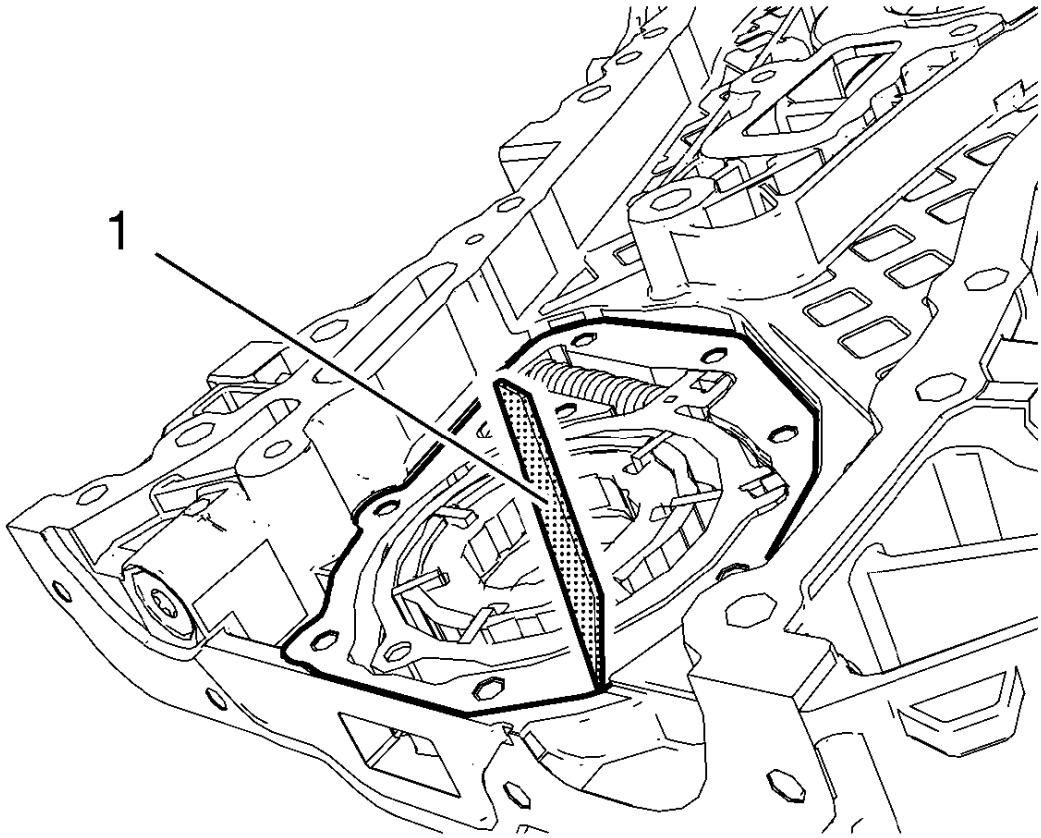

Fig. 422: Straight Edge Tool
Courtesy of GENERAL MOTORS COMPANY

NOTE: Oil pump components are installed.

4. Measure the oil pump axial clearances. Use a straight edge (1) and a feeler gauge.

1. The maximal axial clearance between engine front cover and oil pump vane rotor should be 0.1 mm (0.004 in).
2. The maximal axial clearance between engine front cover and oil pump vane should be 0.09 mm (0.0035 in).
3. The maximal axial clearance between engine front cover and oil pump vane ring should be 0.4 mm (0.016 in).
4. The maximal axial clearance between engine front cover and oil pump slide should be 0.08 mm (0.0031 in).
5. The maximal axial clearance between engine front cover and oil pump slide seal should be 0.09 mm (0.0035 in).

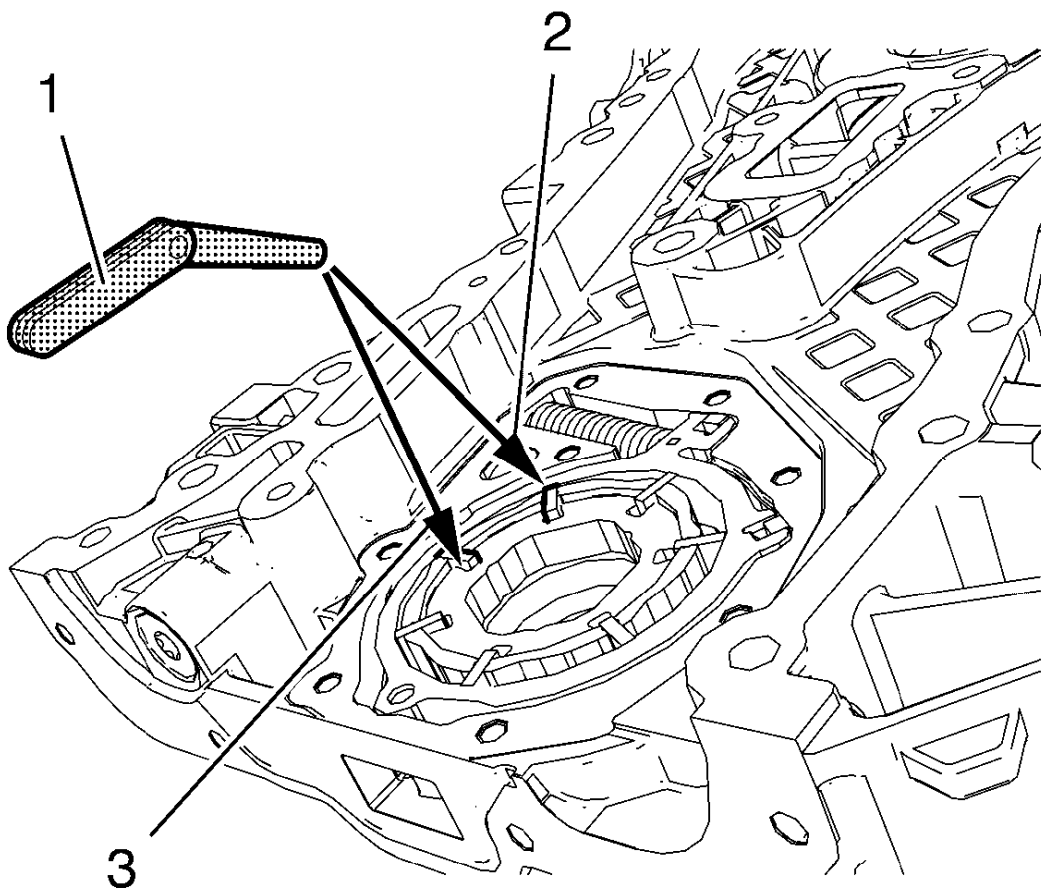

Fig. 423: Feeler Gauge, Oil Pump Slide And Oil Pump Vane
Courtesy of GENERAL MOTORS COMPANY

5. Measure the oil pump radial clearance. Use a feeler gauge (1). Measure the clearance between oil pump vane rotor and oil pump vane (3).

The maximal clearance should be 0.05 mm (0.002 in).

6. Measure the clearance between oil pump vane and oil pump slide (2).

   The maximal clearance should be 0.2 mm (0.008 in).

ENGINE FRONT COVER AND OIL PUMP DISASSEMBLE

Engine Front Cover Disassemble

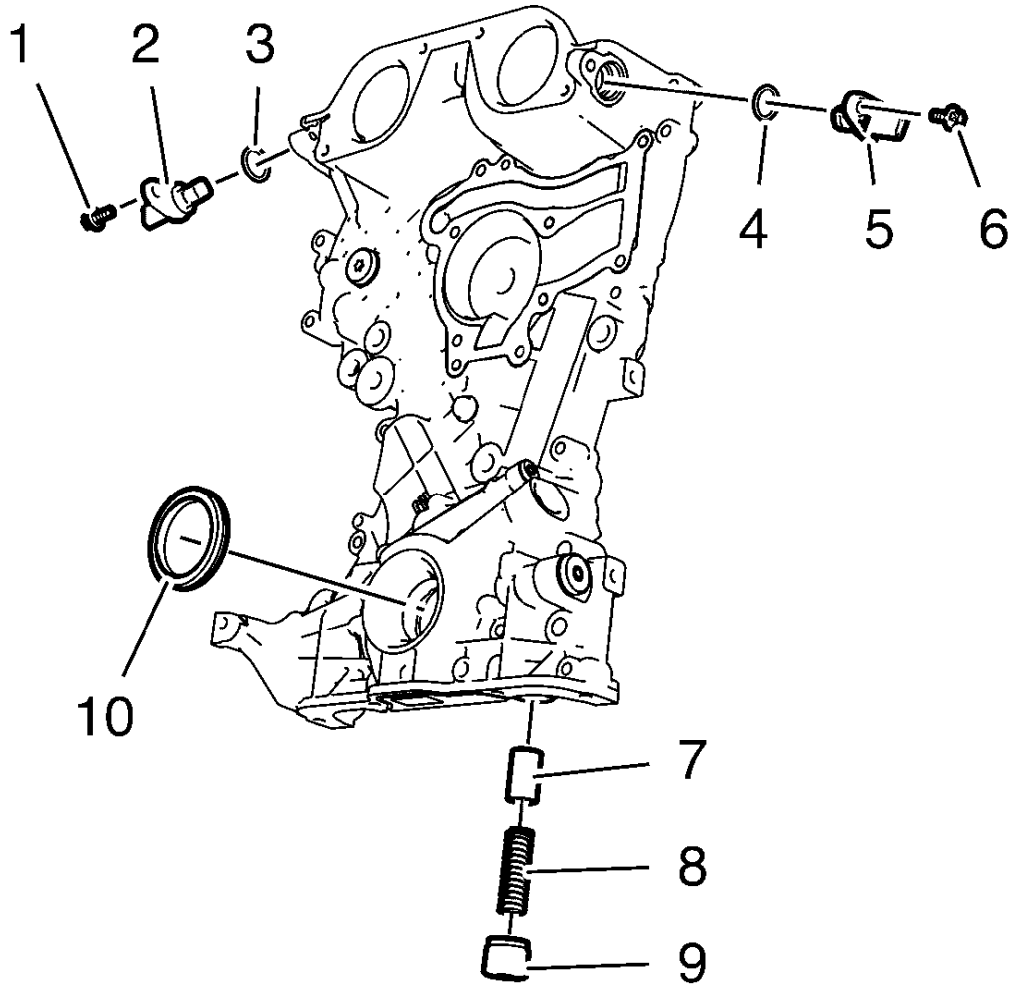

Fig. 424: Engine Front Cover Components
Courtesy of GENERAL MOTORS COMPANY

1. Remove the intake camshaft position sensor bolt (1).
2. Remove the intake camshaft position sensor (2) and the seal ring (3).
3. Remove the exhaust camshaft position sensor bolt (6).
4. Remove the exhaust camshaft position sensor (5) and the seal ring (4).

5. Remove the oil pressure relief valve (7, 8 and 9)
6. Remove the crankshaft front oil seal (10).

Oil Pump Removal

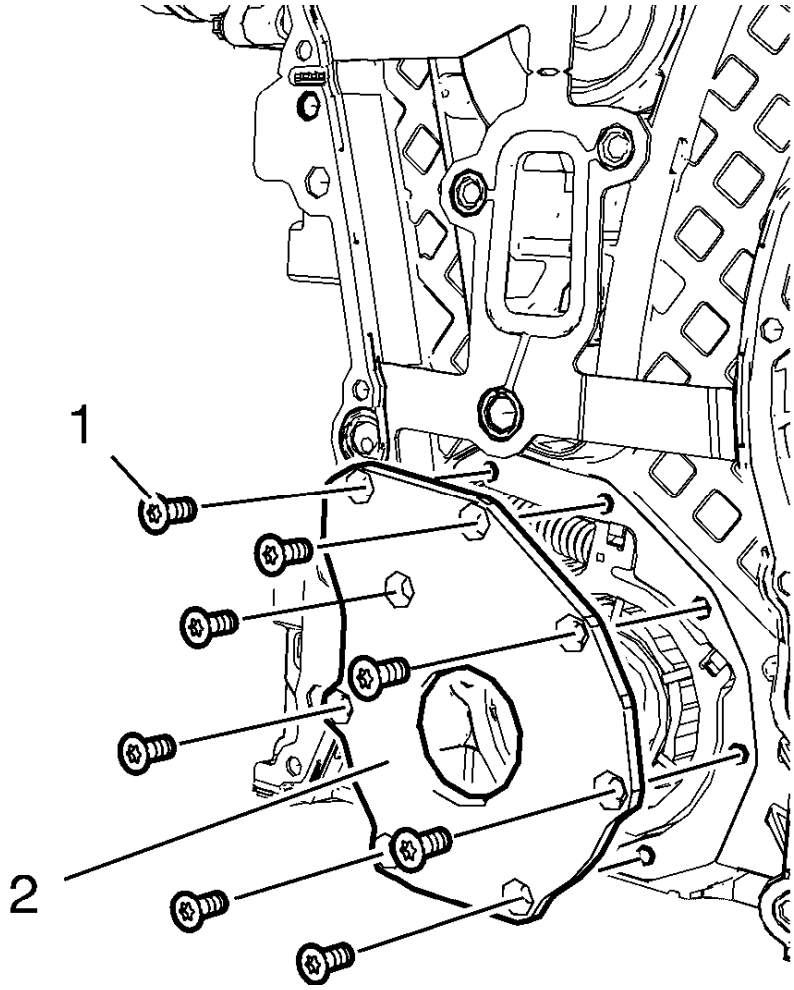

Fig. 425: Engine Oil Pump Cover And Bolts
Courtesy of GENERAL MOTORS COMPANY

1. Remove the 8 oil pump cover bolts (1).
2. Remove the oil pump cover (2).

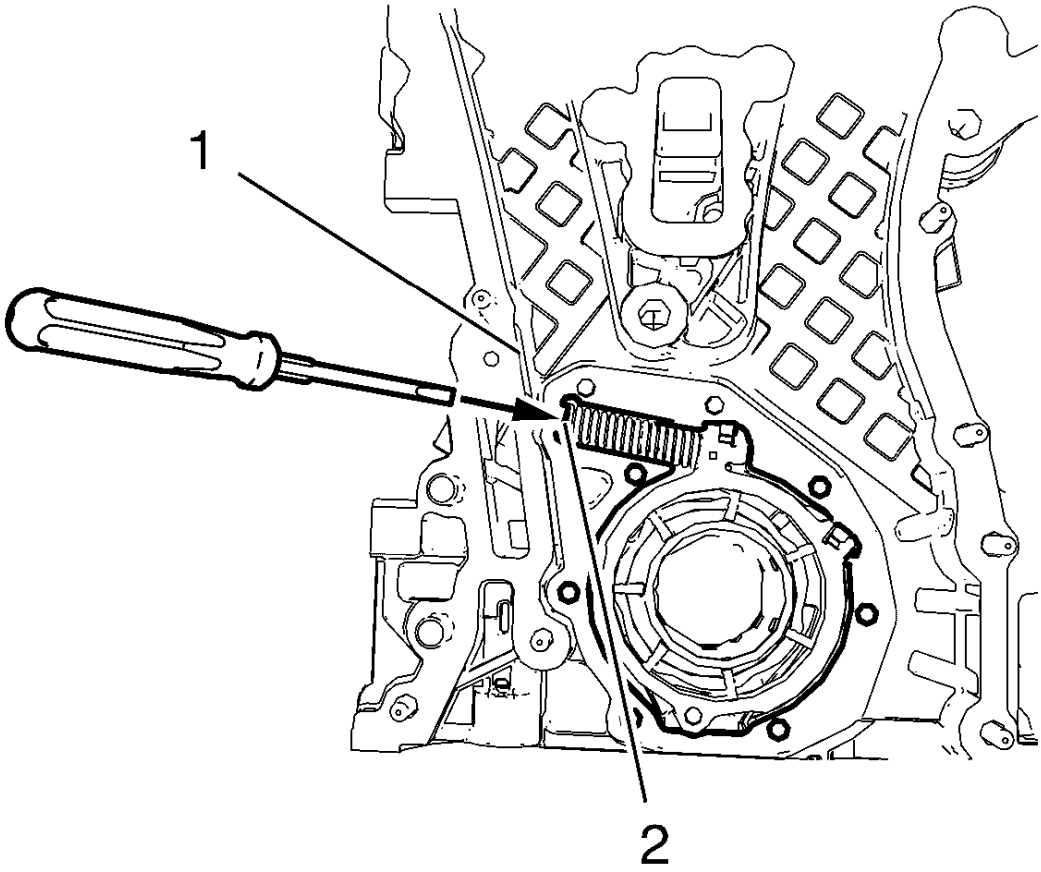

Fig. 426: Oil Pump Slide Spring Windings And Engine Front Cover Edge
Courtesy of GENERAL MOTORS COMPANY

WARNING: Before removing the spring, cover the spring with a towel to prevent the spring from flying and possibly causing damage or personal injury.

NOTE: Position a screw driver between the oil pump slide spring windings (2).

3. Protect the engine front cover edge (1) with a suitable piece of plastic.
4. Compress the oil pump slide spring with a screw driver and remove the oil pump slide spring along with the oil pump slide spring pin.

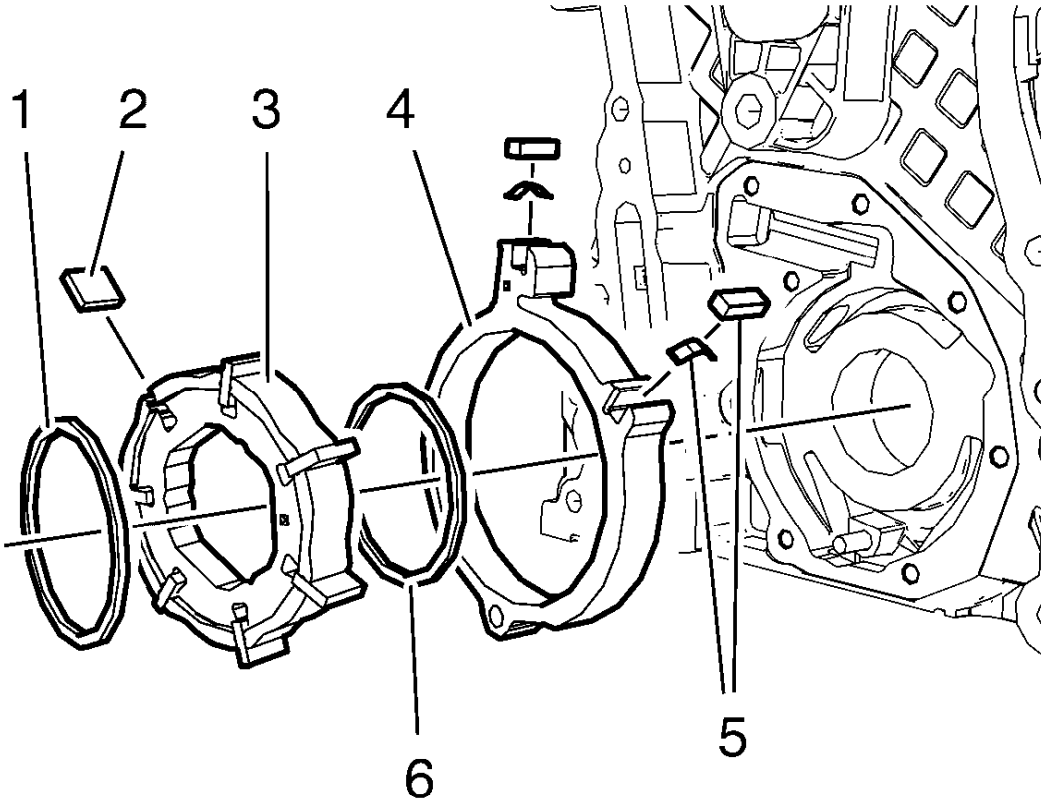

Fig. 427: Engine Oil Pump Components
Courtesy of GENERAL MOTORS COMPANY

NOTE: Mind the installation position of the oil pump components.

5. Remove the oil pump components in the following order:
    1. Outer oil pump vane ring (1).
    2. Oil pump vane rotor (3) and the 7 oil pump vanes (2).
    3. Inner oil pump vane ring (6).
    4. Oil pump slide (4) and the 2 oil pump slide seals with the 2 oil pump slide seal springs (5).

TURBOCHARGER DISASSEMBLE

Special Tool

EN-49940 Remover Quick Connector

For equivalent regional tools, refer to **Special Tools**.

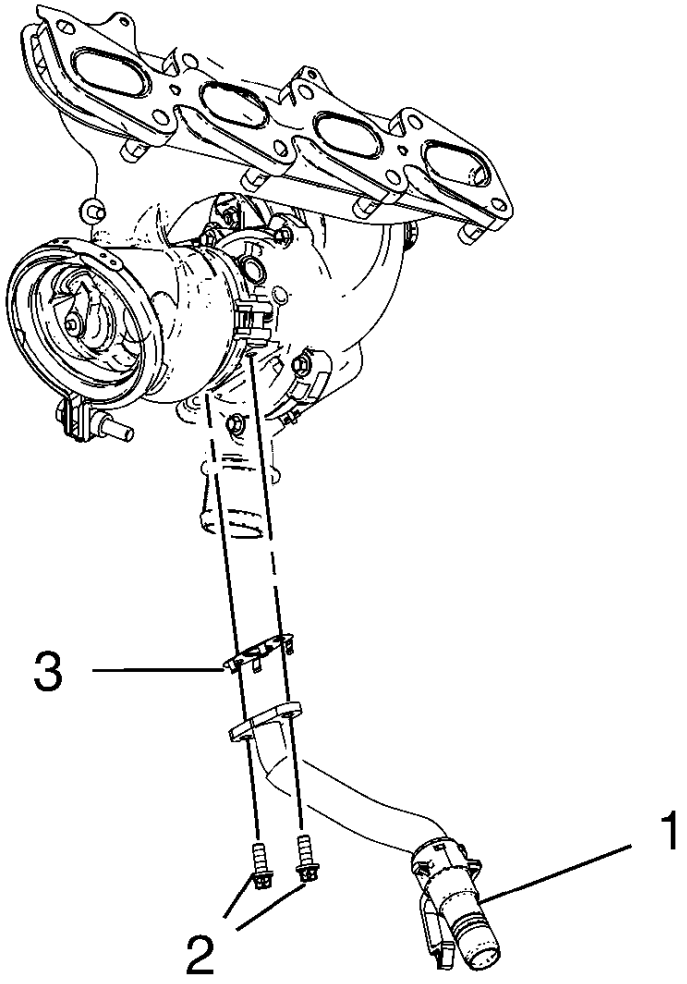

Fig. 428: Turbocharger Oil Return Pipe
Courtesy of GENERAL MOTORS COMPANY

1. Remove the 2 turbocharger oil return pipe bolts (2).
2. Remove the turbocharger oil return pipe (1) and the sealing (3) from the turbocharger.

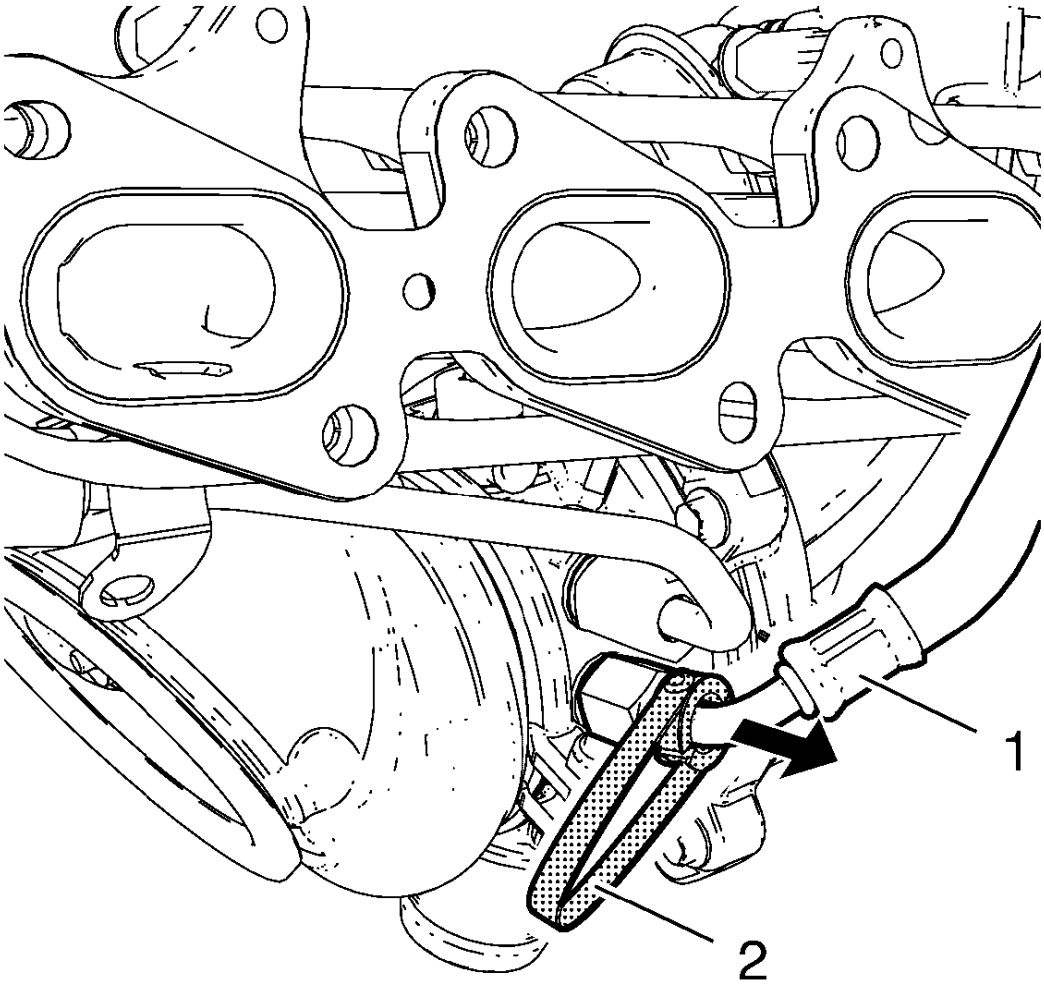

Fig. 429: Turbocharger Coolant Feed Pipe
Courtesy of GENERAL MOTORS COMPANY

NOTE: The quick fitting connectors should be always replaced when the turbocharger coolant pipes are removed

3. Install the **EN-49940** remover (2) to the turbocharger coolant feed pipe (1) and the quick fitting connector as shown.
4. Compress the **EN-49940** remover and remove the turbocharger coolant feed pipe direction of the arrow.

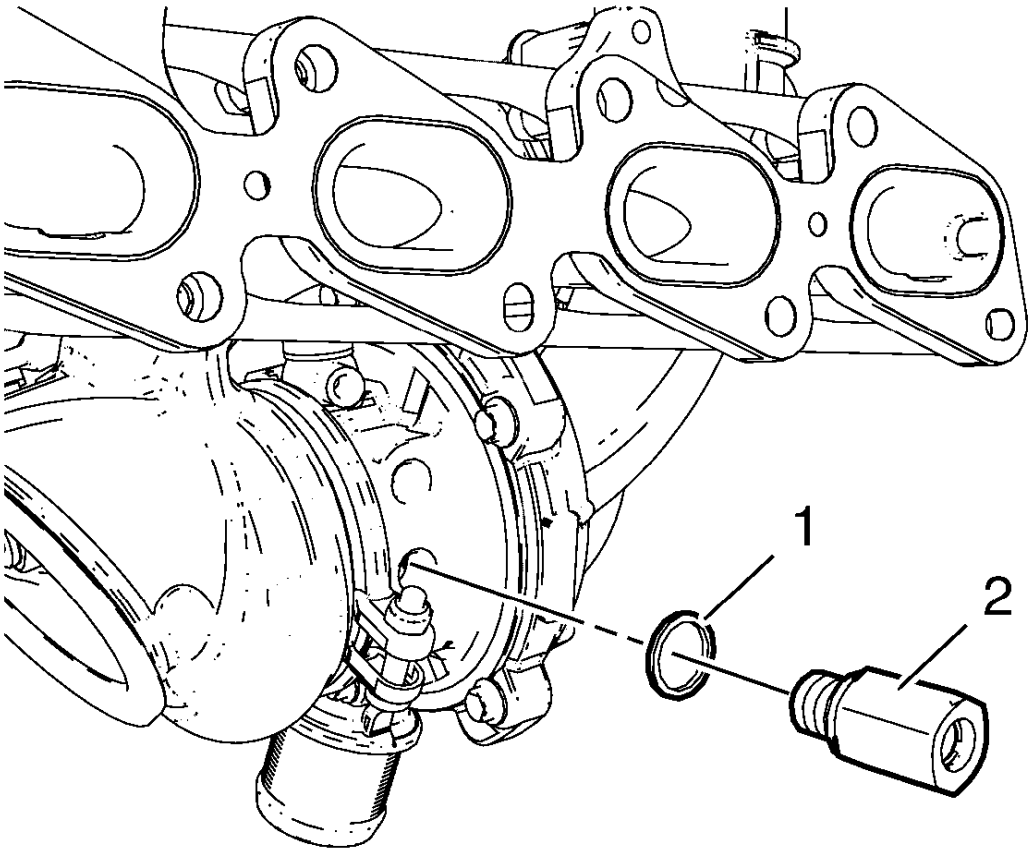

Fig. 430: Quick Fitting Connector And Seal Ring
Courtesy of GENERAL MOTORS COMPANY

5. Remove the quick fitting connector (2) and the seal ring (1).
6. Use the same procedure for the turbocharger coolant return pipe and the turbocharger coolant return pipe quick fitting connector.

TURBOCHARGER CLEANING AND INSPECTION

Cleaning Procedure

1. Clean all sealing surfaces.
2. Clean all threads if necessary.

Inspection Procedure

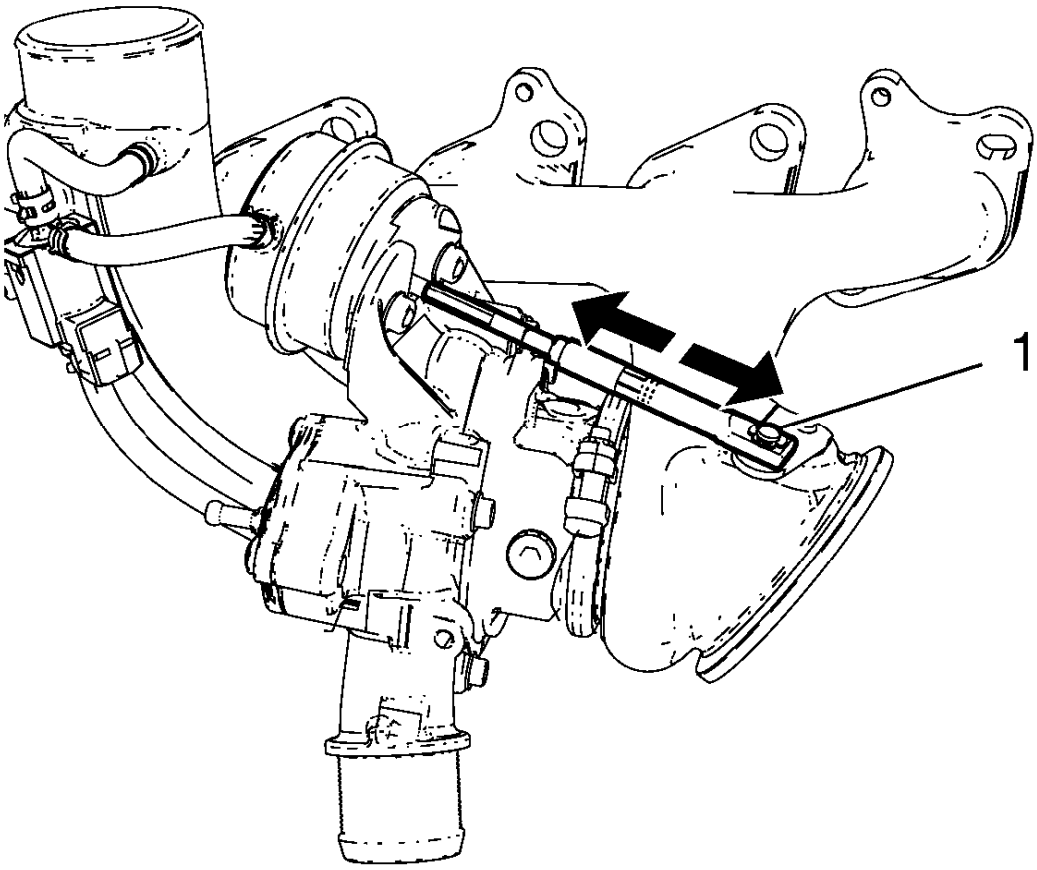

Fig. 431: Wastegate Regulator Mechanism
Courtesy of GENERAL MOTORS COMPANY

1. Inspect the wastegate regulator mechanism (1) for functionality.
2. Inspect the turbine blades for damage or foreign material.
3. Inspect the turbocharger wastegate regulator vacuum hoses for damage.
4. Inspect the exhaust manifold and the turbocharger for cracks or other damage.
5. Inspect the exhaust manifold mating surface for flatness.
6. Inspect the turbocharger oil feed and return pipes for damage or restriction. Do NOT attempt to clean or repair the pipes. Replace any pipe that has damage or a restriction.

TURBOCHARGER ASSEMBLE

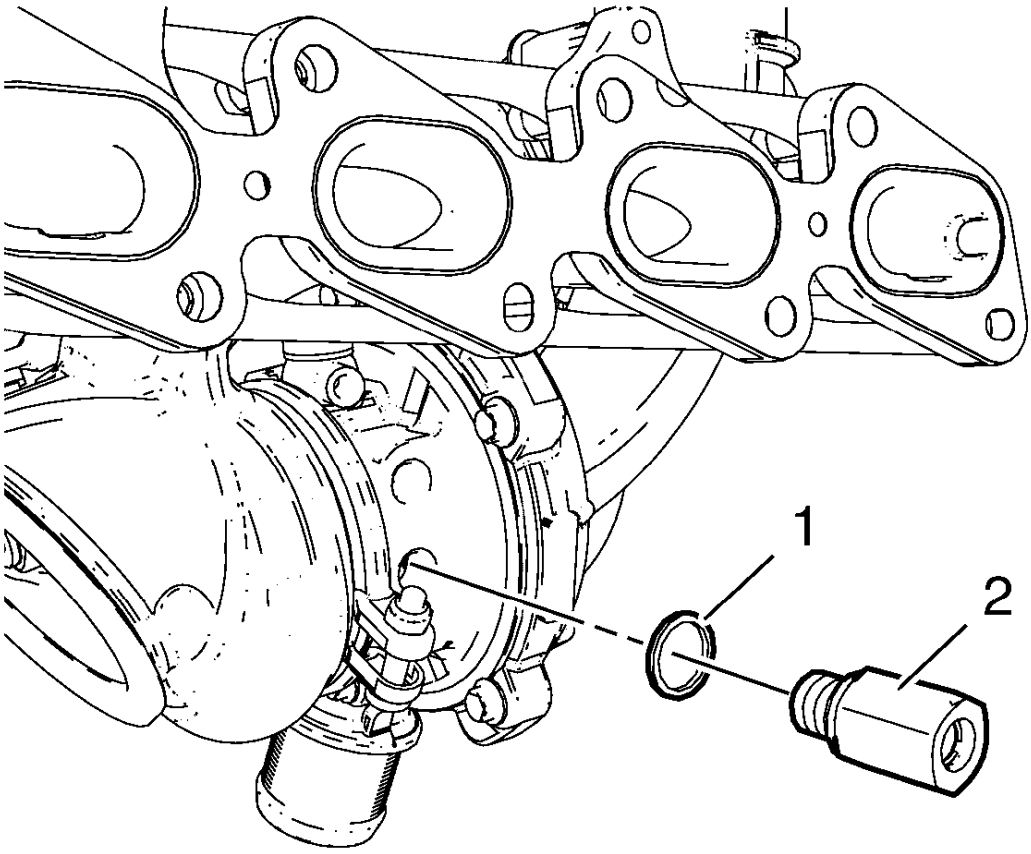

Fig. 432: Quick Fitting Connector And Seal Ring
Courtesy of GENERAL MOTORS COMPANY

CAUTION: Refer to Fastener Caution .

1. Install the NEW quick fitting connector (2) and a NEW seal ring (1) to the turbocharger and tighten to 20 N.m (15 lb ft).

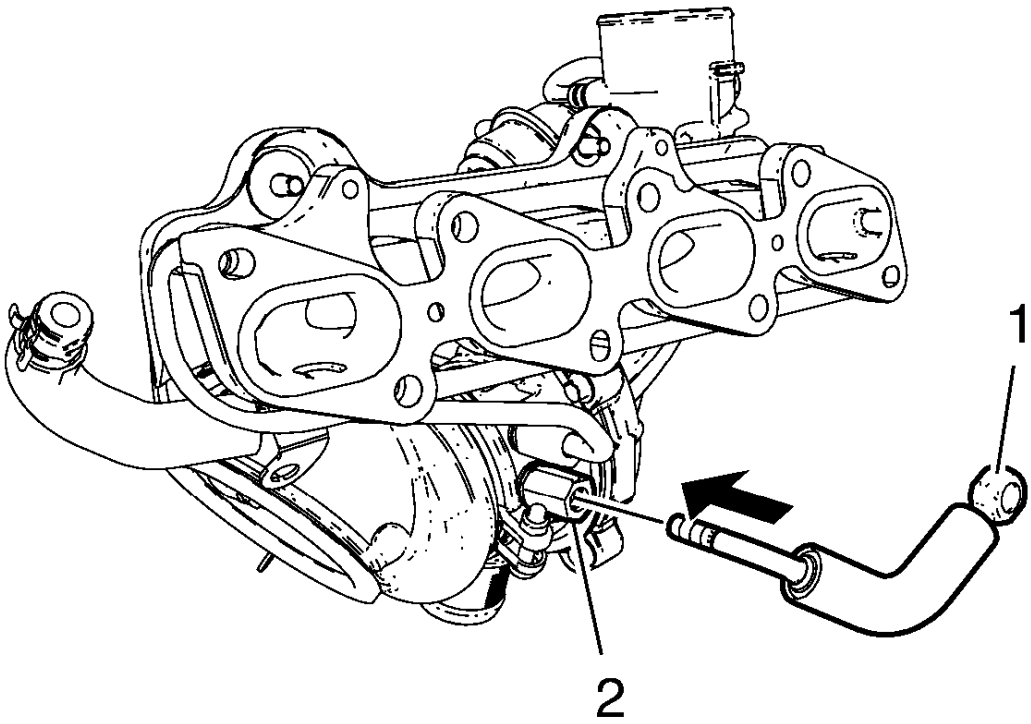

Fig. 433: Turbocharger Coolant Feed Pipe And Quick Fitting Connector
Courtesy of GENERAL MOTORS COMPANY

2. Inspect the turbocharger coolant pipes for ridges and damage.
3. Install the turbocharger coolant feed pipe (1) to the quick fitting connector (2) by pushing in direction of the arrow until an audible click is heard.
4. Use the same procedure for the turbocharger coolant return pipe and the turbocharger coolant return pipe quick fitting connector.

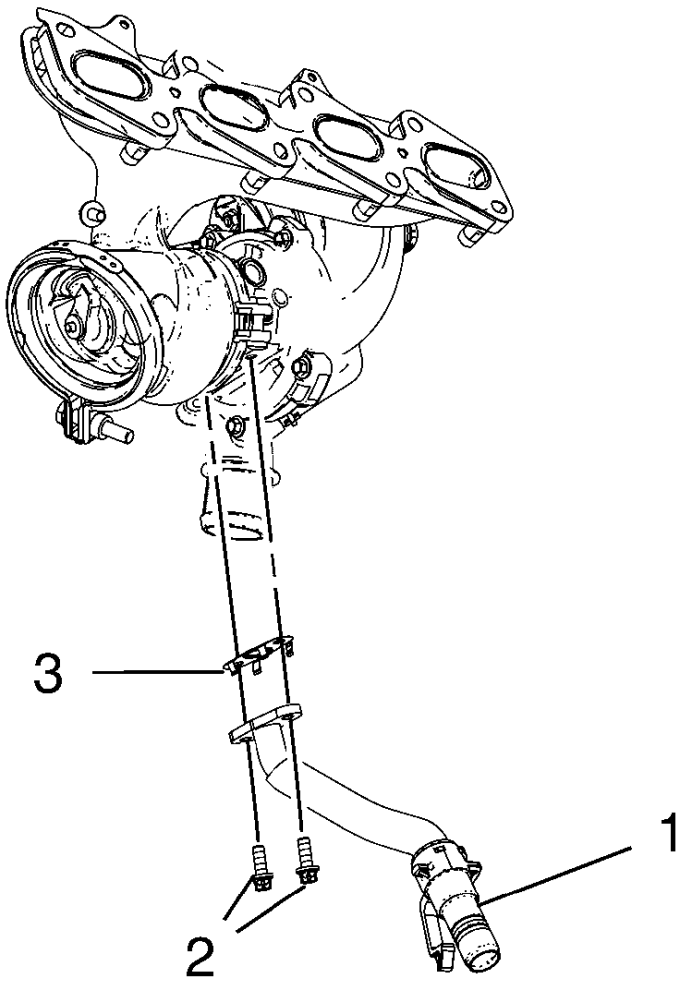

Fig. 434: Turbocharger Oil Return Pipe
Courtesy of GENERAL MOTORS COMPANY

5. Install the turbocharger oil return pipe (1) and a NEW sealing (3) to the turbocharger.
6. Install the 2 turbocharger oil return pipe bolts (2) and tighten to 8 N.m (71 lb in).

ENGINE OIL COOLER DISASSEMBLE

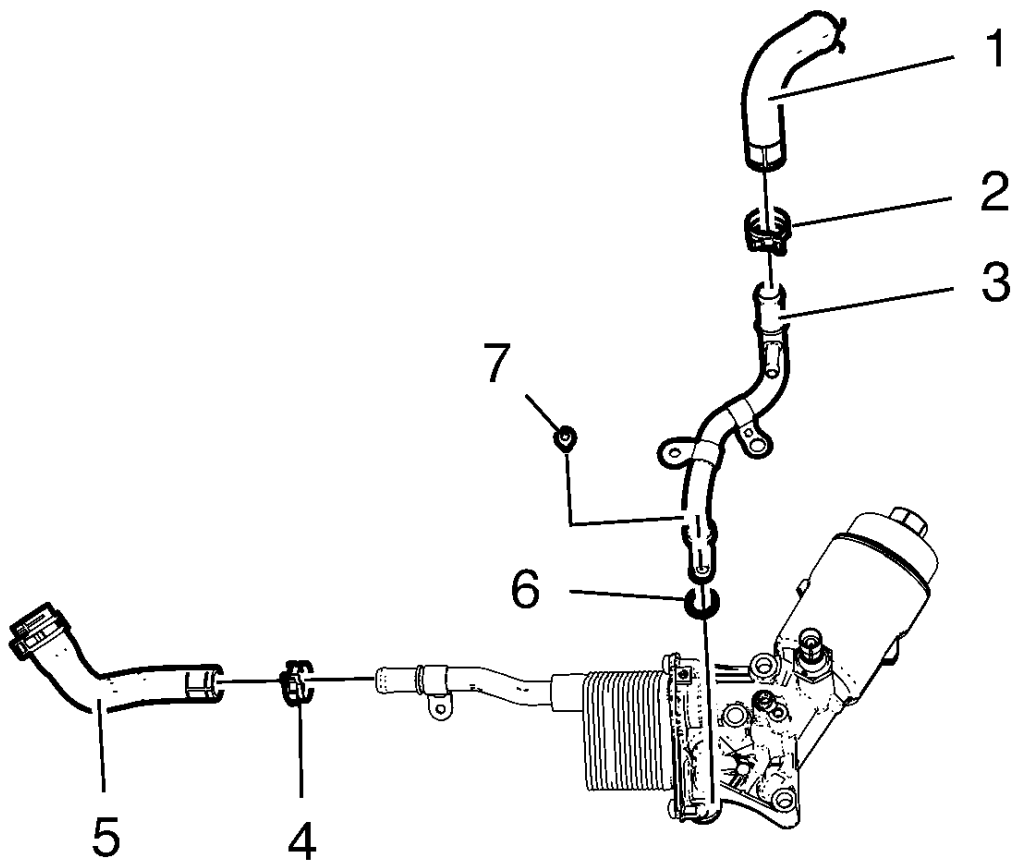

Fig. 435: Engine Oil Cooler Components
Courtesy of GENERAL MOTORS COMPANY

1. Remove the oil cooler coolant inlet hose clamp (2).
2. Remove the oil cooler coolant inlet hose (1).
3. Remove the oil cooler coolant inlet pipe bolt (7)
4. Remove the oil cooler coolant inlet pipe (3) and the seal ring (6).
5. Remove the oil cooler coolant outlet hose clamp (4).
6. Remove the oil cooler coolant outlet hose (5).

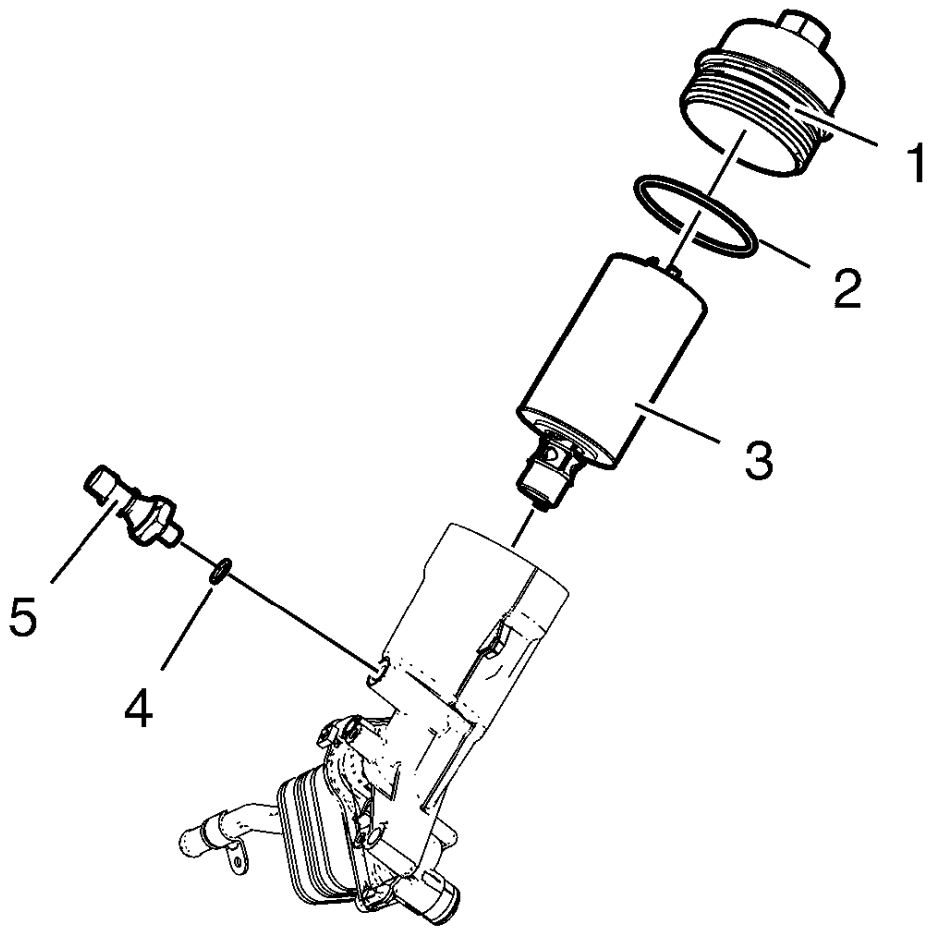

Fig. 436: Engine Oil Pressure Indicator Switch, Oil Filter Cap And Oil Filter Element
Courtesy of GENERAL MOTORS COMPANY

7. Remove the engine oil pressure indicator switch (5) and the seal ring (4).
8. Remove the engine oil filter cap (1) along with the seal ring (2) and the oil filter element (3).

ENGINE OIL COOLER ASSEMBLE

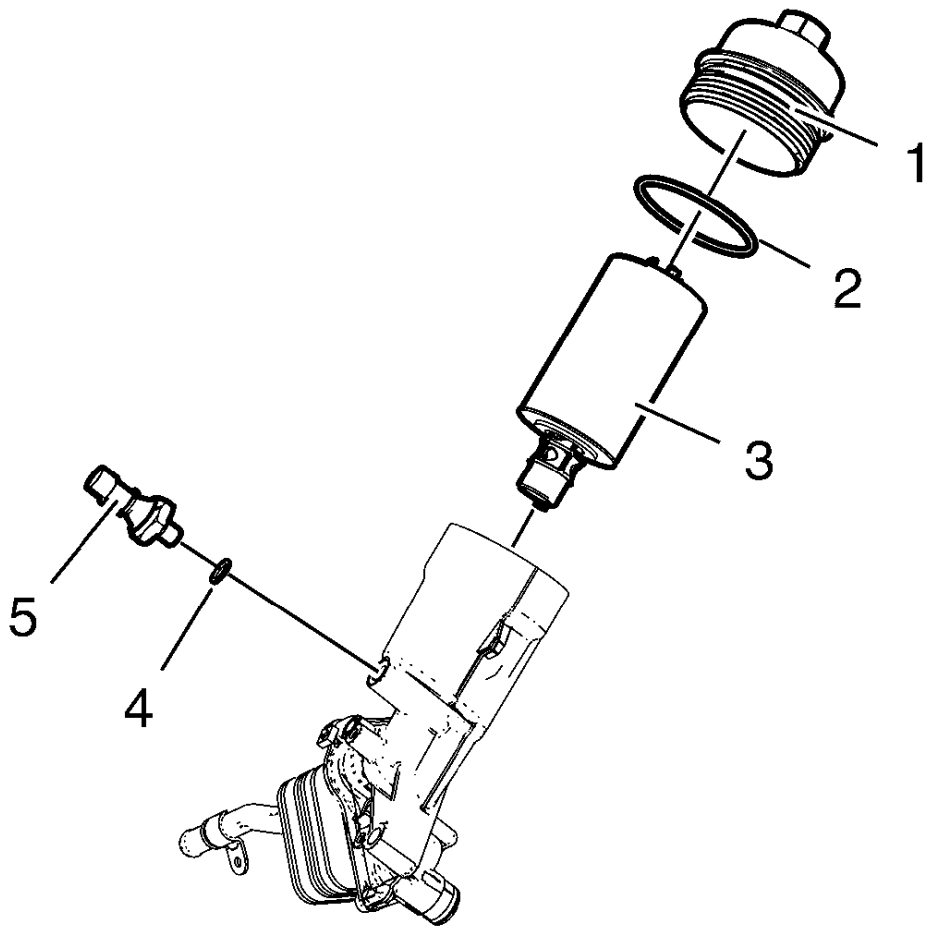

Fig. 437: Engine Oil Pressure Indicator Switch, Oil Filter Cap And Oil Filter Element
Courtesy of GENERAL MOTORS COMPANY

CAUTION: Refer to Fastener Caution .

1. Install the engine oil filter cap (1) along with a NEW seal ring (2) and a NEW oil filter element (3) and tighten to 25 N.m (18 lb ft).
2. Install the engine oil pressure indicator switch (5) and NEW seal ring (4) and tighten to 20 N.m (15 lb ft).

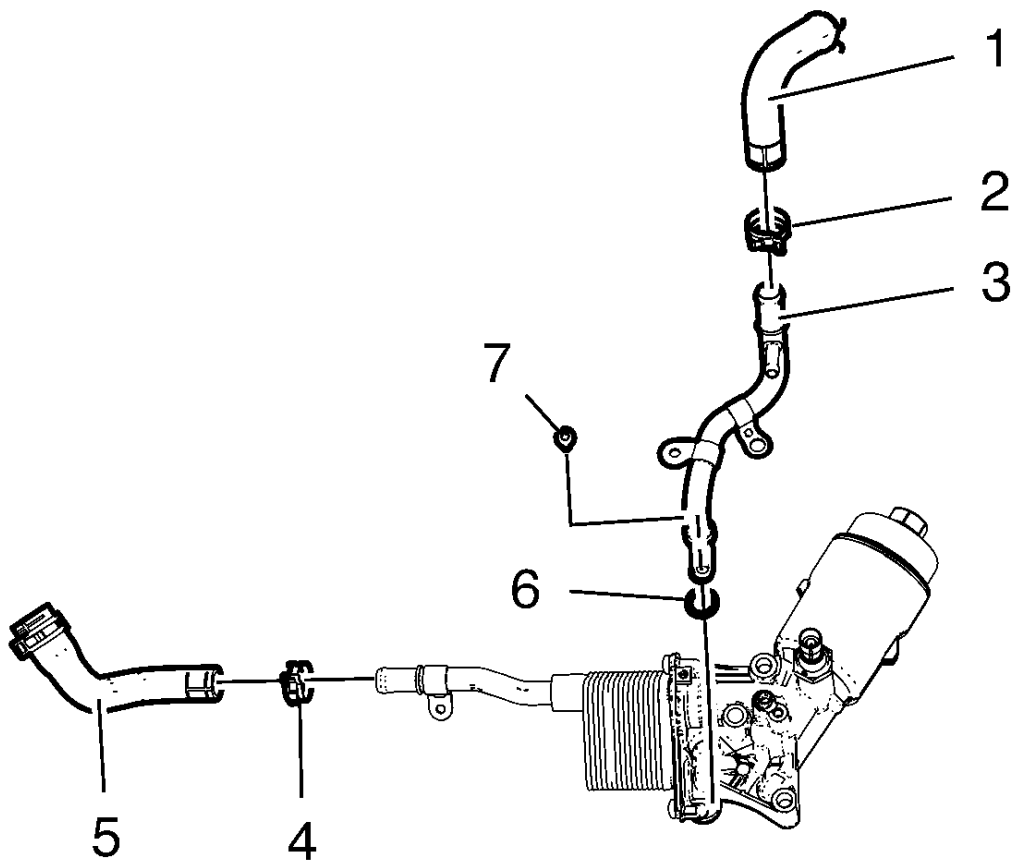

Fig. 438: Engine Oil Cooler Components
Courtesy of GENERAL MOTORS COMPANY

3. Install the oil cooler coolant outlet hose (5)
4. Install the oil cooler coolant outlet hose clamp (4).
5. Install the oil cooler coolant inlet pipe (3) and a NEW seal ring (6).
6. Install the oil cooler coolant inlet pipe bolt (7) and tighten to 10 N.m (89 lb in).
7. Install the oil cooler coolant inlet hose (1).
8. Install oil cooler coolant inlet hose clamp (2).

OIL PAN CLEANING AND INSPECTION

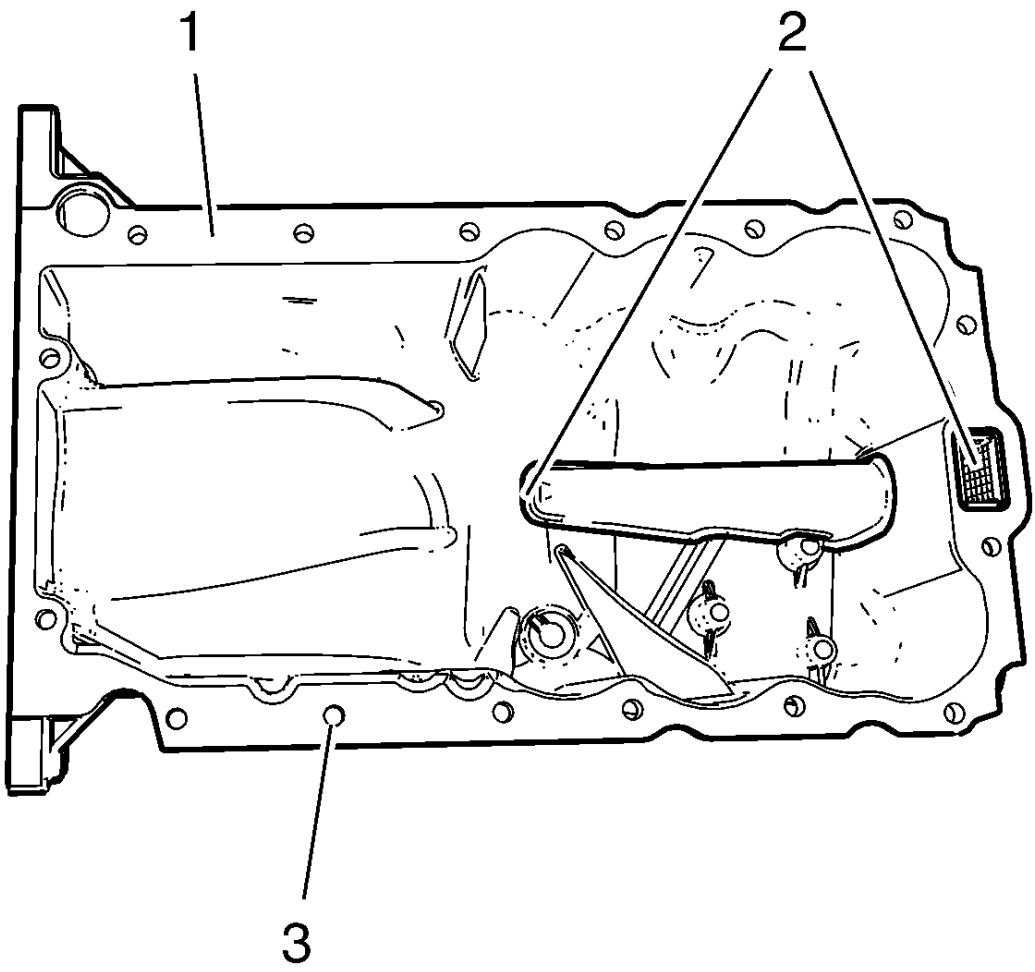

Fig. 439: Oil Suction Gallery, Sealing Surface And Screw Bores
Courtesy of GENERAL MOTORS COMPANY

WARNING: Wear safety glasses when using compressed air in order to prevent eye injury.

CAUTION: To ensure proper engine lubrication, clean clogged or contaminated oil galleries in an approved solvent and with compressed air. Failure to clean oil galleries may cause engine damage.

1. Clean the oil suction gallery (2) with compressed air. Be sure to remove all dirt and old gasket material from the suction gallery (2).
2. Remove all remaining old gasket material from sealing surface (1) and screw bores (3).
3. Clean the sealing surfaces from dirt and grease.
4. Inspect the sealing surface for cracks and damage.

CRANKSHAFT AND BEARING INSTALLATION

Special Tools

- **EN-235-6** Installer
- **EN-470-B** Angular Torque Wrench
- **EN-658-1** Installer

For equivalent regional tools, refer to **Special Tools**.

1. Lubricate crankshaft, crankshaft bearings and crankshaft bearing cap tie plate with engine oil.

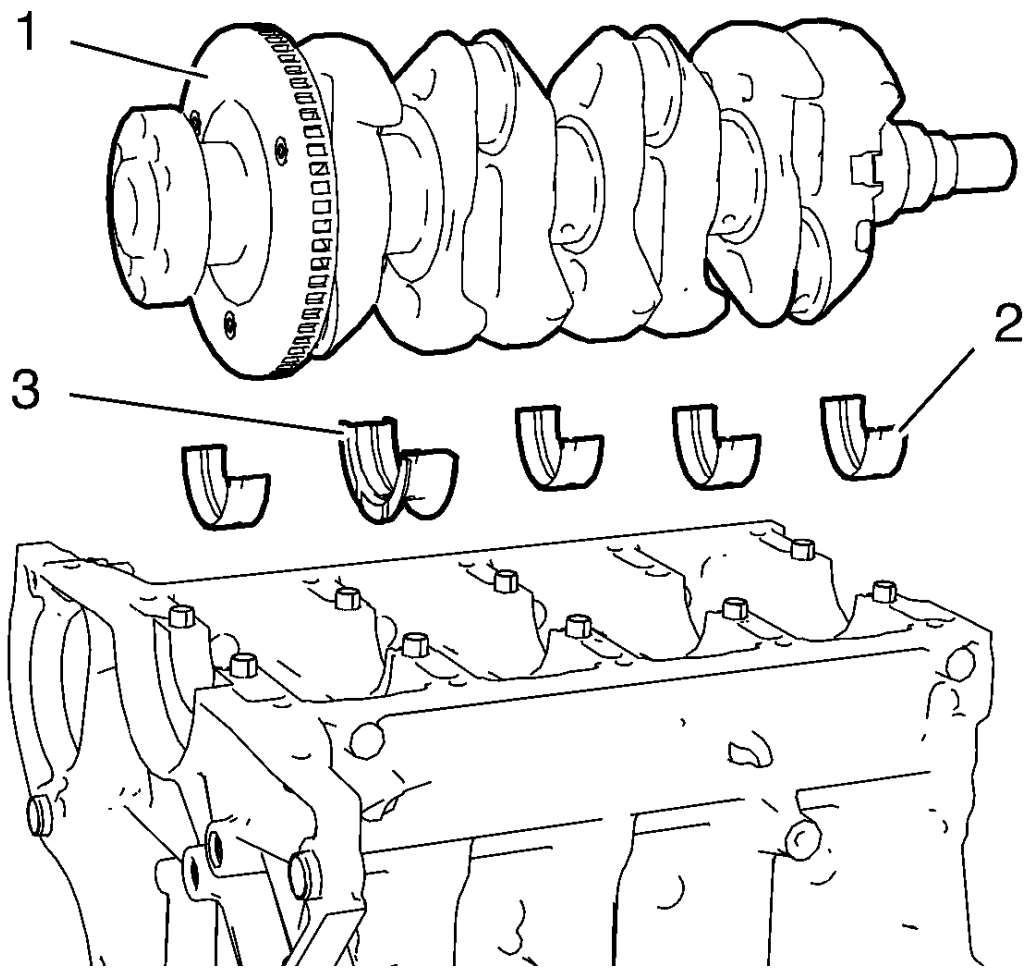

Fig. 440: Crankshaft, Upper Crankshaft Bearings And Upper Crankshaft Thrust Bearing
Courtesy of GENERAL MOTORS COMPANY

2. Install the 4 upper crankshaft bearings (2) and the crankshaft thrust bearing (3).

3. Install the crankshaft (1).

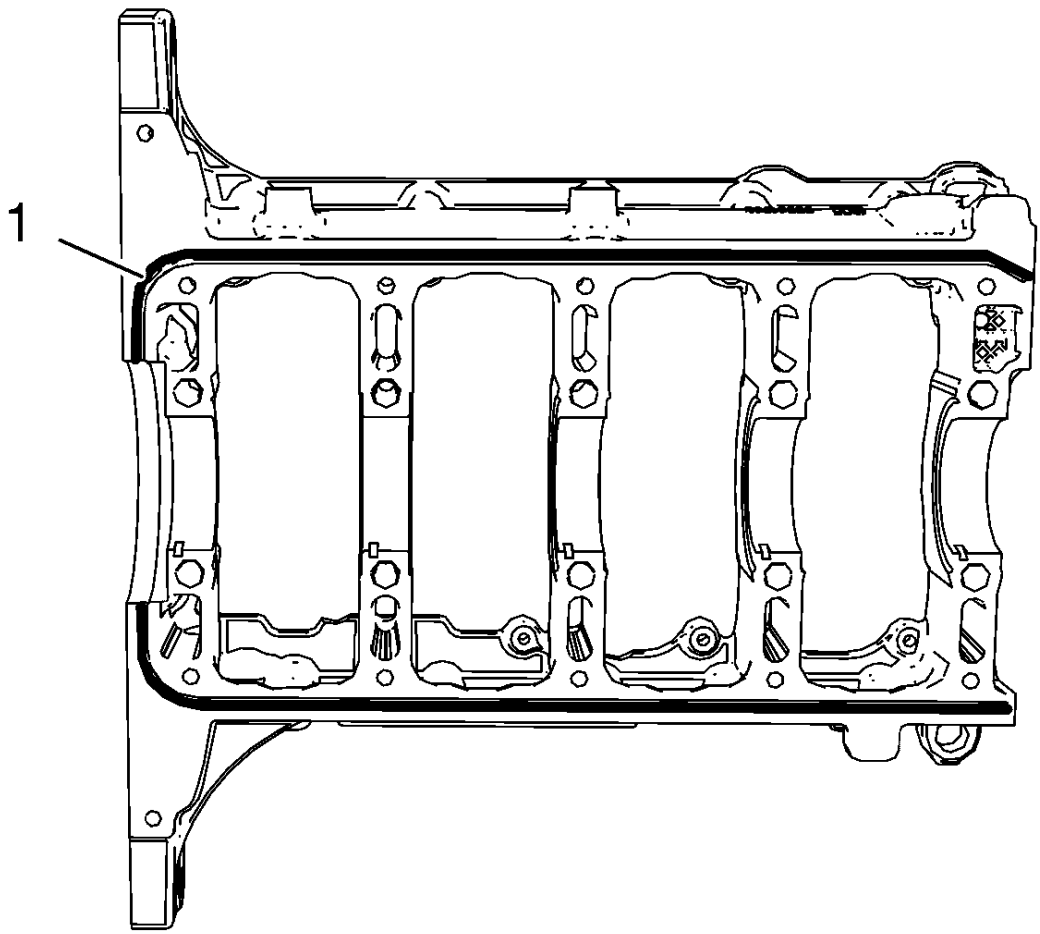

Fig. 441: Sealing Compound Application Area
Courtesy of GENERAL MOTORS COMPANY

NOTE: The thickness of the sealing bead should be 2 mm (0.0787 in).

4. Apply sealing compound (1) to the outer rim of the groove on the crankshaft bearing cap tie plate. Refer to **Adhesives, Fluids, Lubricants, and Sealers**.

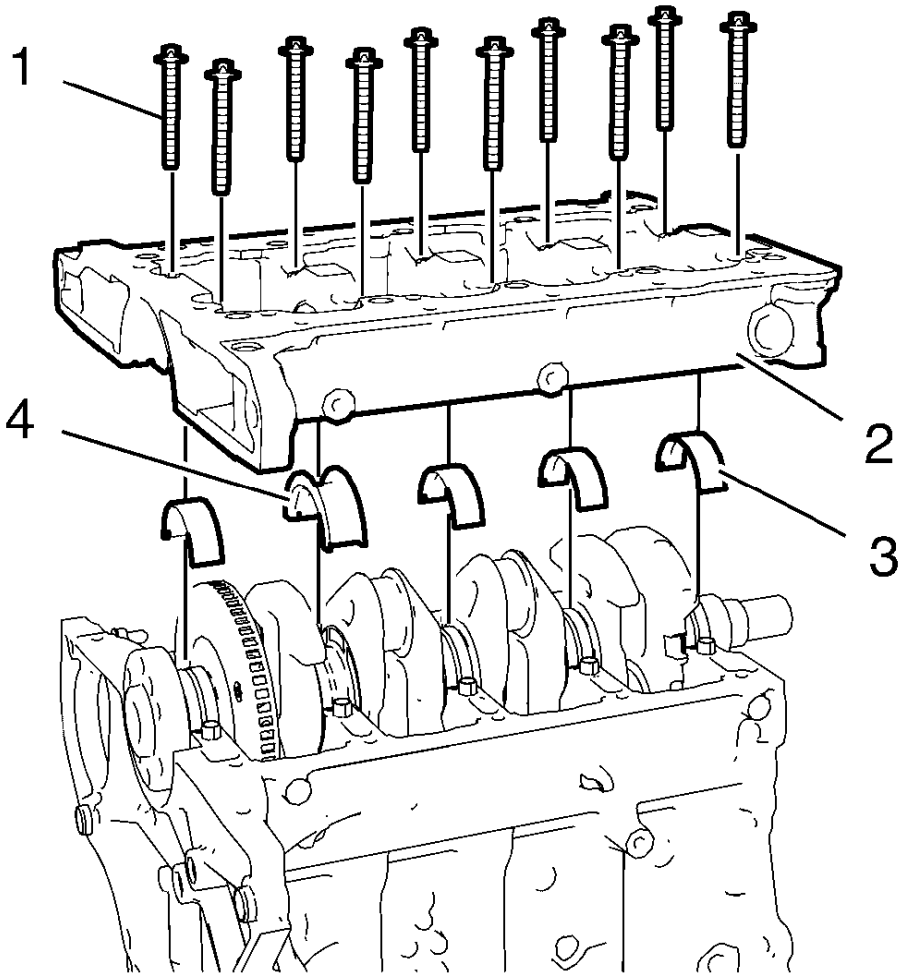

Fig. 442: Crankshaft Bearing Cap Tie Plate
Courtesy of GENERAL MOTORS COMPANY

NOTE: The complete installation procedure should not take longer than 10 minutes.

5. Install the 4 lower crankshaft bearings (3) and the lower crankshaft thrust bearing (4).
6. Install the crankshaft bearing cap tie plate (2).

NOTE: Do not reuse the old bolts.

7. Install the 10 NEW inner crankshaft bearing cap tie plate bolts (1).

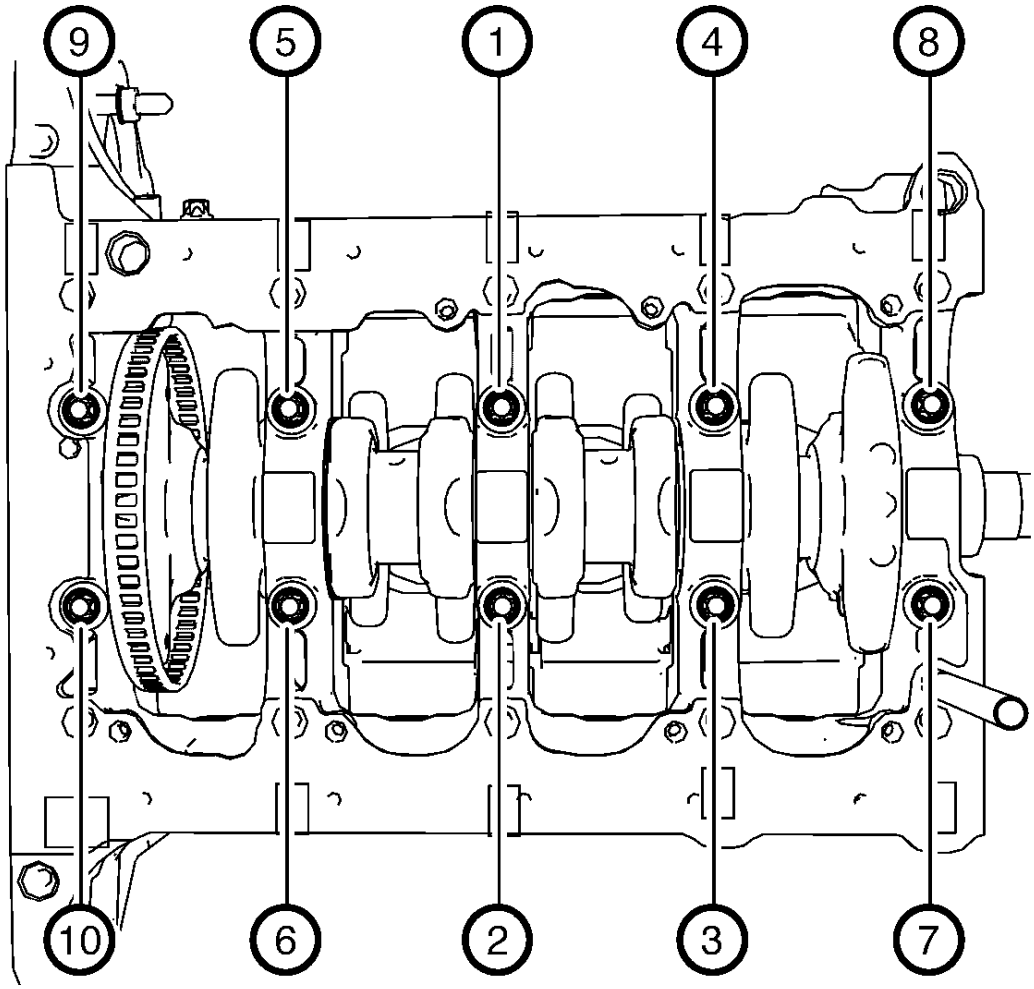

Fig. 443: Inner Crankshaft Bearing Cap Tie Plate Bolts Tightening Sequence
Courtesy of GENERAL MOTORS COMPANY

CAUTION: Refer to Fastener Caution .

CAUTION: Refer to Torque-to-Yield Fastener Caution .

8. Tighten the 10 inner crankshaft bearing cap tie plate bolts in the sequence shown and to the following specifications:
    1. Tighten the inner crankshaft bearing cap tie plate bolts to 25 N.m (18 lb ft).
    2. Tighten the inner crankshaft bearing cap tie plate bolts an additional 60°. Use **EN-470-B** wrench.
    3. Tighten the inner crankshaft bearing cap tie plate bolts an additional 15°. Use **EN-470-B** wrench.

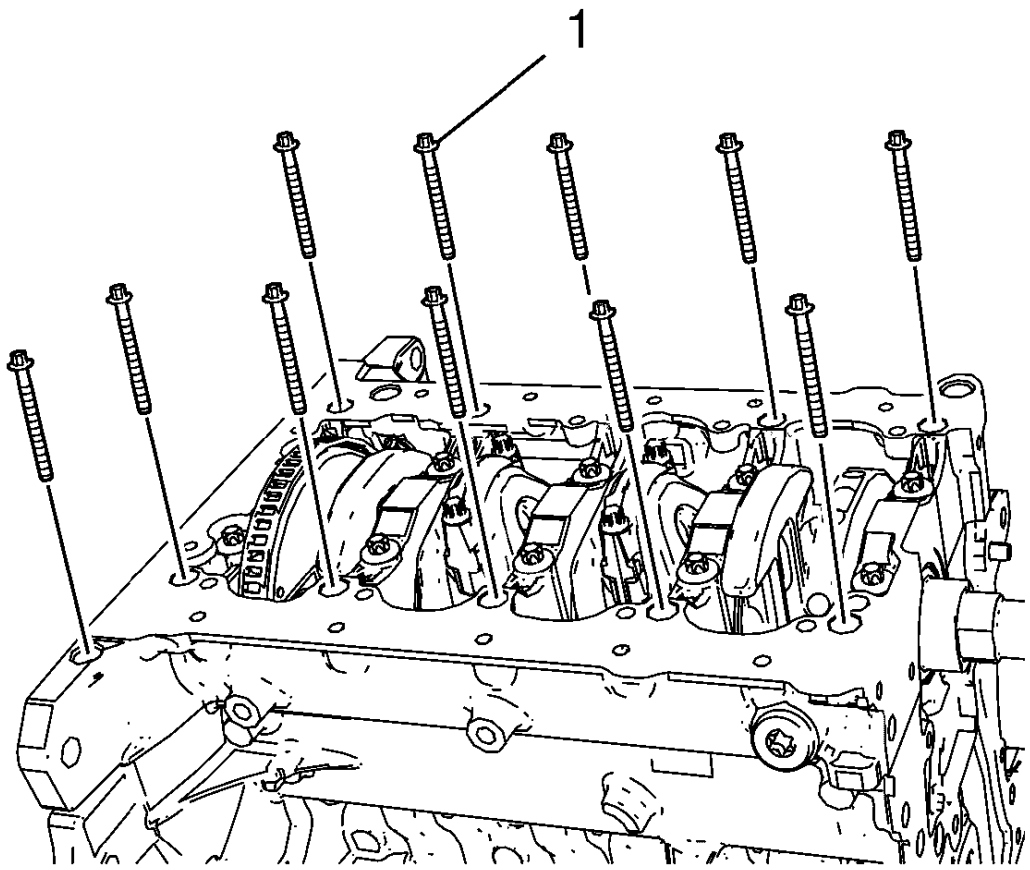

Fig. 444: Outer Crankshaft Bearing Cap Tie Plate Bolts
Courtesy of GENERAL MOTORS COMPANY

NOTE: Do not reuse the old bolts.

9. Install the 12 NEW outer crankshaft bearing cap tie plate bolts (1) and tighten to the following specification:
    1. Tighten the outer crankshaft bearing cap tie plate bolts to 10 N.m (89 lb in).
    2. Tighten the outer crankshaft bearing cap tie plate bolts an additional 60°. Use **EN-470-B** wrench.
    3. Tighten the outer crankshaft bearing cap tie plate bolts an additional 15°. Use **EN-470-B** wrench.

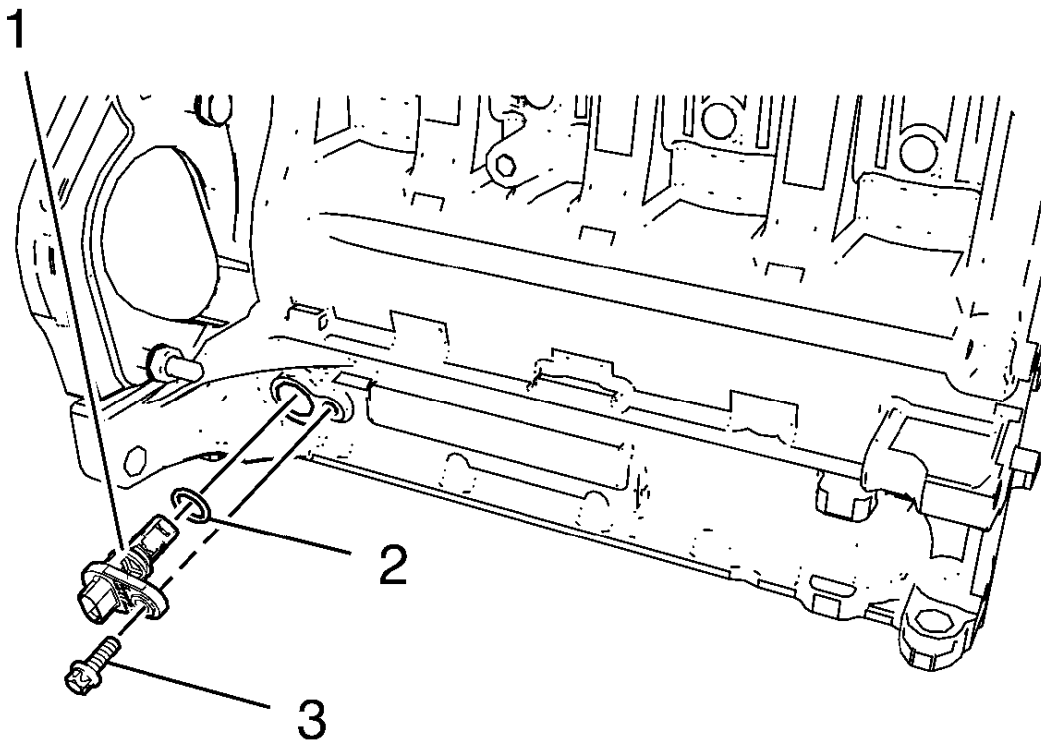

Fig. 445: Crankshaft Position Sensor, Bolt And Seal Ring
Courtesy of GENERAL MOTORS COMPANY

10. Install the crankshaft position sensor (1) and a NEW crankshaft position sensor seal ring (2).
11. Install the crankshaft position sensor bolt (3) and tighten to 8 N.m (71 lb in).

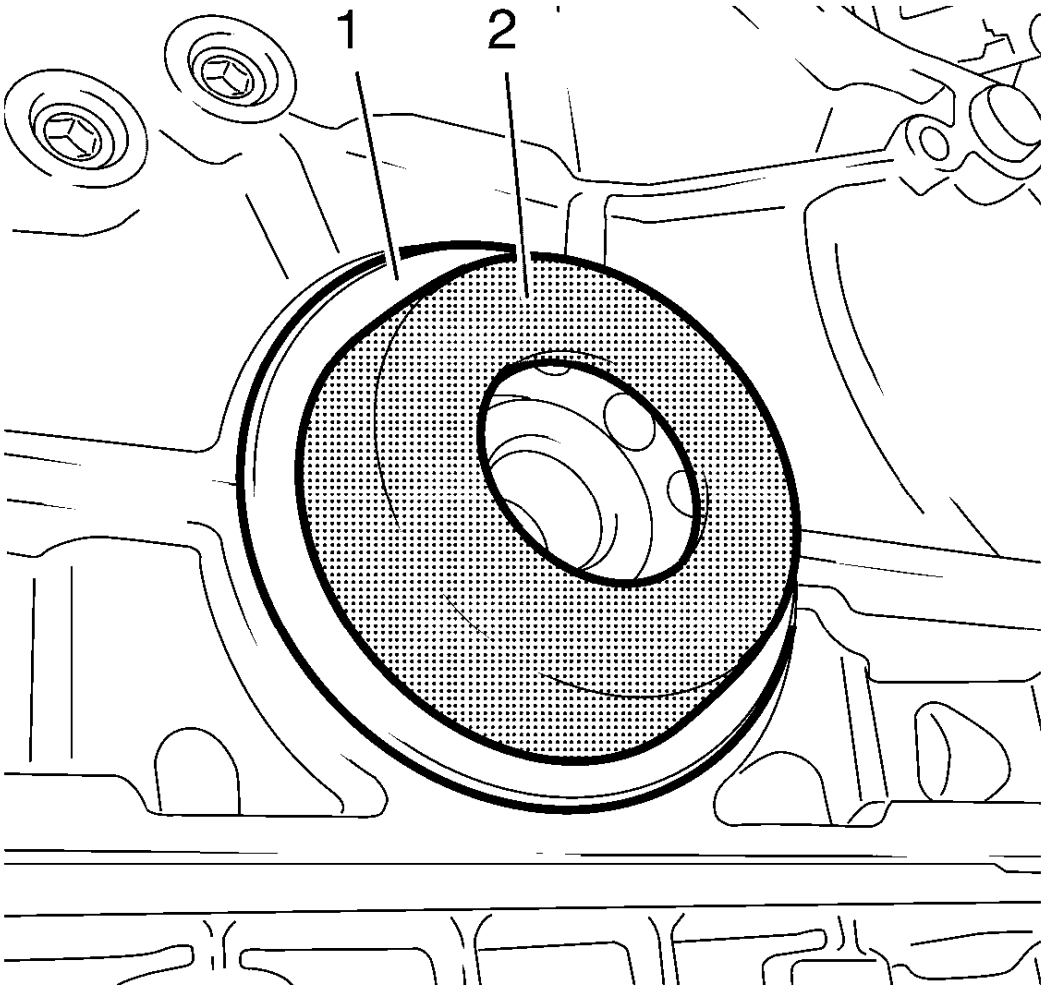

Fig. 446: Crankshaft Rear Oil Seal And Installer
Courtesy of GENERAL MOTORS COMPANY

NOTE: Lubricate the crankshaft rear oil seal.

12. Install the crankshaft rear oil seal (1) with **EN-235-6** installer (2).

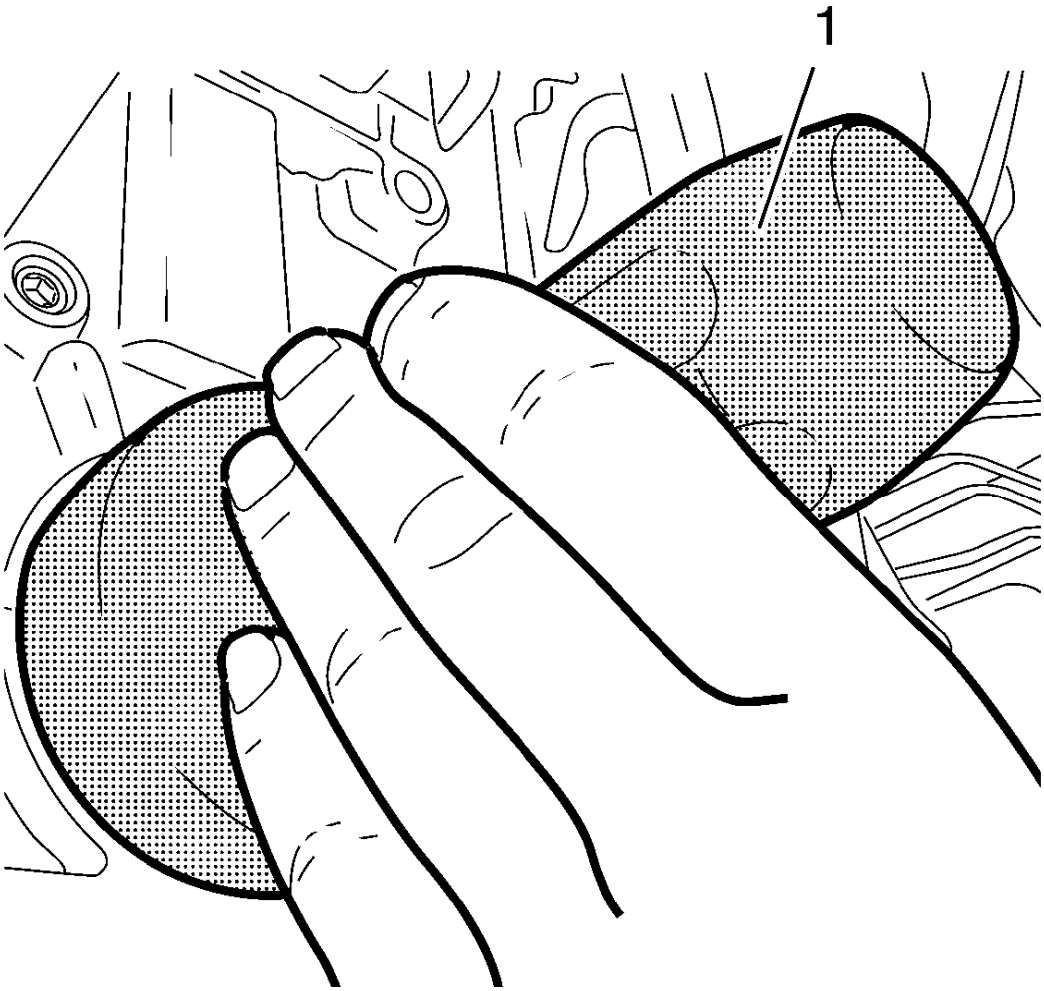

Fig. 447: Crankshaft Rear Oil Seal Installer
Courtesy of GENERAL MOTORS COMPANY

13. Use **EN-658-1** installer (1) to strike the crankshaft rear oil seal.

PISTON, CONNECTING ROD, AND BEARING INSTALLATION

Special Tools

EN-470-B Angular Torque Wrench

For equivalent regional tools, refer to **Special Tools**.

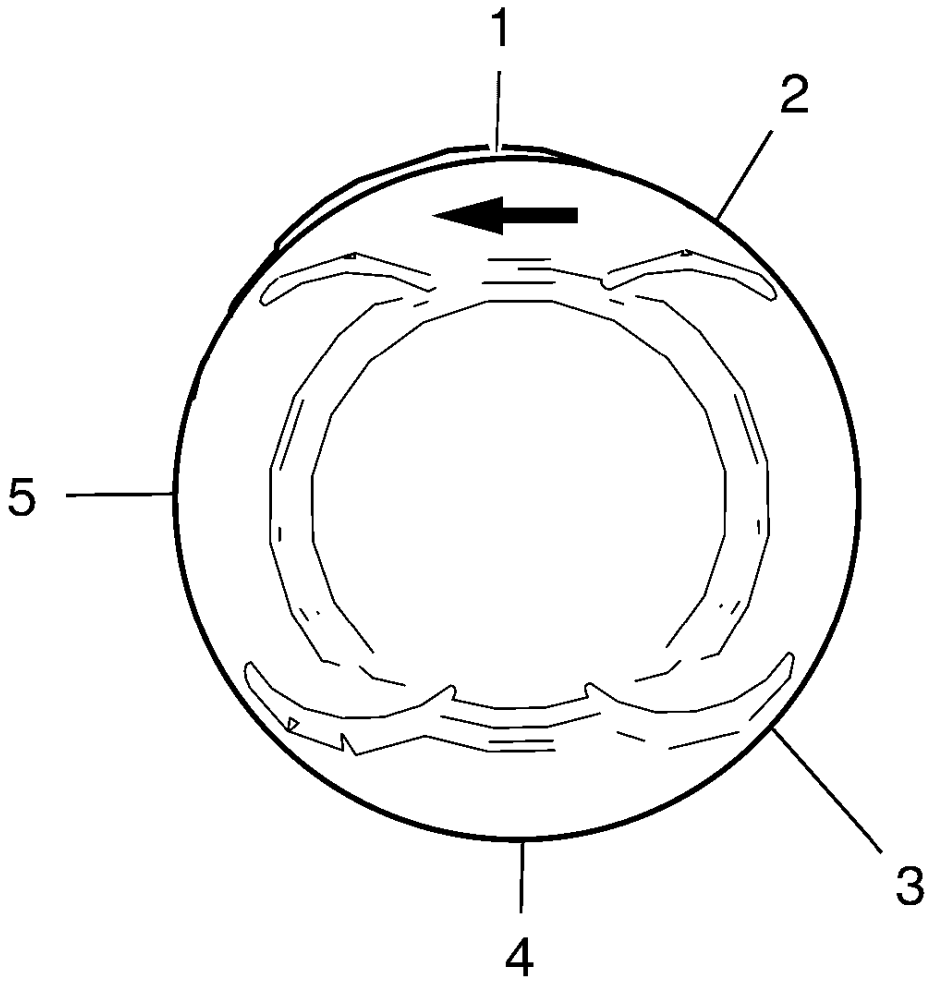

Fig. 448: Piston Ring Joint Adjustment Points
Courtesy of GENERAL MOTORS COMPANY

1. Adjust the piston ring joints as follows:
    1. Upper compression ring (1).
    2. Lower compression ring (4).
    3. Oil rings (2) or (3).
    4. Oil ring spacer (5).

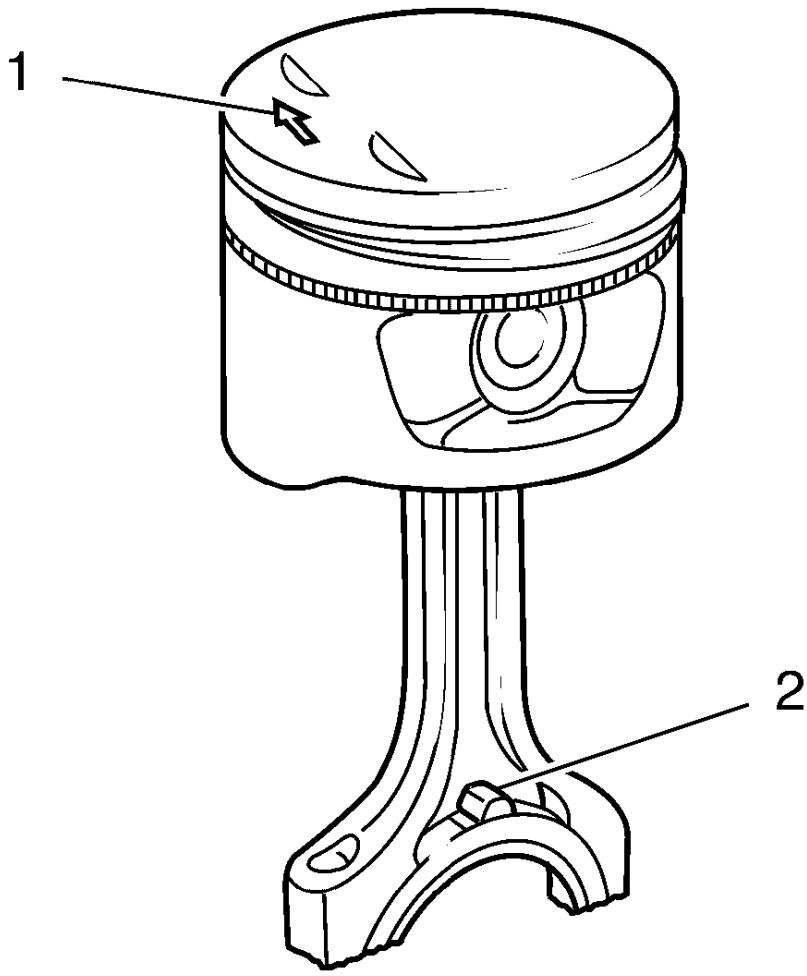

Fig. 449: Rods And Arrow On Piston Head
Courtesy of GENERAL MOTORS COMPANY

2. The arrow (1) on the piston head must point to the timing side.
3. The markings on the connecting rods (2) must point to the transmission side.

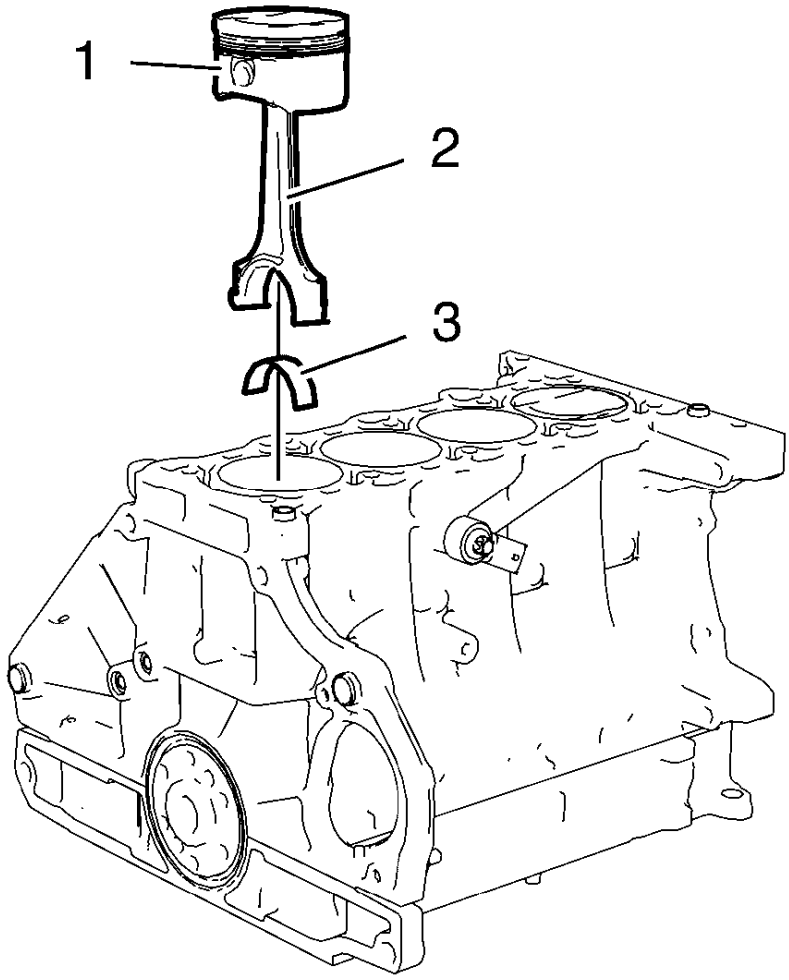

Fig. 450: Pistons, Connecting Rods And Bearings
Courtesy of GENERAL MOTORS COMPANY

4. Install a piston ring compressor to compress the piston rings.
5. Install the pistons (1) in along with connecting rods (2) and upper connecting rod bearings (3) to the engine block and to the crankshaft.

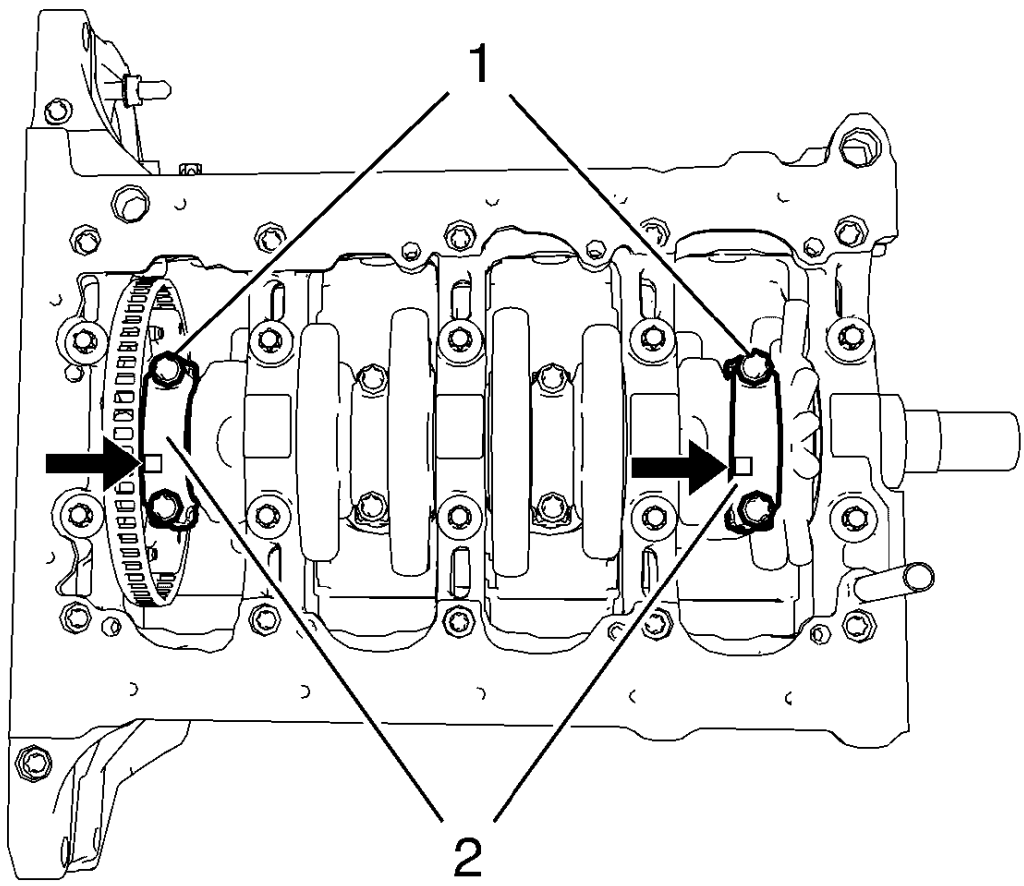

Fig. 451: Rod Bearing Caps And Bolts
Courtesy of GENERAL MOTORS COMPANY

NOTE: The flarings (arrows) on the connecting rod bearing caps must point to the transmission side. The connecting rod bearing caps must be installed in their original position.

6. Install the 2 connecting rod bearings and the 2 connecting rod bearing caps (2) of cylinder 1 and 4.

CAUTION: Refer to Fastener Caution .

CAUTION: Refer to Torque-to-Yield Fastener Caution .

NOTE: Do not reuse the old bolts.

7. Install the 4 NEW connecting rod bearing cap bolts (1) and tighten in the following sequence:
   1. Tighten the connecting rod bearing cap bolts to 25 N.m (18 lb ft).
   2. Tighten the connecting rod bearing cap bolts an additional 45 degrees. Use **EN-470 B** wrench.
8. Rotate the crankshaft 180 degrees.

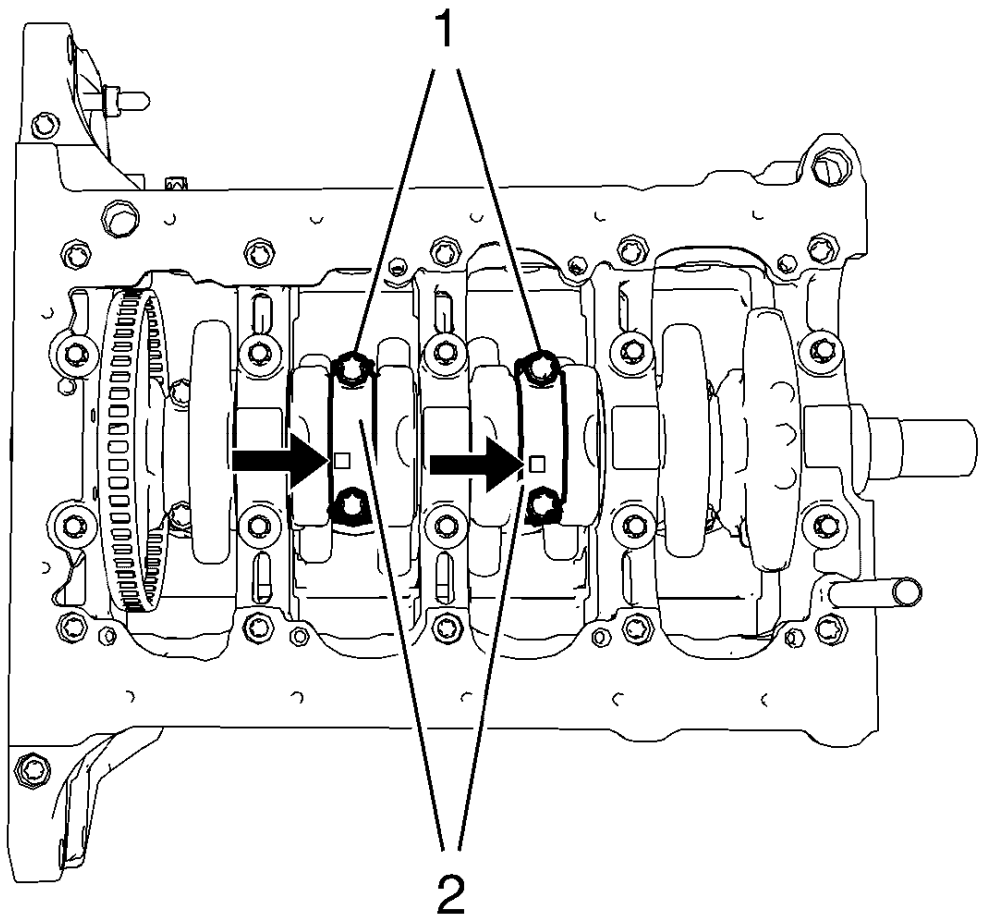

Fig. 452: Rod Bearing Caps And Bolts
Courtesy of GENERAL MOTORS COMPANY

NOTE: The flarings (arrows) on the connecting rod bearing caps must point to the transmission side. The connecting rod bearing caps must be installed in their original position.

9. Install the 2 connecting rod bearings and the 2 connecting rod bearing caps (2) of cylinder 3 and 2.

NOTE: Do not reuse the old bolts.

10. Install the 4 NEW connecting rod bearing cap bolts (1) and tighten in the following sequence:
    1. Tighten the connecting rod bearing cap bolts to 25 N.m (18 lb ft).
    2. Tighten the connecting rod bearing cap bolts an additional 45 degrees. Use **EN-470-B** wrench.

CYLINDER HEAD INSTALLATION

Special Tools

EN-470-B Angular Torque Wrench.

For equivalent regional tools, refer to **Special Tools**.

WARNING: Wear safety glasses when using compressed air in order to prevent eye injury.

1. Clean the sealing surfaces and remove dirt and old gasket material from thread bores, water galleries and oil galleries.

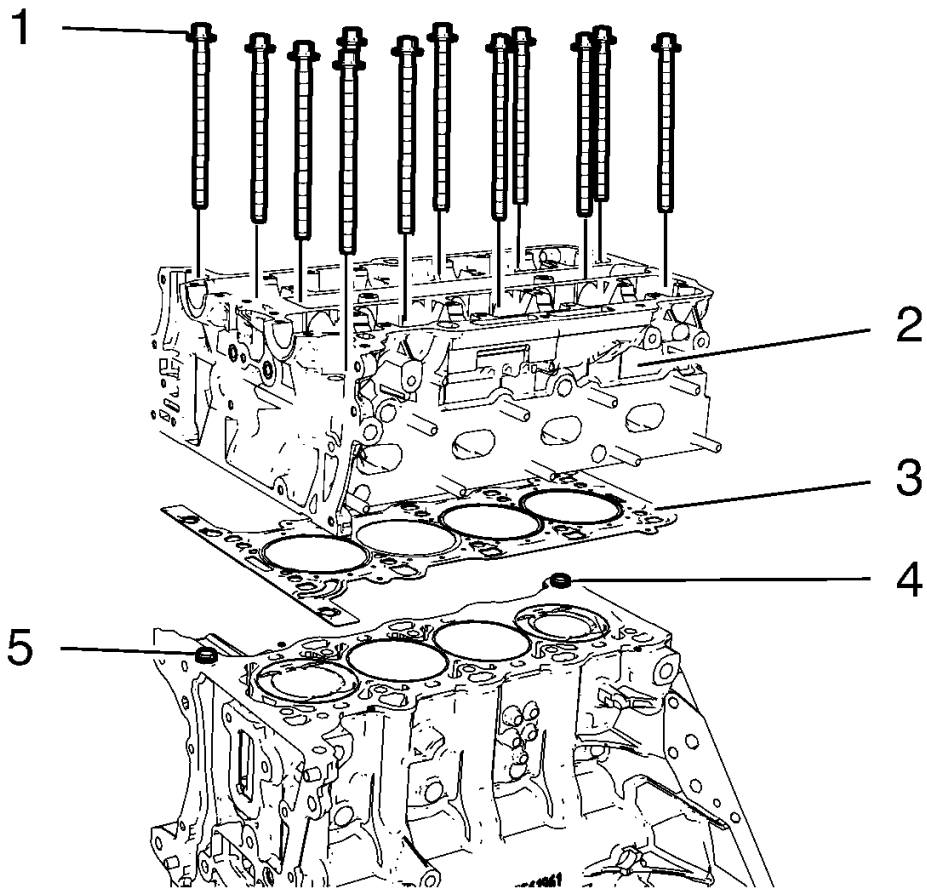

Fig. 453: Cylinder Head, Gasket, Bolts And Guide Sleeves
Courtesy of GENERAL MOTORS COMPANY

NOTE: Mind the guide sleeves (4) and (5).

2. Install a NEW cylinder head gasket (3). The marking "Top" should point to the cylinder head.
3. Install the cylinder head (2).
4. Install 12 NEW cylinder head bolts (1) and hand tighten.

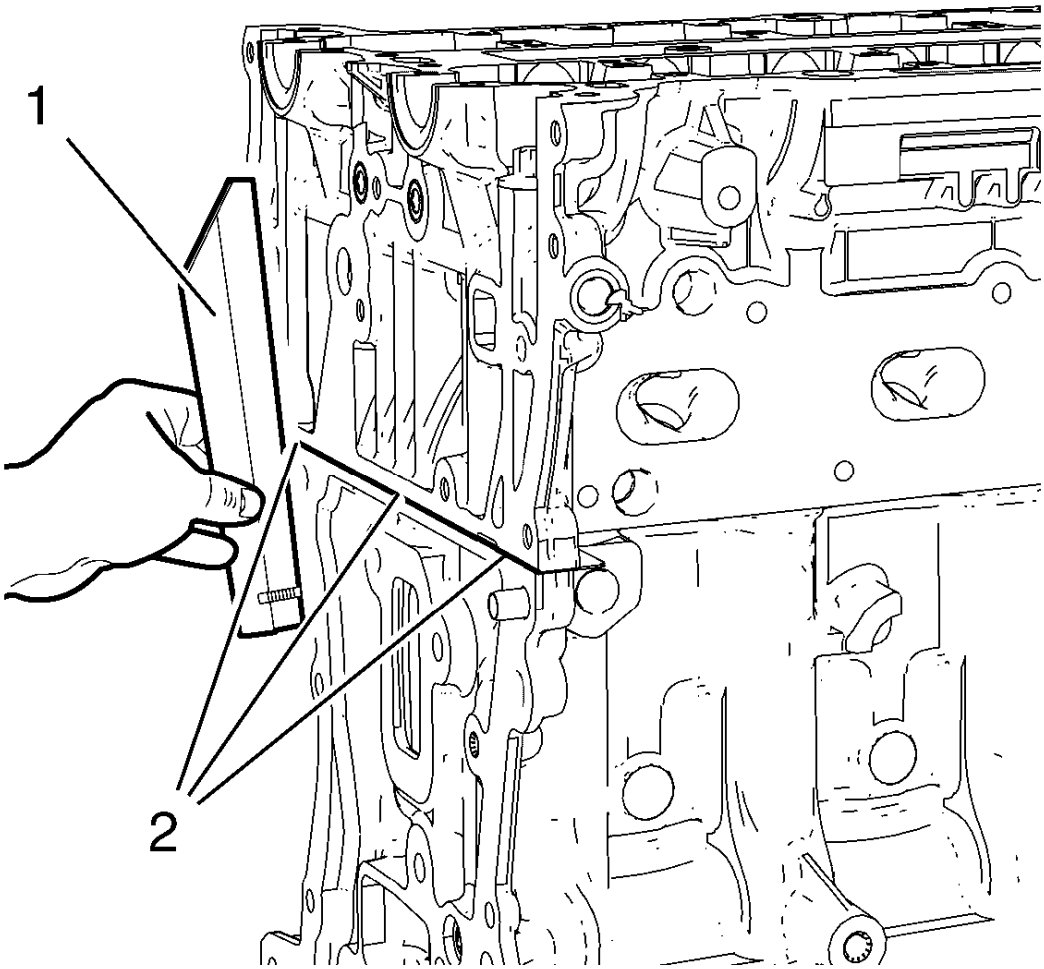

Fig. 454: Straight Edge Tool
Courtesy of GENERAL MOTORS COMPANY

5. Lay a straight edge (1) against the engine block and cylinder head. Adjust the transition in area (2) until there is no clearance between cylinder head and straight edge, using a rubber mallet.

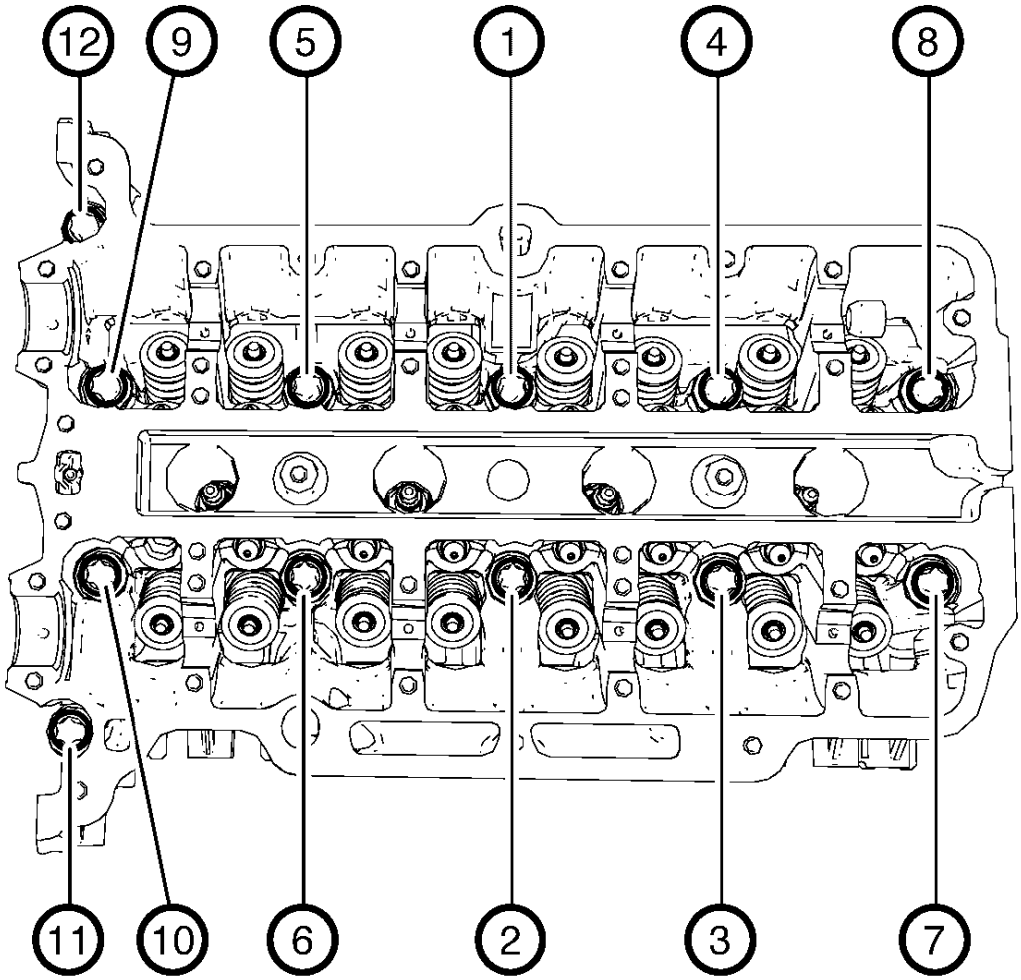

Fig. 455: Cylinder Head Bolts Tightening Sequence
Courtesy of GENERAL MOTORS COMPANY

CAUTION: Refer to Fastener Caution

CAUTION: Refer to Torque-to-Yield Fastener Caution .

6. Tighten the cylinder head bolts in the sequence shown and to the following specifications:
    1. Tighten the cylinder head bolts to 35 N.m (26 lb ft).
    2. Tighten the cylinder head bolts an additional 180 degrees. Use **EN-470-B** wrench.

HYDRAULIC VALVE LASH ADJUSTER INSTALLATION

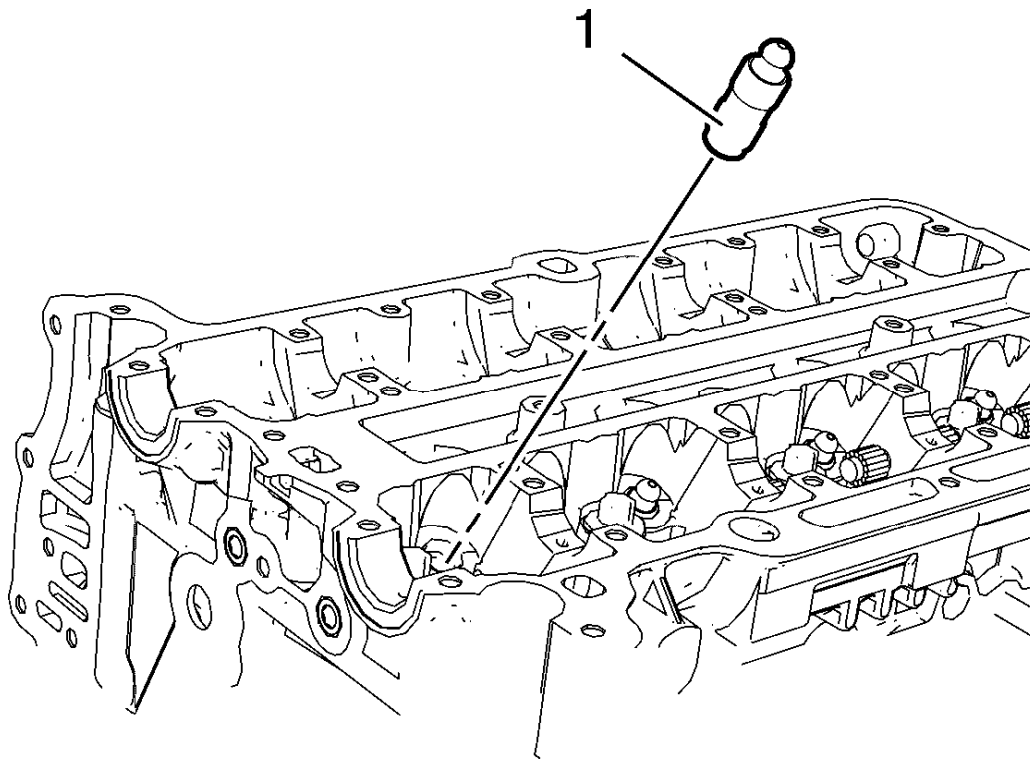

Fig. 456: Hydraulic Valve Lash Adjusters
Courtesy of GENERAL MOTORS COMPANY

NOTE: Mind the installation position of the hydraulic valve lash adjusters.

1. Lubricate the hydraulic valve lash adjusters with engine oil.
2. Install the 16 hydraulic valve lash adjusters (1).

HYDRAULIC VALVE LASH ADJUSTER ARM INSTALLATION

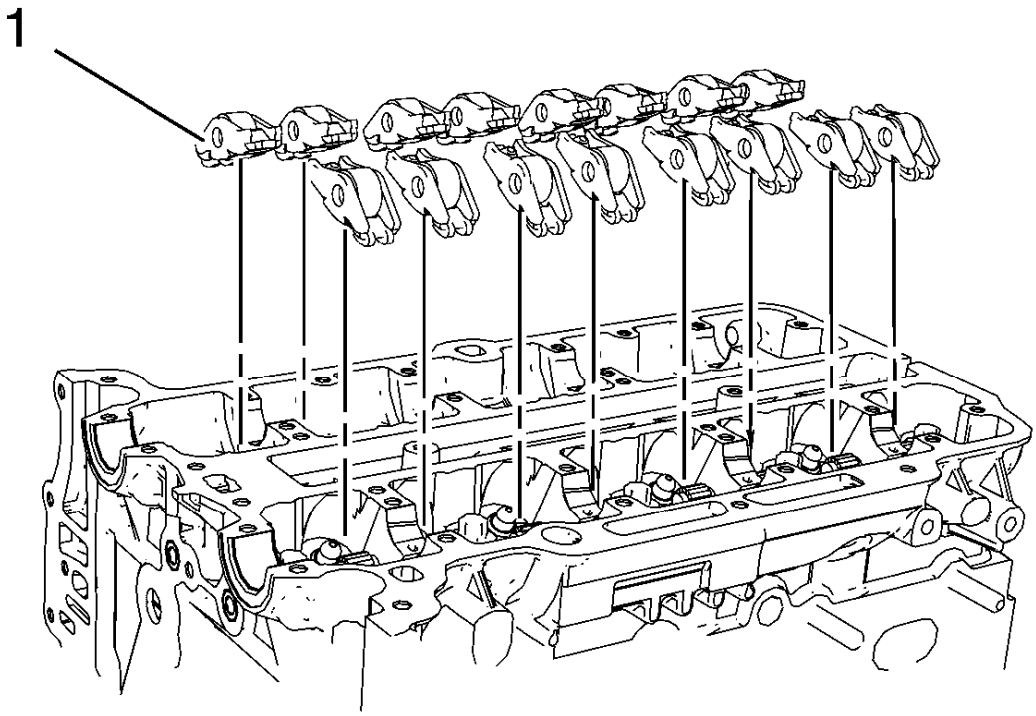

Fig. 457: Hydraulic Valve Lash Adjuster Arms
Courtesy of GENERAL MOTORS COMPANY

NOTE: Hydraulic valve lash adjuster arms should be installed in their original position.

1. Lubricate the hydraulic valve lash adjuster arms with engine oil.
2. Install the 16 hydraulic valve lash adjuster arms (1).

INTAKE CAMSHAFT INSTALLATION

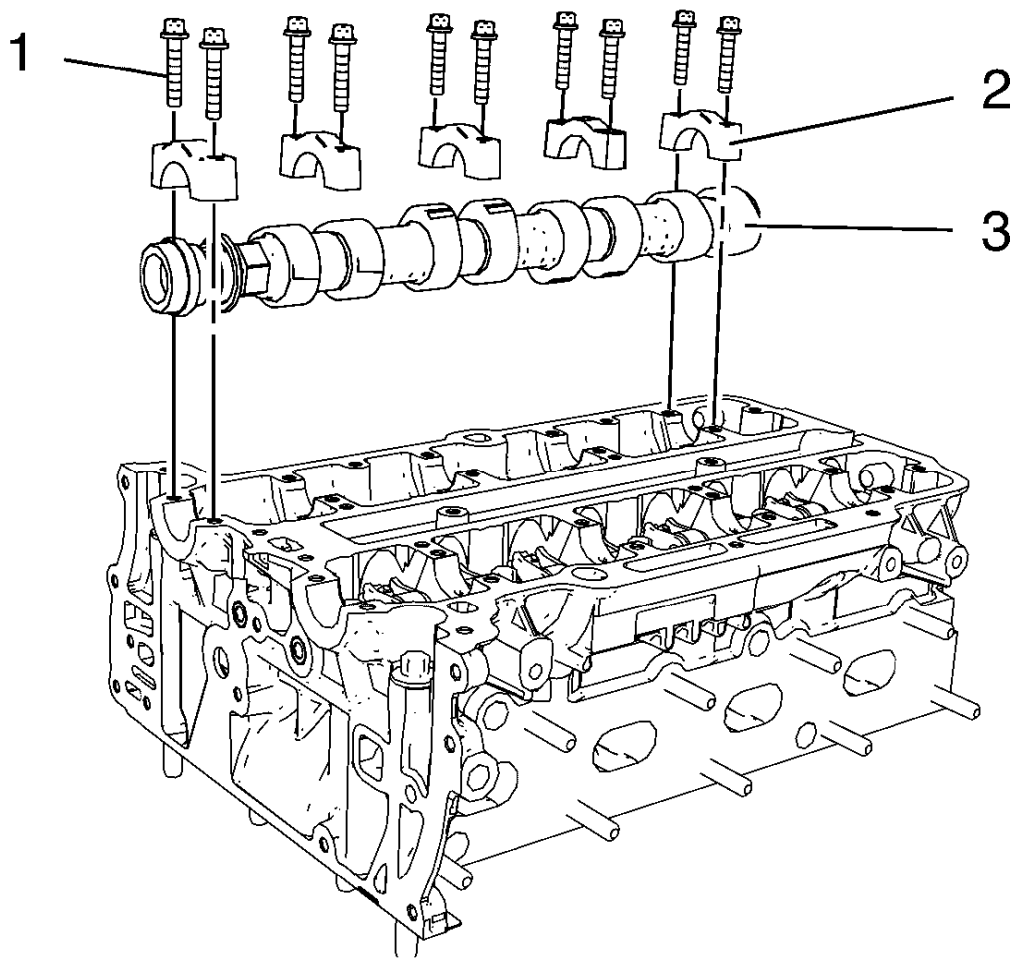

Fig. 458: Intake Camshaft, Camshaft Bearing Caps And Bolts
Courtesy of GENERAL MOTORS COMPANY

NOTE: Mind the markings on the camshaft bearing caps. Camshaft bearing caps should be installed in their original position.

1. Lubricate camshaft and camshaft bearing caps with engine oil.
2. Install the intake camshaft (3).
3. Install the 5 camshaft bearing caps (2).
4. Install the 10 camshaft bearing cap bolts (1) and handtighten.

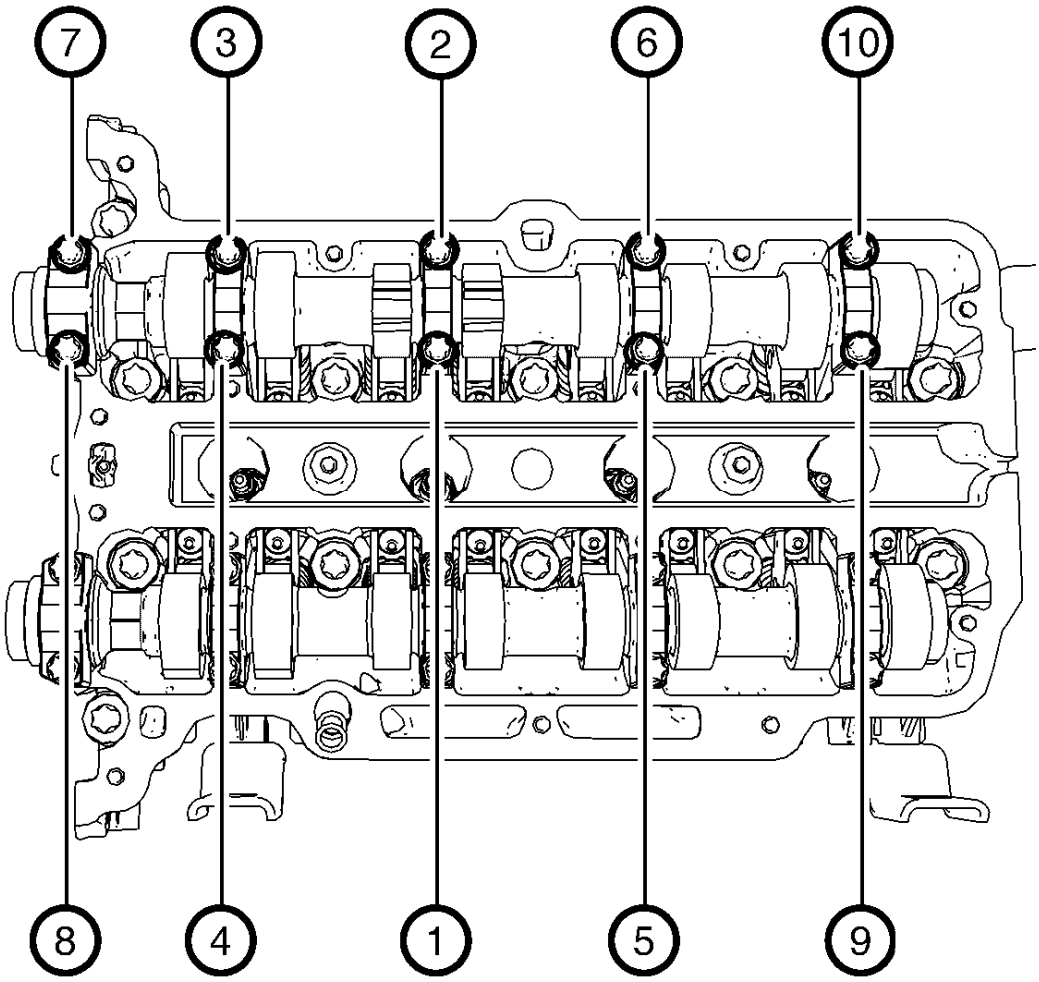

Fig. 459: Intake Camshaft Bearing Cap Bolts Tightening Sequence
Courtesy of GENERAL MOTORS COMPANY

CAUTION: Refer to Fastener Caution .

NOTE: Tighten the camshaft bearing cap bolts one turn at a time in order to avoid shape distortion of the camshaft.

5. Tighten the camshaft bearing cap bolts one turn at a time and in a spiral sequence as shown to 8 N.m (71 lb in).

EXHAUST CAMSHAFT INSTALLATION

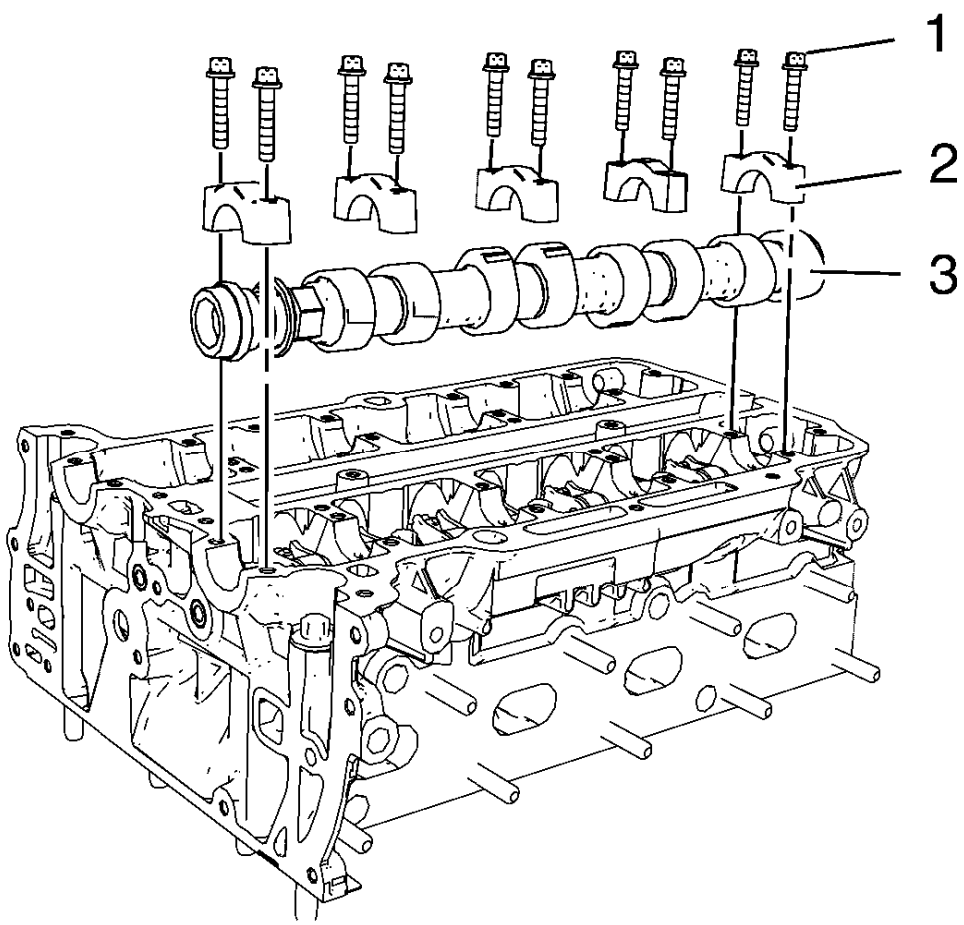

Fig. 460: Exhaust Camshaft, Camshaft Bearing Caps And Bolts
Courtesy of GENERAL MOTORS COMPANY

NOTE: Mind the markings on the camshaft bearing caps. Camshaft bearing caps should be installed in their original position.

1. Lubricate camshaft and camshaft bearing caps with engine oil.
2. Install the exhaust camshaft (3).
3. Install the 5 camshaft bearing caps (2).
4. Install the 10 camshaft bearing cap bolts (1) and handtighten.

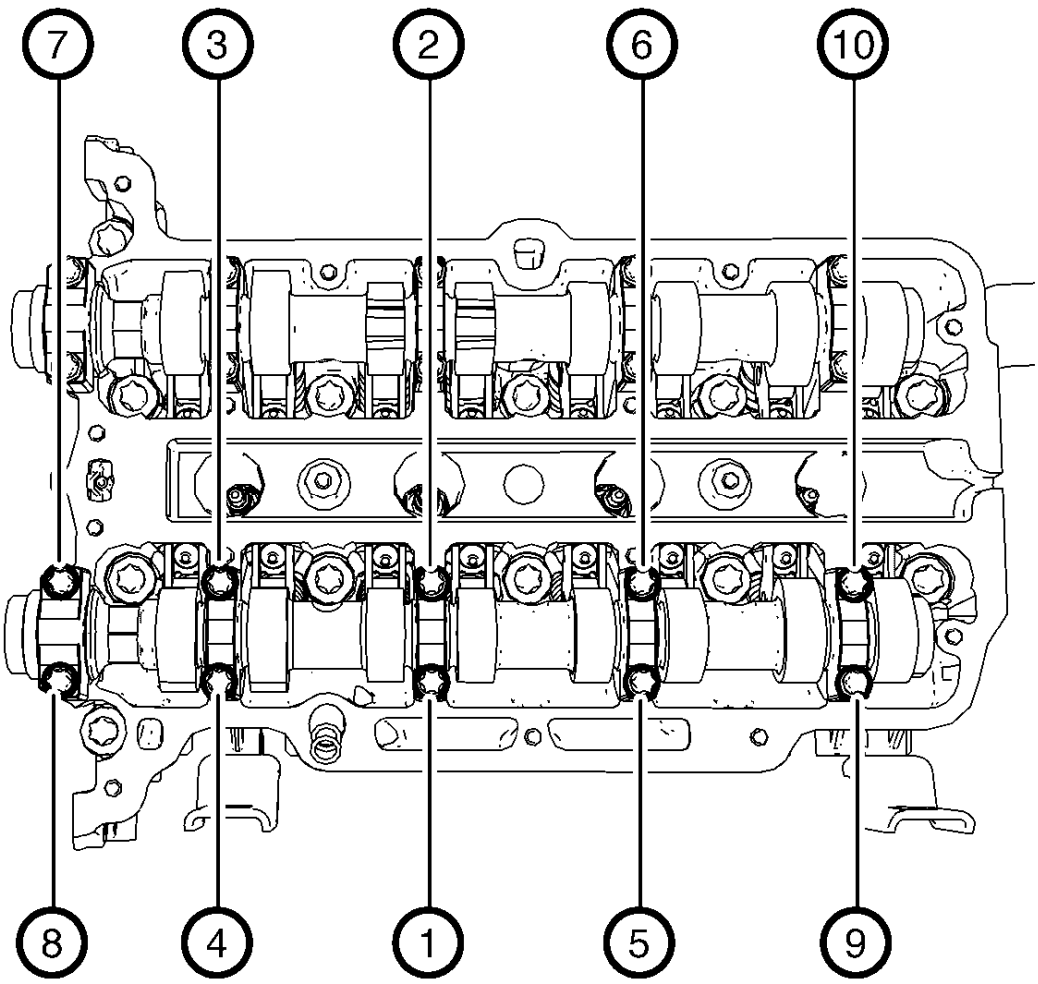

Fig. 461: Exhaust Camshaft Bearing Cap Bolts Tightening Sequence
Courtesy of GENERAL MOTORS COMPANY

CAUTION: Refer to Fastener Caution .

NOTE: Tighten the camshaft bearing cap bolts one turn at a time in order to avoid shape distortion of the camshaft.

5. Tighten the camshaft bearing cap bolts one turn at a time and in a spiral sequence as shown to 8 N.m (71 lb in).

CAMSHAFT SPROCKET INSTALLATION

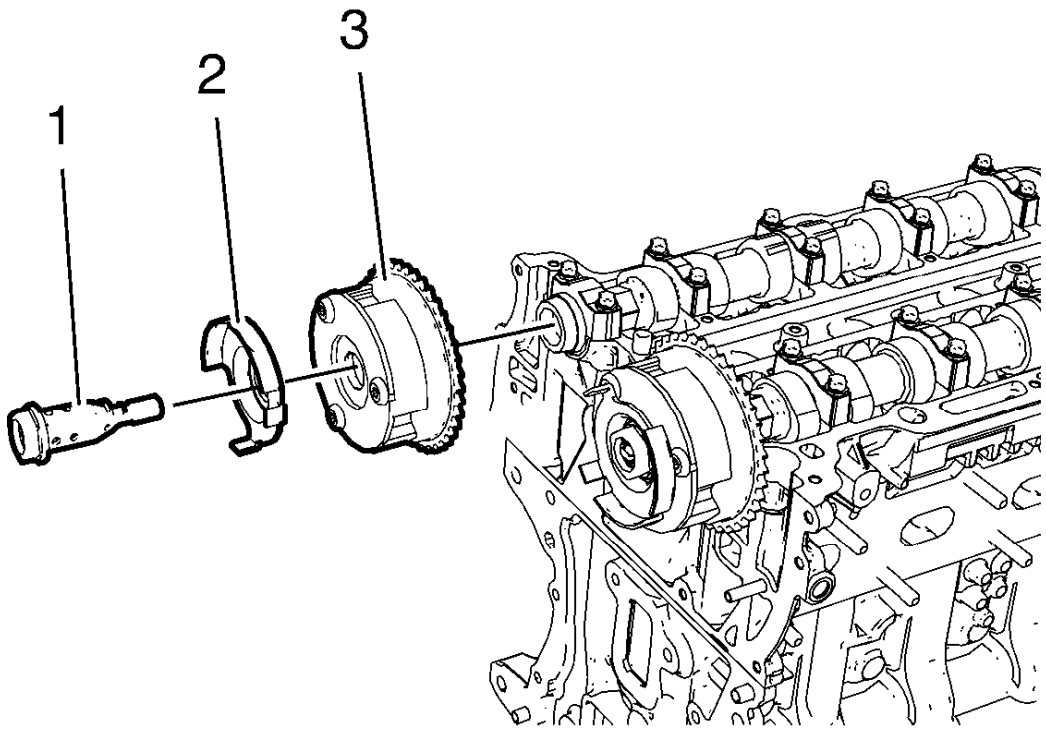

Fig. 462: Intake Camshaft Sprocket, Bolt And Intake Camshaft Position Exciter Wheel
Courtesy of GENERAL MOTORS COMPANY

1. Install the intake camshaft sprocket (3).
2. Install the intake camshaft position sensor exciter wheel (2) and the intake camshaft sprocket bolt (1), but do not tighten yet.
3. Install the exhaust camshaft sprocket.

NOTE: Tightening of camshaft sprocket bolts will be done after the engine front cover installation.

4. Install the exhaust camshaft position sensor exciter wheel and the exhaust camshaft sprocket bolt, but do not tighten yet.

TIMING CHAIN TENSIONER INSTALLATION

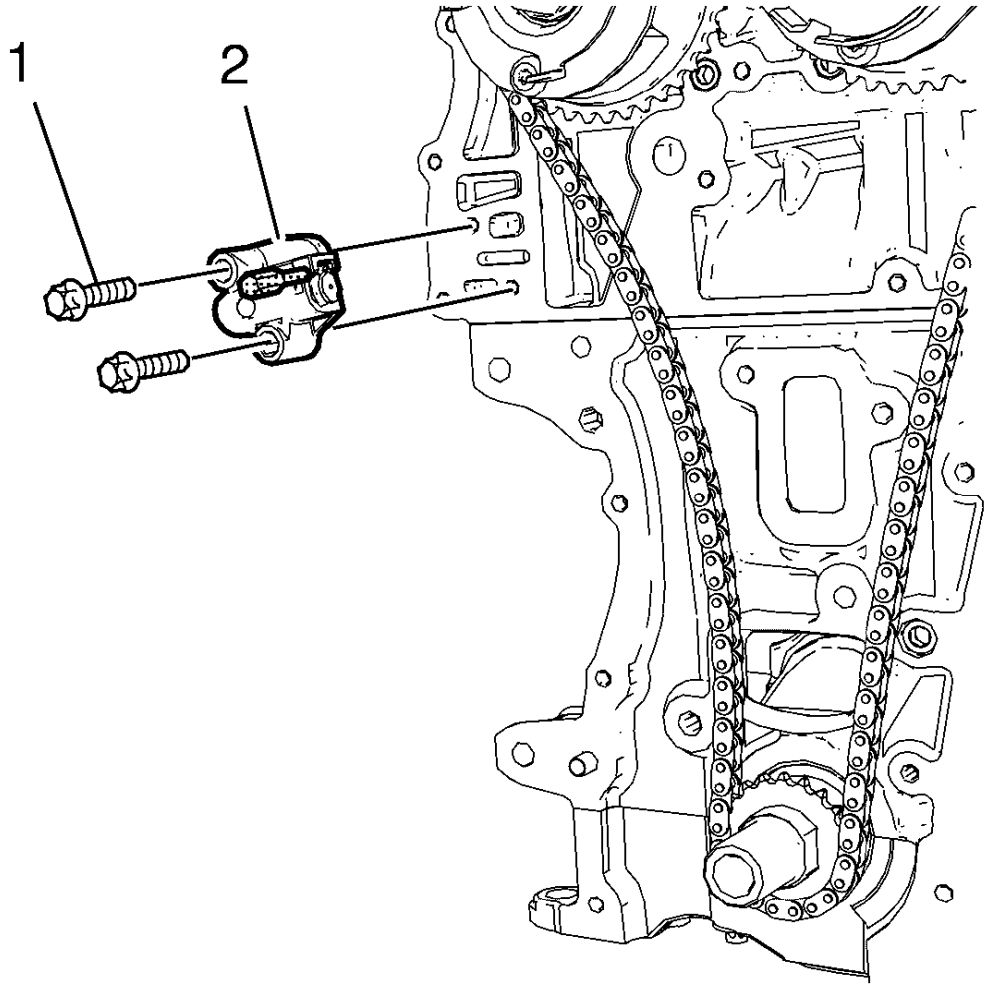

Fig. 463: Timing Chain Tensioner And Bolts
Courtesy of GENERAL MOTORS COMPANY

1. Install the timing chain tensioner (2).

CAUTION: Refer to Fastener Caution .

2. Install the 2 timing chain tensioner bolts (1) and tighten to 8 N.m (71 lb in).

ENGINE FRONT COVER GASKET INSTALLATION

1. Clean the sealing surfaces and remove all remains of old sealing compound material.

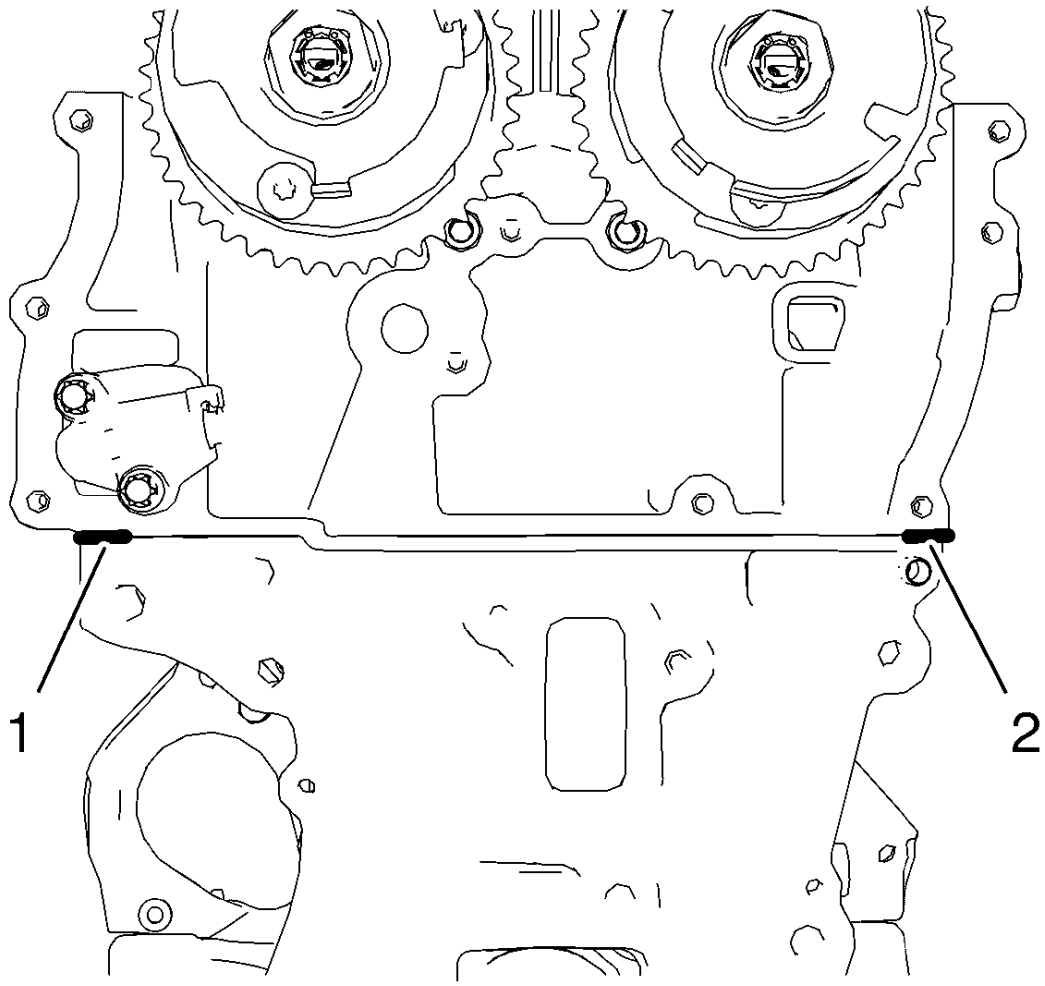

Fig. 464: Sealing Compound Application Areas
Courtesy of GENERAL MOTORS COMPANY

NOTE: The thickness of the sealing bead should be 2 mm (0.0787 in).

2. Apply sealing compound to the shown areas (1) and (2). Refer to **Adhesives, Fluids, Lubricants, and Sealers**.

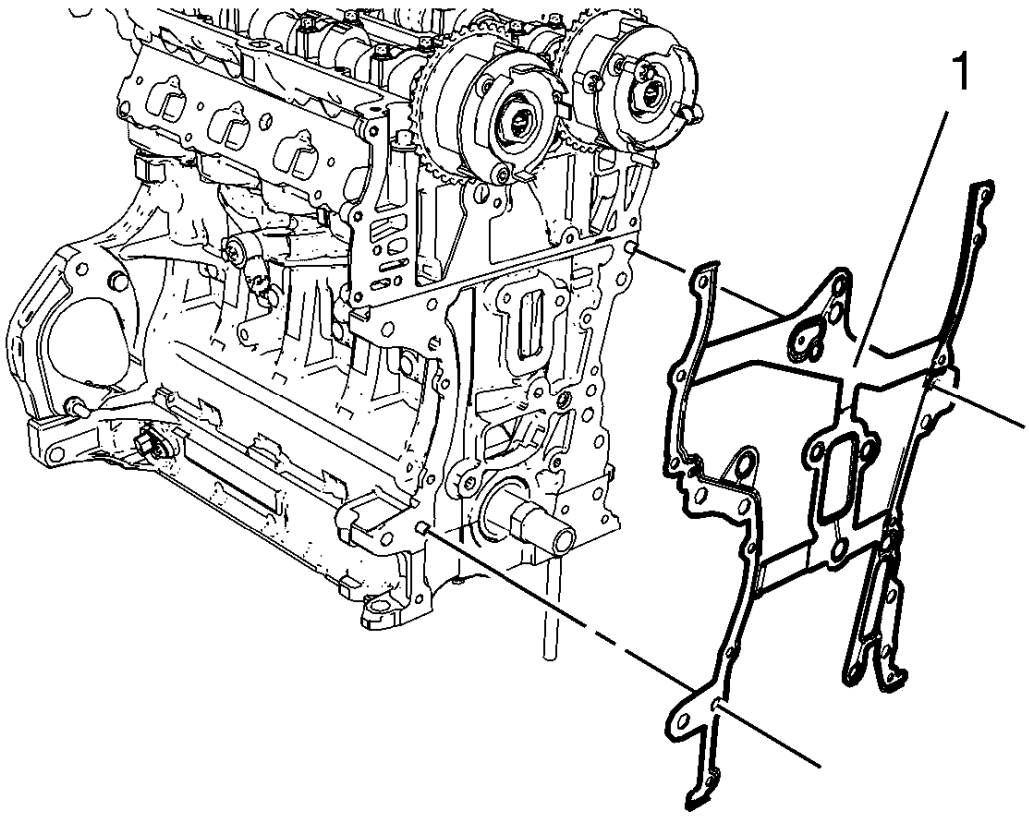

Fig. 465: Engine Front Cover Gasket
Courtesy of GENERAL MOTORS COMPANY

NOTE: Mind the guide sleeves.

3. Install the NEW engine front cover gasket (1).
4. Install the timing chain. Refer to **Camshaft Timing Chain Installation**.

NOTE: The complete installation procedure should not take longer than 10 minutes.

5. Install the engine front cover. Refer to **Engine Front Cover and Oil Pump Installation**.

CAMSHAFT TIMING CHAIN INSTALLATION

Special Tools

- **EN-952** Fixing Pin
- **EN-953-A** Fixing Tool
- **EN-955-10** Fixing Pin from **EN-955** Kit

For equivalent regional tools, refer to **Special Tools**.

1. The engine should be adjusted to TDC.
2. The crankshaft should be locked with **EN-952** fixing pin.
3. The camshaft should be locked with **EN-953-A** fixing tool.

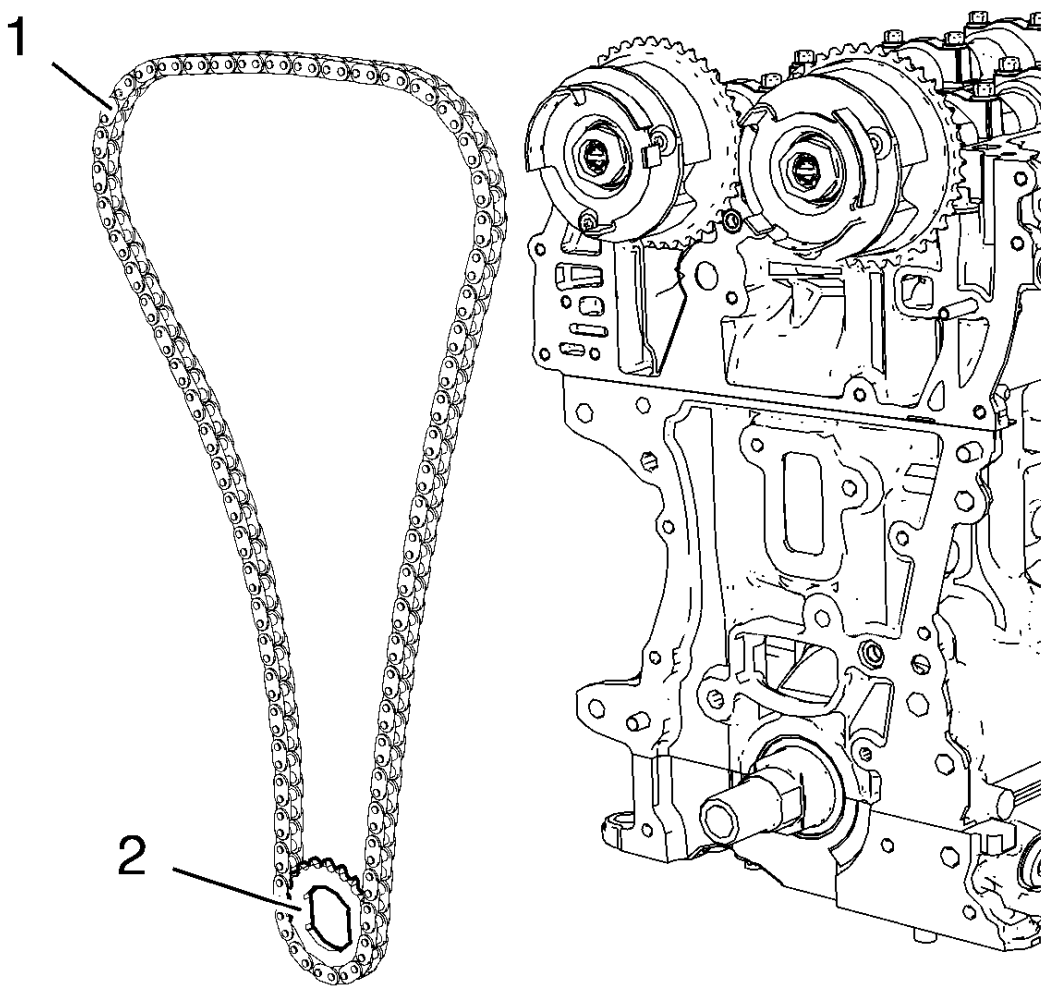

Fig. 466: Timing Chain And Crankshaft Sprocket
Courtesy of GENERAL MOTORS COMPANY

4. Install the timing chain (1) along with the crankshaft sprocket (2).

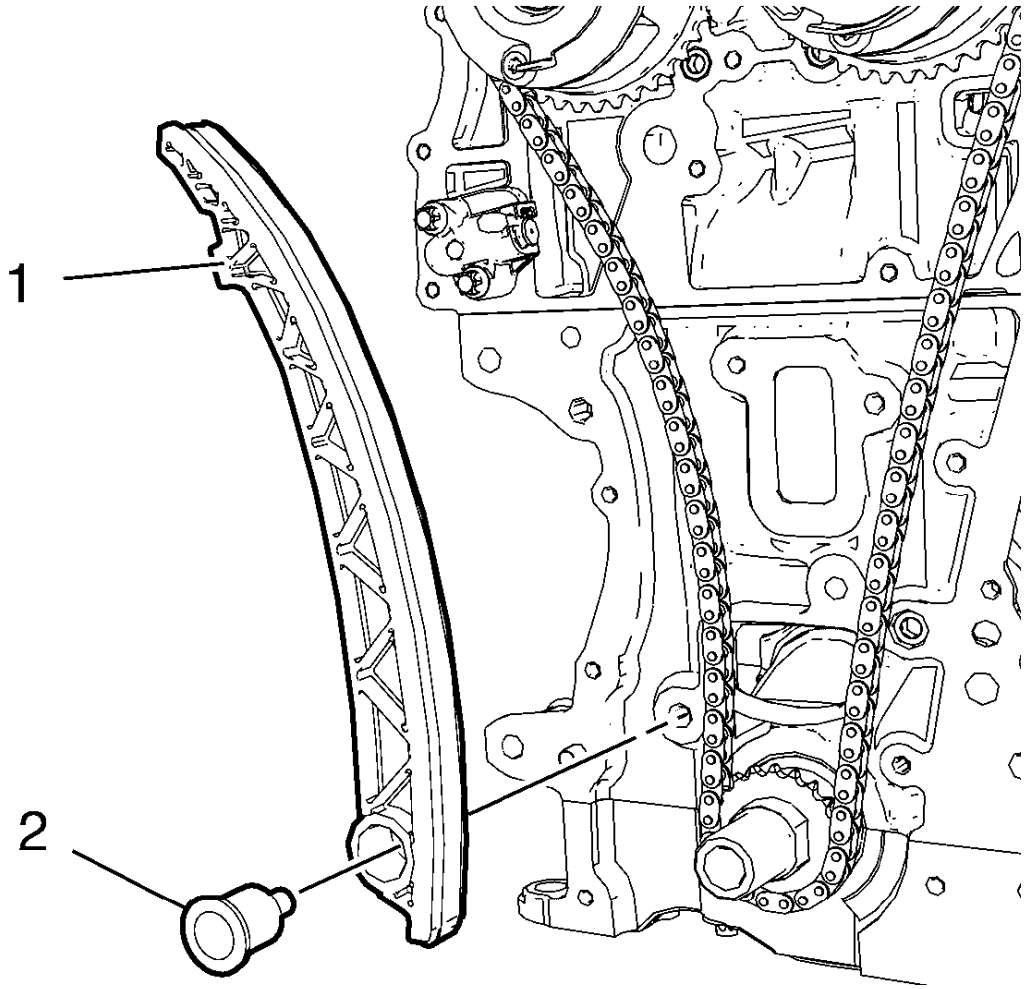

Fig. 467: Timing Chain Tensioner Shoe And Bolt
Courtesy of GENERAL MOTORS COMPANY

5. Install the timing chain tensioner shoe (1).

CAUTION: Refer to Fastener Caution .

6. Install the timing chain tensioner shoe bolt (2) and tighten to 20 N.m (15 lb ft).

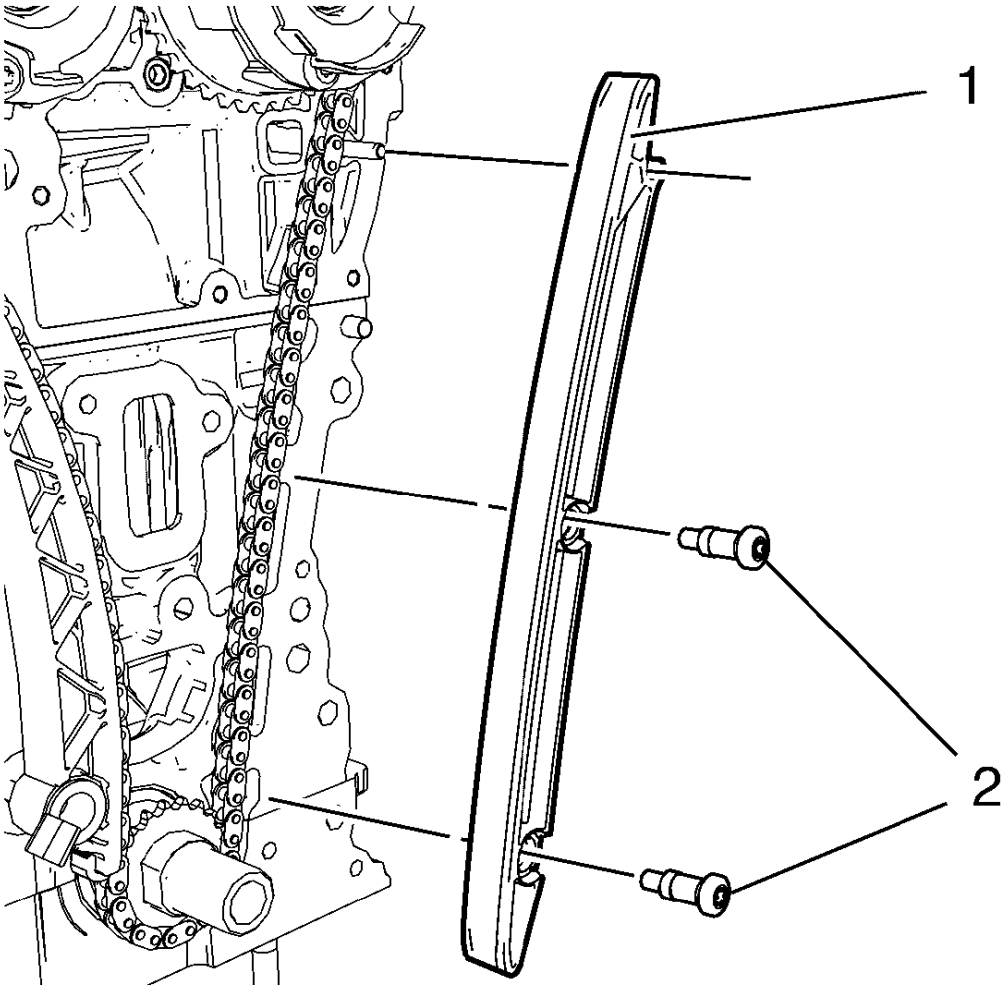

Fig. 468: Timing Chain Guide Right Side
Courtesy of GENERAL MOTORS COMPANY

7. Install the timing chain guide right side (1).
8. Install the 2 timing chain guide right side bolts (2) and tighten to 8 N.m (71 lb in).

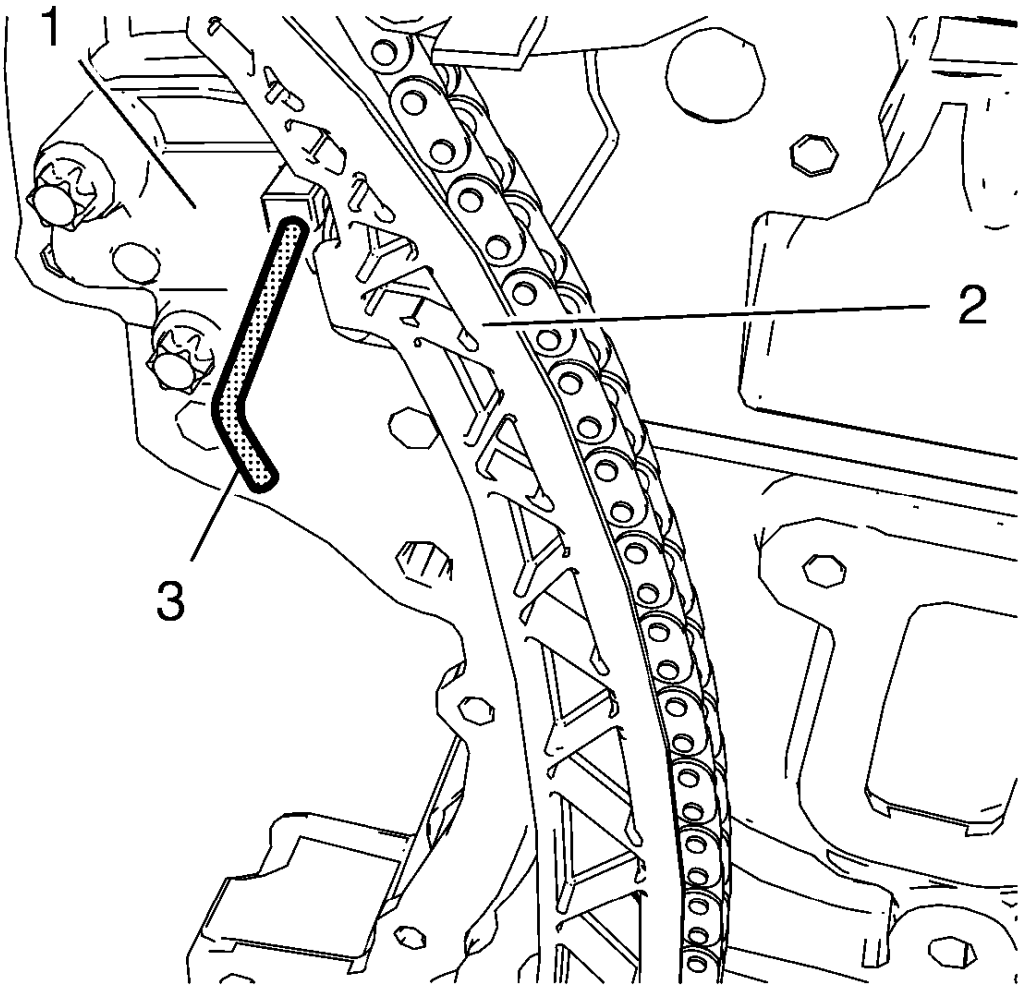

Fig. 469: Timing Chain And Timing Chain Tensioner
Courtesy of GENERAL MOTORS COMPANY

9. Push the timing chain (2) in direction to the timing chain tensioner (1) and remove the **EN-955-10** fixing pin (3).

The upper timing chain guide will be installed after the installation of the engine front cover and the fastening of the camshaft sprockets.

ENGINE FRONT COVER AND OIL PUMP INSTALLATION

Special Tools

- **EN-952** Fixing Pin
- **EN-953-A** Fixing Tool
- **EN-49977-100** Transmitter Disc Fixation
- **EN-49977-200** Fixing Tool

For equivalent regional tools, refer to **Special Tools**.

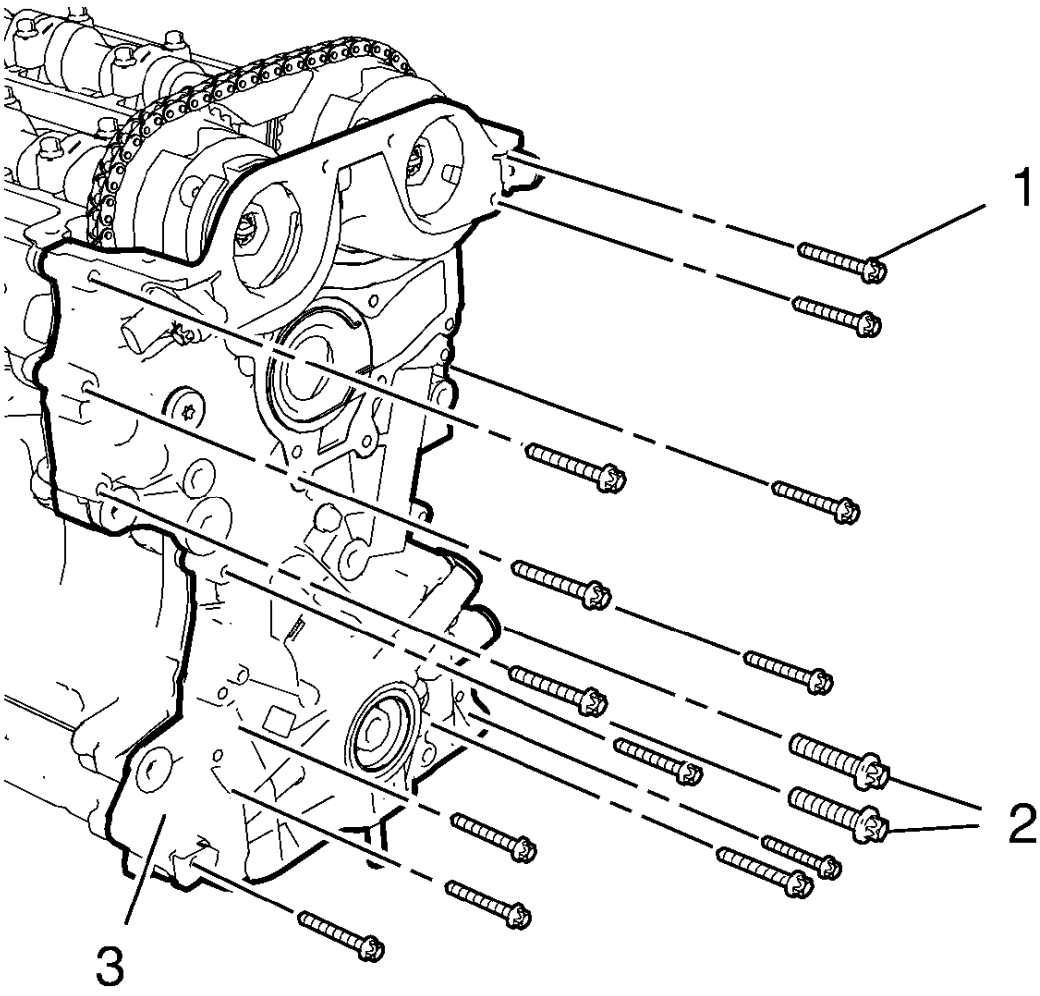

Fig. 470: M6, M10 Front Cover Bolts And Engine Front Cover
Courtesy of GENERAL MOTORS COMPANY

NOTE: Mind the guide sleeves when installing engine front cover.

1. Install the engine front cover (3).
2. Install the 13 engine front cover bolts M6 (1).
3. Install the 2 engine front cover bolts M10 (2).

CAUTION: Refer to Fastener Caution .

4. Tighten the 13 engine front cover bolts M6 to 8 N.m (71 lb in).

5. Tighten the 2 engine front cover bolts M10 to 35 N.m (26 lb ft).

Camshaft Sprocket Fastening

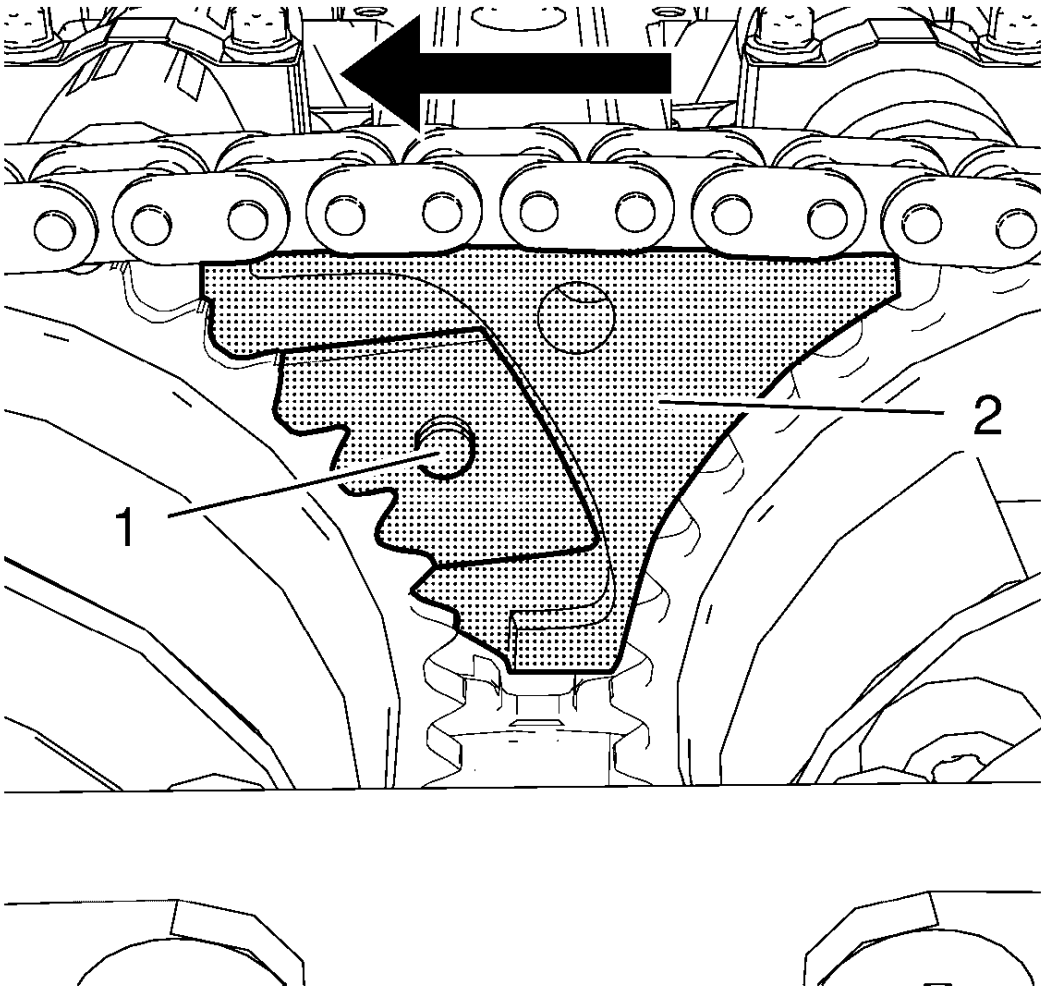

Fig. 471: Intake Camshaft Sprocket Gearing And Special Tool
Courtesy of GENERAL MOTORS COMPANY

NOTE: Push the fixing tool in the direction of the arrow to ensure it fully engages.

1. Install **EN-49977-200** fixing tool (2) and ensure that the gearing of the fixing tool engages with the intake camshaft sprocket gearing (1).

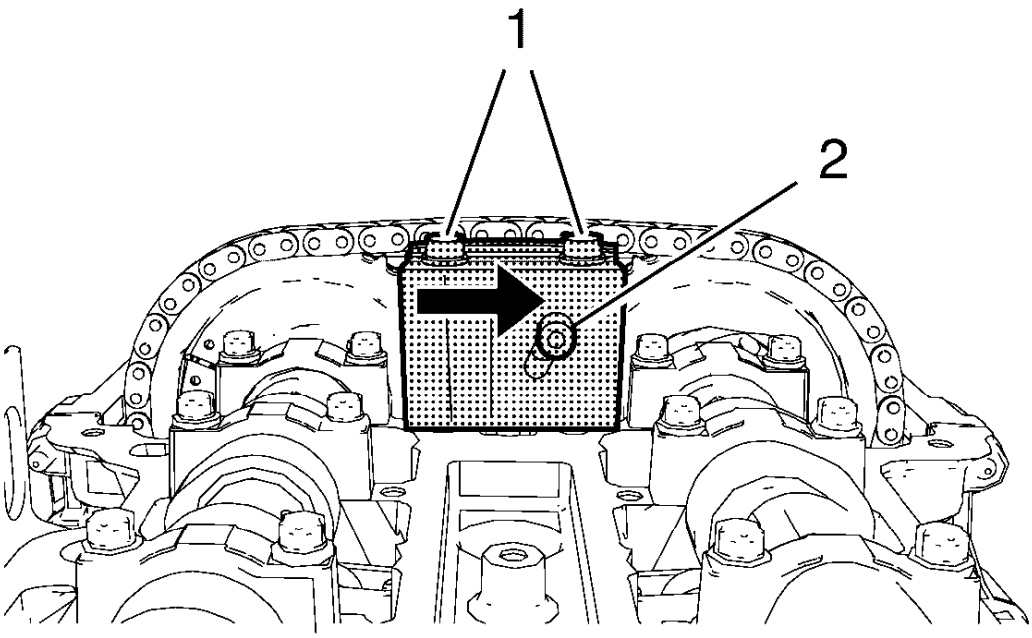

Fig. 472: Adjuster Bolt And Fastening Bolts
Courtesy of GENERAL MOTORS COMPANY

2. Tighten the 2 fastening bolts (1) of **EN-49977-200** fixing tool while pushing the fixing tool in direction of the arrow.
3. Tighten the adjuster bolt (2).

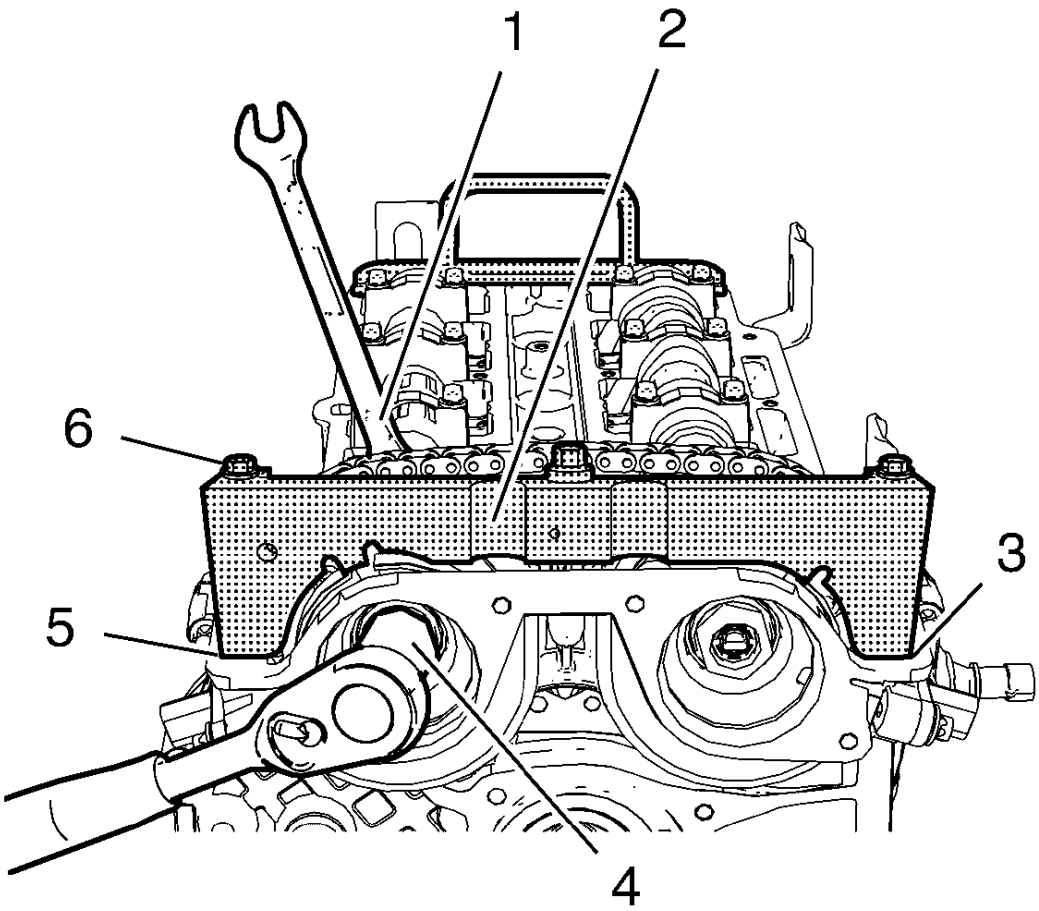

Fig. 473: Fastening Bolts And Fixation Tool
Courtesy of GENERAL MOTORS COMPANY

NOTE: A wrong installation position is possible. Make sure that the holding tool is fully installed to the cylinder head in areas (3) and (5).

4. Install **EN-49977-100** transmitter disc holder (2) to find and hold the correct position of the camshaft position exciter wheels.
5. Tighten the fastening bolts (6) of **EN-49977-100** transmitter disc holder.

CAUTION: Refer to Fastener Caution .

CAUTION: Refer to Torque-to-Yield Fastener Caution .

6. Tighten the NEW intake camshaft sprocket bolt (4) while holding the hexagon (1) of the intake camshaft to 50 N.m (37 lb ft).
7. Tighten the intake camshaft sprocket bolt (4) while holding the hexagon (1) of the intake camshaft to an additional 60 degrees.
8. Tighten the NEW exhaust camshaft sprocket bolt while holding the hexagon of the exhaust camshaft to 50 N.m (37 lb ft).
9. Tighten the exhaust camshaft sprocket bolt while holding the hexagon of the exhaust camshaft to an additional 60 degrees.
10. Remove **EN-49977-100** transmitter disc holder and **EN-49977-200** fixing tool.

Upper Timing Chain Guide Installation

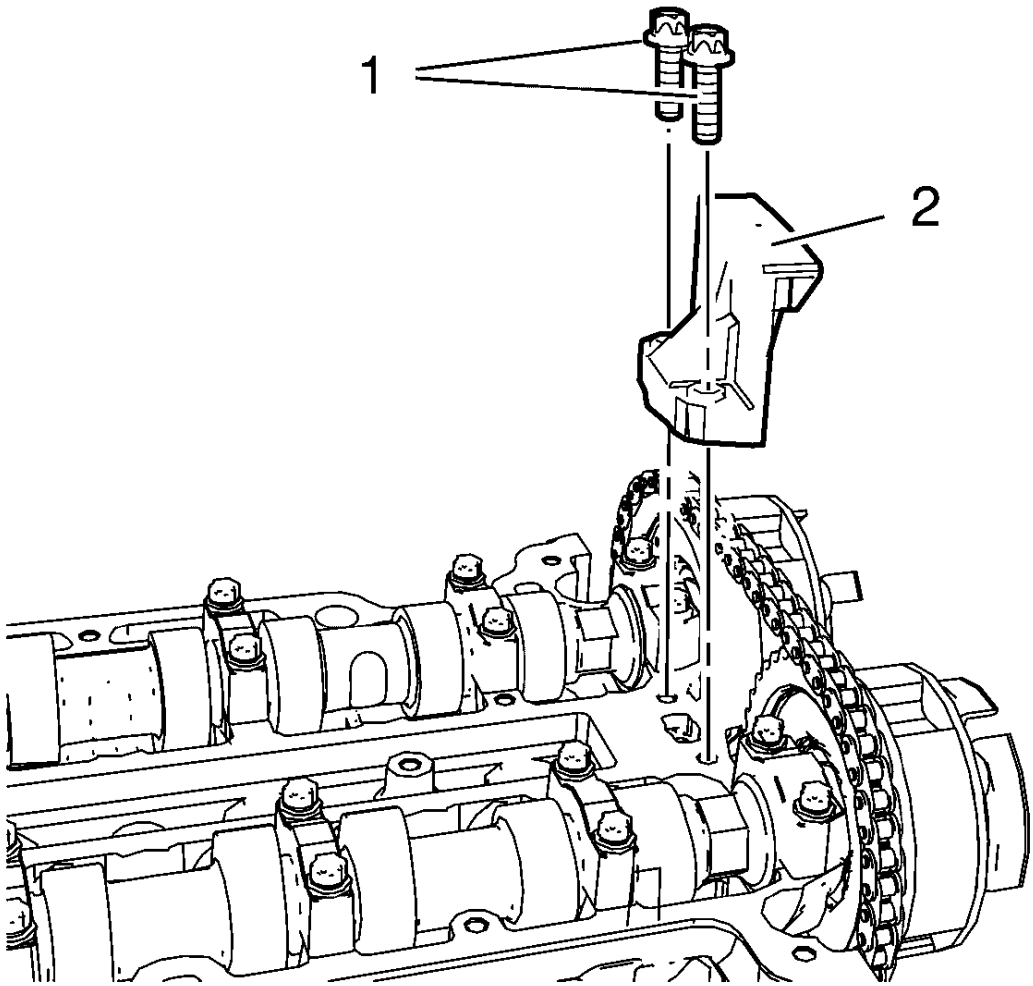

Fig. 474: Upper Timing Chain Guide And Bolts
Courtesy of GENERAL MOTORS COMPANY

1. Install the upper timing chain guide (2).

2. Install the 2 upper timing chain guide bolts (1) and tighten to 8 N.m (71 lb in).
3. Remove **EN-953-A** fixing tool and **EN-952** fixing pin.
4. Install crankshaft bearing cap tie plate hole plug and seal ring and tighten to 50 N.m (37 lb ft).

OIL PAN INSTALLATION

Special Tools

EN-49980 Guidance Pins

For equivalent regional tools, refer to **Special Tools**.

1. Clean the sealing surfaces from old sealing material, dirt, oil and grease.

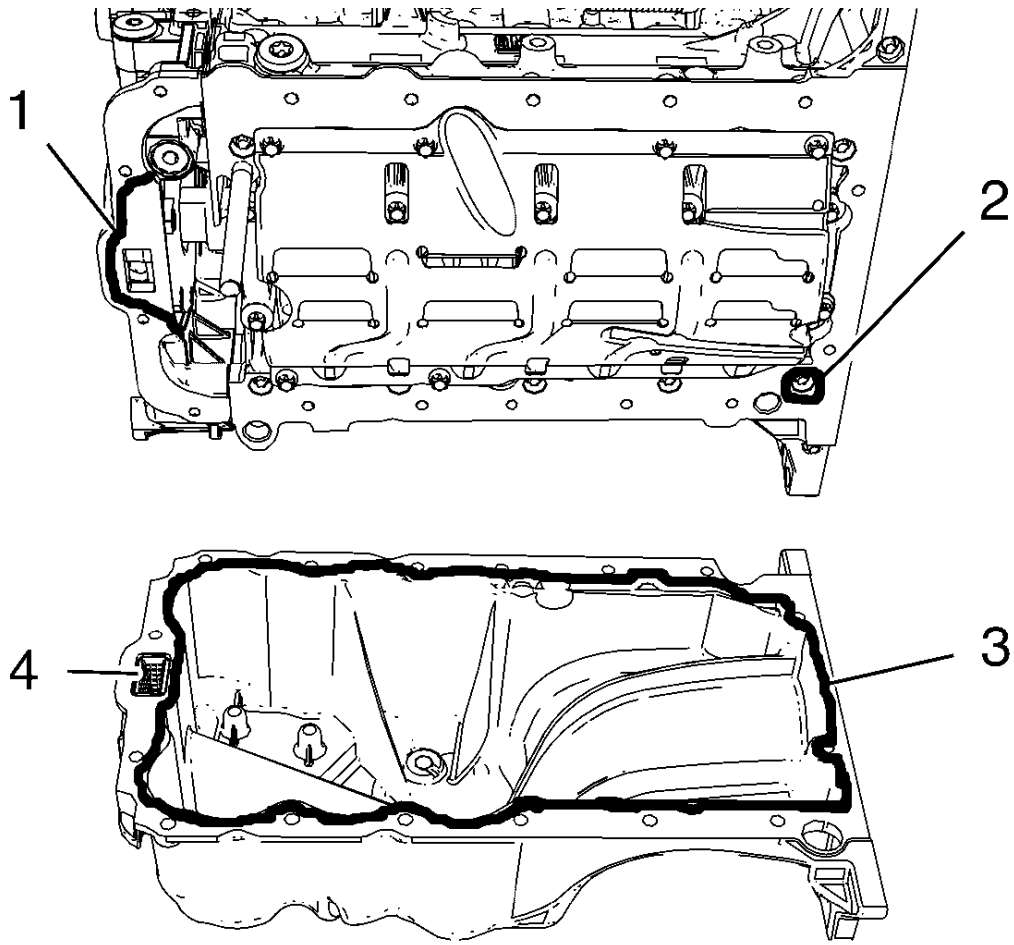

Fig. 475: Engine Front Cover, Oil Suction Gallery And Screw Bore
Courtesy of GENERAL MOTORS COMPANY

NOTE: **The sealing bead should be applied close to the inner edge of the oil pan. Take care that the oil suction gallery (4) will not get contaminated with sealing compound or dirt. The thickness of the sealing bead (3) should be 2 mm (0.0787 in).**

2. Apply sealing compound to the oil pan. Refer to **Adhesives, Fluids, Lubricants, and Sealers**.
3. Apply sealing compound to the groove of the engine front cover (1). Refer to **Adhesives, Fluids, Lubricants, and Sealers**.
4. Apply sealing compound around the screw bore (2) of the crankshaft bearing cap tie plate.

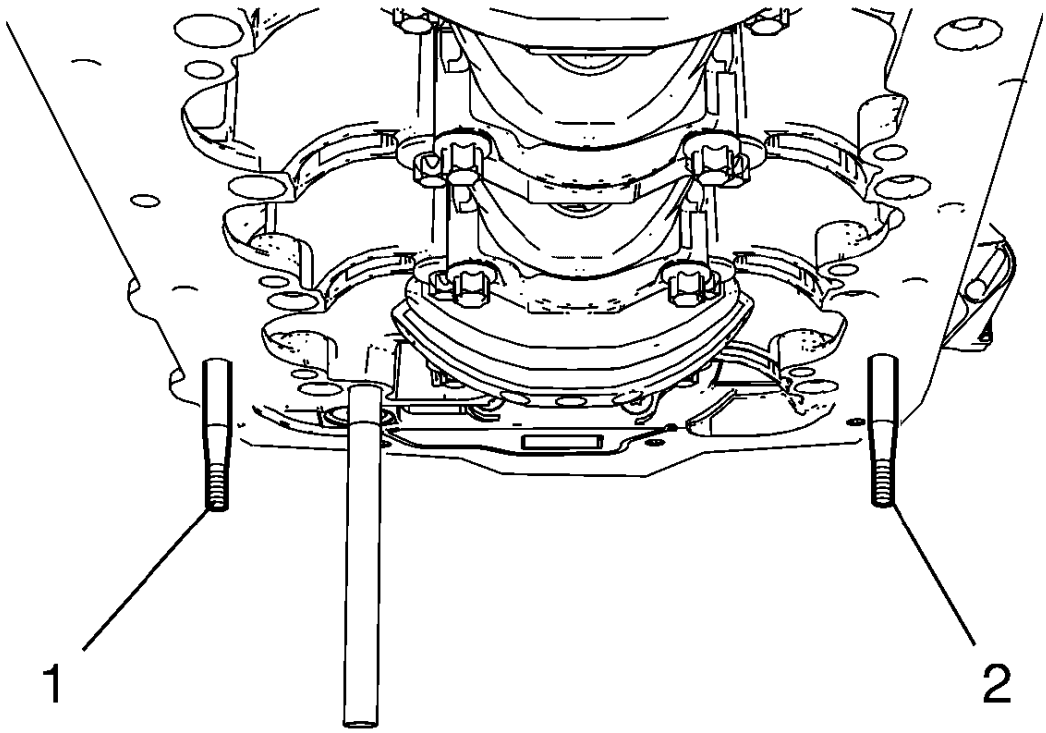

Fig. 476: Engine Oil Pan Pins
Courtesy of GENERAL MOTORS COMPANY

NOTE: **The complete installation procedure of the oil pan should not take longer than 10 minutes.**

5. Install the 2 **EN-49980** pins (1) and (2) to the shown oil pan screw bores.

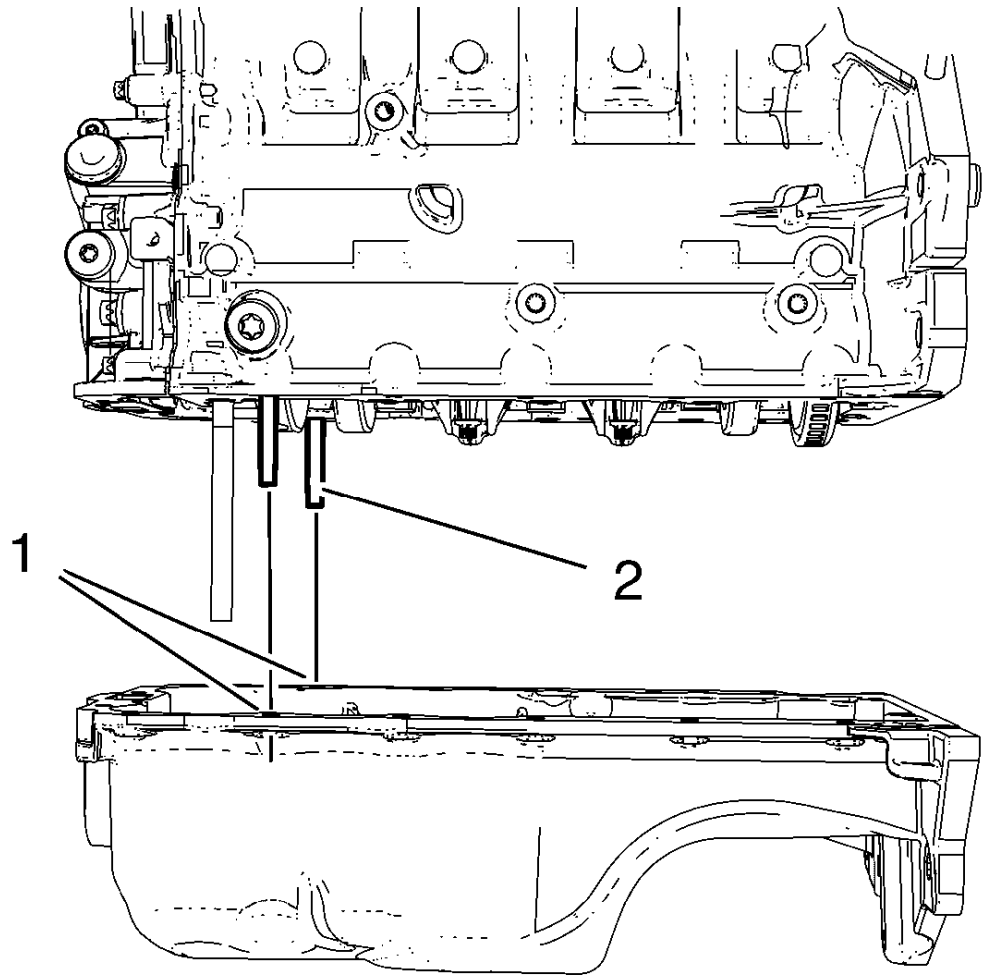

Fig. 477: Engine Oil Pan Pins And Screw Bores
Courtesy of GENERAL MOTORS COMPANY

CAUTION: Use care when installing the oil pan to prevent disruption of the sealing bead. The sealing bead should remain consistent until the oil pan is mated with the engine. An inconsistent sealing bead can cause an insufficient seal and result in engine damage.

6. Carefully install the oil pan. Guide the oil pan with **EN-49980** pins (2) and the equivalent screw bores (1).
7. Hold the oil pan with 4 oil pan bolts.
8. Remove **EN-49980** pins.
9. Install the remaining 12 oil pan bolts and hand tighten.

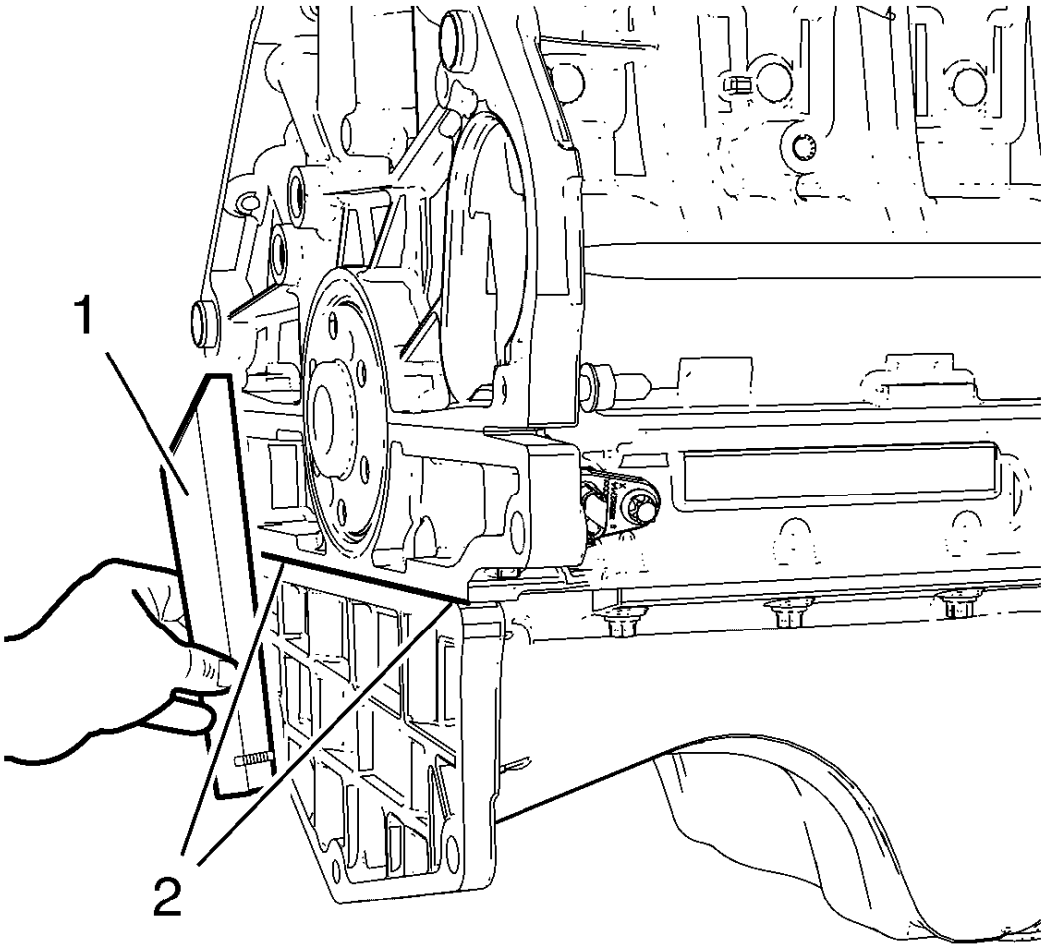

Fig. 478: Straight Edge Tool
Courtesy of GENERAL MOTORS COMPANY

10. Lay a straight edge (1) against the oil pan and engine block. Using a rubber mallet, adjust the transition in area (2) until there is no clearance between oil pan and the straight edge.

CAUTION: Refer to Fastener Caution .

11. Tighten the 16 oil pan bolts to 10 N.m (89 lb in).

ENGINE OIL HEATER INSTALLATION

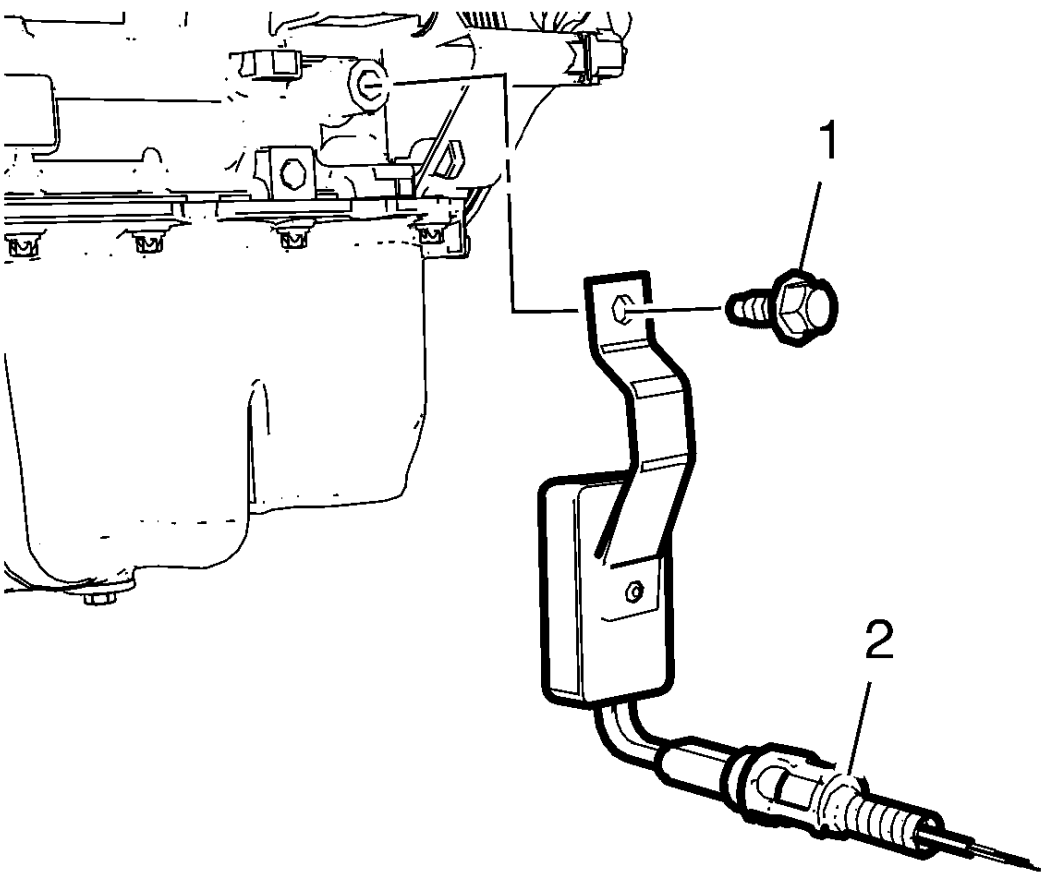

Fig. 479: Engine Oil Heater
Courtesy of GENERAL MOTORS COMPANY

1. Install the engine oil heater (2).

CAUTION: Refer to Fastener Caution .

2. Install the engine oil heater bolt (1) and tighten to 40 N.m (30 lb ft).

CAMSHAFT POSITION ACTUATOR SOLENOID VALVE INSTALLATION

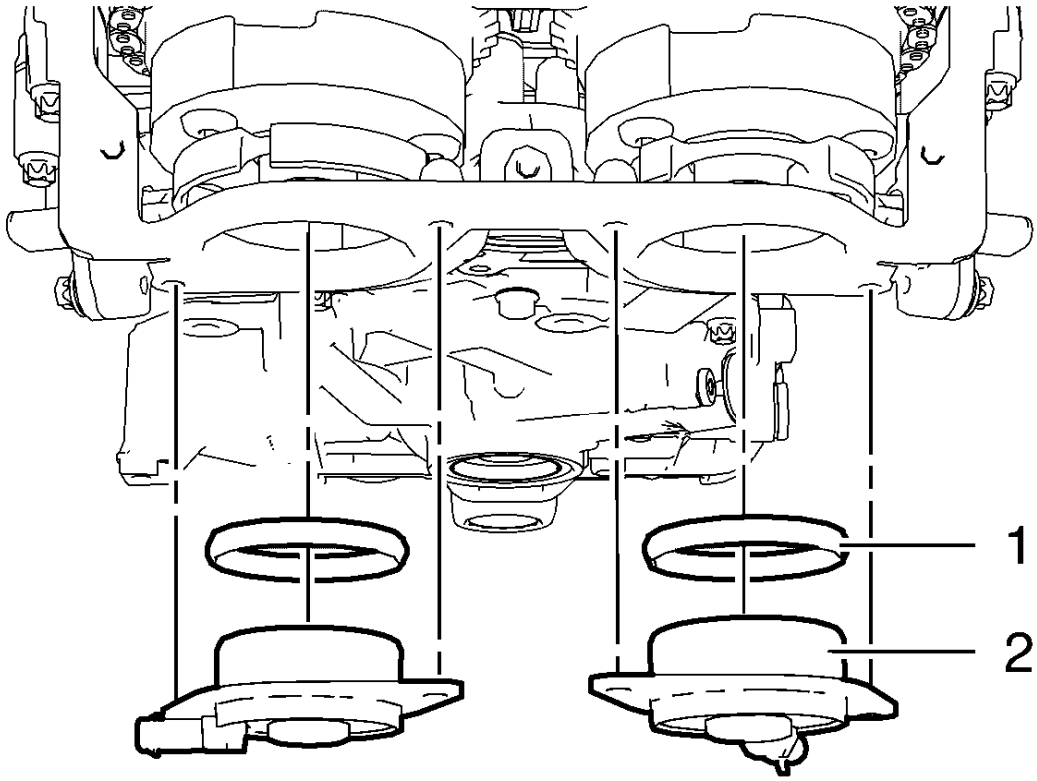

Fig. 480: Camshaft Position Actuator Solenoid Valves And Seal Rings
Courtesy of GENERAL MOTORS COMPANY

CAUTION: The camshaft position actuator solenoid valves must be kept parallel to the engine front cover during removal and installation. The camshaft position actuator solenoid valves can be damaged if they become wedged or stuck during this process.

1. Install the 2 camshaft position actuator solenoid valves (2) and the 2 seal rings (1) by carefully and evenly pressing.

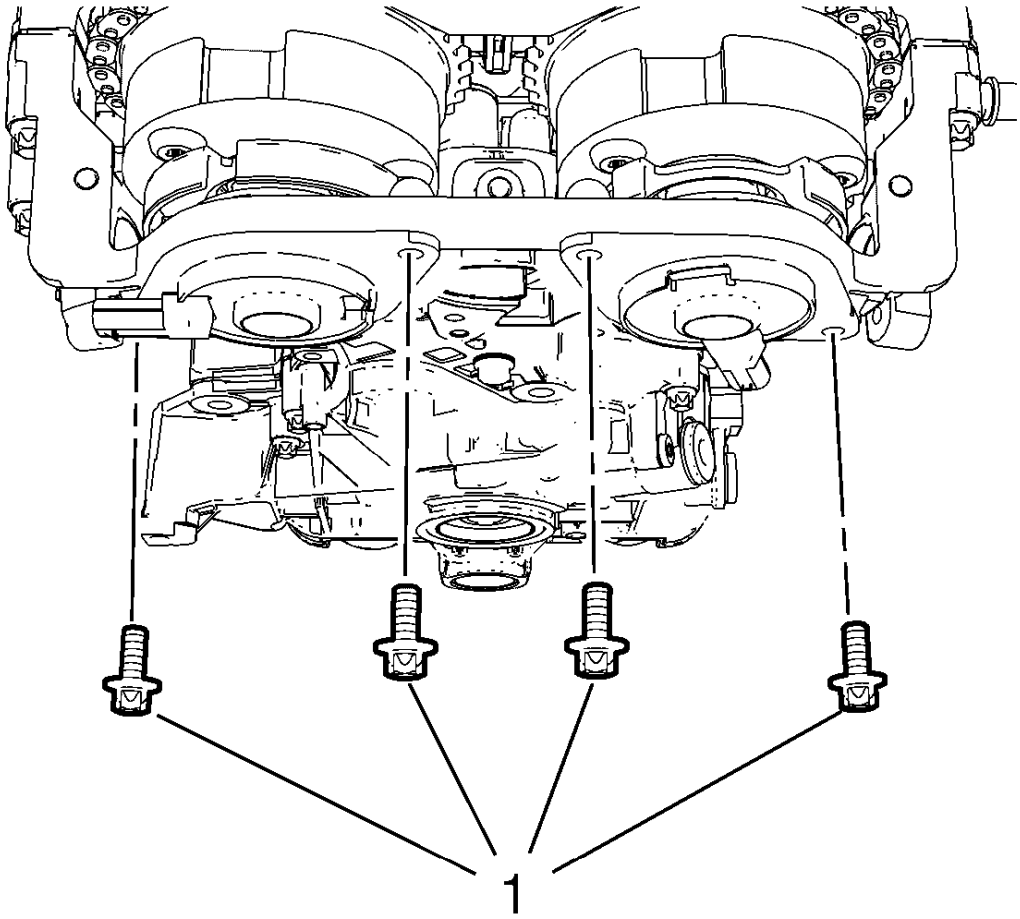

Fig. 481: Camshaft Position Actuator Solenoid Valve Bolts
Courtesy of GENERAL MOTORS COMPANY

CAUTION: Refer to Fastener Caution

2. Install the 4 camshaft position actuator solenoid valve bolts (1) and tighten to 8 N.m (71 lb in).

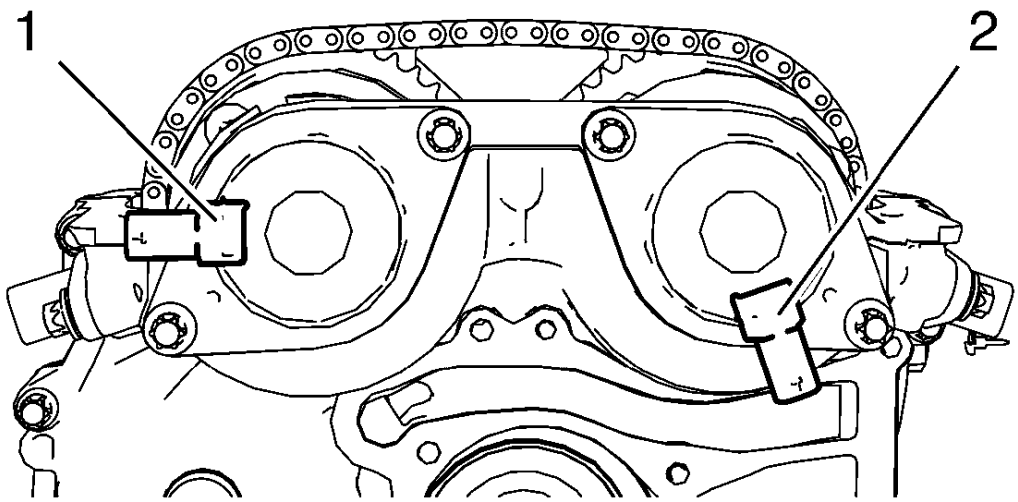

Fig. 482: Camshaft Position Actuator Solenoid Valves Proper Position
Courtesy of GENERAL MOTORS COMPANY

3. The 2 camshaft position actuator solenoid valves should be installed in the position as shown (1) and (2).

CAMSHAFT COVER INSTALLATION

1. Clean the sealing surfaces.

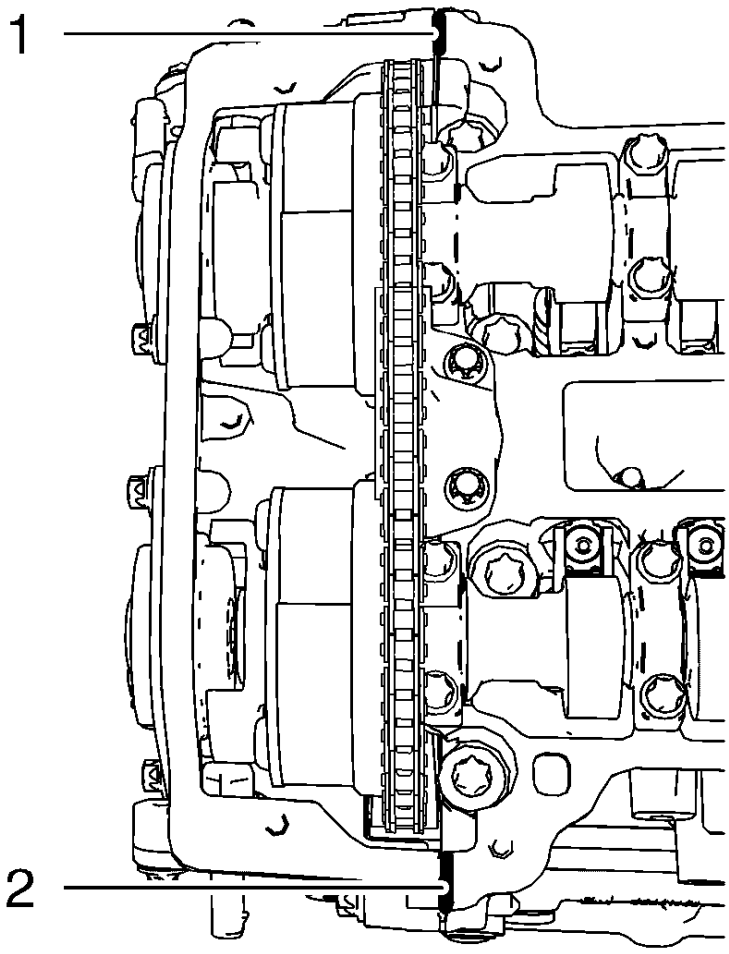

Fig. 483: Sealing Compound Application Areas
Courtesy of GENERAL MOTORS COMPANY

NOTE: The thickness of the sealing bead should be 2 mm (0.0787 in).

2. Apply sealing compound to areas (1) and (2). Refer to **Adhesives, Fluids, Lubricants, and Sealers**.

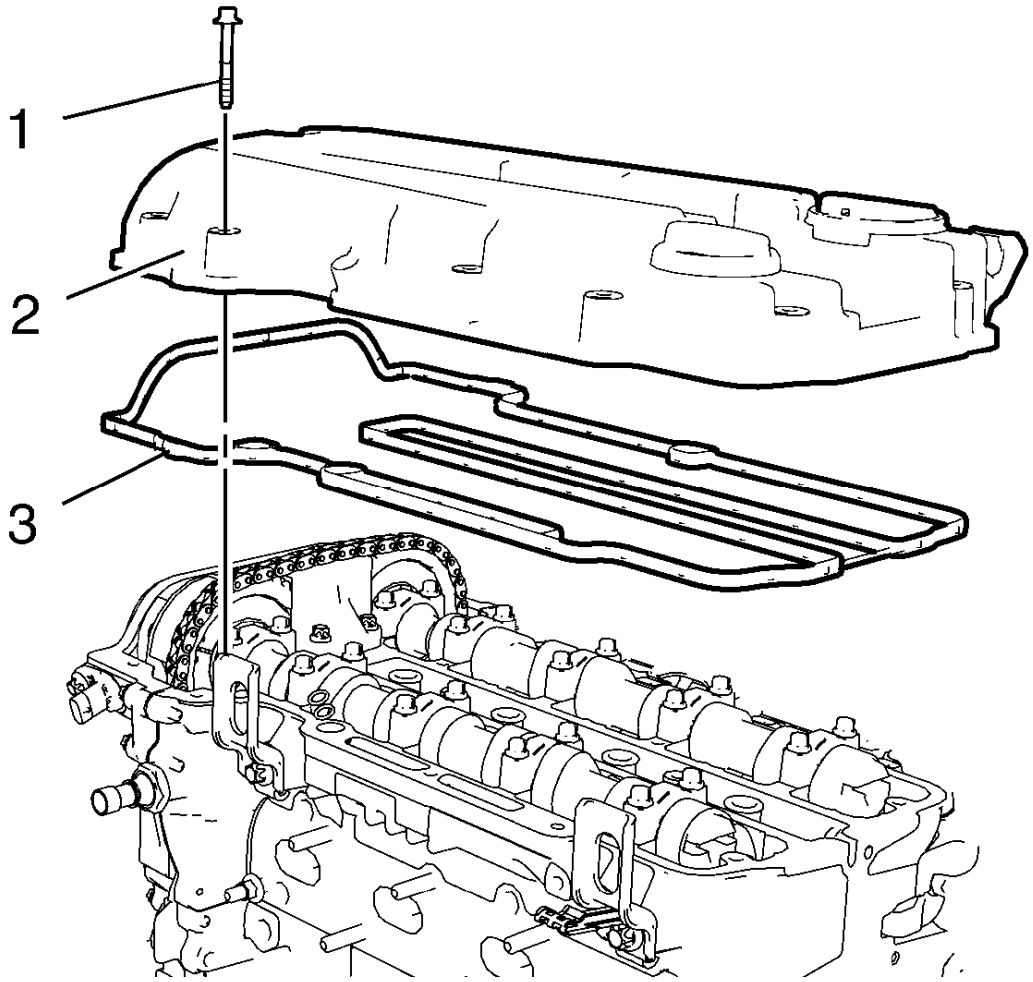

Fig. 484: Camshaft Cover And Gasket
Courtesy of GENERAL MOTORS COMPANY

NOTE: The installation procedure should not take longer than 10 minutes.

3. Install the camshaft cover (2) and a NEW gasket (3).
4. Install the 15 camshaft cover bolts (1).

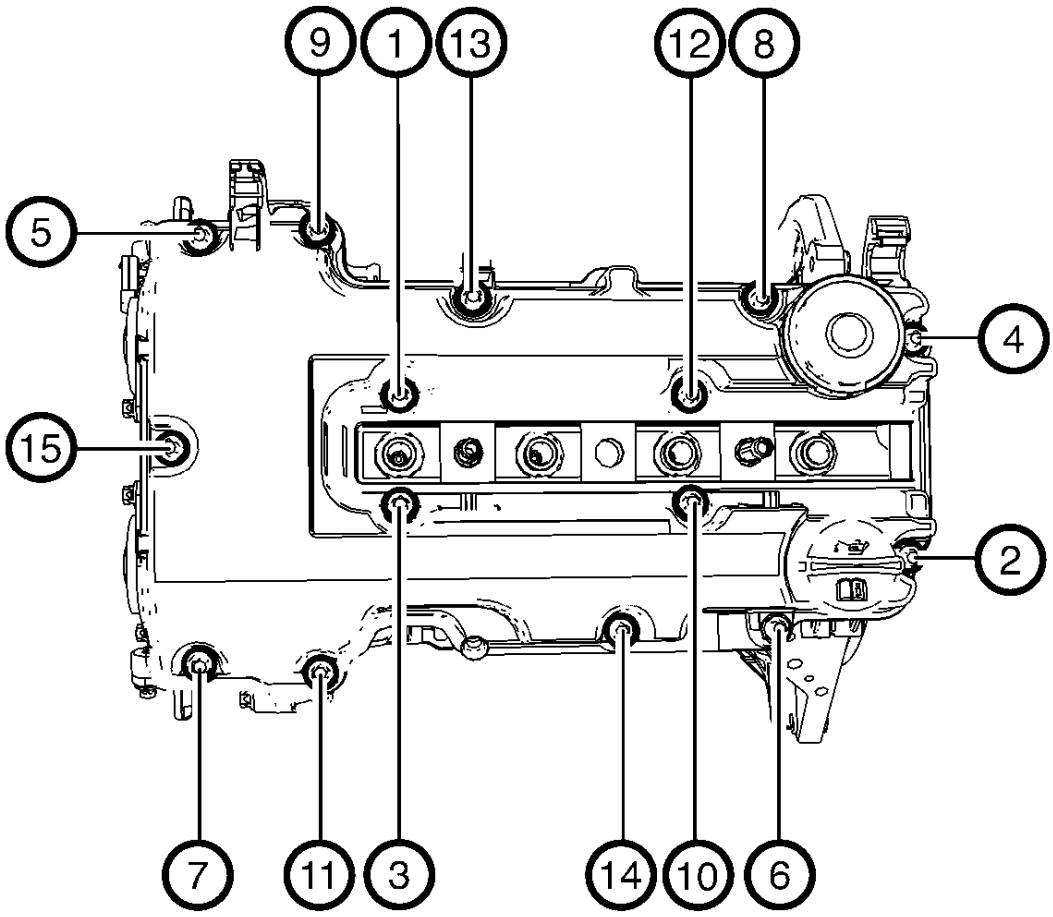

Fig. 485: Camshaft Cover Bolts Tightening Sequence
Courtesy of GENERAL MOTORS COMPANY

5. Tighten the 15 camshaft cover bolts in a sequence as shown to 8 N.m (71 lb in).

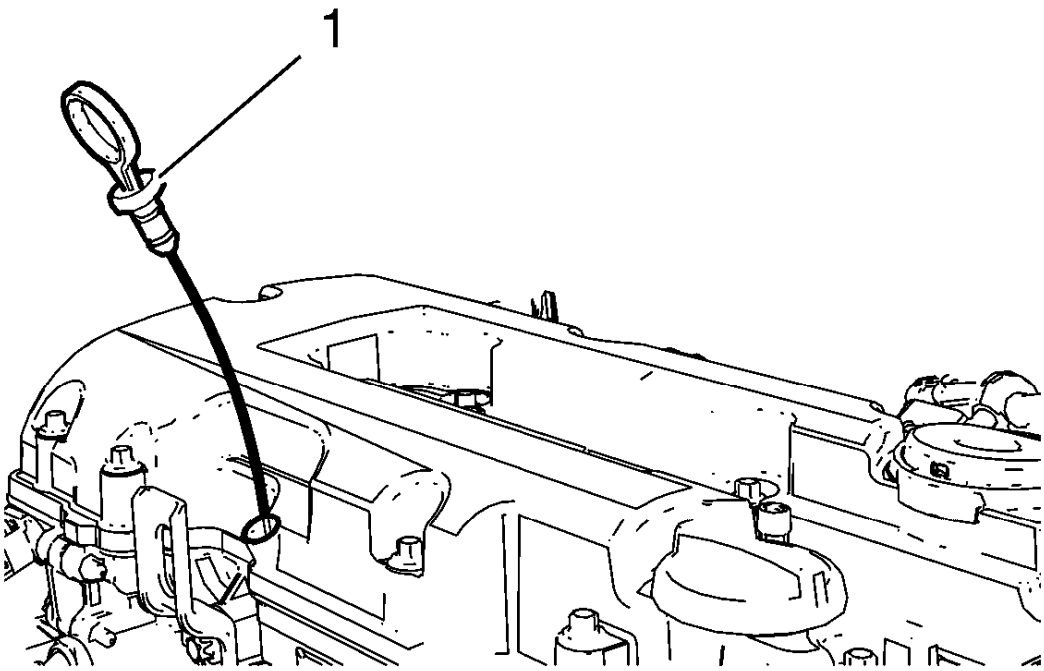

Fig. 486: Engine Oil Level Indicator
Courtesy of GENERAL MOTORS COMPANY

6. Install the oil level indicator (1).

IGNITION COIL INSTALLATION

Special Tools

EN-6009 Remover and Installer Ignition Module

For equivalent regional tools, refer to **Special Tools**.

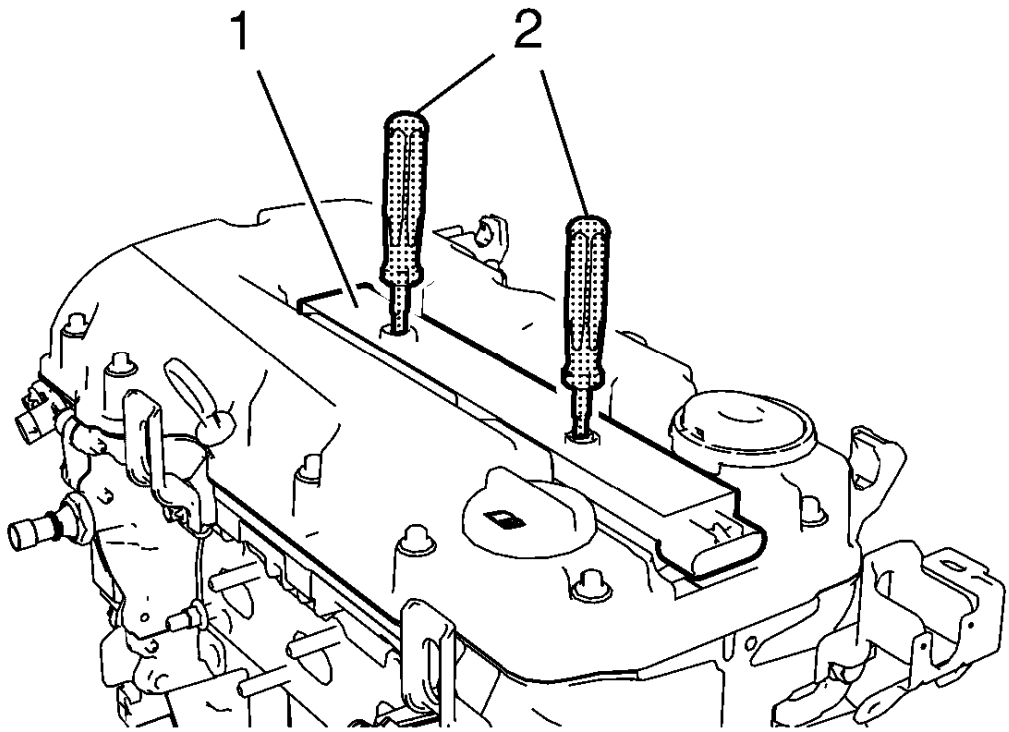

Fig. 487: Ignition Coil And Remover/Installer
Courtesy of GENERAL MOTORS COMPANY

1. Install the ignition coil (1) and remove **EN-6009** remover and installer (2).

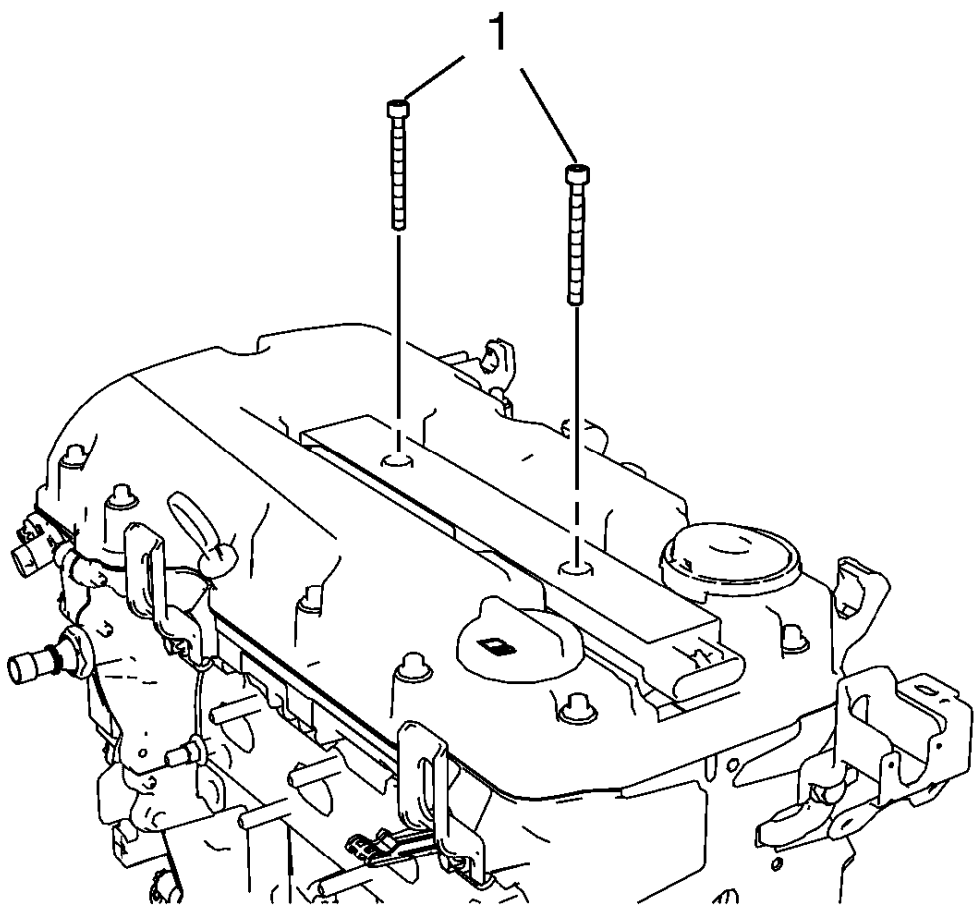

Fig. 488: Ignition Coil Bolts
Courtesy of GENERAL MOTORS COMPANY

CAUTION: Refer to Fastener Caution .

2. Install the 2 ignition coil bolts (1) and tighten to 8 N.m (71 lb in).

ENGINE FLYWHEEL INSTALLATION

Special Tools

- **EN-470-B** Angular Torque Wrench
- **EN-652** Flywheel Holder

For equivalent regional tools, refer to **Special Tools**.

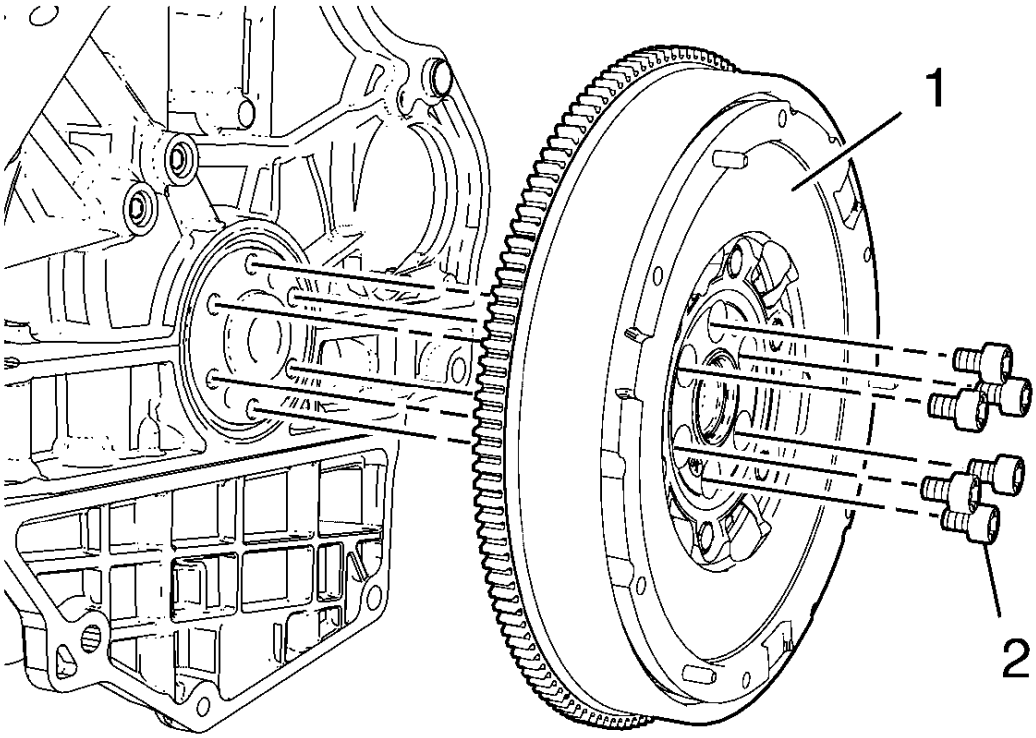

Fig. 489: Engine Flywheel And Bolts
Courtesy of GENERAL MOTORS COMPANY

1. Install the engine flywheel (1).
2. Install the 6 NEW engine flywheel bolts (2).

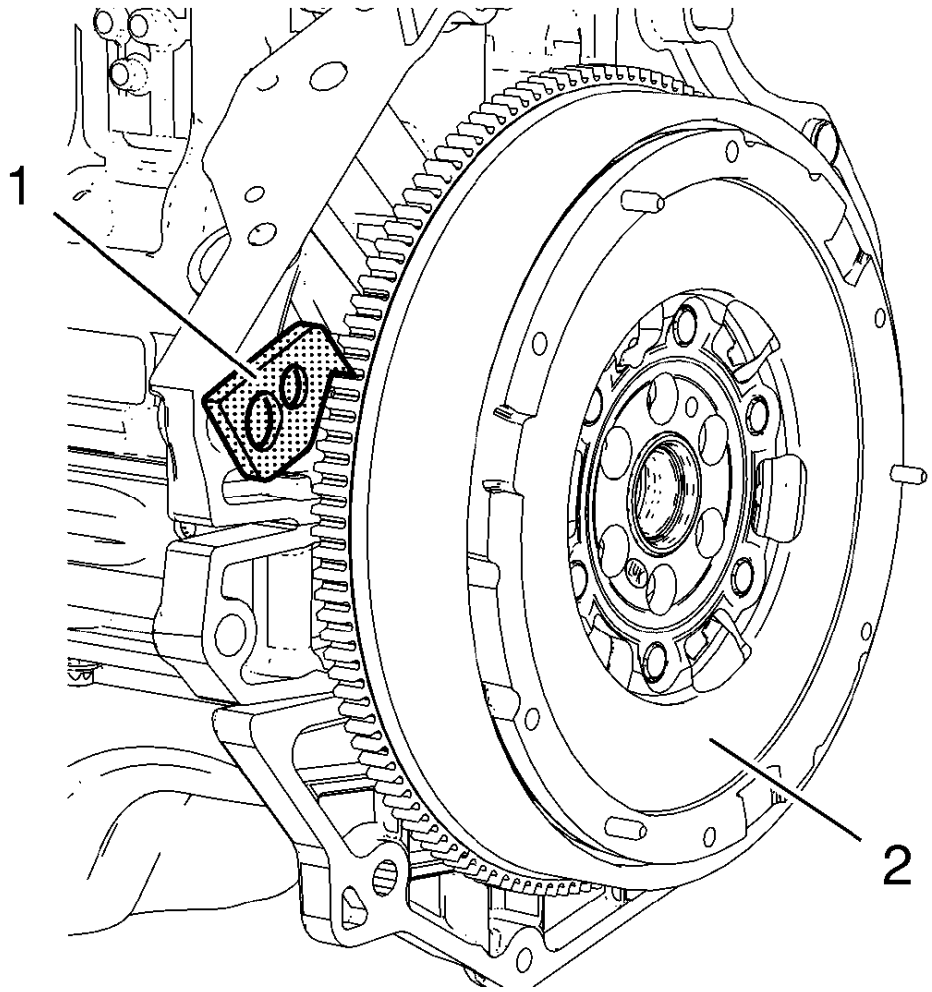

Fig. 490: Engine Flywheel And Holder
Courtesy of GENERAL MOTORS COMPANY

3. Install **EN-652** holder (1) to hold the engine flywheel (2).

CAUTION: Refer to Fastener Caution .

CAUTION: Refer to Torque-to-Yield Fastener Caution .

4. Tighten the 6 engine flywheel bolts in a cross sequence to 60 N.m (44 lb ft).
    1. Tighten the 6 engine flywheel bolts in a cross sequence to an additional 45 degrees. Use **EN-470-B** wrench.
    2. Tighten the 6 engine flywheel bolts in a cross sequence to an additional 15 degrees. Use **EN-470-B**

wrench.

5. Remove **EN-652** holder.

GENERATOR INSTALLATION

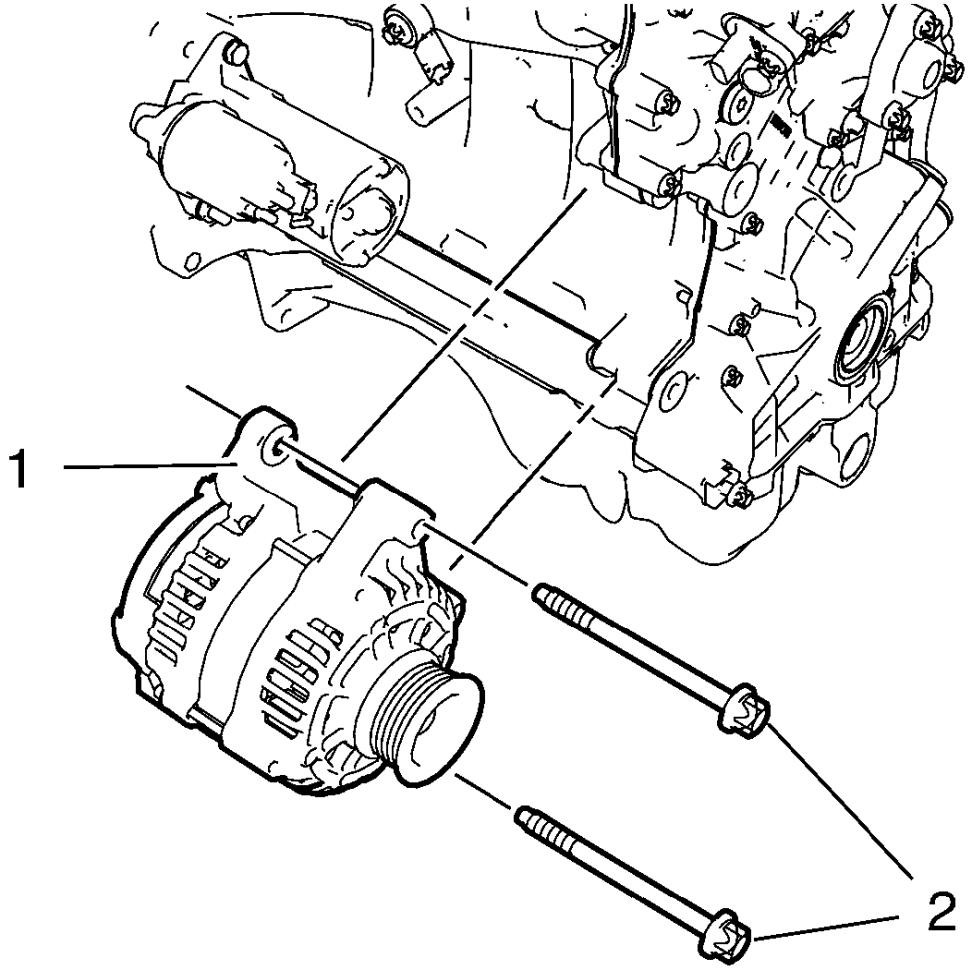

Fig. 491: Generator And Bolts
Courtesy of GENERAL MOTORS COMPANY

1. Install the generator (1).

CAUTION: Refer to Fastener Caution .

2. Install the 2 generator bolts (2) and tighten to 35 N.m (26 lb ft).

STARTER INSTALLATION

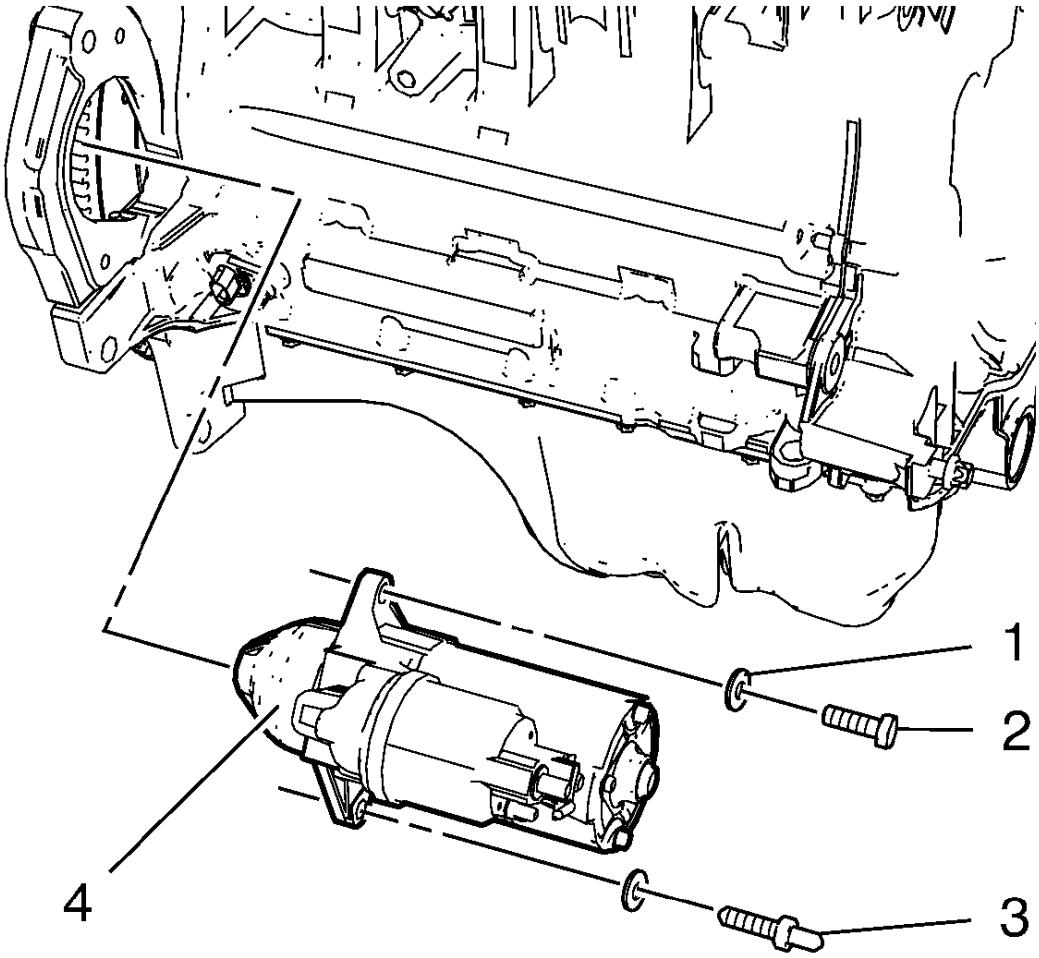

Fig. 492: Starter, Bolt, Stud And Washer
Courtesy of GENERAL MOTORS COMPANY

1. Install the starter (4).
2. Install the lower starter bolt stud (3) and if equipped the washer.
3. Install the upper starter bolt (2) and if equipped the washer (1).

CAUTION: Refer to Fastener Caution .

4. Tighten the starter bolt and starter bolt stud to 25 N.m (18 lb ft).

INTAKE MANIFOLD INSTALLATION

1. Clean the sealing surfaces.

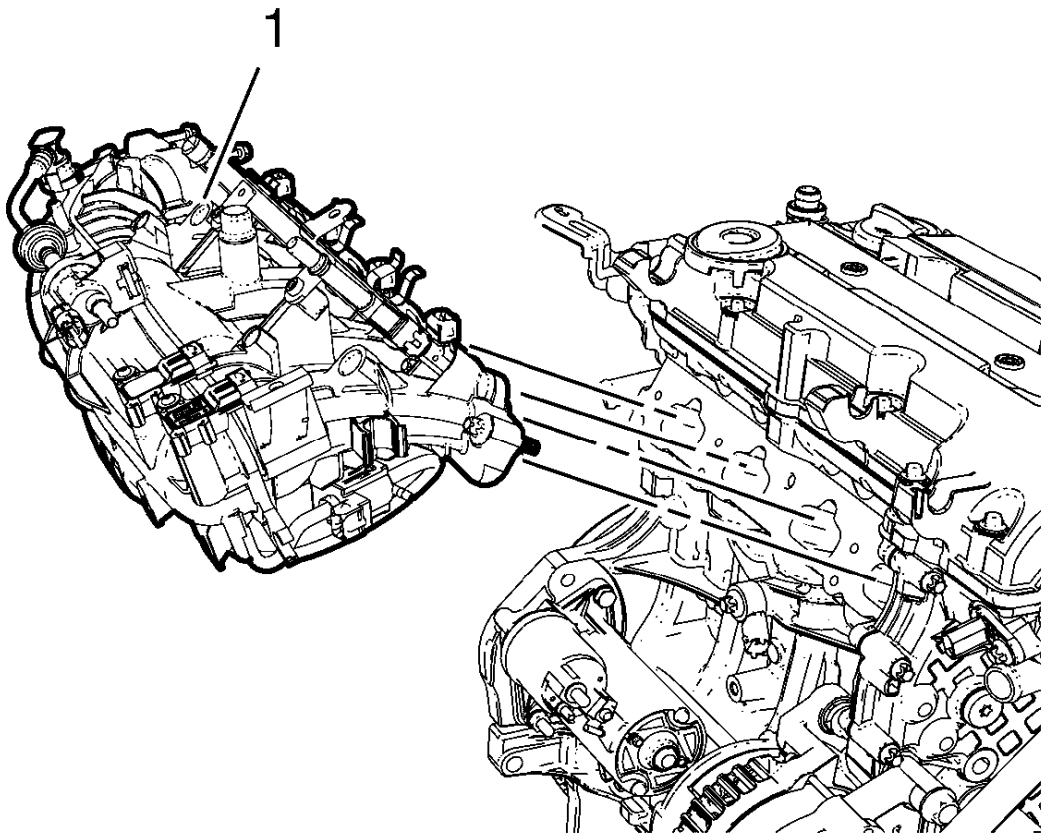

Fig. 493: Intake Manifold
Courtesy of GENERAL MOTORS COMPANY

2. Install the intake manifold (1) along with a NEW intake manifold gasket.

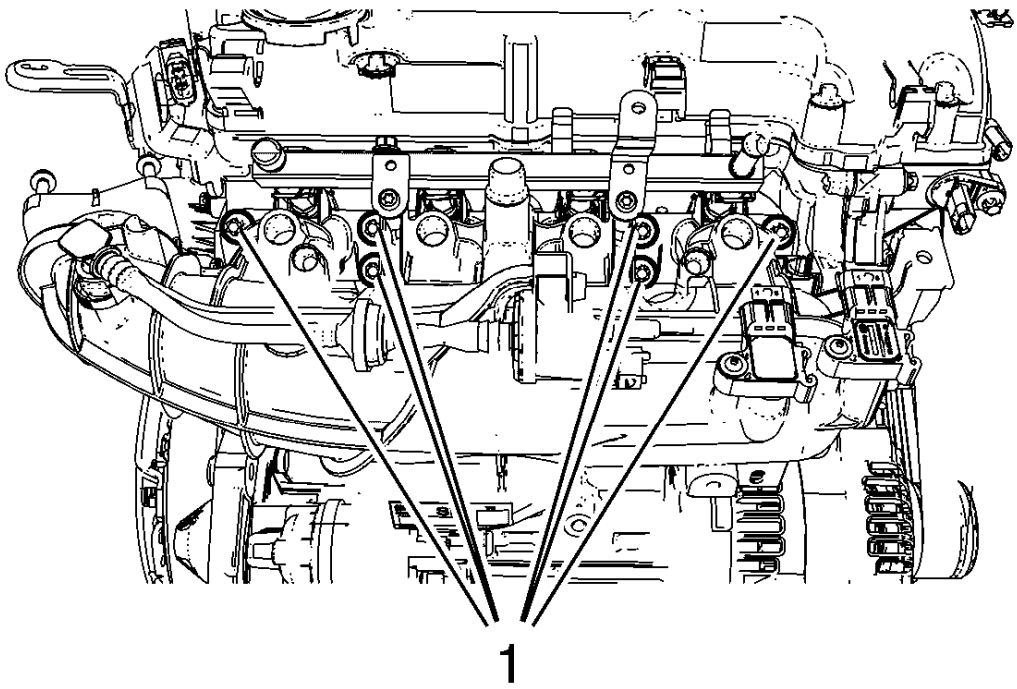

Fig. 494: Intake Manifold Bolts
Courtesy of GENERAL MOTORS COMPANY

CAUTION: Refer to Fastener Caution .

3. Install the 6 intake manifold bolts (1) and tighten to 20 N.m (15 lb ft).

THROTTLE BODY INSTALLATION

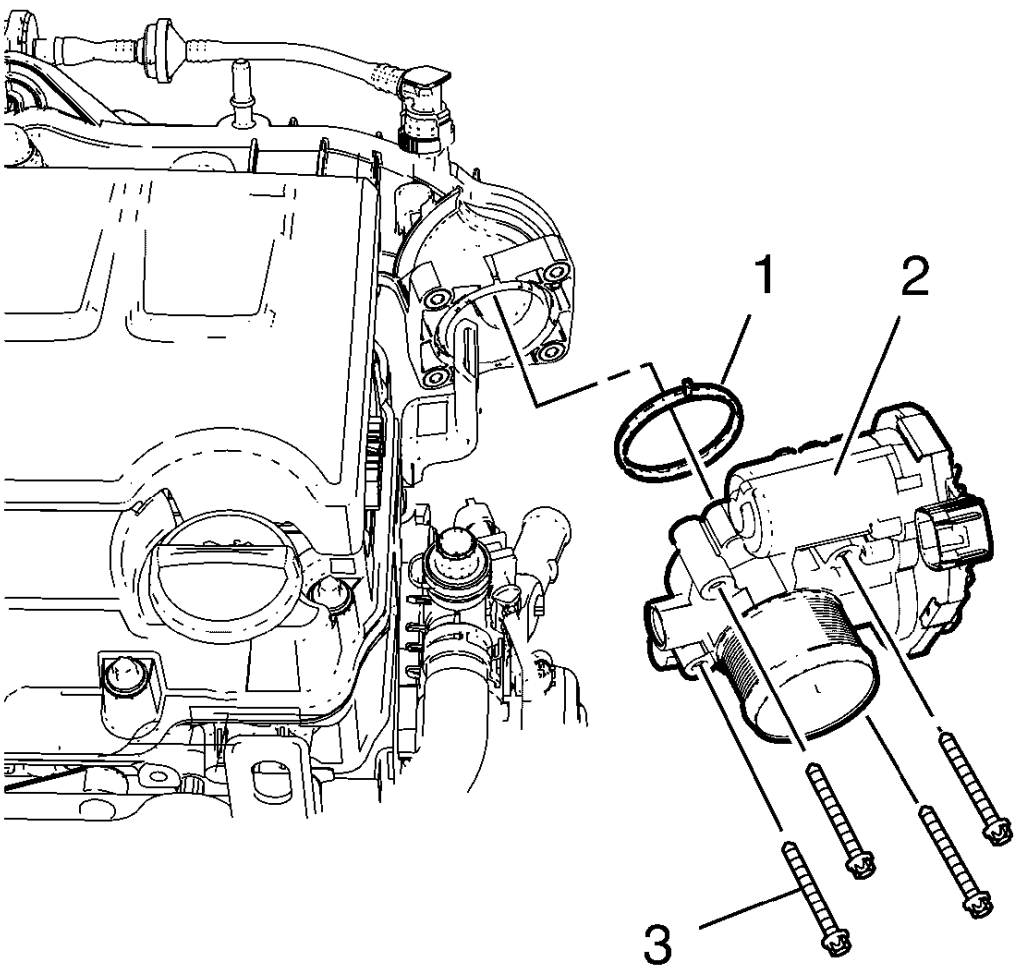

Fig. 495: Throttle Body And Bolts
Courtesy of GENERAL MOTORS COMPANY

1. Install the throttle body (2) and a NEW throttle body seal ring (1).

CAUTION: Refer to Fastener Caution .

2. Install the 4 throttle body bolts (3) and tighten to 8 N.m (71 lb in).

WATER PUMP INSTALLATION

1. Clean the sealing surfaces.

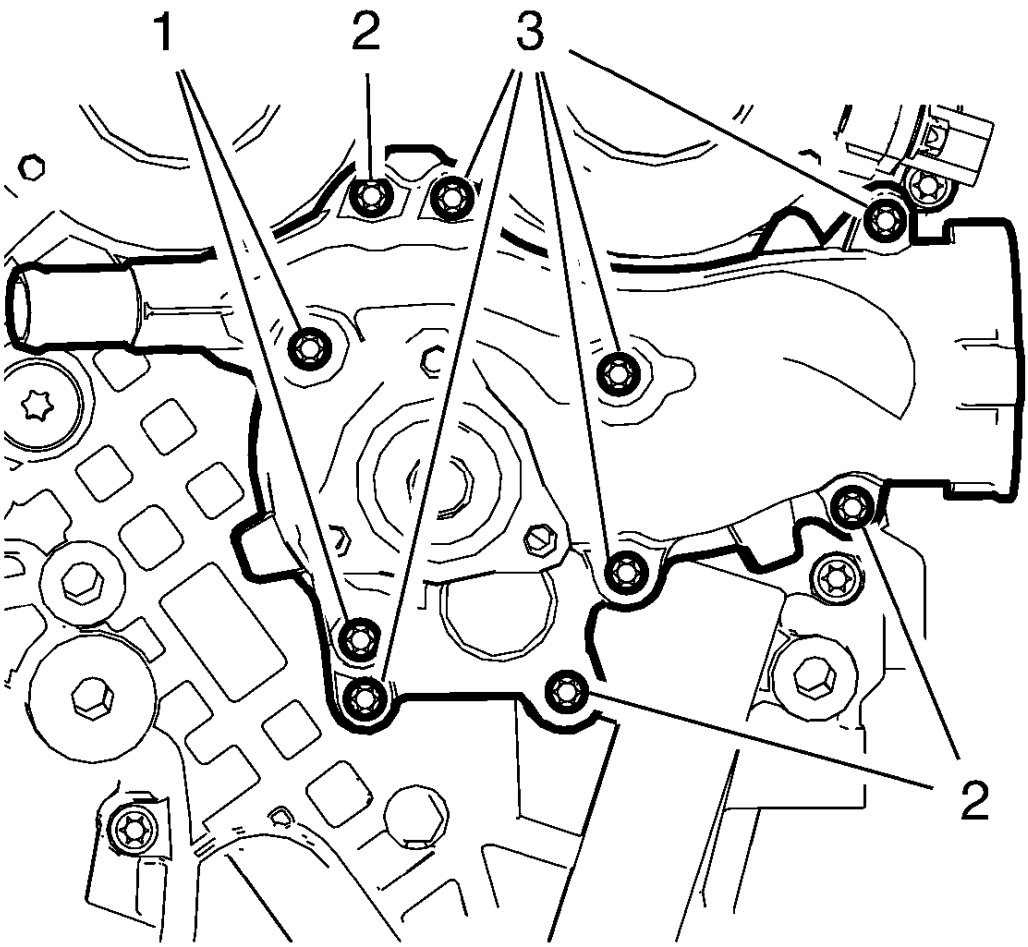

Fig. 496: Water Pump And Engine Front Cover Bolts
Courtesy of GENERAL MOTORS COMPANY

2. The water pump and engine front cover bolts are located as followed:
    - Engine front cover special bolt without cone end 60 mm (2.362 in) (1).
    - Engine front cover standard bolt with cone end 52 mm (2.047 in) (2).
    - Water pump bolt 25 mm (0.984 in) (3).

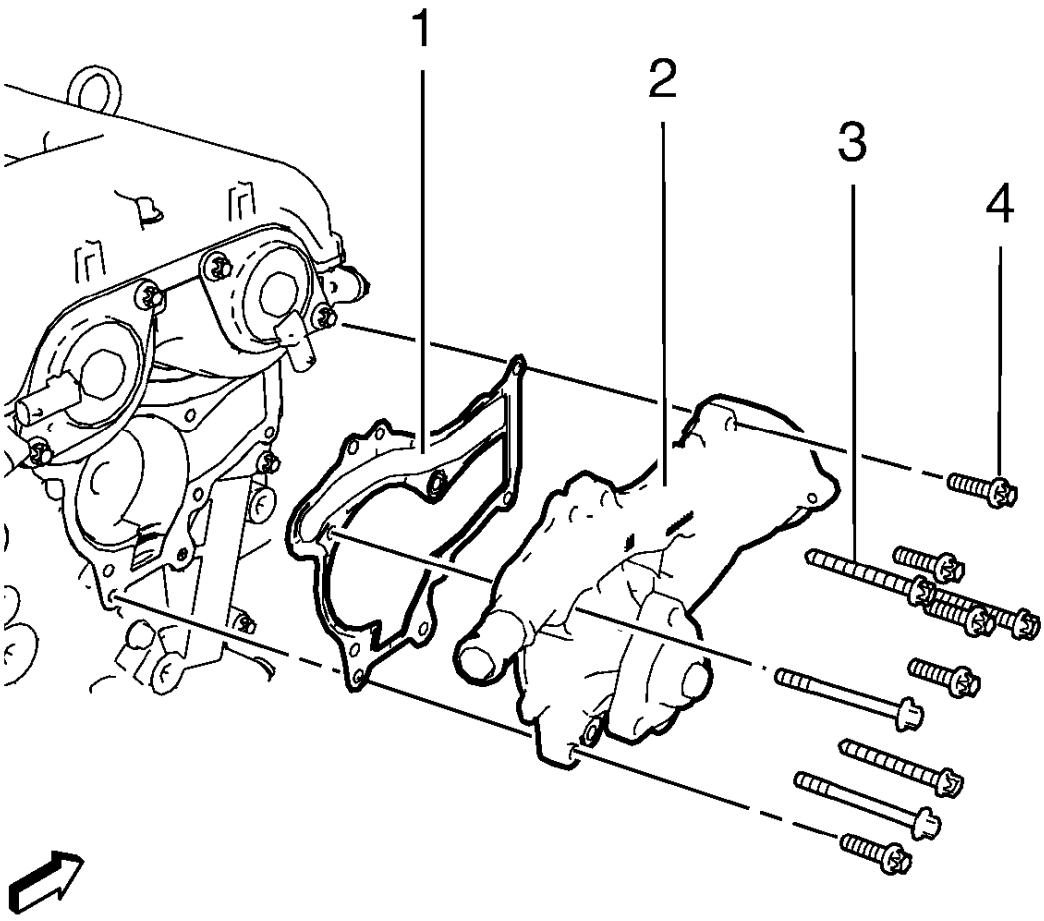

Fig. 497: Water Pump, Bolts And Gasket
Courtesy of GENERAL MOTORS COMPANY

3. Install the water pump (2) and a NEW water pump gasket (1).

CAUTION: Refer to Fastener Caution .

4. Install the 5 water pump bolts (4) and the 5 long engine front cover bolts (3) and tighten in a cross sequence to 8 N.m (71 lb in).

CRANKSHAFT BALANCER INSTALLATION

Special Tools

- **EN-470-B** Angular Torque Wrench

- **EN-956-1** Extension
- **EN-49979** Crankshaft Shock Mount Retainer

For equivalent regional tools, refer to **Special Tools**.

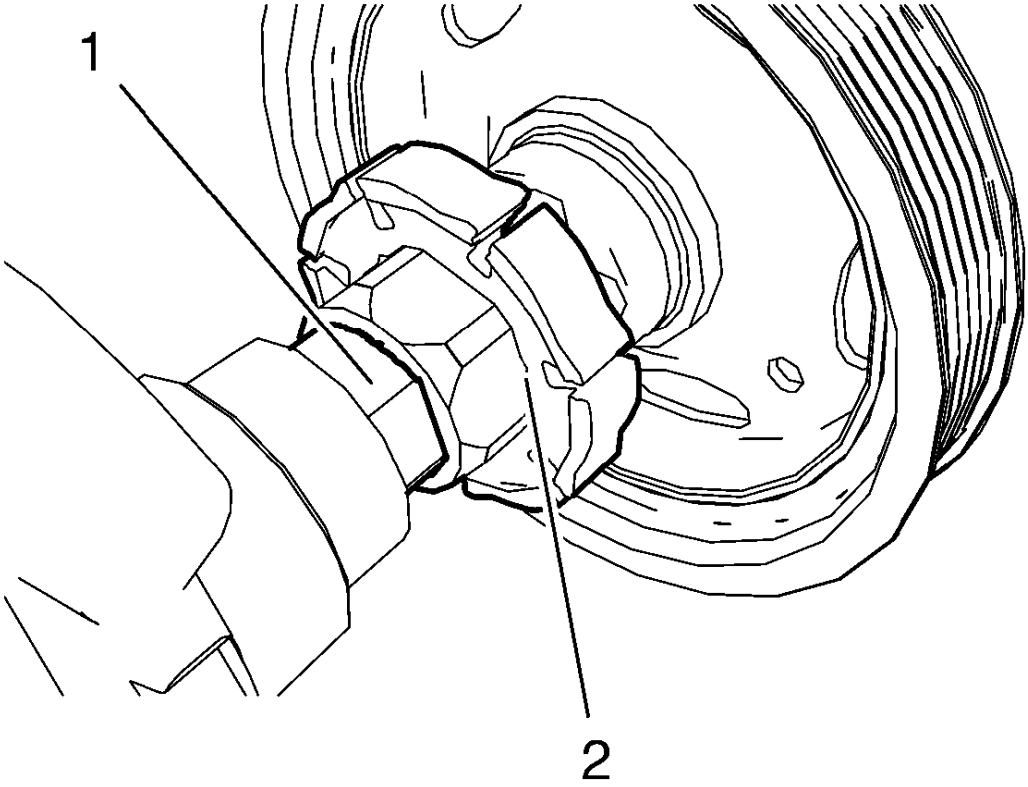

Fig. 498: Engine Oil Pump Rotor And Crankshaft
Courtesy of GENERAL MOTORS COMPANY

NOTE: The crankshaft balancer flange must fit to the hexagon of the oil pump rotor (2) and to the two-flat of the crankshaft (1).

1. Install the crankshaft balancer by carefully pressing into position.

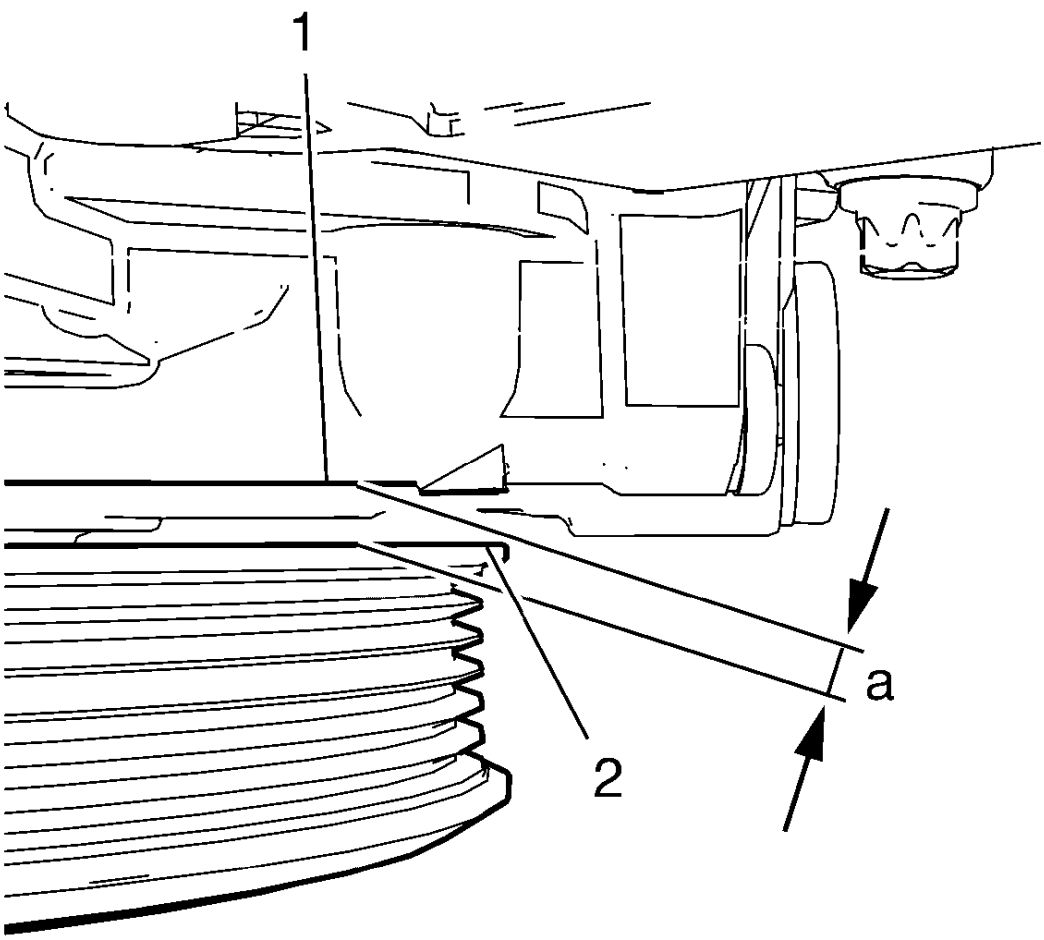

Fig. 499: Engine Front Cover And Crankshaft Balancer
Courtesy of GENERAL MOTORS COMPANY

2. Measure the distance a between the crankshaft balancer (2) and the engine front cover (1). The distance a should be 5.5 mm (0.21654 in).

NOTE: Never re-use the crankshaft balancer bolt.

3. Install a NEW crankshaft balancer bolt.

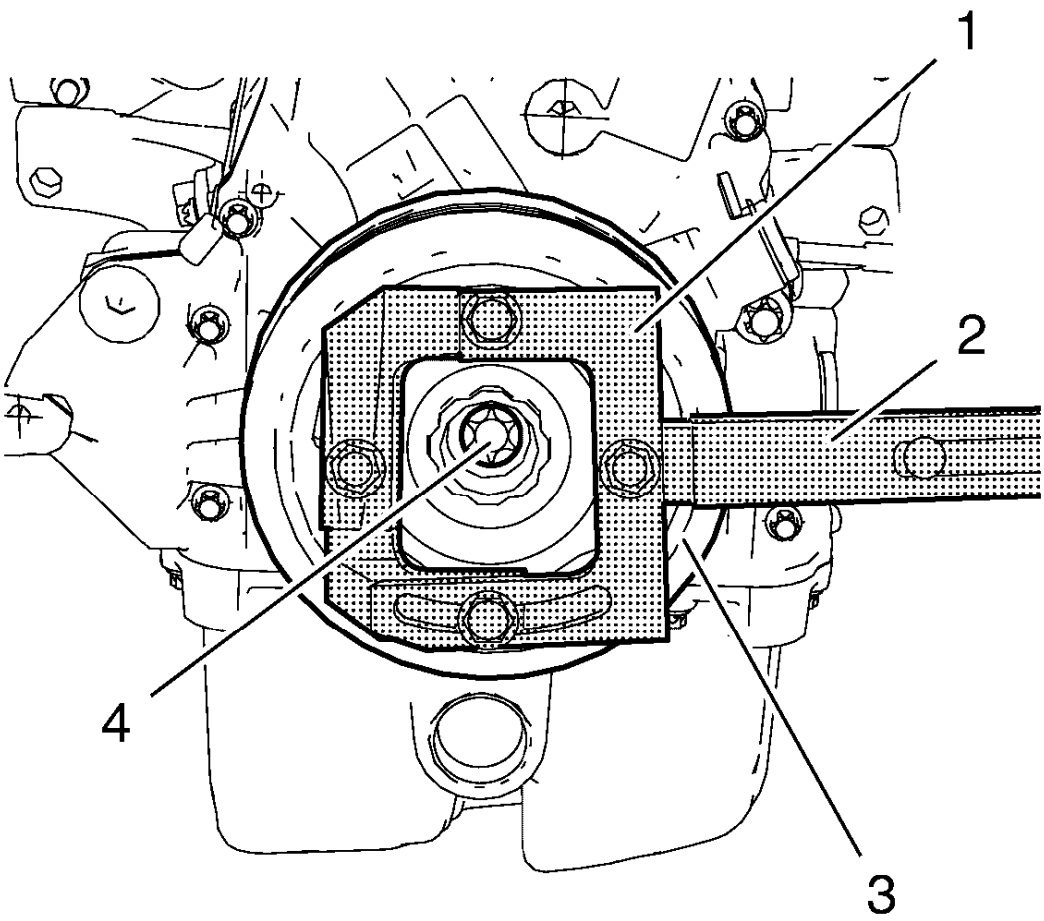

Fig. 500: Crankshaft Balancer, Retainer And Extension
Courtesy of GENERAL MOTORS COMPANY

CAUTION: Refer to Fastener Caution .

CAUTION: Refer to Torque-to-Yield Fastener Caution .

4. Tighten the crankshaft balancer bolt (4) while holding the crankshaft balancer (3) with **EN-49979** retainer (1) and **EN-956-1** extension (2) in the following order:
    1. Tighten the crankshaft balancer bolt to 150 N.m (111 lb ft).
    2. Tighten the crankshaft balancer bolt to an additional 60 degrees, using **EN-470-B** wrench.

WATER PUMP PULLEY INSTALLATION

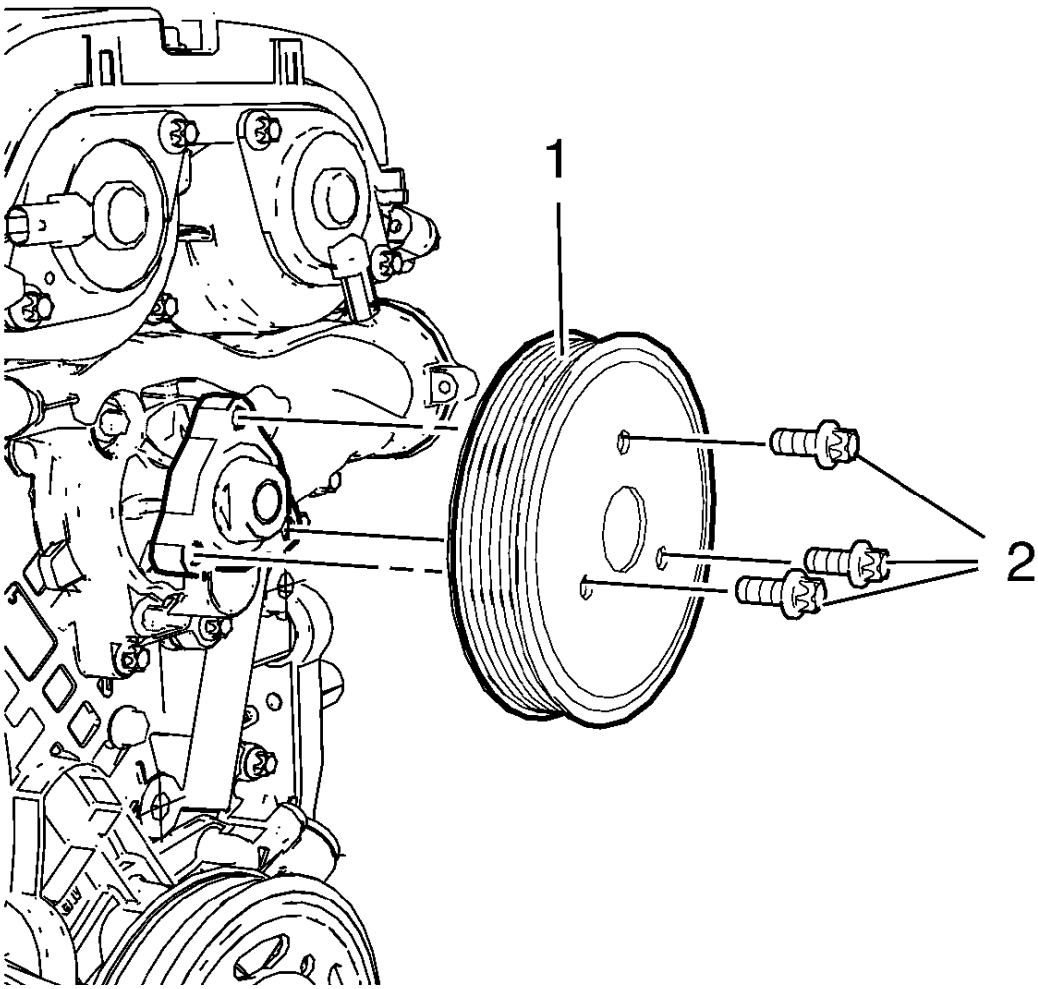

Fig. 501: Water Pump Pulley
Courtesy of GENERAL MOTORS COMPANY

1. Install the water pump pulley (1).
2. Install the 3 water pump pulley bolts (2).

CAUTION: Refer to Fastener Caution .

3. Tighten the 3 water pump pulley bolts (2) to 22 N.m (16 lb ft) while holding up the water pump pulley hub with a wrench.

AIR CONDITIONING COMPRESSOR BRACKET INSTALLATION

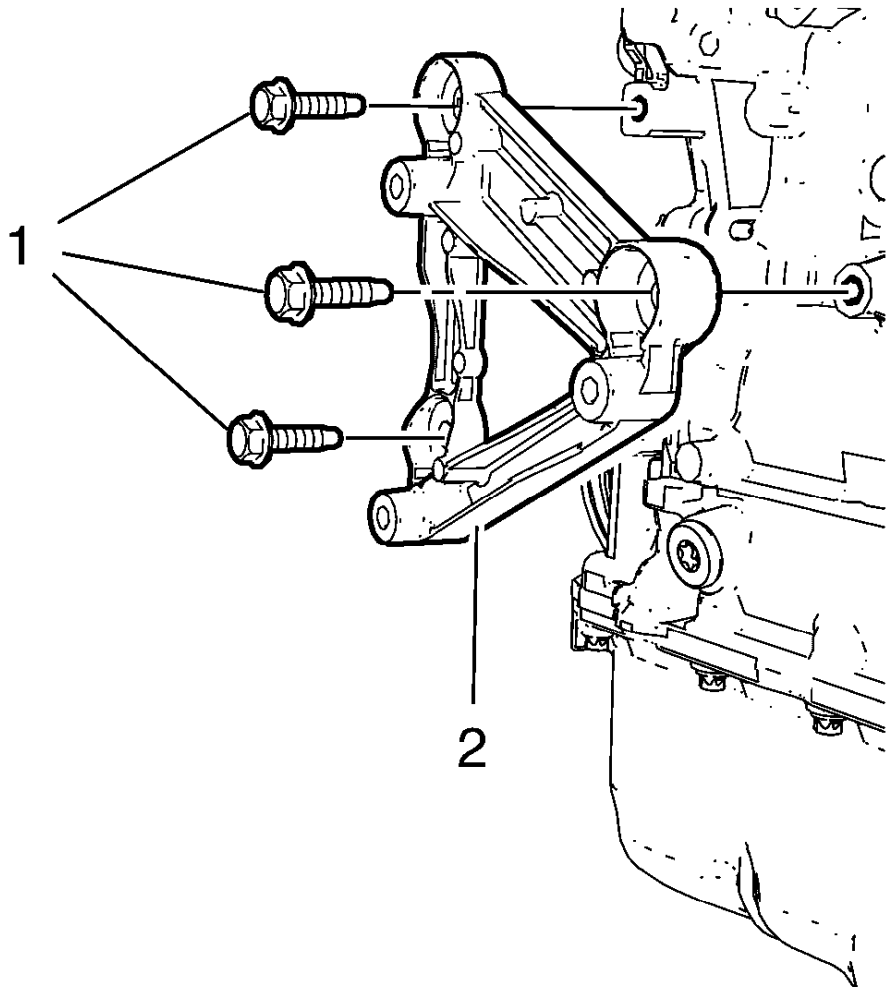

Fig. 502: Power Steering Pump Bracket/Air Conditioning Compressor Bracket And Bolts
Courtesy of GENERAL MOTORS COMPANY

1. Install the air conditioning compressor bracket (2).

CAUTION: Refer to Fastener Caution .

2. Install the 3 air conditioning compressor bracket bolts (1) and tighten to 22 N.m (16 lb ft).

DRIVE BELT TENSIONER INSTALLATION

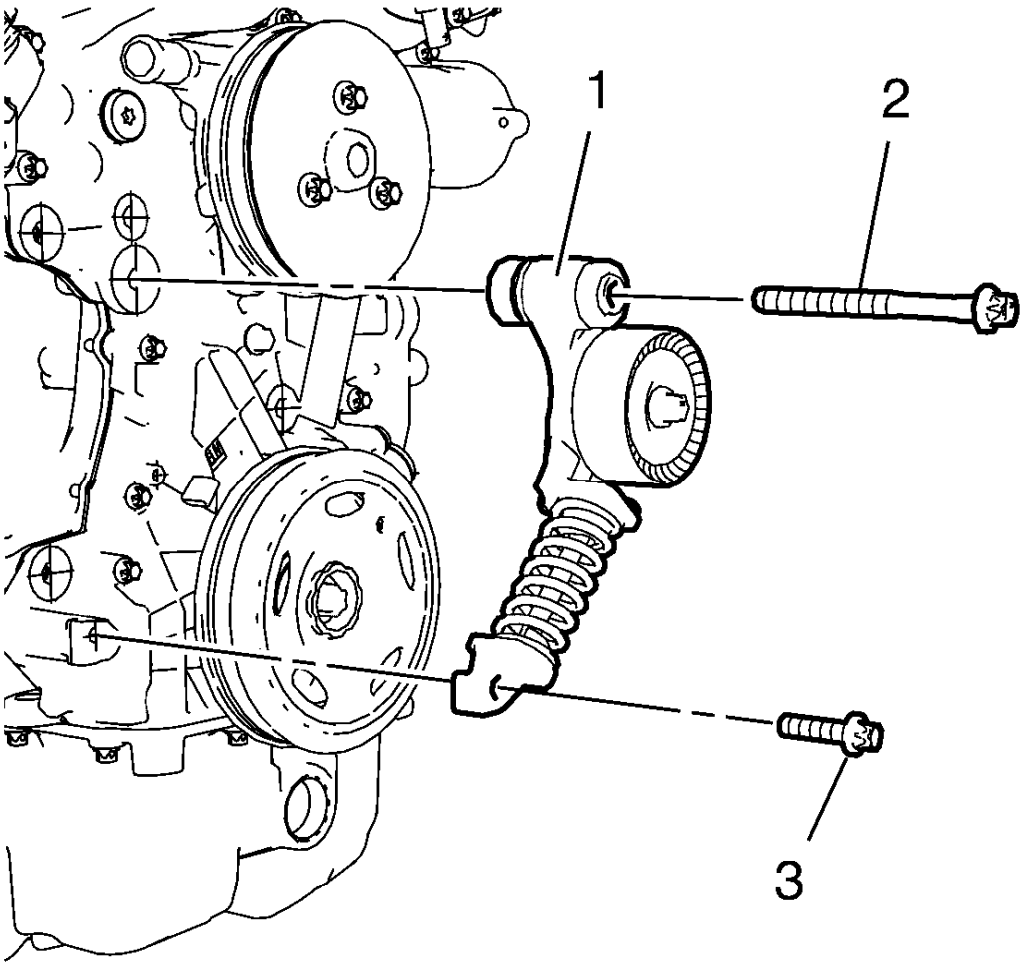

Fig. 503: Drive Belt Tensioner And Bolts
Courtesy of GENERAL MOTORS COMPANY

1. Install the drive belt tensioner (1).
2. Install the upper drive belt tensioner bolt (2).
3. Install the lower drive belt tensioner bolt (3).

CAUTION: Refer to Fastener Caution .

4. Tighten the lower drive belt tensioner bolt (M8) to 22 N.m (16 lb ft).
5. Tighten the upper drive belt tensioner bolt to 55 N.m (41 lb ft).

DRIVE BELT INSTALLATION

Special Tools

- **EN-955** Locking Pins
- **EN-48488** Holding Wrench

For equivalent regional tools, refer to **Special Tools**.

NOTE: Ensure that the drive belt tensioner is held with EN-955-2 locking pin.

1. Install the drive belt.

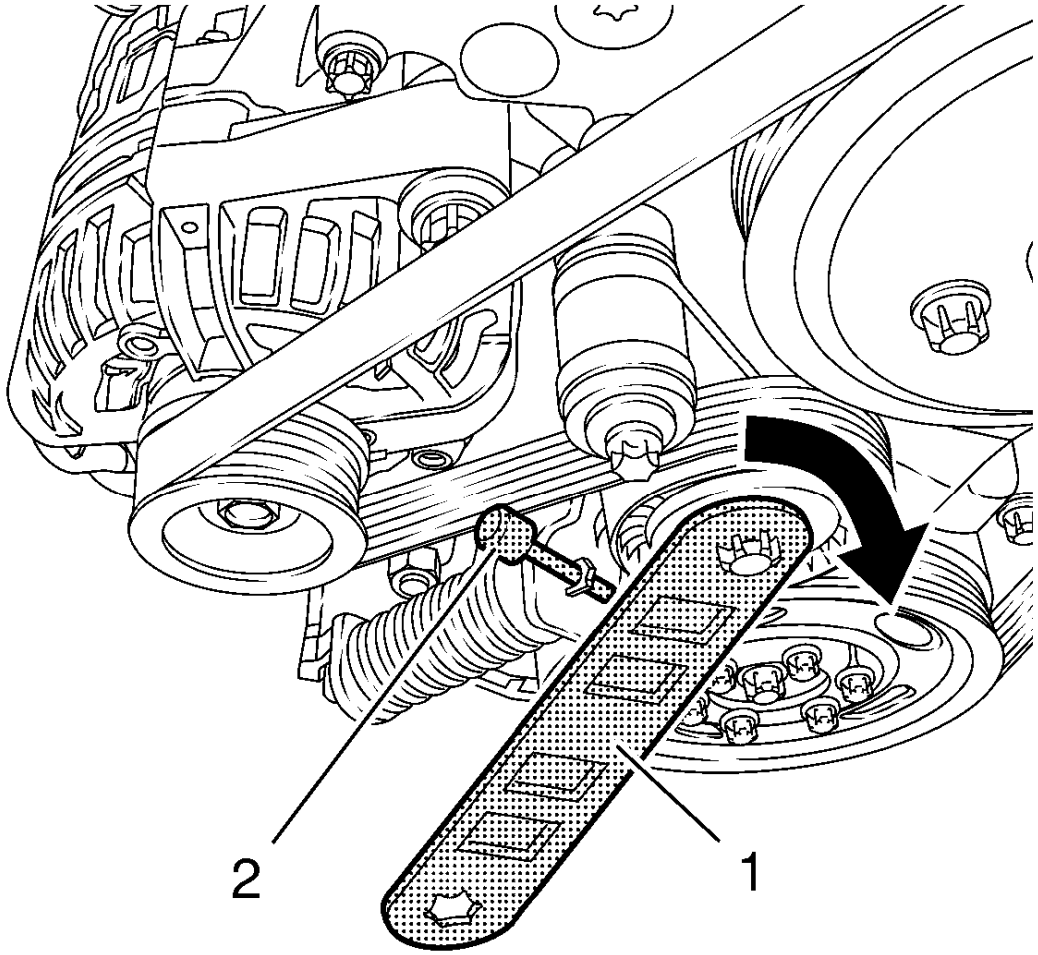

Fig. 504: Locking Pin And Wrench
Courtesy of GENERAL MOTORS COMPANY

2. Move the drive belt tensioner clockwise until **EN-955-20** locking pin (2) can be removed. Use **EN-48488** wrench (1).
3. Remove **EN-955-20** locking pin (2) from the drive belt tensioner while holding with **EN-48488** wrench (1).

4. Release tension from drive belt tensioner and remove **EN-48488** wrench (1).

ENGINE OIL COOLER INSTALLATION

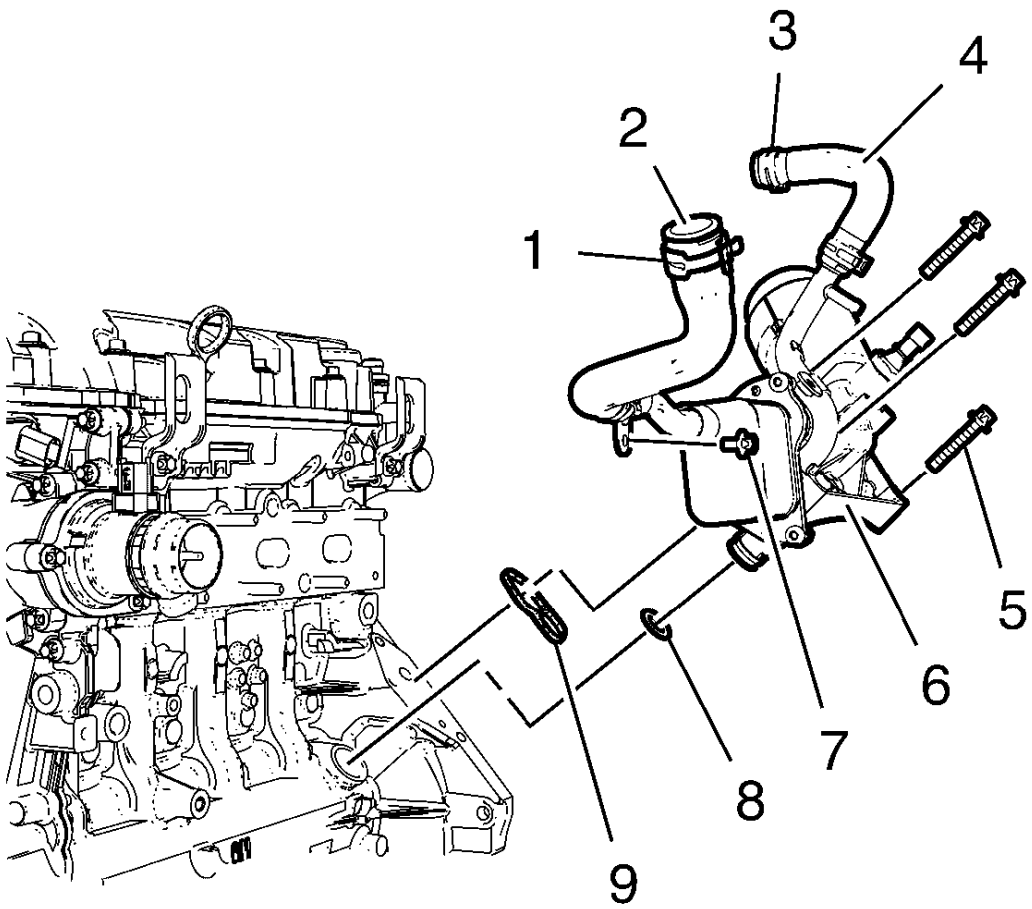

Fig. 505: Engine Oil Cooler
Courtesy of GENERAL MOTORS COMPANY

NOTE: Lubricate the oil cooler seal (8) with clean engine oil.

1. Install the engine oil cooler assembly (6) along with 2 NEW sealings (8) and (9).
2. Install the 3 oil cooler bolts (5) and tighten to 10 N.m (89 lb in).
3. Install the oil cooler coolant outlet pipe bolt (7) and tighten to 10 N.m (89 lb in).
4. Install the oil cooler coolant outlet hose (2) to the engine coolant thermostat housing.
5. Install the oil cooler coolant outlet hose clamp (1).
6. Install the oil cooler coolant inlet hose (4) to the water outlet.

7. Install the oil cooler coolant inlet hose clamp (3).

WATER OUTLET INSTALLATION

1. Clean the sealing surfaces.

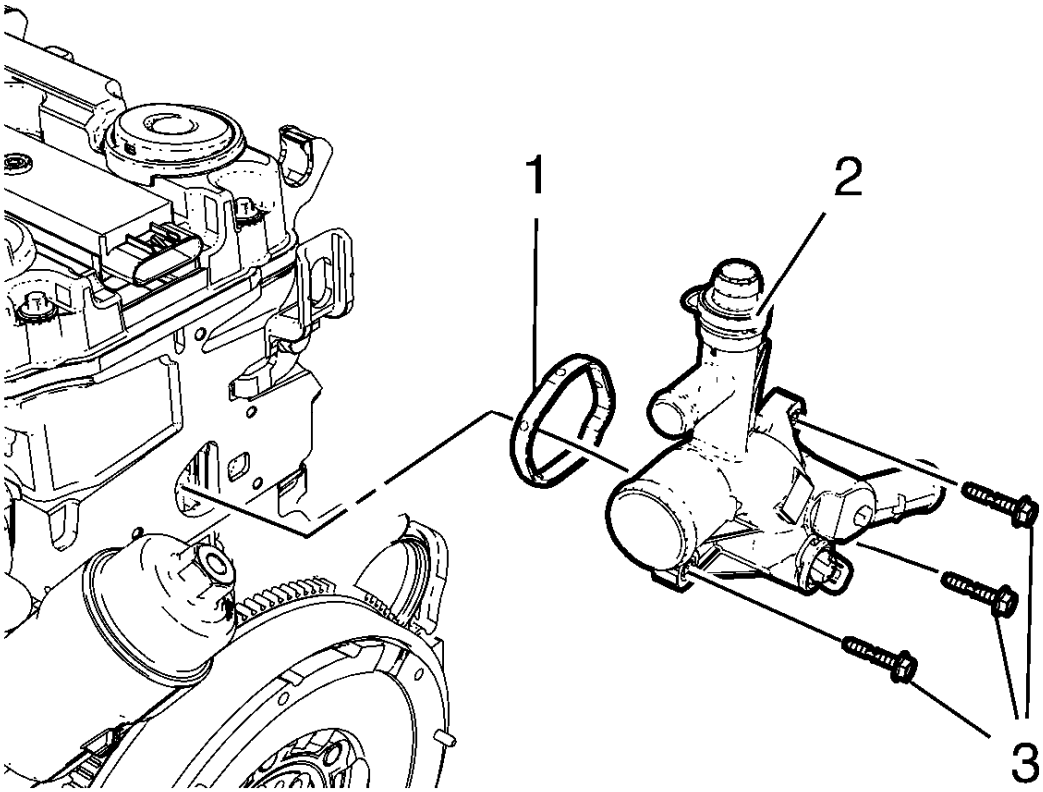

Fig. 506: Water Outlet, Bolts And Seal Ring
Courtesy of GENERAL MOTORS COMPANY

2. Install the water outlet (2) and a NEW water outlet seal ring (1).

CAUTION: Refer to Fastener Caution .

3. Install the 3 water outlet bolts (3) and tighten to 8 N.m (71 lb in).

ENGINE COOLANT THERMOSTAT HOUSING INSTALLATION

1. Clean the sealing surfaces.

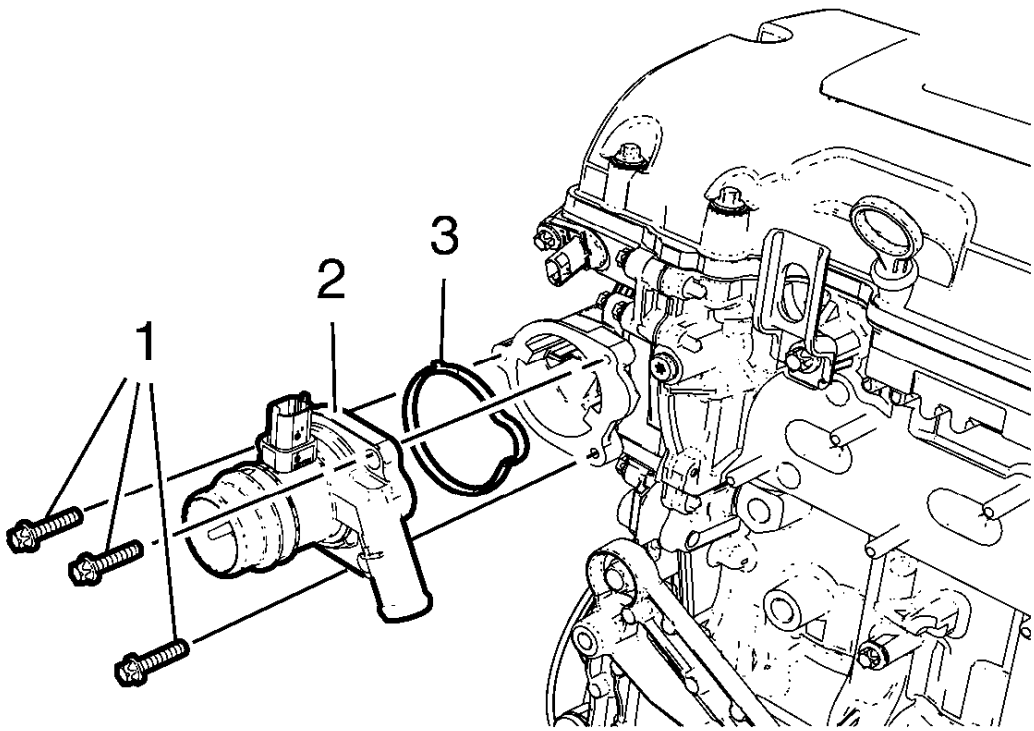

Fig. 507: Engine Coolant Thermostat Housing
Courtesy of GENERAL MOTORS COMPANY

2. Install the engine coolant thermostat housing (2) and a NEW engine coolant thermostat housing seal ring (3).

CAUTION: Refer to Fastener Caution .

3. Install the 3 engine coolant thermostat housing bolts (1) and tighten to 8 N.m (71 lb in).

TURBOCHARGER INSTALLATION

Special Tool

EN-49942 Holding Wrench

For equivalent regional tools, refer to **Special Tools**.

1. Clean the sealing surfaces.
2. Replace the connect fittings on the turbocharger coolant feed pipe and the turbocharger coolant return pipe. Refer to **Turbocharger Disassemble**, and **Turbocharger Assemble**.

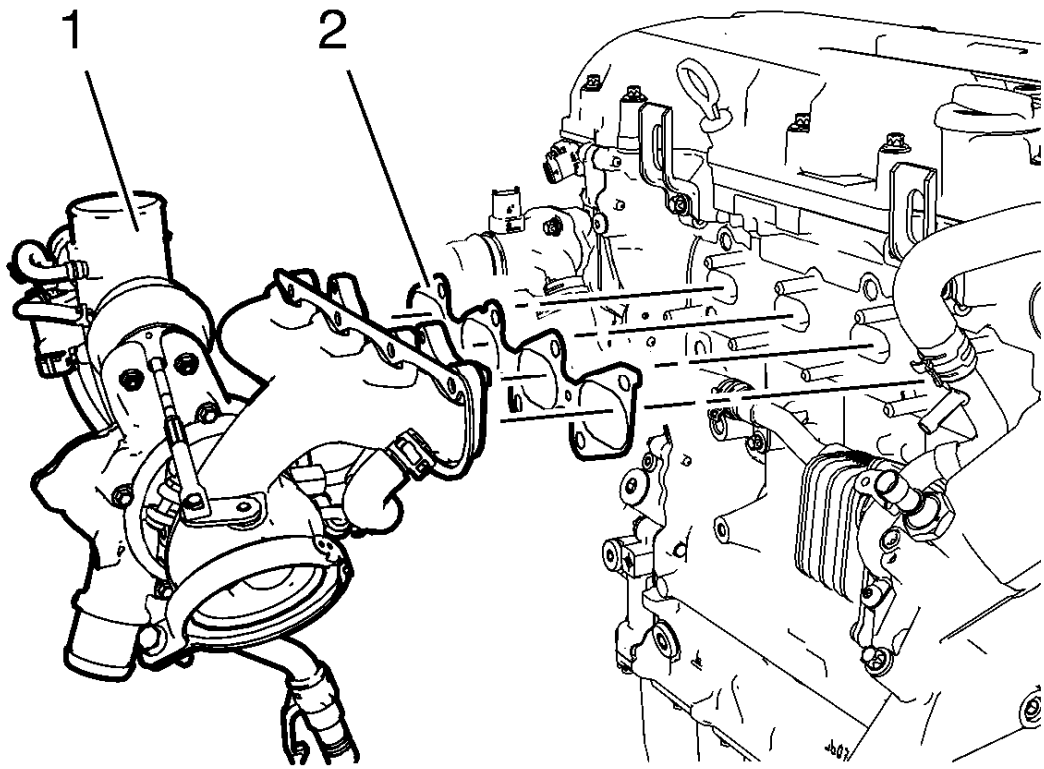

Fig. 508: Turbocharger Assembly And Turbocharger Gasket
Courtesy of GENERAL MOTORS COMPANY

NOTE: Mind the turbocharger oil return pipe.

3. Install the turbocharger assembly (1) and a NEW turbocharger gasket (2).

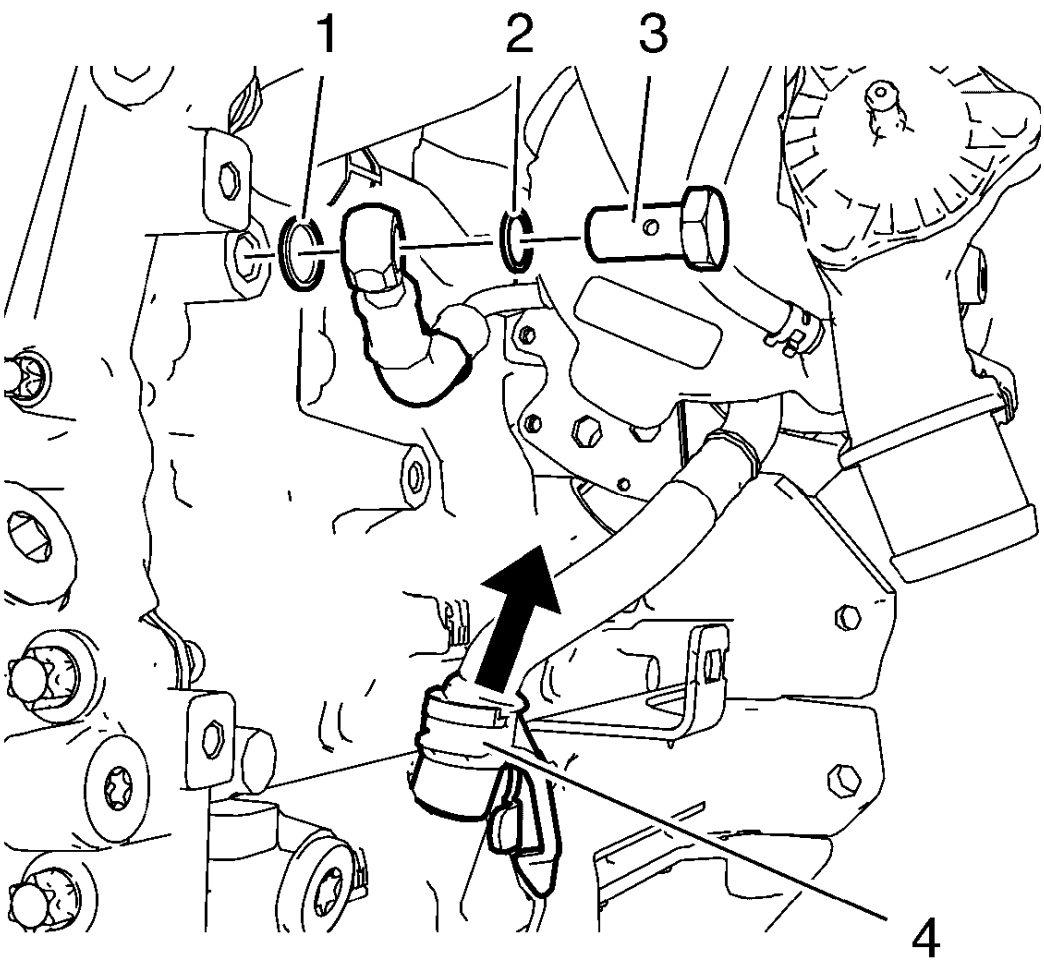

Fig. 509: Turbocharger Oil Return Pipe
Courtesy of GENERAL MOTORS COMPANY

4. Connect the turbocharger oil return pipe to the engine while installing the turbocharger.
5. Install the turbocharger coolant feed pipe hollow screw along with 2 NEW seal rings (1) and (2).

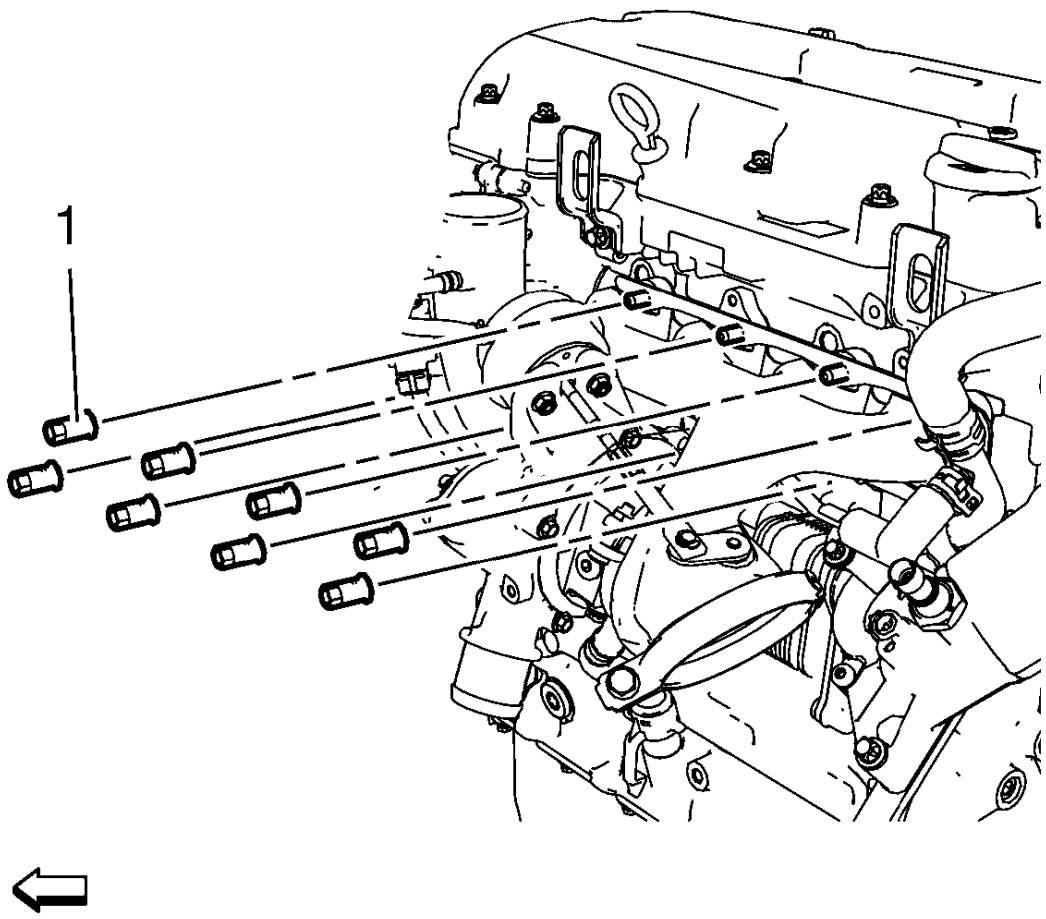

Fig. 510: Turbocharger Nuts
Courtesy of GENERAL MOTORS COMPANY

6. Install the 8 NEW turbocharger nuts (1).

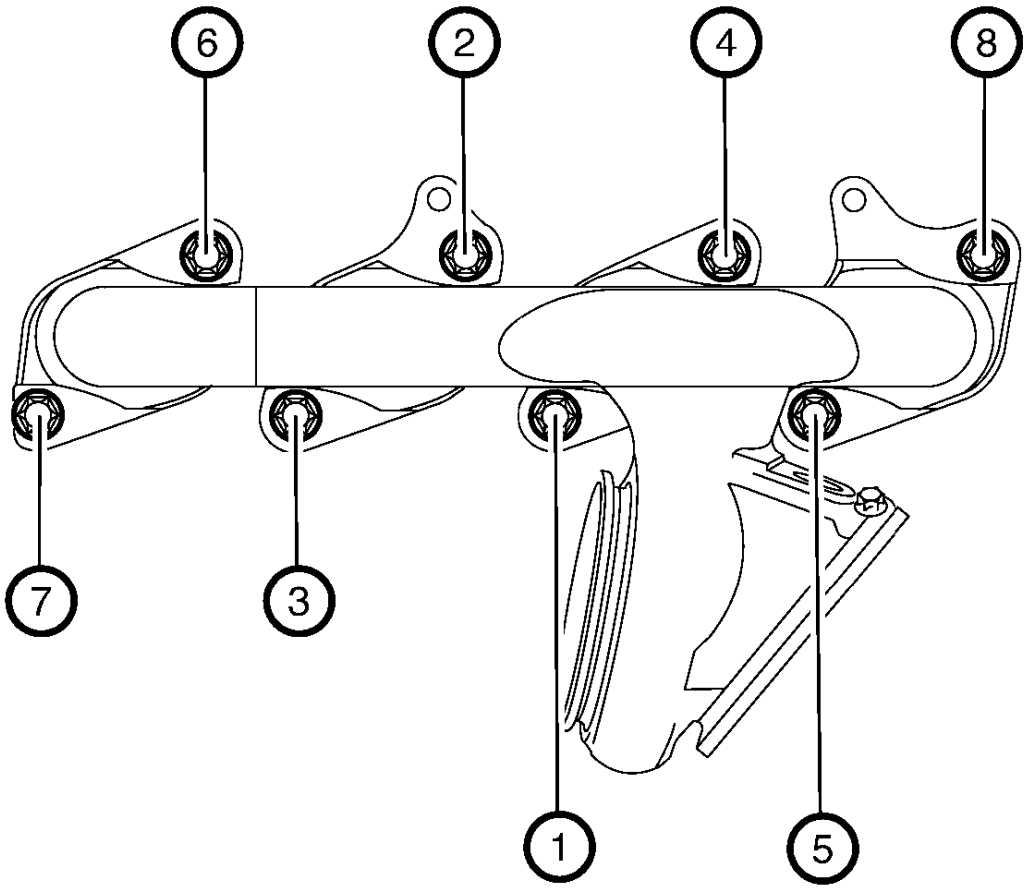

Fig. 511: Turbocharger Nuts Tightening Sequence
Courtesy of GENERAL MOTORS COMPANY

CAUTION: Refer to Fastener Caution .

CAUTION: Refer to Torque-to-Yield Fastener Caution .

7. Tighten the 8 turbocharger nuts in a sequence as shown to 8 N.m (71 lb in).
8. Repeat the tightening procedure to ensure a proper fastening of the turbocharger nuts.

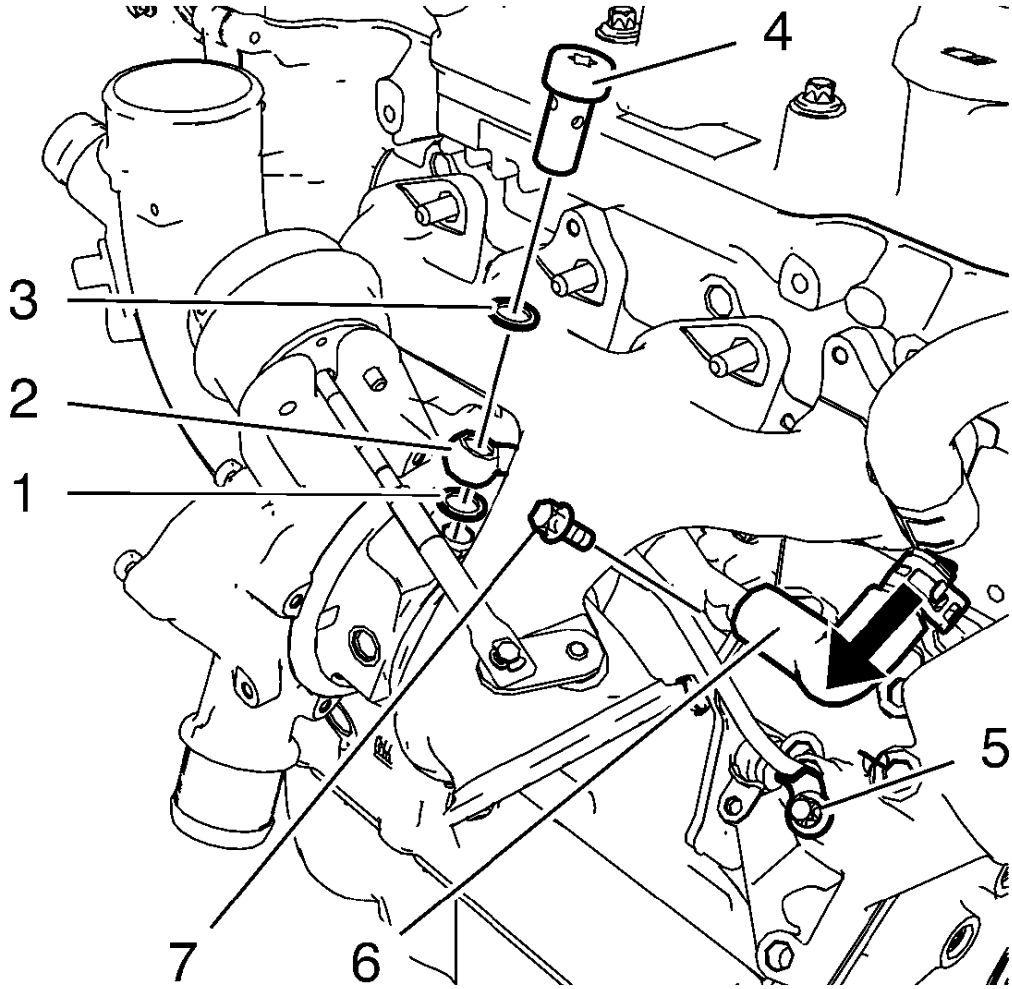

Fig. 512: Turbocharger Oil Feed Pipe Components
Courtesy of GENERAL MOTORS COMPANY

9. Connect the turbocharger coolant return hose (6) to the oil cooler coolant inlet pipe and install the turbocharger coolant return pipe bolt (7) to the oil cooler. Tighten the turbocharger coolant return pipe bolt to 8 N.m (71 lb in).
10. Install the turbocharger oil feed pipe (2) along with a NEW rubber seal ring.
11. Install the turbocharger oil feed pipe hollow screw (4) in compound with 2 NEW seal rings (1) and (3).
12. Install the turbocharger oil feed pipe bolt (5) to the oil cooler and tighten to 10 N.m (89 lb in).
13. Tighten the turbocharger oil feed pipe hollow screw to 30 N.m (22 lb ft).

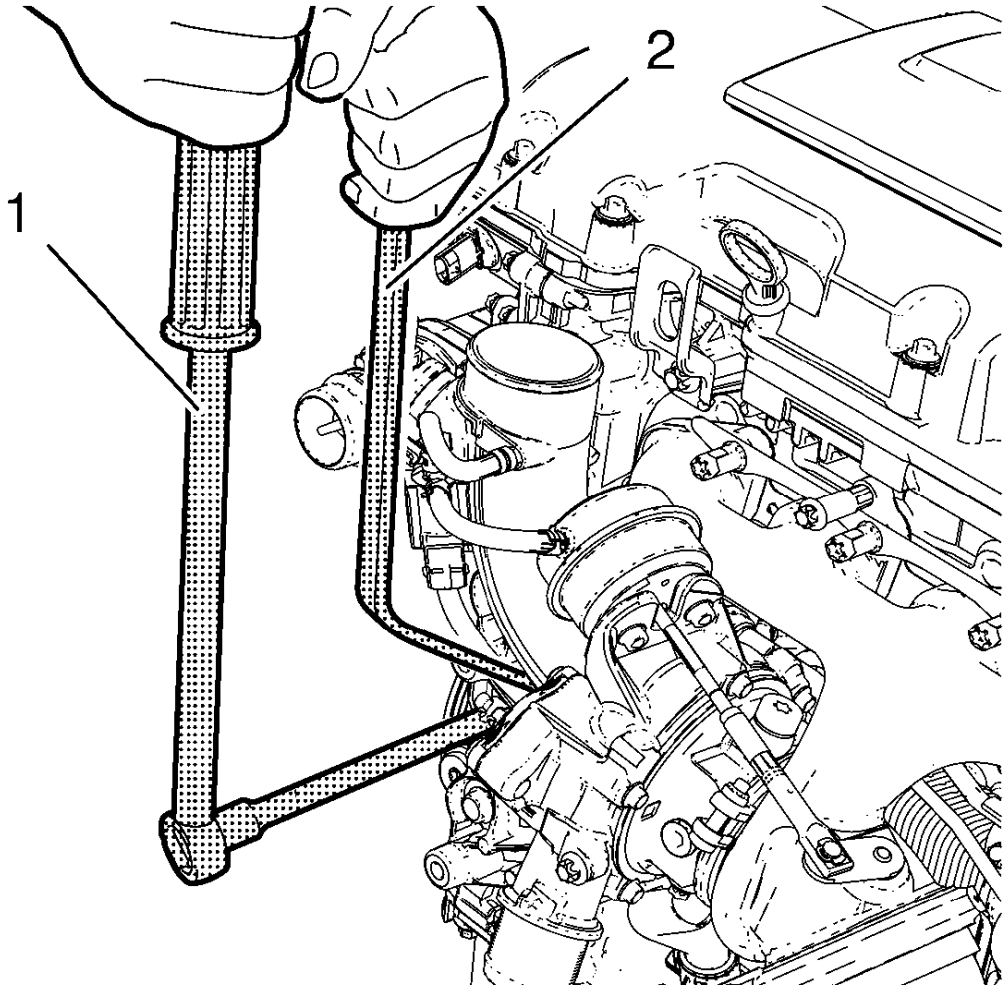

Fig. 513: Holding Wrench And Ratchet Wrench
Courtesy of GENERAL MOTORS COMPANY

NOTE: The EN-49942 holding wrench (2) should be installed to turbocharger coolant feed pipe as shown. The holding wrench should be installed to avoid twisting of the turbocharger coolant feed pipe during the fastening procedure.

14. Install the **EN-49942** holding wrench (2) to the turbocharger coolant feed pipe. Guide a ratchet wrench (1) along with an extension through **EN-49942** holding wrench to the turbocharger coolant feed pipe hollow screw.

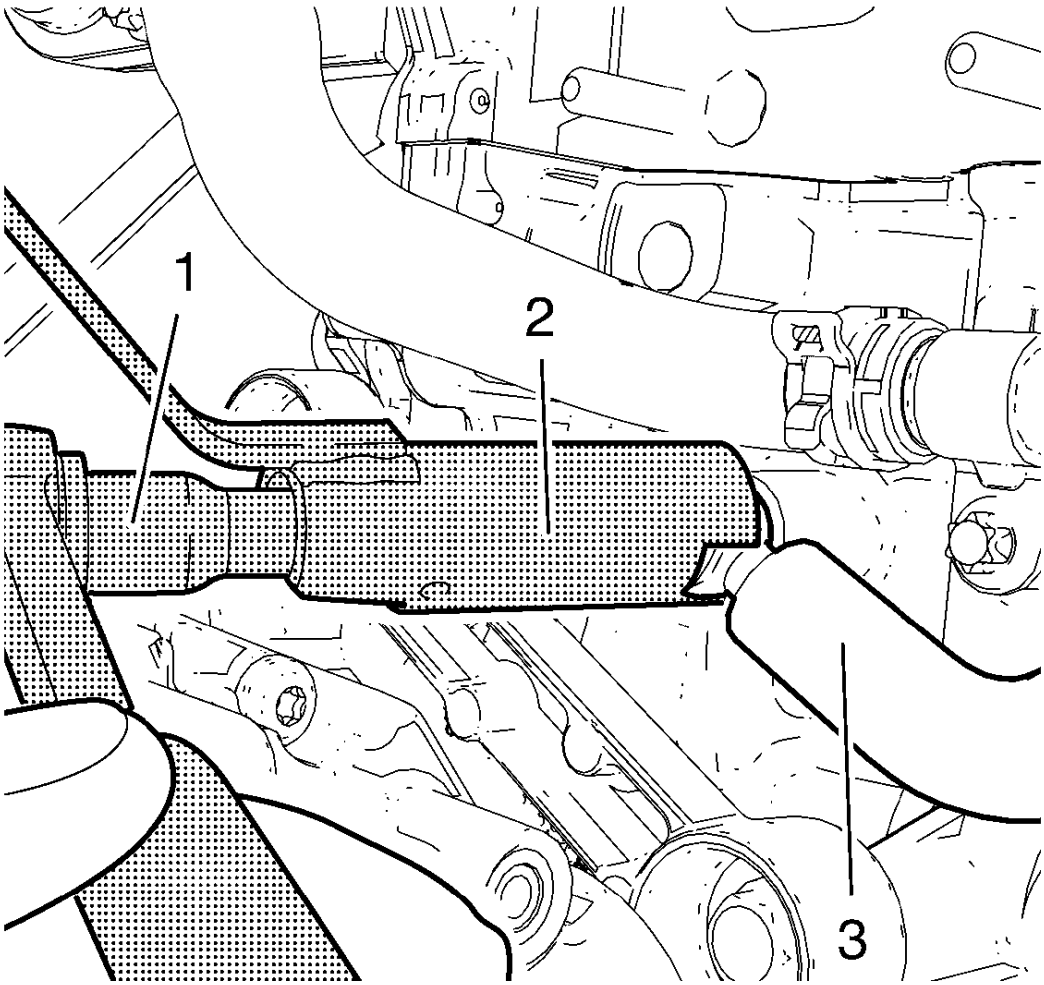

Fig. 514: Ratchet Wrench, Holding Wrench And Coolant Feed Pipe
Courtesy of GENERAL MOTORS COMPANY

NOTE: EN-49942 holding wrench (2) should be installed to turbocharger coolant feed pipe as shown. The holding wrench should be installed to avoid twist of the turbocharger coolant feed pipe while the fastening procedure.

15. Tighten the turbocharger coolant feed pipe hollow screw with ratchet wrench and extension (1) to 30 N.m (22 lb ft).

EXHAUST MANIFOLD HEAT SHIELD INSTALLATION

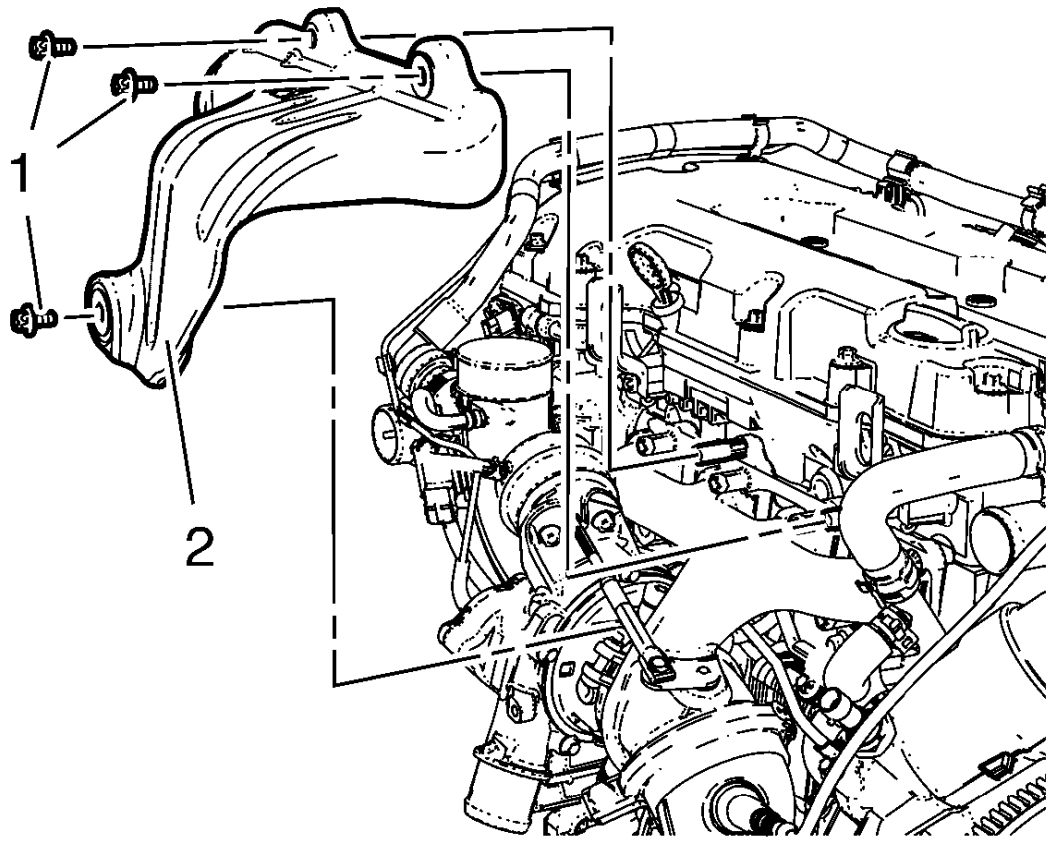

Fig. 515: Exhaust Manifold Heat Shield
Courtesy of GENERAL MOTORS COMPANY

1. Install the exhaust manifold heat shield (2).

CAUTION: Refer to Fastener Caution .

2. Install the 3 exhaust manifold heat shield bolts (1) and the washers and tighten to 8 N.m (71 lb in).

WARM UP THREE-WAY CATALYTIC CONVERTER INSTALLATION

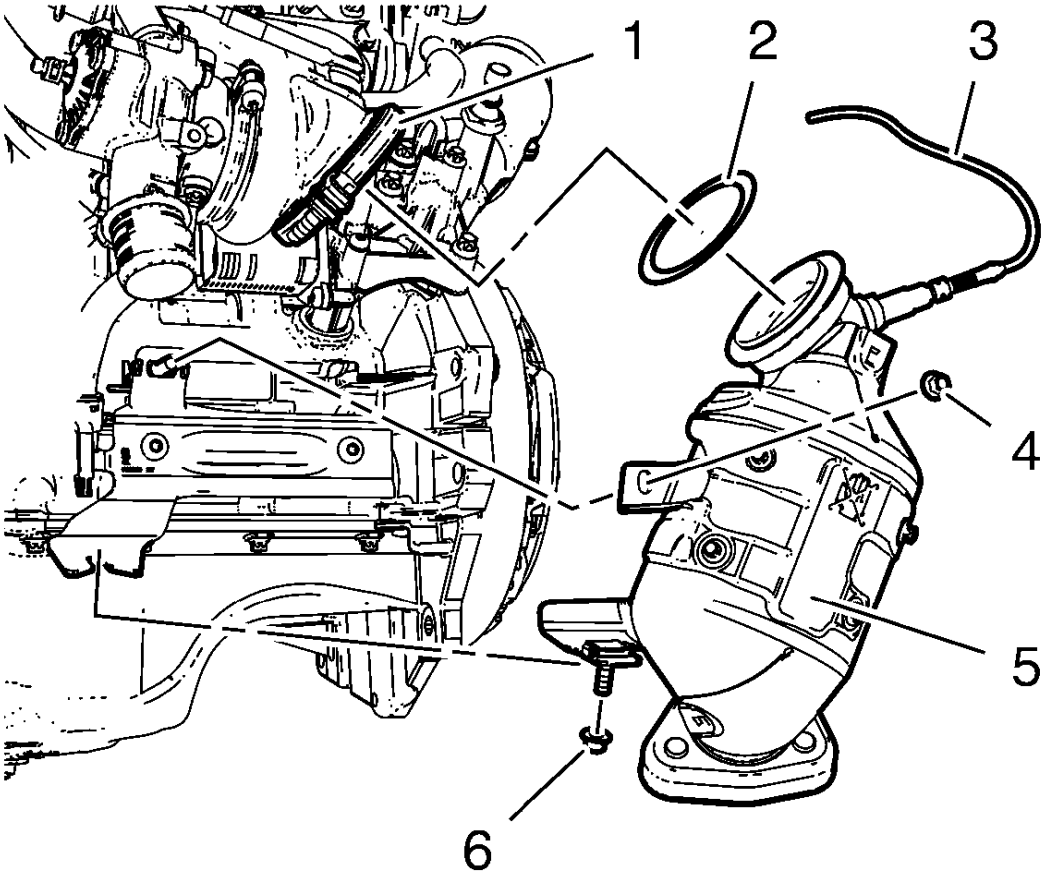

Fig. 516: Catalytic Converter Components
Courtesy of GENERAL MOTORS COMPANY

1. Install the warm up three way catalytic converter (5) to the brackets and the turbocharger. Use a NEW warm up three way catalytic converter seal (2).

NOTE: Never re-use the V-clamp.

2. Install a NEW warm up three way catalytic converter V-clamp (1).
3. Install the 2 catalytic converter to catalytic converter bracket nuts (4) and (6) and hand tighten.
4. Hand tighten the catalytic converter V-clamp.
5. Connect the heated oxygen sensor wiring harness (3) to retainer clip.

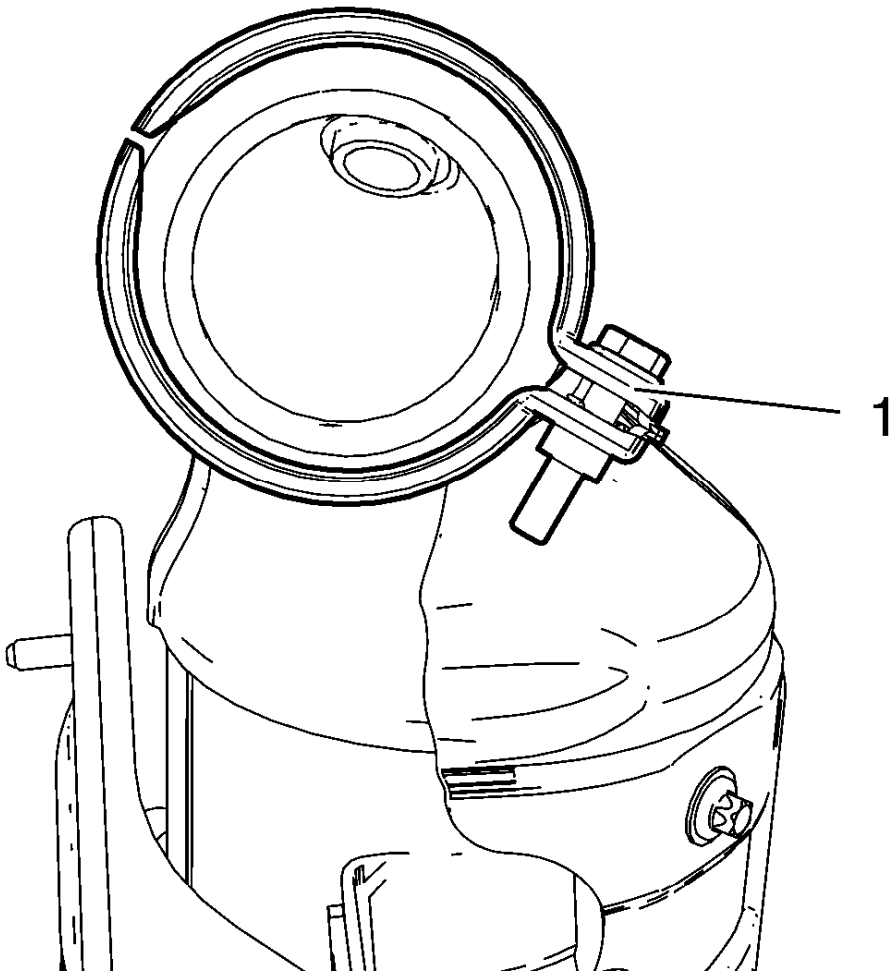

Fig. 517: Catalytic Converter V-Clamp
Courtesy of GENERAL MOTORS COMPANY

6. The catalytic converter V-clamp (1) should be installed in the shown position.

CAUTION: Refer to Fastener Caution .

7. Tighten the catalytic converter to catalytic converter bracket nuts to 22 N.m (16 lb ft).
8. Tighten the catalytic converter V-clamp to 13 N.m (115 lb in).

POSITIVE CRANKCASE VENTILATION PIPE INSTALLATION

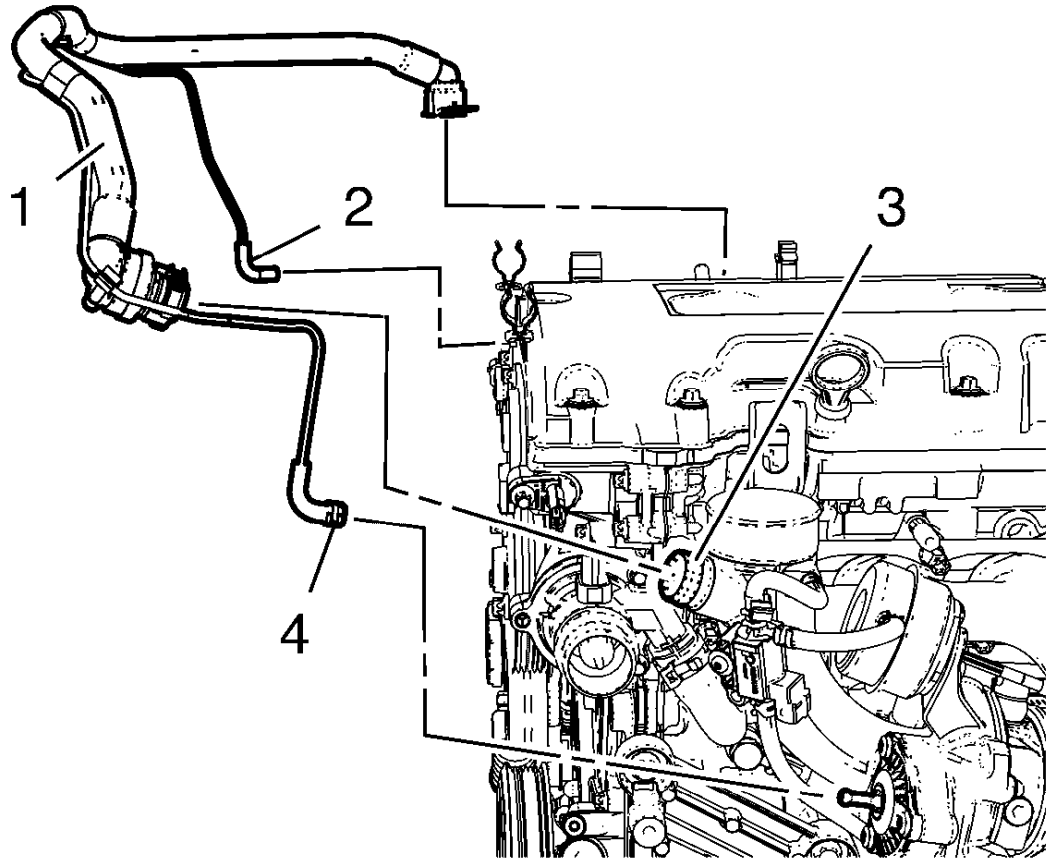

Fig. 518: Turbocharger, Positive Crankcase Ventilation Pipe Assembly And Charger Air Bypass Valve Pipe
Courtesy of GENERAL MOTORS COMPANY

1. Install the positive crankcase ventilation pipe assembly (1) to the camshaft cover retainer clips.
2. Connect the positive crankcase ventilation pipe to turbocharger (3).
3. Install the charger air bypass valve pipe (2) to turbo charger waste regulator solenoid valve.
4. Install the charger air bypass valve pipe to turbocharger.
5. Fasten the charger air bypass valve pipe clamp (4).

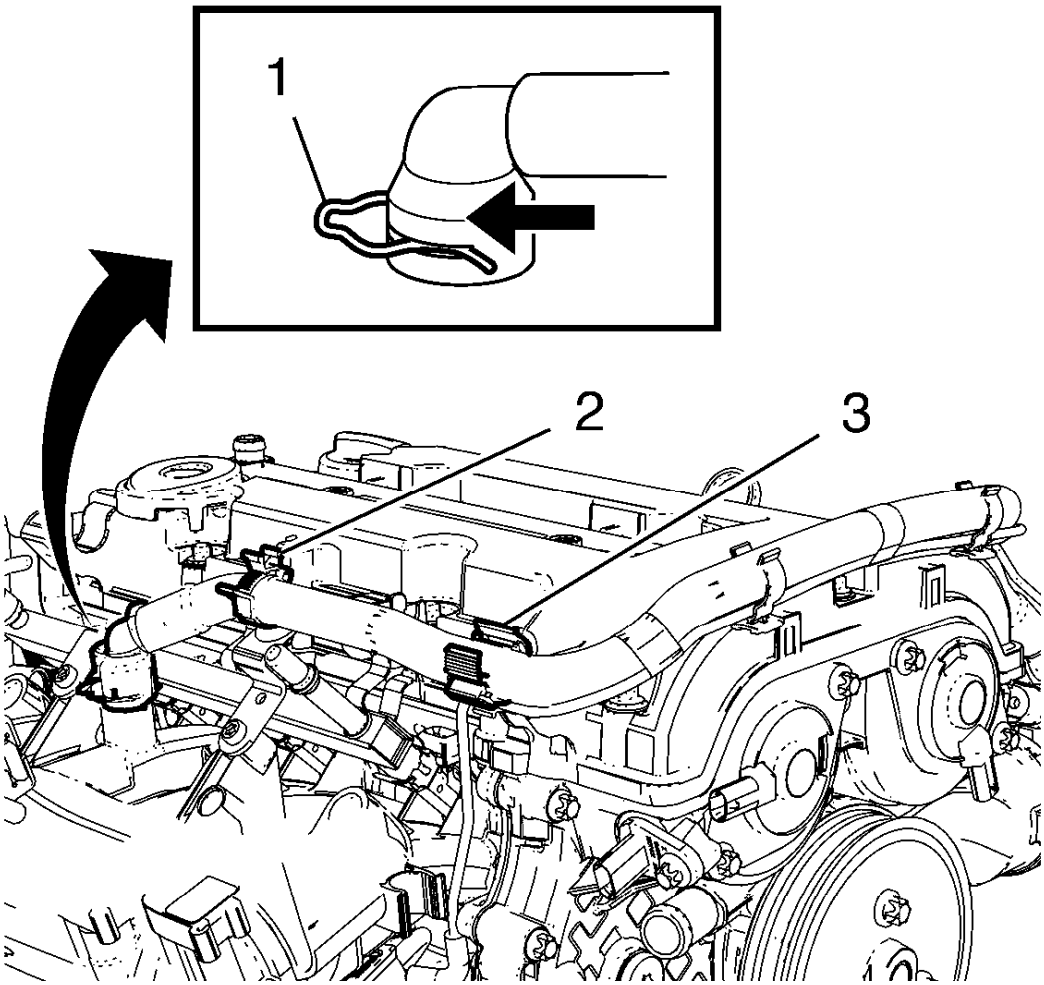

Fig. 519: Positive Crankcase Ventilation Pipe Retainer Clips And Retainer Clamp
Courtesy of GENERAL MOTORS COMPANY

6. Install the positive crankcase ventilation pipe to the intake manifold and fix with retainer clamp (1).
7. Clip in the positive crankcase ventilation pipe to the 2 retainer clips (2) and (3).

ENGINE MOUNT BRACKET INSTALLATION

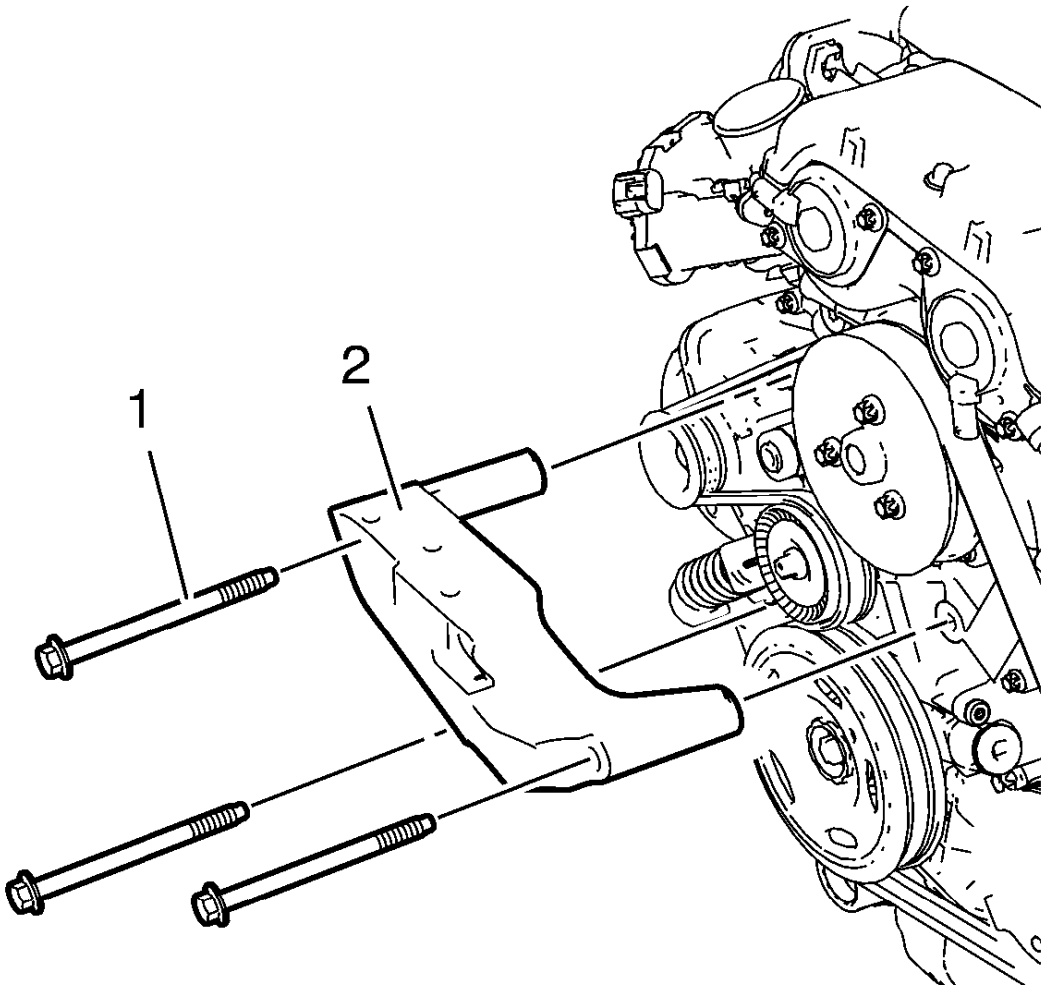

Fig. 520: Engine Mount Bracket And Bolts
Courtesy of GENERAL MOTORS COMPANY

1. Install the engine mount bracket (2).

CAUTION: Refer to Fastener Caution .

2. Install the 3 engine mount bracket bolts and tighten to 60 N.m (45 lb ft) + 45-60°.

ENGINE FRONT COVER AND OIL PUMP ASSEMBLE

Oil Pump Installation

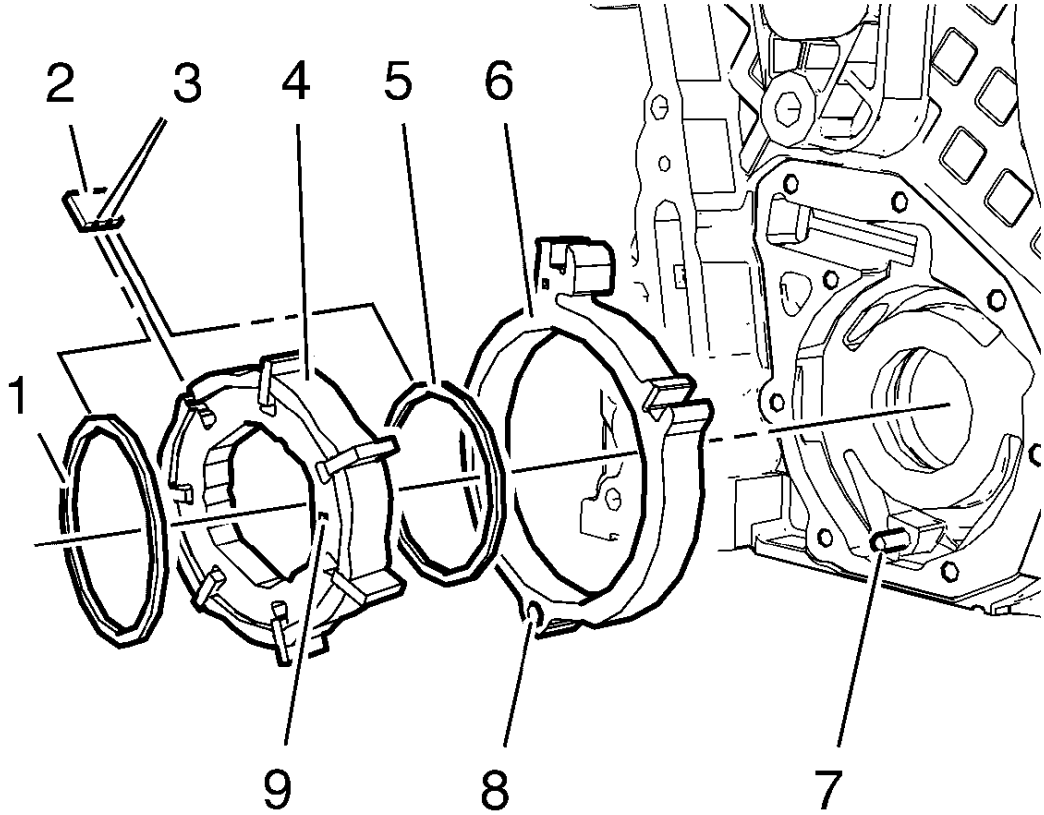

Fig. 521: Oil Pump Components
Courtesy of GENERAL MOTORS COMPANY

NOTE: The oil pump slide spring and pin, as well as the slide seal and slide seal spring can be ordered as single parts. All other oil pump components can only be ordered as a replacement kit.

1. Install the oil pump components in the following order:

NOTE: The bore (8) in the oil pump slide must fit smooth-running and without clearance to the oil pump slide pivot pin (7).

1. Install the oil pump slide (6).
2. Install the inner oil pump vane ring (5).

NOTE: Mind the installation position of the oil pump vane rotor (4). The mark

(9) must point to direction of the oil pump cover.

3. Install the oil pump vane rotor (4).

NOTE: **Mind the localized flats (3) on the oil pump vanes (2) caused by the oil pump vane rings. The localized flats must point to the oil pump vane rotor.**

4. Install the 6 oil pump vanes (2).
5. Install the outer oil pump vane ring (1).

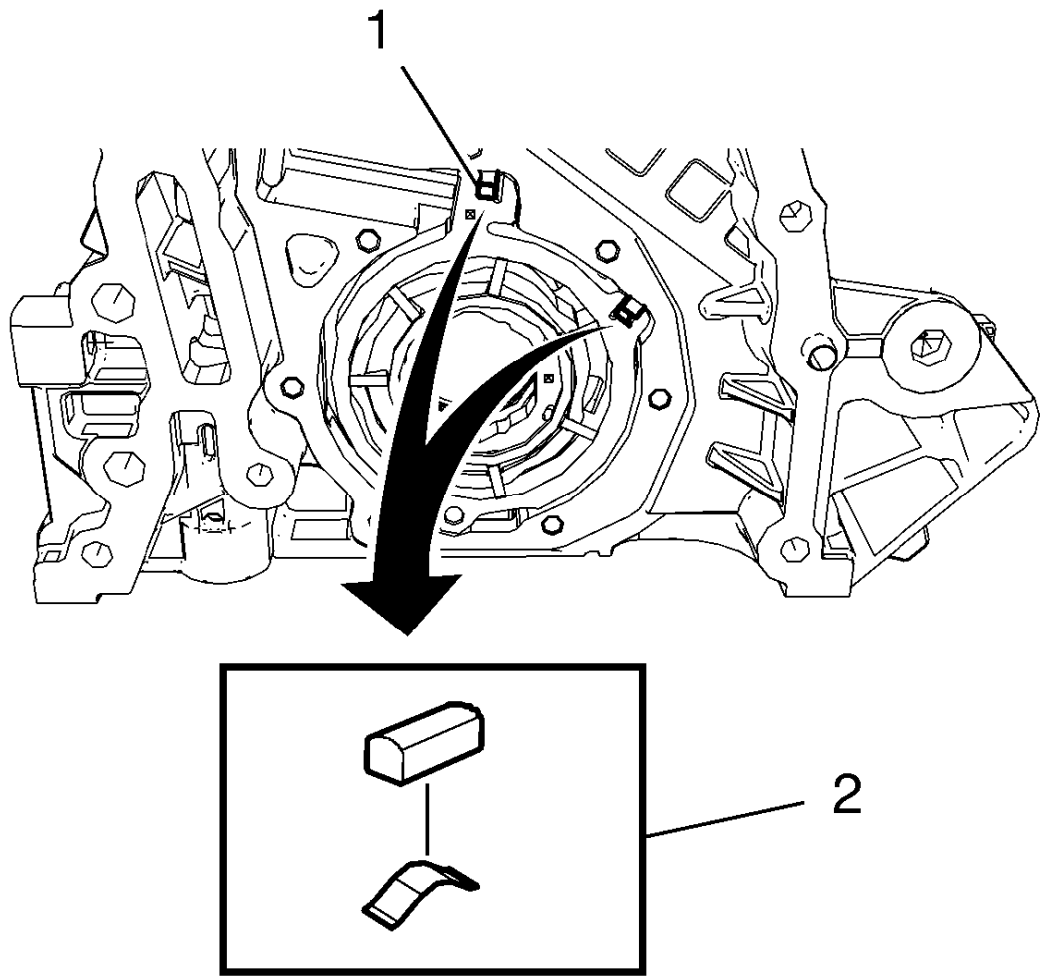

Fig. 522: Oil Pump Slide Seal Springs And Grooves
Courtesy of GENERAL MOTORS COMPANY

2. Install the 2 oil pump slide seals and the 2 oil pump slide seal springs (2) in the position as shown to the 2 grooves (1) of the oil pump slide.

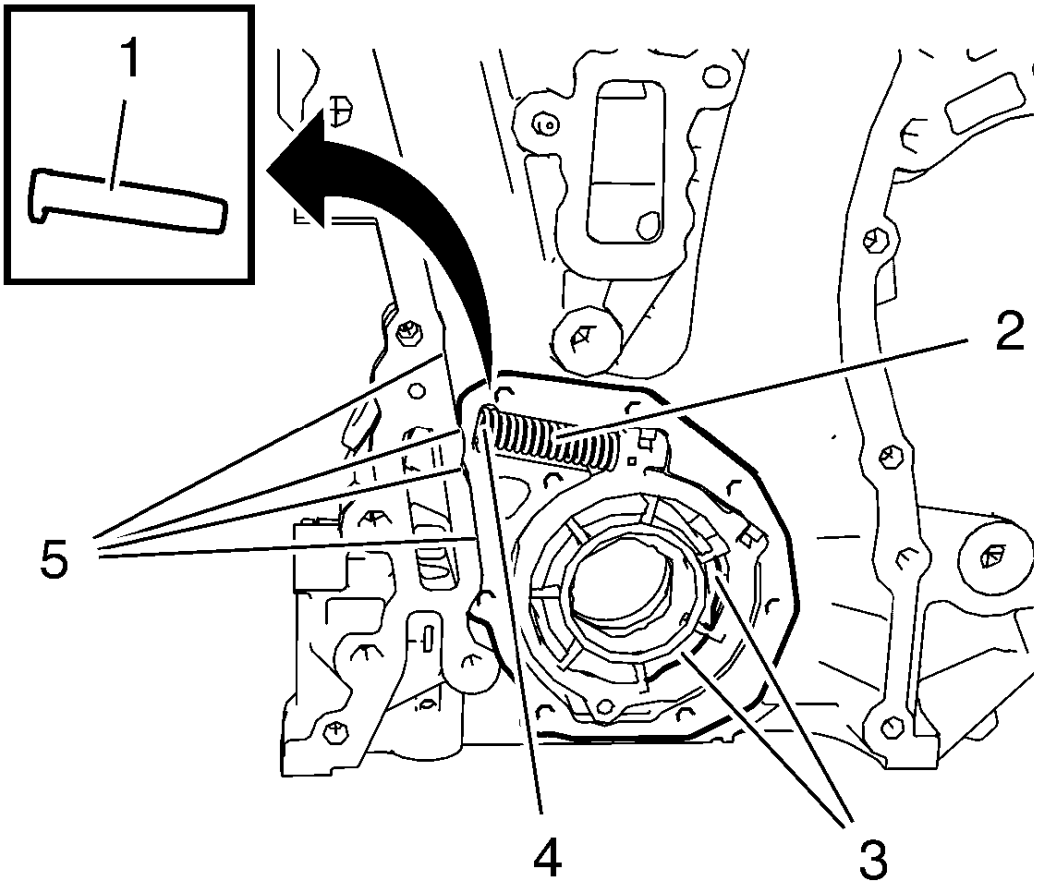

Fig. 523: Oil Pump Slide Spring, Pin, Chambers And Front Cover Edge
Courtesy of GENERAL MOTORS COMPANY

3. Protect the engine front cover edge (5) with a suitable piece of plastic.

NOTE: The length of the removed oil pump slide spring (2) should be 76.5 mm (3.0118 in) for suction engines and 61 mm (2.4016 in) for turbo engines.

4. Install the oil pump slide spring pin along with the oil pump slide spring (4). Use a screwdriver to compress the oil pump slide spring. The flat side of oil pump slide spring pin must face upwards.
5. Measure the oil pump clearances to ensure a correct installation of the oil pump components. Refer to **Engine Front Cover and Oil Pump Cleaning and Inspection**.
6. Lubricate the oil pump vanes, the oil pump vane rotor, the oil pump slide spring and the area (3) with engine oil.
7. Inspect the oil pump slide spring mechanism for functionality.

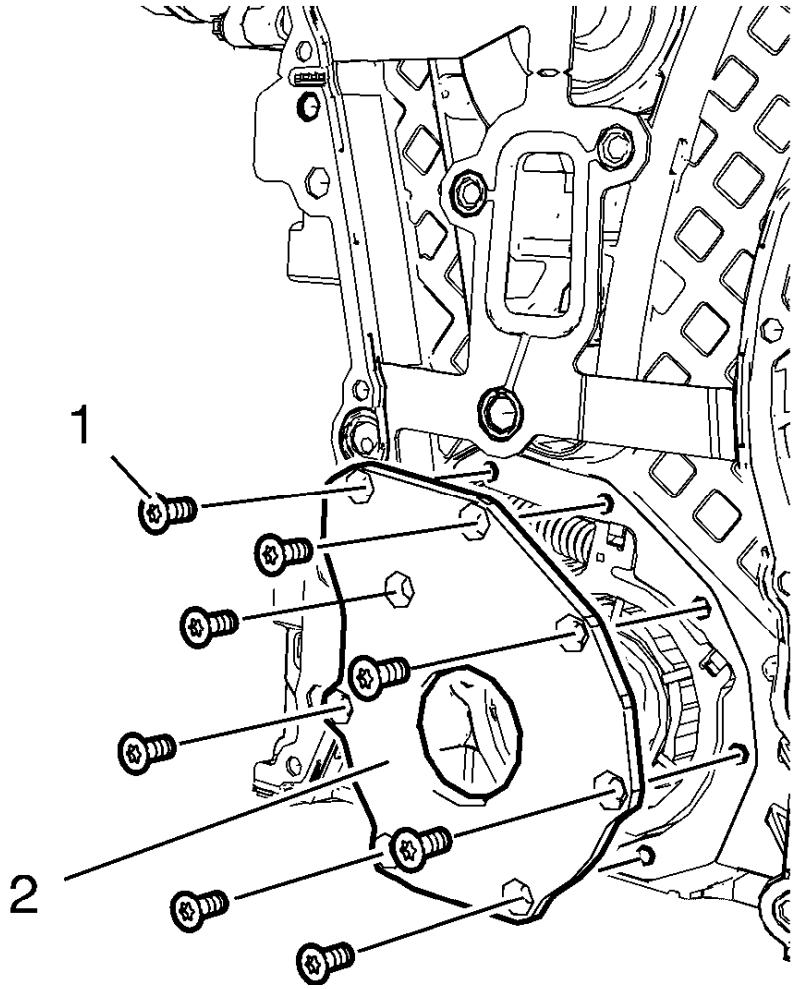

Fig. 524: Engine Oil Pump Cover And Bolts
Courtesy of GENERAL MOTORS COMPANY

8. Install the oil pump cover (2) and the 8 oil pump cover bolts (1).

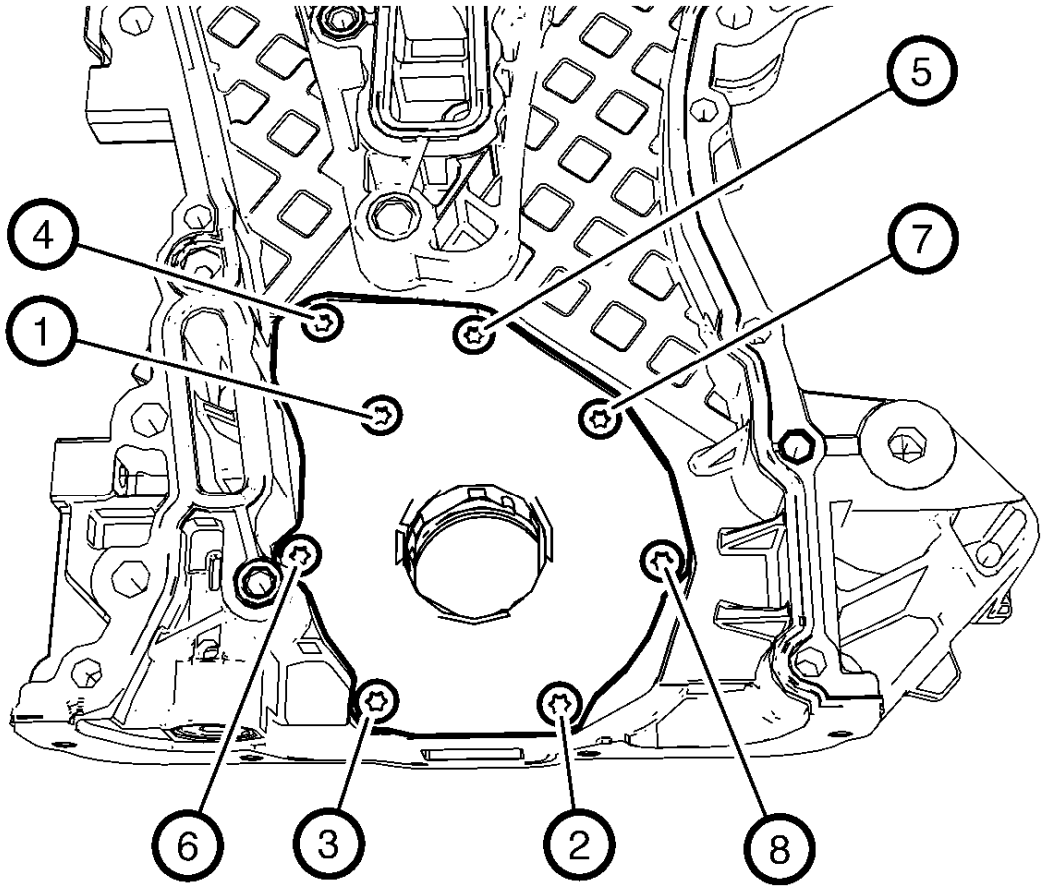

Fig. 525: Oil Pump Cover Bolts Tightening Sequence
Courtesy of GENERAL MOTORS COMPANY

CAUTION: Refer to Fastener Caution .

9. Tighten the oil pump cover bolts in a sequence as shown to 8 N.m (71 lb in).

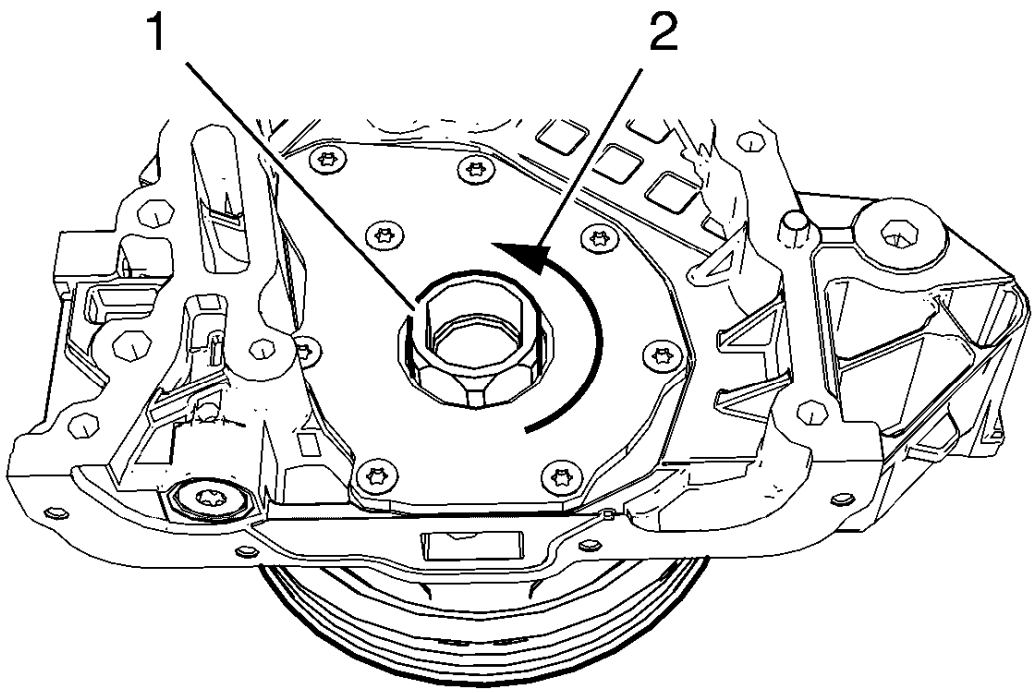

Fig. 526: Crankshaft Balancer
Courtesy of GENERAL MOTORS COMPANY

10. Install the crankshaft balancer (1) and rotate in the direction shown (2) in order to inspect the function of the oil pump mechanism. The crankshaft balancer should rotate easily.

Engine Front Cover Assemble

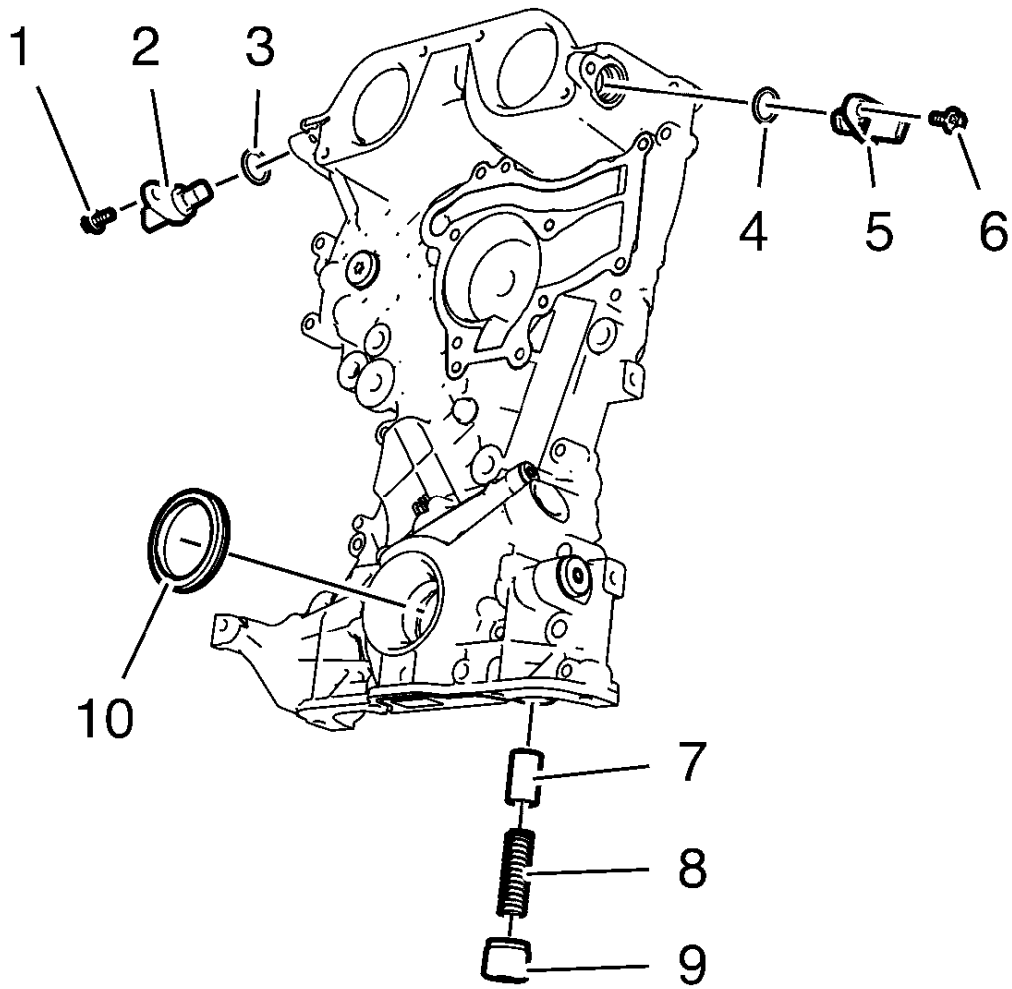

Fig. 527: Engine Front Cover Components
Courtesy of GENERAL MOTORS COMPANY

1. Install the crankshaft front oil seal (10).
2. Install the oil pressure relief valve (7), (8) and (9) and tighten to 50 N.m (37 lb ft).
3. Install the exhaust camshaft position sensor (5) and the seal ring (4).
4. Install the exhaust camshaft sensor bolt (6) and tighten to 6 N.m (53 lb in).
5. Install the intake camshaft position sensor (2) and the seal ring (3).
6. Install the intake camshaft sensor bolt (1) and tighten to 6 N.m (53 lb in).

DRIVE BELT REMOVAL

Special Tools

- **EN-955** Locking Pins
- **EN-48488** Holding Wrench

For equivalent regional tools, refer to **Special Tools**.

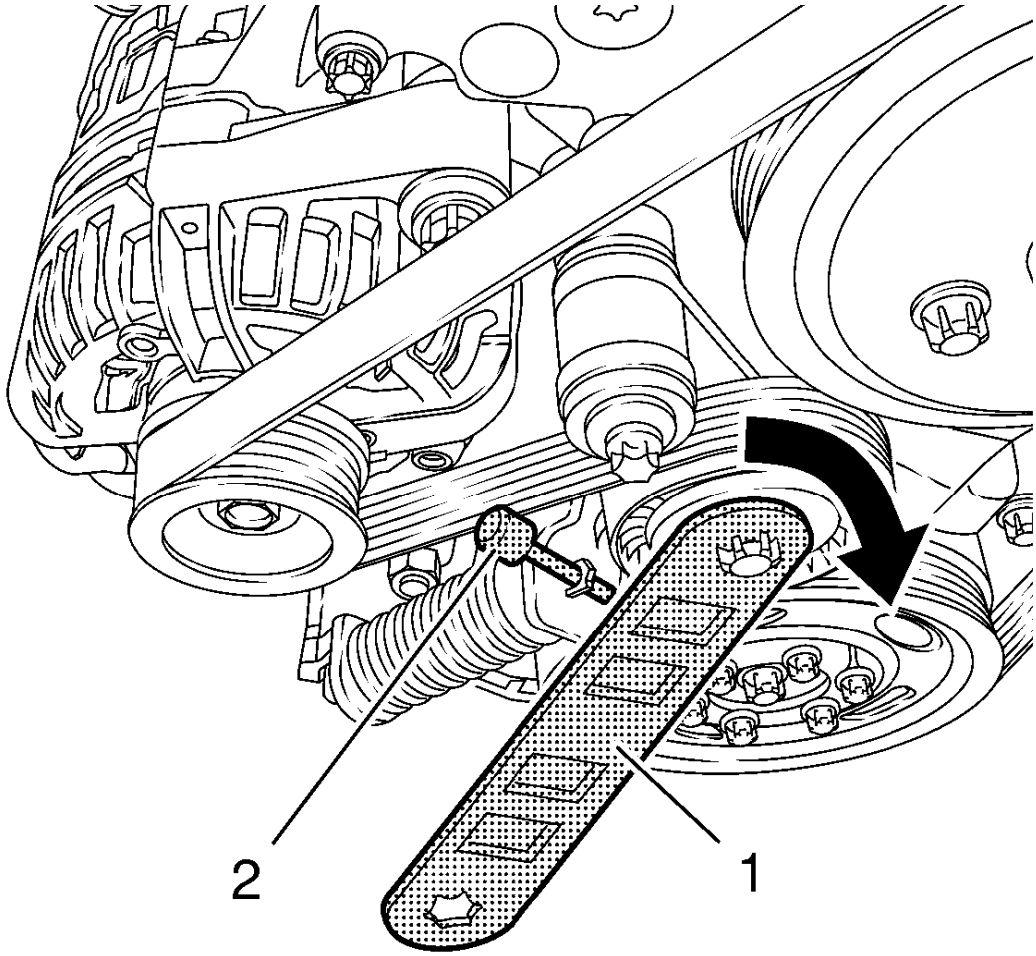

Fig. 528: Locking Pin And Wrench
Courtesy of GENERAL MOTORS COMPANY

1. Install **EN-48488** wrench (1) to the drive belt tensioner.

NOTE: The drive belt tensioner must always be in a pre-tensioned state.

2. Move the drive belt tensioner clockwise until the drive belt tensioner can be fixed with the **EN-955-20** locking pin (2).
3. Remove the drive belt.

AUTOMATIC TRANSMISSION FLEX PLATE REMOVAL

Special Tools

EN-652 Flywheel Holder

For equivalent regional tools, refer to **Special Tools**.

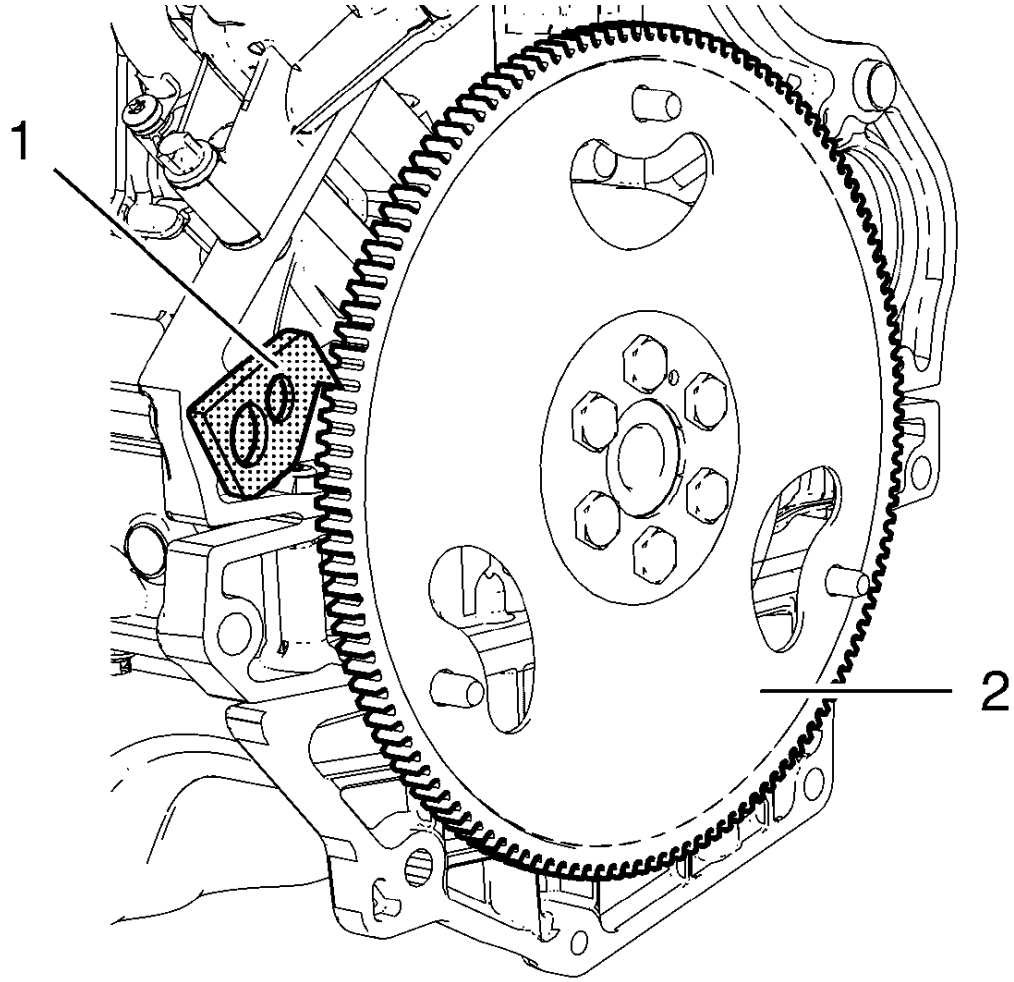

Fig. 529: Automatic Transmission Flex Plate
Courtesy of GENERAL MOTORS COMPANY

1. Install the **EN-652** flywheel holder (1) in order to fix the automatic transmission flex plate (2).

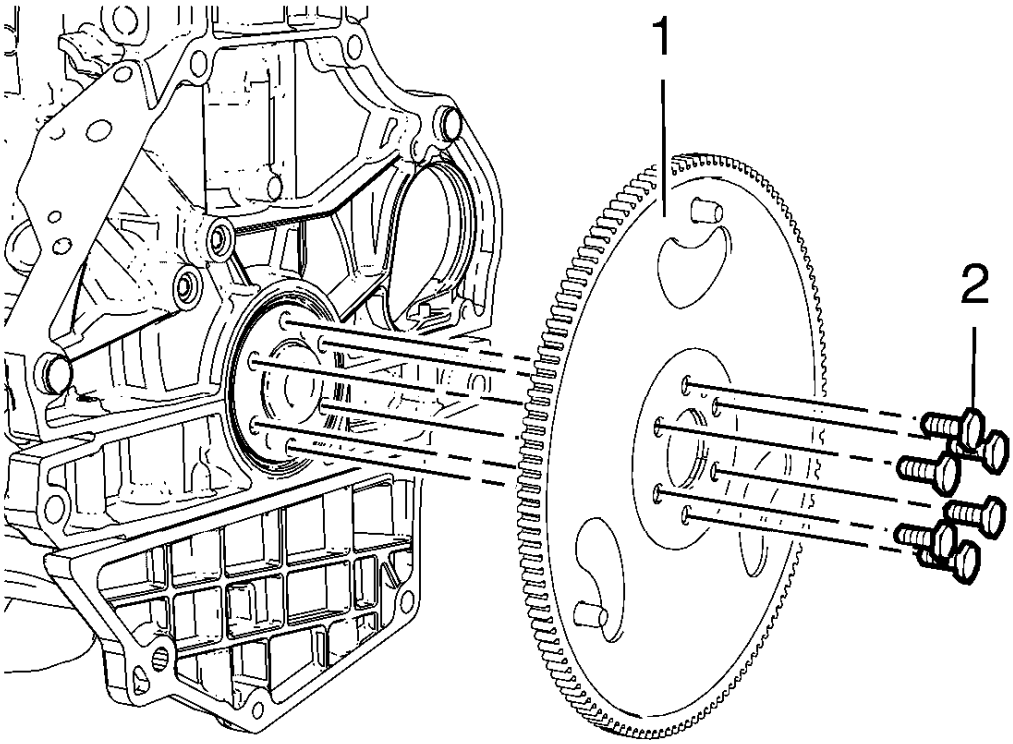

Fig. 530: Automatic Transmission Flex Plate And Bolts
Courtesy of GENERAL MOTORS COMPANY

2. Remove and DISCARD the 6 automatic transmission flex plate bolts (2).
3. Remove the automatic transmission flex plate (1).

ENGINE BLOCK CLEANING AND INSPECTION

Special Tools

EN-8087 Cylinder Bore Gauge

For equivalent regional tool, refer to **Special Tools**.

Cleaning Procedure

1. Remove any old thread sealant, gasket material or sealant.

2. Clean all the following areas with solvent:
   - Sealing surfaces
   - Cooling passages
   - Oil passages
3. Clean all threaded and through holes with solvent.

WARNING: Wear safety glasses when using compressed air in order to prevent eye injury.

4. Dry the engine block with compressed air.

Visual Inspection

1. Inspect the crankshaft bearings journals for damage or spun bearings. The crankshaft bearing journals are not repairable, if the crankshaft bearing journals are damaged the engine block assembly must be replaced.
2. Inspect all sealing and mating surfaces for damage, repair or replace the engine block assembly if necessary.
3. Inspect all threaded and through holes for damage or excessive debris.
4. Inspect all bolts for damage, if damaged replace with NEW bolts only.
5. Inspect the cylinder walls for cracks or damage. The cylinder sleeves are not serviced separately, if the cylinders are damaged the cylinder block assembly must be replaced.
6. Inspect the engine block for cracks. Do not repair any cracks. If cracks are found, the cylinder block assembly must be replaced.

Measuring Procedure

Engine Block Flatness Inspection

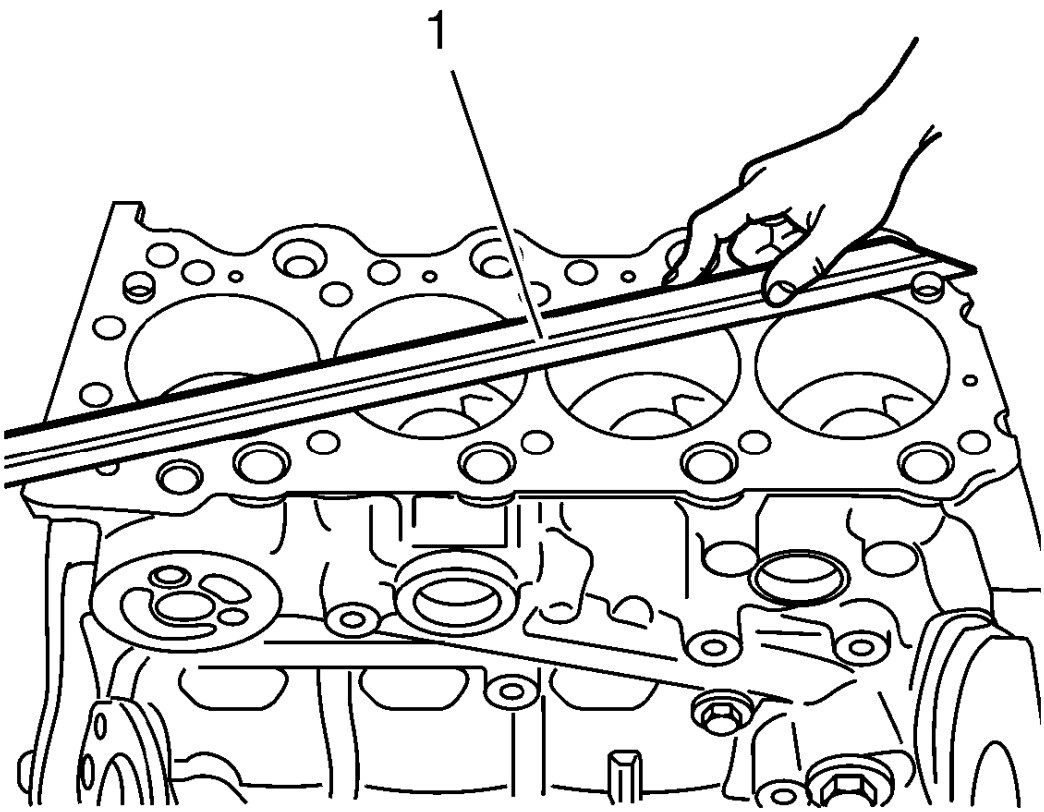

Fig. 531: Inspecting Engine Block For Distortion Using Straight Edge
Courtesy of GENERAL MOTORS COMPANY

1. Inspect the engine block as shown for distortion. Use a straightedge (1).

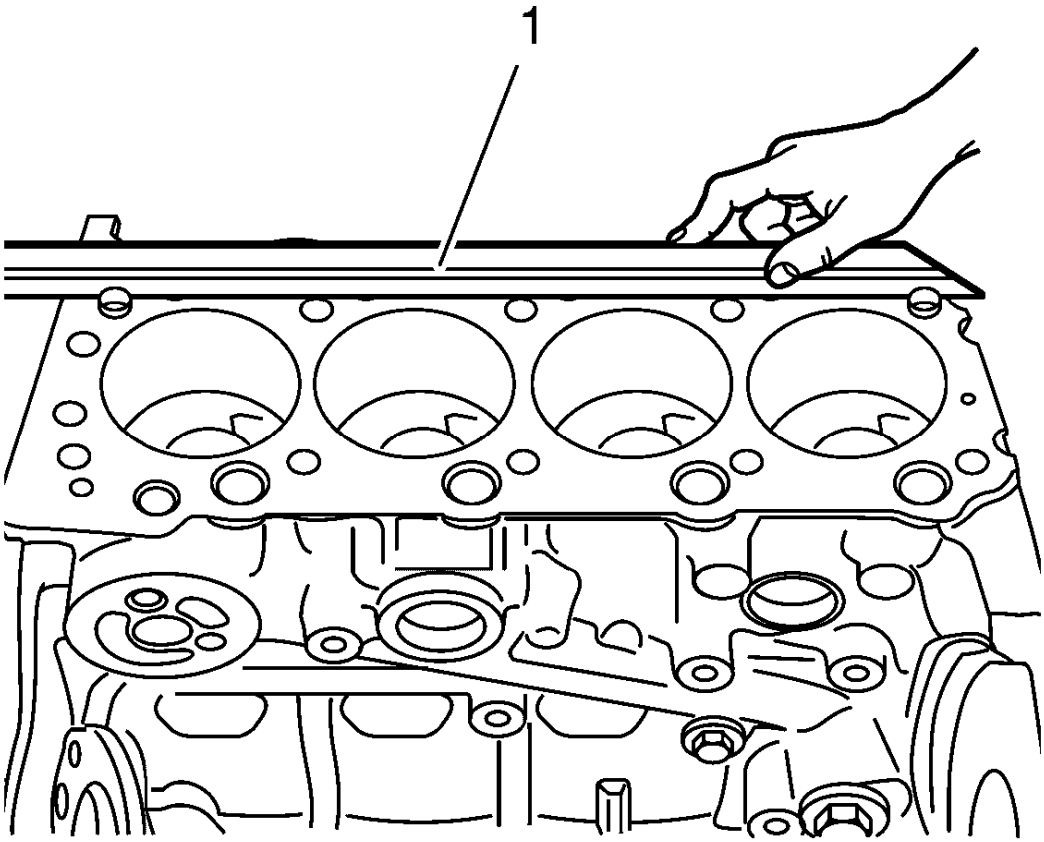

Fig. 532: Inspecting Engine Block For Deflection Using Straight Edge
Courtesy of GENERAL MOTORS COMPANY

2. Inspect the engine block as shown for deflection. Use a straightedge (1).

Cylinder bore and crankshaft bearing bore

NOTE: Old bolts can be used for the measuring procedure.

1. Install the crankshaft bearing cap tie plate and tighten.

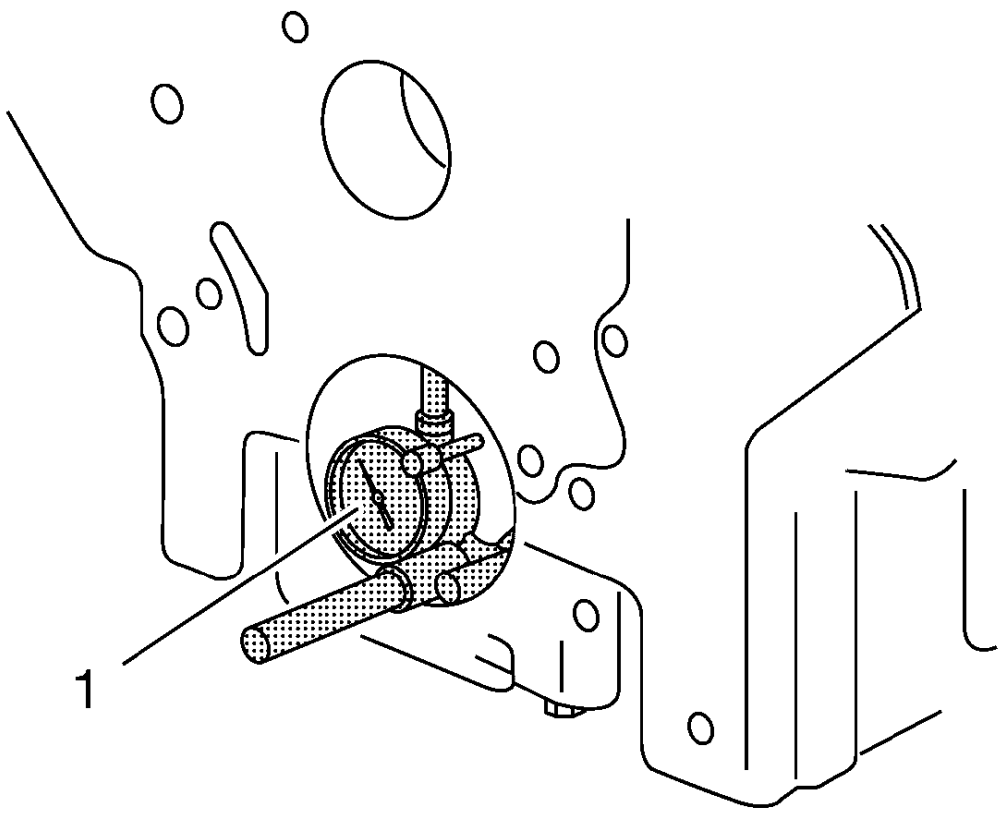

Fig. 533: Measuring Bearing Bore Concentricity And Alignment Using Gauge Tool
Courtesy of GENERAL MOTORS COMPANY

2. Inspect the crankshaft main bearing bores. Use the **EN-8087** gauge (1) to measure the bearing bore concentricity and alignment. Refer to **Engine Mechanical Specifications** to find the permitted values.
3. Replace the engine block and crankshaft bearing cap tie plate if the crankshaft bearing bores are out of specification.

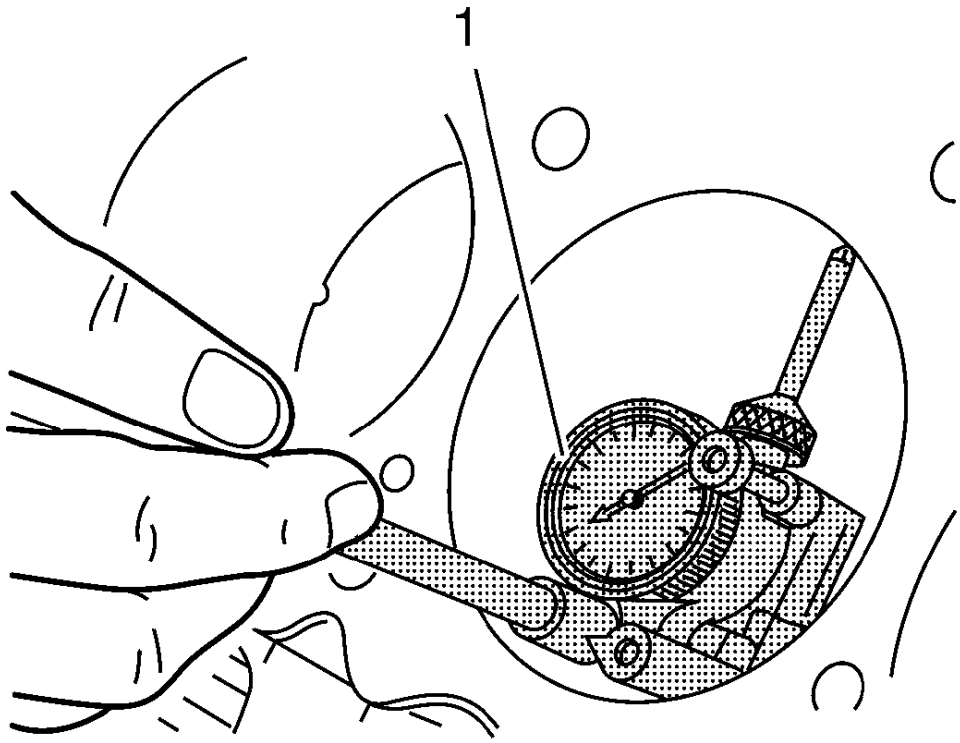

Fig. 534: Inspecting Cylinder Bore
Courtesy of GENERAL MOTORS COMPANY

4. Inspect the cylinder bores using the **EN-8087** gauge (1). Inspect for the following items:
   - Wear
   - Taper
   - Runout
   - Ridging
5. Refer to **Engine Mechanical Specifications** to find the permitted values.
6. If the cylinder bores are out of specification, replace the engine block.
7. Remove the crankshaft bearing cap tie plate.

AUTOMATIC TRANSMISSION FLEX PLATE INSTALLATION

Special Tools

EN-652 Flywheel Holder

For equivalent regional tools, refer to **Special Tools**.

1. Clean the 6 screw bores. Rework if necessary.

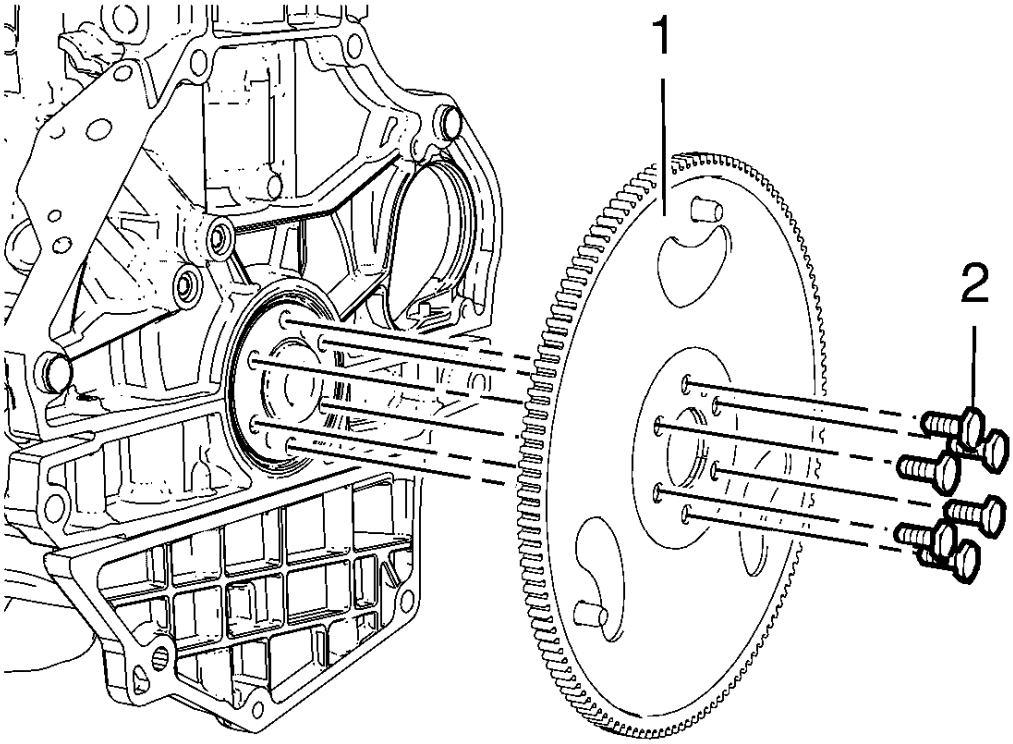

Fig. 535: Automatic Transmission Flex Plate And Bolts
Courtesy of GENERAL MOTORS COMPANY

2. Install the automatic transmission flex plate (1).
3. Install 6 NEW automatic transmission flex plate bolts (2).

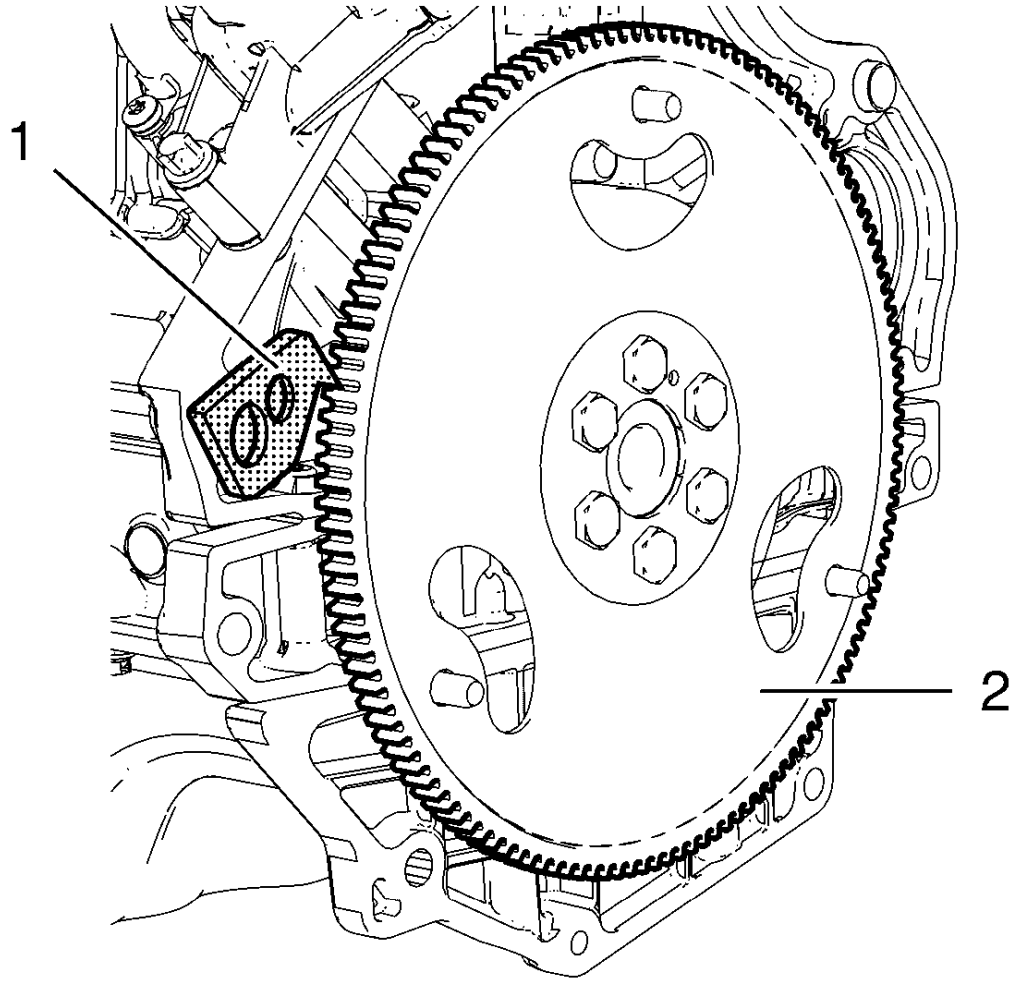

Fig. 536: Automatic Transmission Flex Plate
Courtesy of GENERAL MOTORS COMPANY

4. Install **EN-652** flywheel holder (1) in order to fix the automatic transmission flex plate (2).

CAUTION: Refer to Fastener Caution .

CAUTION: Refer to Torque-to-Yield Fastener Caution .

5. Tighten the 6 automatic transmission flex plate bolts in a cross sequence to 35 N.m(26 lb ft).
6. Tighten the 6 automatic transmission flex plate bolts in a cross sequence to an additional 30°.
7. Tighten the 6 automatic transmission flex plate bolts in a cross sequence to an additional 15°.

DESCRIPTION AND OPERATION

ENGINE COMPONENT DESCRIPTION

Cylinder Block

The cylinder hollow frame structured in-line 4 cylinder. The block has 5 crankshaft bearings with the thrust bearing located on the third bearing from the front of the engine.

Crankshaft

The crankshaft is a steel crankshaft. It is supported in 5 main journals with main bearings which have oil clearance for lubrication. The 3rd bearing is the thrust bearing which controls the proper axial end play of the crankshaft. A harmonic damper is used to control torsional vibration.

Oil Pump

The engine is equipped with a variable oil pump. The oil pump is integrated into the engine front cover and provides different oil pressure values depending on the engine speed.

Oil Pan

The oil pan is a structural aluminum oil pan with transmission attachment points. The oil suction gallery for the oil pump is integrated into the oil pan.

Piston and Connecting Rod

The pistons are aluminum pistons. The connecting rods are made of fractured steel. The piston pin is floating in piston bore and shrinked in connecting rod.

Cylinder Head

This cylinder head is a double over head camshaft (DOHC) type and has 2 camshafts that open 4 valves per cylinder with hydraulic valve lash adjusters and hydraulic valve lash adjuster arms. The cylinder head is made of cast aluminum alloy for better strength and hardness while remaining light weight. The combustion chamber of the cylinder head is designed for increasing of squish and swirl efficiency to help maximize gasoline combustion efficiency.

Camshaft Drive with Variable Camshaft Timing

A timing chain is used for camshaft drive. There is a tensioner to control the tension of the chain. The engine is equipped with a variable camshaft timing system. The camshaft adjuster will readjust itself depending on the engine speed. The valve timing readjusts to reduce fuel consumption and provide optimal power and torque.

Intake Manifold

The intake manifold provides the air flow passage to the combustion chambers through the throttle body. The intake manifold along with the throttle body have an effect on engine torque, power, noise, driveability,

emission, fuel economy and performance. The intake manifold is made of plastic for better strength with maintaining a light weight.

Turbocharger

The turbocharger consists of turbine and compressor on a common shaft. The shaft bearing is constructed to higher rotation speed and lubricated by engine oil. The turbocharger is water cooled for improved durability. The turbine wheel is driven by exhaust emissions. The compressor wheel compresses the intake air. A bypass valve (Wastegate) regulates the charging pressure for generating a high pressure at low speed as well. At a defined charging pressure it regulates the way of the exhaust emission on bypassing the turbine wheel. The Wastegate valve is controlled pneumatic and electric from the pressure in the intake manifold. The pressure of exhaust emission is reduced by opening the Wastegate thereby reducing the intake pressure.

CRANKCASE VENTILATION SYSTEM DESCRIPTION

Positive Crankcase Ventilation

The crankcase ventilation system is used to consume crankcase vapors in the combustion process instead of venting vapors to the atmosphere. Fresh air from the intake system is supplied to the crankcase, mixed with blow-by gases and then passed through a calibrated orifice into the intake manifold. The primary control is through the positive crankcase ventilation (PCV) orifice which meters the flow at a rate depending on inlet vacuum. The PCV orifice is an integral part of the camshaft cover. If abnormal operating conditions occur, the system is designed to allow excessive amounts of blow-by gases to back flow through the crankcase vent into the intake system to be consumed by normal combustion.

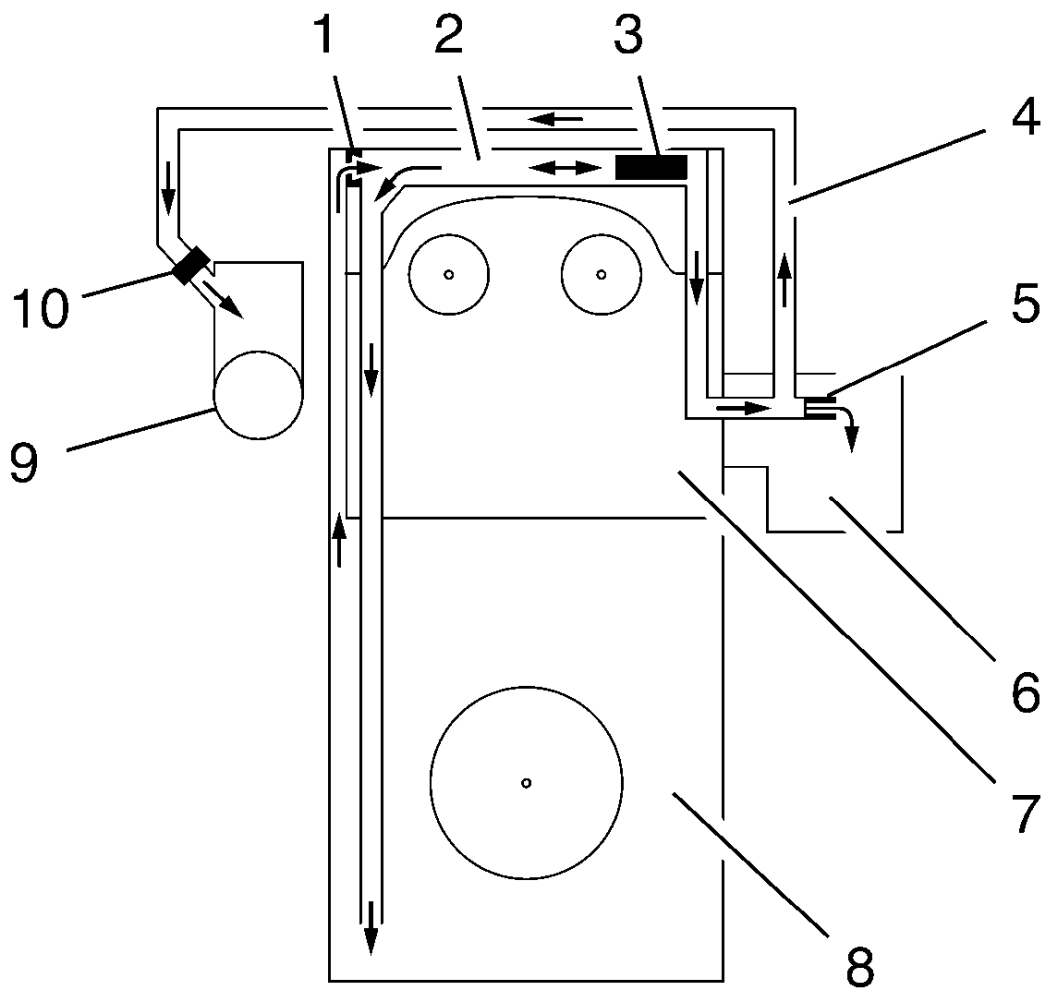

Fig. 537: Positive Crankcase Ventilation System Description Graph
Courtesy of GENERAL MOTORS COMPANY

The blow-by system is designed as a closed crankcase ventilation system (CCV) evacuating the combustion gas from the crankcase (8), separating the oil with an oil separator (1), regulating the pressure in the cylinder head cover (2) over an pressure regulation valve (3) and feed the cleaned gas through the cylinder head (7) into the intake manifold (6). The primary blow-by system leads the gas through a non-return valve (NRV) directly into the plenum; the secondary blow-by pipe assembly (4) routes the cleaned blow-by gas from the intake manifold to the air intake of the turbo charger (9). Deviations from recommended materials have to be indicated and agreed. The blow-by pipe assembly carries the ventilation gas and prevents a leakage or a back-flow of the blow-by gas. It incorporates a quick connector to the manifold, the non-return valve (5) and a quick connector to the turbo charger as well as brackets to hold the pipe assembly. A combined quick connector with a non-return valve (10) at the turbo charger is installed, also.

Results of Incorrect Operation

A plugged positive crankcase ventilation (PCV) orifice or hose may cause the following conditions:

- Rough idle
- Stalling or slow idle speed
- Oil leaks
- Oil in the throttle body
- Sludge in the engine

Functional Check

With these systems, any blow-by in excess of the system capacity, from a badly worn engine, sustained heavy load, etc., is exhausted into the air cleaner and is drawn into the engine.

Proper operation of the crankcase ventilation system depends upon a sealed engine. If oil slugging or dilution is noted and the crankcase ventilation system is functioning properly, check the engine for a possible cause. Correct any problems.

If an engine is idling rough, inspect for a clogged PCV orifice, a dirty vent filter, air cleaner element, or plugged hose. Replace as required. Use the following procedure:

- Remove the PCV hose from the cylinder head cover.
- Operate the engine at idle.
- Place your thumb over the end of the hose in order to check for a vacuum. If there is no vacuum at the hose, inspect for the following items:
  - Plugged hoses
  - The manifold port
- Turn OFF the engine.
- Inspect the PCV orifice in the cylinder head cover for debris or blockage.

LUBRICATION DESCRIPTION

General Lubrication Description

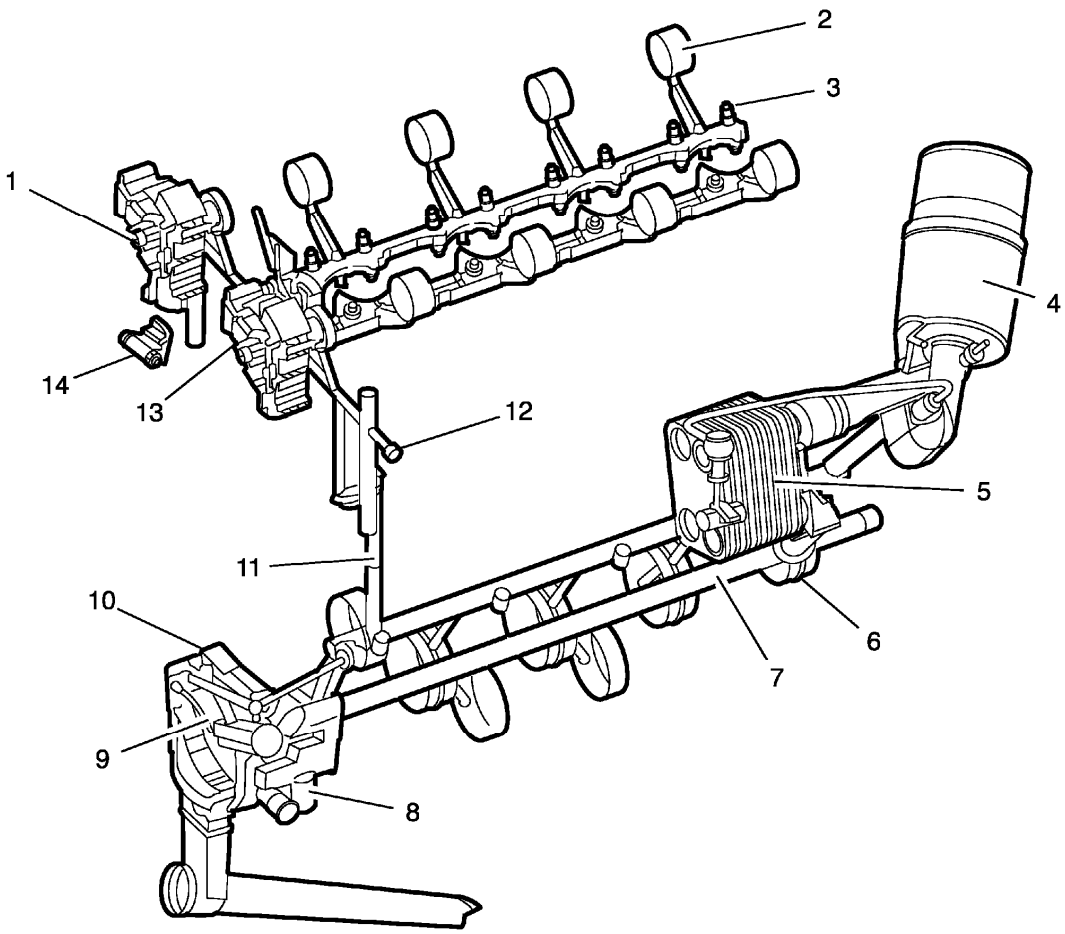

Fig. 538: Lubrication System Components
Courtesy of GENERAL MOTORS COMPANY

Oil is applied under pressure to the crankshaft bearings (6), connecting rod bearings (7), camshaft bearings (2) and hydraulic lash adjusters (3). In addition the variable oil pump (9), variable camshaft phaser (1), and hydraulic chain tensioner (14) are supplied with pressurized oil. Oil is sucked from the oil pan through the fixed screen into the variable vane type oil pump. The pump is integrated in the front cover and directly driven by the crankshaft. Also integrated into the front cover is a pressure relieve valve (8) that opens when the oil pressure is too high at a cold start. When that valve is open some oil flows directly into the oil pan. Normally the pressurized oil passes into the engine oil gallery leading through the oil cooler (5) to the oil filter assembly (4). The oil is cleaned by passing the filter from the outer to the inner side of the filter. Then the oil flows into the main oil gallery. A filter by-pass valve in the oil filter ensures continues oil flow in case the oil filter should be restricted by more than 1.7 bar. From the oil filter the oil is distributed to the crankshaft bearings, oil pump displacement control chamber (10) and cylinder head feed (11). The connecting rod bearings are supplied by oil flow passages through the crankshaft connecting the main journals to the rod journals. A groove around each upper main bearing furnishes oil to the drilled crankshaft passages. In the cylinder head the oil is distributed to the variable camshaft phasers, chain tensioner, oil pressure switch (12) and through the restrictor orifice (13) into the camshaft feed oil gallery. From there the hydraulic valve lifters and camshaft bearings are supplied with oil.

Variable Oil Pump Description

The engine is equipped with a variable displacement vane oil pump. It is indirect regulated by the oil pressure out of the main oil gallery. The purpose of this indirect regulation is to keep a defined maximum pressure in the main oil gallery independent of the individual pressure drop between the pump outlet, the main gallery inlet, and the various engine components. The purpose of the variable displacement is to reduce the power consumption of the pump to reduce the overall fuel consumption of the engine. The oil flow of a static displacement oil pump is linear to the speed of the pump. This would lead to a too high oil pressure after a certain engine speed (ca. 1000 rpm at cold oil temperature, ca. 3000 rpm at hot oil temperatures). To reduce that high oil pressure normal pumps have a relieve valve: a portion of the pressurized, already pumped oil is fed back to the intake of the pump. This is waste of power. The oil flow of a Variable Displacement Vane Pump (VDVP) as used in Fam 0 Gen 3 is linear to the speed and to the excentricity of the rotor to the slide. The slide is moveable, so it is possible to reduce the oil flow for a given speed by reducing the excentricity. With a lower flow the oil pressure is reduced; pump oil flow equals now engine oil flow.

CLEANLINESS AND CARE

An automobile engine is a combination of many of the following surfaces:

- Machined
- Honed
- Polished
- Lapped

The tolerances of these surfaces are measured in the ten-thousandths of an inch. When you service any internal engine part, cleanliness and care are important. Apply a liberal coating of engine oil to the friction areas during assembly in order to protect and lubricate the surfaces on initial operation. Throughout this section, practice proper cleaning and protection procedures to the machined surfaces and to the friction areas.

Whenever you remove the valve train components, keep the components in order. Follow this procedure in order to install the components in the same locations and with the same mating surfaces as when removed.

WARNING: Refer to Battery Disconnect Warning .

Disconnect the negative battery cables before you perform any major work on the engine.

USE OF ROOM TEMPERATURE VULCANIZING (RTV) AND ANAEROBIC SEALANT

Pipe Joint Compound

NOTE: Three types of sealer are commonly used in engines. These are RTV sealer, anaerobic gasket eliminator sealer, and pipe joint compound. The correct sealer and amount must be used in the proper location to prevent oil leaks. DO NOT interchange the 3 types of sealers. Use only the specific sealer or the equivalent as recommended in the service procedure.

- Pipe joint compound is a pliable sealer that does not completely harden. This type sealer is used where 2 non-rigid parts, such as the oil pan and the engine block, are assembled together.
- Do not use pipe joint compound in areas where extreme temperatures are expected. These areas include: exhaust manifold, head gasket, or other surfaces where gasket eliminator is specified.
- Follow all safety recommendations and directions that are on the container. To remove the sealant or the gasket material.
- Apply the pipe joint compound to a clean surface. Use a bead size or quantity as specified in the procedure. Run the bead to the inside of any bolt holes. Do not allow the sealer to enter any blind threaded holes, as it may prevent the bolt from clamping properly.
- Apply a continuous bead of pipe joint compound to one sealing surface. Sealing surfaces to be resealed must be clean and dry.
- Tighten the bolts to specifications. Do not overtighten.

SPECIAL TOOLS AND EQUIPMENT

SPECIAL TOOLS

Illustration	Tool Number/Description
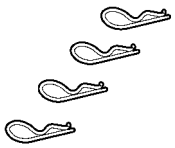	207649 Rod Hairpins
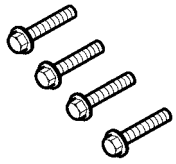	547324 Flange Screws
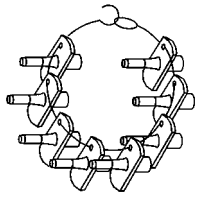	CH-807 KM-807 Plugs
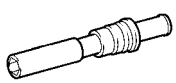	EN-194-E KM-194-E Spark Plug Key
	EN-235-6 KM-235-6 Installer

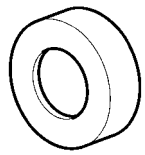	
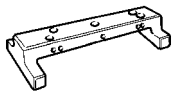	EN-301 KM-301 Measuring Bridge
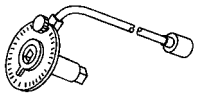	EN-470-B KM-470-B J-45059 Angular Torque Wrench
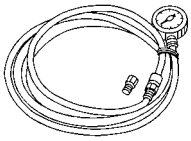	EN-498-B KM-498-B CH-48027 J-21867-L40 Pressure Gauge
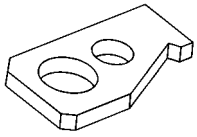	EN-652 DT-652 KM-652 Flywheel Holder
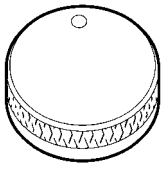	EN-658-1 KM-658-1 J-35264 Installer
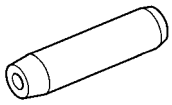	EN-663 KM-663 Installer
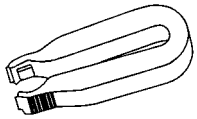	EN-796-A KM-796-A Remover Quick Fitting

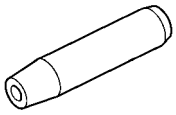	EN-835-A KM-835-A Plugs
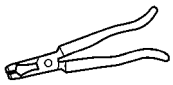	EN-840 KM-840 J-36017 Pliers / Remover
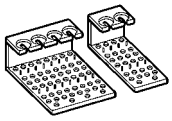	EN-849 KM-849 Assembly Tray
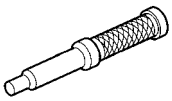	EN-952 KM-952 Fixing Tool Crankshaft
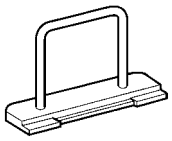	EN-953-A KM-953-A Fixing Tool Camshaft
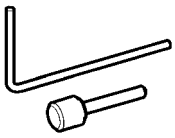	EN-955 KM-955 Locking Pins
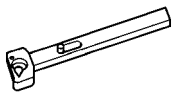	EN-956-1 KM-956-1 Extension
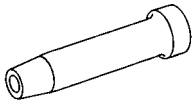	EN-958 KM-958 Valve Stem Seal Installer

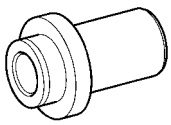	EN-960 KM-960 Installer
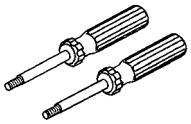	EN-6009 KM-6009 J-43301 Remover / Installer
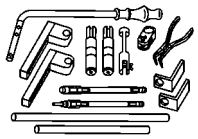	EN-6086 MKM-6086 Basic Kit, Spring and Wedge Replacer
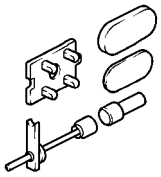	EN-6167 KM-6167 Adapter Kit
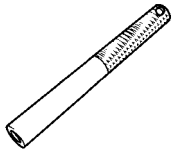	EN-6171 KM-6171 Release Tool
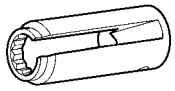	EN-6179 KM-6179 Installer / Remover
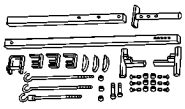	EN-28467-B J-28467-B Universal Engine Support Fixture
	EN-36857 J-36857 Engine Lift Bracket
	EN-34730-91

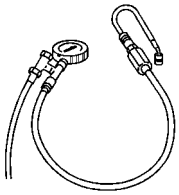	KM-34730-91 J-34730-91 CH-48027 Pressure Tester
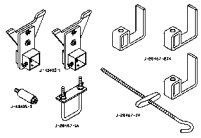	EN-43405 J-43405 Support Foot Set
	EN-45000 KM-J45000 J-45000 Remover Oil Seal
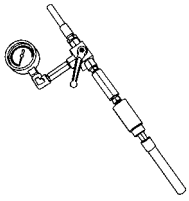	EN-48248 Cylinder Compression Pressure Gauge
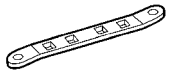	EN-48488 KM-956 Holding Wrench
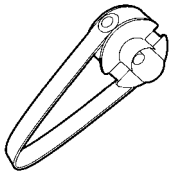	EN-49940 Remover Quick Connector
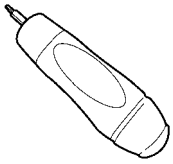	EN-49941 Remover / Installer Piston Retainer Ring
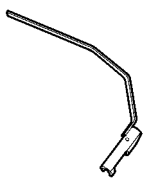	EN-49942 Holding Wrench

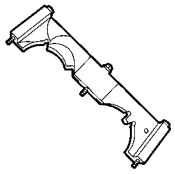	EN-49977-100 Fixation Sensor Disks and Camshafts
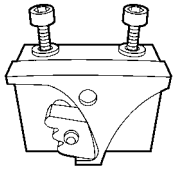	EN-49977-200 Fixing Tool
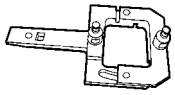	EN-49979 Retainer Shock Mount Crankshaft
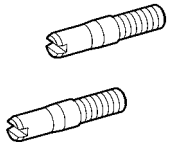	EN-49980 EN-46109 Guidance Pins Oil Pan
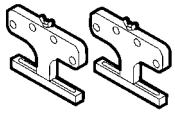	EN-50717-1 Stands
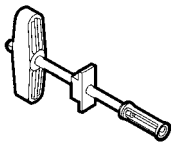	EN-50717-2 Compressor
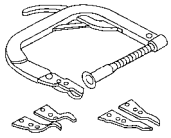	EN-8062 J-8062 Valve Spring Compressor
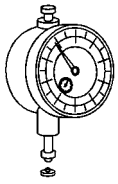	GE-571-B MKM-571-B GE-8001 Dial Gauge

SPECIFICATIONS

FASTENER TIGHTENING SPECIFICATIONS

Fastener Tightening Specifications

Application	Specification	
	Metric	English
AC Compressor Bolt	22	16 lb ft
AC Compressor and Condenser Hose Nut	19	14 lb ft
AC Evaporator Hose Assembly Nut	19	14 lb ft
Air Intake Hose Clamps	3.5	31 lb in
Automatic Transmission Flex Plate Bolt (2)	60	44 lb ft
Camshaft Adjuster Bolt (1)		
• First Pass	50	37 lb ft
• Second Pass	150 degrees	
• Final Pass	15 degrees	
Camshaft Adjuster Closure Plug	30	22 lb ft
Camshaft Bearing Cap Bolt	8	71 lb in
Camshaft Closure Bolt	30	22 lb ft
Camshaft Cover Bolt	8	71 lb in
Camshaft Position Actuator Solenoid Valve Bolt	6	53 lb in
Camshaft Position Sensor Bolt	6	53 lb in
Cold Start Rail Bolt	4	35 lb in
Connecting Rod Bearing Cap Bolt (1)		
• First Pass	35	26 lb ft
• Second Pass	45 degrees	
• Final Pass	15 degrees	
Coolant Pipe Pump Module Bolt	8	71 lb in
Coolant Pipe Thermostat Housing Bolt	8	71 lb in
Crankshaft Balancer Bolt (1)		
• First Pass	95	70 lb ft
• Second Pass	45 degrees	
• Final Pass	15 degrees	
Crankshaft Bearing Cap Bolt (1)		
• First Pass	50	37 lb ft
• Second Pass	45 degrees	
• Final Pass	15 degrees	
Crankshaft Position Sensor Bolt	5	44 lb in
Cylinder Head Bolt (1)		

• First Pass	25	18 lb ft
• Second Pass	90 degrees	
• Third Pass	90 degrees	
• Fourth Pass	90 degrees	
• Final Pass	45 degrees	
Drive Belt Tensioner Bolt	55	41 lb ft
Engine Coolant Pipe Bolts	9	80 lb in
Engine Coolant Thermostat	8	71 lb in
Engine Coolant Thermostat Housing	8	71 lb in
Engine Coolant Thermostat Housing Coolant Pipe Bolt	8	71 lb in
Engine Flywheel Bolt (1)		
• First Pass	60	44 lb ft
• Second Pass	45 degrees	
• Final Pass	15 degrees	
Engine Front Cover (Oil Pump Housing)	20	15 lb ft
Engine Lift Front Bracket	25	18 lb ft
Engine Mount Bolt to Engine Mount Bracket - M10 (1)		
• First Pass	50	37 lb ft
• Second Pass	60 degrees	
• Final Pass	75 degrees	
Engine Mount Bolt	62	46 lb ft
Engine Mount Bracket to Engine Block/Cylinder Head (1)		
• First Pass	60	46 lb ft
• Second Pass	45 degrees	
• Final Pass	60 degrees	
Engine Mount Bracket Bolt to Engine Mount (1)		
• First Pass	50	37 lb ft
• Second Pass	60 degrees	
• Final Pass	75 degrees	
Engine Mount Nut	62	46 lb ft
Engine Oil Cooler Bolts	8	71 lb ft
Engine Oil Cooler Housing Bolt	25	18 lb ft
Engine Oil Cooler Inlet Pipe Bolt	8	71 lb in
Engine Oil Cooler Outlet Pipe Bolt	8	71 lb in
Engine Oil Heater Bolt	40	30 lb ft
Engine Oil Pressure Indicator Switch	20	15 lb ft

Engine Oil Level Indicator Bolt	10	89 lb in
Engine Support Fixture (Front) Bolt	65	48 lb ft
Engine Support Fixture (Rear Left Side) Bolt	65	48 lb ft
Engine Support Fixture (Rear Right Side) Bolt	65	48 lb ft
Evaporative Emission Canister Purge Solenoid Valve Bracket Bolt	7	62 lb in
Exhaust Manifold Bracket Bolt	20	15 lb ft
Exhaust Manifold Nut (1)	20	15 lb ft
Fuel Injection Fuel Rail Bolt	7	62 lb in
Front Compartment Fuse Block Bolt	22	16 lb ft
Front Exhaust Pipe Bolt	20	15 lb ft
Generator Bolt	35	26 lb ft
Heated Oxygen Sensor	42	31 lb ft
Heat Shield Exhaust Manifold Bolt	8	71 lb in
Knock Sensor Bolt	20	15 lb ft
Ignition Module Bolt	8	71 lb in
Intake Manifold Absolute Pressure Sensor Bolt	6	53 lb in
Intake Manifold Bolt	20	15 lb ft
Intake Manifold Bracket to Engine Block Bolt	8	71 lb in
Intake Manifold Bracket Bolt	8	71 lb in
Intake Manifold Grommet Bolt	7	62 lb in
Oil Filter Cap	25	18 lb ft
Oil Flow Check Valve Bore Plug	21	15 lb ft
Oil Level Indicator Tube Bolt	15	11 lb ft
Oil Pan Bolt	10	89 lb in
Oil Pan Drain Plug	14	124 lb in
Oil Pan Baffle Bolt	10	89 lb in
Oil Pan Transmission Housing Bolt M10 (M32, F17)	40	30 lb ft
Oil Pan Transmission Housing Bolt M12 (M32, F17)	60	44 lb ft
Oil Pan Transmission Housing Bolt M10 (D16, D20)	45	33 lb ft
Oil Pan Transmission Housing Bolt M12 (D16, D20)	75	55 lb ft
Oil Pan Transmission Housing Bolt (GF6)	58	43 lb ft
Oil Pressure Measurement Closure Bolt Cylinder Head	15	11 lb ft
Oil Pressure Switch	20	15 lb ft
Oil Pressure Relief Valve Closure Bolt	21	15 lb ft
Oil Pump Cover Bolt	8	71 lb in
Secondary Air Injection Check Valve Bolt	22	16 lb ft

Secondary Air Injection Pump Bolt	22	16 lb ft
Spark Plugs	25	18 lb ft
Throttle Body Bolt	8	71 lb in
Timing Belt Idler Pulley Bolt (1)		
First Pass	20	15 lb ft
Second Pass	120 degrees	
Final Pass	15 degrees	
Timing Belt Lower Front Cover Bolt	6	53 lb in
Timing Belt Rear Cover Bolt (2)	6	53 lb in
Timing Belt Tensioner Bolt (1)		
• First Pass	20	15 lb ft
• Second Pass	120 degrees	
• Final Pass	15 degrees	
Timing Belt Upper Front Cover Bolt	6	53 lb in
Transmission to Cylinder Block Bolt (M32, F17)	60	44 lb ft
Transmission to Cylinder Block Nut (M32, F17)	40	30 lb ft
Transmission to Cylinder Block Bolt (D16, D20)	75	55 lb ft
Transmission to Cylinder Block Bolt (GF6)	58	43 lb ft
Transmission to Cylinder Block Nut (GF6)	58	43 lb ft
Water Pump Bolt	8	71 lb in
Water Pump Pulley Bolt (2)	20	15 lb ft
Wiring Harness Ground Nut	9	80 lb in
1 = Use NEW fastener 2 = Recut threads and insert NEW bolts with screw locking compound. For screw locking compound, refer to Electronic Parts Catalogue.		

ENGINE MECHANICAL SPECIFICATIONS

Engine Mechanical Specifications

Application	Specification	
	Metric	English
General Data		
• Engine Type	4-Cylinder Inline	
• Valves	16	
• Displacement	1.796 l	109.59 cu in
• Bore	80.5 mm	3.169 in
• Bore Distance	86 mm	3.386 in
• Stroke	88.2 mm	3.472 in
• Compression Ratio	10.5:1	

• Maximum Power / Engine Speed kW/RPM - Gasoline • Maximum Power / Engine Speed kW/RPM - E85 Ethanol	103 KW/6300 106 KW/6300	
• Maximum Torque / Engine Speed - Gasoline Y/RPM/lb ft/RPM • Maximum Torque / Engine Speed - E85 Ethanol Y/RPM/lb ft/RPM	170 N.m/ 3800 183 N.m/ 3800	125 lb ft/3800 135 lb ft/3800
• Idle Speed RPM	700-780	
• Overspeed RPM	6500	
• Firing Order	1-3-4-2	
• Engine Length - RFB to Front of Poly V Belt	513 mm	20 in
• Engine Height - Crank Center to Top	420 mm	17 in
• Engine Weight - MT Version	120.5 kg	266 lb
Block		
• Cylinder Block Height	198.5 mm	8 in
• Cylinder Bore Diameter - Standard Size Guiding Value 00	80.492-80.508 mm	3.169-3.1694 in
• Cylinder Bore Diameter - Standard Size Guiding Value 05	80.542-80.558 mm	3.171-3.1716 in
• Cylinder Bore Diameter - Oversize Guiding Value 00+05	80.992-81.008 mm	3.188-3.1893 in
Crankshaft		
• Crankshaft Main Bearing Journal 1-5 Diameter - Standard Size (brown/green)	54.980-54.997 mm	2.165-2.166 in
• Crankshaft Main Bearing Journal 1-5 Diameter - Undersize 0.25 (brown/green)	54.730-54.747 mm	2.155-2.156 in
• Crankshaft Main Bearing Journal 1-5 Diameter - Undersize 0.50 (brown/green)	54.482-54.495 mm	2.145-2.146 in
• Crankshaft Main Bearing Journal 3 Width - Standard Size	26.000-26.052 mm	1.024-1.026 in
• Crankshaft Main Bearing Journal 3 Width - Undersize 0.25	26.200-26.252 mm	1.032-1.034 in
• Crankshaft Main Bearing Journal 3 Width - Undersize 0.50	26.400-26.452 mm	1.040-1.042 in
• Con-Rod Bearing Journal - Standard Size	42.971-42.987 mm	1.692-1.693 in
• Con-Rod Bearing Journal - Undersize 0.25 (blue)	42.721-42.737 mm	1.682-1.683 in

• Con-Rod Bearing Journal - Undersize 0.50 (white)	42.471-42.487 mm	1.672-1.673 in
• Crankshaft Main Bearing 1-5 - Bearing Shell Thickness - Standard Size (brown)	1.987-1.993 mm	0.0783-0.0785 in
• Crankshaft Main Bearing 1-5 - Bearing Shell Thickness - Standard Size (green)	1.993-1.999 mm	0.0785-0.0787 in
• Crankshaft Main Bearing 1-5 - Bearing Shell Thickness - Undersize 0.25 (brown/blue)	2.112-2.118 mm	0.0832-0.0834 in
• Crankshaft Main Bearing 1-5 - Bearing Shell Thickness - Undersize 0.25 (green/blue)	2.118-2.124 mm	0.0834-0.0836 in
• Crankshaft Main Bearing 1-5 - Bearing Shell Thickness - Undersize 0.50 (brown/blue)	2.237-2.243 mm	0.0842-0.0844 in
Crankshaft Main Bearing 1-5 - Bearing Shell Thickness - Undersize 0.50 (green/blue)	2.243-2.249 mm	0.0884-0.0886 in
Crankshaft Bearing Allowable Clearance	0.005-0.059 mm	0.0002-0.0024 in
Crankshaft Bearing Allowable End Clearance	0.100-0.202 mm	0.004-0.008 in
Crankshaft Main Bearing 3 Width - Standard Size	25.85-25.90 mm	1.018-1.020 in
Crankshaft Main Bearing 3 Width - Undersize 0.25	26.05-26.10 mm	1.026-1.028 in
Crankshaft Main Bearing 3 Width - Undersize 0.50	26.25-26.30 mm	1.034-1.036 in
Con-Rod Bearing Shell Thickness - Standard Size	1.485-1.497 mm	0.0585-0.0590 in
Con-Rod Bearing Shell Thickness - Undersize 0.25	1.610-1.622 mm	0.0634-0.0639 in
Con-Rod Bearing Shell Thickness - Undersize 0.50	1.735-1.747 mm	0.0684-0.0688 in
Con-Rod Bearing Allowable Clearance	0.019-0.071 mm	0.0007-0.0028 in
Pistons and Pins		
• Piston Diameter - Standard Size Guiding Value 00	80.455-80.465 mm	3.1676-3.1680 in
• Piston Diameter - Standard Size Guiding Value 00	80-505-80.51 mm	3.1695-3.1697 in
• Piston Diameter - Oversize Guiding Value 00+05	80.955-80.965 mm	3.1872-3.1876 in
• Piston Clearance	0.027-0.053 mm	0.0011-0.0021 in
• Pin Diameter	19 mm	0.748 in
• Pin Longitude	49.84 mm	1.962 in
• Pin to Piston Clearance	0.020-0.060 mm	0.0008-0.0024 in
• Pin to Con-Rod Clearance	0.015-0.021 mm	0.0006-0.0009 in
Piston Rings		
• Piston Ring Thickness - First Compression Ring	1.170-1.190 mm	0.0461-0.0469 in
• Piston Ring Thickness - Second Compression Ring	1.170-1.190 mm	0.0461-0.0469 in

• Piston Ring Thickness - Oil Control Ring	1.900-1.980 mm	0.0749-0.0780 in
• Piston Ring End Gap - First Compression Ring	0.20-0.40 mm	0.0079-0.0158 in
• Piston Ring End Gap - Second Compression Ring	0.40-0.60 mm	0.0158-0.0237 in
• Piston Ring End Gap - Oil Control Ring	0.25-0.75 mm	0.0098-0.0295 in
• Piston Ring to Groove Clearance - First Compression Ring	0.040-0.080 mm	0.0016-0.0032 in
• Piston Ring to groove Clearance - Second Compression Ring	0.030-0.070 mm	0.0012-0.0028 in
• Piston Ring to Groove Clearance - Oil Control Ring	0.030-0.130 mm	0.0012-0.051 in
Cylinder Head		
• Surface Flatness - Block Deck - Longitude	0.05 mm	0.00197 in
	If the deck surface is out of specification, replace the cylinder head. Do not machine the cylinder head.	
• Surface Flatness - Block Deck - Transverse	0.03 mm	0.00118 in
	If the deck surface is out of specification, replace the cylinder head. Do not machine the cylinder head.	
Valve Seat Width - Intake	1.0-1.4 mm	0.040-0.056 in
Valve Seat Width - Exhaust	1.4-1.8 mm	0.056-0.071 in
Valve Seat Angle	45 degrees (- 0.25 degrees)	
Valve Seat Angle Adjustment - Upper	30 degrees (+/- 0.5 degrees)	
Valve Seat Angle Adjustment - Lower	60 degrees (+/- 0.5 degrees)	
Valve Guide Bore Norm Size	5.000-5.016 mm	0.1969-0.1975 in
Valve Guide Bore Oversize 0.075	5.075-5.091 mm	0.1999-0.2005 in
Valve Guide Bore Oversize 0.150	5.150-5.166 mm	0.2028-0.2034 in
Valve Guide Assembly Height	10.70-11.00 mm	0.422-0.434 in
Valve Guide Longitude	36.70-37.30 mm	1.445-1.468 in
Valve Assembly Height - Intake	36.33 mm	1.430 in
Valve Assembly Height - Exhaust	36.33 mm	1.430 in
Camshaft		
• Cam Stroke Intake	10 mm	0.394 in
• Cam Stroke Exhaust	9 mm	0.354 in
Valve System		
• Valves Norm Longitude - Intake	101.10-101.30 mm	3.980-3.988 in
• Valves Norm Longitude - Exhaust	100.40-100.60 mm	3.953-3.961 in
• Valves Oversize Longitude 0.075 - Intake	100.70-100.90 mm	3.965-3.972 in

• Valves Oversize Longitude 0.075 - Exhaust	100.00-100.20 mm	3.937-3.945 in
• Valves - Valve Stem Norm Diameter - Intake	4.965-4.980 mm	0.1955-0.1961 in
• Valves - Valve Stem Norm Diameter - Exhaust	4.950-4.965 mm	0.1949-0.1955 in
• Valves - Valve Stem Oversize Diameter 0.075 - Intake	5.040-5.055 mm	0.1985-0.1991 in
• Valves - Valve Stem Oversize Diameter 0.075 - Exhaust	5.025-5.050 mm	0.1979-0.1989 in
• Valves - Valve Stem to Guide Clearance - Intake	0.020-0.051 mm	0.0008-0.0021 in
• Valves - Valve Stem to Guide Clearance - Exhaust	0.035-0.066 mm	0.0014-0.0026 in
• Valves - Valve Stem allowable Run-Out	0.05 mm	0.0019 in
• Valves - Valve Disk Diameter - Intake	31.1-31.3 mm	1.225-1.233 in
• Valves - Valve Disk Diameter - Exhaust	27.4-27.6 mm	1.079-1.087 in
• Valves - Valve Seat Angle on Valve Disk	90°40' (+/-15')	
• Valve Springs Longitude	42 mm	1.65 in
• Valve Springs Longitude Under Load - Open	35.0 mm	1.38 in
• Valve Springs Longitude Under Load - Close	25.0 mm	0.98 in
Engine Oil		
• Viscosity	SAE 0-W30, 0-W40, 5-W30 and 5-W40	
• Quality	Dexos 1	
Quantity		
• Oil Change Incl. Filter	4.5 l	4.76 quarts
• Oil Consumption Liter/1 000 km (1.057 quarts/621 miles)	max. 0.6 l	max. 0.634 quarts
Cooling System		
• Coolant Specification	Refer to Electronic Parts Catalog	
• Water Pump Design	Rotary Pump	
• Cooling System Capacity	5, 6 l	5.92 quarts
• Flow (Engine Outlet 6000 min $^{-1}$, Thermostat Fully Open)	160 l/min	42.27 US gal/min
• Flow (Radiator 6000 min $^{-1}$, Thermostat Fully Open)	165 l/min	174.4 quarts/min
• Thermostat Opening - Electrical	90°C	194°F
• Thermostat Opening - Thermic	105°C	221°F

ADHESIVES, FLUIDS, LUBRICANTS, AND SEALERS

Adhesives, Fluids, Lubricants, and Sealers

Application	Type of Material	GM Part Number	
		United States	Canada
Bolt Connections	Screw Locking Compound	12345382	10953489
Camshaft Bearings	Dexos1 Engine Oil	19293000	19286321
Camshaft Cover Bolt	Pipe Sealant	12346004	10953480
Camshaft Front Oil Seal	Sealant	1052943	10953491
Camshafts	Dexos1 Engine Oil	19293000	19286321
Crankshaft Bearing Lubricant	Dexos1 Engine Oil	19293000	19286321
Engine Block Oil Gallery Plugs	Sealant	1052943	10953491
Engine Oil	Dexos1 Engine Oil	19293000	19286321
Intake and Exhaust Valves	Dexos1 Engine Oil	19293000	19286321
Oil Pan	Sealant	12378521	88901148
Oxygen Sensor	Assembly Paste - White	88862477	88862478
Oxygen Sensor Threads	Anti-seize	12397953	NA
Rear Crankshaft Main Bearing Cap	Sealant	12378521	88901148
Rear Crankshaft Oil Seal	Dexos1 Engine Oil	19293000	19286321
Rod Bearing - Rod Pins of Crankshaft	Dexos1 Engine Oil	19293000	19286321
Seal Rings	Silicone Grease - White	12345579	10953481
Turbo Heat Shield Fastener	Lubricant	12345996	10953501
Water Pump Bearing	Sealant	1052943	10953491

COMPONENT LOCATOR

ENGINE IDENTIFICATION

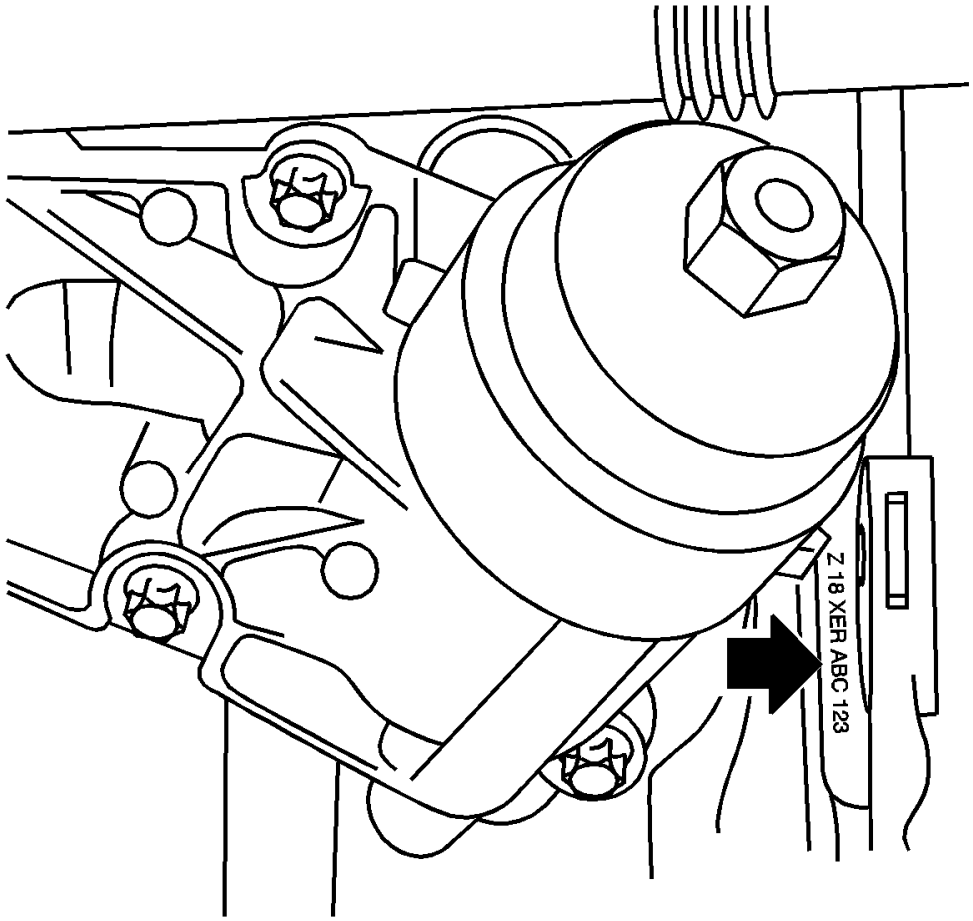

Fig. 1: View Of Engine Identification Code On Cylinder Block
Courtesy of GENERAL MOTORS COMPANY

IMPORTANT: When a short block engine is installed, the engine number must be marked on the cylinder block before installing the engine.

The engine identification code is embossed on the flattened area of the cylinder block, arrow, at the transmission side.

DIAGNOSTIC INFORMATION AND PROCEDURES

SYMPTOMS - ENGINE MECHANICAL

Strategy Based Diagnostics

Perform the **Diagnostic System Check - Vehicle** .

All diagnosis on a vehicle should follow a logical process. Strategy based diagnostics is a uniform approach for

repairing all systems. The diagnostic flow may always be used in order to resolve a system condition. The diagnostic flow is the place to start when repairs are necessary.

Visual/Physical Inspection

- Inspect for aftermarket devices which could affect the operation of the engine.
- Inspect the easily accessible or visible system components for obvious damage or conditions which could cause the symptom.
- Inspect for the correct oil level, proper oil viscosity, and correct filter application.
- Verify the exact operating conditions under which the concern exists. Note factors such as engine RPM, ambient temperature, engine temperature, amount of engine warm-up time, and other specifics.
- Compare the engine sounds, if applicable, to a known good engine and make sure you are not trying to correct a normal condition.

Intermittent

Test the vehicle under the same conditions that the customer reported in order to verify the system is operating properly.

Symptom List

Refer to a symptom diagnostic procedure from the following list in order to diagnose the symptom:

- **Base Engine Misfire without Internal Engine Noises**
- **Base Engine Misfire with Abnormal Internal Lower Engine Noises**
- **Base Engine Misfire with Abnormal Valve Train Noise**
- **Base Engine Misfire with Coolant Consumption**
- **Base Engine Misfire with Excessive Oil Consumption**
- **Engine Noise on Start-Up, but Only Lasting a Few Seconds**
- **Upper Engine Noise, Regardless of Engine Speed**
- **Lower Engine Noise, Regardless of Engine Speed**
- **Engine Noise Under Load**
- **Engine Will Not Crank - Crankshaft Will Not Rotate**
- **Coolant in Engine Oil**
- **Engine Compression Test**
- **Cylinder Leakage Test**
- **Oil Consumption Diagnosis**
- **Oil Pressure Diagnosis and Testing**
- **Oil Leak Diagnosis**
- **Crankcase Ventilation System Inspection/Diagnosis**
- **Drive Belt Chirping, Squeal, and Whine Diagnosis**
- **Drive Belt Rumbling and Vibration Diagnosis**

- **Drive Belt Falls Off and Excessive Wear Diagnosis**
- **Drive Belt Tensioner Diagnosis**

OIL PRESSURE DIAGNOSIS AND TESTING

Special Tools

- **EN-498-B** Oil Pressure Gauge
- **EN-232** Adapter Oil Pressure Check

For equivalent regional tools, refer to **Special Tools**.

Removal Procedure

1. If necessary, remove the exhaust manifold heat shield. Refer to **Exhaust Manifold Heat Shield Replacement (1.8L LUW and LWE)** .

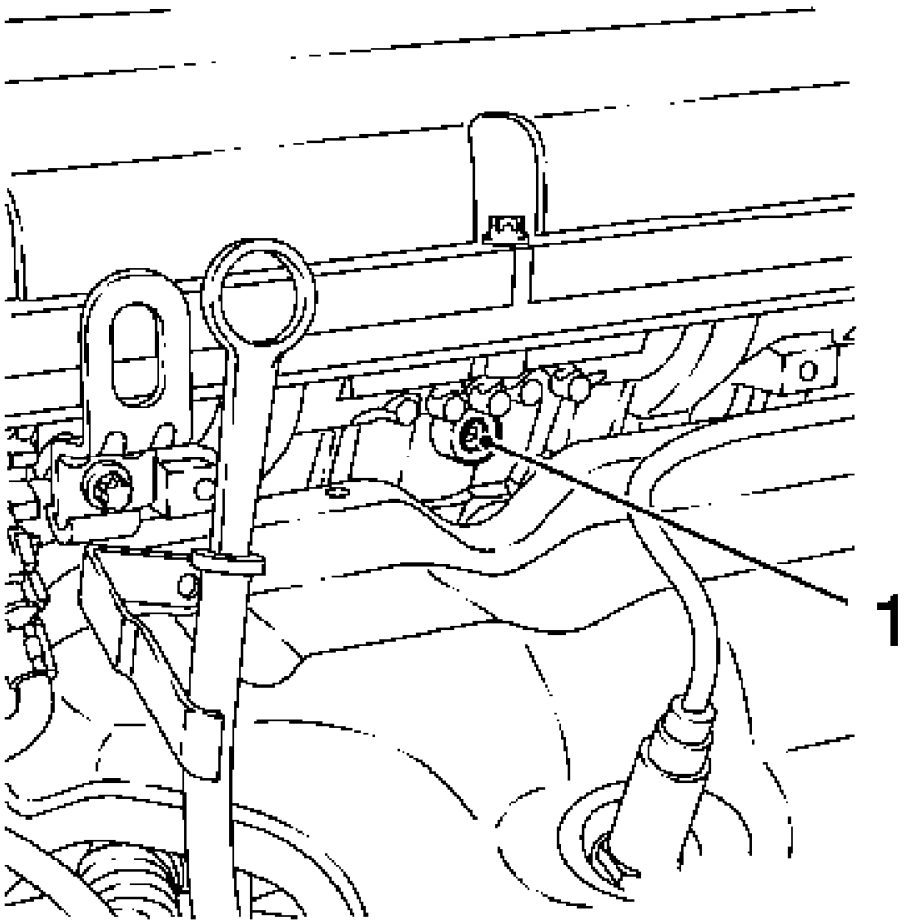

Fig. 2: View Of Closure Bolt

Courtesy of GENERAL MOTORS COMPANY

2. Remove the closure bolt (1).
3. Clean the thread.

Measurement Procedure

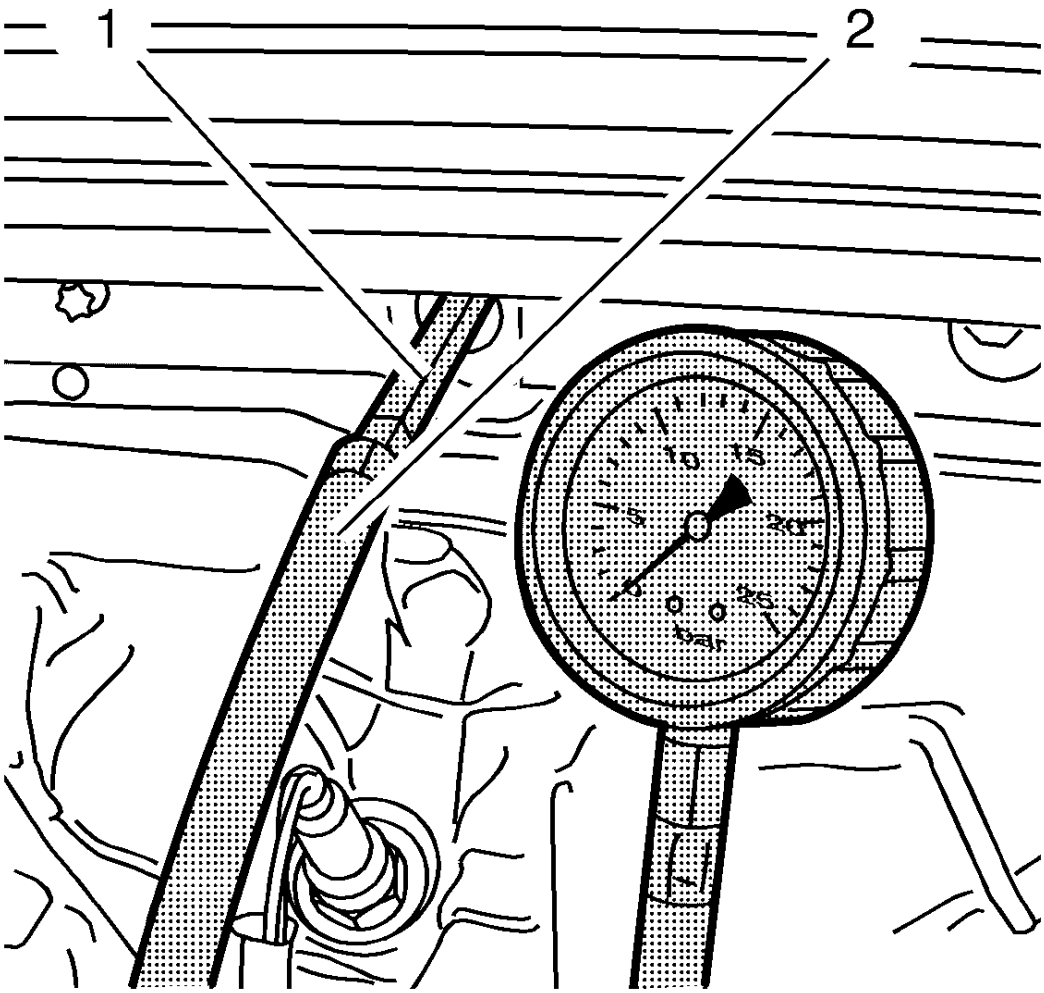

Fig. 3: Oil Pressure Test Gauge
Courtesy of GENERAL MOTORS COMPANY

1. Install the **EN-498-B** gauge (2).
2. Install the **EN-232** adapter (1).
3. Start the engine.
4. Check oil pressure.

At idling speed, the oil pressure must be at least 130 kPa (18.85 psi) and the oil temperature must be 80°C

(170°F) or more.

Installation Procedure

1. Switch off the engine.
2. Remove the **EN-232** adapter.
3. Remove the **EN-498-B** gauge.
4. Install new closure bolt in the cylinder head.

CAUTION: Refer to Fastener Caution .

5. Tighten the closure bolt to 15 N.m (11 lb ft).
6. If necessary, install the exhaust manifold heat shield. Refer to **Exhaust Manifold Heat Shield Replacement (1.8L LUW and LWE)** .
7. Check the engine oil level.

OIL LEAK DIAGNOSIS

Oil Leak Diagnosis

Step	Action	Yes	No
DEFINITION: You can repair most fluid leaks by first, visually locating the leak, repairing or replacing the component, or by resealing the gasket surface. Once the leak is identified, determine the cause of the leak. Repair the leak and the cause of the leak.			
1	1. Operate the vehicle until it reaches normal operating temperature. Refer to **Engine Mechanical Specifications**. 2. Park the vehicle on a level surface over a large sheet of paper or other clean surface. 3. Wait 15 minutes. 4. Inspect for drippings. Are drippings present?	Go to **Step 2**	System OK
2	Can you identify the type of fluid and the approximate location of the leak?	Go to **Step 10**	Go to **Step 3**
3	1. Visually inspect the suspected area. Use a small mirror to assist in looking at hard to see areas. 2. Inspect for leaks at the following locations: • Sealing surfaces • Fittings • Cracked or damaged components		

	Can you identify the type of fluid and the approximate location of the leak?	Go to **Step 10**	Go to **Step 4**
4	1. Completely clean the entire engine and surrounding components. 2. Operate the vehicle for several miles at normal operating temperature and at varying speeds. 3. Park the vehicle on a level surface over a large sheet of paper or other clean surface. 4. Wait 15 minutes. 5. Identify the type of fluid and the approximate location of the leak. Can you identify the type of fluid and the approximate location of the leak?	Go to **Step 10**	Go to **Step 5**
5	1. Visually inspect the suspected area. Use a small mirror to assist in looking at hard to see areas. 2. Inspect for leaks at the following locations: • Sealing surfaces • Fittings • Cracked or damaged components Can you identify the type of fluid and the approximate location of the leak?	Go to **Step 10**	Go to **Step 6**
6	1. Completely clean the entire engine and surrounding components. 2. Apply an aerosol-type powder, for example, baby powder or foot powder, to the suspected area. 3. Operate the vehicle for several miles at normal operating temperature and at varying speeds. 4. Identify the type of fluid and the approximate location of the leak from the discolorations in the powder surface. Can you identify the type of fluid and the approximate location of the leak?	Go to **Step 10**	Go to **Step 7**
7	1. Visually inspect the suspected area. Use a small mirror to assist in looking at hard to see areas. 2. Inspect for leaks at the following locations: • Sealing surfaces • Fittings • Cracked or damaged components		

	Can you identify the type of fluid and the approximate location of the leak?	Go to **Step 10**	Go to **Step 8**
8	Identify the type of fluid and the approximate location of the leak. Can you identify the type of fluid and the approximate location of the leak?	Go to **Step 10**	Go to **Step 9**
9	1. Visually inspect the suspected area. Use a small mirror to assist in looking at hard to see areas. 2. Inspect for leaks at the following locations: • Sealing surfaces • Fittings • Cracked or damaged components Can you identify the type of fluid and the approximate location of the leak?	Go to **Step 10**	System OK
10	1. Inspect the engine for mechanical damage. Special interest should be shown to the following areas: • Higher than recommended fluid levels • Higher than recommended fluid pressures • Plugged or malfunctioning fluid filters or pressure bypass valves • Plugged or malfunctioning engine ventilation system • Improperly tightened or damaged fasteners • Cracked or porous components • Improper sealants or gaskets, where required • Improper sealant or gasket installation • Damaged or worn gaskets or seals • Damaged or worn sealing surfaces 2. Inspect the engine for customer modifications. Is there mechanical damage or customer modifications to the engine?	Go to **Step 11**	System OK
11	Repair or replace all damaged or modified components. Did you complete the repair?	Go to **Step 1**	-

OIL CONSUMPTION DIAGNOSIS

Excessive oil consumption, not due to leaks, is the use of 0.6 L (0.14 gallon) engine oil within 1000 kilometers (622 miles). The causes of excessive oil consumption include the following conditions:

- External oil leaks

Tighten bolts and/or replace gaskets and oil seals as necessary.

- Incorrect oil level or improper reading of oil level indicator

  With the vehicle on a level surface, allow adequate drain down time and inspect for the correct oil level.

- Improper oil viscosity

  Use recommended SAE viscosity for the prevailing temperatures.

- Continuous high speed driving and/or severe usage
- Crankcase ventilation system restrictions or malfunctioning components
- Valve guides and/or valve stem oil seals worn, or the seal omitted

  Ream guides and install oversize service valves and/or new valve stem oil seals.

- Piston rings broken, improperly installed, worn, or not seated properly

  Allow adequate time for rings to seat. Replace broken or worn rings, as necessary.

- Piston improperly installed or mis-fitted.

COOLANT IN COMBUSTION CHAMBER

Coolant in Combustion Chamber

Cause	Correction
DEFINITION: Excessive white smoke and/or coolant type odor coming from the exhaust pipe may indicate coolant in the combustion chamber. Low coolant levels, an inoperative cooling fan, or a faulty thermostat may lead to an overtemperature condition which may cause engine component damage. 1. A slower than normal cranking speed may indicate coolant entering the combustion chamber. Refer to **Engine Will Not Crank - Crankshaft Will Not Rotate**. 2. Remove the spark plugs and inspect for spark plugs saturated by coolant or coolant in the cylinder bore. 3. Inspect by performing a cylinder leak-down test. During this test, excessive air bubbles within the coolant may indicate a faulty gasket or damaged component. 4. Inspect by performing a cylinder compression test. Two cylinders side-by-side on the engine block, with low compression, may indicate a failed cylinder head gasket. Refer to **Engine Compression Test**.	
Faulty cylinder head gasket	Replace the head gasket and components as required. Refer to **Cylinder Head Cleaning and Inspection**, and **Cylinder Head Replacement**.
Warped cylinder head	Replace the cylinder head and gasket. Refer to **Cylinder Head Replacement**.
Cracked cylinder head	Replace the cylinder head and gasket. **Cylinder**

	Head Replacement
Cracked cylinder liner	Replace the components as required.
Cylinder head or block porosity	Replace the components as required.

COOLANT IN ENGINE OIL

Coolant in Engine Oil

Cause	Correction
DEFINITION: Foamy or discolored oil or an engine oil overfill condition may indicate coolant entering the engine crankcase. Low coolant levels, an inoperative cooling fan, or a faulty thermostat may lead to an overtemperature condition which may cause engine component damage. Contaminated engine oil and oil filter should be changed. 1. Inspect the oil for excessive foaming or an overfill condition. Oil diluted by coolant may not properly lubricate the crankshaft bearings and may lead to component damage. Refer to **Lower Engine Noise, Regardless of Engine Speed**. 2. Inspect by performing a cylinder leak-down test. During this test, excessive air bubbles within the cooling system may indicate a faulty gasket or damaged component. 3. Inspect by performing a cylinder compression test. Two cylinders side-by-side on the engine block with low compression may indicate a failed cylinder head gasket. Refer to **Engine Compression Test**.	
Faulty cylinder head gasket	Replace the head gasket and components as required. Refer to **Cylinder Head Replacement**.
Warped cylinder head	Replace the cylinder head and gasket. Refer to **Cylinder Head Replacement**.
Cracked cylinder head	Replace the cylinder head and gasket. **Cylinder Head Replacement**
Cracked cylinder liner	Replace the components as required.
Cylinder head or block porosity	Replace the components as required.

ENGINE NOISE UNDER LOAD

Engine Noise Under Load

Cause	Correction
Low oil pressure	1. Perform an oil pressure test. Refer to **Oil Pressure Diagnosis and Testing**. 2. Repair or replace as required.
Detonation or spark knock	Verify the correct operation of the ignition. Refer to **Symptoms - Engine Controls** .
Loose torque converter bolts	1. Inspect the torque converter bolts and flywheel. 2. Repair as required.
Cracked flywheel- automatic transmission	1. Inspect the flywheel bolts and flywheel. 2. Repair as required.

Excessive connecting rod bearing clearance	Inspect the following components and repair as required: • The connecting rod bearings • The connecting rods • The crankshaft
Excessive crankshaft bearing clearance	Inspect the following components and repair as required: • The crankshaft bearings • The crankshaft journals • The cylinder block crankshaft bearing bore

ENGINE NOISE ON START-UP, BUT ONLY LASTING A FEW SECONDS

Engine Noise on Start-Up, but Only Lasting a Few Seconds

Cause	Correction
Incorrect oil filter without anti-drainback feature	Install the correct oil filter.
Incorrect oil viscosity	1. Drain the oil. 2. Install the correct viscosity oil.
High valve lash adjuster leak down rate	Replace the lash adjusters as required.
Worn crankshaft thrust bearing	1. Inspect the thrust bearing and crankshaft. 2. Repair or replace as required.
Damaged or faulty oil filter by-pass valve	1. Inspect the oil filter by-pass valve for proper operation. 2. Repair or replace as required.
Malfunctioning camshaft position actuators - improper oil viscosity or contamination. The result is camshaft actuator locking pin does not lock	1. Verify correct engine oil viscosity by changing the engine oil and filter. Reevaluate the concern. 2. Isolate the noise to a specific camshaft position actuator. 3. Replace the camshaft actuator, oil and filter.

BASE ENGINE MISFIRE WITHOUT INTERNAL ENGINE NOISES

Base Engine Misfire without Internal Engine Noises

Cause	Correction
Abnormalities, severe cracking, bumps, or missing areas in the accessory drive belt Abnormalities in the accessory drive system and/or components may cause engine revolutions per minute (RPM) variations and lead to a misfire diagnostic trouble code (DTC). A misfire code may be present	Replace the drive belt.

without an actual misfire condition.	
Worn, damaged, or mis-aligned accessory drive components or excessive pulley runout may lead to a misfire DTC. A misfire code may be present without an actual misfire condition.	Inspect the components, and repair or replace as required.
A loose or improperly installed engine flywheel or crankshaft balancer A misfire code may be present without an actual misfire condition.	Repair or replace the flywheel and/or balancer as required.
Restricted exhaust system A severe restriction in the exhaust flow can cause significant loss of engine performance and may set a DTC. Possible causes of restrictions include collapsed or dented pipes or plugged mufflers and/or catalytic converters.	Repair or replace as required.
Improperly installed or damaged vacuum hoses	Repair or replace as required.
Improper sealing between the intake manifold and cylinder heads or throttle body	Replace the intake manifold, gaskets, cylinder heads, and/or throttle body as required.
Improperly installed or damaged manifold absolute pressure (MAP) sensor The sealing grommet of the MAP sensor should not be torn or damaged.	Repair or replace the MAP sensor as required.
Damage to the MAP sensor housing	Replace the intake manifold.
Worn or loose rocker arms The rocker arm bearing end caps and/or needle bearings should be intact and in the proper position.	Replace the valve rocker arms as required.
Stuck valves Carbon buildup on the valve stem can cause the valve not to close properly.	Repair or replace as required.
Excessively worn or mis-aligned timing chain	Replace the timing chain and sprockets as required.
Worn camshaft lobes	Replace the camshaft and valve lifters.
Excessive oil pressure A lubrication system with excessive oil pressure may lead to excessive valve lifter pump up and loss of compression.	• Perform an oil pressure test. Refer to **Oil Pressure Diagnosis and Testing**. • Repair or replace the oil pump as required.
Faulty cylinder head gaskets and/or cracking or other damage to the cylinder heads and engine block cooling system passages Coolant consumption may or may not cause the engine to overheat.	• Inspect for spark plugs saturated by coolant. • Inspect the cylinder heads, engine block, and/or head gaskets. • Repair or replace as required.
Worn piston rings Oil consumption may or may not cause the engine to misfire.	• Inspect the spark plugs for oil deposits. • Inspect the cylinders for a loss of

	compression. Refer to **Engine Compression Test**. • Perform cylinder leak down and compression testing to identify the cause. • Repair or replace as required.
A damaged crankshaft reluctor wheel A damaged crankshaft reluctor wheel can result in different symptoms depending on the severity and location of the damage. • Systems with electronic communications, DIS or coil per cylinder, and severe reluctor ring damage may exhibit periodic loss of crankshaft position, stop delivering a signal, and then re-sync the crankshaft position. • Systems with electronic communication, DIS or coil per cylinder, and slight reluctor ring damage may exhibit no loss of crankshaft position and no misfire may occur. However, a DTC P0300 may be set. • Systems with mechanical communications, high voltage switch, and severe reluctor ring damage may cause additional pulses and effect fuel and spark delivery to the point of generating a DTC P0300 or P0336.	Replace the sensor and/or crankshaft as required.

BASE ENGINE MISFIRE WITH ABNORMAL INTERNAL LOWER ENGINE NOISES

Base Engine Misfire with Abnormal Internal Lower Engine Noises

Cause	Correction
Abnormalities, severe cracking, bumps or missing areas in the accessory drive belt Abnormalities in the accessory drive system and/or components may cause engine revolutions per minute (RPM) variations, noises similar to a faulty lower engine, and also lead to a misfire condition. A misfire code may be present without an actual misfire condition.	Replace the drive belt.
Worn, damaged, or mis-aligned accessory drive components or excessive pulley runout A misfire code may be present without an actual misfire condition.	Inspect the components, repair or replace as required.
Loose or improperly installed engine flywheel or crankshaft balancer A misfire code may be present without an	Repair or replace the flywheel and/or balancer as required.

actual misfire condition.	
Worn piston rings Oil consumption may or may not cause the engine to misfire.	• Inspect the spark plugs for oil deposits. • Inspect the cylinders for a loss of compression. Refer to **Engine Compression Test**. • Perform cylinder leak down and compression testing to determine the cause. • Repair or replace as required.
Worn crankshaft thrust bearings Severely worn thrust surfaces on the crankshaft and/or thrust bearing may permit fore and aft movement of the crankshaft, and create a diagnostic trouble code (DTC) without an actual misfire condition.	Replace the crankshaft and bearings as required.

BASE ENGINE MISFIRE WITH ABNORMAL VALVE TRAIN NOISE

Base Engine Misfire with Abnormal Valve Train Noise

Cause	Correction
Worn or loose rocker arms The rocker arm bearing end caps and/or needle bearings should intact within the rocker arm assembly.	Replace the valve rocker arms as required.
Stuck valves Carbon buildup on the valve stem can cause the valve to not close properly.	Repair or replace as required.
Excessively worn or mis-aligned timing chain	Replace the timing chain and sprockets as required.
Worn camshaft lobes	Replace the camshaft and valve lash adjusters.
Sticking lifters	Replace as required.

BASE ENGINE MISFIRE WITH COOLANT CONSUMPTION

Base Engine Misfire with Coolant Consumption

Cause	Correction
Faulty cylinder head gasket and/or cracking, or other damage to the cylinder head and engine block cooling system passages. Coolant consumption may or may not cause the engine to overheat.	• Inspect for spark plugs saturated by coolant. • Perform a cylinder leak down test. • Inspect the cylinder head and engine block for damage to the coolant passages and/or a faulty head gasket. • Repair or replace as required.

BASE ENGINE MISFIRE WITH EXCESSIVE OIL CONSUMPTION

Base Engine Misfire with Excessive Oil Consumption

Cause	Correction
Worn valves, valve guides, and/or valve stem oil seals	• Inspect the spark plugs for oil deposits. • Repair or replace as required.
Worn piston rings Oil consumption may or may not cause the engine to misfire.	• Inspect the spark plugs for oil deposits. • Inspect the cylinders for a loss of compression. Refer to **Engine Compression Test**. • Perform cylinder leak down and compression testing to determine the cause. • Repair or replace as required.

UPPER ENGINE NOISE, REGARDLESS OF ENGINE SPEED

Upper Engine Noise, Regardless of Engine Speed

Cause	Correction
Low oil pressure	• Perform an oil pressure test. Refer to **Oil Pressure Diagnosis and Testing**. • Repair or replace as required.
Loose and/or worn valve rocker arm attachments	• Inspect the valve rocker arm stud, nut, or bolt. • Repair or replace as required.
Worn valve rocker arm	Replace the valve rocker arm.
Improper lubrication to the valve rocker arms	Inspect the following components and repair or replace as required: • The valve rocker arm • The valve lifter • The oil filter bypass valve • The oil pump and pump screen • The engine block oil galleries
Broken valve spring	Replace the valve spring.
Worn or dirty valve lifters	Replace the valve lifters.
Stretched or broken timing belt and/or damaged sprocket teeth	Replace the timing belt and sprockets.
Worn, damaged, or faulty timing belt tensioners	Replace tensioners
Worn engine camshaft lobes	• Inspect the engine camshaft lobes. • Replace the camshaft and valve lifters as required.
Worn valve guides or valve stems	Inspect the following components, and repair as required: • The valves • The valve guides

Stuck valves Carbon on the valve stem or valve seat may cause the valve to stay open.	Inspect the following components and repair as required: • The valves • The valve guides

LOWER ENGINE NOISE, REGARDLESS OF ENGINE SPEED

Lower Engine Noise, Regardless of Engine Speed

Cause	Correction
Low oil pressure	• Perform an oil pressure test. Refer to **Oil Pressure Diagnosis and Testing**. • Repair or replace damaged components as required.
Worn accessory drive components-abnormalities, such as severe cracking, bumps, or missing areas in the accessory drive belt and/or misalignment of system components	1. Inspect the accessory drive system. 2. Repair or replace as required.
Loose or damaged crankshaft balancer	1. Inspect the crankshaft balancer. 2. Repair or replace as required.
Detonation or spark knock	Verify the correct operation of the ignition system. Refer to **Symptoms - Engine Controls** .
Loose torque converter bolts	1. Inspect the torque converter bolts and flywheel. 2. Repair or replace as required.
Loose or damaged flywheel	Repair or replace the flywheel.
Damaged oil pan, contacting the oil pump screen An oil pan that has been damaged, may improperly position the oil pump screen, preventing proper oil flow to the oil pump.	1. Inspect the oil pan. 2. Inspect the oil pump screen. 3. Repair or replace as required.
Oil pump screen loose, damaged or restricted	1. Inspect the oil pump screen. 2. Repair or replace as required.
Excessive piston-to-cylinder bore clearance	1. Inspect the piston and cylinder bore. 2. Repair as required.
Excessive piston pin-to-bore clearance	1. Inspect the piston, piston pin, and the connecting rod. 2. Repair or replace as required.
Excessive connecting rod bearing clearance	Inspect the following components and repair as required: • The connecting rod bearings • The connecting rods

	• The crankshaft • The crankshaft journals
Excessive crankshaft bearing clearance	Inspect the following components and repair as required: • The crankshaft bearings • The crankshaft journals
Incorrect piston, piston pin, and connecting rod installation Pistons must be installed with the mark, or dimple, on the top of the piston, facing the front of the engine. Piston pins must be centered in the connecting rod pin bore.	1. Verify the pistons, piston pins and connecting rods are installed correctly. 2. Repair as required.

ENGINE WILL NOT CRANK - CRANKSHAFT WILL NOT ROTATE

Engine Will Not Crank - Crankshaft Will Not Rotate

Cause	Correction
Seized accessory drive system component	1. Remove accessory drive belts. 2. Rotate crankshaft by hand at the balancer or flywheel location.
Hydraulically locked cylinder • Coolant/antifreeze in cylinder • Oil in cylinder • Fuel in cylinder	1. Remove spark plugs and check for fluid. 2. Inspect for broken head gasket. 3. Inspect for cracked engine block or cylinder head. 4. Inspect for a sticking fuel injector. 5. Inspect for cracked cylinder wall.
Seized automatic transmission torque converter	1. Remove the torque converter bolts. 2. Rotate crankshaft by hand at the balancer or flywheel location.
Seized manual transmission	1. Disengage the clutch. 2. Rotate crankshaft by hand at the balancer or flywheel location.
Broken timing chain and/or gears	• Inspect timing chain and gears. • Repair as required.
Seized balance shaft	• Inspect balance shaft. • Repair as required.
Material in cylinder • Broken valve	• Inspect cylinder for damaged components and/or foreign materials.

• Piston material • Foreign material • Cracked cylinder wall	• Inspect for fallen cylinder wall. • Repair or replace as required.
Seized crankshaft or connecting rod bearings	• Inspect crankshaft and connecting rod bearings. • Inspect for fallen cylinder wall. • Repair as required.
Bent or broken connecting rod	• Inspect connecting rods. • Repair as required.
Broken crankshaft	• Inspect crankshaft. • Repair as required.

ENGINE COMPRESSION TEST

Removal Procedure

1. Remove the throttle body. Refer to **Throttle Body Assembly Replacement** .
2. Remove the spark plugs. Refer to **Spark Plug Replacement** .
3. Remove the relay holder cover.
4. Remove the fuel pump relay.

Measurement Procedure

Check Compression for all cylinders:

NOTE: Engine revs at least 300/min.

1. Start the engine (approx. 4 seconds).
2. Compare the compression values.

   Maximum pressure differential 100 kPa (14.5 psi)

Installation Procedure

1. Install the fuel pump relay.
   - Place into the socket.
   - Ensure the plug contacts are sound.
2. Install the relay carrier cover.
3. Install the spark plugs. Refer to **Spark Plug Replacement** .
4. Install the throttle body. Refer to **Throttle Body Assembly Replacement** .

DRIVE BELT CHIRPING, SQUEAL, AND WHINE DIAGNOSIS

Diagnostic Aids

- A chirping or squeal noise may be intermittent due to moisture on the drive belts or the pulleys. It may be necessary to spray a small amount of water on the drive belts in order to duplicate the customers concern. If spraying water on the drive belt duplicates the symptom, cleaning the belt pulleys may be the probable solution.
- If the noise is intermittent, verify the accessory drive components by varying their loads making sure they are operated to their maximum capacity. An overcharged A/C system, power steering system with a pinched hose or wrong fluid, or a generator failing are suggested items to inspect.
- A chirping, squeal or whine noise may be caused by a loose or improper installation of a body or suspension component. Other items of the vehicle may also cause the noise.
- The drive belts will not cause a whine noise.

Test Description

The numbers below refer to the step numbers on the diagnostic table.

2

The noise may not be engine related. This step is to verify that the engine is making the noise. If the engine is not making the noise do not proceed further with this table.

3

The noise may be an internal engine noise. Removing the drive belts one at a time and operating the engine for a brief period will verify the noise is related to the drive belt. When removing the drive belt the water pump may not be operating and the engine may overheat. Also DTCs may set when the engine is operating with the drive belts removed.

4

Inspect all drive belt pulleys for pilling. Pilling is the small balls or pills or it can be strings in the drive belt grooves from the accumulation of rubber dust.

6

Misalignment of the pulleys may be caused from improper mounting of the accessory drive component, incorrect installation of the accessory drive component pulley, or the pulley bent inward or outward from a previous repair. Test for a misaligned pulley using a straight edge in the pulley grooves across two or three pulleys. If a misaligned pulley is found refer to that accessory drive component for the proper installation procedure for that pulley.

10

Inspecting of the fasteners can eliminate the possibility that a wrong bolt, nut, spacer, or washer was installed.

12

Inspecting the pulleys for being bent should include inspecting for a dent or other damage to the pulleys that would prevent the drive belt from not seating properly in all of the pulley grooves or on the smooth surface of a pulley when the back side of the belt is used to drive the pulley.

14

This test is to verify that the drive belt tensioner operates properly. If the drive belt tensioner is not operating properly, proper belt tension may not be achieved to keep the drive belt from slipping which could cause a squeal noise.

15

This test is to verify that the drive belt is not too long, which would prevent the drive belt tensioner from working properly. Also if an incorrect length drive belt was installed, it may not be routed properly and may be turning an accessory drive component in the wrong direction.

16

Misalignment of the pulleys may be caused from improper mounting of the accessory drive component, incorrect installation of the accessory drive component pulley, or the pulley bent inward or outward from a previous repair. Test for a misaligned pulley using a straight edge in the pulley grooves across two or three pulleys. If a misaligned pulley is found refer to that accessory drive component for the proper installation procedure for that pulley.

17

This test is to verify that the pulleys are the correct diameter or width. Using a known good vehicle compare the pulley sizes.

19

Replacing the drive belt when it is not damaged or there is not excessive pilling will only be a temporary repair.

Drive Belt Chirping, Squeal, and Whine Diagnosis

Step	Action	Yes	No
CAUTION: **Refer to Belt Dressing Caution .** DEFINITION: The following items are indications of chirping: • A high pitched noise that is heard once per revolution of the drive belt or a pulley. • Chirping may occur on cold damp start-ups and will subside once the vehicle reaches normal operating temp.			

DEFINITION: The following items are indications of drive belt squeal:

- A loud screeching noise that is caused by a slipping drive belt. This is unusual for a drive belt with multiple ribs.
- The noise occurs when a heavy load is applied to the drive belt, such as an air conditioning compressor engagement snapping the throttle, or slipping on a seized pulley or a faulty accessory drive component.

DEFINITION: The following items are indications of drive belt whine:

- A high pitched continuous noise.
- The noise may be caused by an accessory drive component failed bearing.

1	Did you review the Drive Belt Symptom operation and perform the necessary inspections?	Go to **Step 2**	Go to **Symptoms - Engine Mechanical**
2	Verify that there is a chirping, squeal or whine noise. Does the engine make the chirping squeal or whine noise?	Go to **Step 3**	Go to Diagnostic Aids
3	1. Remove the drive belt. If the engine has multiple drive belts, remove the belts one at a time and perform the test below each time a belt is removed. 2. Operate the engine for no longer than 30-40 seconds. 3. Repeat this test if necessary by removing the remaining belt(s). Does the chirping, squeal or whine noise still exist?	Go to **Symptoms - Engine Mechanical**	Go to **Step 4**
4	If diagnosing a chirping noise, inspect for severe pilling exceeding 1/3 of the belt groove depth. If diagnosing a squeal or whine noise, proceed to step 13. Do the belt grooves have pilling?	Go to **Step 5**	Go to **Step 6**
5	Clean the drive belt pulleys with a suitable wire brush. Did you complete the repair?	Go to **Step 20**	Go to **Step 6**
6	Inspect for misalignment of the pulleys. Are any of the pulleys misaligned?	Go to **Step 7**	Go to **Step 8**
7	Replace or repair any misaligned pulleys.		

	Did you complete the repair?	Go to **Step 20**	Go to **Step 8**
8	Inspect for bent or cracked brackets. Did you find any bent or cracked brackets?	Go to **Step 9**	Go to **Step 10**
9	Replace any bent or cracked brackets. Did you complete the repair?	Go to **Step 20**	Go to **Step 10**
10	Inspect for improper, loose or missing fasteners. Did you find the condition?	Go to **Step 11**	Go to **Step 12**
11	**CAUTION:** **Refer to Fastener Caution .** 1. Tighten any loose fasteners. Refer to **Fastener Tightening Specifications**. 2. Replace any improper or missing fasteners. Did you complete the repair?	Go to **Step 20**	Go to **Step 12**
12	Inspect for a bent pulley. Did you find the condition?	Go to **Step 18**	Go to **Step 19**
13	Inspect for an accessory drive component seized bearing or a faulty accessory drive component. If diagnosing a whine noise and the condition still exist, proceed to Diagnostic Aids. Did you find and correct the condition?	Go to **Step 20**	Go to **Step 14**
14	Test the drive belt tensioner for proper operation. Refer to **Drive Belt Tensioner Diagnosis**. Did you find and correct the condition?	Go to **Step 20**	Go to **Step 15**
15	Inspect for the correct drive belt length. Did you find and correct the condition?	Go to **Step 20**	Go to **Step 16**
16	Inspect for misalignment of a pulley. Did you find and correct the condition?	Go to **Step 20**	Go to **Step 17**
17	Inspect for the correct pulley size. Did you find and correct the condition?	Go to **Step 20**	Go to Diagnostic Aids
18	Replace the bent pulley. Did you complete the repair?	Go to **Step 20**	Go to **Step 19**
19	Replace the drive belt. Refer to **Drive Belt Replacement**. Did you complete the repair?	Go to **Step 20**	Go to Diagnostic Aids
20	Operate the system in order to verify the repair. Did you correct the condition?	System OK	Go to **Step 3**

DRIVE BELT RUMBLING AND VIBRATION DIAGNOSIS

Diagnostic Aids

The accessory drive components can have an affect on engine vibration. Vibration from the engine operating may cause a body component or another part of the vehicle to make rumbling noise. Vibration can be caused by, but not limited to the A/C system over charged, the power steering system restricted or the incorrect fluid, or an extra load on the generator. To help identify an intermittent or an improper condition, vary the loads on the accessory drive components.

The drive belt may have a rumbling condition that can not be seen or felt. Sometimes replacing the drive belt may be the only repair for the symptom.

If replacing the drive belt, completing the diagnostic table, and the noise is only heard when the drive belts are installed, there might be an accessory drive component with a failure. Varying the load on the different accessory drive components may aid in identifying which component is causing the rumbling noise.

Test Description

The numbers below refer to the step numbers on the diagnostic table.

2

This test is to verify that the symptom is present during diagnosing. Other vehicle components may cause a similar symptom.

3

This test is to verify that one of the drive belts is causing the rumbling noise or vibration. Rumbling noise may be confused with an internal engine noise due to the similarity in the description. Remove only one drive belt at a time if the vehicle has multiple drive belts. When removing the drive belts the water pump may not be operating and the engine may overheat. Also DTCs may set when the engine is operating with the drive belts removed.

4

Inspecting the drive belts is to ensure that they are not causing the noise. Small cracks across the ribs of the drive belt will not cause the noise. Belt separation is identified by the plys of the belt separating and may be seen at the edge of the belt or felt as a lump in the belt.

5

Small amounts of pilling is normal condition and acceptable. When the pilling is severe the drive belt does not have a smooth surface for proper operation.

9

Inspecting of the fasteners can eliminate the possibility that the wrong bolt, nut, spacer, or washer was

installed.

11

This step should only be performed if the water pump is driven by the drive belt. Inspect the water pump shaft for being bent. Also inspect the water pump bearings for smooth operation and excessive play. Compare the water pump with a known good water pump.

12

Accessory drive component brackets that are bent, cracked, or loose may put extra strain on that accessory component causing it to vibrate.

Drive Belt Rumbling and Vibration Diagnosis

Step	Action	Yes	No
CAUTION: **Refer to Belt Dressing Caution .** DEFINITION: The following items are indications of drive belt rumbling: • A low pitch tapping, knocking, or thumping noise heard at or just above idle. • Heard once per revolution of the drive belt or a pulley. • Rumbling may be caused from: o Pilling, the accumulation of rubber dust that forms small balls (pills) or strings in the drive belt pulley groove o The separation of the drive belt o A damaged drive belt o A worn drive belt idler pulley DEFINITION: The following items are indications of drive belt vibration: • The vibration is engine-speed related. • The vibration may be sensitive to accessory load.			
1	Did you review the Drive Belt Symptom operation and perform the necessary inspections?	Go to **Step 2**	Go to **Symptoms - Engine Mechanical**
2	Verify that there is a rumbling noise or that the vibration is engine related. Does the engine make the rumbling noise or vibration?	Go to **Step 3**	Go to Diagnostic Aids
	1. Remove the drive belt. If the engine has multiple drive belts, remove the belts one at a time and		

3	perform the test below each time a belt is removed. 2. Operate the engine for no longer than 30-40 seconds. 3. Repeat this test if necessary by removing the remaining belt(s). Does the rumbling or vibration still exist?	Go to **Symptoms - Engine Mechanical**	Go to **Step 4**
4	Inspect the drive belts for wear, damage, separation, sections of missing ribs, and debris build-up. Did you find any of these conditions?	Go to **Step 7**	Go to **Step 5**
5	Inspect for severe pilling of more than 1/3 of the drive belt pulley grooves. Did you find severe pilling?	Go to **Step 6**	Go to **Step 7**
6	1. Clean the drive belt pulleys using a suitable wire brush. 2. Reinstall the drive belts. Refer to **Drive Belt Replacement**. Did you correct the condition?	Go to **Step 8**	Go to **Step 7**
7	Install a new drive belt. Refer to **Drive Belt Replacement**. Did you complete the replacement?	Go to **Step 8**	Go to **Step 9**
8	Operate the system in order to verify the repair. Did you correct the condition?	System OK	Go to **Step 9**
9	Inspect for improper, loose or missing fasteners. Did you find any of these conditions?	Go to **Step 10**	Go to **Step 11**
10	**CAUTION:** **Refer to Fastener Caution .** 1. Tighten any loose fasteners. Refer to **Fastener Tightening Specifications**. 2. Replace improper or missing fasteners. Did you complete the repair?	Go to **Step 13**	Go to **Step 11**
11	Inspect for a bent water pump shaft. Refer to **Water Pump Replacement (1.8L LUW and LWE)** . Did you find and correct the condition?	Go to **Step 13**	Go to **Step 12**
	Inspect for bent or cracked brackets.		

12	Did you find and correct the condition?	Go to **Step 13**	Go to Diagnostic Aids
13	Operate the system in order to verify the repair. Did you correct the condition?	System OK	Go to **Step 3**

CYLINDER LEAKAGE TEST

Removal Procedure

1. Open the hood.
2. Raise and support the vehicle. Refer to **Lifting and Jacking the Vehicle** .
3. Remove the right front wheelhouse liner. Refer to **Front Wheelhouse Liner Replacement**
4. Lower the vehicle.
5. Remove the timing belt upper front cover. Refer to **Timing Belt Upper Front Cover Removal**.
6. Remove the spark plugs. Refer to **Spark Plug Replacement** .
7. Detach the engine wiring harness from intake manifold, cylinder head cover and engine wiring harness bracket.
8. Remove the coolant expansion tank closure cap.
9. Remove the oil dipstick.

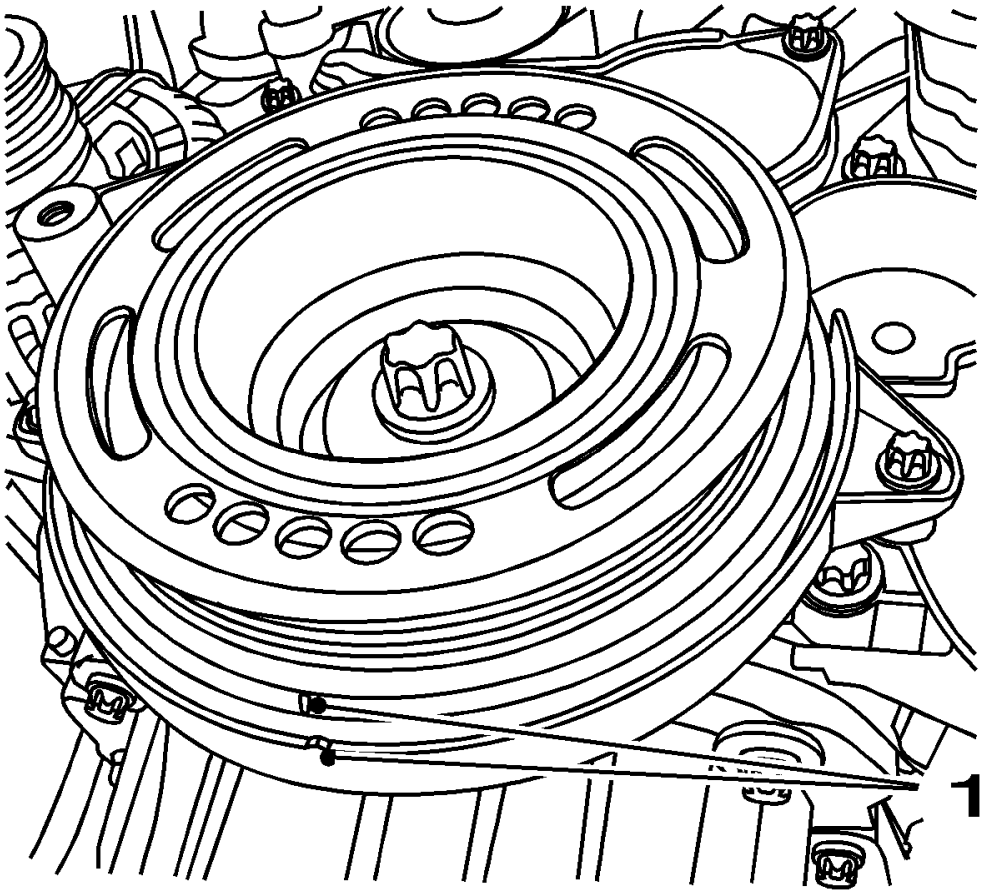

Fig. 4: View Of Crankshaft TDC Position
Courtesy of GENERAL MOTORS COMPANY

10. Set up the crankshaft.
11. Move the crankshaft in the direction of the engine rotation to the first cylinder TDC position (mark 1).

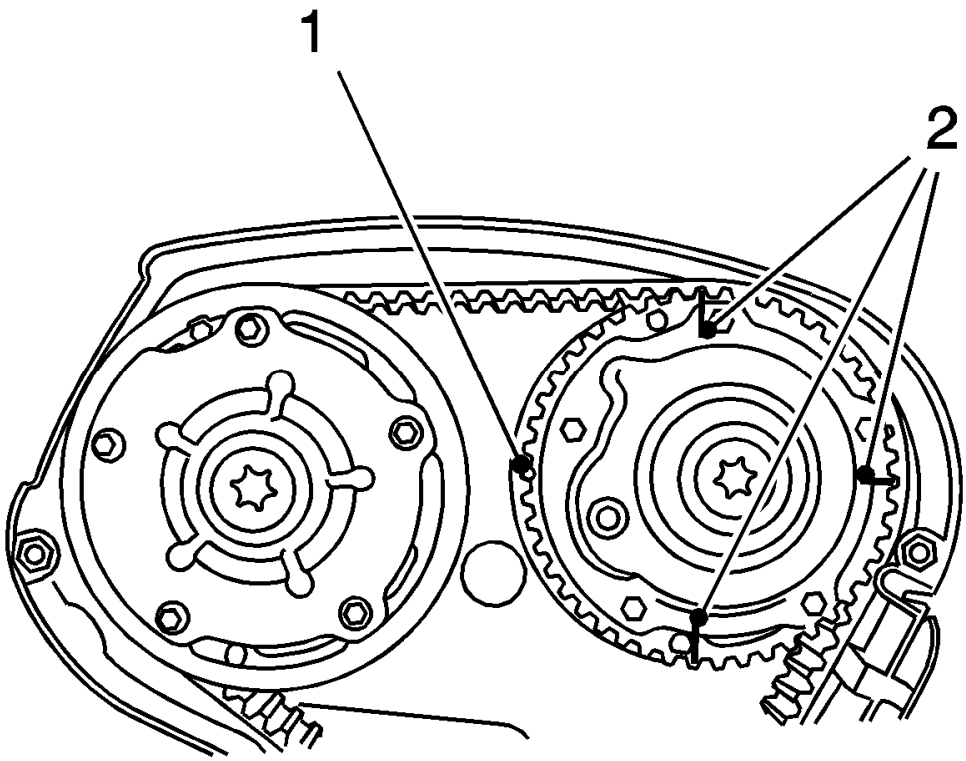

Fig. 5: View Of Guidance Marks
Courtesy of GENERAL MOTORS COMPANY

12. Apply guidance marks.
13. Attach 3 markings (2) as an aid to one of the camshaft adjusters, each one offset by 90° to the marking applied (1).

Test Procedure

NOTE: Follow manufacturer instructions.

1. Calibrate the pressure loss tester and connect to the compressed air system.

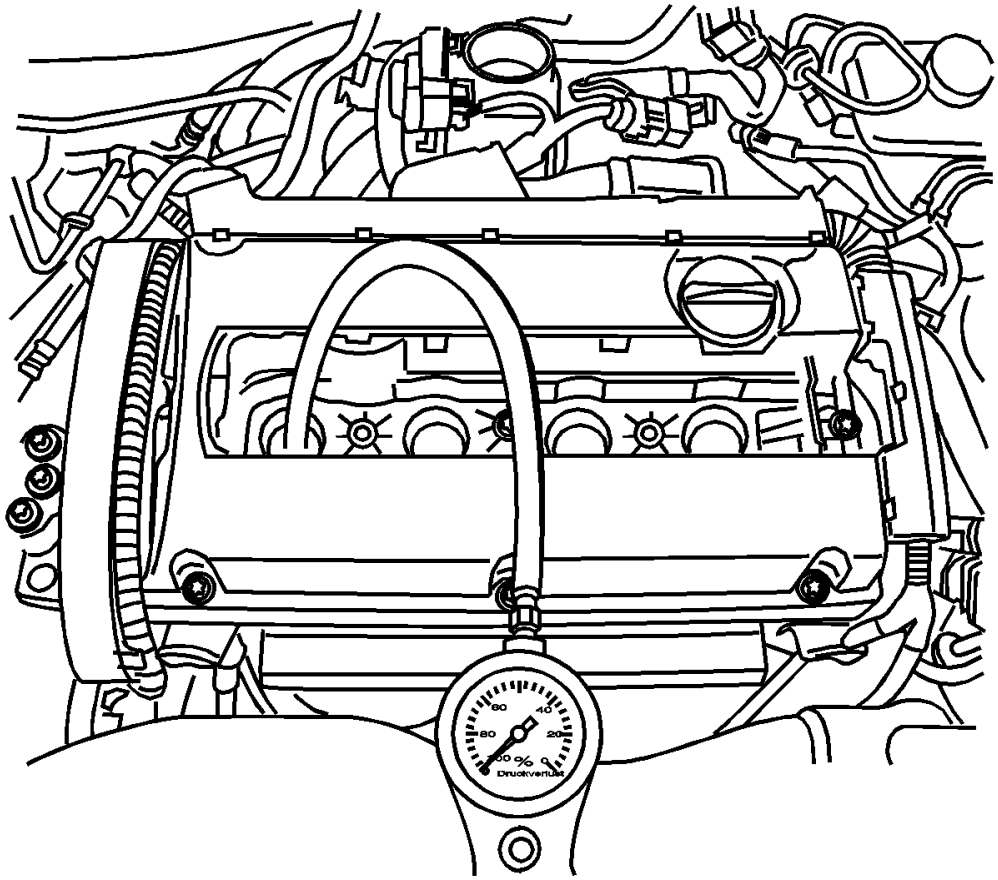

Fig. 6: View Of Pressure Loss Tester
Courtesy of GENERAL MOTORS COMPANY

2. Install the pressure loss tester.

NOTE: Wheels must be in contact with the ground.

- Engage first gear and apply the parking brake.
- Install the connecting piece into the spark plug thread of cylinder number 1.
- Apply compressed air to cylinder number 1.

3. Inspect for Pressure Loss
   - Take pressure loss reading.
     - The maximum permissible pressure differential between cylinders is approximately 10 percent.
     - Maximum pressure loss of a cylinder is 25 percent.
   - Take note of any visible escape of compressed air.

Intake manifold, exhaust manifold, crankcase

- Take note of any bubble formation in the coolant compensation tank.

4. Perform pressure loss test by analogy on cylinders 3, 4 and 2.

Installation Procedure

1. Remove the pressure loss tester.
2. Remove the connection piece from the spark plug thread.
3. Put the vehicle in neutral.
4. Insert the oil dipstick.
5. Install the coolant expansion tank closure cap.
6. Install the spark plugs. Refer to **Spark Plug Replacement** .
7. Install the engine wiring harness to the intake manifold.
8. Install the timing belt upper front cover. Refer to **Timing Belt Upper Front Cover Installation**.
9. Raise and support the vehicle.
10. Install the right front wheelhouse liner. Refer to **Front Wheelhouse Liner Replacement**
11. Lower the vehicle.
12. Close the hood.

CRANKCASE VENTILATION SYSTEM INSPECTION/DIAGNOSIS

Results of Incorrect Operation

A plugged positive crankcase ventilation (PCV) orifice or hose may cause the following conditions:

- Rough idle
- Stalling or slow idle speed
- Oil leaks
- Oil in the throttle body
- Sludge in the engine

Functional Check

With these systems, any blow-by in excess of the system capacity, from a badly worn engine, sustained heavy load, etc., is exhausted into the throttle body and is drawn into the engine.

Proper operation of the crankcase ventilation system depends upon a sealed engine. If oil slugging or dilution is noted and the crankcase ventilation system is functioning properly, check the engine for a possible cause. Correct any problems.

If an engine is idling rough, inspect for a clogged PCV orifice, a dirty vent filter, air cleaner element, or plugged hose. Replace as required. Use the following procedure:

1. Remove the PCV hose from the cylinder head cover.
2. Operate the engine at idle.
3. Place your thumb over the end of the hose in order to check for a vacuum. If there is no vacuum at the hose, inspect for the following items:
   - Plugged hoses
   - The manifold port
4. Turn OFF the engine.
5. Inspect the PCV orifice in the cylinder head cover for debris or blockage.

DRIVE BELT FALLS OFF AND EXCESSIVE WEAR DIAGNOSIS

Diagnostic Aids

If the drive belt repeatedly falls off the drive belt pulleys, this is because of pulley misalignment.

An extra load that is quickly applied on released by an accessory drive component may cause the drive belt to fall off the pulleys. Verify the accessory drive components operate properly.

If the drive belt is the incorrect length, the drive belt tensioner may not keep the proper tension on the drive belt.

Excessive wear on a drive belt is usually caused by an incorrect installation or the wrong drive belt for the application.

Minor misalignment of the drive belt pulleys will not cause excessive wear, but will probably cause the drive belt to make a noise or to fall off.

Excessive misalignment of the drive belt pulleys will cause excessive wear but may also make the drive belt fall off.

Test Description

The numbers below refer to the step numbers on the diagnostic table.

2

This inspection is to verify the condition of the drive belt. Damage may of occurred to the drive belt when the drive belt fell off. The drive belt may of been damaged, which caused the drive belt to fall off. Inspect the belt for cuts, tears, sections of ribs missing, or damaged belt plys.

4

Misalignment of the pulleys may be caused from improper mounting of the accessory drive component, incorrect installation of the accessory drive component pulley, or the pulley bent inward or outward from a previous repair. Test for a misaligned pulley using a straight edge in the pulley grooves across two or three pulleys. If a misaligned pulley is found refer to that accessory drive component for the proper installation procedure of that pulley.

5

Inspecting the pulleys for being bent should include inspecting for a dent or other damage to the pulleys that would prevent the drive belt from not seating properly in all of the pulley grooves or on the smooth surface of a pulley when the back side of the belt is used to drive the pulley.

6

Accessory drive component brackets that are bent or cracked will let the drive belt fall off.

7

Inspecting of the fasteners can eliminate the possibility that a wrong bolt, nut, spacer, or washer was installed. Missing. loose, or the wrong fasteners may cause pulley misalignment from the bracket moving under load. Over tightening of the fasteners may cause misalignment of the accessory component bracket.

13

The inspection is to verify the drive belt is correctly installed on all of the drive belt pulleys. Wear on the drive belt may be caused by mis-positioning the drive belt by one groove on a pulley.

14

The installation of a drive belt that is too wide or too narrow will cause wear on the drive belt. The drive belt ribs should match all of the grooves on all of the pulleys.

15

This inspection is to verify the drive belt is not contacting any parts of the engine or body while the engine is operating. There should be sufficient clearance when the drive belt accessory drive components load varies. The drive belt should not come in contact with an engine or a body component when snapping the throttle.

Drive Belt Falls Off and Excessive Wear Diagnosis

Step	Action	Yes	No
CAUTION: **Refer to Belt Dressing Caution .** DEFINITION: The drive belt falls off the pulleys or may not ride correctly on the pulleys.DEFINITION: Wear at the outside ribs of the drive belt due to an incorrectly installed drive belt.			
1	Did you review the Drive Belt Symptom operation and perform the necessary inspections?	Go to **Step 2**	Go to **Symptoms - Engine Mechanical**
2	If diagnosing excessive wear, proceed to step 13. If diagnosing a drive belt that falls off, inspect		

	for a damaged drive belt. Did you find the condition?	Go to **Step 3**	Go to **Step 4**
3	Install a new drive belt. Refer to **Drive Belt Replacement**. Does the drive belt continue to fall off?	Go to **Step 4**	System OK
4	Inspect for misalignment of the pulleys. Did you find and repair the condition?	Go to **Step 12**	Go to **Step 5**
5	Inspect for a bent or dented pulley. Did you find and repair the condition?	Go to **Step 12**	Go to **Step 6**
6	Inspect for a bent or a cracked bracket. Did you find and repair the condition?	Go to **Step 12**	Go to **Step 7**
7	Inspect for improper, loose or missing fasteners. Did you find loose or missing fasteners?	Go to **Step 8**	Go to **Step 9**
8	**CAUTION:** **Refer to Fastener Caution .** 1. Tighten any loose fasteners. Refer to **Fastener Tightening Specifications**. 2. Replace improper or missing fasteners. Does the drive belt continue to fall off?	Go to **Step 9**	System OK
9	Test the drive belt tensioner for operating correctly. Refer to **Drive Belt Tensioner Diagnosis**. Does the drive belt tensioner operate correctly?	Go to **Step 11**	Go to **Step 10**
10	Replace the drive belt tensioner. Refer to **Drive Belt Tensioner Replacement**. Does the drive belt continue to fall off?	Go to **Step 11**	System OK
11	Inspect for failed drive belt idler and drive belt tensioner pulley bearings. Did you find and repair the condition?	Go to **Step 12**	Go to Diagnostic Aids
12	Operate the system in order to verify the repair. Did you correct the condition?	System OK	Go to **Step 2**
13	Inspect the drive belt for the proper installation. Refer to **Drive Belt Replacement**. Did you find this condition?	Go to **Step 16**	Go to **Step 14**
14	Inspect for the proper drive belt. Did you find this condition?	Go to **Step 16**	Go to **Step 15**
15	Inspect for the drive belt rubbing against a bracket, hose, or wiring harness. Did you find and repair the condition?	Go to **Step 17**	Go to Diagnostic Aids
16	Replace the drive belt. Refer to **Drive Belt Replacement**. Did you complete the replacement?	Go to **Step 17**	-
	Operate the system in order to verify the repair.		

17	Did you correct the condition?	System OK	-

DRIVE BELT TENSIONER DIAGNOSIS

Diagnosis consists of a function check on the automatic belt tensioner and a visual check on the belt and the components linked to the belt.

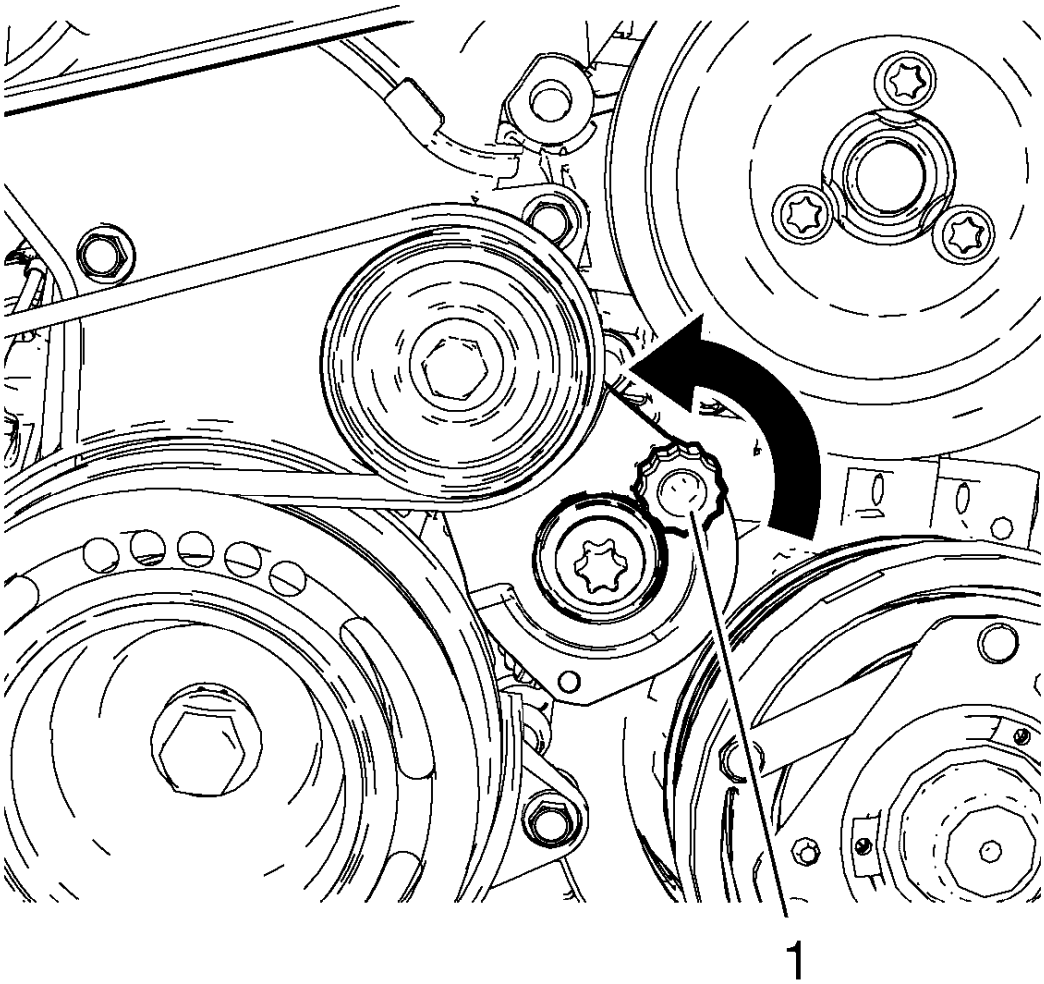

Fig. 7: Drive Belt Tensioner
Courtesy of GENERAL MOTORS COMPANY

- Apply tension to the belt tensioner via the cast projection (1) in the direction of the arrow, counterclockwise, and allow to slide back slowly.
- The tensioner must slide back to the initial position.

DUAL MASS FLYWHEEL DIAGNOSIS

Check for Thermal Overload

NOTE: These quick information shall help to carry out a correct diagnosis in case of a customer complaint.

Through friction of clutch plate on the friction surface of the dual mass flywheel temperatures up to 200 °C can arise during normal driving. At sliding clutch or through operating errors much higher temperatures can arise. These temperatures must not cause mandatory a reduced lifetime of the dual mass flywheel.

Possible indications for a high thermal load are:

- Tarnish (bluish) as well as local hotspots on friction surface
- Tarnish (bluish) near of mounting area and riveting area of clutch

If all other checkable features are well, the dual mass flywheel can stay in the vehicle.

Possible indications for a too high thermal load are:

- Cracks
- Fusion zones on friction surface (material smear)
- Scores in friction surface (for example through clutch lining riveting at destroyed or worn clutch plate)
- Tarnish (bluish) which reaches up to bearing area of dual mass flywheel
- Bluish discoloration of locating pins (3 locating pins in outer zone of dual mass flywheel)

In these cases the dual mass flywheel has to be replaced.

Overview Dual Mass Flywheel

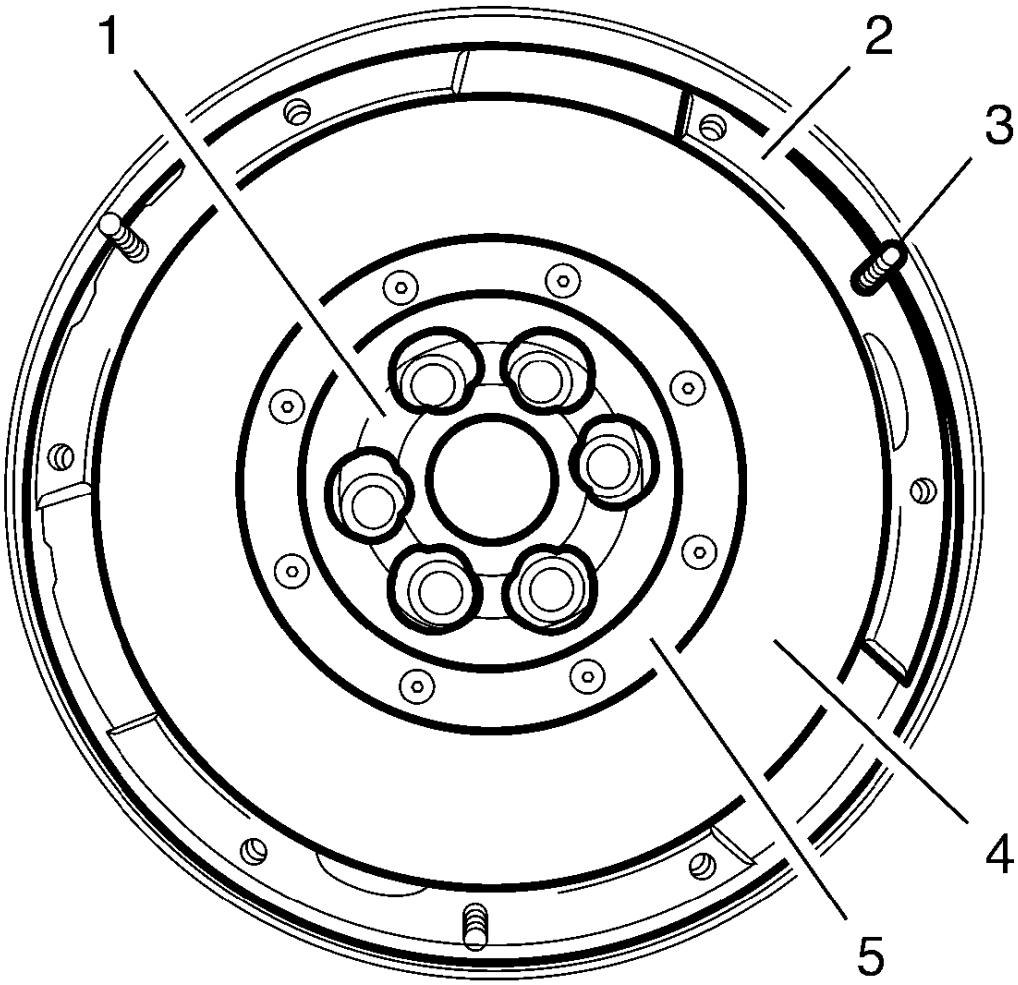

Fig. 8: Overview Dual Mass Flywheel
Courtesy of GENERAL MOTORS COMPANY

Callout	Component Name
1	Bearing Area
2	Mounting Area Pressure Plate
3	Locating Pins
4	Friction Surface
5	Riveting Area

Exploded View Dual Mass Flywheel with Additional Mass

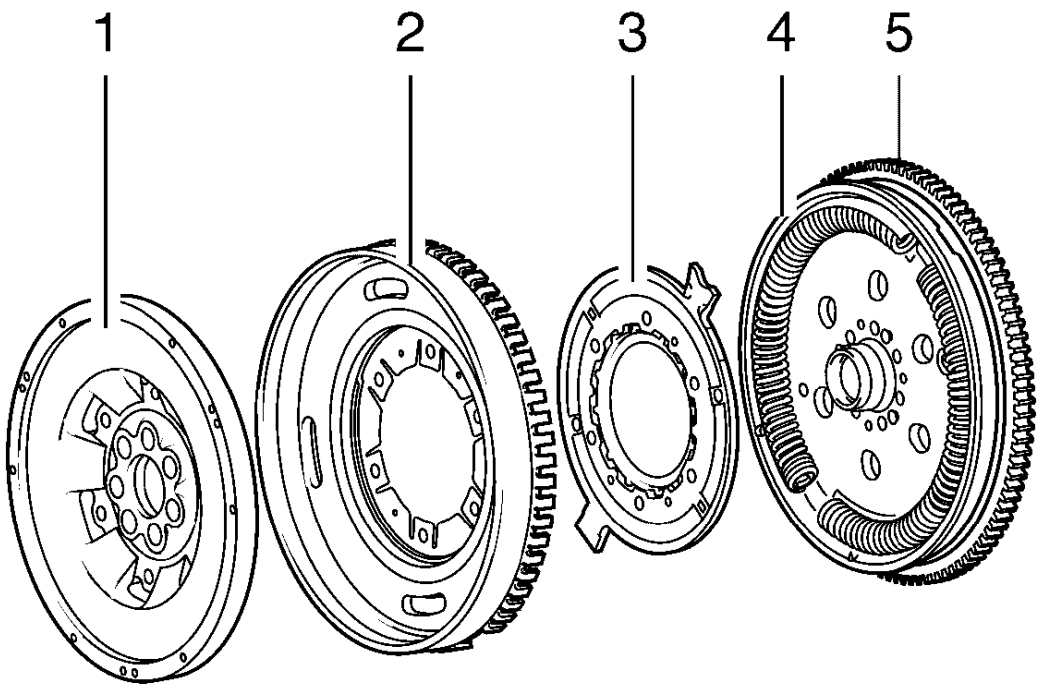

Fig. 9: Exploded View Dual Mass Flywheel with Additional Mass
Courtesy of GENERAL MOTORS COMPANY

Callout	Component Name
1	Secondary Flywheel Mass
2	Additional Mass, Coupled with Cover and Pulse-Generator Ring
3	Flange
4	Primary Flywheel Mass with Bowed Springs and Plain Bearing/Bearing Bolt
5	Toothed Ring

Check for Damaged Components

All following checking procedures have to be carried out at installed dual mass flywheel. For visual check at vehicle very bright light and a additional bright and small pocket lamp is necessary. Damages like grease on primary flywheel and loose ore missing balance weights cannot be checked at installed condition. During visual

check material alteration can be stated which eliminate a further operating suitability.

For comparison different damages at dual mass flywheel with the corresponding further procedure are presented here.

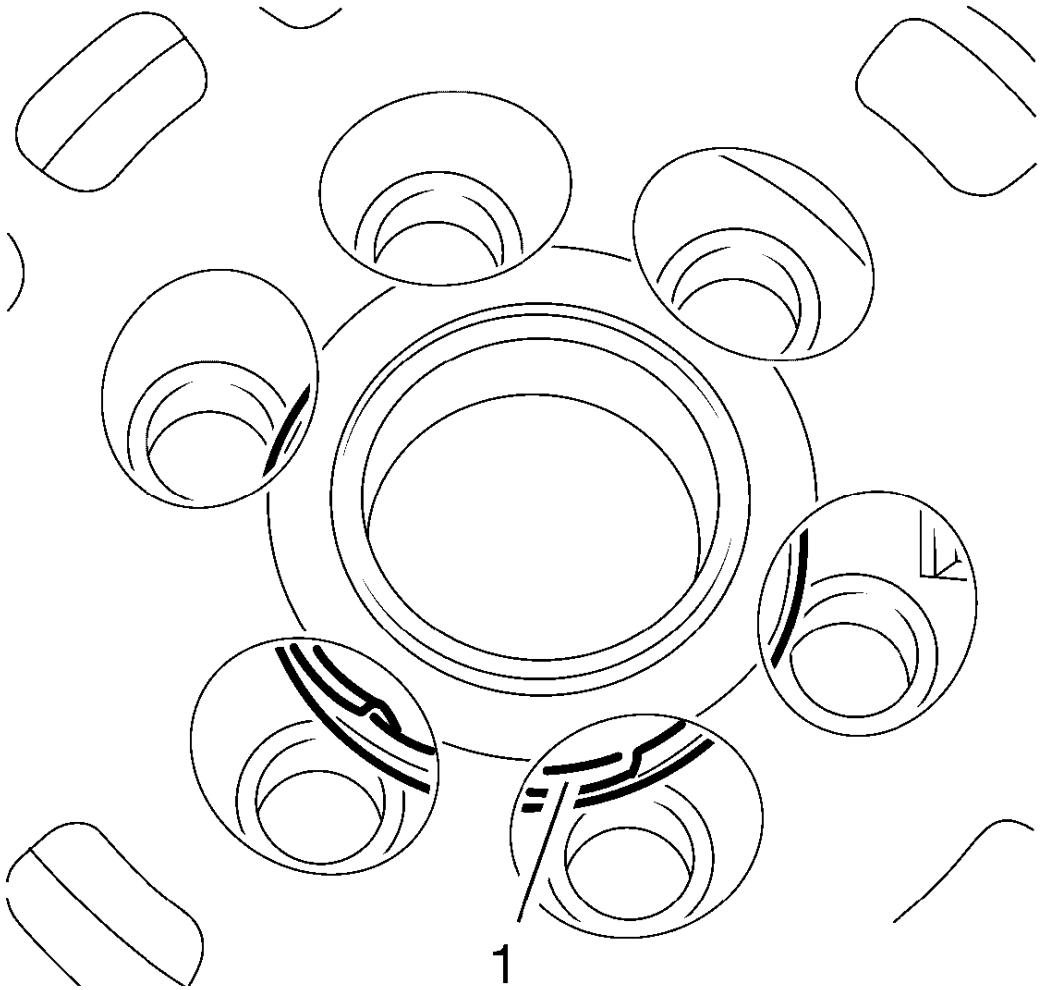

Fig. 10: Plain Bearing
Courtesy of GENERAL MOTORS COMPANY

NOTE: In case of mechanical damages at plain bearing the dual mass flywheel has to be replaced.

1. Inspect plain bearing (1) for damages.

   Dependent of the manufacturer damages can be detected through ventilation openings of secondary flywheel. Parts of the bearing (1) are detached or lie loose around the bearing bolt.

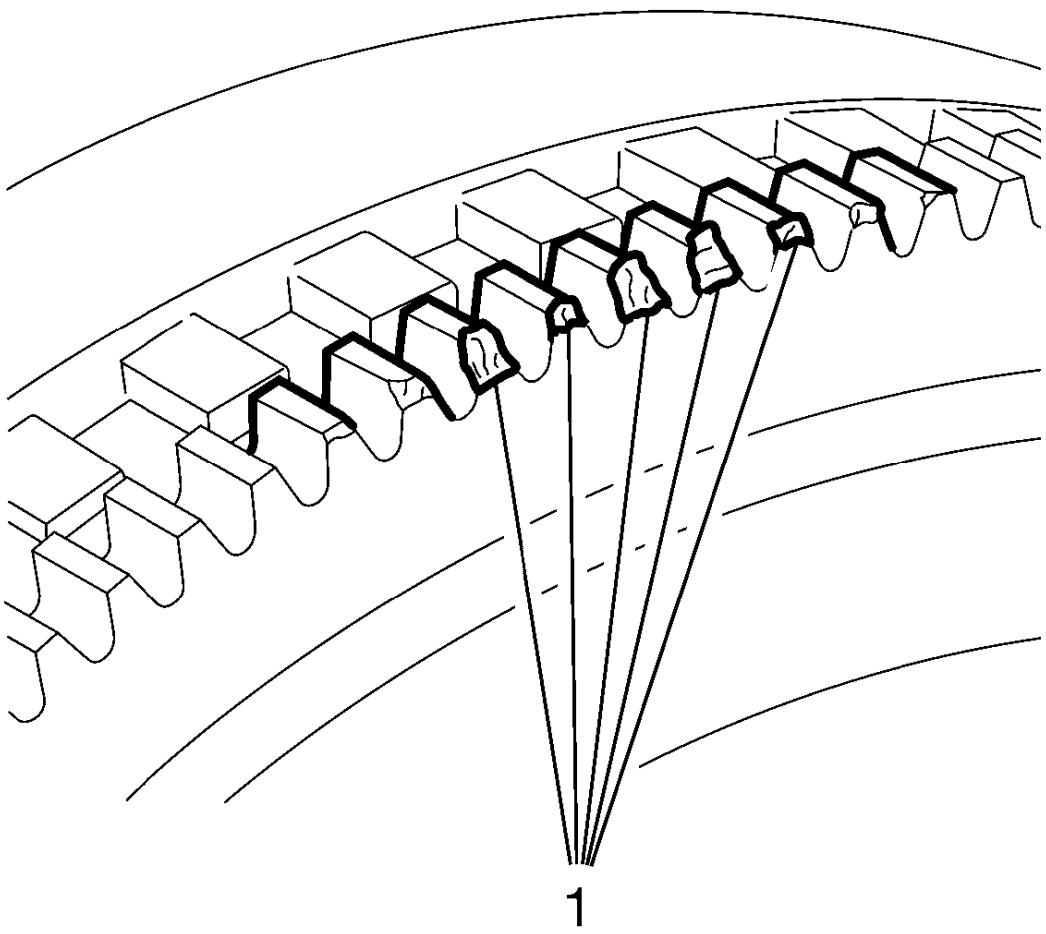

Fig. 11: Toothed Ring
Courtesy of GENERAL MOTORS COMPANY

NOTE: Light abrasion on frontal areas of teeth is allowed. If problems occur during starting the engine the dual mass flywheel has to be replaced.

2. Inspect toothed ring (1) for damages.

   The toothed ring is needed to start the engine. Through a lot of starting procedures and/or an incorrect engaging starter signs of abrasion can occur on teeth of the toothed ring. The profile of damages can reach from only low signs of abrasion up to heavy material removal. The installation of a pulse-generator ring depends on the manufacturer.

   The image shows signs of abrasion and mechanical damages at toothed ring (1), they occur through abrasion due to a lot of starting procedures. In this case the dual mass flywheel has to be replaced.

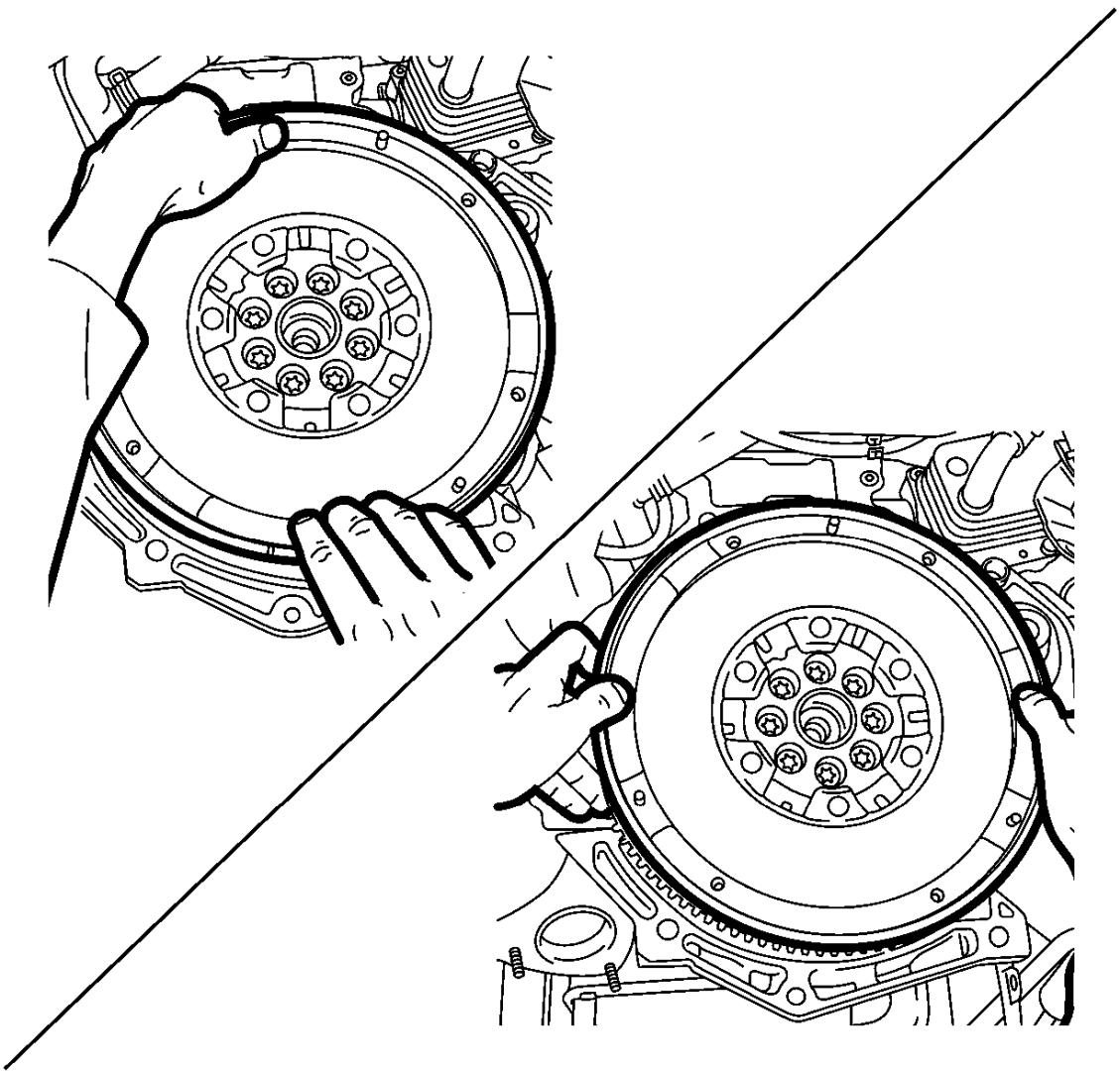

Fig. 12: Inspecting Tilt Clearance
Courtesy of GENERAL MOTORS COMPANY

NOTE: The check must be carried out only by hand without any tools.

3. Inspect tilt clearance.

   At dual mass flywheel the additional-mass ring looms over the gap between primary and secondary flywheel. It is not possible to carry out just a visual check.

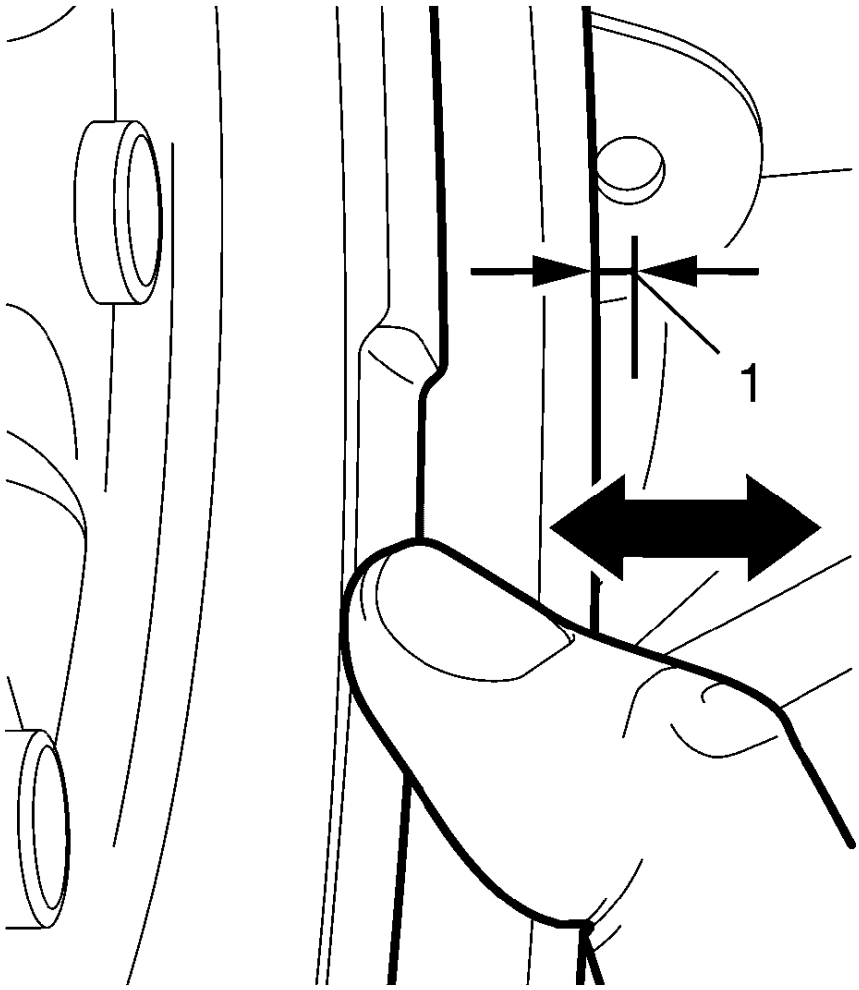

Fig. 13: Tilt Clearance Height
Courtesy of GENERAL MOTORS COMPANY

NOTE: An absolute clear measurement is not possible with this check due to the different applied forces of the several workshop employees during the check.

4. Embrace dual mass flywheel and apply thumbs onto the outer radius of secondary flywheel.
5. Apply pressure onto the secondary flywheel alternating on upper, lower, left and right side

During the tilt clearance check a functional metal rattling noise may occur.

If tilt clearance is higher than 3 mm (MUST be measured, DO NOT make an estimation) (1) the dual mass flywheel has to be replaced.

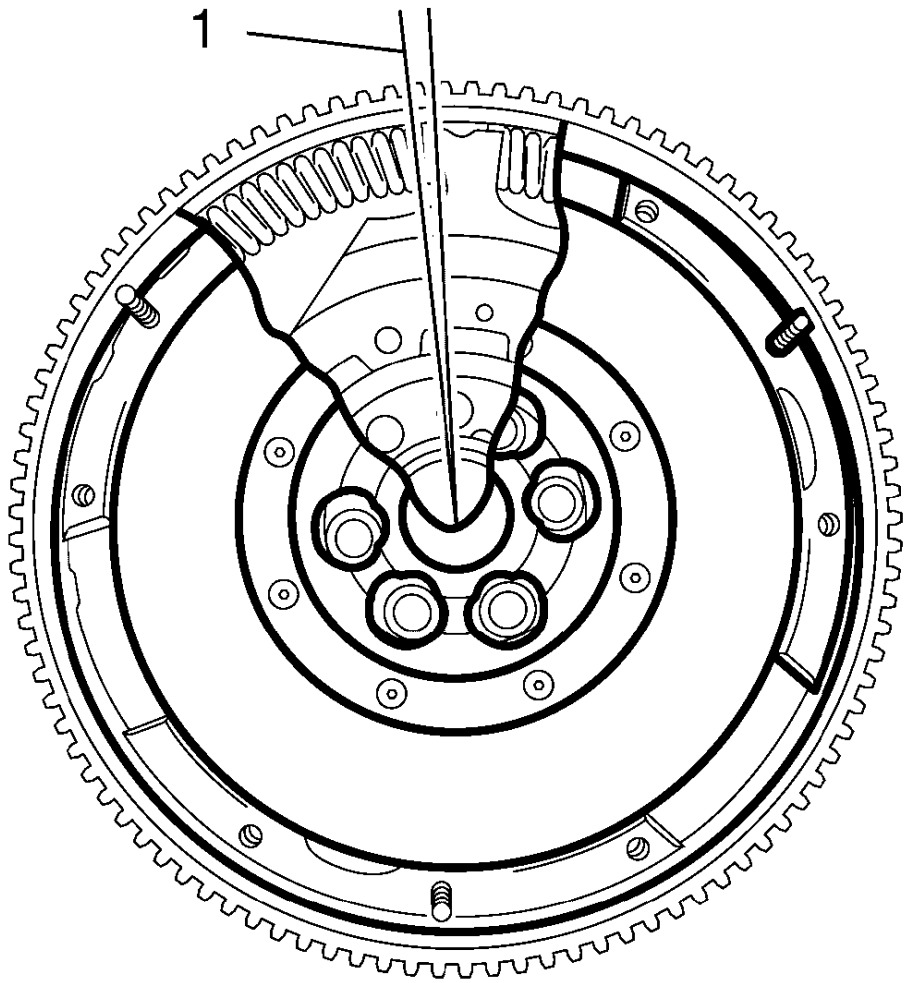

Fig. 14: Tilt Clearance Angle
Courtesy of GENERAL MOTORS COMPANY

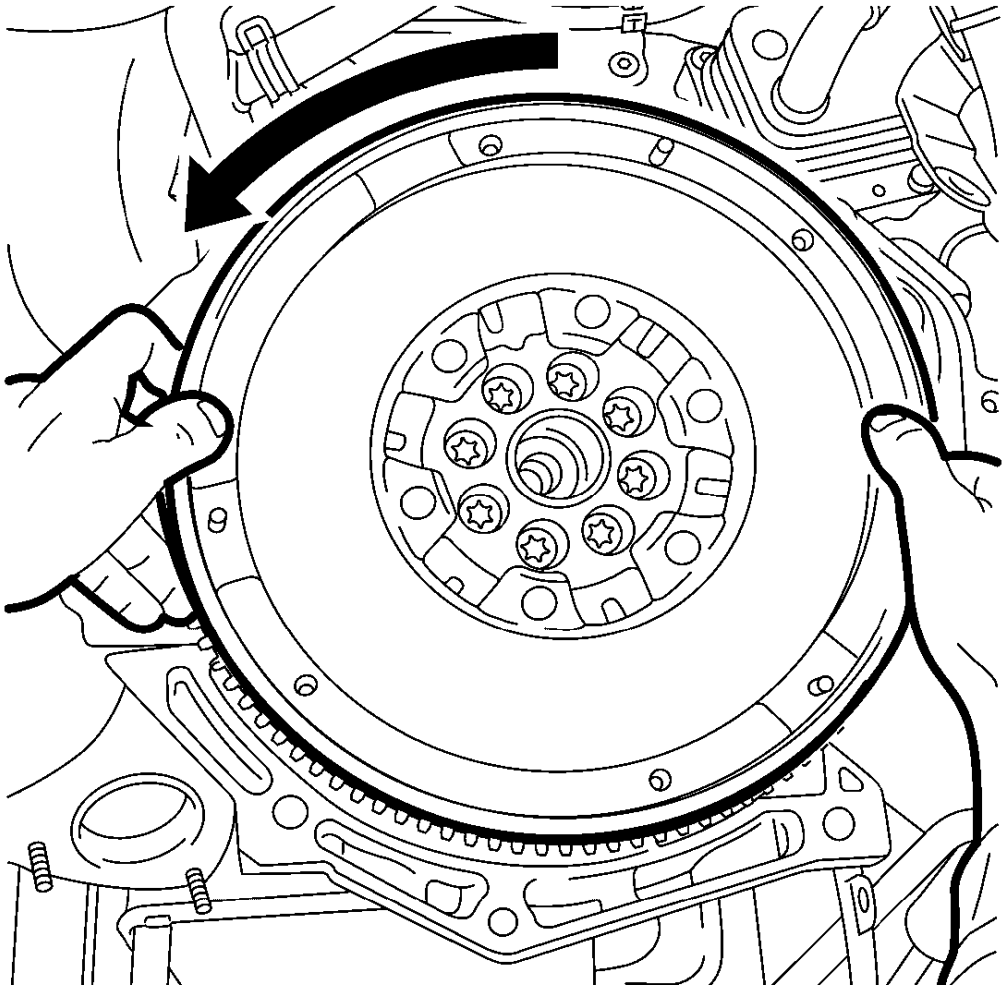

Fig. 15: Rotating Secondary Flywheel Anticlockwise
Courtesy of GENERAL MOTORS COMPANY

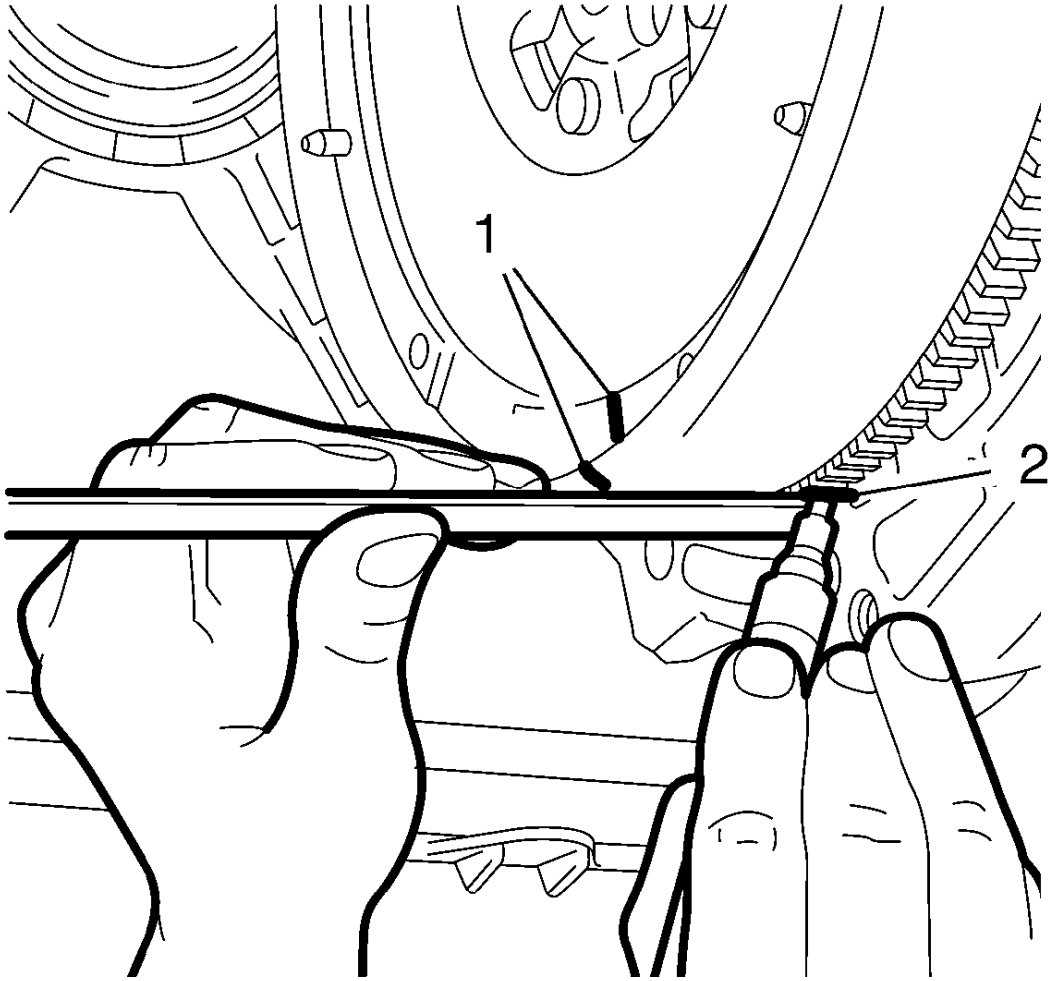

Fig. 16: Releasing Secondary Flywheel
Courtesy of GENERAL MOTORS COMPANY

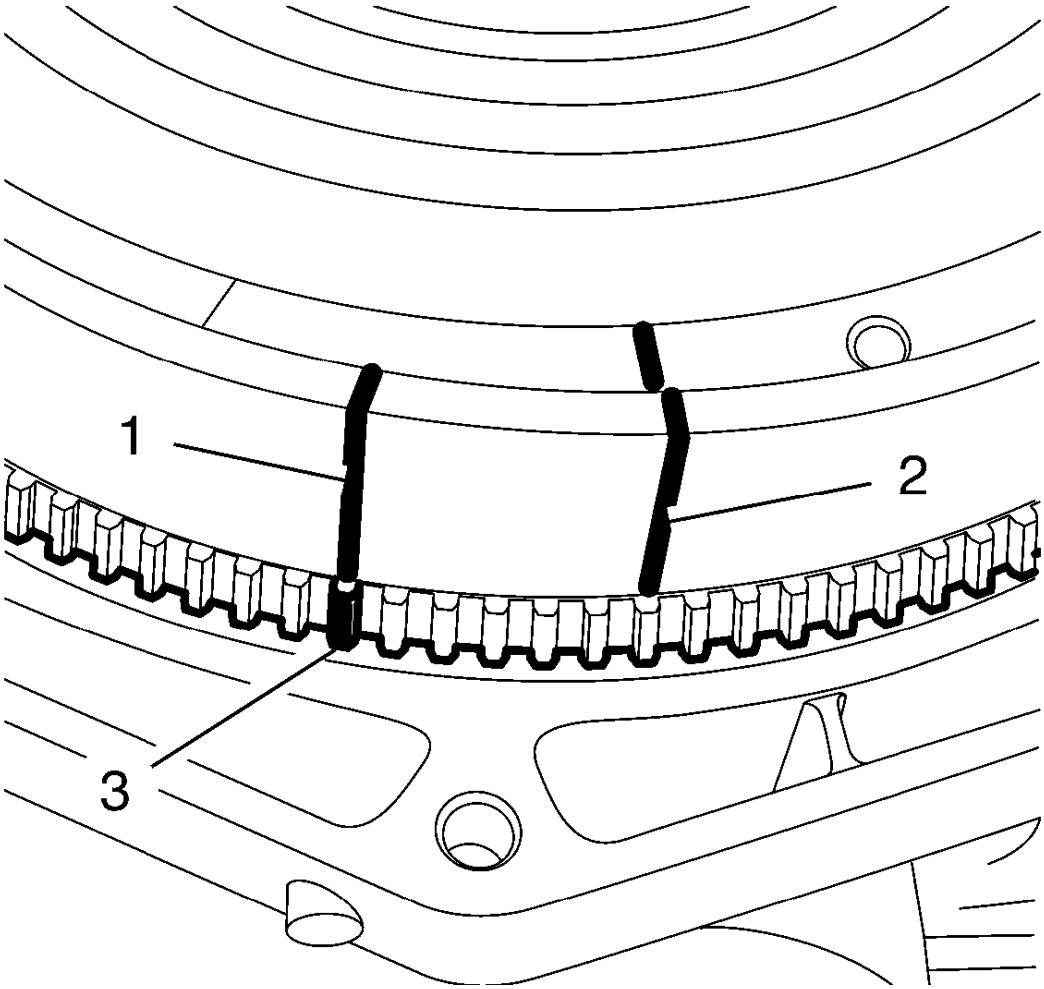

Fig. 17: Mark On Flywheel And Toothed Ring For Starter
Courtesy of GENERAL MOTORS COMPANY

6. Inspect clearance angle (1).

   Before the inspection of the clearance angle the dual mass flywheel should be rotated several times clockwise and anticlockwise to receive a feeling for the resistance of the springs. In addition unusual loud clicking noise or possible rattle, crunch, grinding noise can be sounded out during rotating the dual mass flywheel.

   If the rotation of the flywheel is impossible the flywheel is defective and has to be replaced.

   The clearance angle is the angle (1) about the secondary and the primary flywheel can be turned light against each other. Thereby the flange wings are moved in the duct of the bowed springs without adjoining the bowed springs. Dictated by functional factors the clearance angle is up to 8 teeth.

   Is the secondary flywheel rotated beyond this point the bowed springs in the duct are moved to spring

arrestor in the primary flywheel/cover. Now the both spring are tensioned.

- Rotate secondary flywheel anticlockwise (arrow) until the elastic counterforce (spring force) is clear noticeable.
- Release secondary flywheel slowly until the bowed springs are relaxed, so no counterforce acts onto the springs.
- Mark position with a vertical line by a white pencil on secondary flywheel (1) and on toothed ring for starter (2).
- Rotate secondary flywheel clockwise until the elastic counterforce is clear noticeable.
- Release secondary flywheel slowly until the bowed springs are relaxed.
- Apply new marking on secondary flywheel (1) on the height of the marking on the toothed ring for starter (3).
- Count amount of teeth on toothed ring for starter from marked tooth up to the height of the first marking on secondary flywheel (2). Dictated by functional factors up to 8 teeth are allowed.

7. ALWAYS replace the engine flywheel if following conditions are given:
   - The difference exceeds the amount of 8 teeth.
   - The dual mass flywheel cannot be rotated.
   - During rotating the dual mass flywheel a hard metallic arrestor is audible or noticeable.

REPAIR INSTRUCTIONS - ON VEHICLE

DRIVE BELT REPLACEMENT

Special Tools

EN 6349 Locking Pin

For equivalent regional tools, refer to **Special Tools**.

Removal Procedure

1. Open the hood.
2. Raise the vehicle. Refer to **Lifting and Jacking the Vehicle** .
3. Remove the right front wheelhouse liner. Refer to **Front Wheelhouse Liner Replacement** .

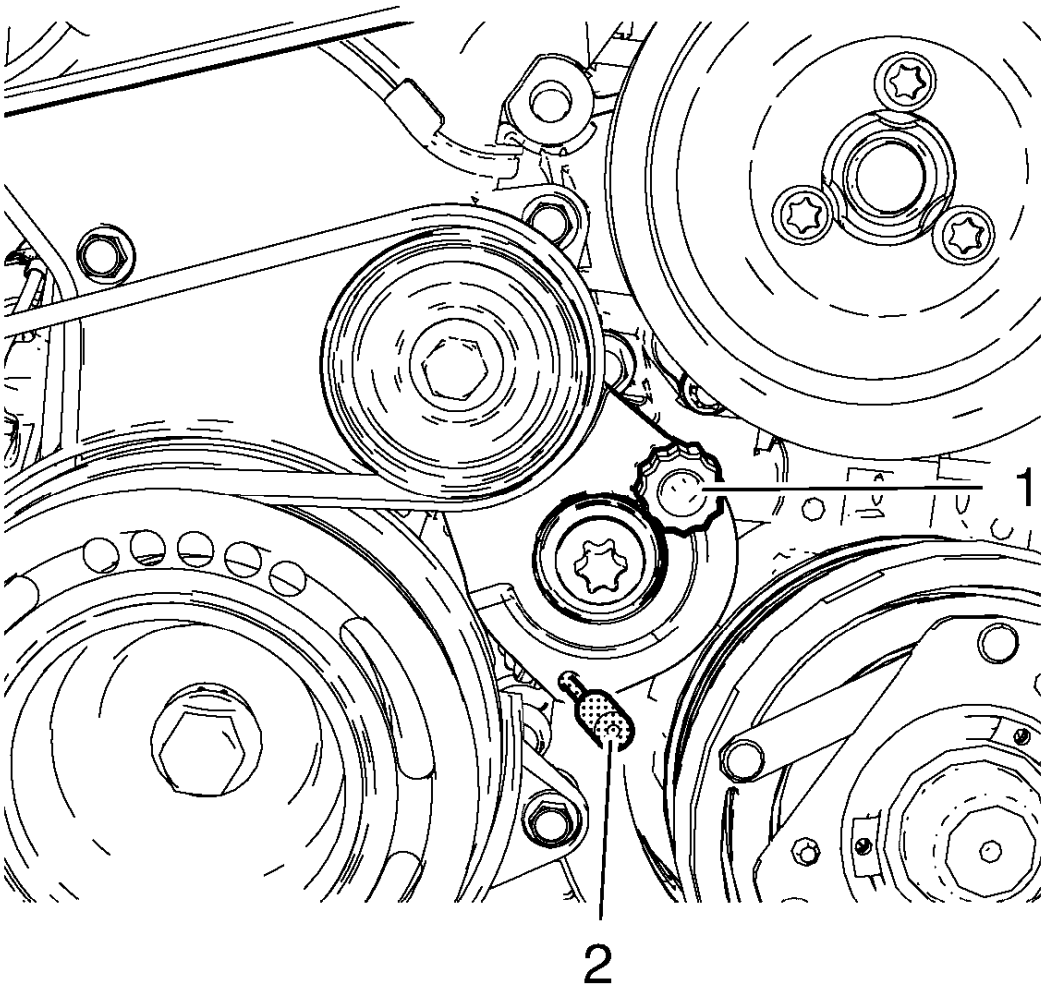

Fig. 18: Drive Belt Tensioner And Special Tool
Courtesy of GENERAL MOTORS COMPANY

4. Release tension to the drive belt tensioner by rotating counterclockwise (1) and lock with **EN 6349** pin (2).

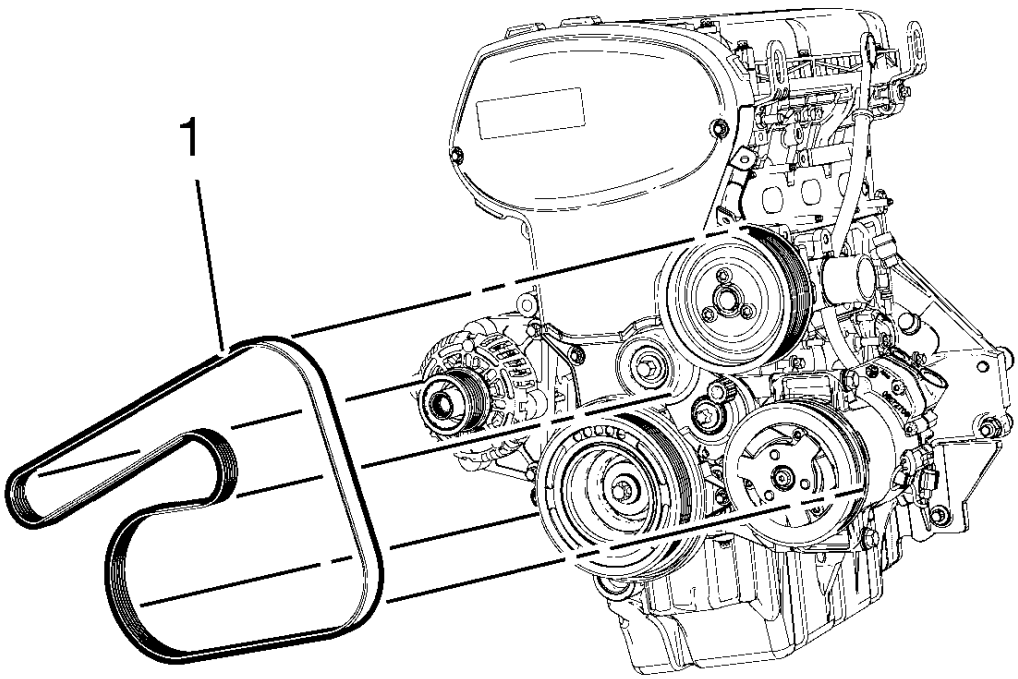

Fig. 19: Drive Belt Routing
Courtesy of GENERAL MOTORS COMPANY

5. Remove the drive belt (1).

Installation Procedure

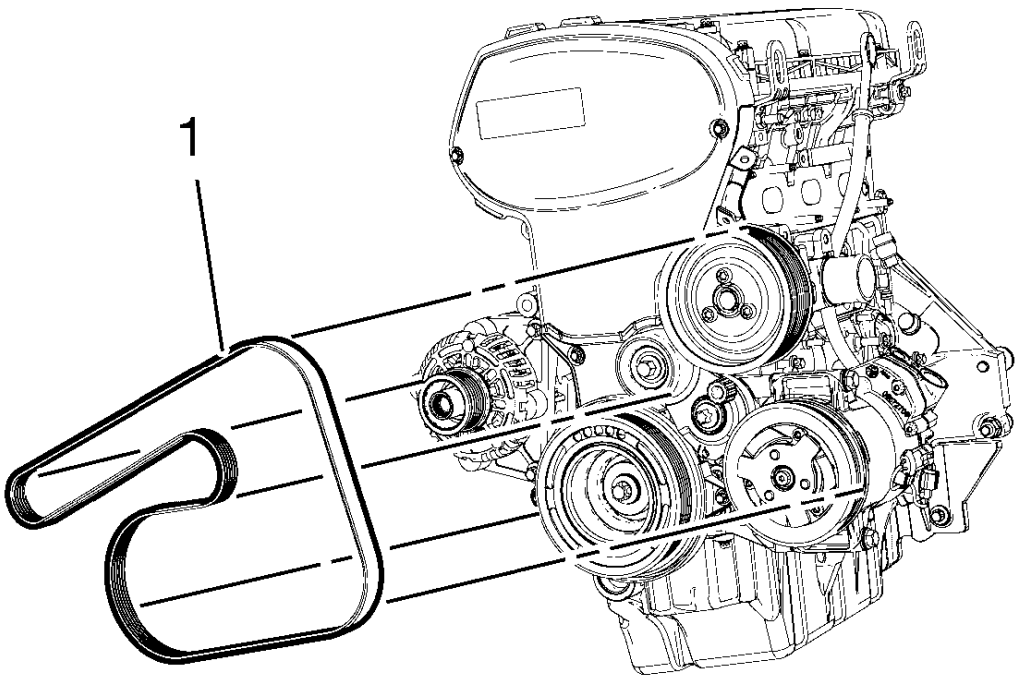

Fig. 20: Drive Belt Routing
Courtesy of GENERAL MOTORS COMPANY

1. Install the drive belt (1).

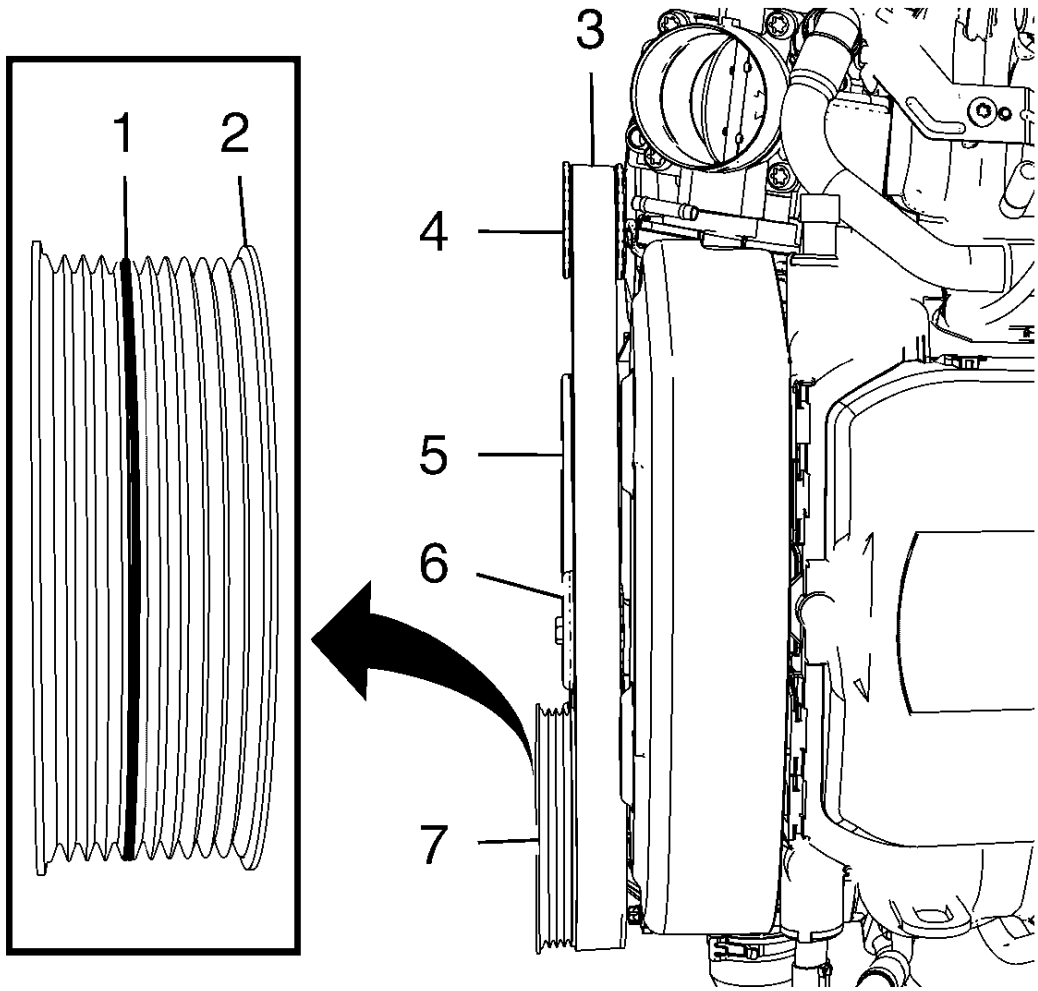

Fig. 21: Checking Drive Belt Position
Courtesy of GENERAL MOTORS COMPANY

NOTE: **Ensure that the drive belt is aligned on the generator pulley (4), crankshaft balancer (5), drive belt tensioner (6) water pump pulley (7), and A/C compressor. The drive belt must lie on the water pump pulley between the flange (1) and (2).**

2. Check the position of the drive belt (3).

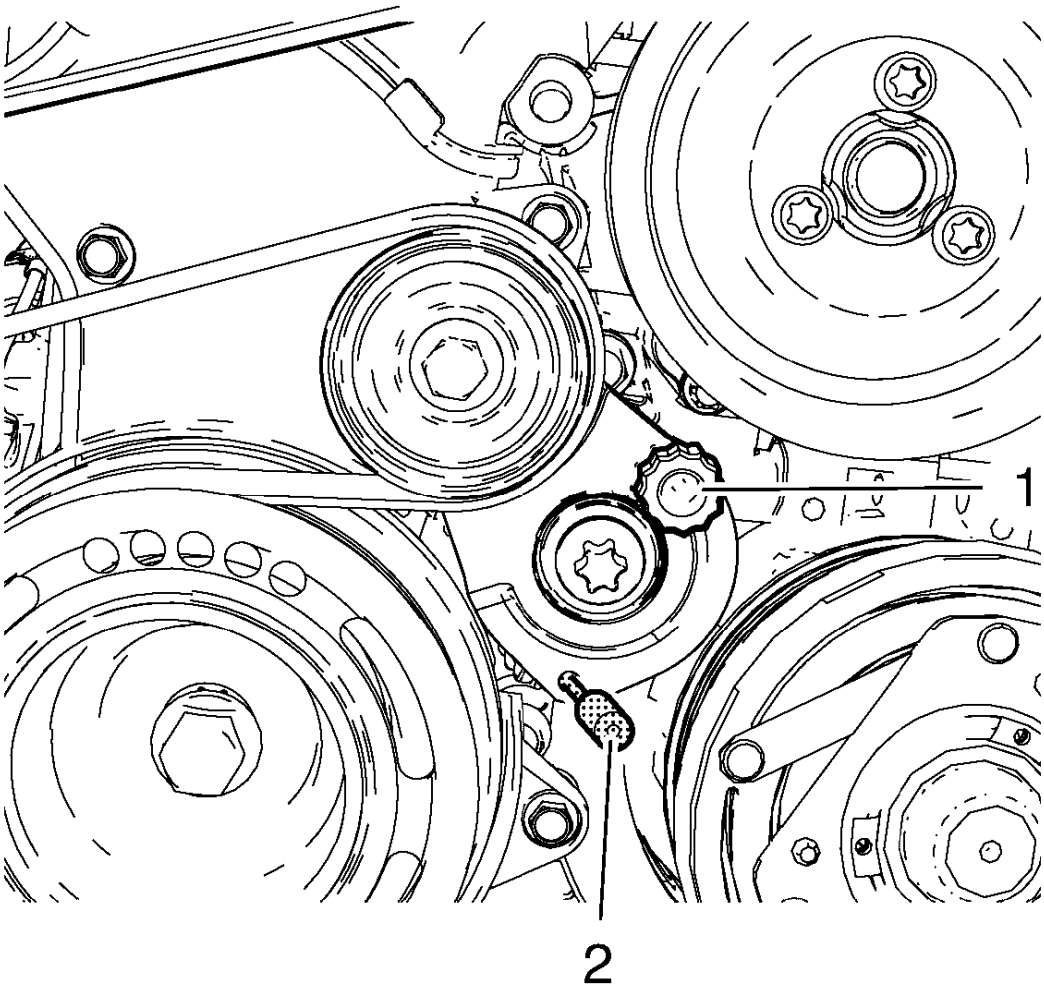

Fig. 22: Drive Belt Tensioner And Special Tool
Courtesy of GENERAL MOTORS COMPANY

3. Release tension to the tensioner by rotating counterclockwise (1).

NOTE: Allow tensioner to slide back slowly.

4. Remove **EN 6349** pin (2).
5. Apply tension to the tensioner clockwise (1).
6. Install the right front wheelhouse liner. Refer to **Front Wheelhouse Liner Replacement** .
7. Lower the vehicle.
8. Close the hood.

DRIVE BELT TENSIONER REPLACEMENT

Removal Procedure

1. Remove the generator and air conditioning compressor belt. Refer to **Drive Belt Replacement**.

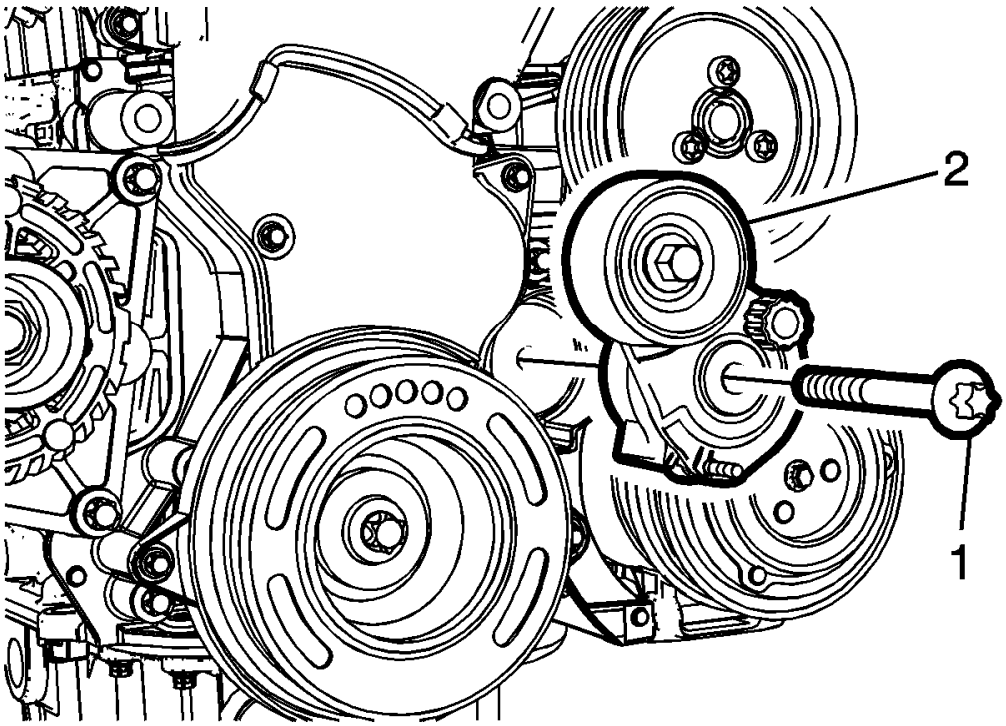

Fig. 23: Drive Belt Tensioner Bolt
Courtesy of GENERAL MOTORS COMPANY

2. Remove the drive belt tensioner bolt (1).
3. Remove the drive belt tensioner (2).

Installation Procedure

1. Clean the drive belt tensioner thread.

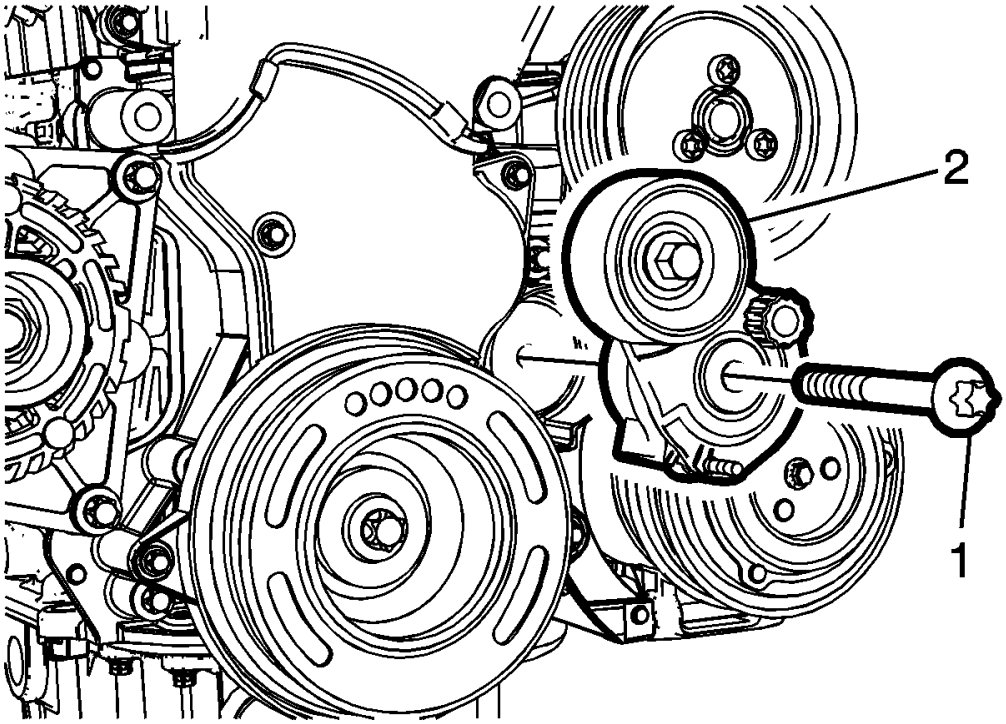

Fig. 24: Drive Belt Tensioner Bolt
Courtesy of GENERAL MOTORS COMPANY

2. Install drive belt tensioner (2).

CAUTION: Refer to Fastener Caution .

3. Install the drive belt tensioner bolt (1) and tighten to 55 N.m (41 lb ft).
4. Install the generator and air conditioning compressor belt. Refer to **Drive Belt Replacement**.

ENGINE MOUNT REPLACEMENT

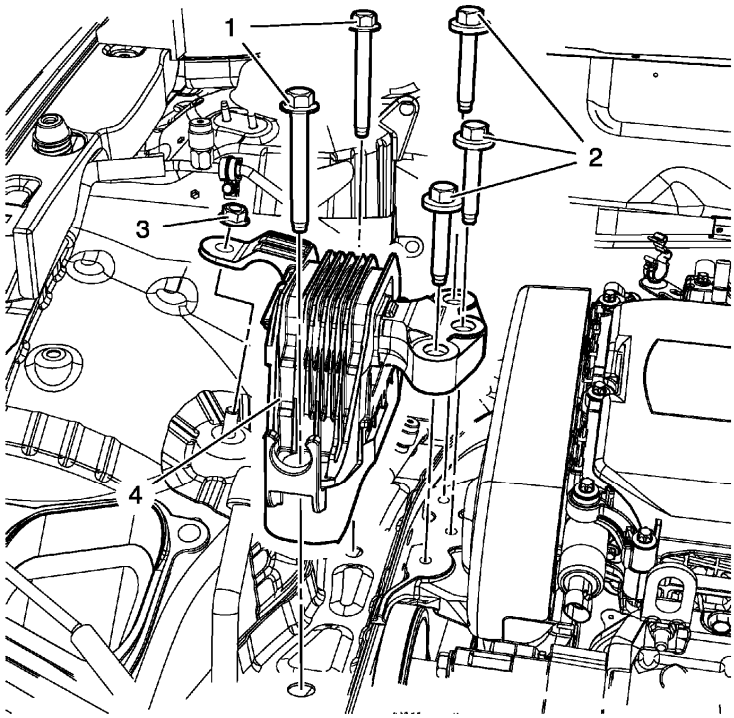

Fig. 25: Engine Mount And Bolts
Courtesy of GENERAL MOTORS COMPANY

Engine Mount Replacement

Callout	Component Name
Preliminary Procedures 1. Remove the air cleaner assembly. Refer to **Air Cleaner Assembly Replacement (1.8L LWE)** , **Air Cleaner Assembly Replacement (1.8L LUW)** . 2. Support the engine. Install a suitable engine lifting device. Install a suitable cable at the 3 engine lift brackets and at the engine lifting device.	
1	Engine Mount Bolt (Qty: 2) **CAUTION:** **Refer to Fastener Caution .** **Tighten** 62 N.m (46 lb ft)
2	Engine Mount Bracket Bolt (Qty: 3) **CAUTION:** **Refer to Torque-to-Yield Fastener Caution .**

	Procedure Install NEW bolts, do NOT reuse old bolts **Tighten** 50 N.m + 60°-75° (37 lb ft + 60°-75°)
3	Engine Mount Nut **Tighten** 62 N.m (46 lb ft)
4	Engine Mount

POWERTRAIN MOUNT BALANCING

NOTE: Follow the balance procedure steps listed below when no starting point has been established such as in a collision repair.

1. Raise and support the vehicle. Refer to **Lifting and Jacking the Vehicle** .

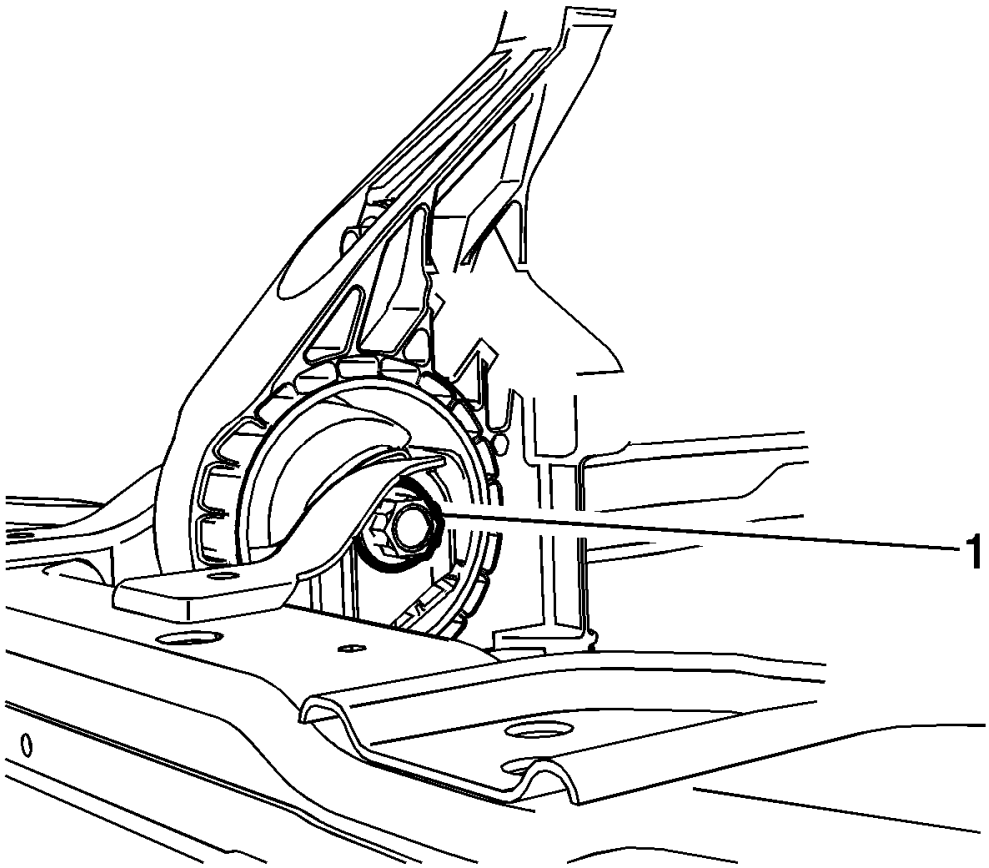

Fig. 26: Front Transaxle Mount Through Bolt

Courtesy of GENERAL MOTORS COMPANY

2. Loosen the front transaxle mount through bolt (1) until it is finger tight.

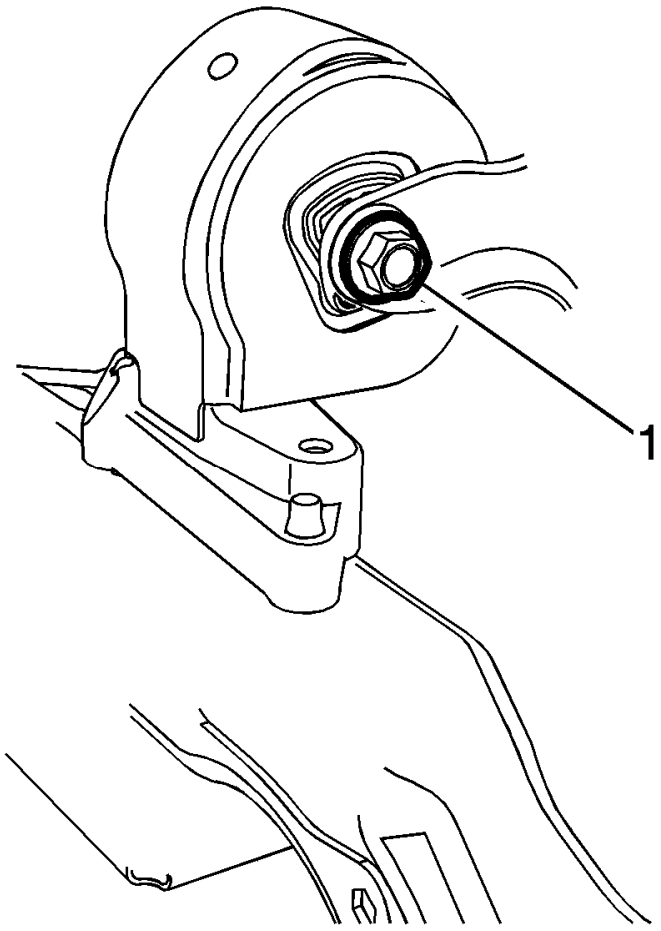

Fig. 27: Rear Transaxle Mount Through Bolt
Courtesy of GENERAL MOTORS COMPANY

3. Loosen the rear transaxle mount (1) through bolt until it is finger tight.
4. Lower the vehicle.

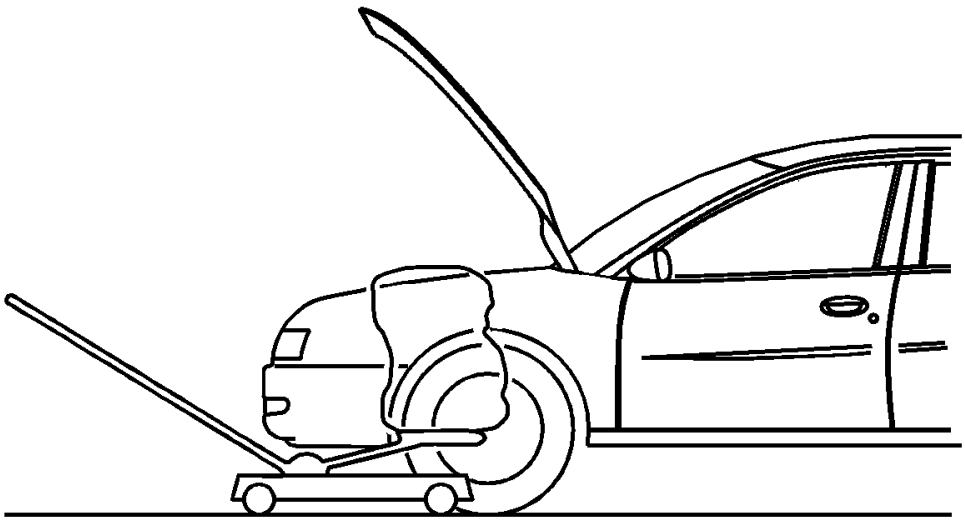

Fig. 28: Supporting Engine/Transmission With Hydraulic Floor Jack
Courtesy of GENERAL MOTORS COMPANY

5. Position two floor jacks with wood blocks under the engine and transaxle in order to support the powertrain assembly.

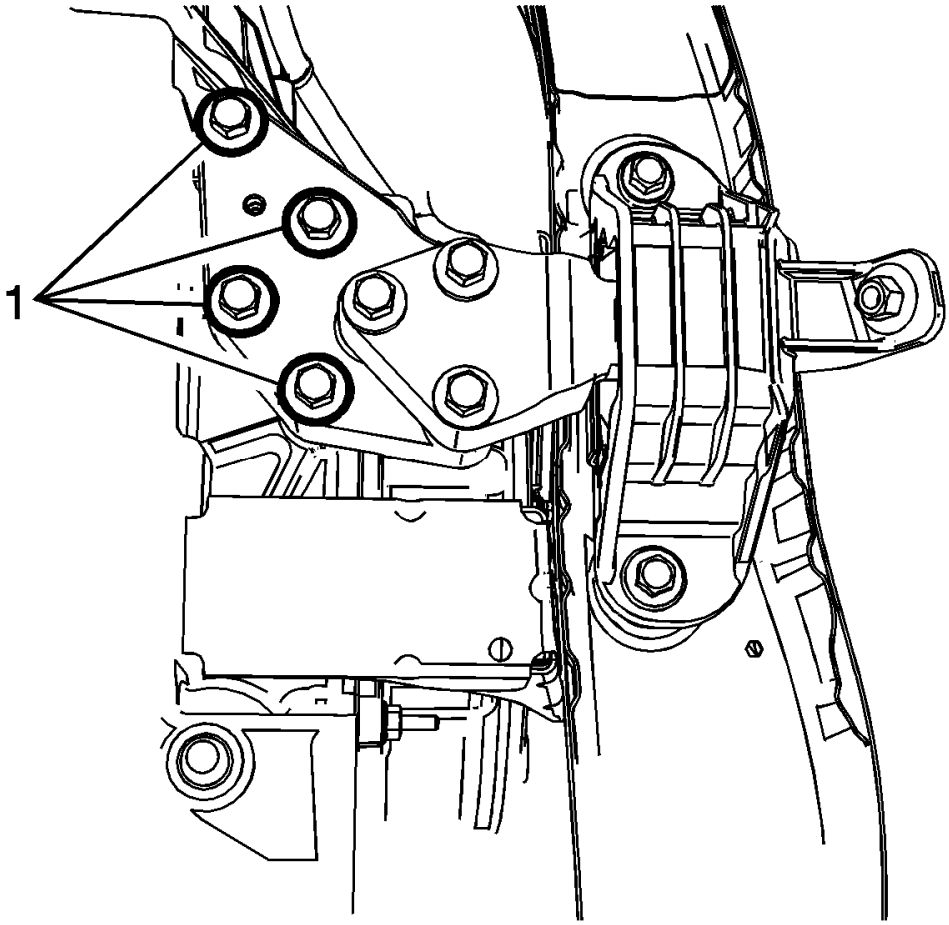

Fig. 29: Transaxle Bolts
Courtesy of GENERAL MOTORS COMPANY

6. Loosen the transaxle adapter to transaxle bolts (1).

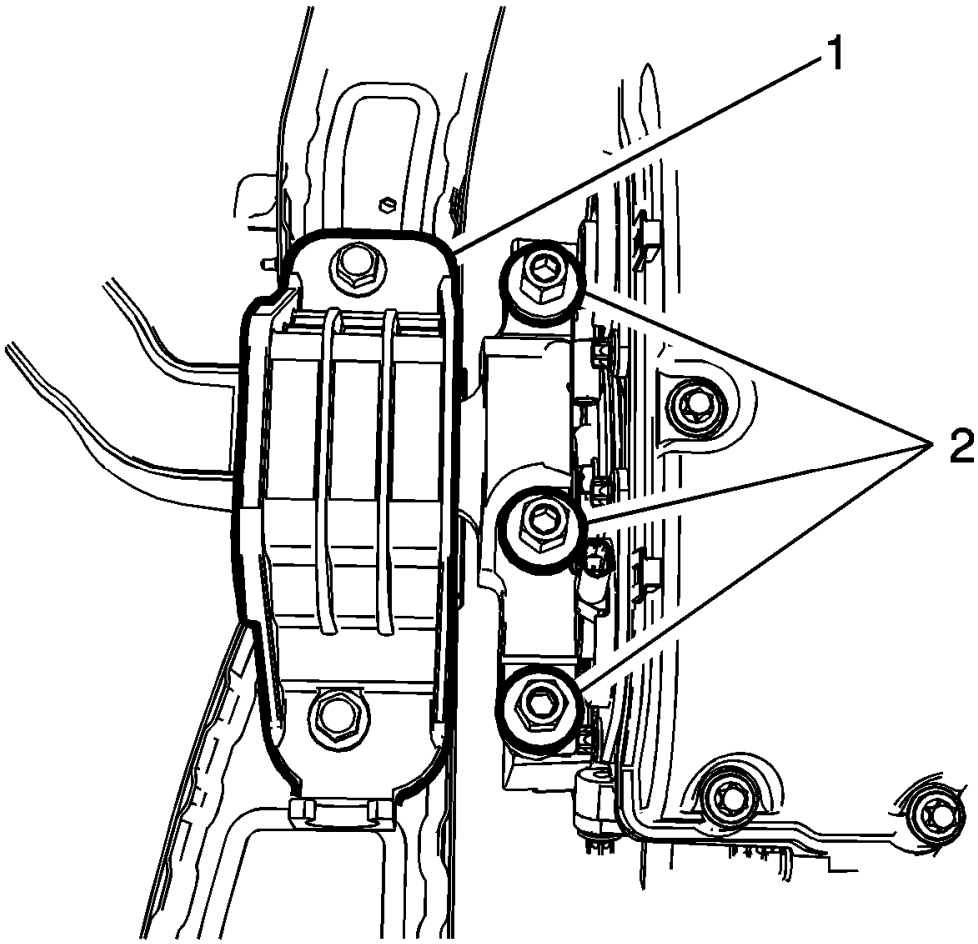

Fig. 30: Engine Mount And Bracket Bolts
Courtesy of GENERAL MOTORS COMPANY

7. Loosen the engine mount (1) to bracket bolts (2).
8. Lower the floor jacks in order to allow a 1/4 inch (6 mm) gap between the upper engine mount and engine mount bracket, and also between the transmission and left transmission mount.

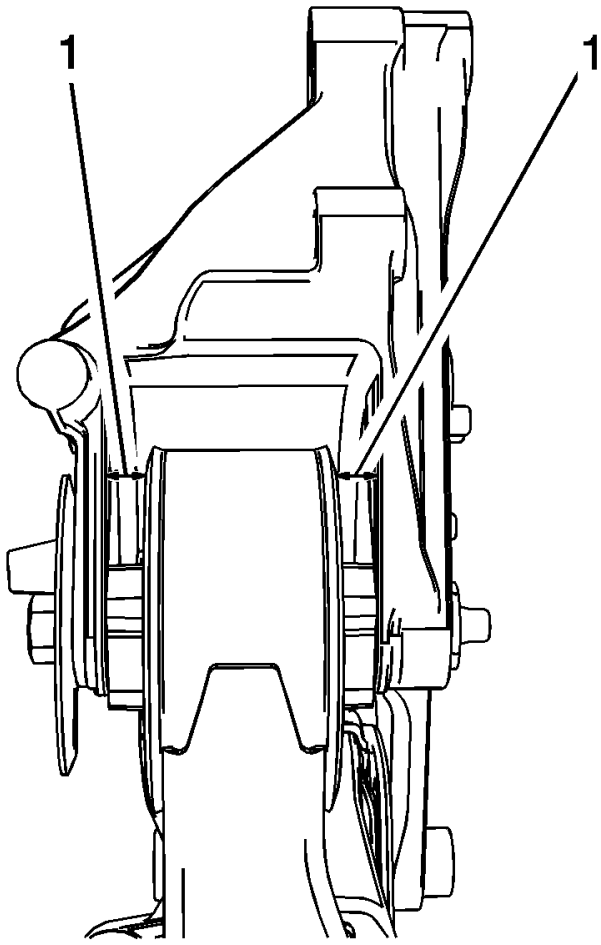

Fig. 31: Front And Rear Powertrain Mounts
Courtesy of GENERAL MOTORS COMPANY

9. Check that the front and rear mounts are centered (1) in the mount brackets, adjust if necessary.
10. Tighten the left hand (transaxle side) mount bolts, starting with the bolt nearest to the center of the mount. See the appropriate transmission mount replacement procedure for the fastener tightening specifications.

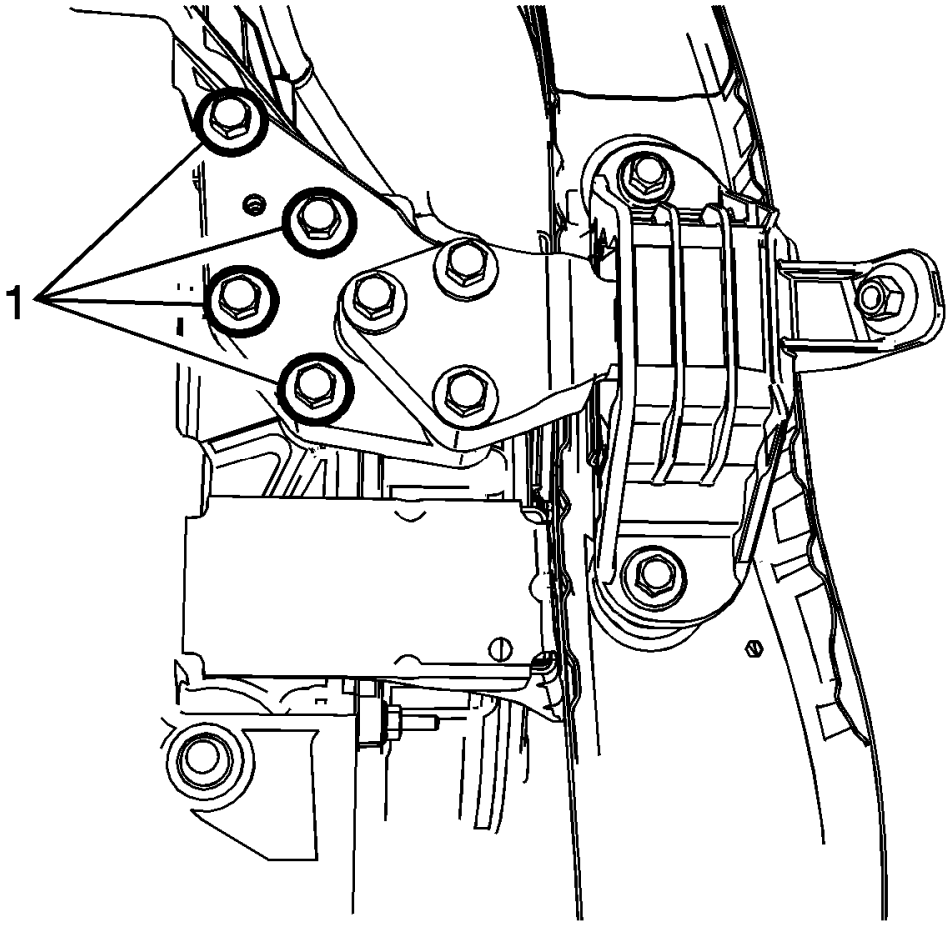

Fig. 32: Transaxle Bolts
Courtesy of GENERAL MOTORS COMPANY

11. Tighten the right hand (engine side) mount bolts (1), starting with the bolt nearest to the center of the mount. See the appropriate engine mount replacement procedure for the fastener tightening specifications.
12. Remove the floor jacks from under the oil pan and transmission.
13. Raise the vehicle.
14. Shake the powertrain from front to rear and allow the powertrain to settle.

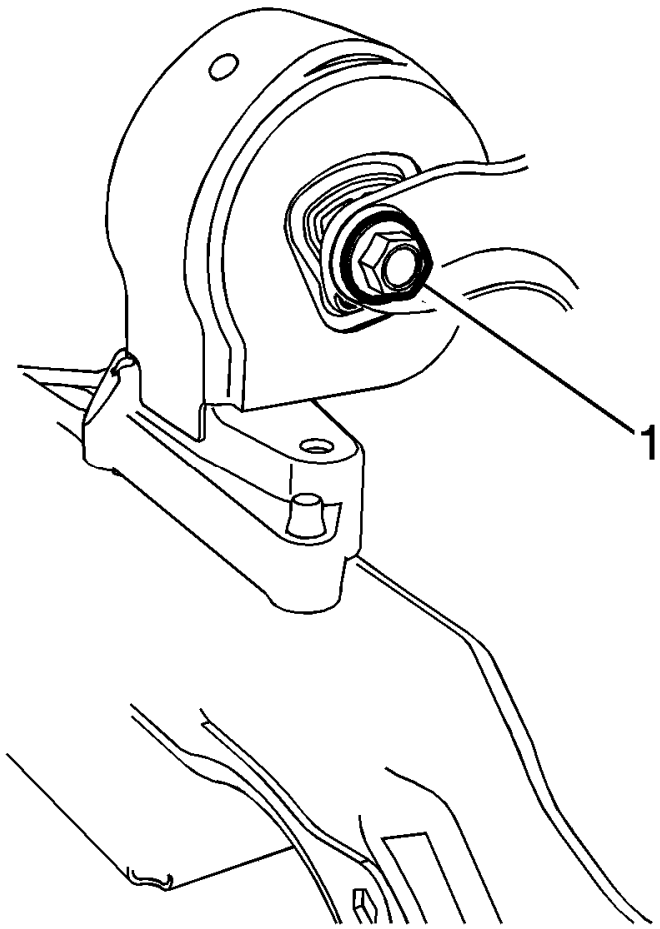

Fig. 33: Rear Transaxle Mount Through Bolt
Courtesy of GENERAL MOTORS COMPANY

NOTE: It is essential that the lower mount through bolts should be as close to centered as possible in the oversized mount insert holes before tightening to specification.

15. Tighten the rear transaxle mount through bolt (1). See the appropriate transmission mount replacement procedure for the fastener tightening specifications.

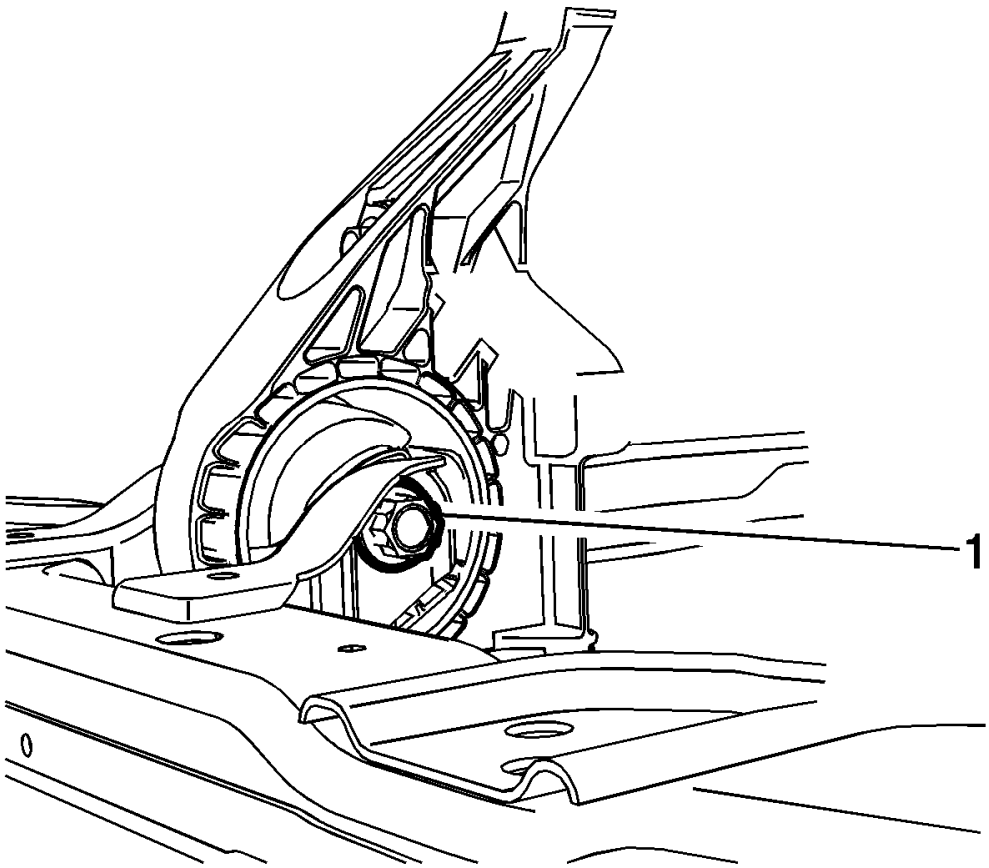

Fig. 34: Front Transaxle Mount Through Bolt
Courtesy of GENERAL MOTORS COMPANY

16. Tighten the front transaxle mount through bolt (1). See the appropriate transmission mount replacement procedure for the fastener tightening specifications.
17. Lower the vehicle.

POWERTRAIN MOUNT BALANCING - LOWER

NOTE: Follow the balance procedure steps listed below when front or rear mounts through bolts are loosened or removed during a repair procedure.

1. Raise and support the vehicle. Refer to **Lifting and Jacking the Vehicle** .

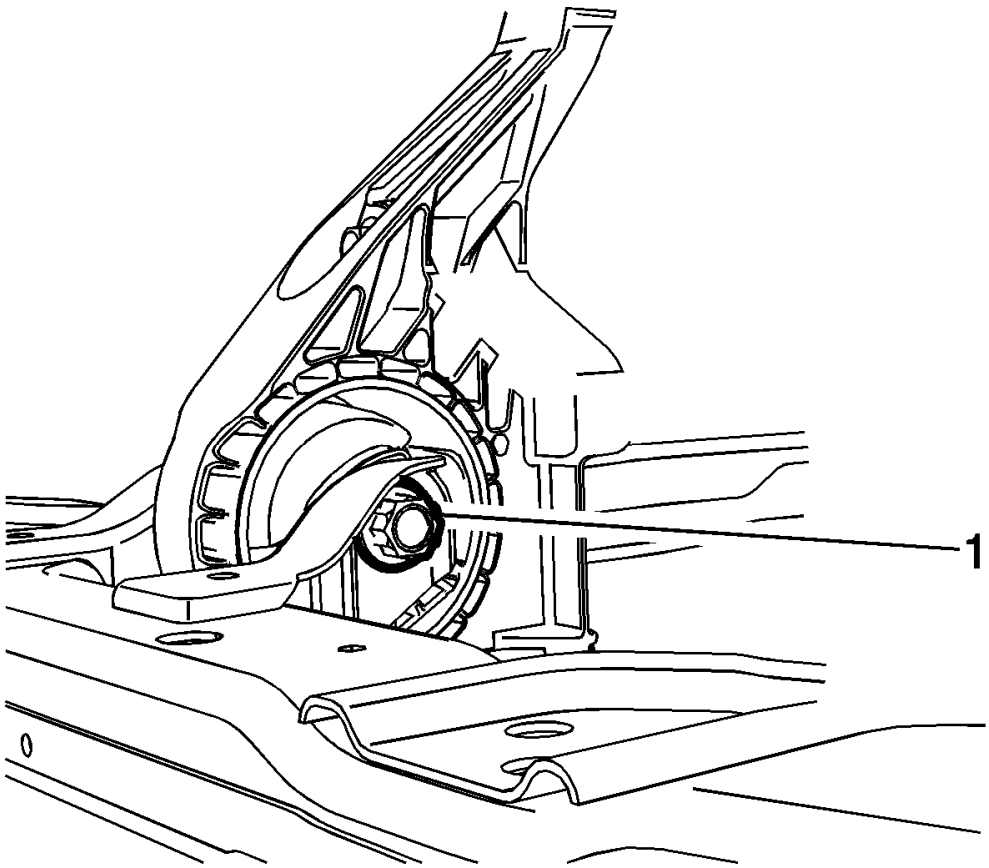

Fig. 35: Front Transaxle Mount Through Bolt
Courtesy of GENERAL MOTORS COMPANY

2. Loosen the front transaxle mount through bolt (1).

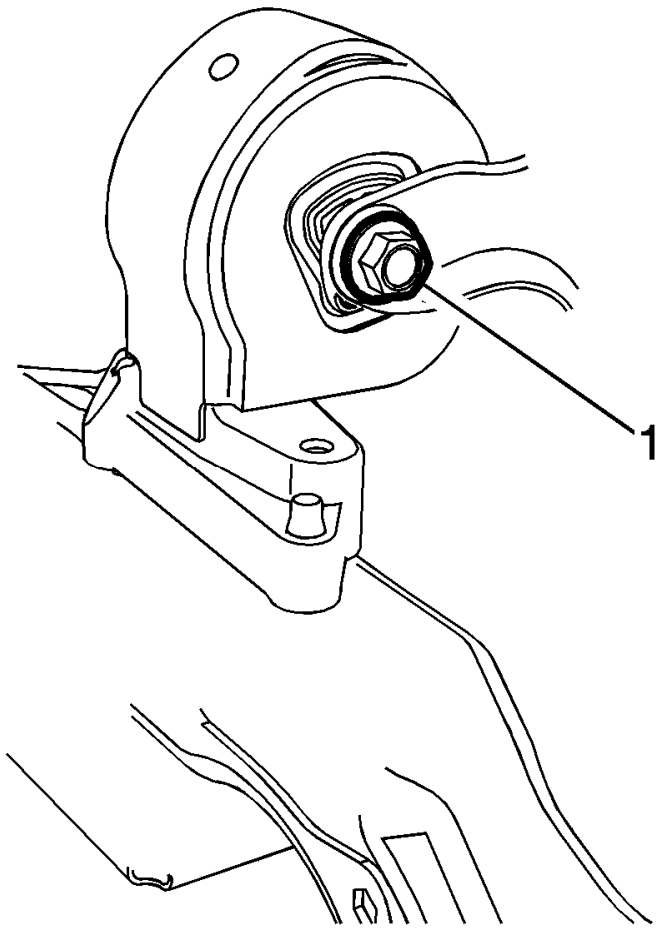

Fig. 36: Rear Transaxle Mount Through Bolt
Courtesy of GENERAL MOTORS COMPANY

3. Loosen the rear transaxle mount through bolt (1).
4. Shake the powertrain from front to rear and allow the powertrain to settle.

NOTE: It is essential that the through bolts are as close to centered as possible in the oversized mount insert holes before tightening to specification.

5. Tighten the rear transaxle mount through bolt (1). See the appropriate transmission mount replacement procedure for the fastener tightening specifications.

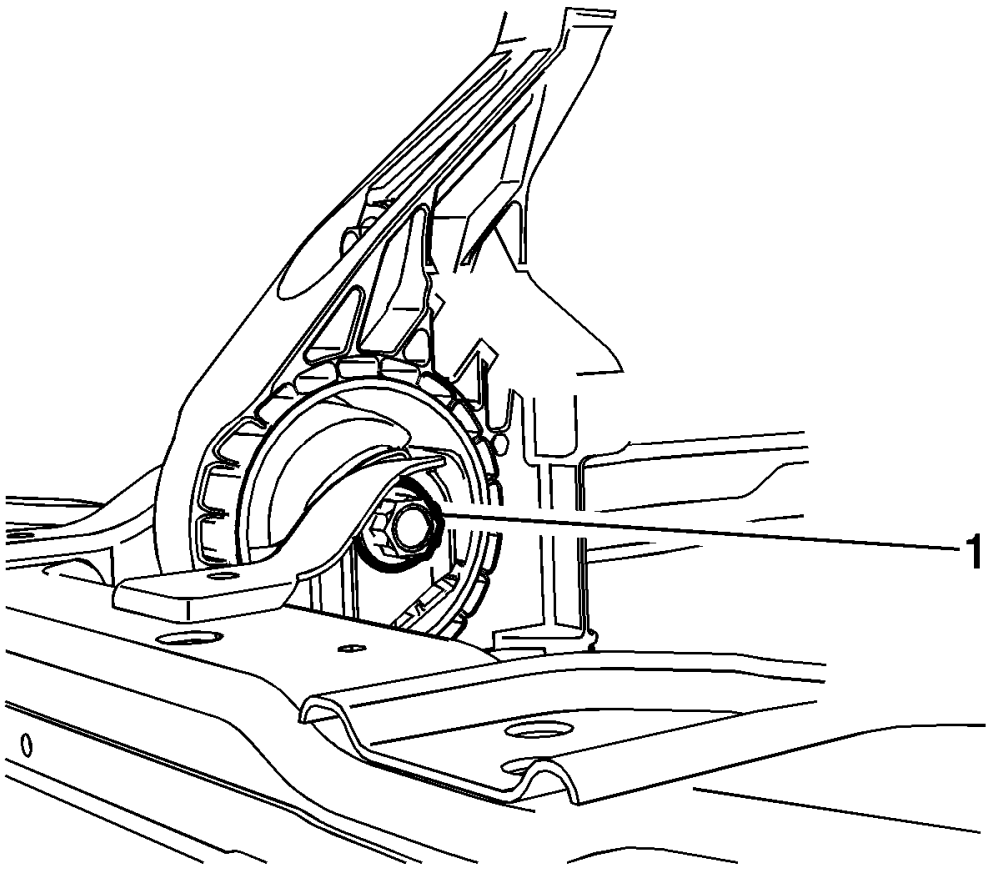

Fig. 37: Front Transaxle Mount Through Bolt
Courtesy of GENERAL MOTORS COMPANY

6. Tighten the front transaxle mount through bolt (1). See the appropriate transmission mount replacement procedure for the fastener tightening specifications.
7. Lower the vehicle.

ENGINE MOUNT REPLACEMENT - RIGHT SIDE

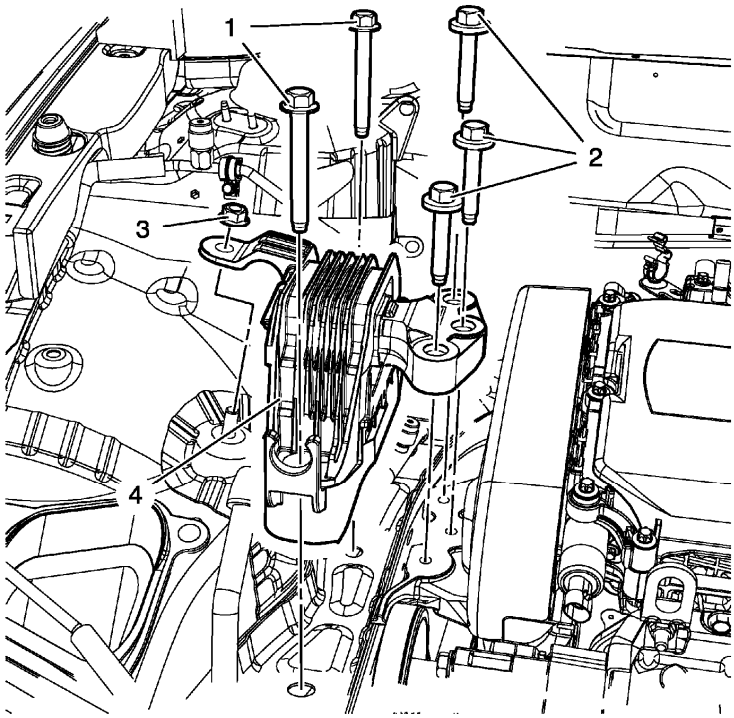

Fig. 38: Engine Mount And Bolts
Courtesy of GENERAL MOTORS COMPANY

Engine Mount Replacement - Right Side

Callout	Component Name
Preliminary Procedures 1. Remove the air cleaner assembly. Refer to **Air Cleaner Assembly Replacement (1.8L LWE)** , **Air Cleaner Assembly Replacement (1.8L LUW)** . 2. Support the engine. Install a suitable engine lifting device. Install a suitable cable at the 3 engine lift brackets and at the engine lifting device.	
1	Engine Mount Bolt (Qty: 2) **CAUTION:** **Refer to Fastener Caution .** **Tighten** 62 N.m (46 lb ft)
2	Engine Mount Bracket Bolt (Qty: 3) **CAUTION:** **Refer to Torque-to-Yield Fastener Caution .**

	Procedure Use NEW bolts, do NOT reuse old bolts. **Tighten** 50 N.m + 60°-75° (37 lb ft + 60°-75°)
3	Engine Mount Nut **Tighten** 62 N.m (46 lb ft)
4	Engine Mount

ENGINE MOUNT INSPECTION

1. Install the engine support fixture. Refer to **Engine Support Fixture**.
2. Observe the engine mount while raising the engine. Raising the engine removes the weight from the engine mount and creates slight tension on the rubber.
3. Replace the engine mount if the engine mount exhibits any of the following conditions:
   - The hard rubber is covered with heat check cracks.
   - The rubber is separated from the metal plate of the engine mount.
   - The rubber is split through the center of the engine mount.
4. For engine mount replacement, refer to **Engine Mount Replacement - Right Side**.
5. For rear transmission mount replacement, refer to:
   - Automatic transmission, refer to **Transmission Rear Mount Replacement** .
   - Manual transmission, refer to **Transmission Rear Mount Replacement** .
6. For left transmission mount replacement, refer to:
   - Automatic transmission, refer to **Transmission Mount Replacement - Left Side** .
   - Manual transmission, refer to **Transmission Mount Bracket Replacement - Left Side** .

ENGINE MOUNT BRACKET REPLACEMENT

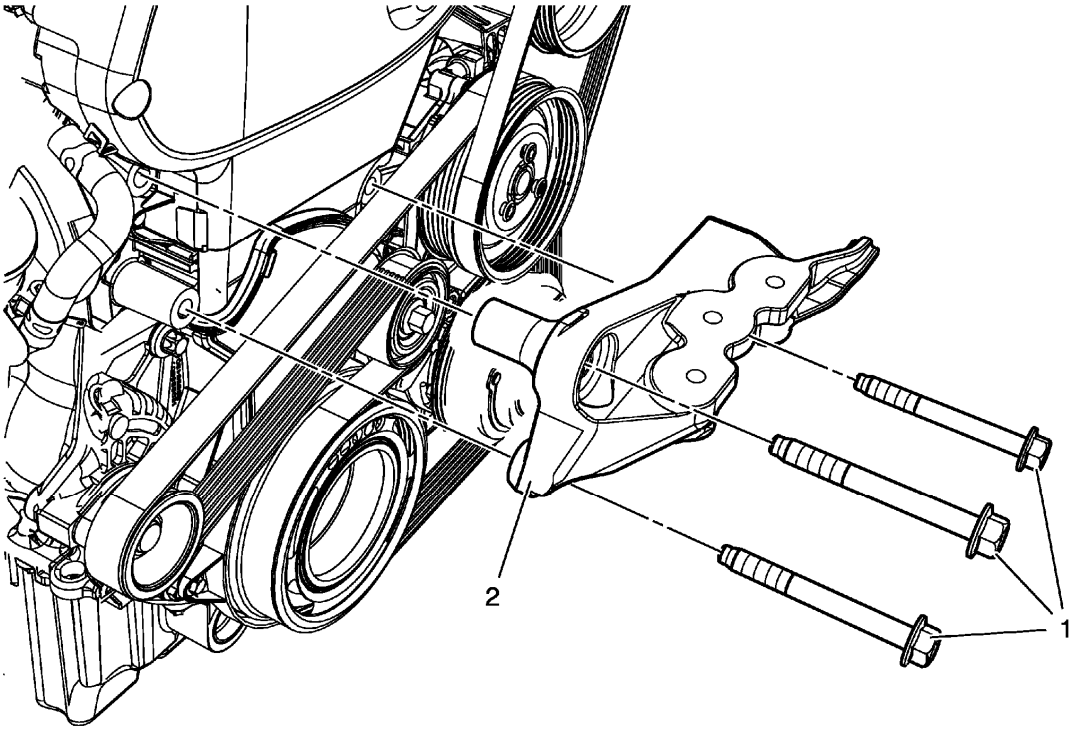

Fig. 39: Engine Mount Bracket
Courtesy of GENERAL MOTORS COMPANY

Engine Mount Bracket Replacement

Callout	Component Name
Preliminary Procedures Remove the engine mount. Refer to **Engine Mount Replacement**.	
1	Engine Mount Bracket Bolt (Qty: 3) **CAUTION:** **Refer to Fastener Caution .** **Tighten** 60 N.m (45 lb ft) + 45-60°
2	Engine Mount Bracket

INTAKE MANIFOLD REPLACEMENT

Removal Procedure

WARNING: Refer to Gasoline/Gasoline Vapors Warning .

WARNING: Refer to Safety Goggles and Fuel Warning .

WARNING: In order to reduce the risk of fire and personal injury observe the following items:

- **Replace all nylon fuel pipes that are nicked, scratched or damaged during installation, do not attempt to repair the sections of the nylon fuel pipes**
- **Do not hammer directly on the fuel harness body clips when installing new fuel pipes. Damage to the nylon pipes may result in a fuel leak.**
- **Always cover nylon vapor pipes with a wet towel before using a torch near them. Also, never expose the vehicle to temperatures higher than 115°C (239°F) for more than one hour, or more than 90°C (194°F) for any extended period.**
- **Apply a few drops of clean engine oil to the male pipe ends before connecting fuel pipe fittings. This will ensure proper reconnection and prevent a possible fuel leak. (During normal operation, the O-rings located in the female connector will swell and may prevent proper reconnection if not lubricated.)**

1. Open the hood.
2. Remove the air cleaner outlet duct. Refer to **Air Cleaner Outlet Duct Replacement** .
3. Raise and support the vehicle. Refer to **Lifting and Jacking the Vehicle** .
4. Place a drain pan underneath the vehicle.

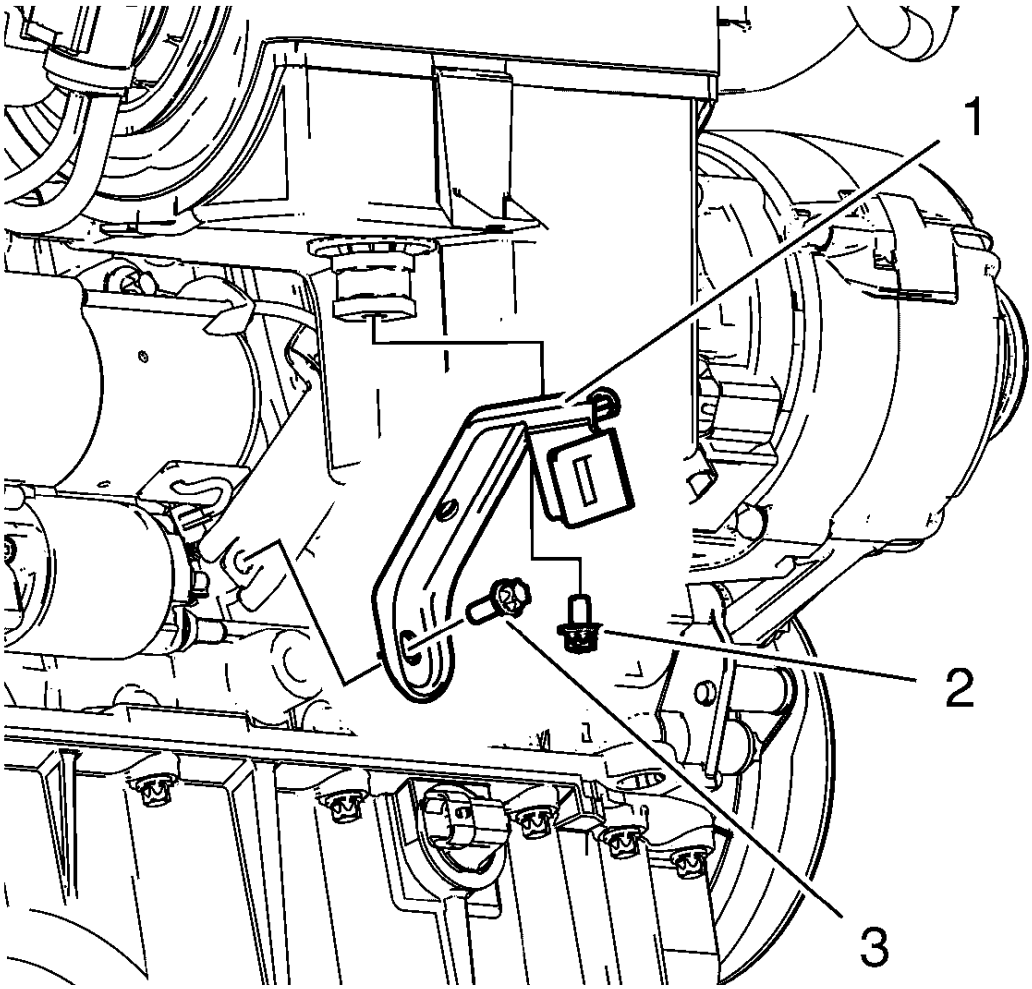

Fig. 40: Intake Manifold Bracket
Courtesy of GENERAL MOTORS COMPANY

5. Remove the 2 intake manifold brace bolts (2, 3).
6. Remove and disconnect the wiring harness plug from the heated oxygen sensor 1.
7. Remove the intake manifold brace (1).
8. Remove the evaporative emission canister purge solenoid valve. Refer to **Evaporative Emission Canister Purge Solenoid Valve Replacement**

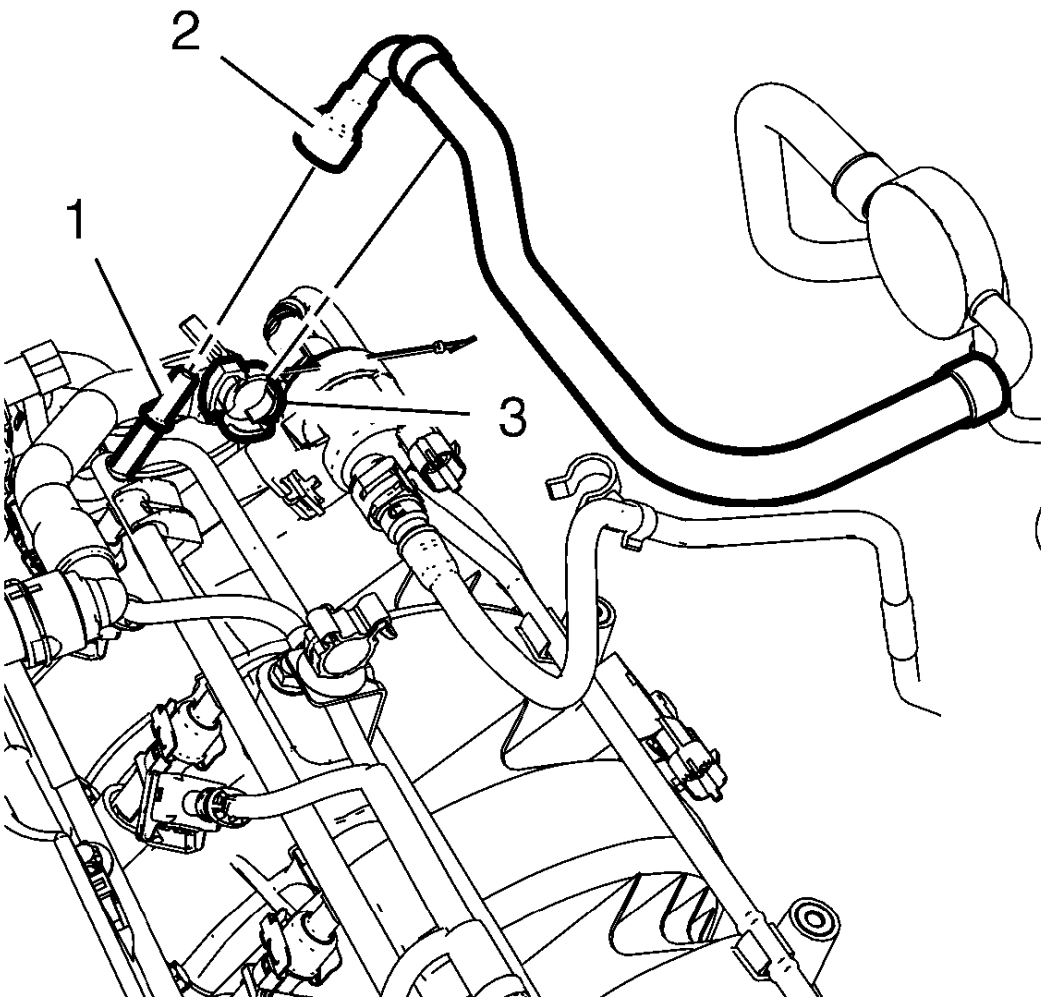

Fig. 41: Fuel Feed Pipe
Courtesy of GENERAL MOTORS COMPANY

9. Unclip the fuel feed pipe (2) from the fuel feed pipe clip (3).
10. Release the fuel feed pipe (2) from the multiport fuel injection fuel rail (1) and remove the fuel feed pipe.
11. Close the fuel feed pipe with a suitable cap.

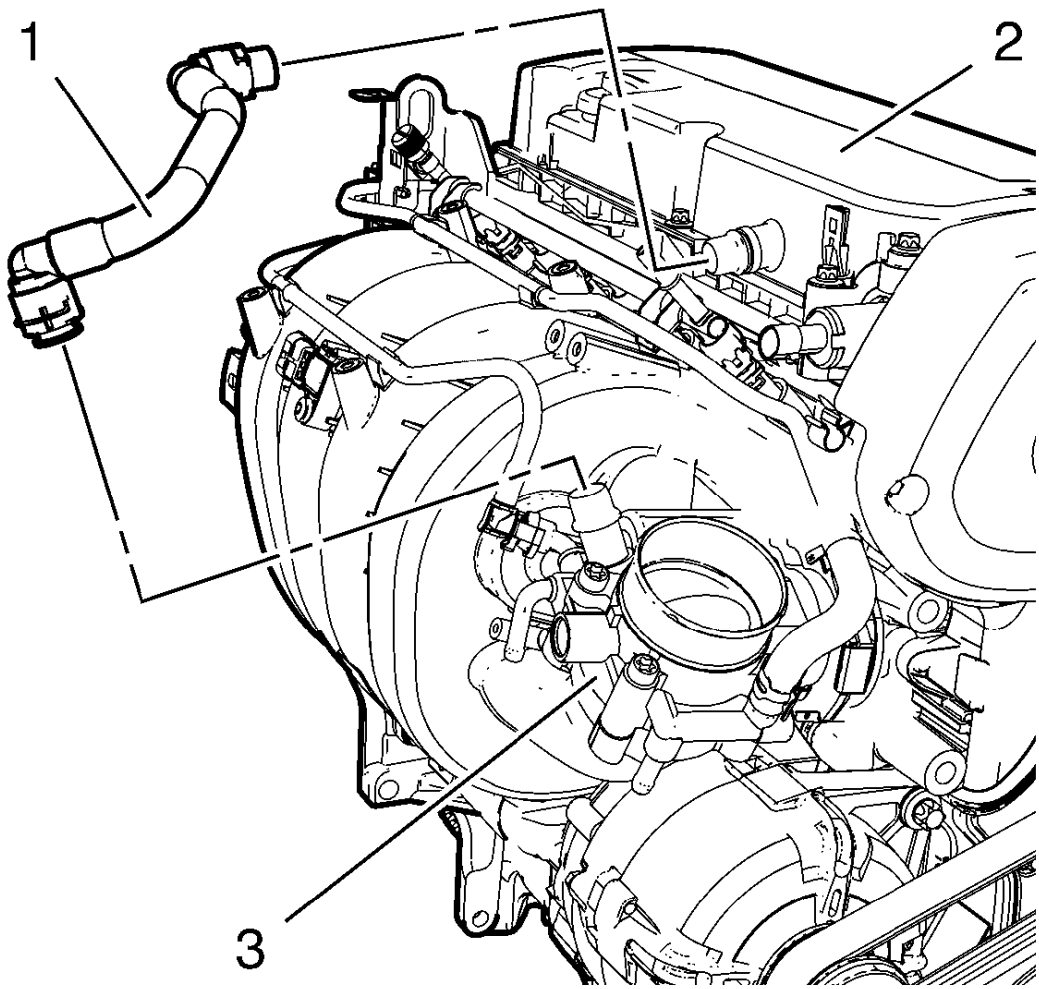

Fig. 42: Throttle Body And Positive Crankcase Ventilation Tube
Courtesy of GENERAL MOTORS COMPANY

12. Remove the positive crankcase ventilation tube (1) from throttle body (3) and the camshaft cover (2).
13. Remove the throttle body assembly. Refer to **Throttle Body Assembly Replacement** .

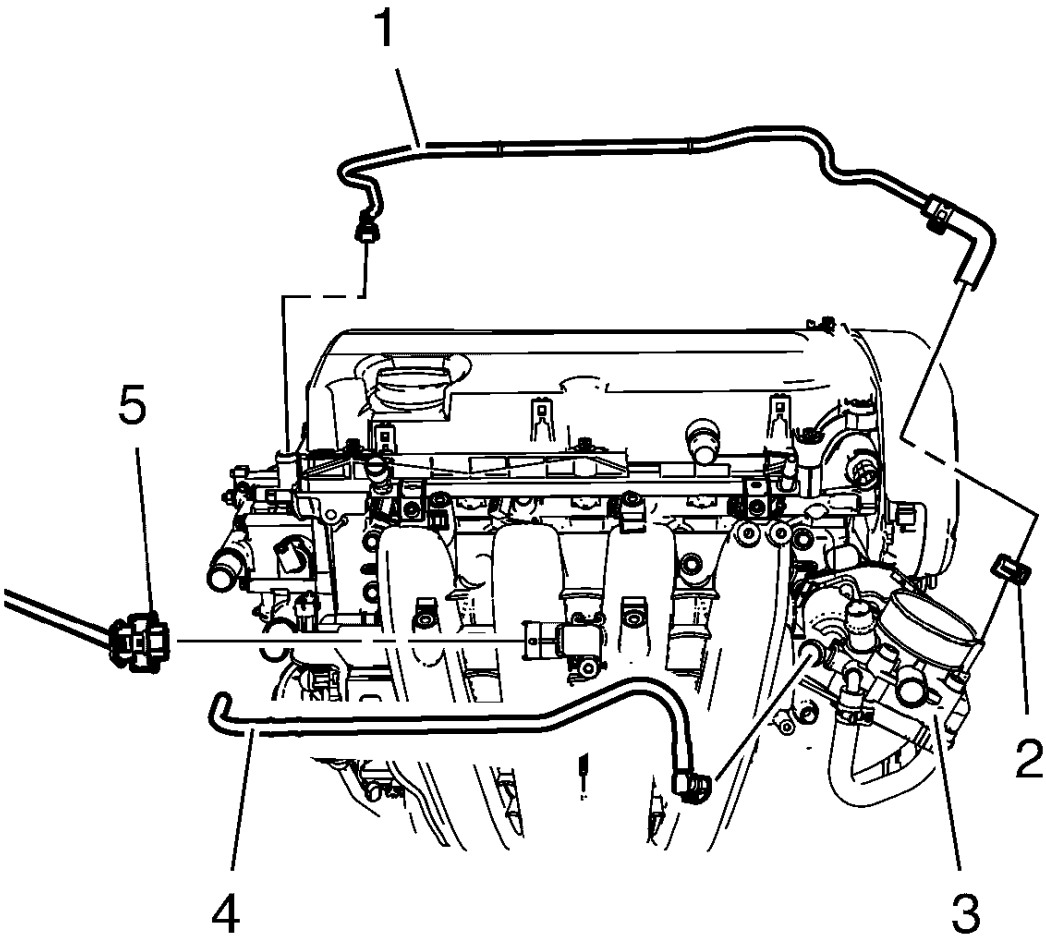

Fig. 43: Throttle Body, Throttle Body Heater Inlet Hose And Throttle Body Heater Outlet Hose
Courtesy of GENERAL MOTORS COMPANY

14. Disconnect the manifold absolute pressure sensor wiring harness plug (5).
15. Remove the clamp (2) and remove the throttle body heater inlet hose (1) from throttle body (3).
16. Disconnect the throttle body heater outlet hose (4) from the throttle body (3).
17. Remove the engine management wiring harness and the fuel injectors wiring harness.

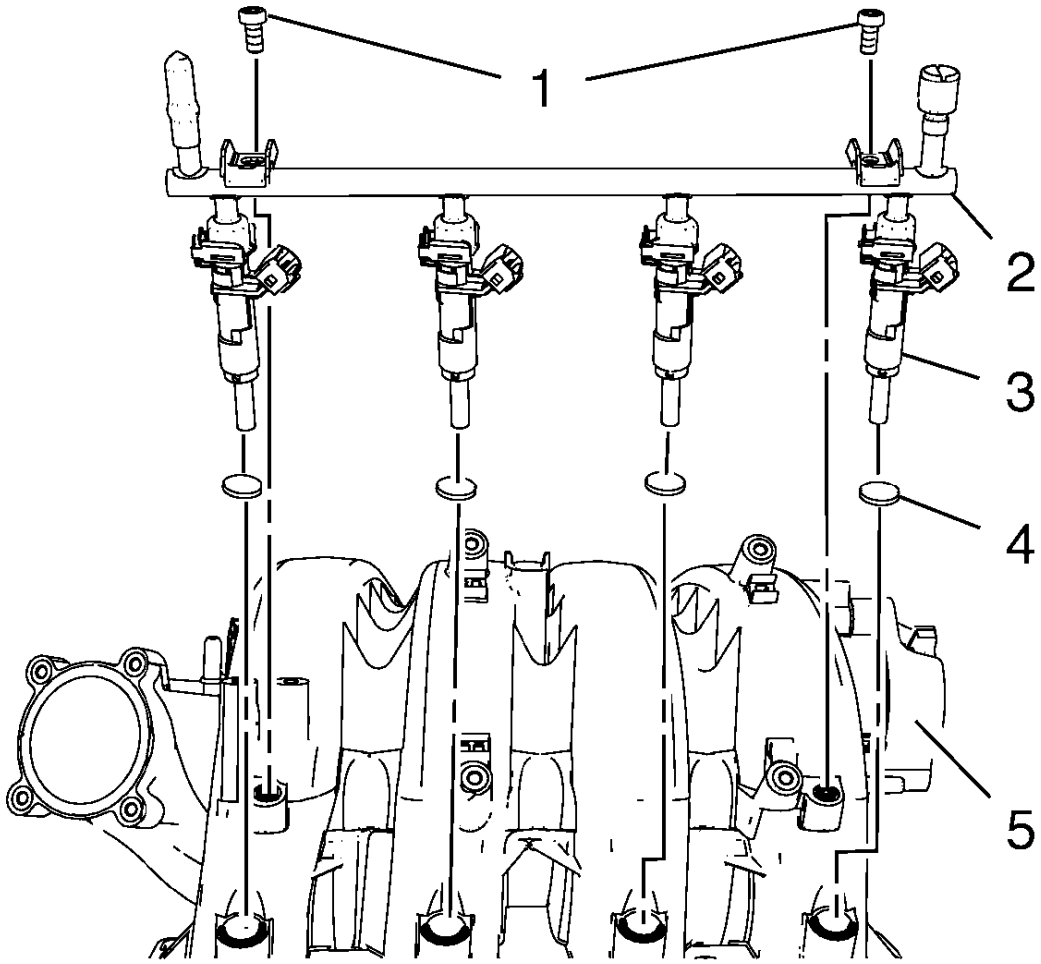

Fig. 44: Intake Manifold, Multiport Fuel Injection Fuel Rail, Fuel Injectors, Seals And Bolts
Courtesy of GENERAL MOTORS COMPANY

18. Remove the 2 multiport fuel injection fuel rail bolts (1).
19. Remove the multiport fuel injection fuel rail (2) and the fuel injectors (3) from the intake manifold (5).
20. Remove the 4 multiport fuel injector seals (4).

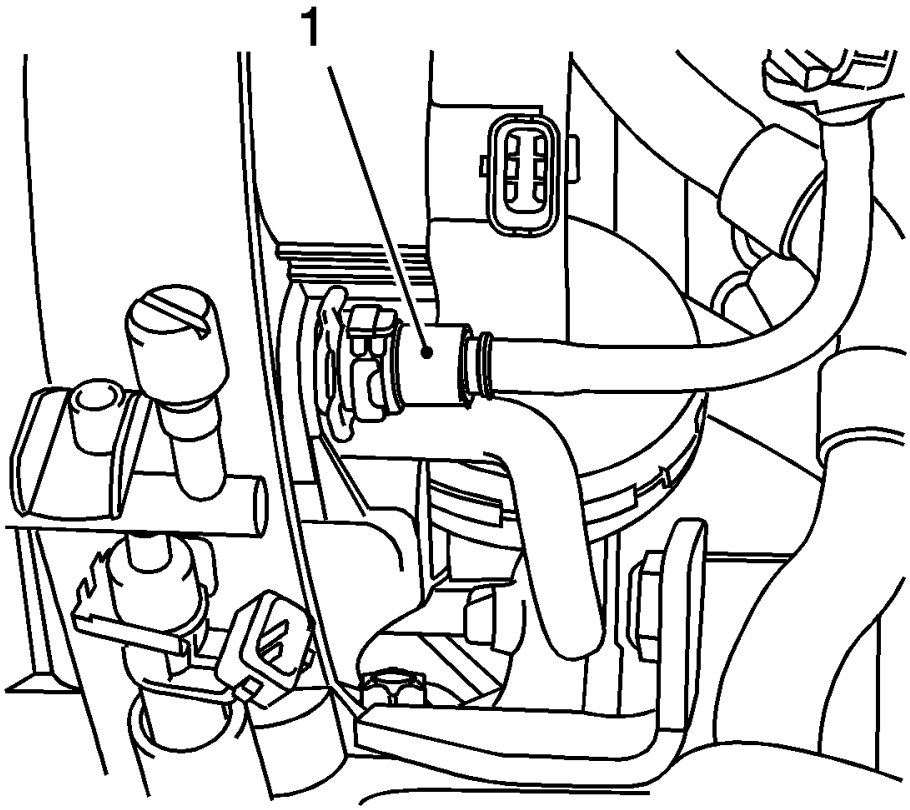

Fig. 45: View Of Brake Servo Vacuum Line
Courtesy of GENERAL MOTORS COMPANY

21. Disconnect the booster vacuum pipe (1) from the intake manifold.

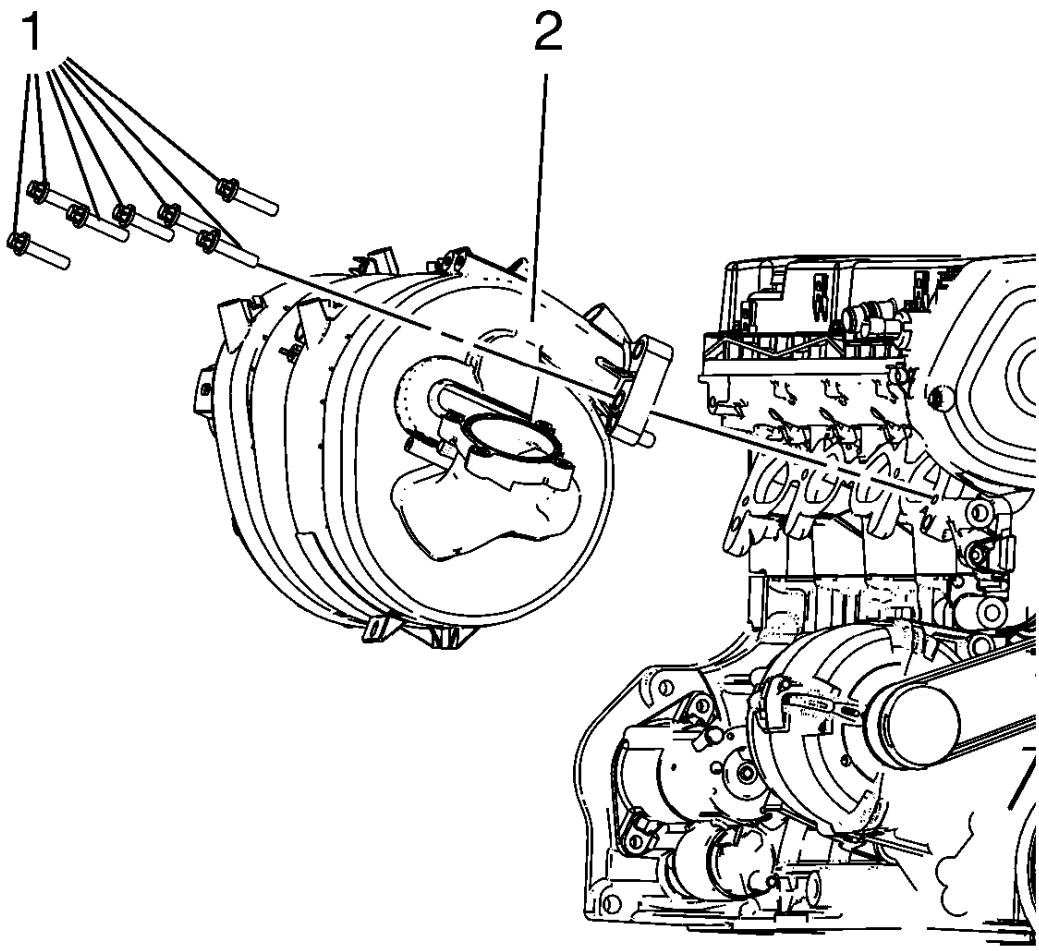

Fig. 46: Intake Manifold And Bolts
Courtesy of GENERAL MOTORS COMPANY

22. Remove the 7 intake manifold bolts (1).
23. Remove the intake manifold (2).

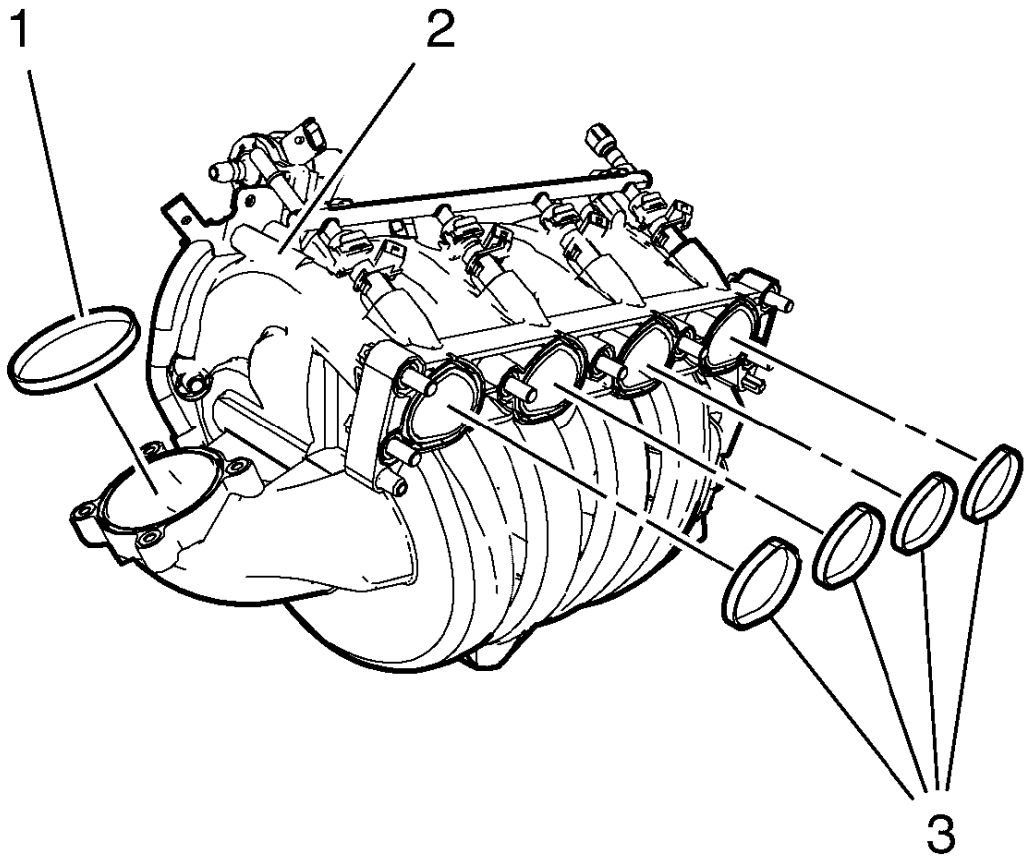

Fig. 47: Intake Manifold, Seal And Throttle Body Seal
Courtesy of GENERAL MOTORS COMPANY

24. Remove the intake manifold gaskets (1, 3) from the intake manifold (2).

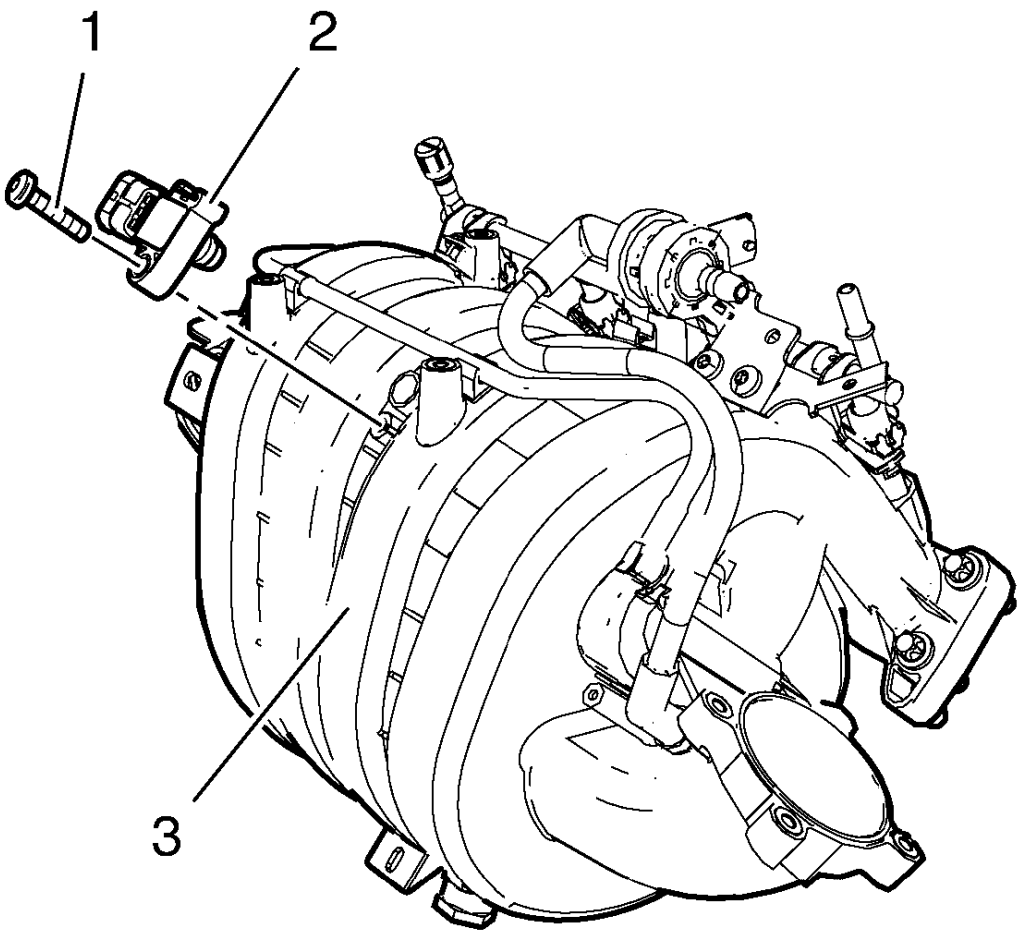

Fig. 48: Intake Manifold, Manifold Absolute Pressure Sensor And Bolt
Courtesy of GENERAL MOTORS COMPANY

25. Remove the manifold absolute pressure sensor bolt (1).
26. Remove the manifold absolute pressure sensor (2) from the intake manifold (3).

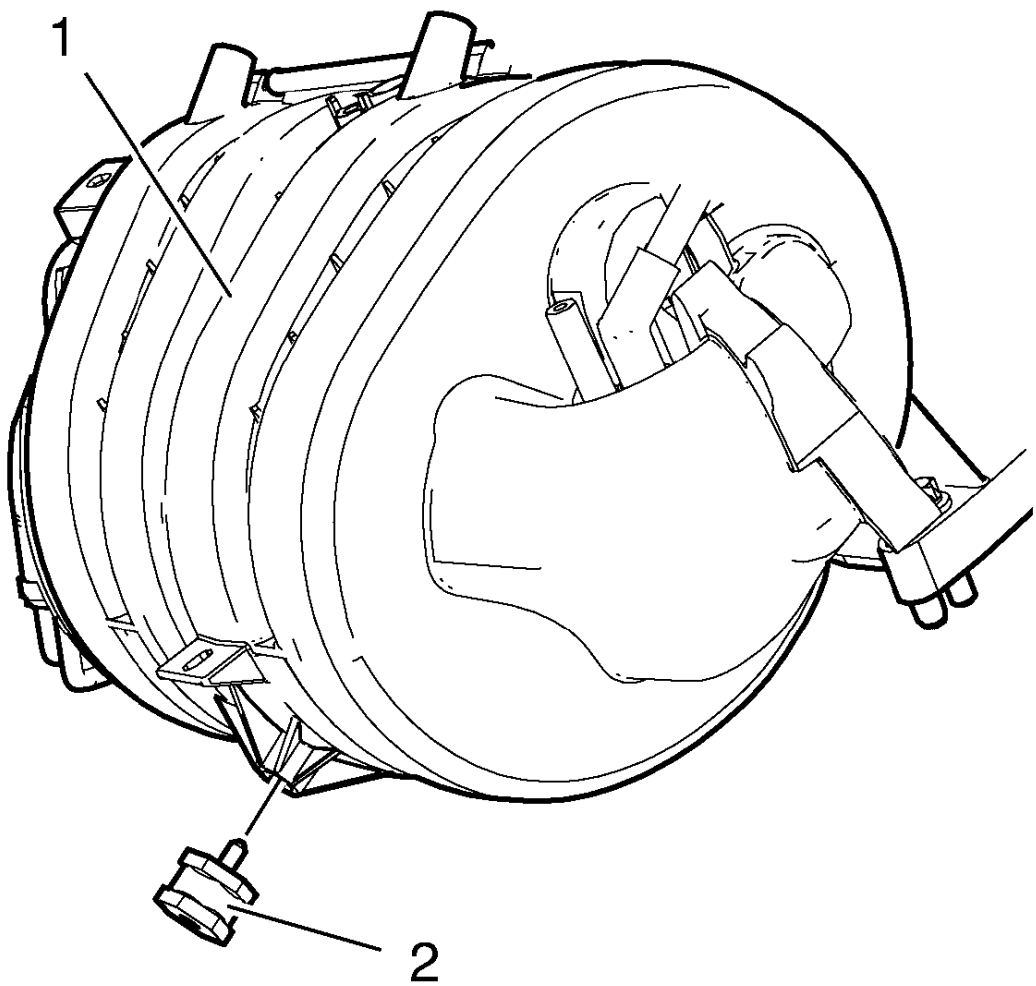

Fig. 49: Intake Manifold And Mount
Courtesy of GENERAL MOTORS COMPANY

27. Remove the rubber bracket (2) from intake manifold (1).

Cleaning and Inspection Procedure

Clean and inspect the intake manifold. Refer to **Intake Manifold Cleaning and Inspection**.

Installation Procedure

1. Clean the sealing surfaces.

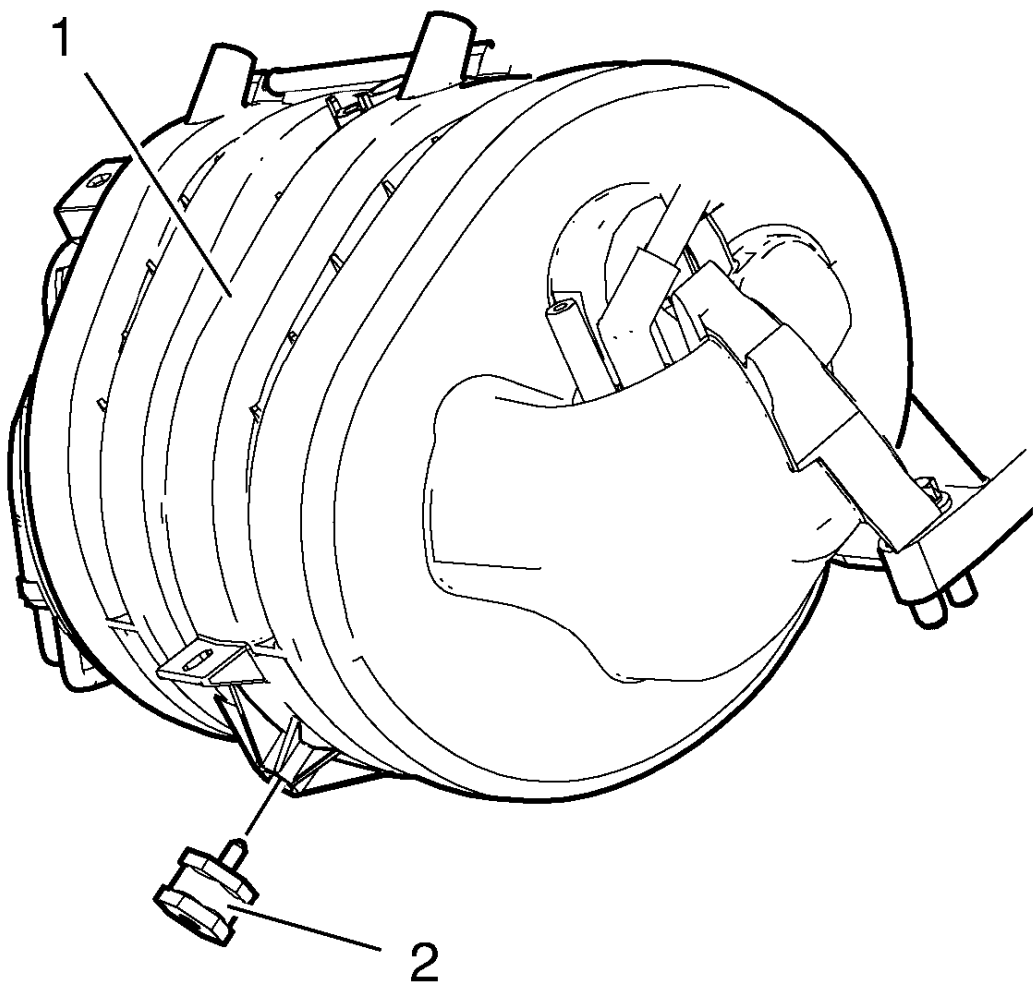

Fig. 50: Intake Manifold And Mount
Courtesy of GENERAL MOTORS COMPANY

2. Install the rubber bracket (2) to intake manifold (1).

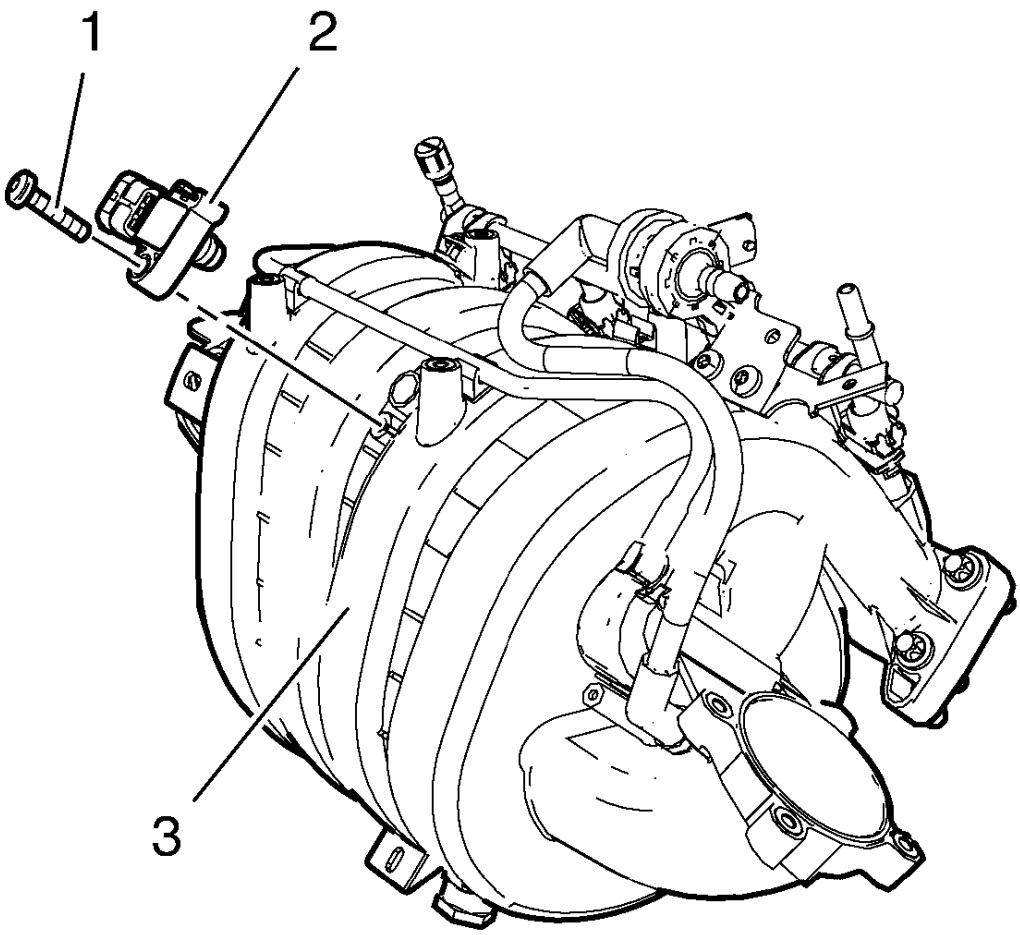

Fig. 51: Intake Manifold, Manifold Absolute Pressure Sensor And Bolt
Courtesy of GENERAL MOTORS COMPANY

3. Install the manifold absolute pressure sensor (2) to the intake manifold (3).
4. Install the manifold absolute pressure sensor bolt (1) and tighten to 6 N.m (53 lb in).

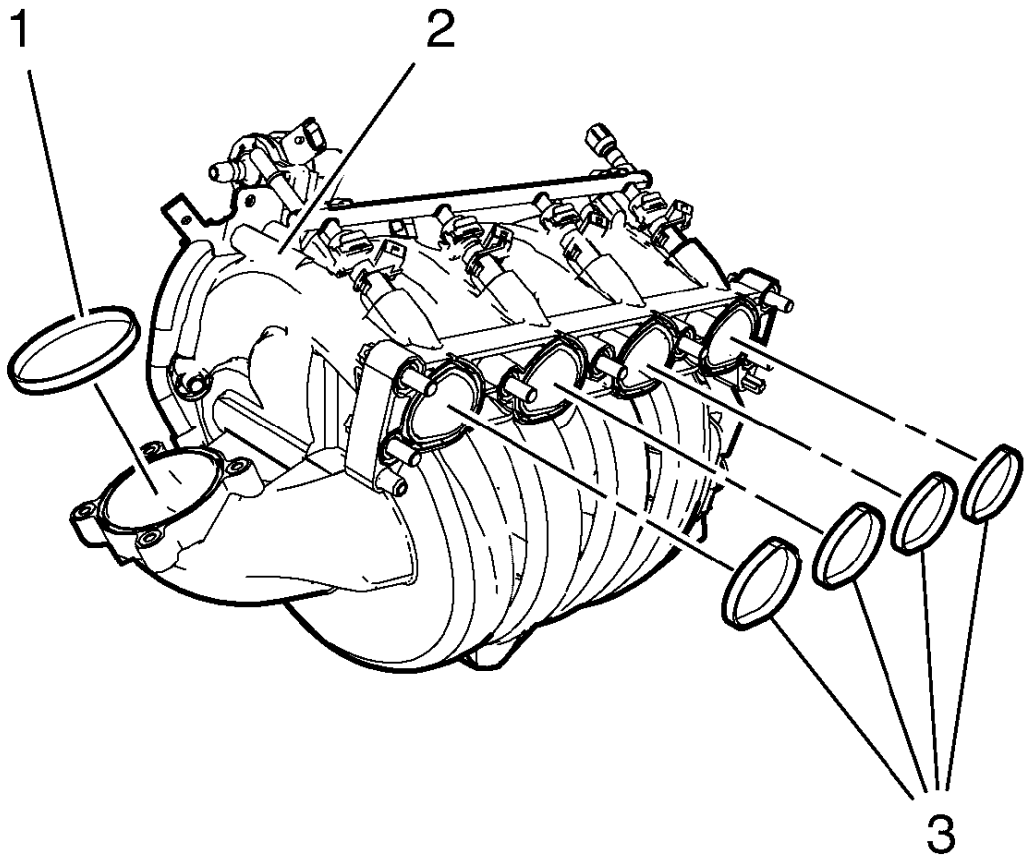

Fig. 52: Intake Manifold, Seal And Throttle Body Seal
Courtesy of GENERAL MOTORS COMPANY

5. Install the NEW gaskets (1, 3) to the intake manifold (2).

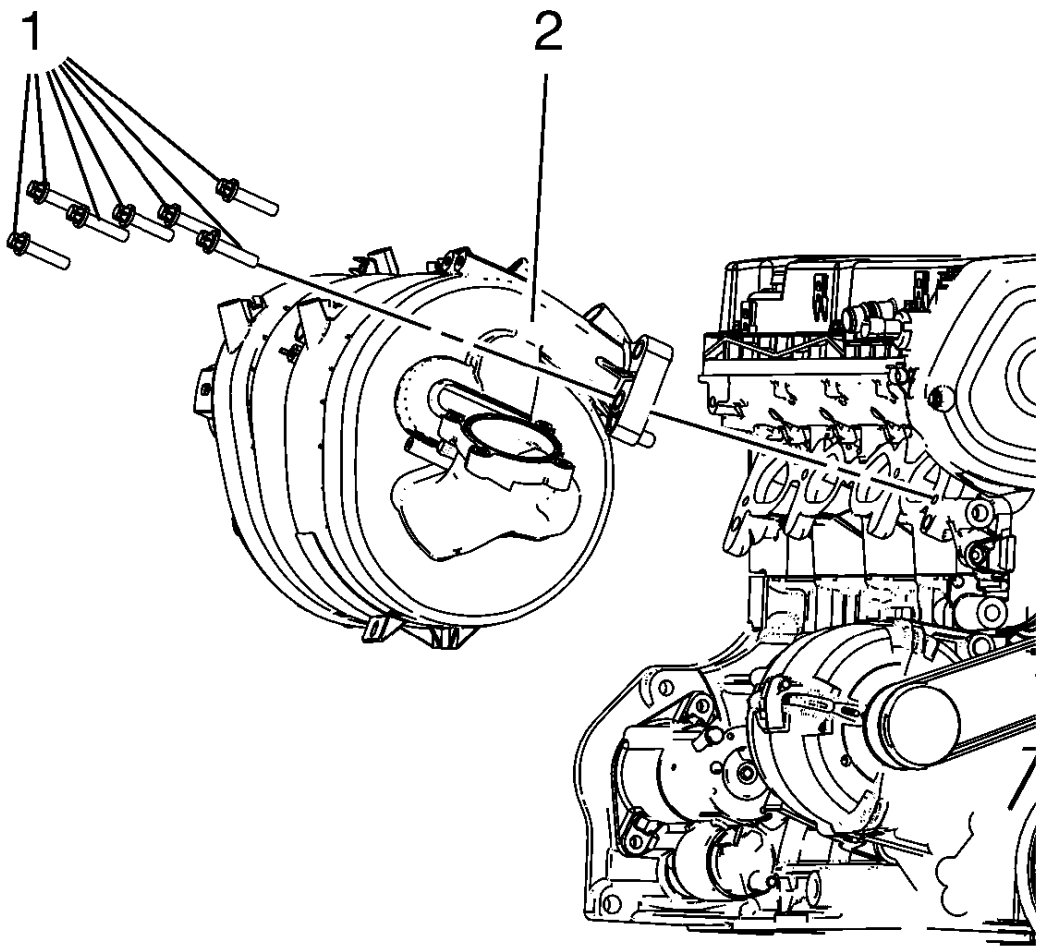

Fig. 53: Intake Manifold And Bolts
Courtesy of GENERAL MOTORS COMPANY

CAUTION: Refer to Fastener Caution .

6. Install the intake manifold (2) and the 7 intake manifold bolts (1) and tighten to 20 N.m (15 lb ft).

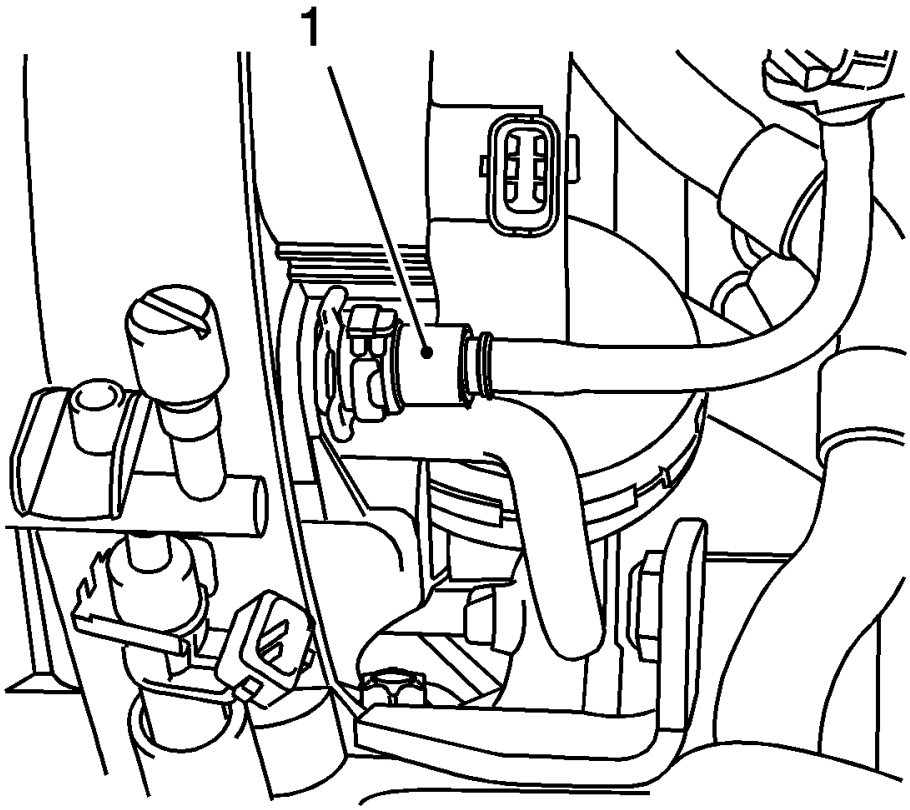

Fig. 54: View Of Brake Servo Vacuum Line
Courtesy of GENERAL MOTORS COMPANY

7. Connect the booster vacuum pipe (1) to the intake manifold.

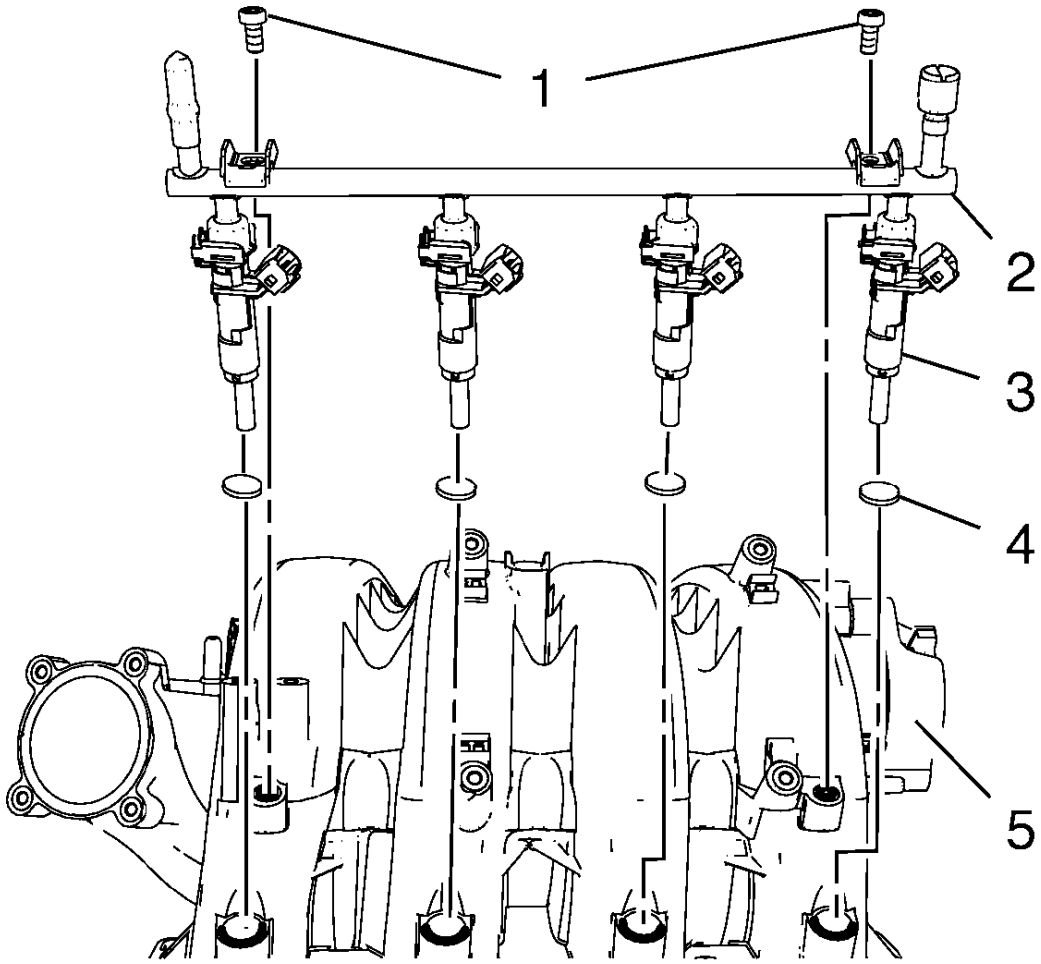

Fig. 55: Intake Manifold, Multiport Fuel Injection Fuel Rail, Fuel Injectors, Seals And Bolts
Courtesy of GENERAL MOTORS COMPANY

8. Install the 4 multiport fuel injector seals (4).
9. Install the multiport fuel injection fuel rail (2) and the fuel injectors (3) to the intake manifold (5).
10. Install the 2 multiport fuel injection fuel rail bolts (1) and tighten to 8 N.m (71 lb in).

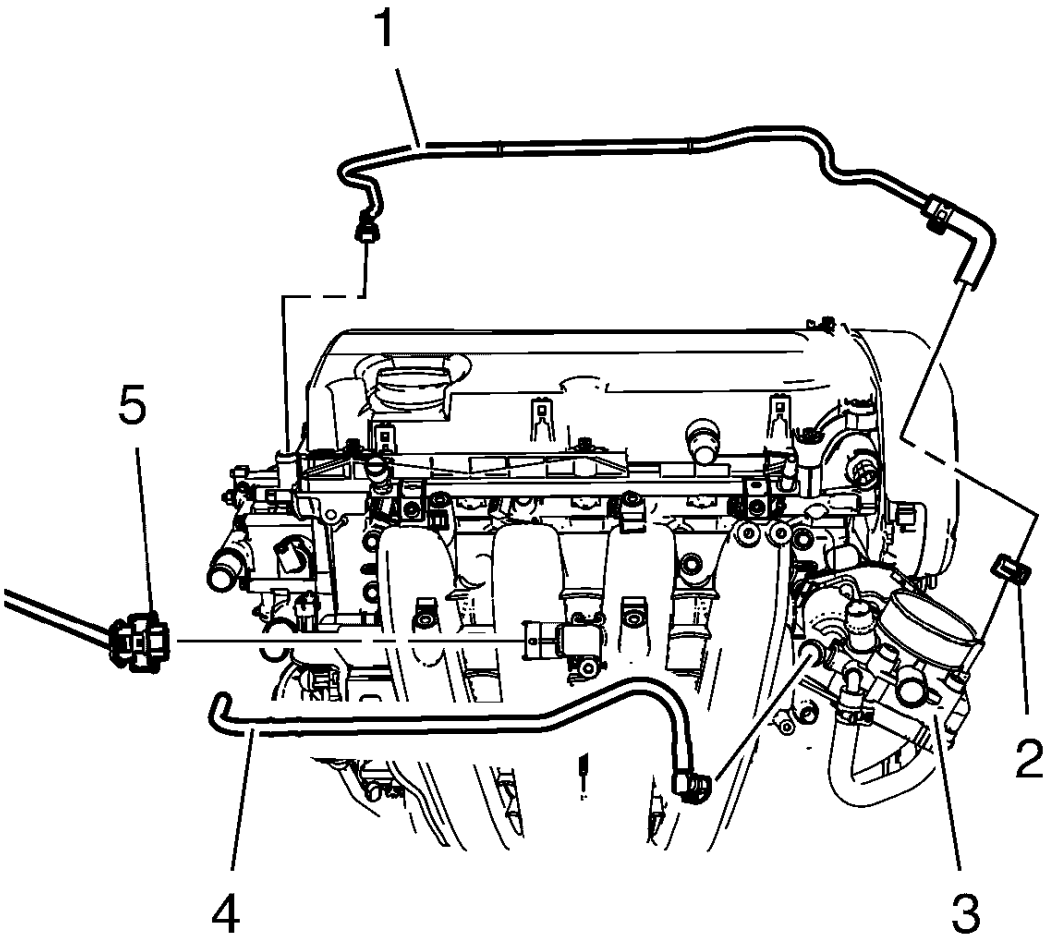

Fig. 56: Throttle Body, Throttle Body Heater Inlet Hose And Throttle Body Heater Outlet Hose
Courtesy of GENERAL MOTORS COMPANY

11. Connect the throttle body heater outlet hose (4) to the throttle body (3).
12. Install the throttle body heater inlet hose (1) to the throttle body (3) and install the clamp (2).
13. Connect the manifold absolute pressure sensor wiring harness plug (5).
14. Install the engine management wiring harness and the fuel injectors wiring harness.

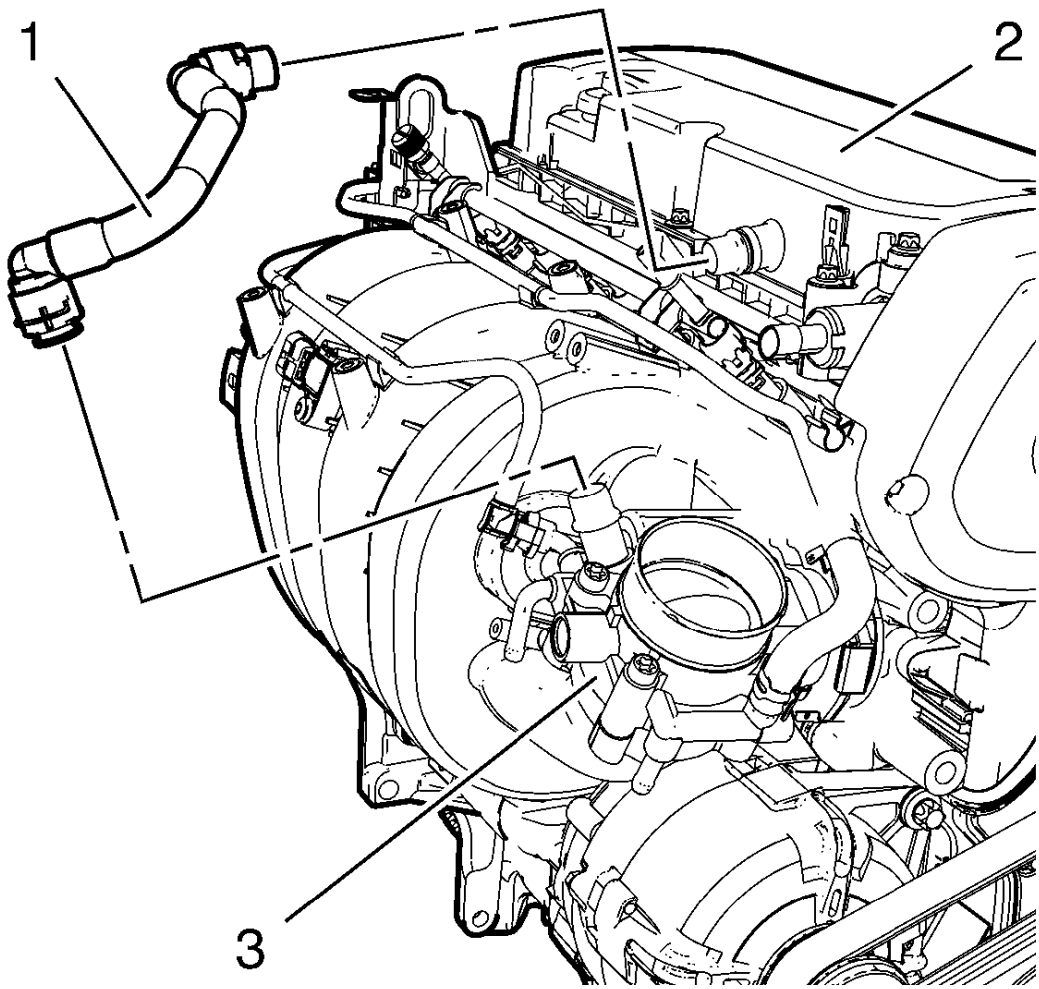

Fig. 57: Throttle Body And Positive Crankcase Ventilation Tube
Courtesy of GENERAL MOTORS COMPANY

15. Install the positive crankcase ventilation tube (1) the to throttle body (3) and to the camshaft cover (2).
16. Install the throttle body assembly. Refer to **Throttle Body Assembly Replacement** .
17. Install the evaporative emission canister purge solenoid valve. Refer to **Evaporative Emission Canister Purge Solenoid Valve Replacement**

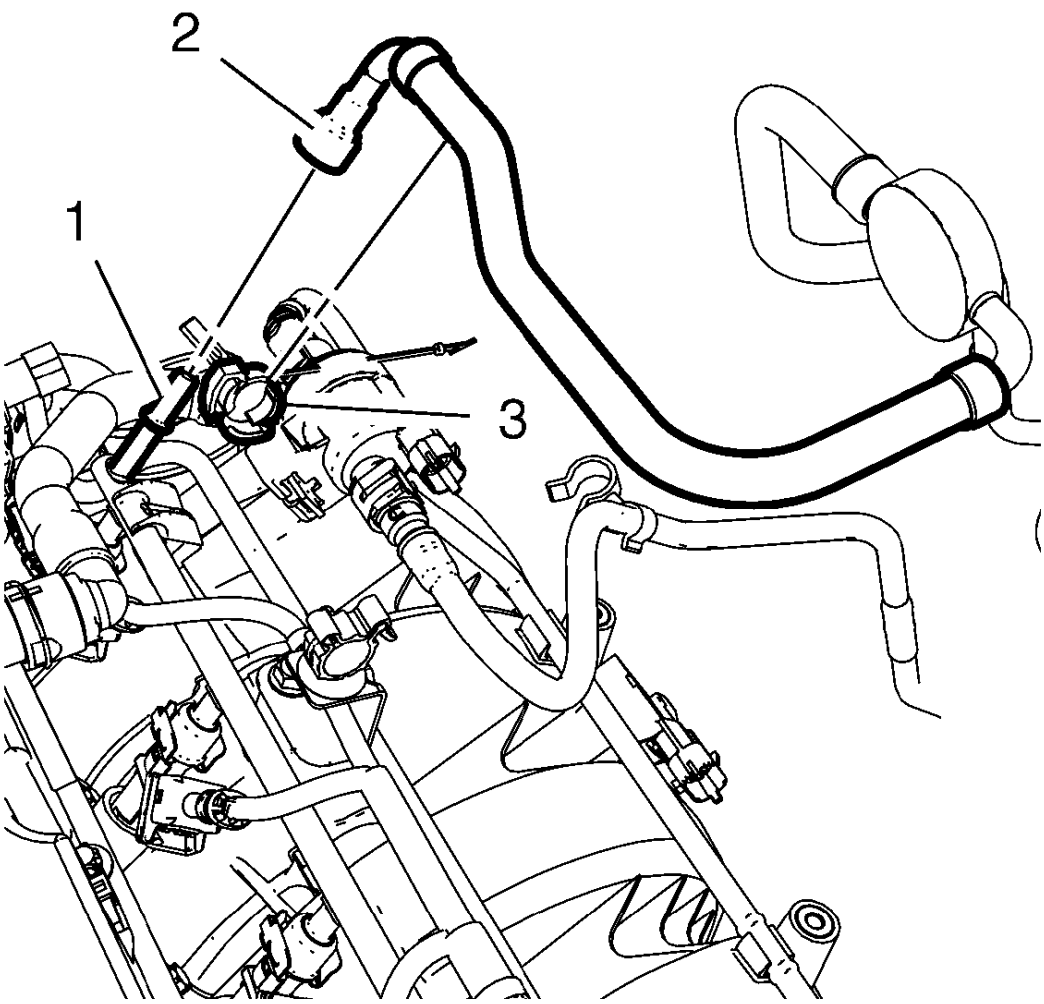

Fig. 58: Fuel Feed Pipe
Courtesy of GENERAL MOTORS COMPANY

18. Remove the cap from fuel feed pipe (2).
19. Install the fuel feed pipe (2) to the multiport fuel injection fuel rail (1).
20. Clip the fuel feed pipe (2) to the fuel feed pipe clip (3).

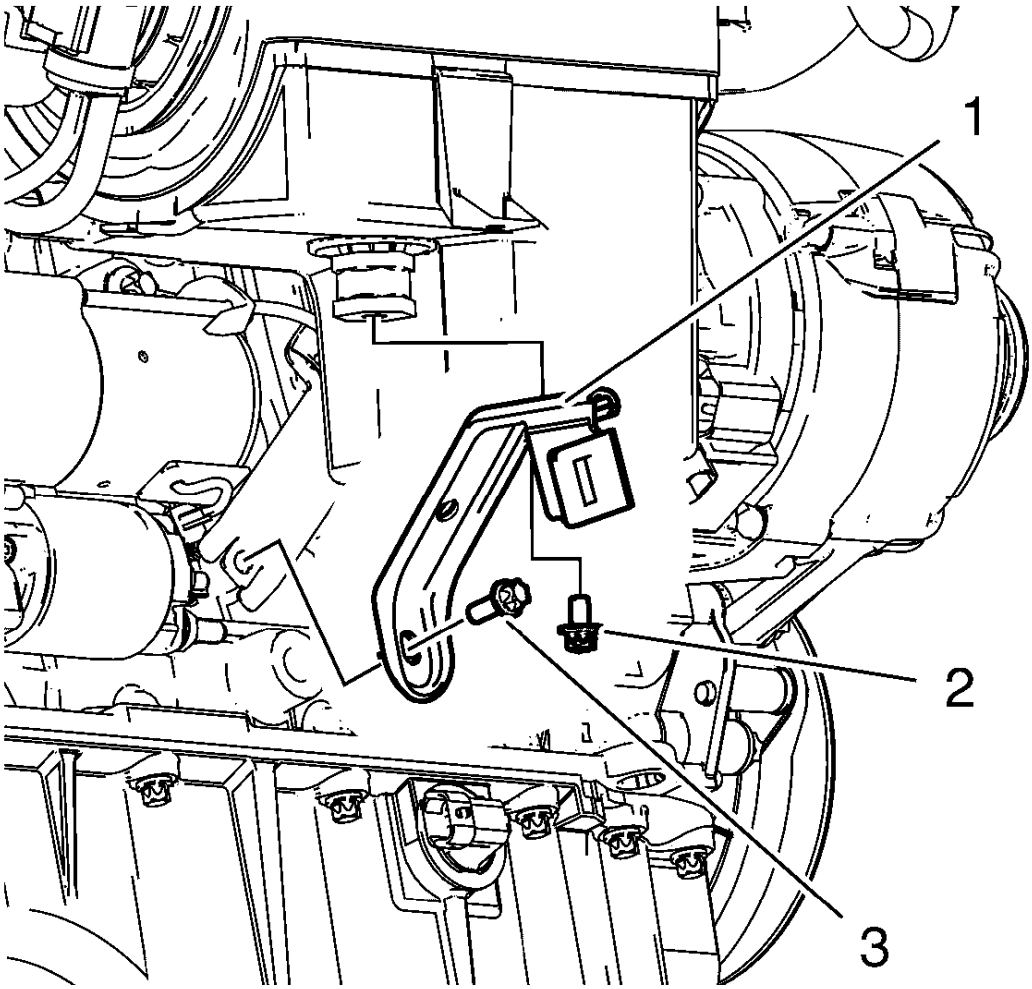

Fig. 59: Intake Manifold Bracket
Courtesy of GENERAL MOTORS COMPANY

21. Install the intake manifold brace (1).
22. Install and connect the wiring harness plug to the heated oxygen sensor 1.
23. Install the 2 intake manifold brace bolts (2, 3) and tighten to 8 N.m (71 lb in).
24. Lower the vehicle.
25. Install the air cleaner outlet duct. Refer to **Air Cleaner Outlet Duct Replacement** .
26. Close the hood.

TIMING BELT REPLACEMENT

Special Tools

- **EN-6333** Timing Belt Tensioner Locking Pin
- **EN-6340** Camshaft Locking Tool

- **EN-6625** Crankshaft Locking Device
- **EN-45059** Angle Meter

For equivalent regional tools, refer to **Special Tools**.

Removal Procedure

NOTE: If the timing belt is being replaced due to the maintenance schedule interval, then the timing belt tensioner and idler pulley must also be replaced.

1. Remove the air cleaner assembly. Refer to **Air Cleaner Assembly Replacement (1.8L LWE)** , **Air Cleaner Assembly Replacement (1.8L LUW)** .
2. Remove the timing belt upper front cover. Refer to **Timing Belt Upper Front Cover Removal**.
3. Raise and support the vehicle. Refer to **Lifting and Jacking the Vehicle** .
4. Remove the right front wheelhouse liner. Refer to **Front Wheelhouse Liner Replacement** .
5. Remove the drive belt tensioner. Refer to **Drive Belt Tensioner Replacement**.
6. Remove the front compartment insulator. Refer to **Front Compartment Insulator Replacement** .
7. Set the engine to top dead center (TDC).
8. For vehicle with manual transmission: Remove the transmission front mount. Refer to **Transmission Front Mount Replacement** .

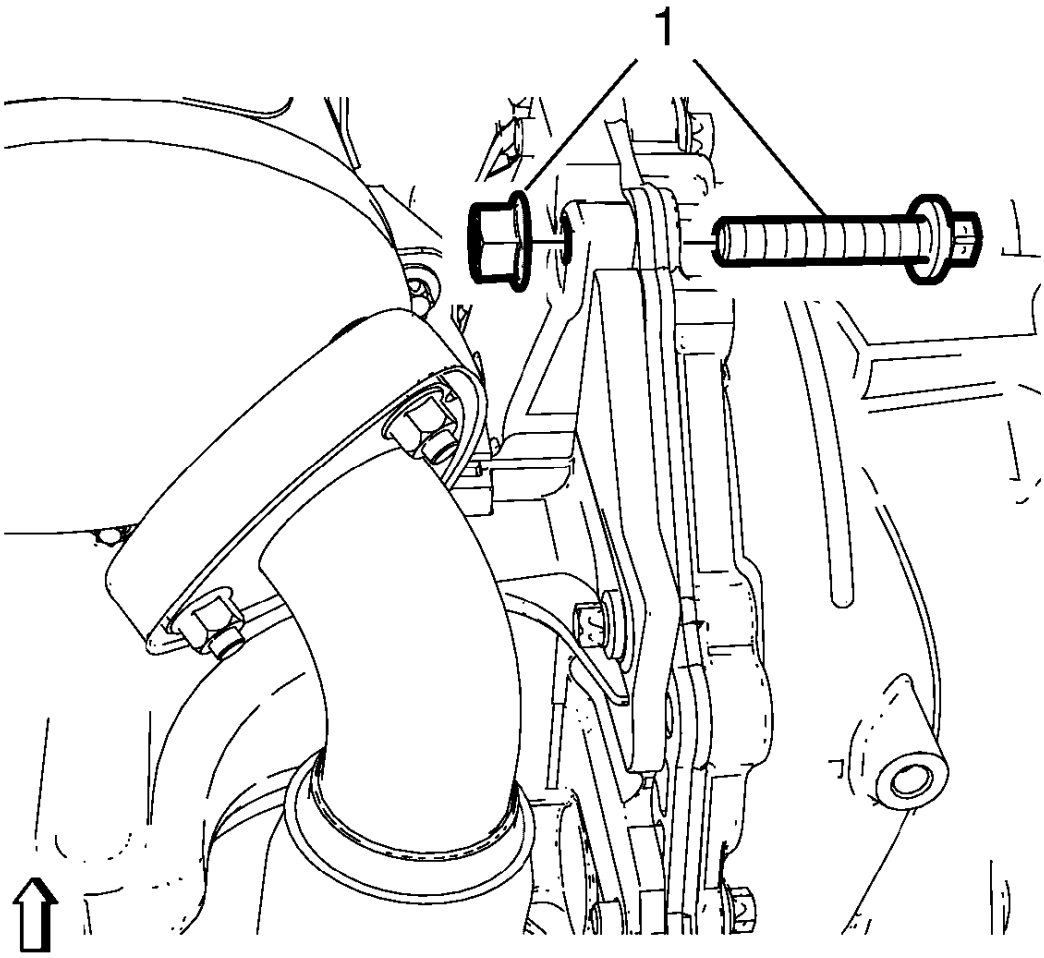

Fig. 60: Connection Bolt
Courtesy of GENERAL MOTORS COMPANY

9. For vehicle with manual transmission: Remove the bolted connection (1).

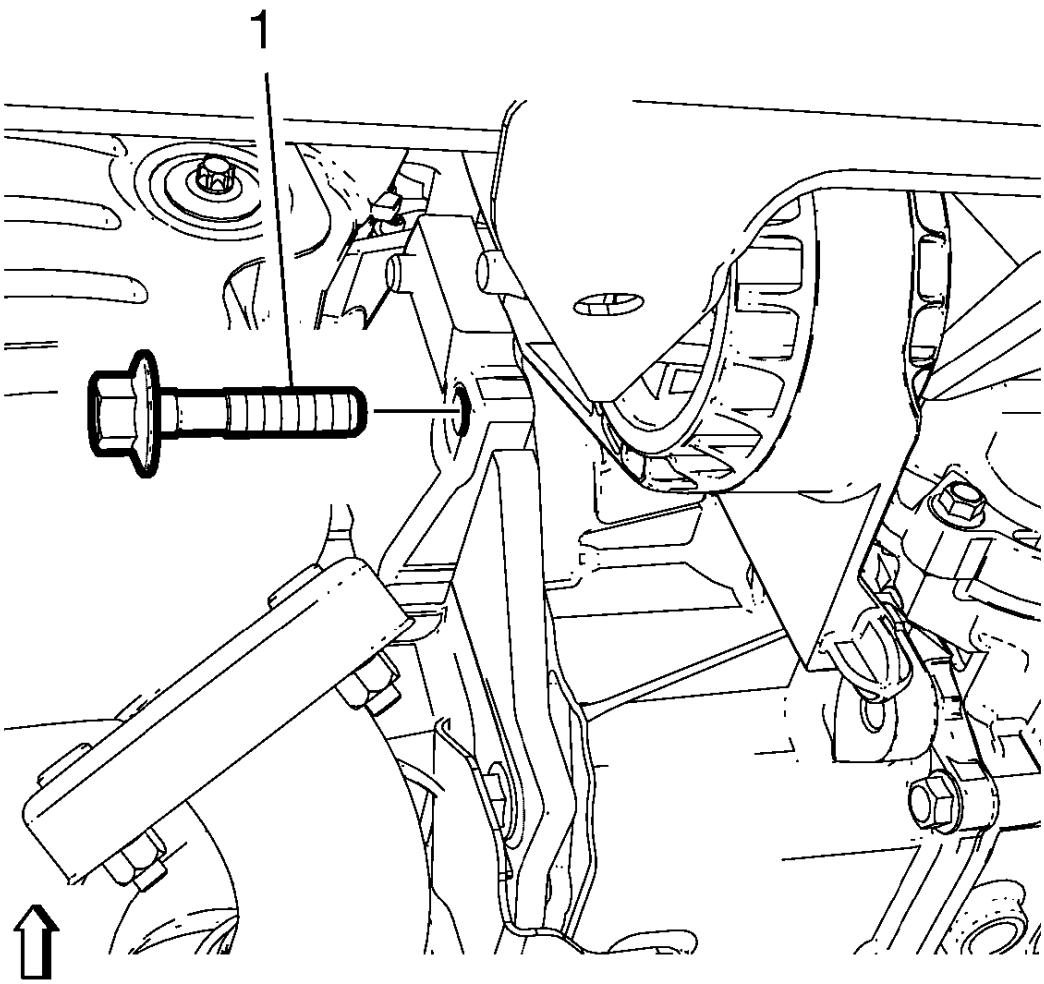

Fig. 61: Automatic Transmission Bracket Bolt
Courtesy of GENERAL MOTORS COMPANY

10. For vehicle with automatic transmission: Remove the bolt (1).

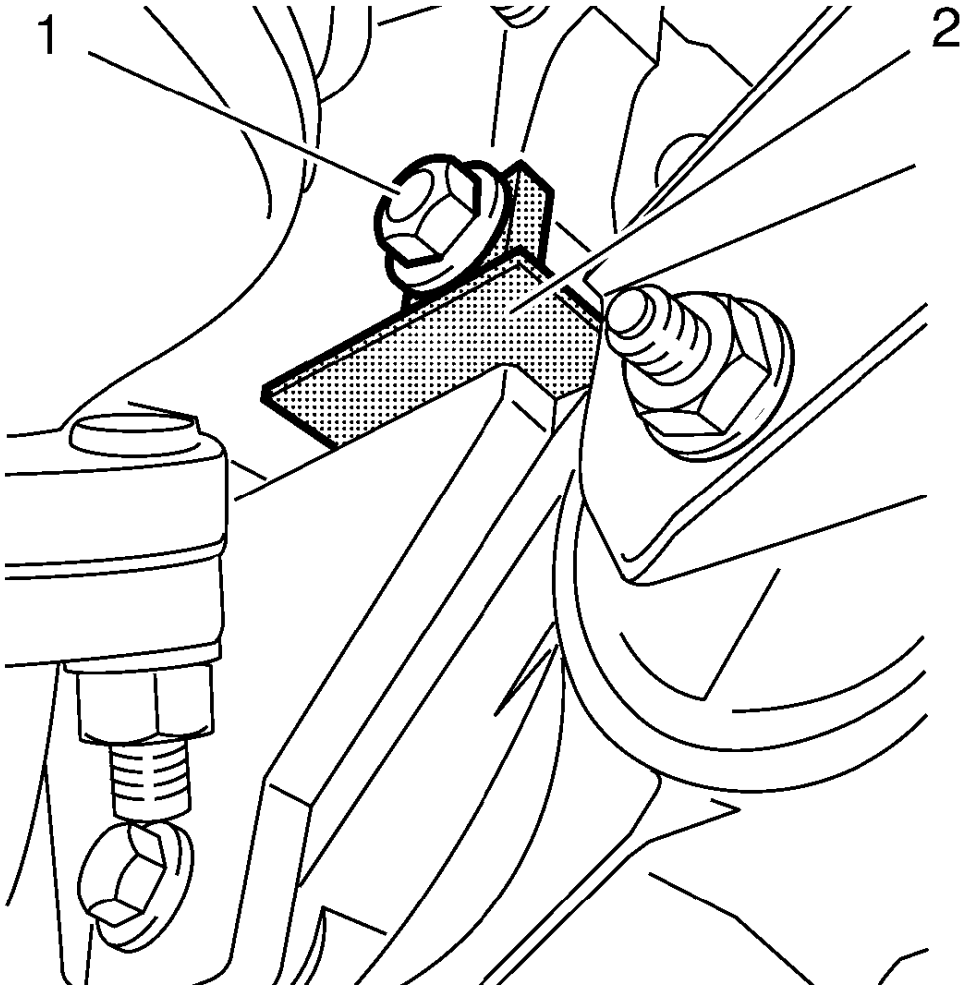

Fig. 62: Locking Device And Bolt
Courtesy of GENERAL MOTORS COMPANY

11. Install **EN-6625** locking device (2) to block the crankshaft.
12. Install the bolt or bolted connection (1).

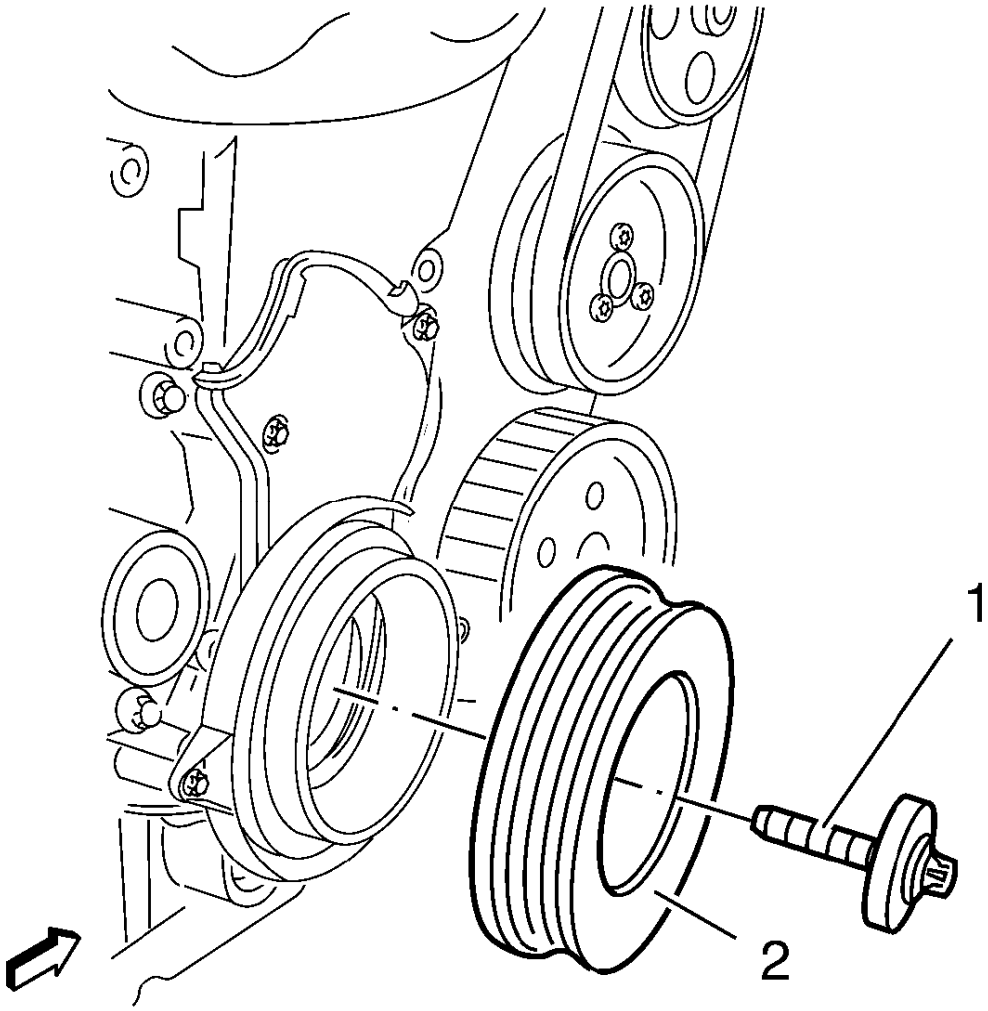

Fig. 63: Crankshaft Balancer And Bolt
Courtesy of GENERAL MOTORS COMPANY

13. Remove and DISCARD the crankshaft balancer bolt (1).

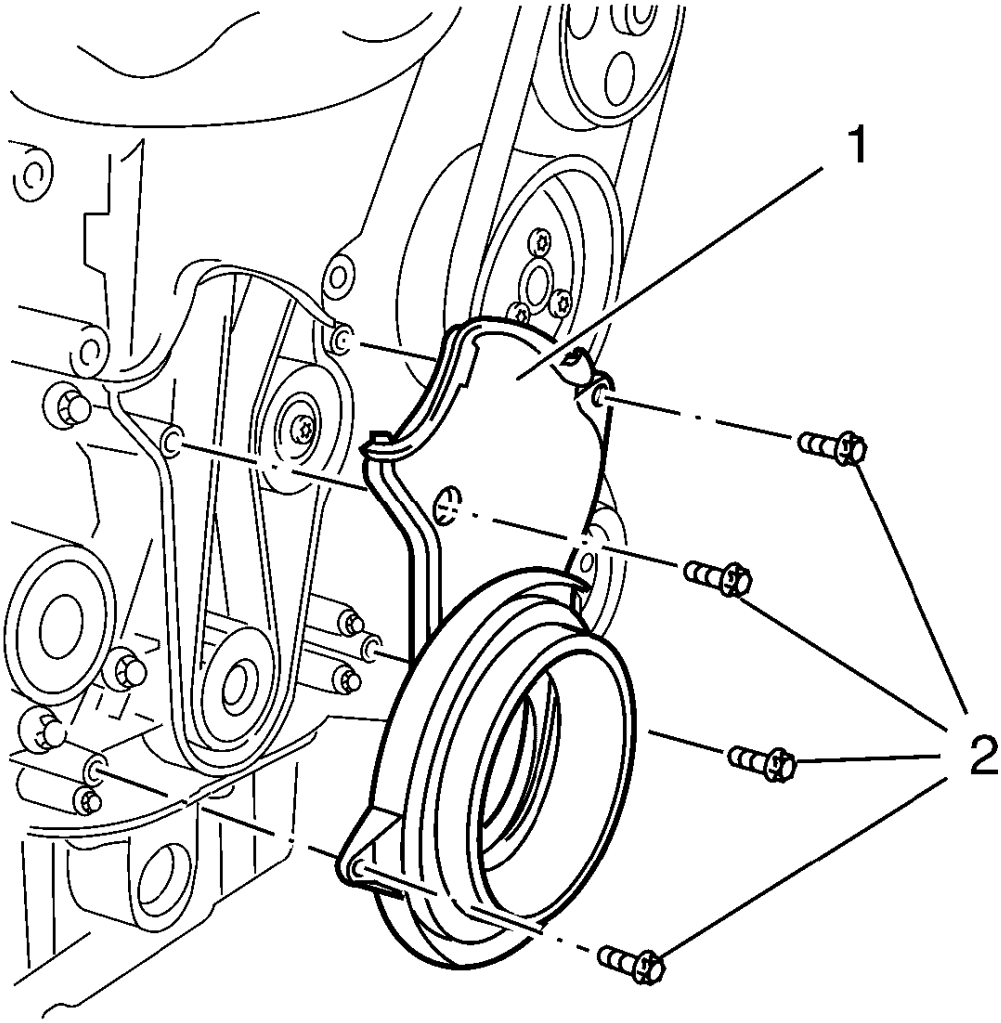

Fig. 64: Timing Belt Lower Front Cover
Courtesy of GENERAL MOTORS COMPANY

14. Remove the 4 lower timing belt cover bolts (2).
15. Remove the lower timing belt cover (1).
16. Lower the vehicle.

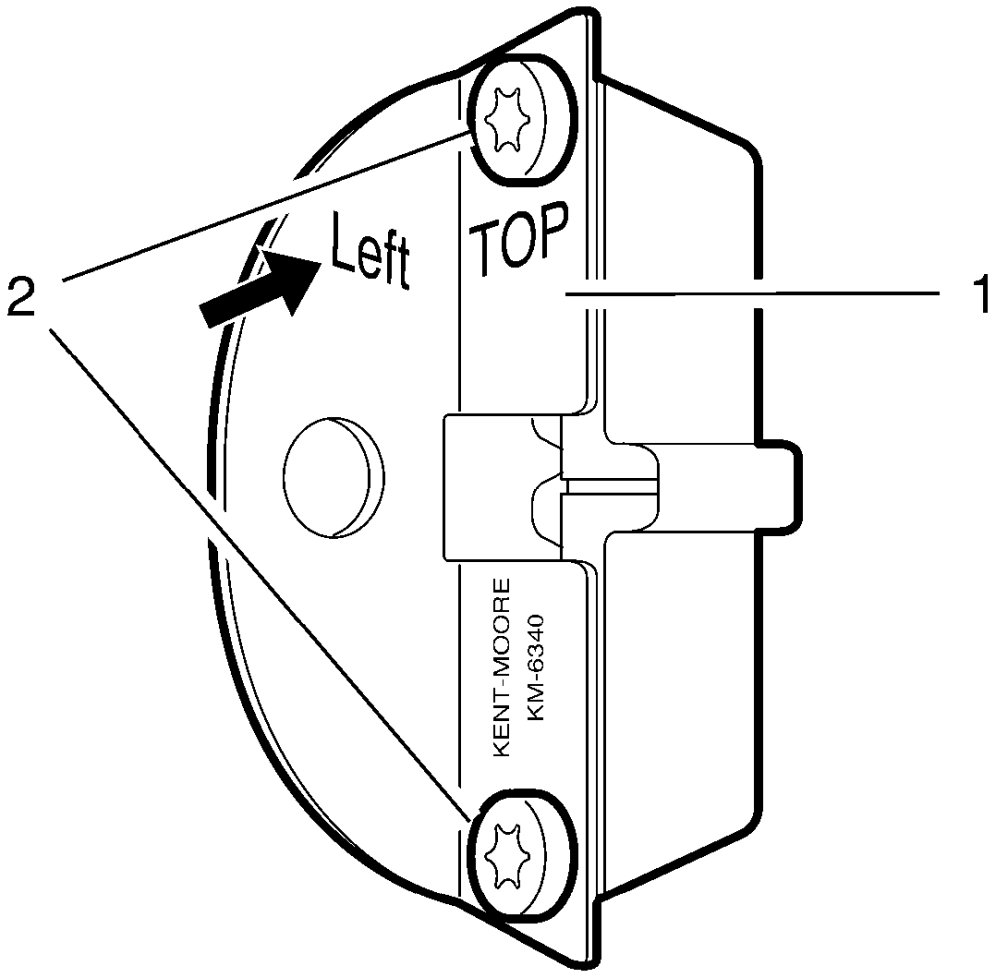

Fig. 65: Locking Tool
Courtesy of GENERAL MOTORS COMPANY

NOTE: The left half of the EN-6340 locking tool can be recognized by the lettering "left", arrow, on the tool.

17. Prepare the left half of the **EN-6340** locking tool.
    1. Remove the 2 bolts (2)
    2. Remove the front panel (1) from the **EN-6340** locking tool - left.

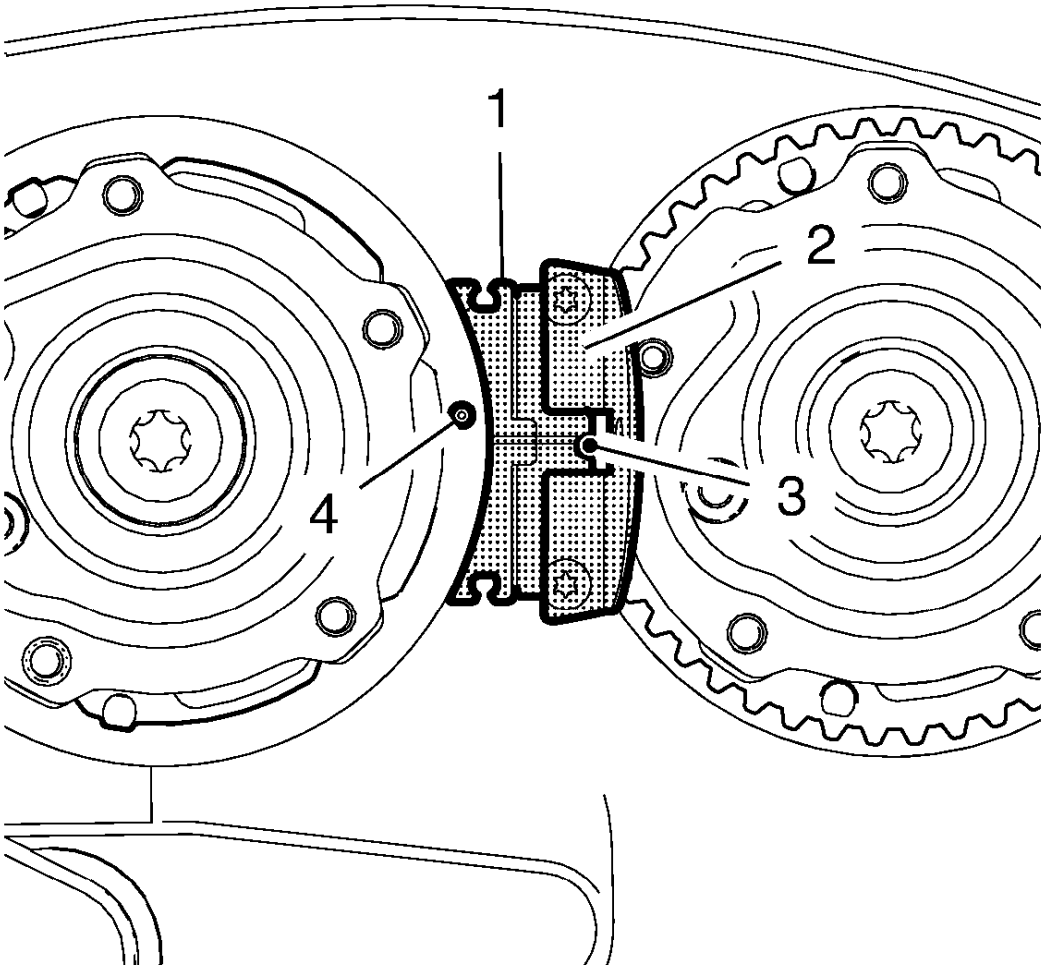

Fig. 66: Camshaft Adjuster Locking Tool
Courtesy of GENERAL MOTORS COMPANY

18. Install the **EN-6340** locking tool into the camshaft adjusters.

    NOTE: The spot type marking (4) on the intake camshaft adjuster does not correspond to the groove of EN-6340 locking tool - left during this process but must be somewhat above as shown.

    1. Install the **EN-6340** locking tool - left (1) in the camshaft adjusters as shown.

       NOTE: The spot type marking (3) on the exhaust camshaft adjuster must correspond to the groove on EN-6340 locking tool - right.

    2. Install **EN-6340** locking tool - right (2) in the camshaft adjusters as shown.
19. Raise and support the vehicle. Refer to **Lifting and Jacking the Vehicle** .

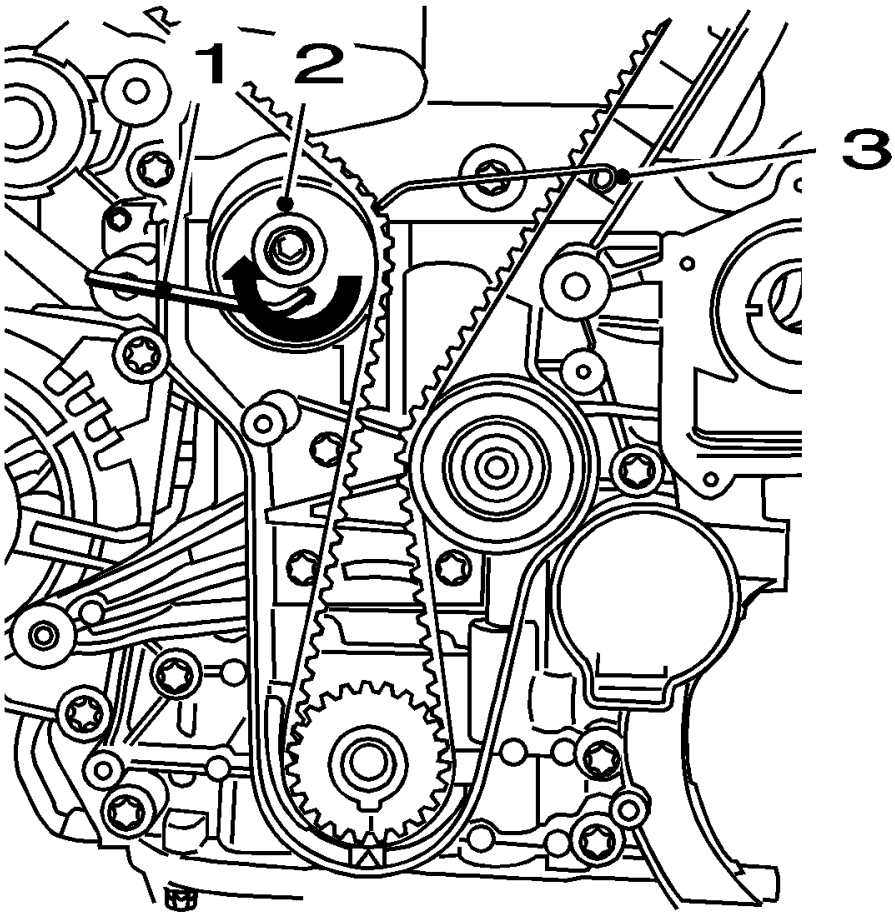

Fig. 67: View Of Drive Belt Tensioner, Allen Key And KM-6333
Courtesy of GENERAL MOTORS COMPANY

20. Apply tension to the drive belt tensioner (2) in the direction of the arrow, using an allen key (1).
21. Install the **EN-6333** locking pin (3).
22. Remove the timing belt idler pulley. Refer to **Timing Belt Idler Pulley Replacement**.

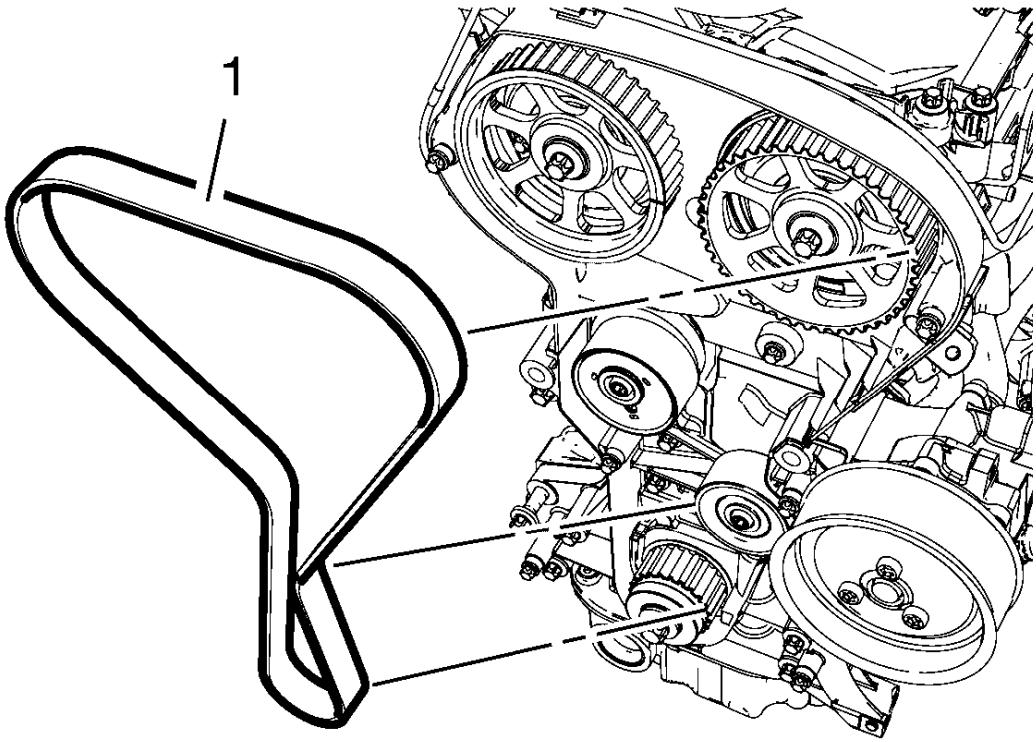

Fig. 68: Drive Belt Routing
Courtesy of GENERAL MOTORS COMPANY

23. Remove the timing belt (1).

Installation Procedure

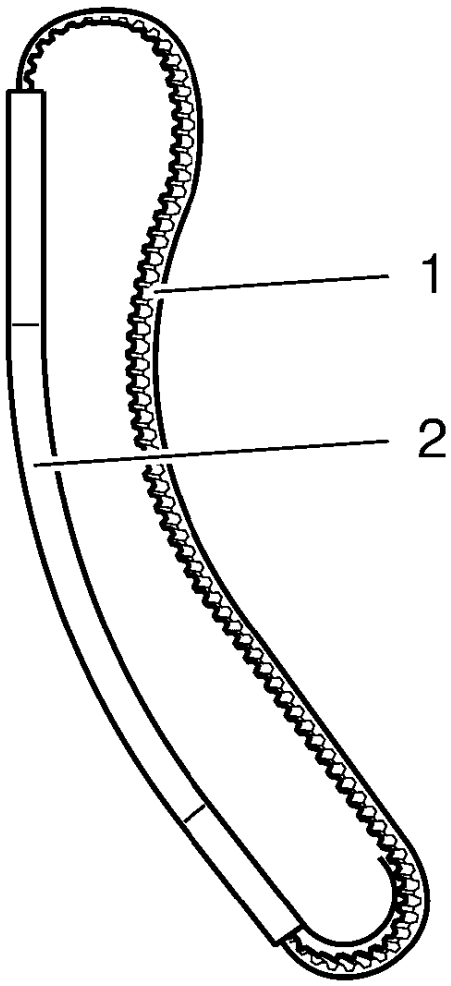

Fig. 69: Timing Belt And Assembly Tool
Courtesy of GENERAL MOTORS COMPANY

NOTE: **Threading the timing belt through the engine mount bracket is only permissible in conjunction with the assembly tool supplied with NEW timing belts or otherwise it is possible to damage the toothed belt at this stage by kinking it.**

NOTE: **If the toothed belt has been used, observe the direction of rotation.**

1. Install the timing belt (1) in the enclosed assembly tool (2).
2. Guide the timing belt through the engine mount bracket with the assembly tool.
3. Remove the assembly tool.

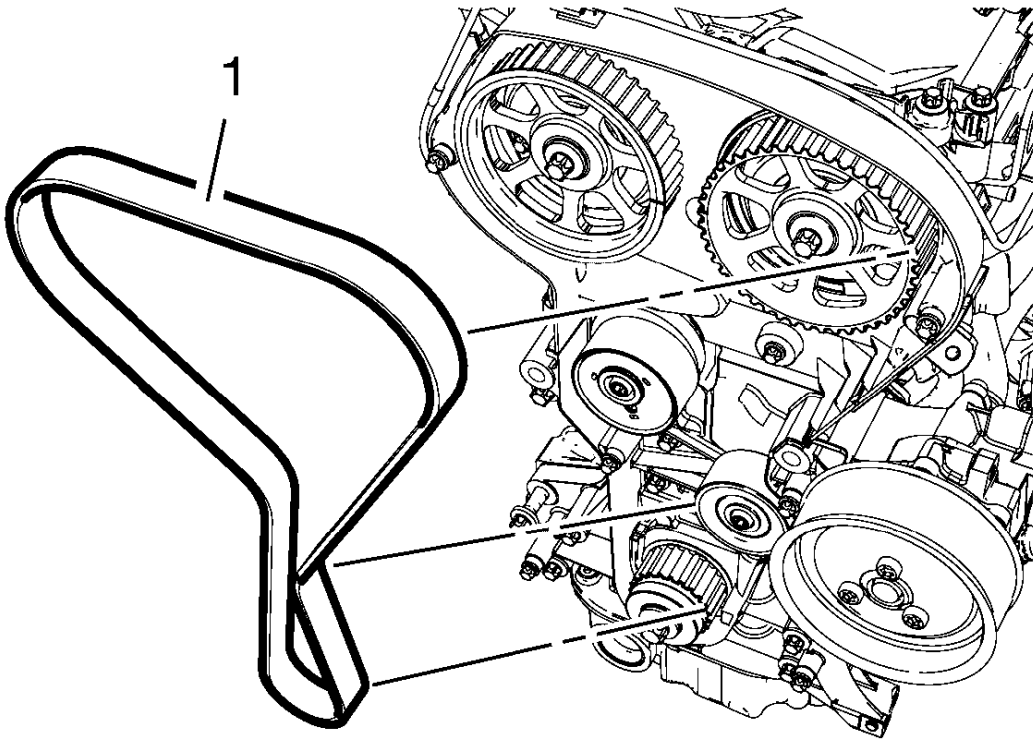

Fig. 70: Drive Belt Routing
Courtesy of GENERAL MOTORS COMPANY

4. Install the timing belt (1).
5. Guide the timing belt past the tensioner and place it on the crankshaft sprocket wheel.
6. Place the timing belt on the exhaust and intake camshaft position actuator adjusters.
7. Raise and support the vehicle.
8. Install the timing belt idler pulley. Refer to **Timing Belt Idler Pulley Replacement**.

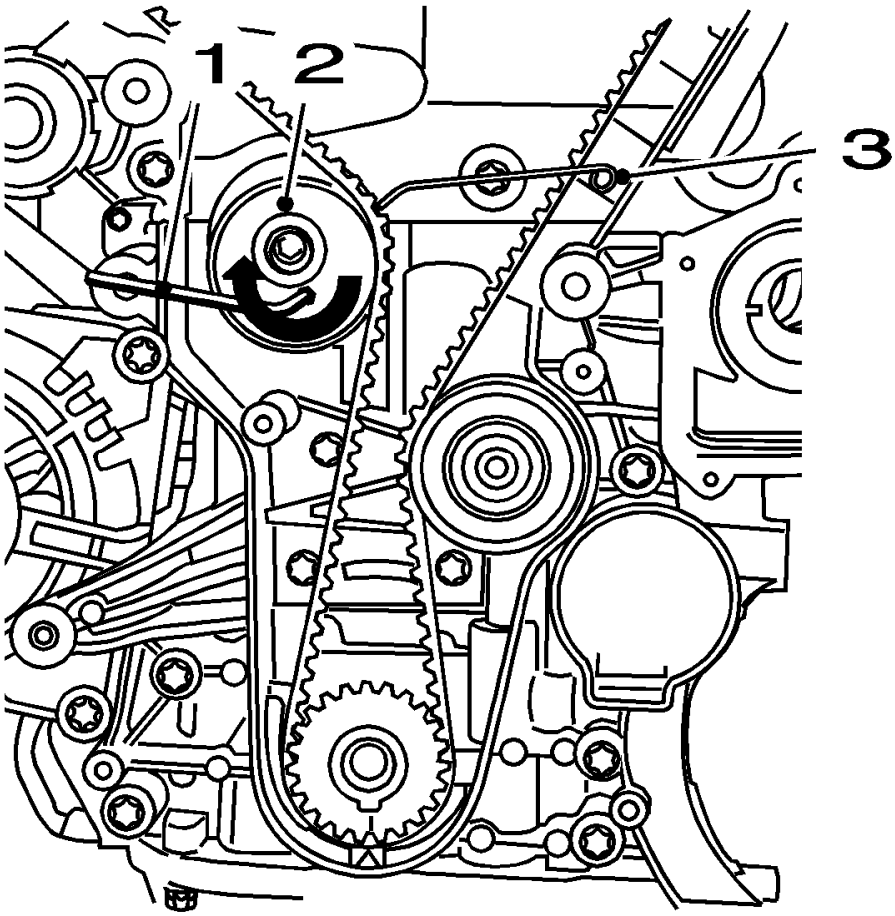

Fig. 71: View Of Drive Belt Tensioner, Allen Key And KM-6333
Courtesy of GENERAL MOTORS COMPANY

9. Apply tension to the drive belt tensioner (2) in the direction of the arrow, using an allen key (1).
10. Remove the **EN-6333** locking pin (3).

NOTE: The timing belt tensioner moves automatically to the correct position.

11. Release tension on timing belt tensioner.

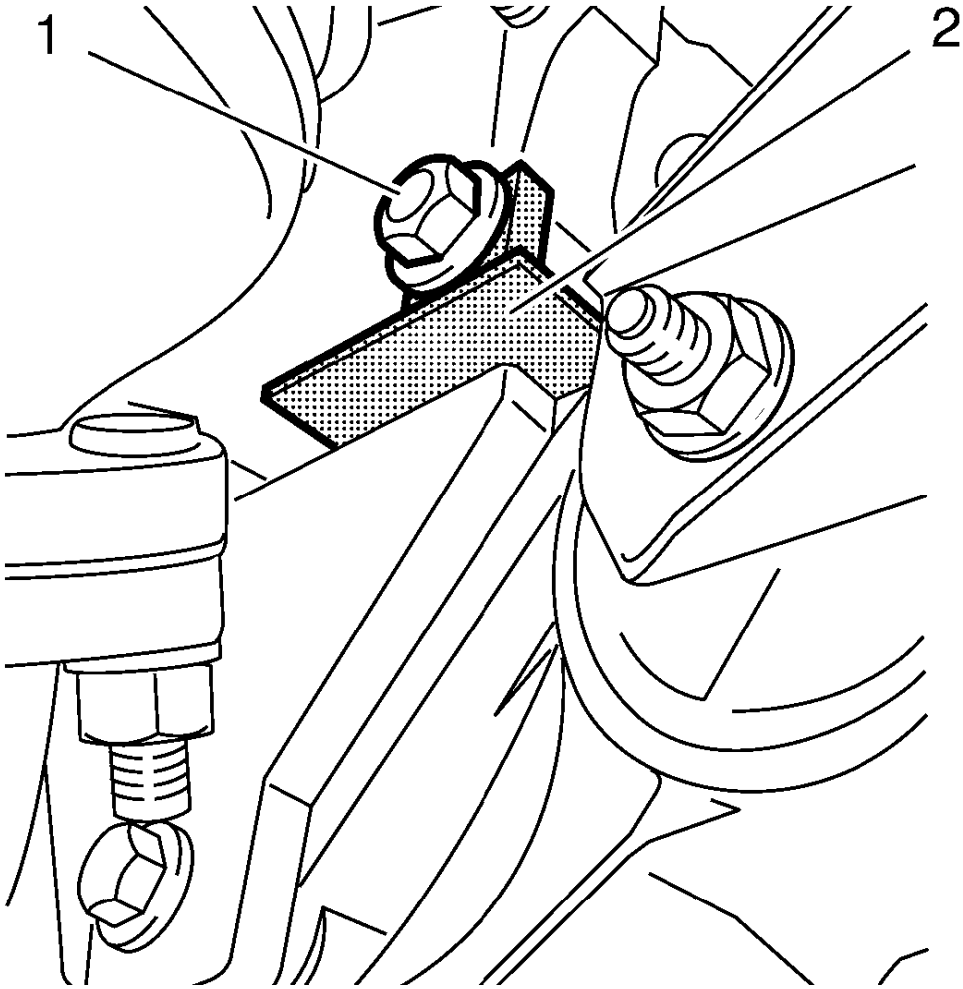

Fig. 72: Locking Device And Bolt
Courtesy of GENERAL MOTORS COMPANY

12. Remove bolt or bolted connection (1).
13. Remove **EN-6625** locking device (2).
14. Lower the vehicle.
15. Remove the **EN-6340** locking tool.

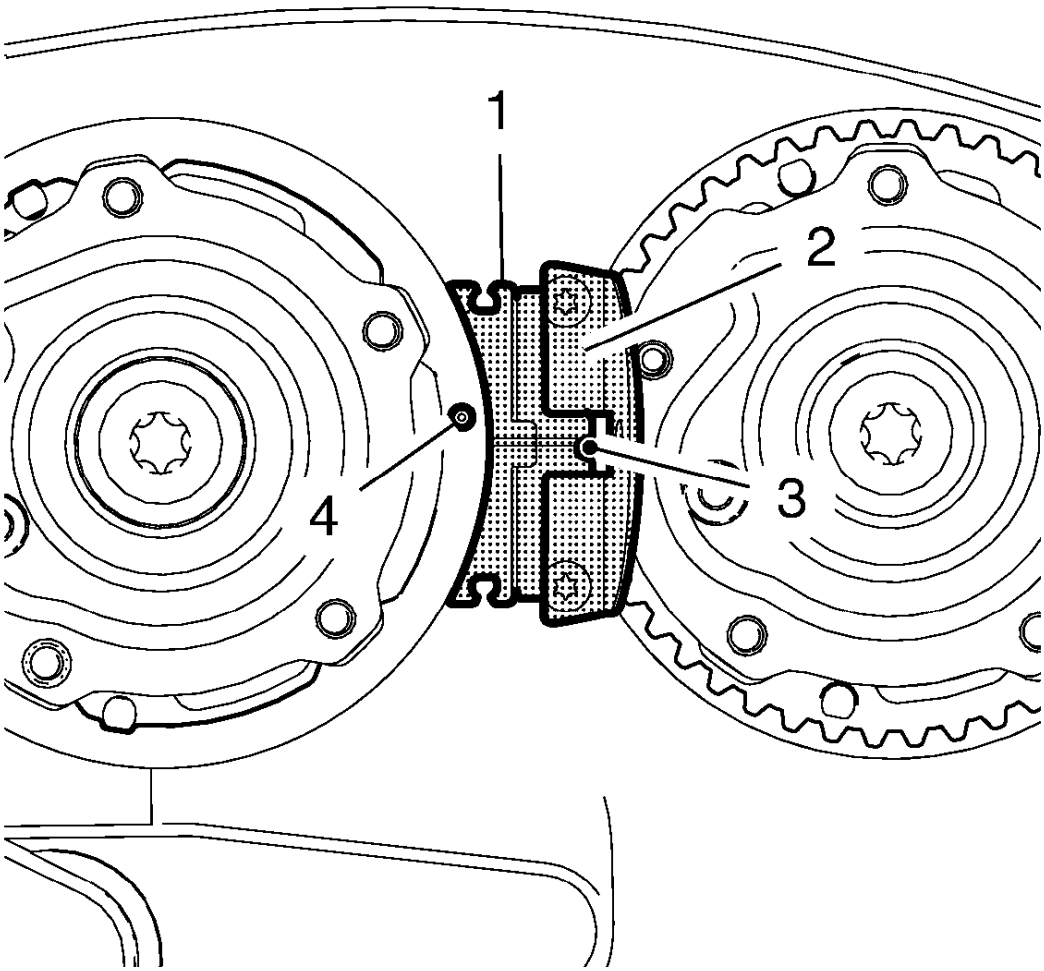

Fig. 73: Camshaft Adjuster Locking Tool
Courtesy of GENERAL MOTORS COMPANY

16. Check the timing

NOTE: Note the marking at the camshaft sprockets.

1. Turn the crankshaft 720 degrees in the direction of engine rotation by the crankshaft balancer bolt.

NOTE: The spot type marking (4) on the intake camshaft adjuster does not correspond to the groove of EN-6340 locking tool - left during this process but must be somewhat above as shown.

2. Install **EN-6340** locking tool - left (1) into the camshaft adjusters as shown.

NOTE: The spot type marking (3) on the exhaust camshaft adjuster must

correspond to the groove on EN-6340 locking tool - right.

3. Install **EN-6340** locking tool - right (2) into the camshaft adjusters as shown.

17. Remove the **EN-6340** locking tool.
18. Raise and support the vehicle. Refer to **Lifting and Jacking the Vehicle** .

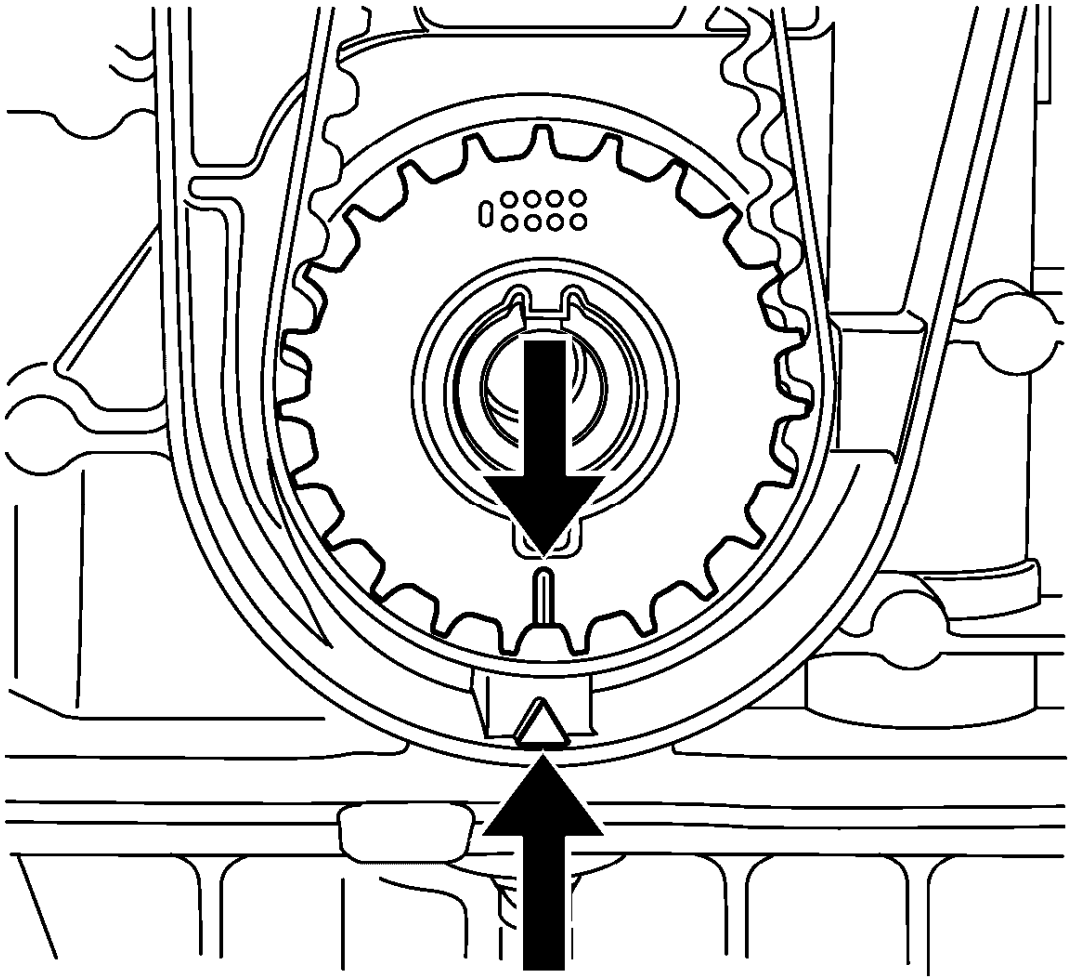

Fig. 74: Aligning Timing Belt Drive Gear And Oil Pump Housing
Courtesy of GENERAL MOTORS COMPANY

NOTE: The timing belt drive gear and oil pump housing must align.

19. Control the crankshaft balancer position.

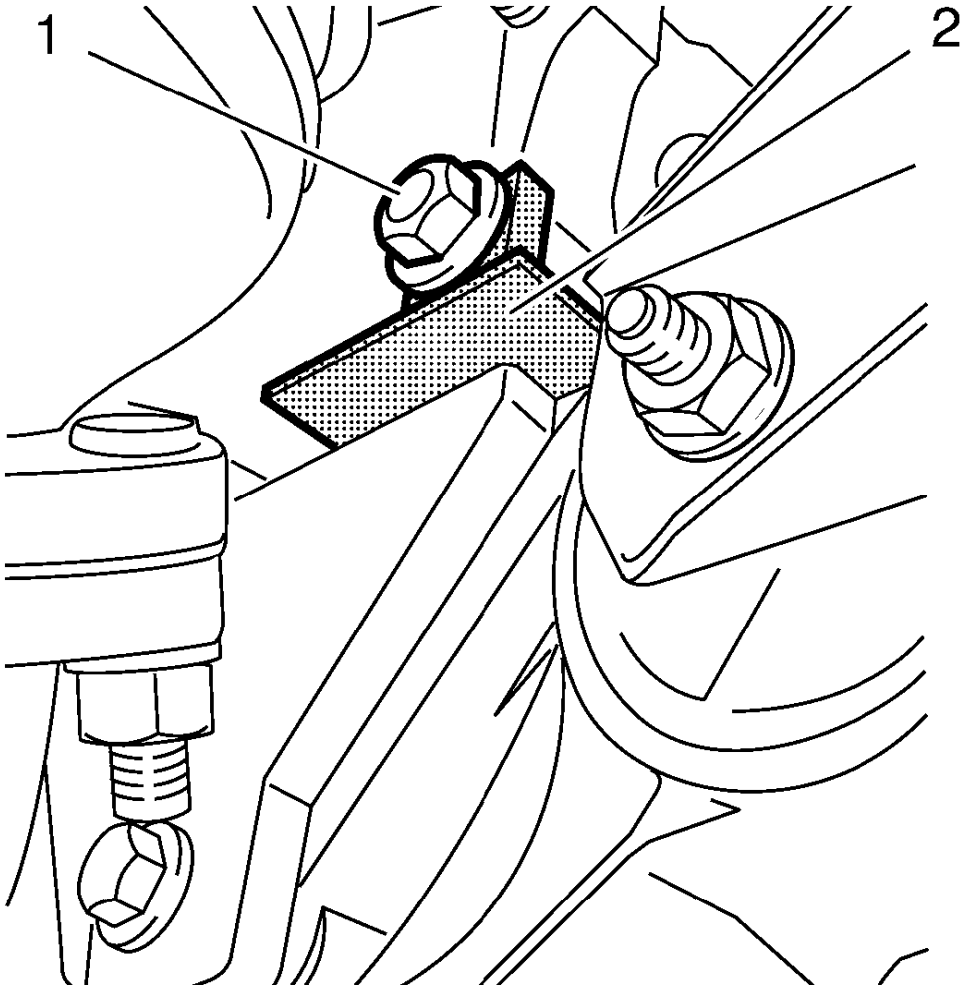

Fig. 75: Locking Device And Bolt
Courtesy of GENERAL MOTORS COMPANY

20. Install **EN-6625** locking device (2) to block the crankshaft.
21. Install the bolt or bolted connection (1).

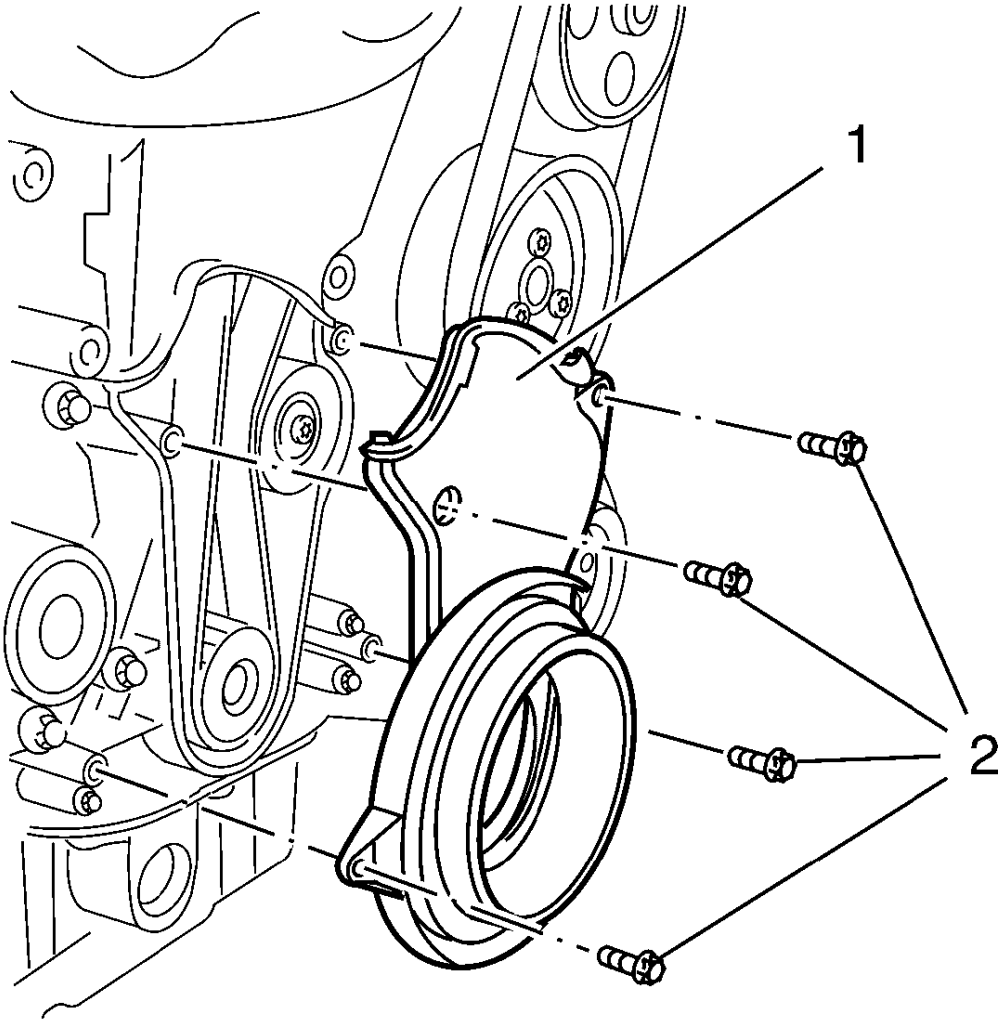

Fig. 76: Timing Belt Lower Front Cover
Courtesy of GENERAL MOTORS COMPANY

22. Install the lower timing belt cover (1).

CAUTION: Refer to Fastener Caution .

23. Install the 4 lower timing belt cover bolts (2) and tighten to 6 N.m (53 lb in).

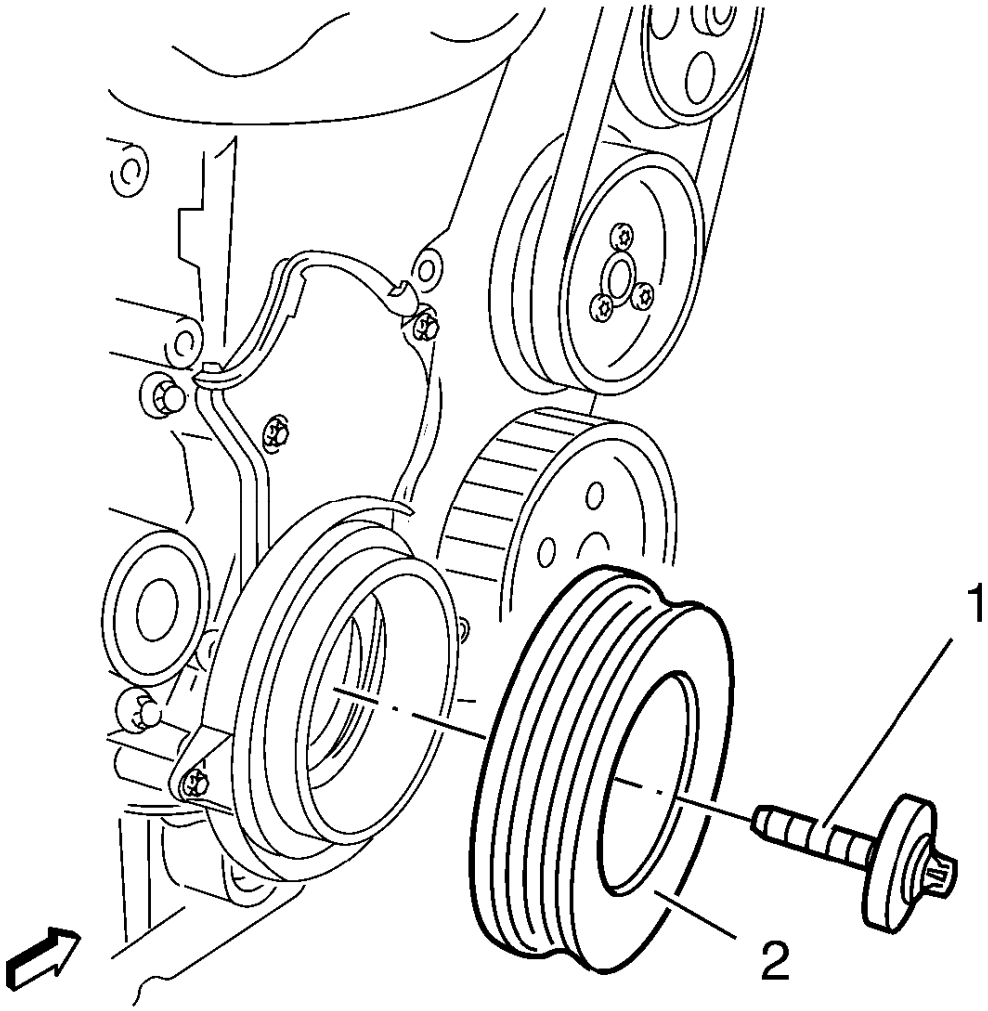

Fig. 77: Crankshaft Balancer And Bolt
Courtesy of GENERAL MOTORS COMPANY

24. Install the crankshaft balancer (2).
25. Install a NEW crankshaft balancer bolt (1) and tighten a first pass to 95 N.m (70 lb ft).

CAUTION: Refer to Torque-to-Yield Fastener Caution .

26. Tighten the NEW crankshaft balancer bolt a second pass to an additional 45 degrees. using the **EN-45059** meter.
27. Tighten the NEW crankshaft balancer bolt a final pass to an additional 15 degrees. using the **EN-45059** meter.

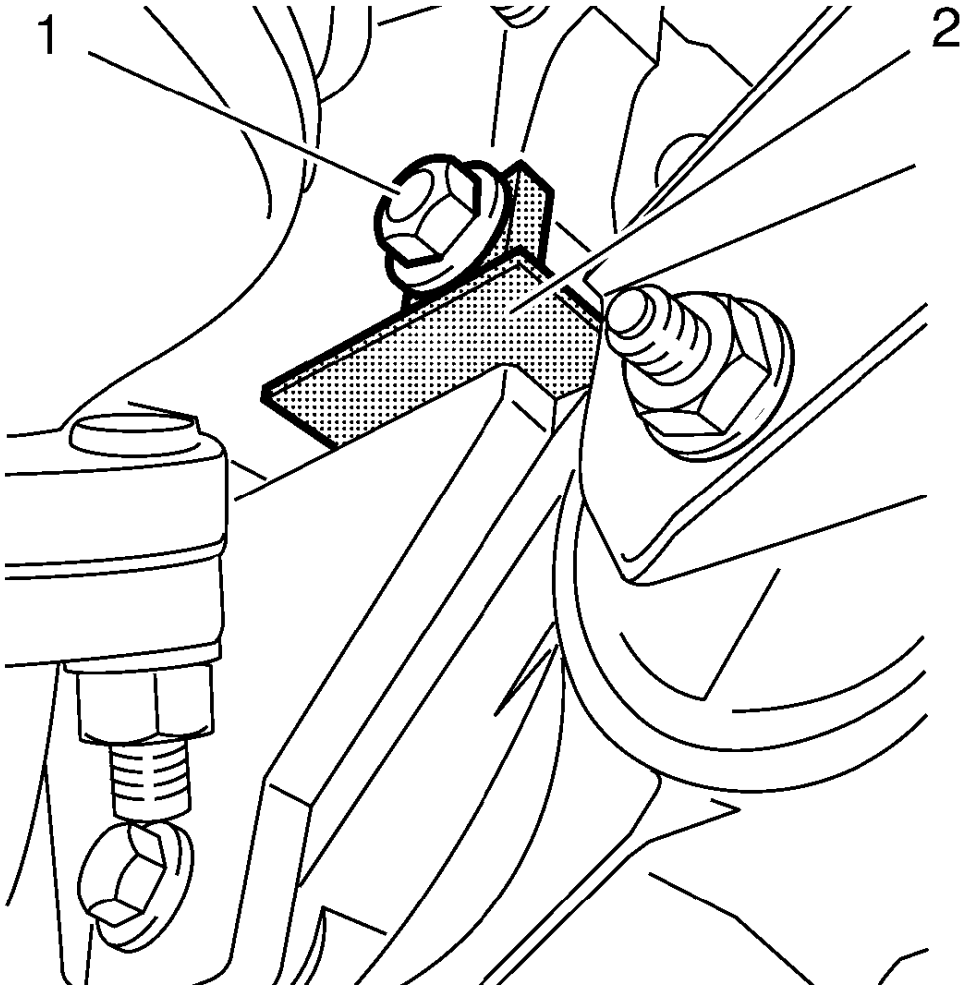

Fig. 78: Locking Device And Bolt
Courtesy of GENERAL MOTORS COMPANY

28. Remove bolt or bolted connection (1).
29. Remove **EN-6625** locking device (2).

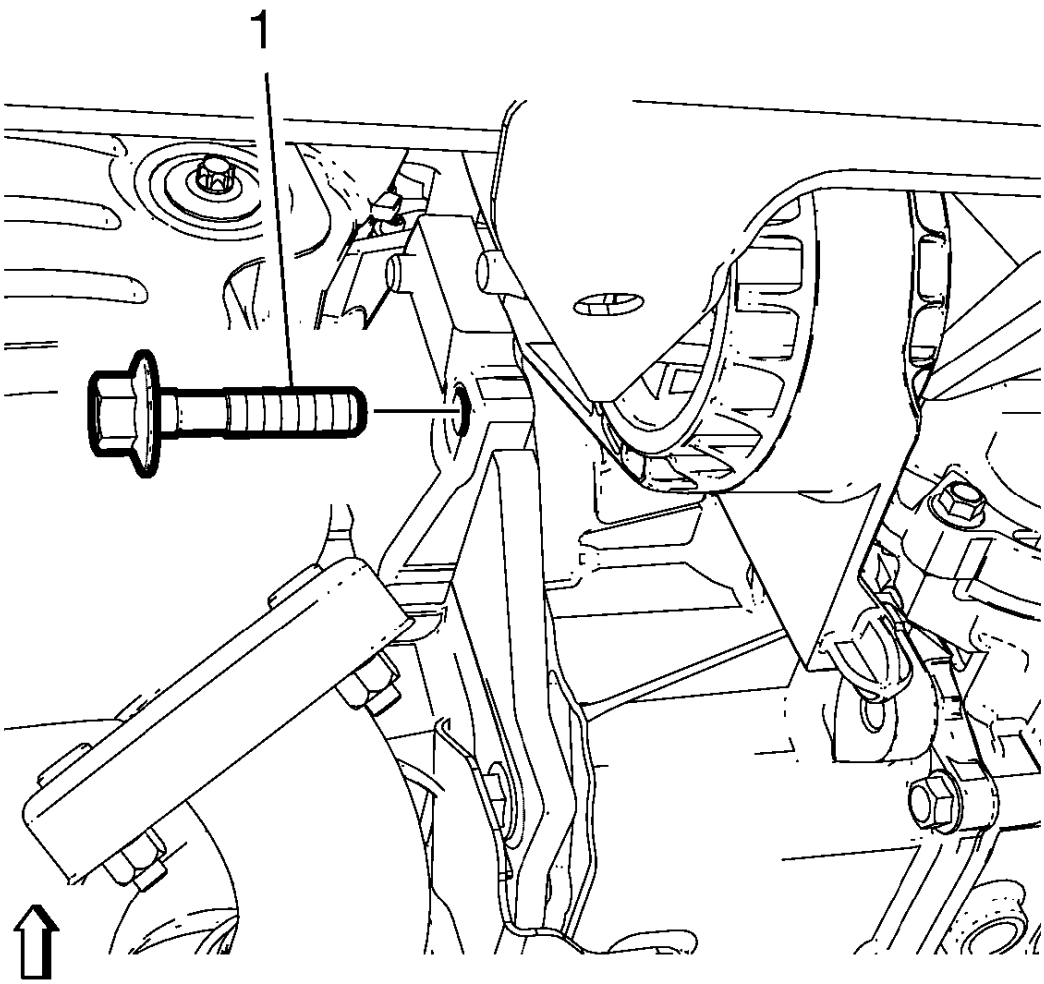

Fig. 79: Automatic Transmission Bracket Bolt
Courtesy of GENERAL MOTORS COMPANY

30. For vehicle with automatic transmission: Install the bolt (1) and tighten to 45 N.m (33 lb ft).

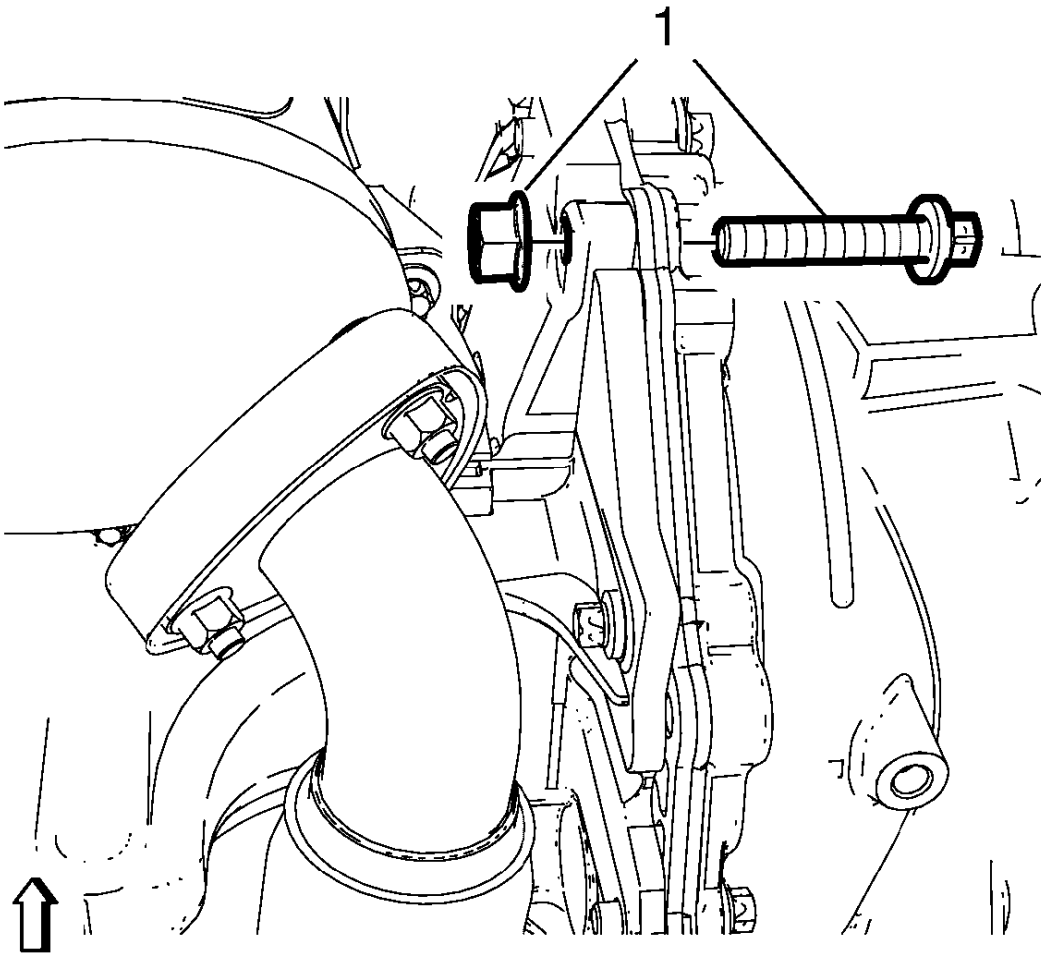

Fig. 80: Connection Bolt
Courtesy of GENERAL MOTORS COMPANY

31. For vehicle with manual transmission: Install the bolt (1) and tighten to 40 N.m (32 lb ft).
32. Install the drive belt tensioner. Refer to **Drive Belt Tensioner Replacement**.
33. Install the right front wheelhouse liner. Refer to **Front Wheelhouse Liner Replacement** .
34. Lower the vehicle.
35. Remove the **EN-6340** locking tool.
36. Install the timing belt upper front cover. Refer to **Timing Belt Upper Front Cover Installation**.
37. Install the air cleaner assembly. Refer to **Air Cleaner Assembly Replacement (1.8L LWE)** , **Air Cleaner Assembly Replacement (1.8L LUW)** .
38. Reset the CHANGE TIMING BELT message. Refer to **Indicator/Warning Message Description and Operation** .

TIMING BELT IDLER PULLEY REPLACEMENT

Special Tools

EN-45059 Angle Meter

For equivalent tools, refer to **Special Tools**.

Removal Procedure

1. Remove the timing belt. Refer to **Timing Belt Replacement**.

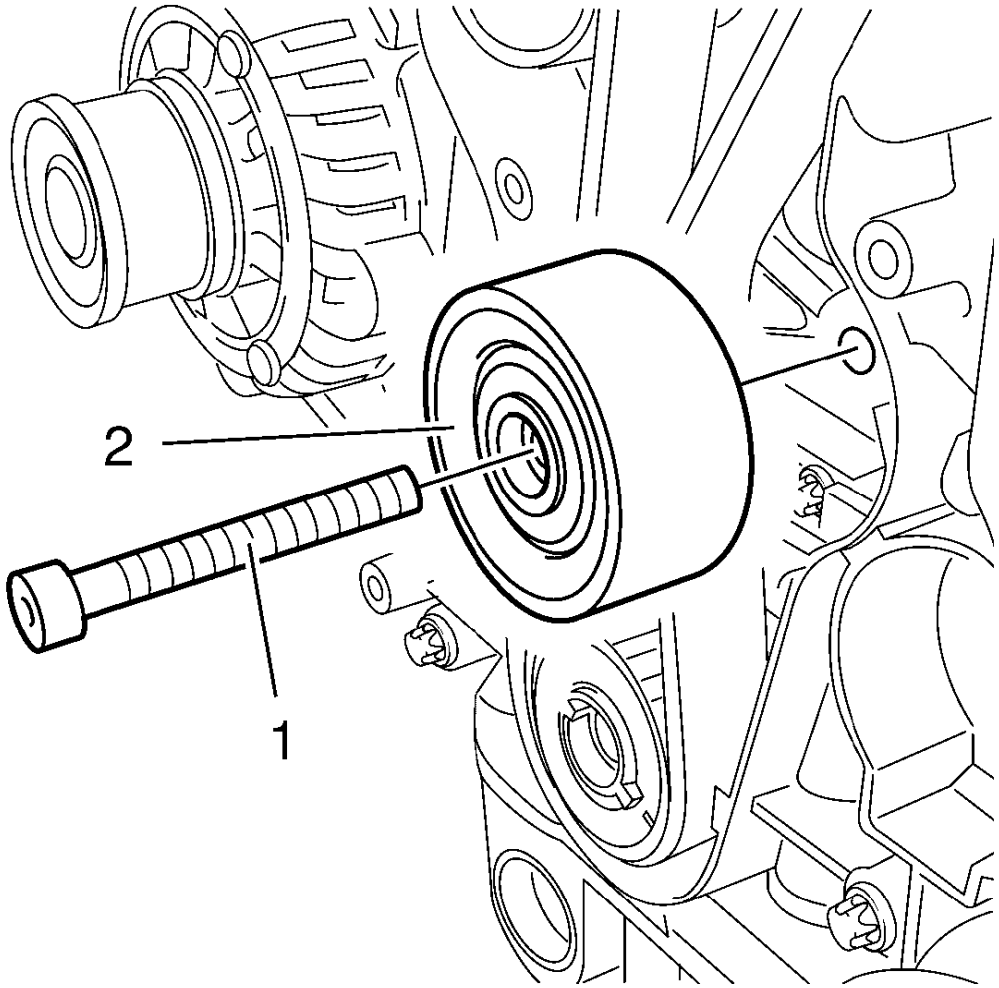

Fig. 81: Timing Belt Idler Pulley Bolt
Courtesy of GENERAL MOTORS COMPANY

2. Remove and DISCARD the timing belt idler pulley bolt (2).
3. Remove the timing belt idler pulley (1).

Installation Procedure

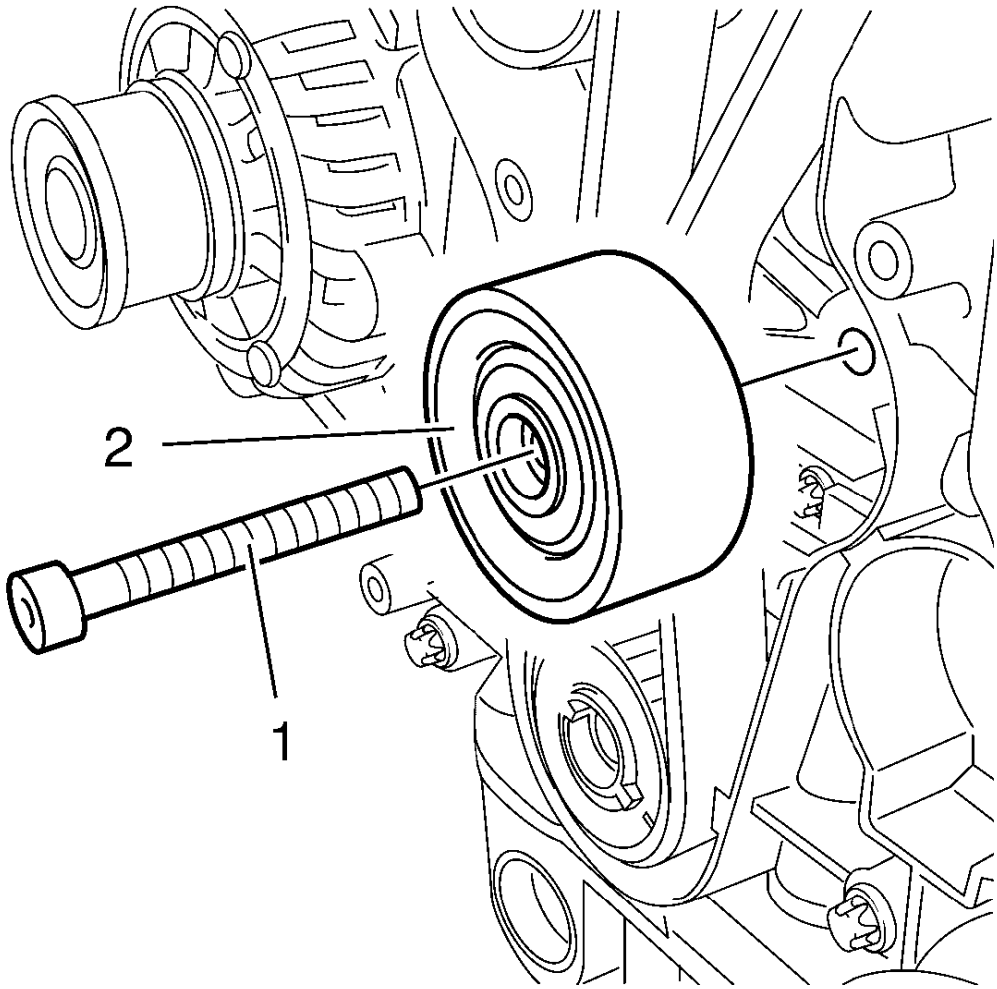

Fig. 82: Timing Belt Idler Pulley Bolt
Courtesy of GENERAL MOTORS COMPANY

CAUTION: Refer to Fastener Caution .

CAUTION: Refer to Torque-to-Yield Fastener Caution .

1. Install the timing belt idler pulley (1) and tighten the NEW bolt (2) in three passes use the **EN-45059** meter :
    1. First pass tighten to 20 N.m (15 lb ft).
    2. Second pass to 120 degrees.
    3. Final pass to 15 degrees.
2. Install the timing belt. Refer to **Timing Belt Replacement**.

TIMING BELT TENSIONER REPLACEMENT

Special Tools

- **EN-6333** Timing Belt Tensioner Locking Pin
- **EN-6340** Camshaft Locking Tool
- **EN-6625** Crankshaft Locking Device
- **EN-45059** Torque Angle Sensor Kit

For equivalent regional tools, refer to **Special Tools**.

Removal Procedure

1. Open the hood.
2. Remove the air cleaner assembly. Refer to **Air Cleaner Assembly Replacement (1.8L LWE)** , **Air Cleaner Assembly Replacement (1.8L LUW)** .
3. Remove the timing belt upper front cover. Refer to **Timing Belt Upper Front Cover Removal**.
4. Raise and support the vehicle. Refer to **Lifting and Jacking the Vehicle** .
5. Remove the right front wheelhouse liner. Refer to **Front Wheelhouse Liner Replacement** .
6. Remove the drive belt tensioner. Refer to **Drive Belt Tensioner Replacement**.
7. Remove the front compartment insulator. Refer to **Front Compartment Insulator Replacement** .
8. Set the engine to top dead center (TDC).
9. For vehicle with manual transmission: Remove the transmission front mount. Refer to **Transmission Front Mount Replacement** .

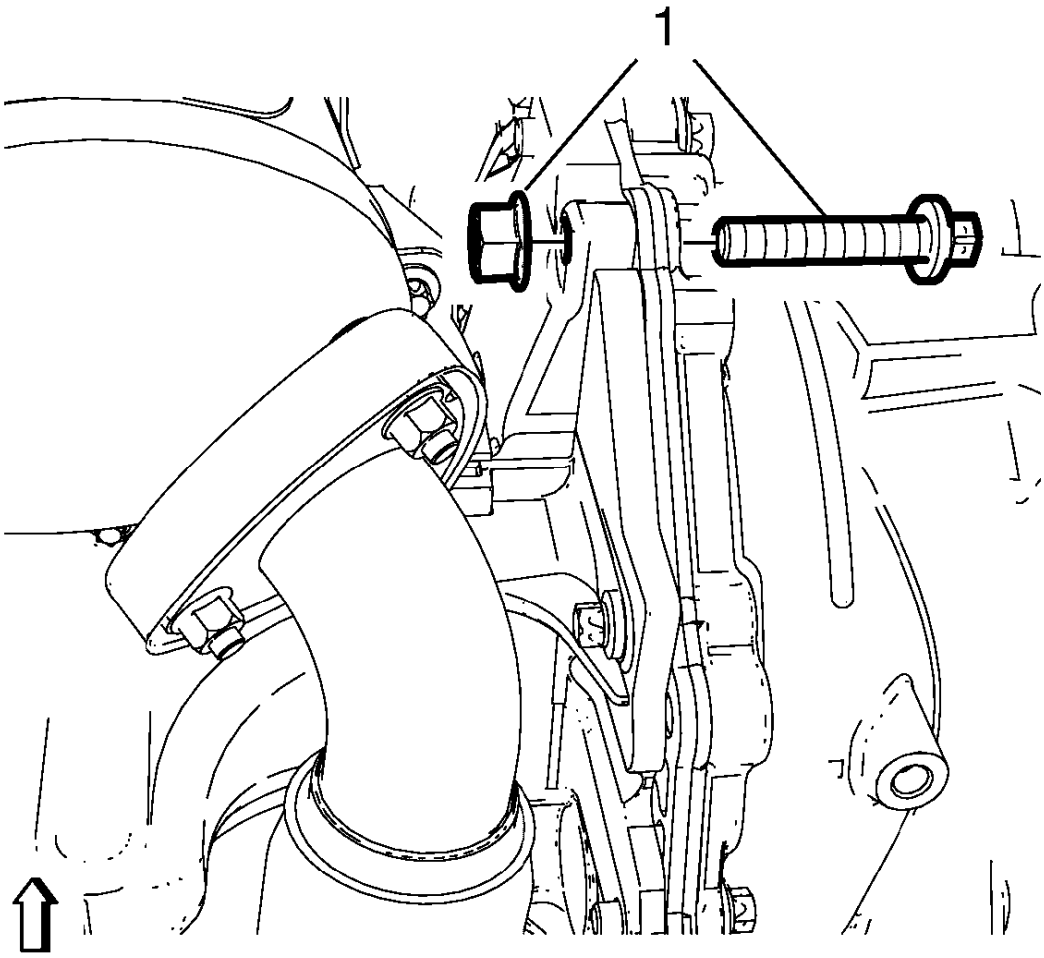

Fig. 83: Connection Bolt
Courtesy of GENERAL MOTORS COMPANY

10. For vehicle with manual transmission: Remove the bolted connection (1).

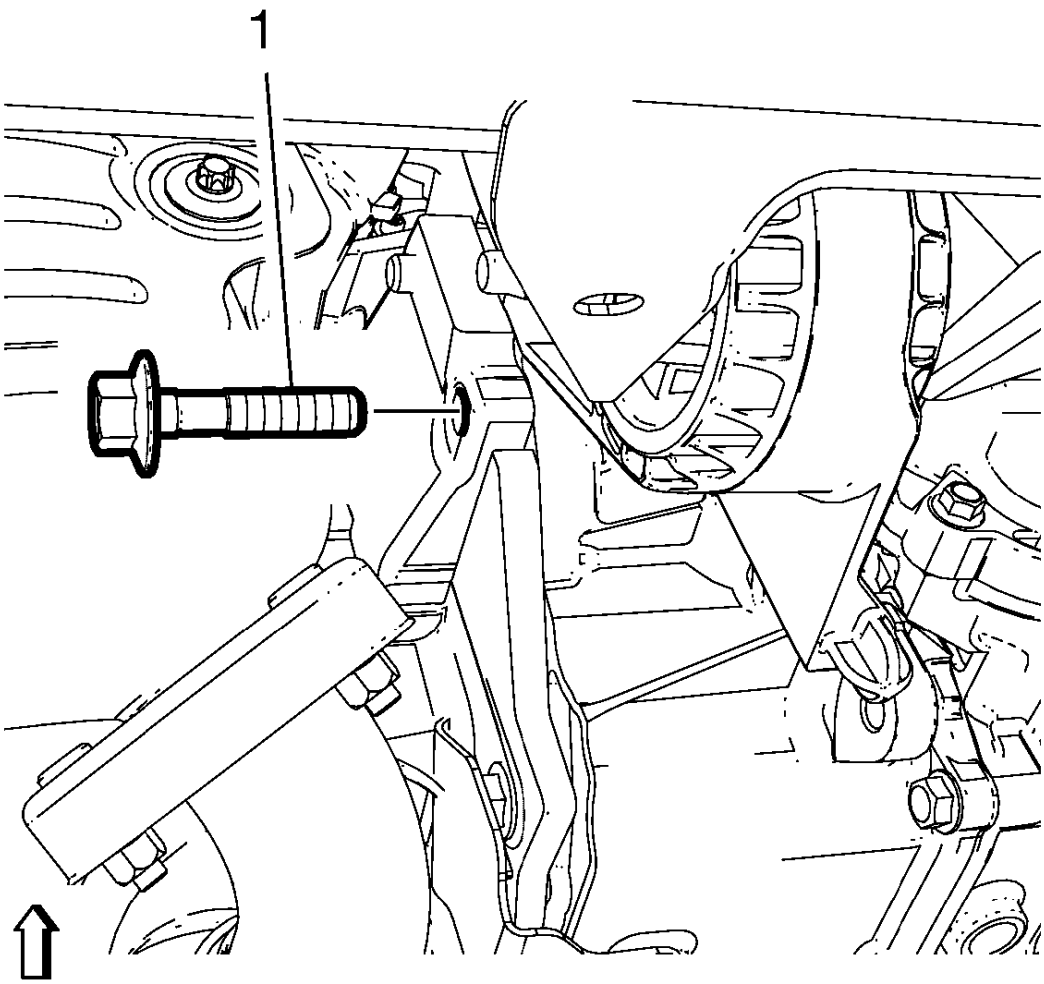

Fig. 84: Automatic Transmission Bracket Bolt
Courtesy of GENERAL MOTORS COMPANY

11. For vehicle with automatic transmission: Remove the bolt (1).

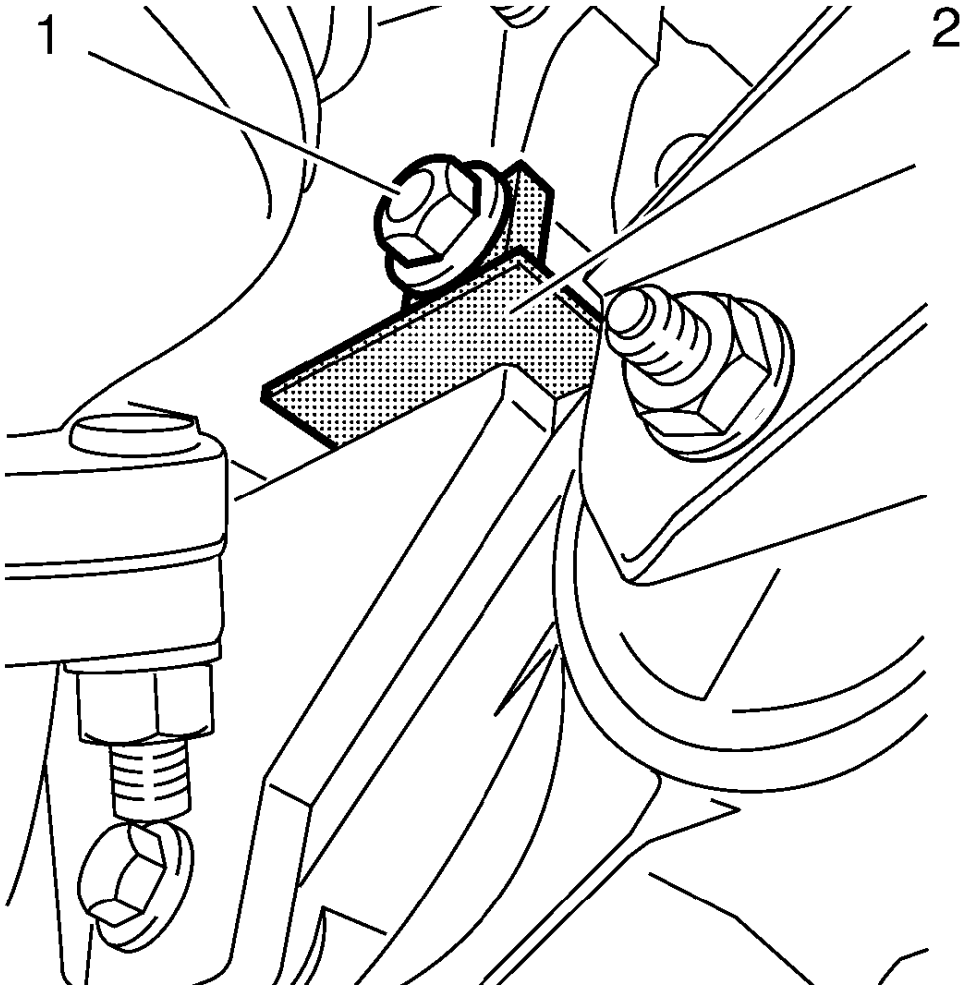

Fig. 85: Locking Device And Bolt
Courtesy of GENERAL MOTORS COMPANY

12. Install **EN-6625** locking device (2) to block the crankshaft.
13. Install the bolt or bolted connection (1).

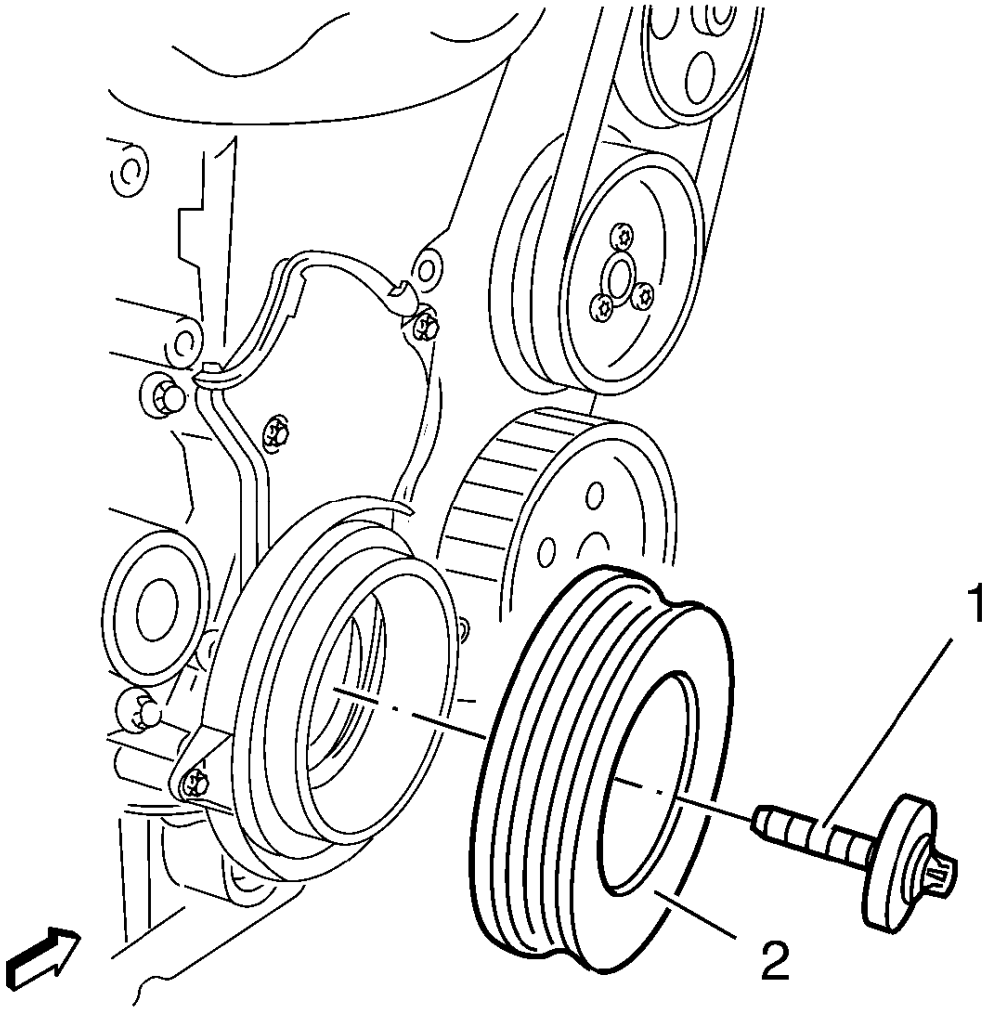

Fig. 86: Crankshaft Balancer And Bolt
Courtesy of GENERAL MOTORS COMPANY

14. Remove and DISCARD the crankshaft balancer bolt (1).

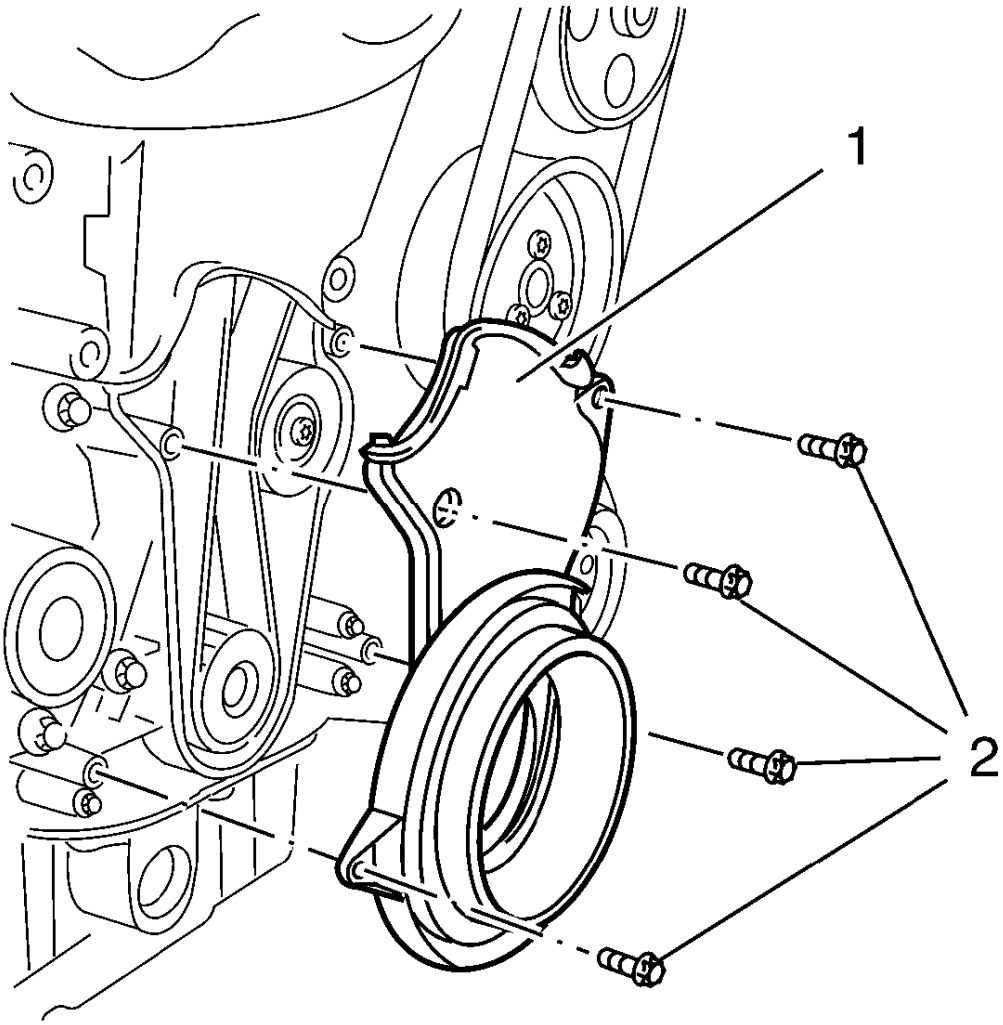

Fig. 87: Timing Belt Lower Front Cover
Courtesy of GENERAL MOTORS COMPANY

15. Remove the 4 lower timing belt cover bolts (2).
16. Remove the lower timing belt cover (1).
17. Lower the vehicle.

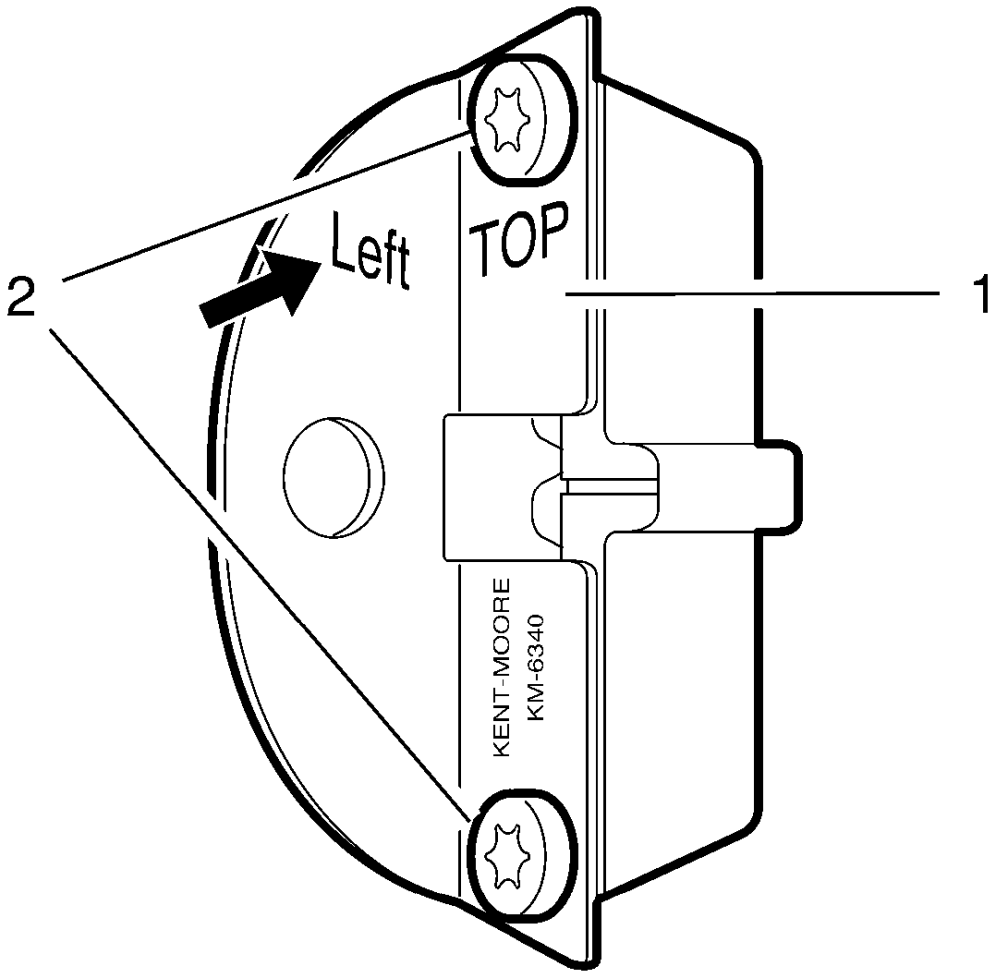

Fig. 88: Locking Tool
Courtesy of GENERAL MOTORS COMPANY

NOTE: The left half of the EN-6340 locking tool can be recognized by the lettering "left", arrow, on the tool.

18. Prepare the left half of the **EN-6340** locking tool.
    1. Remove the 2 bolts (2)
    2. Remove the front panel (1) from the **EN-6340** locking tool - left.

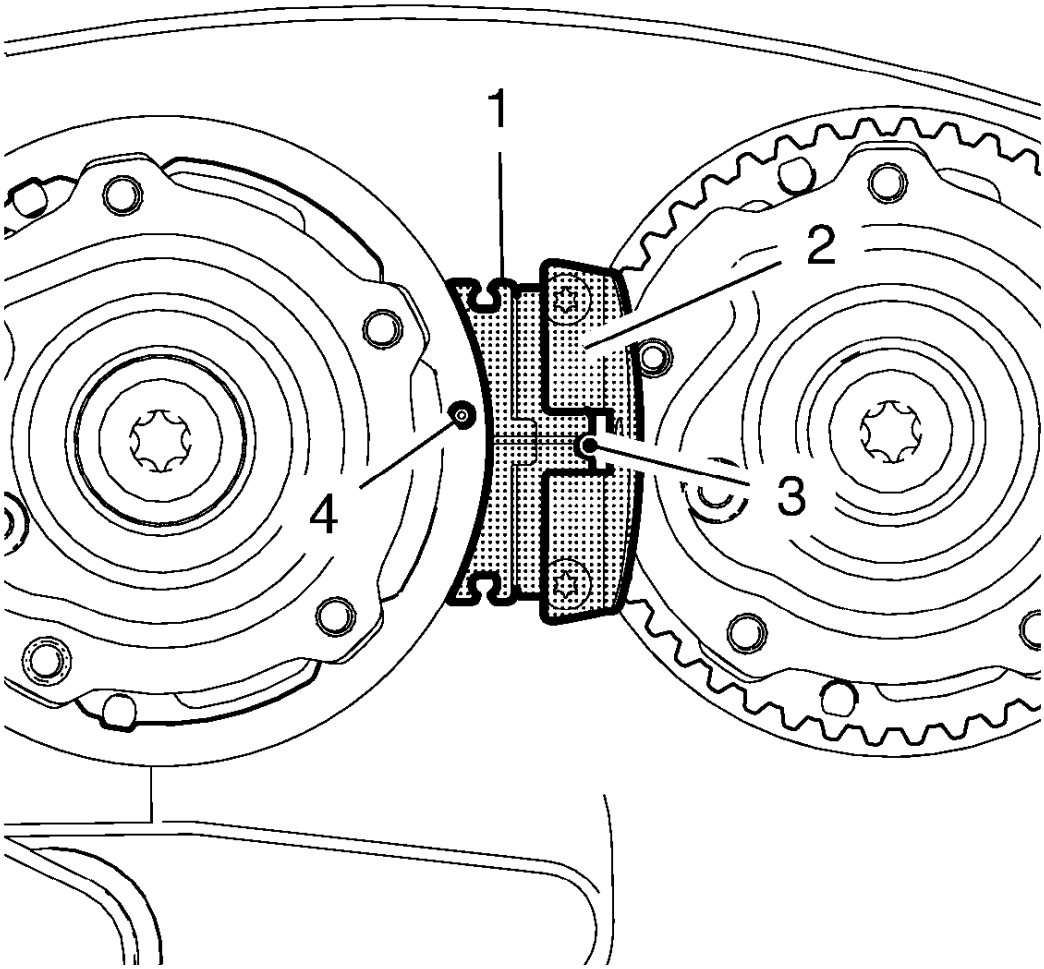

Fig. 89: Camshaft Adjuster Locking Tool
Courtesy of GENERAL MOTORS COMPANY

19. Install the **EN-6340** locking tool into the camshaft adjusters.

NOTE: The spot type marking (4) on the intake camshaft adjuster does not correspond to the groove of EN-6340-left during this process but must be somewhat above as shown.

1. Install the **EN-6340** locking tool - left (1) in the camshaft adjusters as shown.

NOTE: The spot type marking (3) on the exhaust camshaft adjuster must correspond to the groove on EN-6340-right.

2. Install **EN-6340** locking tool - right (2) in the camshaft adjusters as shown.

20. Remove **EN-6340** locking tool.

21. Raise and support the vehicle. Refer to **Lifting and Jacking the Vehicle** .

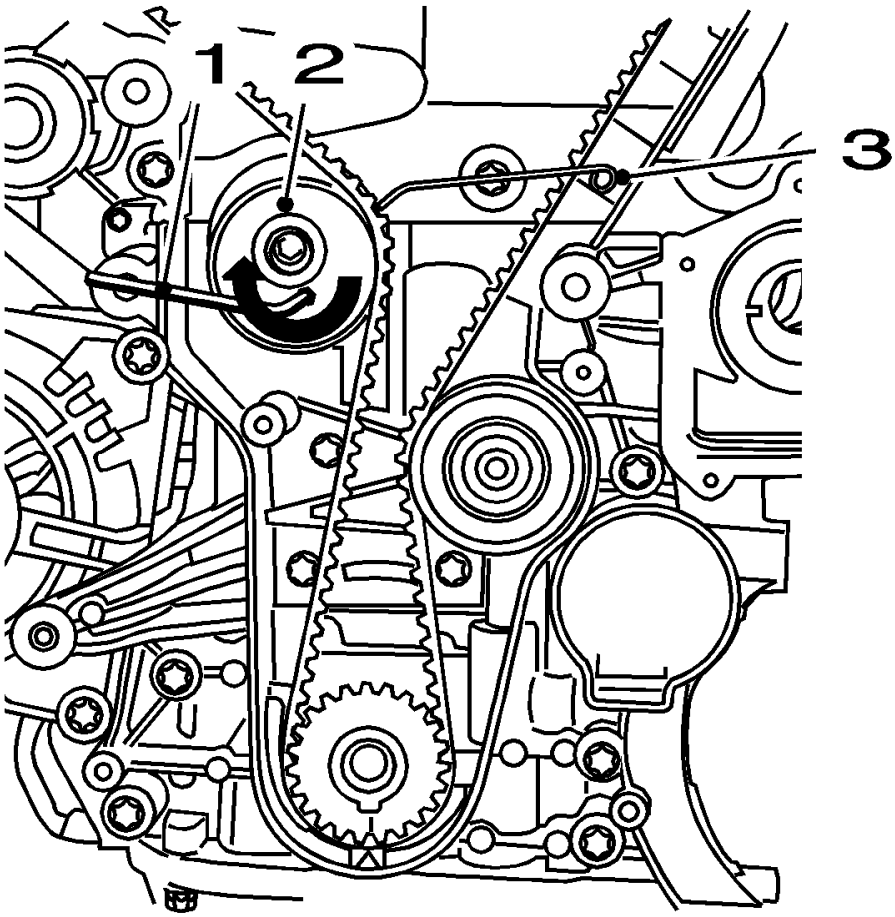

Fig. 90: View Of Drive Belt Tensioner, Allen Key And KM-6333
Courtesy of GENERAL MOTORS COMPANY

22. Apply tension to the drive belt tensioner (2) in the direction of the arrow, using an allen key (1).
23. Install the **EN-6333** locking pin (3).
24. Lower the vehicle.
25. Remove the engine mount bracket. Refer to **Engine Mount Bracket Replacement**.
26. Remove the timing belt center front cover. Refer to **Timing Belt Center Front Cover Removal**.

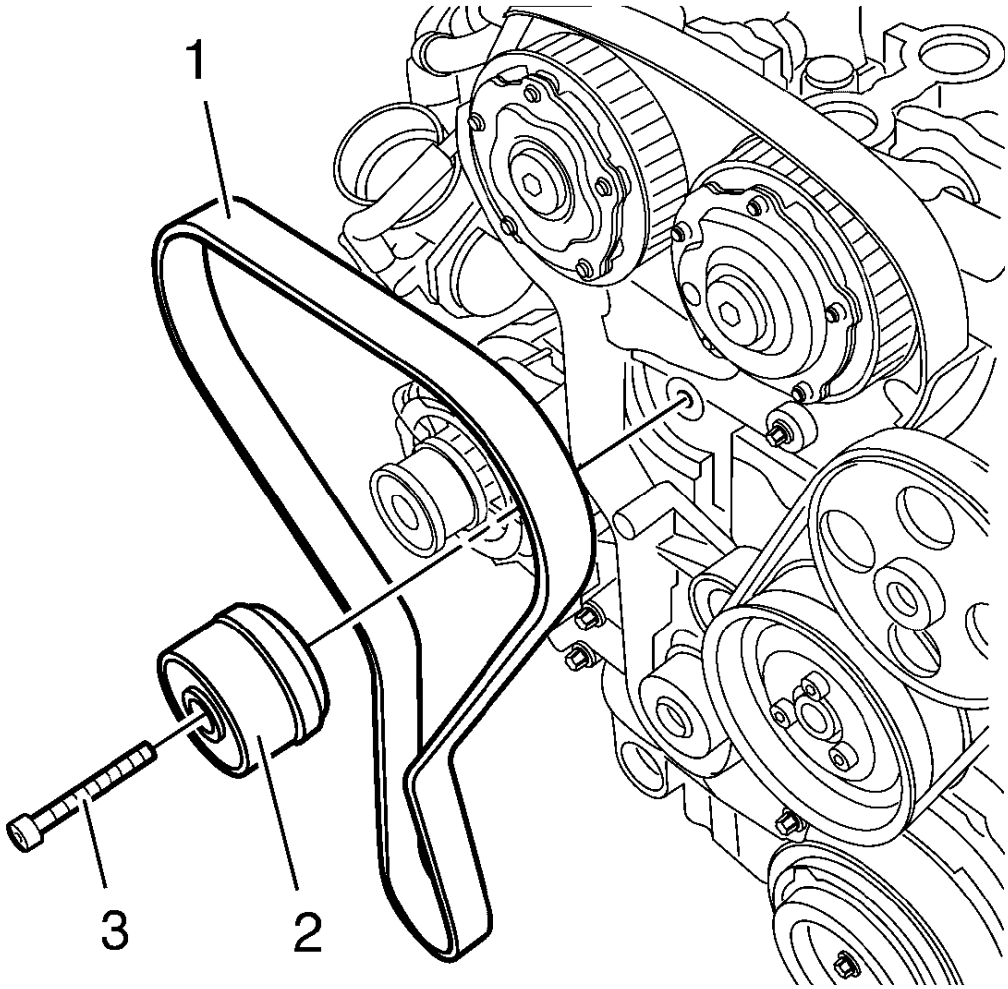

Fig. 91: Timing Belt, Timing Belt Tensioner
Courtesy of GENERAL MOTORS COMPANY

NOTE: Note the direction of the belt, if the timing belt will be reused.

27. Remove the timing belt (1).
28. Remove and DISCARD the timing belt tensioner bolt (3).
29. Remove the timing belt tensioner (2).

Installation Procedure

1. Re-cut the timing belt tensioner thread.

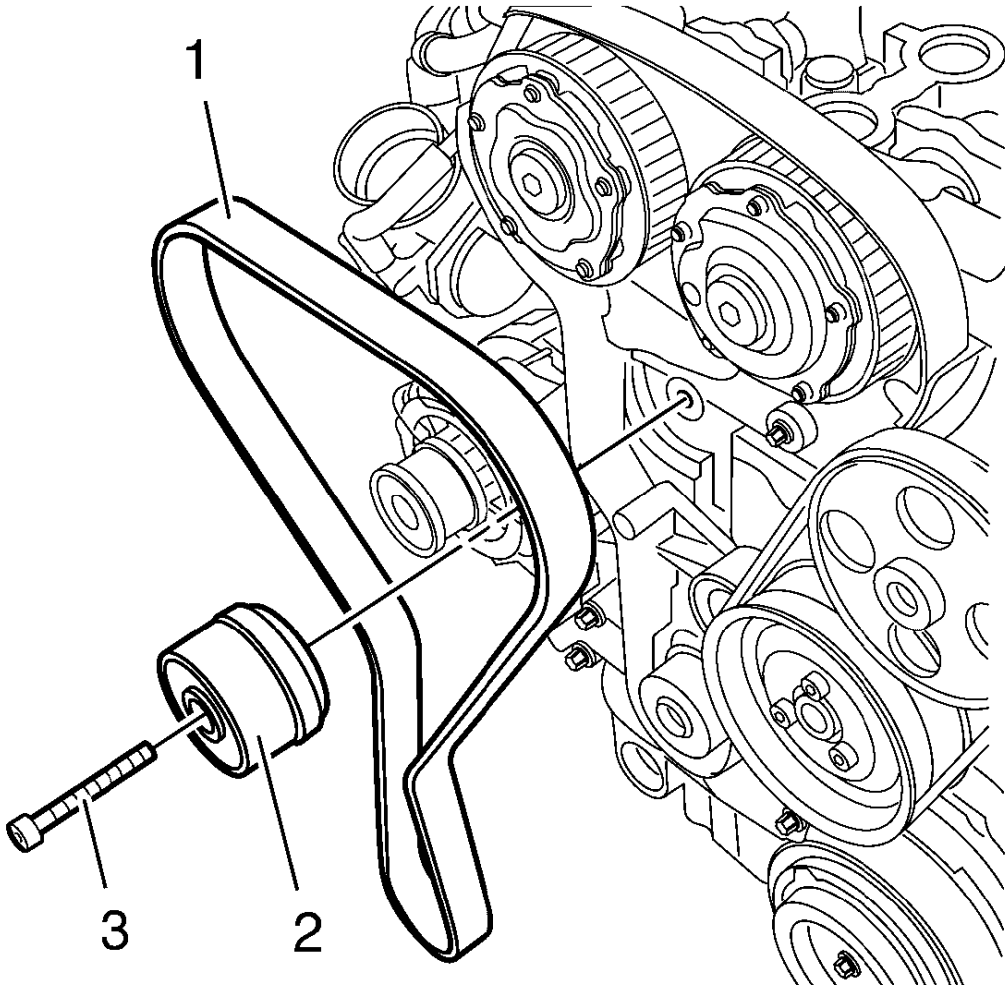

Fig. 92: Timing Belt, Timing Belt Tensioner
Courtesy of GENERAL MOTORS COMPANY

2. Install the timing belt tensioner (2).

NOTE: Service may offer bolts that are not microencapsulated. If this is the case apply thread lock agent to the bolt.

3. If fastener is microencapsulated, install a NEW timing belt tensioner bolt (3). DO NOT reuse the old bolt.

CAUTION: Refer to Fastener Caution .

4. Tighten the timing belt tensioner bolt to 20 N.m (15 lb ft).
5. Install the timing belt (1).
6. Guide the timing belt past the tensioner and place it on the crankshaft sprocket wheel.

7. Place the timing belt on the exhaust and intake camshaft position actuator adjusters.
8. Install the engine mount bracket. Refer to **Engine Mount Bracket Replacement**.
9. Install the timing belt center front cover. Refer to **Timing Belt Center Front Cover Installation**.
10. Raise the vehicle.

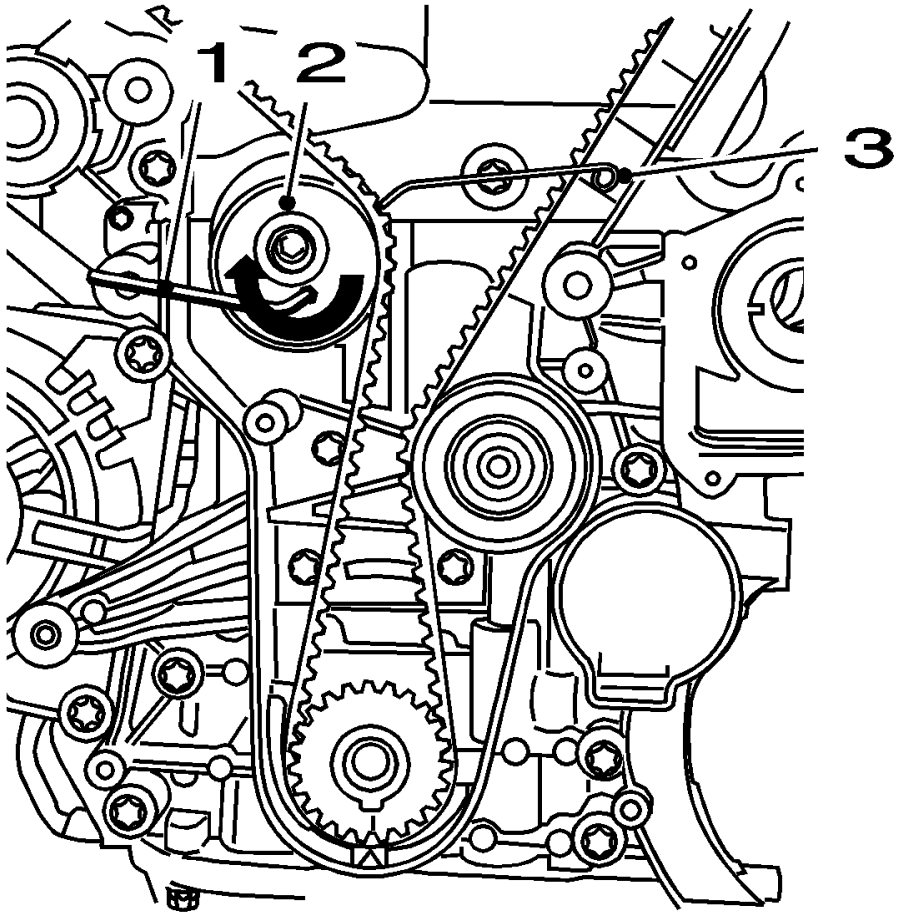

Fig. 93: View Of Drive Belt Tensioner, Allen Key And KM-6333
Courtesy of GENERAL MOTORS COMPANY

11. Apply tension to the drive belt tensioner (2) in the direction of the arrow, using an allen key (1).
12. Remove the **EN-6333** locking pin (3).

NOTE: The timing belt tensioner moves automatically to the correct position.

13. Release tension on timing belt tensioner.

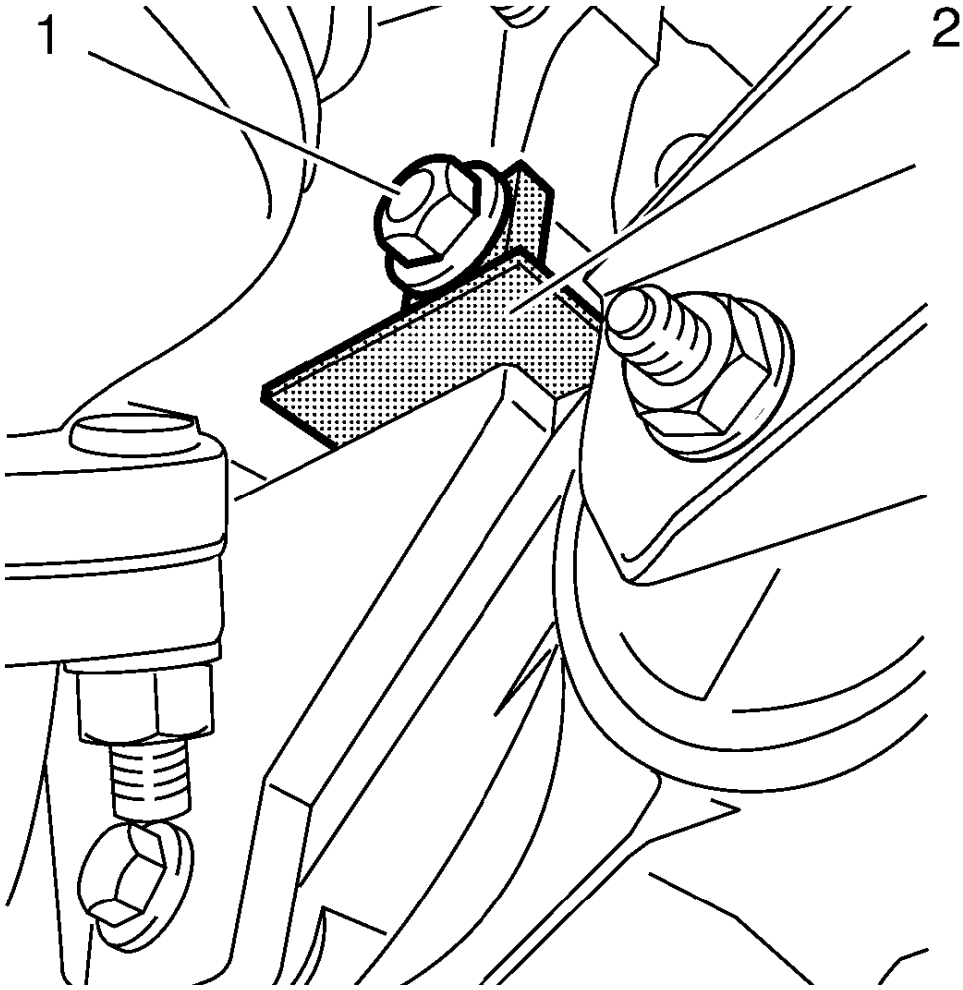

Fig. 94: Locking Device And Bolt
Courtesy of GENERAL MOTORS COMPANY

14. Remove bolt or bolted connection (1).
15. Remove **EN-6625** locking device (2).
16. Lower the vehicle.
17. Remove the **EN-6340** locking tool.

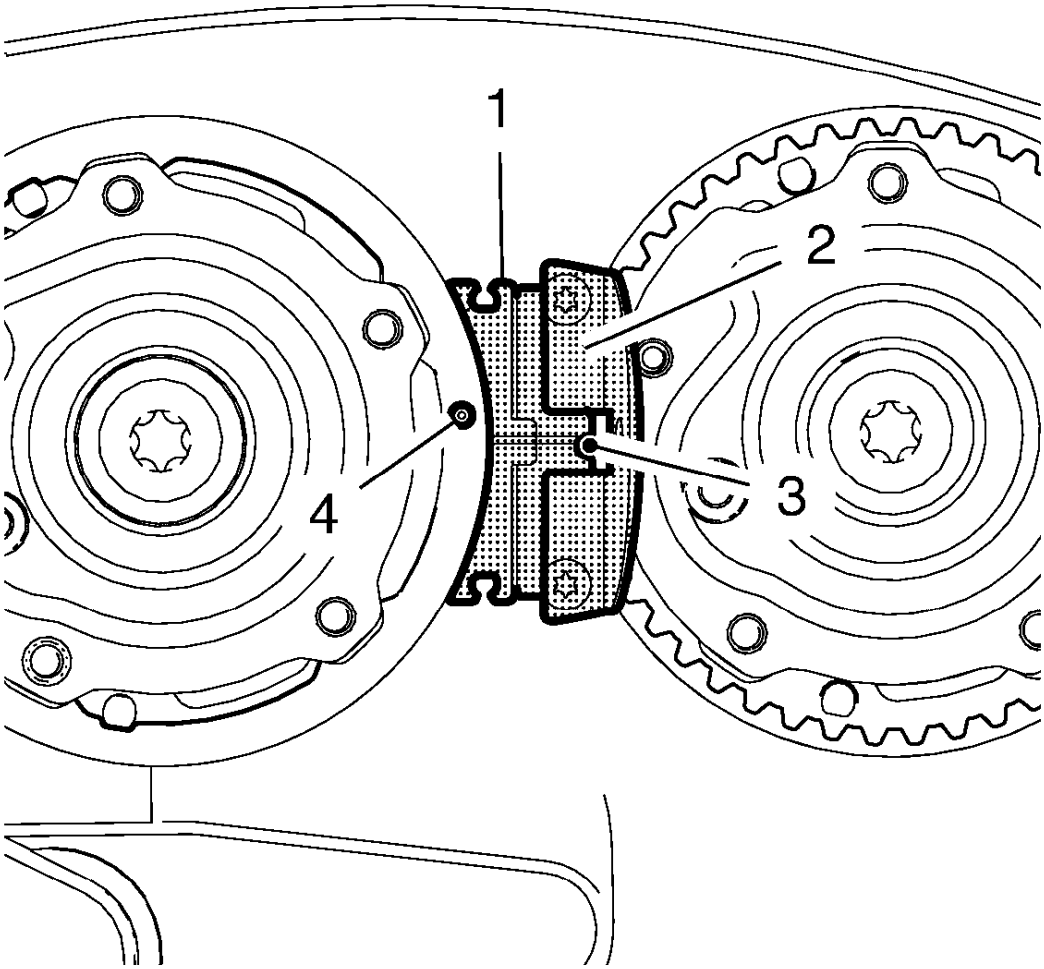

Fig. 95: Camshaft Adjuster Locking Tool
Courtesy of GENERAL MOTORS COMPANY

18. Check the timing

NOTE: Note the marking at the camshaft sprockets.

1. Turn the crankshaft 720° in the direction of engine rotation by the crankshaft balancer bolt.

NOTE: The spot type marking (4) on the intake camshaft adjuster does not correspond to the groove of EN-6340-left during this process but must be somewhat above as shown.

2. Install **EN-6340-left** locking tool (1) into the camshaft adjusters as shown.

NOTE: The spot type marking (3) on the exhaust camshaft adjuster must

correspond to the groove on EN-6340-right.

3. Install **EN-6340-right** locking tool (2) into the camshaft adjusters as shown.

19. Remove the **EN-6340** locking tool.
20. Raise and support the vehicle. Refer to **Lifting and Jacking the Vehicle** .

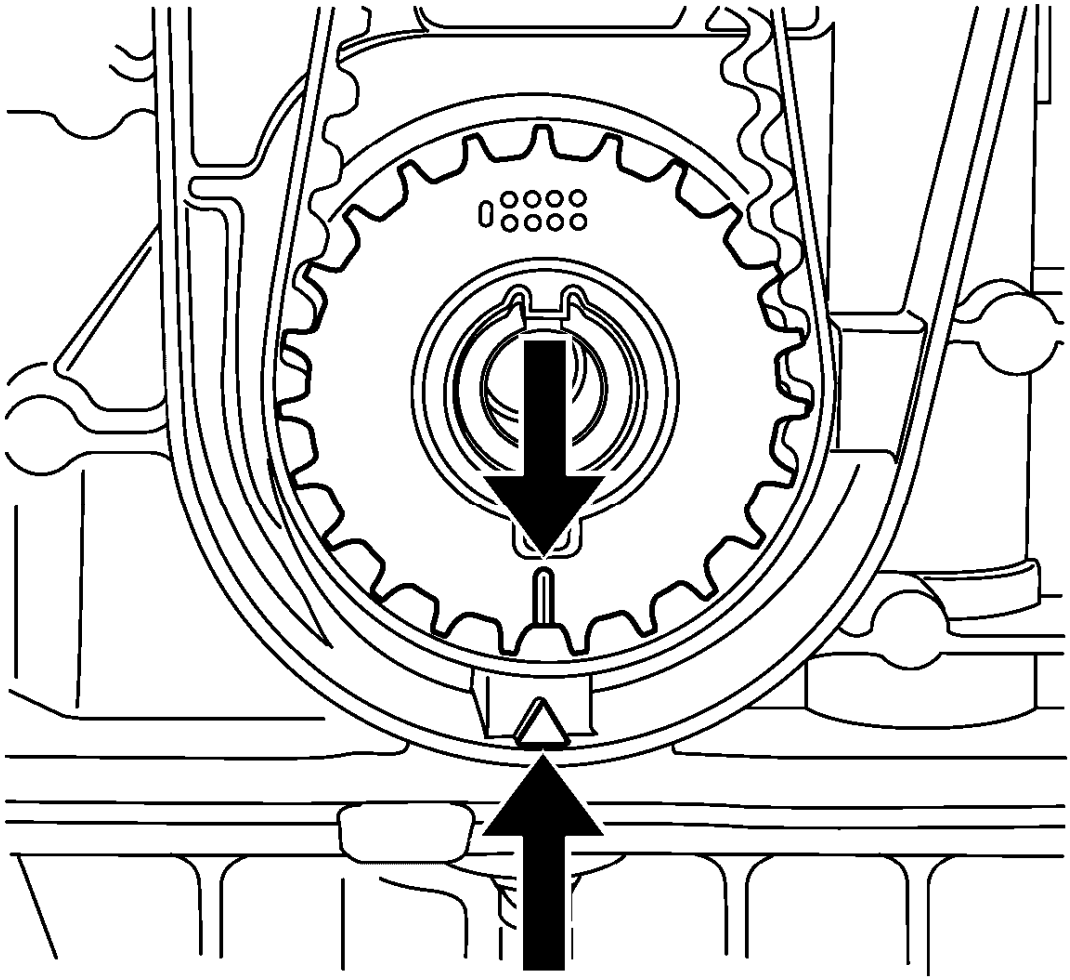

Fig. 96: Aligning Timing Belt Drive Gear And Oil Pump Housing
Courtesy of GENERAL MOTORS COMPANY

NOTE: The timing belt drive gear and oil pump housing must align.

21. Control the crankshaft balancer position.

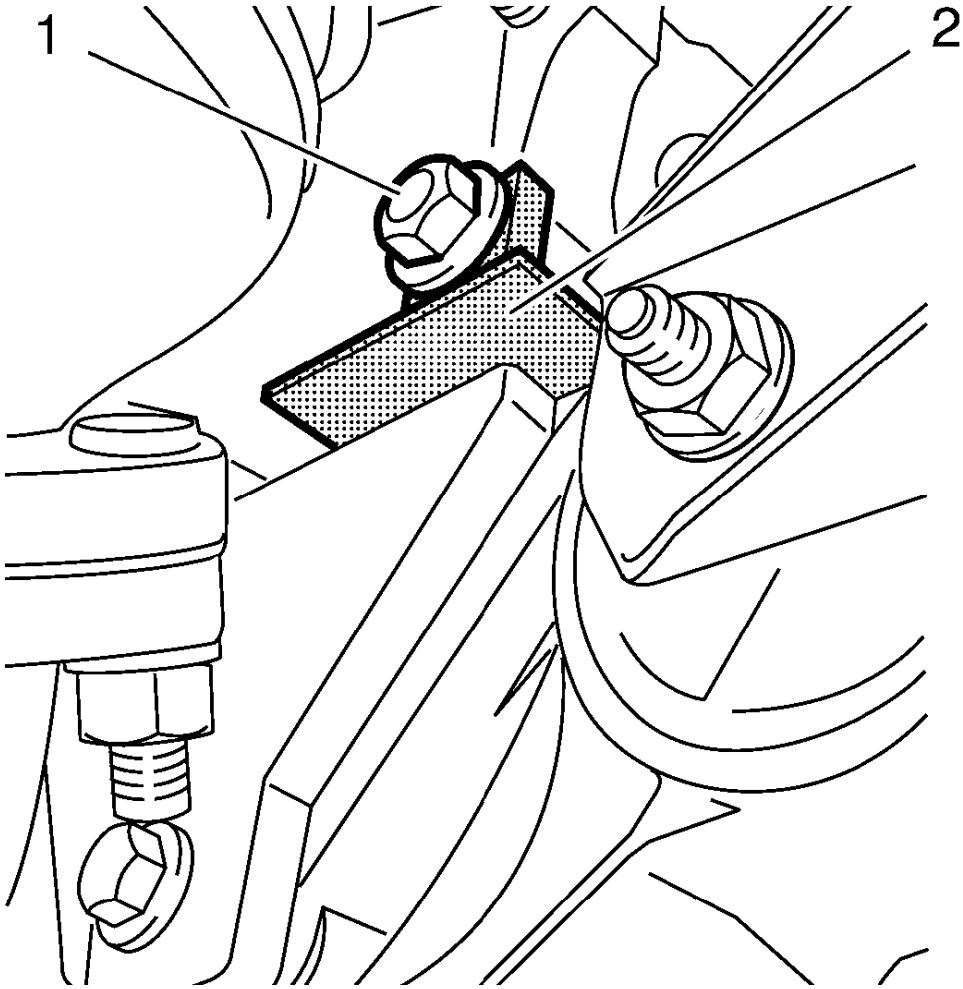

Fig. 97: Locking Device And Bolt
Courtesy of GENERAL MOTORS COMPANY

22. Install **EN-6625** locking device (2) to block the crankshaft.
23. Install the bolt or bolted connection (1).

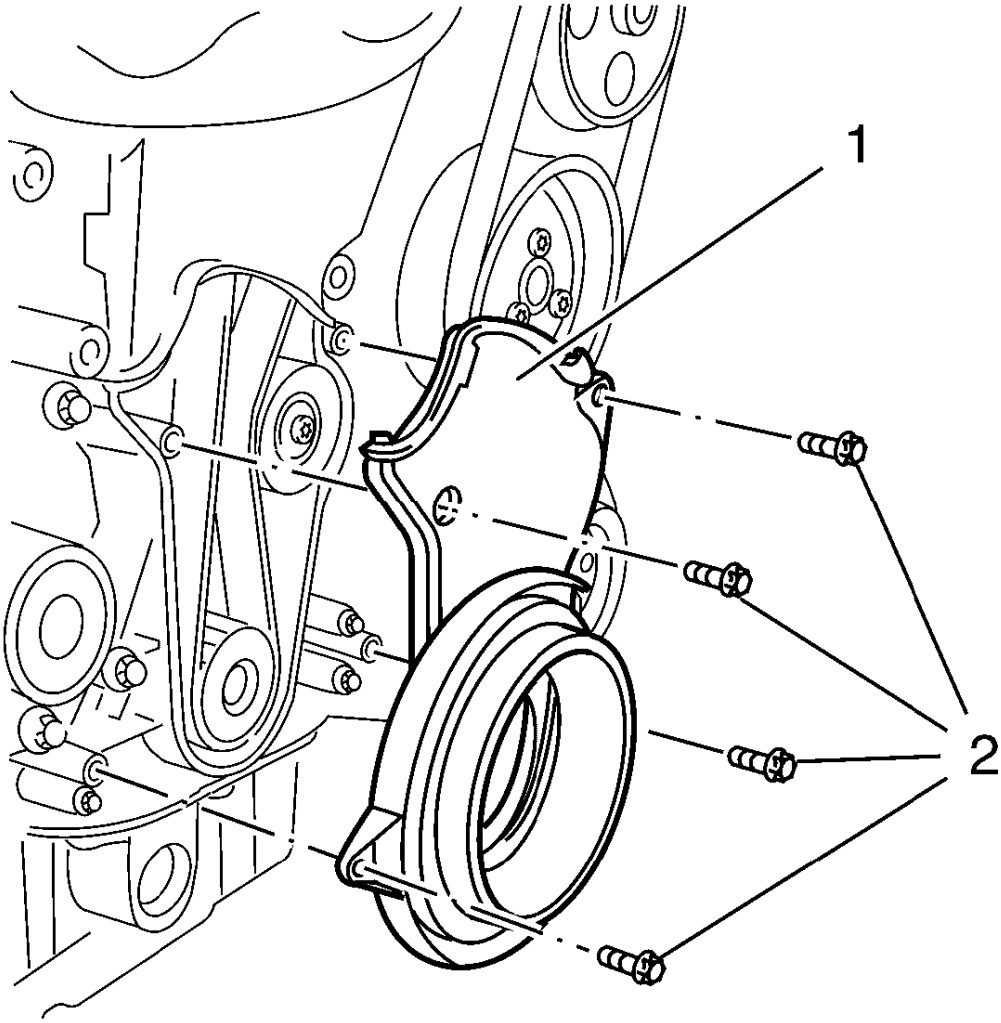

Fig. 98: Timing Belt Lower Front Cover
Courtesy of GENERAL MOTORS COMPANY

24. Install the lower timing belt cover (1).
25. Install the 4 lower timing belt cover bolts (2) and tighten to 6 N.m (53 lb in).

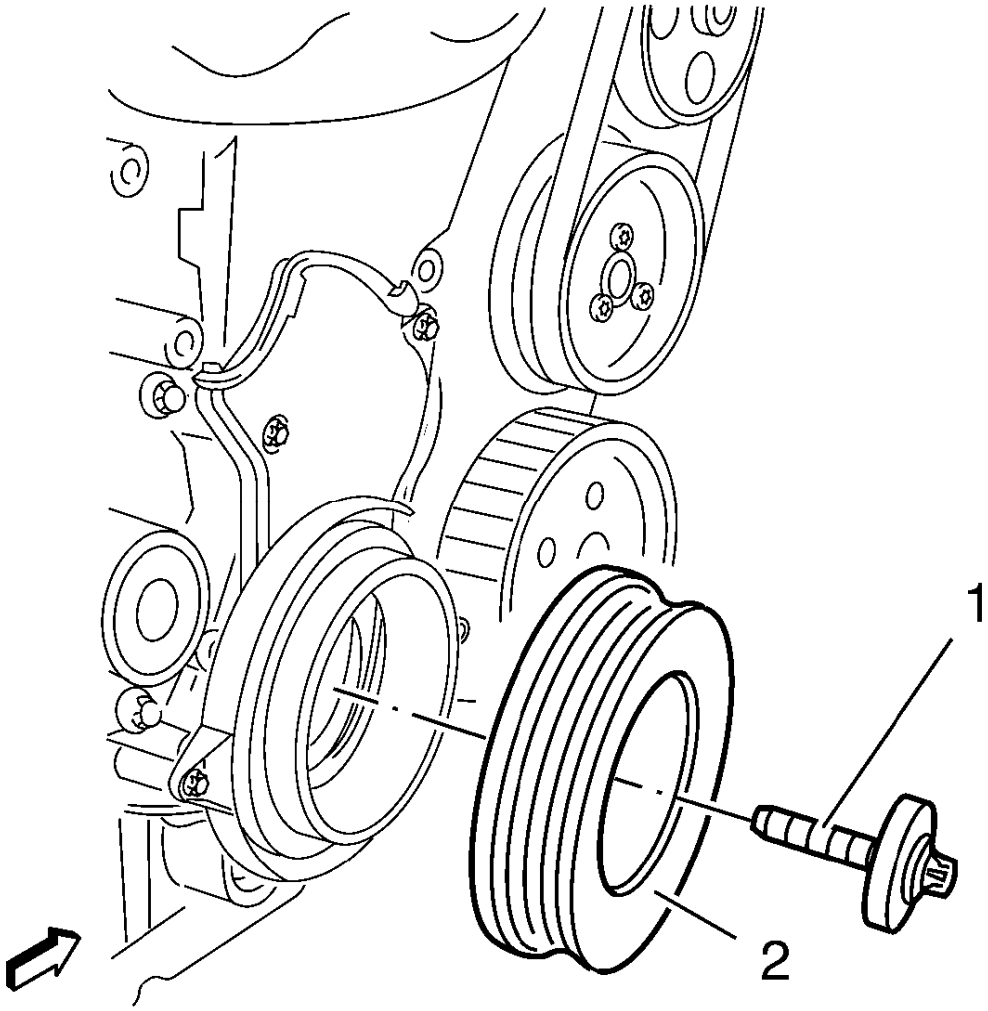

Fig. 99: Crankshaft Balancer And Bolt
Courtesy of GENERAL MOTORS COMPANY

CAUTION: Refer to Torque-to-Yield Fastener Caution in the Preface section.

26. Install the crankshaft balancer (2).
27. Install a NEW crankshaft balancer bolt (1) and tighten in 3 passes using the **EN-45059** sensor kit :
    1. First pass to 95 N.m (70 lb ft).
    2. Second pass to 45°.
    3. Third pass to 15°.

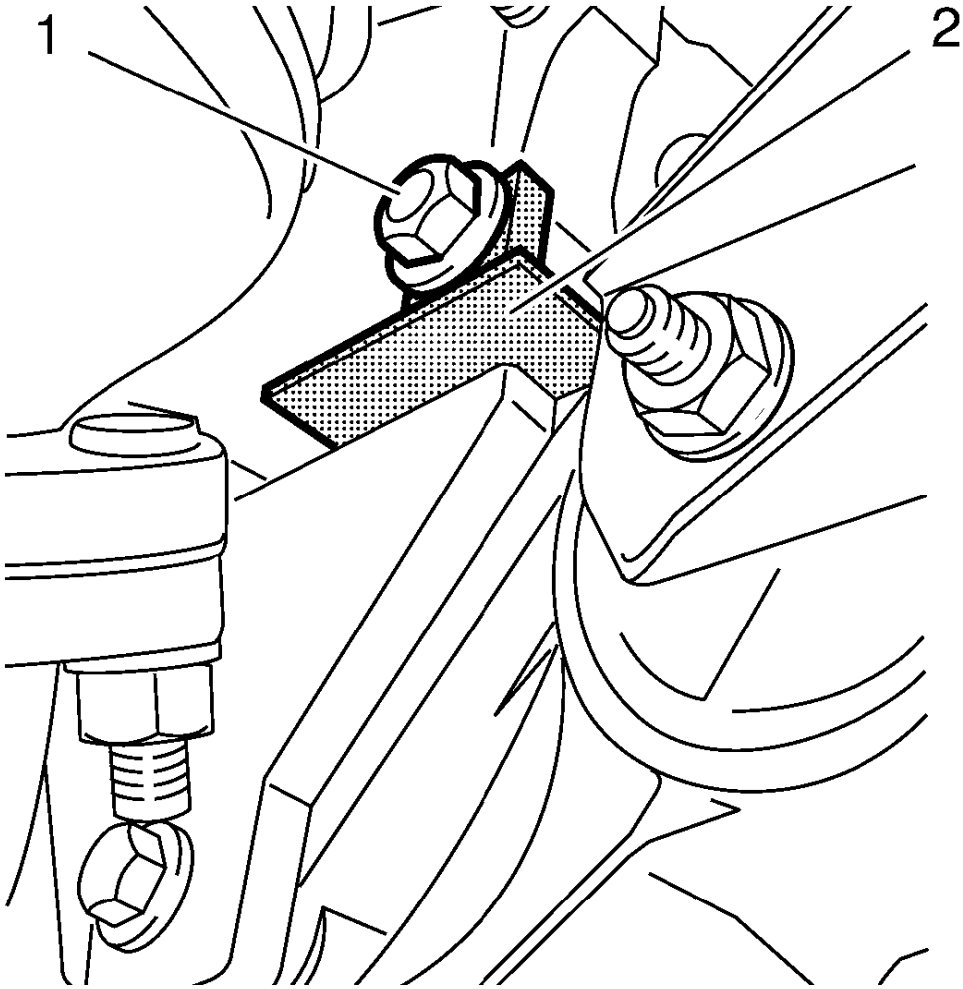

Fig. 100: Locking Device And Bolt
Courtesy of GENERAL MOTORS COMPANY

28. Remove bolt or bolted connection (1).
29. Remove **EN-6625** locking device (2).

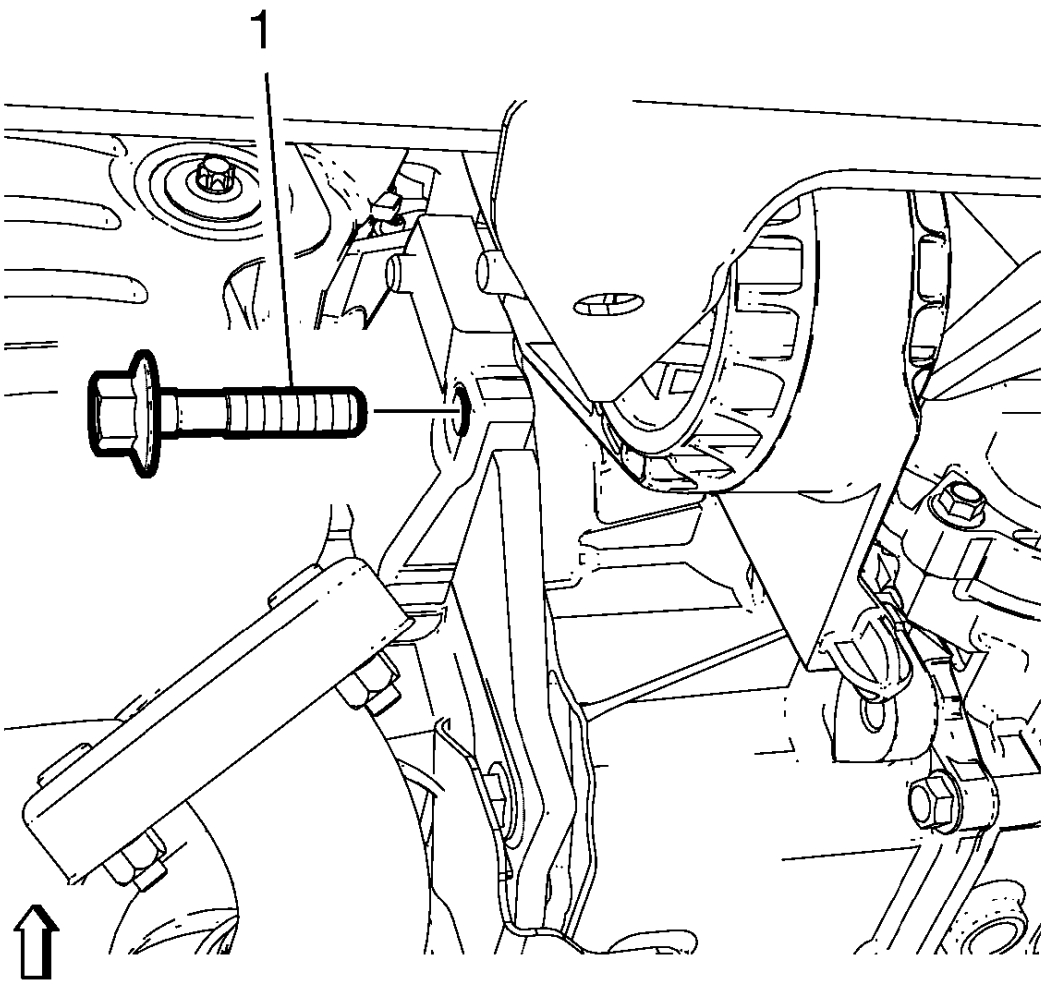

Fig. 101: Automatic Transmission Bracket Bolt
Courtesy of GENERAL MOTORS COMPANY

30. For vehicle with automatic transmission: Install the bolt (1) and tighten to 45 N.m (33 lb ft).

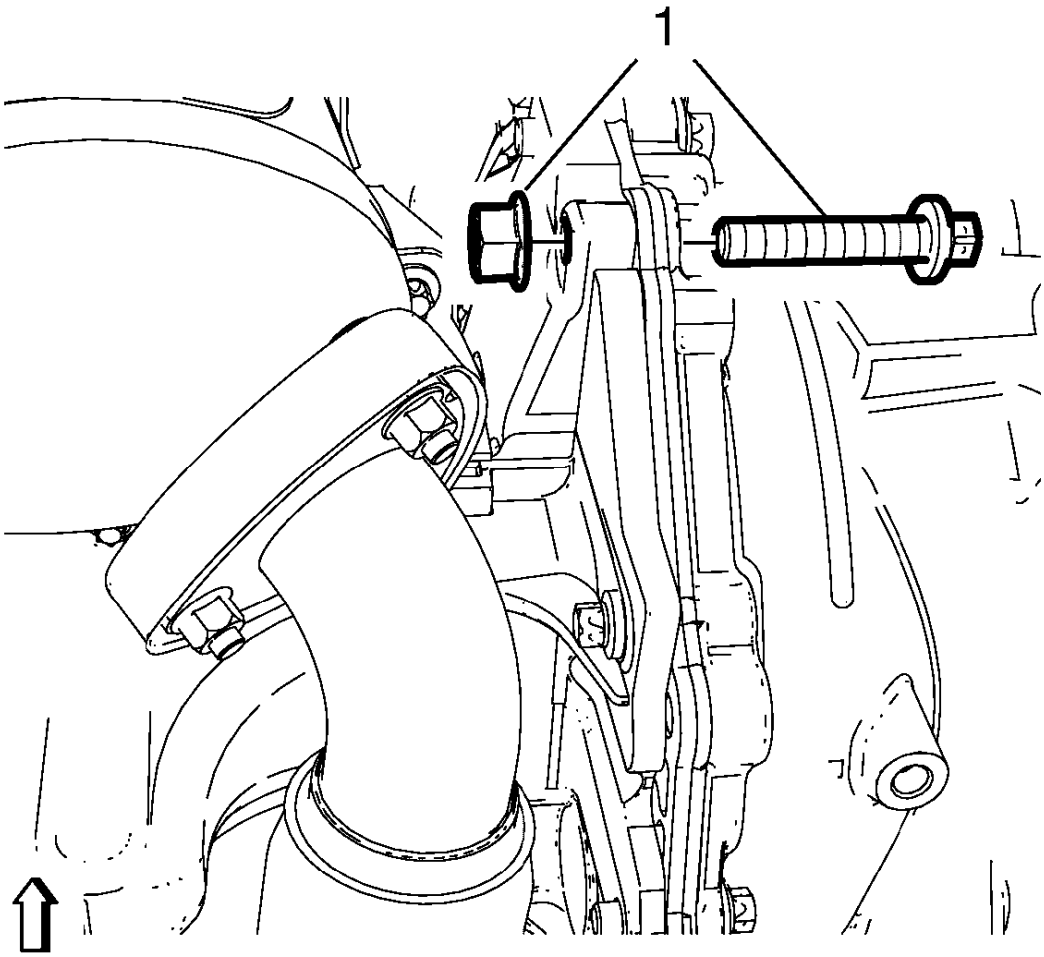

Fig. 102: Connection Bolt
Courtesy of GENERAL MOTORS COMPANY

31. For vehicle with manual transmission: Install the bolted connection (1) and tighten to 40 N.m (32 lb ft).
32. Install the drive belt tensioner. Refer to **Drive Belt Tensioner Replacement**.
33. Install the right front wheelhouse liner. Refer to **Front Wheelhouse Liner Replacement** .
34. Lower the vehicle.
35. Remove the **EN-6340** locking tool.
36. Install the timing belt upper front cover. Refer to **Timing Belt Upper Front Cover Installation**.
37. Install the air cleaner assembly. Refer to **Air Cleaner Assembly Replacement (1.8L LWE)** , **Air Cleaner Assembly Replacement (1.8L LUW)** .
38. Close the hood.

TIMING BELT CENTER FRONT COVER REPLACEMENT

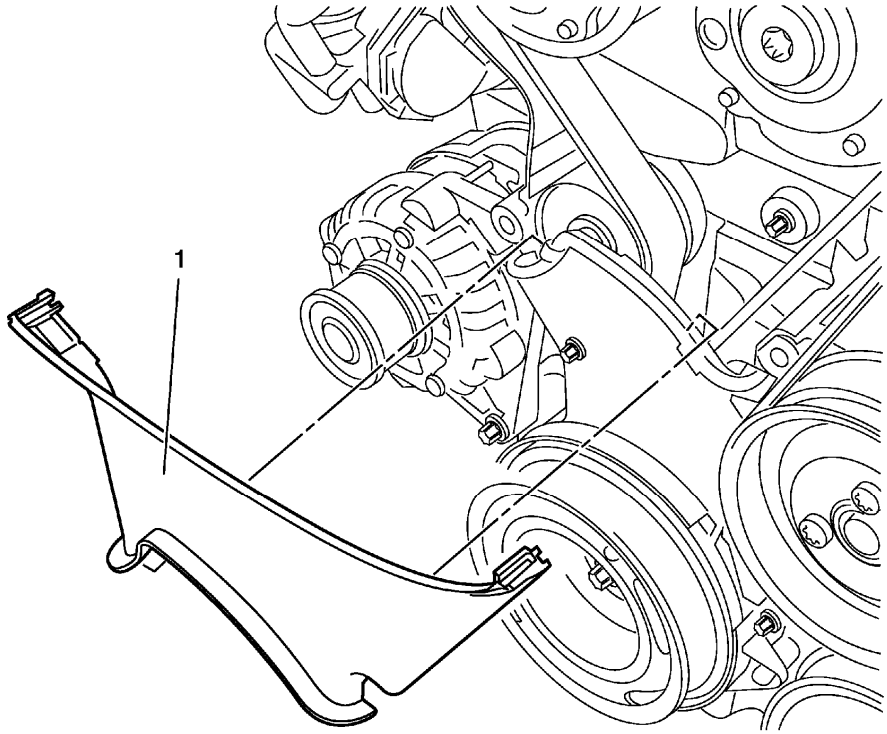

Fig. 103: Timing Belt Center Front Cover
Courtesy of GENERAL MOTORS COMPANY

Timing Belt Center Front Cover Replacement

Callout	Component Name
Preliminary Procedure 1. Remove the timing belt upper front cover. Refer to **Timing Belt Upper Front Cover Replacement**. 2. Remove the engine mount bracket. Refer to **Engine Mount Bracket Replacement**.	
1	Timing Belt Center Front Cover

TIMING BELT UPPER FRONT COVER REPLACEMENT

Removal Procedure

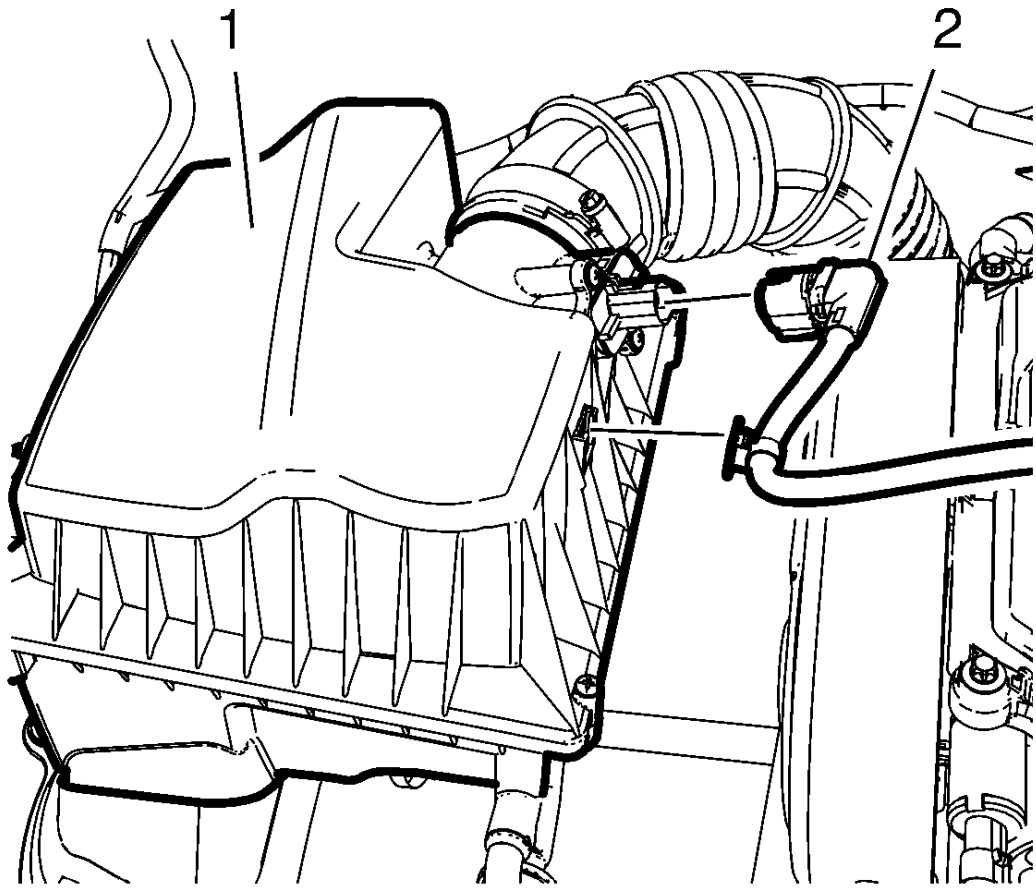

Fig. 104: Air Cleaner
Courtesy of GENERAL MOTORS COMPANY

1. Disconnect the wiring harness plug (2).
2. Unclip the wiring harness from the air cleaner (1).

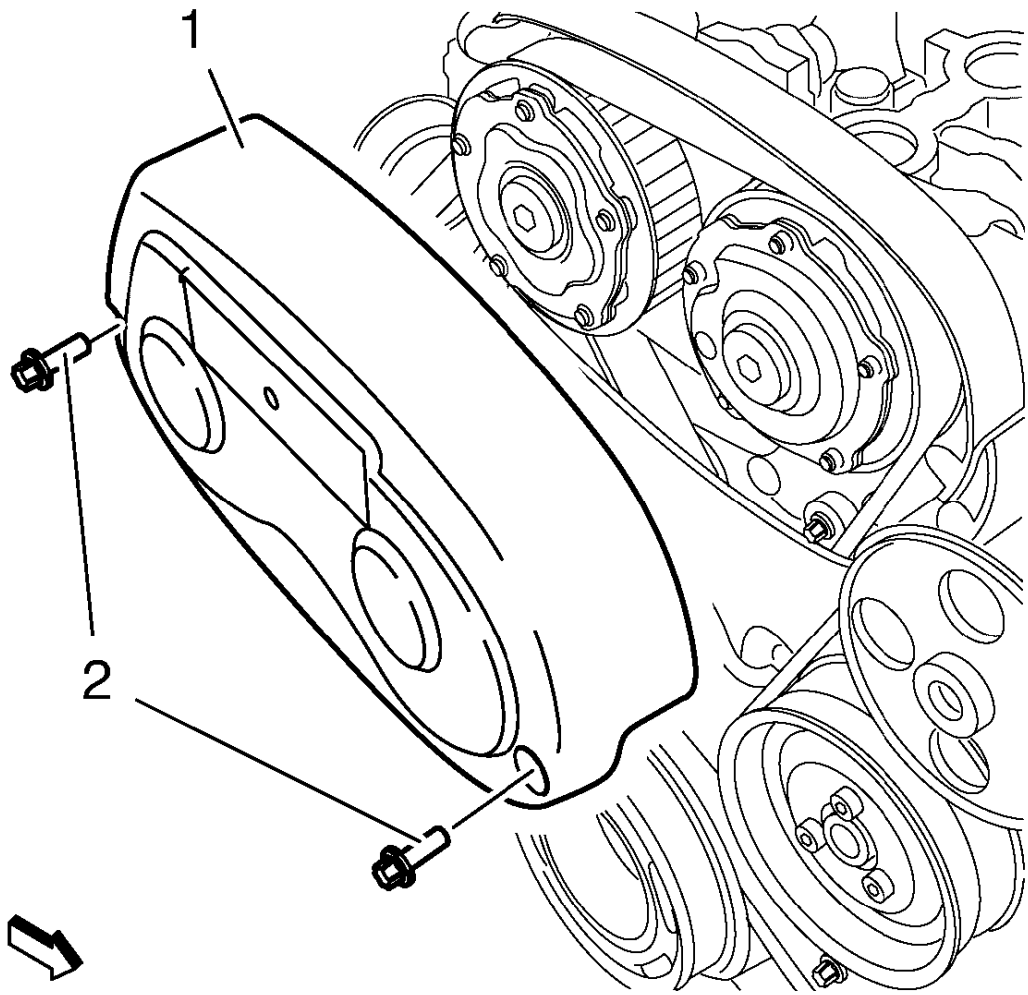

Fig. 105: Timing Belt Upper Front Cover
Courtesy of GENERAL MOTORS COMPANY

3. Remove the 2 timing belt upper front cover bolts (2).
4. Remove the timing belt upper front cover (1).

Installation Procedure

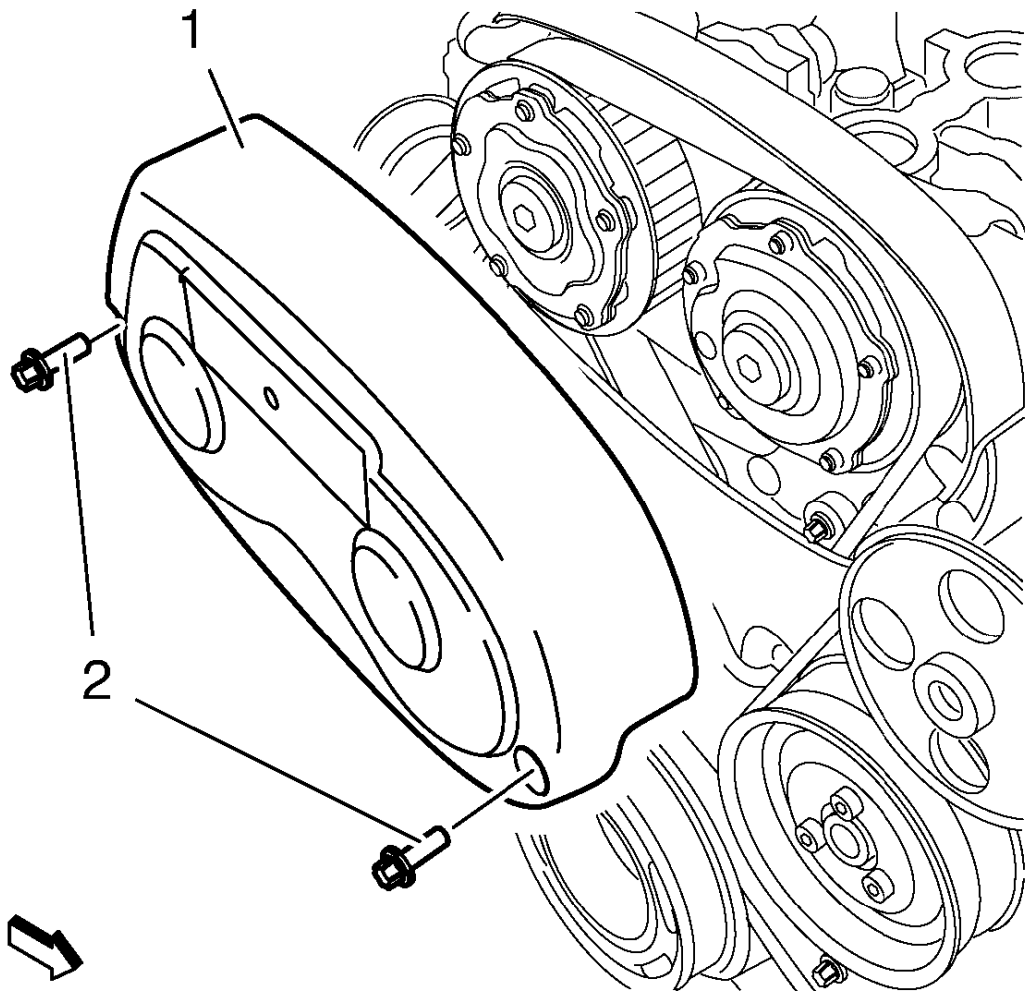

Fig. 106: Timing Belt Upper Front Cover
Courtesy of GENERAL MOTORS COMPANY

1. Install the timing belt upper front cover (1).

CAUTION: Refer to Fastener Caution .

2. Install the 2 timing belt upper front cover bolts (2) and tighten to 6 N.m (53 lb in).

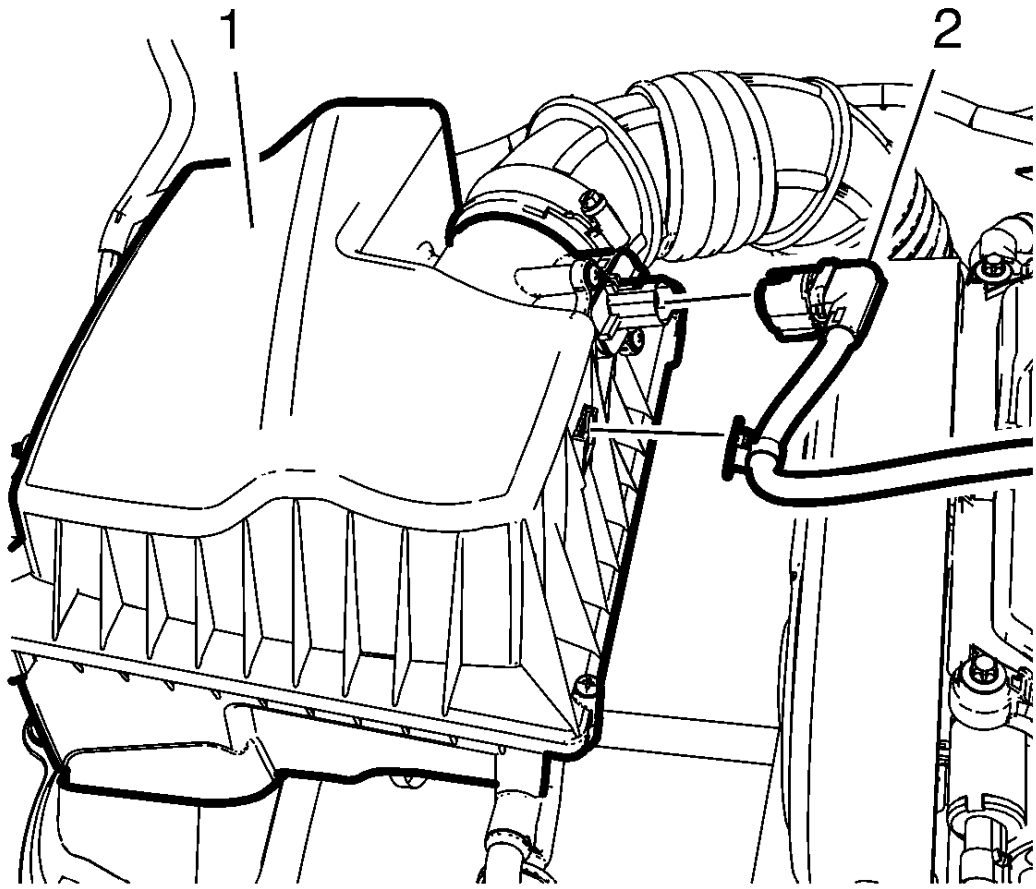

Fig. 107: Air Cleaner
Courtesy of GENERAL MOTORS COMPANY

3. Connect the wiring harness plug (2).
4. Clip in the wiring harness to the air cleaner (1).

TIMING BELT LOWER FRONT COVER REPLACEMENT

For equivalent regional tools, refer to **Special Tools**.

Removal Procedure

1. Raise and support the vehicle. Refer to **Lifting and Jacking the Vehicle** .
2. Remove the crankshaft balancer. Refer to **Crankshaft Balancer Replacement (Manual Transmission)**, **Crankshaft Balancer Replacement (Automatic Transmission)**.

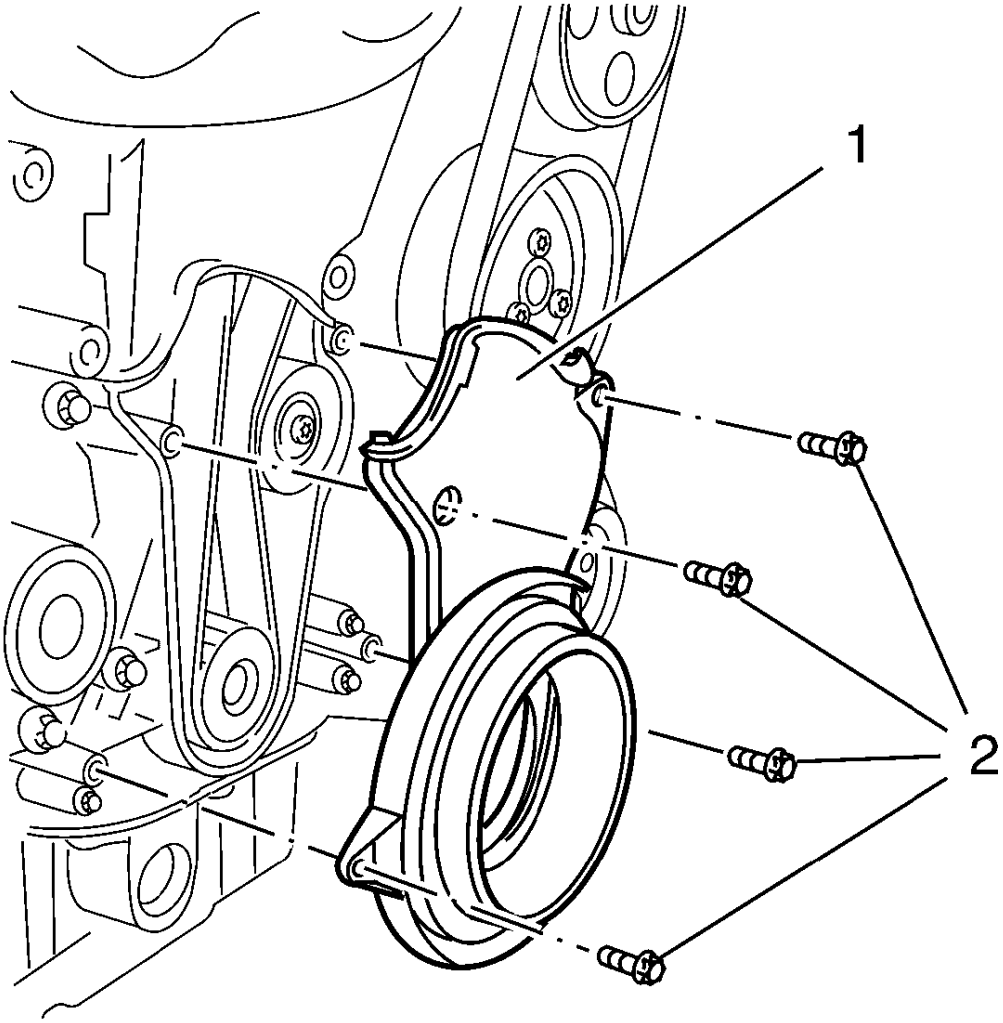

Fig. 108: Timing Belt Lower Front Cover
Courtesy of GENERAL MOTORS COMPANY

3. Remove the 4 lower timing belt cover bolts (2).
4. Remove the lower timing belt cover (1).

Installation Procedure

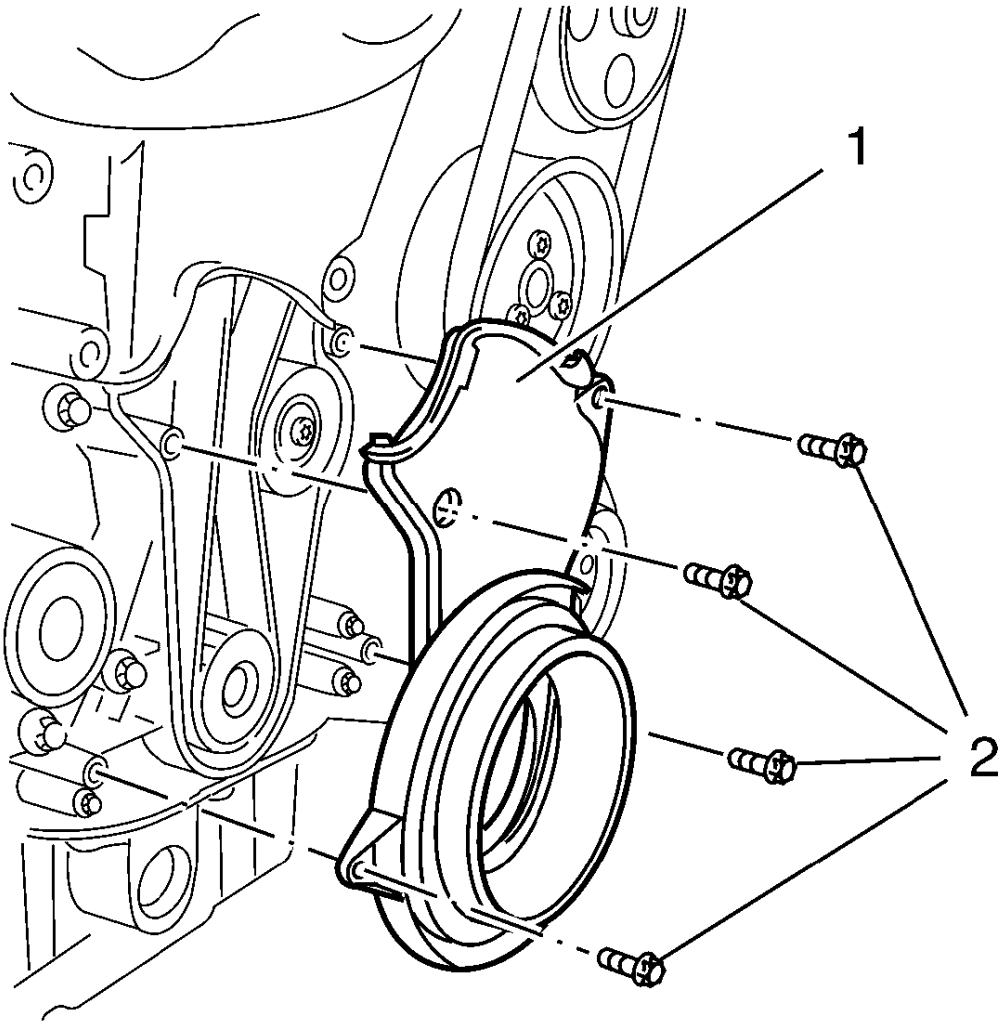

Fig. 109: Timing Belt Lower Front Cover
Courtesy of GENERAL MOTORS COMPANY

CAUTION: Refer to Fastener Caution .

1. Install the lower timing belt cover (1).
2. Install the 4 lower timing belt cover bolts (2) and tighten to 6 N.m (53 lb in).
3. Install the crankshaft balancer. Refer to **Crankshaft Balancer Replacement (Manual Transmission)**, **Crankshaft Balancer Replacement (Automatic Transmission)**.
4. Lower the vehicle.

TIMING BELT REAR COVER REPLACEMENT

Removal Procedure

1. Remove the camshaft position actuator adjuster. Refer to **Camshaft Position Actuator Adjuster Replacement**.
2. Remove the timing belt tensioner. Refer to **Timing Belt Tensioner Replacement**.

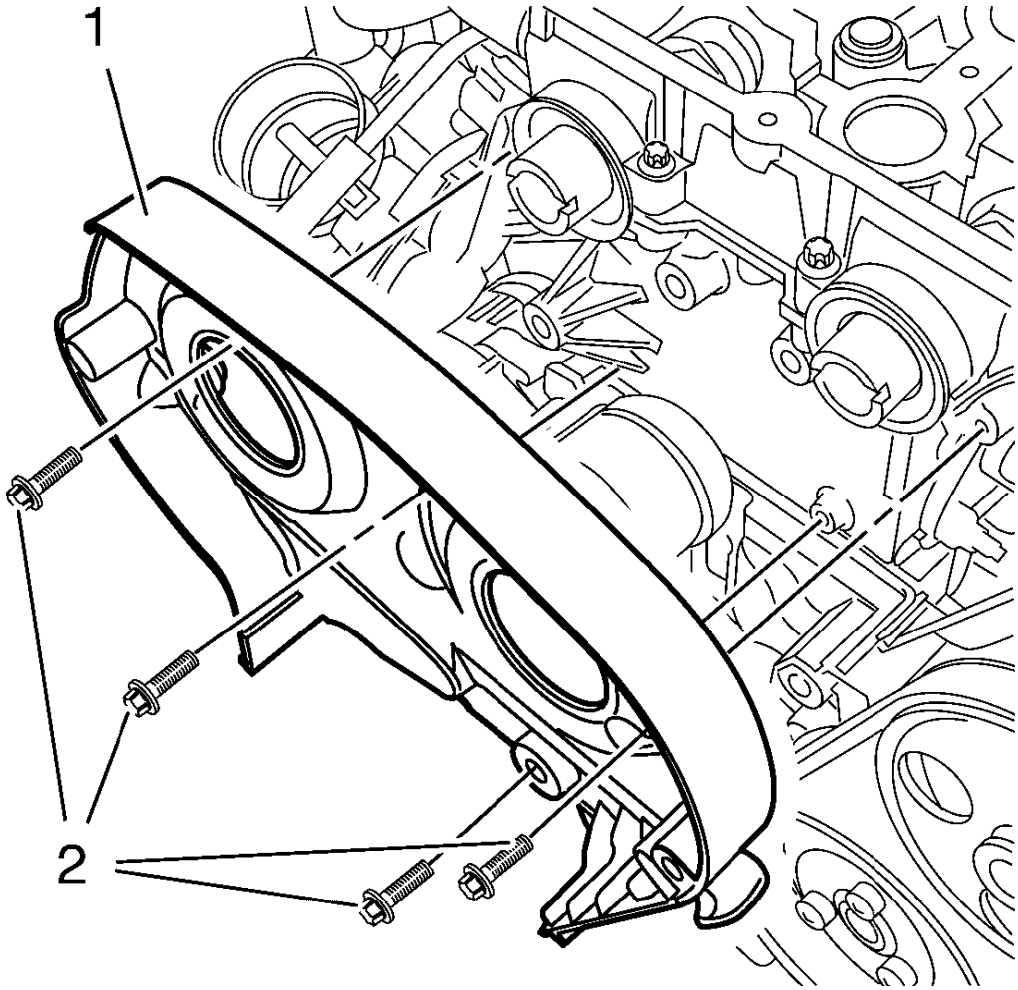

Fig. 110: Timing Belt Rear Cover And Bolts
Courtesy of GENERAL MOTORS COMPANY

3. Remove and DISCARD the 4 timing belt rear cover bolts (2).

NOTE: Oil can escape. Use a cloth, rag or paper to take the oil drain away from all timing components.

4. Remove the timing belt rear cover (1).

Installation Procedure

1. Re-cut the 4 timing belt rear cover threads.

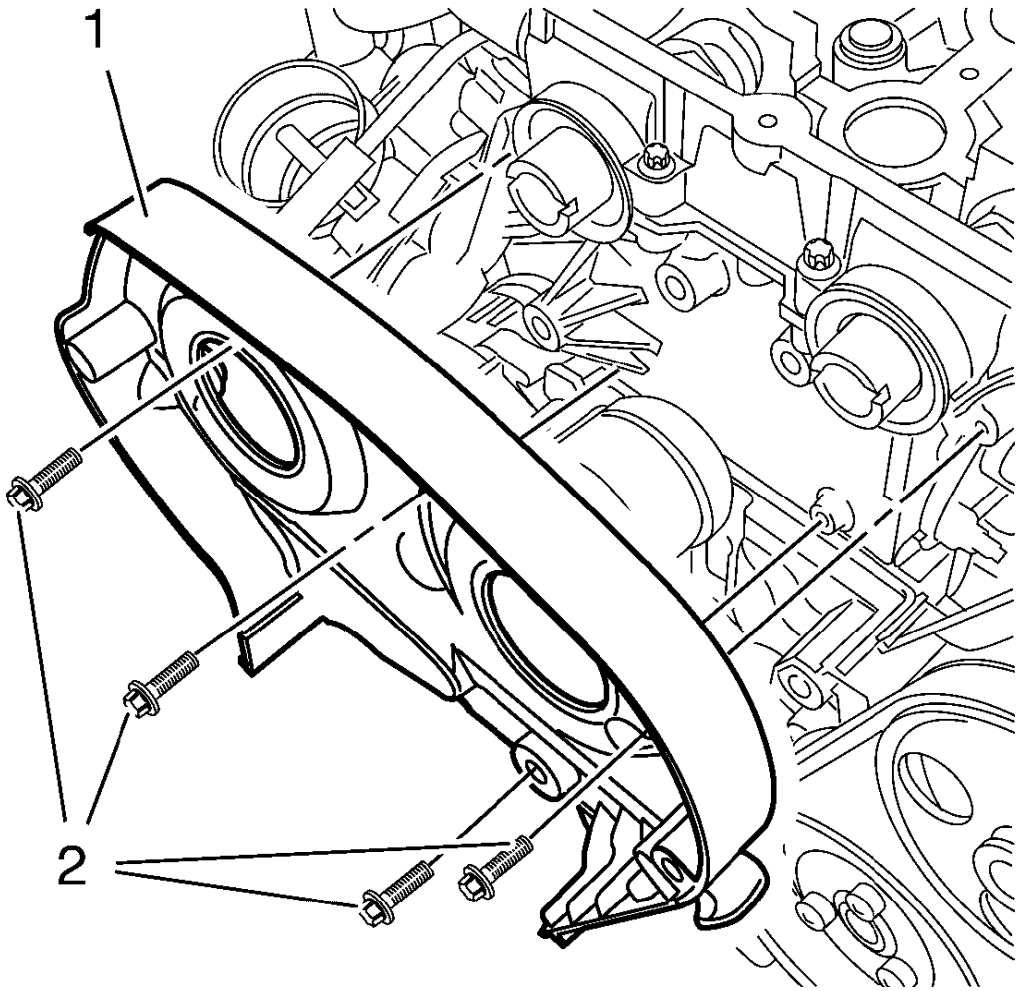

Fig. 111: Timing Belt Rear Cover And Bolts
Courtesy of GENERAL MOTORS COMPANY

NOTE: If the cover is contaminated with oil. You have to clean it close.

2. Install the timing belt rear cover (1).

CAUTION: Refer to Fastener Caution .

NOTE: Service may offer bolts that are not microencapsulated. If this is the case apply thread lock agent to the bolt. If fastener is microencapsulated, install a NEW 4 timing belt rear cover bolts. DO NOT reuse the old bolt.

3. Install the 4 NEW timing belt rear cover bolts (2) and tighten to 6 N.m (53 lb in).
4. Install the timing belt tensioner. Refer to **Timing Belt Tensioner Replacement**.

5. Install the camshaft position actuator adjuster. Refer to **Camshaft Position Actuator Adjuster Replacement**.

VALVE LIFTER REPLACEMENT

Special Tools

EN-845 Suction Device

For equivalent regional tools, refer to **Special Tools**.

Removal Procedure

1. Remove the camshafts. Refer to **Camshaft Replacement**.

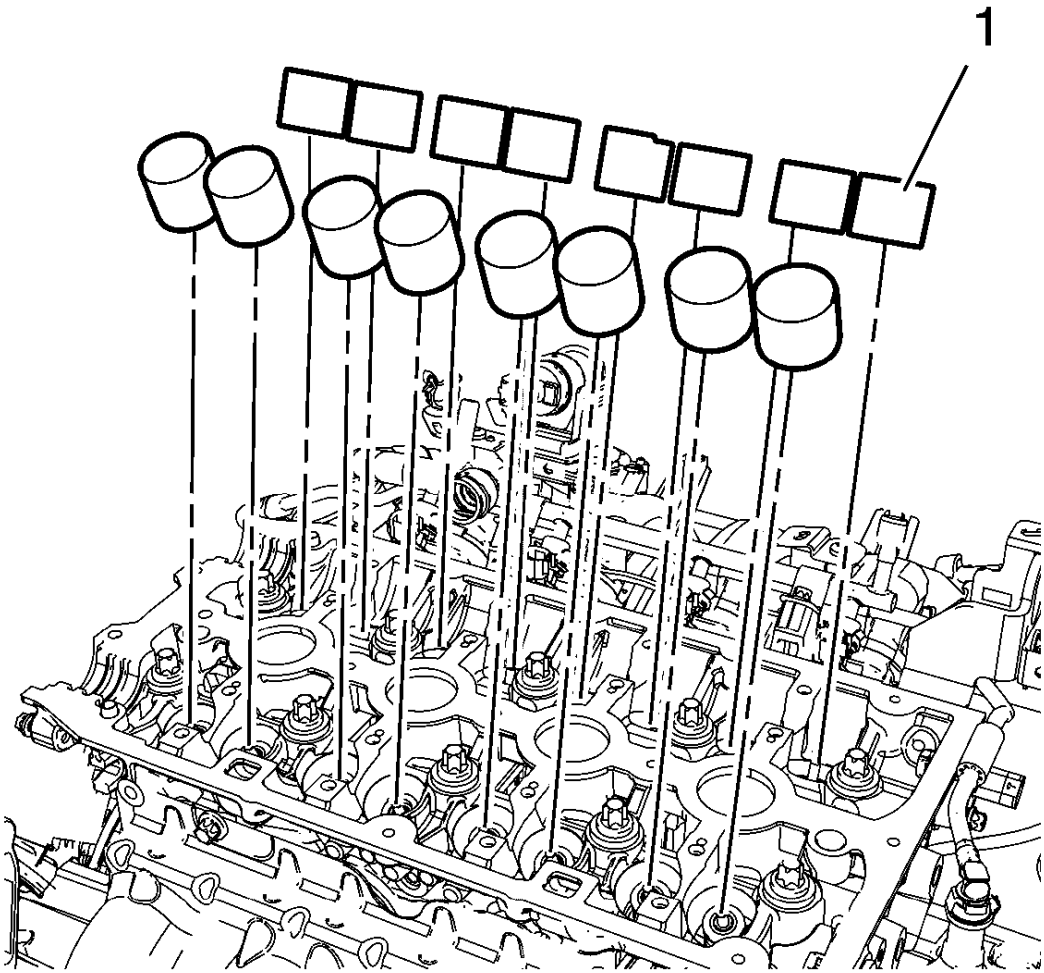

Fig. 112: Valve Lifters
Courtesy of GENERAL MOTORS COMPANY

NOTE: Mark the assignments.

2. Remove the 16 valve lifters (1), using the **EN-845** suction device.

Installation Procedure

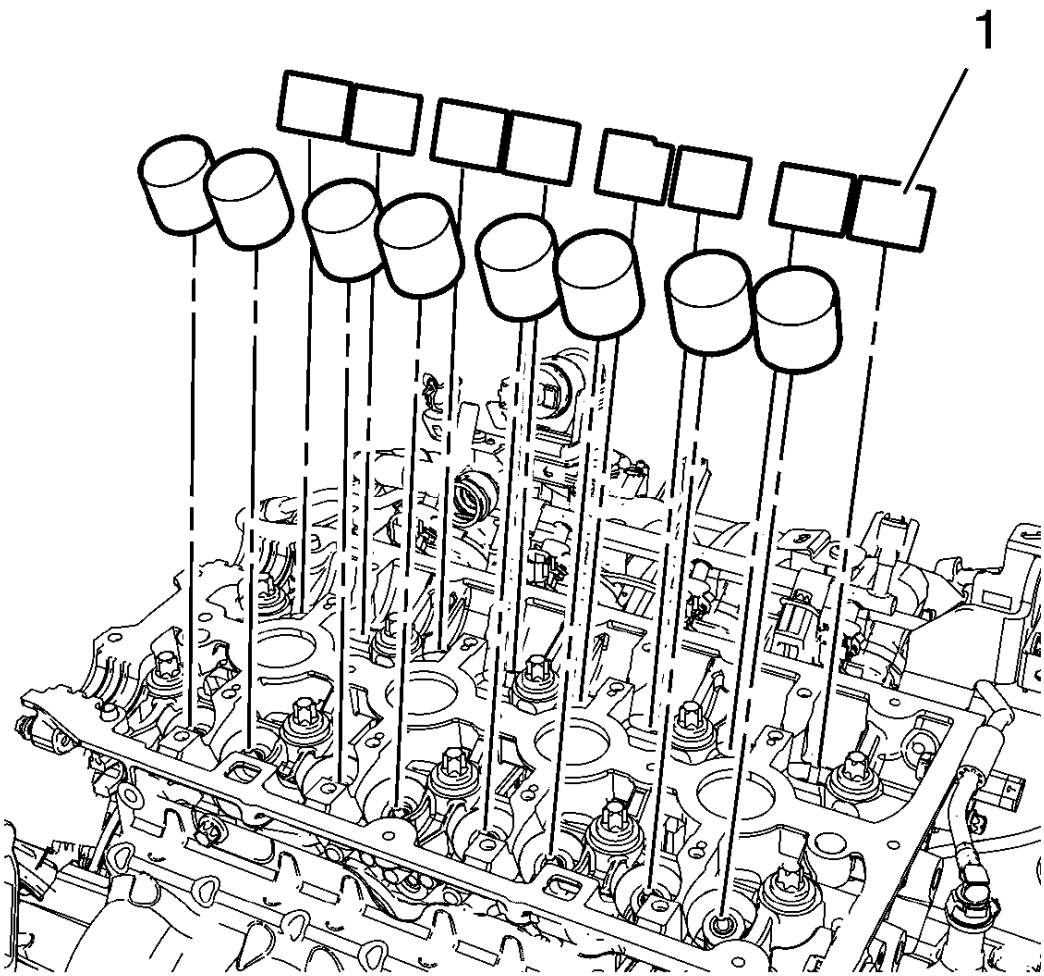

Fig. 113: Valve Lifters
Courtesy of GENERAL MOTORS COMPANY

NOTE: Observe the correct assignment.

NOTE: Coat the sliding surfaces with NEW engine oil.

1. Install the 16 valve lifters (1), using the **EN-845** suction device.
2. Install the camshafts. Refer to **Camshaft Replacement**.

CYLINDER HEAD REPLACEMENT

Special Tools

- **EN-6333** Timing Belt Tensioner Locking Pin
- **EN-6340** Camshaft Adjuster Locking Tool
- **EN-6625** Crankshaft Locking Device
- **EN-6628-A** Camshaft Locking Tool
- **EN-45059** Angle Meter

For equivalent regional tools, refer to **Special Tools**.

Removal Procedure

1. Disconnect the battery negative cable. Refer to **Battery Negative Cable Disconnection and Connection** .
2. Remove the air cleaner assembly. Refer to **Air Cleaner Assembly Replacement (1.8L LWE)** , **Air Cleaner Assembly Replacement (1.8L LUW)** .
3. Raise and support the vehicle. Refer to **Lifting and Jacking the Vehicle** .
4. Drain the cooling system. Refer to **Cooling System Draining and Filling (Static Fill)** , **Cooling System Draining and Filling (GE-47716 Fill)** .
5. Drain the engine oil. Refer to **Engine Oil and Oil Filter Replacement**.
6. Remove the intake manifold. Refer to **Intake Manifold Replacement**.

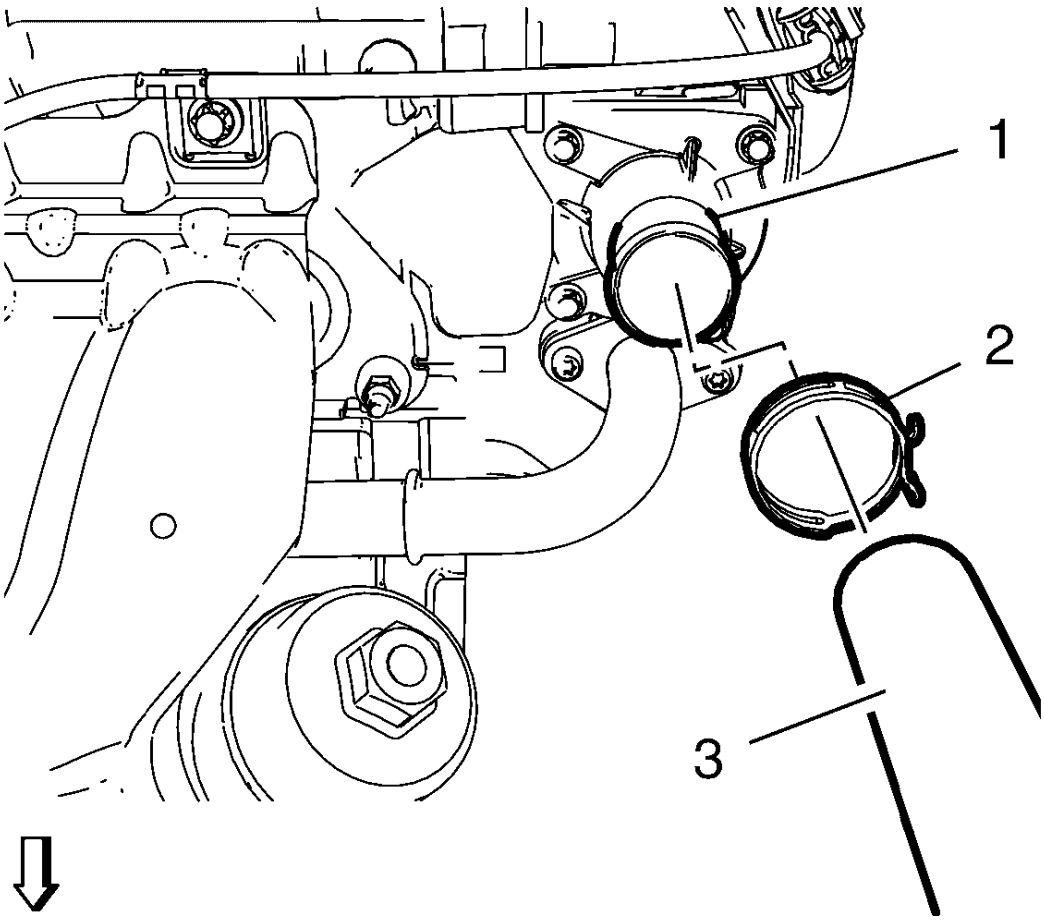

Fig. 114: Radiator Inlet Hose And Clamp
Courtesy of GENERAL MOTORS COMPANY

7. Loosen the radiator inlet hose clamp (2).
8. Remove the radiator inlet hose (3) from the engine coolant thermostat (1).
9. Remove the heater outlet hose from the engine coolant thermostat housing. Refer to **Heater Outlet Hose Replacement (1.8L LUW)** , **Heater Outlet Hose Replacement (1.8L LWE)** .
10. Remove the heater inlet hose from the engine coolant thermostat housing. Refer to **Heater Inlet Hose Replacement (1.8L LUW and LWE)** .

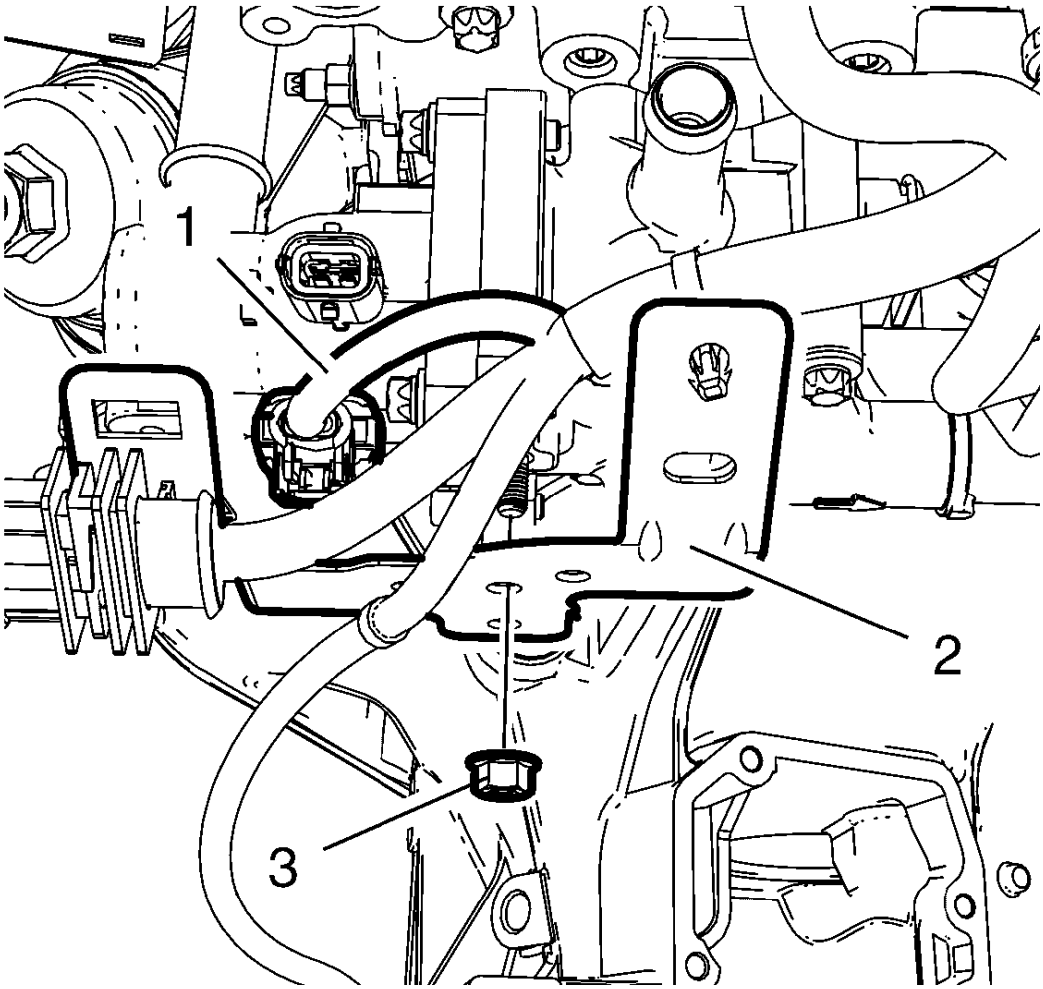

Fig. 115: Thermostat Housing Bracket, Bolts And Wiring Harness
Courtesy of GENERAL MOTORS COMPANY

11. Disconnect the thermostat wiring harness plug (1).
12. Remove the thermostat housing bracket nut (3).
13. Hang the thermostat housing bracket (2) with attached wiring harness aside.
14. Remove the exhaust manifold. Refer to **Exhaust Manifold Replacement** .

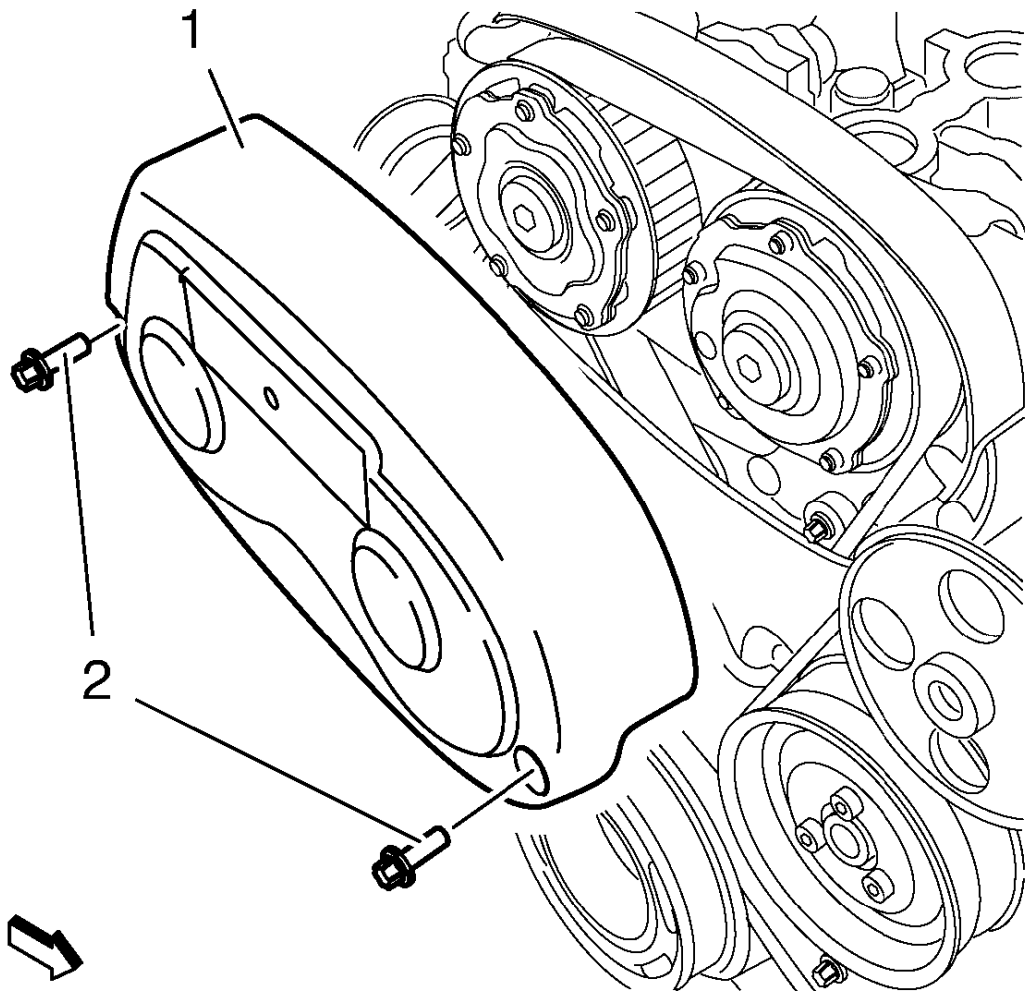

Fig. 116: Timing Belt Upper Front Cover
Courtesy of GENERAL MOTORS COMPANY

15. Remove the 2 timing belt upper front cover bolts (2).
16. Remove the timing belt upper front cover (1).
17. Remove the camshaft cover. Refer to **Camshaft Cover Replacement**.
18. Remove the 2 camshaft position sensor. Refer to **Camshaft Position Sensor Replacement** .
19. Remove the 2 camshaft position actuator solenoid valve. Refer to **Camshaft Position Actuator Solenoid Valve Replacement**.
20. Remove the drive belt tensioner. Refer to **Drive Belt Tensioner Replacement**.

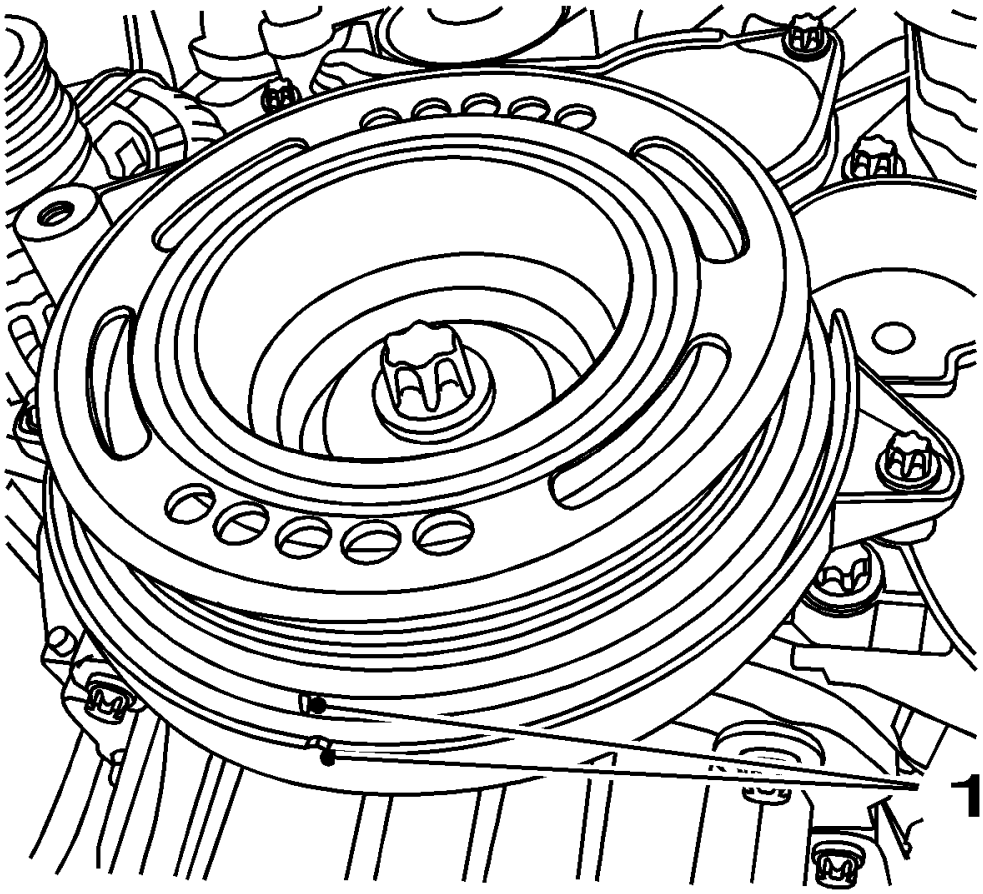

Fig. 117: View Of Crankshaft TDC Position
Courtesy of GENERAL MOTORS COMPANY

21. Set the crankshaft balancer in direction of engine rotation until the markings (1) line up with the cylinder 1 at TDC.
22. Remove the crankshaft balancer. Refer to **Crankshaft Balancer Replacement (Manual Transmission)**, **Crankshaft Balancer Replacement (Automatic Transmission)**.

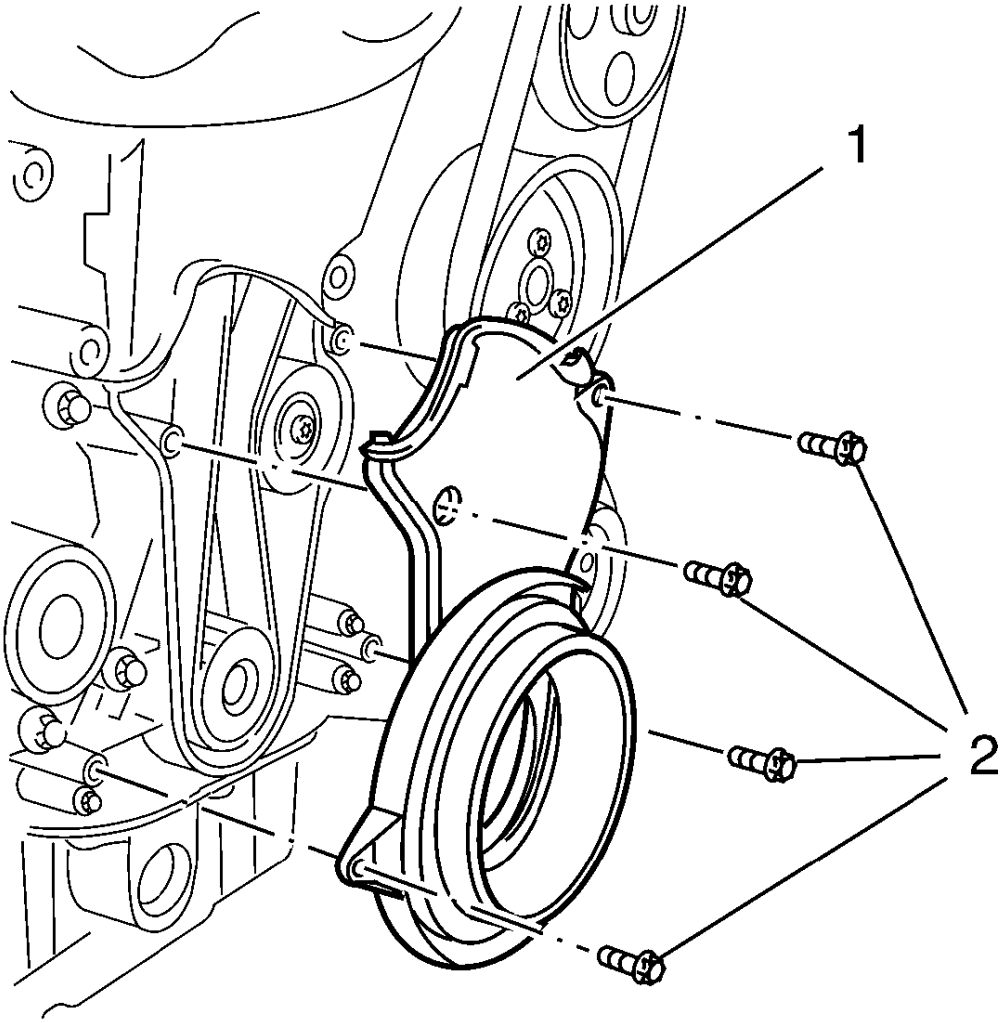

Fig. 118: Timing Belt Lower Front Cover
Courtesy of GENERAL MOTORS COMPANY

23. Remove the 4 lower timing belt cover bolts (2).
24. Remove the lower timing belt cover (1).
25. Lower the vehicle.
26. Support the engine under the oil pan.

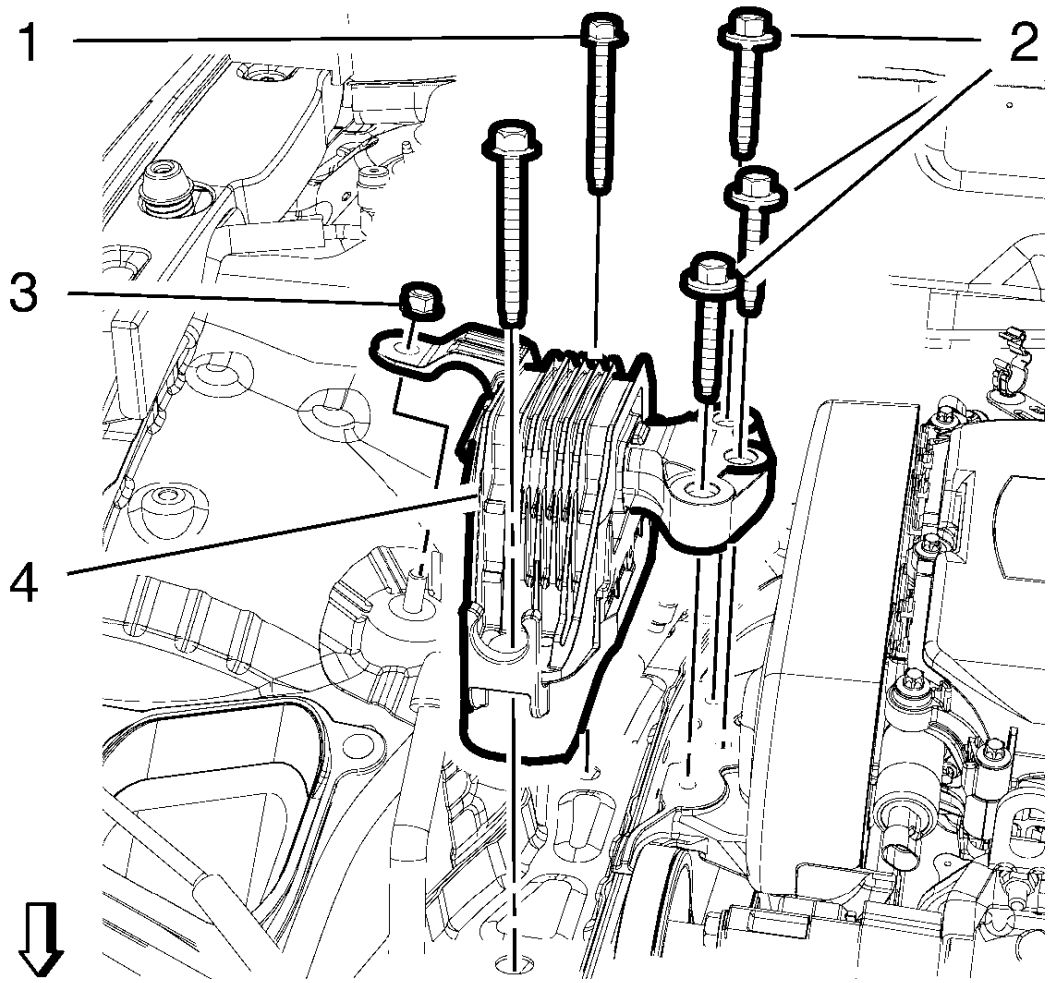

Fig. 119: Engine Mount And Bolts
Courtesy of GENERAL MOTORS COMPANY

27. Remove the engine mount nut (3).
28. Remove the 5 engine mount bolts (1, 2).
29. Remove the engine mount (4).

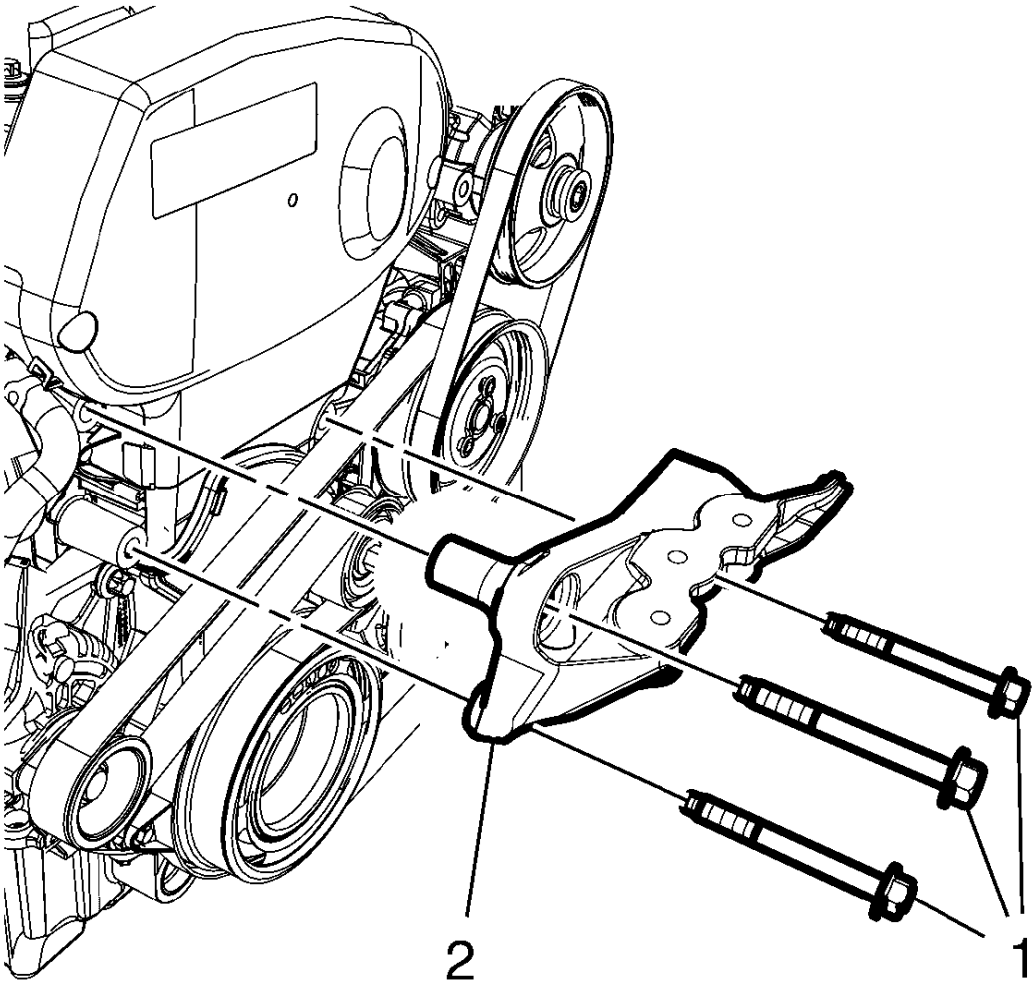

Fig. 120: Engine Mount Bracket And Bolts
Courtesy of GENERAL MOTORS COMPANY

30. Remove the 3 engine mount bracket bolts (1).
31. Remove the engine mount bracket (2).

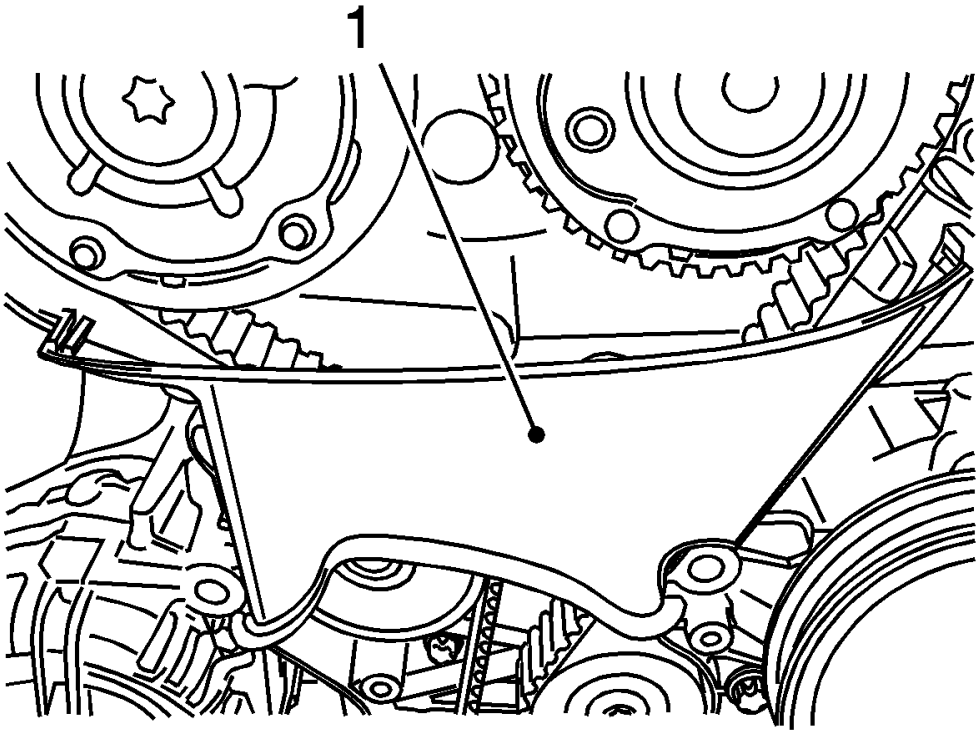

Fig. 121: View Of Toothed Belt Cover
Courtesy of GENERAL MOTORS COMPANY

32. Remove the center front timing belt cover from the rear timing belt cover at 2 locations.
33. Remove the center front timing belt cover (1).

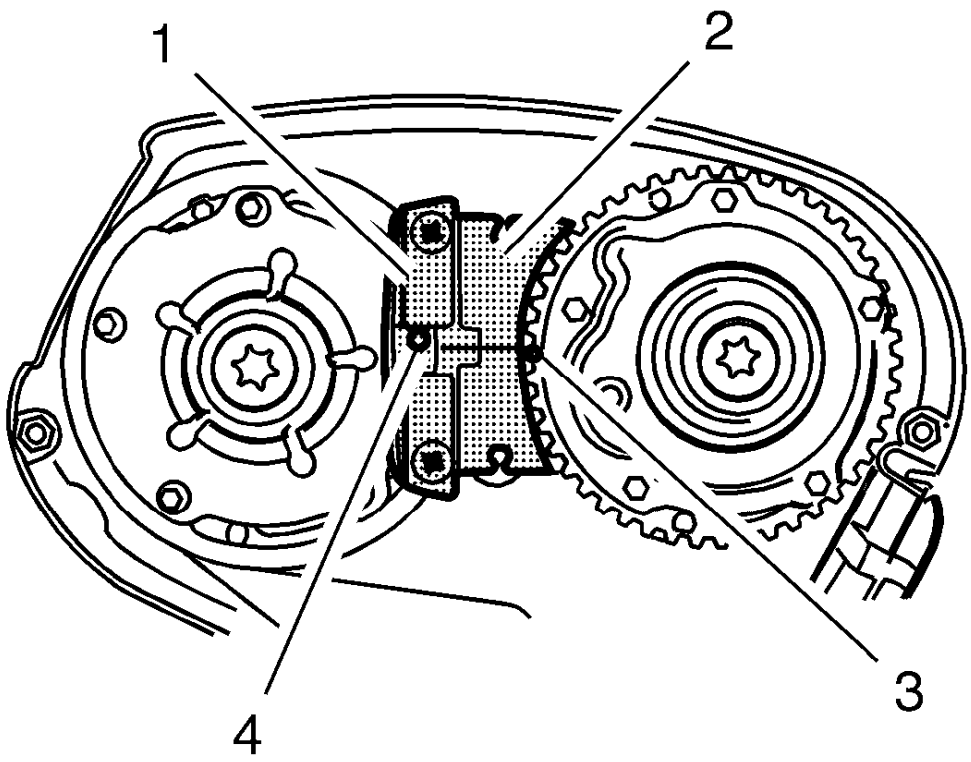

Fig. 122: Spot Type Markings And Special Tool
Courtesy of GENERAL MOTORS COMPANY

34. Install the **EN-6340** locking tool into the camshaft adjusters.

NOTE: The spot type marking (4) on the intake camshaft adjuster does not correspond to the groove of EN-6340 locking tool - left during this process but must be somewhat above as shown.

- Install the **EN-6340** locking tool - left (1) in the camshaft adjusters as shown.

NOTE: The spot type marking (3) on the exhaust camshaft adjuster must correspond to the groove on EN-6340 locking tool - right.

- Install **EN-6340** locking tool - right (2) in the camshaft adjusters as shown.

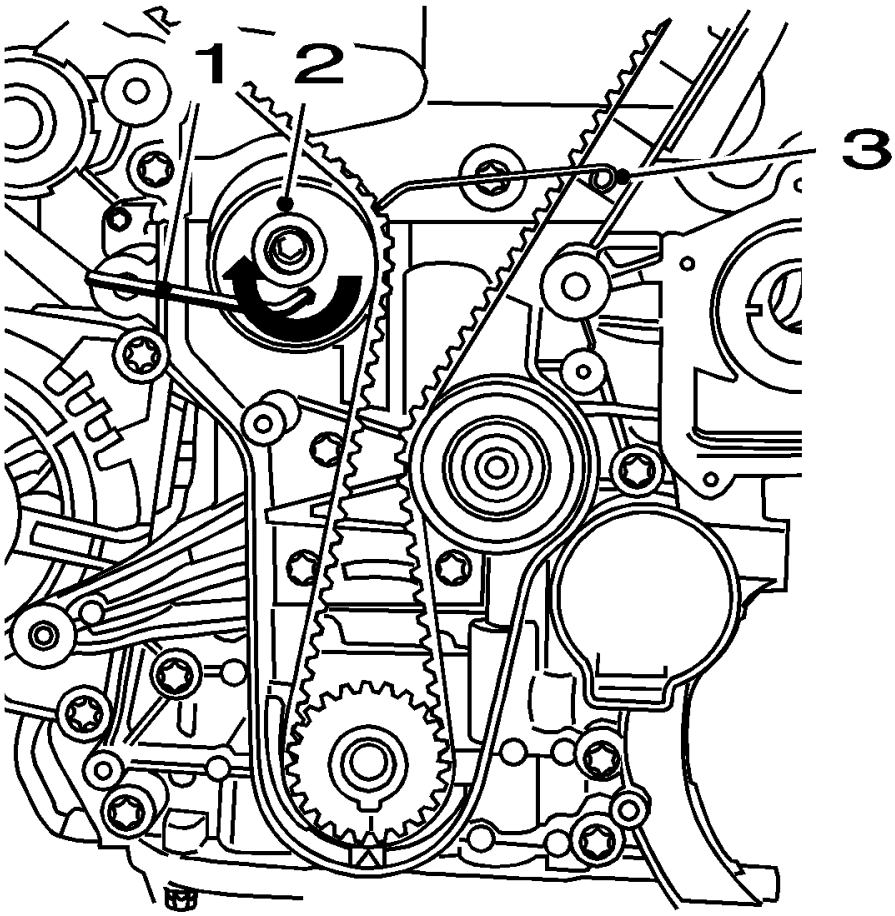

Fig. 123: View Of Drive Belt Tensioner, Allen Key And KM-6333
Courtesy of GENERAL MOTORS COMPANY

35. Apply tension to the timing belt tensioner (2) in the direction of the arrow, using an allen key (1).
36. Install the **EN-6333** pin (3).

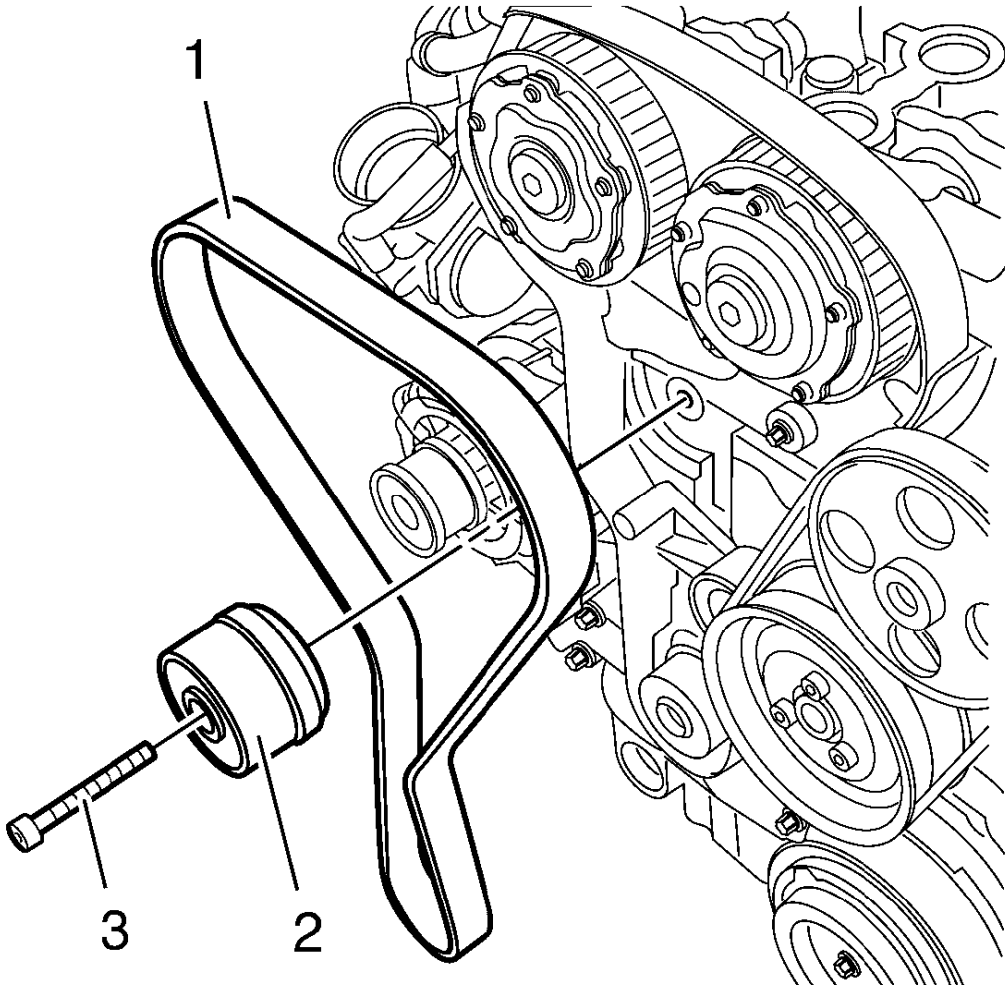

Fig. 124: Timing Belt, Timing Belt Tensioner
Courtesy of GENERAL MOTORS COMPANY

NOTE: Note the direction of the belt, if the timing belt will be reused.

37. Remove the timing belt (1).
38. Remove and DISCARD the timing belt tensioner bolt (3).
39. Remove the timing belt tensioner (2).
40. Raise the vehicle.

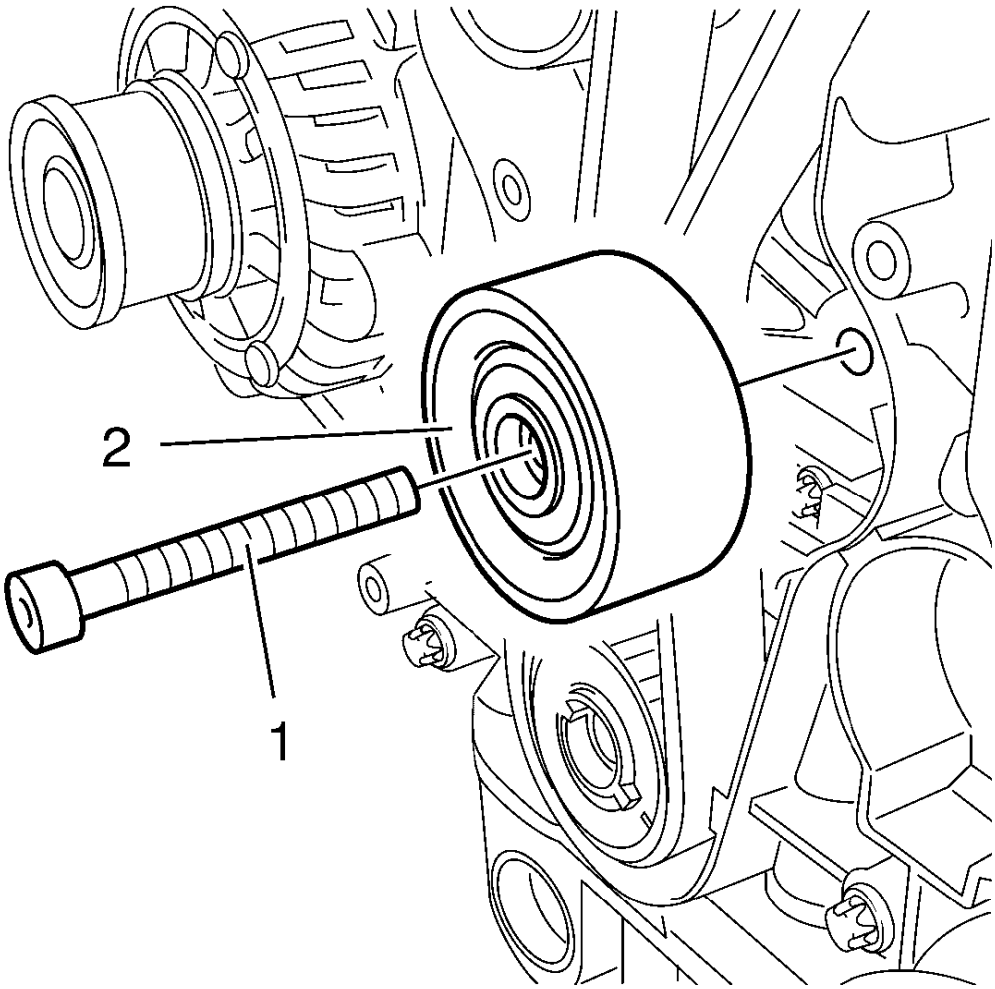

Fig. 125: Timing Belt Idler Pulley Bolt
Courtesy of GENERAL MOTORS COMPANY

41. Remove the timing belt idler pulley bolt (1).
42. Remove the timing belt idler pulley (2).
43. Remove the **EN-6625** locking device.

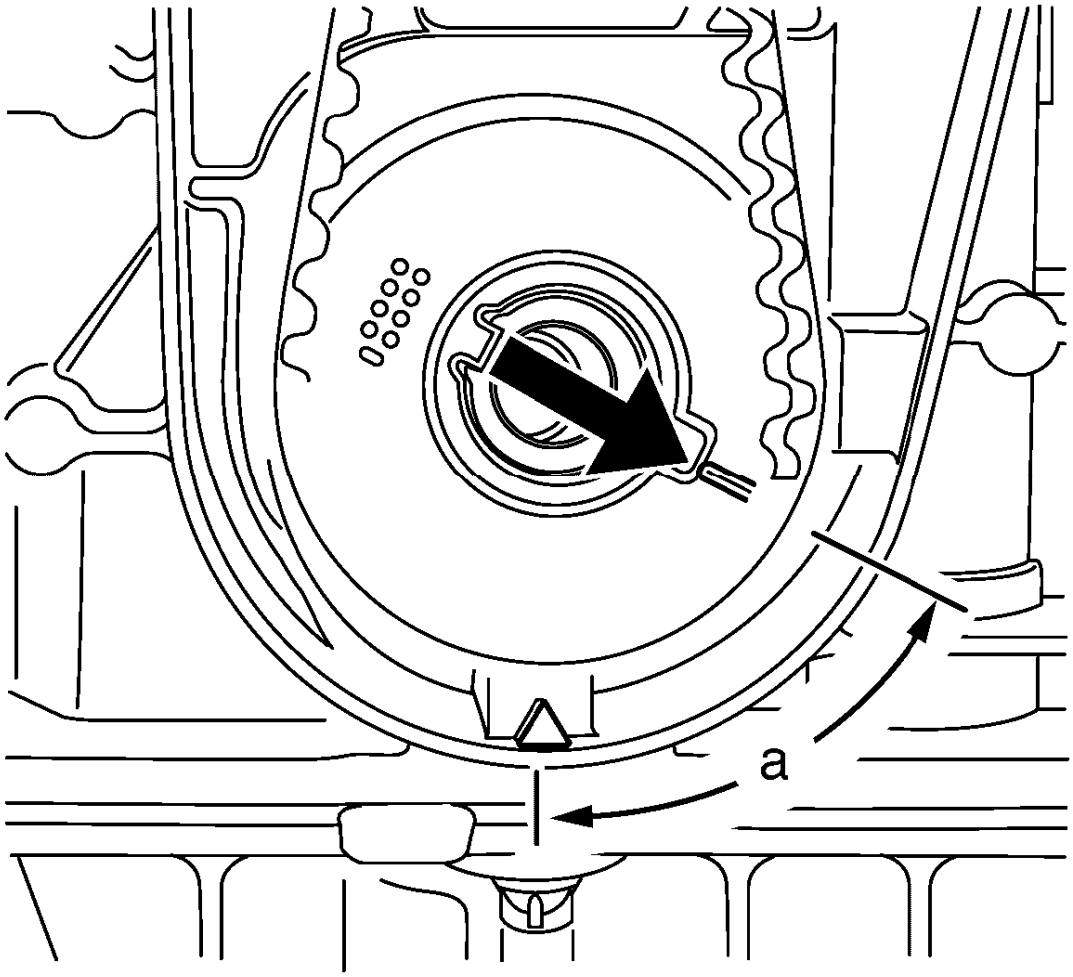

Fig. 126: Turning Crankshaft Against Direction Of Engine Rotation
Courtesy of GENERAL MOTORS COMPANY

44. Set the crankshaft in direction of engine rotation to 60 degrees (a) before TDC. Use the **EN-45059** meter and the crankshaft balancer bolt.

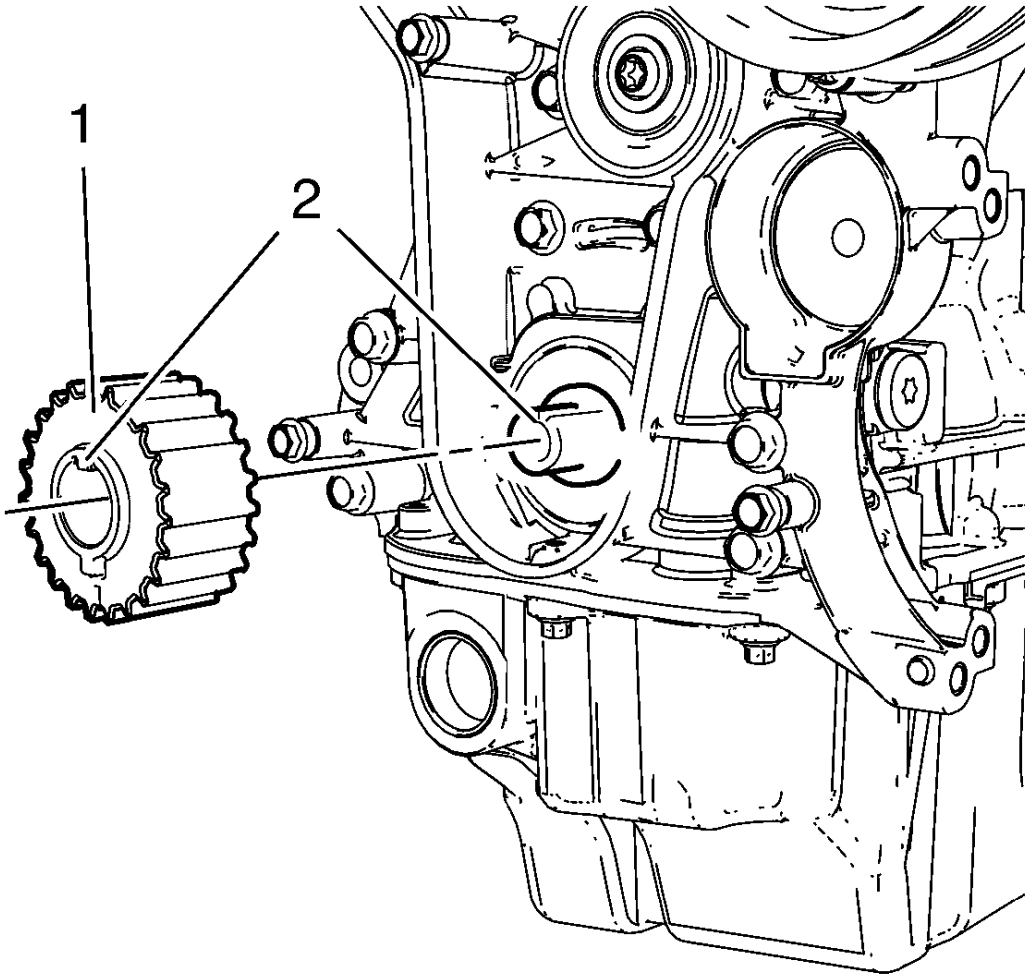

Fig. 127: Crankshaft Sprocket
Courtesy of GENERAL MOTORS COMPANY

NOTE: Some engine oil will run out of the camshaft and the camshaft position actuator adjuster. That is the reason for the removal of the whole timing assembly.

45. Remove the crankshaft sprocket (1).
46. Lower the vehicle.
47. Remove the **EN-6340** locking tool.

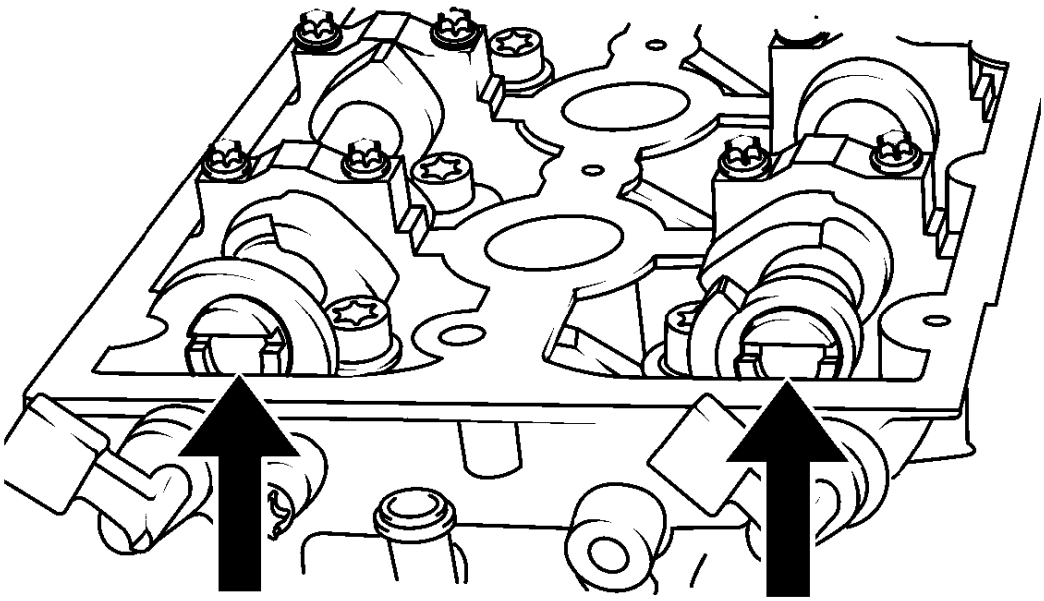

Fig. 128: Aligning Camshafts Horizontally
Courtesy of GENERAL MOTORS COMPANY

NOTE: Note the arrows.

48. Turn the camshaft by the camshaft position actuator adjuster until the groove on the end of the camshafts is horizontal.

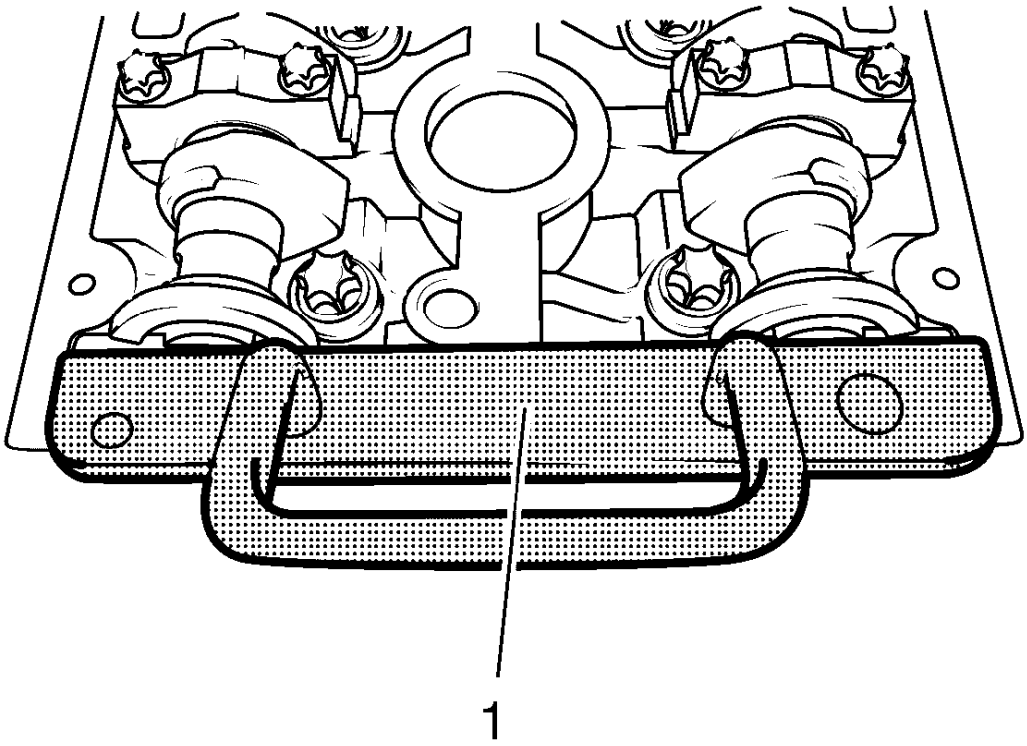

Fig. 129: Locking Tool
Courtesy of GENERAL MOTORS COMPANY

49. Install the **EN-6628-A** locking tool (1).
50. Place a collecting basin underneath the vehicle.

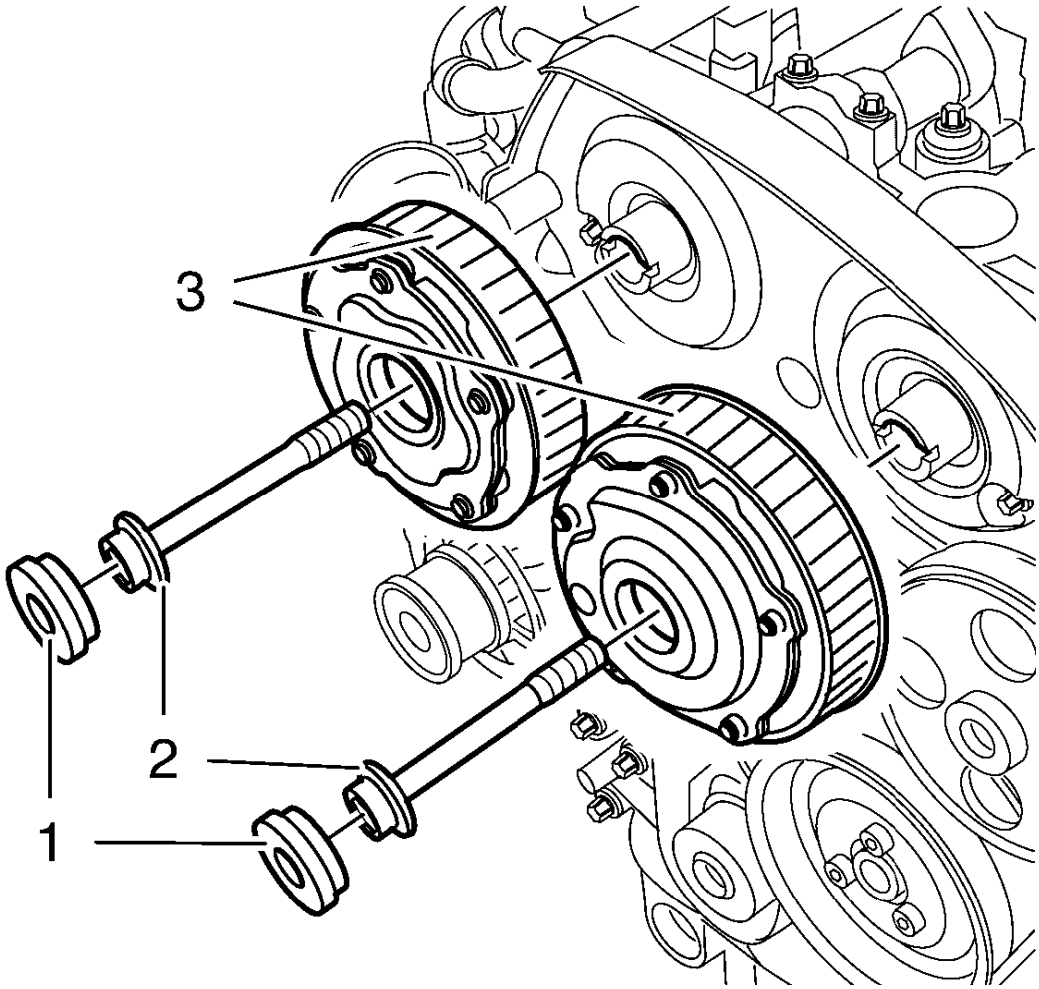

Fig. 130: Camshaft Position Actuator Adjuster Closure Bolt
Courtesy of GENERAL MOTORS COMPANY

51. Remove the camshaft position actuator adjuster closure bolt (1) of the intake camshaft position actuator adjuster and the exhaust camshaft position actuator adjuster (3).

NOTE: A second technician is required.

NOTE: Use an appropriate open-end wrench in order to counterhold the camshaft hexagon. A thin cross-section wrench is required for a better fit. The usage of EN-6628-A locking tool is for the camshaft adjustment to prevent misalignment of the camshafts. The wrench is required to counterhold the camshafts during bolt torque procedure.

52. Remove and DISCARD the intake camshaft position actuator adjuster bolt and/or the exhaust camshaft position actuator adjuster bolt (2).

53. Remove the intake camshaft position actuator adjuster and the exhaust camshaft position actuator adjuster (3).
54. Remove the timing belt rear cover. Refer to **Timing Belt Rear Cover Removal**.

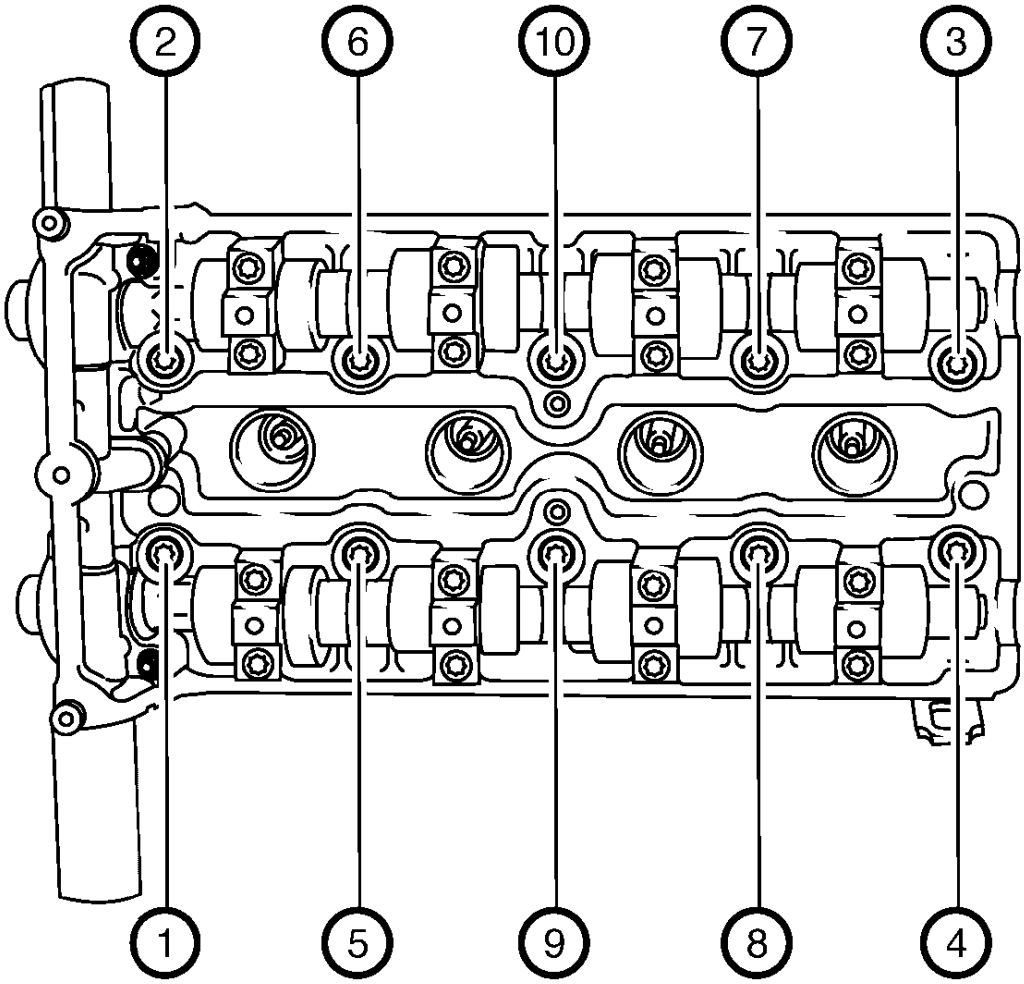

Fig. 131: Cylinder Head Bolts Tightening Sequence
Courtesy of GENERAL MOTORS COMPANY

55. Loosen the 10 cylinder head bolts in sequence as shown.
    1. Loosen the 10 bolts 90 degrees.
    2. Loosen the 10 bolts 180 degrees.

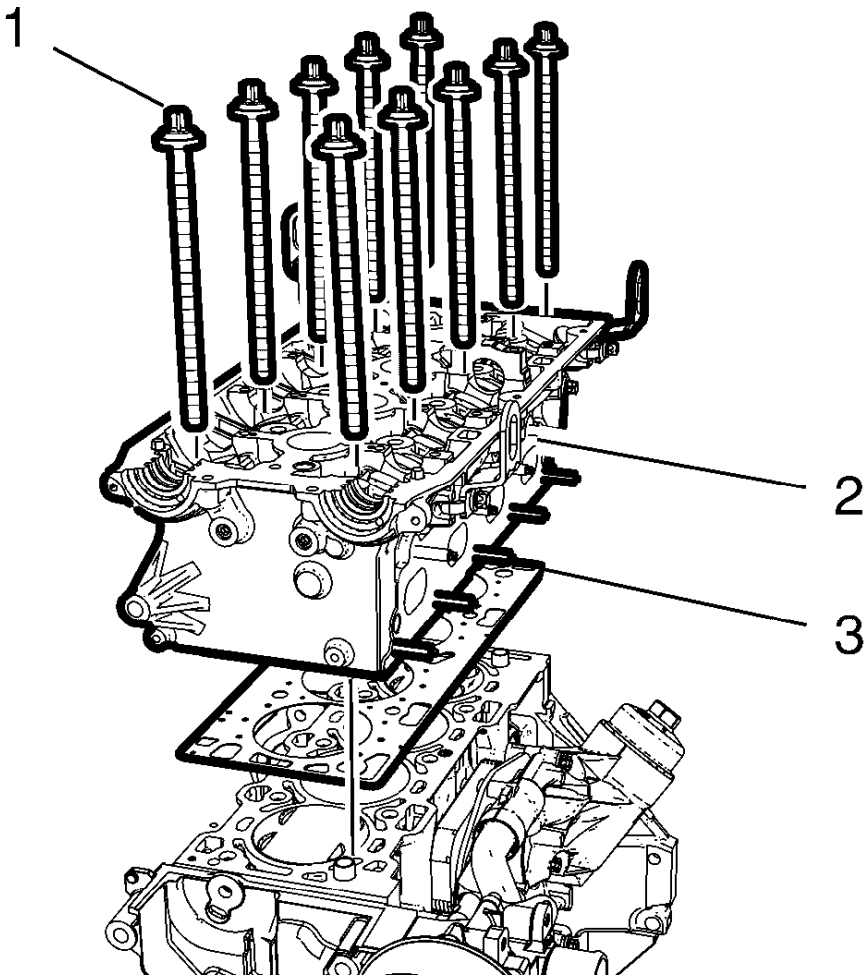

Fig. 132: Cylinder Head And Bolts
Courtesy of GENERAL MOTORS COMPANY

56. Remove and DISCARD the 10 cylinder head bolts (1).
57. Remove the cylinder head (2).
58. Remove and DISCARD the cylinder head gasket (3).
59. In case of re-use, then clean and inspect the cylinder head. Refer to **Cylinder Head Cleaning and Inspection**.
60. Remove the thermostat housing. Refer to **Engine Coolant Thermostat Housing Removal**.
61. Remove the camshafts. Refer to **Camshaft Removal**.
62. Remove the valve lifter. Refer to **Valve Lifter Removal**.
63. Disassemble the cylinder head. Refer to **Cylinder Head Disassemble**.

Installation Procedure

1. Assemble the cylinder head. Refer to **Cylinder Head Assemble**.

2. Install the valve lifter. Refer to **Valve Lifter Installation**.
3. Install the camshafts. Refer to **Camshaft Installation**.
4. Install the thermostat housing. Refer to **Engine Coolant Thermostat Housing Installation**.
5. Clean the sealing surfaces.
6. Inspect for plane surface.
    - Cylinder block, cylinder head
    - Straight-edge, feeler gauge

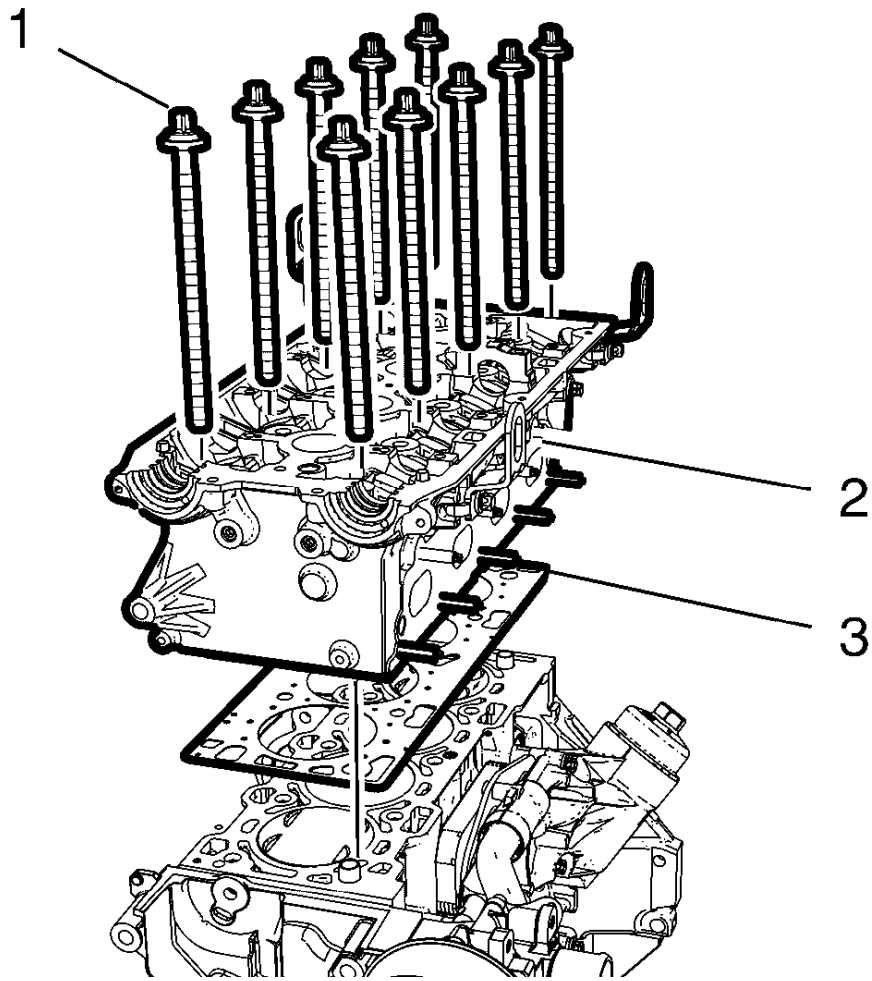

Fig. 133: Cylinder Head And Bolts
Courtesy of GENERAL MOTORS COMPANY

7. Install a NEW cylinder head gasket (3).
8. Install the cylinder head (2).

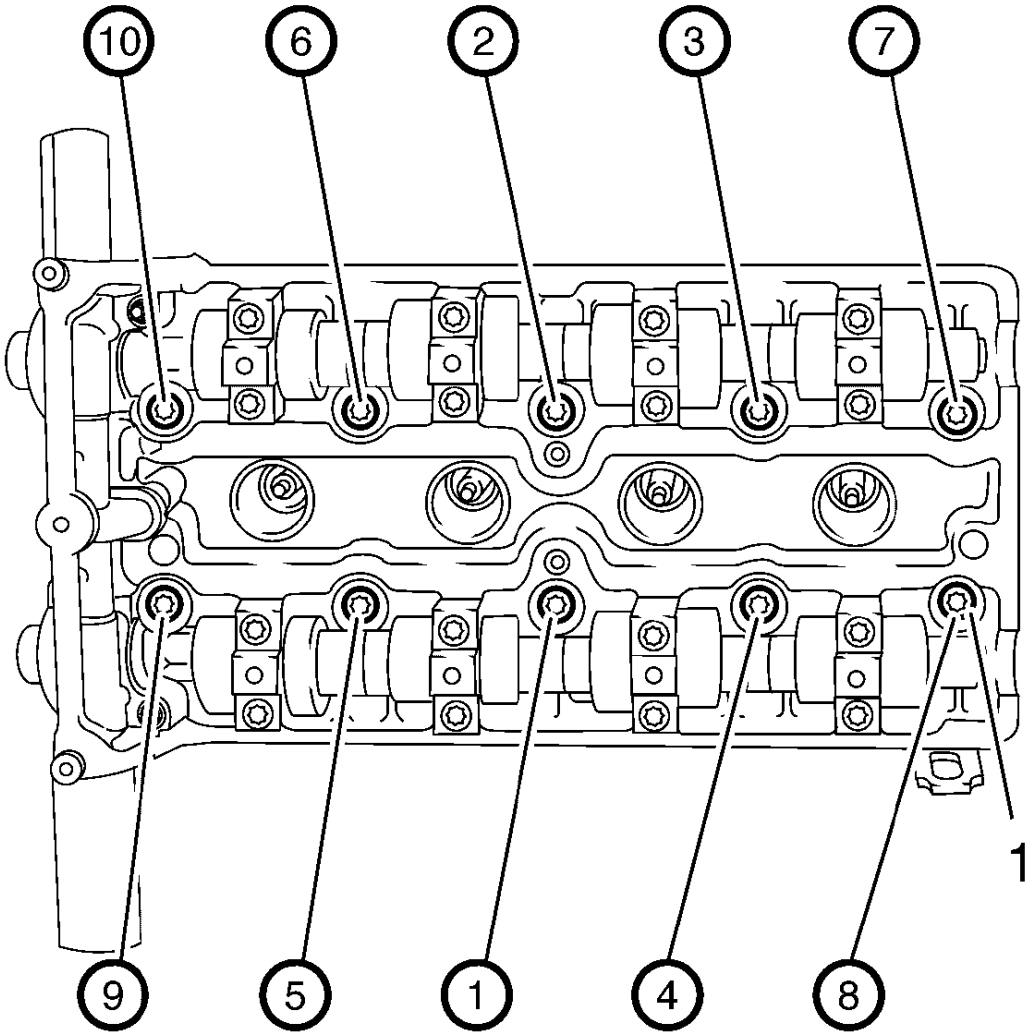

Fig. 134: Cylinder Head Bolts Tightening Sequence
Courtesy of GENERAL MOTORS COMPANY

CAUTION: Refer to Fastener Caution .

CAUTION: Refer to Torque-to-Yield Fastener Caution .

9. Install 10 NEW cylinder head bolts (1).
10. Tighten the bolts as shown in sequence in 5 passes, using the **EN-45059** meter :
    1. First pass to 25 (18 lb ft)
    2. Second pass to 90 degrees
    3. Third pass to 90 degrees
    4. Fourth pass to 90 degrees

5. Final pass to 45 degrees

11. Install the timing belt rear cover. Refer to **Timing Belt Rear Cover Installation**.

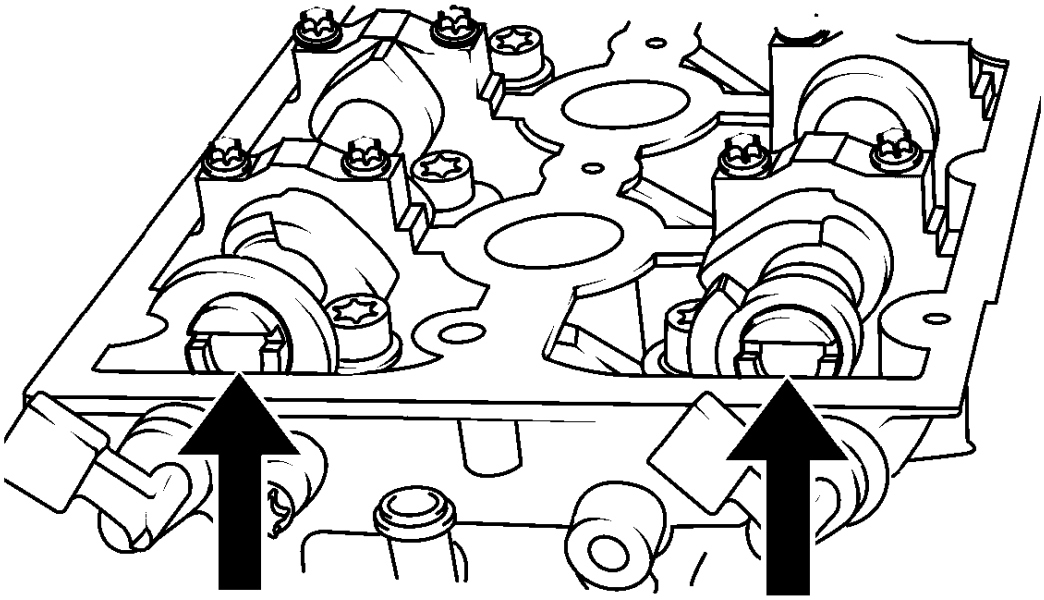

Fig. 135: Aligning Camshafts Horizontally
Courtesy of GENERAL MOTORS COMPANY

12. Align the camshafts horizontally by the hexagon arrows, until the **EN-6628-A** locking tool can be inserted in both camshafts.

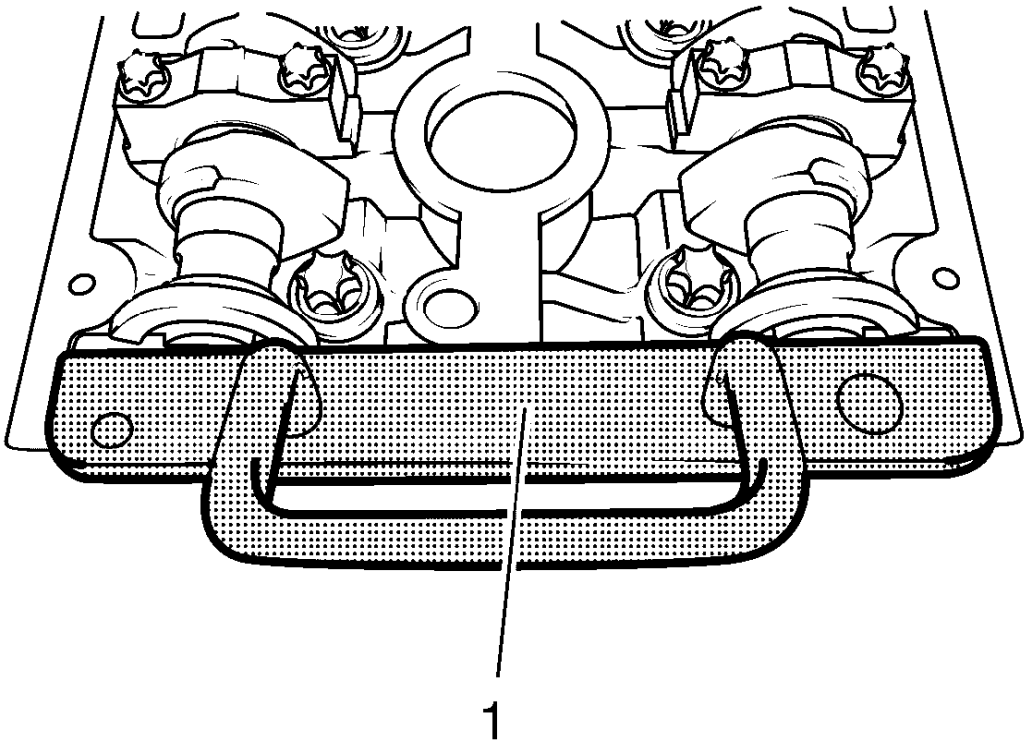

Fig. 136: Locking Tool
Courtesy of GENERAL MOTORS COMPANY

13. Insert the **EN-6628-A** locking tool (1) into the camshafts.

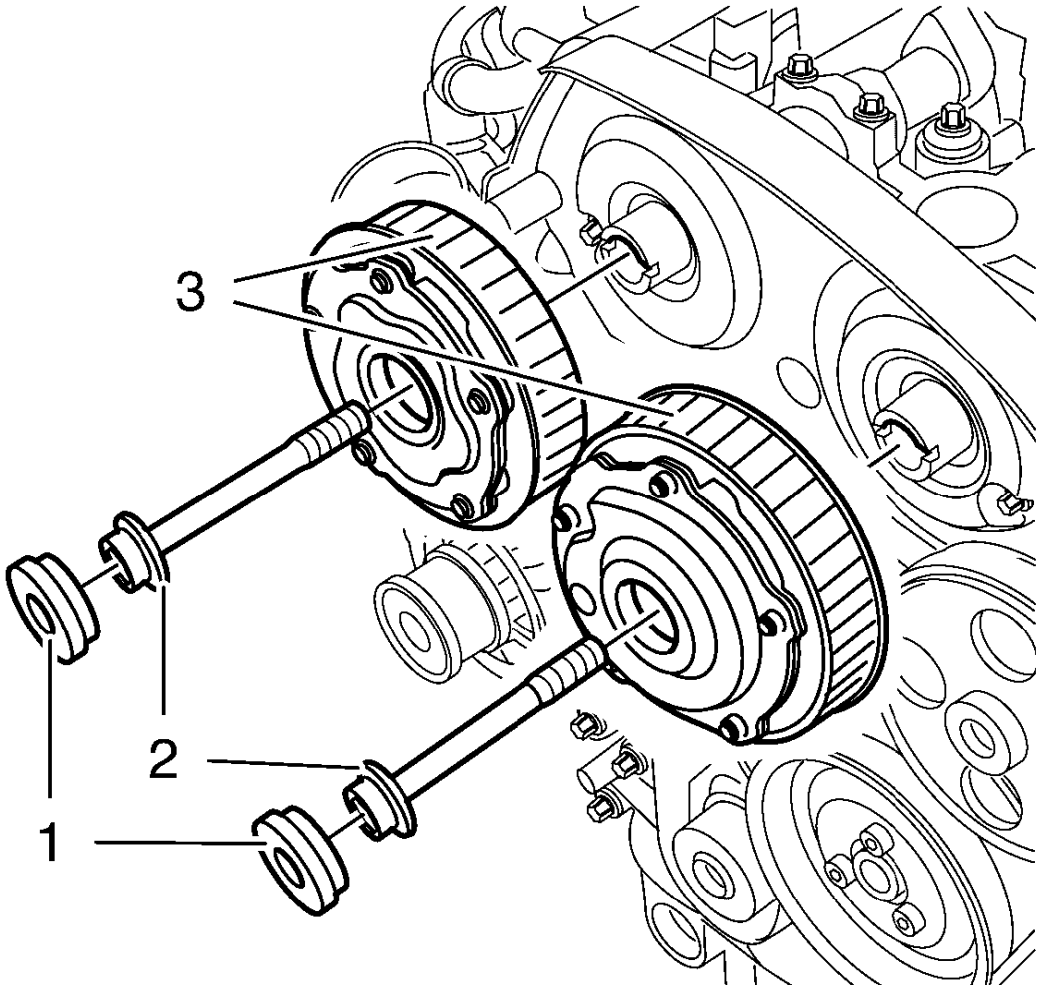

Fig. 137: Camshaft Position Actuator Adjuster Closure Bolt
Courtesy of GENERAL MOTORS COMPANY

NOTE: If the cover is contaminated with oil, you have to clean it close.

NOTE: A second person is required. Counterhold against the hexagon of corresponding camshaft with an open-ended wrench.

14. Install intake camshaft position actuator adjuster and/or the exhaust camshaft position actuator adjuster (3).
15. Install a NEW intake camshaft position actuator adjuster bolt and/or a NEW exhaust camshaft position actuator adjuster bolt (2).

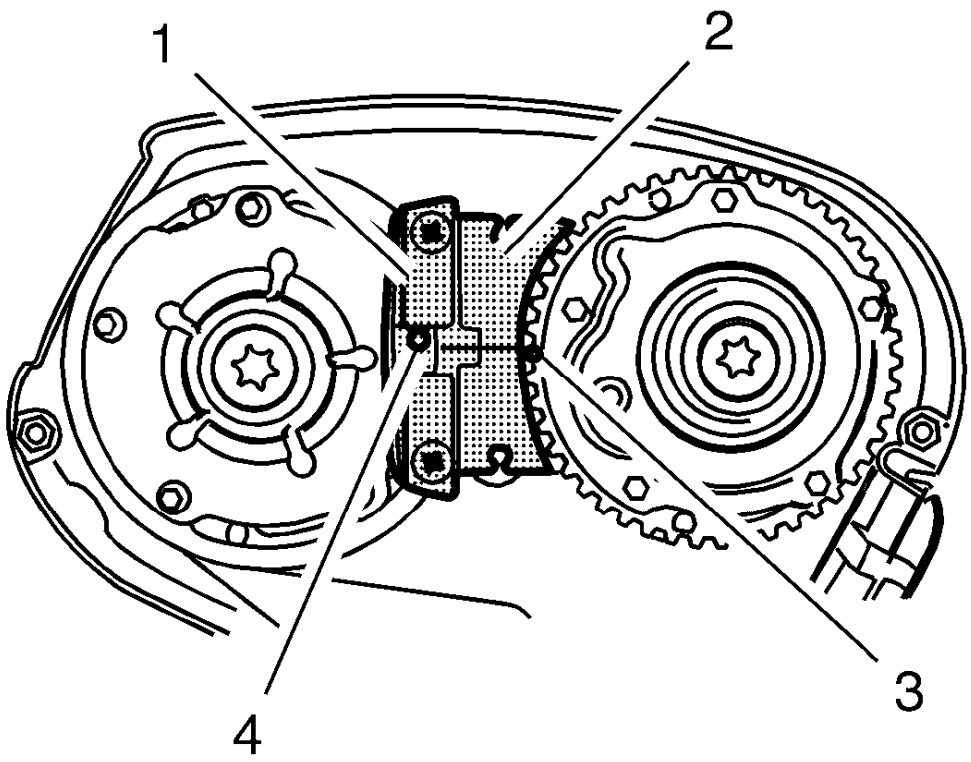

Fig. 138: Spot Type Markings And Special Tool
Courtesy of GENERAL MOTORS COMPANY

16. Install the **EN-6340** locking tool into the camshaft position actuator adjusters.

NOTE: The spot type marking (4) on the intake camshaft position actuator adjuster does not correspond to the groove of EN-6340 locking tool - left during this process but must be somewhat above as shown.

1. Install the **EN-6340** locking tool - left (1) in the camshaft position actuator adjusters as shown.

NOTE: The spot type marking (3) on the exhaust camshaft position actuator adjuster must correspond to the groove on EN-6340 locking tool - right.

2. Install the **EN-6340** locking tool - right (2) in the camshaft position actuator adjusters as shown.

CAUTION: Refer to Torque-to-Yield Fastener Caution .

NOTE: If the cover is contaminated with oil, you have to clean it close.

NOTE: A second technician is required.

NOTE: Use an appropriate open-end wrench in order to counterhold the camshaft hexagon. A thin cross-section wrench is required for a better fit. The Use of EN-6628-A locking tool is for the camshaft adjustment to prevent misalignment of the camshafts. The wrench is required to counterhold the camshafts during bolt torque procedure.

17. Tighten the camshaft position actuator adjuster bolts (2) in three passes use the **EN-45059** meter :

    Hold at the appropriate camshaft hexagon.

    1. First pass tighten to 50 (37 lb ft).
    2. Second pass to 150 degrees.
    3. Final pass to 15 degrees.

    NOTE: Check the closure bolt seal ring.

18. Install the 2 camshaft position actuator adjuster closure plugs (1) and tighten to 30 (22 lb ft).
19. Remove the **EN-6628-A** locking tool.

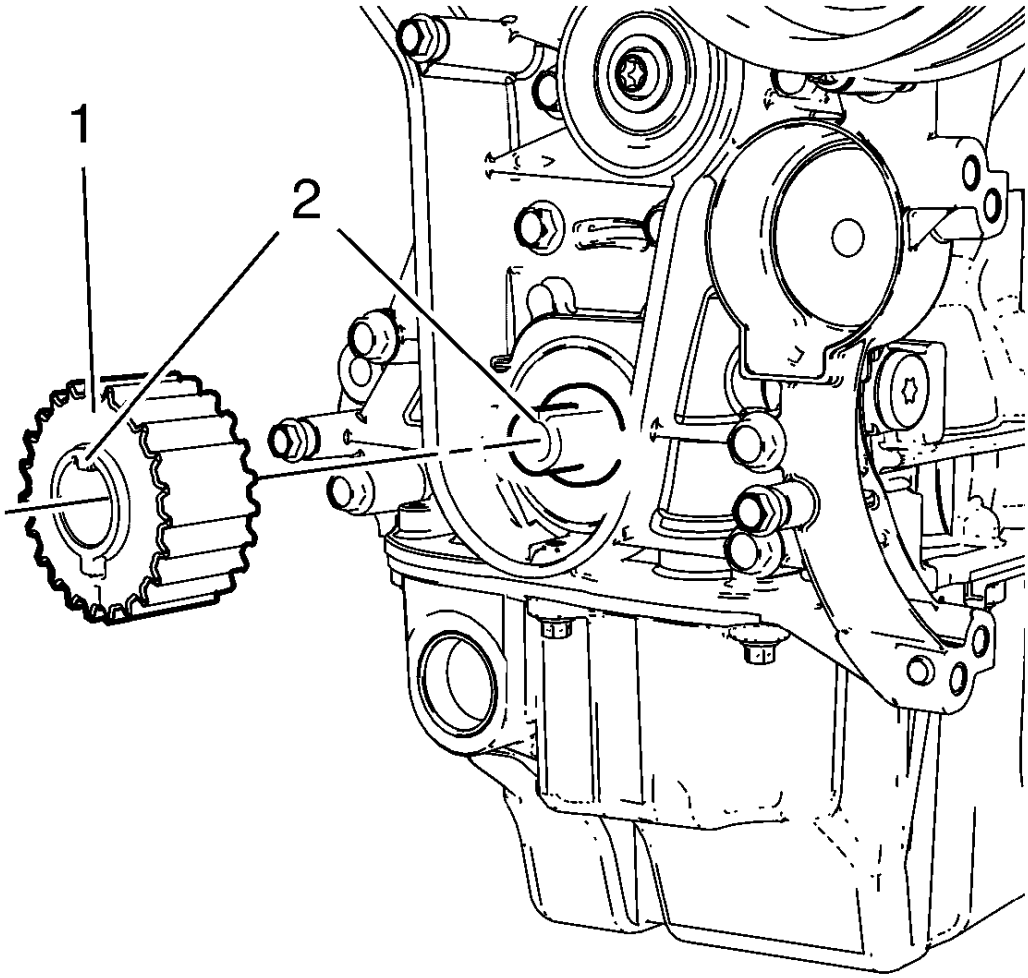

Fig. 139: Crankshaft Sprocket
Courtesy of GENERAL MOTORS COMPANY

NOTE: When installing the crankshaft sprocket, the cam and the groove must align (2).

20. Install the crankshaft sprocket (1).

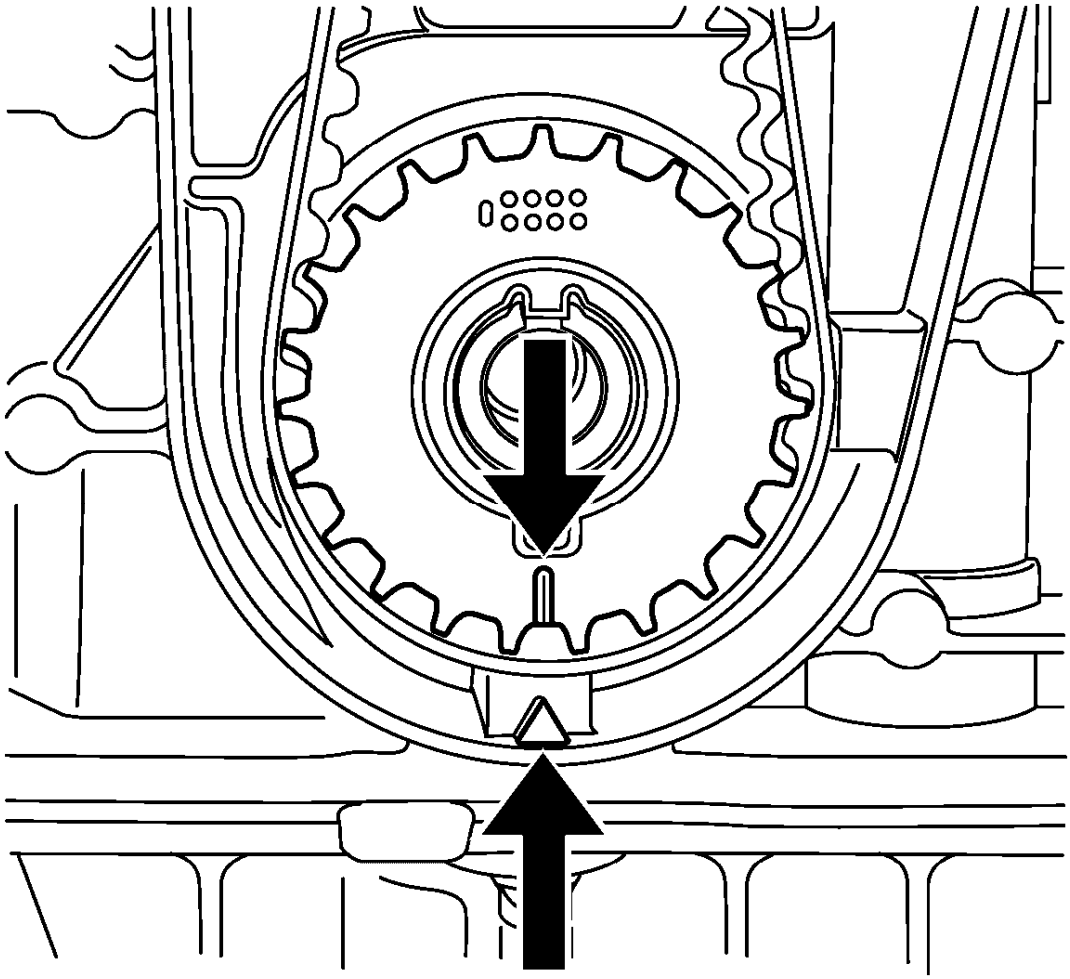

Fig. 140: Aligning Timing Belt Drive Gear And Oil Pump Housing
Courtesy of GENERAL MOTORS COMPANY

NOTE: The crankshaft sprocket and oil pump housing must align.

21. Set the crankshaft in the direction of engine rotation to TDC. Use the crankshaft balancer bolt.

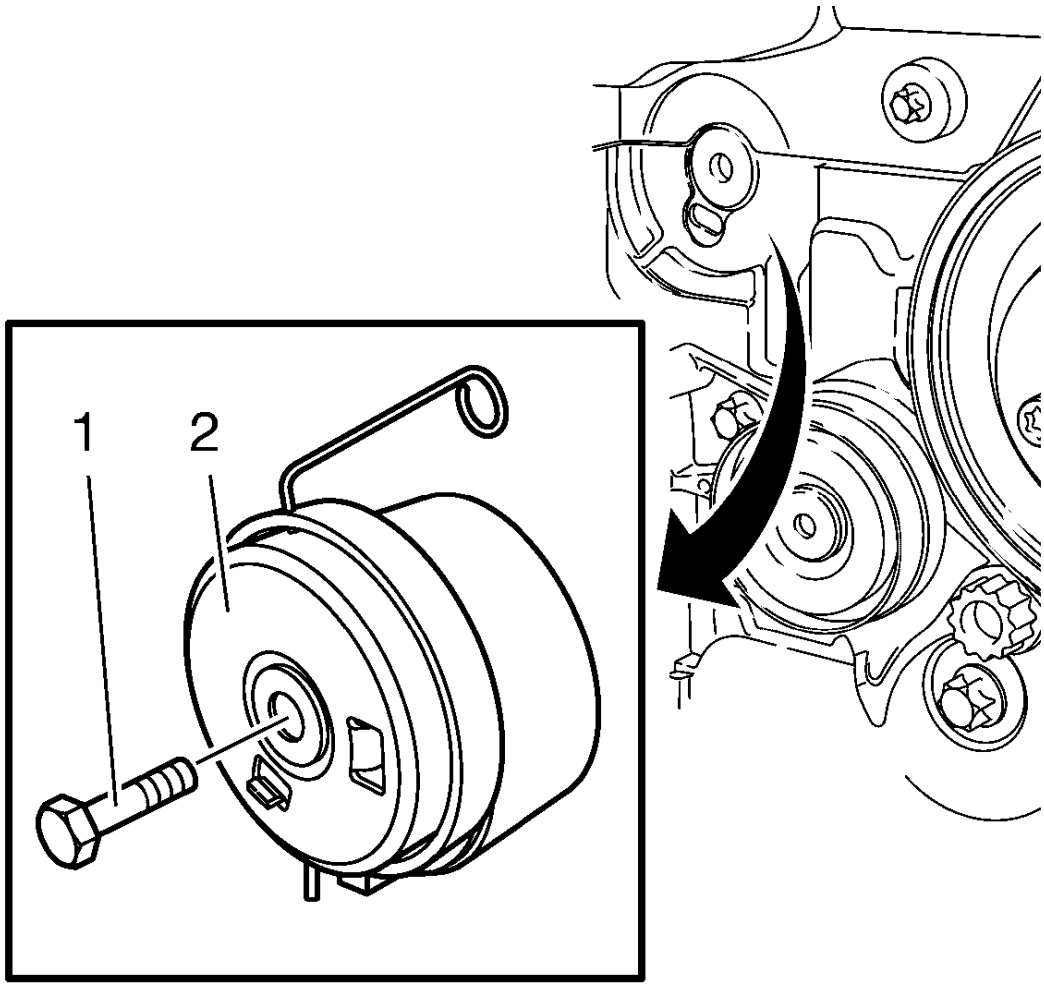

Fig. 141: Timing Belt Tensioner
Courtesy of GENERAL MOTORS COMPANY

CAUTION: Refer to Torque-to-Yield Fastener Caution .

22. Install the timing belt tensioner (2) and tighten the NEW timing belt tensioner bolt (1) in three passes use the **EN-45059** meter :
    1. First pass tighten to 20 (15 lb ft).
    2. Second pass to 120 degrees.
    3. Third pass to 15 degrees.

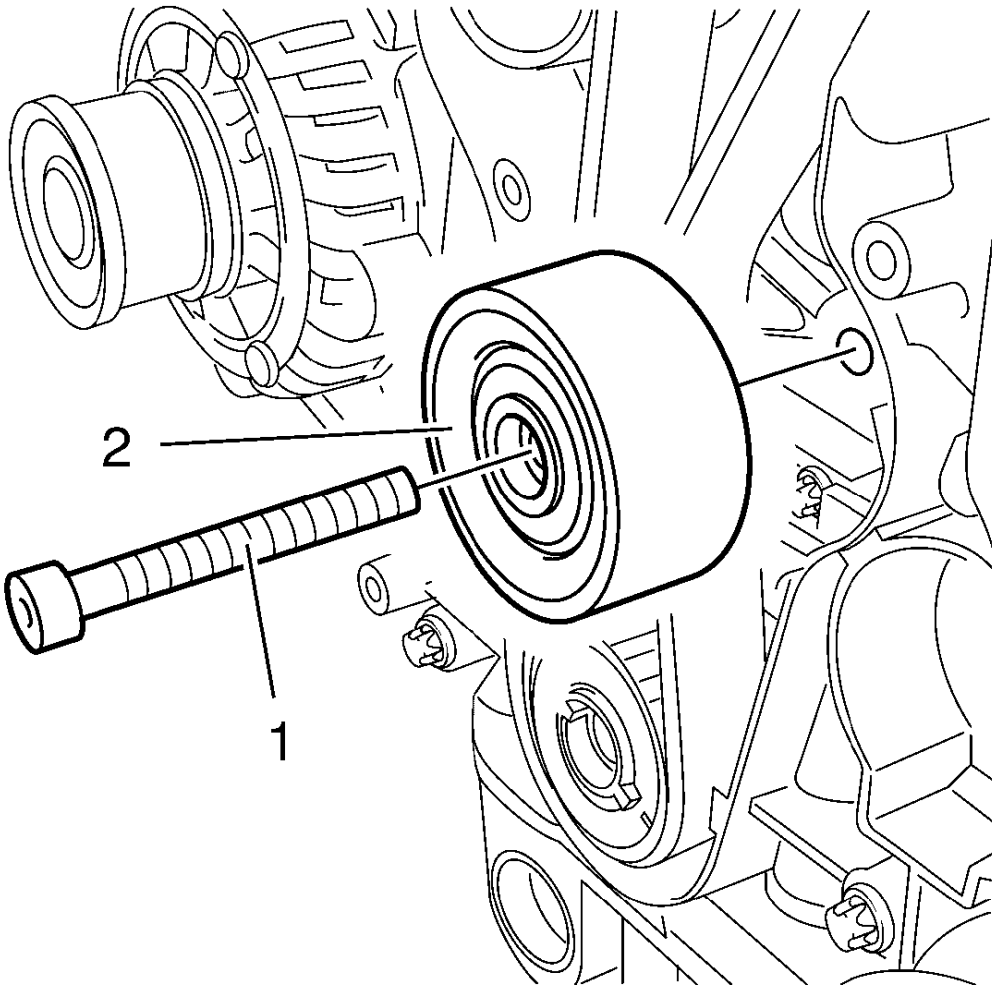

Fig. 142: Timing Belt Idler Pulley Bolt
Courtesy of GENERAL MOTORS COMPANY

CAUTION: Refer to Torque-to-Yield Fastener Caution .

23. Install the timing belt idler pulley (2) and tighten the NEW bolt (1) in three passes use the **EN-45059** meter :
    1. First pass tighten to 20 (15 lb ft).
    2. Second pass to 120 degrees.
    3. Third pass to 15 degrees.

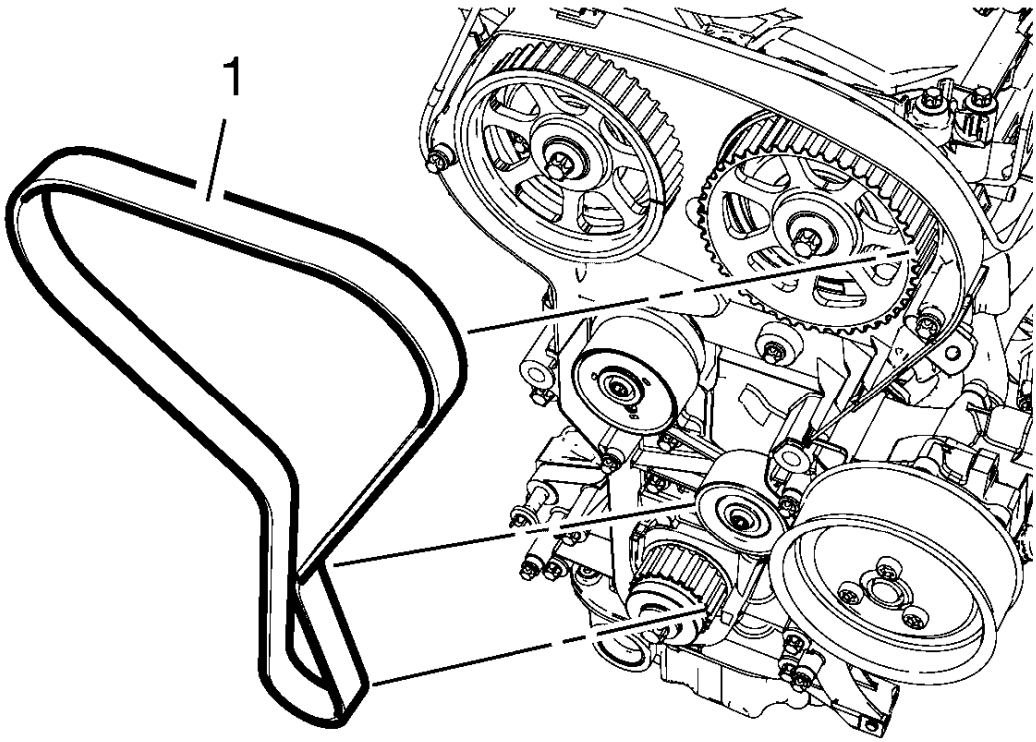

Fig. 143: Drive Belt Routing
Courtesy of GENERAL MOTORS COMPANY

24. Install the timing belt (1).
25. Guide the timing belt past the tensioner and place it on the crankshaft sprocket wheel.
26. Place the timing belt on the exhaust and intake camshaft position actuator adjusters.

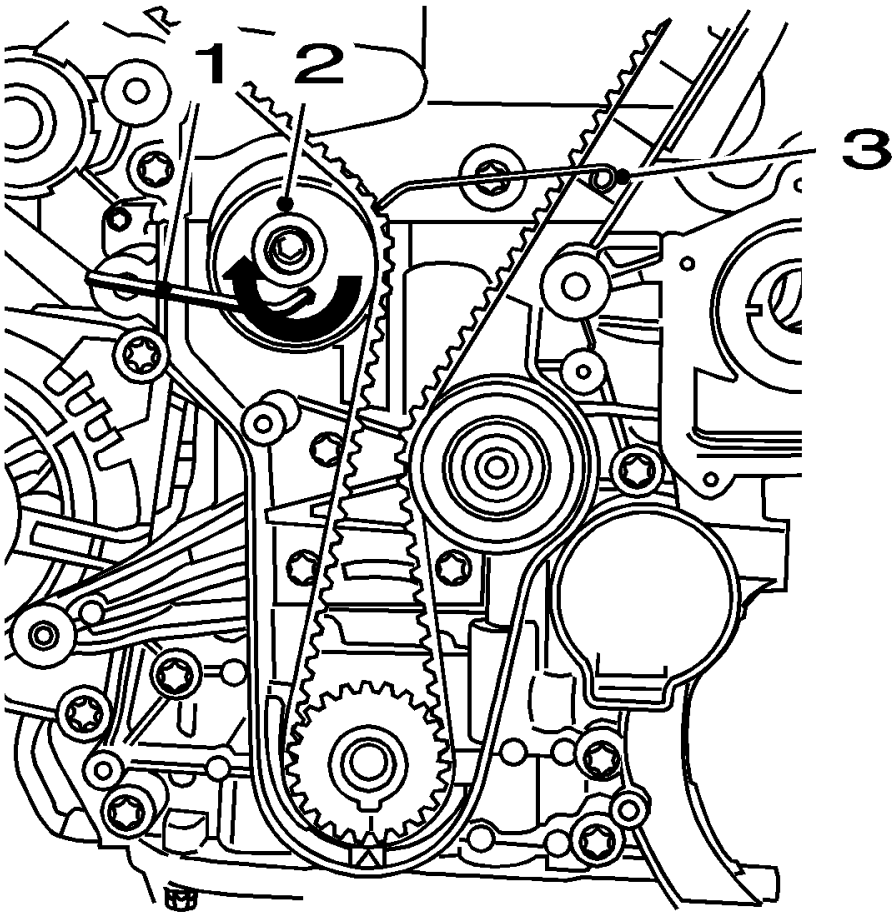

Fig. 144: View Of Drive Belt Tensioner, Allen Key And KM-6333
Courtesy of GENERAL MOTORS COMPANY

27. Apply tension to the timing belt tensioner (2) in the direction of the arrow, using an allen key (1).
28. Remove the **EN-6333** pin (3).

NOTE: The timing belt tensioner moves automatically to the correct position.

29. Release tension on timing belt tensioner.
30. Lower the vehicle.

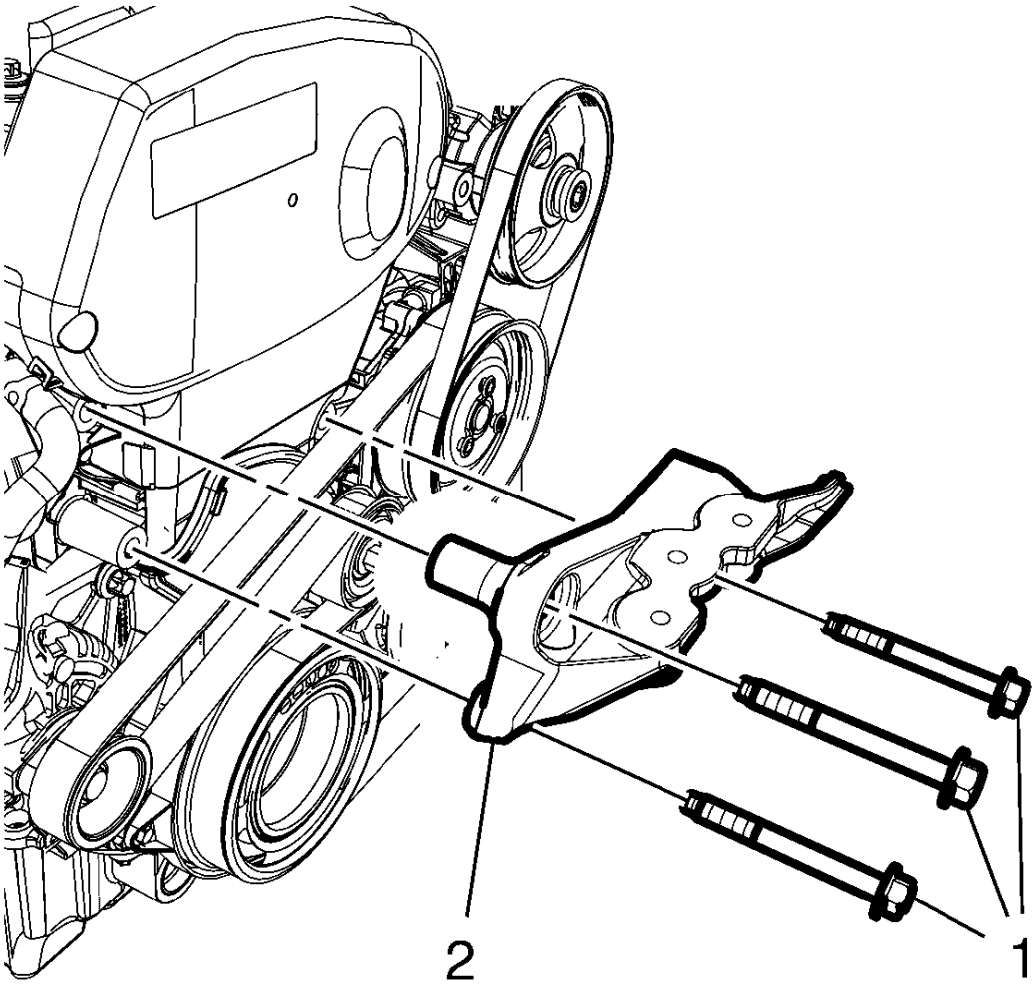

Fig. 145: Engine Mount Bracket And Bolts
Courtesy of GENERAL MOTORS COMPANY

31. Install the engine mount bracket (2).
32. Install the 3 engine mount bracket bolts (1) tighten to 62 (46 lb ft).

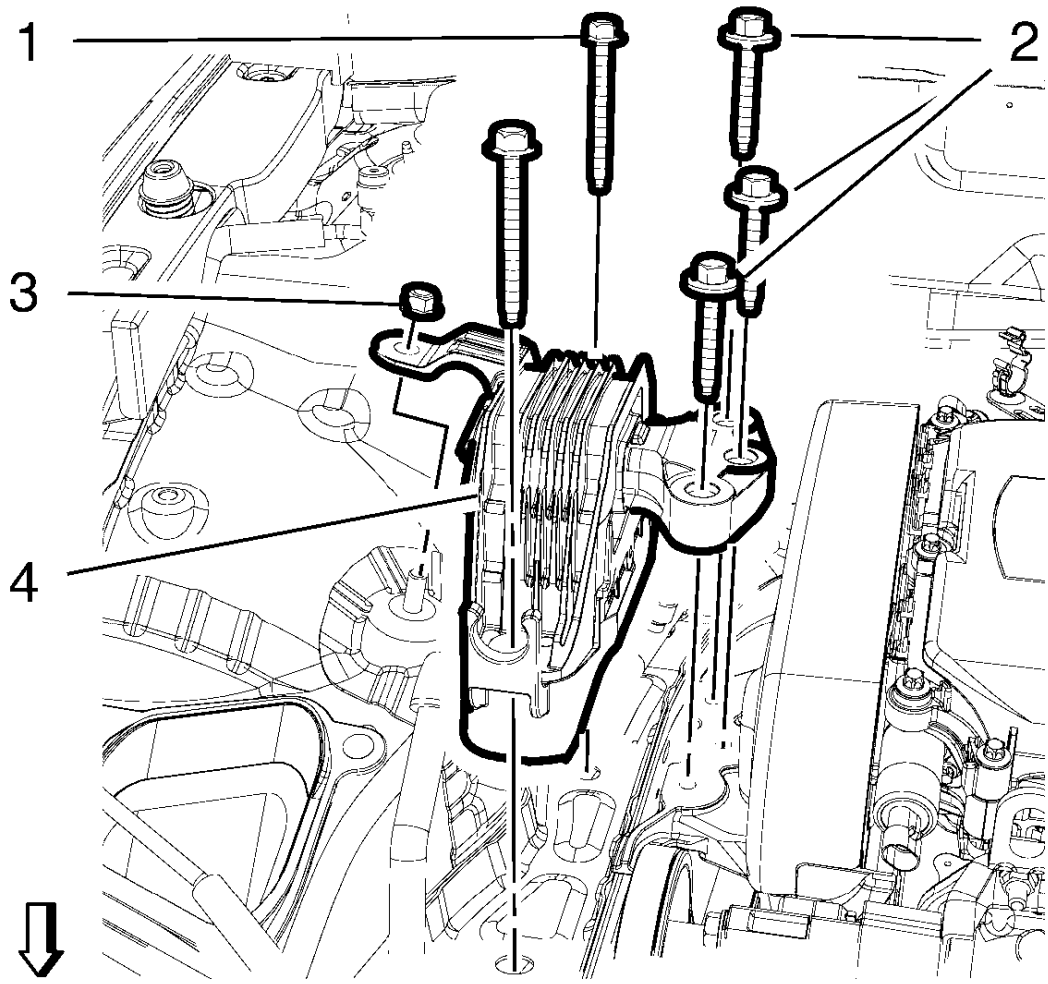

Fig. 146: Engine Mount And Bolts
Courtesy of GENERAL MOTORS COMPANY

33. Install the engine mount (4).
34. Install the 2 engine mount bolts (1) and tighten to 62 (46 lb ft).

CAUTION: Refer to Torque-to-Yield Fastener Caution .

35. Install the 3 engine mount bolts (2) and tighten in three passes use the **EN-45059** meter.
    1. First pass tighten to 50 (37 lb ft).
    2. Second pass to 60 degrees.
    3. Third pass to 15 degrees.
36. Unsupport the engine.
37. Remove **EN-6340** locking tool.

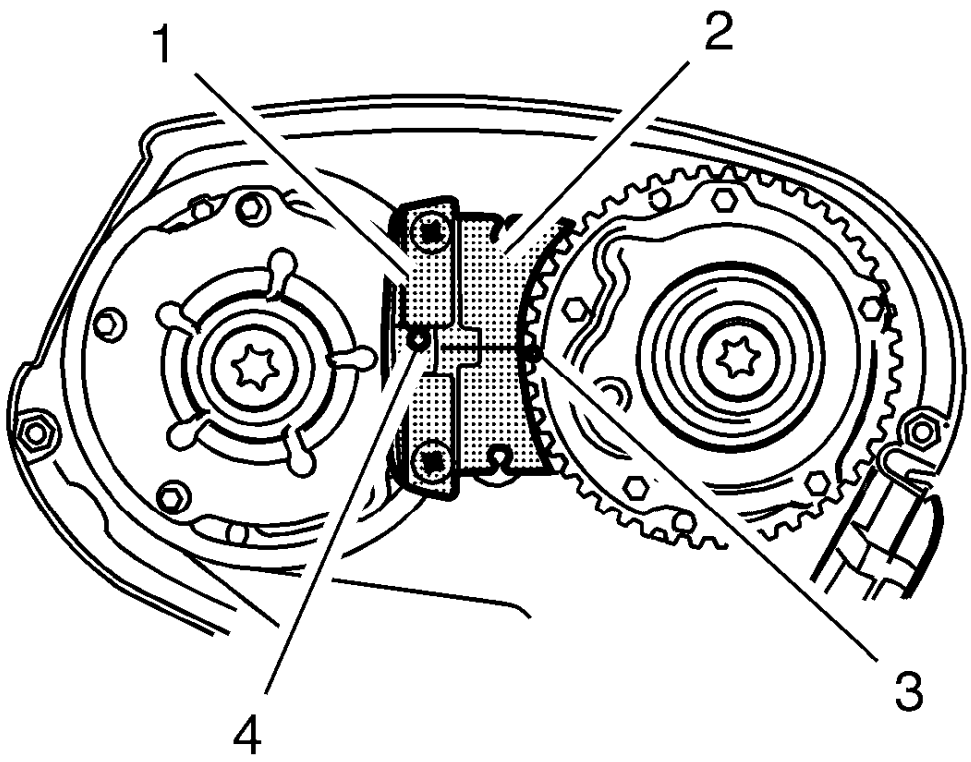

Fig. 147: Spot Type Markings And Special Tool
Courtesy of GENERAL MOTORS COMPANY

38. Check the timing

NOTE: Note the marking at the camshaft sprockets.

- Turn the crankshaft 720 degrees in the direction of engine rotation by the bolt on the crankshaft balancer.

NOTE: The spot type marking (4) on the intake camshaft adjuster does not correspond to the groove of EN-6340 locking tool - left during this process but must be somewhat above as shown.

- Install **EN-6340** locking tool - left (1) into the camshaft adjusters as shown.

NOTE: The spot type marking (3) on the exhaust camshaft adjuster must correspond to the groove on EN-6340 locking tool - right.

- Install **EN-6340** locking tool - right (2) into the camshaft adjusters as shown.
- Raise the vehicle.

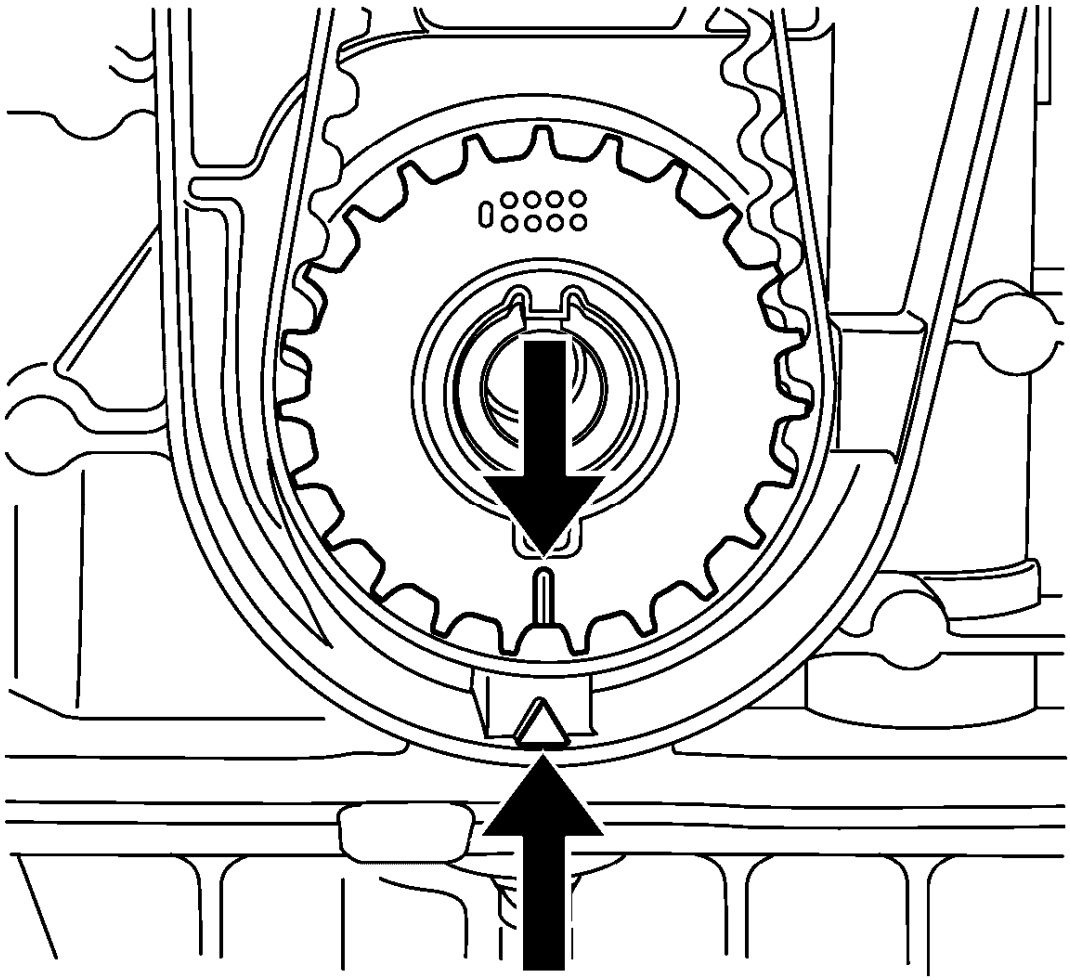

Fig. 148: Aligning Timing Belt Drive Gear And Oil Pump Housing
Courtesy of GENERAL MOTORS COMPANY

NOTE: The crankshaft sprocket and oil pump housing must align.

39. Check the crankshaft position.

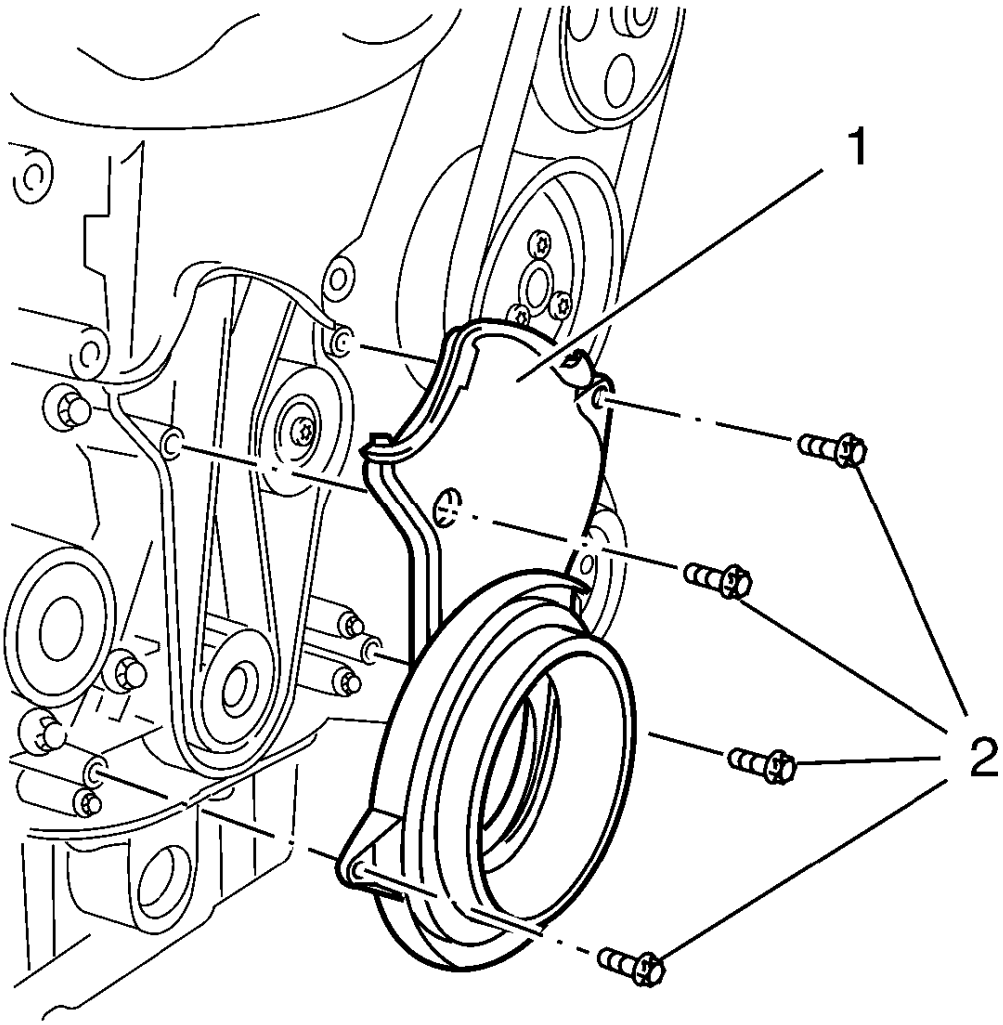

Fig. 149: Timing Belt Lower Front Cover
Courtesy of GENERAL MOTORS COMPANY

40. Install the lower timing belt cover (1).

CAUTION: Refer to Fastener Caution .

41. Install the 4 lower timing belt cover bolts (2) and tighten to 6 (53 lb in).
42. Install the crankshaft balancer. Refer to **Crankshaft Balancer Replacement (Manual Transmission)**, **Crankshaft Balancer Replacement (Automatic Transmission)**.
43. Lower the vehicle.
44. Remove the **EN-6340** locking tool.
45. Install the camshaft position actuator solenoid valve. Refer to **Camshaft Position Actuator Solenoid Valve Replacement**.

46. Install the 2 camshaft position sensors. Refer to **Camshaft Position Sensor Replacement** .
47. Install the camshaft cover. Refer to **Camshaft Cover Replacement**.

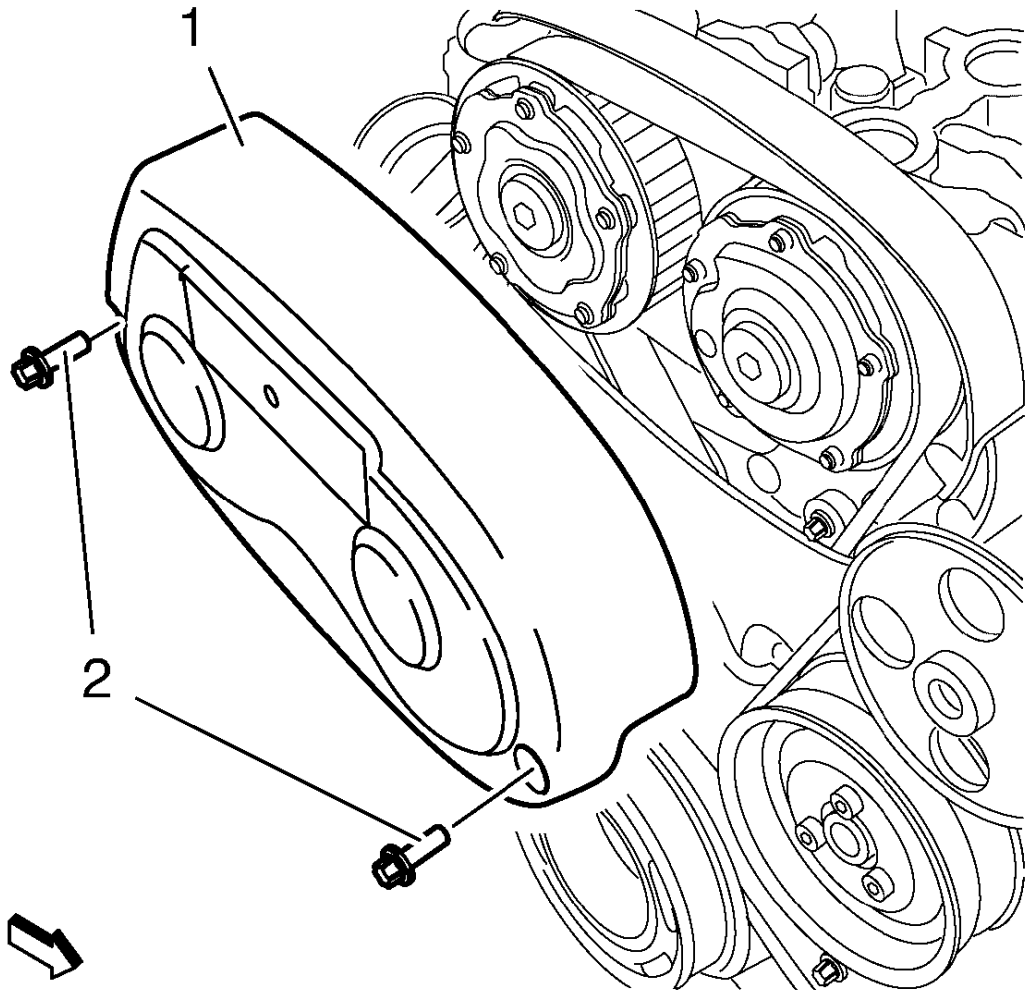

Fig. 150: Timing Belt Upper Front Cover
Courtesy of GENERAL MOTORS COMPANY

48. Install the timing belt upper front cover (1).
49. Install the 2 timing belt upper front cover bolts (2) and tighten to 6 (53 lb in).
50. Install the exhaust manifold. Refer to **Exhaust Manifold Replacement** .

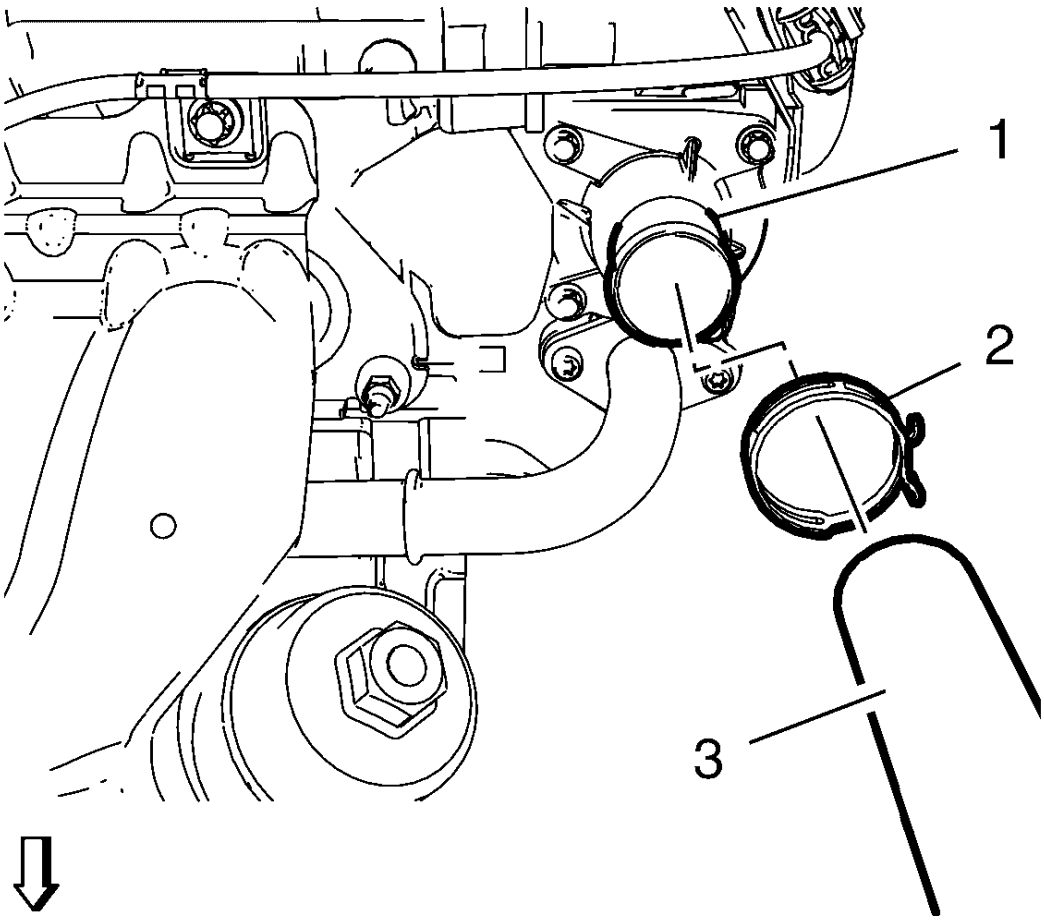

Fig. 151: Radiator Inlet Hose And Clamp
Courtesy of GENERAL MOTORS COMPANY

51. Install the radiator inlet hose (3) with the radiator inlet hose clamp (2) to the engine coolant thermostat (1).
52. Install the heater inlet hose to the engine coolant thermostat housing. Refer to **Heater Inlet Hose Replacement (1.8L LUW and LWE)** .
53. Install the heater outlet hose to the engine coolant thermostat housing. Refer to **Heater Outlet Hose Replacement (1.8L LUW)** , **Heater Outlet Hose Replacement (1.8L LWE)** .

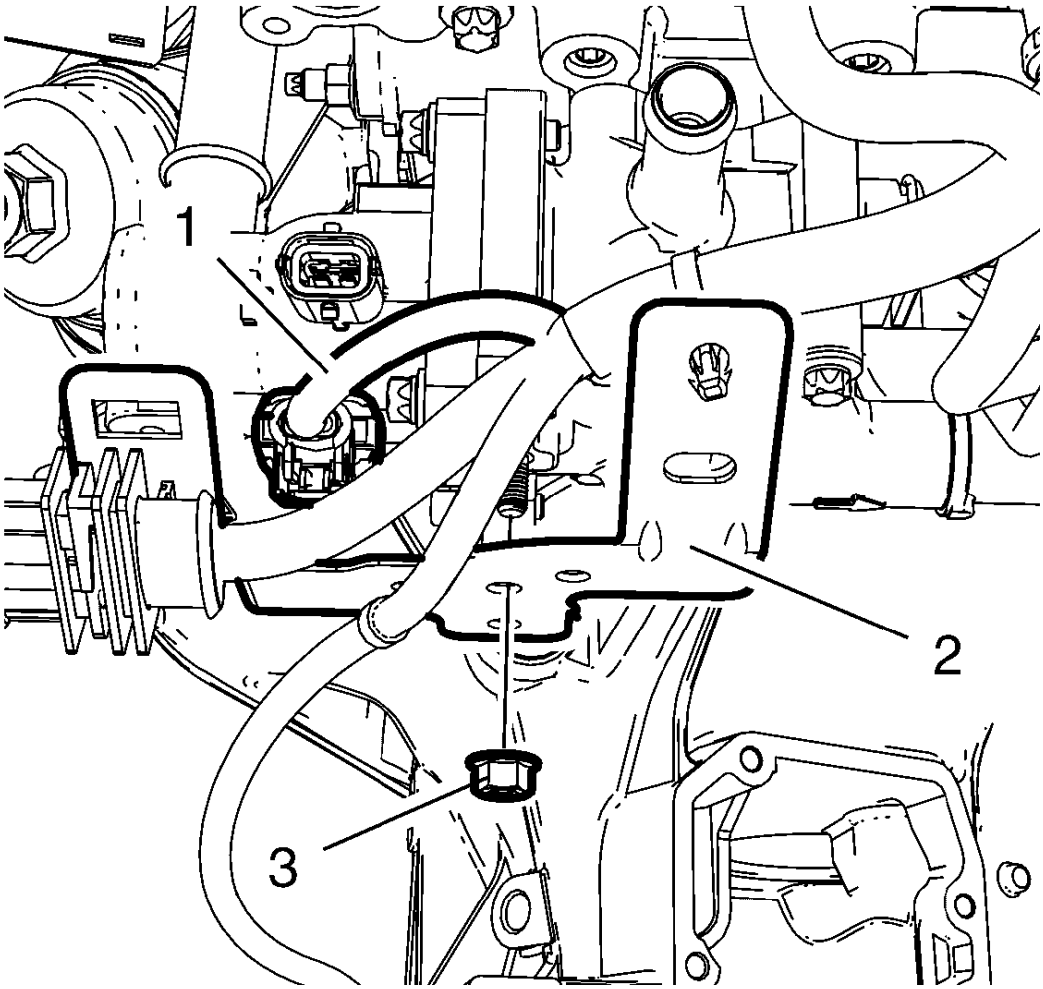

Fig. 152: Thermostat Housing Bracket, Bolts And Wiring Harness
Courtesy of GENERAL MOTORS COMPANY

54. Install the engine coolant thermostat housing bracket (2).
55. Install the engine coolant thermostat housing bracket nut (3) and tighten to 6 (53 lb in).
56. Connect the thermostat wiring harness plug (1).
57. Install the intake manifold. Refer to **Intake Manifold Replacement**.
58. Install the air cleaner assembly. Refer to **Air Cleaner Assembly Replacement (1.8L LWE)** , **Air Cleaner Assembly Replacement (1.8L LUW)** .
59. Fill engine oil. Refer to **Engine Mechanical Specifications**.
60. Connect the battery negative cable. Refer to **Battery Negative Cable Disconnection and Connection** .
61. Fill the cooling system. Refer to **Cooling System Draining and Filling (Static Fill)** , **Cooling System Draining and Filling (GE-47716 Fill)** .

OIL PAN REPLACEMENT (MANUAL TRANSMISSION)

Removal Procedure

1. Open the hood.
2. Raise and support the vehicle. Refer to **Lifting and Jacking the Vehicle** .
3. Place collecting basin underneath.
4. Remove the oil drain bolt.
5. Collect the engine oil.

CAUTION: Refer to Fastener Caution .

6. Install the NEW seal ring and the oil drain bolt, tighten to 14 N.m (124 lb in).
7. Lower the vehicle.
8. Remove the oil level indicator tube. Refer to **Oil Level Indicator Tube Replacement**.
9. Raise the vehicle.
10. Remove the right front wheelhouse liner. Refer to **Front Wheelhouse Liner Replacement** .
11. Remove the engine oil heater. Refer to **Engine Oil Heater Replacement**.
12. Remove the exhaust front pipe. Refer to **Exhaust Front Pipe Replacement** .

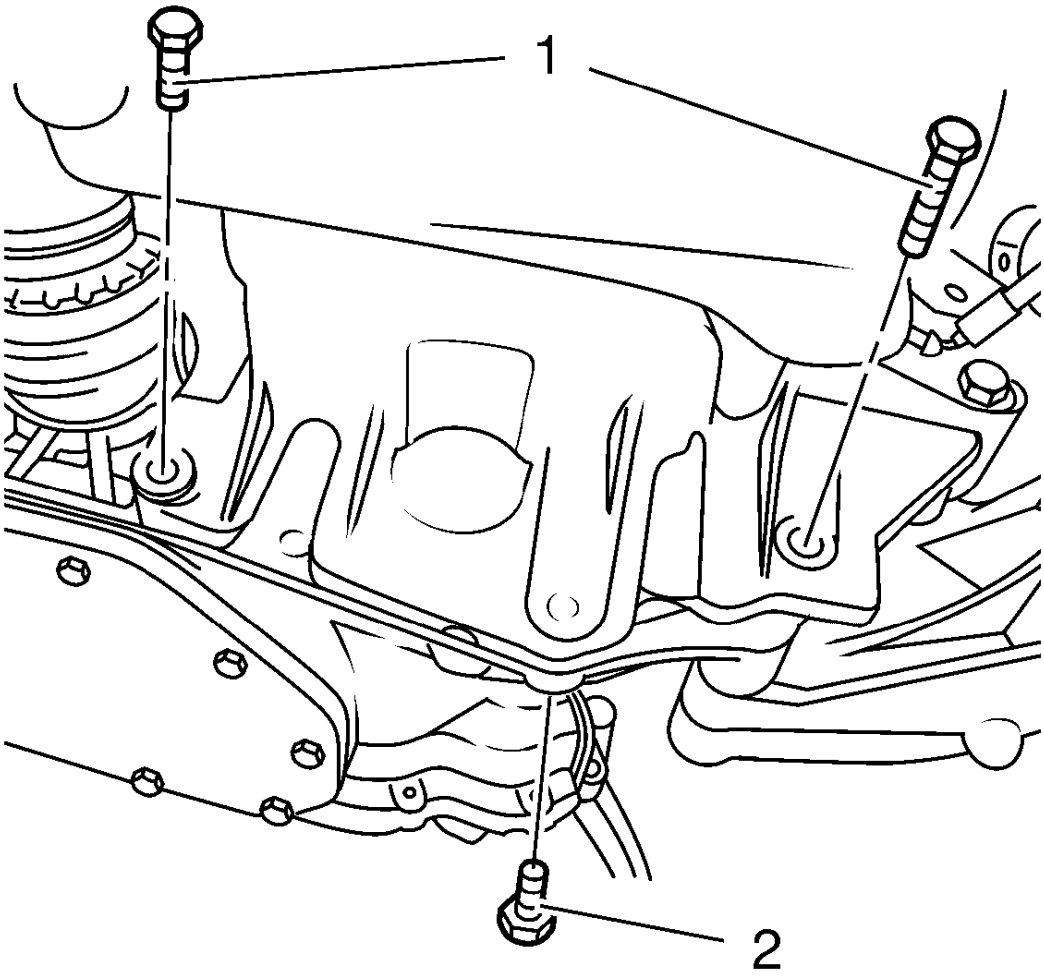

Fig. 153: Oil Pan Bolts
Courtesy of GENERAL MOTORS COMPANY

13. Remove the 3 oil pan bolts (1, 2) from the transmission.

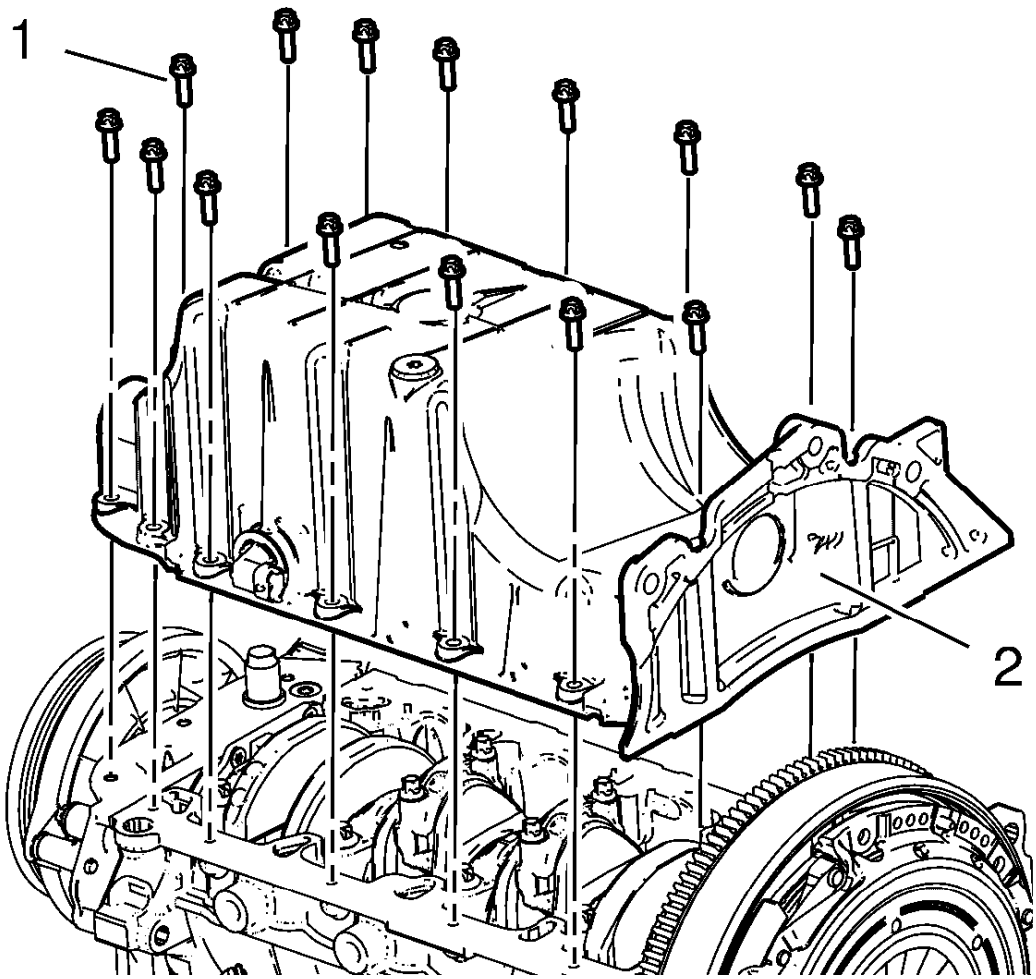

Fig. 154: Oil Pan And Bolts
Courtesy of GENERAL MOTORS COMPANY

NOTE: Remove the oil pan evenly all the way around with a suitable tool.

14. Remove the 15 oil pan bolts (1) and remove the oil pan (2).

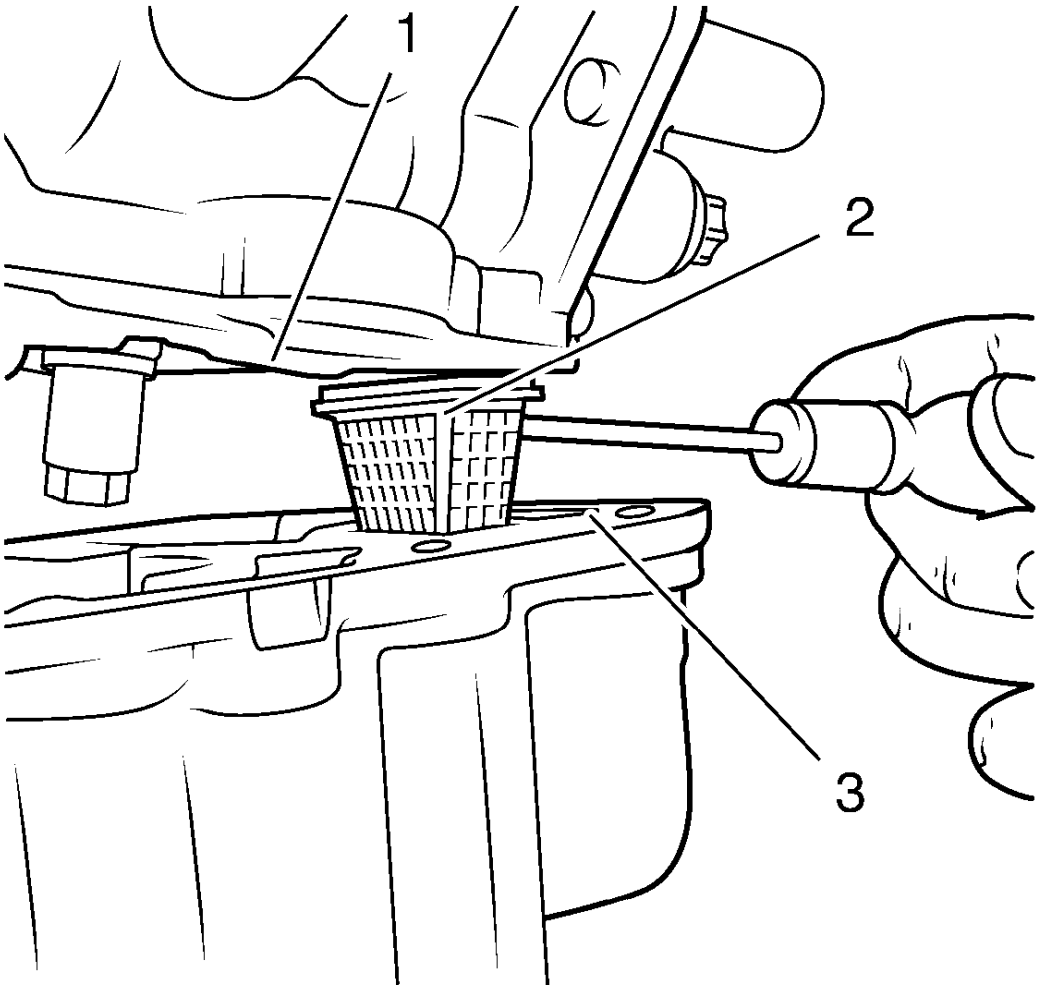

Fig. 155: Protecting Oil Screen From Damage
Courtesy of GENERAL MOTORS COMPANY

NOTE: Use a screwdriver or another suitable tool.

15. To prevent damage to the oil screen, ensure that the oil screen (2) remains in the oil pan (3). If the oil screen gets caught on the cylinder block (1), push it into the oil pan.
16. Remove the oil pan.

Installation Procedure

1. Clean the sealing surfaces.

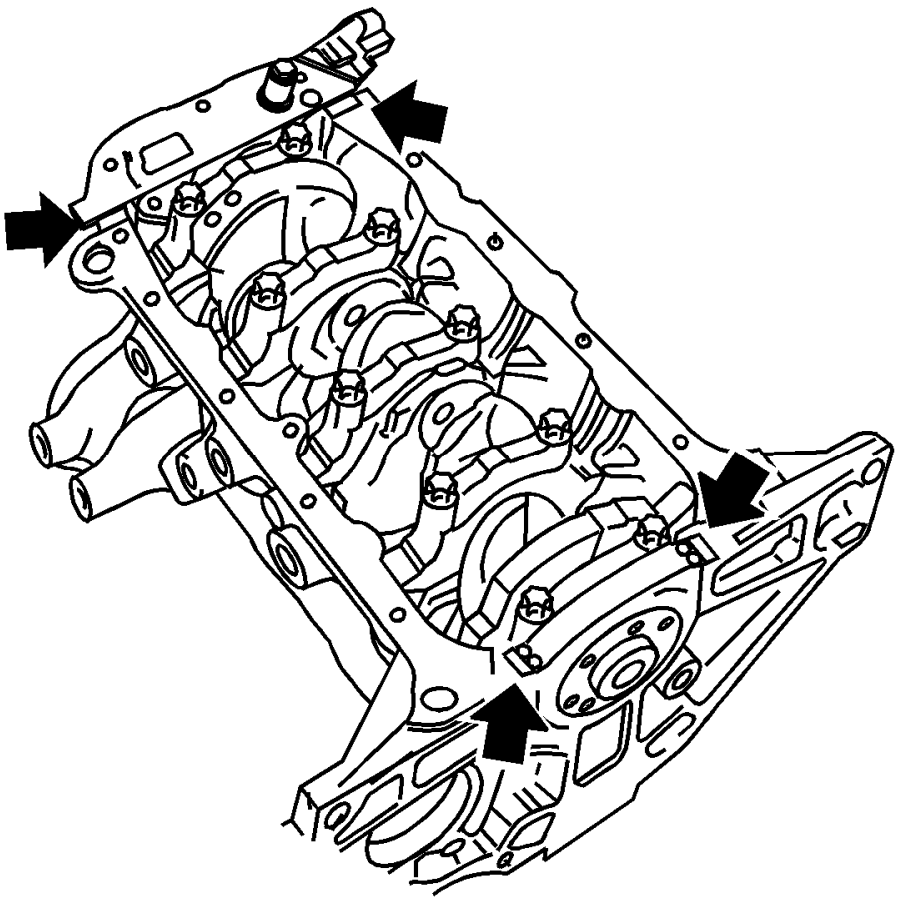

Fig. 156: View Of Joints For Sealant
Courtesy of GENERAL MOTORS COMPANY

2. Apply an approximately 3.5 mm (0.14 in) thick bead of oil pan sealant to the joints (arrows).

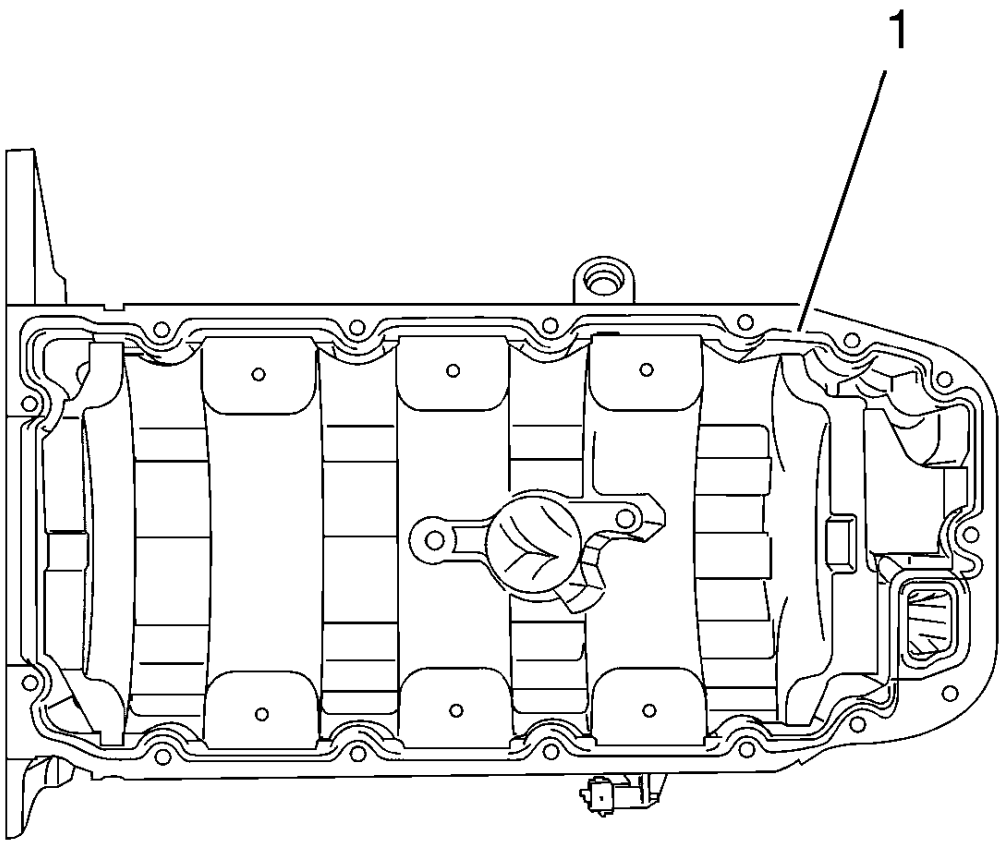

Fig. 157: Sealant Application Area
Courtesy of GENERAL MOTORS COMPANY

NOTE: The assembly time including torque check must take no longer than 10 minutes.

3. Apply an approximately 3.5 mm (0.14 in) thick bead of oil pan sealant (1) as illustrated.

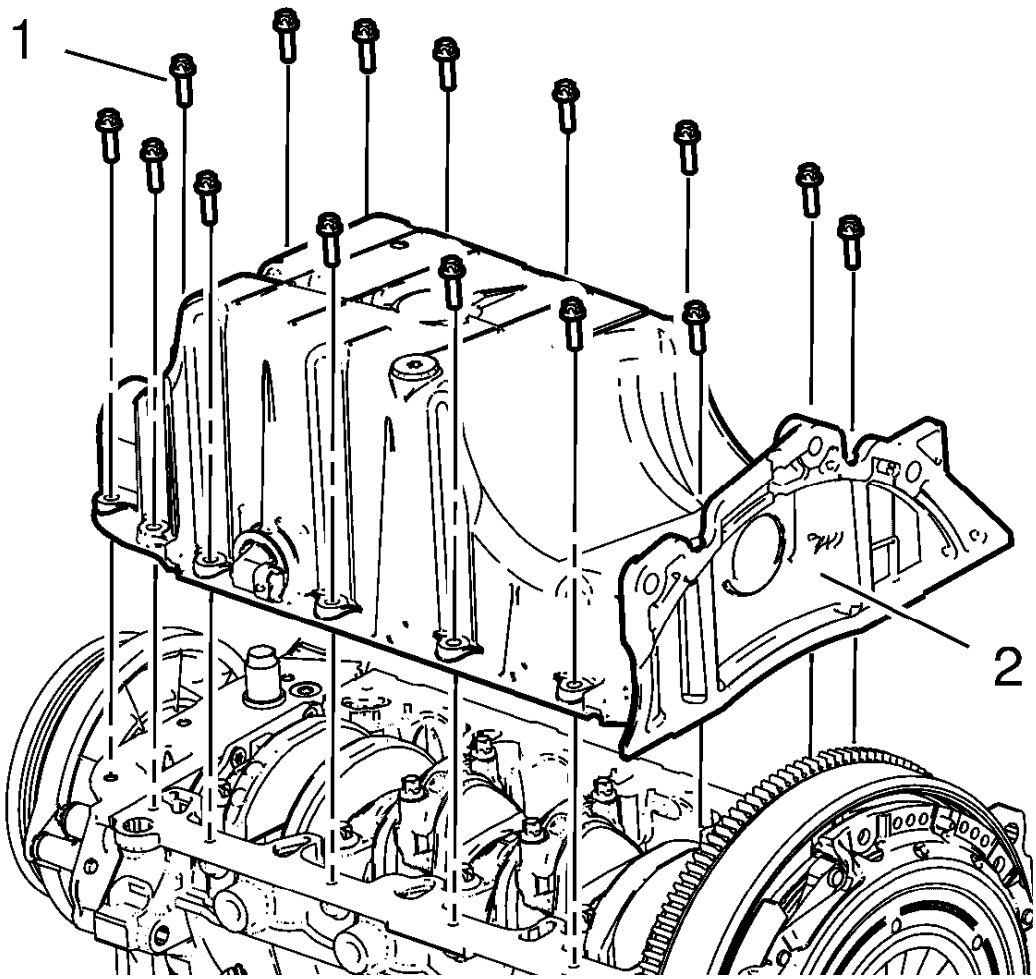

Fig. 158: Oil Pan And Bolts
Courtesy of GENERAL MOTORS COMPANY

CAUTION: Refer to Fastener Caution .

4. Install the 15 oil pan bolts (1) to the oil pan (2) and tighten to 10 N.m (89 lb in).

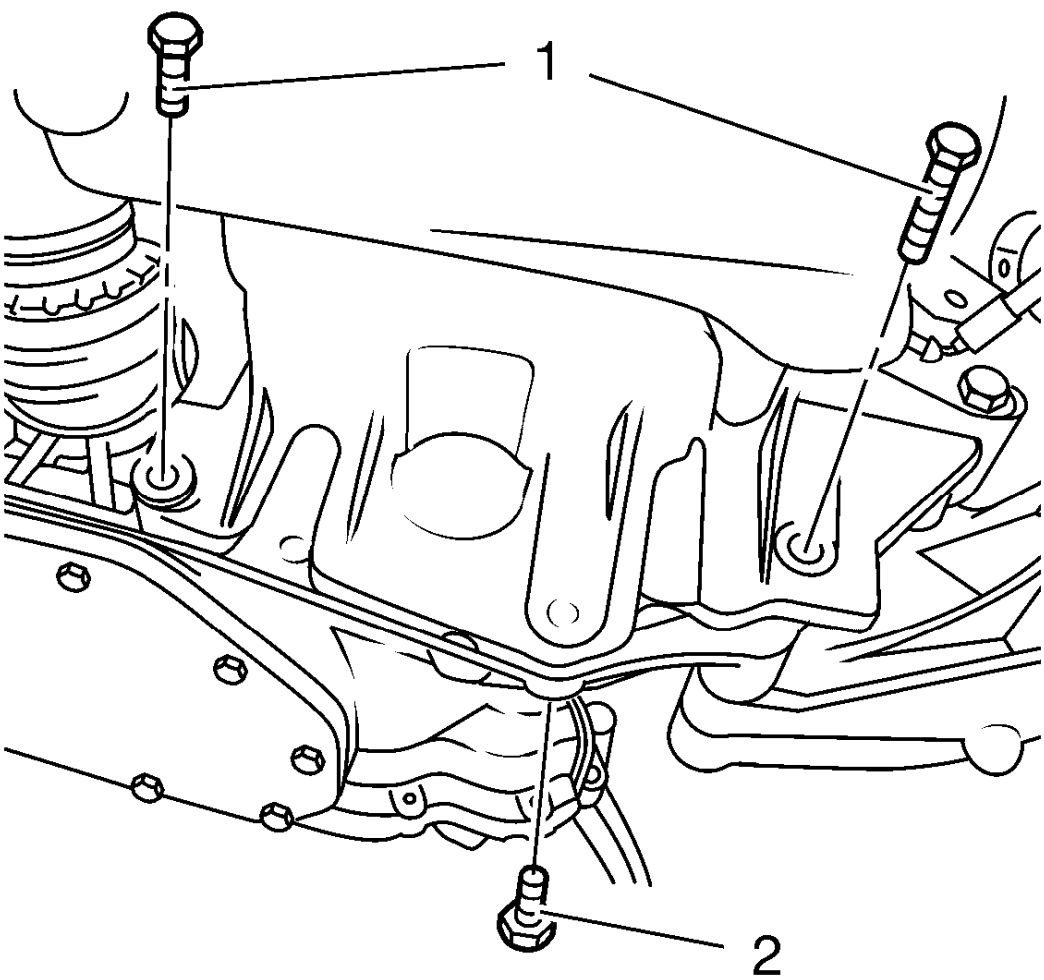

Fig. 159: Oil Pan Bolts
Courtesy of GENERAL MOTORS COMPANY

5. Install the 3 oil pan bolts (1, 2) to the transmission and tighten to 40 N.m (30 lb ft).
6. Install the exhaust front pipe. Refer to **Exhaust Front Pipe Replacement** .
7. Install the engine oil heater. Refer to **Engine Oil Heater Replacement**.
8. Install the right front wheelhouse liner. Refer to **Front Wheelhouse Liner Replacement** .
9. Lower the vehicle.
10. Install the oil level indicator tube. Refer to **Oil Level Indicator Tube Replacement**.

NOTE: Inspect the engine oil level and correct if necessary.

11. Refill the collected engine oil.
12. Close the hood.

OIL PAN REPLACEMENT (AUTOMATIC TRANSMISSION)

Removal Procedure

1. Raise and support the vehicle. Refer to **Lifting and Jacking the Vehicle** .
2. Place collecting basin underneath.
3. Remove the oil drain bolt.
4. Collect the engine oil.

CAUTION: Refer to Fastener Caution .

5. Install the NEW seal ring and the oil drain bolt, tighten to 14 N.m (124 lb in).
6. Lower the vehicle.
7. Remove the oil level indicator tube. Refer to **Oil Level Indicator Tube Replacement**.
8. Raise the vehicle.
9. Remove the right front wheelhouse liner. Refer to **Front Wheelhouse Liner Replacement** .
10. Remove the engine oil heater. Refer to **Engine Oil Heater Replacement**.
11. Remove the exhaust front pipe. Refer to **Exhaust Front Pipe Replacement** .

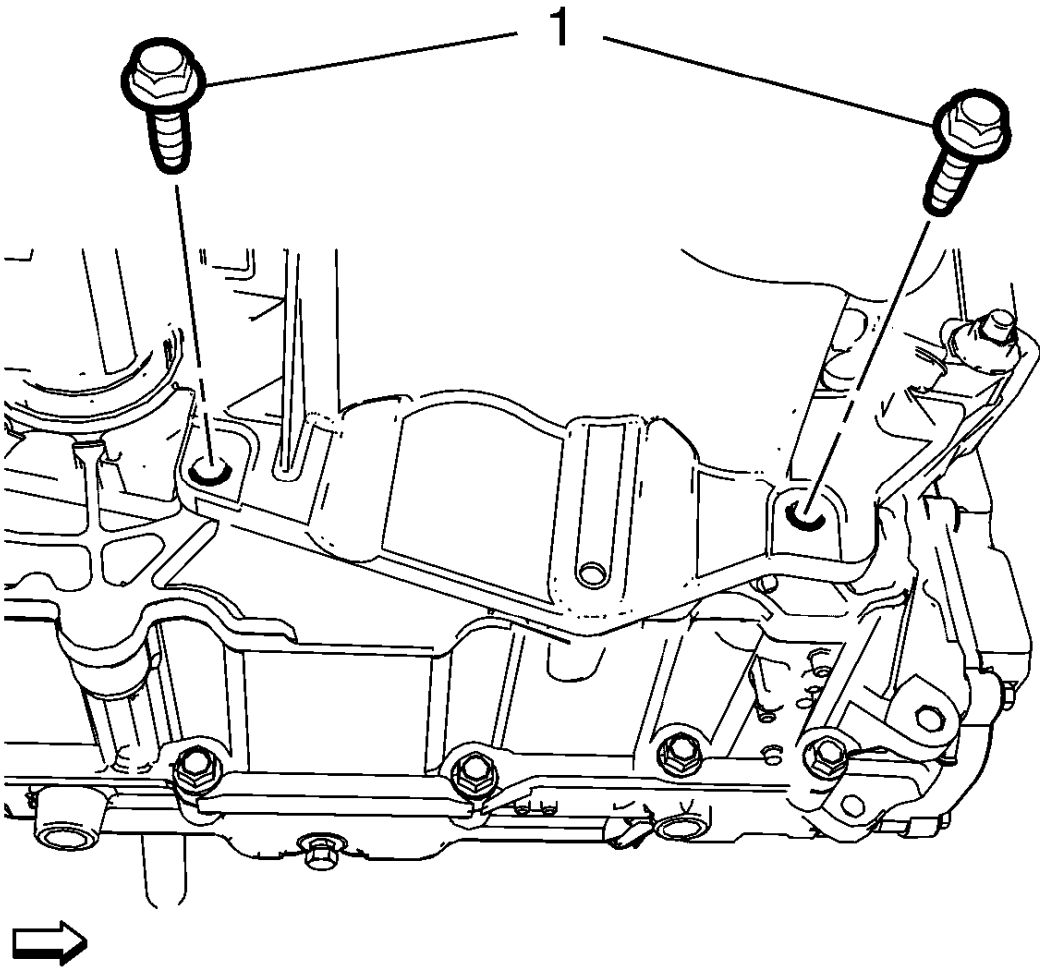

Fig. 160: Oil Pan Bolts
Courtesy of GENERAL MOTORS COMPANY

12. Remove the 2 oil pan bolts (1) from the transmission.

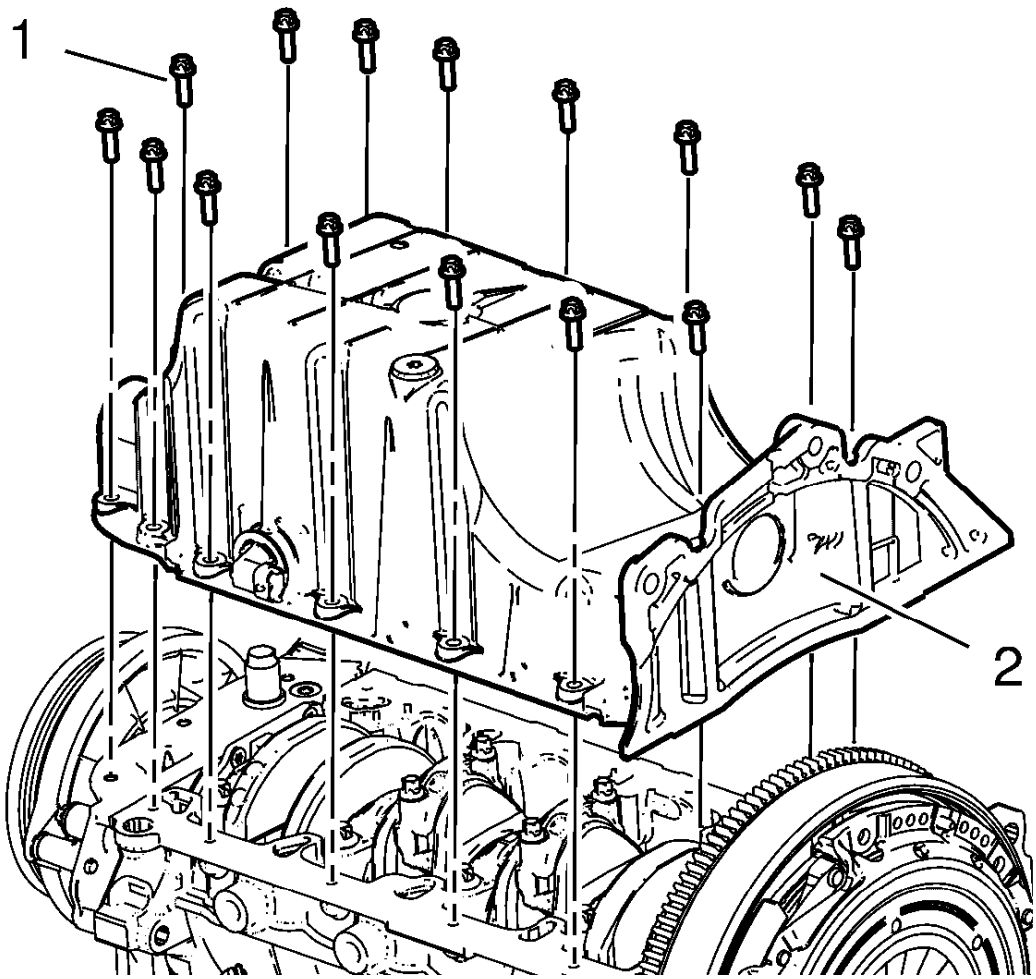

Fig. 161: Oil Pan And Bolts
Courtesy of GENERAL MOTORS COMPANY

NOTE: Remove the oil pan evenly all the way around with a suitable tool.

13. Remove the 15 oil pan bolts (1) and remove the oil pan (2).

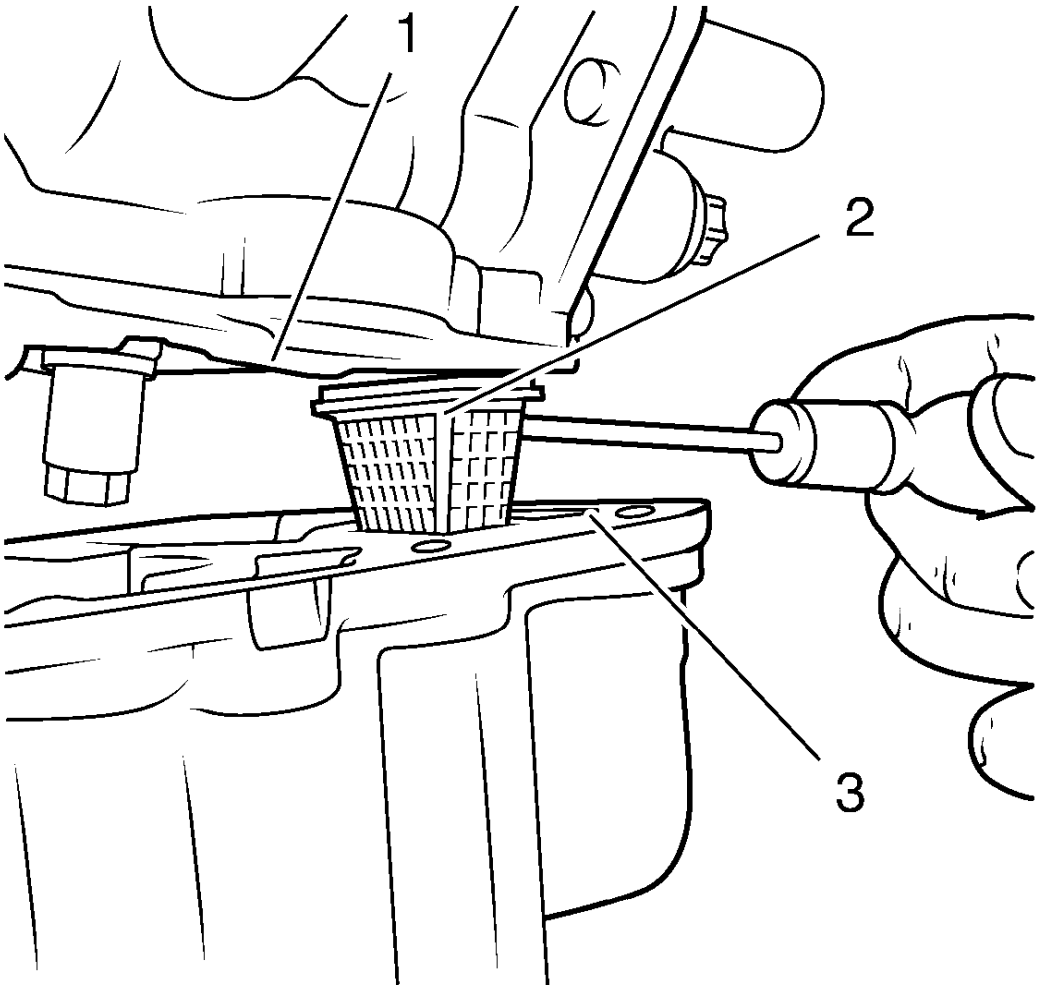

Fig. 162: Protecting Oil Screen From Damage
Courtesy of GENERAL MOTORS COMPANY

NOTE: Use a screwdriver or another suitable tool.

14. To prevent damage to the oil screen, ensure that the oil screen (2) remains in the oil pan (3). If the oil screen gets caught on the cylinder block (1), push it into the oil pan.
15. Remove the oil pan.

Installation Procedure

1. Clean the sealing surfaces.

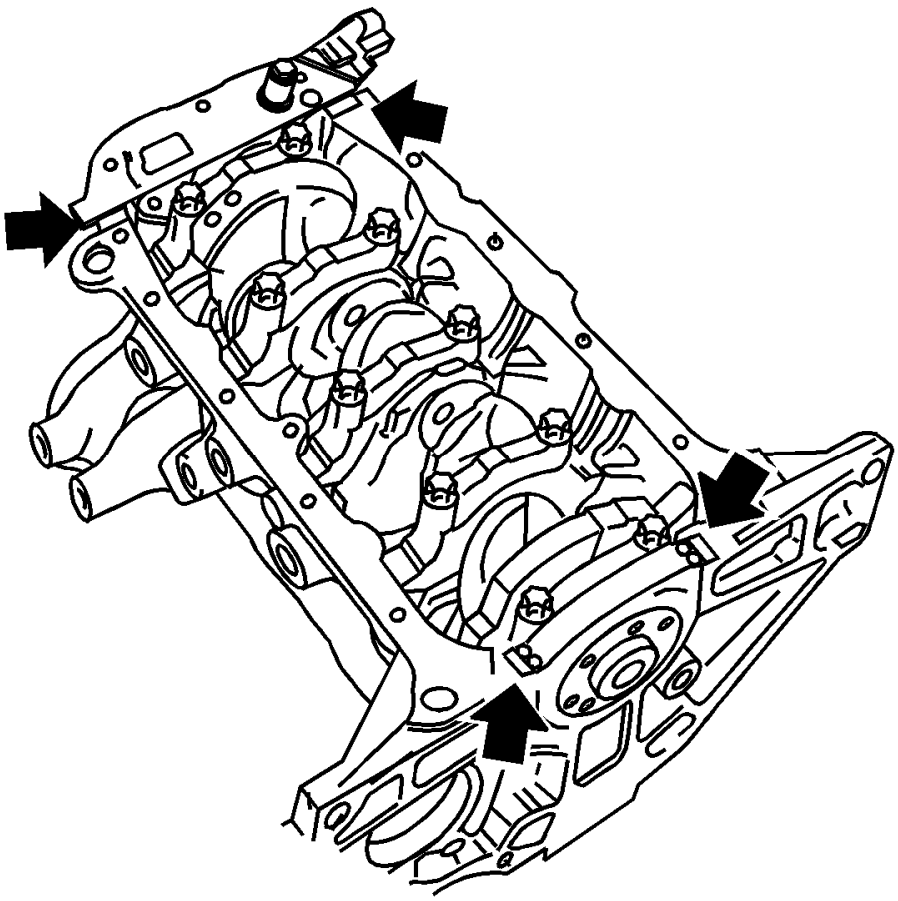

Fig. 163: View Of Joints For Sealant
Courtesy of GENERAL MOTORS COMPANY

2. Apply an approximately 3.5 mm (0.14 in) thick bead of oil pan sealant to the joints (arrows).

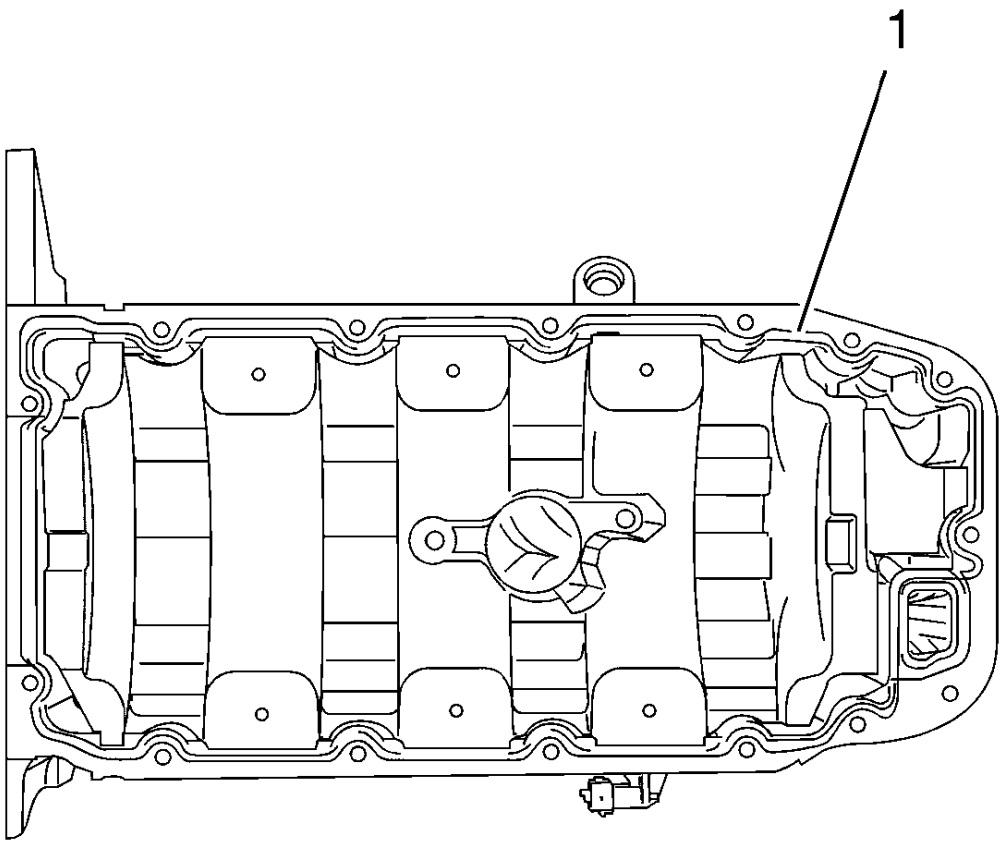

Fig. 164: Sealant Application Area
Courtesy of GENERAL MOTORS COMPANY

NOTE: The assembly time including torque check must take no longer than 10 minutes.

3. Apply an approximately 3.5 mm (0.14 in) thick bead of oil pan sealant (1) as illustrated.

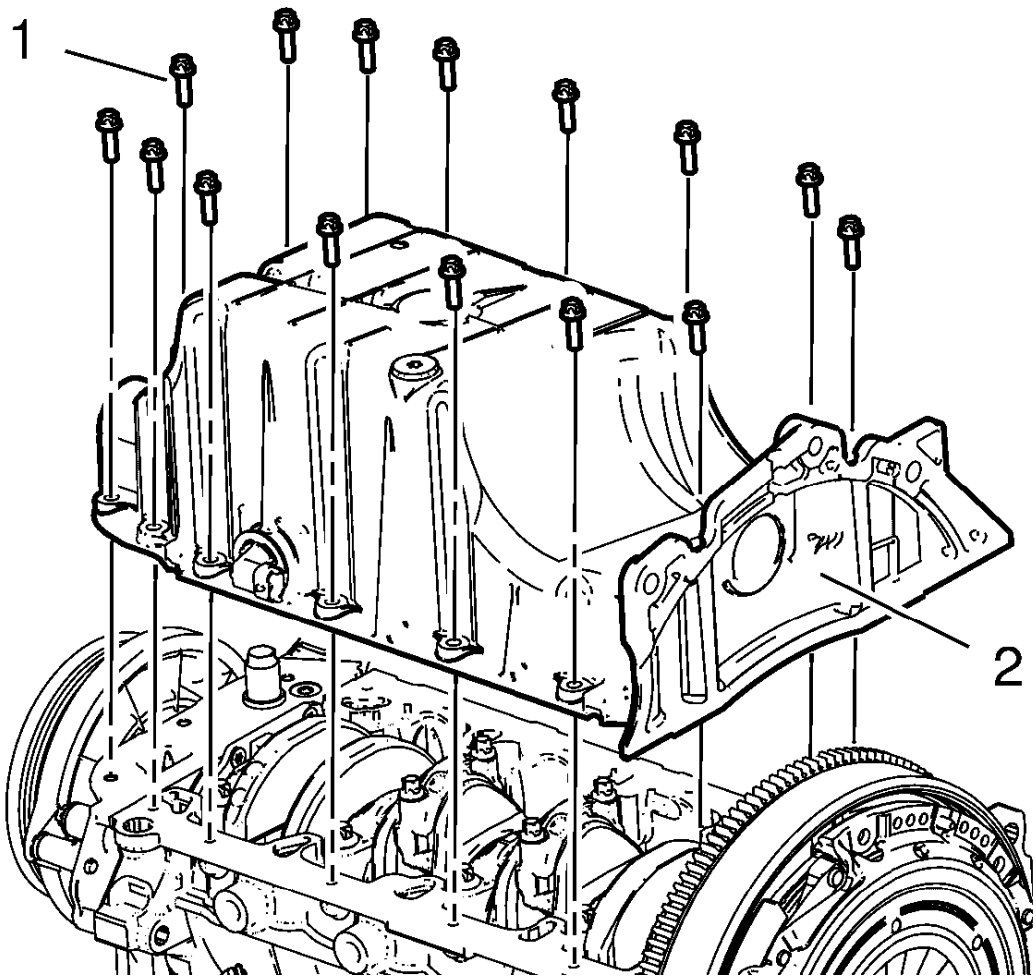

Fig. 165: Oil Pan And Bolts
Courtesy of GENERAL MOTORS COMPANY

CAUTION: Refer to Fastener Caution .

4. Install the 15 oil pan bolts (1) to the oil pan (2) and tighten to 10 N.m (89 lb in).

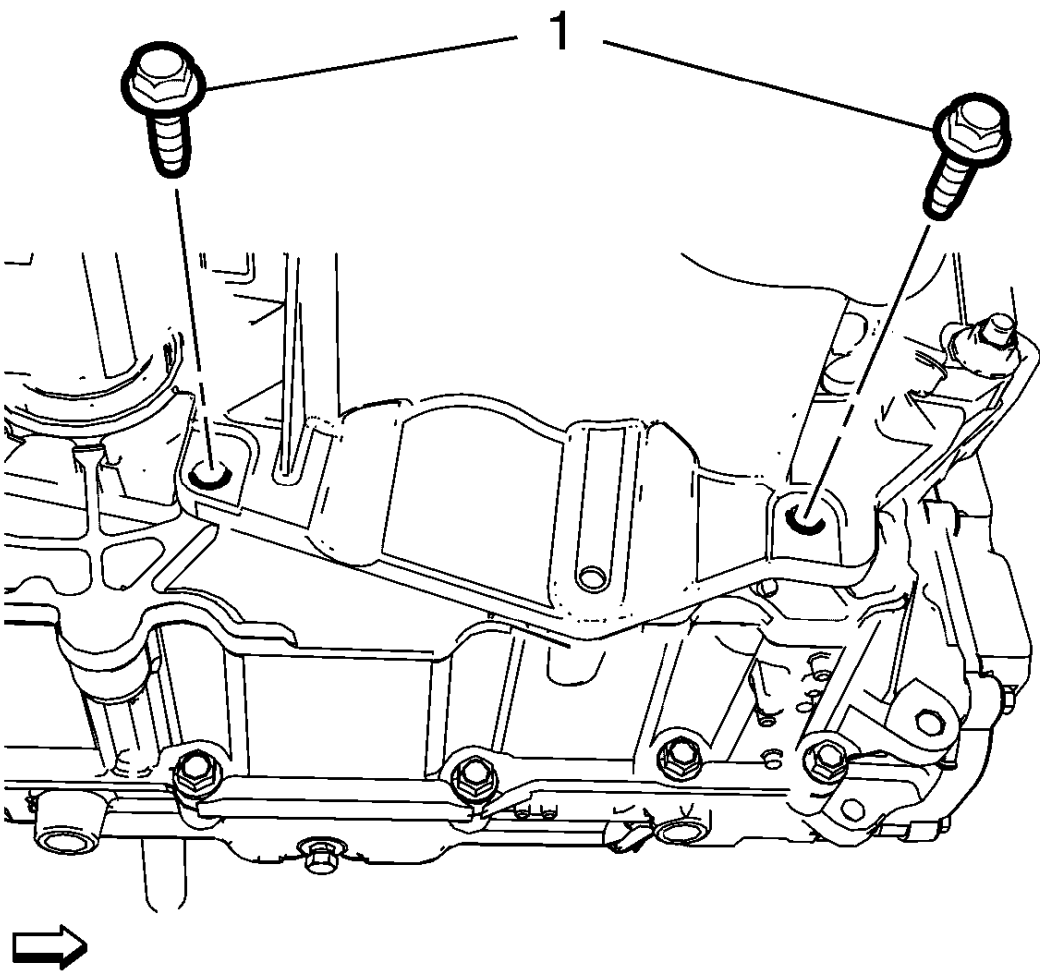

Fig. 166: Oil Pan Bolts
Courtesy of GENERAL MOTORS COMPANY

5. Install the 2 oil pan bolts (1) to the transmission and tighten to 58 N.m (43 lb ft).
6. Install the exhaust front pipe. Refer to **Exhaust Front Pipe Replacement** .
7. Install the engine oil heater. Refer to **Engine Oil Heater Replacement**.
8. Install the right front wheelhouse liner. Refer to **Front Wheelhouse Liner Replacement** .
9. Lower the vehicle.
10. Install the oil level indicator tube. Refer to **Oil Level Indicator Tube Replacement**.

NOTE: Inspect the engine oil level and correct if necessary.

11. Refill the collected engine oil.

AUTOMATIC TRANSMISSION FLEX PLATE REPLACEMENT

Special Tools

EN-652 Automatic Transmission Flex Plate Holder

For equivalent regional tools, refer to **Special Tools**.

Removal Procedure

1. Remove the automatic transmission. Refer to **Transmission Replacement** .

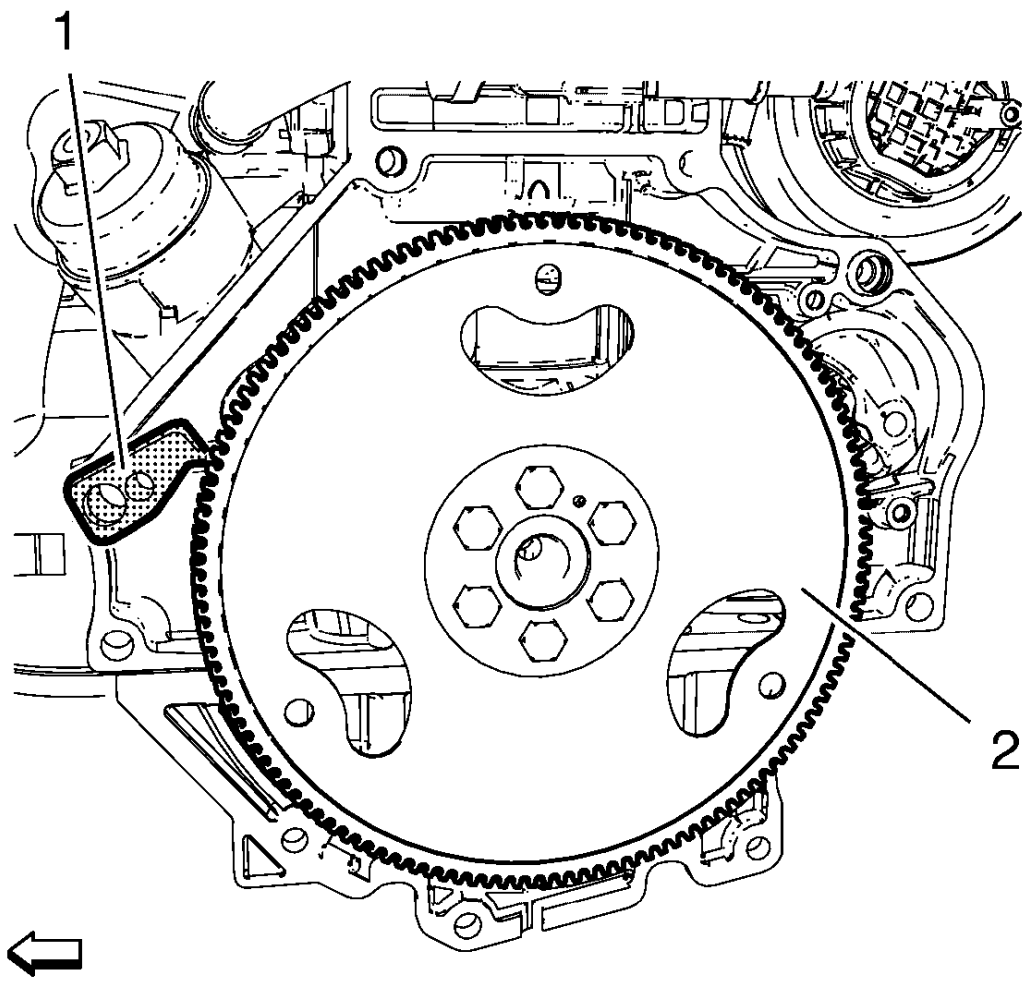

Fig. 167: Automatic Transmission Flex Plate And Holder
Courtesy of GENERAL MOTORS COMPANY

2. Install the **EN-652** holder (1) to hold the automatic transmission flex plate (2).
3. Loosen the 6 automatic transmission flex plate bolts.
4. Remove the **EN-652** holder (1).

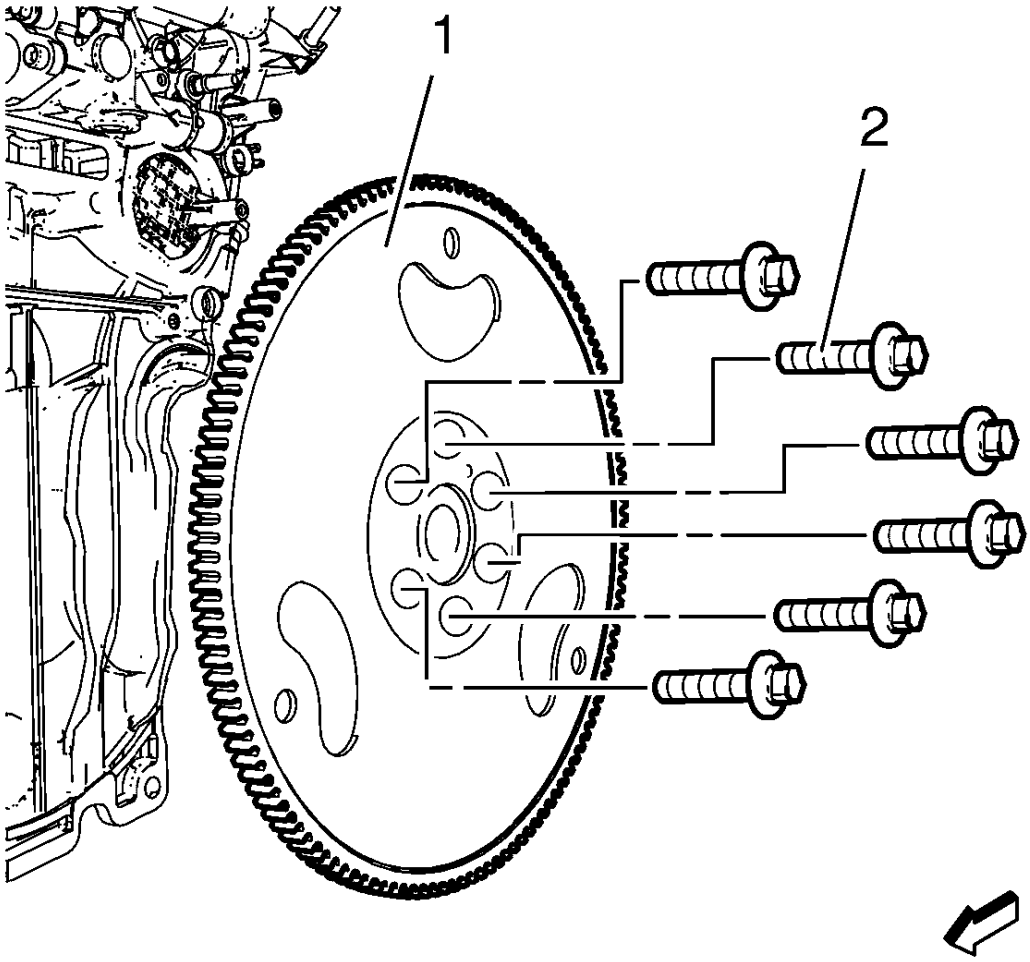

Fig. 168: Automatic Transmission Flex Plate And Bolts
Courtesy of GENERAL MOTORS COMPANY

5. Remove the 6 automatic transmission flex plate bolts (2).
6. Remove the automatic transmission flex plate (1).

Installation Procedure

1. Clean the automatic transmission flex plate bolt threads.

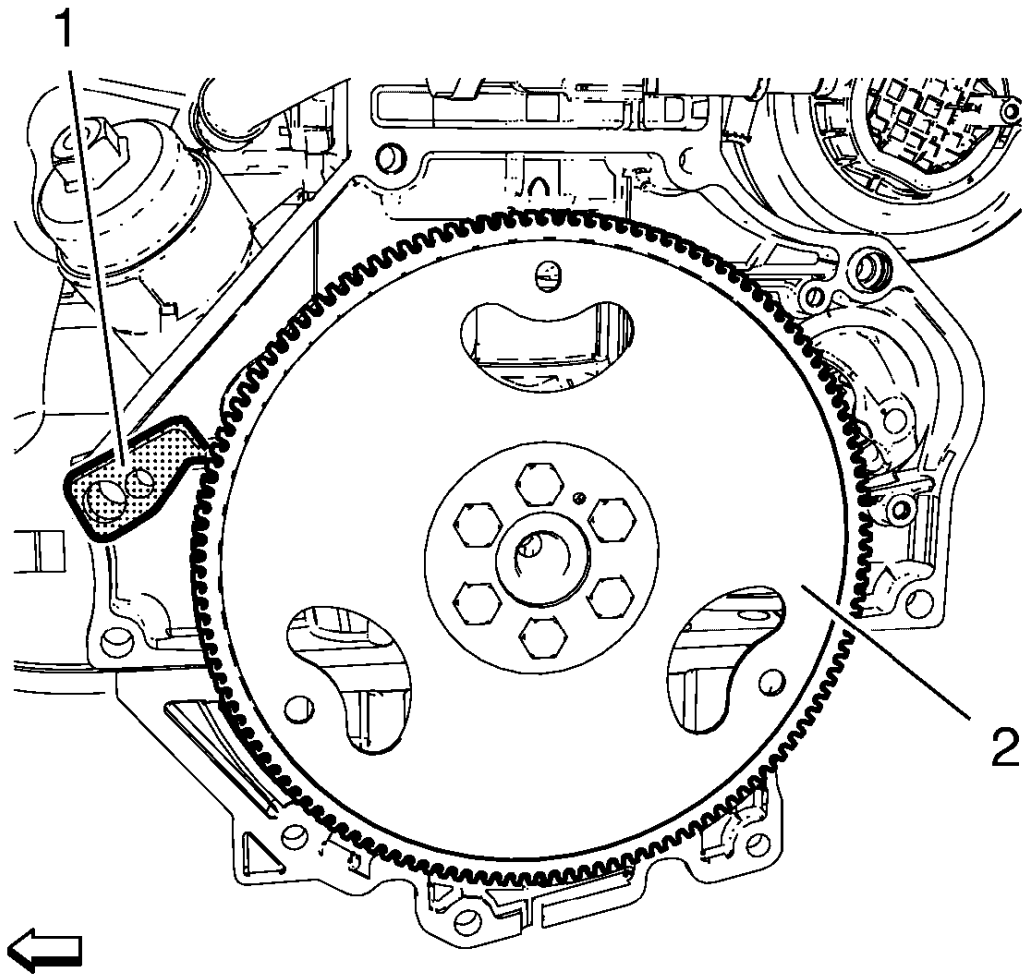

Fig. 169: Automatic Transmission Flex Plate And Holder
Courtesy of GENERAL MOTORS COMPANY

2. Install the automatic transmission flex plate (2) and the **EN-652** holder to hold the automatic transmission flex plate (2).

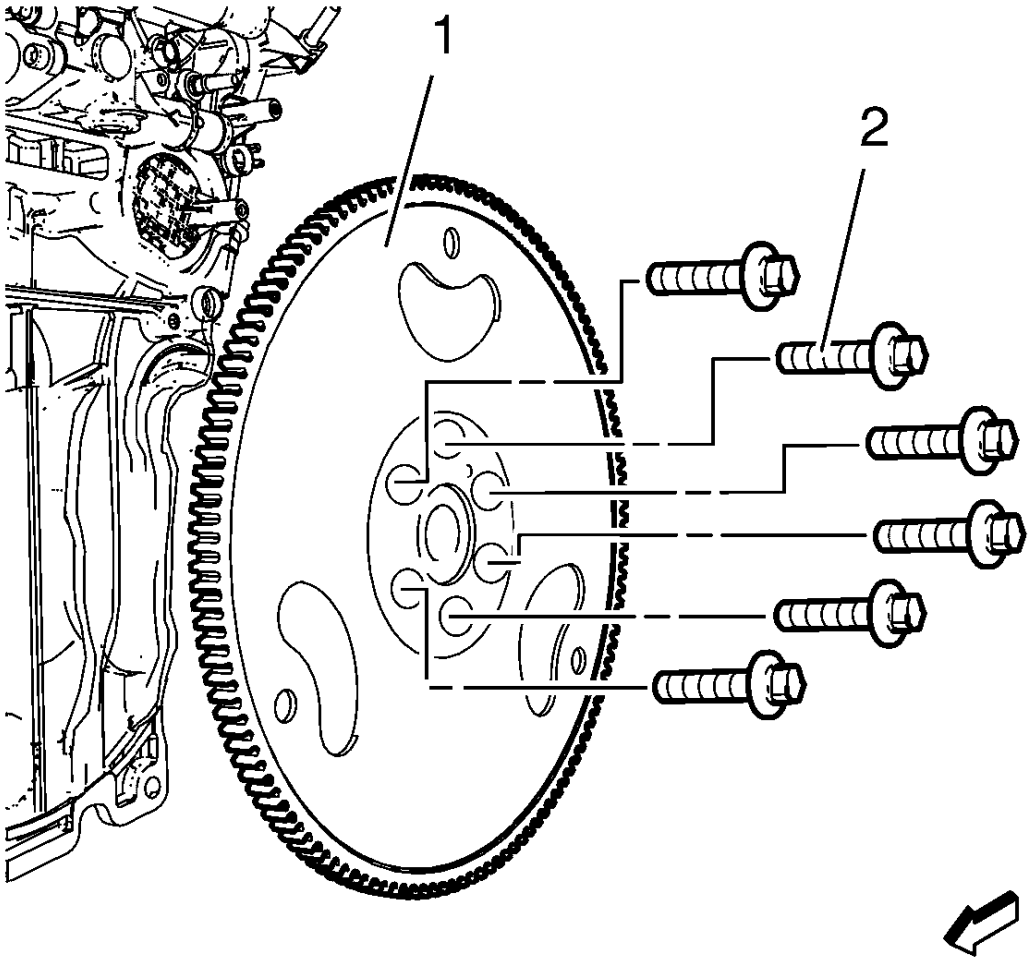

Fig. 170: Automatic Transmission Flex Plate And Bolts
Courtesy of GENERAL MOTORS COMPANY

CAUTION: Refer to Fastener Caution .

CAUTION: Refer to Torque-to-Yield Fastener Caution .

3. Install the 6 NEW automatic transmission flex plate bolts (2) and tighten the bolts to 60 N.m (44 lb ft) ± 5°.
4. Remove the **EN-652** holder.
5. Install the automatic transmission. Refer to **Transmission Replacement** .

ENGINE FLYWHEEL REPLACEMENT

Removal Procedure

1. Remove the manual transmission. Refer to **Transmission Replacement** .
2. Remove the clutch pressure and driven plate. Refer to **Clutch Pressure and Driven Plate Replacement (1.8L LUW and LWE)** .
3. Remove the engine flywheel. Refer to **Engine Flywheel Removal**.

Installation Procedure

1. Install the engine flywheel. Refer to **Engine Flywheel Installation**
2. Install the clutch pressure and driven plate. Refer to **Clutch Pressure and Driven Plate Replacement (1.8L LUW and LWE)** .
3. Install the manual transmission. Refer to **Transmission Replacement** .

CRANKSHAFT BALANCER REPLACEMENT (AUTOMATIC TRANSMISSION)

Special Tools

- **EN-6625** Crankshaft Locking Device
- **EN-45059** Angle Meter

For equivalent regional tools, refer to **Special Tools**.

Removal Procedure

1. Raise and support the vehicle. Refer to **Lifting and Jacking the Vehicle** .
2. Remove the right front wheelhouse liner. Refer to **Front Wheelhouse Liner Replacement** .
3. Remove the drive belt. Refer to **Drive Belt Replacement**.

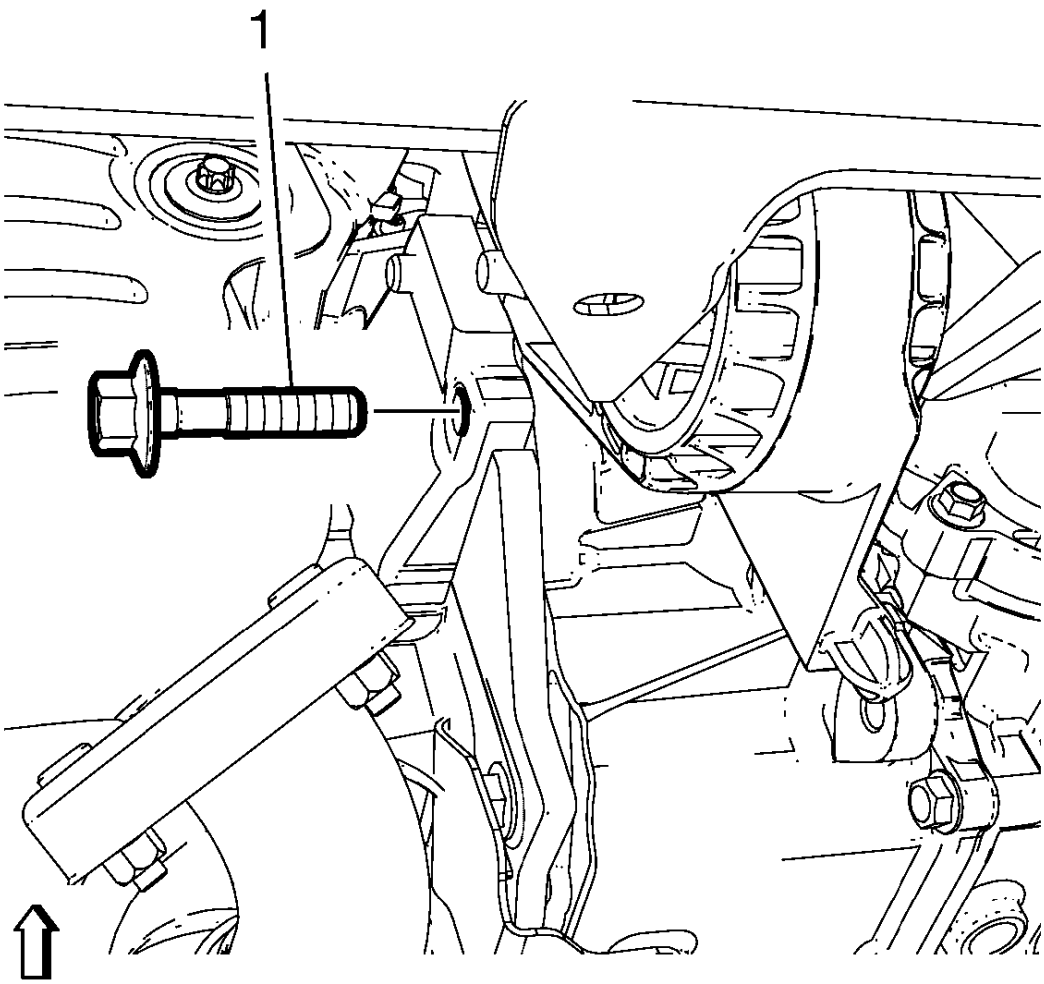

Fig. 171: Automatic Transmission Bracket Bolt
Courtesy of GENERAL MOTORS COMPANY

4. Remove the bolt (1).

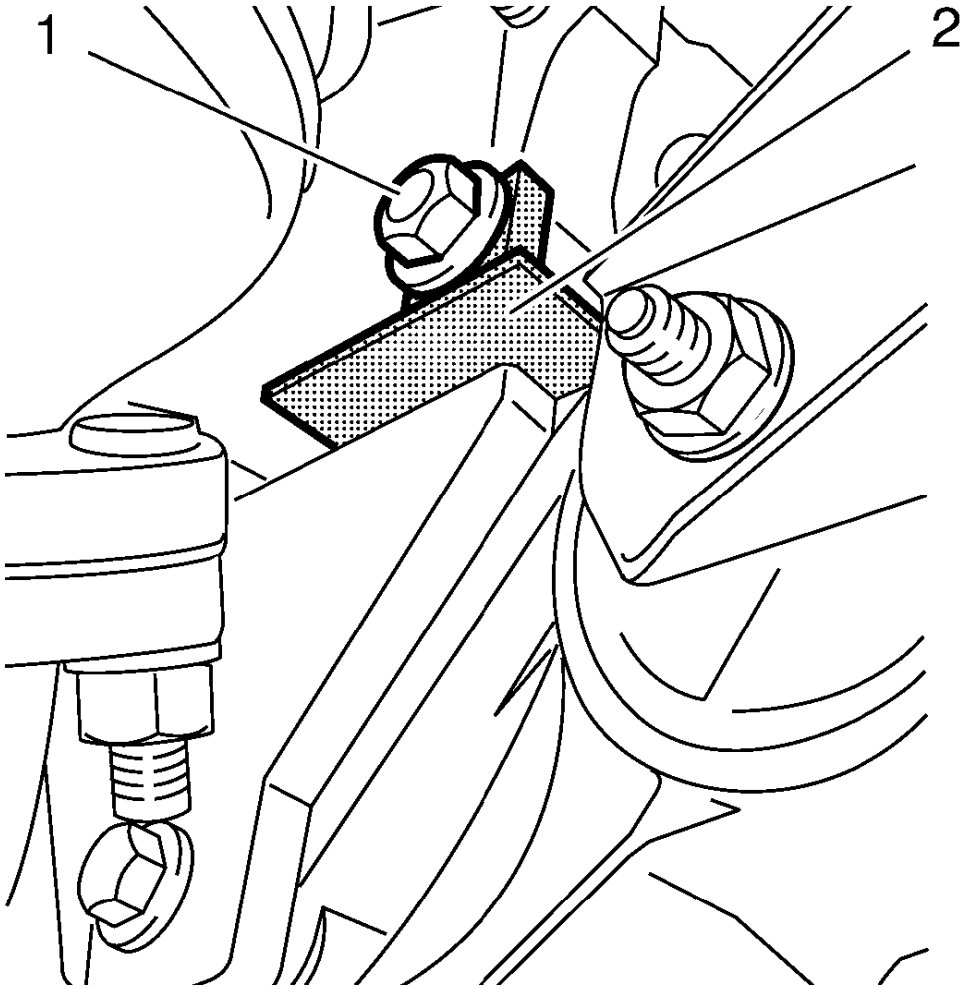

Fig. 172: Locking Device And Bolt
Courtesy of GENERAL MOTORS COMPANY

5. Install the **EN-6625** locking device (2) to lock the crankshaft.
6. Install the bolt (1).

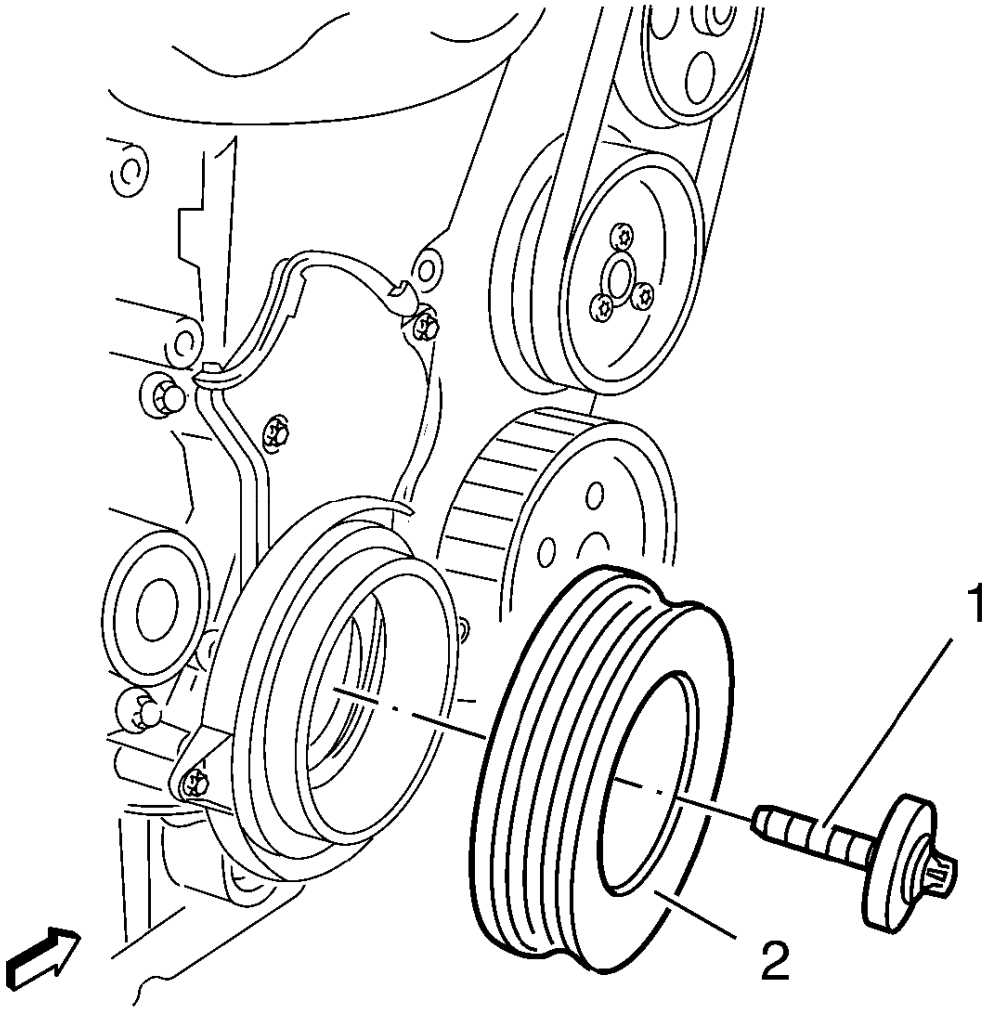

Fig. 173: Crankshaft Balancer And Bolt
Courtesy of GENERAL MOTORS COMPANY

7. Remove and DISCARD the crankshaft balancer bolt (1).
8. Remove the crankshaft balancer (2).

Installation Procedure

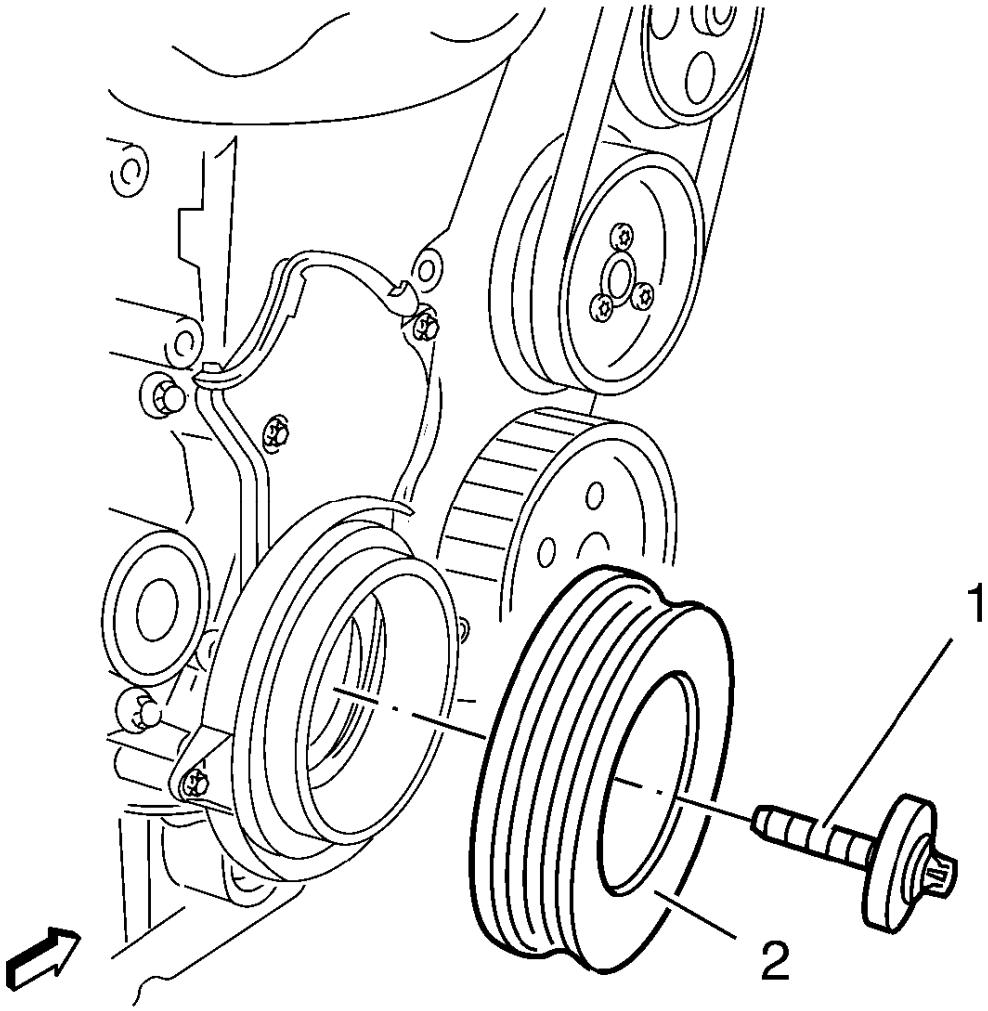

Fig. 174: Crankshaft Balancer And Bolt
Courtesy of GENERAL MOTORS COMPANY

1. Install the crankshaft balancer (2).

CAUTION: Refer to Fastener Caution .

CAUTION: Refer to Torque-to-Yield Fastener Caution .

2. Install a NEW crankshaft balancer bolt (1) and tighten a first pass to 95 (70 lb ft).
3. Tighten the NEW crankshaft balancer bolt a second pass to an additional 45 degrees, using the **EN-45059** meter.
4. Tighten the NEW crankshaft balancer bolt a final pass to an additional 15 degrees, using the **EN-45059**

meter.

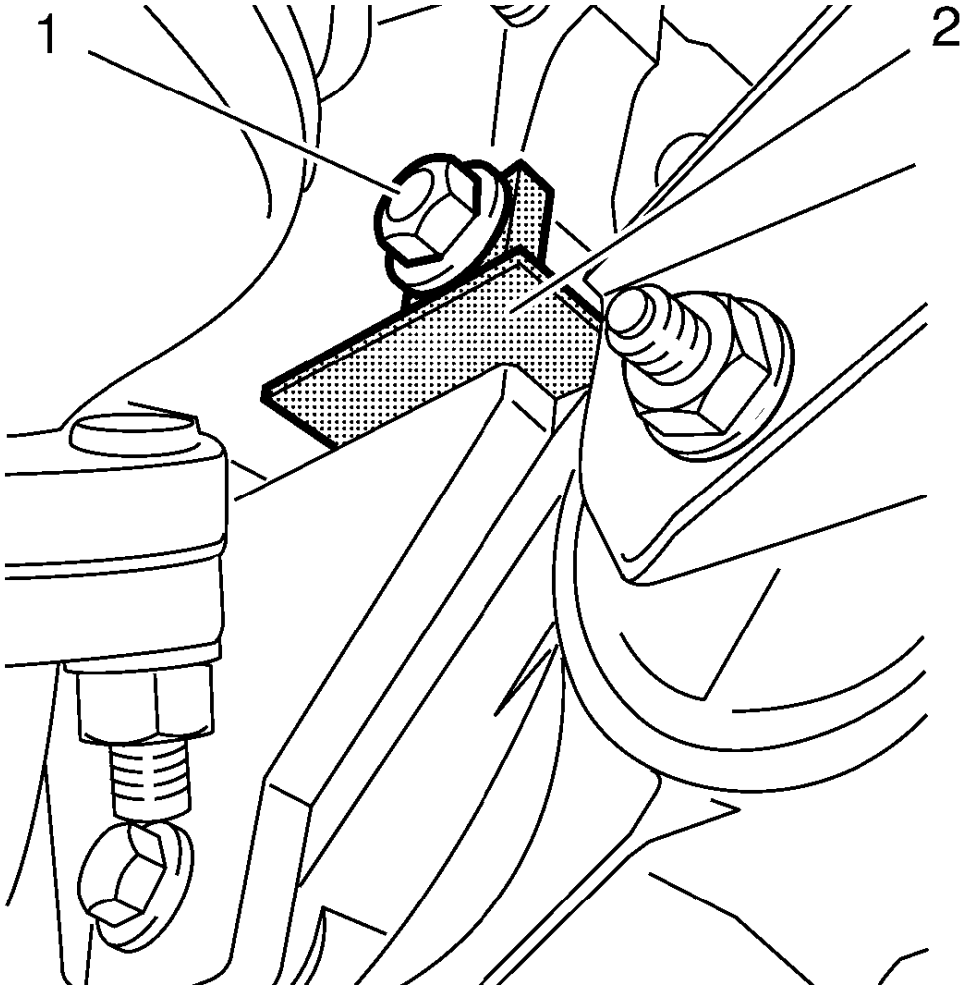

Fig. 175: Locking Device And Bolt
Courtesy of GENERAL MOTORS COMPANY

5. Remove the bolt (1).
6. Remove **EN-6625** locking device (2) to unlock the crankshaft.

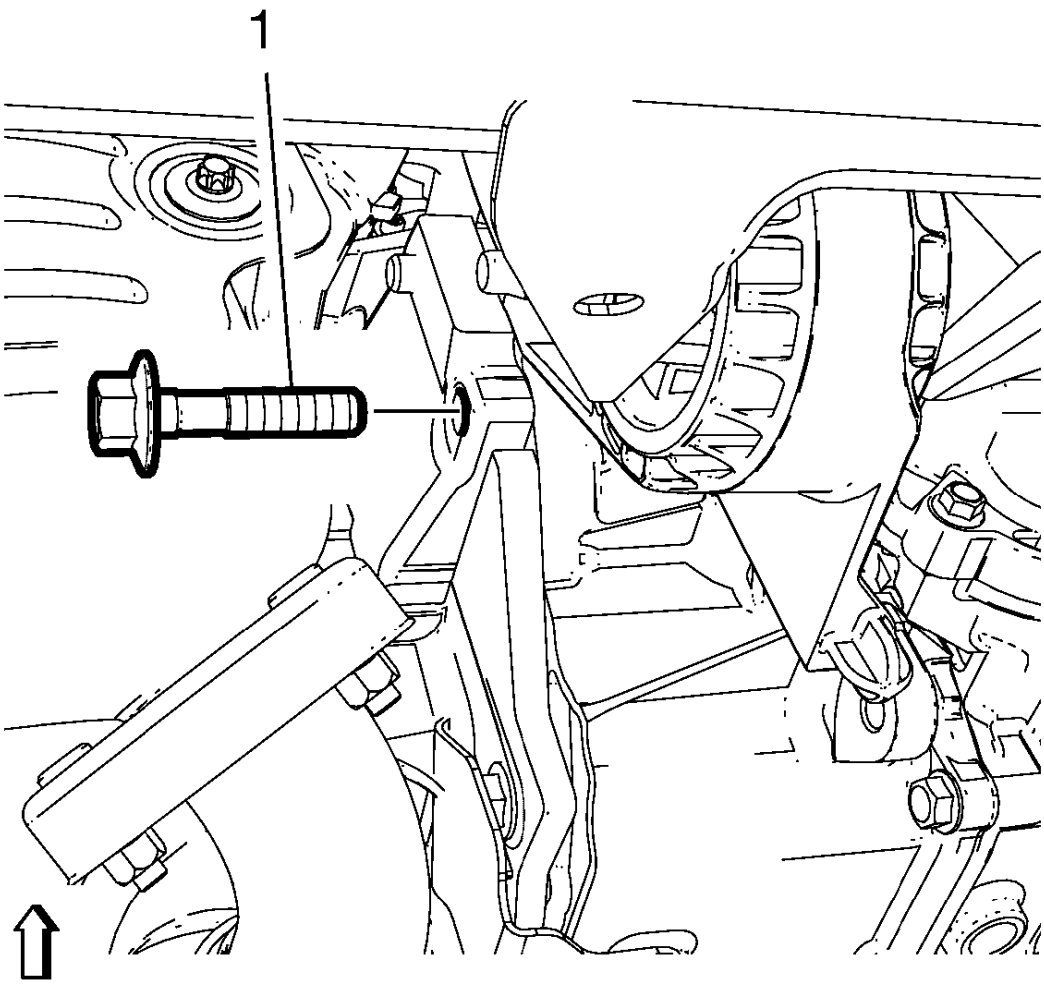

Fig. 176: Automatic Transmission Bracket Bolt
Courtesy of GENERAL MOTORS COMPANY

7. Install the bolt (1) and tighten to 45 (33 lb ft).
8. Install the drive belt. Refer to **Drive Belt Replacement**.
9. Install the right front wheelhouse liner. Refer to **Front Wheelhouse Liner Replacement** .
10. Lower the vehicle.

CRANKSHAFT BALANCER REPLACEMENT (MANUAL TRANSMISSION)

Special Tools

- **EN-6625** Crankshaft Locking Device
- **EN-45059** Angle Meter

For equivalent regional tools, refer to **Special Tools**.

Removal Procedure

1. Raise and support the vehicle. Refer to **Lifting and Jacking the Vehicle** .
2. Remove the right front wheelhouse liner. Refer to **Front Wheelhouse Liner Replacement** .
3. Remove the drive belt. Refer to **Drive Belt Replacement**.
4. Remove the transmission front mount. Refer to **Transmission Front Mount Replacement** .

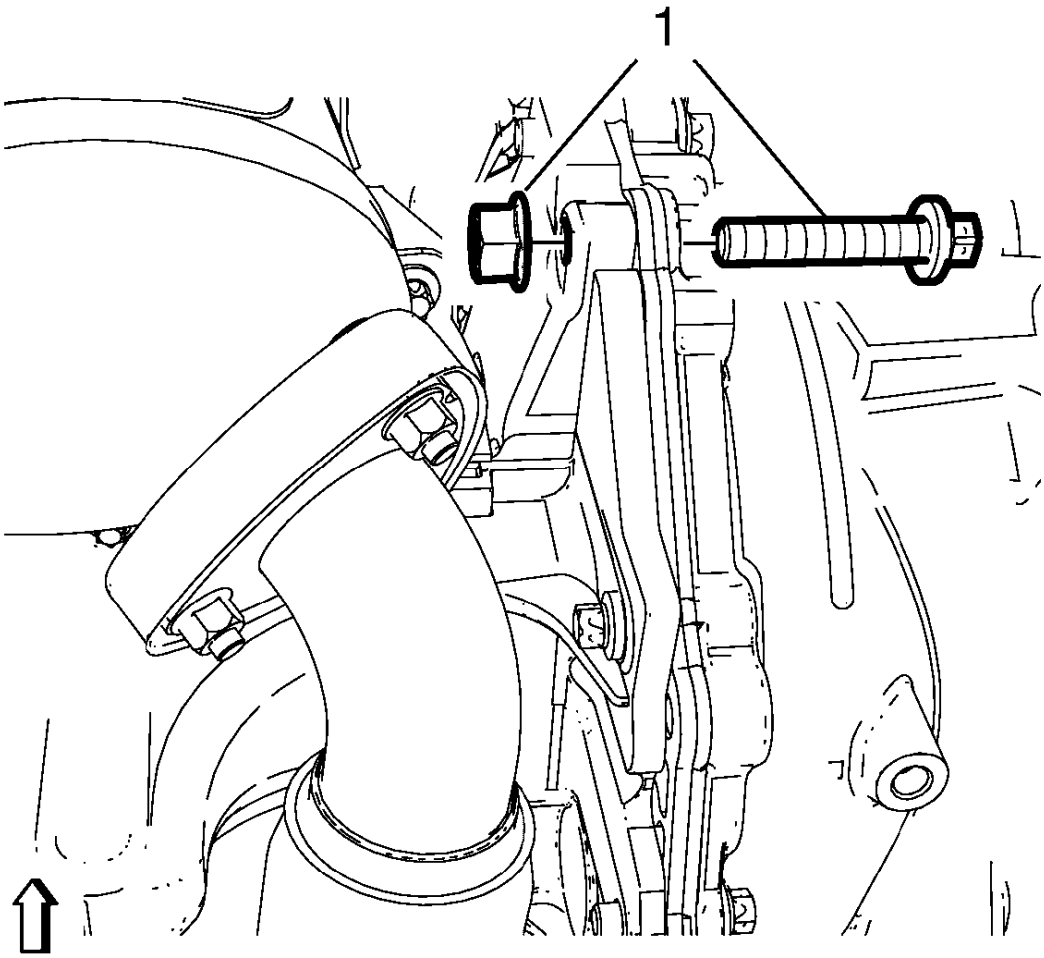

Fig. 177: Connection Bolt
Courtesy of GENERAL MOTORS COMPANY

5. Remove the bolted connection (1).

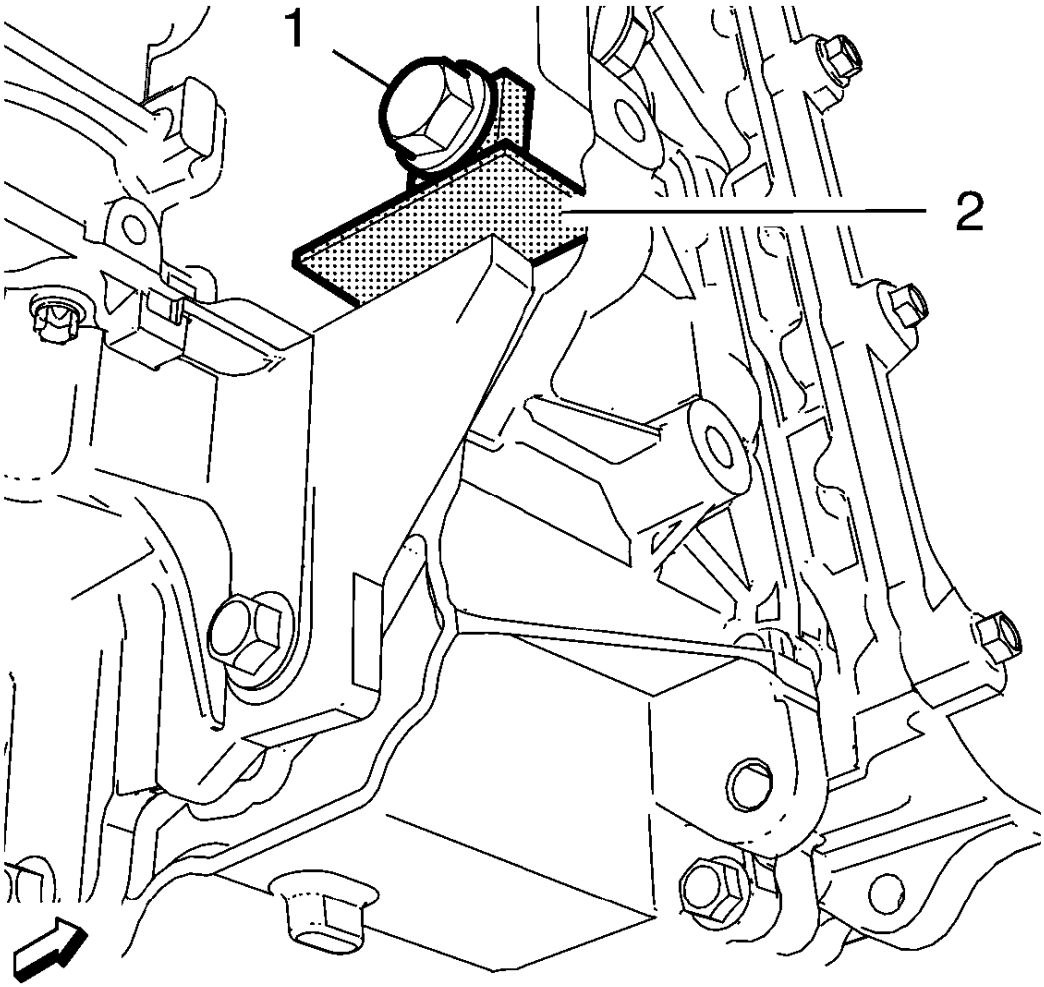

Fig. 178: Locking Device
Courtesy of GENERAL MOTORS COMPANY

6. Install the **EN-6625** locking device (2) to lock the crankshaft.
7. Install the bolted connection (1).

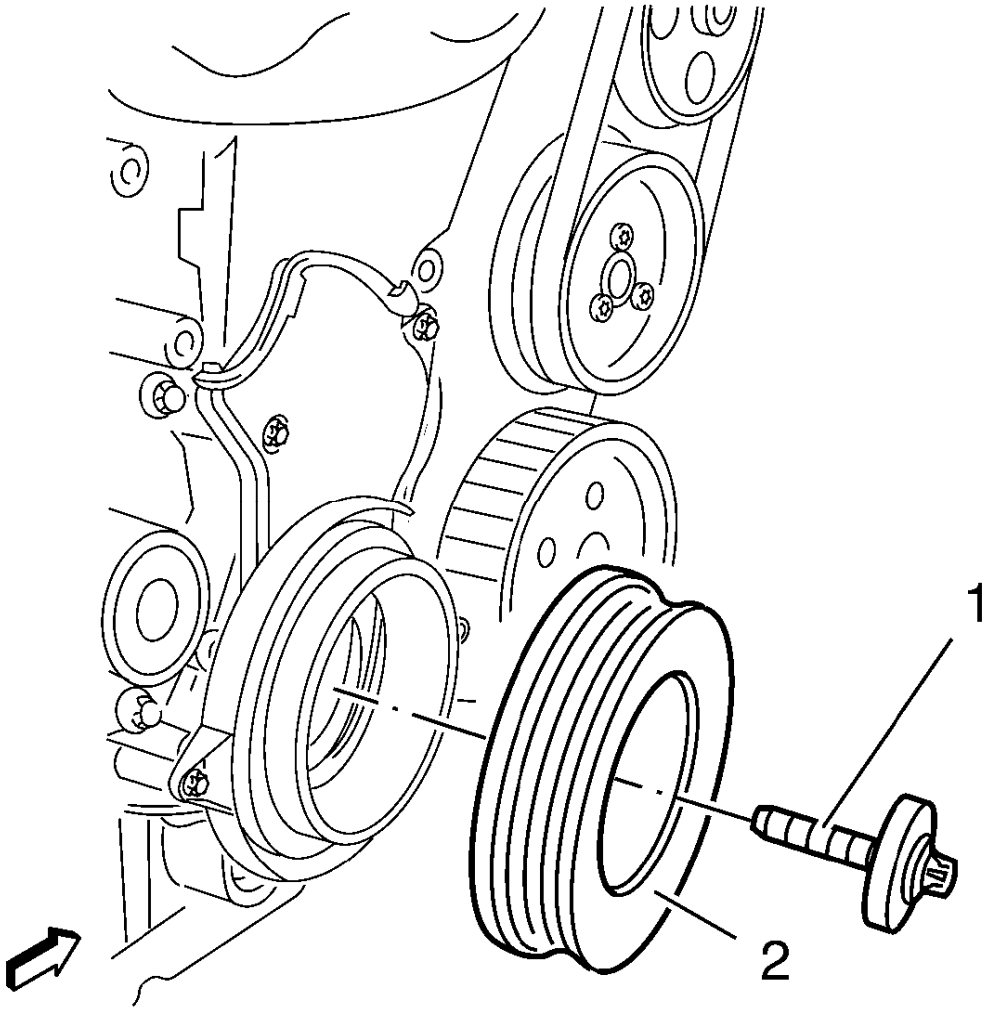

Fig. 179: Crankshaft Balancer And Bolt
Courtesy of GENERAL MOTORS COMPANY

8. Remove and DISCARD the crankshaft balancer bolt (1).
9. Remove the crankshaft balancer (2).

Installation Procedure

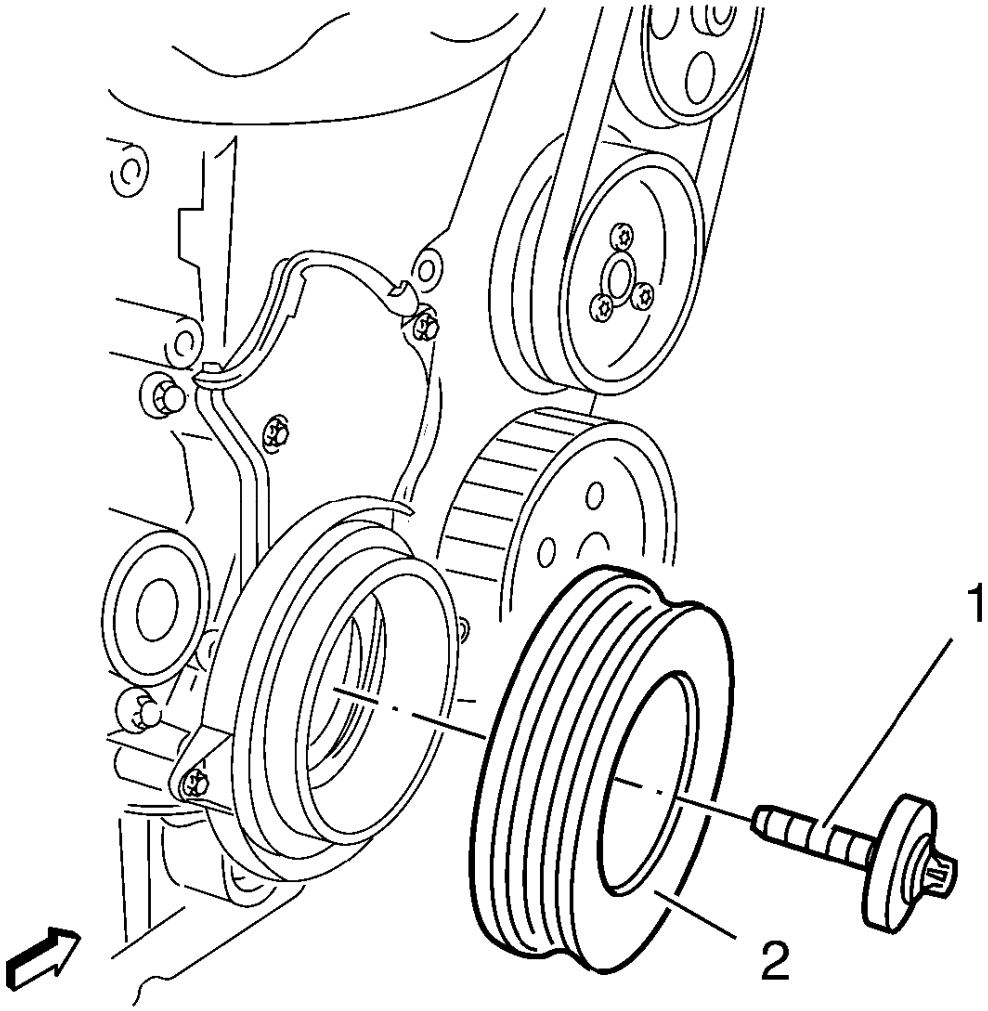

Fig. 180: Crankshaft Balancer And Bolt
Courtesy of GENERAL MOTORS COMPANY

1. Install the crankshaft balancer (2).

CAUTION: Refer to Fastener Caution .

2. Install a NEW crankshaft balancer bolt (1) and tighten a first pass to 95 (70 lb ft).

CAUTION: Refer to Torque-to-Yield Fastener Caution .

3. Tighten the NEW crankshaft balancer bolt a second pass to an additional 45 degrees, using the **EN-45059** meter.
4. Tighten the NEW crankshaft balancer bolt a final pass to an additional 15 degrees, using the **EN-45059**

meter.

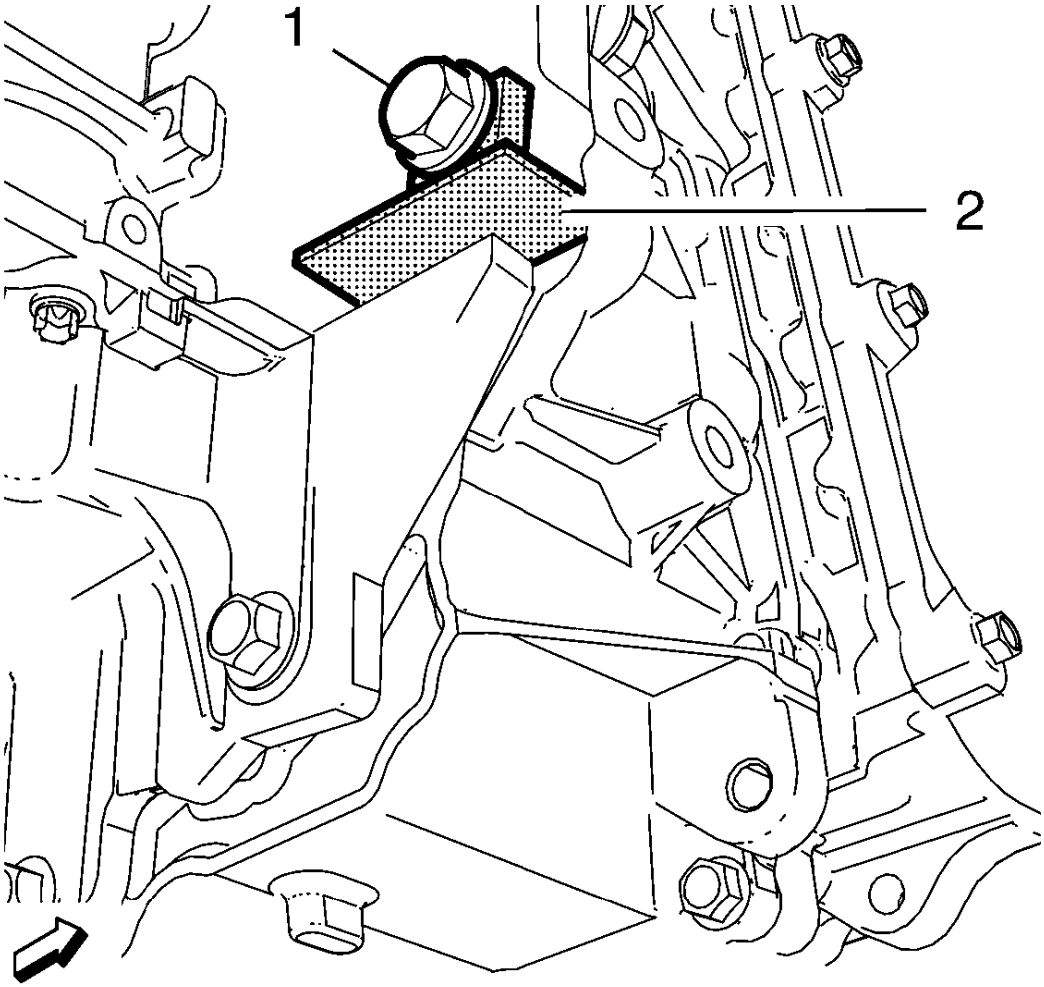

Fig. 181: Locking Device
Courtesy of GENERAL MOTORS COMPANY

5. Remove the bolted connection (1).
6. Remove **EN-6625** locking device (2) to unlock the crankshaft.

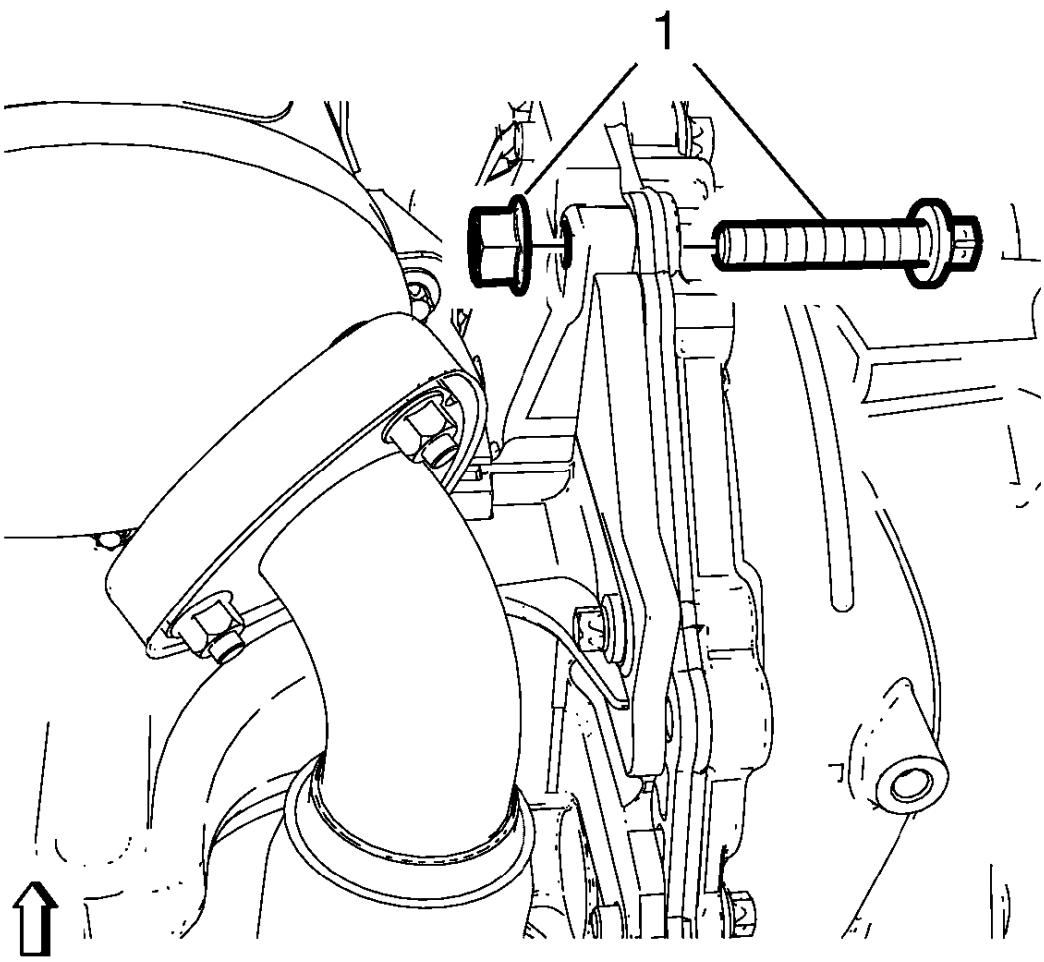

Fig. 182: Connection Bolt
Courtesy of GENERAL MOTORS COMPANY

7. Install the bolted connection (1) and tighten to 40 (30 lb ft).
8. Install the transmission front mount. Refer to **Transmission Front Mount Replacement** .
9. Install the drive belt. Refer to **Drive Belt Replacement**.
10. Install the right front wheelhouse liner. Refer to **Front Wheelhouse Liner Replacement** .
11. Lower the vehicle.

CRANKSHAFT FRONT OIL SEAL REPLACEMENT

IMPORTANT: Special Tools

- **EN-6351** Mounting Sleeves
- **EN-45000** Remover

For equivalent regional tools, refer to **Special Tools**.

Removal Procedure

1. Replace the timing belt. Refer to **Timing Belt Replacement**.

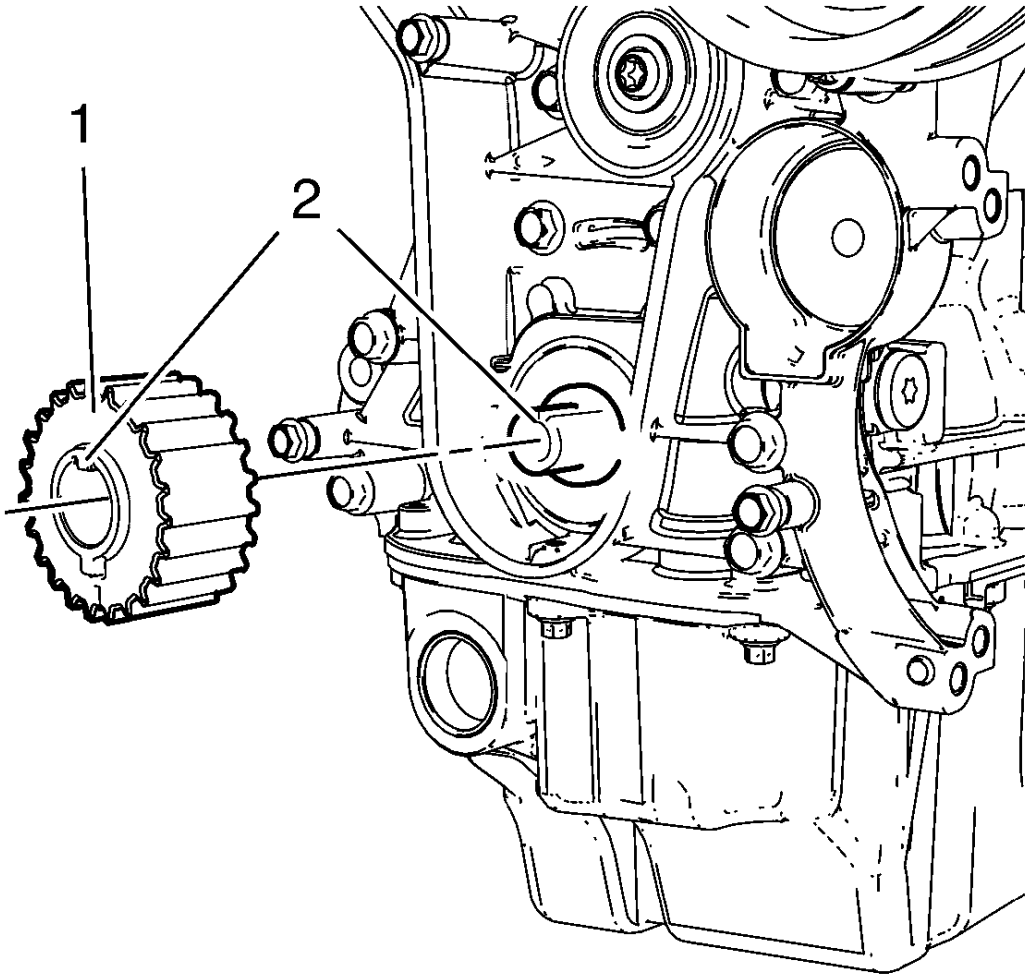

Fig. 183: Crankshaft Sprocket
Courtesy of GENERAL MOTORS COMPANY

2. Remove the crankshaft sprocket (1).

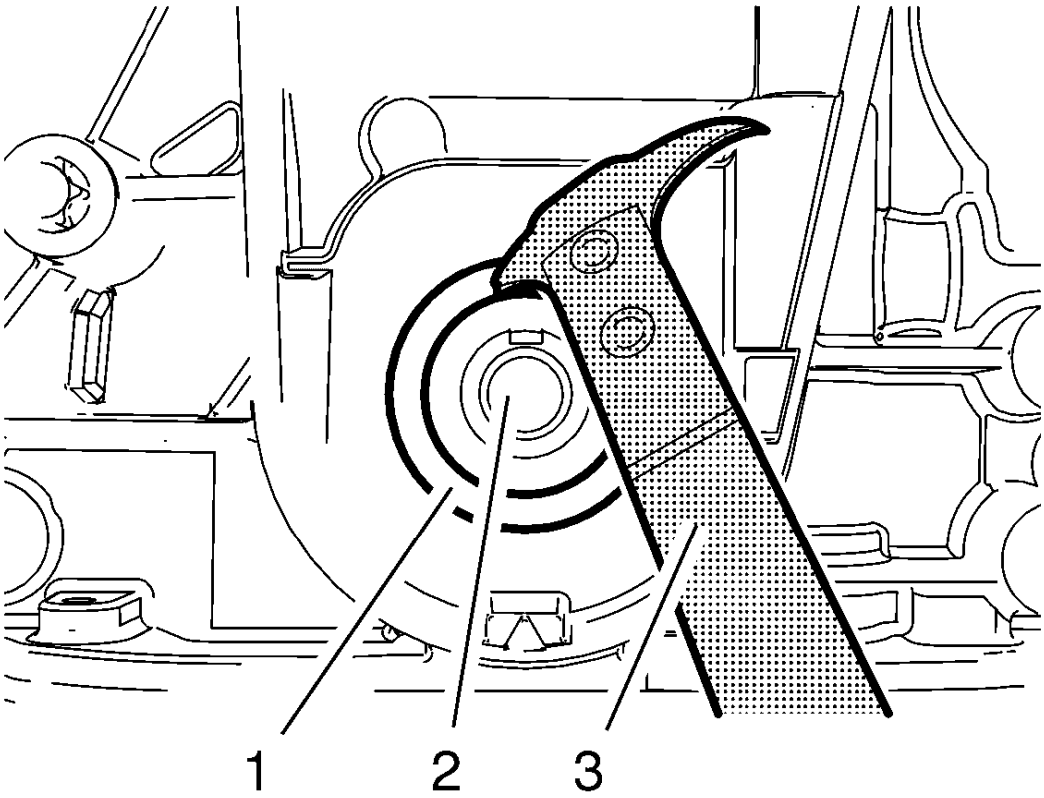

Fig. 184: Crankshaft Front Oil Seal Removal Tool
Courtesy of GENERAL MOTORS COMPANY

CAUTION: Clean the crankshaft sealing surface with a clean, lint-free towel. Inspect lead-in edge of crankshaft for burrs/sharp edges that could damage the rear main oil seal. Remove burrs/sharp edges with crocus cloth before proceeding.

3. Using the **EN-45000** remover (3), remove the crankshaft front oil seal (1) from the crankshaft (2).

Installation Procedure

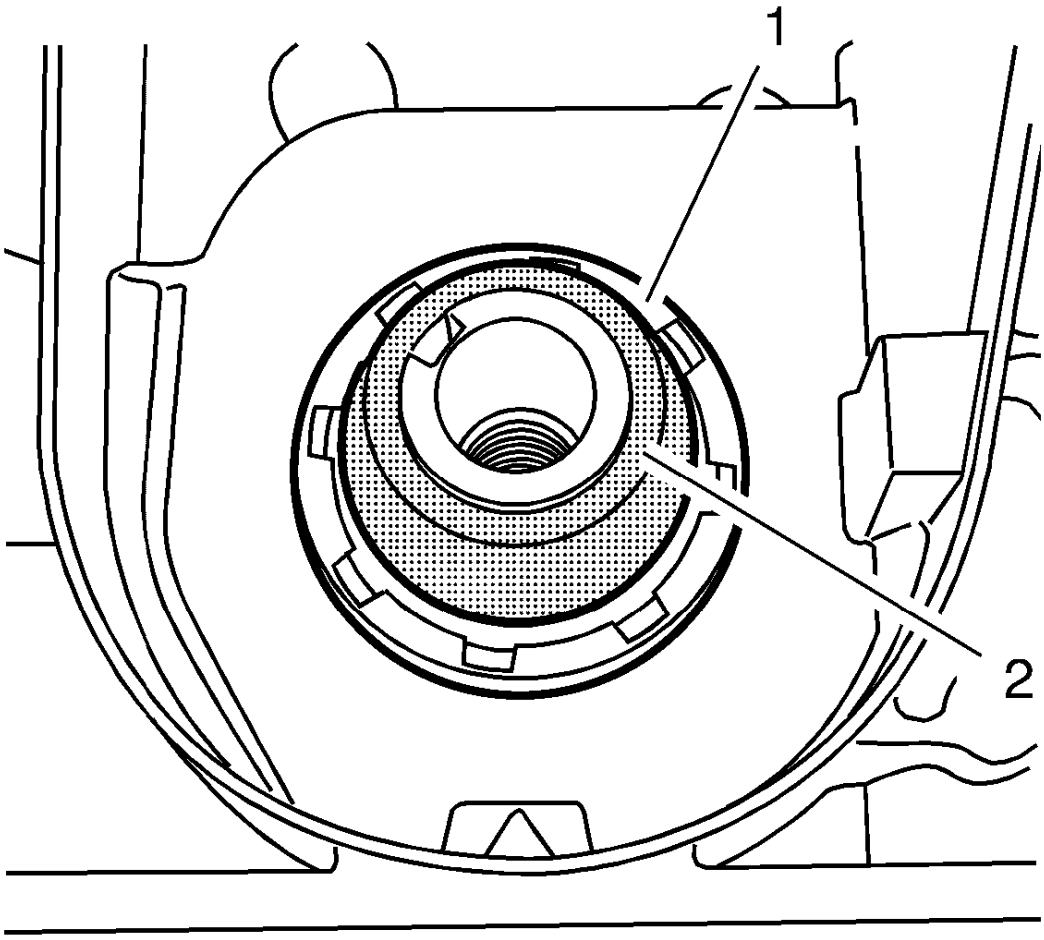

Fig. 185: Crankshaft And Crankshaft Front Oil Seal
Courtesy of GENERAL MOTORS COMPANY

1. Clean the sealing surfaces.
2. Slide the **EN-6351** mounting sleeves (2) protective sleeve onto the crankshaft journal.
3. Slide the crankshaft front oil seal (1) over the protective sleeve on the crankshaft journal.

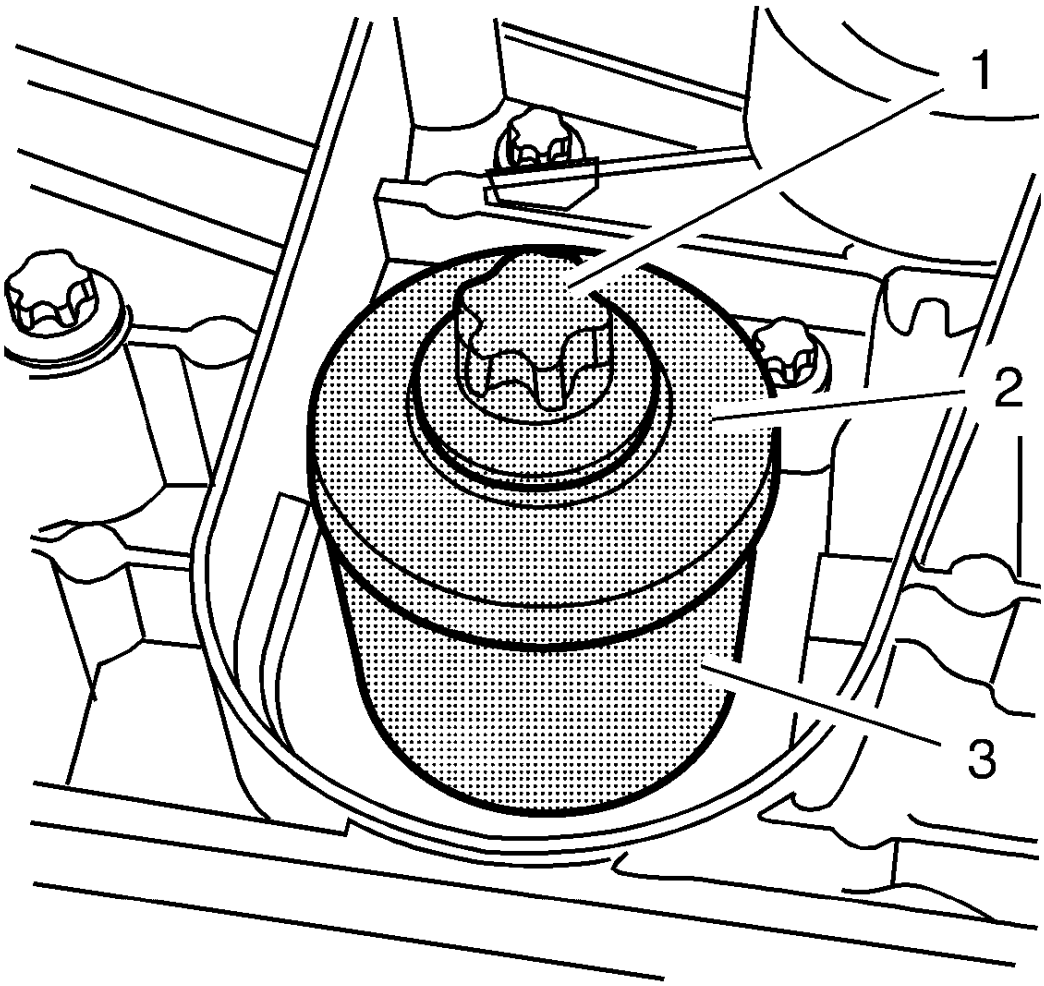

Fig. 186: Crankshaft Drive Gear Bolt, Washer And Sleeves
Courtesy of GENERAL MOTORS COMPANY

4. Remove the protective sleeve, and using the **EN-6351** mounting sleeves (3), press the seal ring into the pump housing.
5. Use the crankshaft drive gear bolt (1) and washer (2) to press in the crankshaft front oil seal.

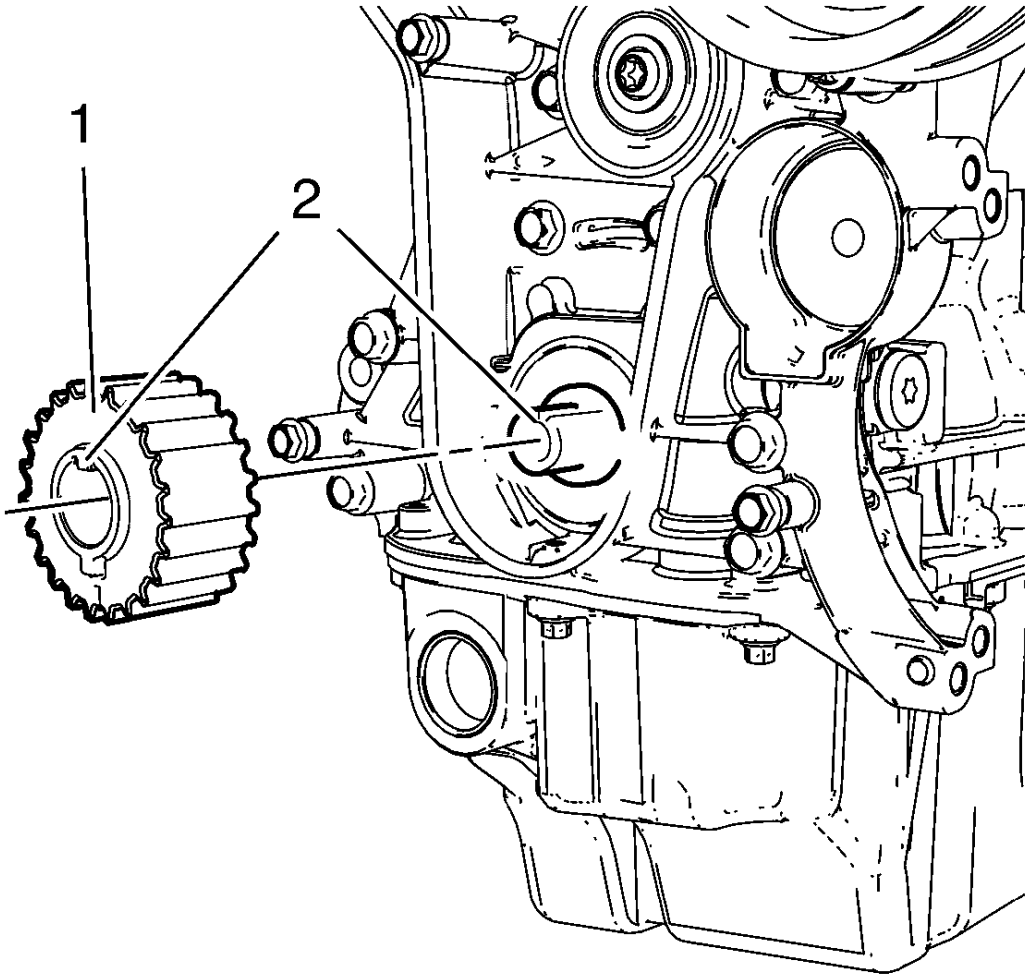

Fig. 187: Crankshaft Sprocket
Courtesy of GENERAL MOTORS COMPANY

NOTE: When installing the crankshaft sprocket, the cam and the groove must align (2).

6. Install the crankshaft sprocket (1).
7. Install the timing belt. Refer to **Timing Belt Replacement**.

CRANKSHAFT REAR OIL SEAL REPLACEMENT

Special Tools

- **EN-235-6** Installer
- **EN-328-B** Pin Remover
- **EN-658-1** Installer

- **EN-6624** Remover

For equivalent regional tools, refer to **Special Tools**.

Removal Procedure

1. For vehicle with automatic transmission: remove the automatic transmission flex plate. Refer to **Automatic Transmission Flex Plate Replacement**.
2. For vehicle with manual transmission: remove the engine flywheel. Refer to **Engine Flywheel Replacement**.
3. Place the collecting basin underneath.

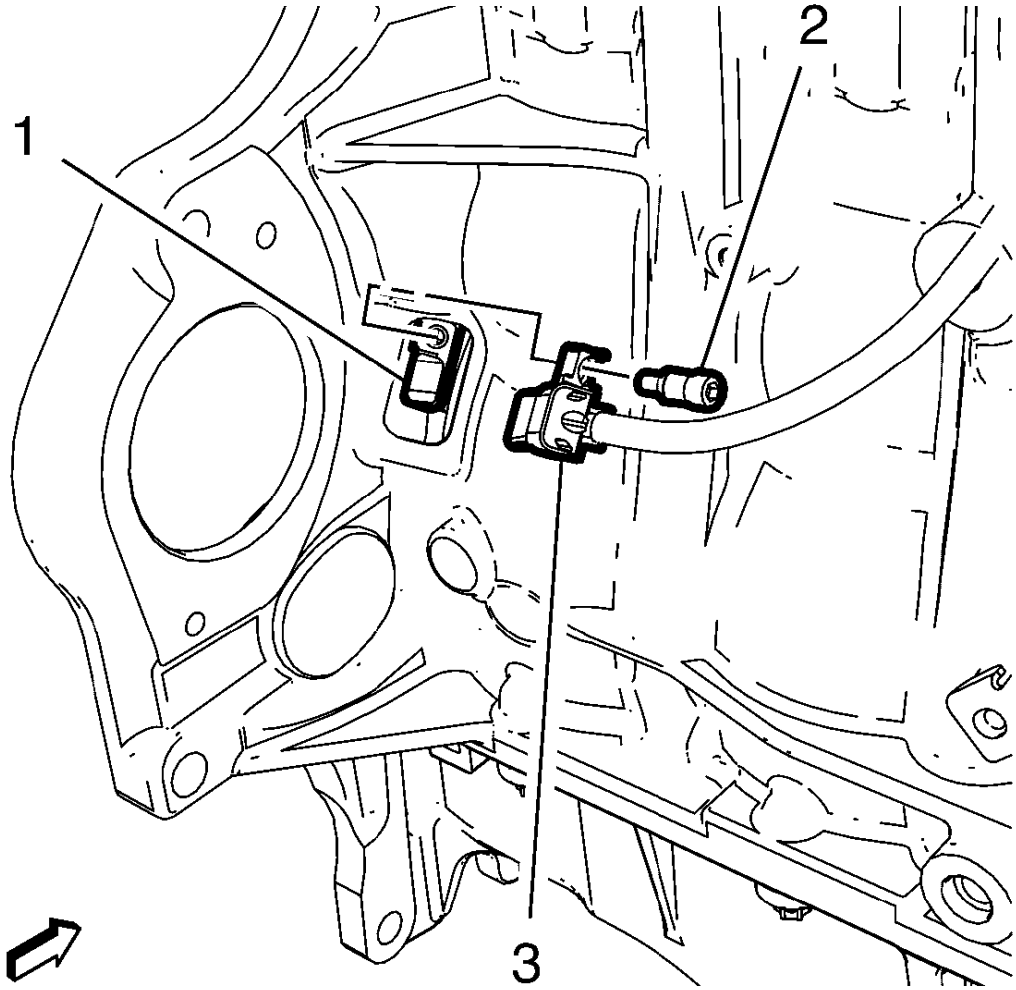

Fig. 188: Crankshaft Position Sensor And Bolt
Courtesy of GENERAL MOTORS COMPANY

4. Remove the crankshaft position sensor bolt (2).

5. Remove the crankshaft position sensor (3) from the crankshaft rear oil seal housing (1).

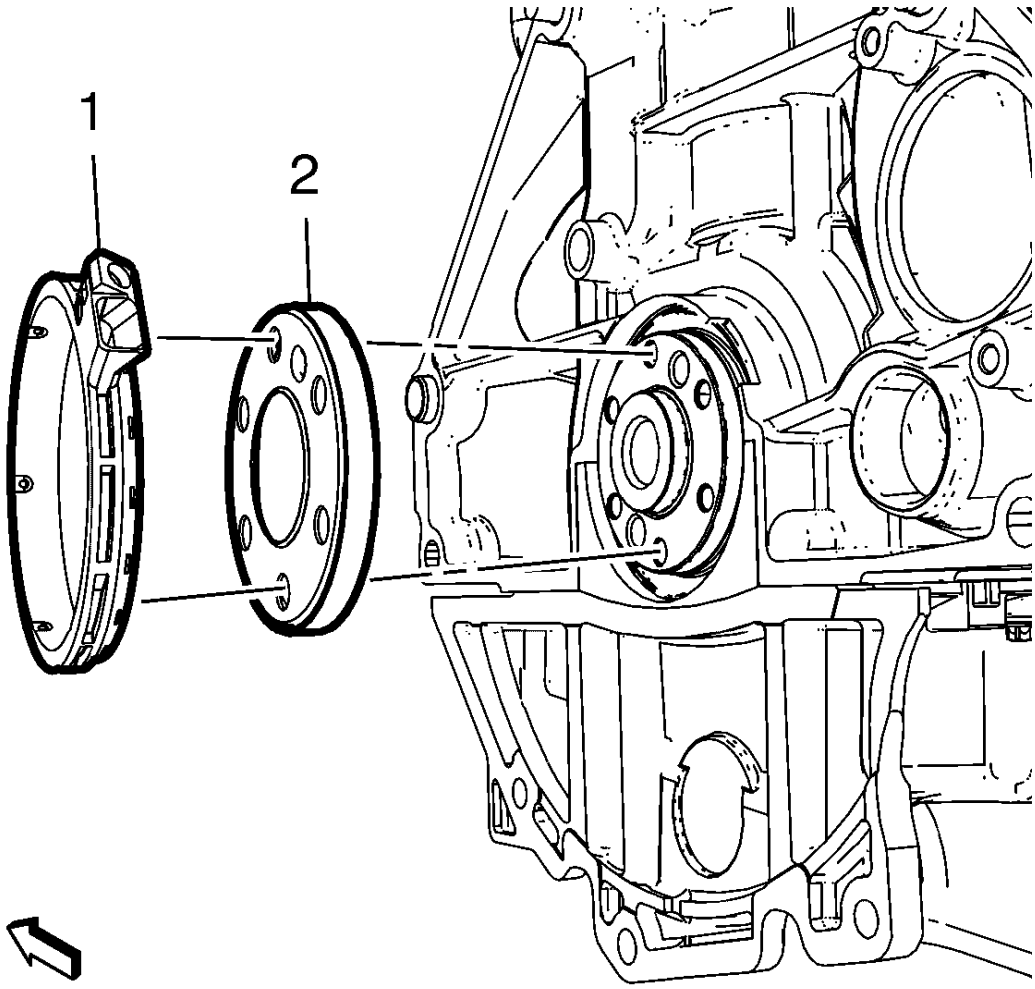

Fig. 189: Crankshaft Position Sensor Reluctor Ring And Oil Seal Housing
Courtesy of GENERAL MOTORS COMPANY

CAUTION: Do not allow the crankshaft encoder wheel to come into contact with external magnetic fields or sharp metal objects. Do not drop the crankshaft encoder wheel. Do not damage the rubberized encoder track. Failure to follow these precautions may cause damage to the component.

6. Remove the crankshaft rear oil seal housing (1).
7. Remove the crankshaft position sensor reluctor ring (2).

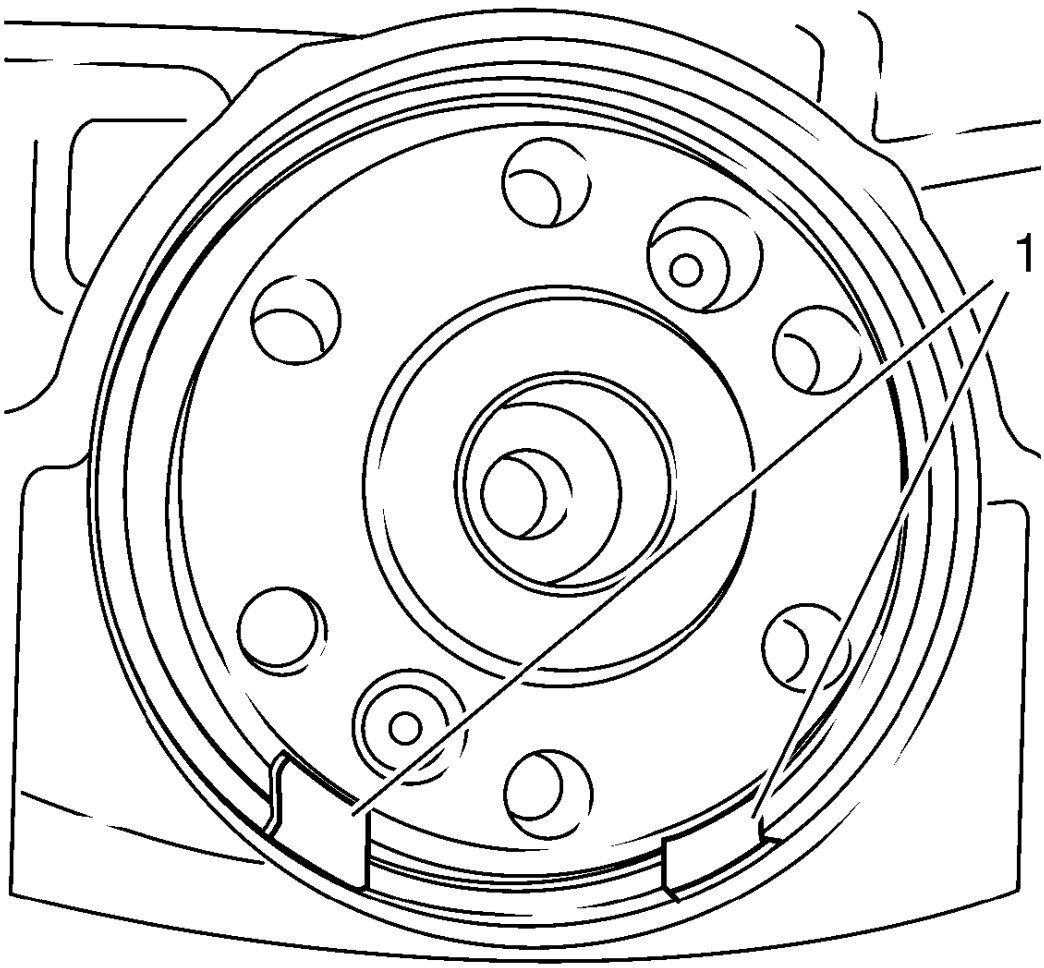

Fig. 190: Holes At 5 O'clock And 7 O'clock Positions
Courtesy of GENERAL MOTORS COMPANY

NOTE: The diameter of the hole must not exceed 2 mm (0.0787 in). If the diameter of the hole exceeds 2 mm (0.0787 in), the bolt of EN-6624 remover will not be able to grip.

8. Only make a hole at the 5 o'clock and 7 o'clock positions (1), these are the only positions where is a cavity behind the seal ring.

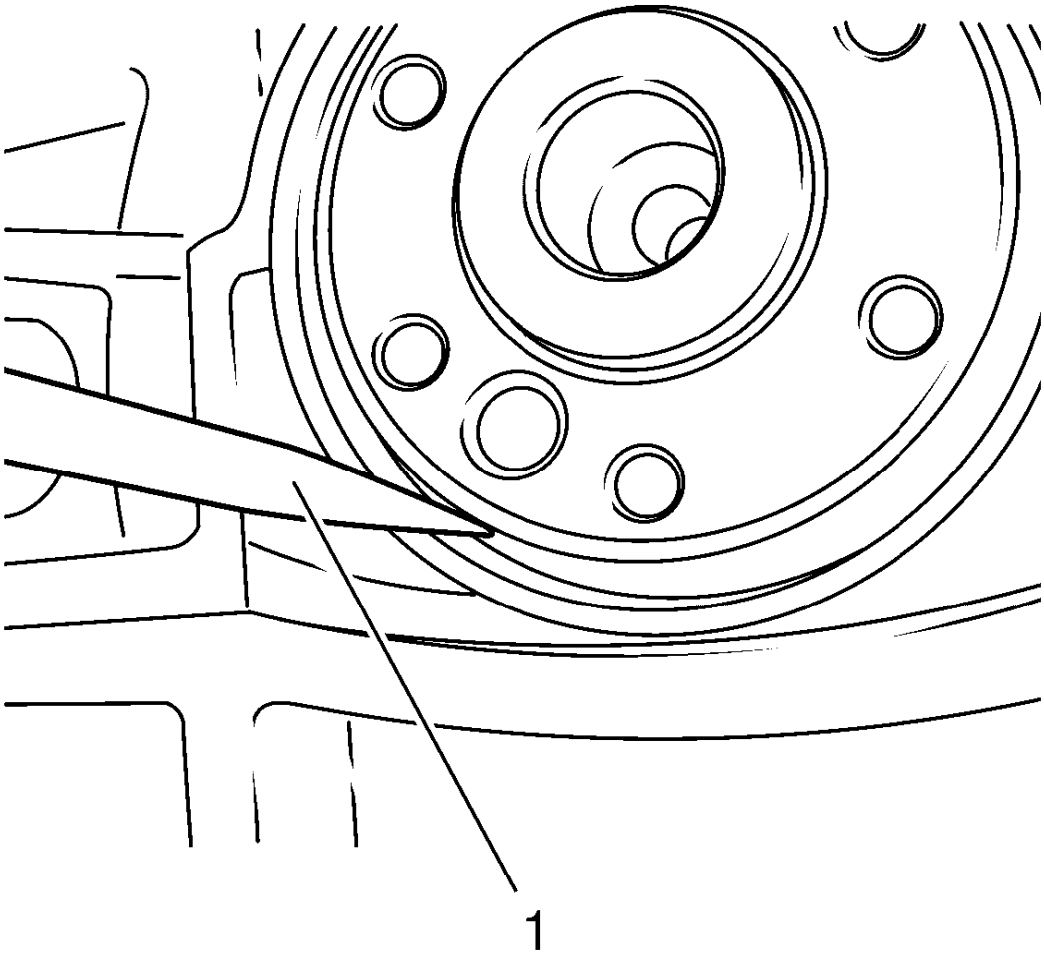

Fig. 191: Scribe Tool
Courtesy of GENERAL MOTORS COMPANY

9. Using a suitable tool, such as a scribe (1), make a hole in the crankshaft rear oil seal.

   Position the scribe (1) at the outer edge of the crankshaft rear oil seal.

10. Remove the seal ring.

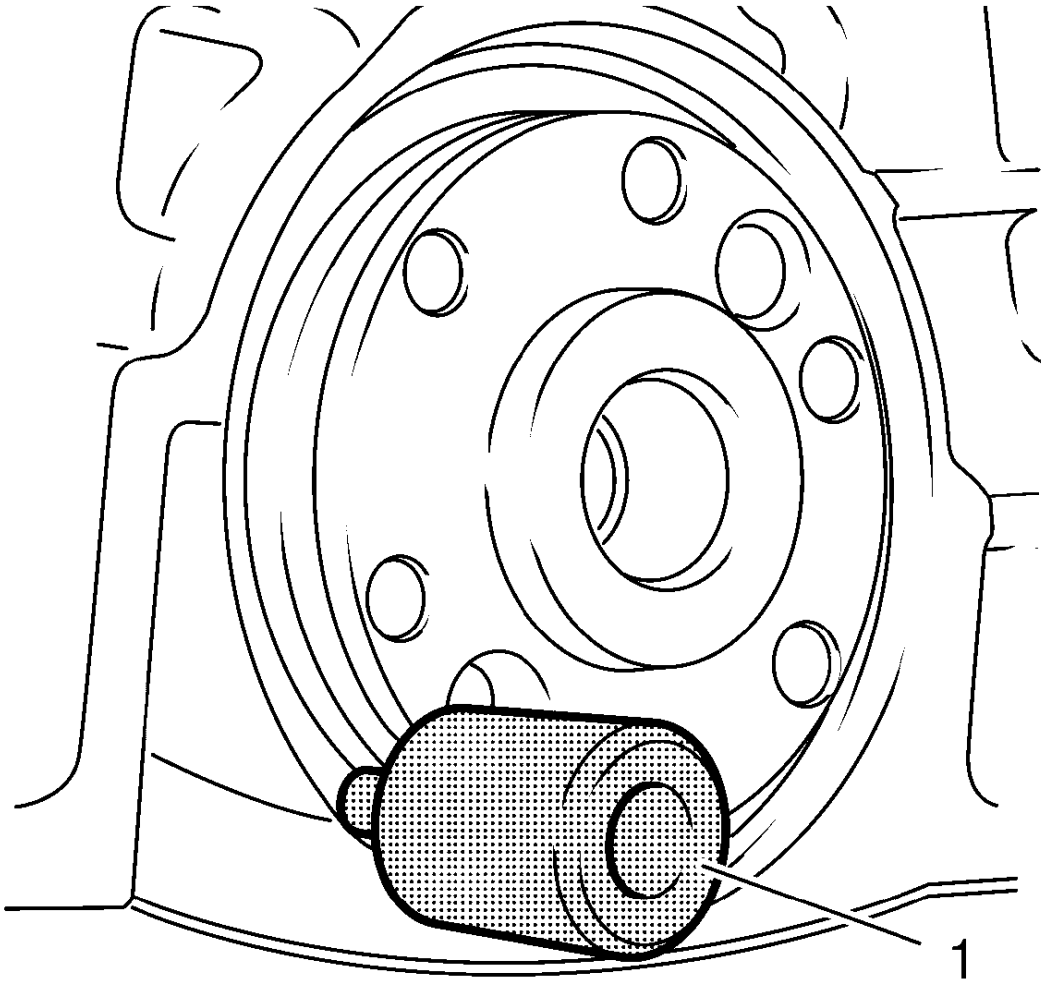

Fig. 192: crankshaft Rear Oil Seal Removal Tool
Courtesy of GENERAL MOTORS COMPANY

11. Install **EN-6624** remover (1) to the crankshaft rear oil seal and tighten the bolt.

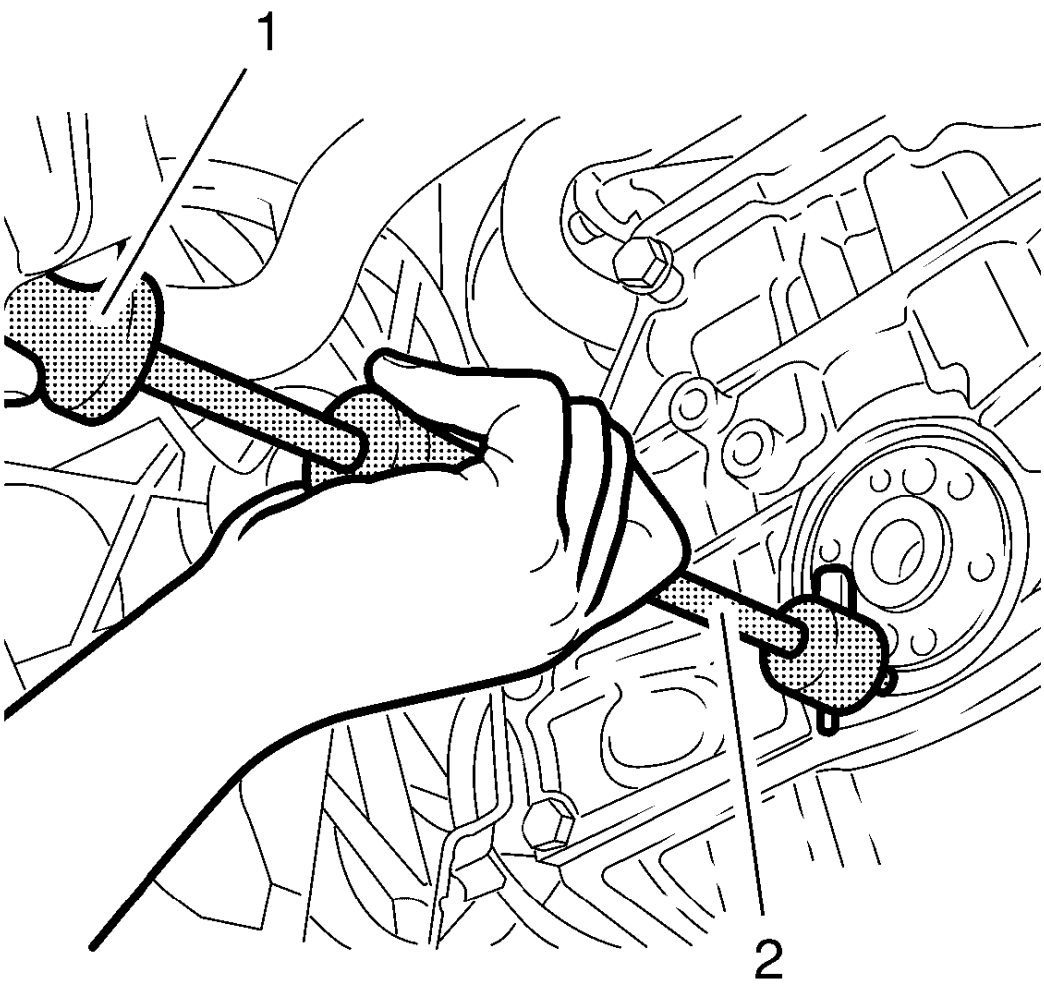

Fig. 193: Special Removal Tools
Courtesy of GENERAL MOTORS COMPANY

12. Install the **EN-328-B** remover (1) to **EN-6624** remover (2) and remove the crankshaft rear oil seal.

Installation Procedure

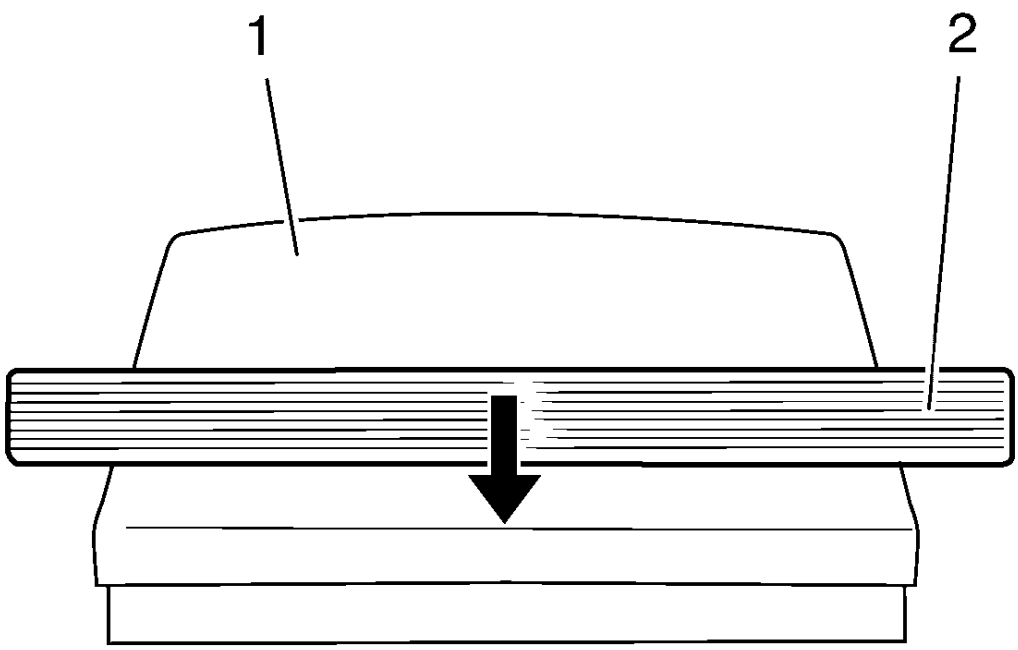

Fig. 194: Crankshaft Rear Oil Seal
Courtesy of GENERAL MOTORS COMPANY

1. Slide the crankshaft rear oil seal (2) across the **EN-235-6** installer (1).

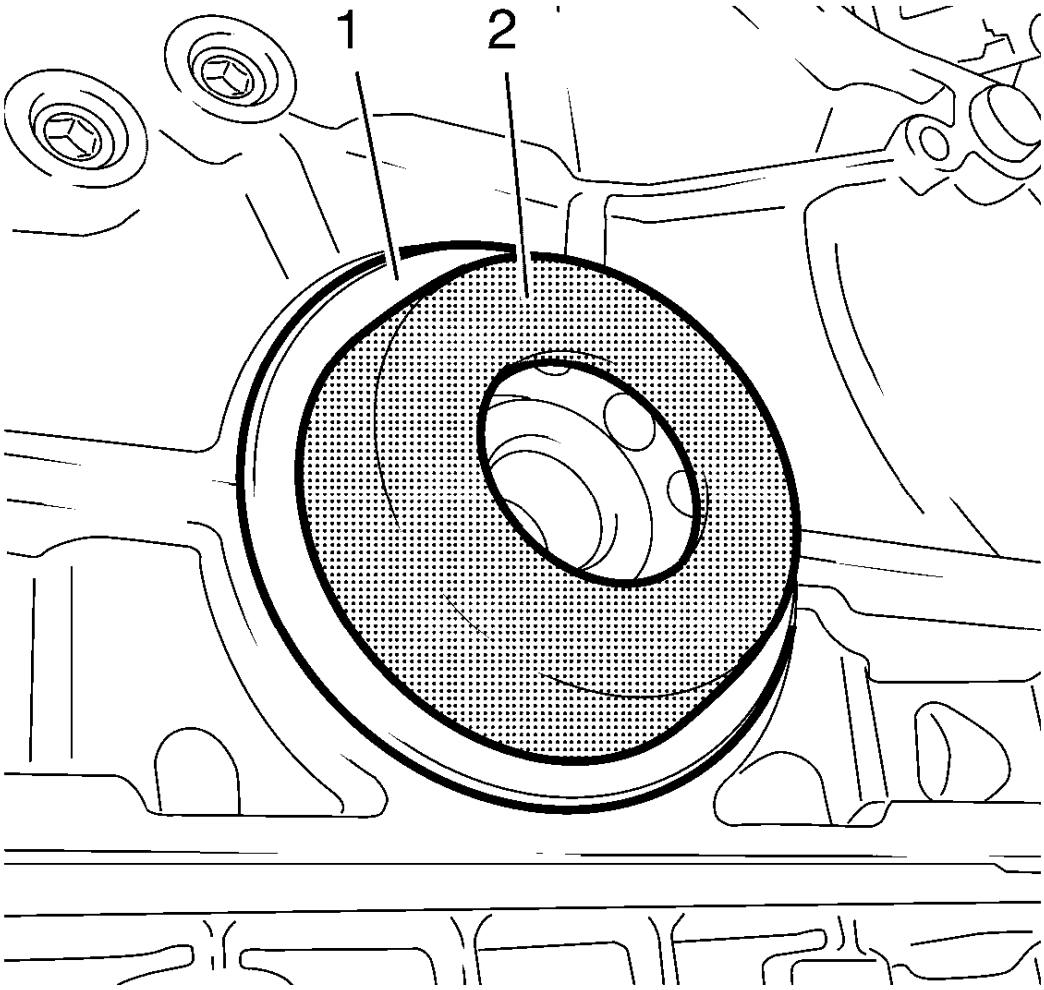

Fig. 195: Crankshaft Rear Oil Seal And Installer
Courtesy of GENERAL MOTORS COMPANY

2. Install the crankshaft rear oil seal (1) with **EN-235-6** installer (2) to the crankshaft.

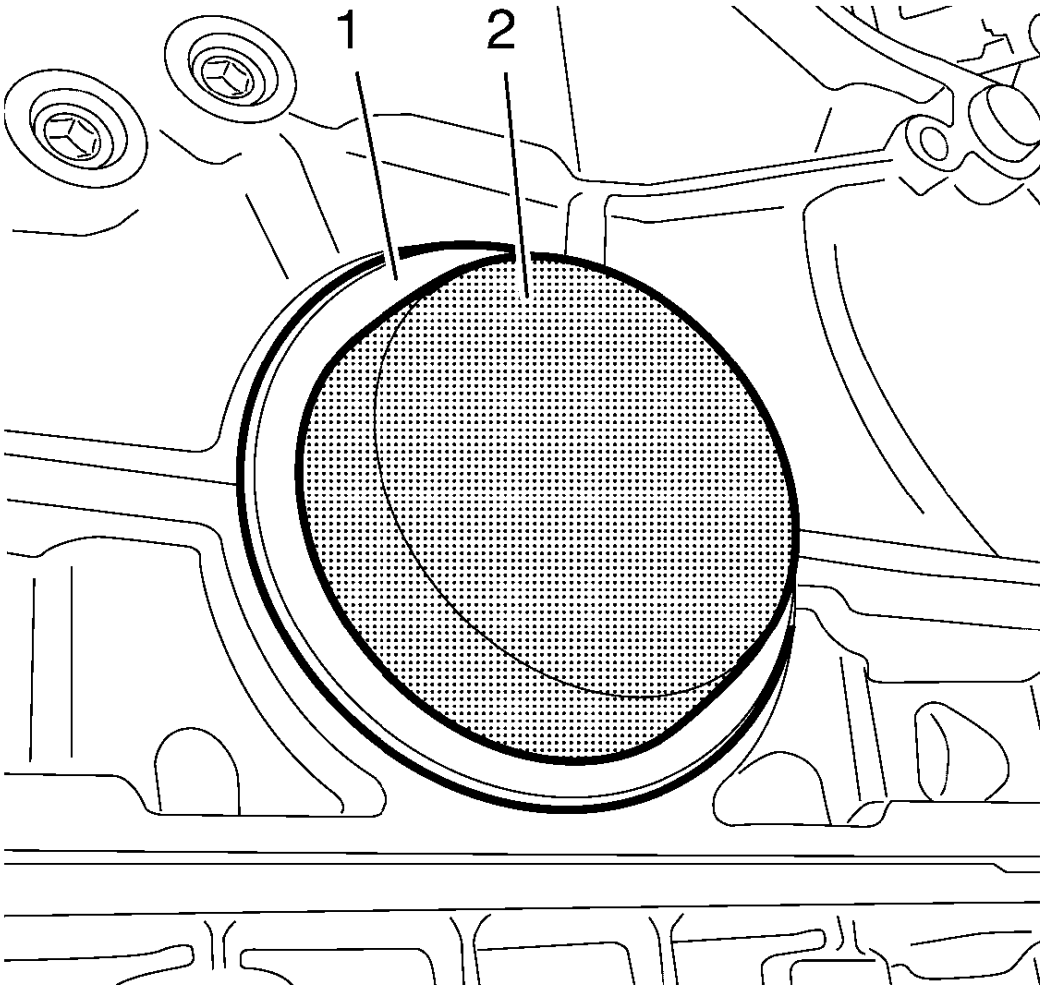

Fig. 196: Oil Seal Installer
Courtesy of GENERAL MOTORS COMPANY

3. Use **EN-658-1** installer (2) to strike the crankshaft rear oil seal (1)

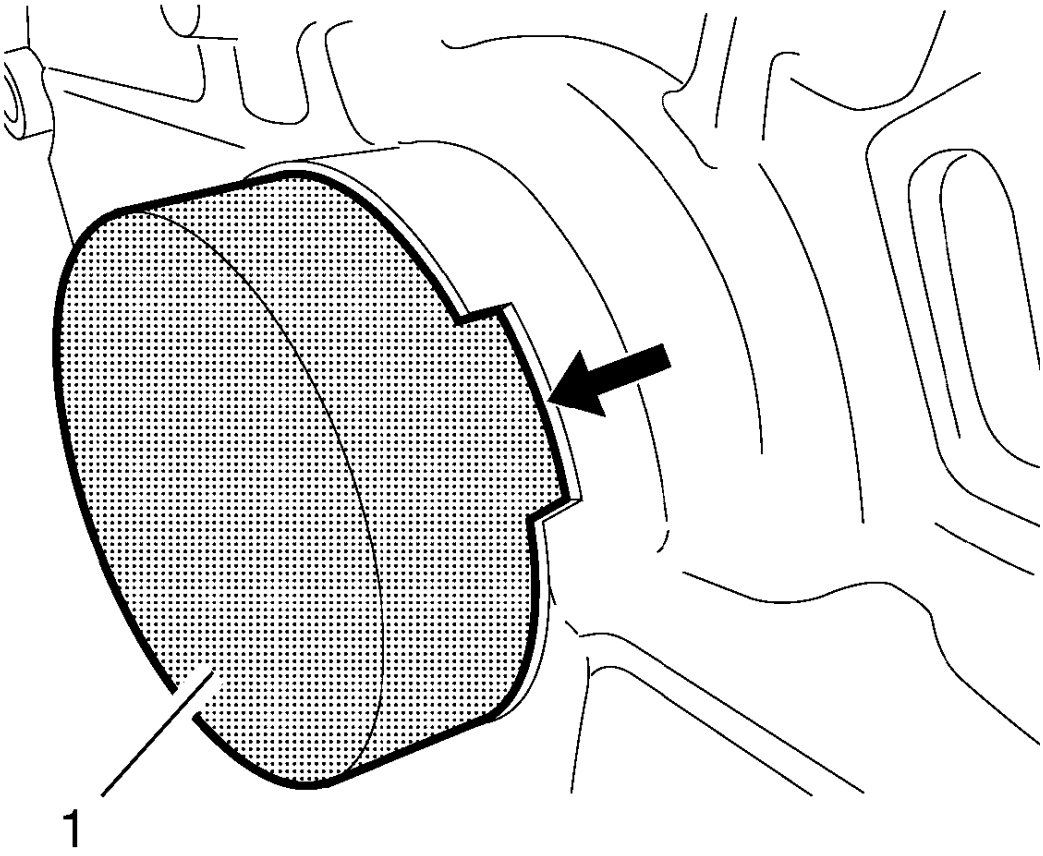

Fig. 197: Check Crankshaft Rear Oil Seal For Proper Seat
Courtesy of GENERAL MOTORS COMPANY

4. Check the crankshaft rear oil seal for proper seat, the **EN-658-1** installer must be flush with the cylinder block at the position (1).

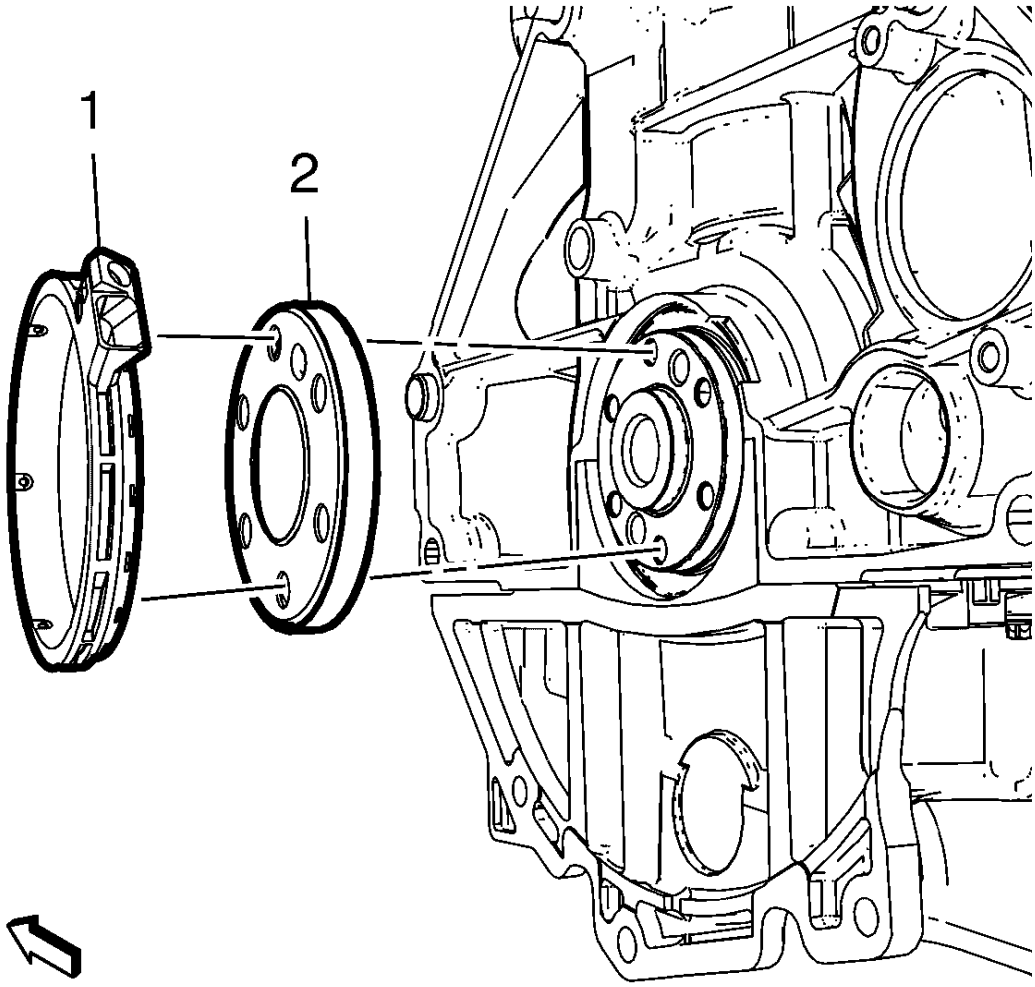

Fig. 198: Crankshaft Position Sensor Reluctor Ring And Oil Seal Housing
Courtesy of GENERAL MOTORS COMPANY

5. Install the crankshaft position sensor reluctor ring (2).

CAUTION: Do not allow the crankshaft encoder wheel to come into contact with external magnetic fields or sharp metal objects. Do not drop the crankshaft encoder wheel. Do not damage the rubberized encoder track. Failure to follow these precautions may cause damage to the component.

6. Install the crankshaft rear oil seal housing (1).

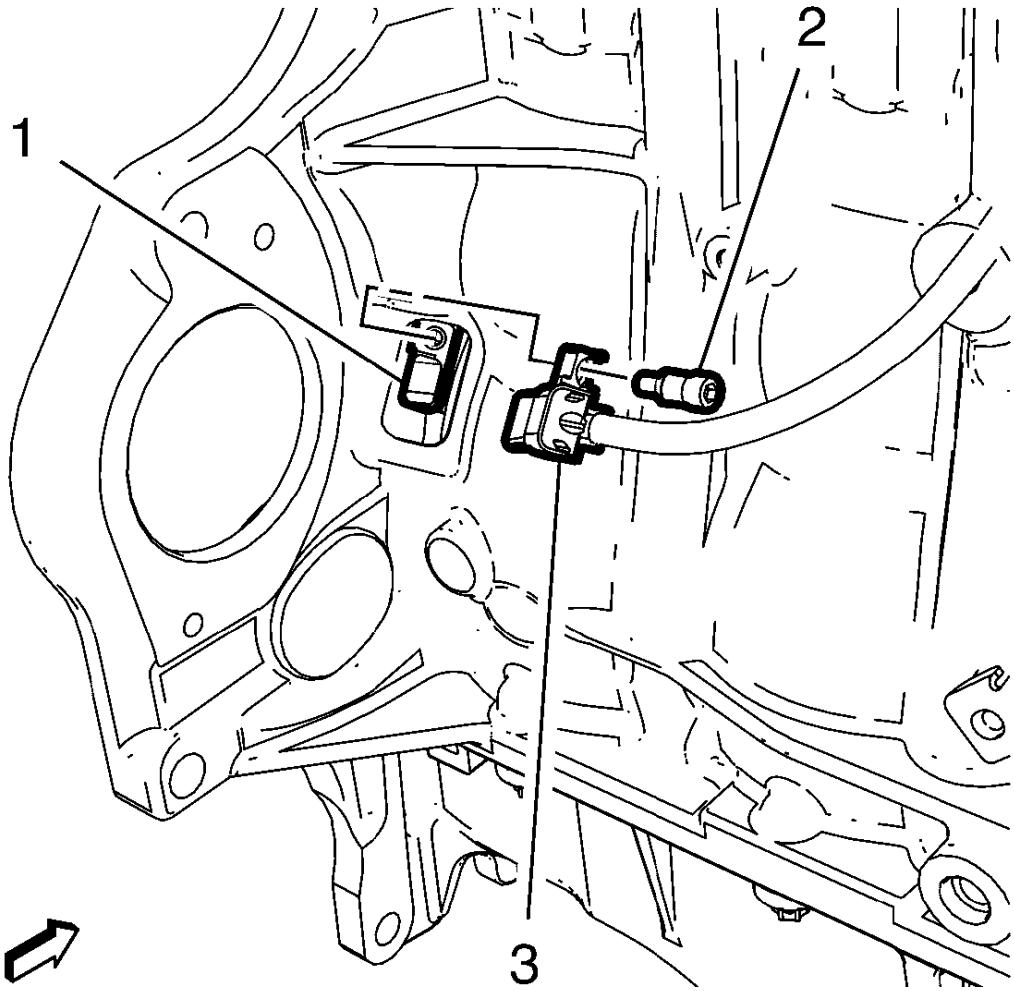

Fig. 199: Crankshaft Position Sensor And Bolt
Courtesy of GENERAL MOTORS COMPANY

7. Install the crankshaft position sensor (3) to the crankshaft rear oil seal housing (1).

CAUTION: Refer to Fastener Caution .

8. Install the crankshaft position sensor bolt (2) and tighten to 4.5 N.m (40 lb in).
9. Remove the collecting basin.
10. For vehicle with manual transmission: install the engine flywheel. Refer to **Engine Flywheel Replacement**.
11. For vehicle with automatic transmission: install the automatic transmission flex plate. Refer to **Automatic Transmission Flex Plate Replacement**.

POSITIVE CRANKCASE VENTILATION HOSE/PIPE/TUBE REPLACEMENT

Removal Procedure

1. Open the hood.

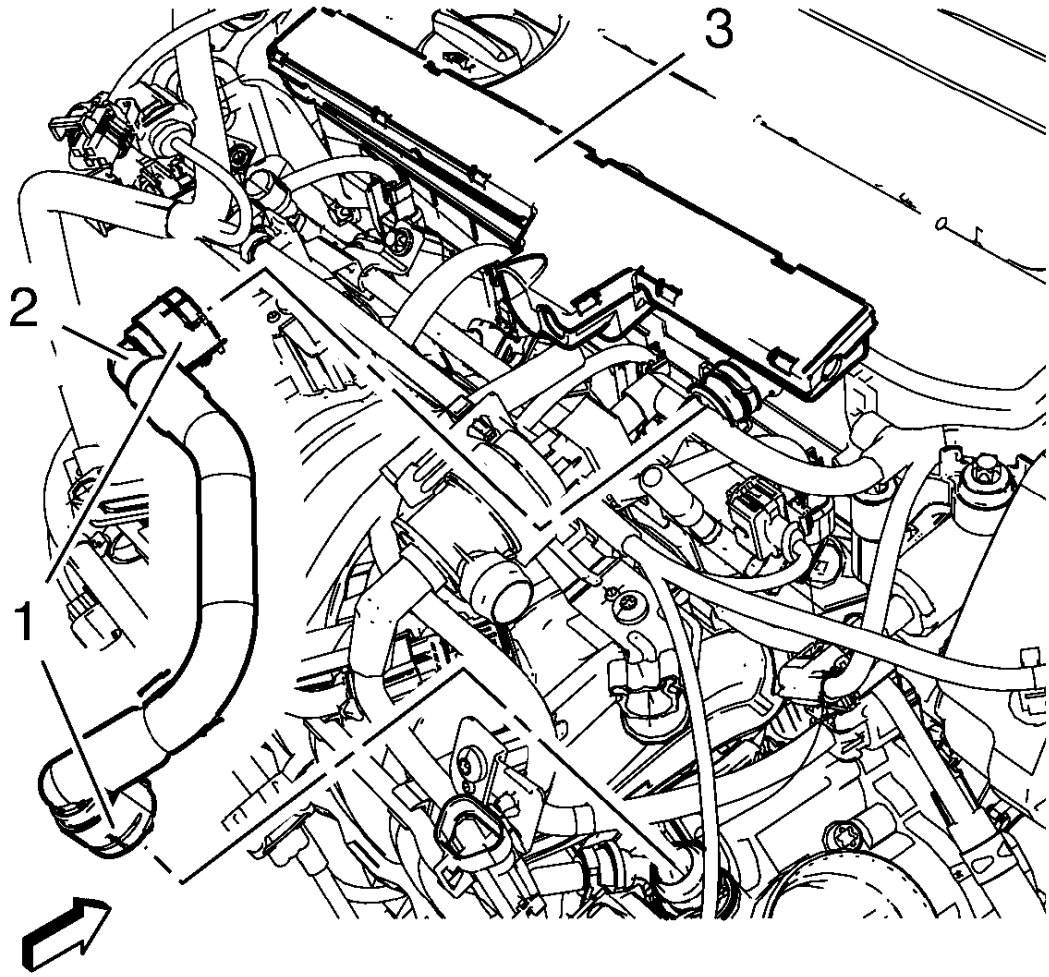

Fig. 200: Positive Crankcase Ventilation Tube, Connectors And ECM Wiring Harness Guide
Courtesy of GENERAL MOTORS COMPANY

2. Unclip the ECM wiring harness guide (3) from the cylinder head cover.
3. Disconnect the 2 positive crankcase ventilation tube connectors (1).
4. Remove the positive crankcase ventilation tube (2).

Installation Procedure

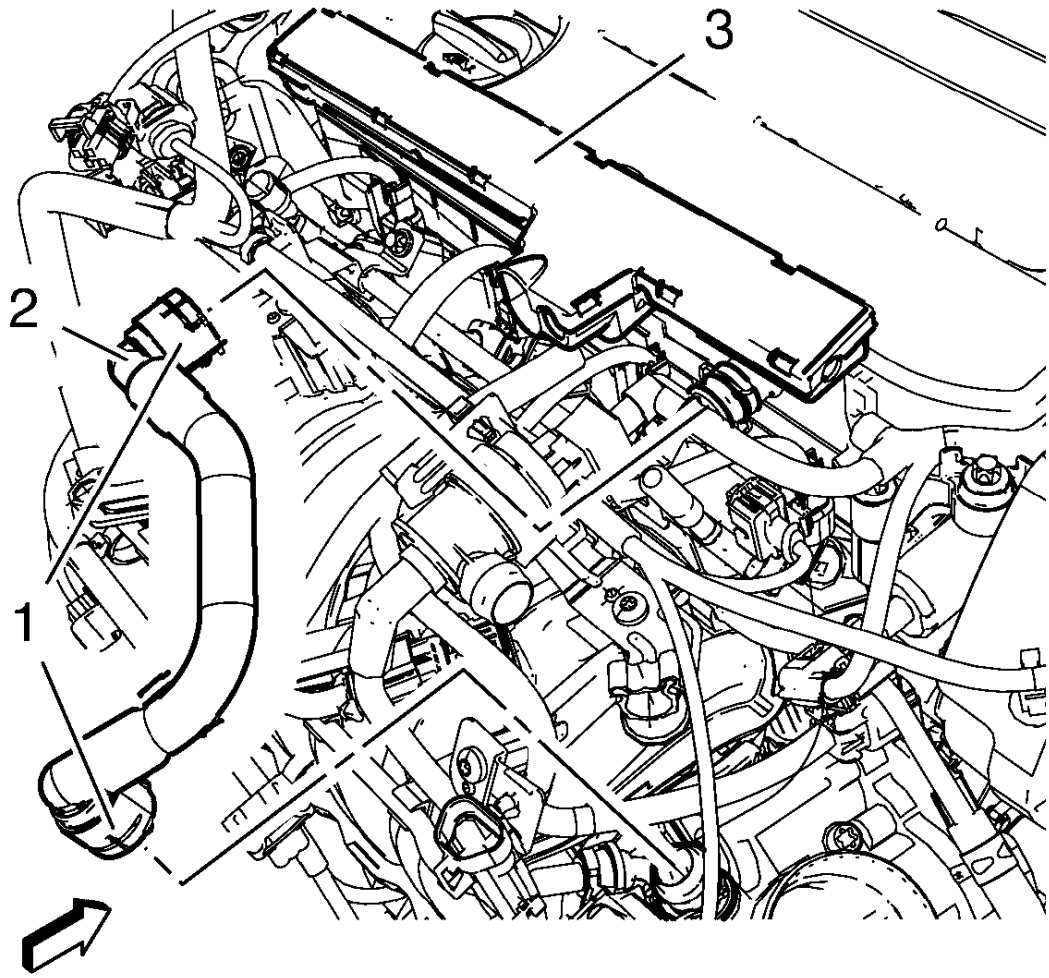

Fig. 201: Positive Crankcase Ventilation Tube, Connectors And ECM Wiring Harness Guide
Courtesy of GENERAL MOTORS COMPANY

1. Install the positive crankcase ventilation tube (2).
2. Connect the 2 positive crankcase ventilation tube connectors (1).
3. Clip in the ECM wiring harness guide (3) to the cylinder head cover.
4. Close the hood.

ENGINE OIL HEATER REPLACEMENT

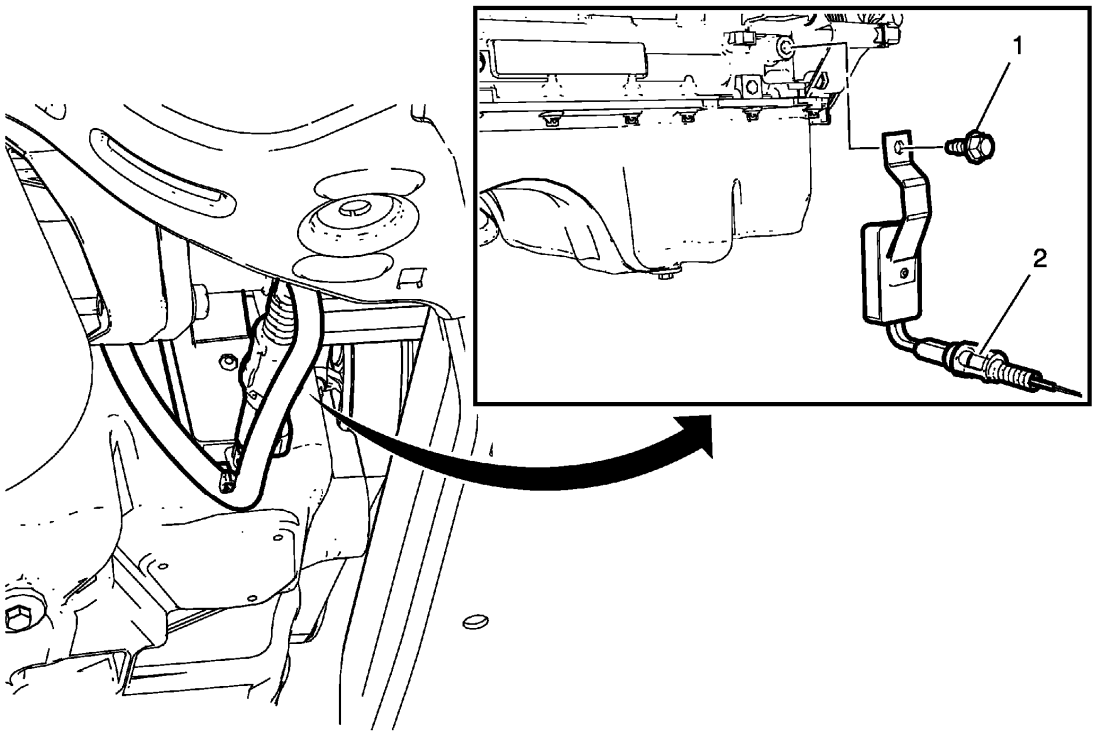

Fig. 202: Engine Oil Heater And Bolt
Courtesy of GENERAL MOTORS COMPANY

Engine Oil Heater Replacement

Callout	Component Name
WARNING: **While engine is operating, the exhaust system will become extremely hot. To prevent burns avoid contacting a hot exhaust system.** **Preliminary Procedures** Disconnect the battery negative cable. Refer to **Battery Negative Cable Disconnection and Connection** .	
1	Engine Oil Heater Bolt **CAUTION:** **Refer to Fastener Caution .** **Tighten** 40 N.m (30 lb ft)
2	Engine Oil Heater **Procedure** Disconnect the wiring harness plug.

ENGINE FRONT COVER WITH OIL PUMP REPLACEMENT

Removal Procedure

1. Open the hood.
2. Disconnect the negative battery cable. Refer to **Battery Negative Cable Disconnection and Connection** .
3. Remove the exhaust manifold. Refer to **Exhaust Manifold Replacement** .
4. Drain the cooling system. Refer to **Cooling System Draining and Filling (Static Fill)** , **Cooling System Draining and Filling (GE-47716 Fill)** .
5. Remove the air conditioning compressor. Refer to **Air Conditioning Compressor Replacement (1.8L LUW and LWE)** .
6. Remove the generator. Refer to **Generator Replacement (1.8L LUW and LWE)** .
7. Remove the timing belt rear cover. Refer to **Timing Belt Rear Cover Replacement**.
8. Remove the oil pan. Refer to **Oil Pan Replacement (Manual Transmission)**, **Oil Pan Replacement (Automatic Transmission)**.
9. Remove the radiator outlet hose from the water pump. Refer to **Radiator Outlet Hose Replacement (1.8L LUW and LWE)** .

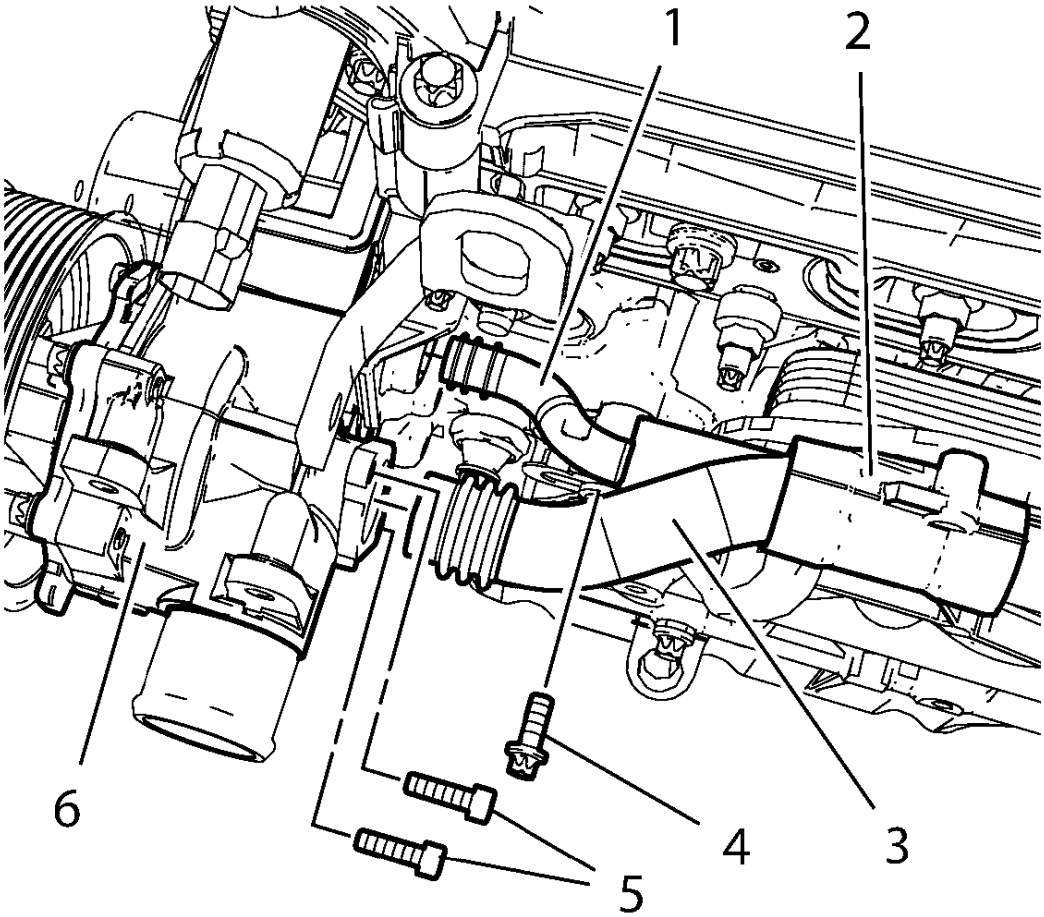

Fig. 203: Engine Oil Cooler Outlet Pipe And Bolts
Courtesy of GENERAL MOTORS COMPANY

10. Remove the engine oil cooler inlet pipe bolt (4).
11. Push the engine oil cooler inlet pipe (1) into the engine oil cooler housing (2).
12. Remove the 2 engine oil cooler outlet pipe bolts (5) from the water pump.
13. Push the engine oil cooler outlet pipe (3) into the engine oil cooler housing (2).

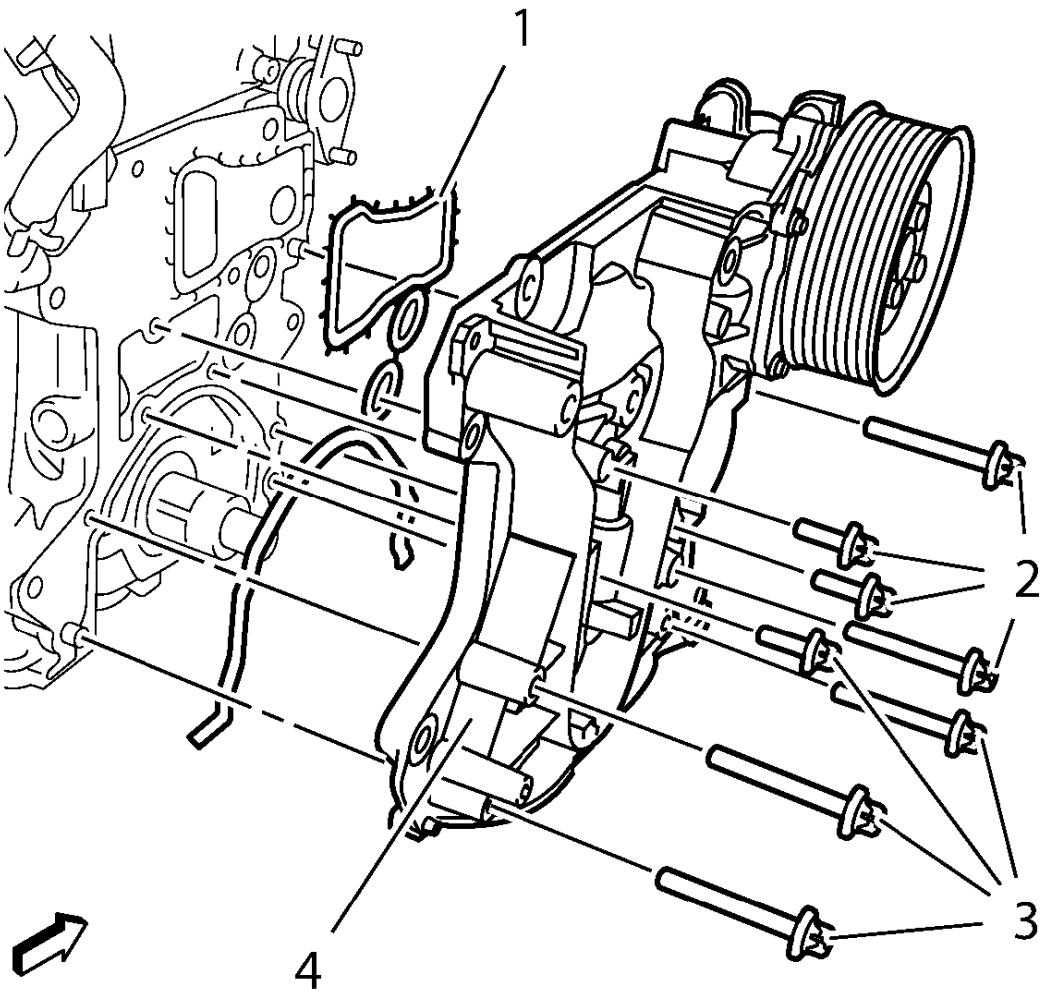

Fig. 204: Engine Front Cover, Seal And Bolts
Courtesy of GENERAL MOTORS COMPANY

14. Remove the 8 engine front cover bolts (2, 3).
15. Remove the engine front cover (4).
16. Remove the engine front cover seal (1).

Installation Procedure

1. Clean sealing surface.

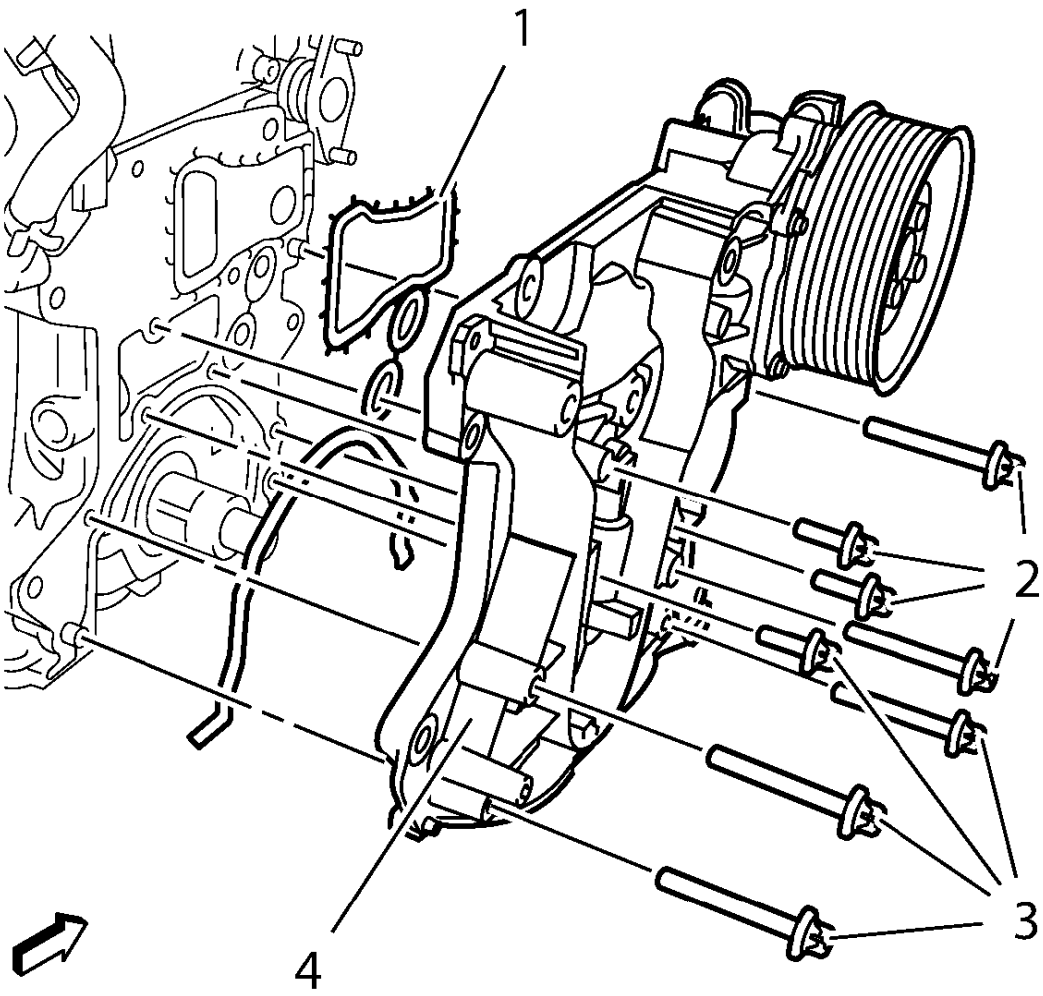

Fig. 205: Engine Front Cover, Seal And Bolts
Courtesy of GENERAL MOTORS COMPANY

2. Install a NEW engine front cover seal (1).
3. Install the engine front cover (4).

CAUTION: Refer to Fastener Caution .

4. Install the 8 engine front cover bolts (2, 3) and tighten to 20 N.m (15 lb ft).

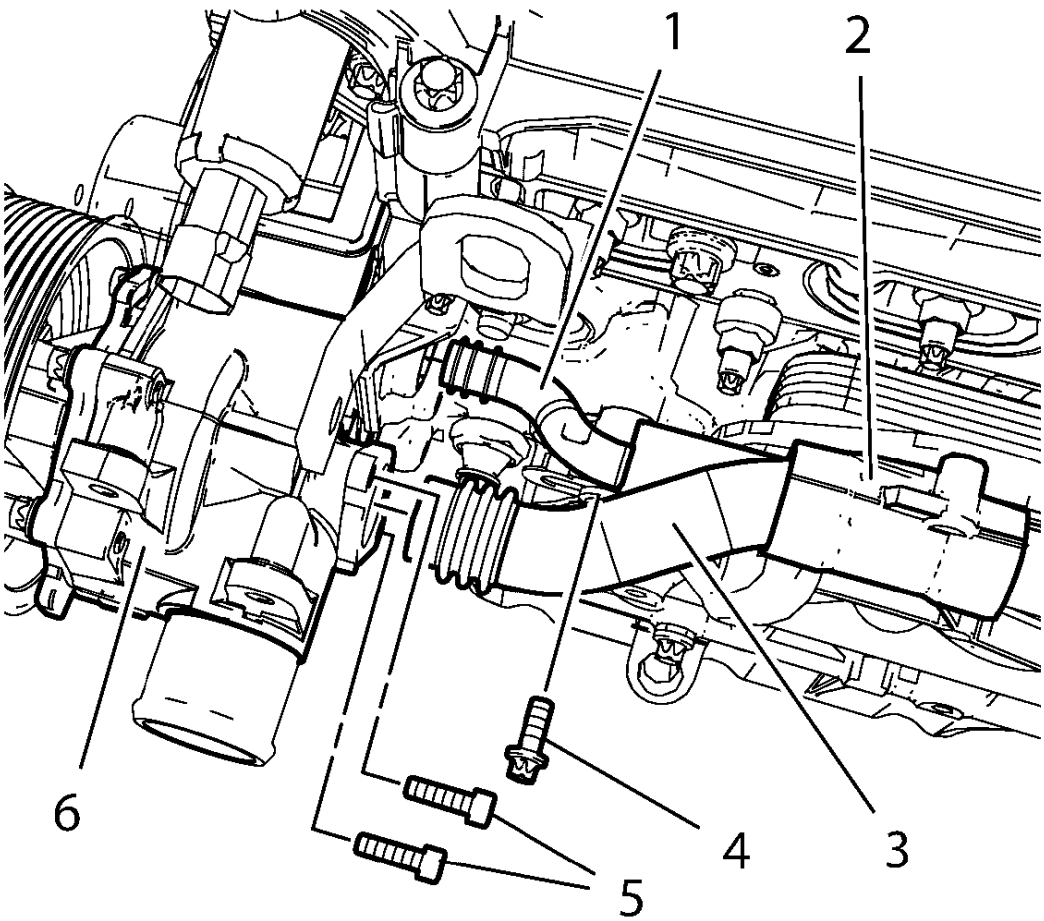

Fig. 206: Engine Oil Cooler Outlet Pipe And Bolts
Courtesy of GENERAL MOTORS COMPANY

5. Push the engine oil cooler outlet pipe (3) to the water pump (6).
6. Install the engine oil cooler outlet pipe bolts (5) and tighten to 8 N.m (71 lb in).
7. Push the engine oil cooler inlet pipe (1) into the water pump (6).
8. Install the engine oil cooler inlet pipe bolt (4) and tighten to 8 N.m (71 lb in).
9. Install the radiator outlet hose to the water pump. Refer to **Radiator Outlet Hose Replacement (1.8L LUW and LWE)** .
10. Install the oil pan. Refer to **Oil Pan Replacement (Manual Transmission)**, **Oil Pan Replacement (Automatic Transmission)**.
11. Install the timing belt rear cover. Refer to **Timing Belt Rear Cover Replacement**.
12. Install the generator. Refer to **Generator Replacement (1.8L LUW and LWE)** .
13. Install the air conditioning compressor. Refer to **Air Conditioning Compressor Replacement (1.8L LUW and LWE)** .

14. Install the exhaust manifold. Refer to **Exhaust Manifold Replacement** .
15. Connect the negative battery cable. Refer to **Battery Negative Cable Disconnection and Connection** .
16. Fill the cooling system. Refer to **Cooling System Draining and Filling (Static Fill)** , **Cooling System Draining and Filling (GE-47716 Fill)** .
17. Close the hood.

OIL PRESSURE RELIEF VALVE REPLACEMENT

Removal Procedure

1. Remove the oil pan. Refer to **Oil Pan Replacement (Manual Transmission)**, **Oil Pan Replacement (Automatic Transmission)**.

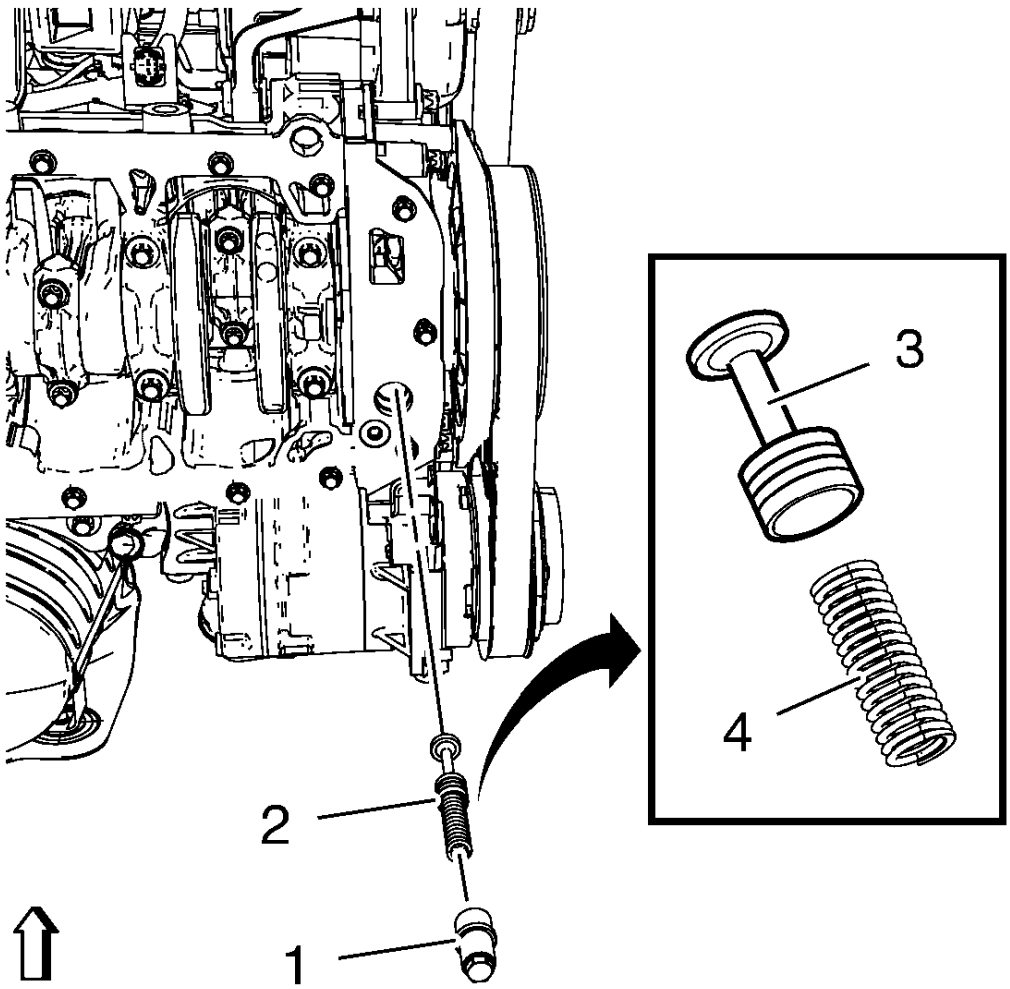

Fig. 207: Oil Pressure Relief Valve Assembly
Courtesy of GENERAL MOTORS COMPANY

2. Remove the oil pressure relief valve closure bolt (1).
3. Remove the oil pressure relief valve assembly (2).
4. Remove the piston (3) and the spring (4).

WARNING: Bodily injury may occur if the cleaning solvent is inhaled or exposed to the skin.

WARNING: To avoid eye injury, use approved safety lenses, goggles, or face shield when using buffing and cleaning equipment.

5. Clean the parts.
6. Inspect the parts.
7. Clean the thread.

Installation Procedure

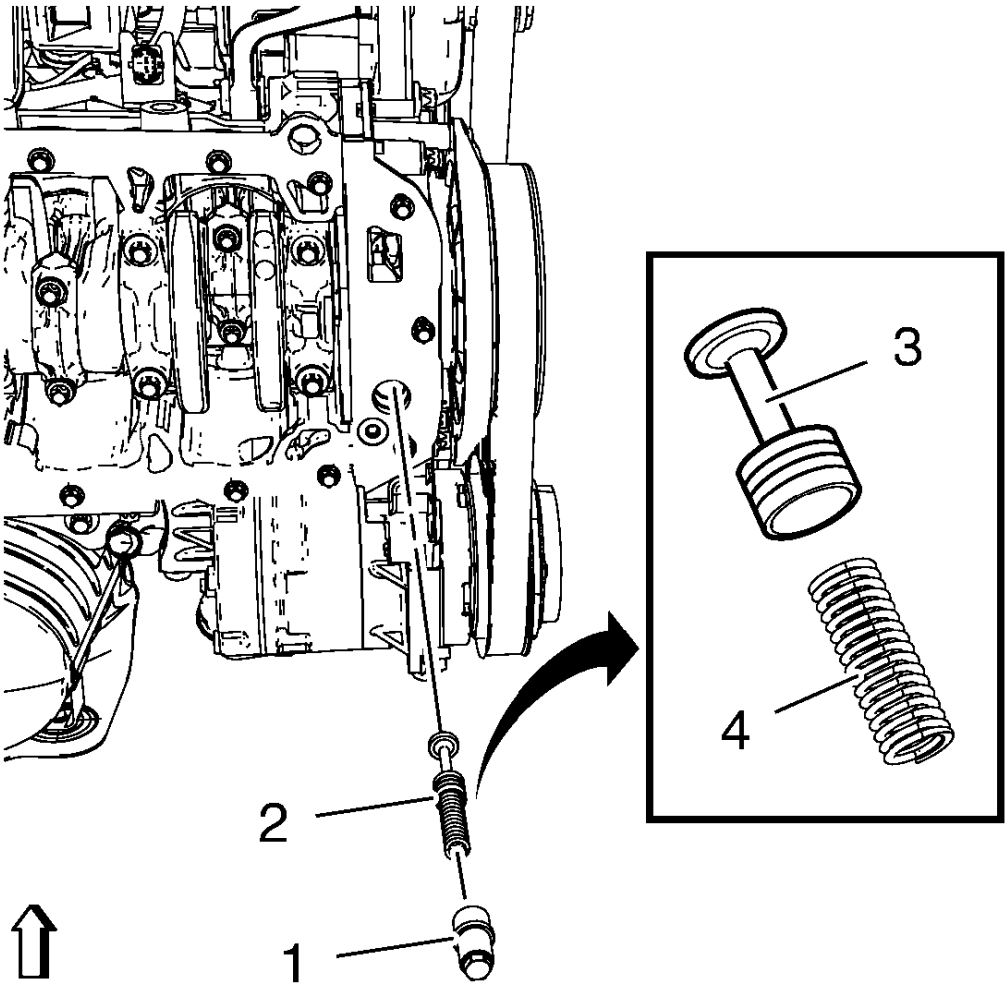

Fig. 208: Oil Pressure Relief Valve Assembly
Courtesy of GENERAL MOTORS COMPANY

1. Install the piston (3) and the spring (4).
2. Install the oil pressure relief valve assembly (2).

CAUTION: Refer to Fastener Caution .

3. Install the oil pressure relief valve closure bolt (1) and tighten to 21 N.m (16 lb ft).
4. Install the oil pan. Refer to **Oil Pan Replacement (Manual Transmission)**, **Oil Pan Replacement (Automatic Transmission)**.

ENGINE OIL COOLER HOUSING REPLACEMENT

Refer to **Engine Oil Cooler Replacement (1.8L LUW and LWE)** , it is the same procedure.

OIL FLOW CHECK VALVE REPLACEMENT

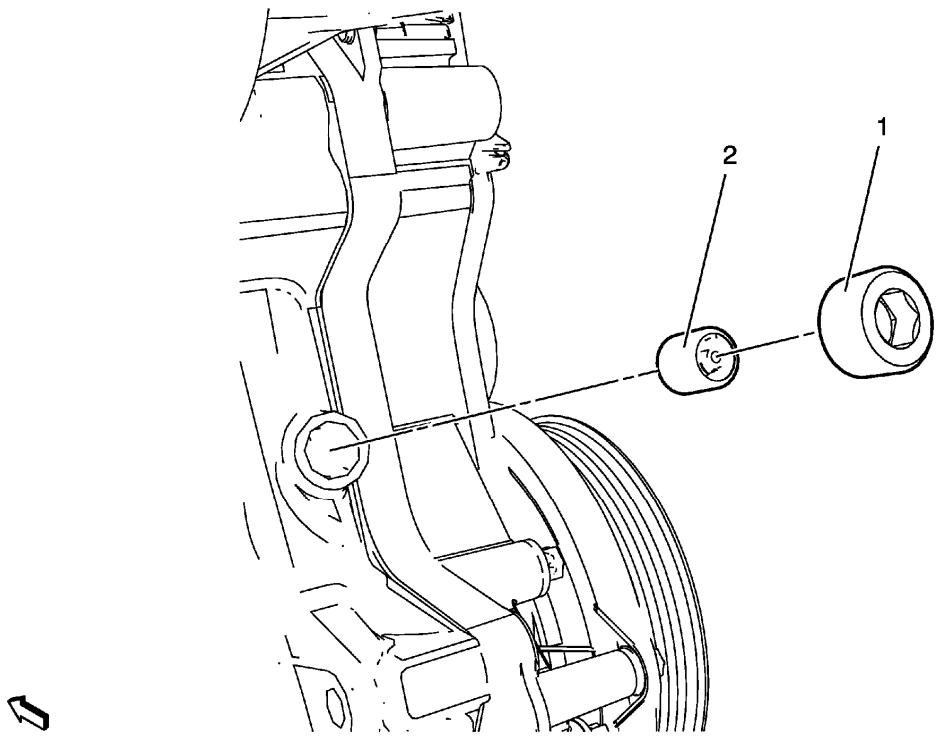

Fig. 209: Oil Flow Check Valve
Courtesy of GENERAL MOTORS COMPANY

Oil Flow Check Valve Replacement

Callout	Component Name
Preliminary Procedure Remove the generator. Refer to **Generator Replacement (1.8L LUW and LWE)** .	
1	Oil Flow Check Valve Bore Plug **CAUTION:** **Refer to Fastener Caution .** **Tighten** 21 N.m (16 lb ft)
2	Oil Flow Check Valve

OIL LEVEL INDICATOR TUBE REPLACEMENT

Removal Procedure

1. Open the hood.
2. Remove the oil dipstick.

NOTE: If the engine oil level is at maximum, some oil may emerge when drawing out the oil dipstick guide tube.

3. Place collecting basin underneath.

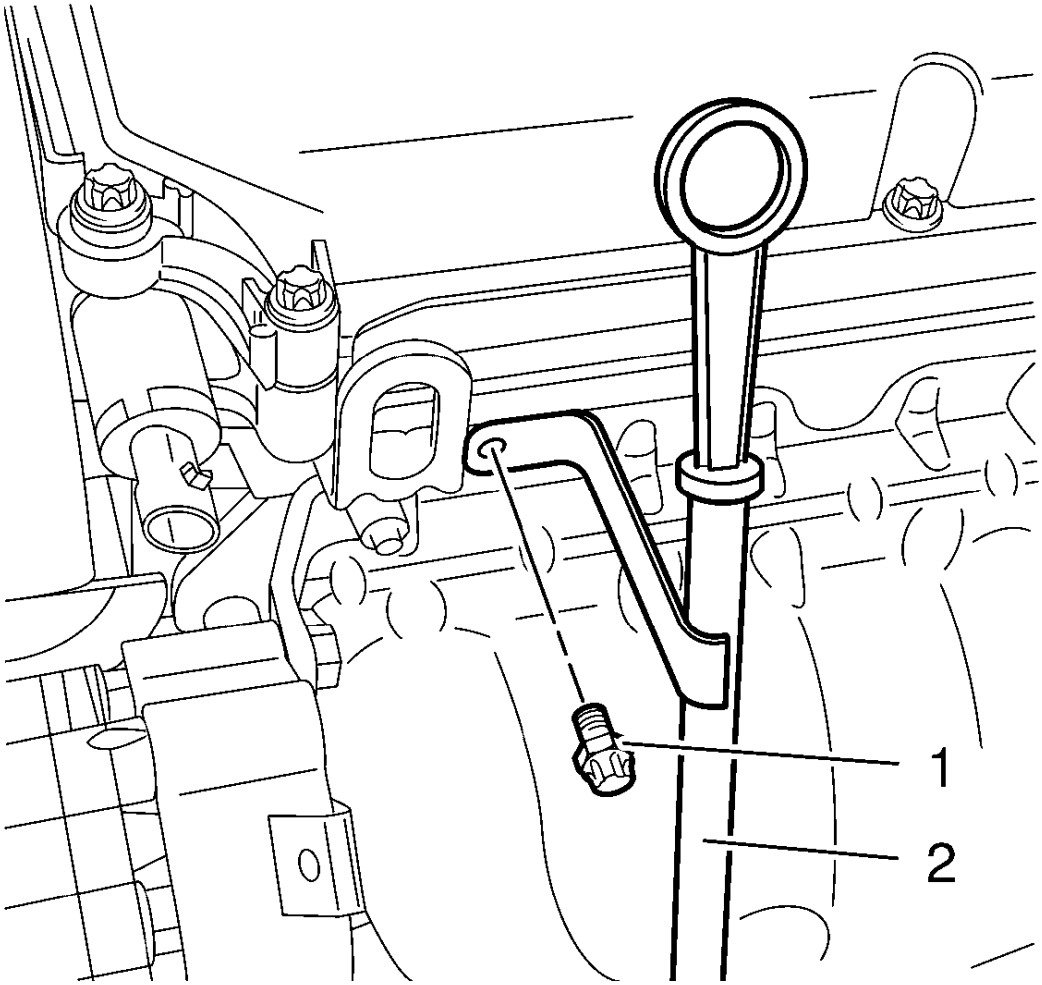

Fig. 210: Oil Level Indicator Tube And Bolt
Courtesy of GENERAL MOTORS COMPANY

4. Remove the oil level indicator tube bolt (1).
5. Remove the oil level indicator tube (2) and the oil level indicator seal.

Installation Procedure

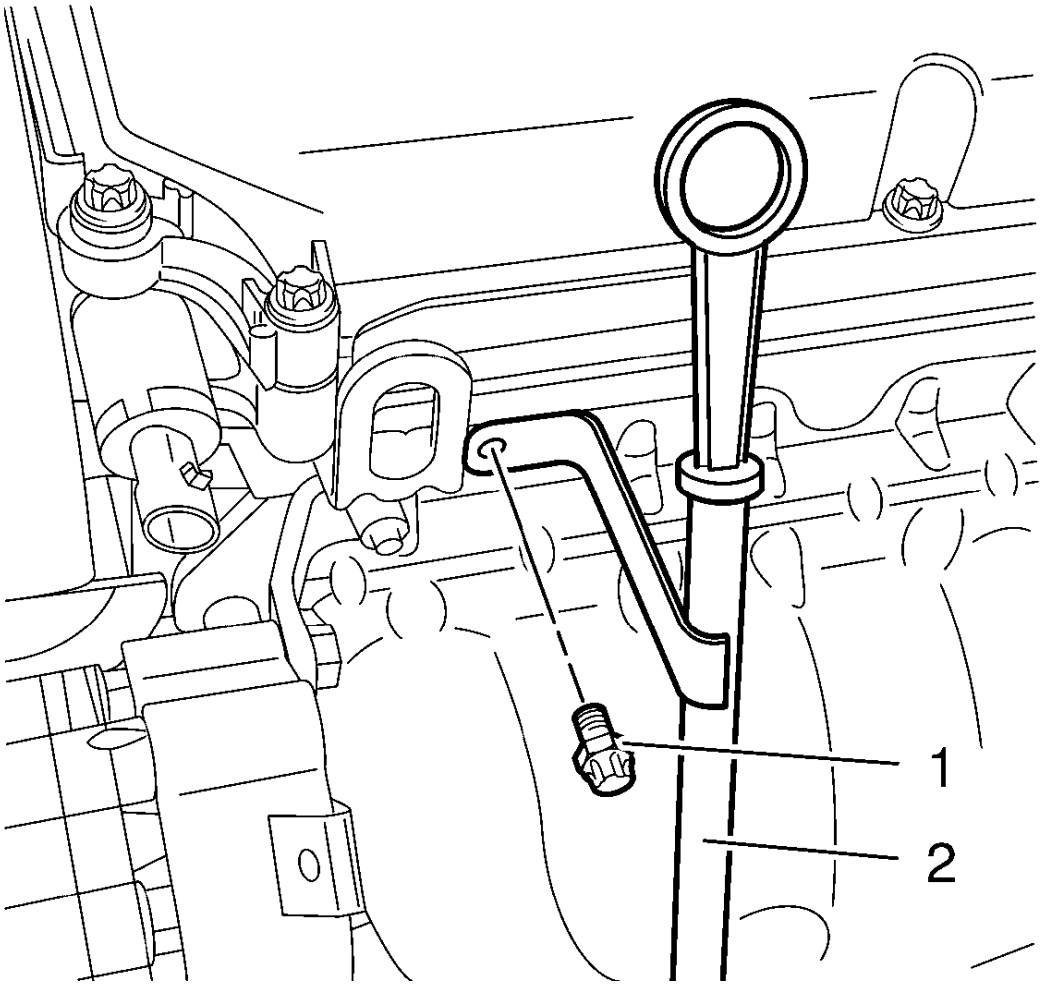

Fig. 211: Oil Level Indicator Tube And Bolt
Courtesy of GENERAL MOTORS COMPANY

1. Install the oil level indicator tube (2).
2. Install a NEW oil level indicator tube gasket.

CAUTION: Refer to Fastener Caution .

3. Install the oil level indicator tube bolt (1) and tighten to 15 N.m (11 lb ft).
4. Install the oil dipstick.
5. Close the hood.

ENGINE REPLACEMENT

Removal Procedure

1. Disconnect the negative battery cable from the battery. Refer to **Battery Negative Cable Disconnection and Connection** .
2. Drain the engine cooling system. Refer to **Cooling System Draining and Filling (Static Fill)** , **Cooling System Draining and Filling (GE-47716 Fill)** .
3. Recover the air conditioning refrigerant. Refer to **Refrigerant Recovery and Recharging** .

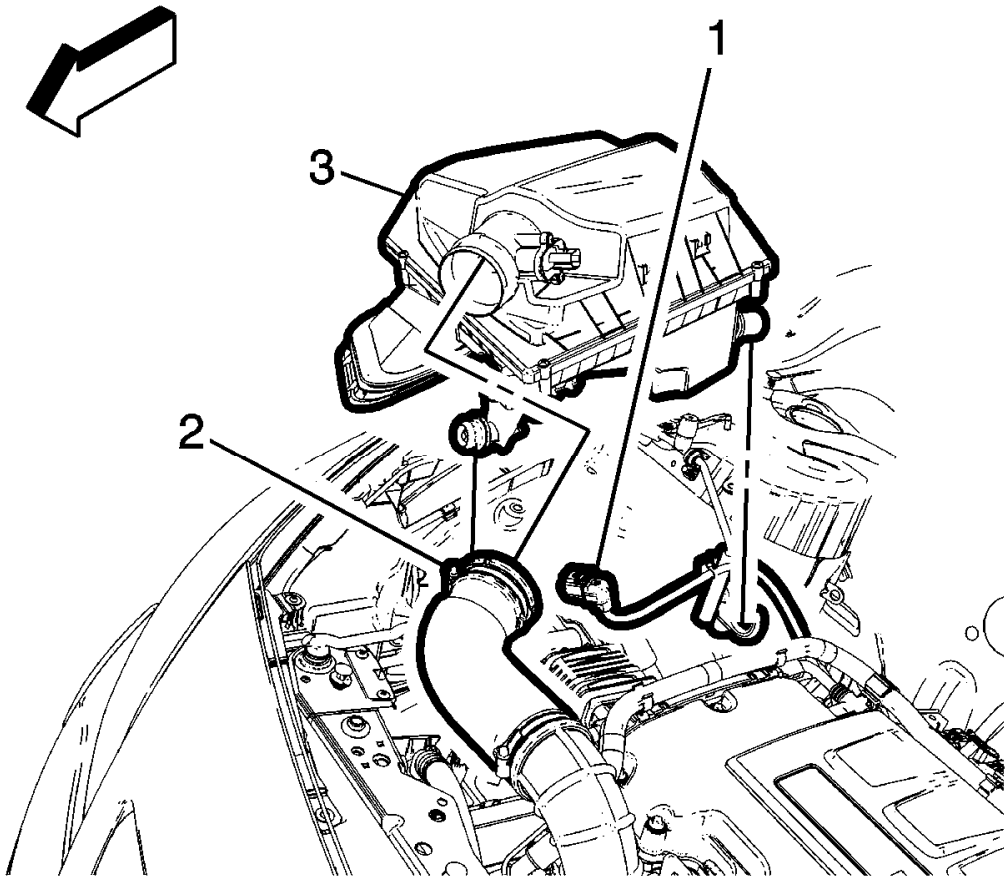

Fig. 212: Air Cleaner Assembly, Electrical Connector And Clamp
Courtesy of GENERAL MOTORS COMPANY

4. Disconnect the electrical connector (1).
5. Loosen the clamp (2) and remove air cleaner from air cleaner assembly (3).

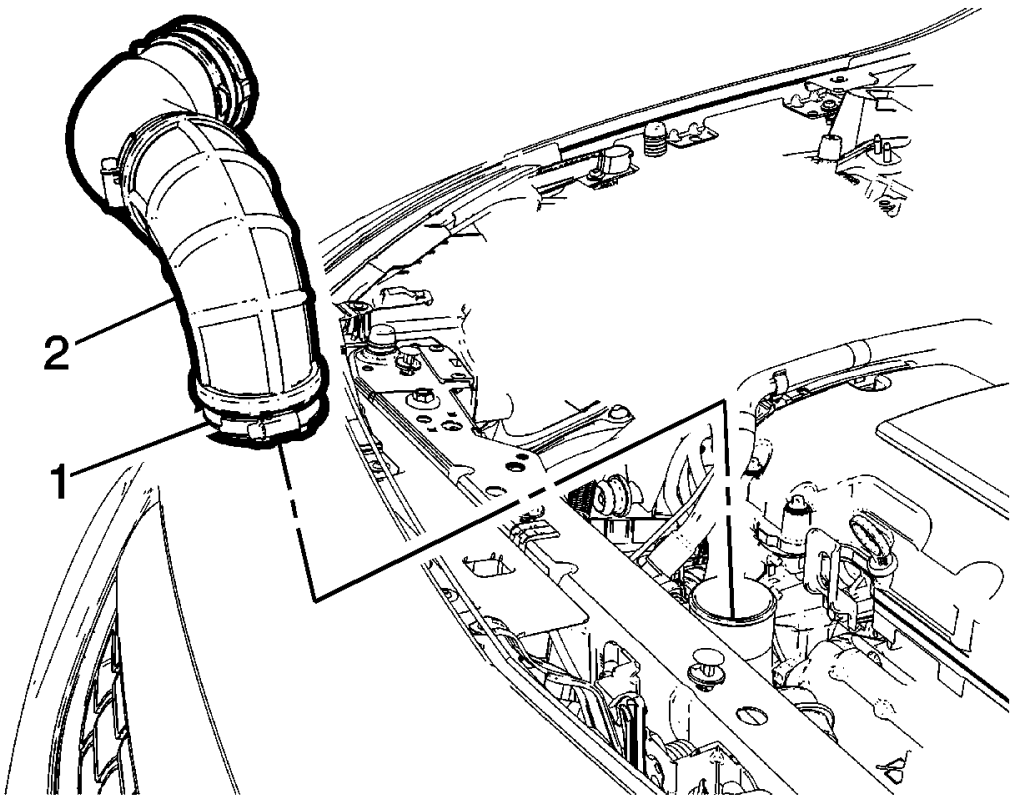

Fig. 213: Air Cleaner Outlet Duct And Clamp
Courtesy of GENERAL MOTORS COMPANY

6. Loosen the clamp (1) and remove the outlet duct (2).
7. Remove the charge air cooler inlet air hose. Refer to **Charge Air Cooler Inlet Air Hose Replacement** .
8. Remove the charge air cooler outlet air hose. Refer to **Charge Air Cooler Outlet Air Hose Replacement (Automatic Transmission)** , **Charge Air Cooler Outlet Air Hose Replacement (Manual Transmission)** .

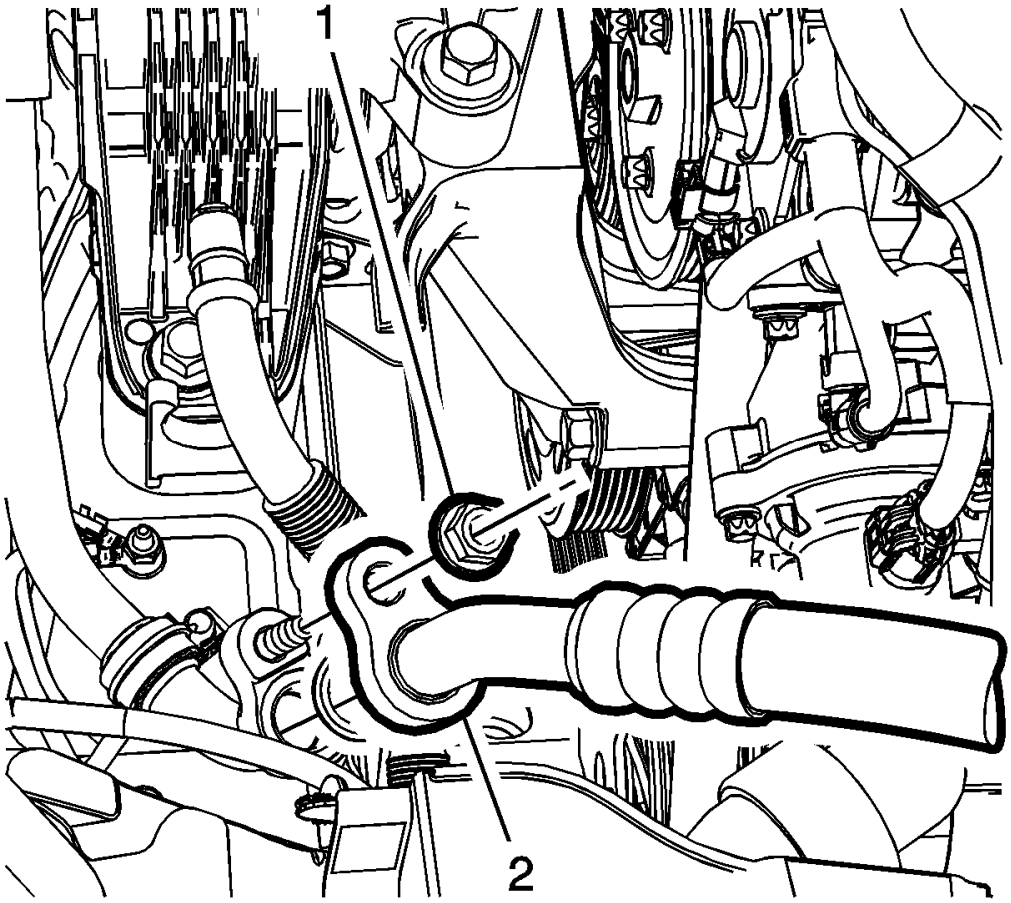

Fig. 214: Refrigerant Hose And Nut
Courtesy of GENERAL MOTORS COMPANY

9. Remove refrigerant hose nut (1) from refrigerant hose (2).

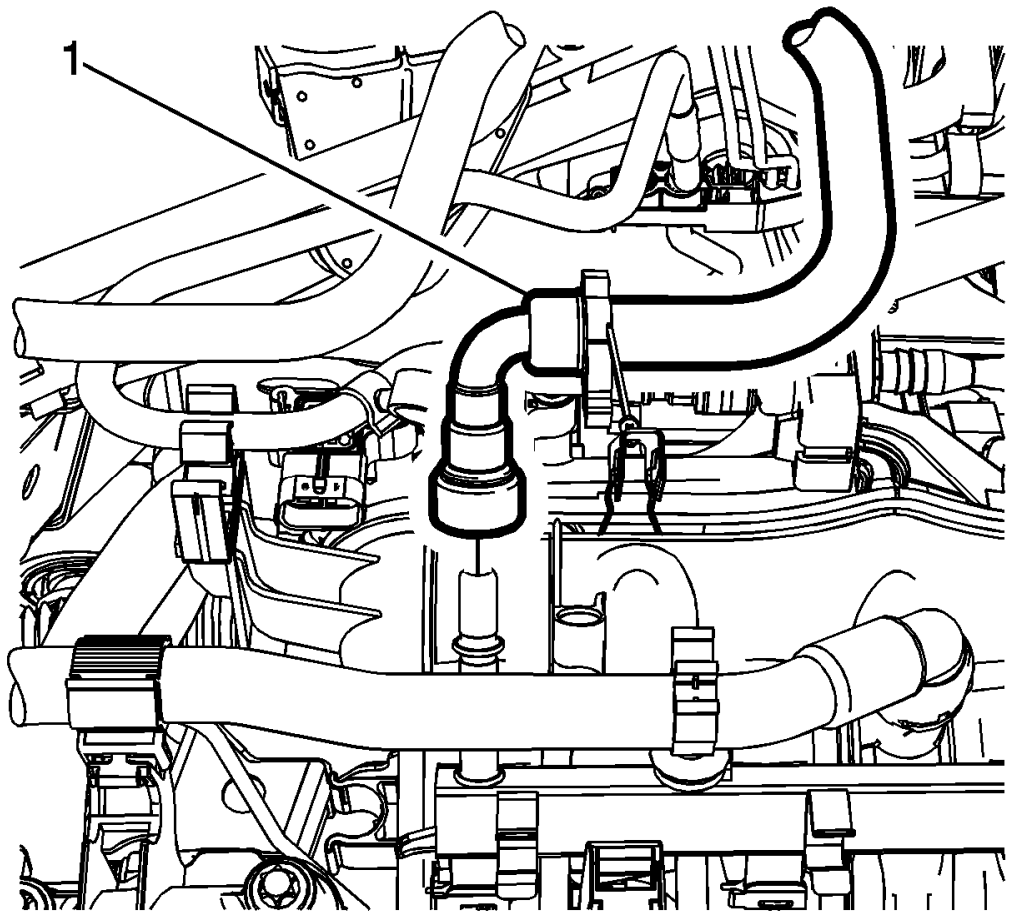

Fig. 215: Fuel Feed Pipe
Courtesy of GENERAL MOTORS COMPANY

10. Disconnect the fuel feed line (1) and reposition away from the engine. Refer to **Fuel Pressure Relief** .

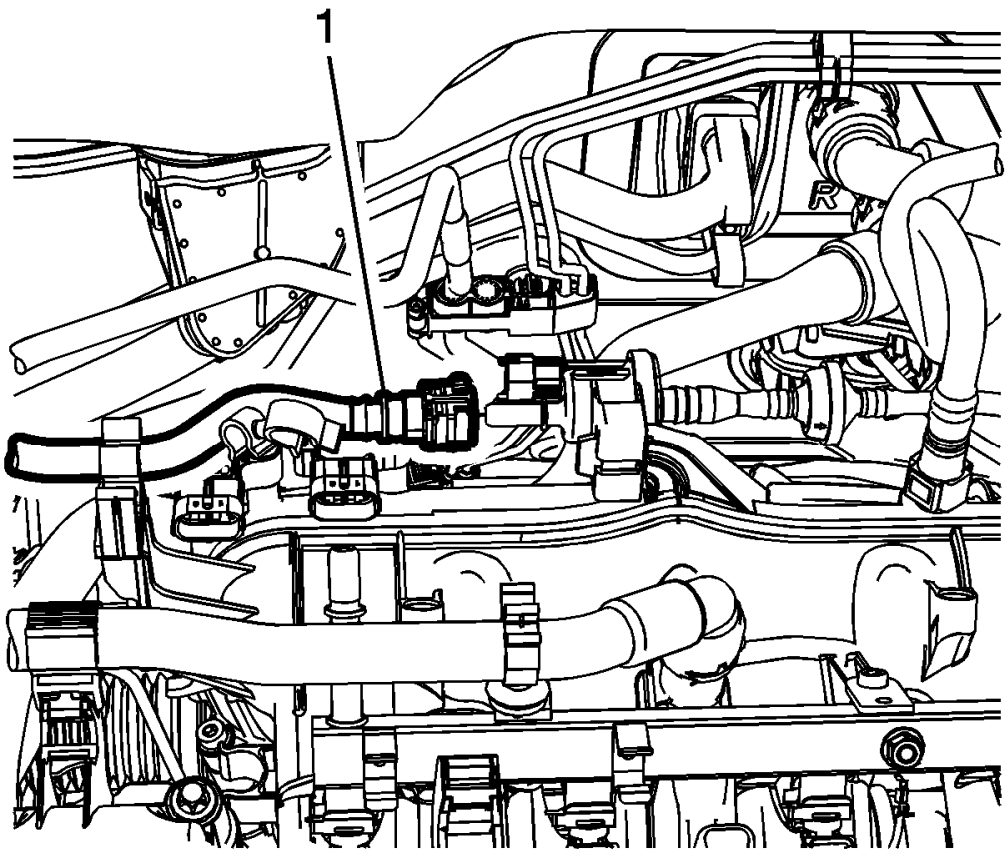

Fig. 216: Fuel Ventilation Pipe
Courtesy of GENERAL MOTORS COMPANY

11. Disconnect the EVAP hose (1). Refer to **Plastic Collar Quick Connect Fitting Service** .

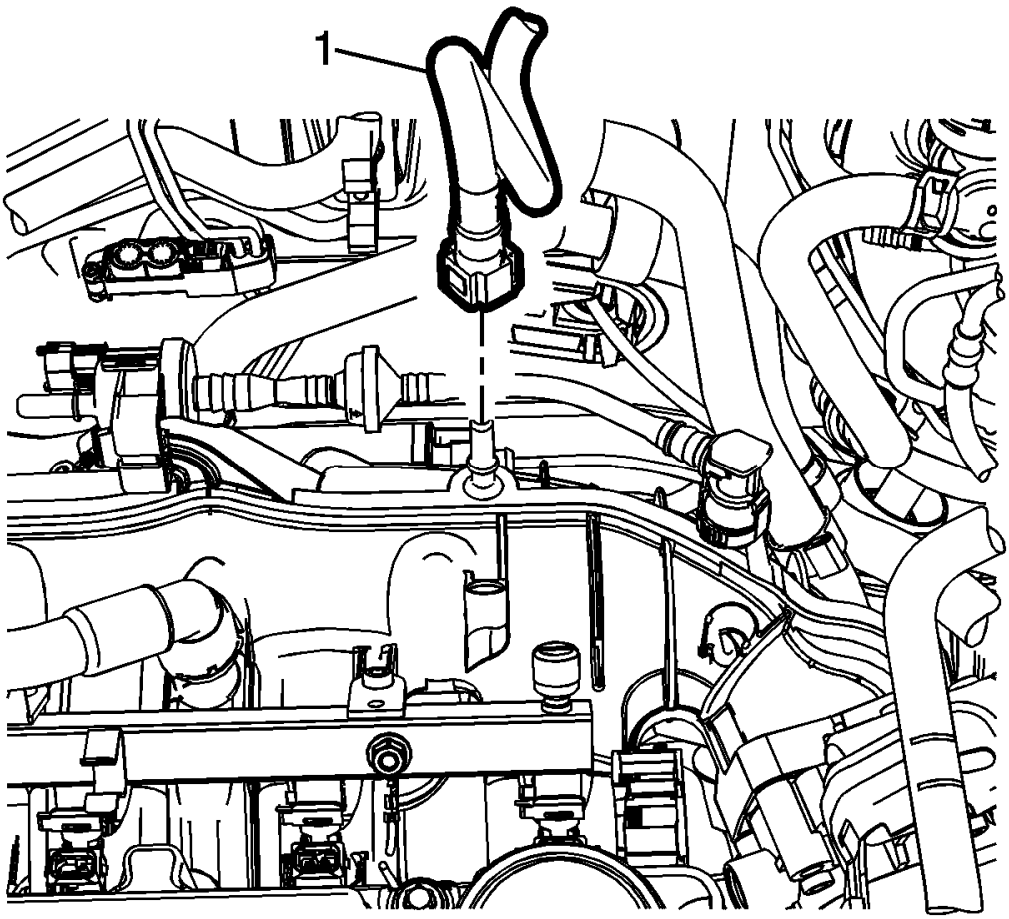

Fig. 217: Brake Booster Vacuum Pipe
Courtesy of GENERAL MOTORS COMPANY

12. Disconnect the power brake booster vacuum pipe (1).

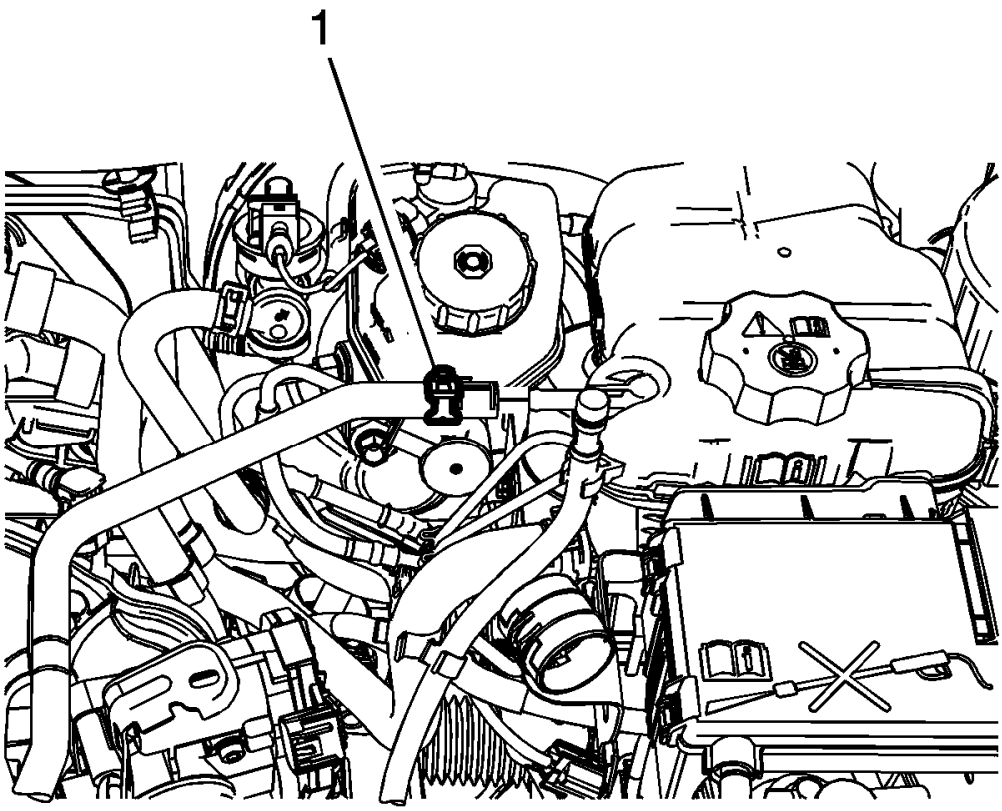

Fig. 218: Radiator Surge Tank Outlet Hose Clamp
Courtesy of GENERAL MOTORS COMPANY

13. Reposition the hose clamp (1) and remove the radiator surge tank outlet hose.

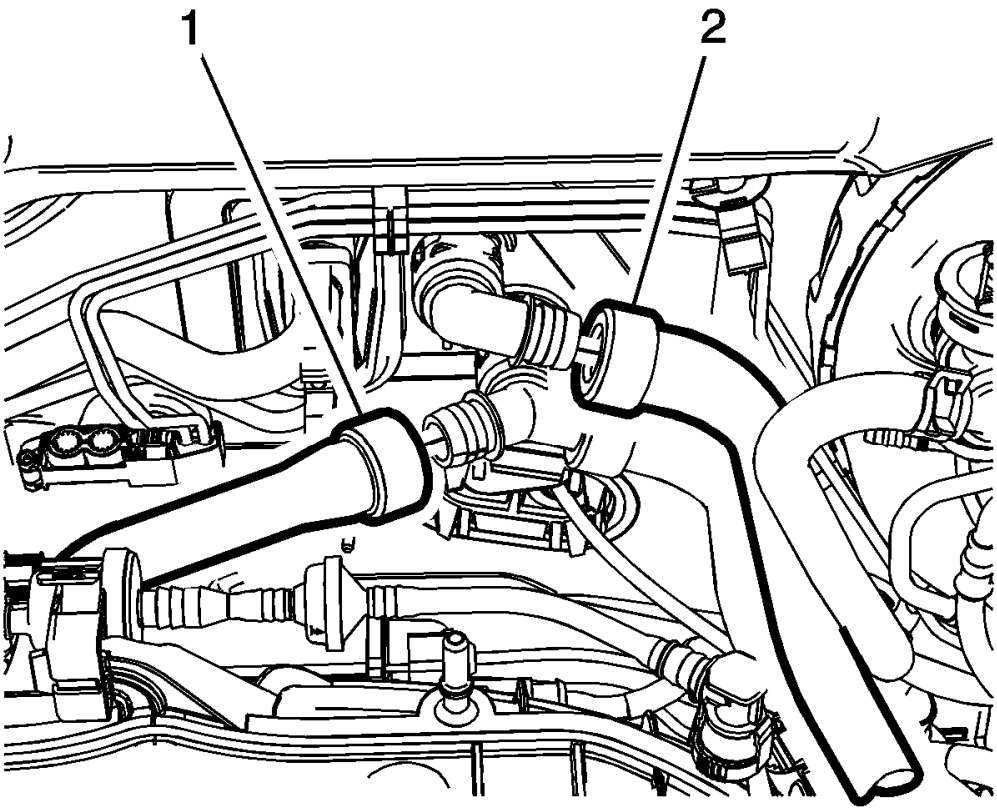

Fig. 219: Heater Core Inlet And Outlet Hoses
Courtesy of GENERAL MOTORS COMPANY

14. Disconnect inlet (2) and outlet (1) heater core hoses.

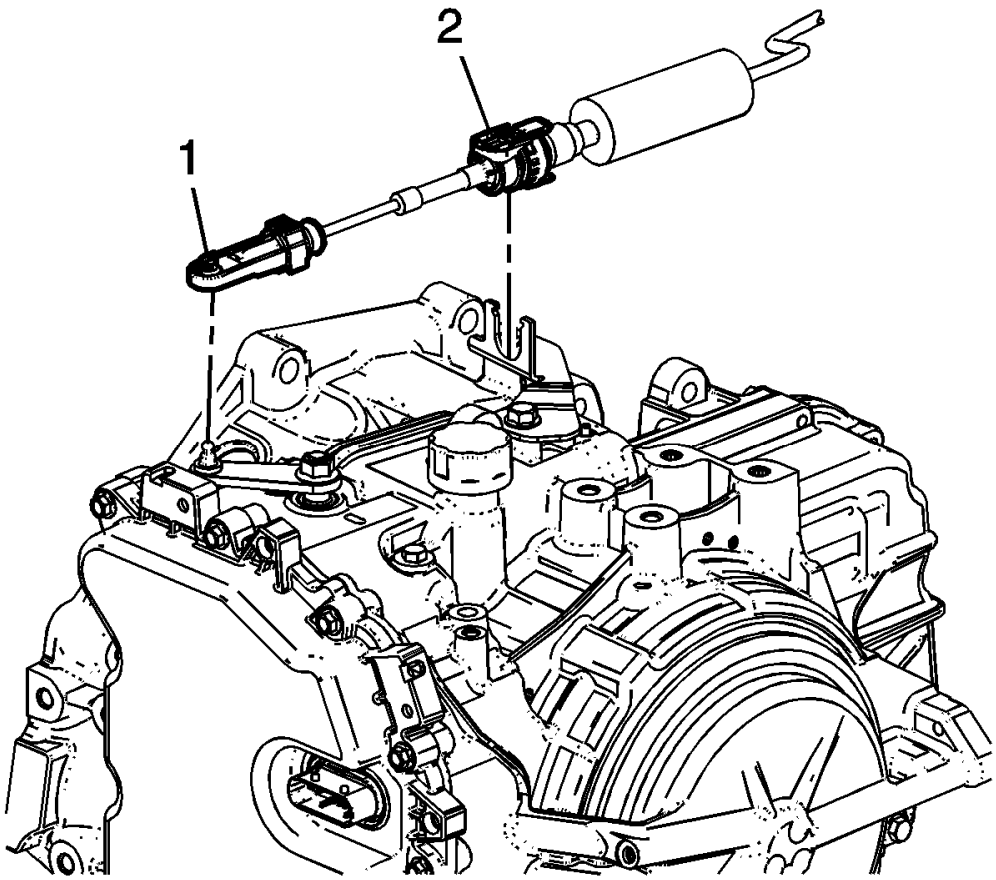

Fig. 220: View Of Transmission Range Selector Lever & Cable Connection
Courtesy of GENERAL MOTORS COMPANY

15. On vehicles equipped with a automatic transmission, disconnect the transmission range selector lever cable terminal (1) from the transmission manual shift lever pin.
16. On vehicles equipped with a automatic transmission, press the locking tabs inward in order to release the transmission range selector lever cable (2) from the cable bracket.

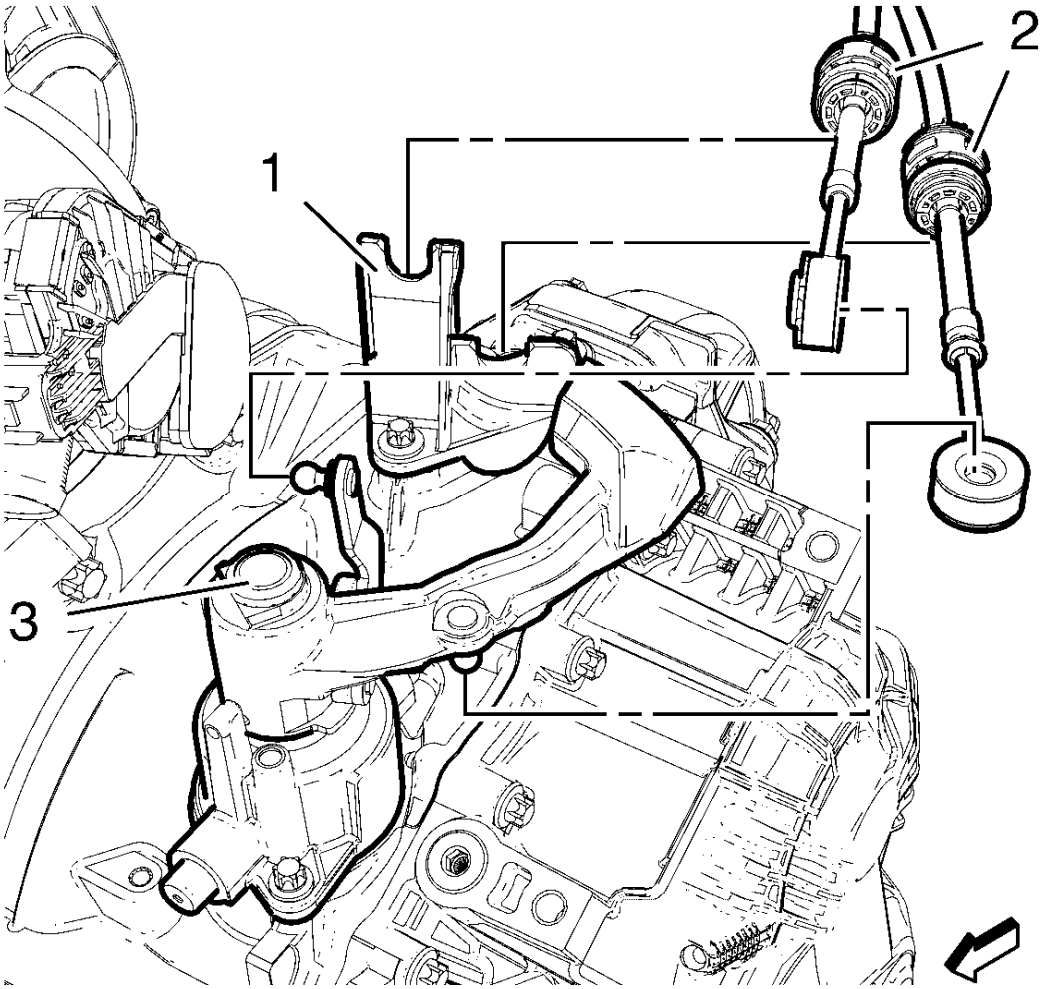

Fig. 221: Selector Lever Cable, Bracket And Transmission Control Housing
Courtesy of GENERAL MOTORS COMPANY

17. On vehicles equipped with a manual transmission, using a suitable pry tool, disconnect the shift lever cables (2) from the shift levers (3)
18. On vehicles equipped with a manual transmission, remove the shift lever cables (2) from the cable bracket (1).

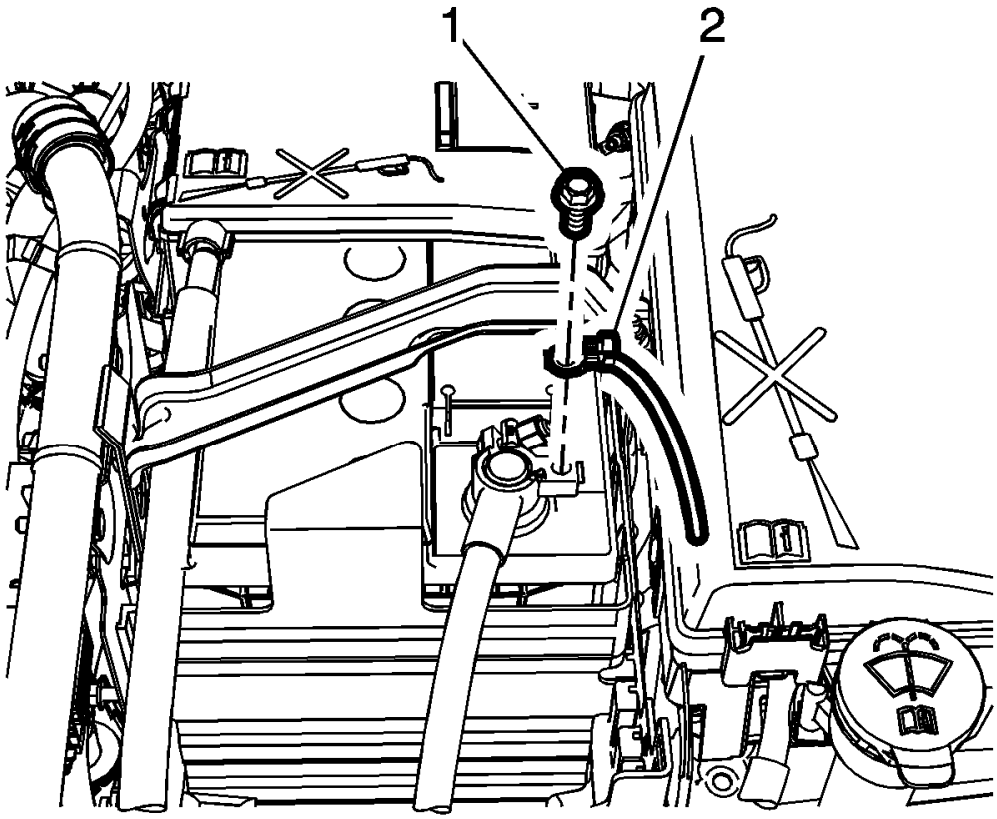

Fig. 222: Ground Strap And Bolt
Courtesy of GENERAL MOTORS COMPANY

19. Remove the ground strap bolt (1) from the battery cable and reposition the strap (2) a side.
20. Remove the battery tray. Refer to **Battery Tray Replacement** .

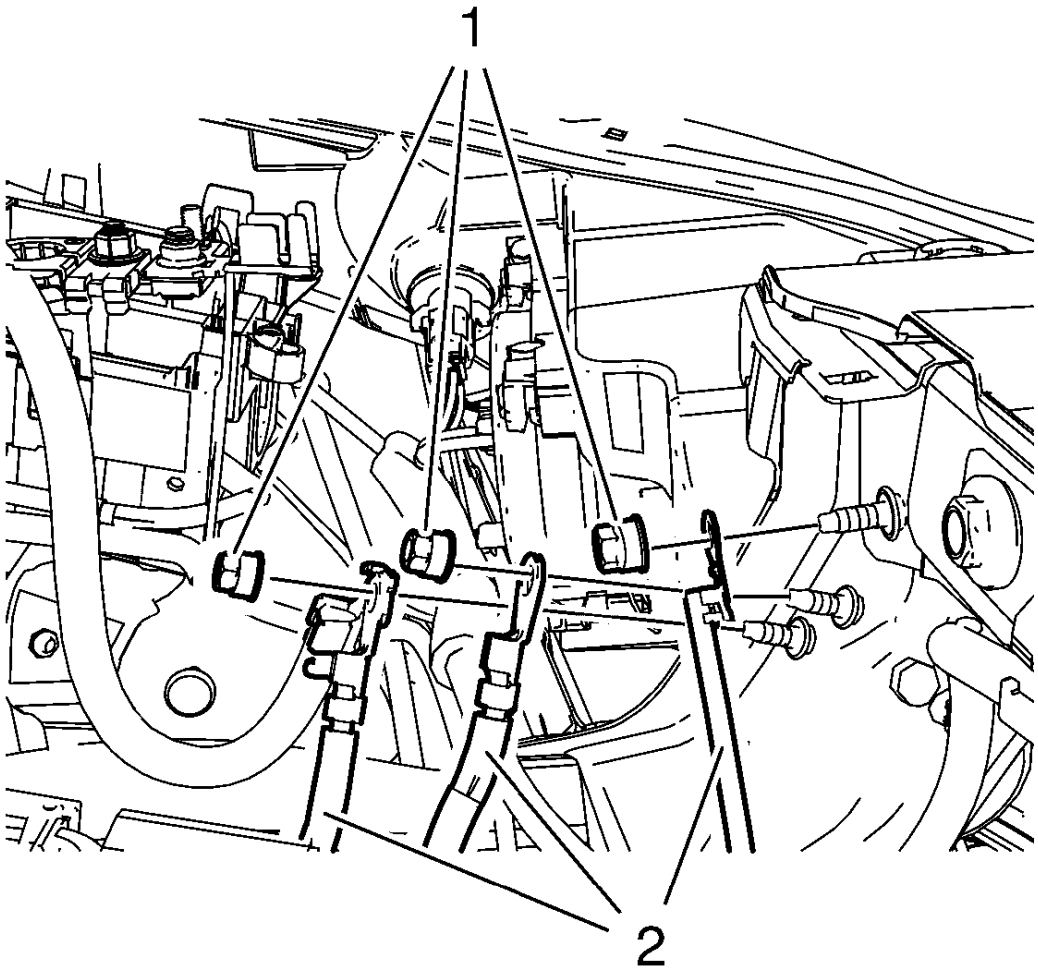

Fig. 223: Wiring Harnesses And Ground Nuts
Courtesy of GENERAL MOTORS COMPANY

21. Remove the ground nuts (1) and put the wiring harness (2) aside.
22. Disconnect the electrical connectors from the engine control module (ECM). Refer to **Engine Control Module Replacement** .
23. Disconnect the wiring harness from the accessory wiring junction block.

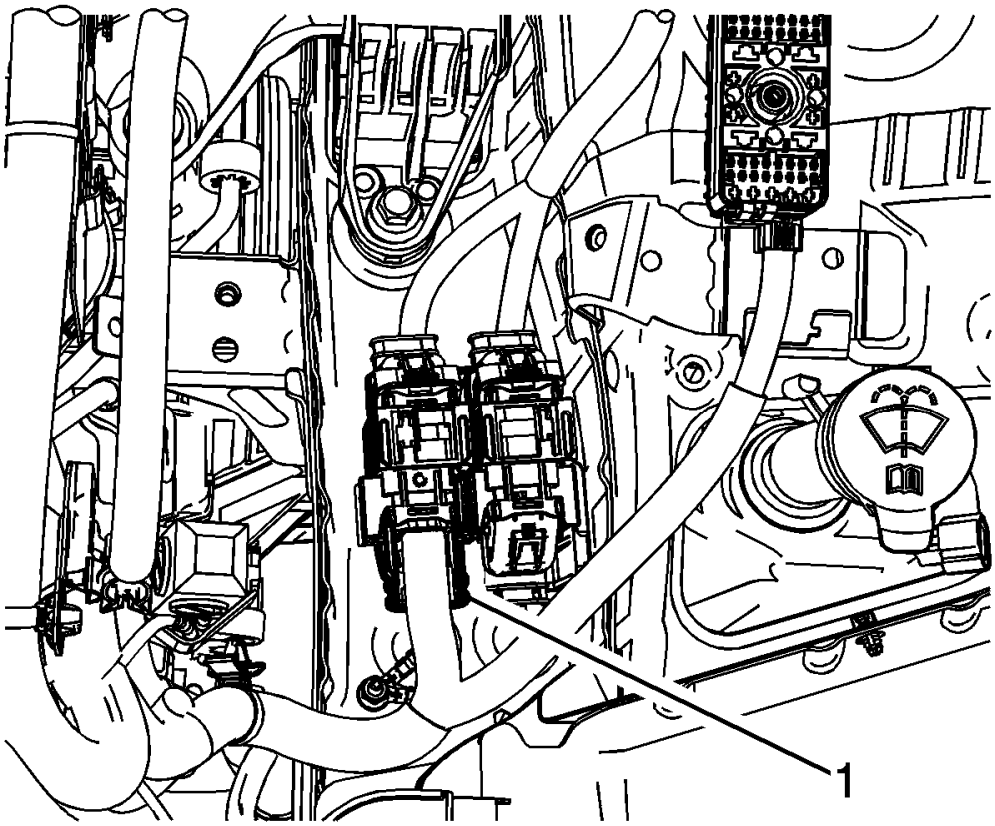

Fig. 224: Junction Connector
Courtesy of GENERAL MOTORS COMPANY

24. Disconnect the wiring harness from the junction connector (1).
25. Place the ECM, transmission and the accessory wiring junction block wiring harnesses on the top of engine assembly.
26. Install the engine support fixture.

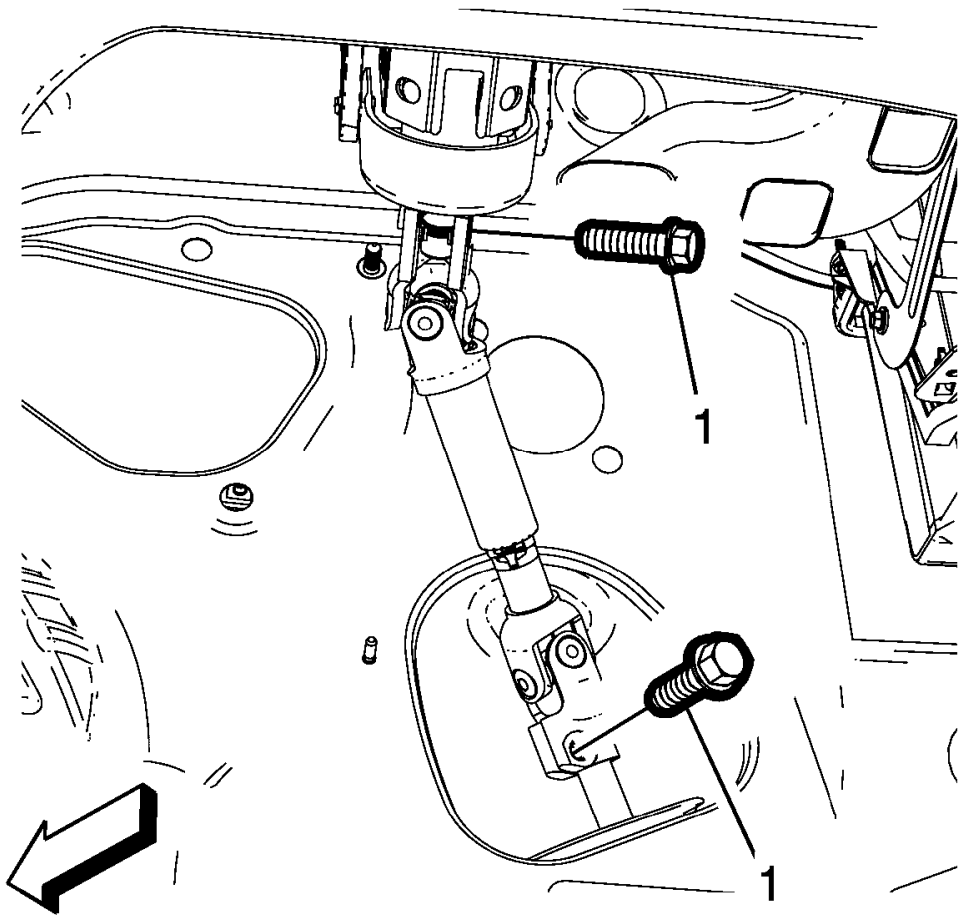

Fig. 225: Lower Steering Intermediate Shaft Bolt
Courtesy of GENERAL MOTORS COMPANY

27. Remove and DISCARD the lower steering intermediate shaft bolt (1).

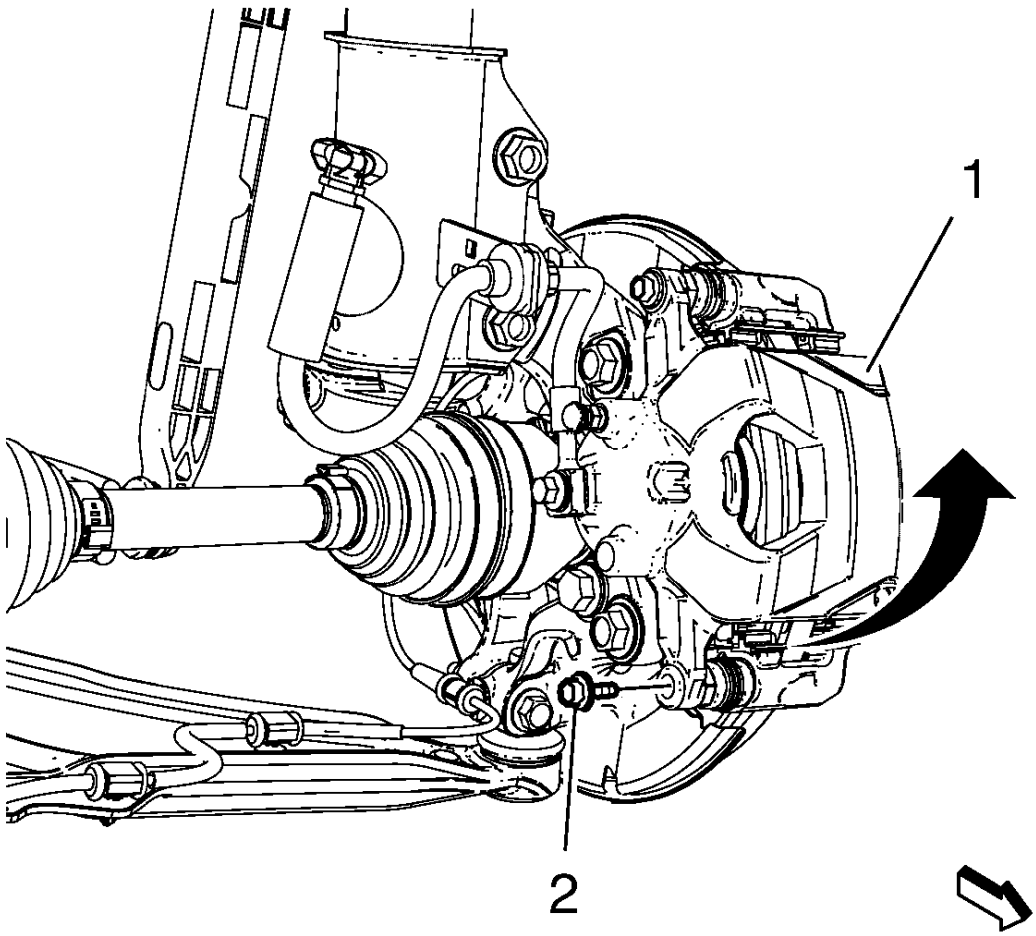

Fig. 226: View Of Brake Caliper And Brake Caliper Guide Pin Bolt
Courtesy of GENERAL MOTORS COMPANY

NOTE: Do Not disconnect the brake hoses from the calipers.

28. Remove the front brake calipers (1) and caliper bolts (2) from the caliper brackets, and then suspend the calipers with mechanics wire to the body.
29. Remove the exhaust system. Refer to **Exhaust System Replacement** .

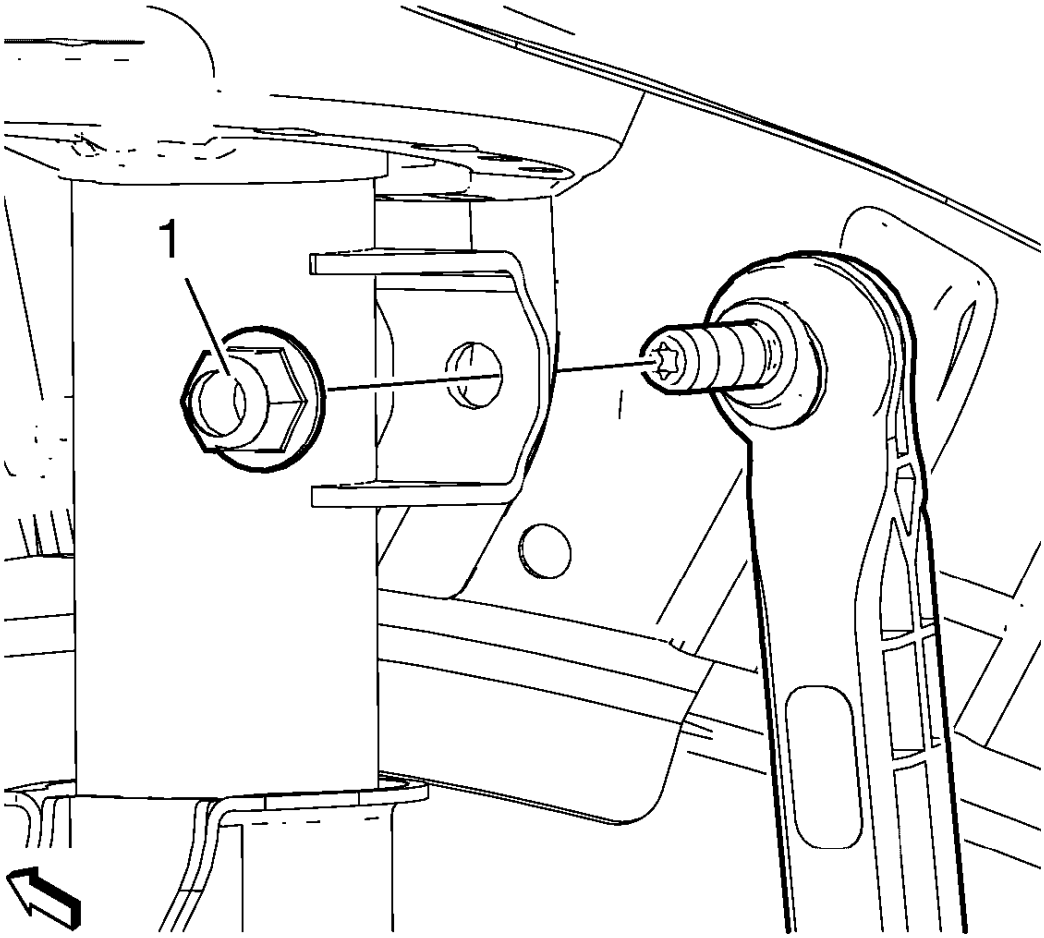

Fig. 227: Stabilizer Link Nut
Courtesy of GENERAL MOTORS COMPANY

30. Remove and DISCARD the stabilizer link nut (1) from the strut assemblies. Refer to **Stabilizer Shaft Link Replacement** .
31. Disconnect the right wheel drive shaft from the intermediate shaft.
32. Disconnect the front steering knuckles from the strut assemblies. Refer to **Steering Knuckle Replacement** .
33. Disconnect the electronic power steering connectors from the electronic power steering assembly. Refer to **FEP Connectors (Steering Gear)** .

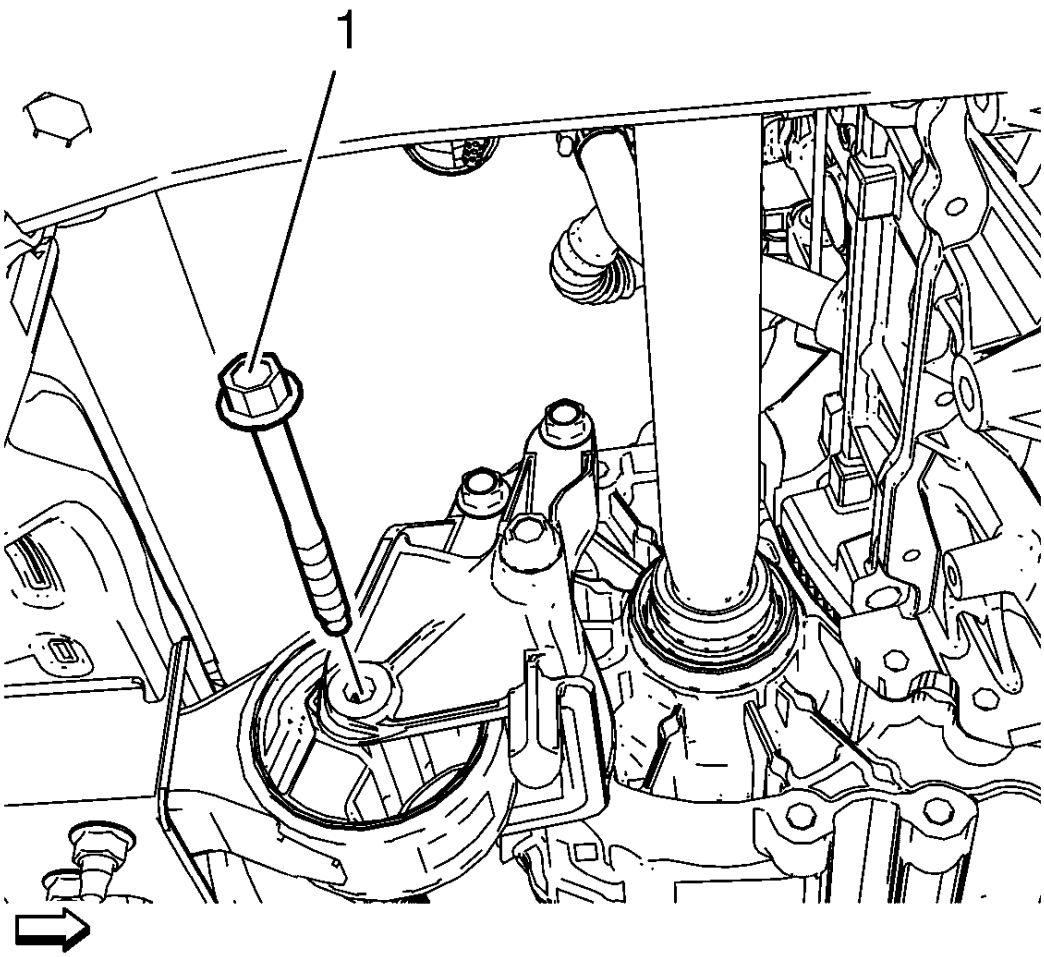

Fig. 228: Transmission Bracket Mount To Mount Through Bolt
Courtesy of GENERAL MOTORS COMPANY

34. Remove the rear transmission mount bracket to rear mount through bolt (1).

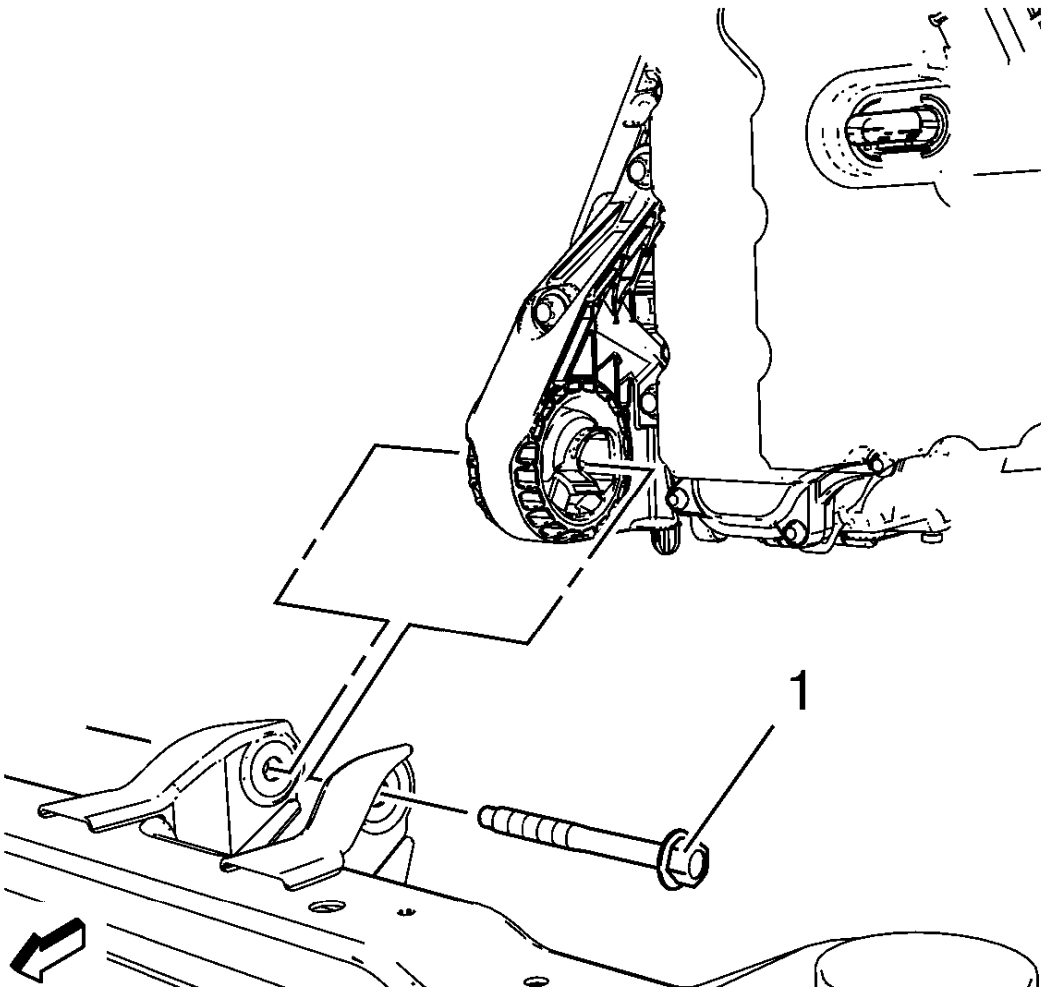

Fig. 229: Front Transmission Mount Through Bolt
Courtesy of GENERAL MOTORS COMPANY

35. Remove the transmission front mount through bolt (1).
36. Using suitable straps or chains, secure the front of vehicle to the hoist arms.

NOTE: Use the engine support fixture to slightly raise the powertrain assembly to aid in the removal of the engine and transmission mount bolts.

37. Use the engine support fixture to slightly raise the powertrain assembly to aid in the removal of the engine and transmission mount bolts.

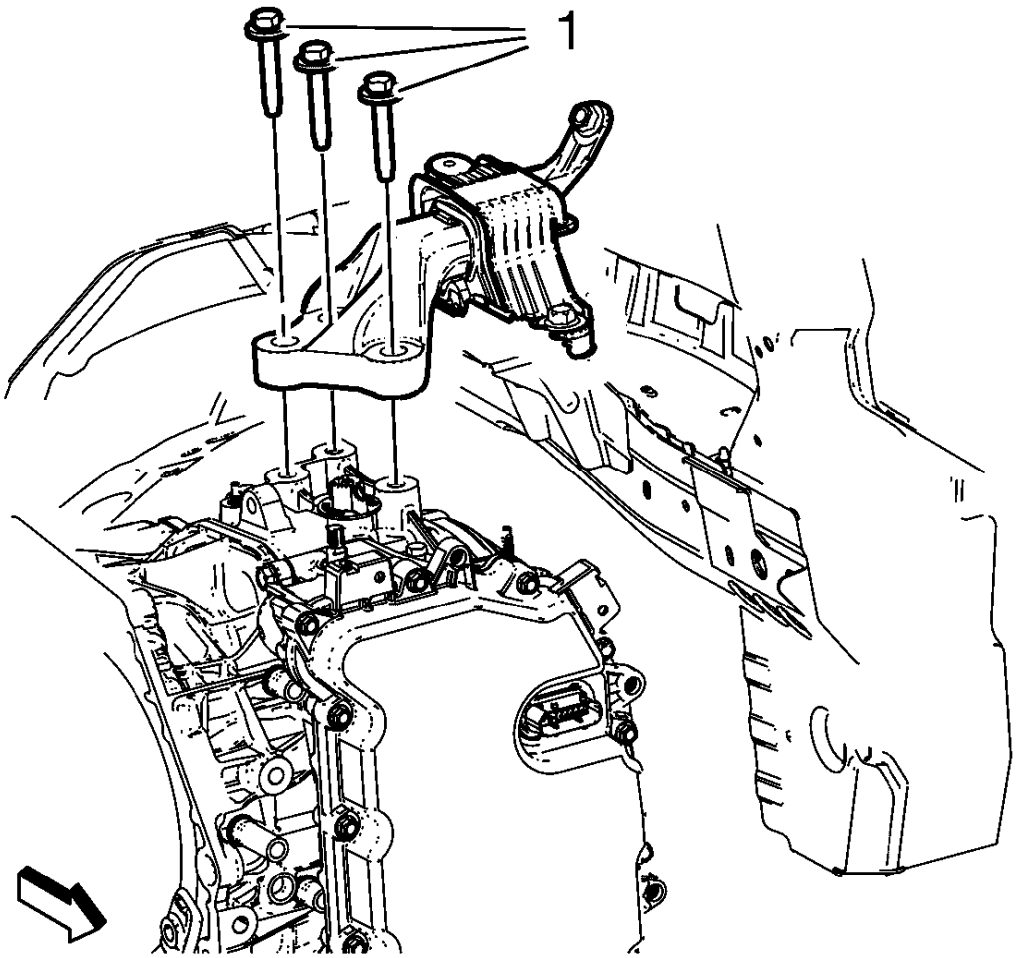

Fig. 230: Left Transmission Mount Bolts
Courtesy of GENERAL MOTORS COMPANY

38. Remove and DISCARD the left transmission mount to bracket bolts (1).

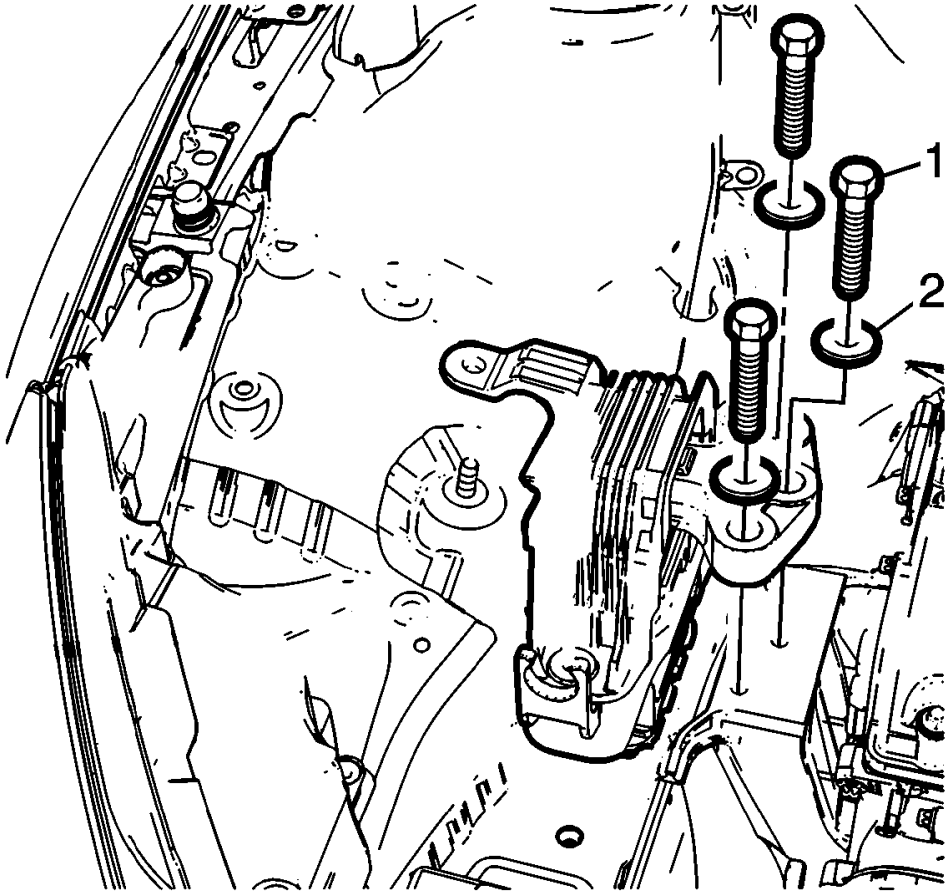

Fig. 231: Engine Mount Bracket Bolts And Washers
Courtesy of GENERAL MOTORS COMPANY

39. Remove the engine mount to engine mount bracket bolts (1) and the washers (2).
40. Using a suitable engine support table, lower the vehicle until the drivetrain and front suspension frame contacts the engine support table.
41. Position blocks of wood below the oil pan and transmission to stabilize the powertrain on the support table.
42. Using the engine support fixture, lower the powertrain down until it is resting on the engine support table.

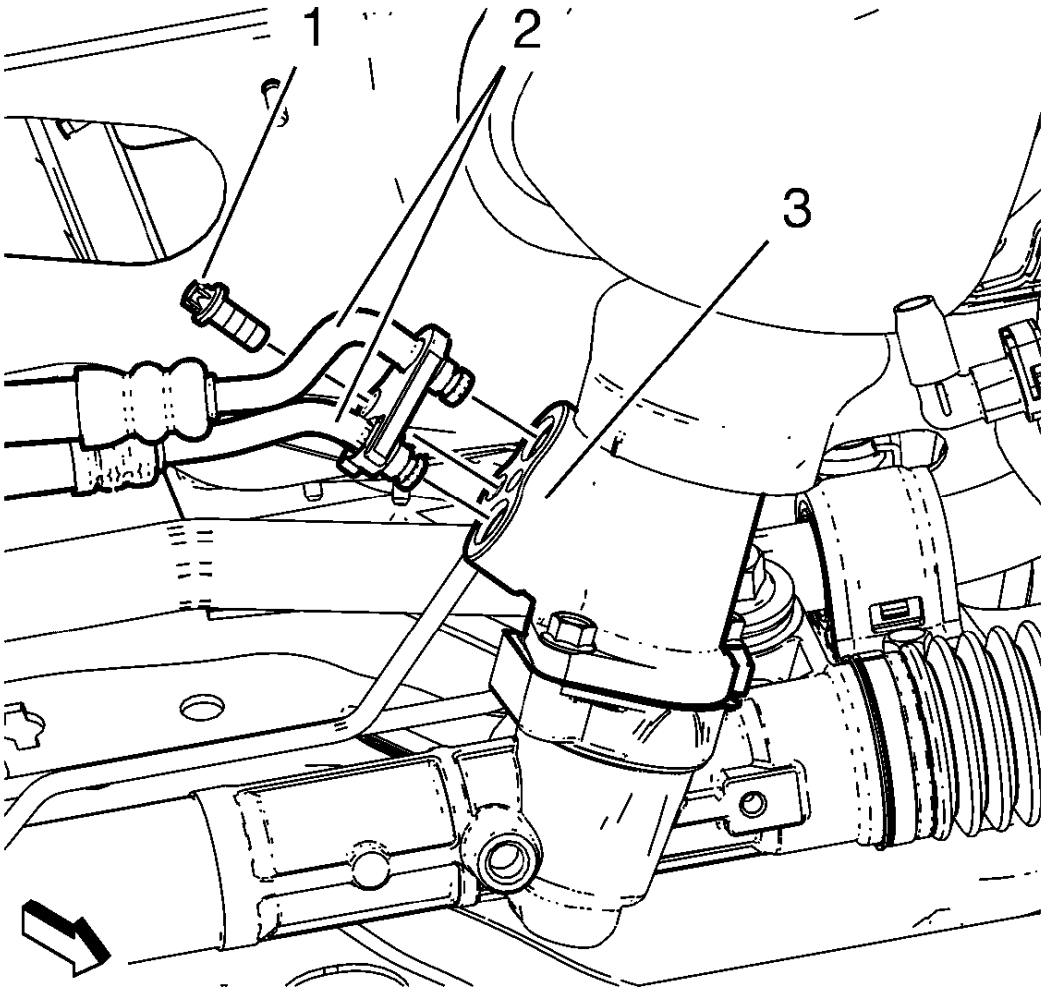

Fig. 232: Power Steering Gear, Inlet And Outlet Hose And Bolts
Courtesy of GENERAL MOTORS COMPANY

43. Remove the power steering gear inlet and outlet hose bolts (1). Remove the inlet and outlet hose (2) from the steering gear (3).
44. Remove the engine support fixture.
45. Remove the drivetrain and front suspension frame reinforcements from the rear of the frame.
46. Remove the front drivetrain and front suspension frame retaining bolts.
47. Slowly and carefully raise the vehicle, ensure the engine, transmission, radiator assembly and drivetrain suspension frame are free from wiring, hoses and other engine compartment components.
48. Separate the transmission from the engine assembly.
49. Disconnect engine coolant hoses as necessary.
50. Disconnect electrical connectors as necessary.
51. Transfer components as necessary.

Installation Procedure

1. Position the engine to the transmission assembly.
2. Position the engine, transmission, radiator assembly and drivetrain suspension frame under the vehicle.
3. Slowly and carefully lower the vehicle, ensure the engine, transmission, radiator assembly and drivetrain suspension frame are free from wiring, hoses and other engine compartment components.

CAUTION: Refer to Fastener Caution .

4. Install the four front drivetrain and front suspension frame retaining bolts, then tighten to the fasteners to 160 N.m (118 lb ft).
5. Install the drivetrain and front suspension frame reinforcements to the rear of the frame, then tighten the reinforcement fasteners to 22 N.m (16 lb ft).

NOTE: Use the engine support fixture to slightly raise the powertrain assembly to aid in the installation of the engine and transmission mount bolts.

6. Install the engine support fixture. Refer to **Engine Support Fixture** .

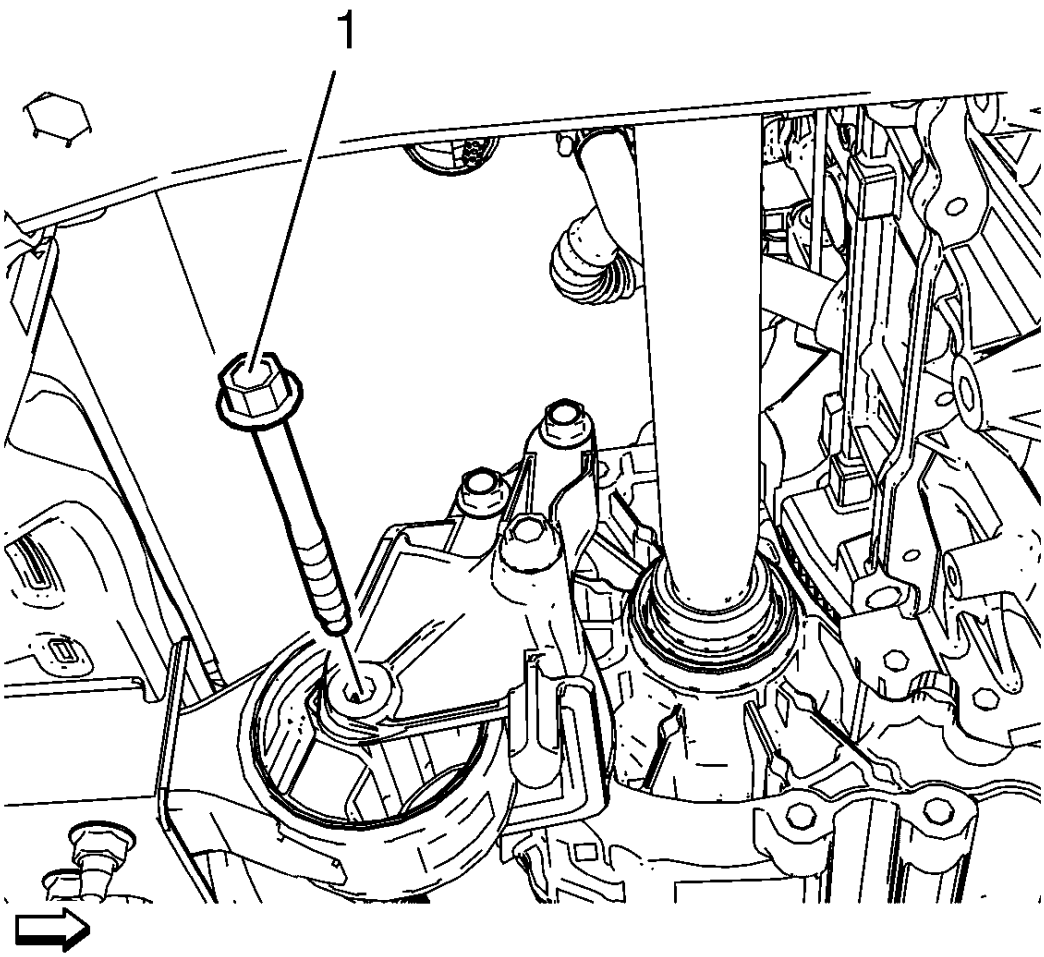

Fig. 233: Transmission Bracket Mount To Mount Through Bolt
Courtesy of GENERAL MOTORS COMPANY

7. Install the transmission bracket mount to mount through bolt (1) and tighten to 100 N.m (74 lb ft).

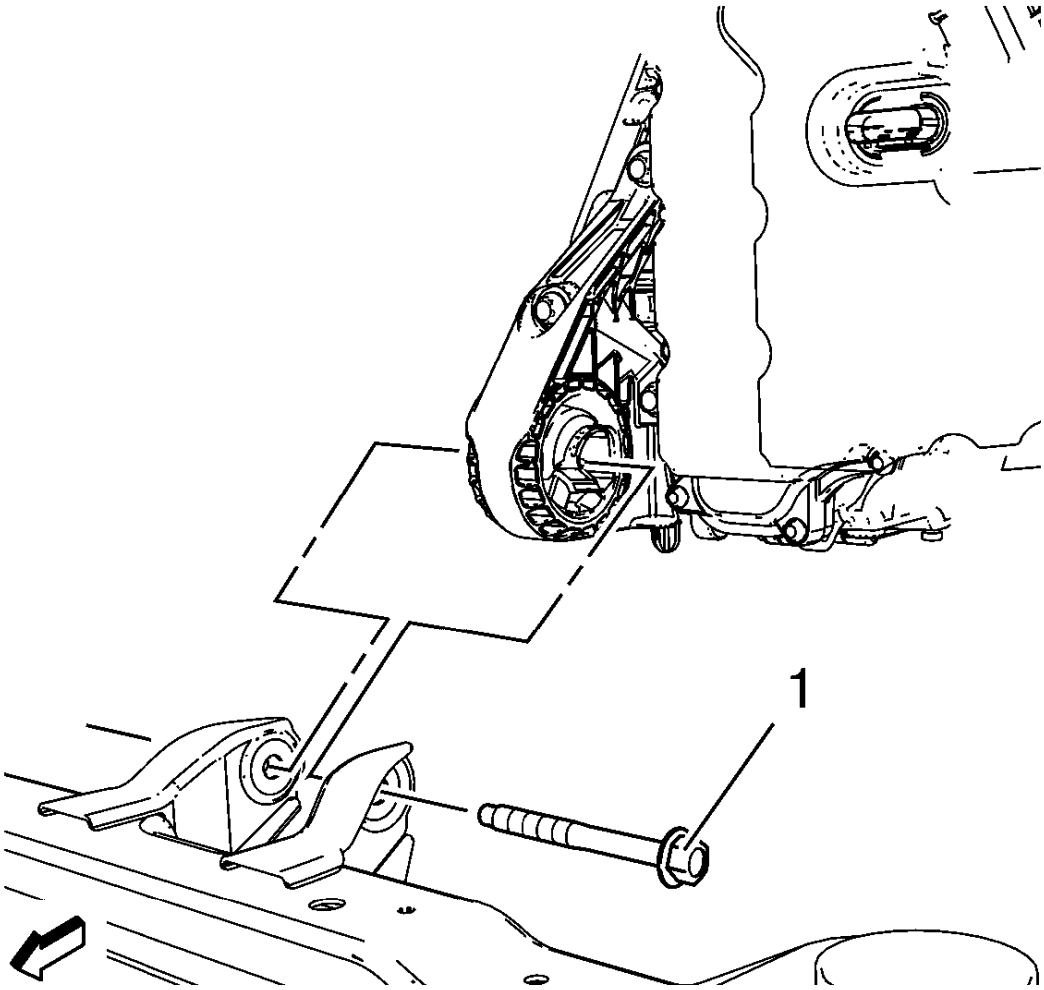

Fig. 234: Front Transmission Mount Through Bolt
Courtesy of GENERAL MOTORS COMPANY

8. Install the transmission mount through bolt (1) and tighten to 58 N.m (43 lb ft).
9. Install the engine mount. Refer to **Engine Mount Replacement - Right Side** .

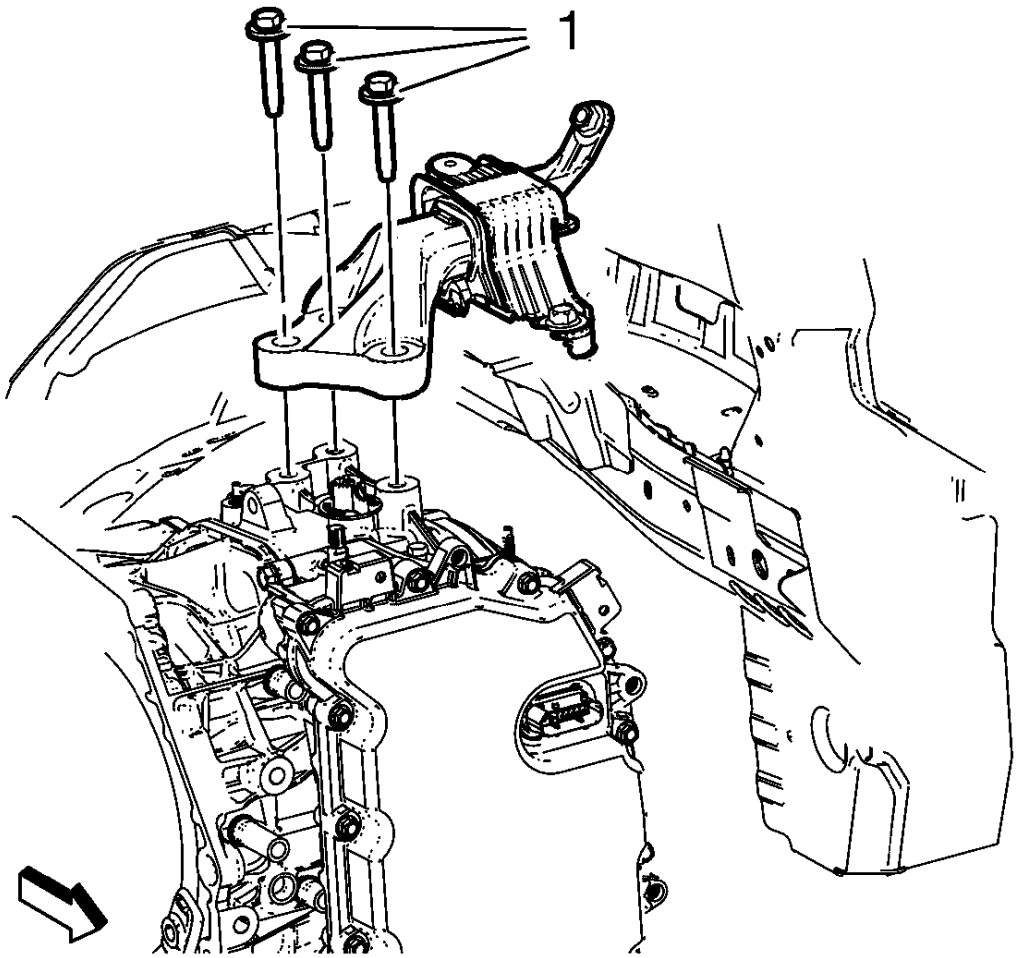

Fig. 235: Left Transmission Mount Bolts
Courtesy of GENERAL MOTORS COMPANY

WARNING: Refer to Torque-to-Yield Fastener Warning .

10. Install the NEW left transmission mount to transmission bolts (1) and tighten to 50 N.m (37 lb ft) plus 60-75 degrees.

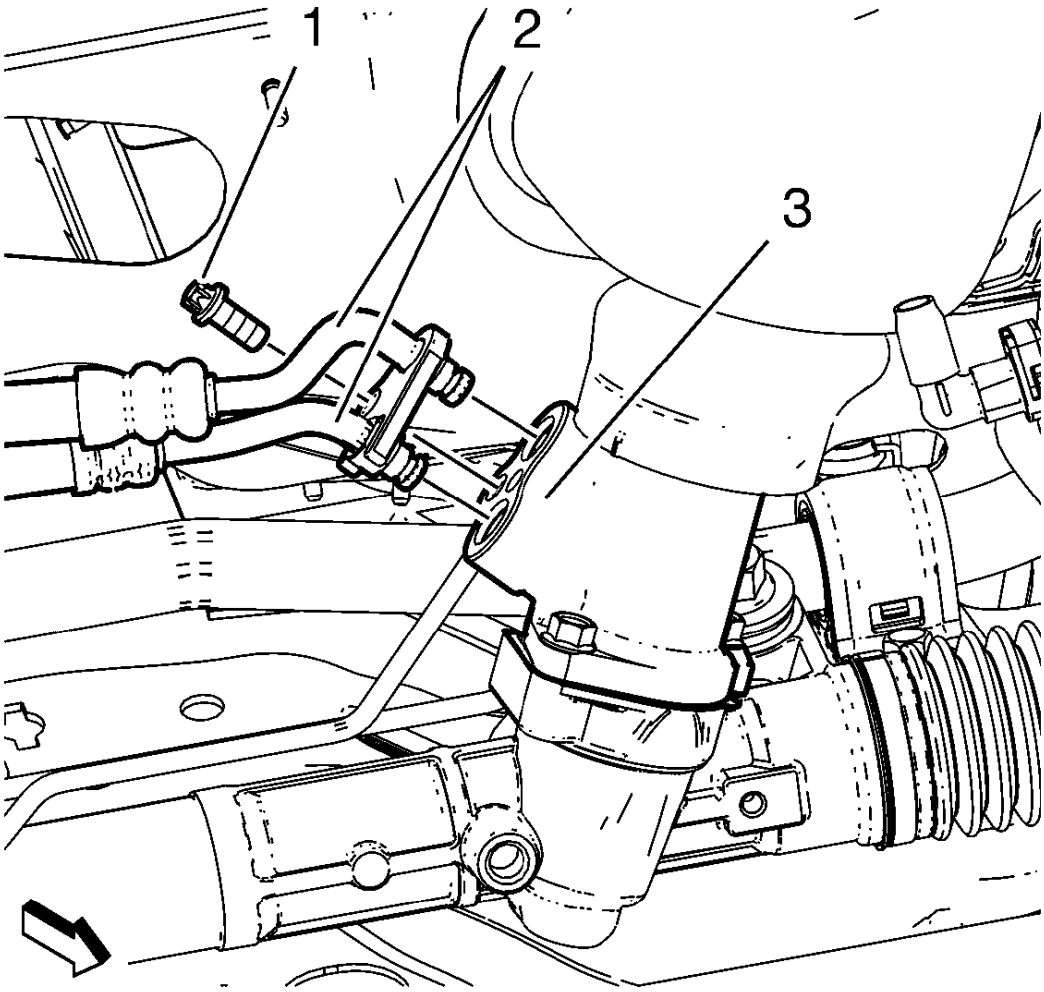

Fig. 236: Power Steering Gear, Inlet And Outlet Hose And Bolts
Courtesy of GENERAL MOTORS COMPANY

11. Install the inlet and outlet hose (2) to the steering gear (3).
12. Install power steering gear inlet and outlet hose bolts (1) and tighten to 11 N.m (97 lb in).

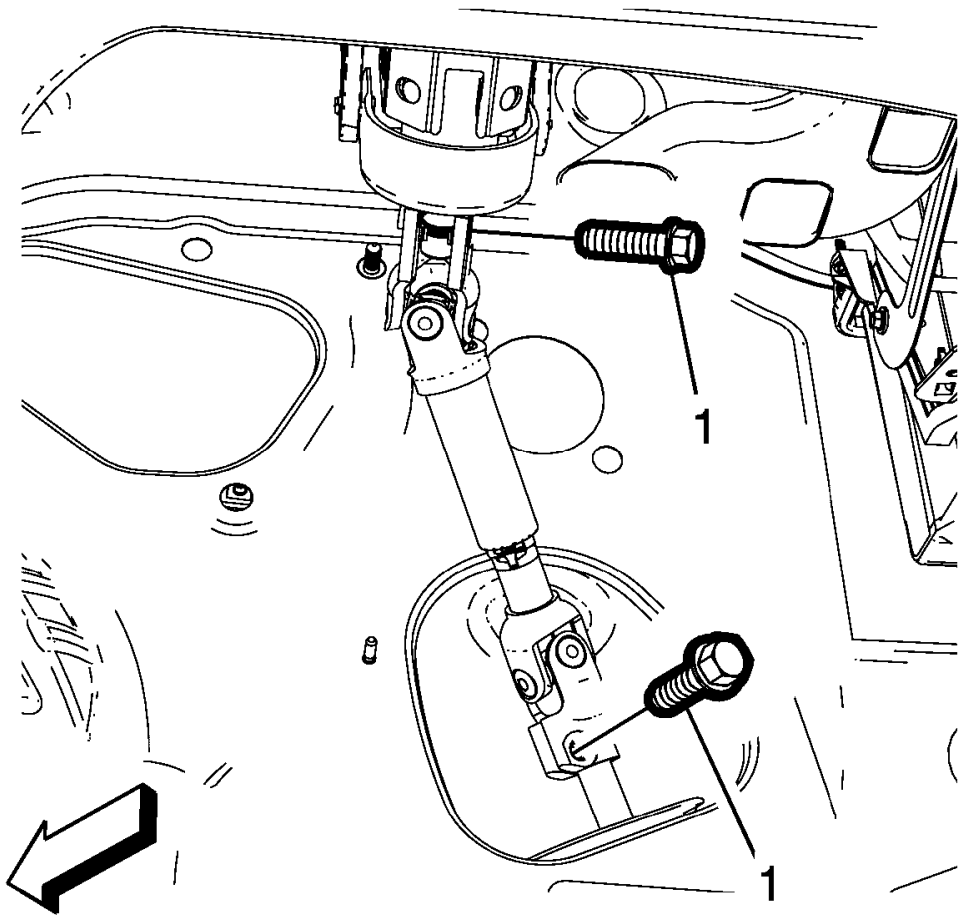

Fig. 237: Lower Steering Intermediate Shaft Bolt
Courtesy of GENERAL MOTORS COMPANY

13. Instal NEW the lower steering intermediate shaft (1) bolt and tighten to 34 N.m (25 lb ft).
14. Connect the front steering knuckles to the strut assemblies. Refer to **Steering Knuckle Replacement** .

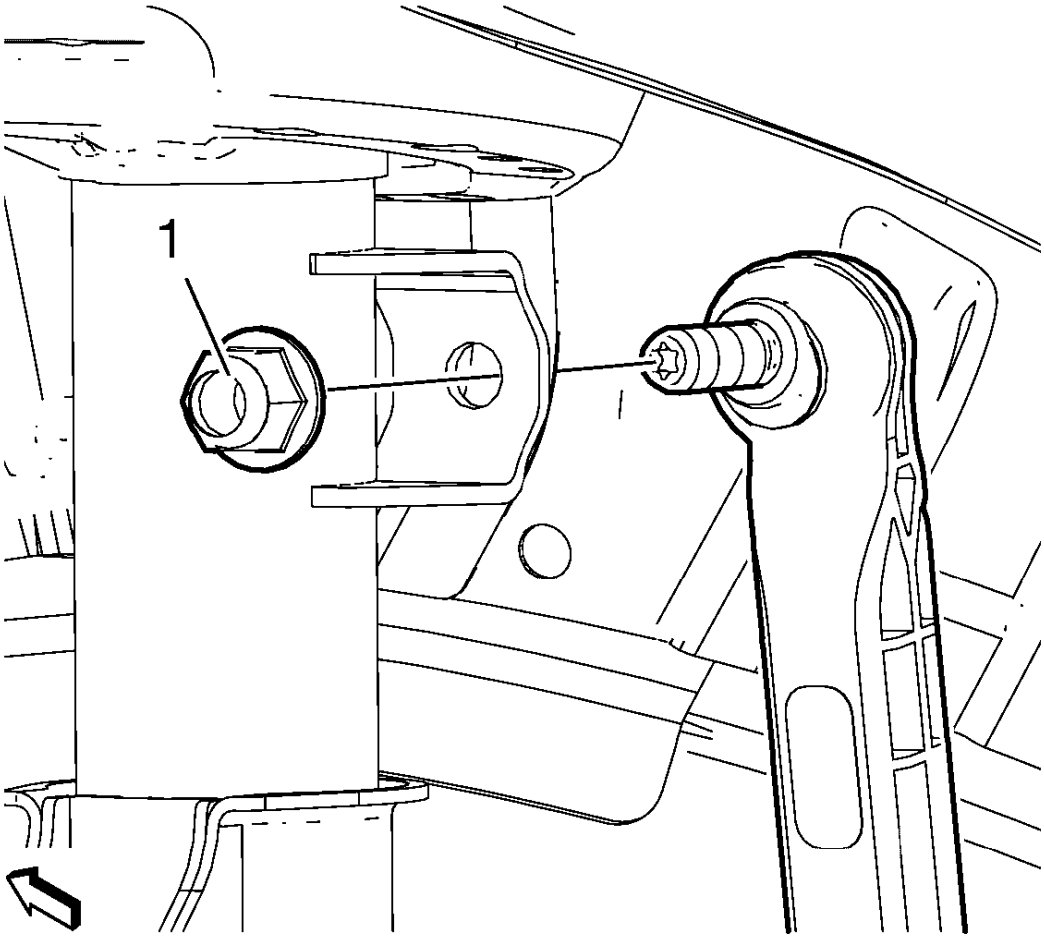

Fig. 238: Stabilizer Link Nut
Courtesy of GENERAL MOTORS COMPANY

15. Install NEW the stabilizer link nut (1) to the strut assemblies. Refer to **Stabilizer Shaft Link Replacement** .
16. Connect the right wheel drive shaft from the intermediate shaft.

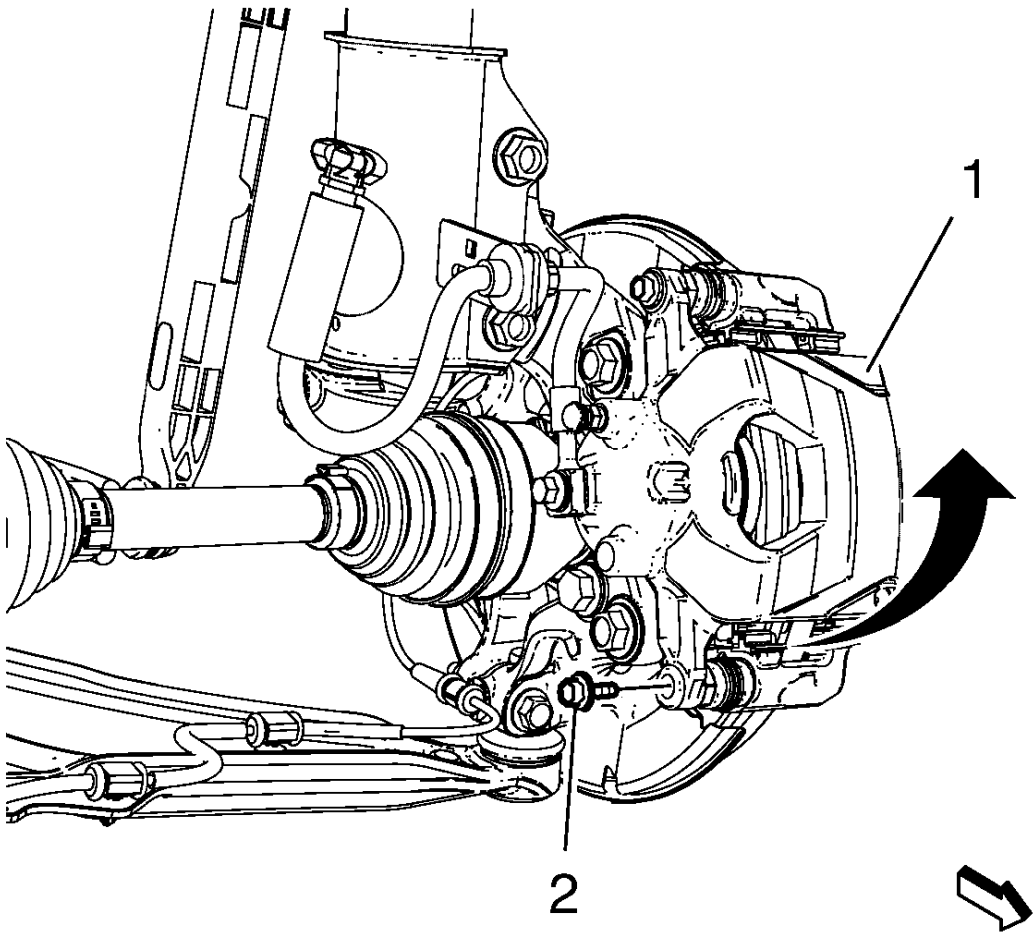

Fig. 239: View Of Brake Caliper And Brake Caliper Guide Pin Bolt
Courtesy of GENERAL MOTORS COMPANY

17. Install the front brake caliper (1) and tighten the brake caliper guide pin bolt (2) to 28 N.m (21 lb ft).
18. Install the exhaust system. Refer to **Exhaust System Replacement** .
19. Connect the wheel speed connectors to the steering knuckles.
20. Remove the engine support fixture.
21. Connect the wiring connectors and ground strap to the transmission.
22. Connect the wiring harness to the accessory wiring junction block.
23. Connect the electrical connectors to the ECM. Refer to **Engine Control Module Replacement** .

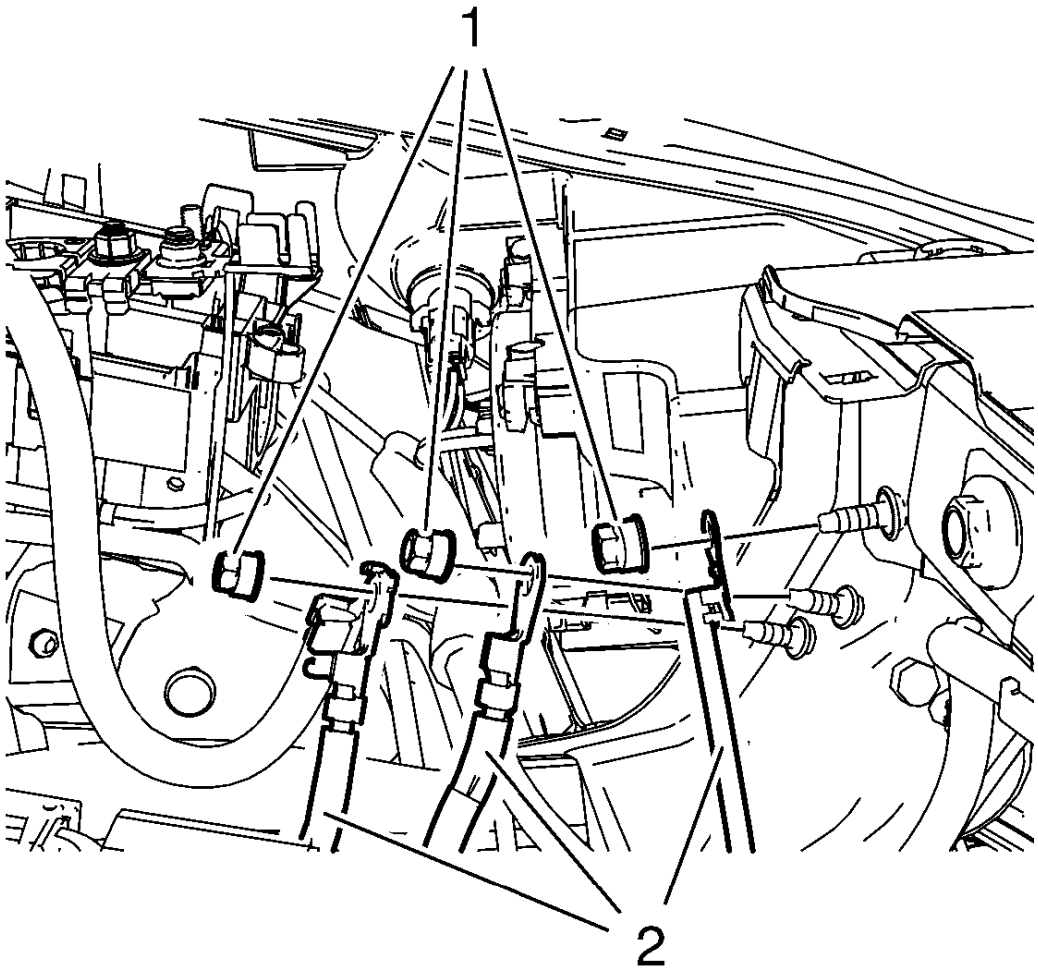

Fig. 240: Wiring Harnesses And Ground Nuts
Courtesy of GENERAL MOTORS COMPANY

24. Install the wiring harnesses (2).
25. Install the ground nuts (1) and tighten to 9 N.m (80 lb in).

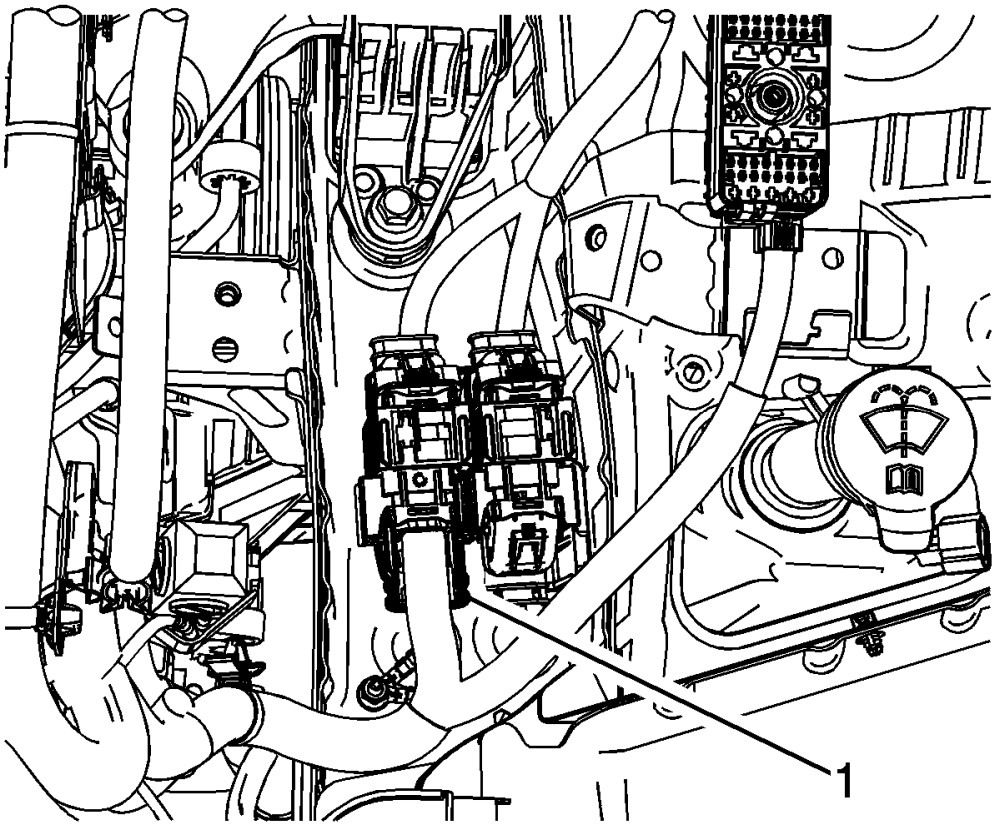

Fig. 241: Junction Connector
Courtesy of GENERAL MOTORS COMPANY

26. Connect the wiring harness plugs (1).

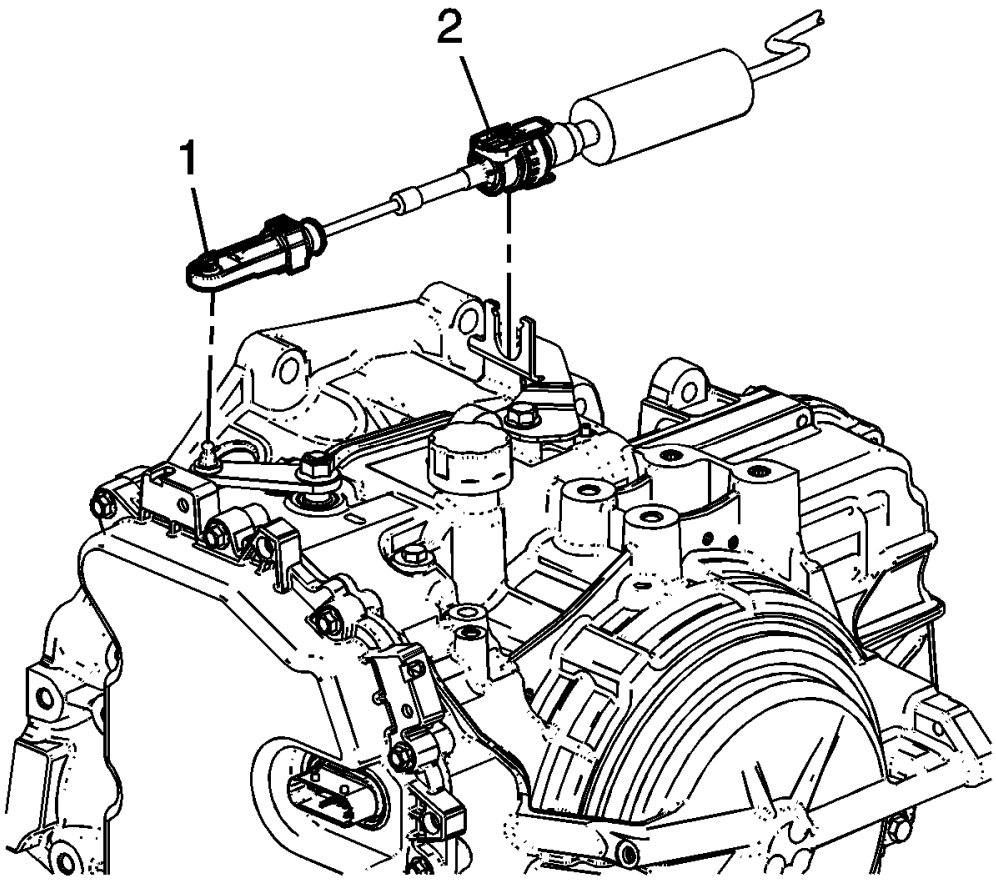

Fig. 242: View Of Transmission Range Selector Lever & Cable Connection
Courtesy of GENERAL MOTORS COMPANY

27. On vehicles equipped with a automatic transmission, connect the transmission range selector lever cable terminal (1) to the transmission manual shift lever pin.
28. On vehicles equipped with a automatic transmission, press the locking tabs outward in order to lock the transmission range selector lever cable (2) to the cable bracket.

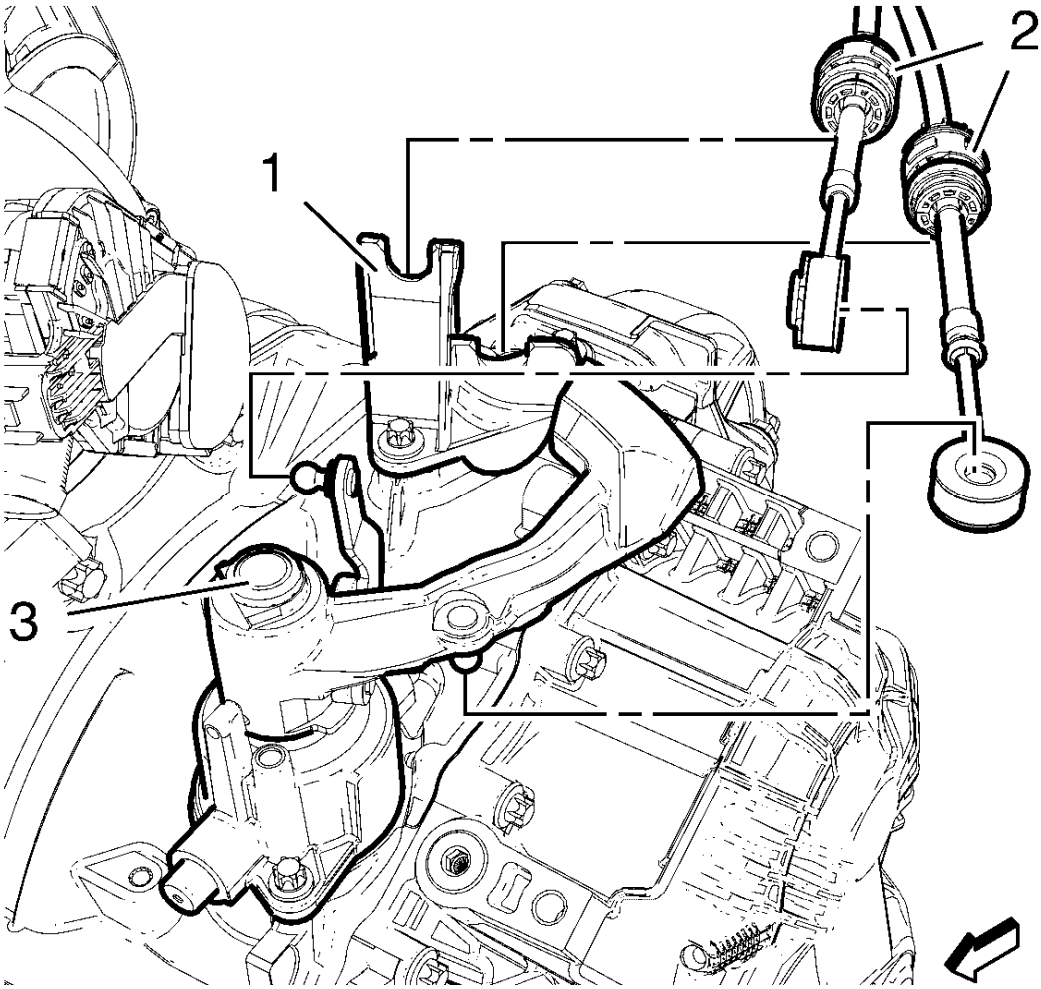

Fig. 243: Selector Lever Cable, Bracket And Transmission Control Housing
Courtesy of GENERAL MOTORS COMPANY

29. On vehicles equipped with a manual transmission, connect the shift lever cables (2) to the shift levers (3)
30. On vehicles equipped with a manual transmission, install the shift lever cables (2) to the cable bracket (1).
31. Install the battery tray. Refer to **Battery Tray Replacement** .

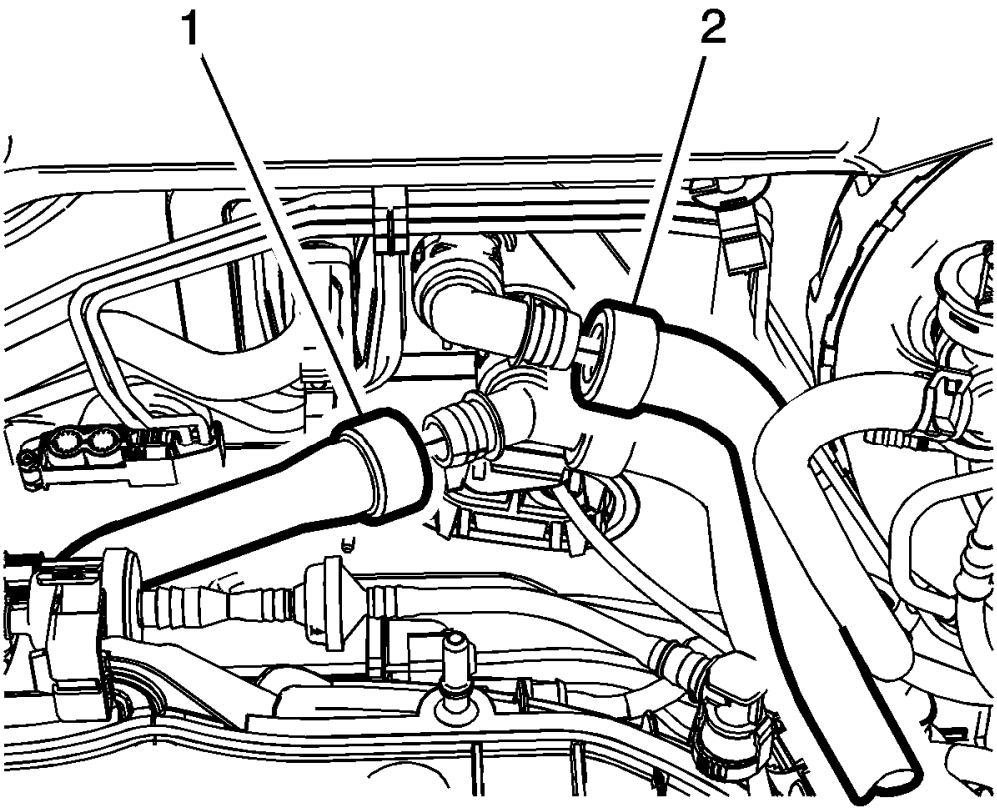

Fig. 244: Heater Core Inlet And Outlet Hoses
Courtesy of GENERAL MOTORS COMPANY

32. Connect inlet (2) and outlet (1) heater core hoses.

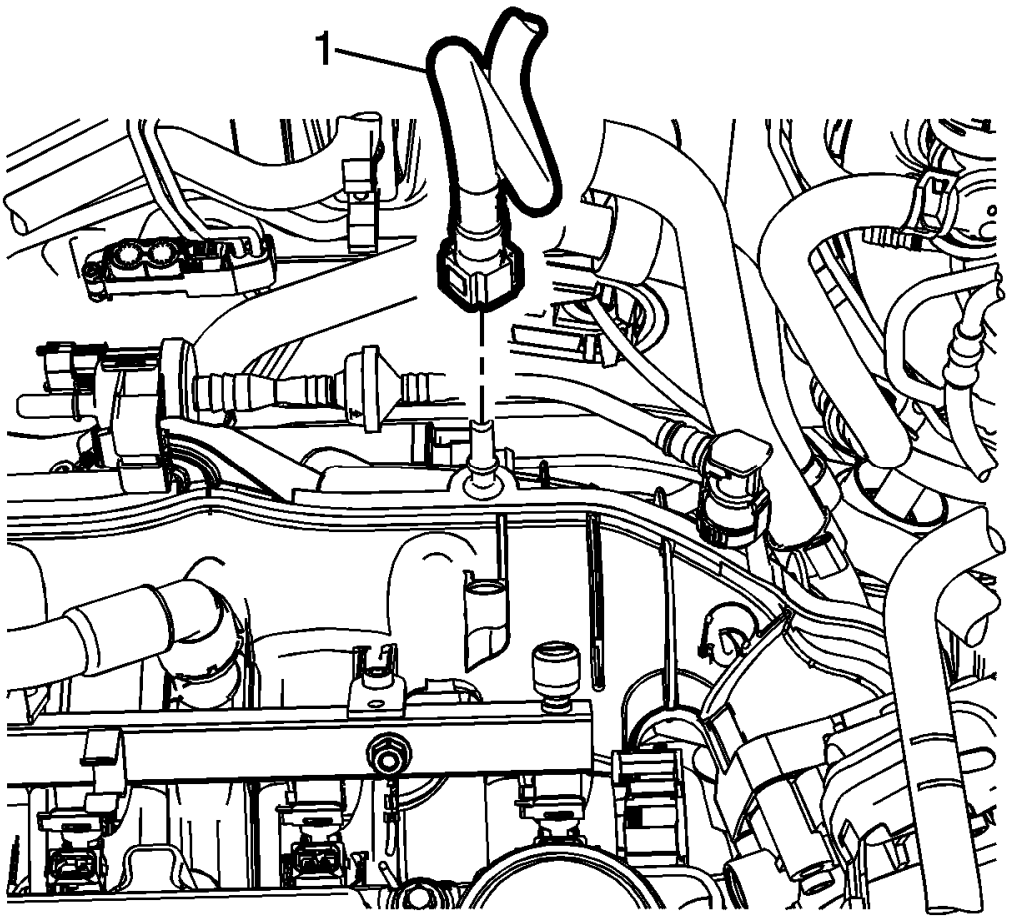

Fig. 245: Brake Booster Vacuum Pipe
Courtesy of GENERAL MOTORS COMPANY

33. Connect the power brake booster vacuum pipe (1).

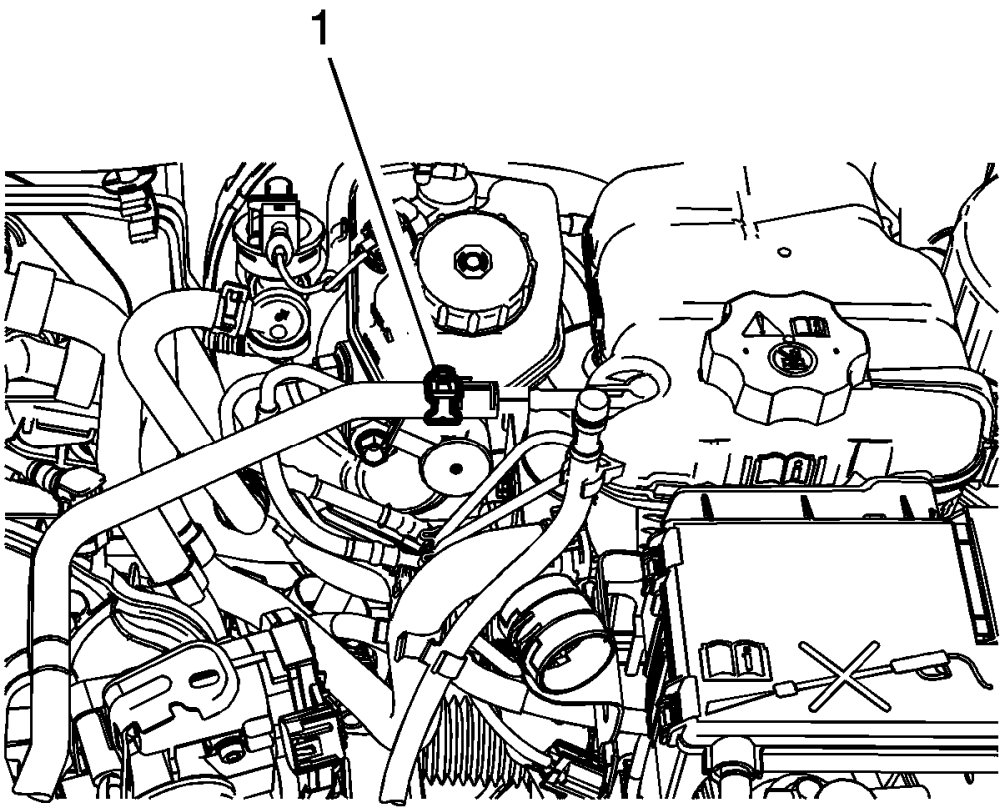

Fig. 246: Radiator Surge Tank Outlet Hose Clamp
Courtesy of GENERAL MOTORS COMPANY

34. Connect the coolant hose and reposition the clamp (1).

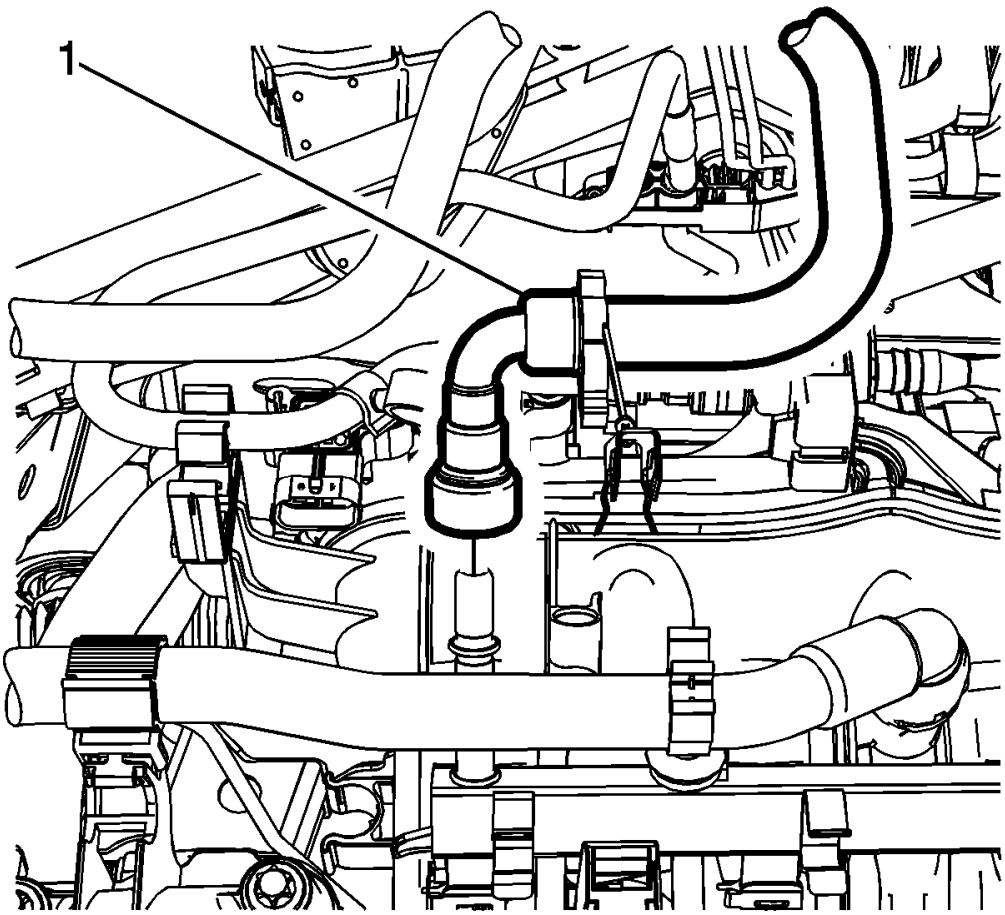

Fig. 247: Fuel Feed Pipe
Courtesy of GENERAL MOTORS COMPANY

35. Connect the fuel feed line (1) and reposition away from the engine. Refer to **Fuel Pressure Relief** .

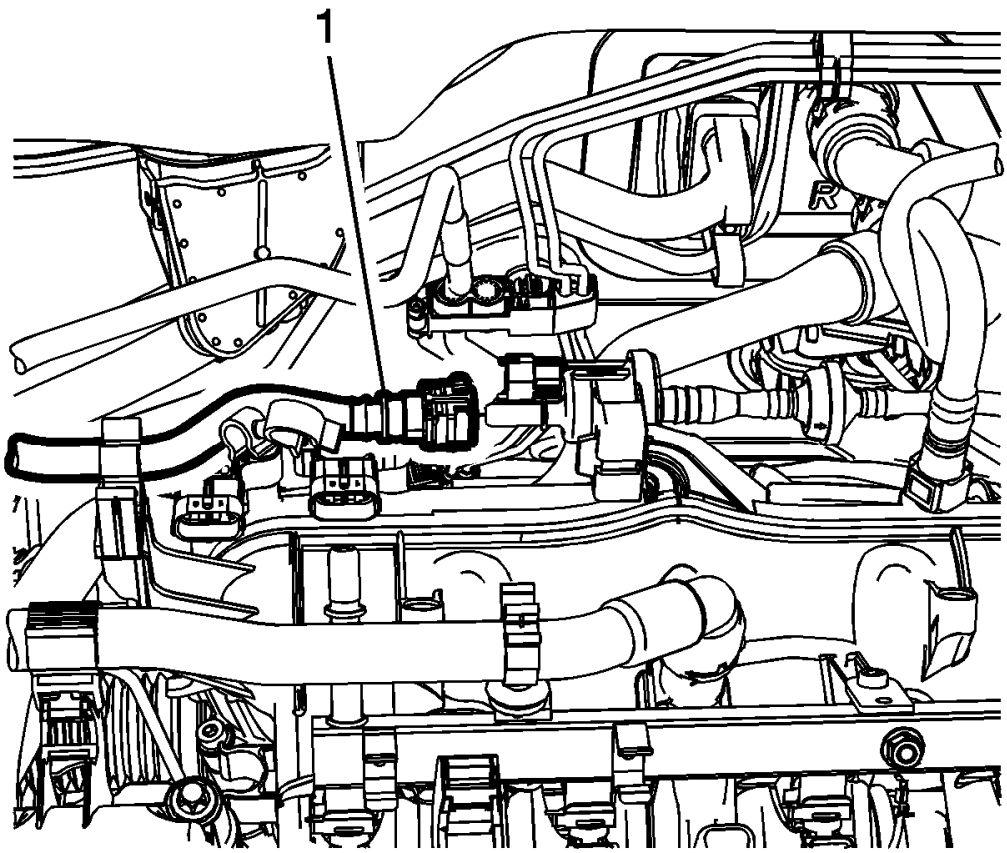

Fig. 248: Fuel Ventilation Pipe
Courtesy of GENERAL MOTORS COMPANY

36. Connect the EVAP hose (1). Refer to **Plastic Collar Quick Connect Fitting Service** .

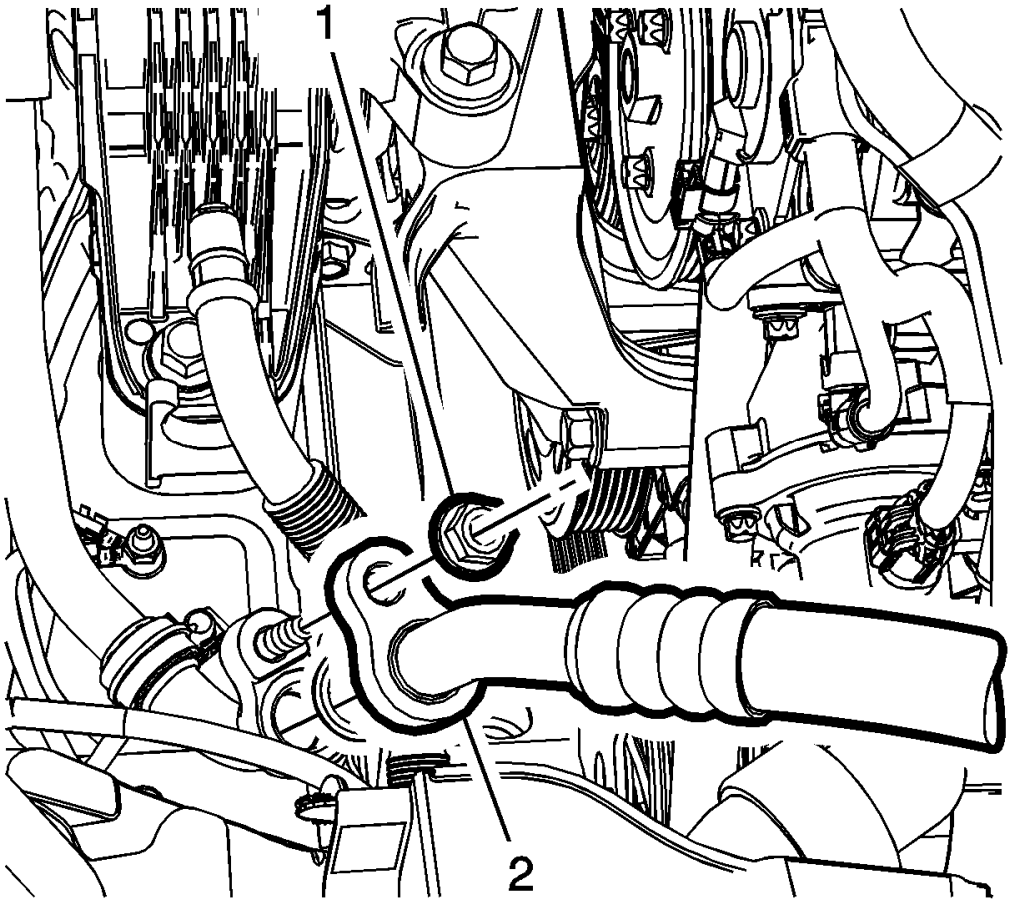

Fig. 249: Refrigerant Hose And Nut
Courtesy of GENERAL MOTORS COMPANY

NOTE: **Use NEW O-ring seals. Refer to Air Conditioning O-Ring Seal Replacement .**

37. Install refrigerant hose (2) and tighten the nut (1) to 19 N.m (14 lb ft).
38. Install the charge air cooler inlet air hose. Refer to **Charge Air Cooler Inlet Air Hose Replacement** .
39. Install the charge air cooler outlet air hose. Refer to **Charge Air Cooler Outlet Air Hose Replacement (Automatic Transmission)** , **Charge Air Cooler Outlet Air Hose Replacement (Manual Transmission)** .
40. Connect engine coolant hoses as necessary.
41. Connect electrical connectors as necessary.
42. Install the front fascia.
43. Install the front wheelhouse front liners.
44. Install the air cleaner assembly. Refer to **Air Cleaner Assembly Replacement** .
45. Fill the engine cooling system. Refer to **Cooling System Draining and Filling (Static Fill)** , **Cooling**

System Draining and Filling (GE-47716 Fill) .

46. Charge the air conditioning system. Refer to **Refrigerant Recovery and Recharging** .
47. Check engine oil level. Refer to **Engine Oil and Oil Filter Replacement** .
48. Connect the negative battery cable to the battery. Refer to **Battery Negative Cable Disconnection and Connection** .

ENGINE OIL AND OIL FILTER REPLACEMENT

Removal Procedure

1. Open hood.
2. Place a drain pan below the vehicle.

CAUTION: To prevent damage to oil filter cap ensure proper tool is used. Do not use an open end wrench which may cause damage to filter cap.

3. Using a 24mm socket or closed end wrench loosen oil filter cap. Unscrew filter cap 3 turns and let oil filter and cap assembly drain in housing for 30 seconds.

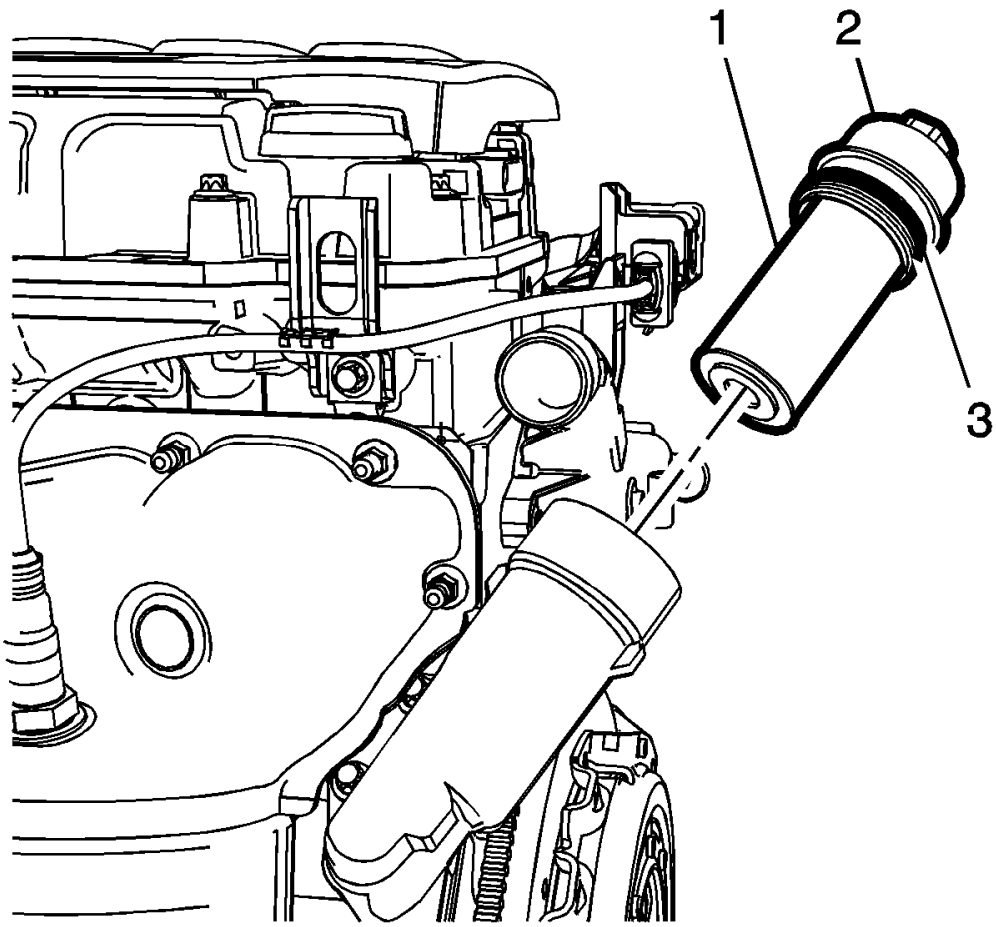

Fig. 250: Engine Oil Filter Cap, Cap Seal Ring And Oil Filter Element
Courtesy of GENERAL MOTORS COMPANY

NOTE: Use care when removing engine oil filter cap and filter to minimize fluid spillage. If fluid spillage occurs it must be cleaned with appropriate cleaner.

NOTE: Inspect oil filter cap for any cracks or damage. If oil filter cap is damaged it must be replaced.

4. Remove the engine oil filter cap (2) with the engine oil filter cap seal ring (3) and the oil filter element (1).
5. Raise and support the vehicle. Refer to **Lifting and Jacking the Vehicle** .
6. Remove the oil pan drain plug and allow the oil to drain into the drain pan.

Installation Procedure

1. Clean the oil pan drain plug thread in the oil pan.

2. Install a NEW seal ring to the oil pan drain plug.

CAUTION: Refer to Component Fastener Tightening Caution .

3. Install the oil pan drain plug and tighten to 14 N.m (10 lb ft).
4. Lower the vehicle.

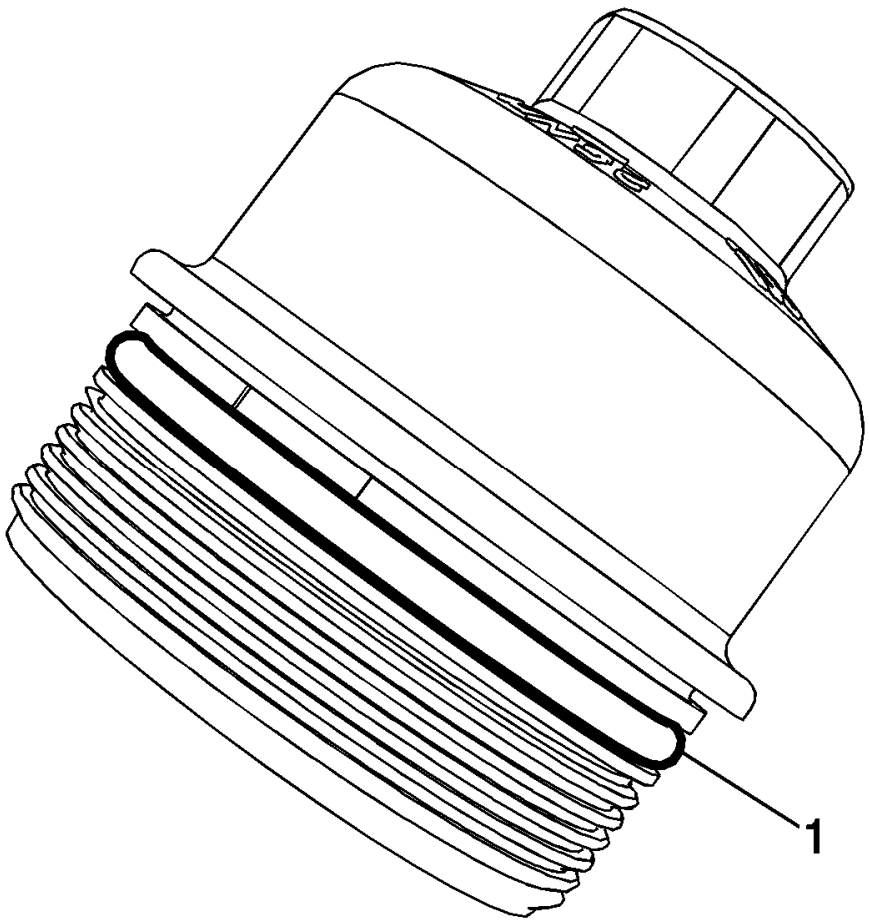

Fig. 251: Oil Filter Cap Seal Ring
Courtesy of GENERAL MOTORS COMPANY

NOTE: Clean oil filter cap and lubricate the NEW oil filter cap seal ring with clean engine oil. Ensure oil filter cap seal ring is in proper position as shown.

5. Install a NEW oil filter cap seal ring (1).

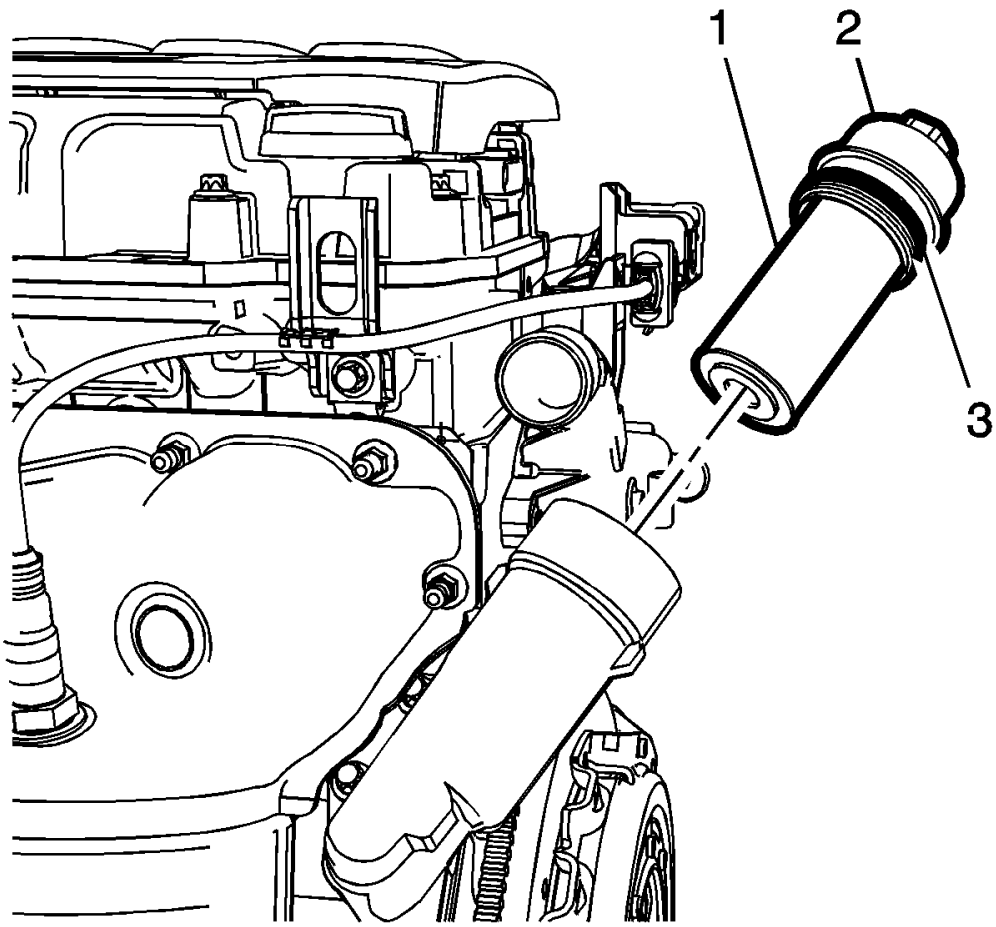

Fig. 252: Engine Oil Filter Cap, Cap Seal Ring And Oil Filter Element
Courtesy of GENERAL MOTORS COMPANY

6. Install the engine oil filter cap (2) with NEW engine oil filter cap seal ring (3) and NEW oil filter element (1) hand tight.

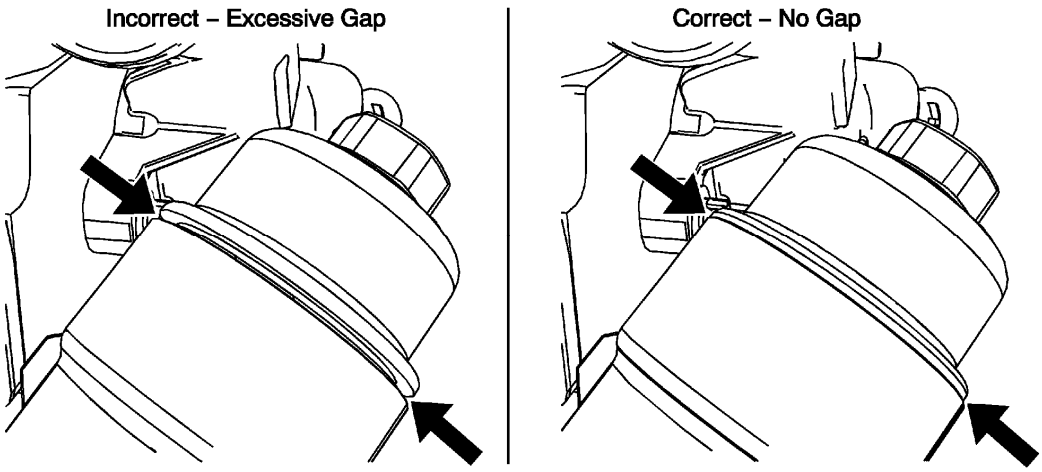

Fig. 253: Oil Filter Cap Seal Ring
Courtesy of GENERAL MOTORS COMPANY

CAUTION: Ensure oil filter cap is completely seated on oil filter housing. If not completely seated an oil leak may occur.

CAUTION: Over torquing the oil filter cap may cause damage to the oil filter cap resulting in an oil leak.

7. Using a 24mm socket or closed end wrench tighten the engine oil filter cap to 25 N.m (18 lb ft).

CAUTION: Using engine oils of any viscosity other than those viscosities recommended could result in engine damage.

NOTE: Do not overfill the engine with engine oil.

NOTE: Anytime engine oil is added (top off or oil changes) ensure all engine surfaces are completely free of residual oil. If there is oil on any engine surface clean as necessary.

8. Fill engine with NEW oil using Dexos™1 5W-30 specification.

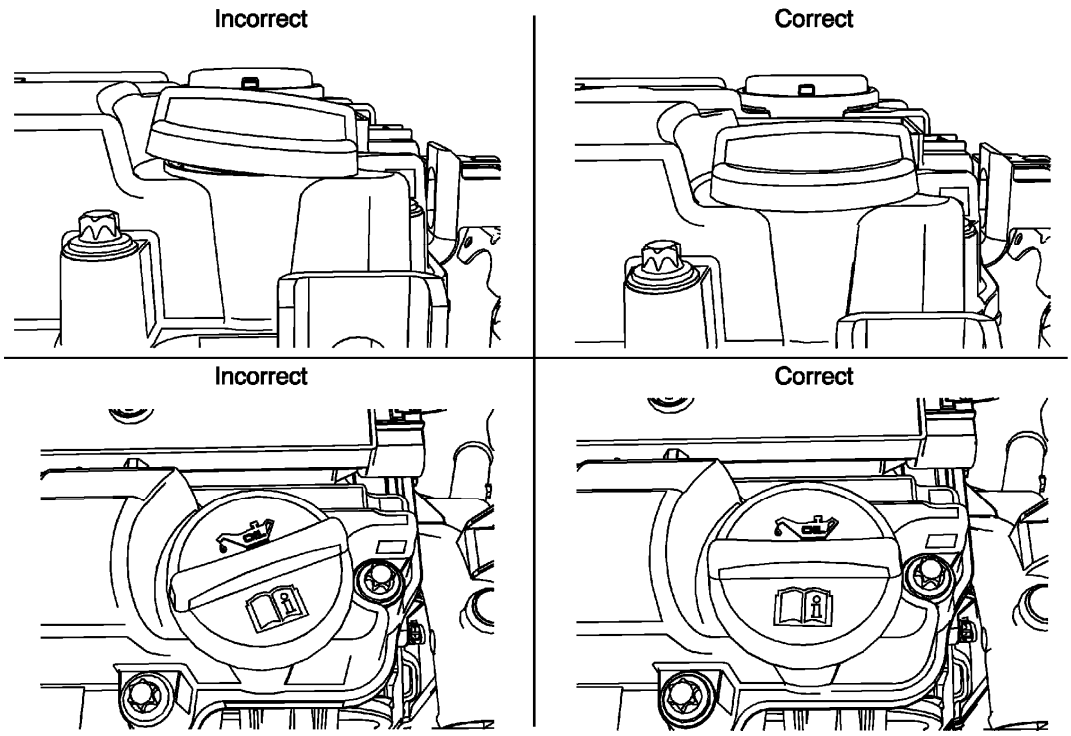

Fig. 254: Proper Oil Filler Cap Seating
Courtesy of GENERAL MOTORS COMPANY

NOTE: Oil fill cap must be properly seated and tightened during installation.

9. Install oil fill cap.
10. Start the engine and allow it to run until the oil pressure control indicator goes off. Inspect for any oil leaks around the drain plug, oil filter and oil fill cap.

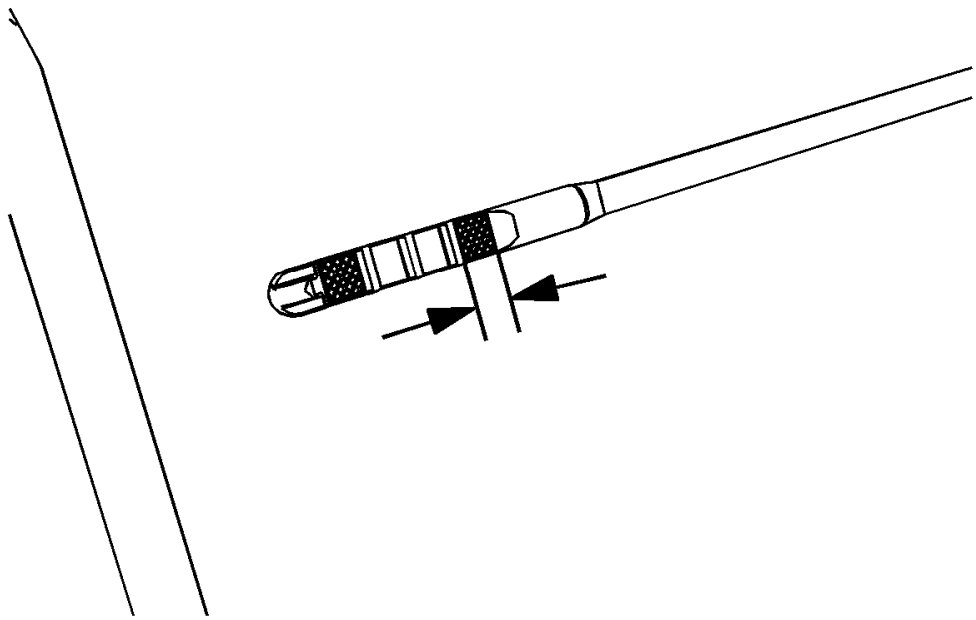

Fig. 255: Engine Oil Level Indicator
Courtesy of GENERAL MOTORS COMPANY

11. Inspect the engine oil level. The oil level should be in the cross-hatched section of the oil level indicator as shown.
12. Close hood.
13. Reset the engine oil life system monitor.

CAMSHAFT SEAL REPLACEMENT

Special Tools

- **EN-422** Installer
- **EN-45000** Remover

For equivalent regional tools, refer to **Special Tools**.

Removal Procedure

1. Remove the camshaft position actuator adjuster. Refer to **Camshaft Position Actuator Adjuster Replacement**.

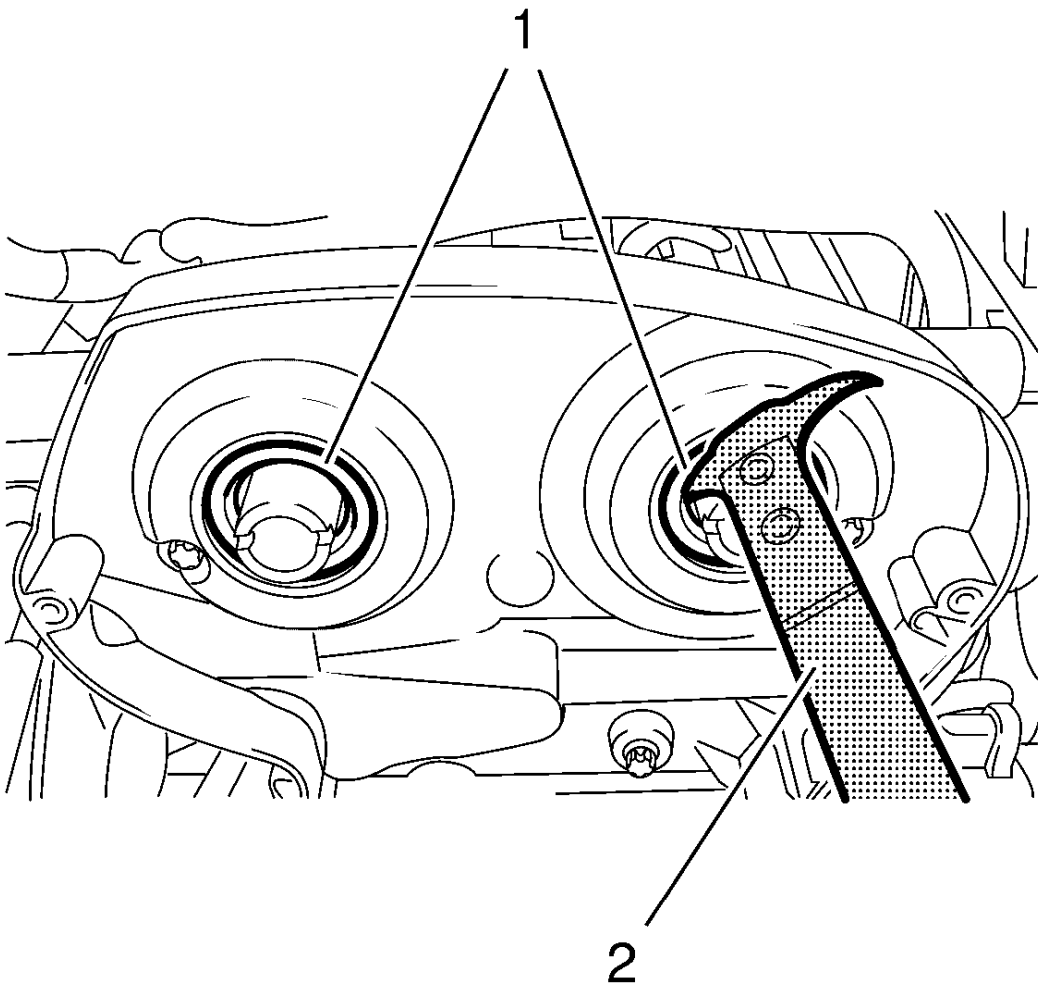

Fig. 256: Camshaft Front Oil Seals And Tool
Courtesy of GENERAL MOTORS COMPANY

NOTE: Do not damage the sealing surfaces.

2. Use the **EN-45000** remover to loosen the camshaft front oil seals (1).

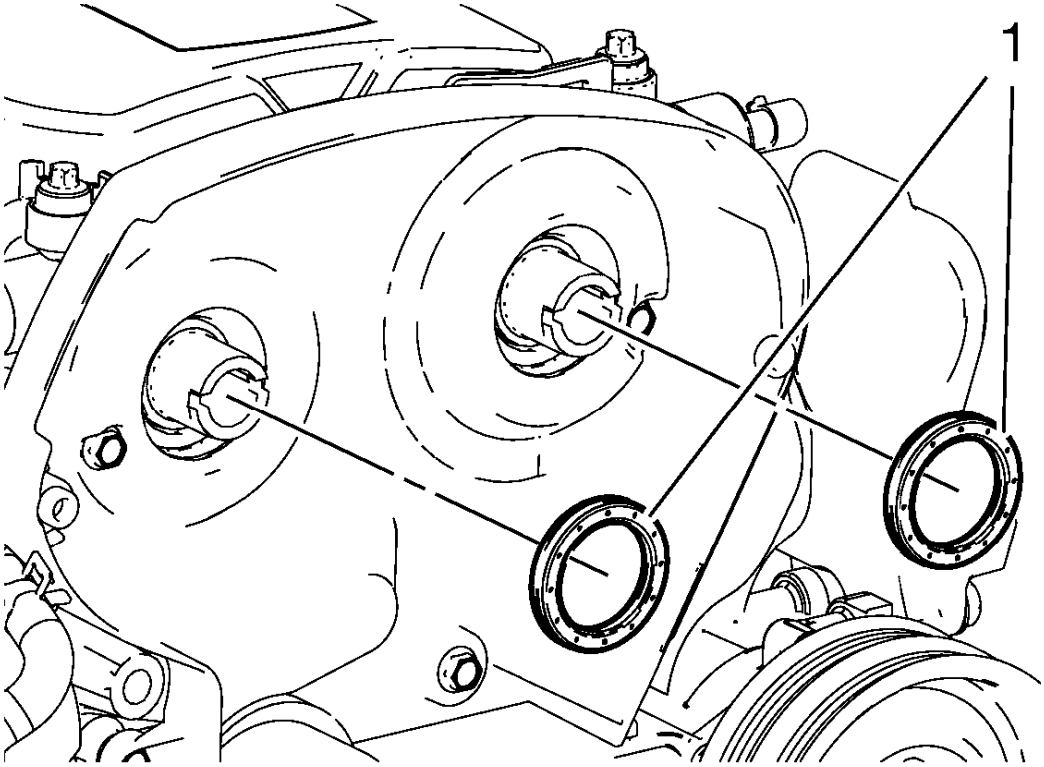

Fig. 257: Camshaft Front Oil Seals
Courtesy of GENERAL MOTORS COMPANY

3. Remove the camshaft front oil seals (1).

Installation Procedure

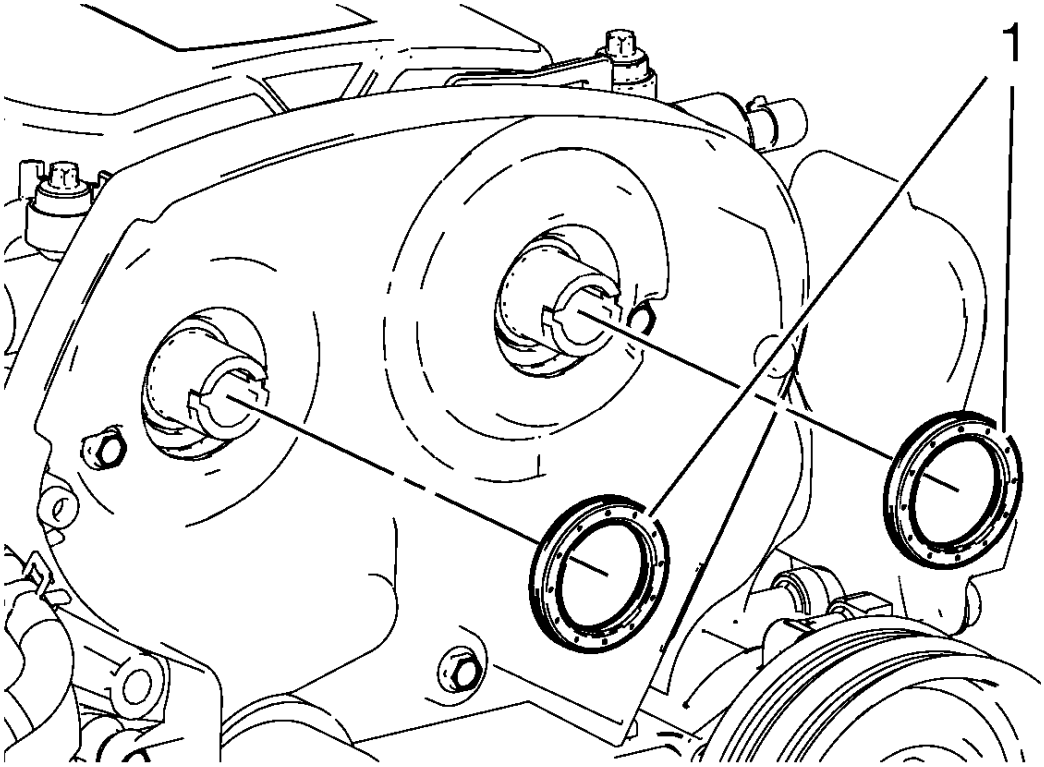

Fig. 258: Camshaft Front Oil Seals
Courtesy of GENERAL MOTORS COMPANY

1. Insert 2 NEW camshaft front oil seals (1).

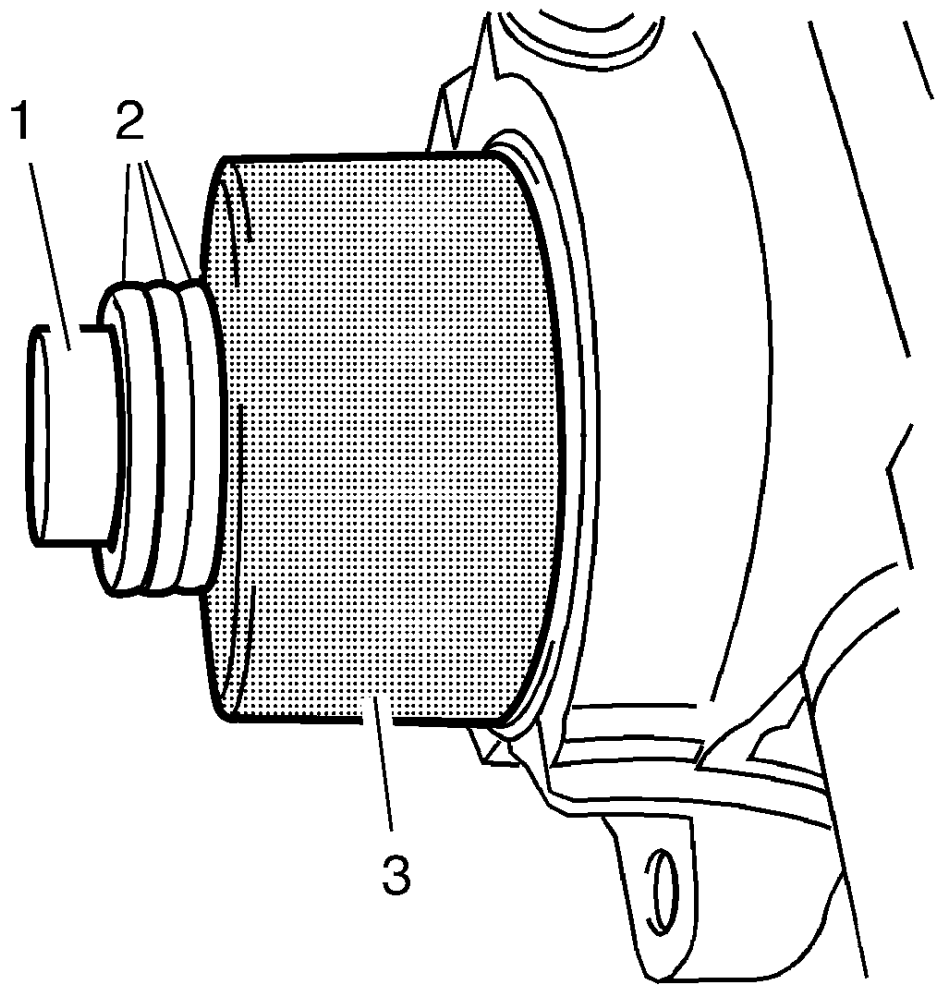

Fig. 259: Camshaft Sprocket Bolt, Shims And Tool
Courtesy of GENERAL MOTORS COMPANY

2. Tighten the seal ring with **EN-422** installer (3) on the camshaft until this is in contact with the cylinder head.
3. To install, use camshaft sprocket bolt (1) in conjunction with shims (2) with a total thickness of approximately 10 mm (0.393 in).
4. Install the camshaft position actuator adjuster. Refer to **Camshaft Position Actuator Adjuster Replacement**.

CAMSHAFT COVER REPLACEMENT

Removal Procedure

1. Remove the ignition coil. Refer to **Ignition Coil Replacement** .

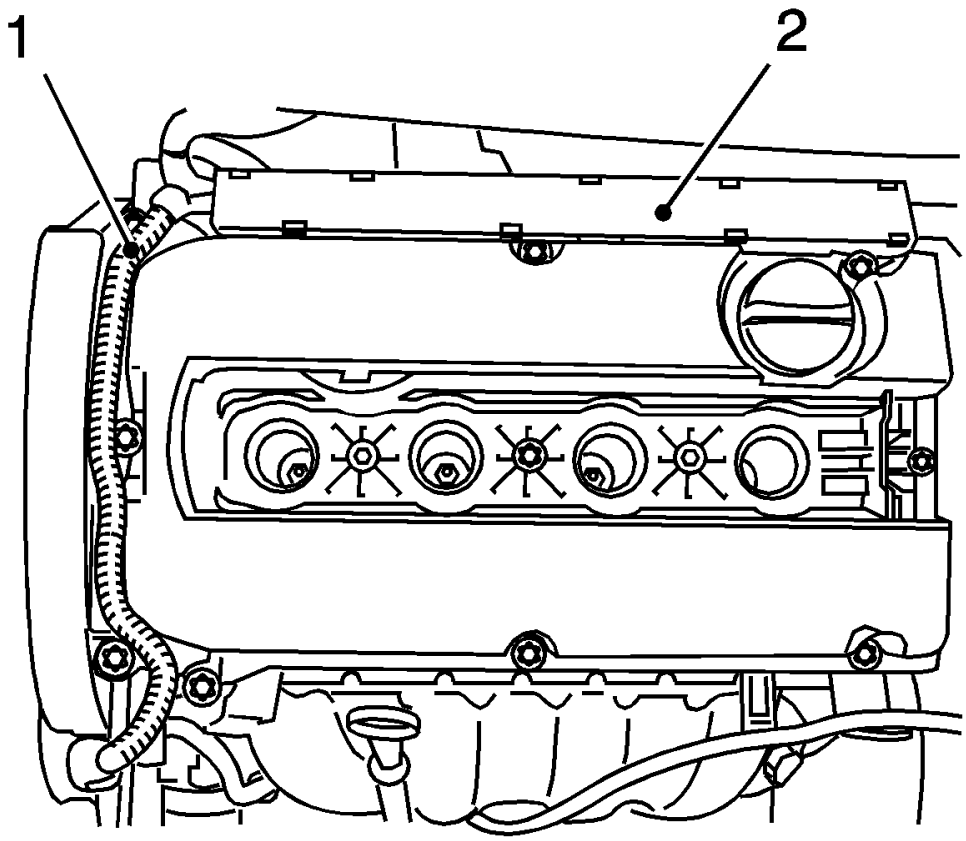

Fig. 260: Wiring Harness Guide And Cylinder Head Cover
Courtesy of GENERAL MOTORS COMPANY

2. Unclip the ECM wiring harness guide (1) from the cylinder head cover.
3. Disconnect the wiring guide (2).
4. Remove the positive crankcase ventilation tube. Refer to **Positive Crankcase Ventilation Hose/Pipe/Tube Replacement**.

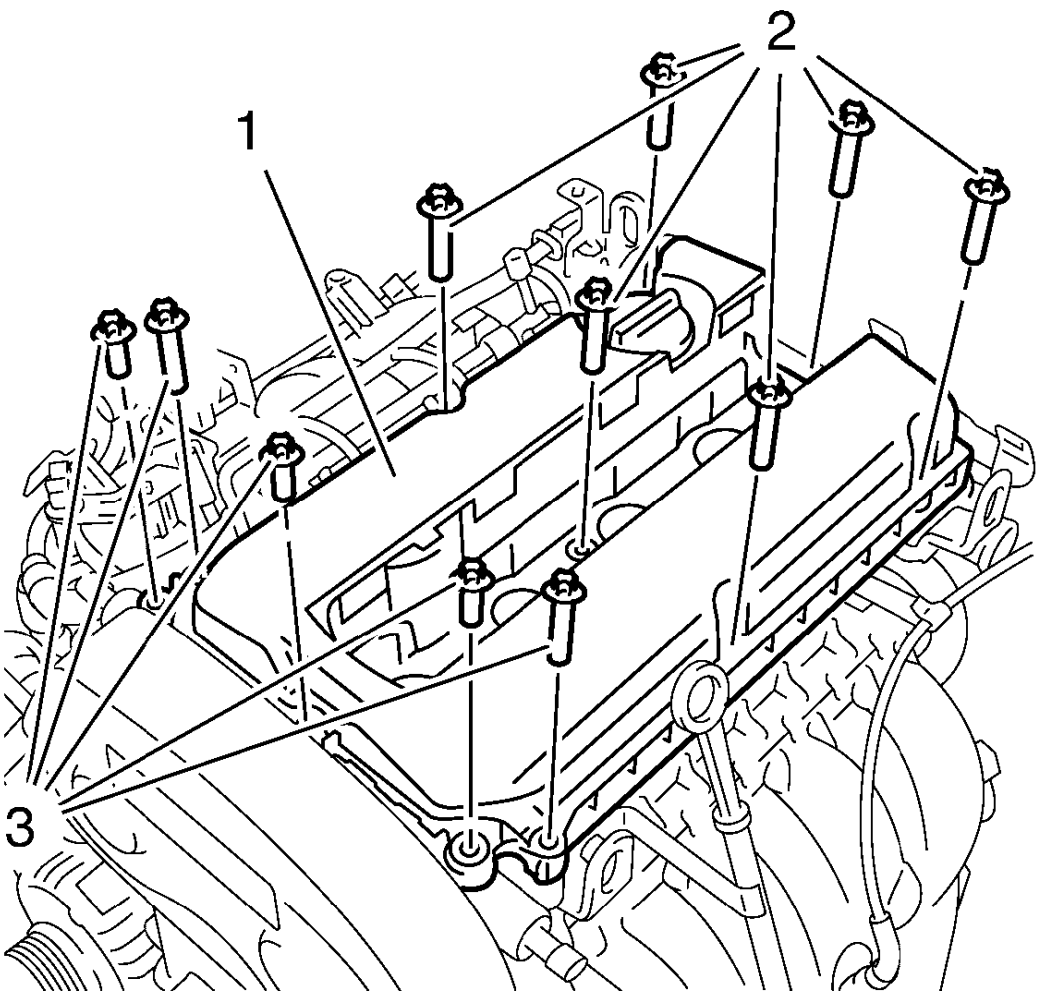

Fig. 261: Camshaft Cover And Bolts
Courtesy of GENERAL MOTORS COMPANY

5. Remove the 11 bolts (2, 3).
6. Remove the camshaft cover (1).

Installation Procedure

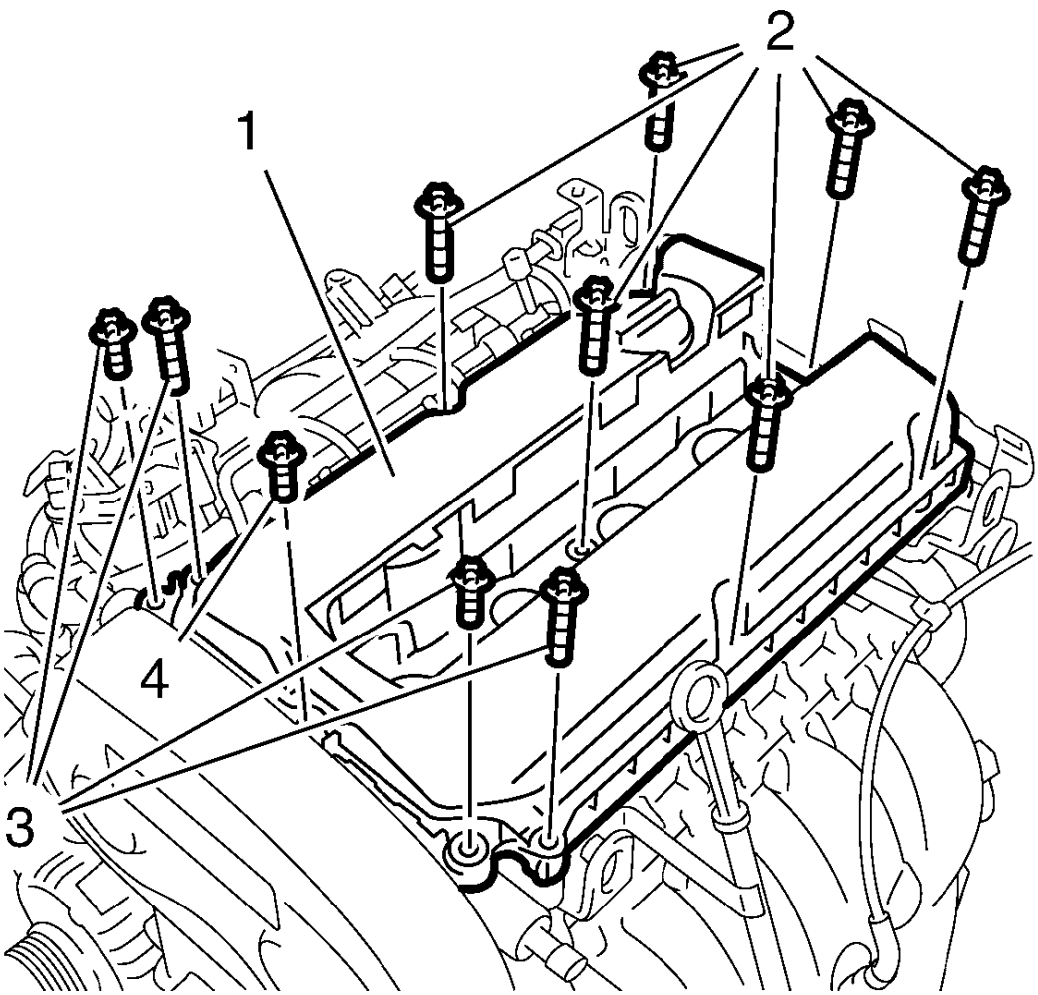

Fig. 262: Camshaft Cover Bolt
Courtesy of GENERAL MOTORS COMPANY

1. Clean the bolt and the camshaft cover bolt (4) thread.
2. Apply sealant to the camshaft cover bolt (4). Refer to **Adhesives, Fluids, Lubricants, and Sealers**
3. Insert a NEW gasket in the cylinder head cover.
4. Install the camshaft cover (1).

CAUTION: Refer to Fastener Caution .

5. Install the 11 bolts (2, 3, 4) and tighten to 8 N.m (71 lb in).
6. Install the positive crankcase ventilation tube. Refer to **Positive Crankcase Ventilation Hose/Pipe/Tube Replacement**.

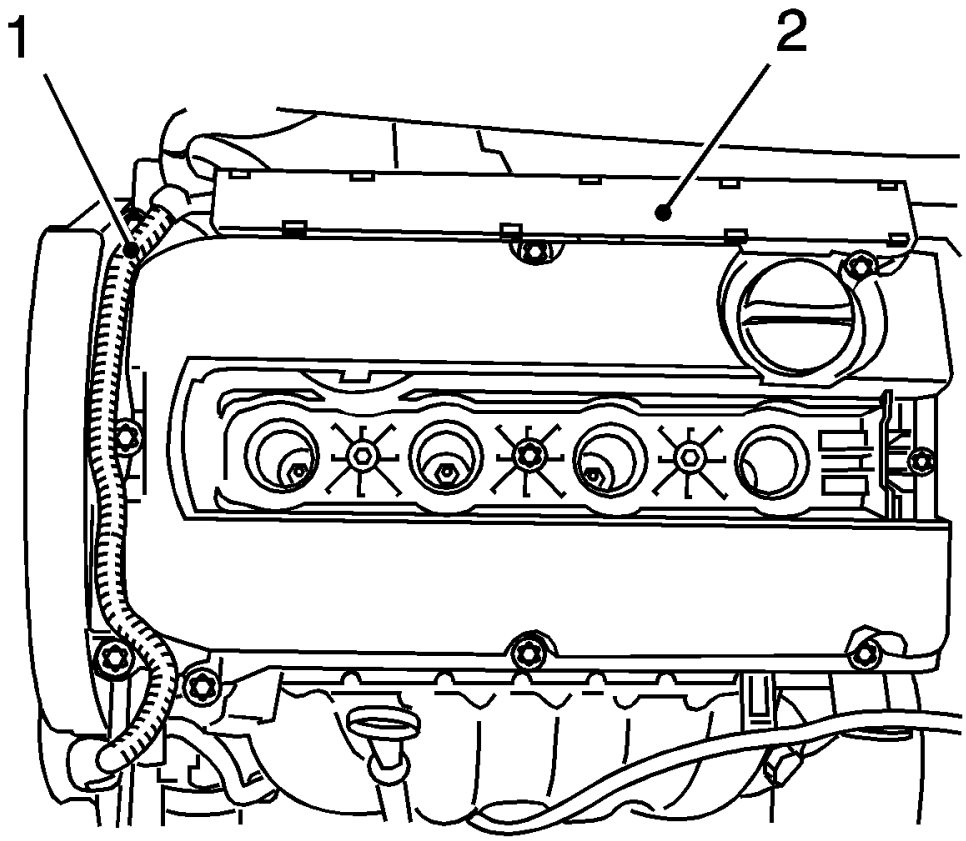

Fig. 263: Wiring Harness Guide And Cylinder Head Cover
Courtesy of GENERAL MOTORS COMPANY

7. Clip in the ECM wiring harness guide (1) to the cylinder head cover.
8. Connect the wiring guide (2).
9. Install the ignition coil. Refer to **Ignition Coil Replacement** .

CAMSHAFT POSITION ACTUATOR ADJUSTER REPLACEMENT

Special Tools

- **EN-6340** Camshaft Adjuster Locking Tool
- **EN-6333** Timing Belt Tensioner Locking Pin
- **EN-6625** Crankshaft Locking Device
- **EN-6628-A** Camshaft Locking Tool
- **EN-45059** Angle Meter

For equivalent regional tools, refer to **Special Tools**.

Removal Procedure

1. Remove the air cleaner housing. Refer to **Air Cleaner Assembly Replacement (1.8L LWE)** , **Air Cleaner Assembly Replacement (1.8L LUW)** .

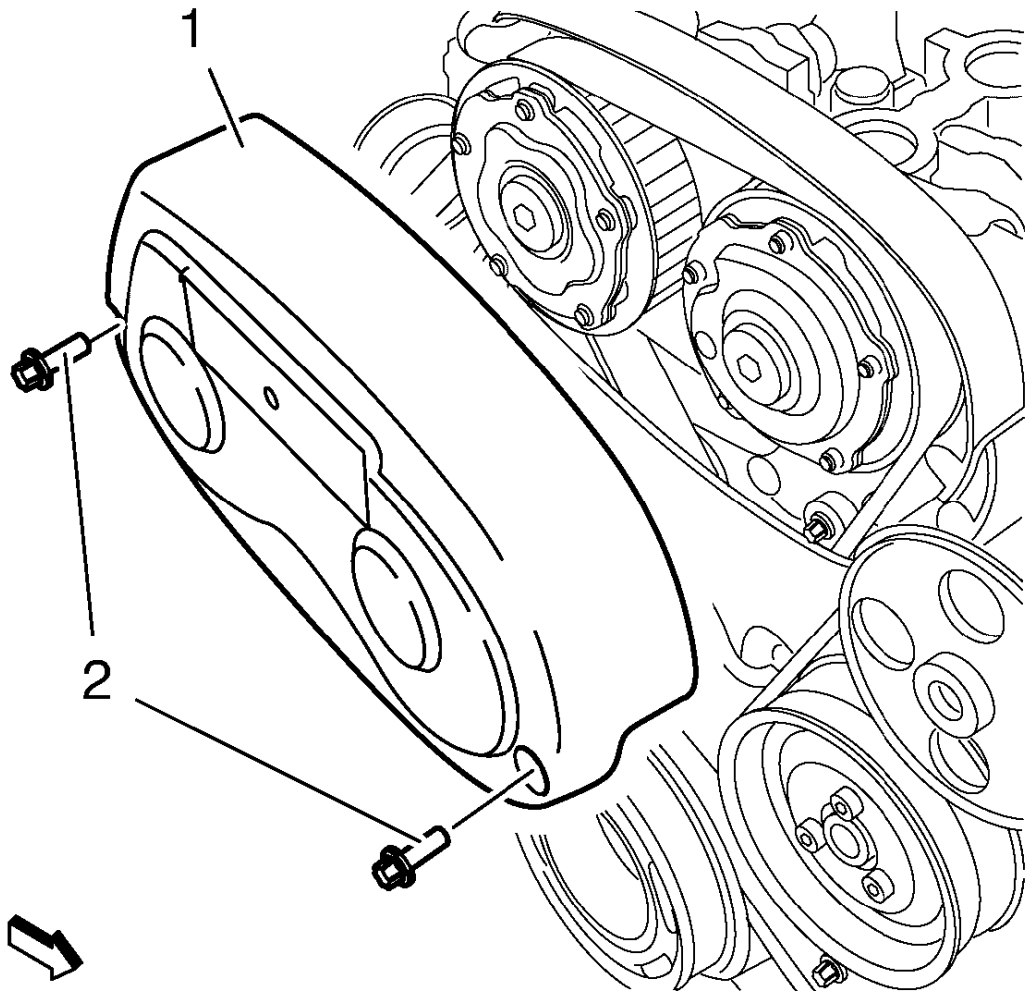

Fig. 264: Timing Belt Upper Front Cover
Courtesy of GENERAL MOTORS COMPANY

2. Remove the 2 timing belt upper front cover bolts (2).
3. Remove the timing belt upper front cover (1).
4. Remove the camshaft cover. Refer to **Camshaft Cover Replacement**.
5. Remove the 2 camshaft position actuator solenoid valve. Refer to **Camshaft Position Actuator Solenoid Valve Replacement**.
6. Remove the drive belt. Refer to **Drive Belt Replacement**.
7. Remove the drive belt tensioner. Refer to **Drive Belt Tensioner Replacement**.

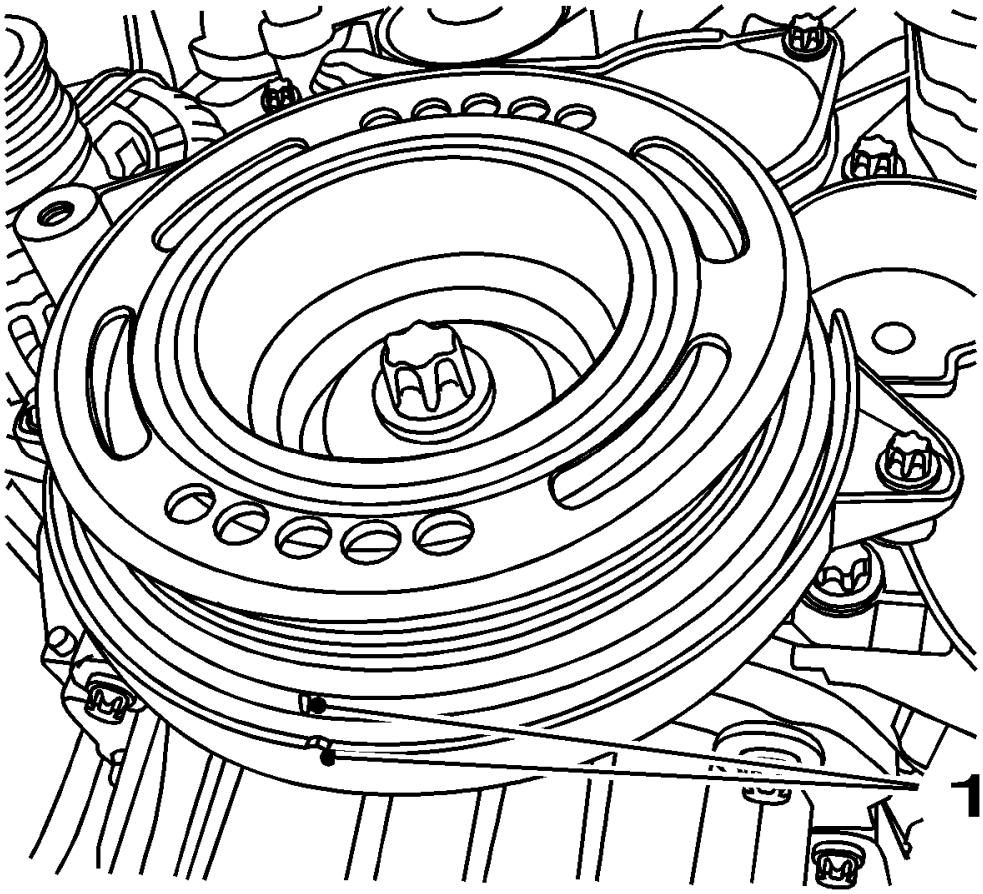

Fig. 265: View Of Crankshaft TDC Position
Courtesy of GENERAL MOTORS COMPANY

8. Set the crankshaft balancer in direction of engine rotation until the markings (1) line up with the cylinder 1 at TDC.
9. Remove the crankshaft balancer. Refer to **Crankshaft Balancer Replacement (Manual Transmission)**, **Crankshaft Balancer Replacement (Automatic Transmission)**.
10. Remove the **EN-6625** locking device.

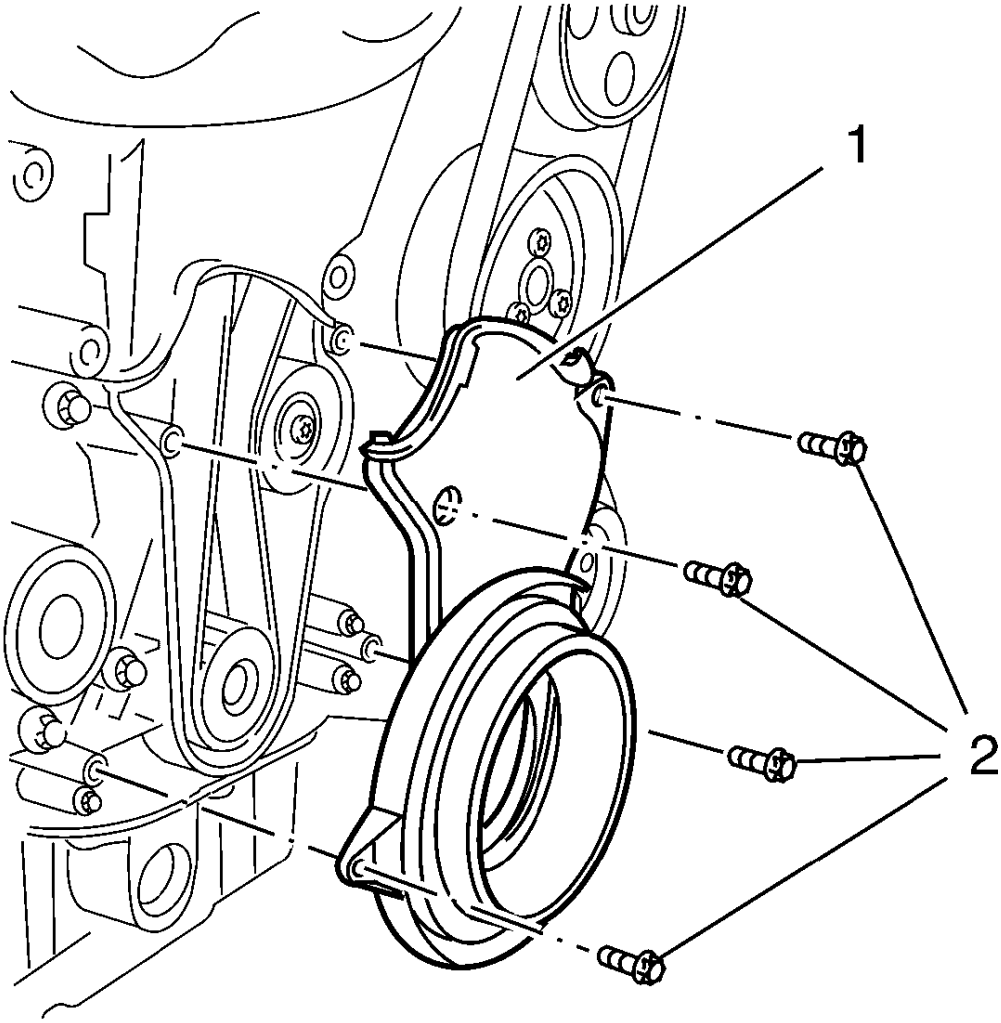

Fig. 266: Timing Belt Lower Front Cover
Courtesy of GENERAL MOTORS COMPANY

11. Remove the 4 lower timing belt cover bolts (2).
12. Remove the lower timing belt cover (1).
13. Lower the vehicle.

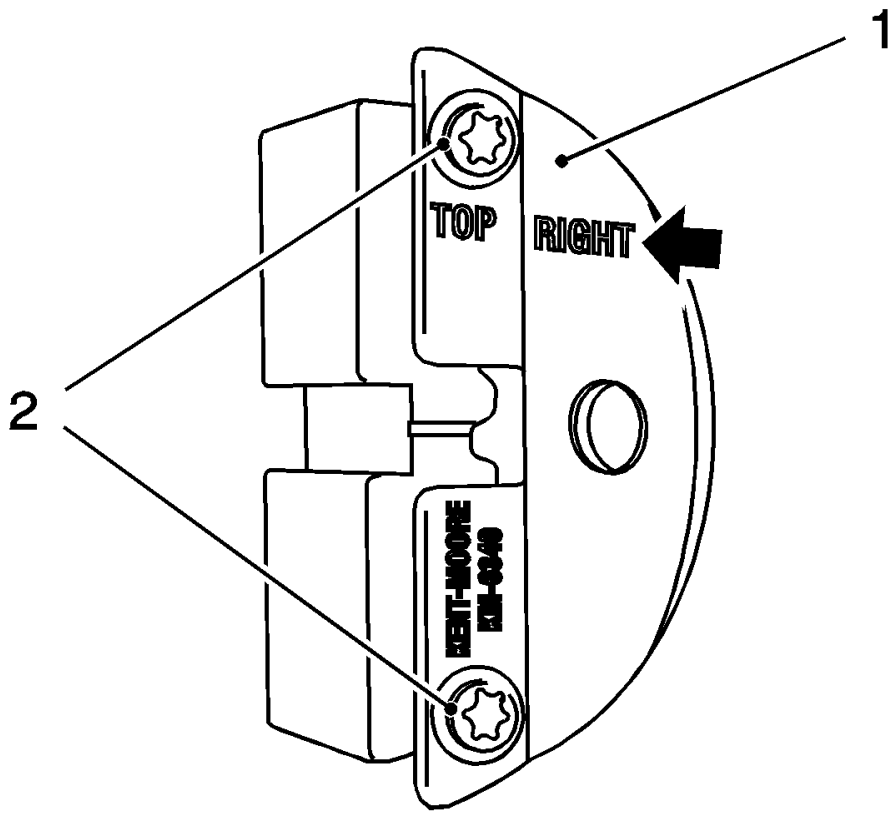

Fig. 267: View Of Front Panel And Bolts
Courtesy of GENERAL MOTORS COMPANY

NOTE: The right half of the EN-6340 locking tool can be recognized by the lettering "right", arrow, on the tool.

14. Prepare the right half of the **EN-6340** locking tool.
    1. Remove the 2 bolts (2).
    2. Remove the front panel (1) from the **EN-6340** locking tool - right.

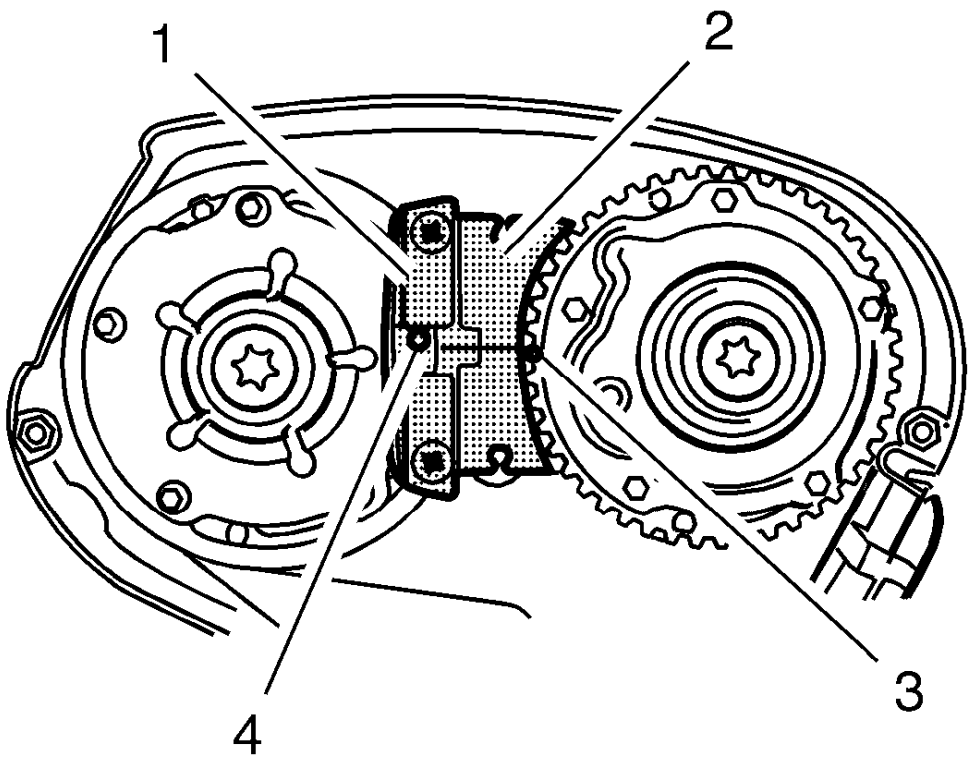

Fig. 268: Spot Type Markings And Special Tool
Courtesy of GENERAL MOTORS COMPANY

15. Install the **EN-6340** locking tool into the camshaft adjusters.

NOTE: The spot type marking (4) on the intake camshaft adjuster does not correspond to the groove of EN-6340 locking tool - left during this process but must be somewhat above as shown.

- Install the **EN-6340** locking tool - left (1) into the camshaft adjusters as shown.

NOTE: The spot type marking (3) on the exhaust camshaft adjuster must correspond to the groove on EN-6340 locking tool - right.

- Install **EN-6340** locking tool - right (2) into the camshaft adjusters as shown.

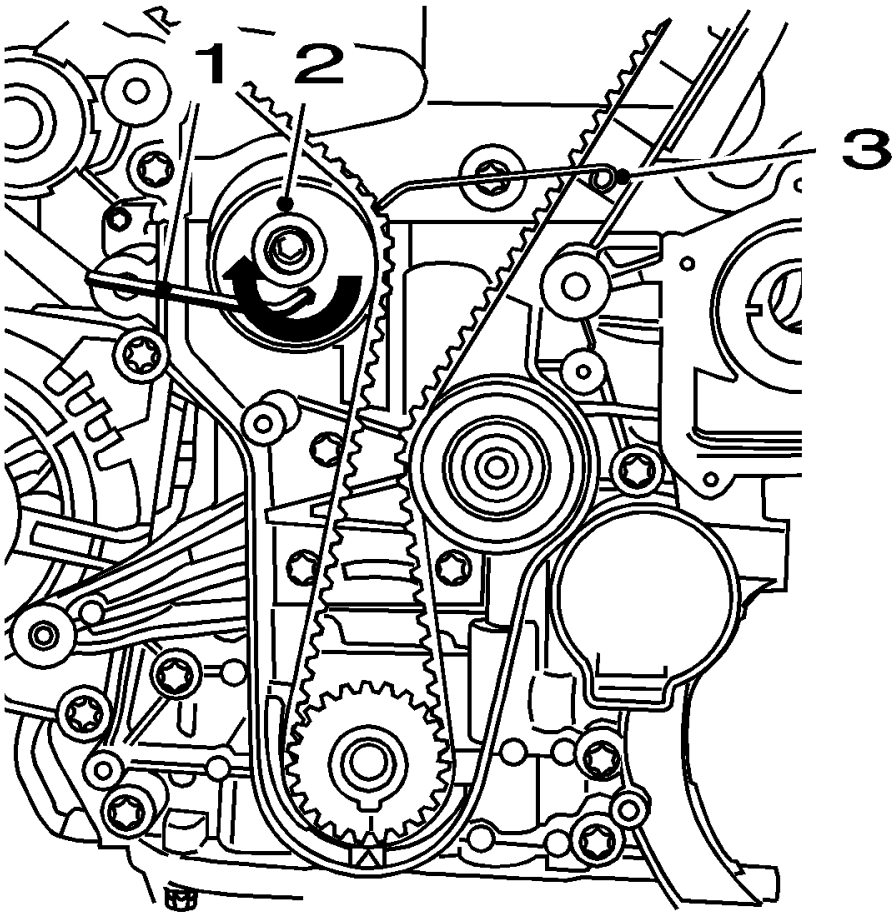

Fig. 269: View Of Drive Belt Tensioner, Allen Key And KM-6333
Courtesy of GENERAL MOTORS COMPANY

16. Apply tension to the timing belt tensioner (2) in the direction of the arrow, using an allen key (1).
17. Install the **EN-6333** pin (3).

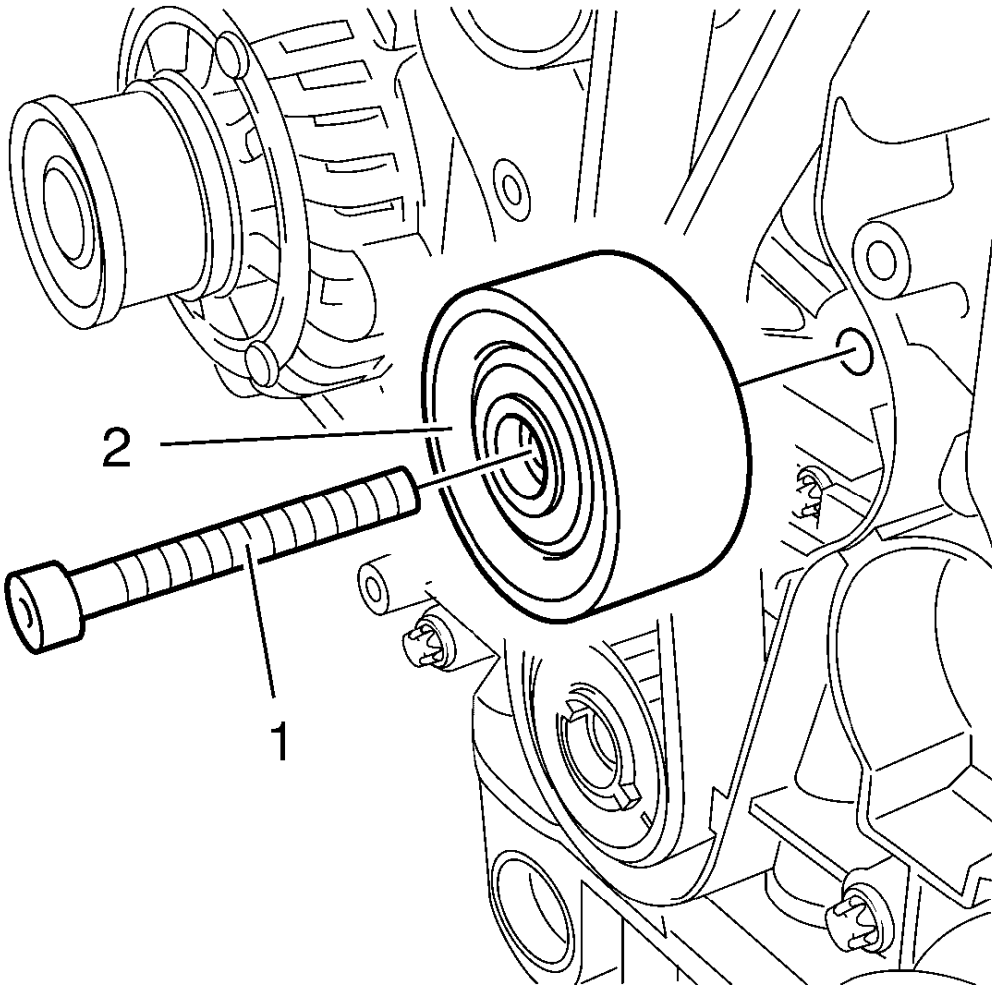

Fig. 270: Timing Belt Idler Pulley Bolt
Courtesy of GENERAL MOTORS COMPANY

18. Remove and DISCARD the timing belt idler pulley bolt (1).
19. Remove the timing belt idler pulley (2).

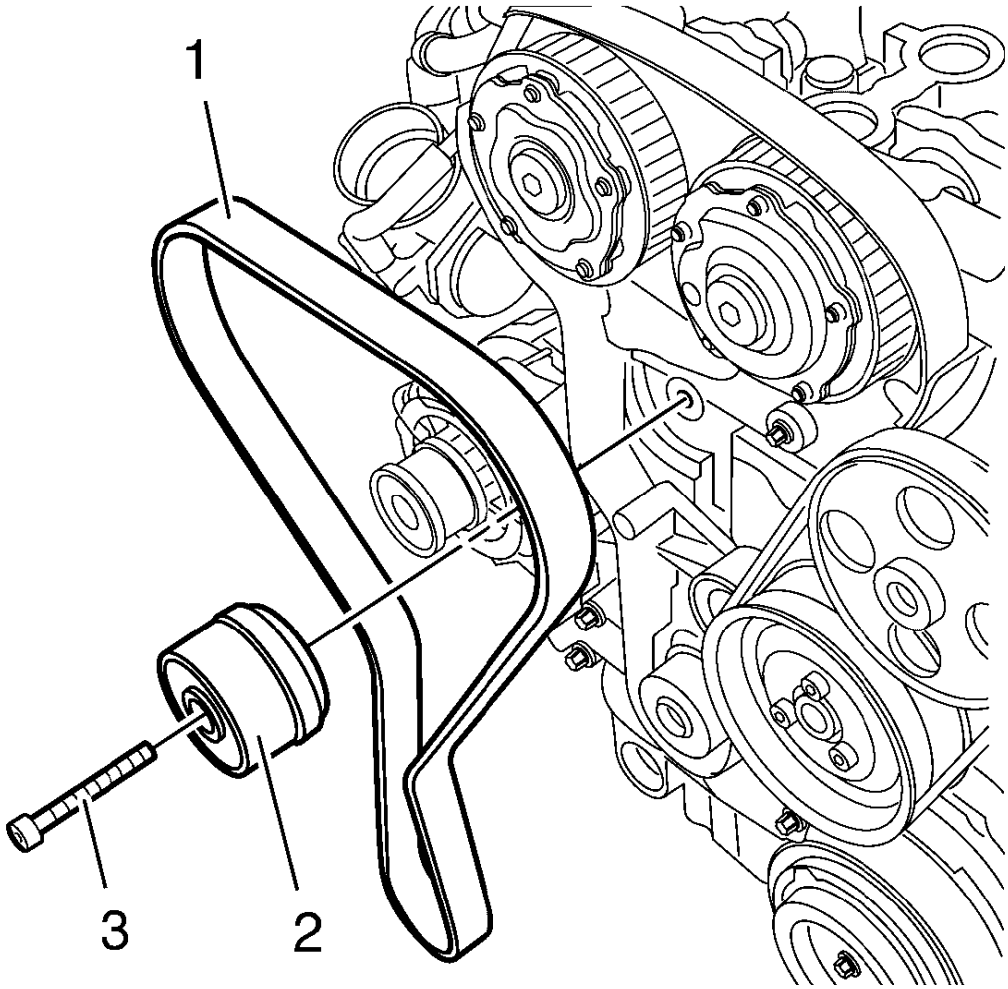

Fig. 271: Timing Belt, Timing Belt Tensioner
Courtesy of GENERAL MOTORS COMPANY

NOTE: Note the direction of the belt, if the timing belt will be reused.

20. Remove the timing belt (1).
21. Remove and DISCARD the timing belt tensioner bolt (3).
22. Remove the timing belt tensioner (2).

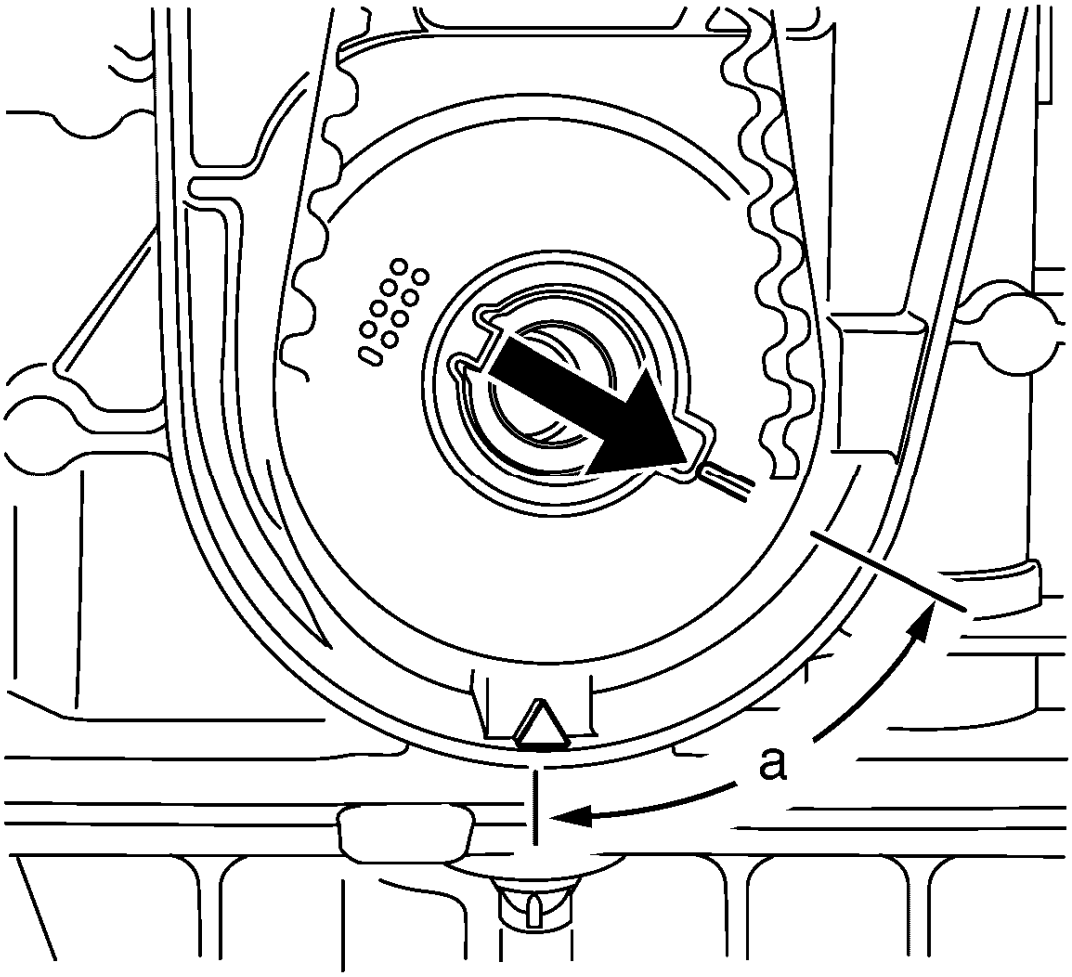

Fig. 272: Turning Crankshaft Against Direction Of Engine Rotation
Courtesy of GENERAL MOTORS COMPANY

23. Set the crankshaft in direction of engine rotation to 60 degrees (a) before TDC. Use the **EN-45059** meter and the crankshaft balancer bolt.

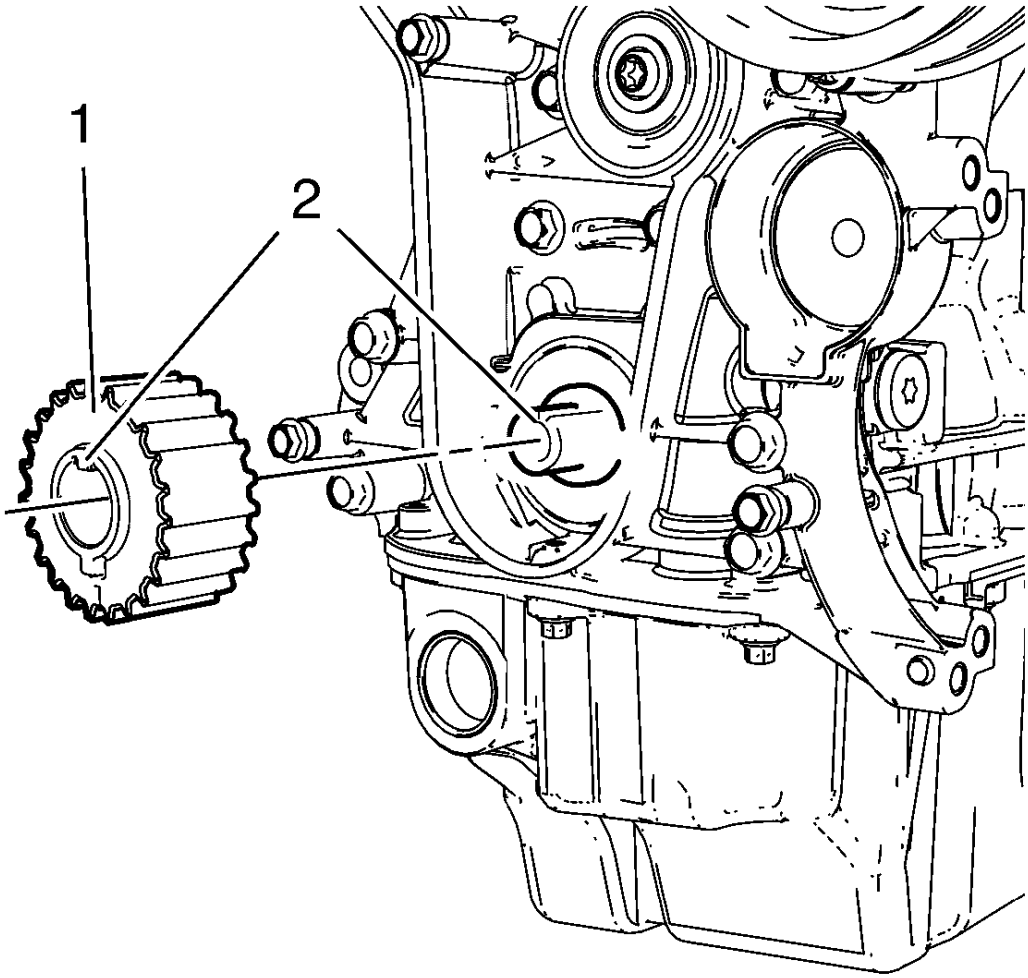

Fig. 273: Crankshaft Sprocket
Courtesy of GENERAL MOTORS COMPANY

NOTE: Some engine oil will run out of the camshaft and the camshaft position actuator adjuster. That is the reason for the removal of the whole timing assembly.

24. Remove the crankshaft sprocket (1).
25. Lower the vehicle.

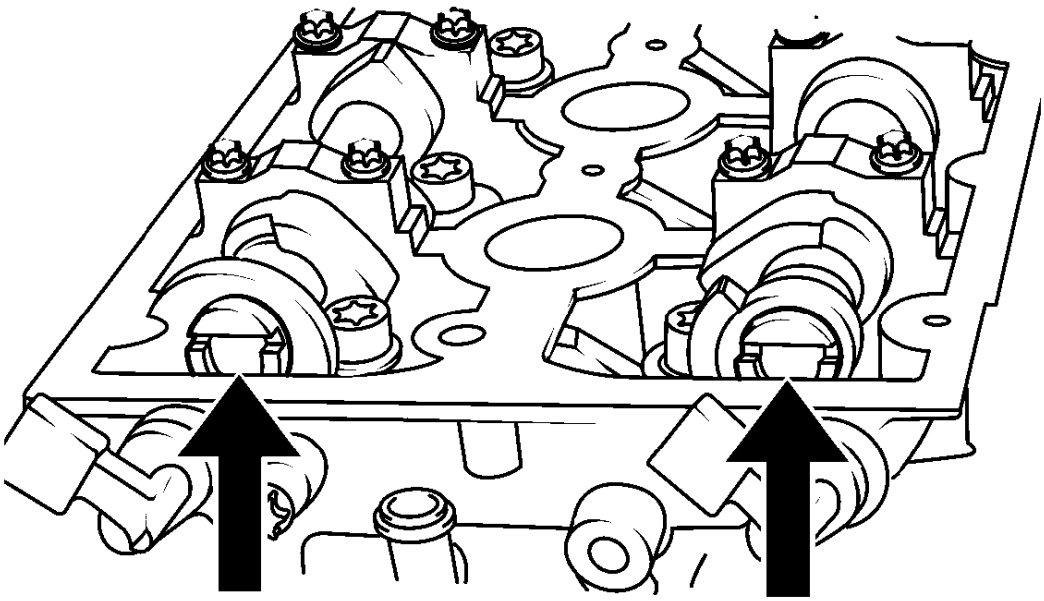

Fig. 274: Aligning Camshafts Horizontally
Courtesy of GENERAL MOTORS COMPANY

NOTE: Note the arrows.

26. Turn the camshaft by the hexagon until the groove on the end of the camshafts is horizontal.

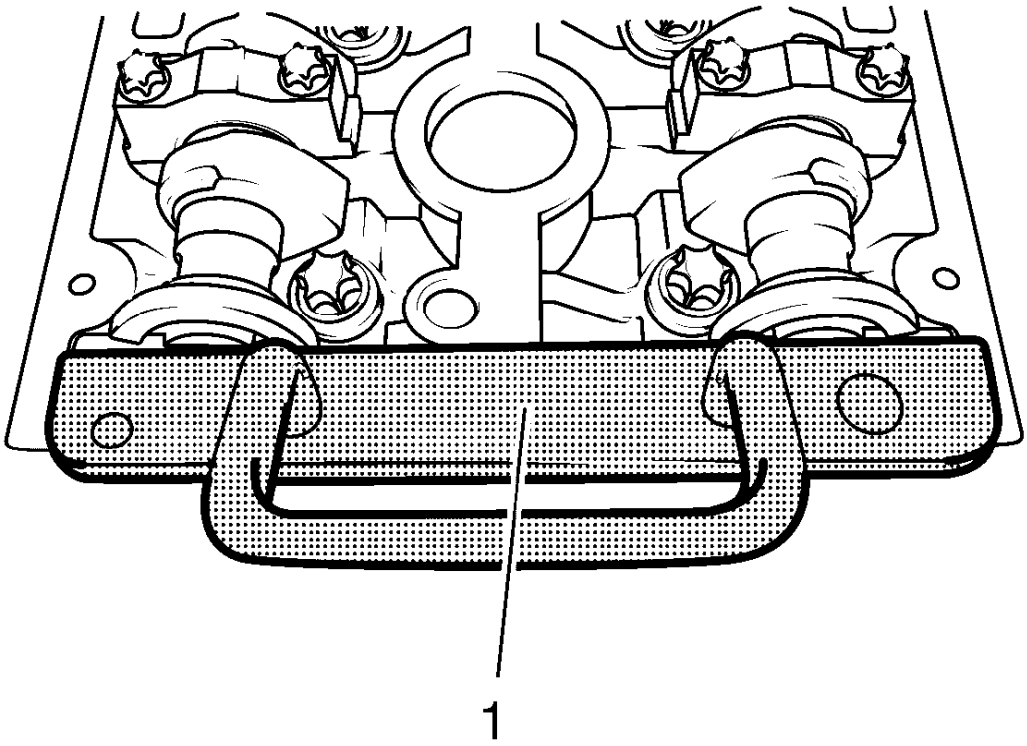

Fig. 275: Locking Tool
Courtesy of GENERAL MOTORS COMPANY

27. Install the **EN-6628-A** locking tool (1).
28. Raise and support the vehicle. Refer to **Lifting and Jacking the Vehicle** .
29. Place a collecting basin underneath the vehicle.

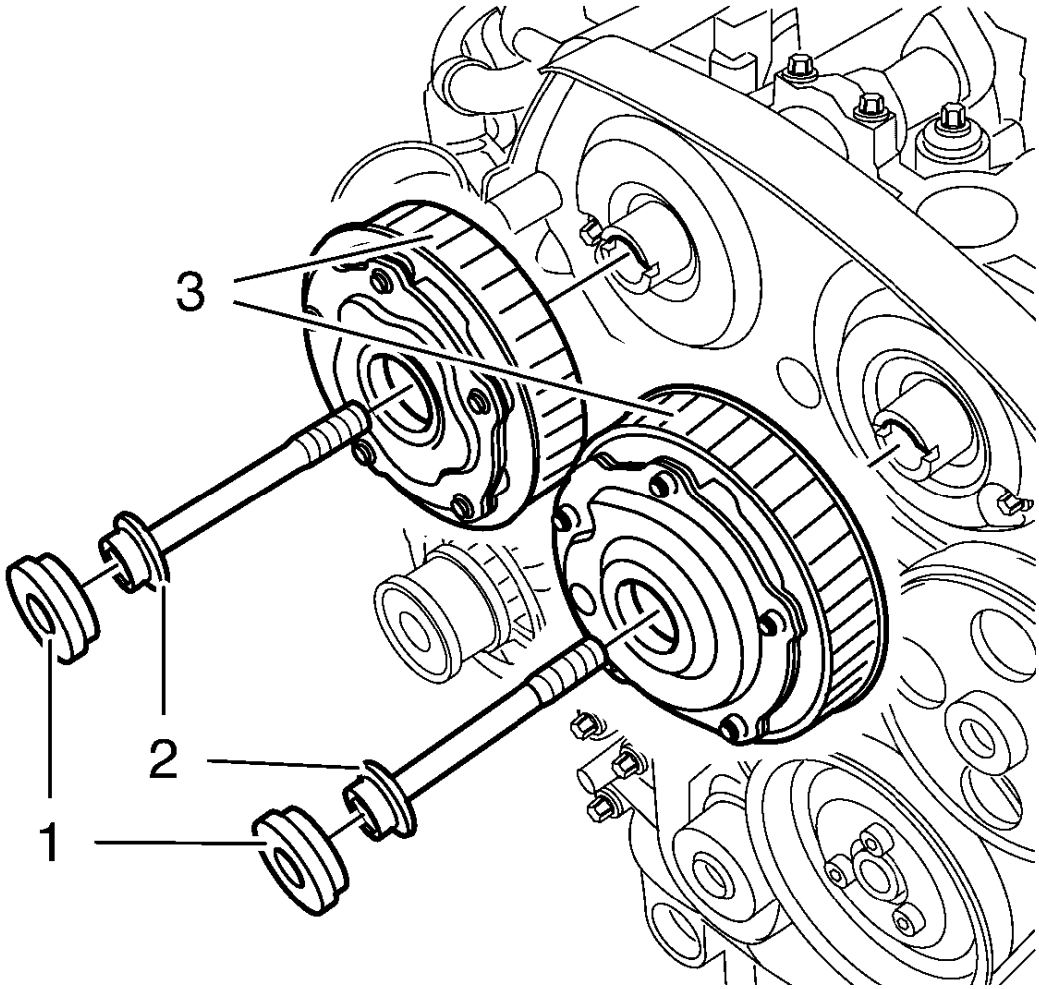

Fig. 276: Camshaft Position Actuator Adjuster Closure Bolt
Courtesy of GENERAL MOTORS COMPANY

30. Remove the camshaft position actuator adjuster closure bolt (1) of the intake camshaft position actuator adjuster and/or the exhaust camshaft position actuator adjuster (3).

NOTE: A second technician is required.

NOTE: Use an appropriate open-end wrench in order to counterhold the camshaft hexagon. A thin cross-section wrench is required for a better fit. The usage of EN-6628-A locking tool is for the camshaft adjustment to prevent misalignment of the camshafts. The wrench is required to counterhold the camshafts during bolt torque procedure.

31. Remove and DISCARD the intake camshaft position actuator adjuster bolt and/or the exhaust camshaft position actuator adjuster bolt (2).

32. Remove the intake camshaft position actuator adjuster and/or the exhaust camshaft position actuator adjuster (3).

Installation Procedure

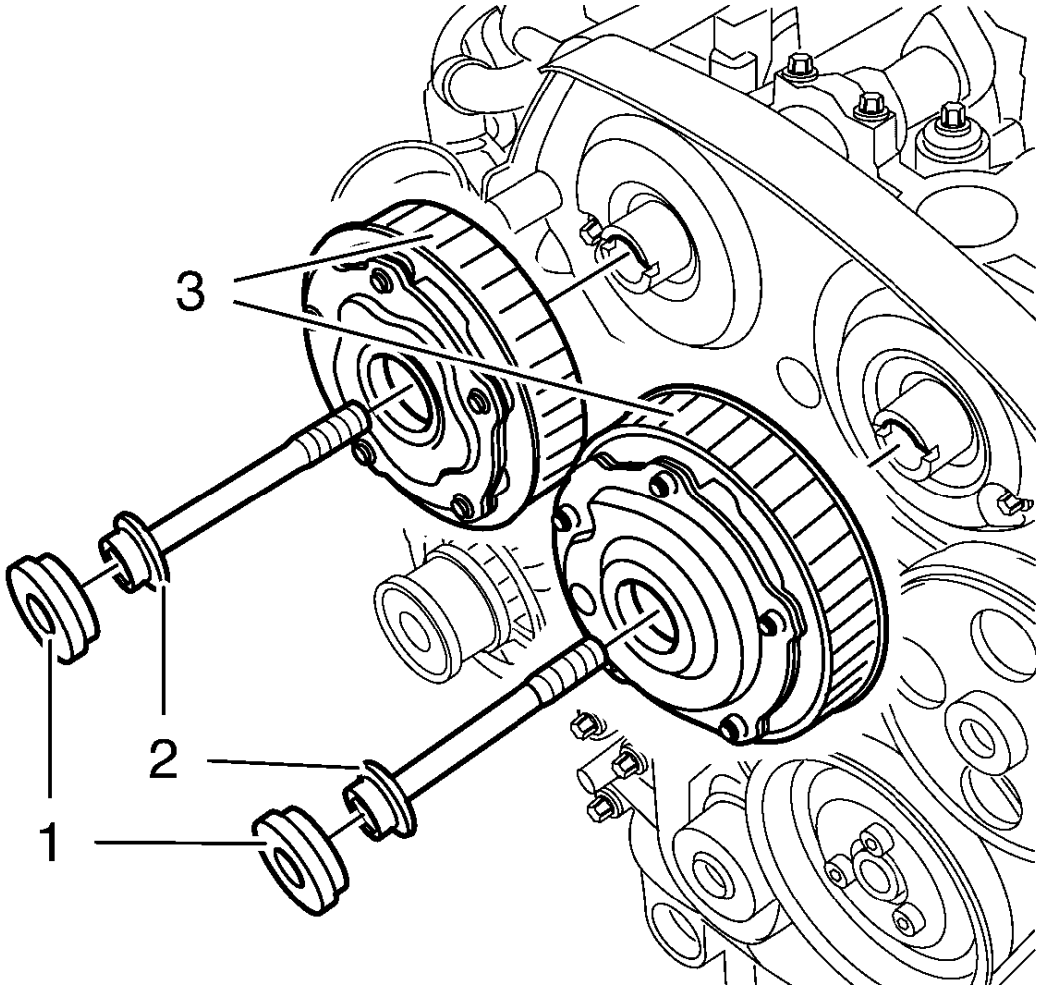

Fig. 277: Camshaft Position Actuator Adjuster Closure Bolt
Courtesy of GENERAL MOTORS COMPANY

NOTE: If the cover is contaminated with oil, you have to clean it close.

1. Install intake camshaft position actuator adjuster and/or the exhaust camshaft position actuator adjuster (3).
2. Install a NEW intake camshaft position actuator adjuster bolt and/or a NEW exhaust camshaft position actuator adjuster bolt (2). DO NOT tighten the bolts yet.

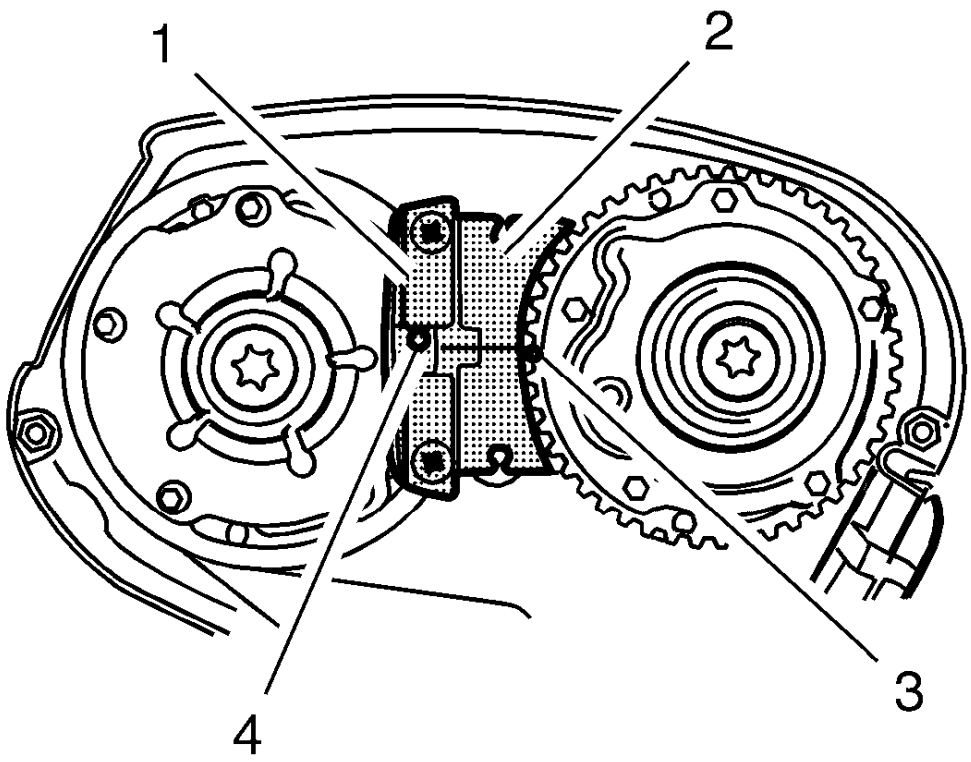

Fig. 278: Spot Type Markings And Special Tool
Courtesy of GENERAL MOTORS COMPANY

3. Install the **EN-6340** locking tool into the camshaft position actuator adjusters.

NOTE: The spot type marking (4) on the intake camshaft position actuator adjuster does not correspond to the groove of EN-6340-left locking tool - left during this process but must be somewhat above as shown.

1. Install the **EN-6340-left** locking tool (1) in the camshaft position actuator adjusters as shown.

NOTE: The spot type marking (3) on the exhaust camshaft position actuator adjuster must correspond to the groove on EN-6340-left locking tool - right.

2. Install the **EN-6340-right** locking tool (2) in the camshaft position actuator adjusters as shown.

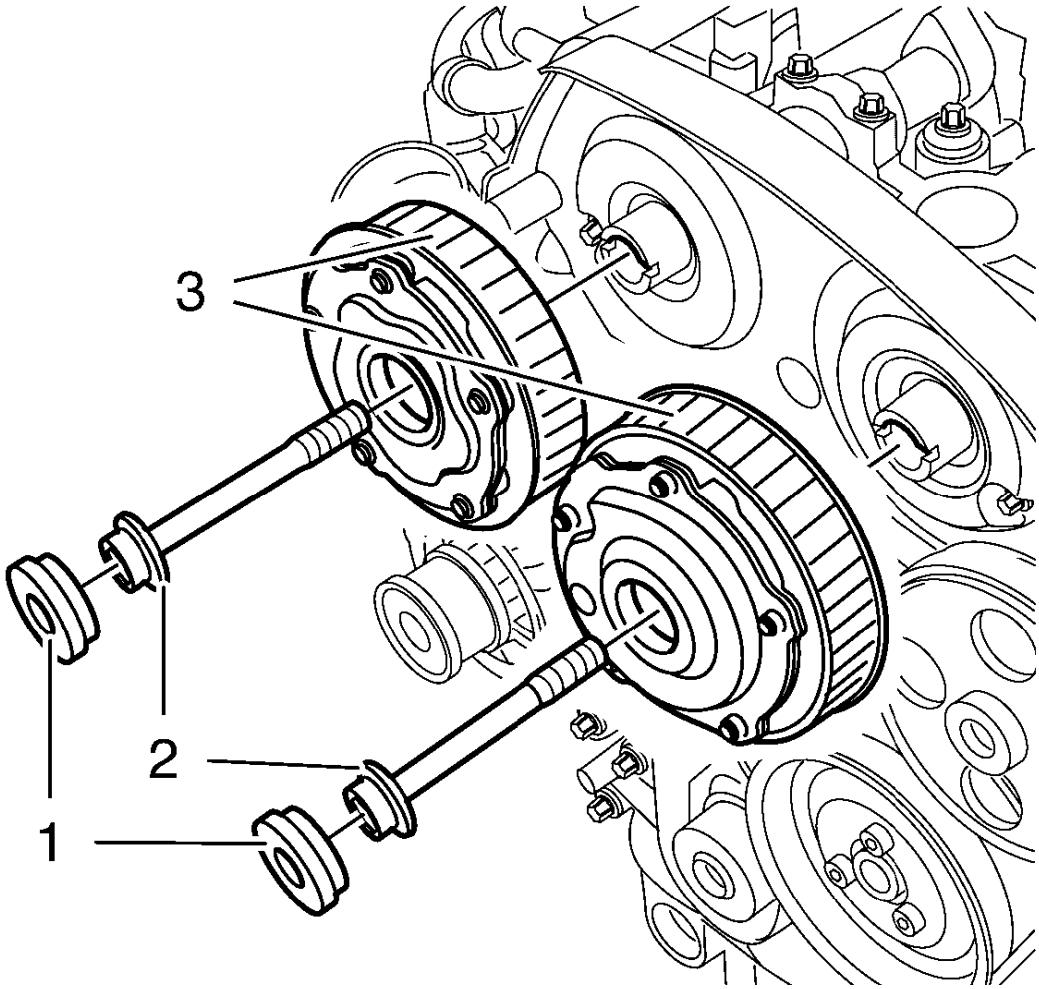

Fig. 279: Camshaft Position Actuator Adjuster Closure Bolt
Courtesy of GENERAL MOTORS COMPANY

CAUTION: Refer to Fastener Caution .

CAUTION: Refer to Torque-to-Yield Fastener Caution .

NOTE: A second technician is required.

NOTE: Use an appropriate open-end wrench in order to counterhold the camshaft hexagon. A thin cross-section wrench is required for a better fit. The usage of EN-6628-A locking tool is for the camshaft adjustment to prevent misalignment of the camshafts. The wrench is required to counterhold the

camshafts during bolt torque procedure.

4. Tighten the camshaft position actuator adjuster bolts (2) in three passes use the **EN-45059** meter :
   1. First pass tighten to 50 N.m (37 lb ft).
   2. Second pass to 150 degrees.
   3. Final pass to 15 degrees.

NOTE: Check the closure bolt seal ring.

5. Install the 2 camshaft position actuator adjuster closure plugs (1) and tighten to 30 N.m (22 lb ft).
6. Remove the **EN-6628-A** locking tool.
7. Raise the vehicle.

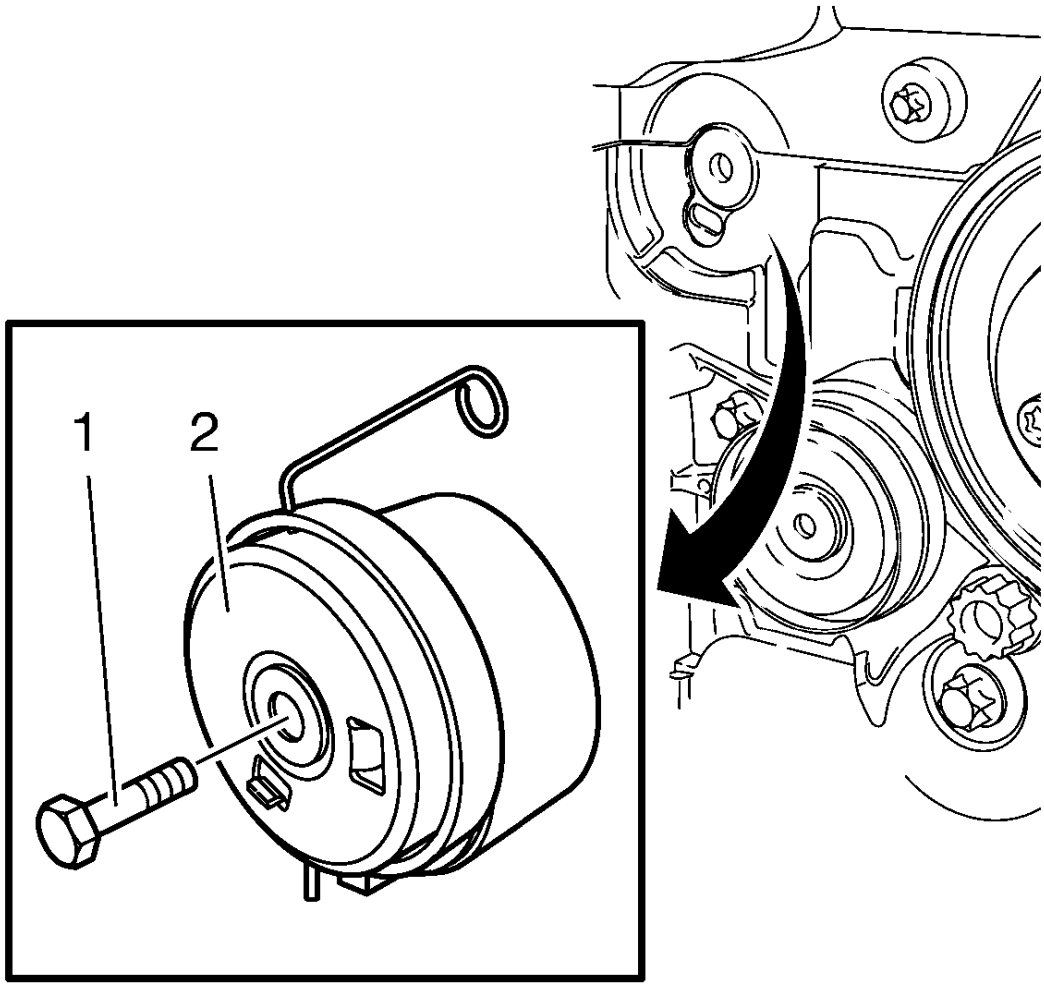

Fig. 280: Timing Belt Tensioner
Courtesy of GENERAL MOTORS COMPANY

CAUTION: Refer to Torque-to-Yield Fastener Caution .

8. Install the timing belt tensioner (2) and tighten the NEW timing belt tensioner bolt (1) in three passes use the **EN-45059** meter :
    1. First pass tighten to 20 N.m (15 lb ft).
    2. Second pass to 120 degrees.
    3. Final pass to 15 degrees.

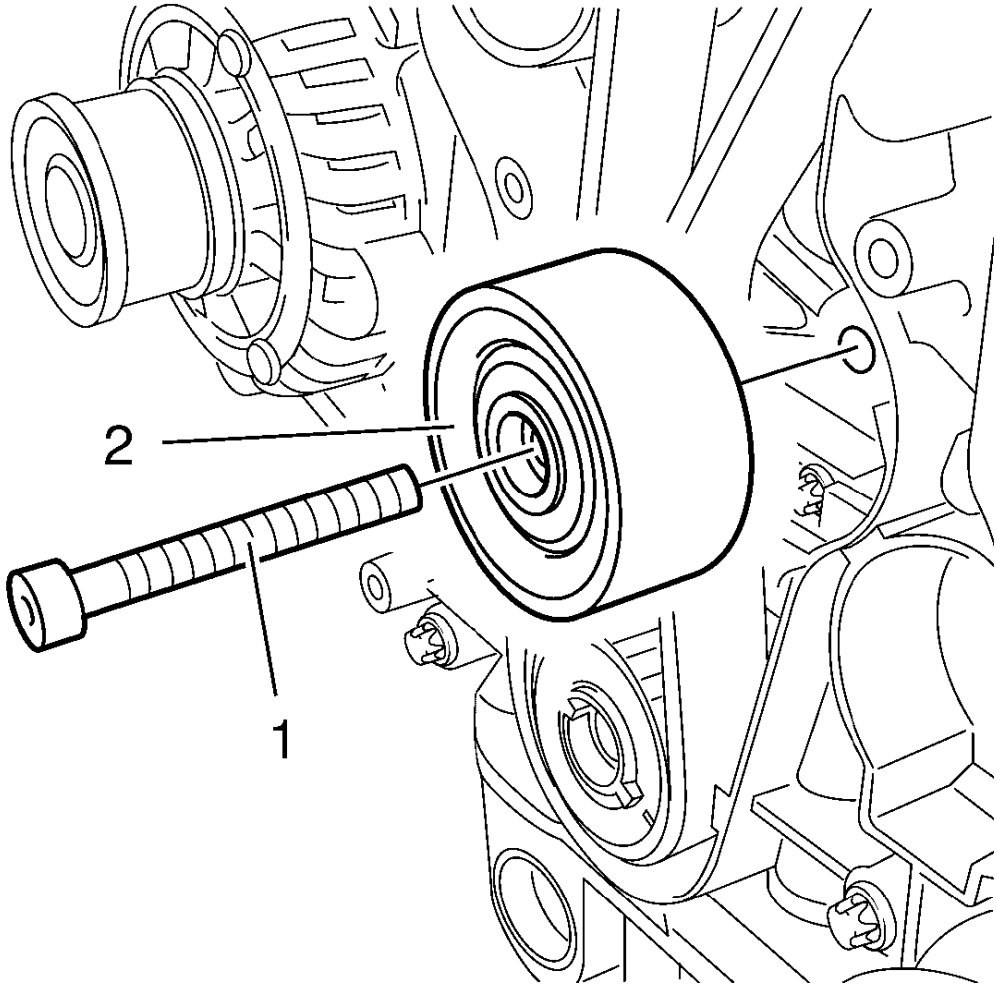

Fig. 281: Timing Belt Idler Pulley Bolt
Courtesy of GENERAL MOTORS COMPANY

CAUTION: Refer to Torque-to-Yield Fastener Caution .

9. Install the timing belt idler pulley (2) and tighten the NEW bolt (1) in three passes use the **EN-45059** meter :
    1. First pass tighten to 20 N.m (15 lb ft).
    2. Second pass to 120 degrees.
    3. Final pass to 15 degrees.

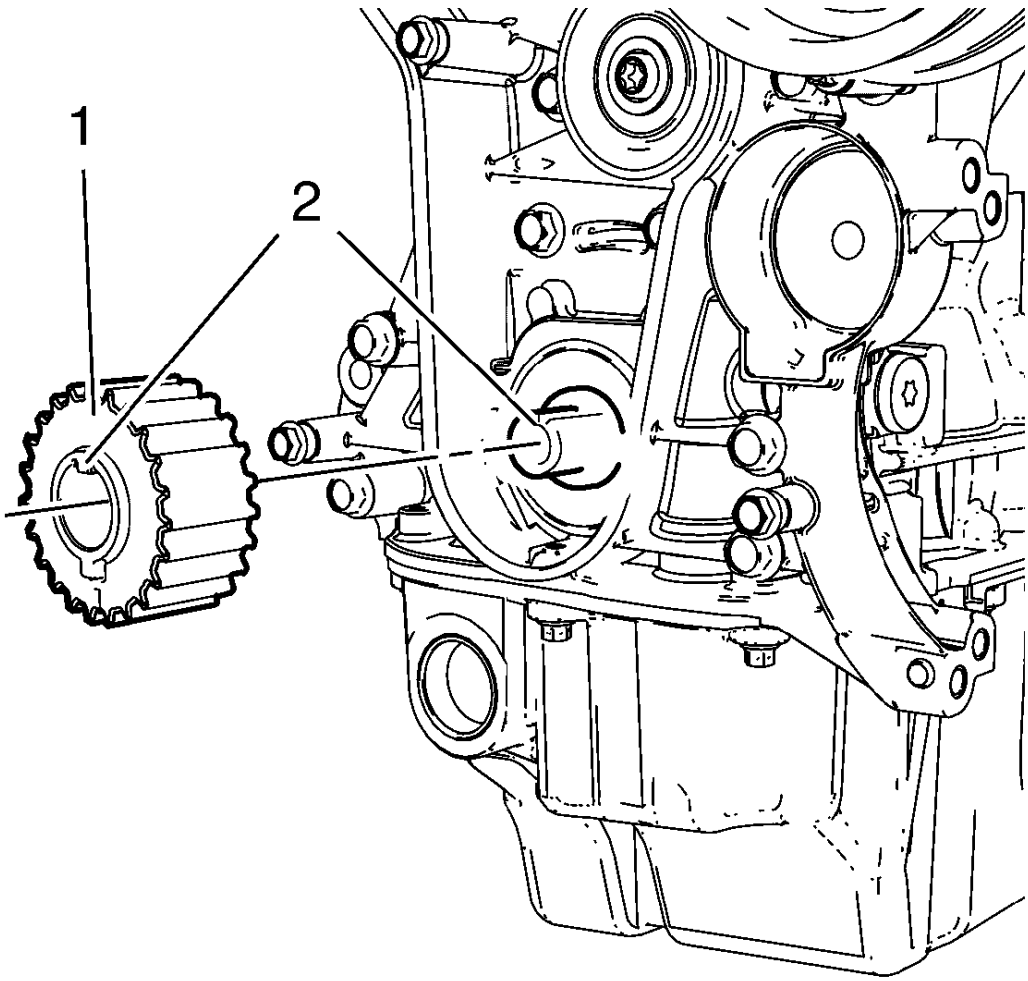

Fig. 282: Crankshaft Sprocket
Courtesy of GENERAL MOTORS COMPANY

NOTE: When installing the crankshaft sprocket, the cam and the groove must align (2).

10. Install the crankshaft sprocket (1).

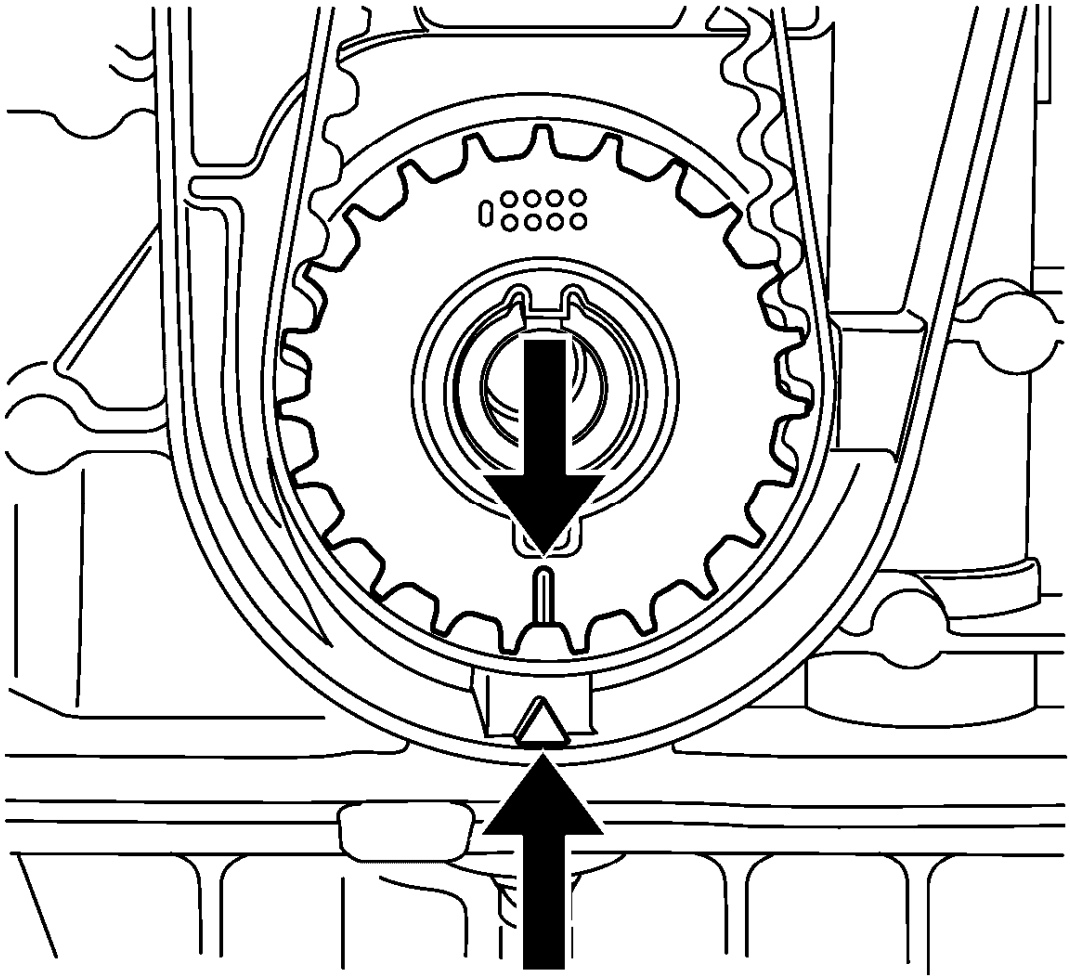

Fig. 283: Aligning Timing Belt Drive Gear And Oil Pump Housing
Courtesy of GENERAL MOTORS COMPANY

11. Set the crankshaft in the direction of engine rotation to TDC. Use the crankshaft balancer bolt.

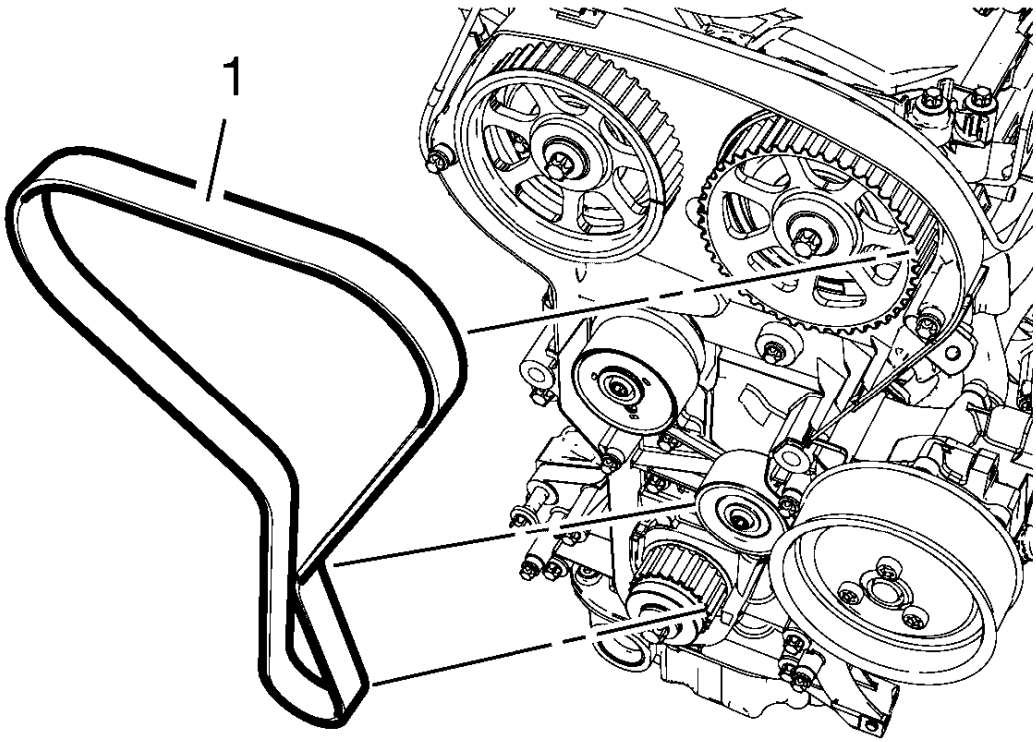

Fig. 284: Drive Belt Routing
Courtesy of GENERAL MOTORS COMPANY

12. Install the timing belt (1).
13. Guide the timing belt past the tensioner and place it on the crankshaft sprocket wheel.
14. Place the timing belt on the exhaust and intake camshaft position actuator adjusters.

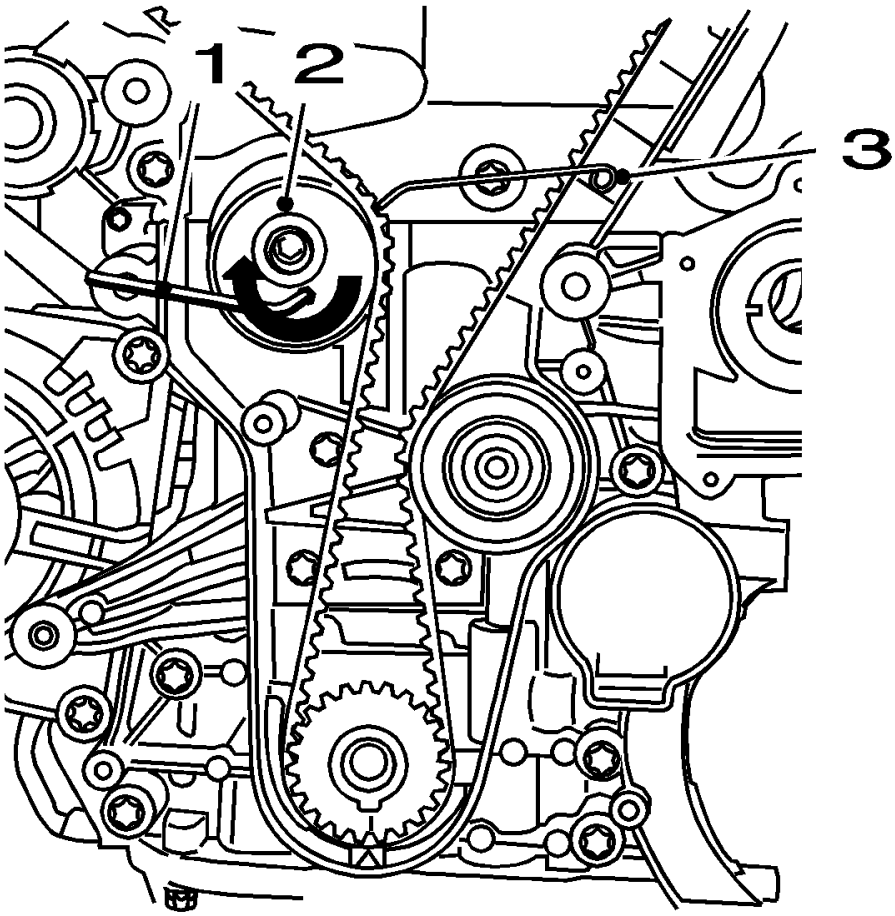

Fig. 285: View Of Drive Belt Tensioner, Allen Key And KM-6333
Courtesy of GENERAL MOTORS COMPANY

15. Apply tension to the timing belt tensioner (2) in the direction of the arrow, using an allen key (1).
16. Remove the **EN-6333** pin (3).

NOTE: The timing belt tensioner moves automatically to the correct position.

17. Release tension on timing belt tensioner.
18. Check position of the camshaft and camshaft position actuator adjuster.
    1. Turn crankshaft 720 degrees in the direction of engine rotation by the crankshaft balancer bolt.

NOTE: Note marking, camshaft position actuator adjuster.

    2. Insert **EN-6340** locking tool into camshaft position actuator adjuster.

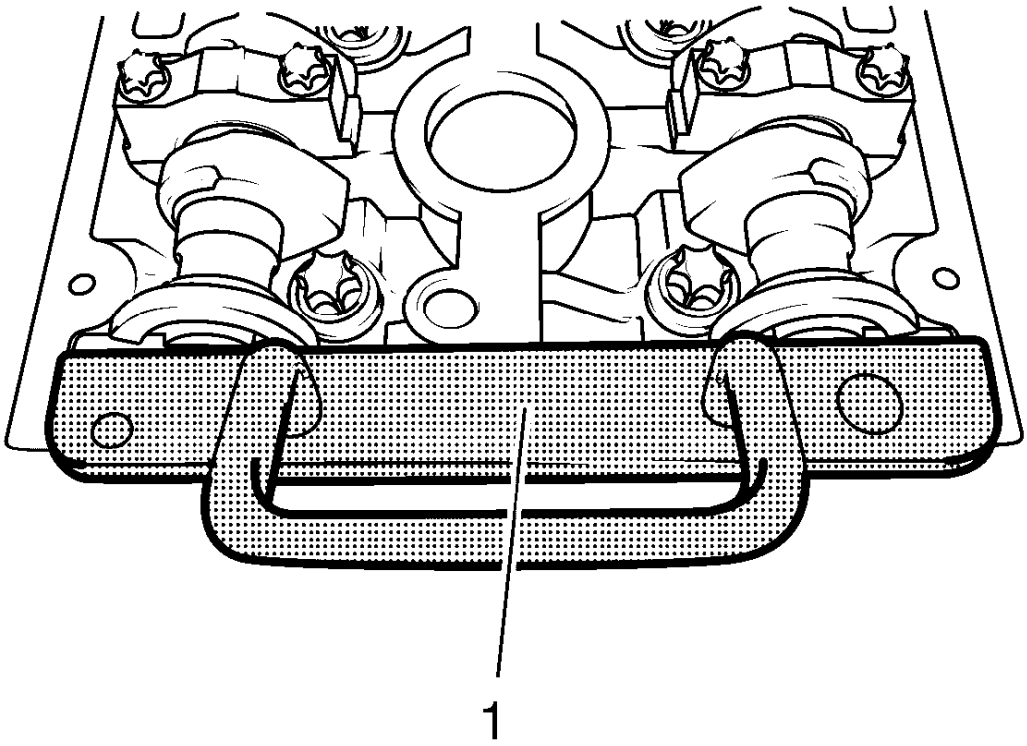

Fig. 286: Locking Tool
Courtesy of GENERAL MOTORS COMPANY

19. Insert the **EN-6628-A** locking tool (1) into the camshafts.
20. Align camshafts by hexagon until **EN-6628-A** locking tool can be inserted in both camshafts.

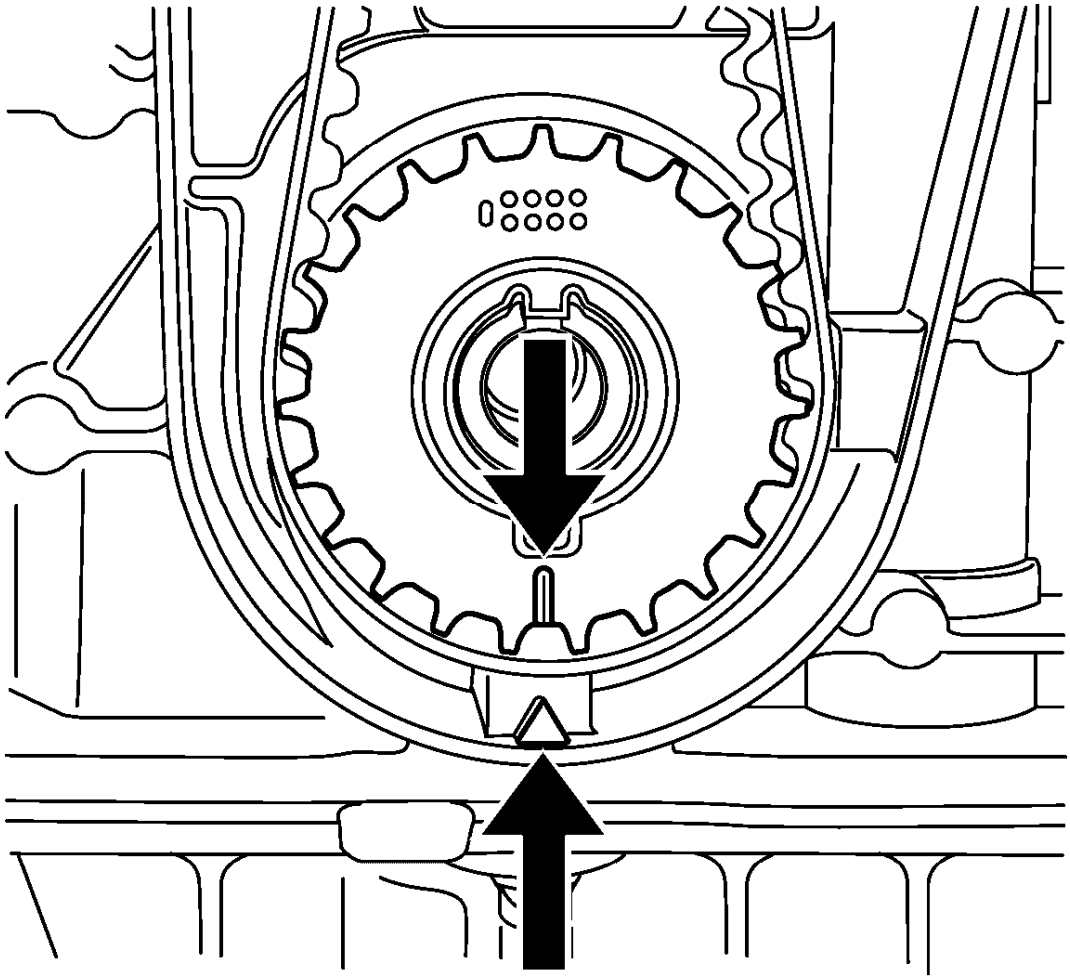

Fig. 287: Aligning Timing Belt Drive Gear And Oil Pump Housing
Courtesy of GENERAL MOTORS COMPANY

NOTE: The crankshaft sprocket and oil pump housing must align.

21. Check the crankshaft position.
22. Remove the **EN-6628-A** locking tool.

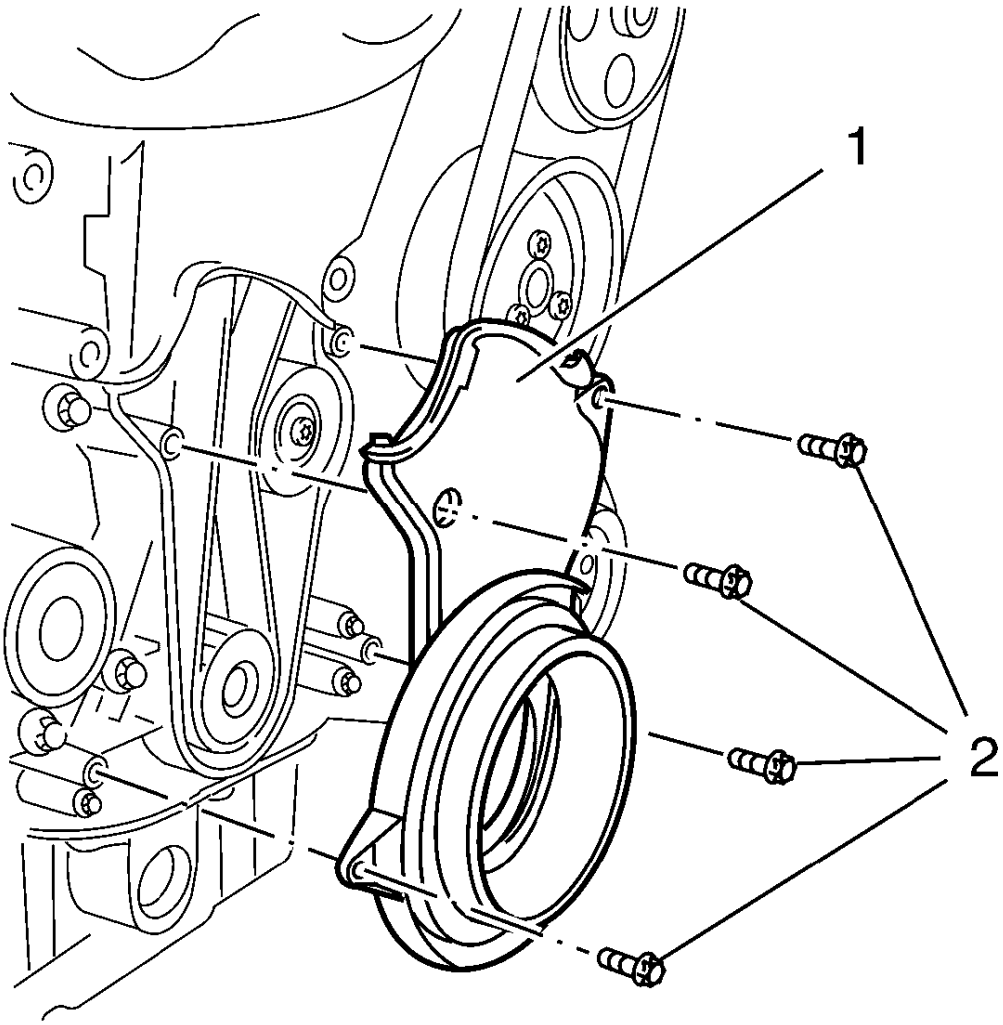

Fig. 288: Timing Belt Lower Front Cover
Courtesy of GENERAL MOTORS COMPANY

23. Install the lower front timing belt cover (1) and tighten the 4 bolts (2) to 6 N.m (53 lb in).
24. Install the crankshaft balancer. Refer to **Crankshaft Balancer Replacement (Manual Transmission)**, **Crankshaft Balancer Replacement (Automatic Transmission)**.
25. Install the drive belt tensioner. Refer to **Drive Belt Tensioner Replacement**.
26. Install the drive belt. Refer to **Drive Belt Replacement**.
27. Lower the vehicle.
28. Install the camshaft position actuator solenoid valve. Refer to **Camshaft Position Actuator Solenoid Valve Replacement**.
29. Install the camshaft cover. Refer to **Camshaft Cover Replacement**.

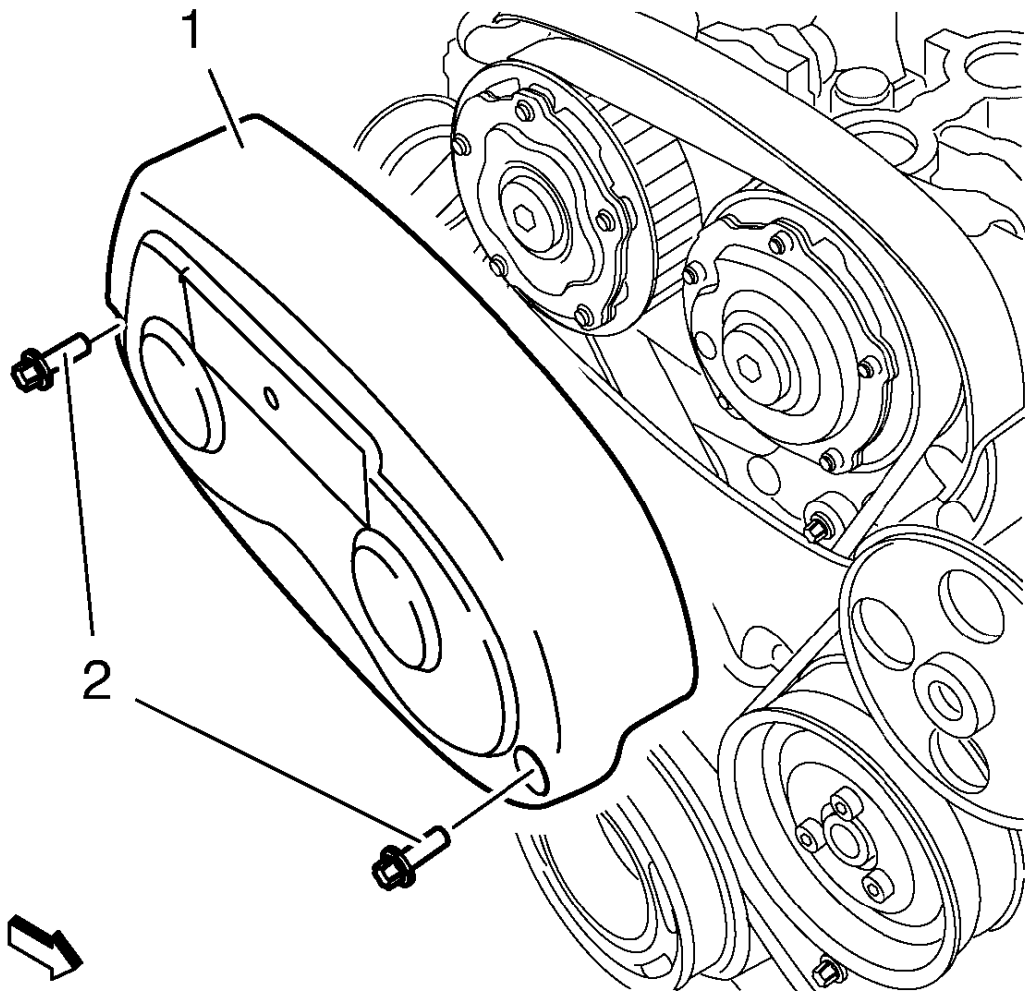

Fig. 289: Timing Belt Upper Front Cover
Courtesy of GENERAL MOTORS COMPANY

30. Install the timing belt upper front cover (1).
31. Install the 2 timing belt upper front cover bolts (2) and tighten to 6 N.m (53 lb in).
32. Install the air cleaner housing. Refer to **Air Cleaner Assembly Replacement (1.8L LWE)** , **Air Cleaner Assembly Replacement (1.8L LUW)** .

CAMSHAFT POSITION ACTUATOR SOLENOID VALVE REPLACEMENT

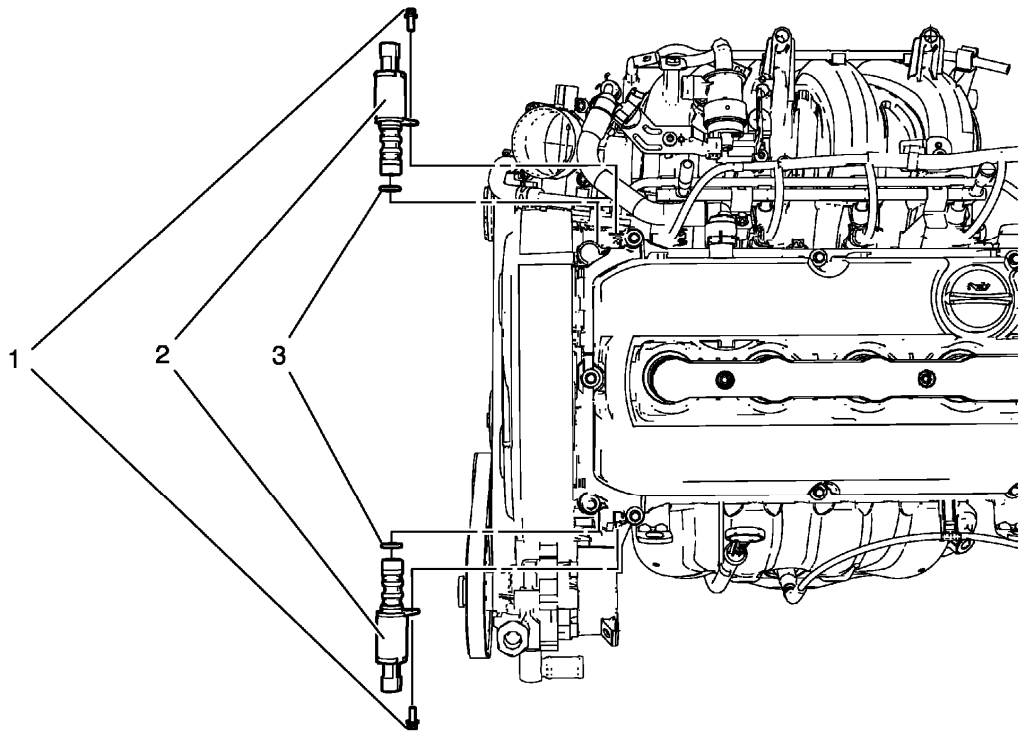

Fig. 290: Camshaft Position Actuator Solenoid Valve
Courtesy of GENERAL MOTORS COMPANY

Camshaft Position Actuator Solenoid Valve Replacement

Callout	Component Name
1	Camshaft Position Actuator Solenoid Valve Bolt (Qty: 2) **CAUTION:** **Refer to Fastener Caution .** **Tighten** 6 N.m (53 lb in)
2	Camshaft Position Actuator Solenoid Valve (Qty: 2)
3	Camshaft Position Actuator Solenoid Valve Seal (Qty: 2) **TIP:** Coat the camshaft position actuator solenoid valve seals with NEW engine oil.

CAMSHAFT REPLACEMENT

Special Tools

- **EN-422** Installer
- **EN-6628-A** Locking Tool

For equivalent regional tools, refer to **Special Tools**.

Removal Procedure

1. Remove the camshaft adjuster. Refer to **Camshaft Position Actuator Adjuster Replacement**.
2. Remove the rear timing belt cover. Refer to **Timing Belt Rear Cover Replacement**.
3. Remove intake camshaft position sensor. Refer to **Camshaft Position Sensor Replacement** .
4. Remove exhaust camshaft position sensor. Refer to **Camshaft Position Sensor Replacement** .
5. Remove **EN-6628-A** locking tool.

   Counterhold at hexagon of camshaft.

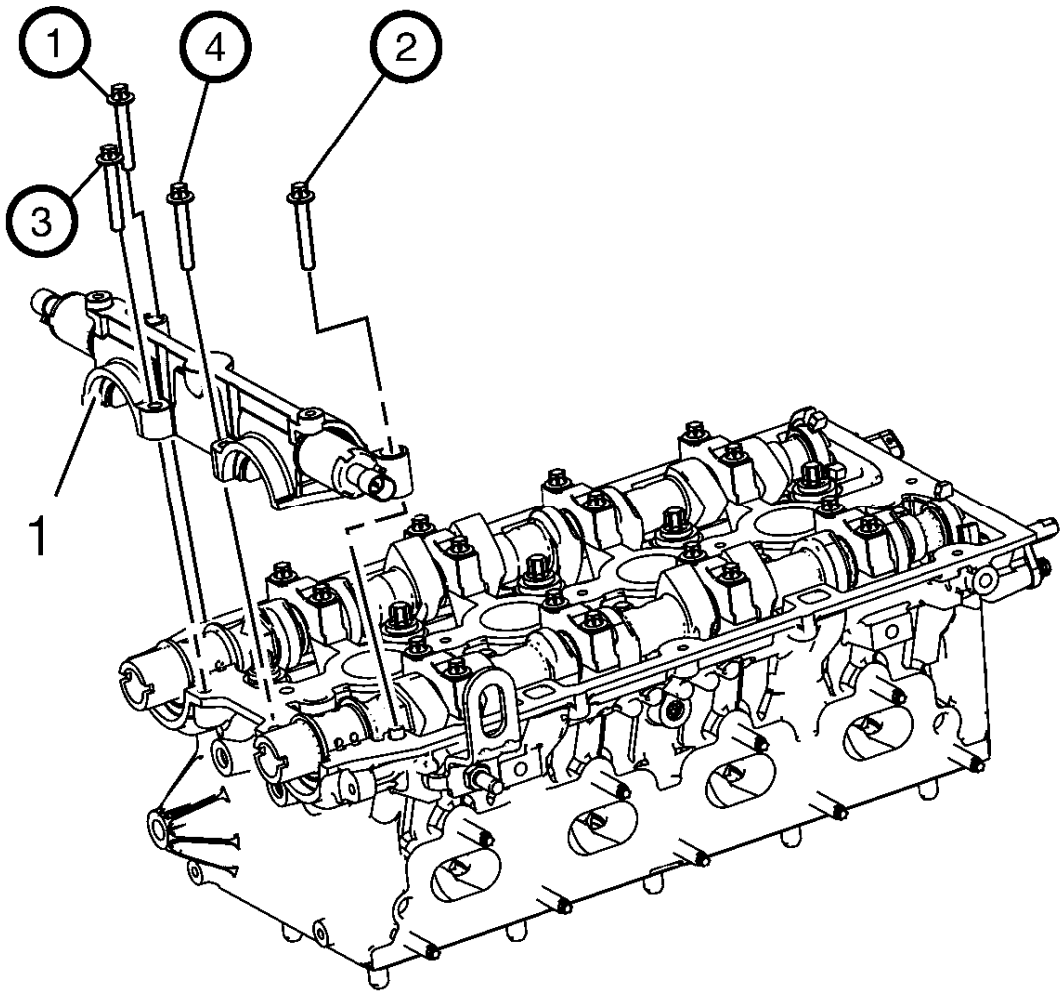

Fig. 291: Camshaft Bearing Cap And Camshaft Bearing Cap Bolts Removal Sequence
Courtesy of GENERAL MOTORS COMPANY

NOTE: Note removal sequence 1-4.

6. Remove the 4 camshaft bearing cap bolts.

NOTE: Release the bearing support by striking it gently with a plastic hammer.

7. Remove the first camshaft bearing cap (1).

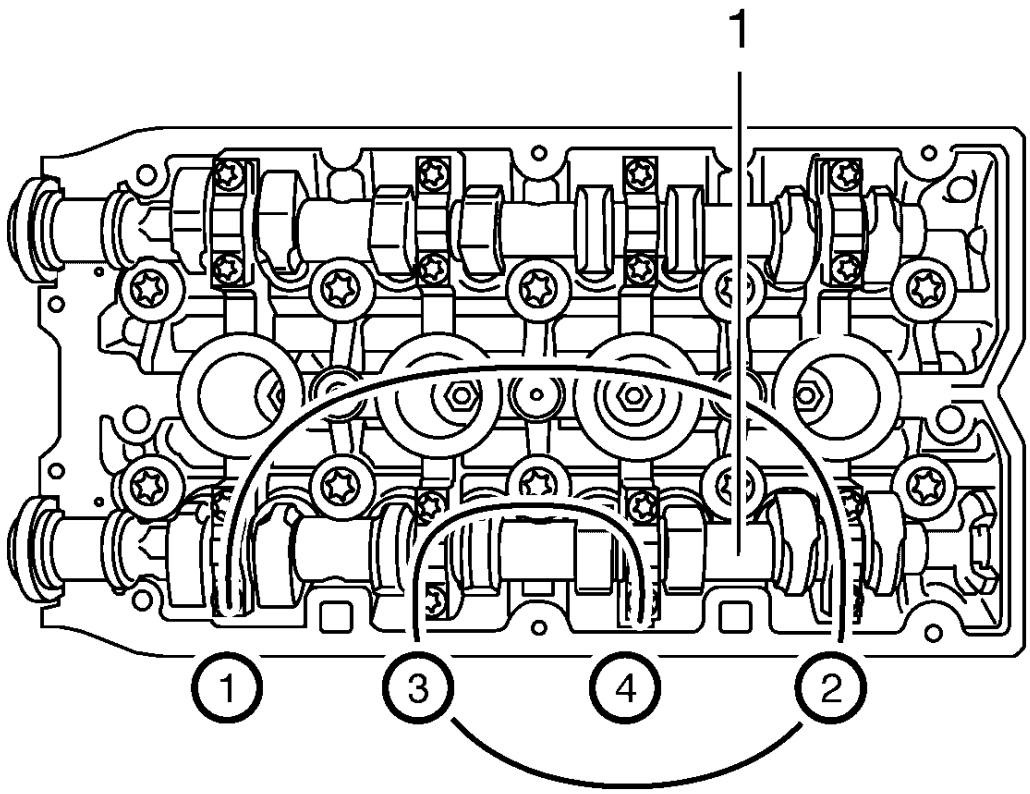

Fig. 292: Exhaust Camshaft Bearing Cap Bolts Loosening Sequence
Courtesy of GENERAL MOTORS COMPANY

8. Loosen the 8 exhaust camshaft bearing cap bolts working from outside to inside in a spiral in steps of 1/2 up to 1 turn.
9. Remove the 8 exhaust camshaft bearing cap bolts.

NOTE: Mark camshaft bearing caps before removal.

10. Remove the 4 exhaust camshaft bearing caps Numbers 6-9 from the cylinder head.

11. Remove the exhaust camshaft (1).

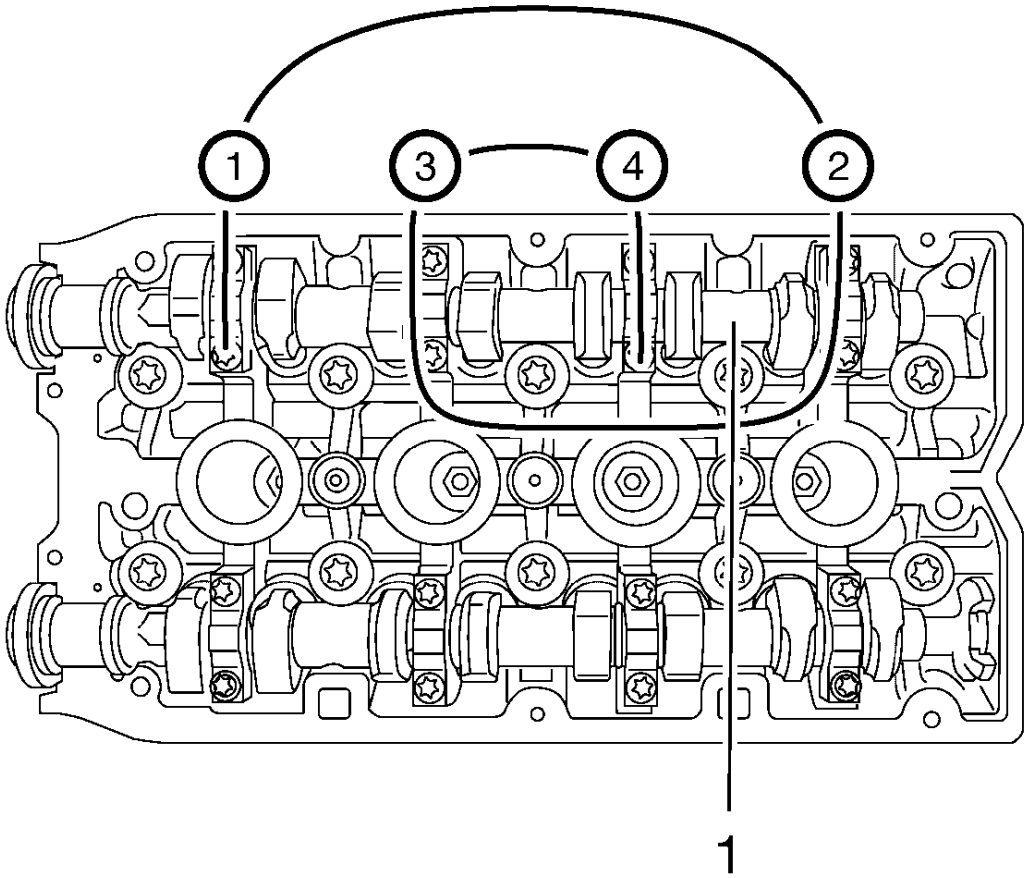

Fig. 293: Intake Camshaft Bearing Cap Bolts Loosening Sequence
Courtesy of GENERAL MOTORS COMPANY

12. Loosen the 8 intake camshaft bearing cap bolts working from outside to inside in a spiral in steps of 1/2 up to 1 turn.
13. Remove the 8 intake camshaft bearing cap bolts.

NOTE: Mark camshaft bearing caps before removal.

14. Remove the 4 intake camshaft bearing caps Numbers 2-5 from the cylinder head.
15. Remove the intake camshaft (1).
16. Detach the seal rings from the camshafts.

Installation Procedure

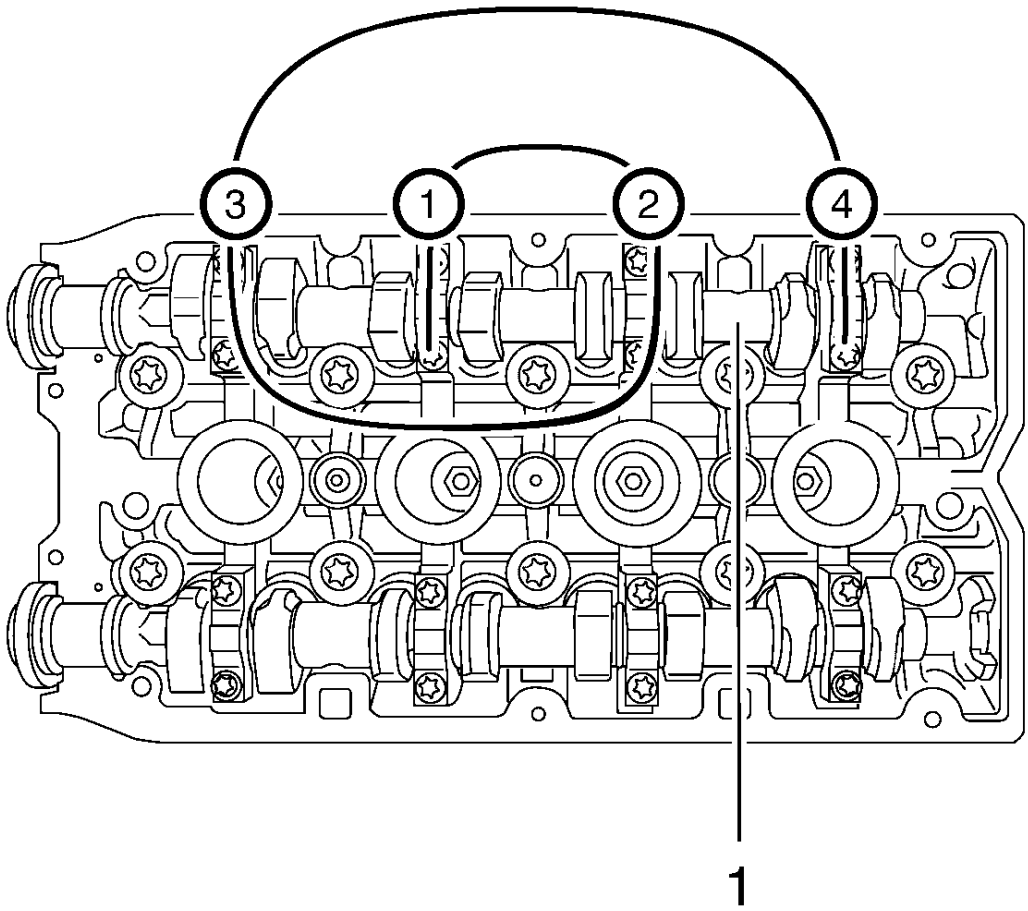

Fig. 294: Intake Camshaft Bearing Cover Bolts Tightening Sequence
Courtesy of GENERAL MOTORS COMPANY

NOTE: Lubricate with clean engine oil.

1. Install the intake camshaft (1).

NOTE: Note the identification marking on the camshaft bearing cover.

2. Install the 4 intake camshaft bearing cover Numbers 2-5.

CAUTION: Refer to Fastener Caution .

3. Install the 8 intake camshaft bearing cover bolts and tighten in a spiral from the inside to the outside to 8 N.m (71 lb in).

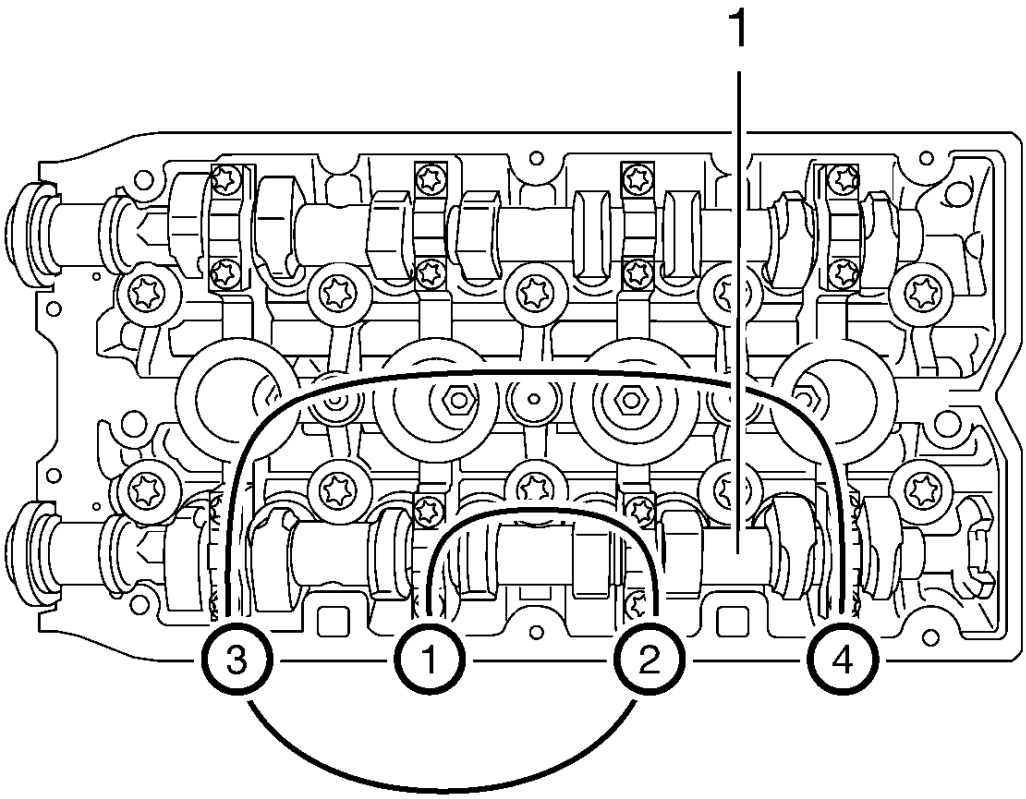

Fig. 295: Exhaust Camshaft Bearing Cover Bolts Tightening Sequence
Courtesy of GENERAL MOTORS COMPANY

NOTE: Lubricate with clean engine oil.

4. Install the exhaust camshaft (1).

NOTE: Note the identification marking on the camshaft bearing cover.

5. Install the 4 exhaust camshaft bearing cover Numbers 6-9.
6. Install the 8 exhaust camshaft bearing cover bolts and tighten in a spiral from the inside to the outside to 8 N.m (71 lb in).

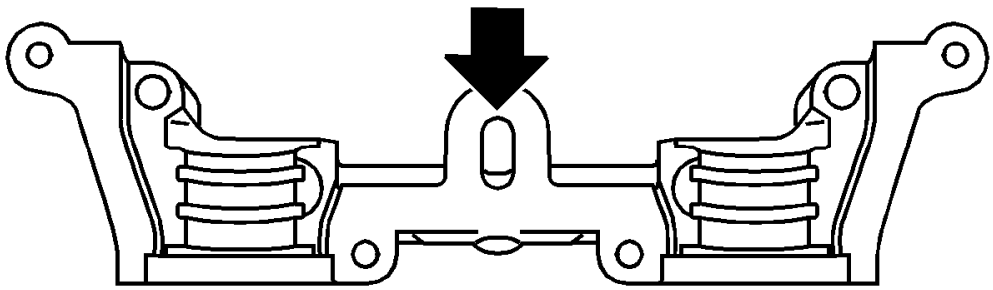

Fig. 296: View Of Oil Duct
Courtesy of GENERAL MOTORS COMPANY

NOTE: Sealing surfaces must be free from oil and grease.

7. Clean sealing surfaces of the first camshaft bearing support and the cylinder head with a suitable tool.

   Clean oil duct from any sealant residue.

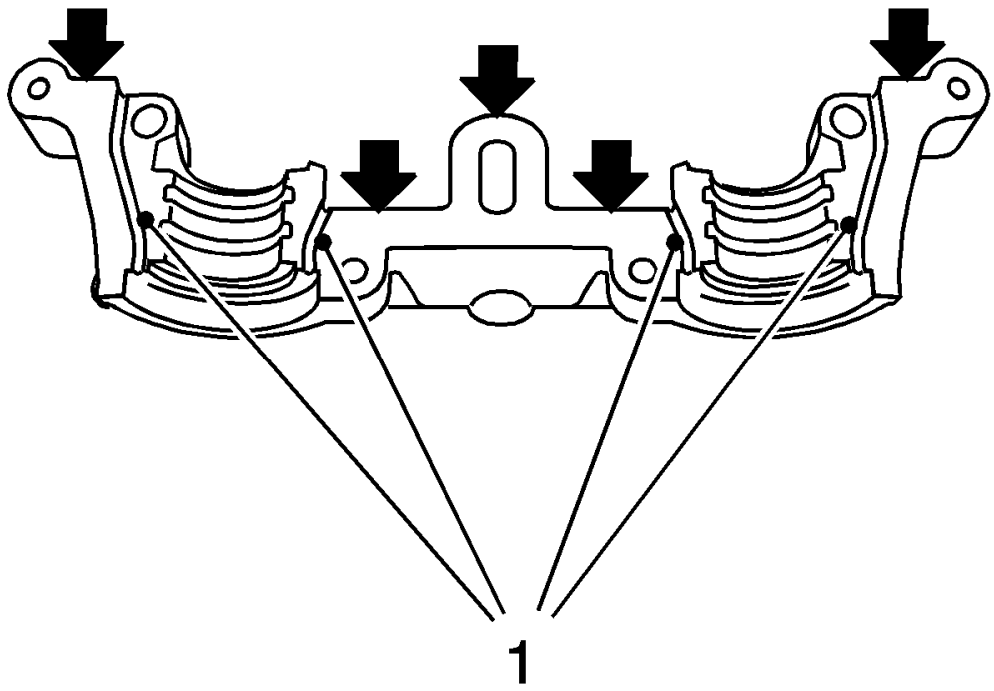

Fig. 297: View Of Sealing Surfaces And Grooves
Courtesy of GENERAL MOTORS COMPANY

NOTE:

- **Sealing surfaces must be free from oil and grease.**
- **It is essential to ensure that no sealant is applied outside the marked sealing areas.**
- **The grooves adjacent to the sealing surfaces must remain free from sealant.**

8. Apply surface sealant to sealing surfaces (1) of the first camshaft bearing cap thinly and evenly.
9. Position the first camshaft bearing cap on the cylinder block and tighten the bolts approximately to 2 N.m (18 lb in).

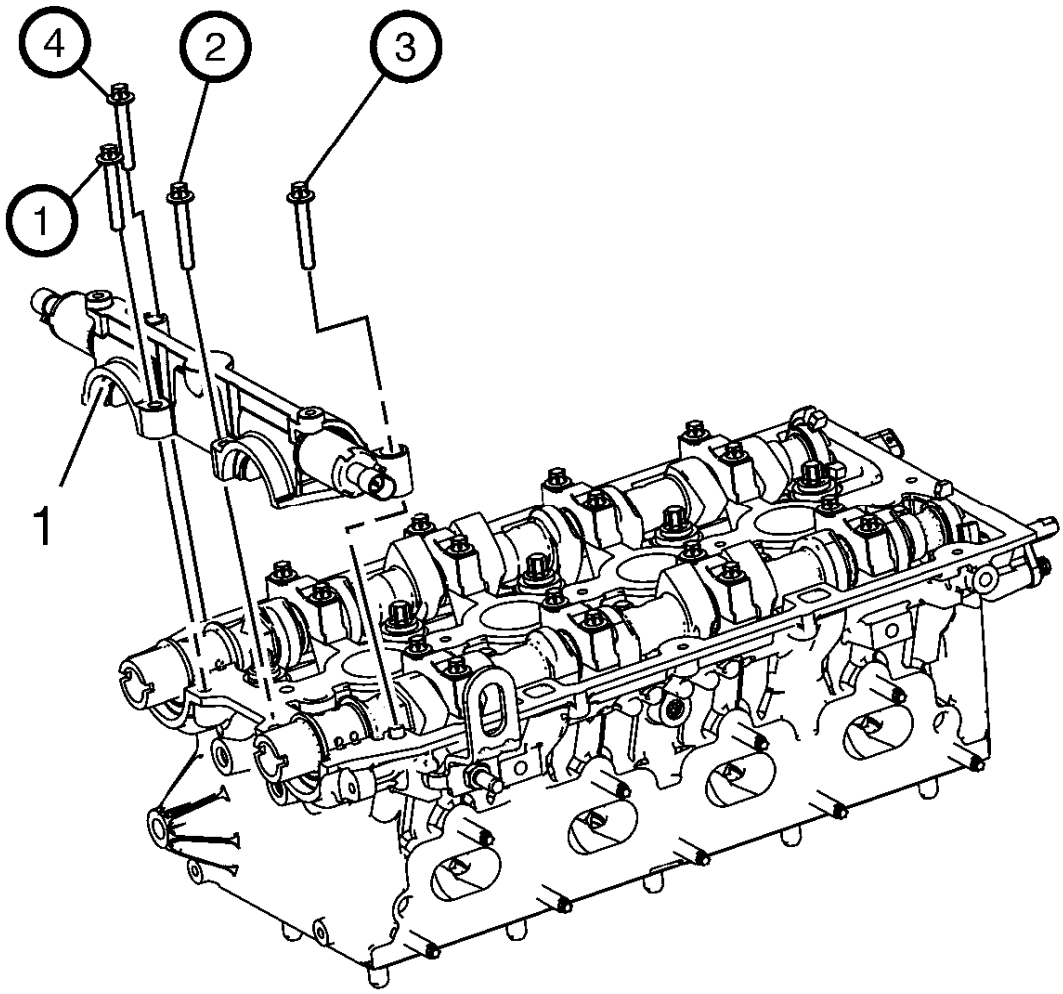

Fig. 298: Camshaft Bearing Cap
Courtesy of GENERAL MOTORS COMPANY

NOTE: No sealant may reach the camshafts.

10. Install the first camshaft bearing cap (1).

NOTE: Note installation sequence 1-4.

11. Install the first camshaft bearing cap bolts and tighten to 8 N.m (71 lb in).

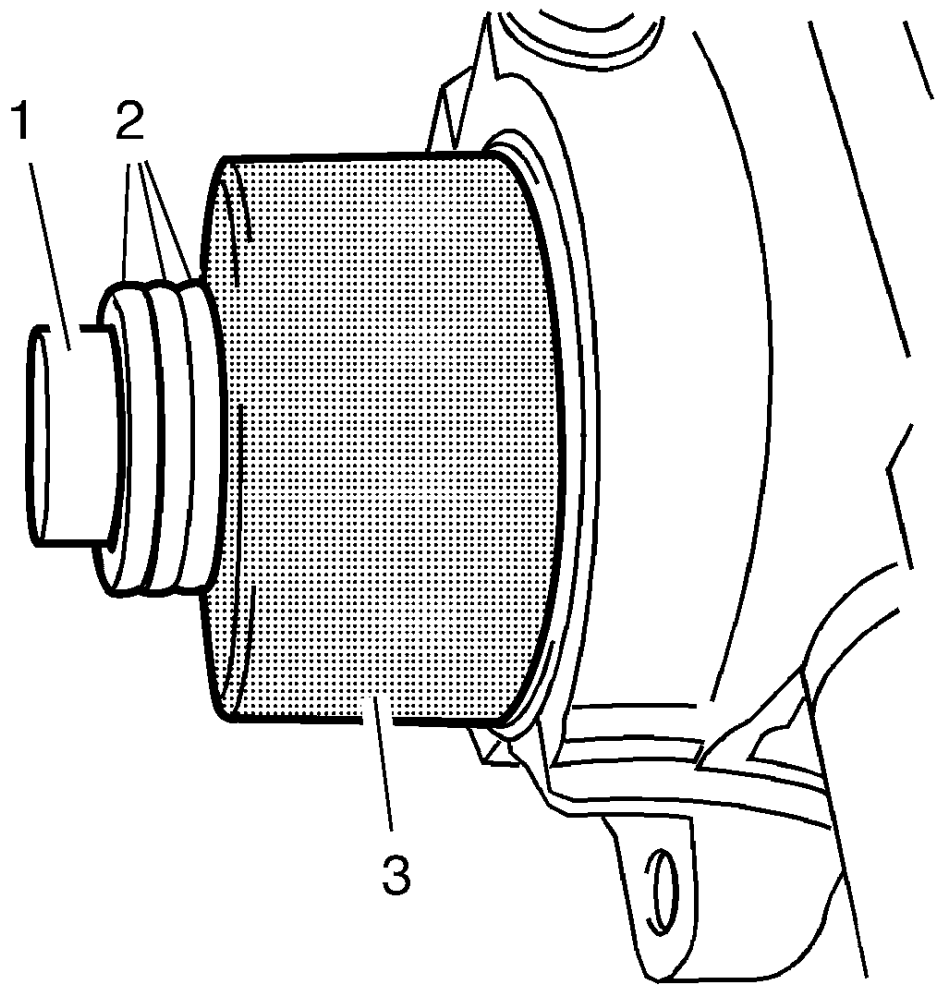

Fig. 299: Camshaft Sprocket Bolt, Shims And Tool
Courtesy of GENERAL MOTORS COMPANY

12. Install 2 NEW sealing rings to the camshafts.
13. Tighten the seal ring with **EN-422** installer (3) on the camshaft until this is in contact with the cylinder head.
14. To install, use camshaft sprocket bolt (1) in conjunction with shims (2) with a total thickness of approximately 10 mm (0.394 in).
15. Remove the **EN-422** installer (3).
16. Turn the intake camshaft against the direction of engine rotation.
17. Install **EN-6628-A** locking tool.
18. Turn the exhaust camshaft in the direction of rotation of the engine.
19. Install **EN-6628-A** locking tool.
20. Install exhaust camshaft position sensor. Refer to **Camshaft Position Sensor Replacement** .
21. Install intake camshaft position sensor. Refer to **Camshaft Position Sensor Replacement** .

22. Install the rear timing belt cover. Refer to **Timing Belt Rear Cover Replacement**.
23. Install the camshaft adjuster. Refer to **Camshaft Position Actuator Adjuster Replacement**.

VALVE STEM OIL SEAL AND VALVE SPRING REPLACEMENT

Special Tools

- **207649** Rod Hairpin Clips
- **547324** Flange Screws
- **EN-840** Pliers / Remover
- **EN-958** Installer
- **EN-45059** Angle Meter
- **EN-50717** Kit
- **J-43649-2** Rods

For equivalent regional tools, refer to **Special Tools**.

Removal Procedure

1. Remove the spark plugs. Refer to **Spark Plug Replacement** .
2. Remove the camshaft position actuator adjuster. Refer to **Camshaft Position Actuator Adjuster Replacement**.
3. Remove both camshafts. Refer to **Camshaft Replacement**.
4. Remove the valve lifter. Refer to **Valve Lifter Replacement**.

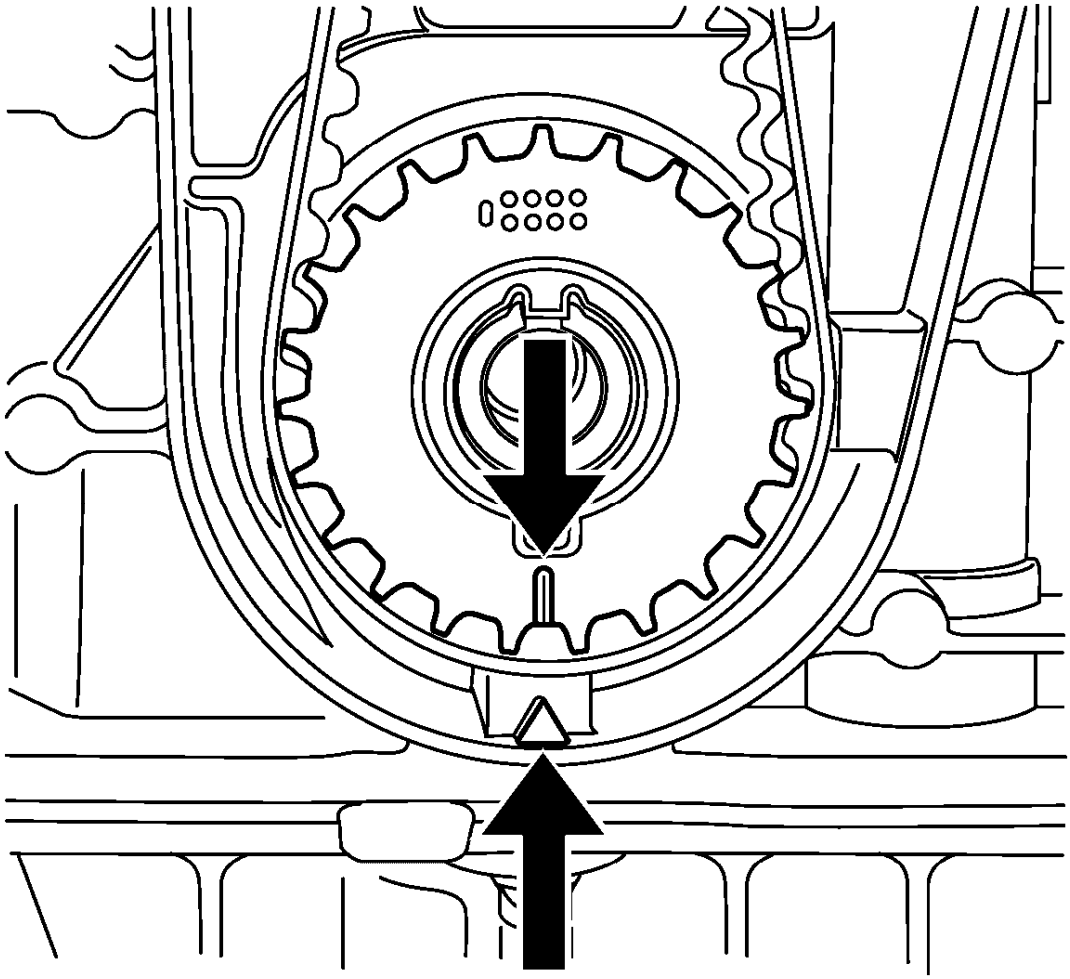

Fig. 300: Aligning Timing Belt Drive Gear And Oil Pump Housing
Courtesy of GENERAL MOTORS COMPANY

5. For cylinder 1 and 4 set the crankshaft to TDC marking, cylinder number 1. Use the crankshaft balancer bolt.
6. For cylinder 2 and 3, set the crankshaft BDC (180 degrees from TDC marking). Use the crankshaft balancer bolt.

NOTE: Wheels must contact the ground.

7. Shift to 1. gear (MT) or park position (AT) and apply the park brake.

Valve Stem Oil Seal Removal

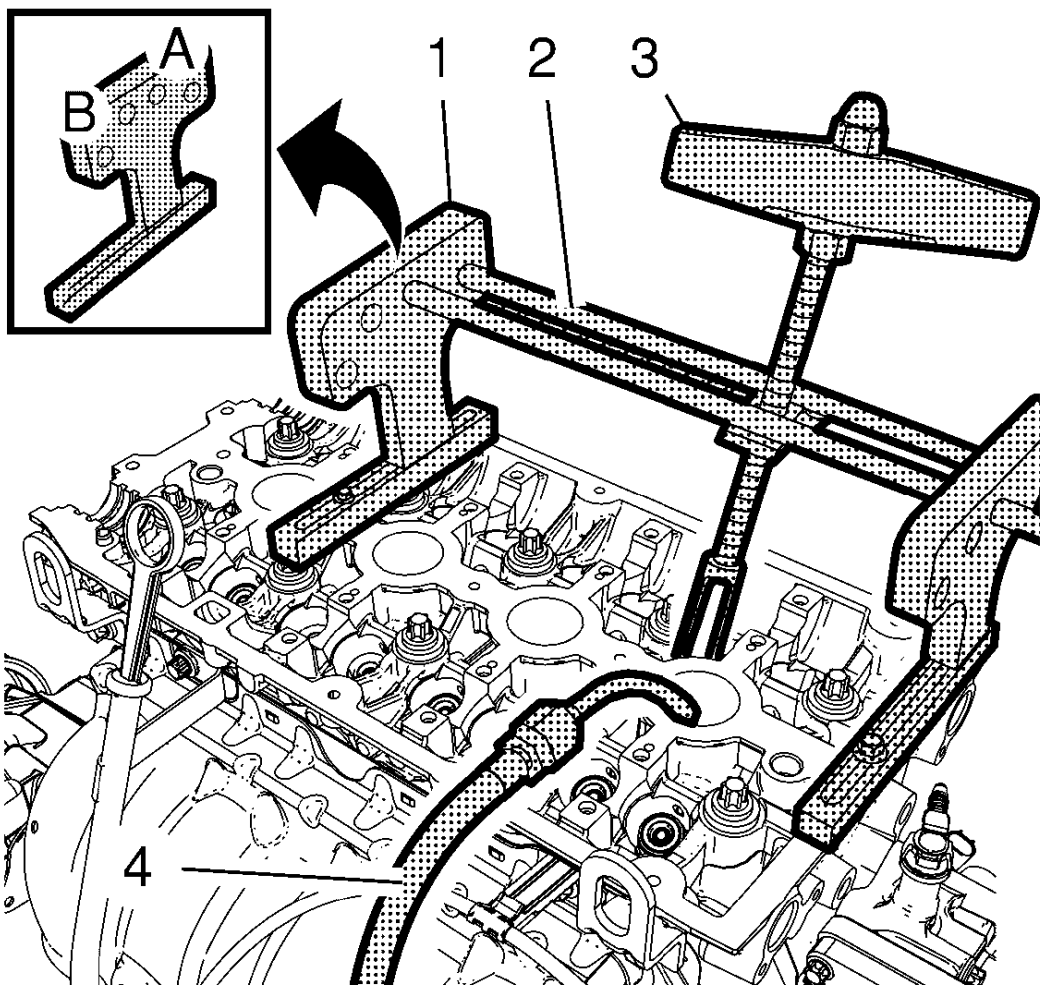

Fig. 301: Valve Stem Oil Seal Removal Tools
Courtesy of GENERAL MOTORS COMPANY

1. Install the 2 **EN-50717-1** stands (1) to the cylinder head and fix them with the **547324** screws.
2. Install the 2 **J-43649-2** rods (2) and the **EN-51717-2** compressor (3) to the B-side of the **EN-50717-1** stands. Secure the rods with the **207649** clips then.
3. Install an suitable air pressure adapter (4) to the spark plug hole.
4. Apply air pressure to the corresponding cylinder.
5. Position the **EN-51717-2** compressor (3) so that its adapter proper contacts the valve spring retainer and pretension the compressor.

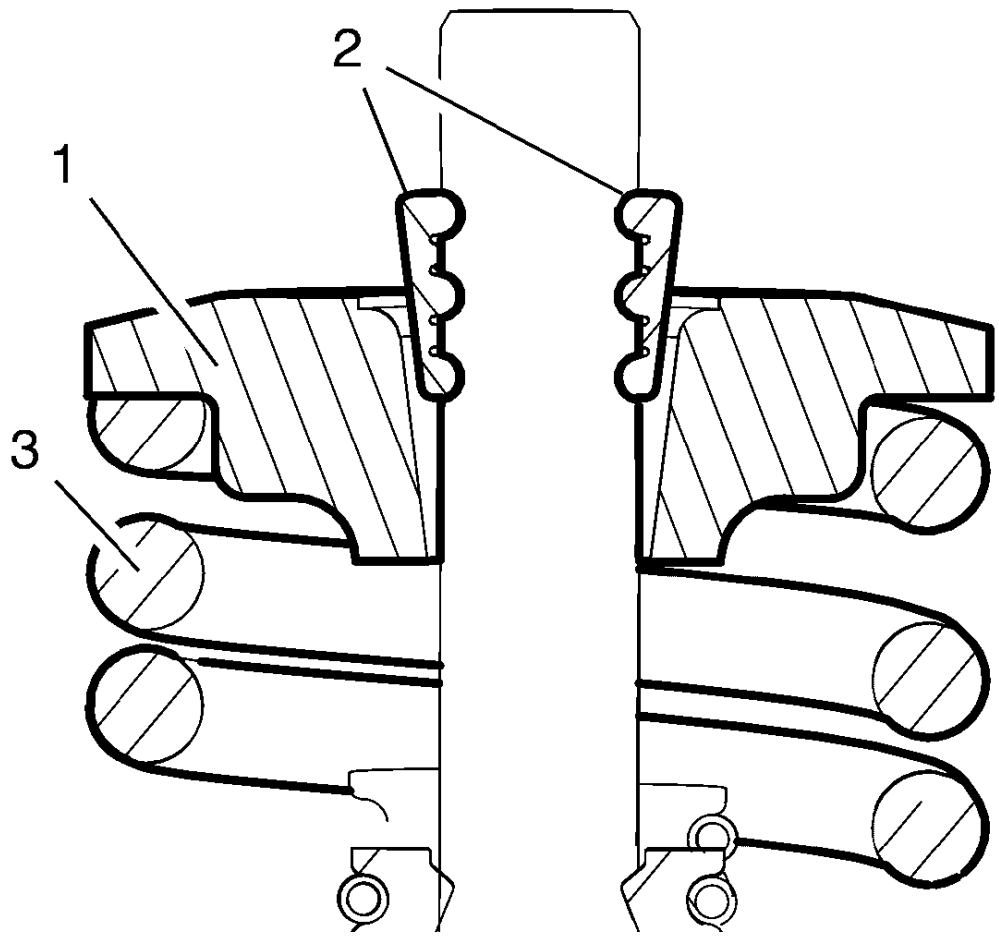

Fig. 302: Valve Spring Retainer And Valve Spring
Courtesy of GENERAL MOTORS COMPANY

WARNING: Valve springs can be tightly compressed. Use care when removing the retainers and plugs. Personal injury could result.

6. Apply pressure to the **EN-50717-2** compressor to push down the vale spring retainer (1) and compress the valve spring (3) until the valve keys (2) are free from tension. Carefully remove the valve keys then.
7. Release the tension from the **EN-50717-2** compressor.
8. Remove the valve spring retainer (1) and the valve spring (3).

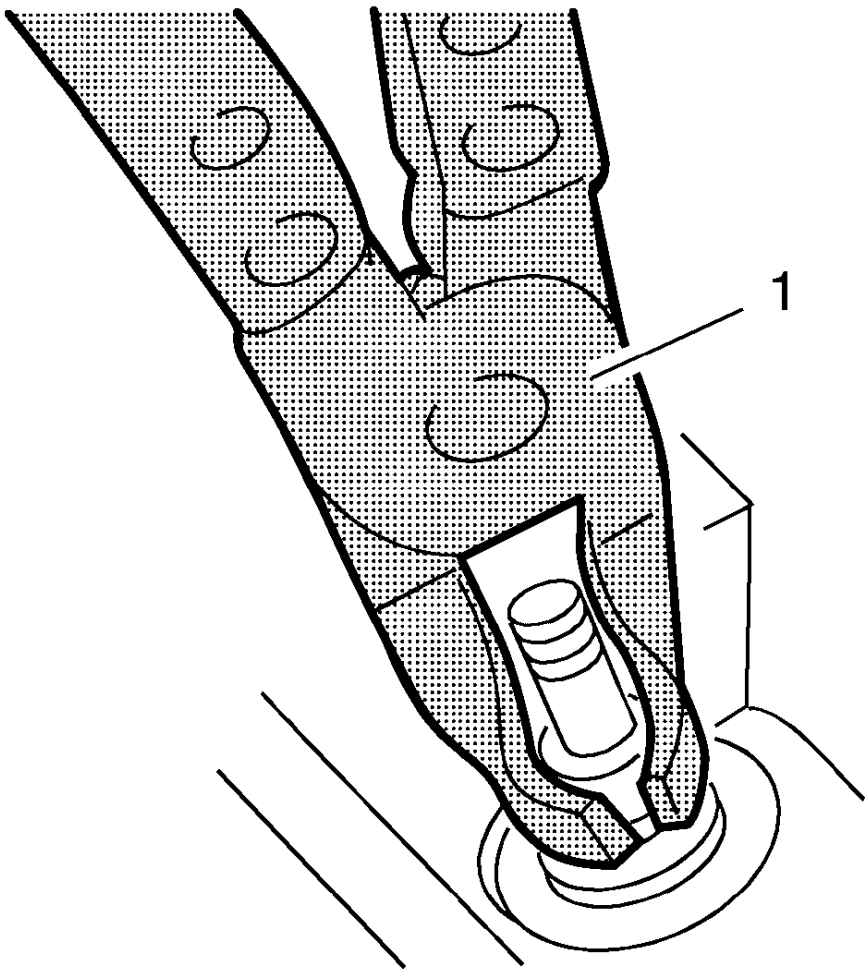

Fig. 303: Valve Stem Seal Removal Tool
Courtesy of GENERAL MOTORS COMPANY

9. Remove and DISCARD the valve stem oil seal, using the **EN-840** pliers (1).

Valve Stem Oil Seal Installation

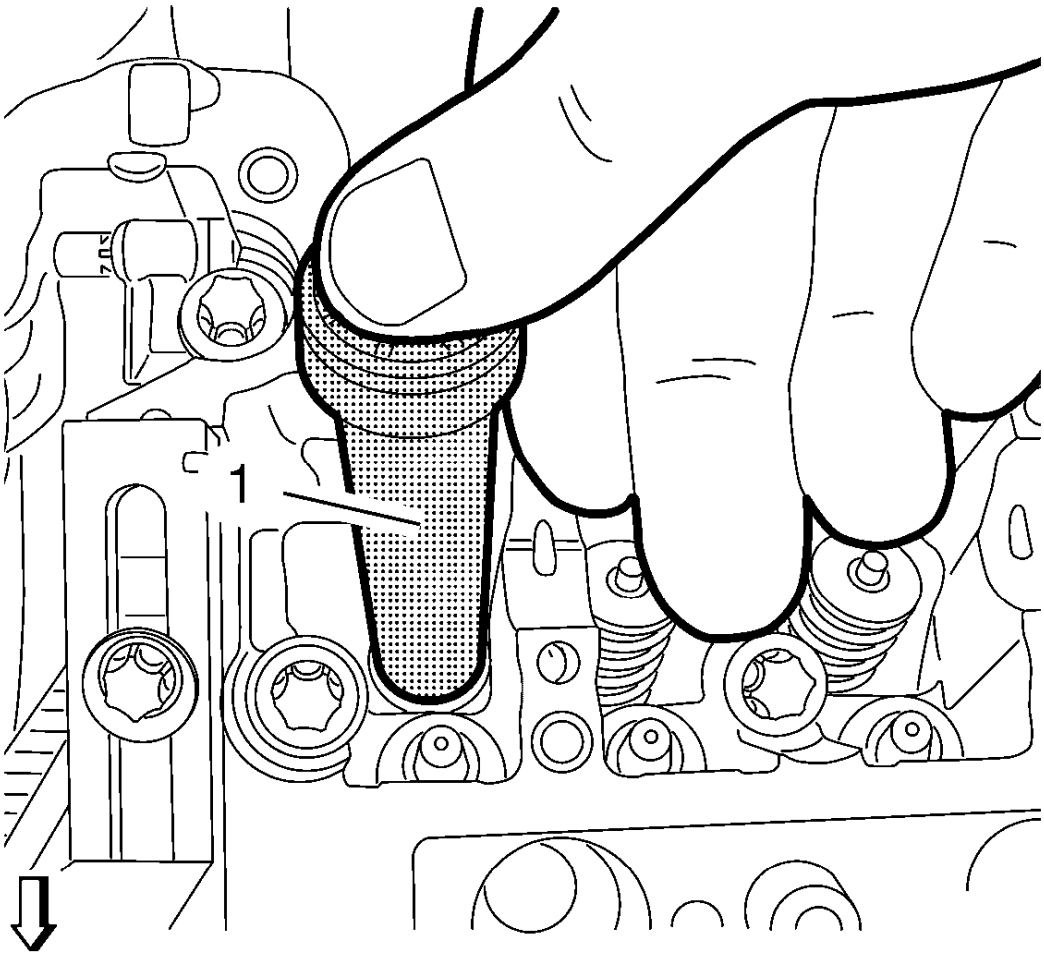

Fig. 304: Intake Valve Stem Oil Seal Installation Tool
Courtesy of GENERAL MOTORS COMPANY

NOTE: Lubricate the NEW valve stem oil seal with clean engine oil.

1. Install the NEW valve stem oil seal, using the **EN-958** installer (1).
2. Loosely install the valve spring and the valve spring retainer.

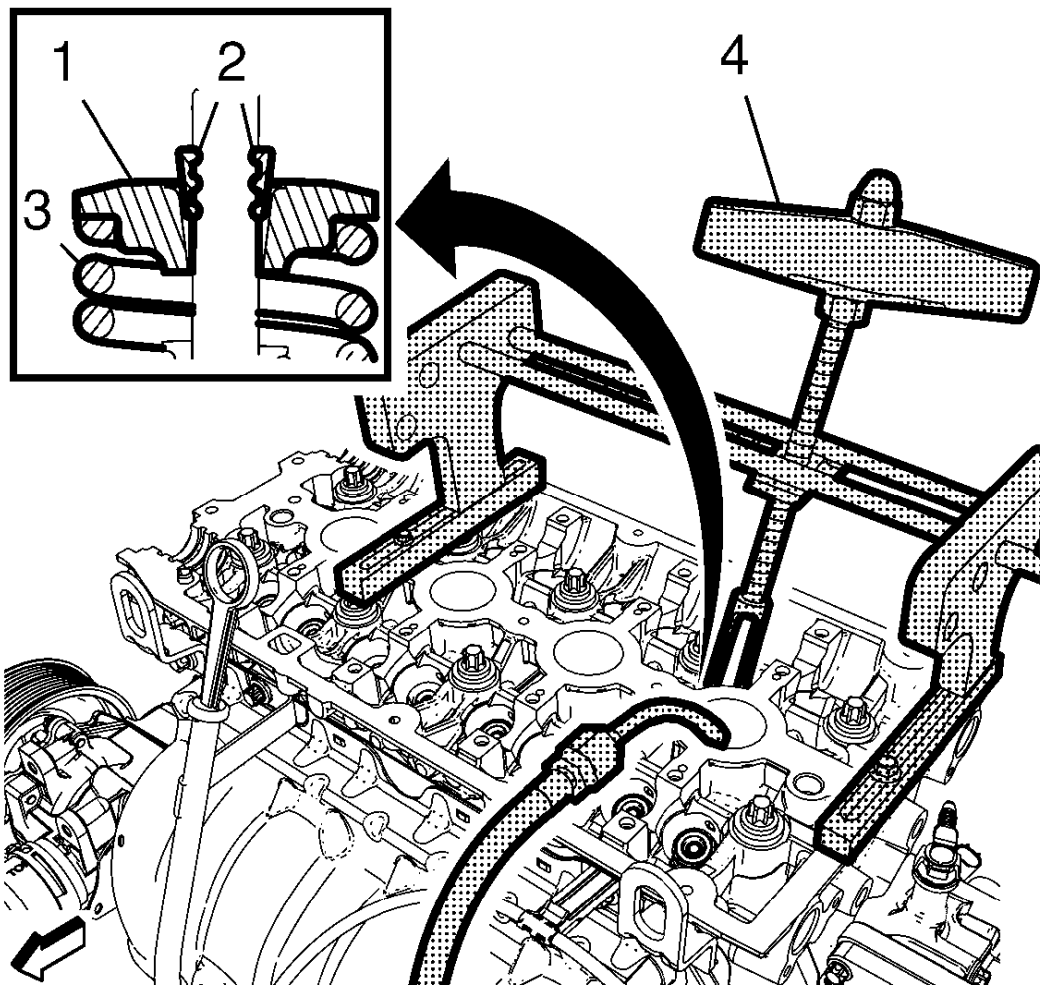

Fig. 305: Valve Spring Compressor
Courtesy of GENERAL MOTORS COMPANY

CAUTION: The valve stem keys must correctly seat in the valve spring cap. Engine damage may occur by not installing properly.

3. Using the **EN-51717-2** compressor (4), push down the valve spring retainer (1) and compress the valve spring (3) until the valve keys (2) can be inserted. Carefully insert the valve keys then, so that they are proper installed to the valve stem grooves.
4. Carefully release the tension from the **EN-50717-2** compressor.
5. Inspect the valve keys and valve spring retainer for proper seat.
6. Repeat the procedure with the remaining valves and cylinders. Transfer the **EN-50717-1** stands and the **EN-51717-2** compressor as needed.
7. Take care that air pressure is always applied to the combustion chamber of the treated cylinder.

Installation Procedure

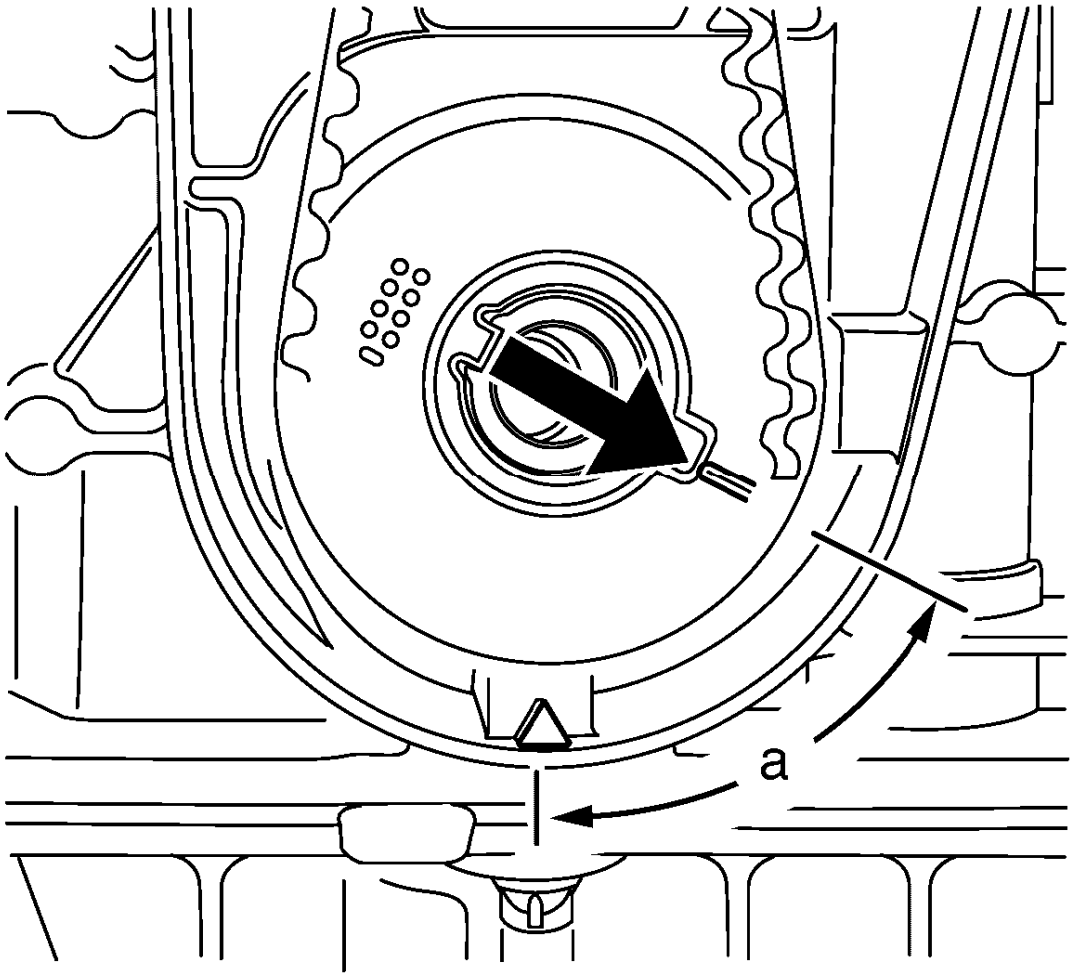

Fig. 306: Turning Crankshaft Against Direction Of Engine Rotation
Courtesy of GENERAL MOTORS COMPANY

1. Set the crankshaft in direction of engine rotation to 60 degrees (a) before TDC. Use the **EN-45059** meter and the crankshaft balancer bolt.
2. Install the valve lifter. Refer to **Valve Lifter Replacement**.
3. Install both camshafts. Refer to **Camshaft Replacement**.
4. Install the camshaft position actuator adjuster. Refer to **Camshaft Position Actuator Adjuster Replacement**.
5. Install the spark plugs. Refer to **Spark Plug Replacement** .

VALVE GUIDE REAMING, AND VALVE AND SEAT GRINDING

Valve Cleaning Procedure

1. Use soft bristle wire brush to clean any carbon build-up from the valve head. DO NOT use a wire brush

on any part of the valve stem. The valve stem is chrome plated to provide enhanced wear characteristics. Wire brushing the stem could remove the chrome plating.

2. Thoroughly clean the valve with solvent and wipe dry.

Valve Visual Inspection Procedure

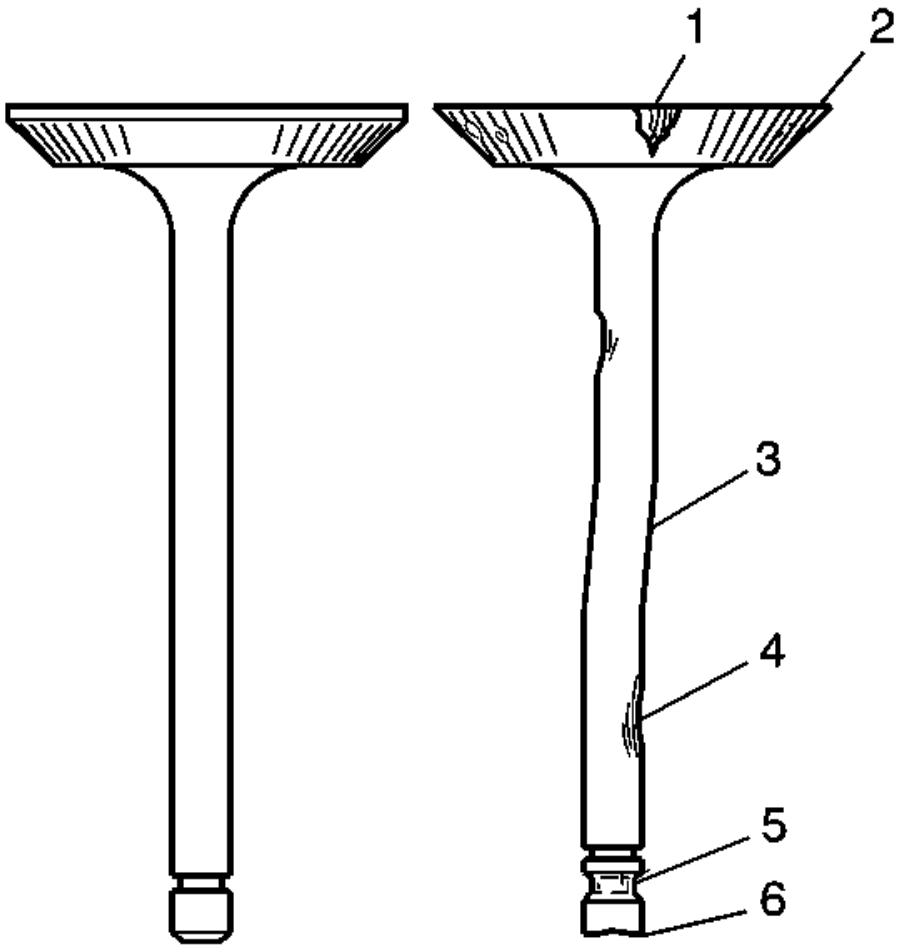

Fig. 307: Identifying Inspection Points For Valves Damage
Courtesy of GENERAL MOTORS COMPANY

1. Inspect the valve for damage from the head to tip for the following conditions:
   - Pitting in the valve seat area (1)
   - Lack of valve margin (2)
   - Bending in the valve stem (3)
   - Pitting or excessive wear in the stem (4)
   - Worn valve key grooves (5)
   - Worn valve tip (6)

2. Replace the valve if any of these conditions exist.

Valve Measurement and Reconditioning Overview

NOTE:

- **Proper valve service is critical to engine performance. Therefore, all detailed measurement procedures must be followed to identify components that are out of specification.**
- **If the measurement procedures reveal that the valve or valve seat must be reconditioned, it is critical to perform the measurement procedures after reconditioning.**

Valve Seat Width Measurement Procedure

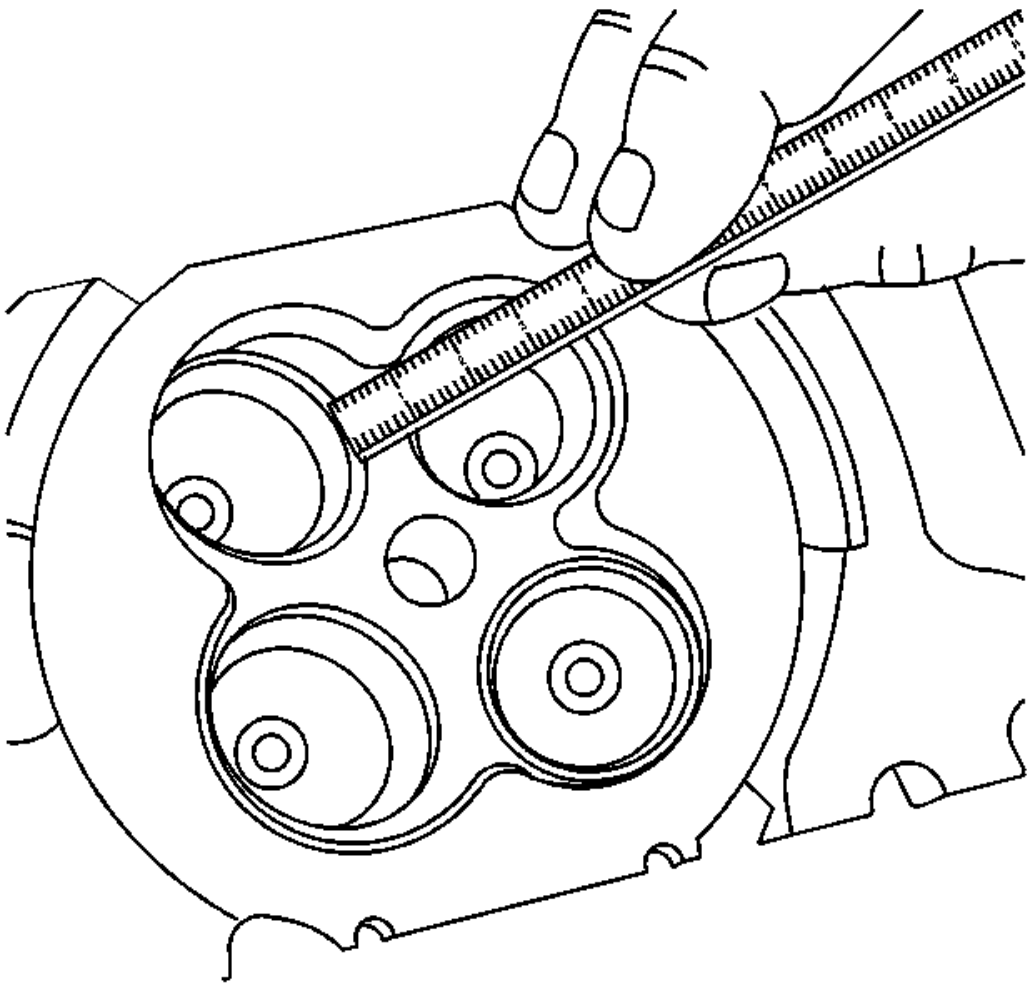

Fig. 308: Checking Valve Seat Width
Courtesy of GENERAL MOTORS COMPANY

1. Measure the valve seat width in the cylinder head using a proper scale.

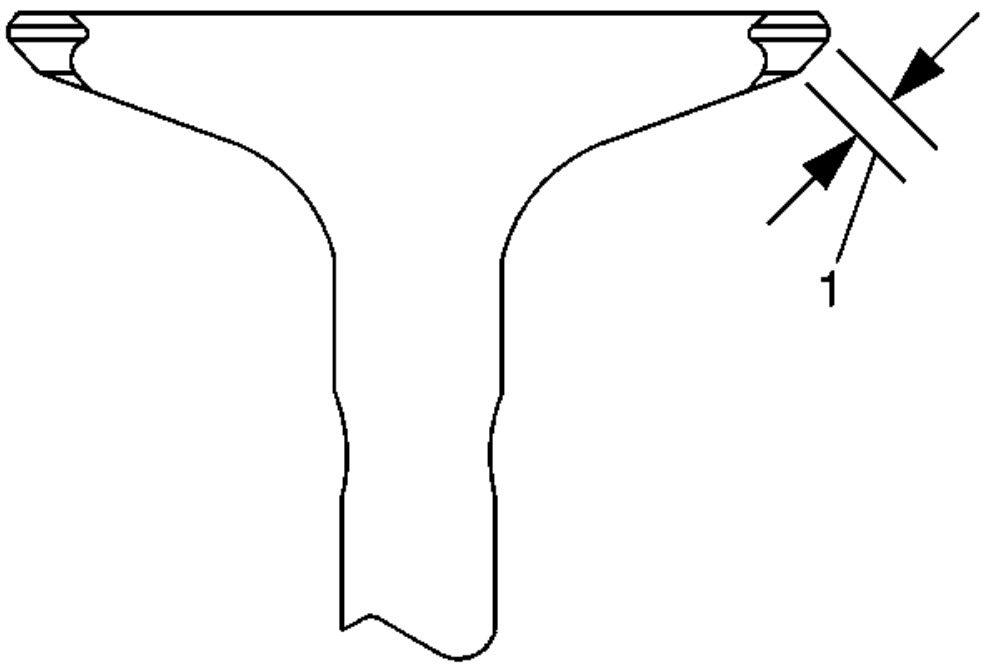

Fig. 309: Measuring Seat Width On Valve Face
Courtesy of GENERAL MOTORS COMPANY

2. Measure the seat width on the valve face (1) using a proper scale.

NOTE: **The seat contact area must be at least 0.5 mm (0.020 in) from the outer diameter (margin) of the valve. If the contact area is too close to the margins, the seat must be reconditioned to move the contact area away from the margin.**

3. Compare your measurements with the specifications, refer to **Engine Mechanical Specifications**.
4. If the seat widths are acceptable, check the valve seat roundness using the Valve Seat Roundness Measurement Procedure.
5. If the seat width is not acceptable, you must grind the valve seat using the Valve and Seat Reconditioning Procedure to bring the width back into specification. Proper valve seat width is critical to providing the correct amount of valve heat dissipation.

Valve Seat Roundness Measurement Procedure

1. Measure the valve seat roundness using a dial indicator attached to a tapered pilot installed in the guide. The pilot should have a slight bind when installed in the guide.

CAUTION: The correct size pilot must be used. Do not use adjustable diameter pilots. Adjustable pilots may damage the valve guides.

2. Compare your measurements with the specifications, refer to **Engine Mechanical Specifications**.
3. If the valve seat exceeds the roundness specification, you must grind the valve and valve seat using the Valve and Seat Reconditioning Procedure.
4. If new valves are being used, the valve seat roundness must be within 0.05 mm (0.002 in).

Valve Margin Measurement Procedure

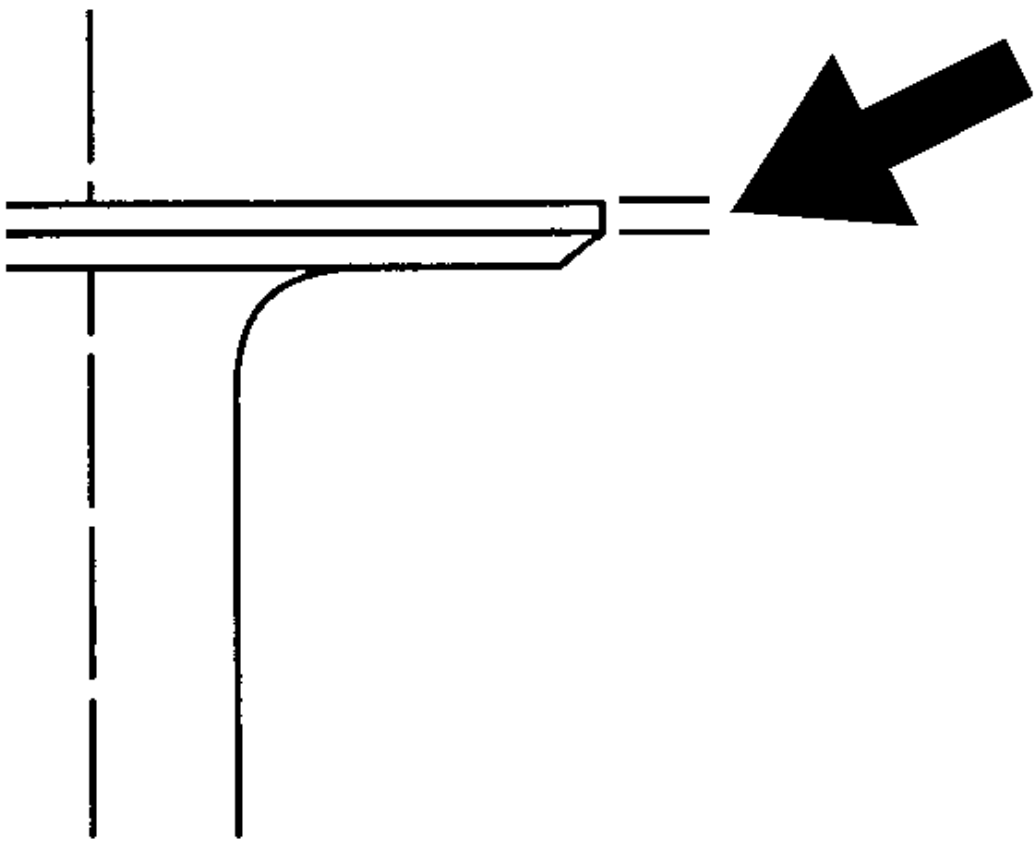

Fig. 310: View Of Valve Margin Measurement
Courtesy of GENERAL MOTORS COMPANY

1. Measure the valve margin using an appropriate scale.
2. Reference the specifications in this section for minimum valve margin and compare them to your measurements.
3. If the valve margins are beyond specification, replace the valves.
4. If the valve margins are within specification and do not require refacing, test the valve for seat concentricity using the Valve-to-Seat Concentricity Measurement Procedure.

Valve-to-Seat Concentricity Measurement Procedure

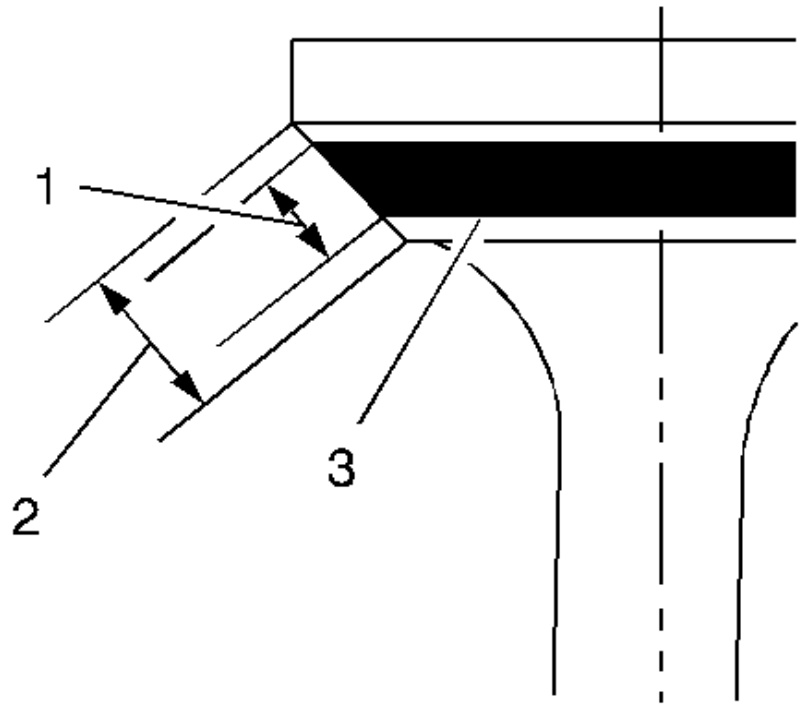

Fig. 311: View Of Valve Contact Face Measurements
Courtesy of GENERAL MOTORS COMPANY

NOTE:

- **Checking the valve-to-seat concentricity determines whether the valve and seat are sealing properly.**
- **You must measure the valve face and the valve seat to ensure proper valve sealing.**

1. Coat the valve face lightly with blue dye (3).
2. Install the valve in the cylinder head.
3. Turn the valve against the seat with enough pressure to wear off the dye.
4. Remove the valve from the cylinder head.
5. Inspect the valve face.
    - If the valve face is concentric, providing a proper seal, with the valve stem, a continuous mark will be made around the entire face (1).

      NOTE: The wear mark MUST be at least 0.5 mm (0.020 in) from the outer diameter, the margin, of the valve. If the wear mark is too close to the margin, the seat must be reconditioned to move the contact area away from the margin.

    - If the face is not concentric with the stem, the mark will NOT be continuous around the valve face. The valve should be refaced or replaced and the seat must be reconditioned using the Valve and Seat Reconditioning Procedure.

Valve and Seat Reconditioning Procedure

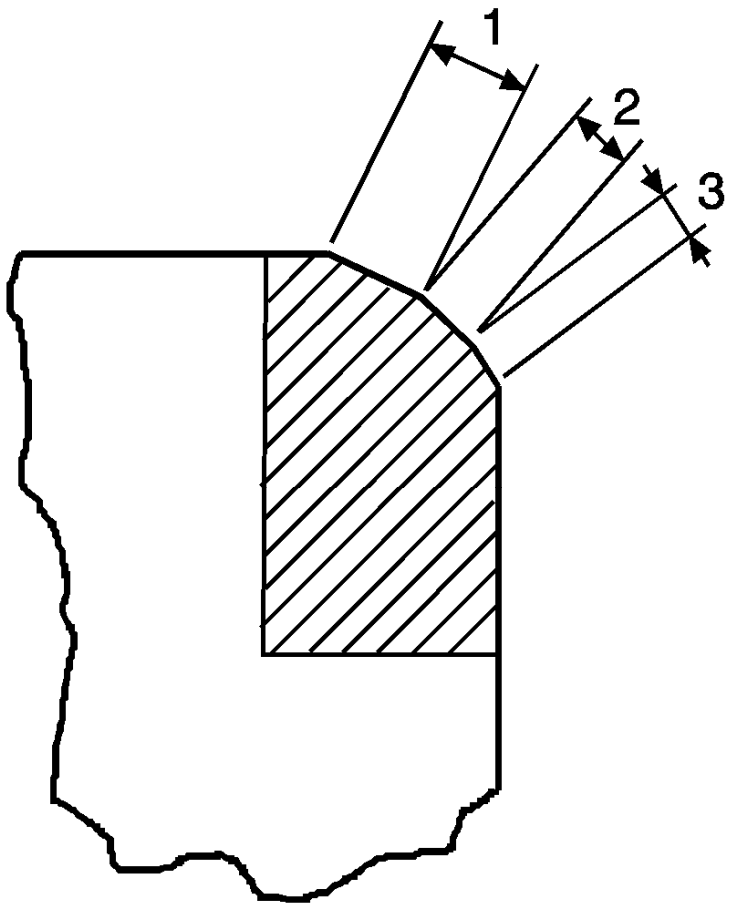

Fig. 312: View Of Valve Seat Proper Angles
Courtesy of GENERAL MOTORS COMPANY

NOTE:

- **If the valve seat width, roundness or concentricity is beyond specifications, you must grind the seats in order to ensure proper heat dissipation and prevent the build up of carbon on the seats.**
- **It is necessary to reface the valve if seat reconditioning is required unless a new valve is used.**

1. Grind the valve seats (2) to the proper angle specification, refer to **Engine Mechanical Specifications**.
2. Using the proper angle specification, refer to **Engine Mechanical Specifications**, grind, relieve, the valve seats (1) to correctly position the valve seating surface (2) to the valve.
3. Using the proper angle specification listed in engine mechanical specifications, refer to **Engine Mechanical Specifications**,, grind, undercut, the valve seats (3) to narrow the valve seat widths to the specifications, refer to **Engine Mechanical Specifications**.
4. If the original valve is being used, grind the valve to the specifications, refer to **Engine Mechanical**

Specifications. Measure the valve margin again after grinding using the Valve Margin Measurement Procedure. Replace the valve if the margin is out of specification. New valves do not require grinding.

5. When grinding the valves and seats, grind off as little material as possible. Cutting valve seat results in lowering the valve spring pressure.
6. Install the valve in the cylinder head.
    - If you are using refaced valves, lap the valves into the seats with a fine grinding compound. The refacing and reseating operations should leave the refinished surfaces smooth and true so that minimal lapping is required. Excessive lapping will groove the valve face and prevent a good seat when hot.

      NOTE: Be sure to clean any remaining lapping compound from the valve and seat with solvent and compressed air prior to final assembly.

    - If you are using new valves, do not lap the valves under any condition.
7. After obtaining the proper valve seat width in the cylinder head, you must re-measure the valve stem height using the Valve Stem Height Measurement Procedure.
8. If the valve stem height is acceptable, test the seats for concentricity using the Valve-to-Seat Concentricity Measurement Procedure.

Valve Stem Height Measurement Procedure

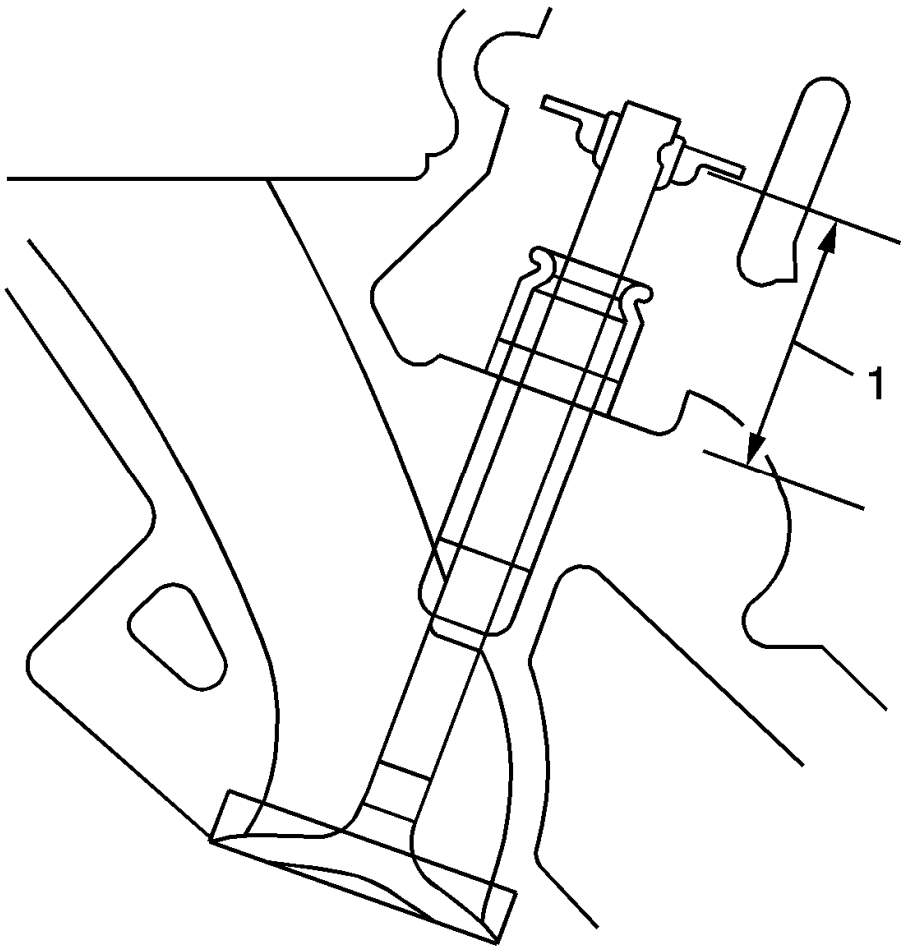

Fig. 313: Measuring Valve Stem Height
Courtesy of GENERAL MOTORS COMPANY

NOTE: To determine the valve stem height measurement, measure from the valve spring seat to the valve spring retainer.

1. Install the valve into the valve guide.
2. Ensure the valve is seated to the cylinder head valve seat.
3. Install the valve stem oil seal.
4. Install the valve spring retainer and valve stem locks.
5. Measure the distance (1) between the cylinder head to the bottom of the valve spring retainer. Refer to **Engine Mechanical Specifications**.
6. If the maximum height specification is exceeded, a new valve should be installed and the valve stem height re-measured.

CAUTION: DO NOT grind the valve stem tip. The tip of the valve is hardened and grinding the tip will eliminate the hardened surface causing

premature wear and possible engine damage.

CAUTION: DO NOT use shims in order to adjust valve stem height. The use of shims will cause the valve spring to bottom out before the camshaft lobe is at peak lift and engine damage could result.

7. If the valve stem height still exceeds the maximum height specification, the cylinder head must be replaced.

VALVE SPRING INSPECTION AND MEASUREMENT

Special Tool

GE-22738-B Valve Spring Tester

For equivalent regional tools, refer to **Special Tools**.

Inspection Procedure

1. Clean the valve springs in solvent.

WARNING: Wear safety glasses in order to avoid eye damage.

2. Dry the valve springs with compressed air.
3. Inspect the valve springs for broken coils or coil ends.

Measurement Procedure

1. Measure the tension of the valve spring using the **GE-22738-B** tester. Refer to **Engine Mechanical Specifications**.
2. If low valve spring load is found, replace the valve springs. DO NOT use shims to increase spring load. The use of shims can cause the valve spring to bottom out before the camshaft lobe is at peak lift.

REPAIR INSTRUCTIONS - OFF VEHICLE

ENGINE SUPPORT FIXTURE

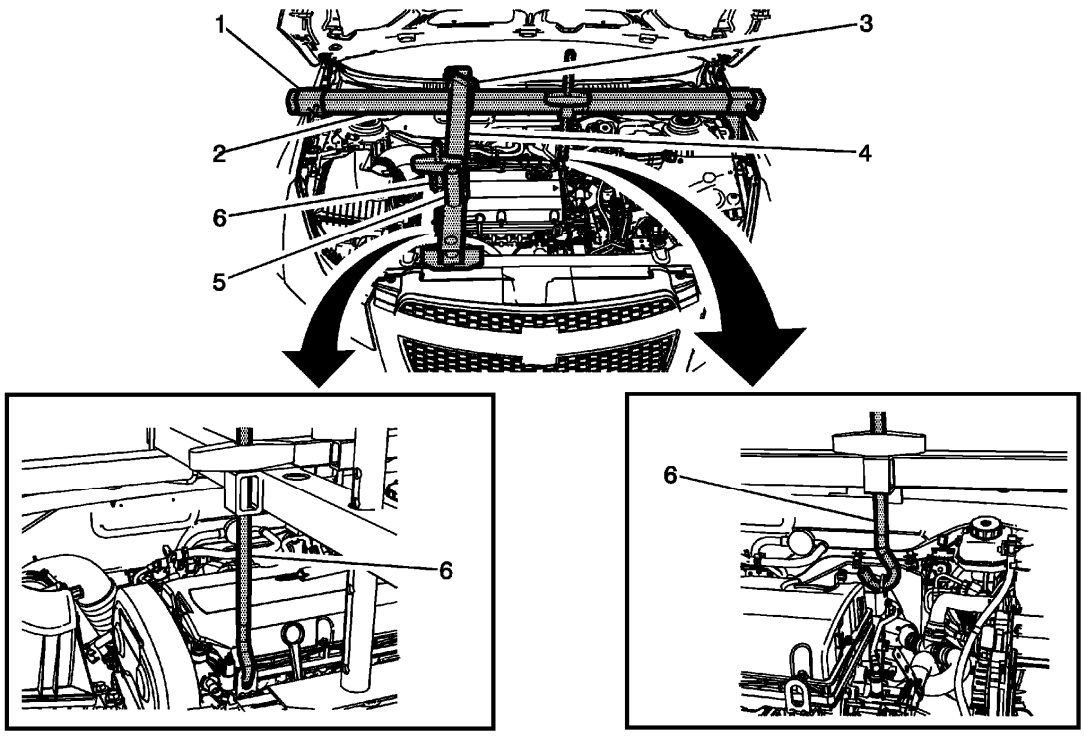

Fig. 314: Locating Engine Support Components
Courtesy of GENERAL MOTORS COMPANY

Engine Support Fixture

Callout	Component Name
Preliminary Procedure Remove the Front Fender Shipping Cover. Refer to **Front Fender Shipping Cover Replacement** . **Special Tools** • **J-43405** Engine Support Fixture Adapter • **J-28467-518** Main Support Beam • **J-28467-1A** Cross Bracket • **J-28467-5A** Strut Tower Support Assembly • **J-28467-2A** Radiator Tube Shelf Assembly • **J-36857** Engine Lift Bracket • **J-28467-8A** Hook Assembly For equivalent regional tools, refer to **Special Tools** .	

1	Engine Support Fixture Adapter Leg (Qty: 2) **Procedure** Install the bracket to fender frame. Do not install on top of fender lip.
2	Main Support Beam
3	Cross Bracket
4	Strut Tower Support Assembly **Procedure** Adjust the length of the strut tower support assembly.
5	Radiator Tube Shelf Assembly
6	Hook Assembly **Procedure** Use a grade 10.9 bolt to install the engine lift bracket. **TIP:** If the engine is not equipped with engine lift bracket, install J-36857 in place.

TIMING BELT INSPECTION

Special Tools

- **EN-6340** Locking Tool
- **EN-6628-A** Locking Tool

For equivalent regional tools, refer to **Special Tools**.

Removal Procedure

1. Remove the timing belt upper front cover. Refer to **Timing Belt Upper Front Cover Removal**.

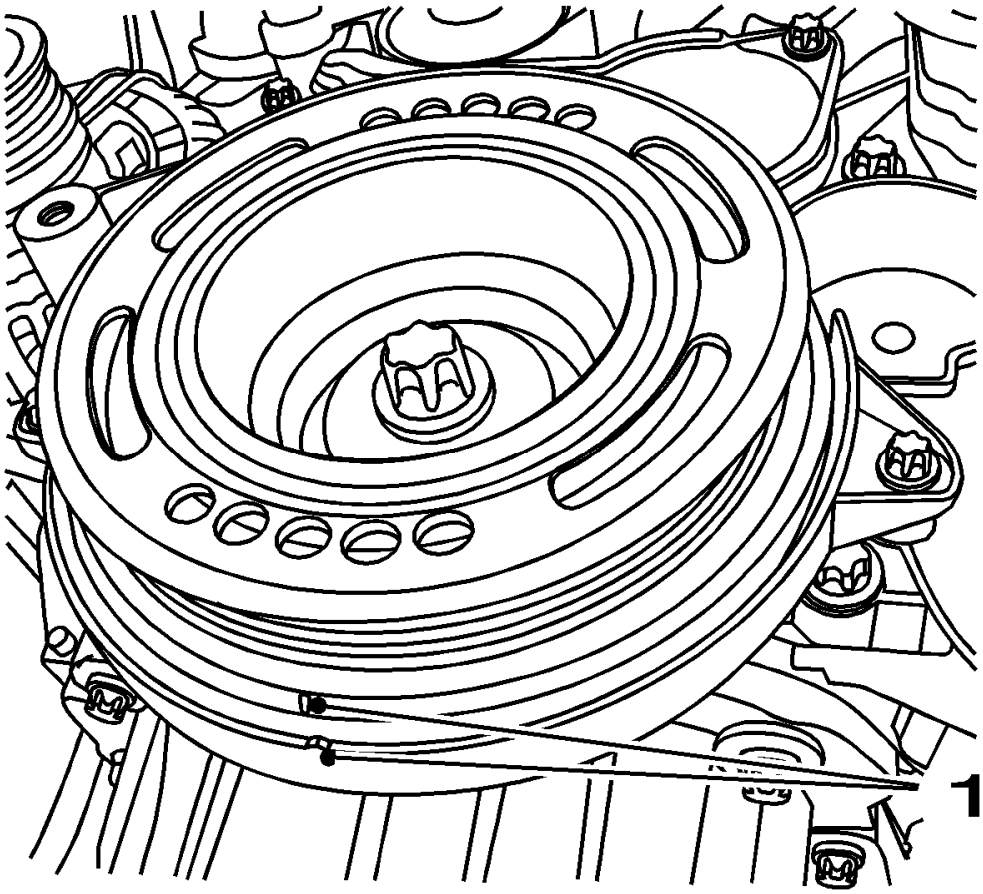

Fig. 315: View Of Crankshaft TDC Position
Courtesy of GENERAL MOTORS COMPANY

2. Set the crankshaft balancer in the direction of the engine rotation to "1st cylinder TDC" (mark 1).
3. Remove the camshaft cover. Refer to **Camshaft Cover Removal**.

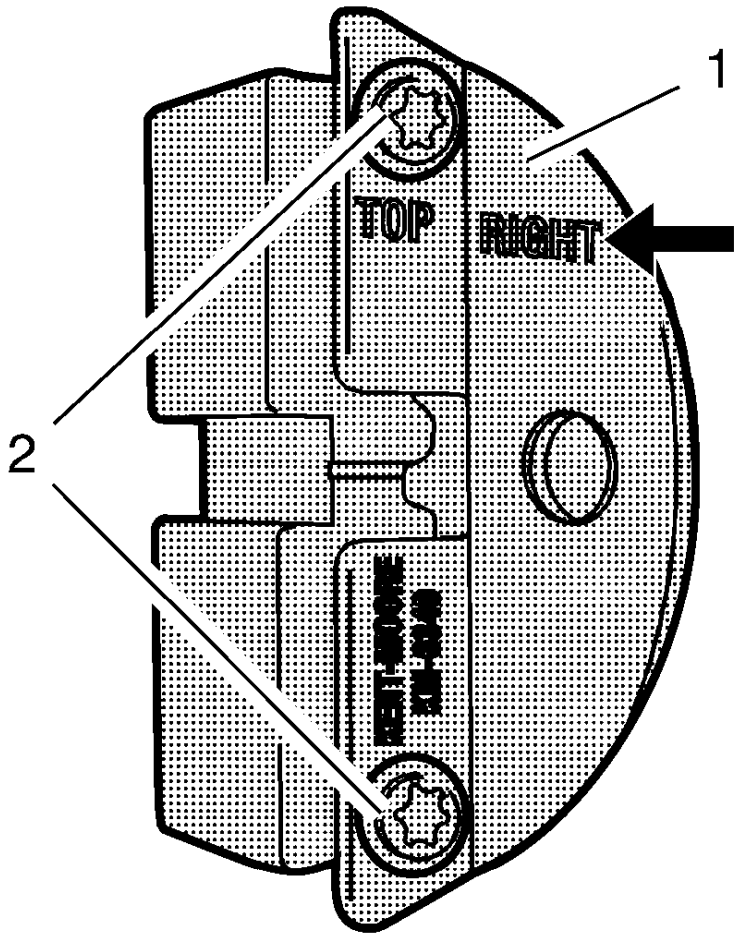

Fig. 316: Front Panel And Bolts
Courtesy of GENERAL MOTORS COMPANY

NOTE: The right half of the EN-6340 locking tool can be recognized by the lettering "right", arrow, on the tool.

4. Prepare the right half of the **EN-6340** locking tool.
    1. Remove the 2 bolts (2).
    2. Remove the front panel (1) from the **EN-6340** locking tool -right.

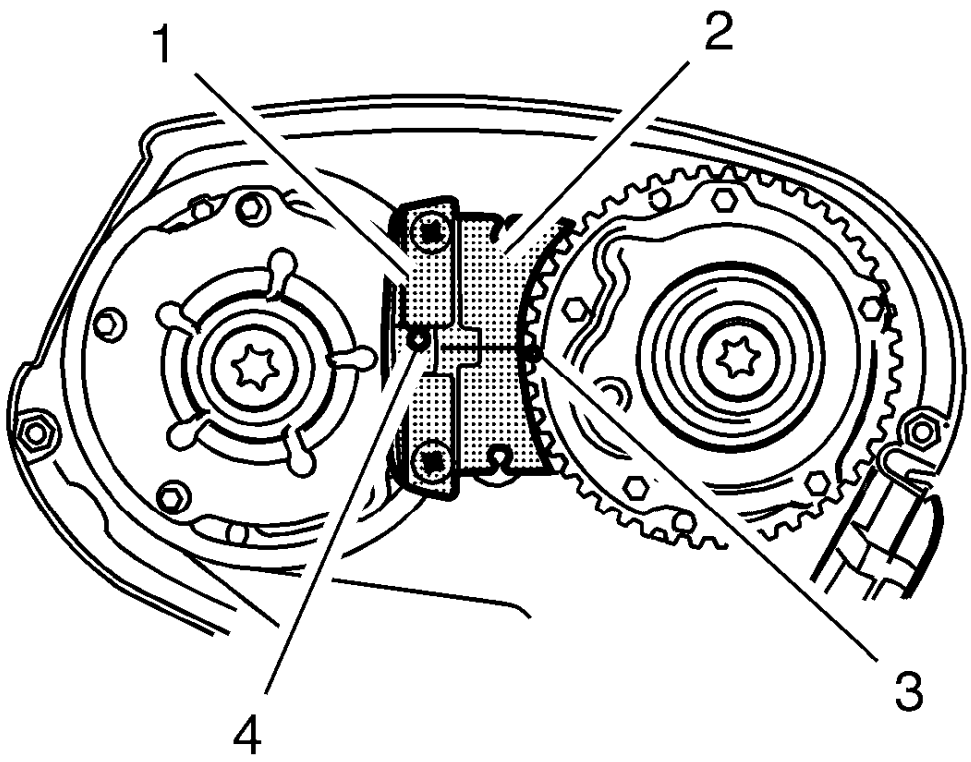

Fig. 317: Spot Type Markings And Special Tool
Courtesy of GENERAL MOTORS COMPANY

NOTE:

- **The spot type marking (4) on the intake camshaft position actuator adjuster does not correspond to the groove of the EN-6340 locking tool - left (1) during this process, but must be somewhat above.**
- **The spot type marking (3) on the exhaust camshaft position actuator adjuster must correspond to the groove on EN-6340 locking tool - right (2).**

5. Insert the **EN-6340** locking tool - left (1) and the **EN-6340** locking tool - right (2) in the camshaft position actuator adjuster.

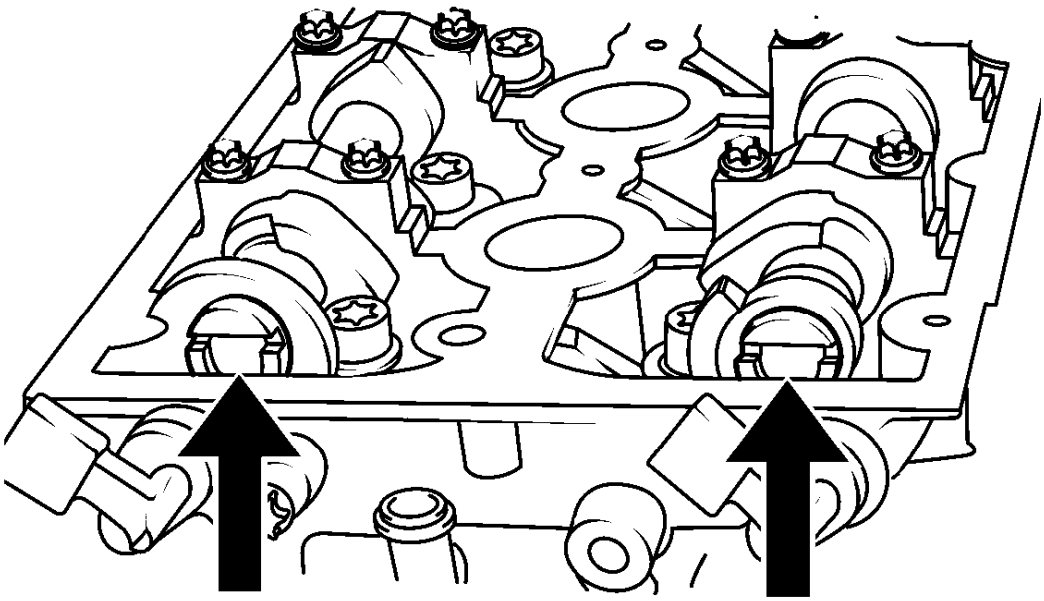

Fig. 318: Aligning Camshafts Horizontally
Courtesy of GENERAL MOTORS COMPANY

NOTE: If the EN-6628-A locking tool cannot be inserted, the timing must be set.

6. Align the camshafts horizontally by the hexagon (arrows) until the **EN-6628-A** locking tool can be inserted in both camshafts.

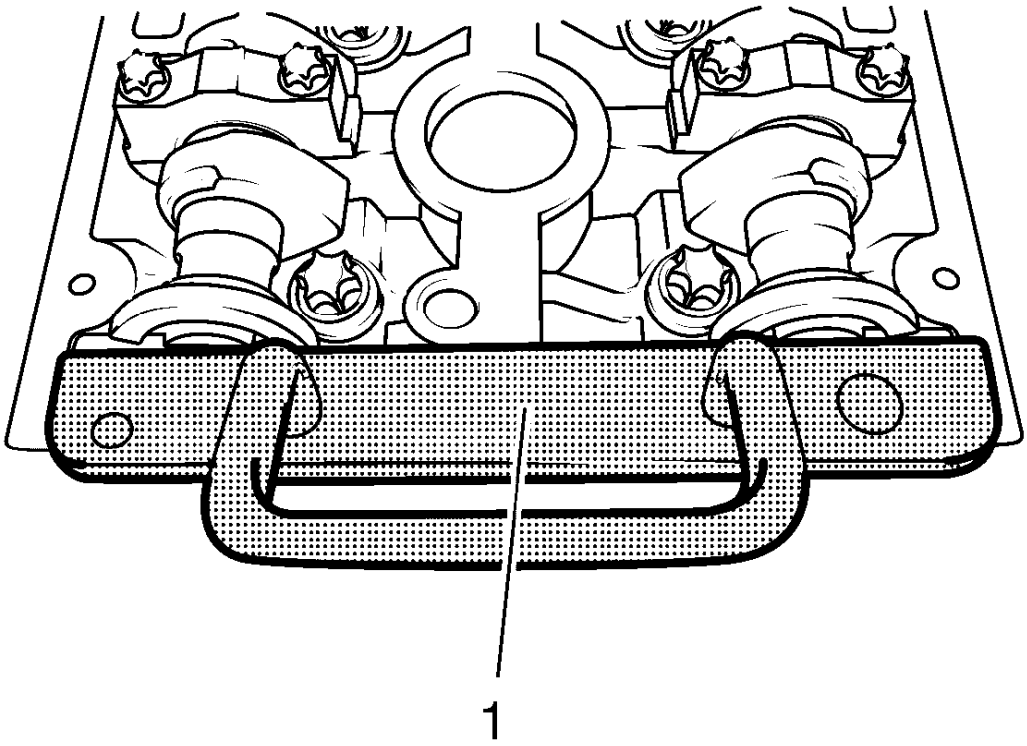

Fig. 319: Locking Tool
Courtesy of GENERAL MOTORS COMPANY

7. Insert the **EN-6628-A** locking tool (1) into the camshafts.

Installation Procedure

1. Remove the **EN-6628-A** locking tool.
2. Remove the **EN-6340** locking tool.
3. Install the camshaft cover. Refer to **Camshaft Cover Installation**.
4. Install the timing belt upper front cover. Refer to **Timing Belt Upper Front Cover Installation**.

TIMING BELT ADJUSTMENT

Special Tools

- **EN-652** Flywheel Holder

- **EN-6333** Locking Pin
- **EN-6340** Locking Tool
- **EN-6628-A** Locking Tool
- **EN-45059** Torque Angle Sensor Kit

For equivalent regional tool, refer to **Special Tools**.

Removal Procedure

1. Remove the timing belt upper front cover. Refer to **Timing Belt Upper Front Cover Removal**.

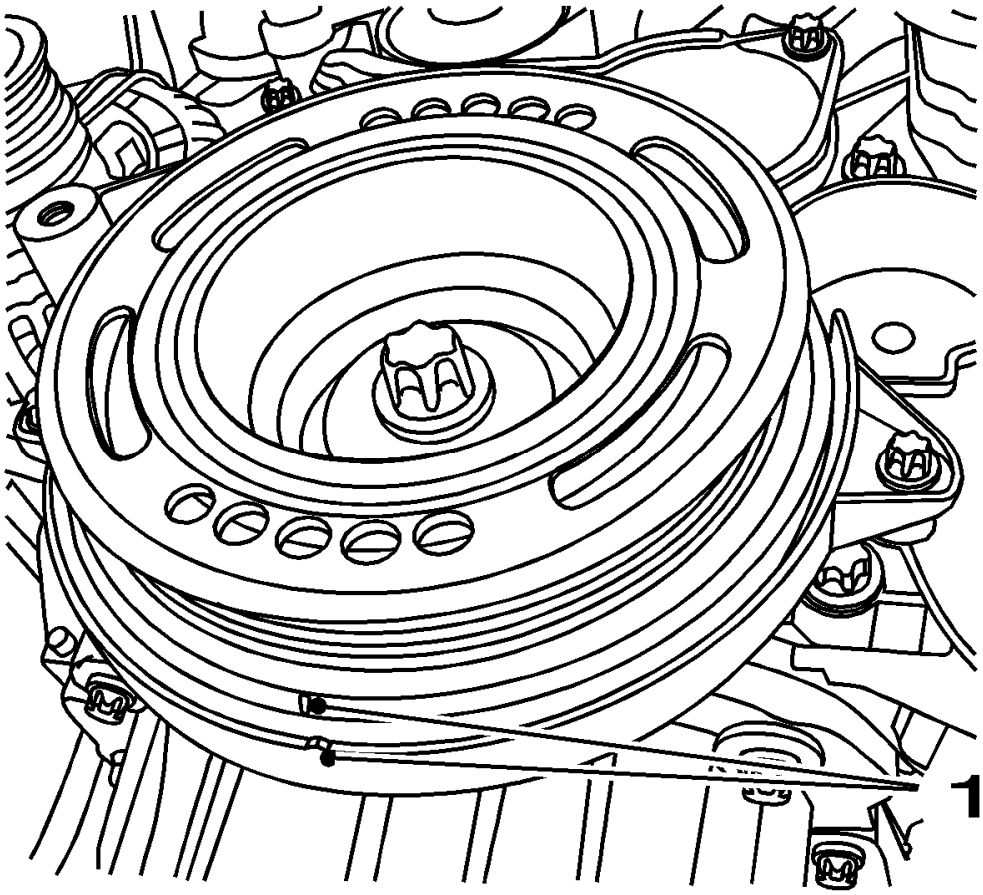

Fig. 320: View Of Crankshaft TDC Position
Courtesy of GENERAL MOTORS COMPANY

2. Set the crankshaft balancer in the direction of the engine rotation to "1st cylinder TDC" (mark 1).
3. Remove the camshaft cover. Refer to **Camshaft Cover Removal**.

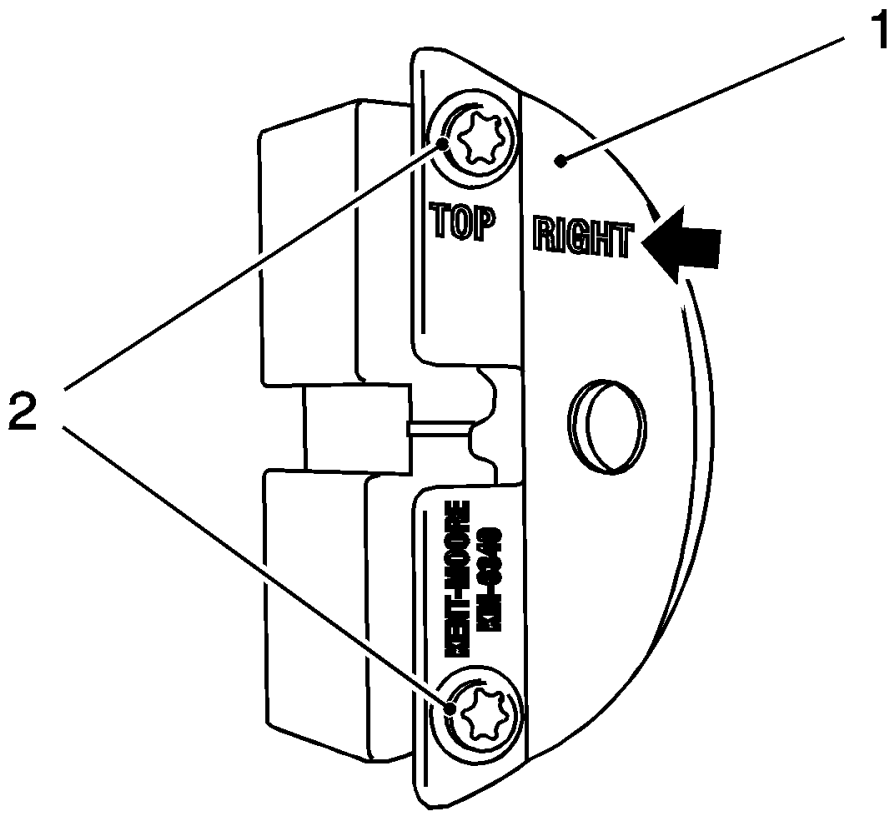

Fig. 321: View Of Front Panel And Bolts
Courtesy of GENERAL MOTORS COMPANY

NOTE: The right half of the EN-6340 locking tool can be recognized by the lettering "right", arrow, on the tool.

4. Prepare the right half of the **EN-6340** locking tool.
    1. Remove the 2 bolts (2).
    2. Remove the front panel (1) from the **EN-6340** locking tool - right.

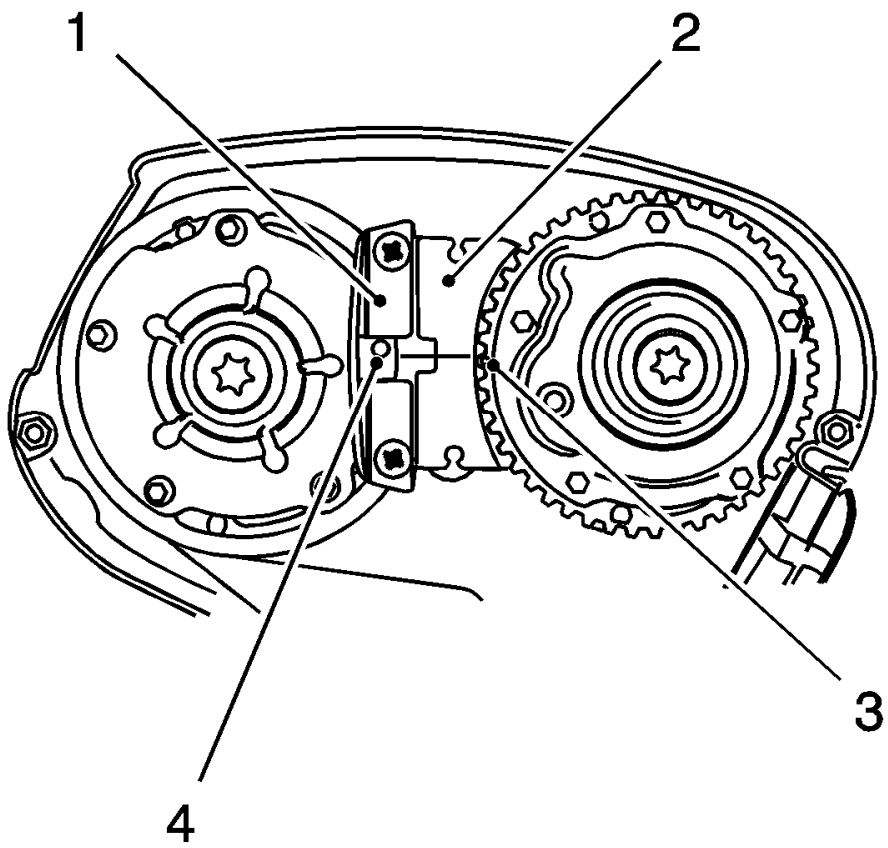

Fig. 322: View Of Camshaft Holder And Markings
Courtesy of GENERAL MOTORS COMPANY

NOTE:

- **The spot type marking (4) on the intake camshaft position actuator adjuster does not correspond to the groove of the EN-6340 locking tool - left (1) during this process, but must be somewhat above.**
- **The spot type marking (3) on the exhaust camshaft position actuator adjuster must correspond to the groove on EN-6340 locking tool - right (2).**

5. Insert the **EN-6340** locking tool - left (1) and the **EN-6340** locking tool - right (2) in the camshaft position actuator adjuster.

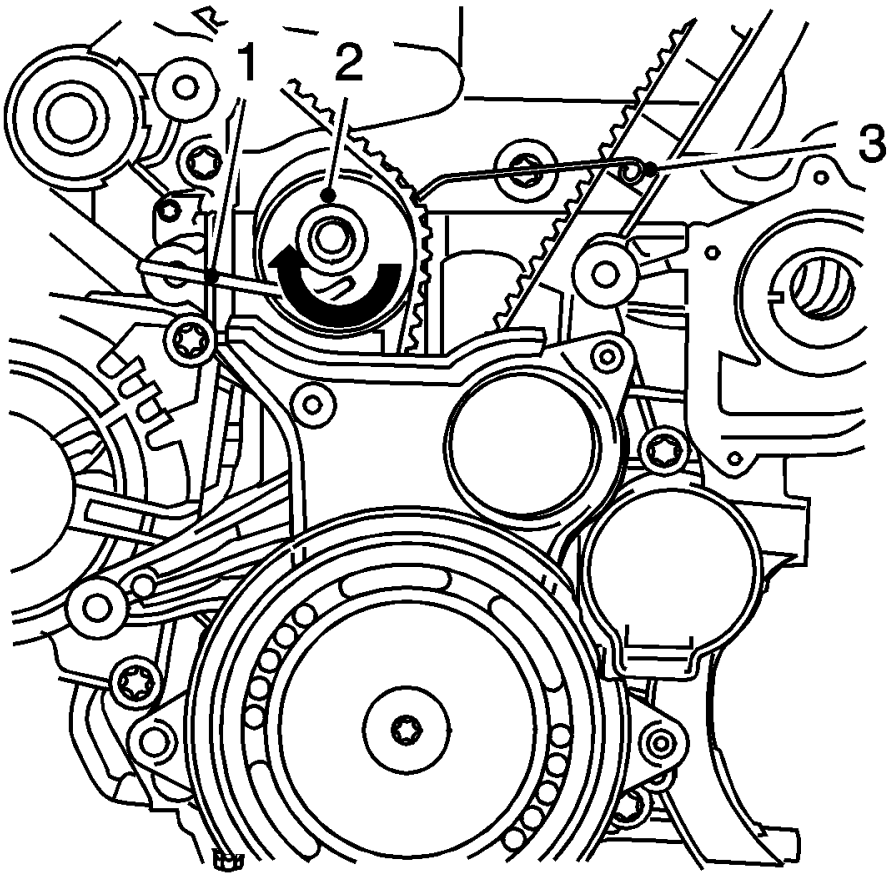

Fig. 323: View Of Tooth Belt Tensioner Components
Courtesy of GENERAL MOTORS COMPANY

6. Install the **EN-6333** locking pin (1), apply tension to the timing belt tension roller (2) in the direction of the arrow. Install the **EN-6333** locking pin (3).
7. Mark timing belt in direction of rotation.

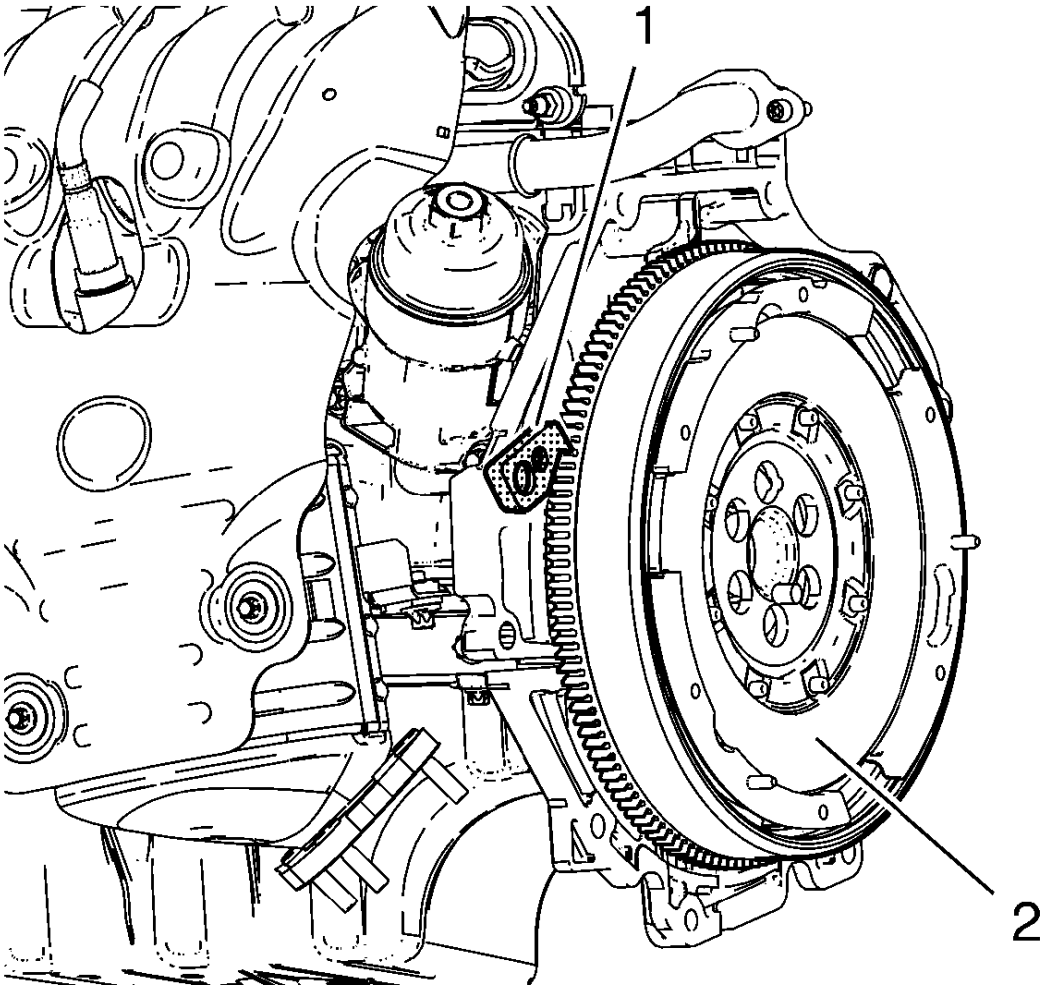

Fig. 324: Flywheel And Flywheel Holder
Courtesy of GENERAL MOTORS COMPANY

8. Install the **EN-652** flywheel holder (1), lock the flywheel (2) (or automatic transmission flex respectively) via the starter ring gear.

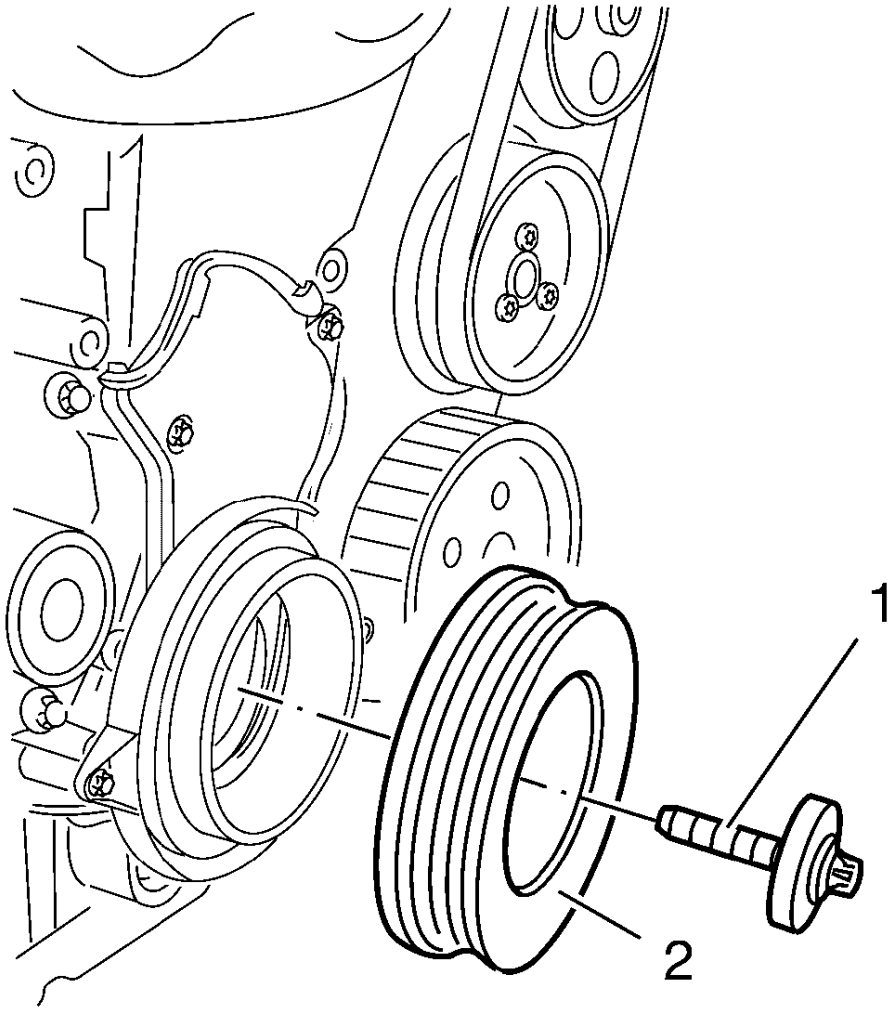

Fig. 325: Crankshaft Balancer And Bolt
Courtesy of GENERAL MOTORS COMPANY

9. Remove and DISCARD the crankshaft balancer bolt (1).
10. Remove the crankshaft balancer (2).

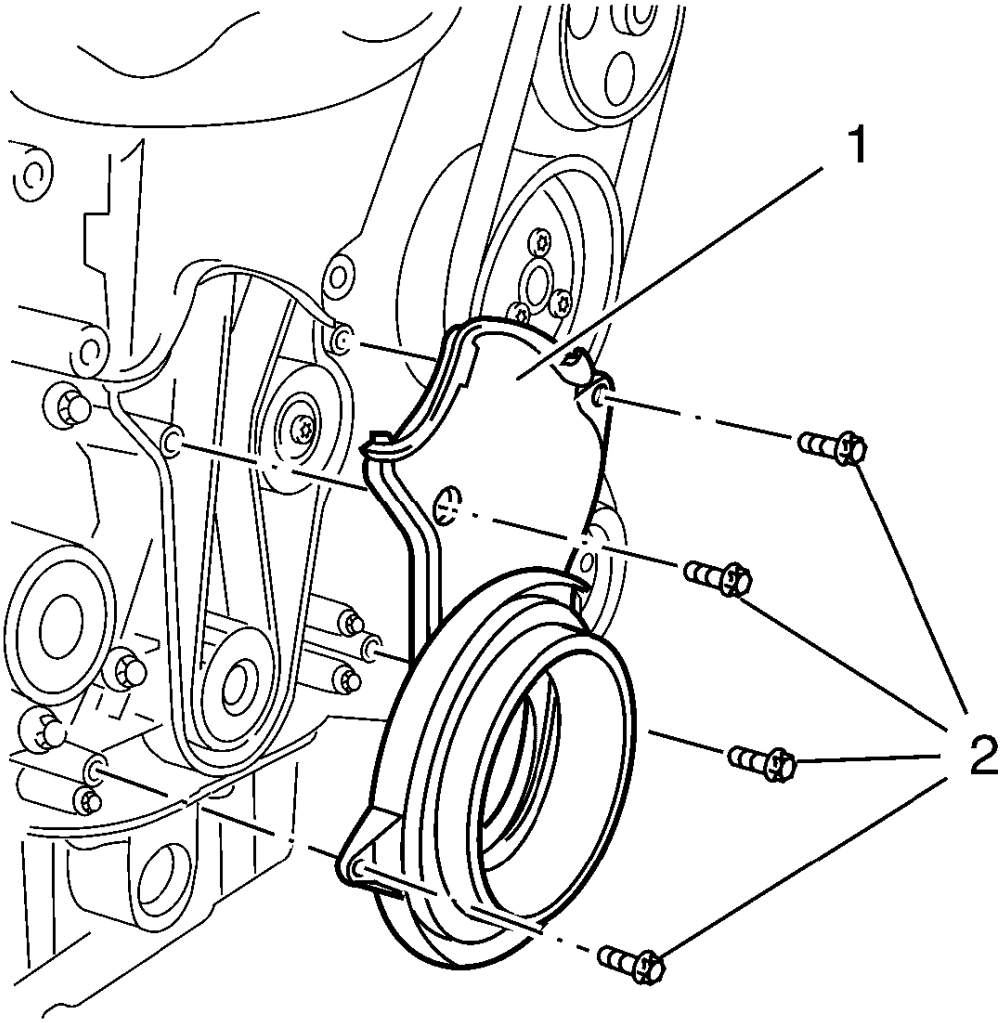

Fig. 326: Timing Belt Lower Front Cover
Courtesy of GENERAL MOTORS COMPANY

11. Remove the 4 timing belt lower front cover bolts (2).
12. Remove the timing belt lower front cover (1).

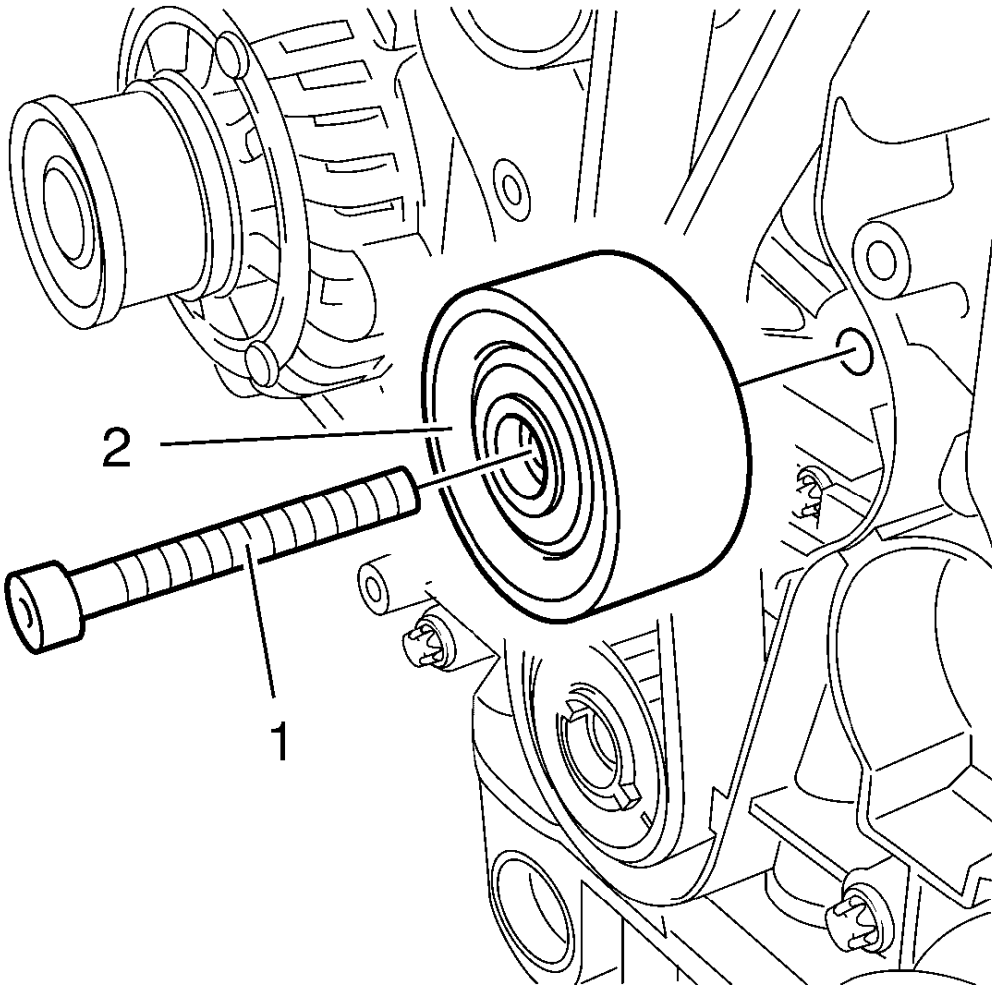

Fig. 327: Timing Belt Idler Pulley Bolt
Courtesy of GENERAL MOTORS COMPANY

13. Remove the timing belt idler pulley bolt (1).
14. Remove the timing belt idler pulley (2).

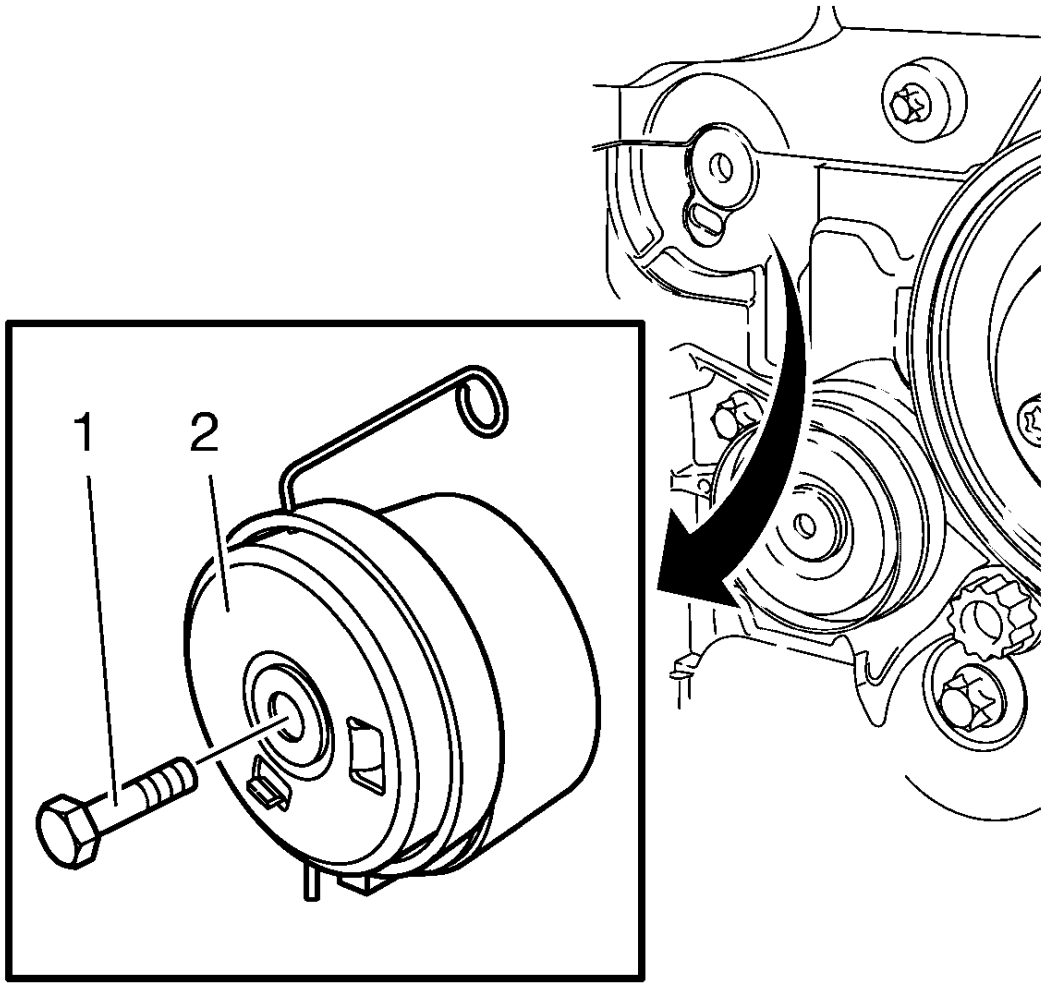

Fig. 328: Timing Belt Tensioner
Courtesy of GENERAL MOTORS COMPANY

15. Remove the tensioner bolt (1).
16. Remove the timing belt tensioner (2).

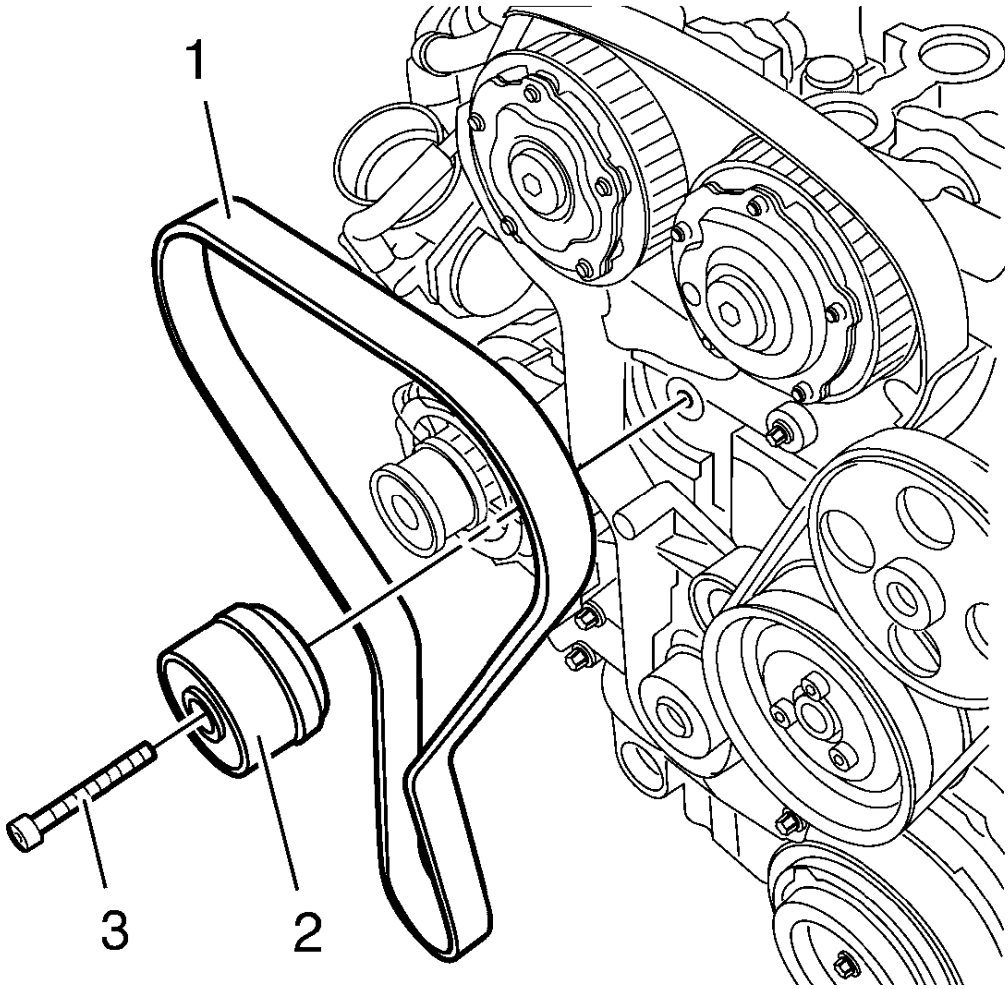

Fig. 329: Timing Belt, Timing Belt Tensioner
Courtesy of GENERAL MOTORS COMPANY

17. Remove the timing belt (1).
18. Stop the timing belt tensioner (2).
19. Remove the **EN-652** flywheel holder to unlock the crankshaft.

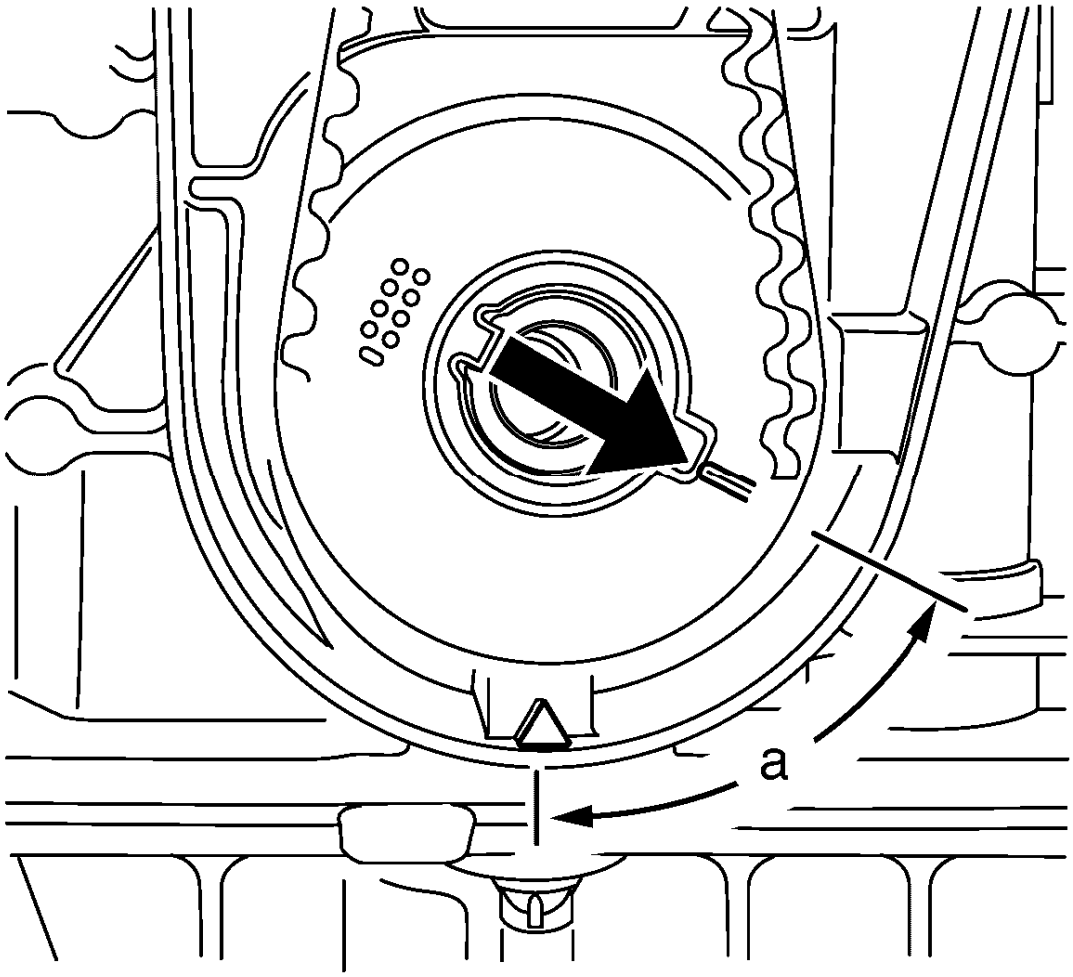

Fig. 330: Turning Crankshaft Against Direction Of Engine Rotation
Courtesy of GENERAL MOTORS COMPANY

20. Turn the crankshaft 60° (A) against the direction of engine rotation.

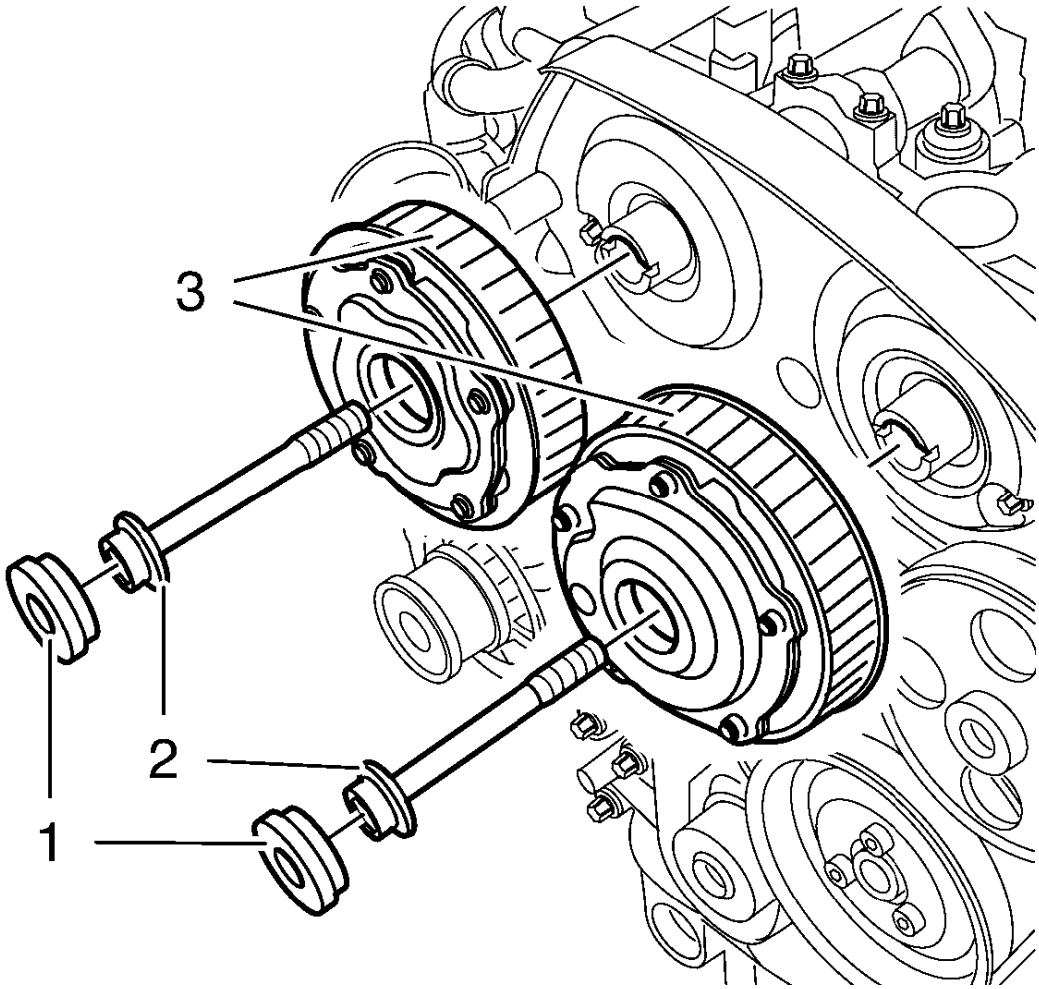

Fig. 331: Camshaft Position Actuator Adjuster Closure Bolt
Courtesy of GENERAL MOTORS COMPANY

21. Remove the 2 camshaft position actuator adjuster closure bolts (1).

NOTE: A second technician is required.

22. Loosen the camshaft position actuator adjuster bolts (2).

    Hold at the appropriate camshaft hexagon.

23. Remove and DISCARD the camshaft position actuator adjuster bolts (2) and the camshaft position actuator adjuster (3).

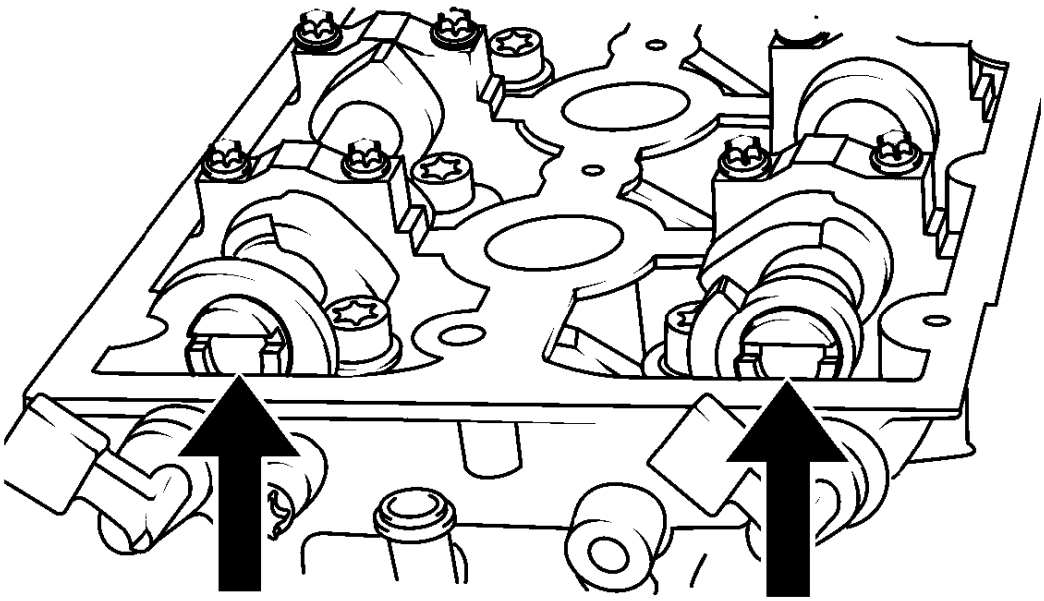

Fig. 332: Aligning Camshafts Horizontally
Courtesy of GENERAL MOTORS COMPANY

24. Align the camshafts horizontally by the hexagon arrows, until the **EN-6628-A** locking tool can be inserted in both camshafts.

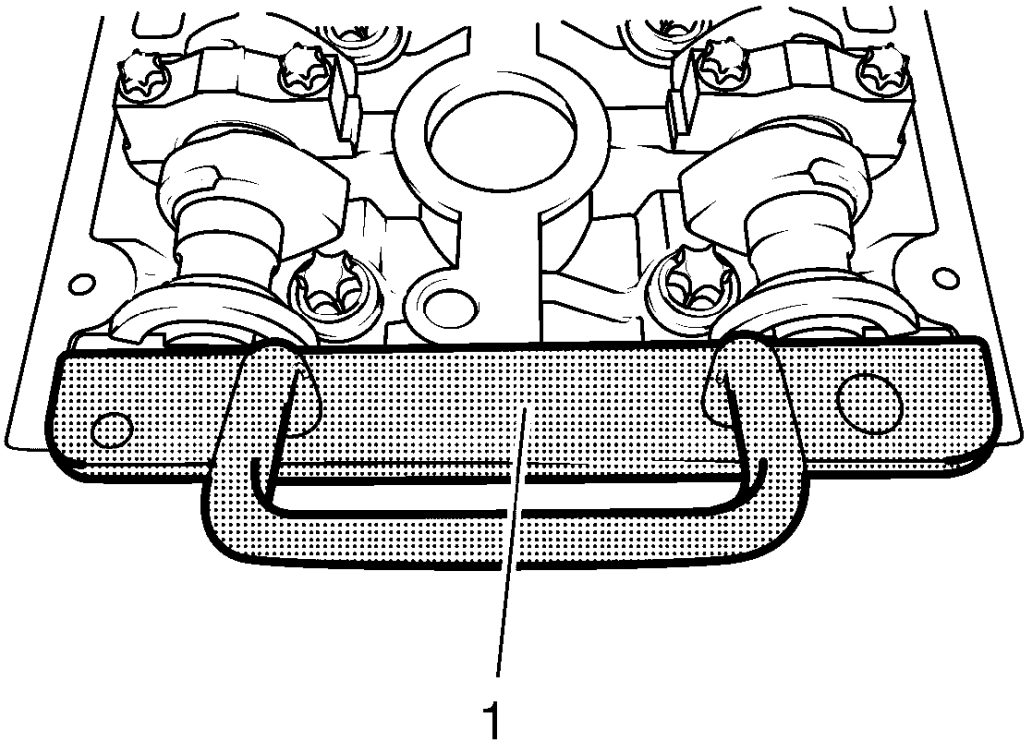

Fig. 333: Locking Tool
Courtesy of GENERAL MOTORS COMPANY

25. Insert the **EN-6628-A** locking tool (1) into the camshafts.

Installation Procedure

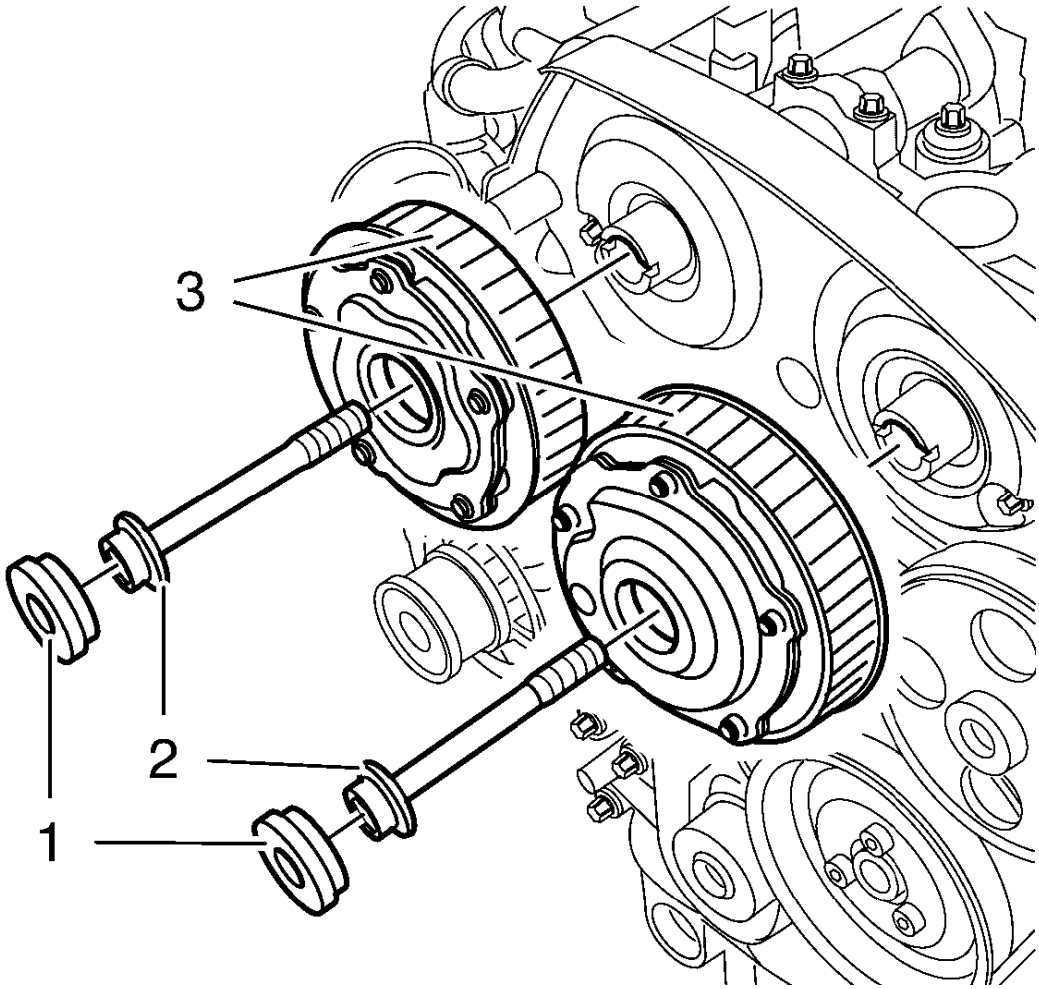

Fig. 334: Camshaft Position Actuator Adjuster Closure Bolt
Courtesy of GENERAL MOTORS COMPANY

NOTE: Do not tighten the camshaft adjuster bolts.

1. Install the camshaft position actuator adjuster (3).
2. Install NEW camshaft position actuator adjuster bolts (2).

CAUTION: Refer to Fastener Caution .

CAUTION: Refer to Torque-to-Yield Fastener Caution .

NOTE: A second technician is required.

3. Tighten the camshaft position actuator adjuster bolts (2) in three passes:

   Hold at the appropriate camshaft hexagon.

   1. First pass tighten to 65 N.m (48 lb ft).
   2. Second pass to 120°.
   3. Third pass to 15°.
4. Replace the camshaft position actuator adjuster seal rings.
5. Install the 2 camshaft position actuator adjuster closure plugs (1) and tighten to 30 N.m (22 lb ft).
6. Remove the **EN-6628-A** locking tool.

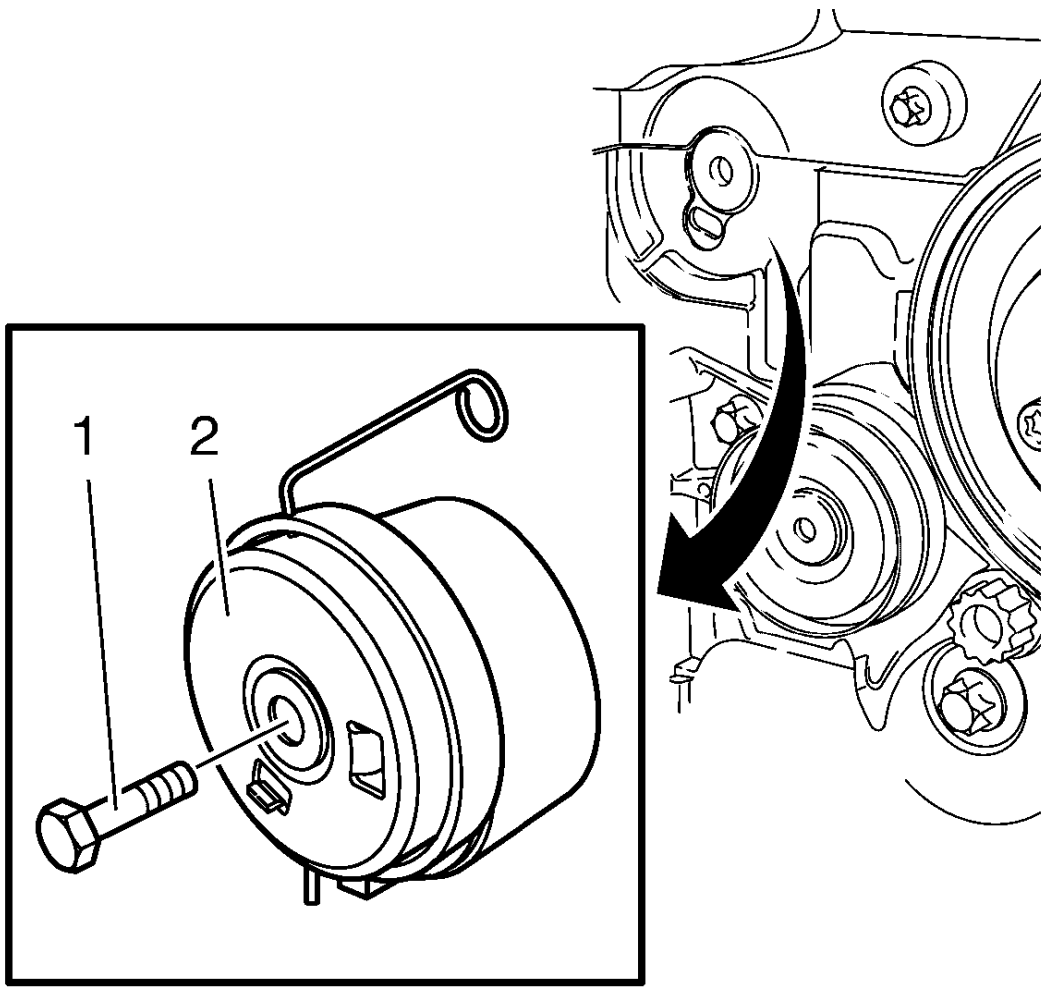

Fig. 335: Timing Belt Tensioner
Courtesy of GENERAL MOTORS COMPANY

7. Clean the timing belt tensioner thread.

8. Install the timing belt tensioner (2) and tighten the NEW timing belt tensioner bolt (1) to 20 N.m (15 lb ft).
9. Clean the timing belt idler pulley thread.

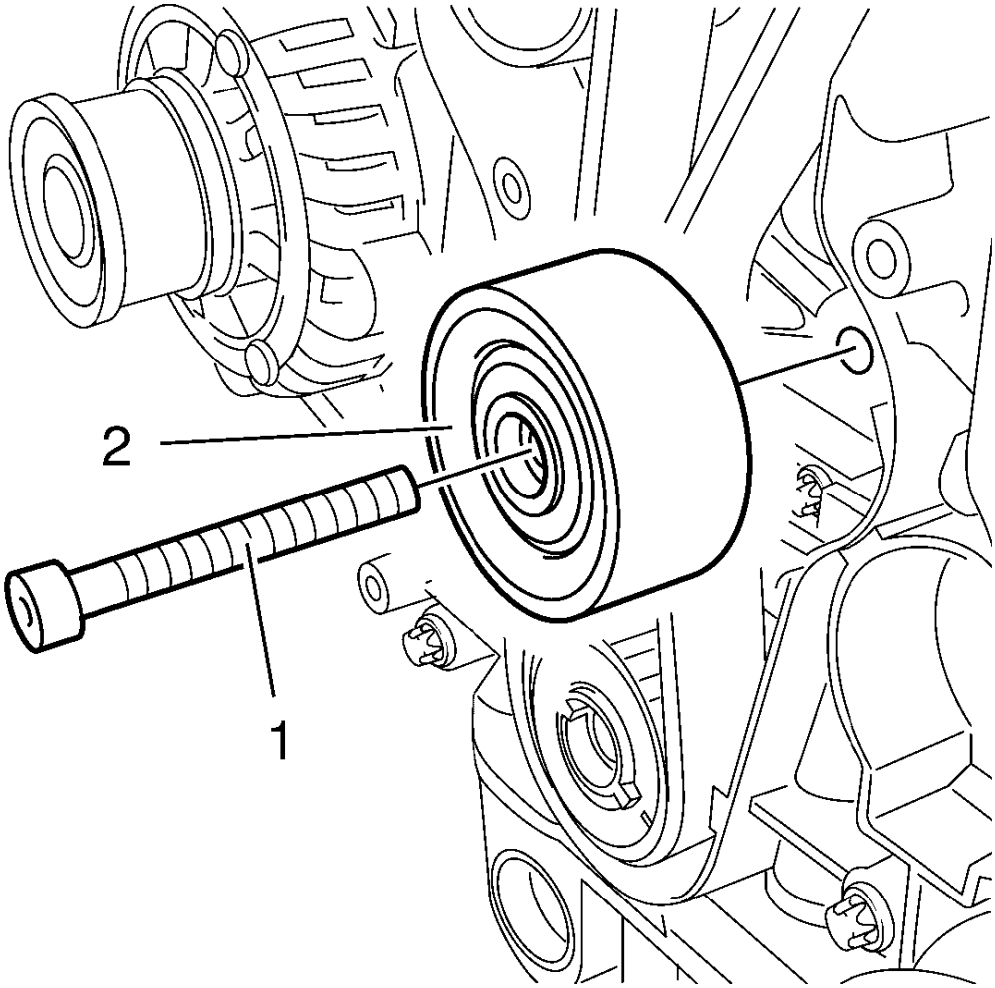

Fig. 336: Timing Belt Idler Pulley Bolt
Courtesy of GENERAL MOTORS COMPANY

10. Install the timing belt idler pulley (2) and tighten the NEW bolt (1) to 25 N.m (18 lb ft).

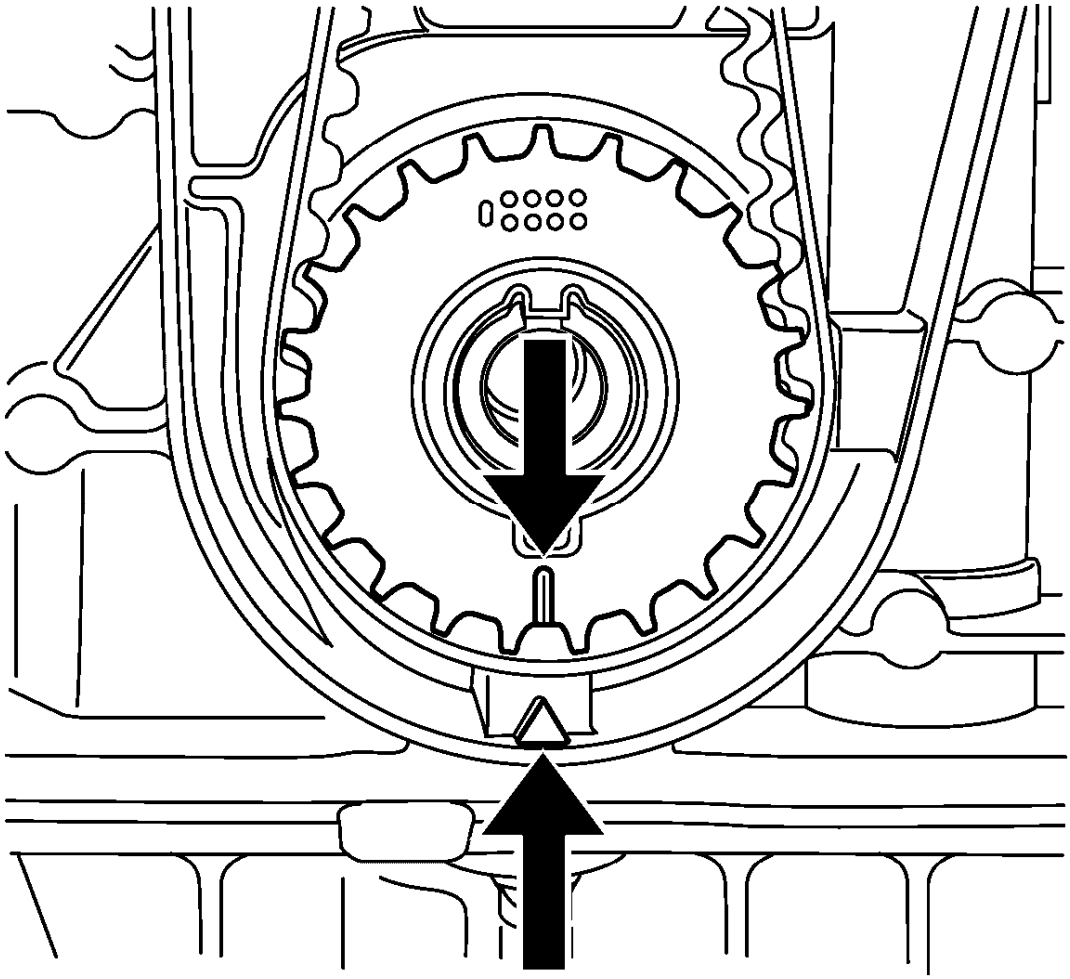

Fig. 337: Aligning Timing Belt Drive Gear And Oil Pump Housing
Courtesy of GENERAL MOTORS COMPANY

NOTE: The timing belt drive gear and oil pump housing must align.

11. Turn the crankshaft in the direction of engine rotation, by the crankshaft balancer bolt, to cylinder 1 TDC of combustion stroke.

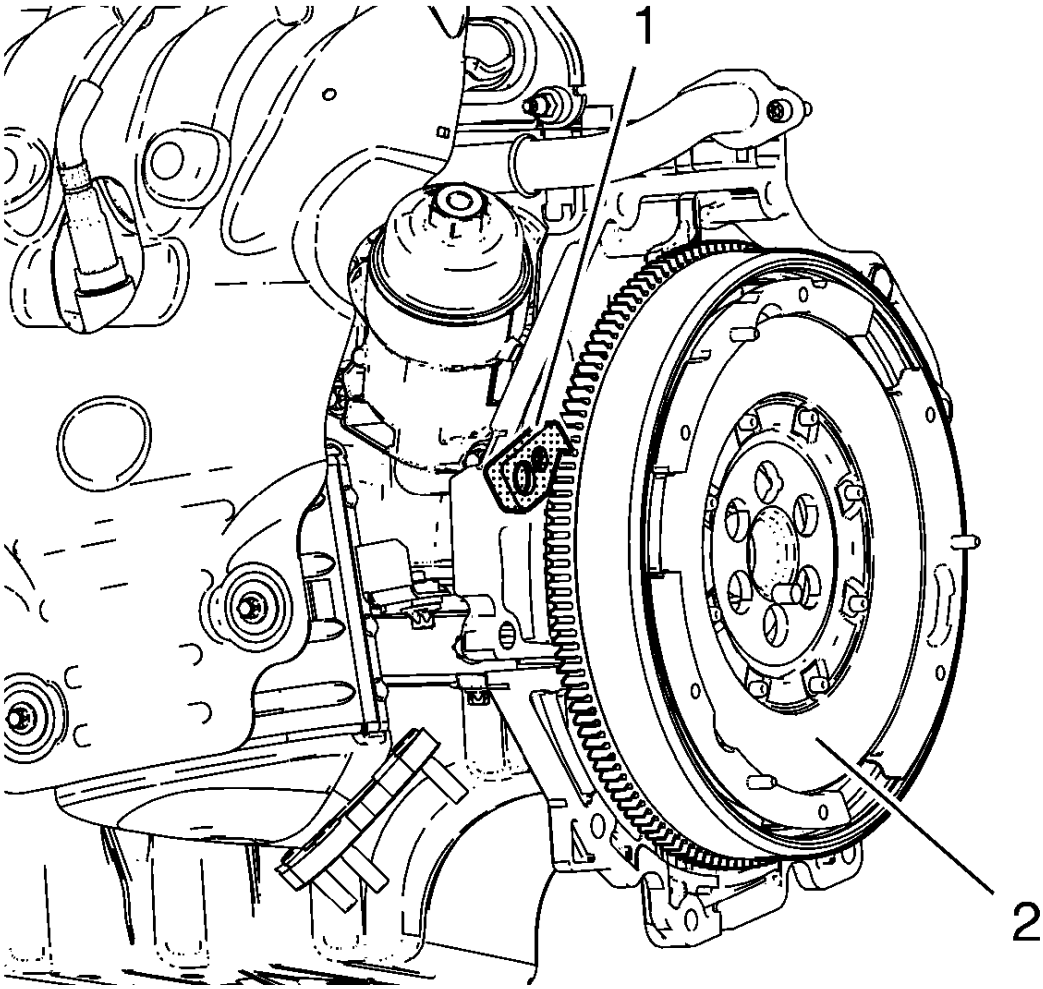

Fig. 338: Flywheel And Flywheel Holder
Courtesy of GENERAL MOTORS COMPANY

12. Install the **EN-652** flywheel holder (1), lock the flywheel (2) (or automatic transmission flex respectively) via the starter ring gear.

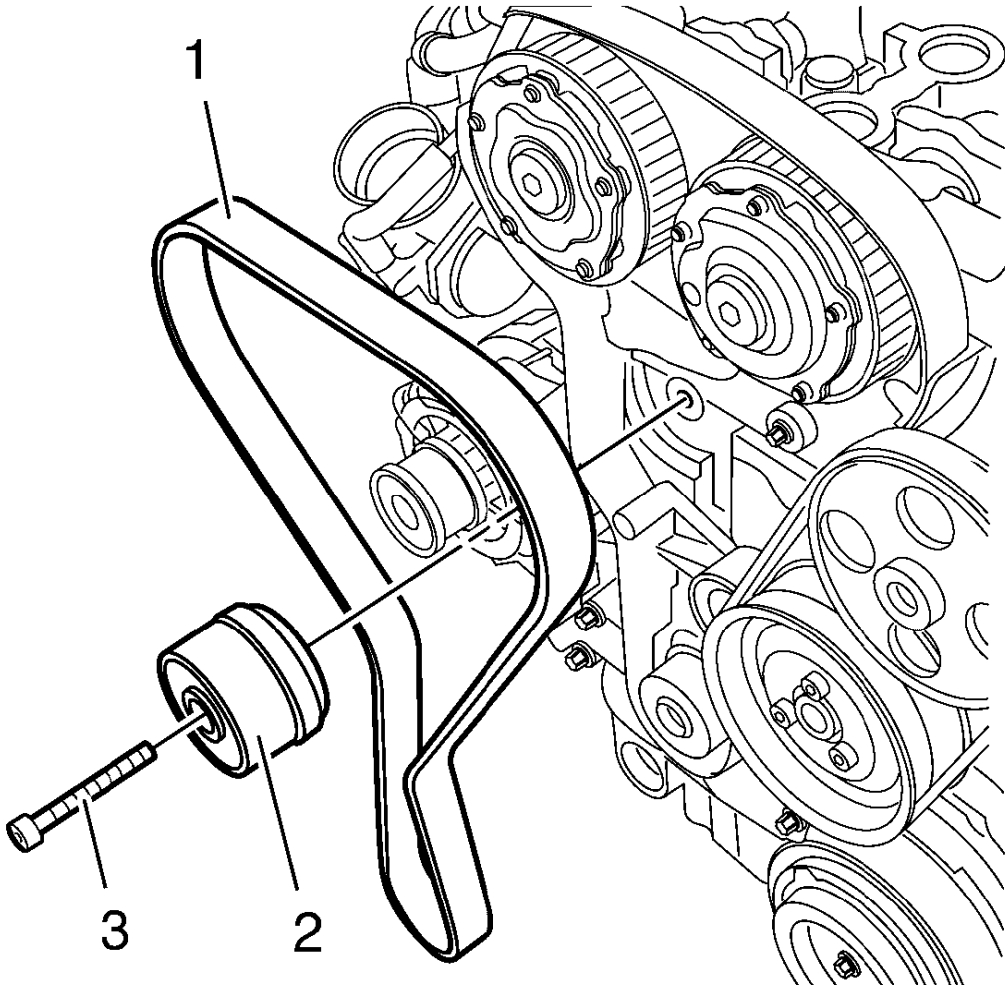

Fig. 339: Timing Belt, Timing Belt Tensioner
Courtesy of GENERAL MOTORS COMPANY

NOTE: Observe direction of rotation.

13. Insert the timing belt (1).
14. Apply preliminary tension clockwise to the timing belt tension roller.
15. Remove the **EN-6333** locking pin.
16. Release the tension on the timing belt tensioner.

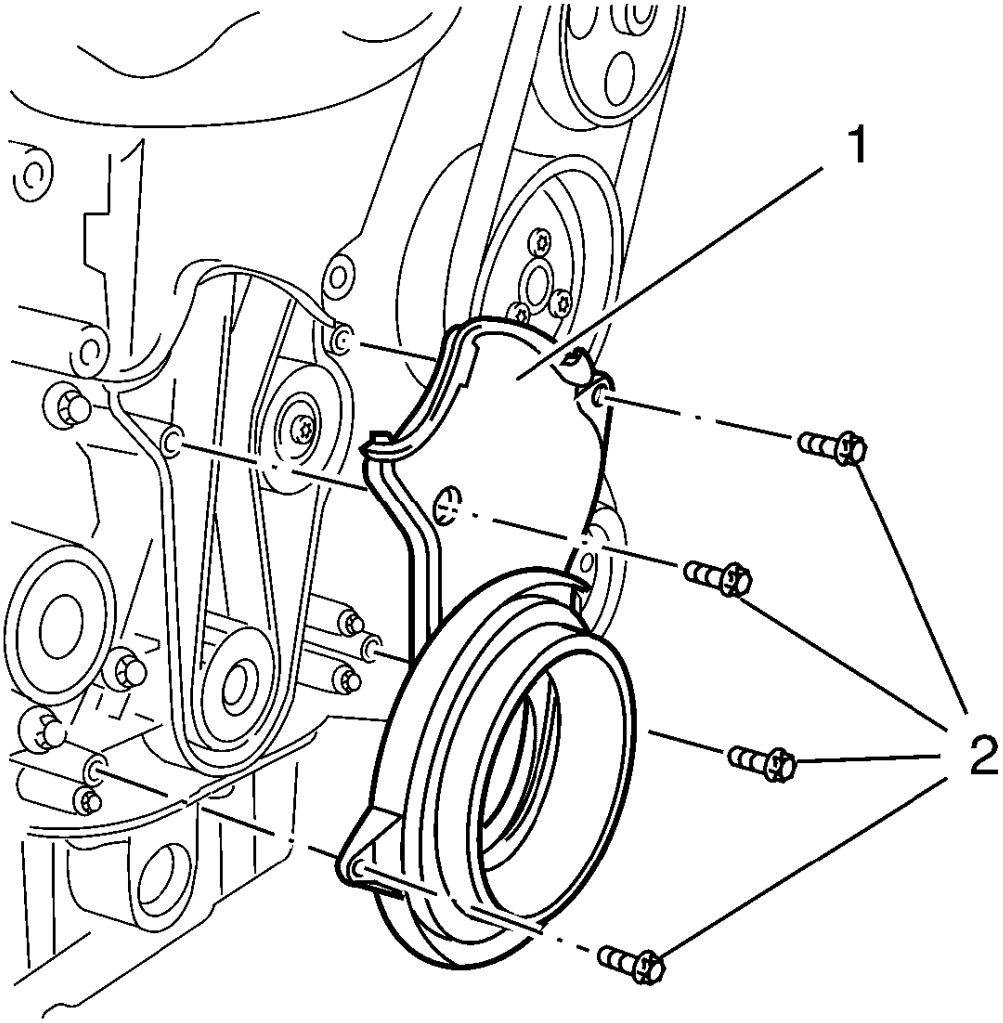

Fig. 340: Timing Belt Lower Front Cover
Courtesy of GENERAL MOTORS COMPANY

17. Install the lower front timing belt cover (1) and tighten the 4 bolts (2) to 6 N.m (53 lb in).

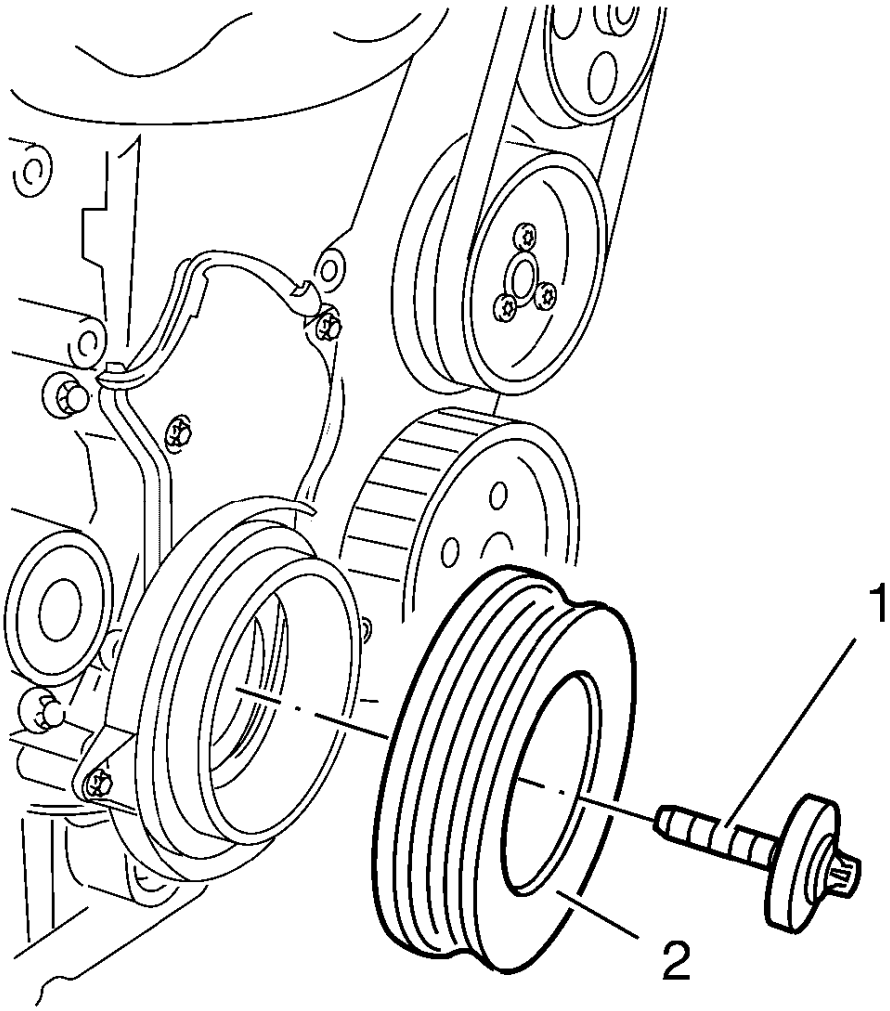

Fig. 341: Crankshaft Balancer And Bolt
Courtesy of GENERAL MOTORS COMPANY

18. Install the crankshaft balancer (2) and NEW bolt (1) and tighten in 3 passes using the **EN-45059** sensor kit :
    1. First pass to 95 N.m (70 lb ft).
    2. Second pass to 45°.
    3. Third pass to 15°.
19. Remove the **EN-652** flywheel holder to unlock the crankshaft.
20. Remove the **EN-6340** locking tool.
21. Check position of the camshaft position actuator adjuster.
    1. Turn crankshaft 720° in the direction of engine rotation by the crankshaft balancer bolt.

NOTE: Note marking, camshaft position actuator adjuster.

2. Insert **EN-6340** locking tool into camshaft timing gears.

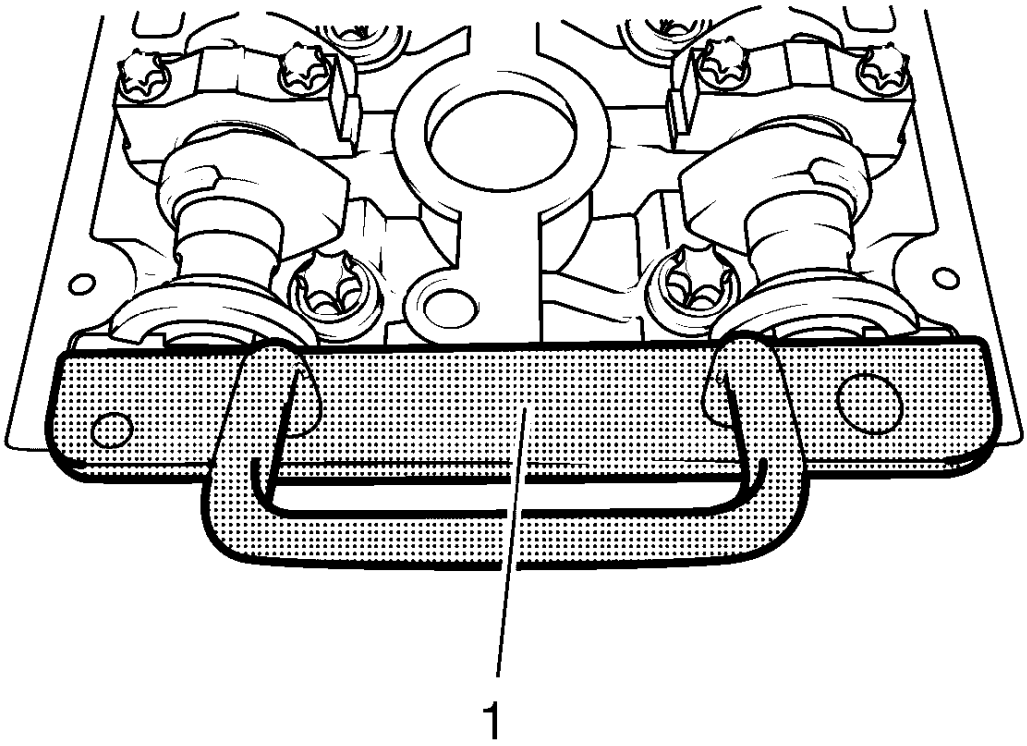

Fig. 342: Locking Tool
Courtesy of GENERAL MOTORS COMPANY

22. Insert the **EN-6628-A** locking tool (1) into the camshafts.
23. Align camshafts by hexagon until **EN-6628-A** locking tool can be inserted in both camshafts.

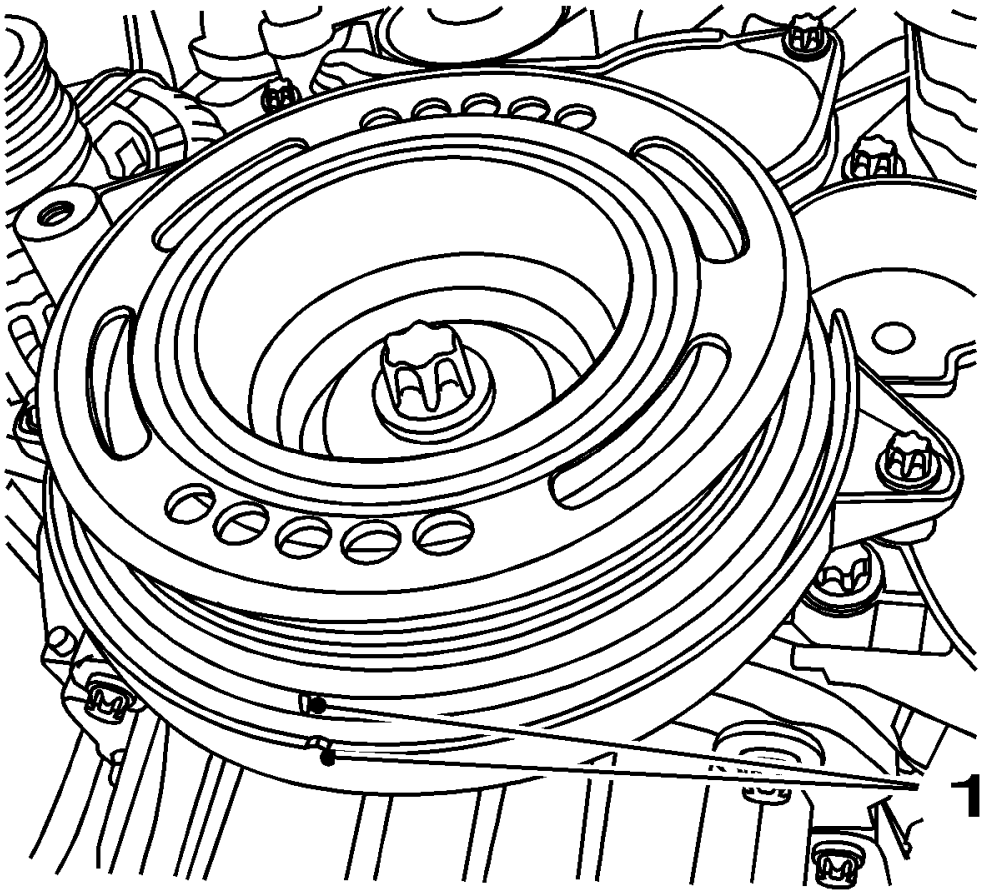

Fig. 343: View Of Crankshaft TDC Position
Courtesy of GENERAL MOTORS COMPANY

24. Check the crankshaft position.
25. Marking on crankshaft balancer must align with marking on timing belt lower cover, see mark (1).
26. Remove the **EN-6628-A** locking tool.
27. Install the camshaft cover. Refer to **Camshaft Cover Installation**.
28. Install the timing belt upper front cover. Refer to **Timing Belt Upper Front Cover Installation**.

DRAINING FLUIDS AND OIL FILTER REMOVAL

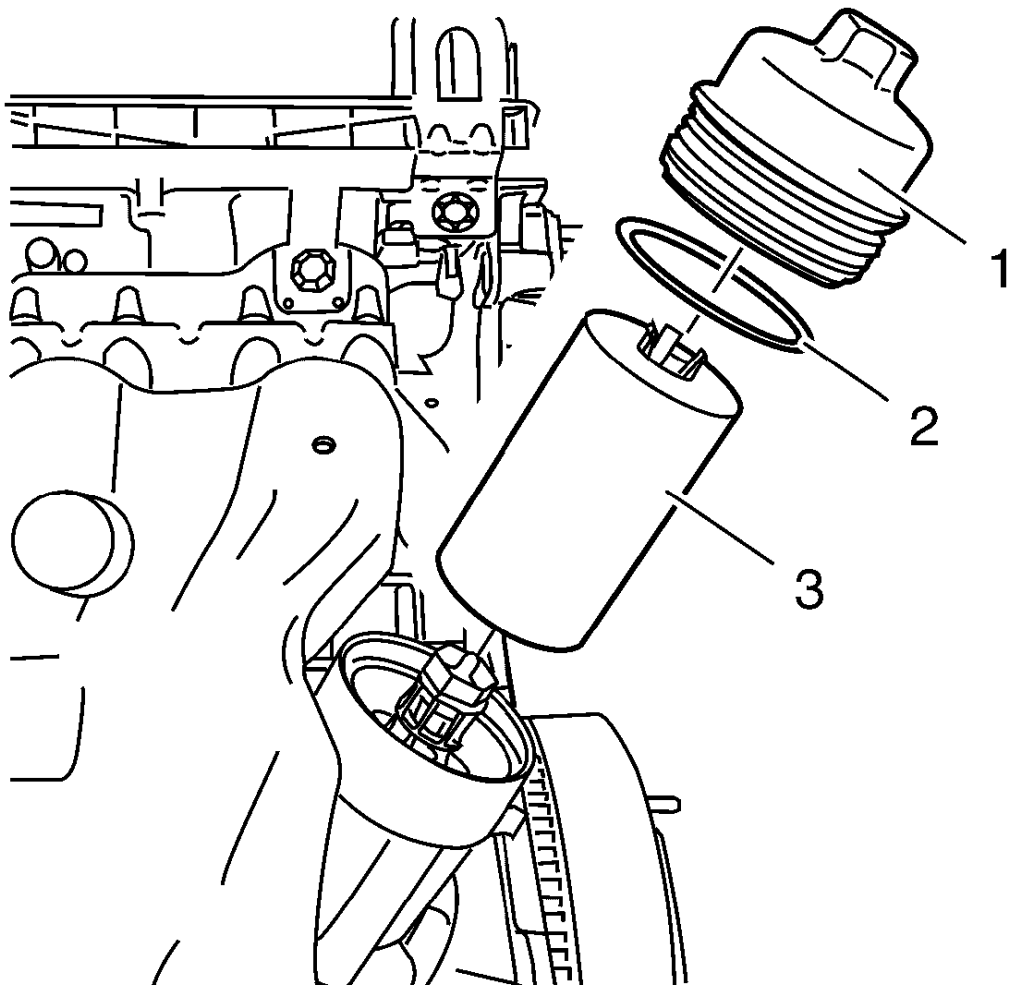

Fig. 344: Oil Filter Cap, Oil Filter Seal And Oil Filter Insert
Courtesy of GENERAL MOTORS COMPANY

1. Place a drip pan underneath.
2. Remove the oil filter cap (1).
3. Remove the oil filter cap seal (2).
4. Remove and properly dispose of the oil filter insert (3).
5. Re-install the oil filter cap.
6. Remove the oil drain bolt.
7. Drain the engine oil into the drip pan.

AUTOMATIC TRANSMISSION FLEX PLATE REMOVAL

Special Tools

EN-652 Automatic Transmission Flex Plate Holder

For equivalent regional tools, refer to **Special Tools**.

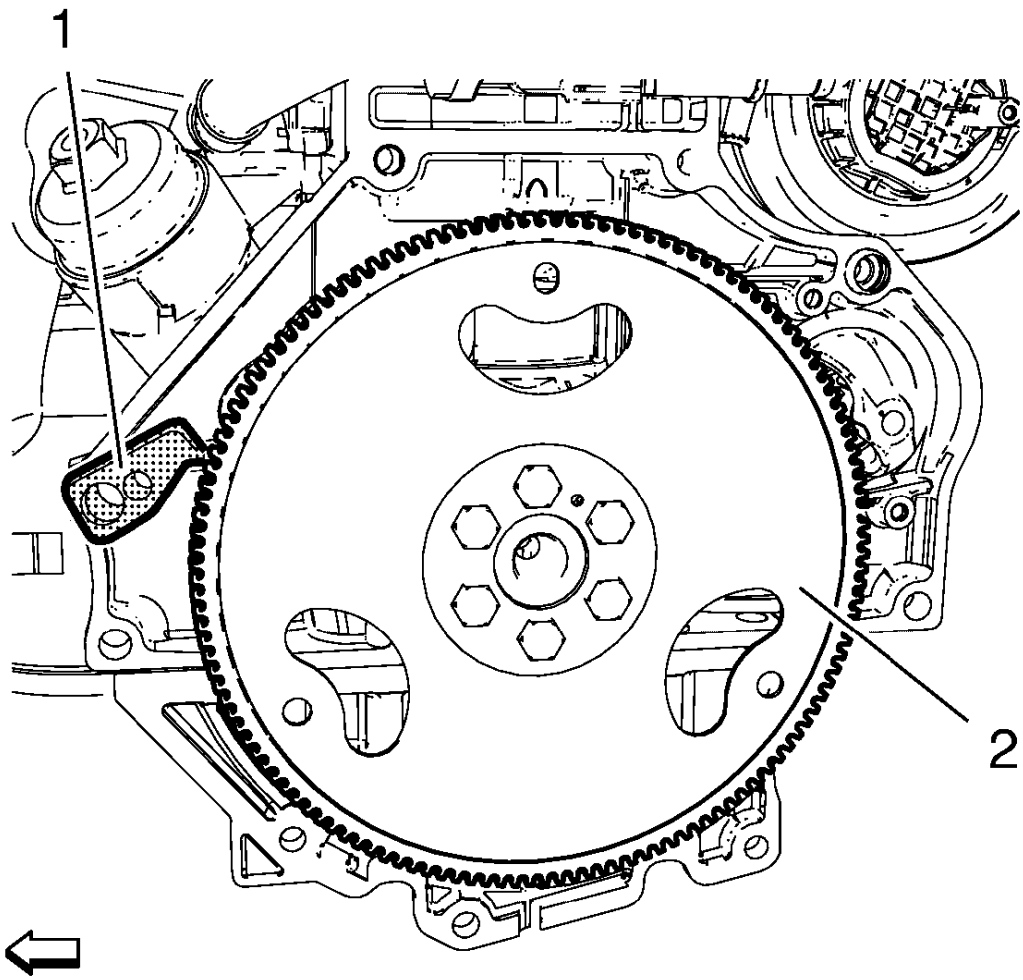

Fig. 345: Automatic Transmission Flex Plate And Holder
Courtesy of GENERAL MOTORS COMPANY

1. Install the **EN-652** holder (1) to hold the automatic transmission flex plate (2).
2. Loosen the 6 automatic transmission flex plate bolts.
3. Remove the **EN-652** holder (1).

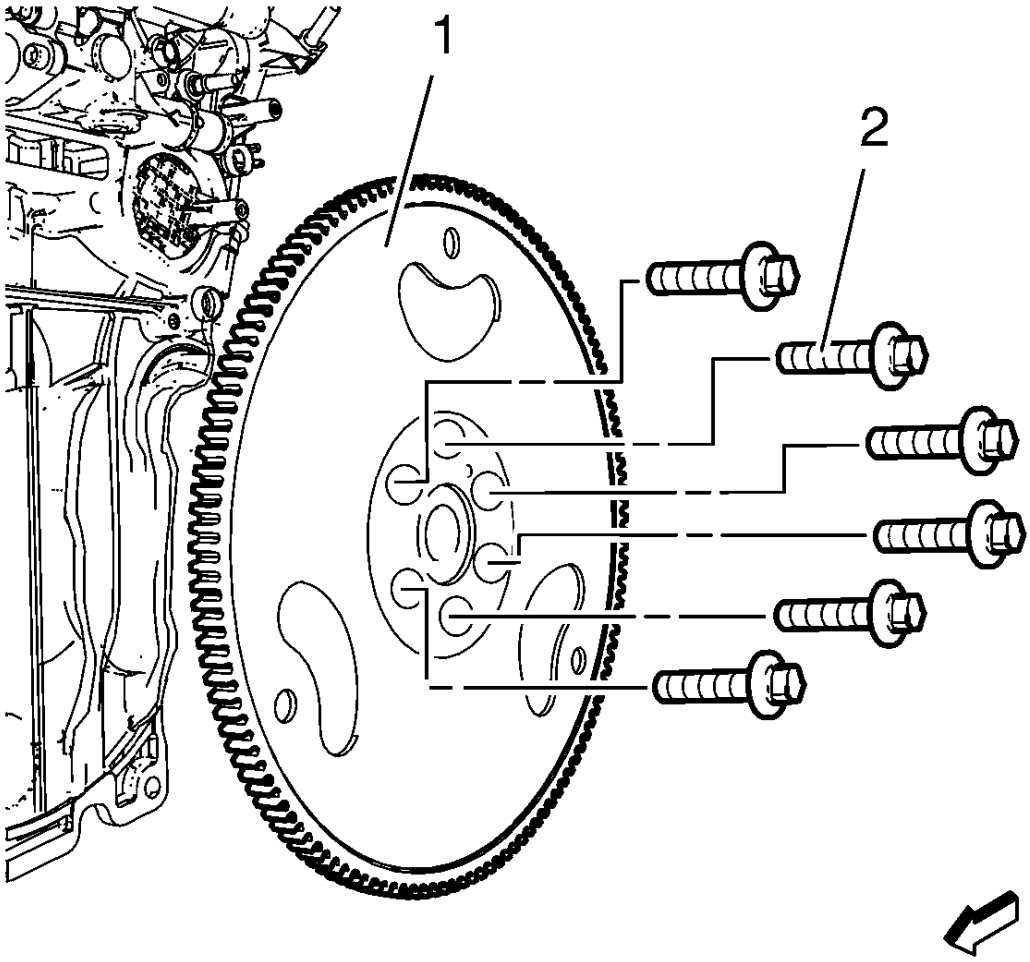

Fig. 346: Automatic Transmission Flex Plate And Bolts
Courtesy of GENERAL MOTORS COMPANY

4. Remove the 6 automatic transmission flex plate bolts (2).
5. Remove the automatic transmission flex plate (1).

ENGINE FLYWHEEL REMOVAL

Special Tools

EN-652 Flywheel Holder

For equivalent regional tools, refer to **Special Tools**.

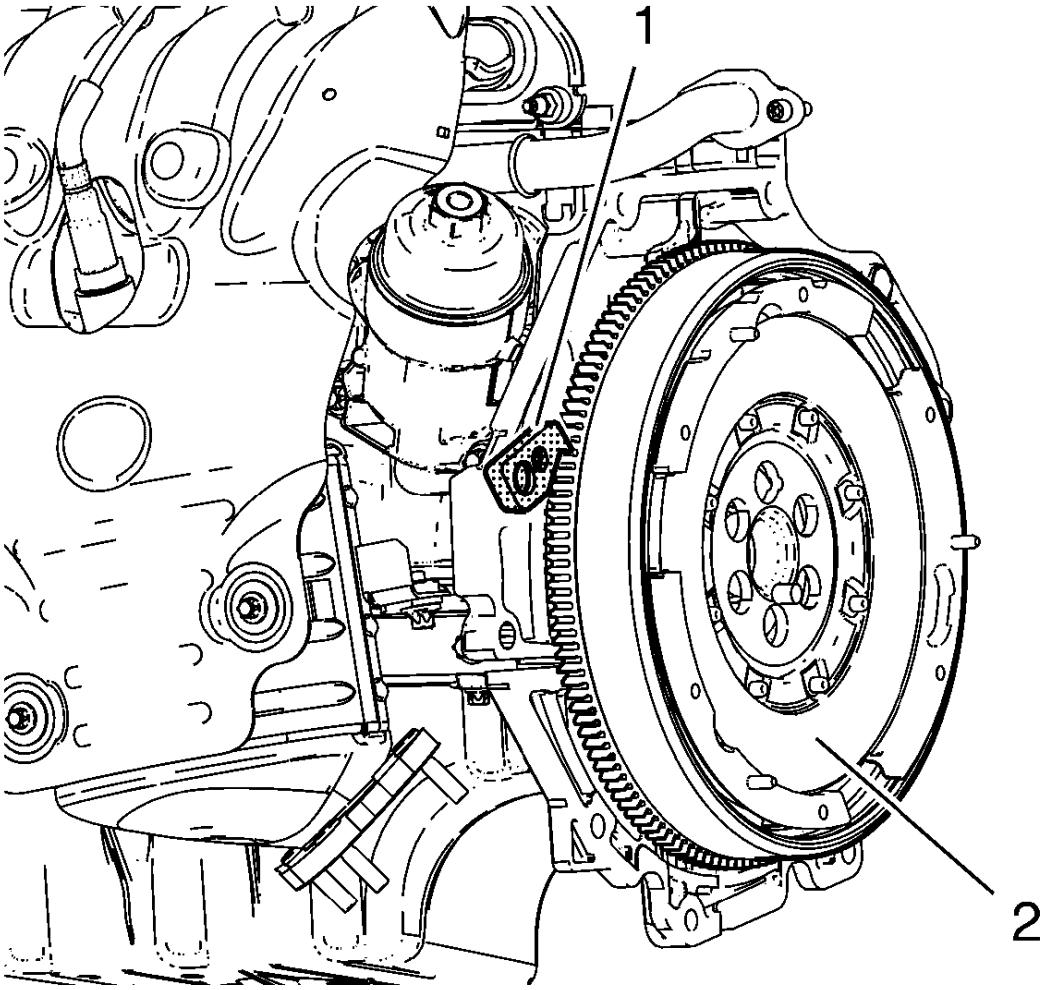

Fig. 347: Flywheel And Flywheel Holder
Courtesy of GENERAL MOTORS COMPANY

1. Install the **EN-652** holder (1), lock the flywheel via the starter ring gear.
2. Loosen the 6 flywheel bolts.
3. Remove the **EN-652** holder (1).

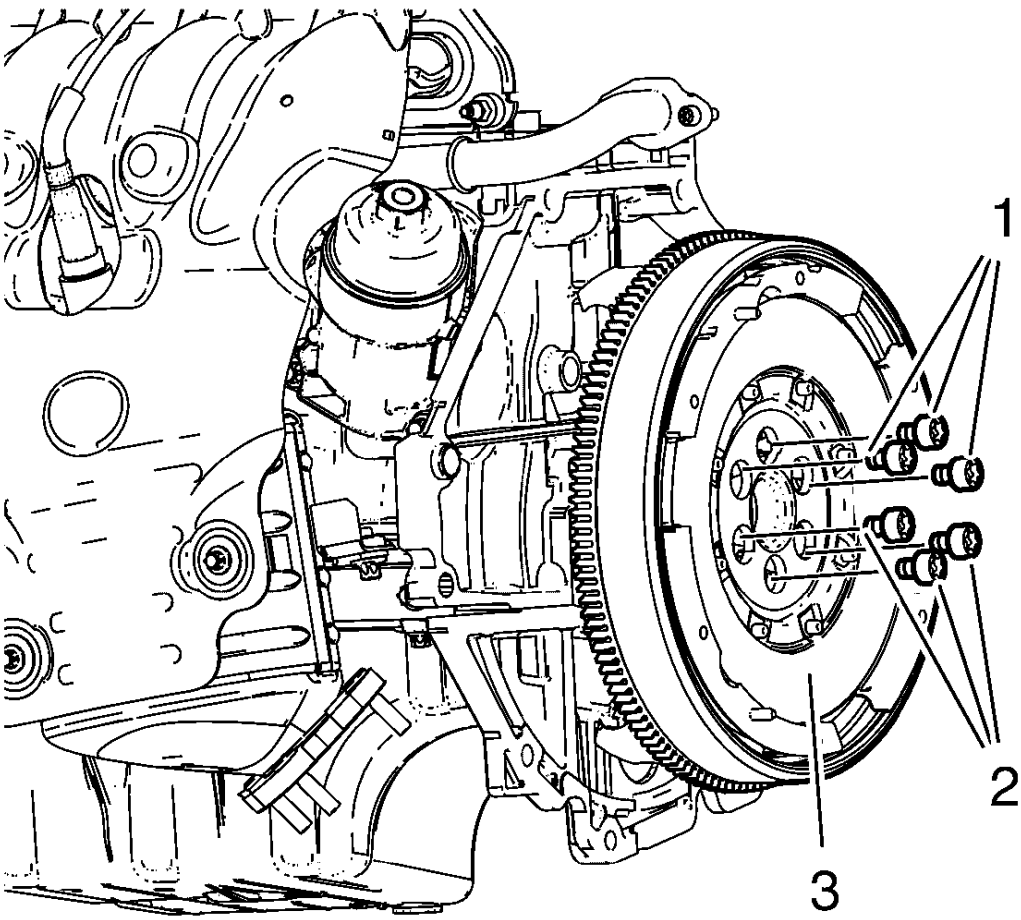

Fig. 348: Flywheel And Bolts
Courtesy of GENERAL MOTORS COMPANY

4. Remove and DISCARD the 6 flywheel bolts (1, 2).
5. Remove the flywheel (3).

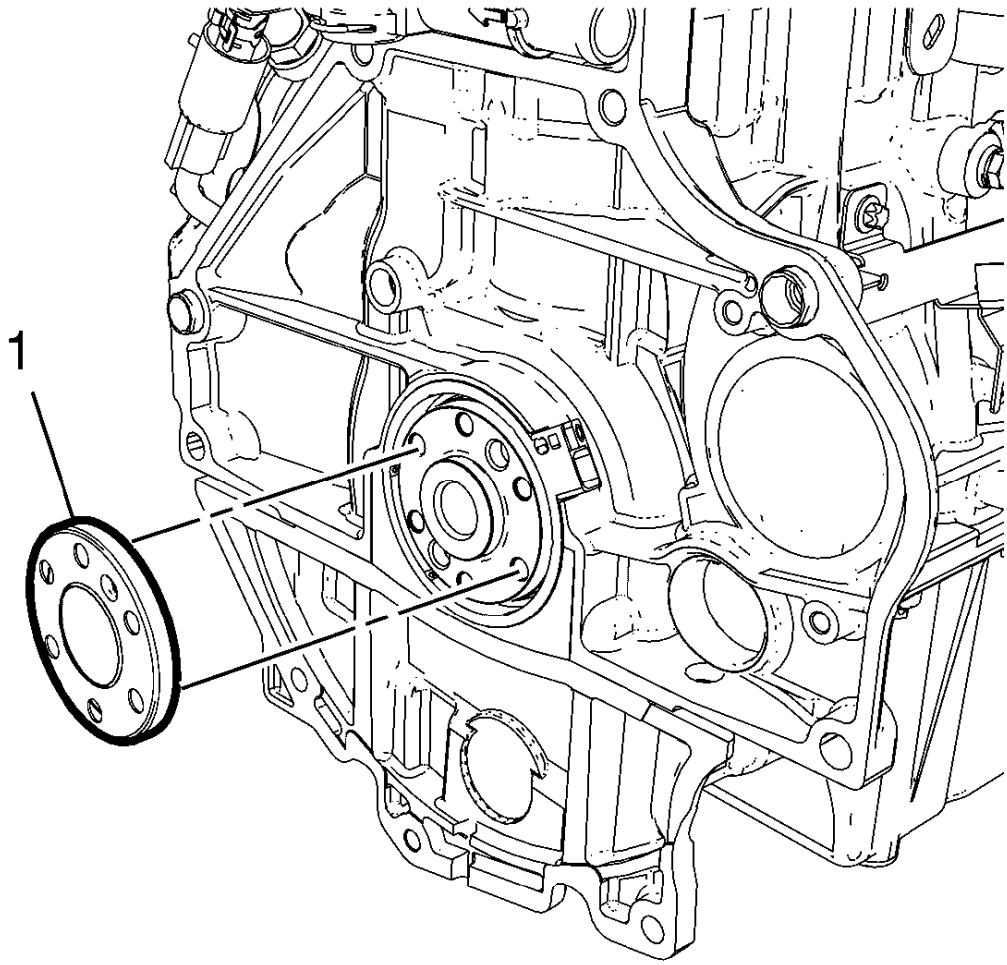

Fig. 349: Crankshaft Position Reluctor Ring
Courtesy of GENERAL MOTORS COMPANY

6. Remove the crankshaft position reluctor ring (1).

CRANKSHAFT REAR OIL SEAL REMOVAL

Special Tools

- **EN-328-B** Pin Remover
- **EN-6624** Remover

For equivalent regional tools, refer to **Special Tools**.

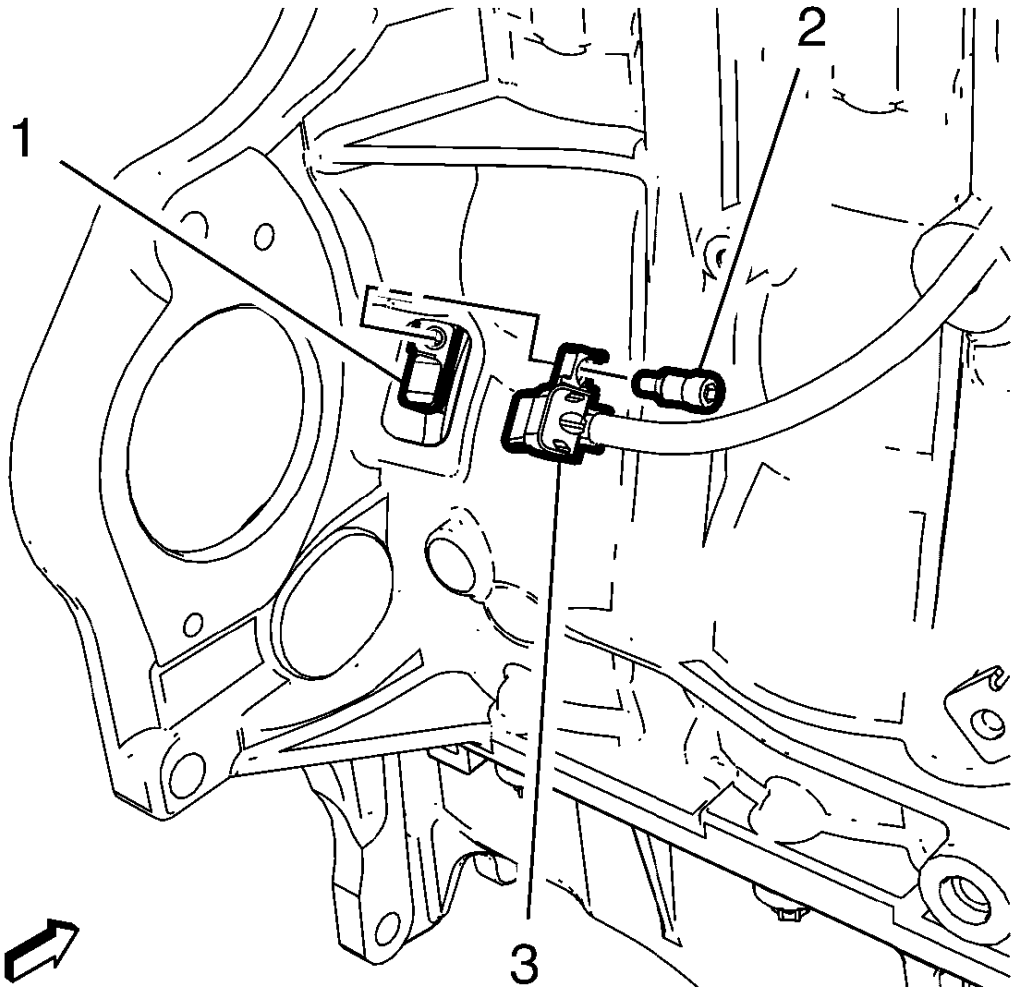

Fig. 350: Crankshaft Position Sensor And Bolt
Courtesy of GENERAL MOTORS COMPANY

1. Remove the crankshaft position sensor bolt (2).
2. Remove the crankshaft position sensor (3) from the crankshaft rear oil seal housing (1).

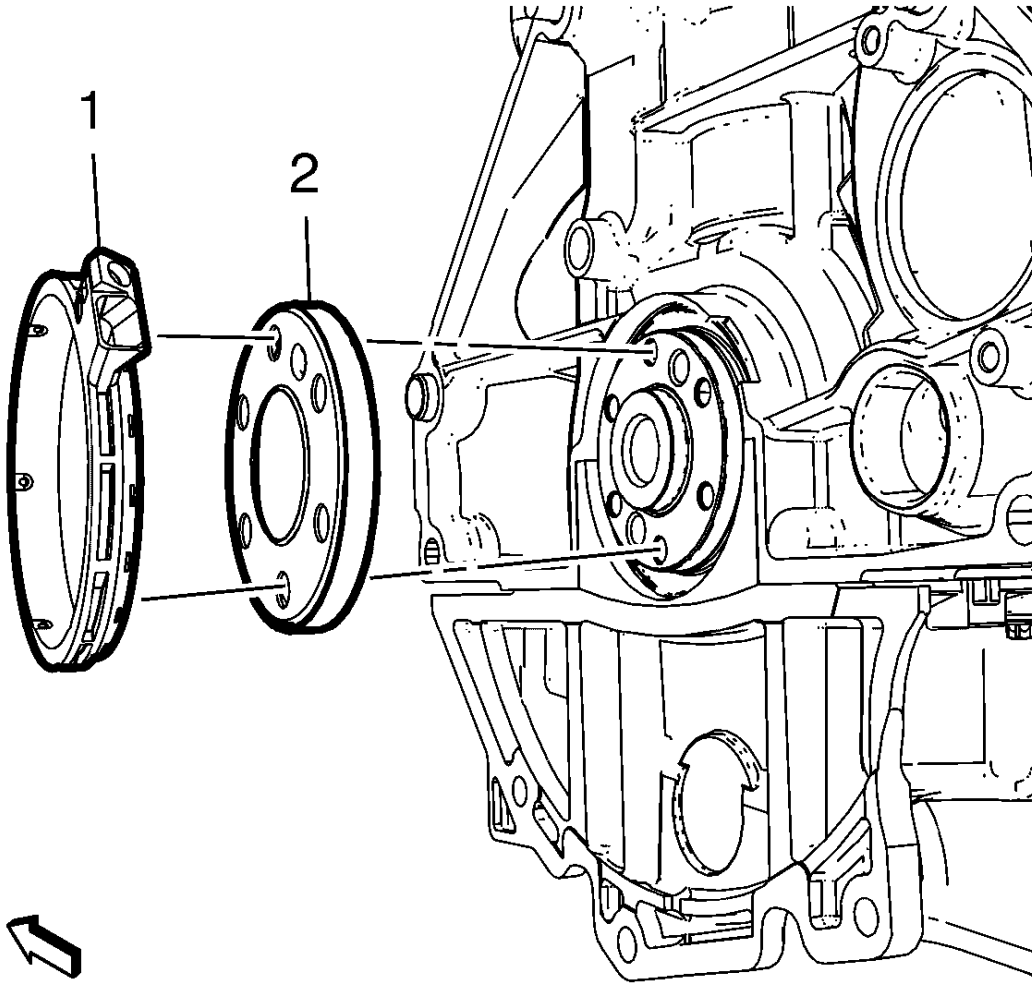

Fig. 351: Crankshaft Position Sensor Reluctor Ring And Oil Seal Housing
Courtesy of GENERAL MOTORS COMPANY

CAUTION: Do not allow the crankshaft encoder wheel to come into contact with external magnetic fields or sharp metal objects. Do not drop the crankshaft encoder wheel. Do not damage the rubberized encoder track. Failure to follow these precautions may cause damage to the component.

3. Remove the crankshaft rear oil seal housing (1).
4. Remove the crankshaft position sensor reluctor ring (2).

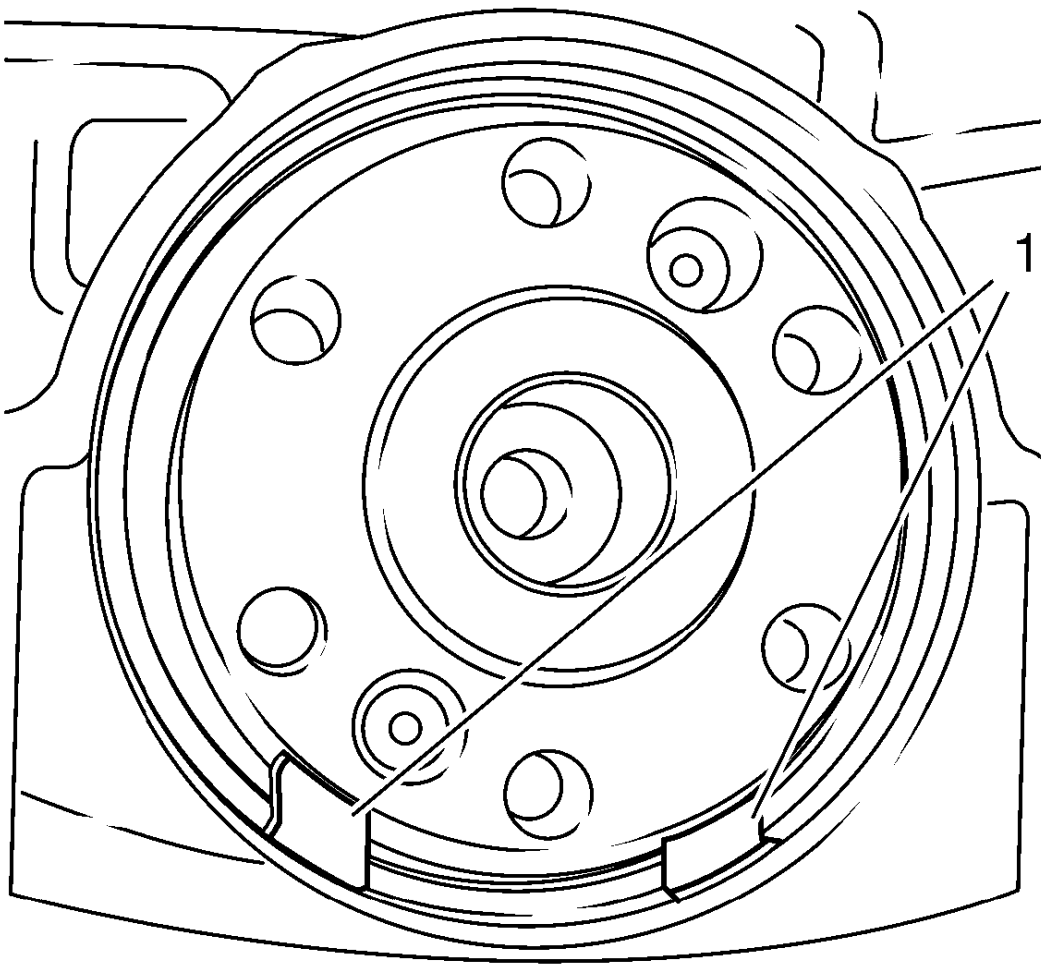

Fig. 352: Holes At 5 O'clock And 7 O'clock Positions
Courtesy of GENERAL MOTORS COMPANY

NOTE: The diameter of the hole must not exceed 2 mm (0.0787 in). If the diameter of the hole exceeds 2 mm (0.0787 in), the bolt of EN-6624 remover will not be able to grip.

5. Only make a hole at the 5 o'clock and 7 o'clock positions (1), these are the only positions where is a cavity behind the seal ring.

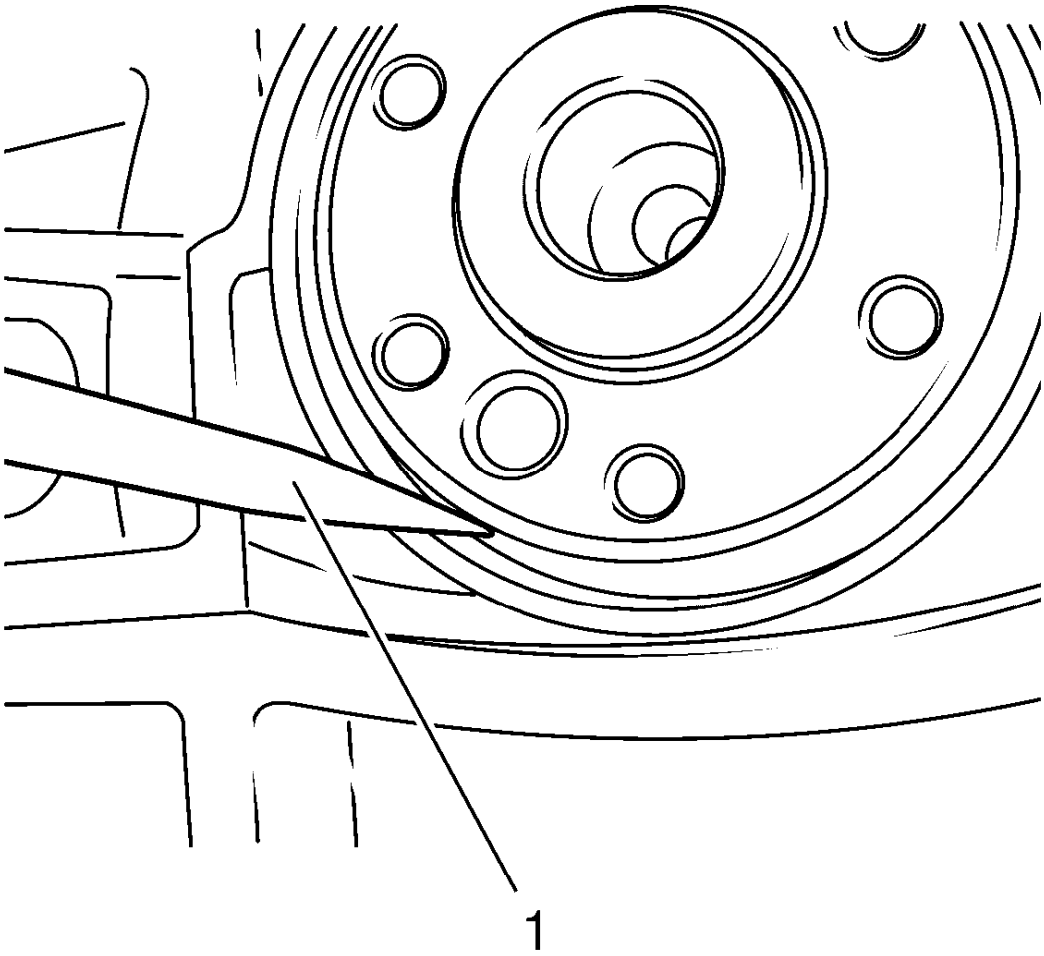

Fig. 353: Scribe Tool
Courtesy of GENERAL MOTORS COMPANY

6. Using a suitable tool, such as a scribe (1), make a hole in the crankshaft rear oil seal.

   Position the scribe (1) at the outer edge of the crankshaft rear oil seal.

7. Remove the seal ring.

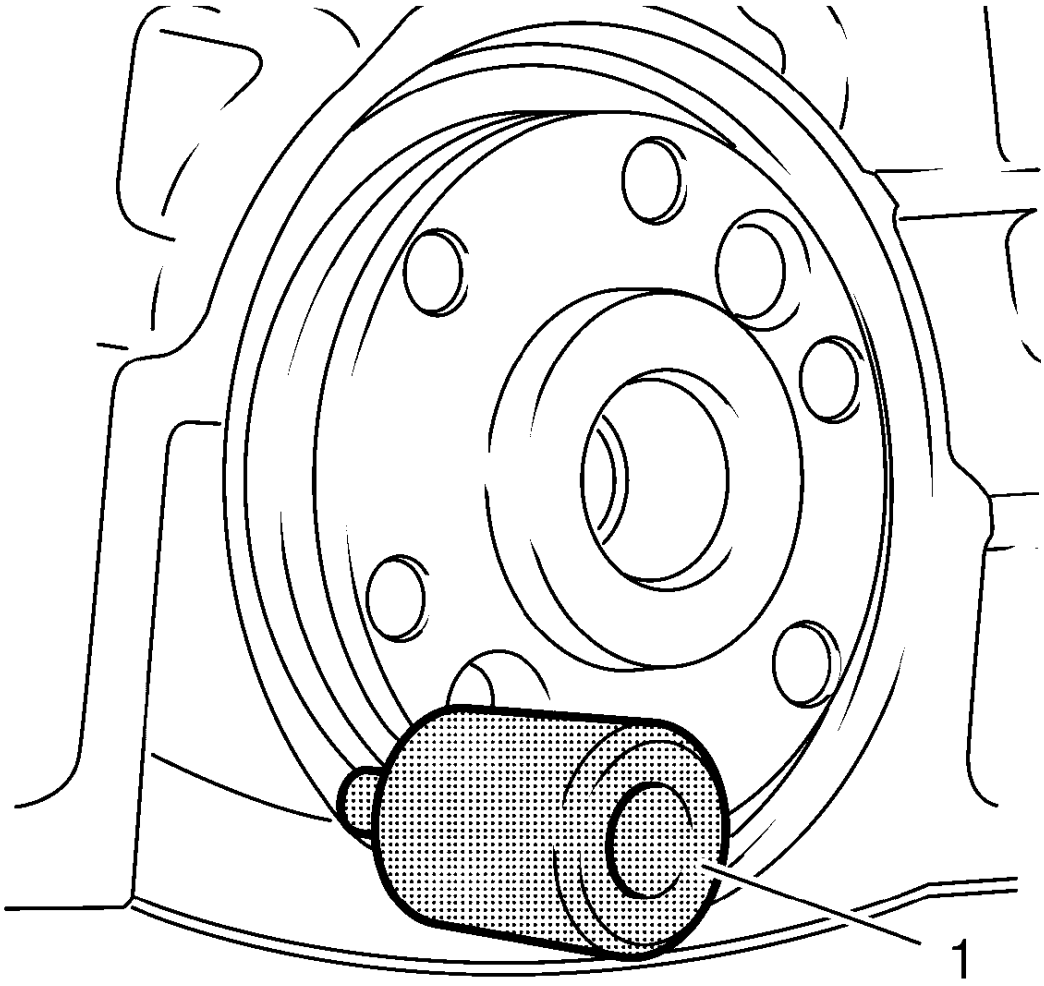

Fig. 354: crankshaft Rear Oil Seal Removal Tool
Courtesy of GENERAL MOTORS COMPANY

8. Install **EN-6624** remover (1) to the crankshaft rear oil seal and tighten the bolt.

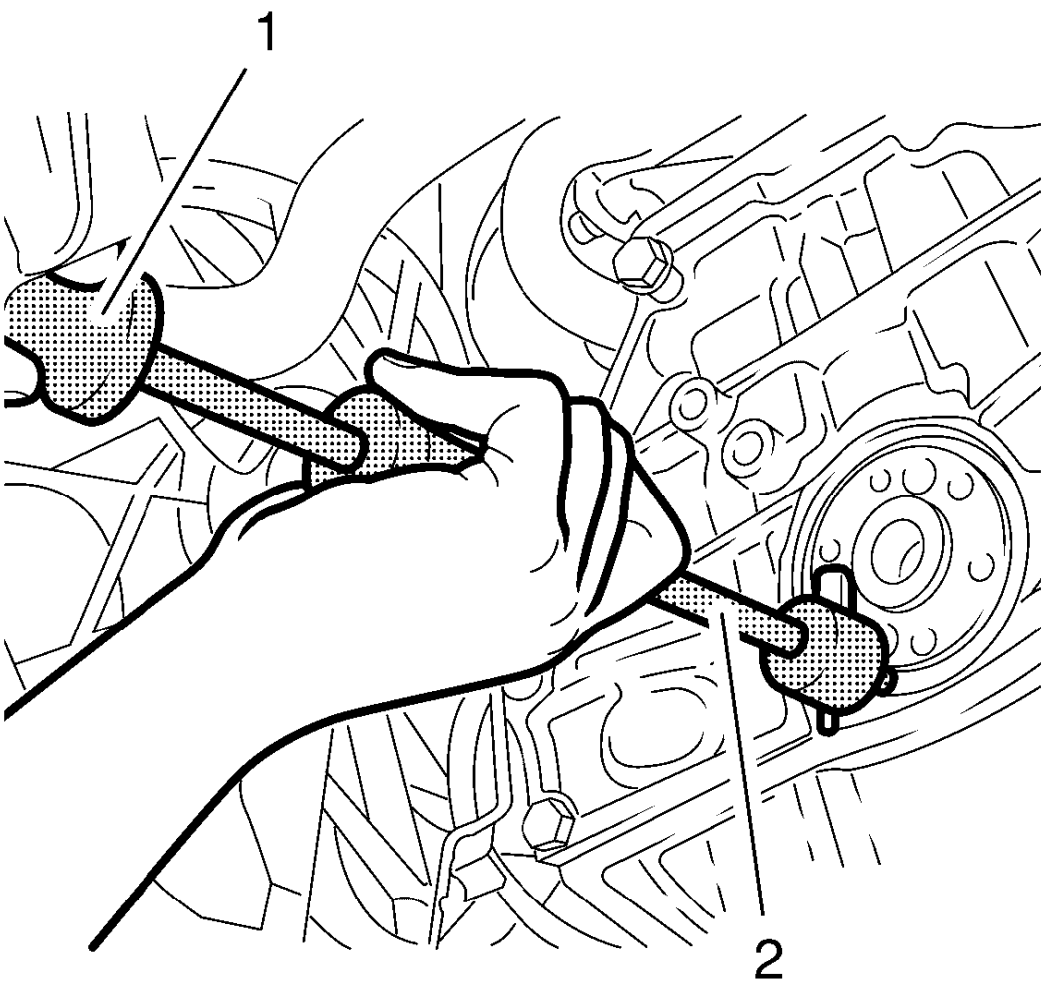

Fig. 355: Special Removal Tools
Courtesy of GENERAL MOTORS COMPANY

9. Install the **EN-328-B** remover (1) to **EN-6624** remover (2) and remove the crankshaft rear oil seal.

POSITIVE CRANKCASE VENTILATION PIPE REMOVAL

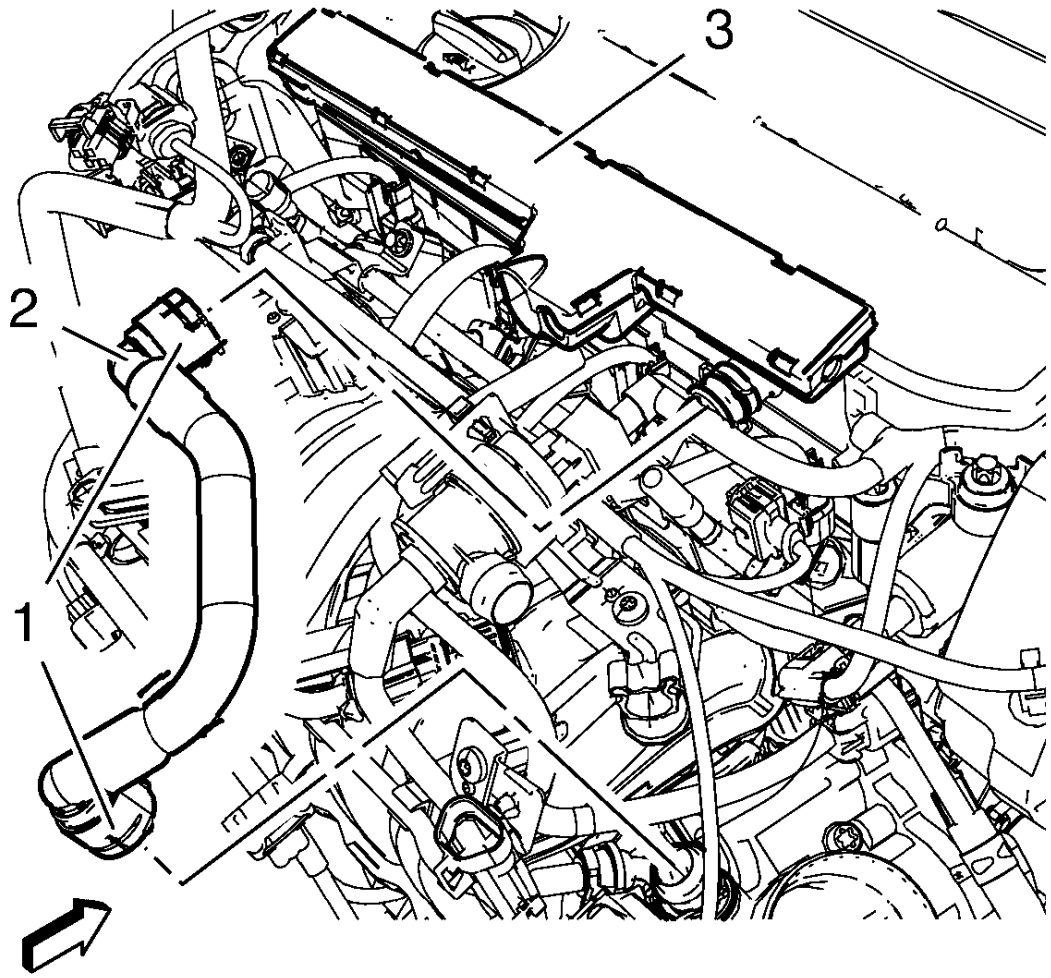

Fig. 356: Positive Crankcase Ventilation Tube, Connectors And ECM Wiring Harness Guide
Courtesy of GENERAL MOTORS COMPANY

1. Unclip the ECM wiring harness guide (3) from the cylinder head cover.
2. Disconnect the 2 positive crankcase ventilation tube connectors (1).
3. Remove the positive crankcase ventilation tube (2).

SECONDARY AIR INJECTION PUMP PIPE REMOVAL

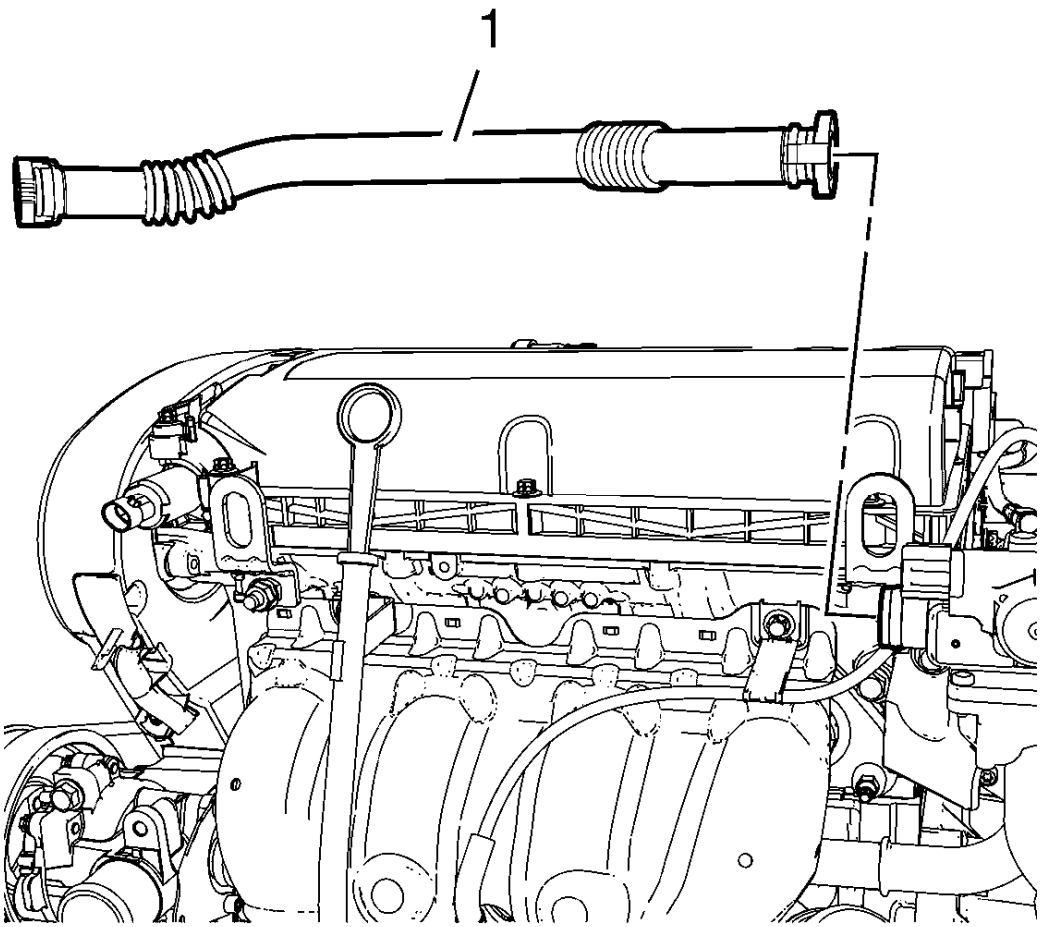

Fig. 357: Secondary Air Injection Pump Pipe
Courtesy of GENERAL MOTORS COMPANY

1. Disconnect the secondary air injection pump pipe (3) from the secondary air injection check valve. Refer to **Plastic Collar Quick Connect Fitting Service** .

SECONDARY AIR INJECTION PUMP REMOVAL

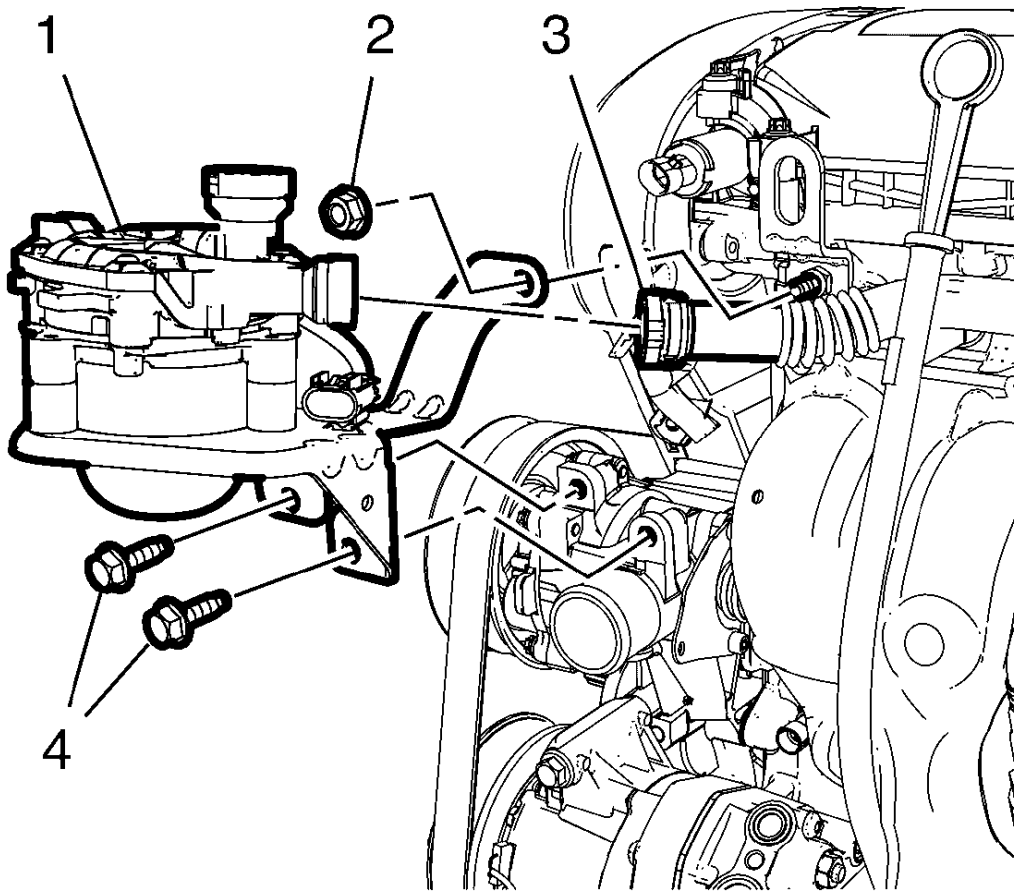

Fig. 358: Secondary Air Injection Pump Pipe
Courtesy of GENERAL MOTORS COMPANY

1. Disconnect the secondary air injection pump pipe (3). Refer to **Plastic Collar Quick Connect Fitting Service** .
2. Remove the secondary air injection pump nut (2) and the 2 secondary air injection pump bolts (4).
3. Remove the secondary air injection pump (1).

SECONDARY AIR INJECTION CHECK VALVE REMOVAL

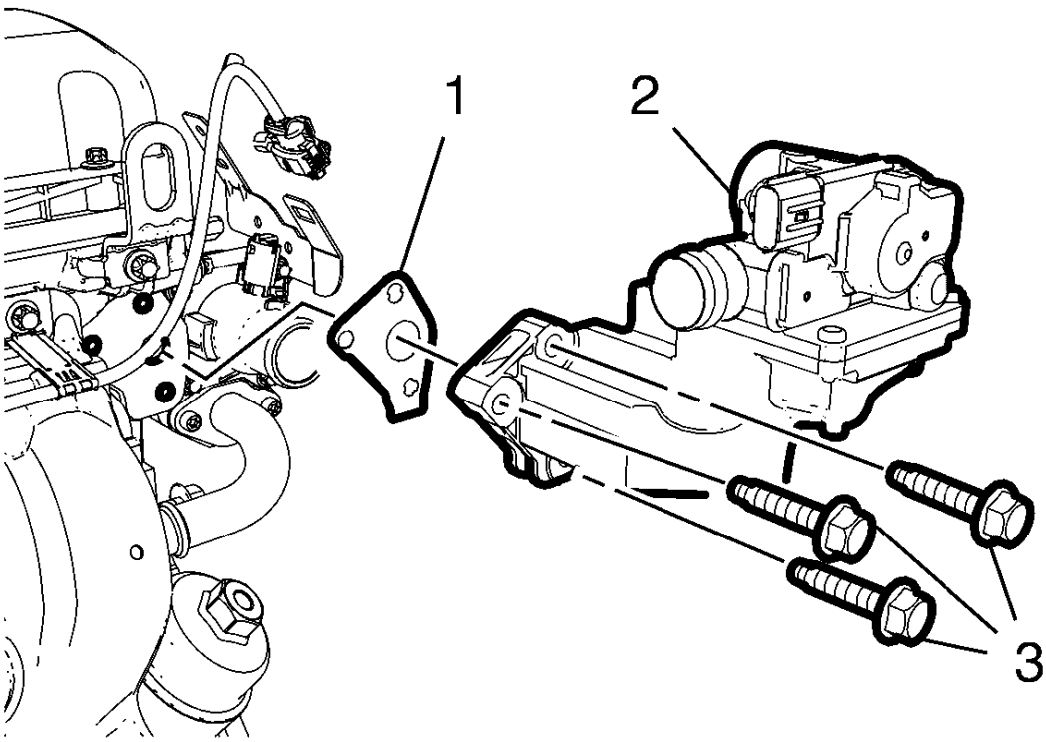

Fig. 359: Secondary Air Injection Check Valve Bolts
Courtesy of GENERAL MOTORS COMPANY

1. Remove the 3 secondary air injection check valve bolts (3).
2. Remove the secondary air injection check valve (2).
3. Remove and DISCARD the secondary air injection check valve gasket (1).

DRIVE BELT REMOVAL

Special Tools

EN-6349 Locking Pin

For equivalent regional tools, refer to **Special Tools**.

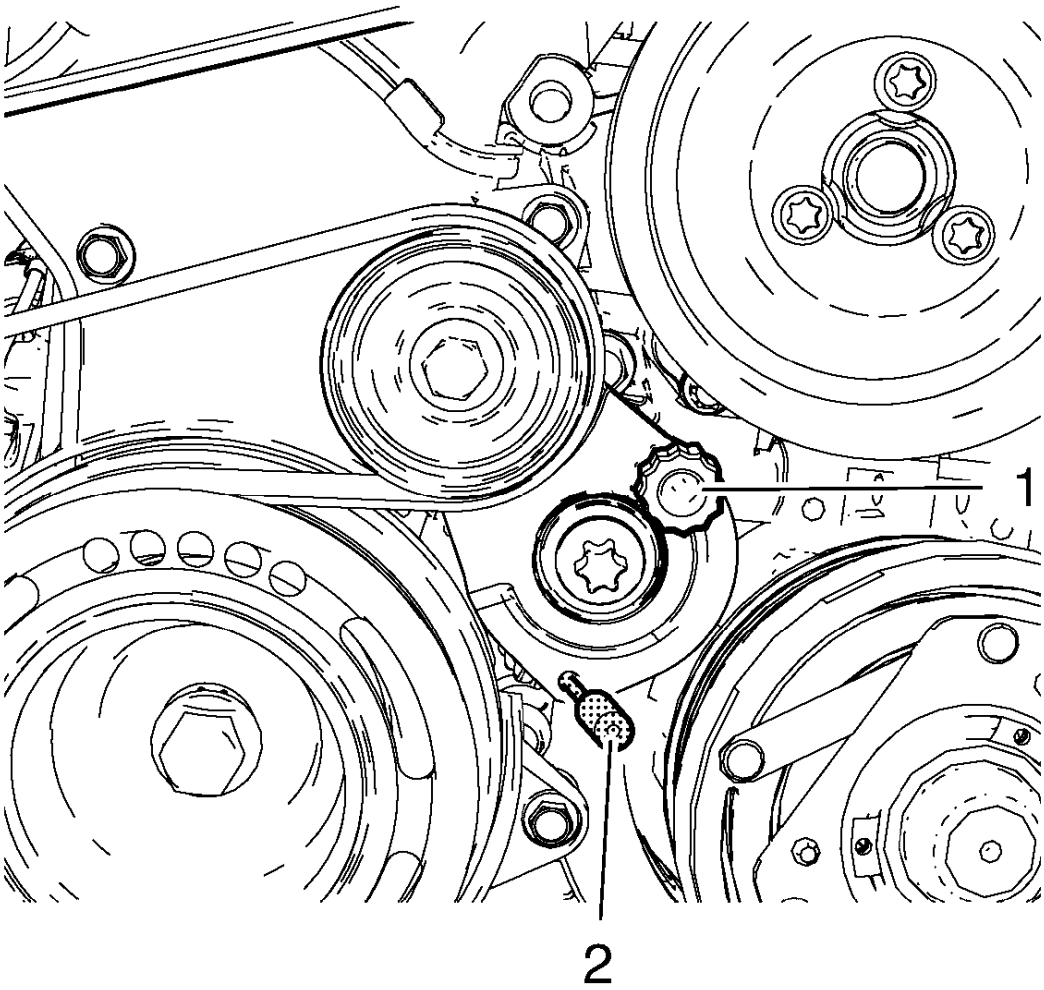

Fig. 360: Drive Belt Tensioner And Special Tool
Courtesy of GENERAL MOTORS COMPANY

1. Release tension to the drive belt tensioner counterclockwise (1) and lock with **EN-6349** pin (2).

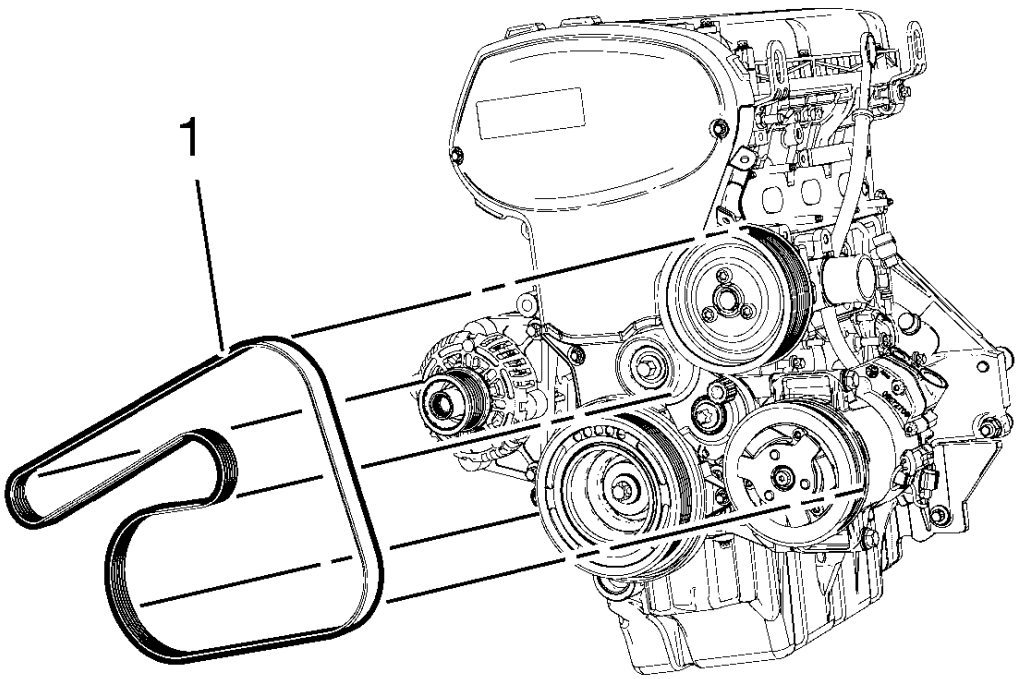

Fig. 361: Drive Belt Routing
Courtesy of GENERAL MOTORS COMPANY

2. Remove the drive belt (1).

DRIVE BELT TENSIONER REMOVAL

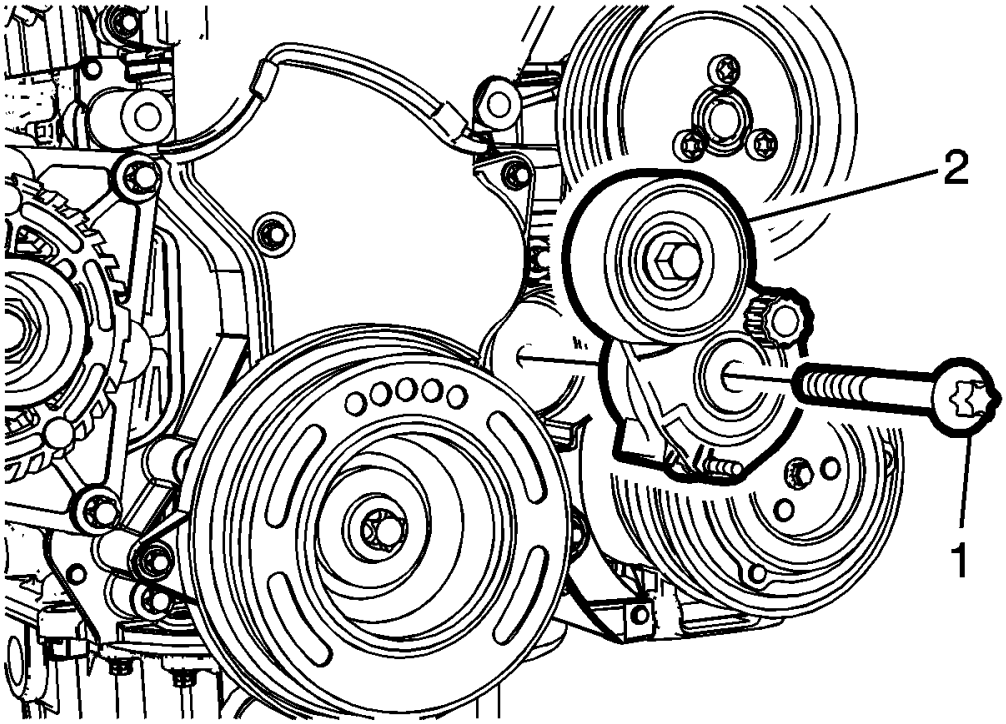

Fig. 362: Drive Belt Tensioner Bolt
Courtesy of GENERAL MOTORS COMPANY

1. Remove the drive belt tensioner bolt (1).
2. Remove the drive belt tensioner (2).

TIMING BELT UPPER FRONT COVER REMOVAL

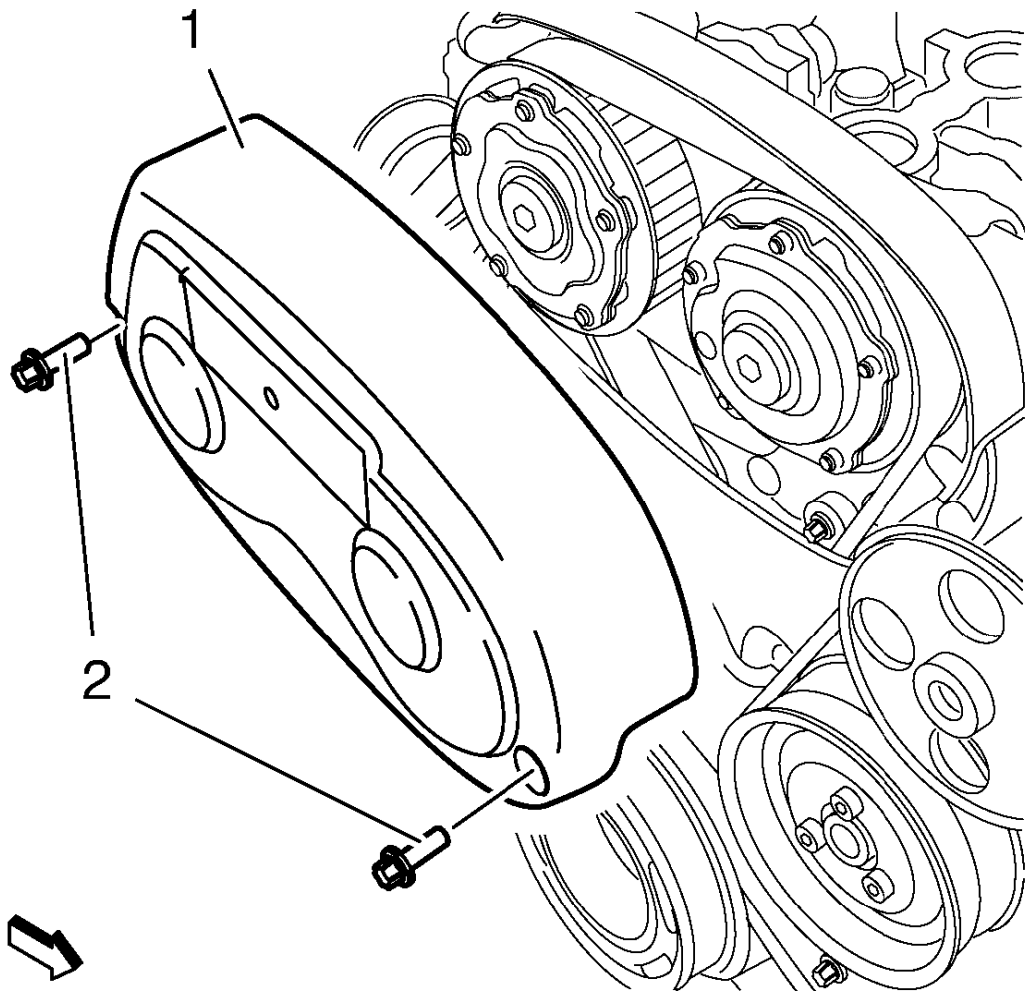

Fig. 363: Timing Belt Upper Front Cover
Courtesy of GENERAL MOTORS COMPANY

1. Remove the 2 timing belt upper front cover bolts (2).
2. Remove the timing belt upper front cover (1).

TIMING BELT CENTER FRONT COVER REMOVAL

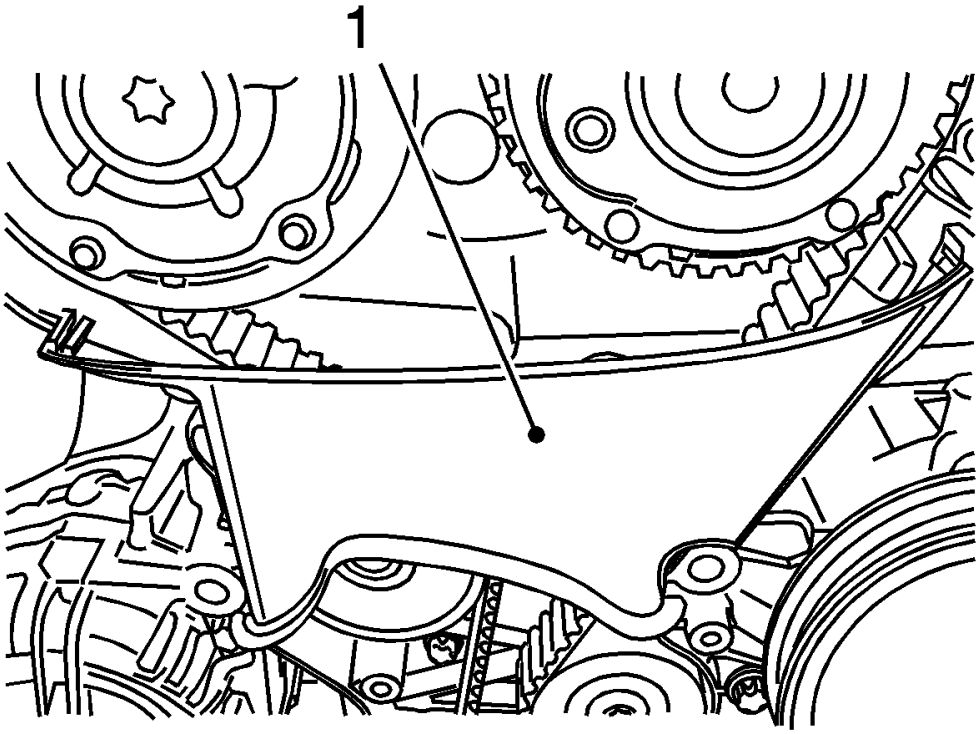

Fig. 364: View Of Toothed Belt Cover
Courtesy of GENERAL MOTORS COMPANY

1. Remove the center front timing belt cover from the rear timing belt cover at 2 locations.
2. Remove the center front timing belt cover (1).

CRANKSHAFT BALANCER REMOVAL

Special Tools

EN-652 Flywheel Holder

For equivalent regional tools, refer to **Special Tools**.

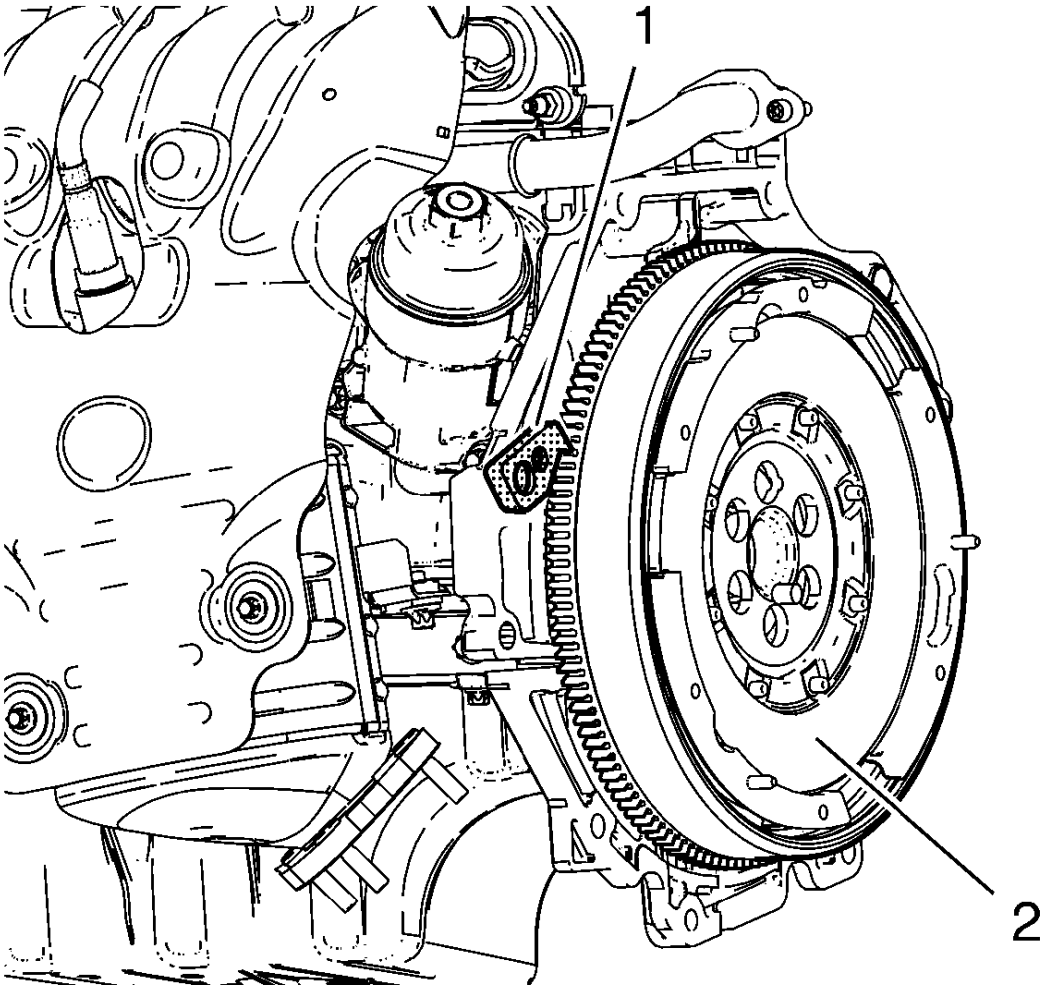

Fig. 365: Flywheel And Flywheel Holder
Courtesy of GENERAL MOTORS COMPANY

1. Install the **EN-652** holder (1). Lock the flywheel (2) or the automatic transmission flex plate via the starter ring gear.

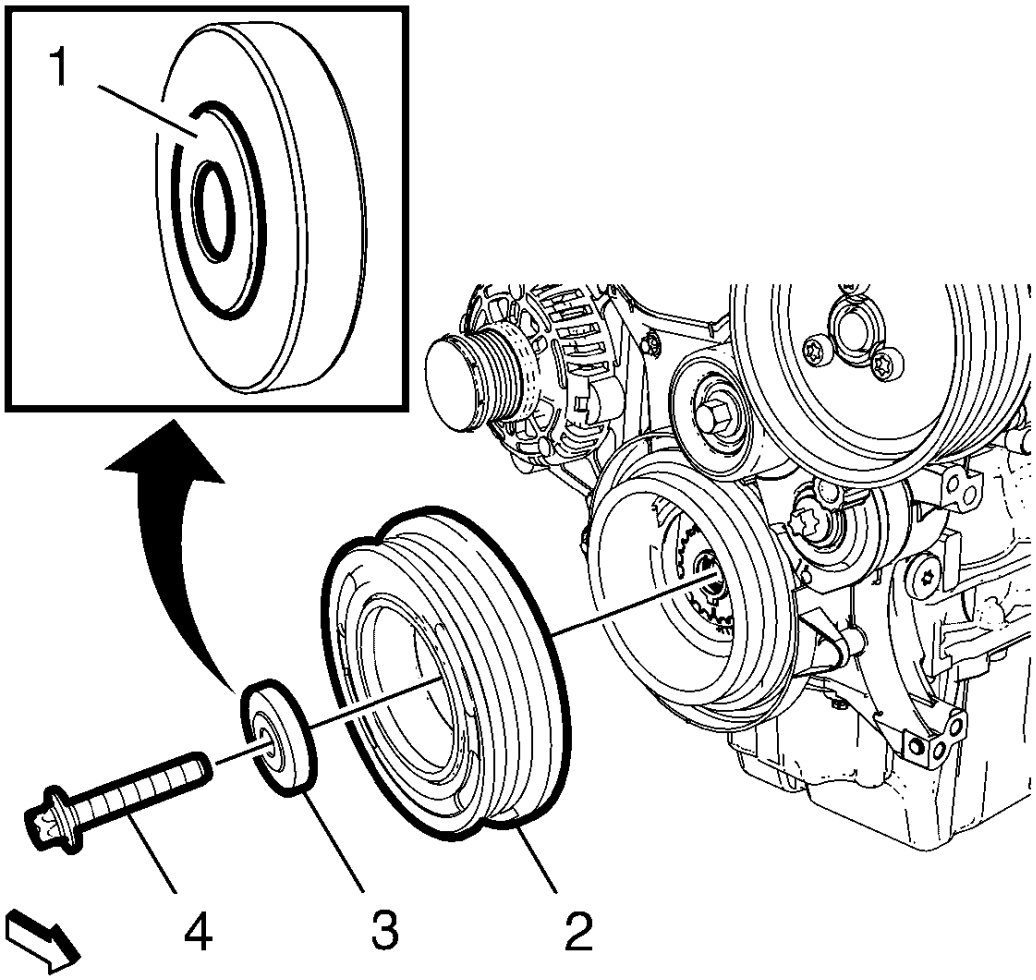

Fig. 366: Crankshaft Balancer, Washer And Bolt
Courtesy of GENERAL MOTORS COMPANY

2. Remove and DISCARD the crankshaft balancer bolt (4).
3. Remove the crankshaft balancer washer (3).
4. Remove the crankshaft balancer (2).

TIMING BELT LOWER FRONT COVER REMOVAL

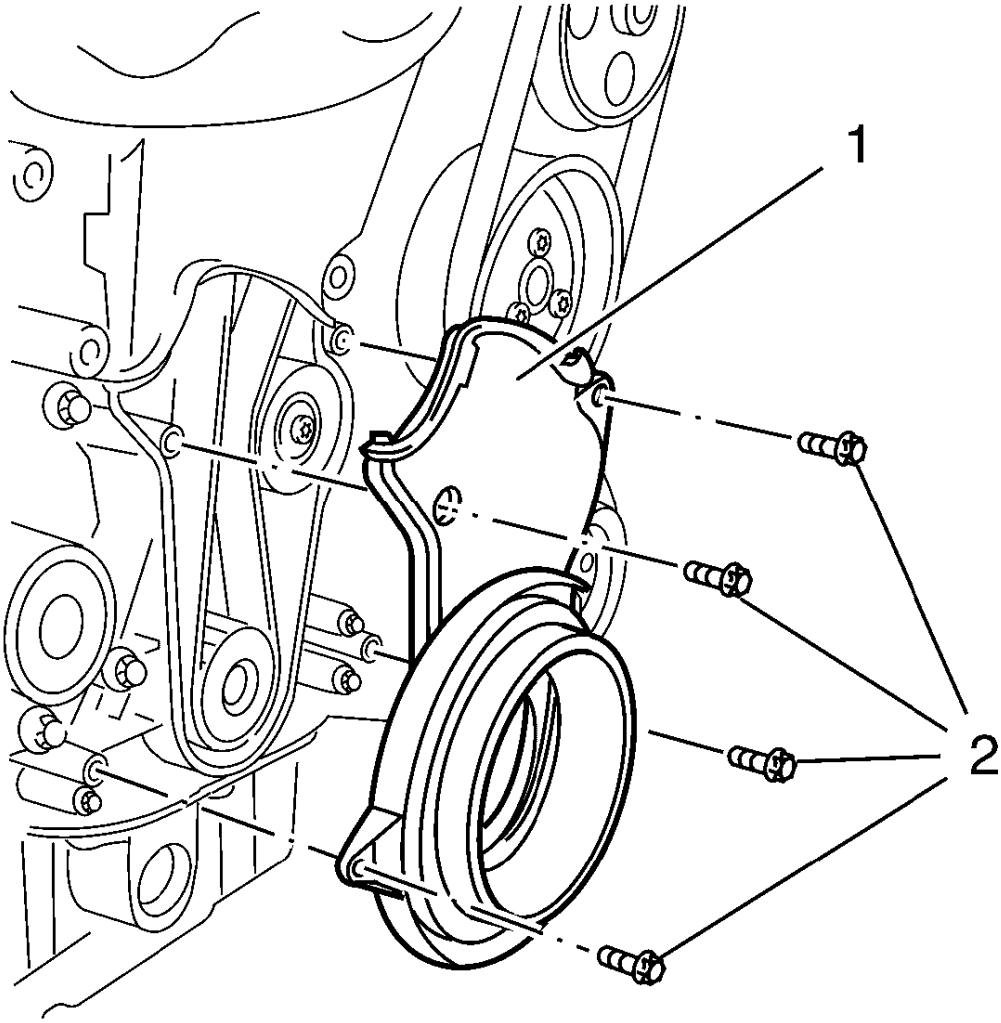

Fig. 367: Timing Belt Lower Front Cover
Courtesy of GENERAL MOTORS COMPANY

1. Remove the 4 timing belt lower front cover bolts (2).
2. Remove the timing belt lower front cover (1).

TIMING BELT REMOVAL

Special Tools

- **EN-6333** Locking Pin
- **EN-6340** Locking Tool

For equivalent regional tools, refer to **Special Tools**.

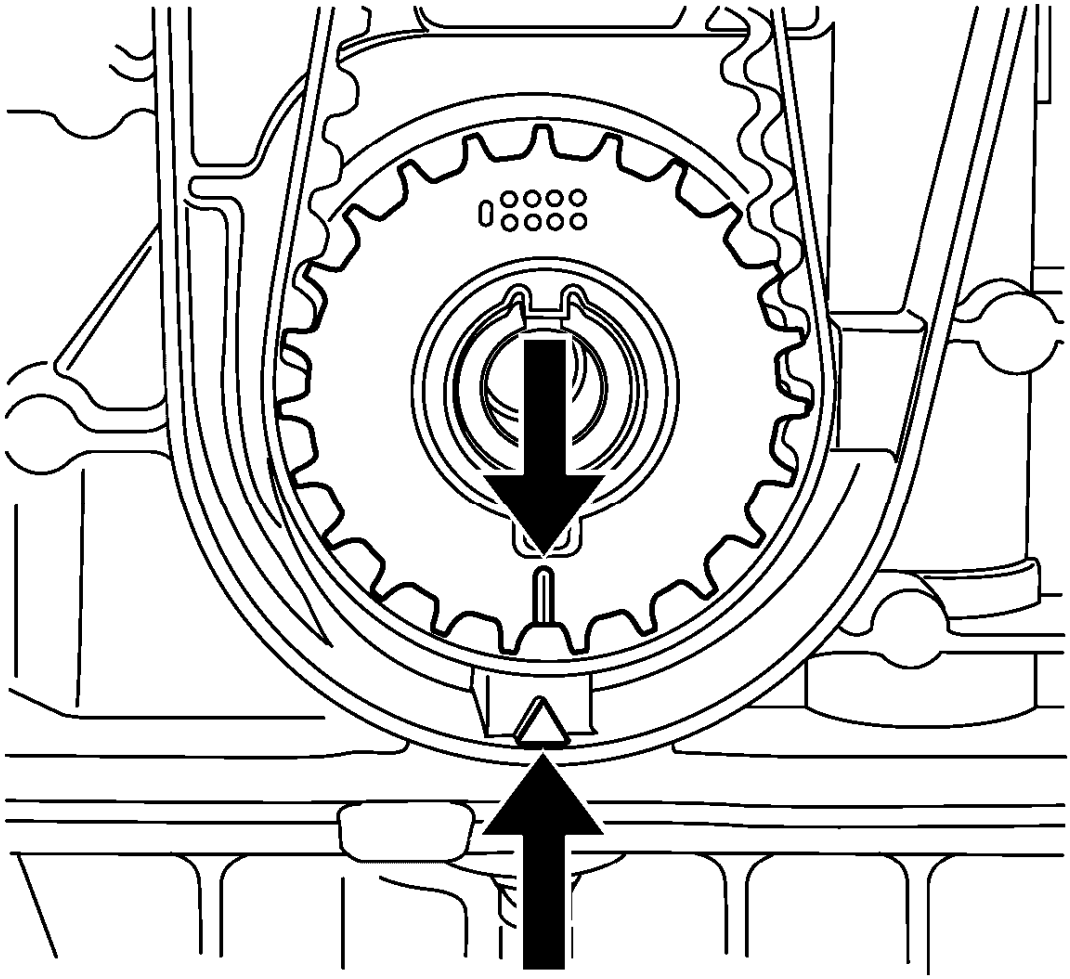

Fig. 368: Aligning Timing Belt Drive Gear And Oil Pump Housing
Courtesy of GENERAL MOTORS COMPANY

NOTE: The timing belt drive gear and oil pump housing must align.

1. Turn the crankshaft in the direction of engine rotation, by the crankshaft balancer bolt, to cylinder 1 TDC of combustion stroke.

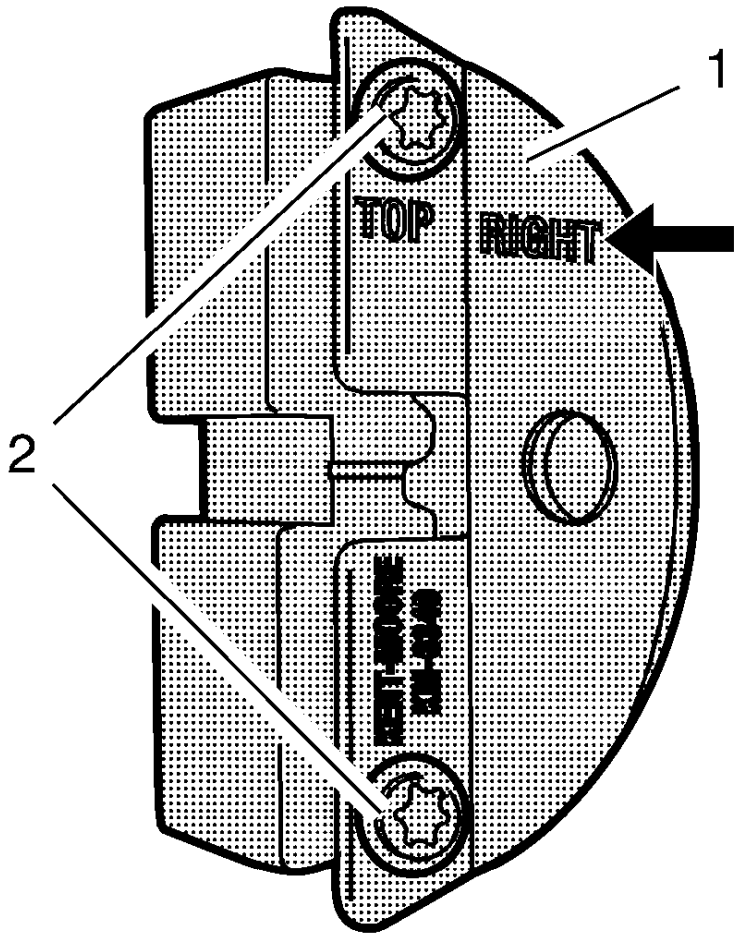

Fig. 369: Front Panel And Bolts
Courtesy of GENERAL MOTORS COMPANY

NOTE: The right half of the EN-6340 locking tool can be recognized by the lettering right, arrow, on the tool.

2. Prepare the right half of the **EN-6340** locking tool.
    1. Remove the 2 bolts (2).
    2. Detach the front panel (1) from the **EN-6340** locking tool - right.

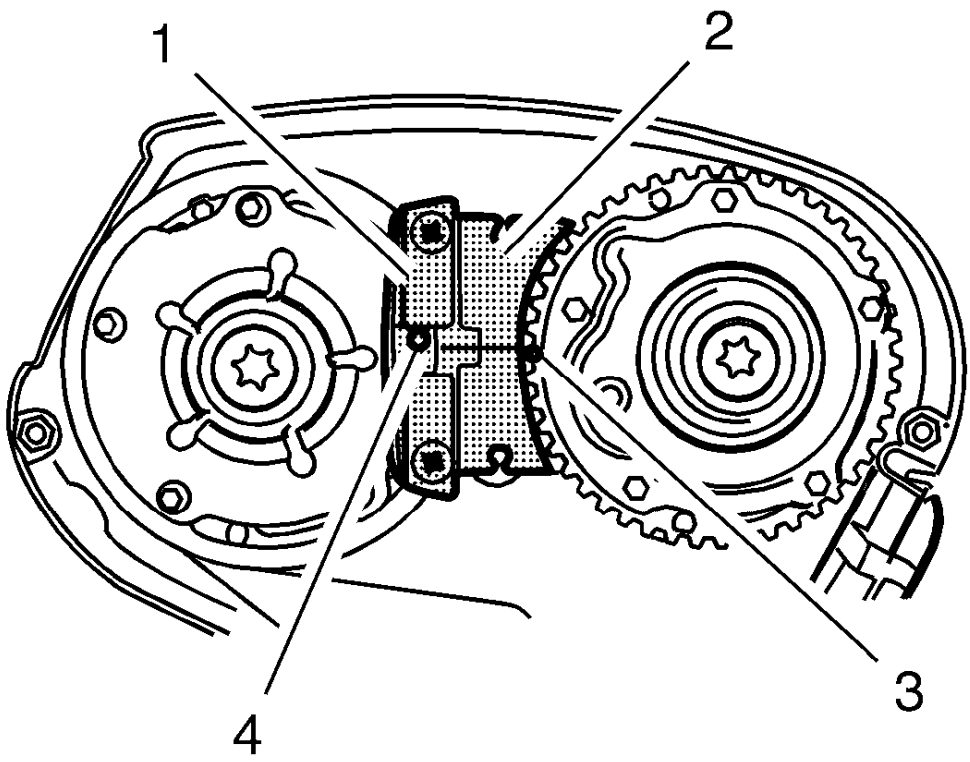

Fig. 370: Spot Type Markings And Special Tool
Courtesy of GENERAL MOTORS COMPANY

NOTE:

- **The spot type marking (4) on the intake camshaft adjuster does not correspond to the groove of the EN-6340 locking tool - left (1) during this process, but must be somewhat above.**
- **The spot type marking (3) on the exhaust camshaft adjuster must correspond to the groove on EN-6340 locking tool - right (2).**

3. Insert the **EN-6340** locking tool - left (1) and the **EN-6340** locking tool - right (2) in the camshaft adjuster.

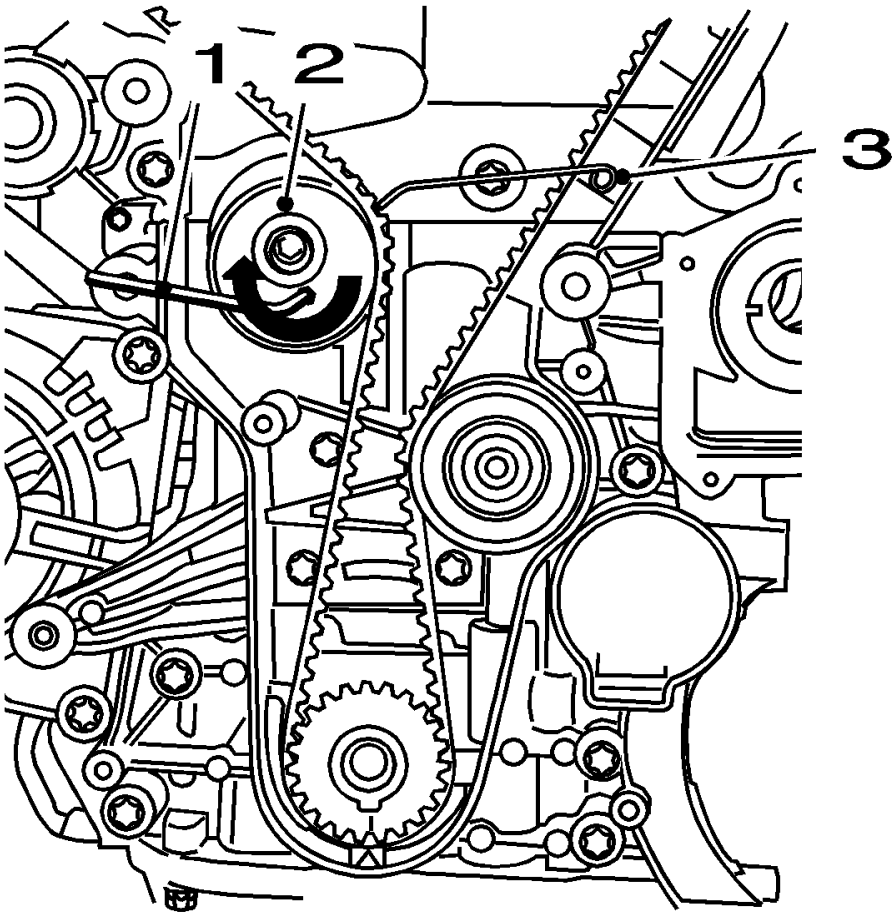

Fig. 371: View Of Drive Belt Tensioner, Allen Key And KM-6333
Courtesy of GENERAL MOTORS COMPANY

4. Install the **EN-6333** locking pin (3), apply tension to the timing belt tension roller (2) in the direction of the arrow, using an Allen key (1).
5. Stop the timing belt tensioner.

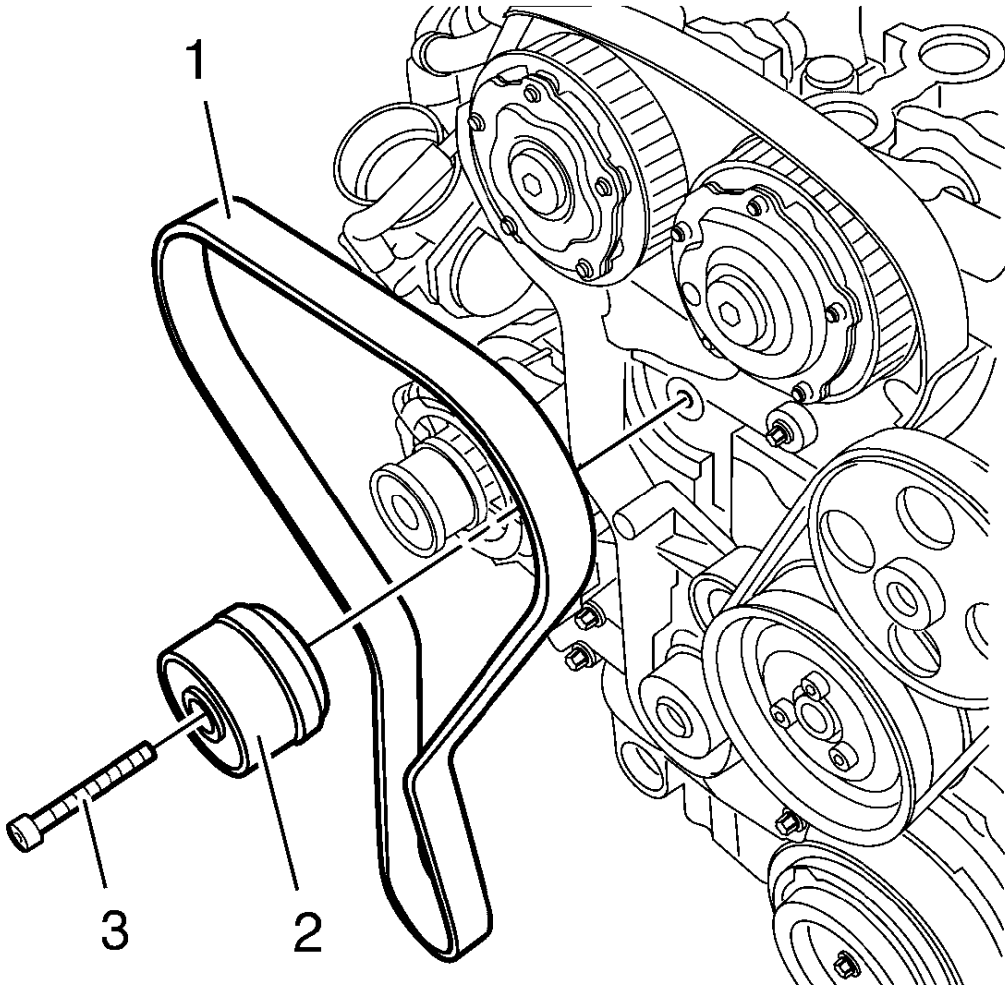

Fig. 372: Timing Belt, Timing Belt Tensioner
Courtesy of GENERAL MOTORS COMPANY

NOTE: Observe direction of rotation.

6. Remove the timing belt (1).

TIMING BELT TENSIONER REMOVAL

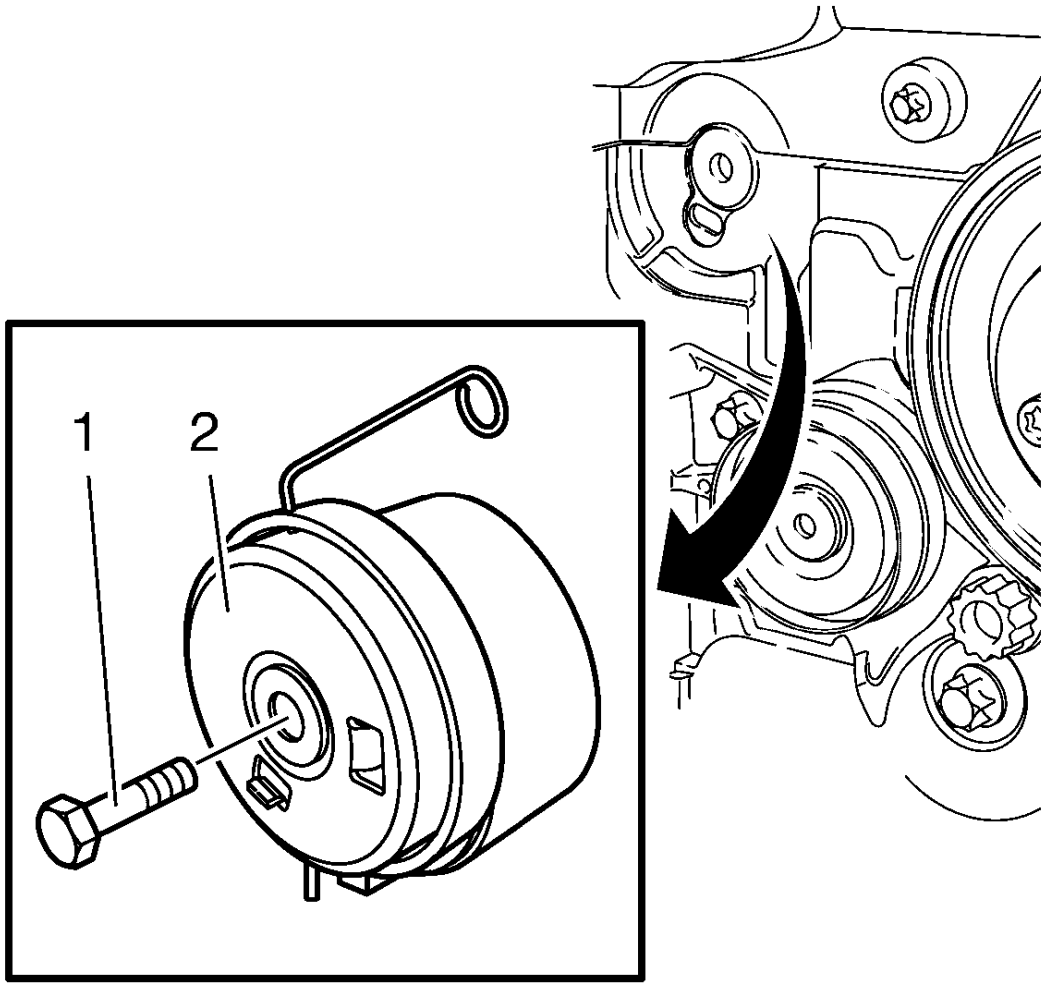

Fig. 373: Timing Belt Tensioner
Courtesy of GENERAL MOTORS COMPANY

1. Remove the tensioner bolt (1).
2. Remove the timing belt tensioner (2).

TIMING BELT IDLER PULLEY REMOVAL

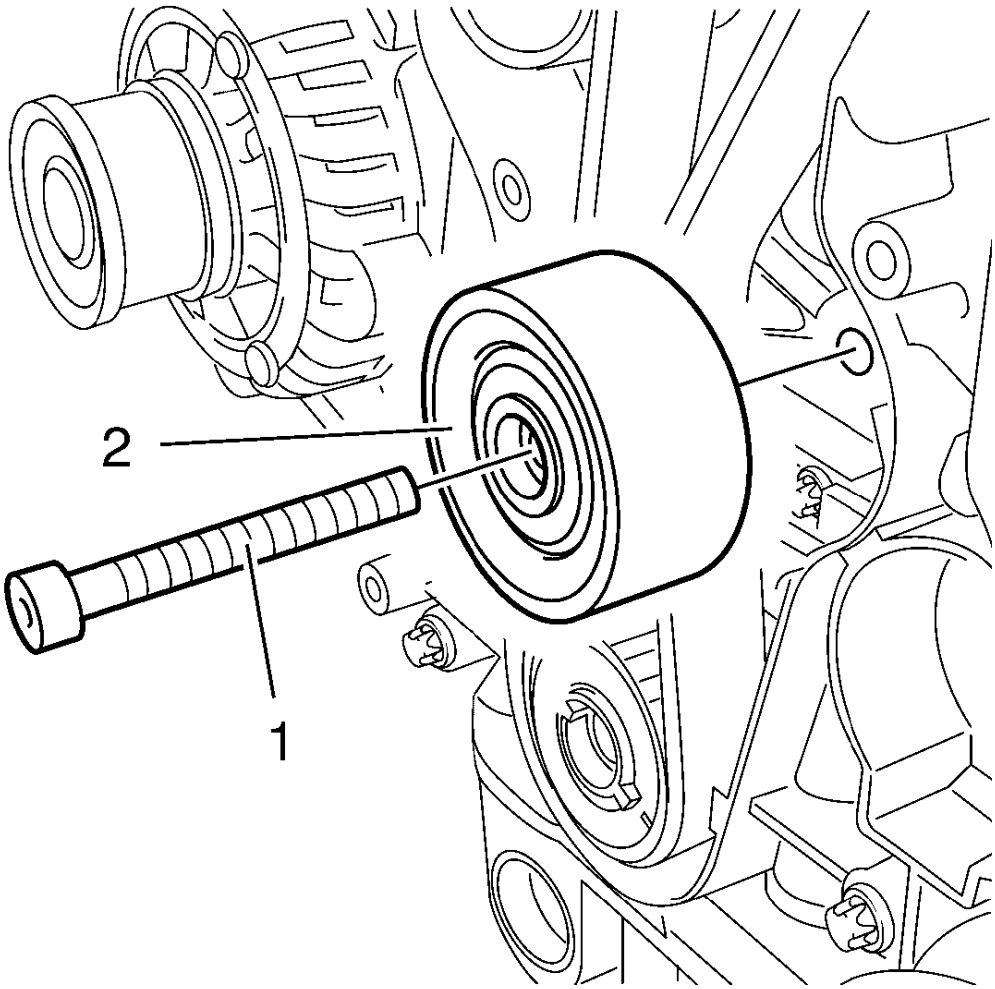

Fig. 374: Timing Belt Idler Pulley Bolt
Courtesy of GENERAL MOTORS COMPANY

1. Remove the timing belt idler pulley bolt (1).
2. Remove the timing belt idler pulley (2).

CRANKSHAFT SPROCKET REMOVAL

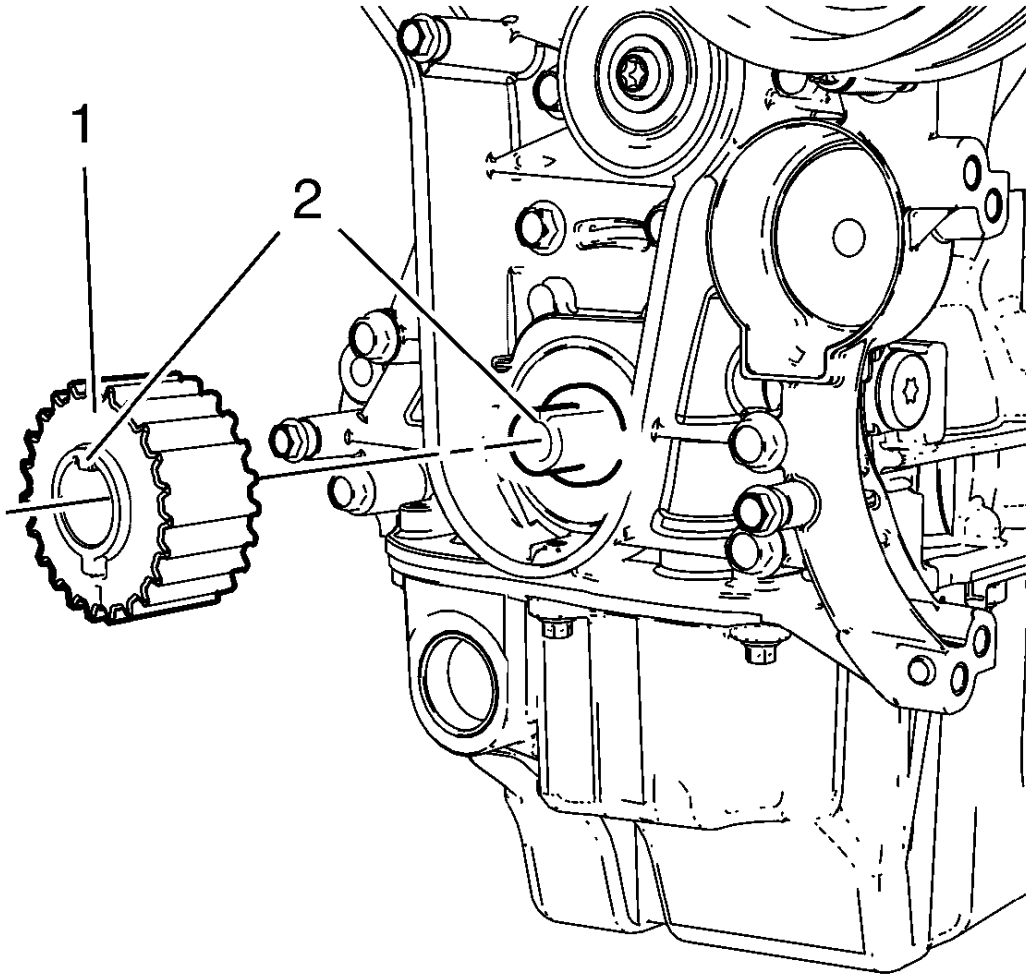

Fig. 375: Crankshaft Sprocket
Courtesy of GENERAL MOTORS COMPANY

Remove the crankshaft sprocket (1).

CAMSHAFT POSITION ACTUATOR SOLENOID VALVE REMOVAL

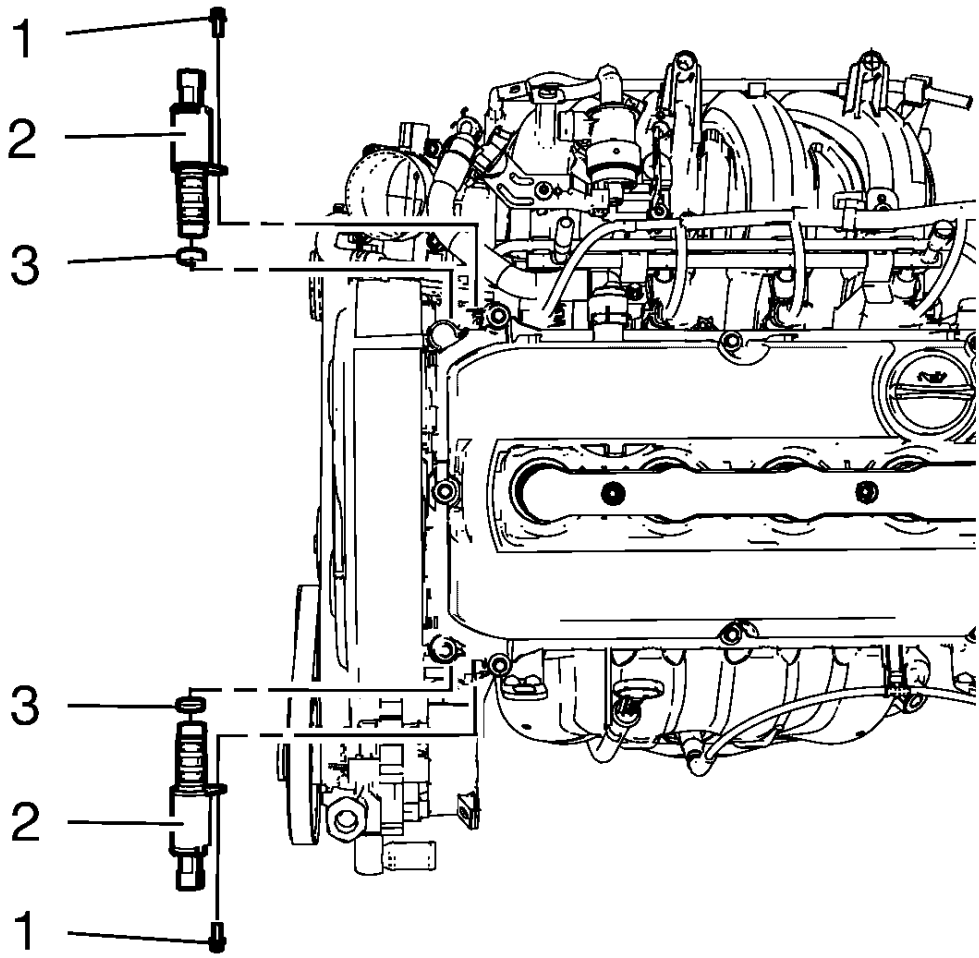

Fig. 376: Camshaft Position Actuator Solenoid Valves, Bolts And Seals
Courtesy of GENERAL MOTORS COMPANY

1. Remove the camshaft position actuator solenoid valve bolts (1).
2. Remove the camshaft position actuator solenoid valves (2).
3. Remove the camshaft position actuator solenoid valve seals (3).

CAMSHAFT POSITION ACTUATOR ADJUSTER REMOVAL

Special Tools

- **EN-6340** Camshaft Adjuster Locking Tool
- **EN-6628-A** Camshaft Locking Tool

For equivalent regional tools, refer to **Special Tools**.

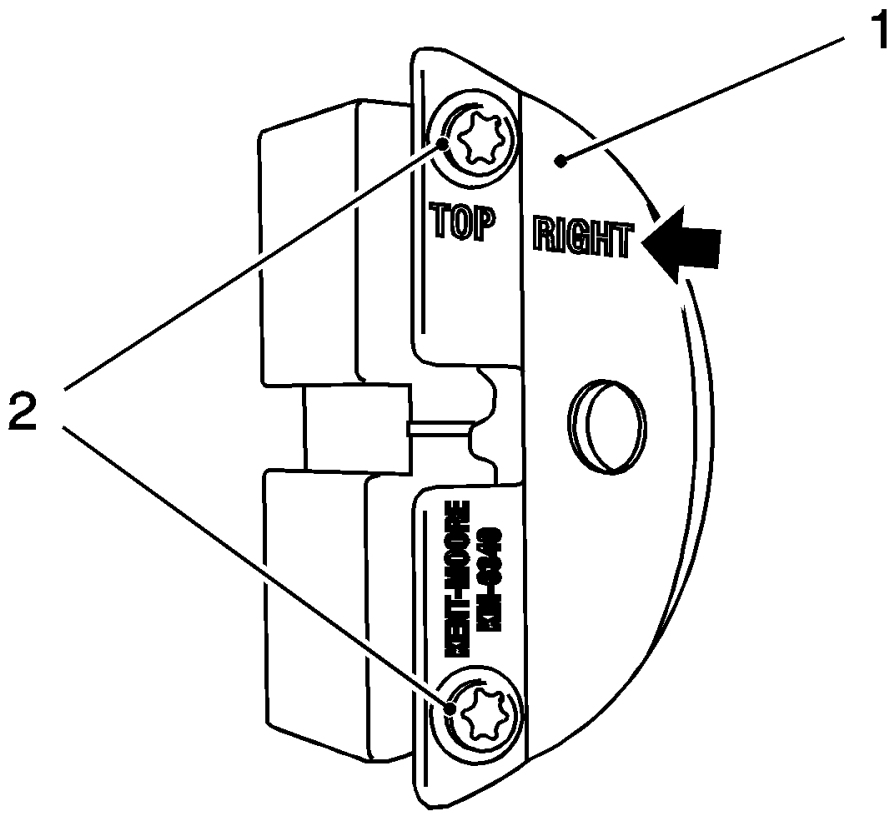

Fig. 377: View Of Front Panel And Bolts
Courtesy of GENERAL MOTORS COMPANY

NOTE: The right half of the EN-6340 locking tool can be recognized by the lettering "right", arrow, on the tool.

1. Prepare the right half of the **EN-6340** locking tool.
    1. Remove the 2 bolts (2).
    2. Remove the front panel (1) from the **EN-6340** locking tool - right.

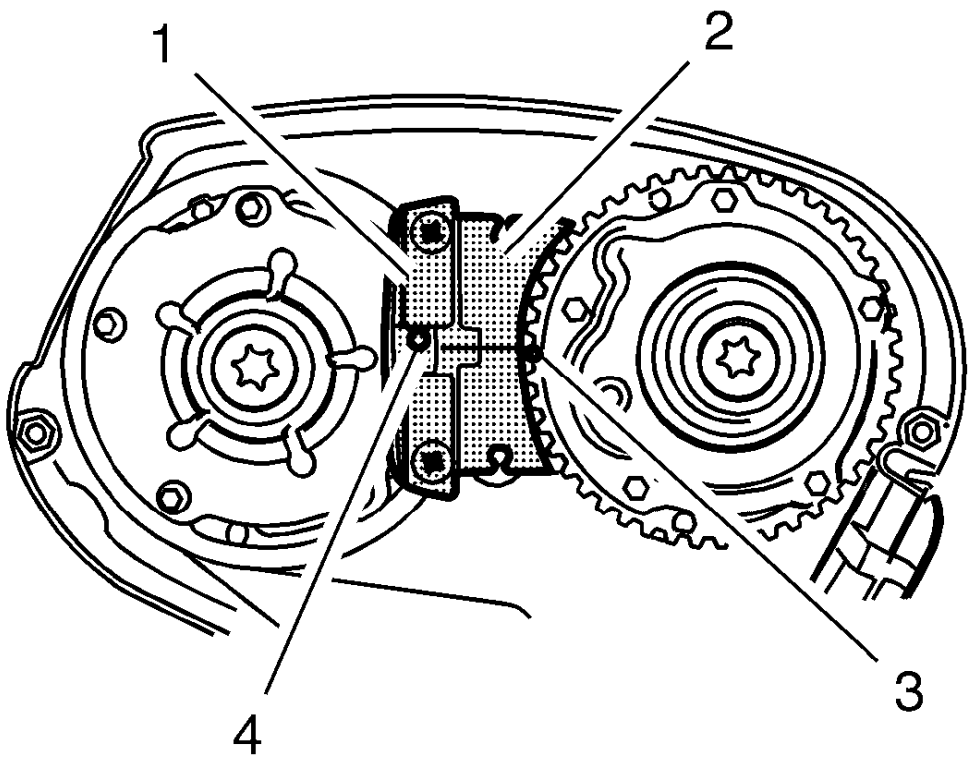

Fig. 378: Spot Type Markings And Special Tool
Courtesy of GENERAL MOTORS COMPANY

2. Install the **EN-6340** locking tool into the camshaft adjusters.

NOTE: The spot type marking (4) on the intake camshaft adjuster does not correspond to the groove of EN-6340 locking tool - left during this process but must be somewhat above as shown.

- Install the **EN-6340** locking tool - left (1) into the camshaft adjusters as shown.

NOTE: The spot type marking (3) on the exhaust camshaft adjuster must correspond to the groove on EN-6340 locking tool - right.

- Install **EN-6340** locking tool - right (2) into the camshaft adjusters as shown.

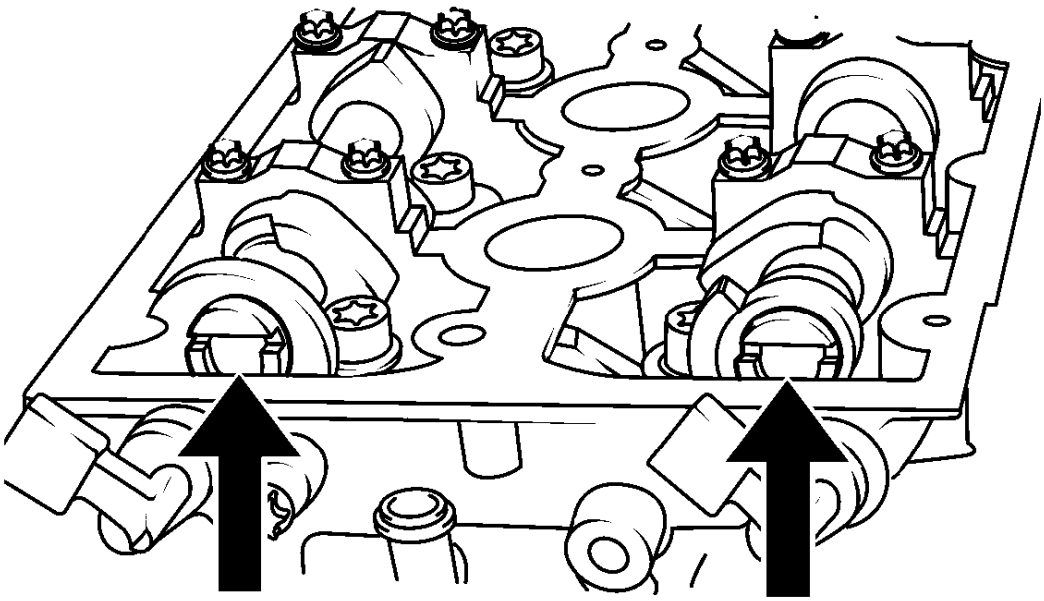

Fig. 379: Aligning Camshafts Horizontally
Courtesy of GENERAL MOTORS COMPANY

NOTE: Note the arrows.

3. Turn the camshaft by the hexagon until the groove on the end of the camshafts is horizontal.

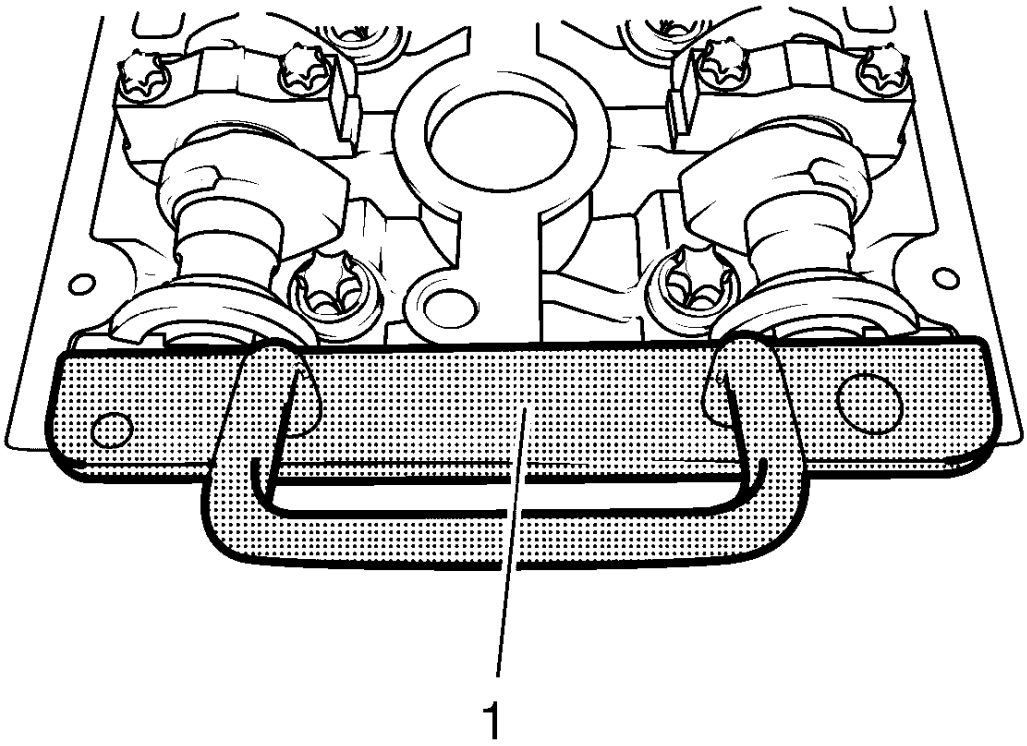

Fig. 380: Locking Tool
Courtesy of GENERAL MOTORS COMPANY

4. Install the **EN-6628-A** locking tool (1).

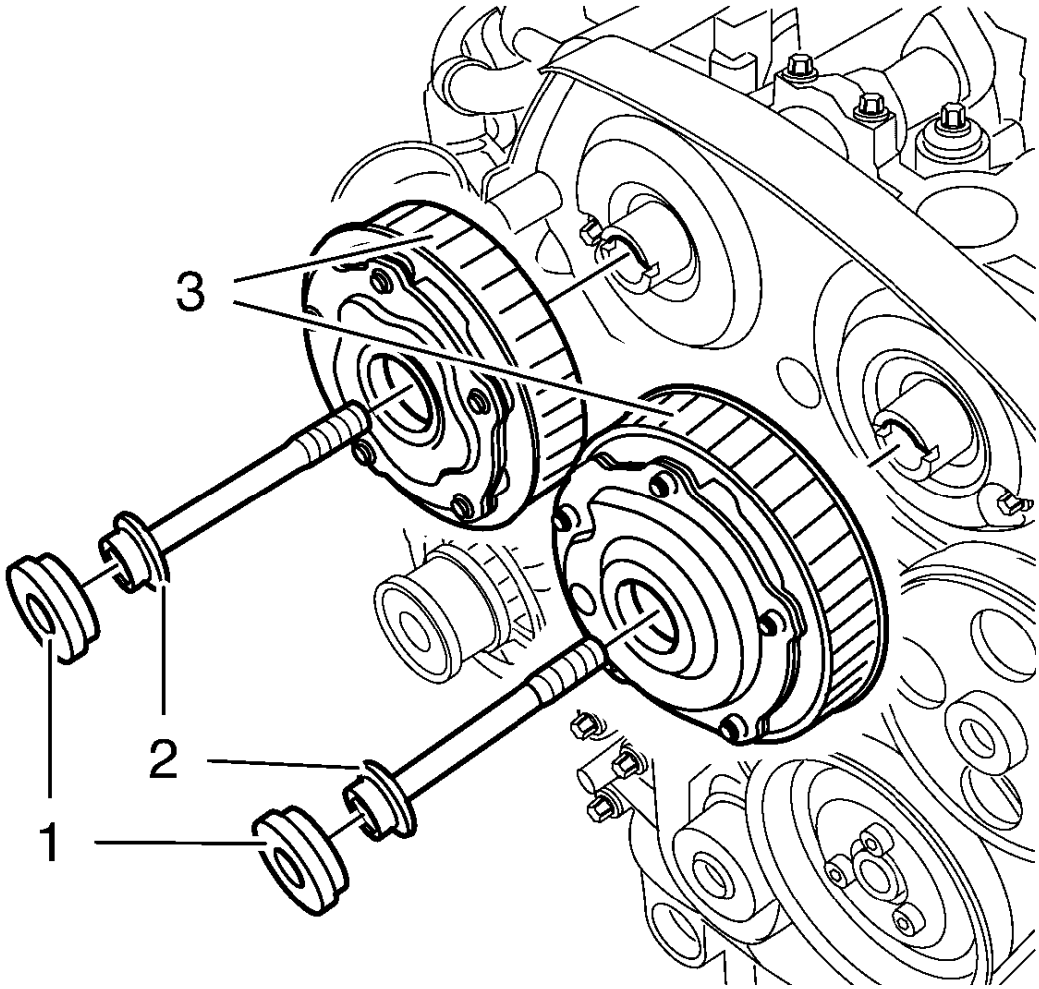

Fig. 381: Camshaft Position Actuator Adjuster Closure Bolt
Courtesy of GENERAL MOTORS COMPANY

5. Remove the camshaft position actuator adjuster closure bolt (1) of the intake camshaft position actuator adjuster and/or the exhaust camshaft position actuator adjuster (3).

NOTE: A second technician is required.

NOTE: Use an appropriate open-end wrench in order to counterhold the camshaft hexagon. A thin cross-section wrench is required for a better fit. The usage of EN-6628-A locking tool is for the camshaft adjustment to prevent misalignment of the camshafts. The wrench is required to counterhold the camshafts during bolt torque procedure.

6. Remove and DISCARD the intake camshaft position actuator adjuster bolt and/or the exhaust camshaft position actuator adjuster bolt (2).

7. Remove the intake camshaft position actuator adjuster and/or the exhaust camshaft position actuator adjuster (3).

CRANKSHAFT FRONT OIL SEAL REMOVAL

Special Tools

EN-45000 Remover

For equivalent regional tools, refer to **Special Tools**.

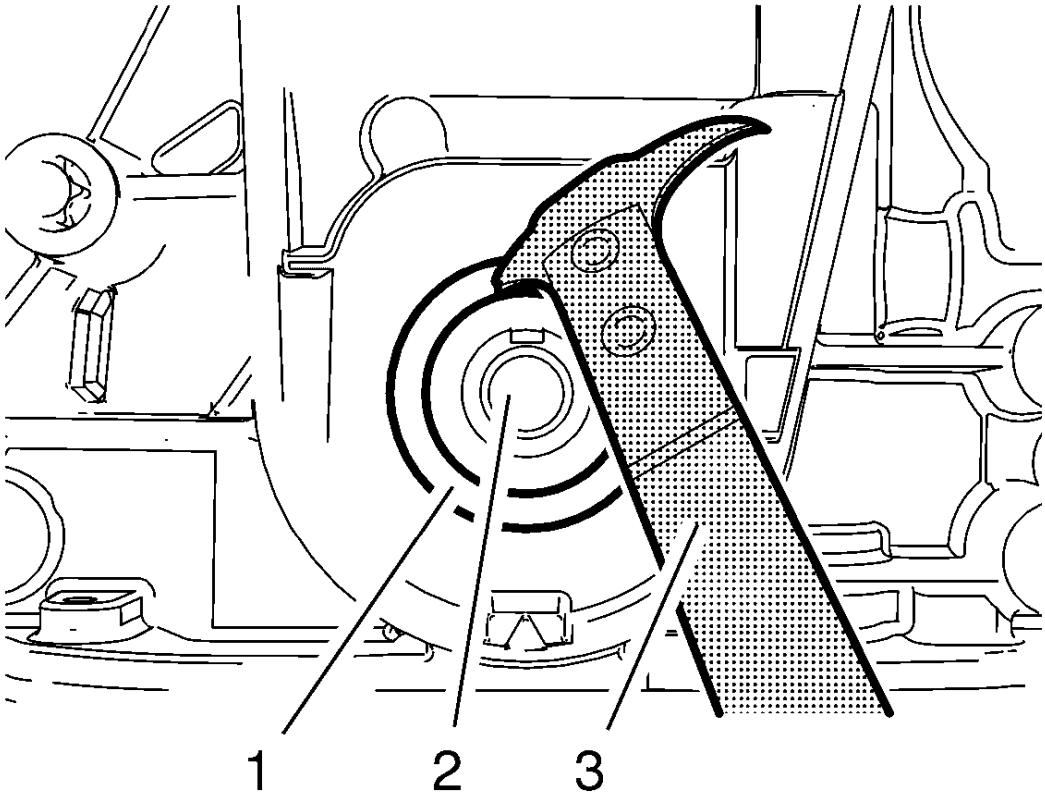

Fig. 382: Crankshaft Front Oil Seal Removal Tool
Courtesy of GENERAL MOTORS COMPANY

CAUTION: Clean the crankshaft sealing surface with a clean, lint-free towel. Inspect lead-in edge of crankshaft for burrs/sharp edges that could damage the rear main oil seal. Remove burrs/sharp edges with crocus cloth before

proceeding.

Using the **EN-45000** remover (3), remove the crankshaft front oil seal (1) from the crankshaft (2).

TIMING BELT REAR COVER REMOVAL

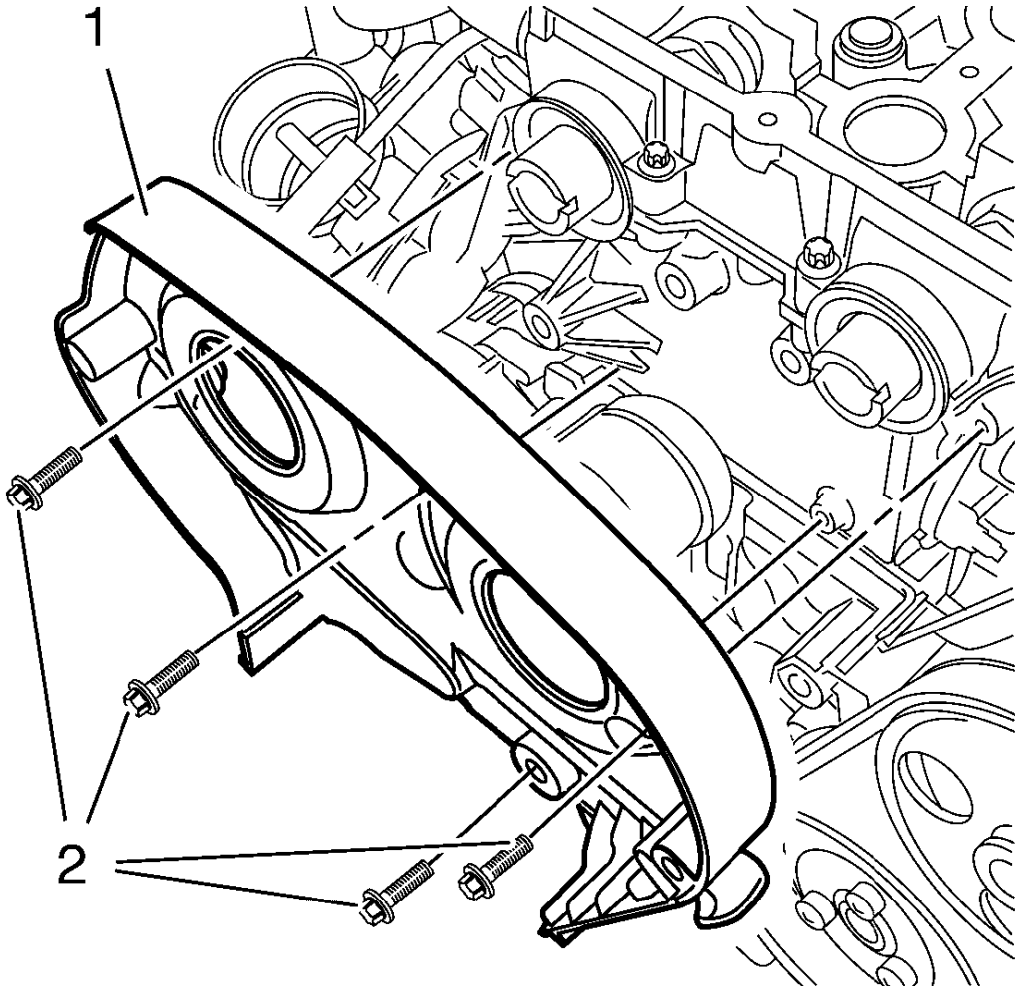

Fig. 383: Timing Belt Rear Cover And Bolts
Courtesy of GENERAL MOTORS COMPANY

1. Remove and DISCARD the 4 timing belt rear cover bolts (2).
2. Remove the timing belt rear cover (1).

THROTTLE BODY ASSEMBLY REMOVAL

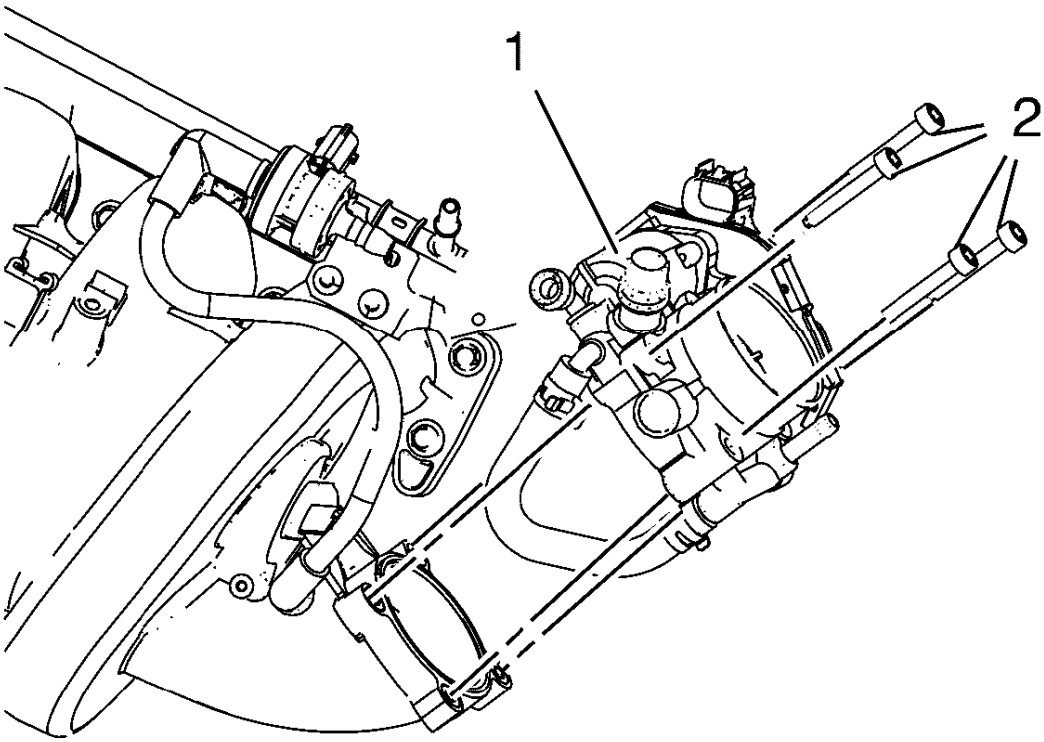

Fig. 384: Throttle Body And Bolts
Courtesy of GENERAL MOTORS COMPANY

1. Remove the 4 throttle body bolts (2).
2. Remove the throttle body (1).
3. Remove the throttle body seal.

INTAKE MANIFOLD REMOVAL

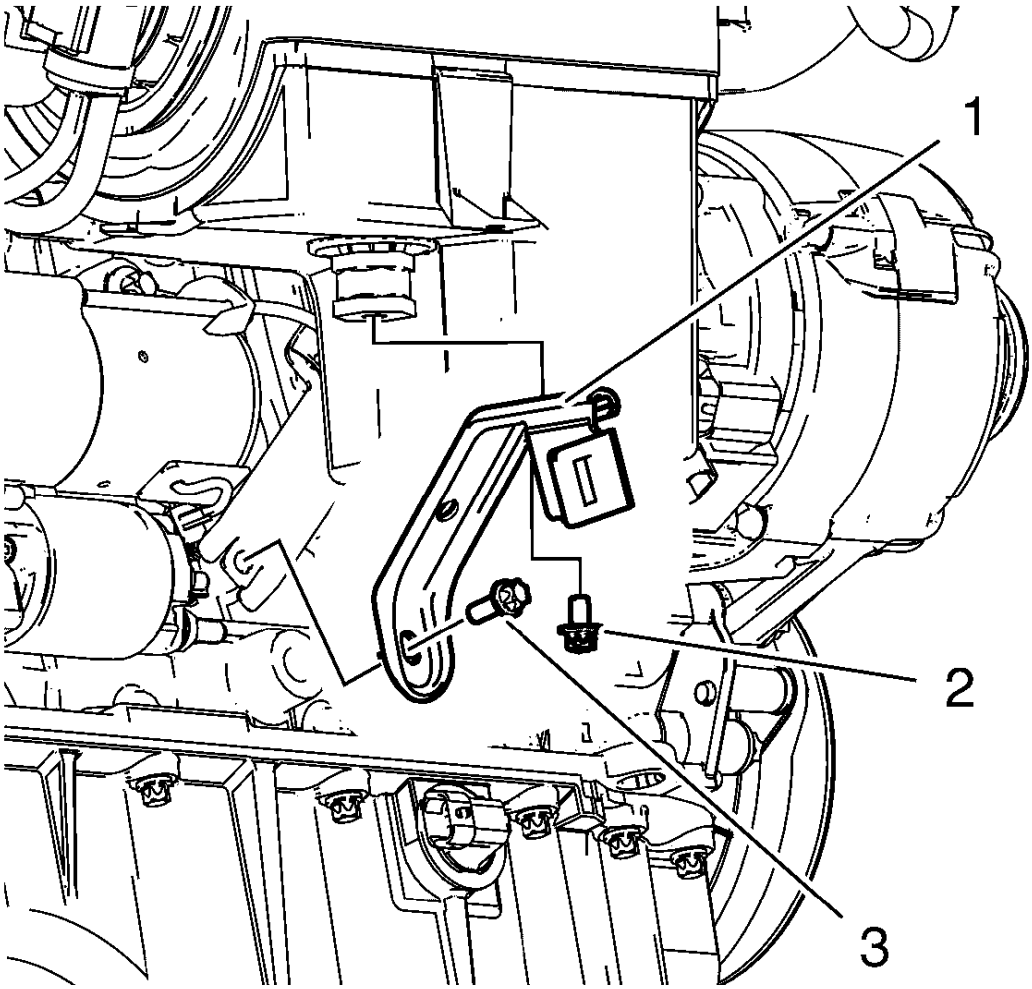

Fig. 385: Intake Manifold Bracket
Courtesy of GENERAL MOTORS COMPANY

1. Remove the 2 intake manifold brace bolts (2, 3).
2. Remove the intake manifold brace (1).

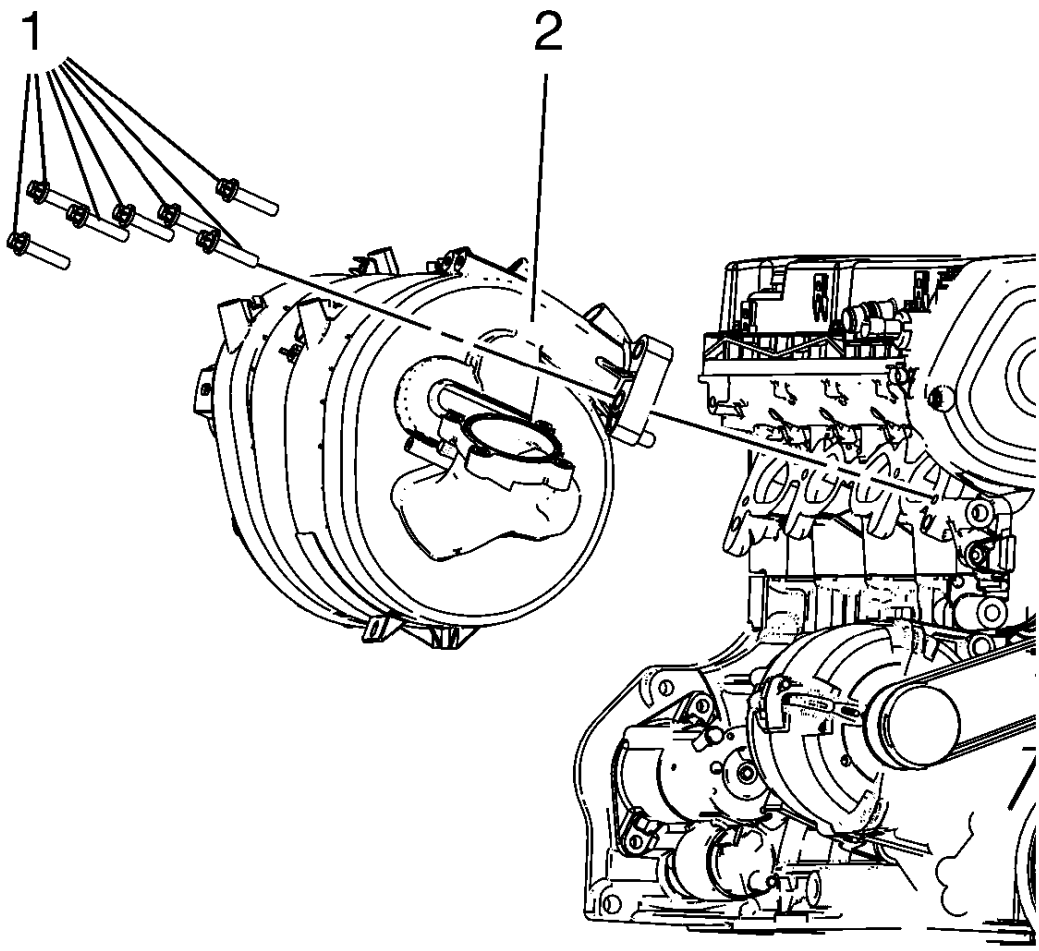

Fig. 386: Intake Manifold And Bolts
Courtesy of GENERAL MOTORS COMPANY

3. Remove the 7 intake manifold bolts (1).
4. Remove the intake manifold (2) and the 4 intake manifold gaskets.

OIL LEVEL INDICATOR AND TUBE REMOVAL

1. Remove the oil dipstick.

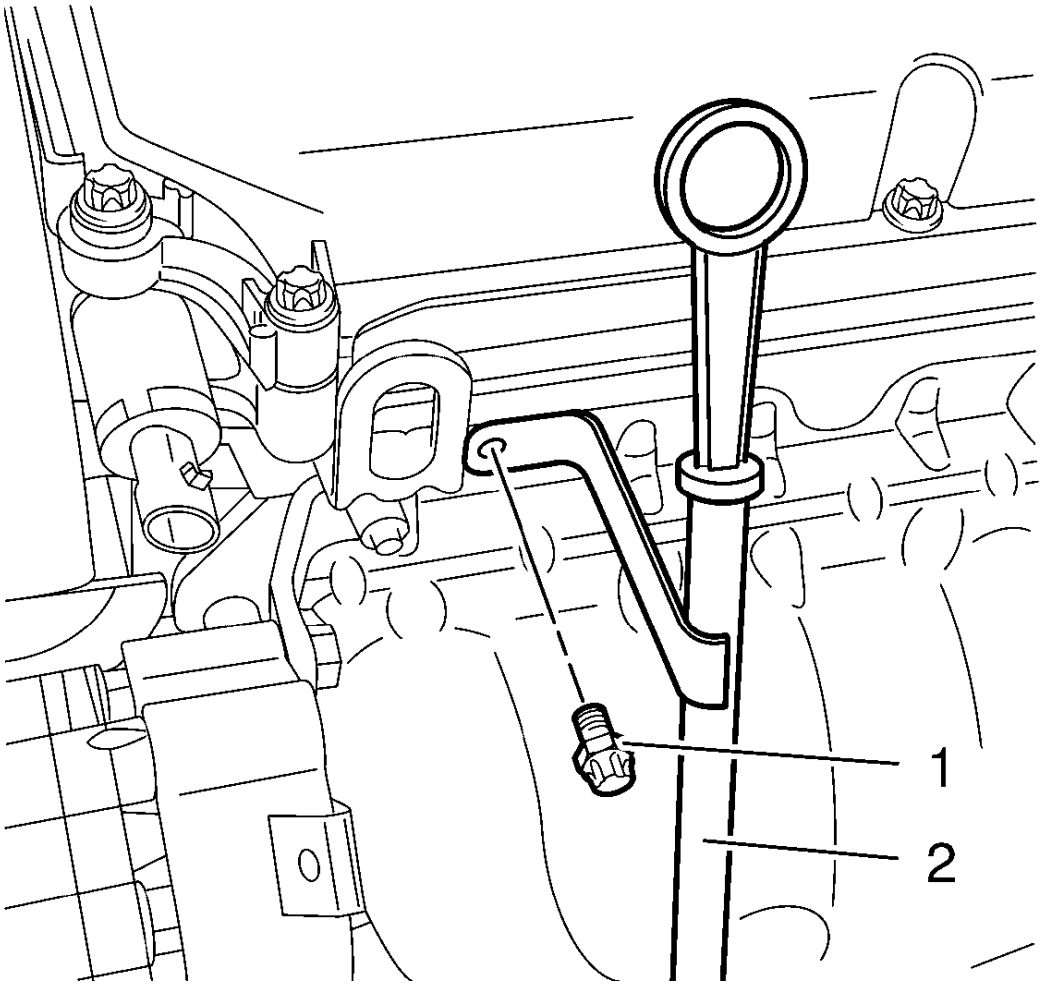

Fig. 387: Oil Level Indicator Tube And Bolt
Courtesy of GENERAL MOTORS COMPANY

2. Remove the oil level indicator tube bolt (1).

NOTE: If the engine oil level is at the maximum level, oil may emerge while removing the oil dipstick guide tube.

3. Remove the oil level indicator tube (2) and oil level indicator seal.

EXHAUST MANIFOLD REMOVAL

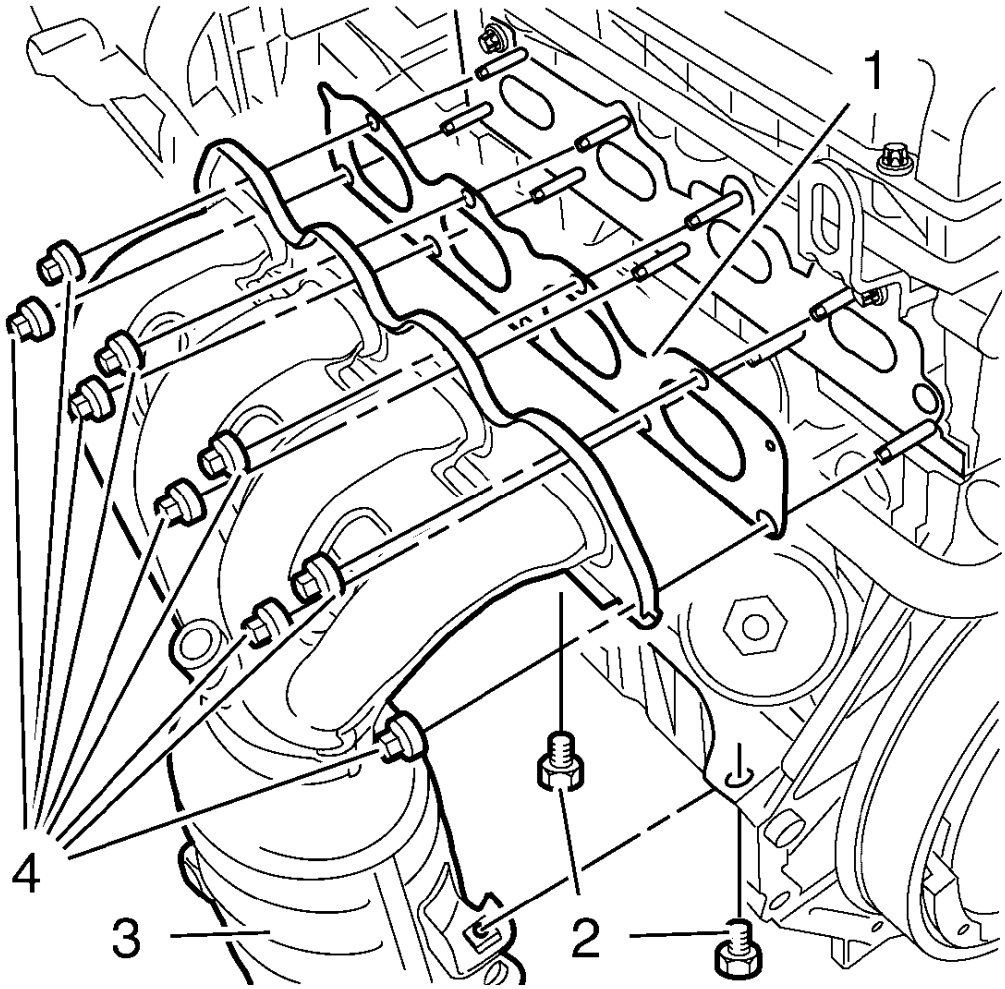

Fig. 388: Exhaust Manifold And Bolts
Courtesy of GENERAL MOTORS COMPANY

1. Remove the 9 exhaust manifold nuts (4).
2. Remove the 2 exhaust manifold bolts (2)
3. Remove the exhaust manifold (3) and gasket (1).
4. Clean all of the gasket surfaces.

ENGINE COOLANT THERMOSTAT REMOVAL

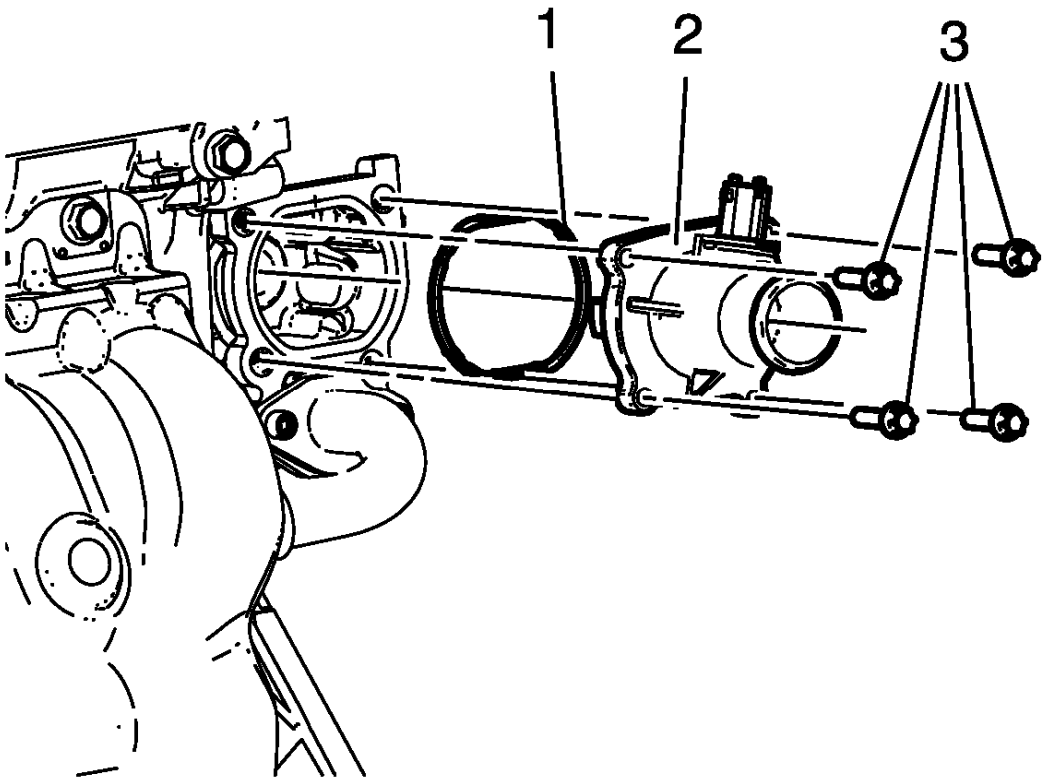

Fig. 389: Identifying Engine Coolant Thermostat Assembly
Courtesy of GENERAL MOTORS COMPANY

CAUTION: Refer to Engine Coolant Thermostat Housing Caution .

1. Remove the 4 engine coolant thermostat bolts (3).
2. Remove the engine coolant thermostat assembly (2).
3. Remove the engine coolant seal (1).

ENGINE COOLANT THERMOSTAT HOUSING REMOVAL

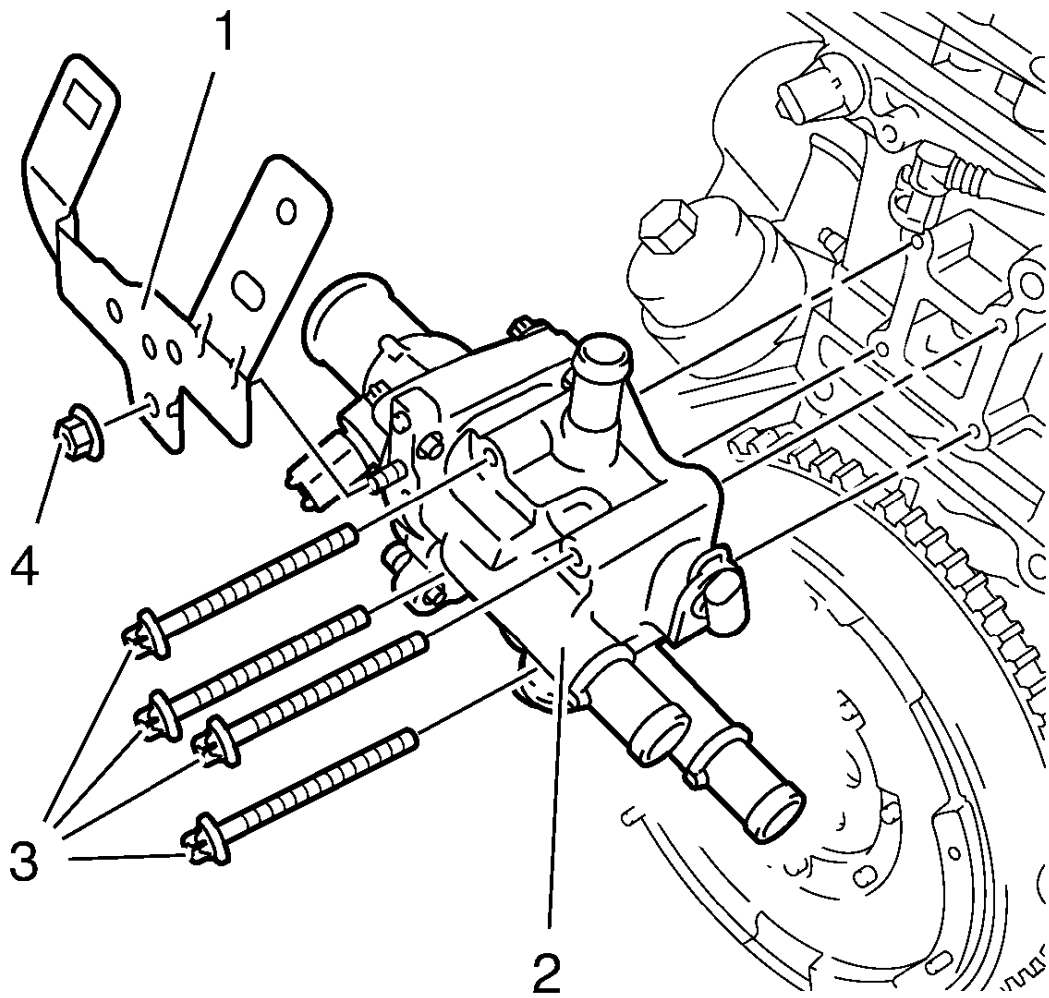

Fig. 390: Engine Coolant Thermostat Housing
Courtesy of GENERAL MOTORS COMPANY

CAUTION: Refer to Engine Coolant Thermostat Housing Caution .

1. Remove the engine coolant thermostat housing retainer nut (4).
2. Remove the engine coolant thermostat housing retainer (1).
3. Remove the 4 engine coolant thermostat housing bolts (3).
4. Remove the engine coolant thermostat housing (2).

ENGINE OIL COOLER HOUSING REMOVAL

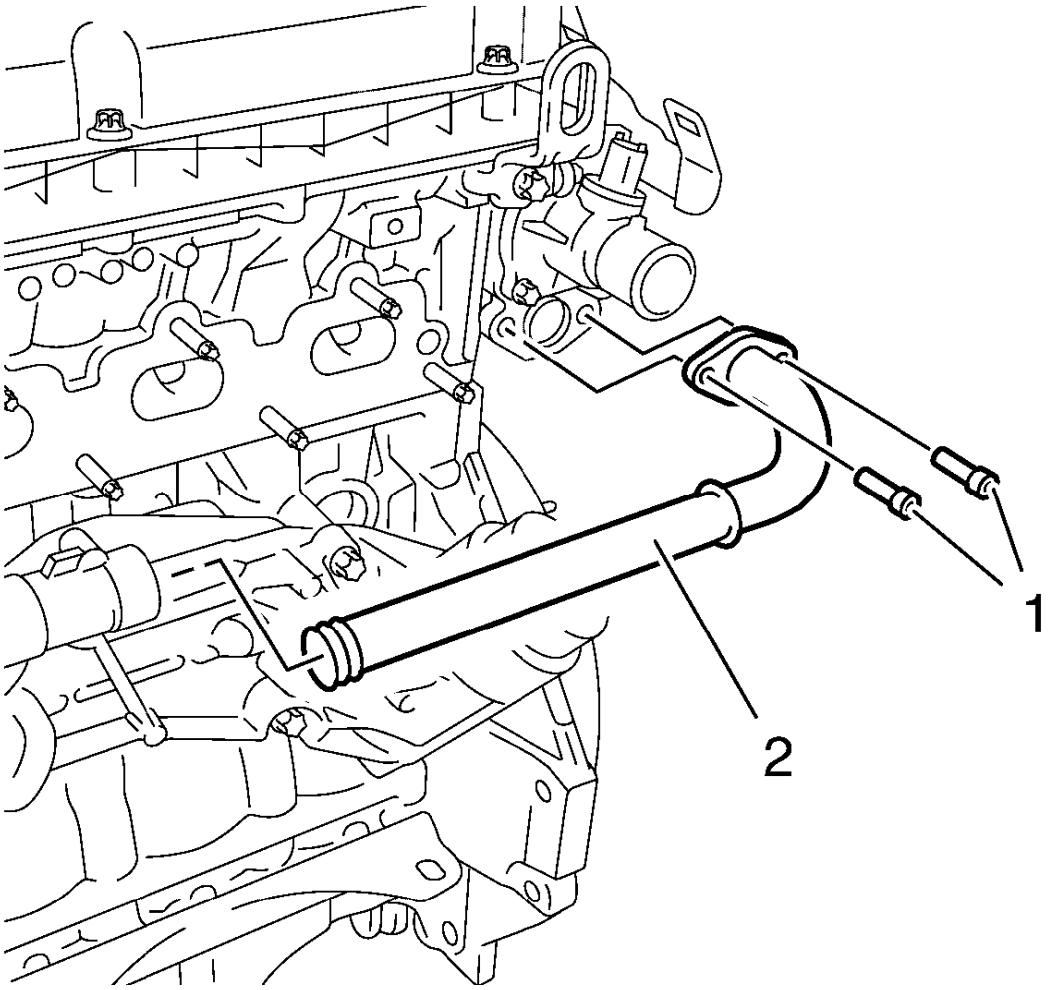

Fig. 391: Identifying Engine Oil Cooler Outlet Pipe And Bolts
Courtesy of GENERAL MOTORS COMPANY

1. Remove the 2 engine oil cooler pipe bolts (1).
2. Remove the oil cooler pipe (2).

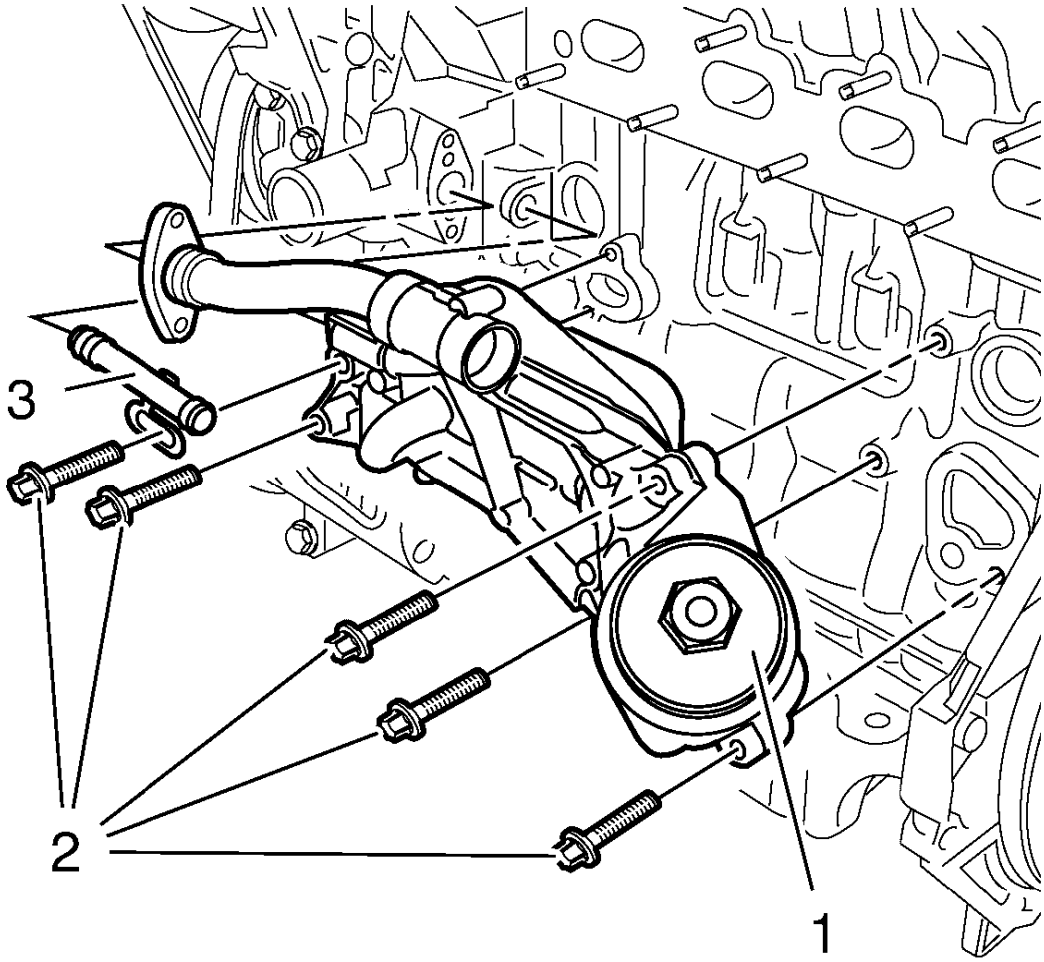

Fig. 392: Identifying Engine Oil Cooler Housing, Bolts And Engine Oil Cooler Inlet Pipe
Courtesy of GENERAL MOTORS COMPANY

3. Remove the 5 engine oil cooler housing bolts (2).
4. Remove the engine oil cooler housing (1).
5. Remove the engine oil cooler inlet pipe (3).

ENGINE OIL COOLER REMOVAL

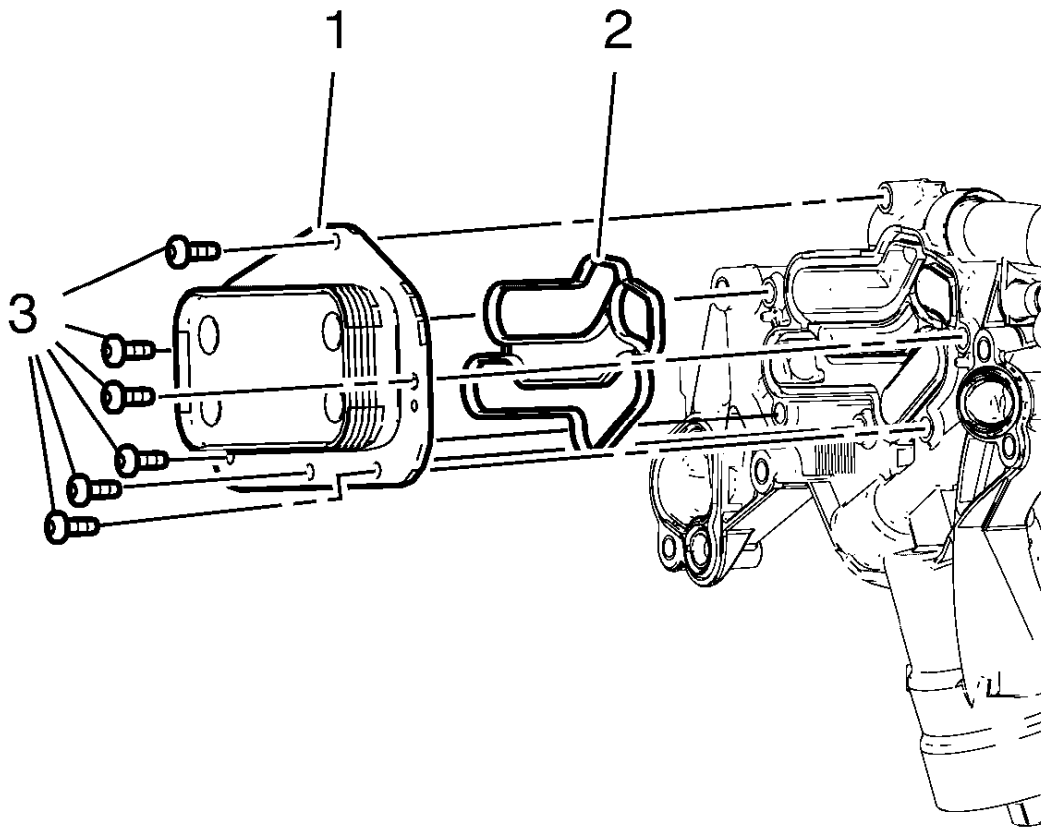

Fig. 393: Engine Oil Cooler
Courtesy of GENERAL MOTORS COMPANY

Remove the 6 engine oil cooler bolts (3), the engine oil cooler (1) and the engine oil cooler gasket (2) from the engine oil cooler housing.

WATER PUMP PULLEY REMOVAL

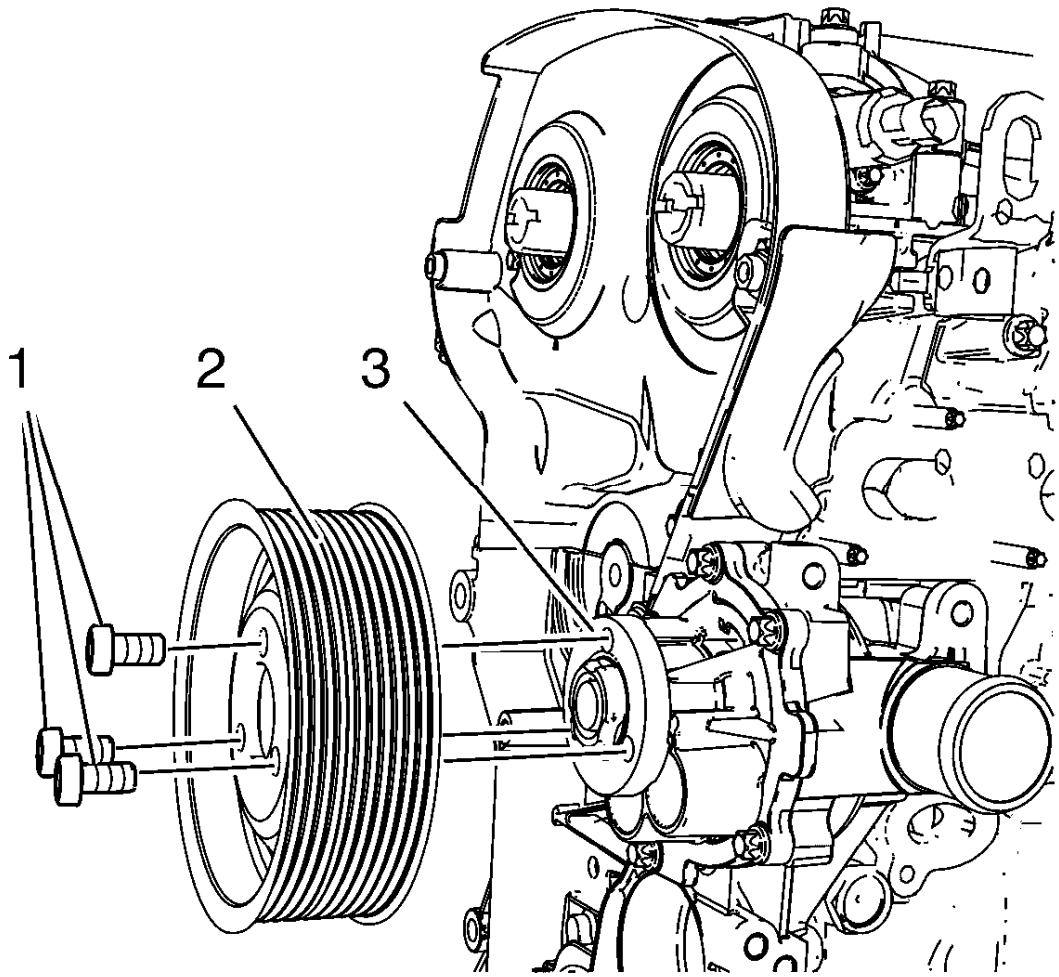

Fig. 394: Water Pump And Water Pump Pulley
Courtesy of GENERAL MOTORS COMPANY

NOTE: Counterhold the crankshaft balancer. For this procedure the drive belt has to be installed.

1. Loosen the 3 water pump pulley bolts (1).
2. Remove the 3 water pump pulley bolts (1).
3. Remove the water pump pulley (2) from the water pump (3).

WATER PUMP REMOVAL

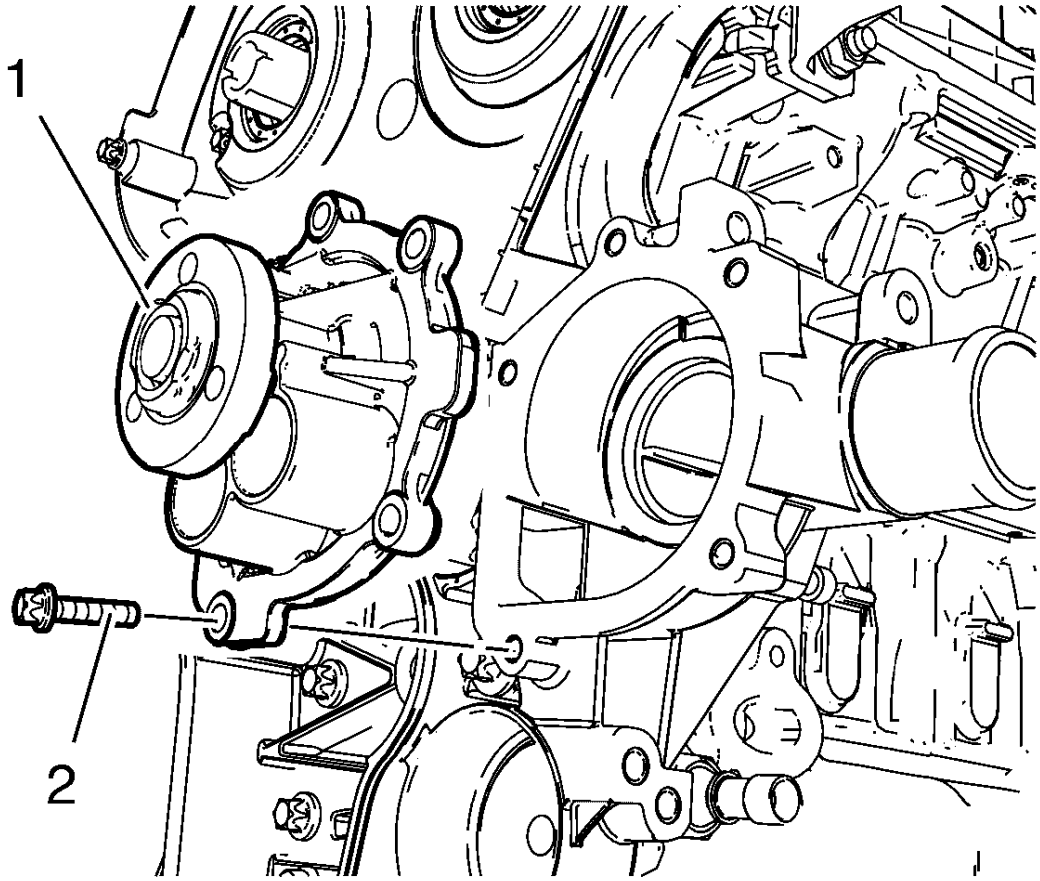

Fig. 395: Water Pump And Bolts
Courtesy of GENERAL MOTORS COMPANY

1. Remove the 5 water pump bolts (2).
2. Remove the water pump (1).
3. Remove the water pump seal.

ENGINE OIL HEATER REMOVAL

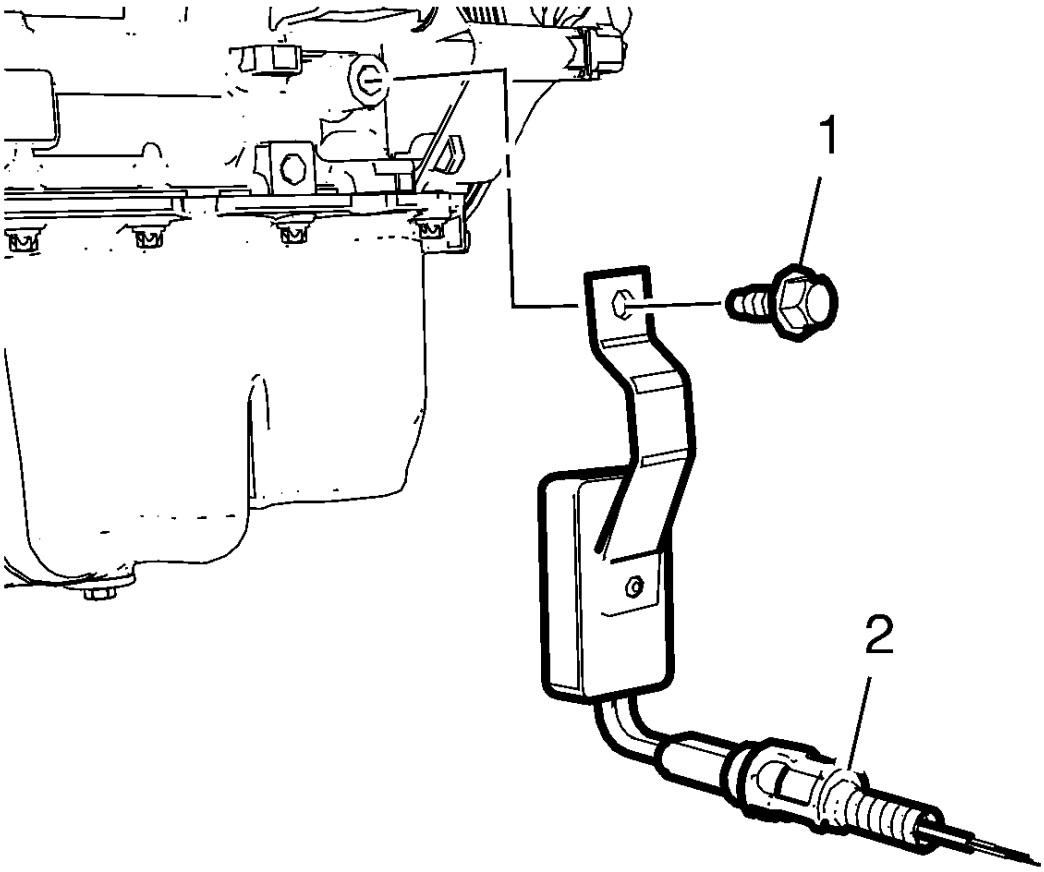

Fig. 396: Engine Oil Heater
Courtesy of GENERAL MOTORS COMPANY

1. Remove the engine oil heater bolt (1).
2. Remove the engine oil heater (2).

OIL PAN REMOVAL

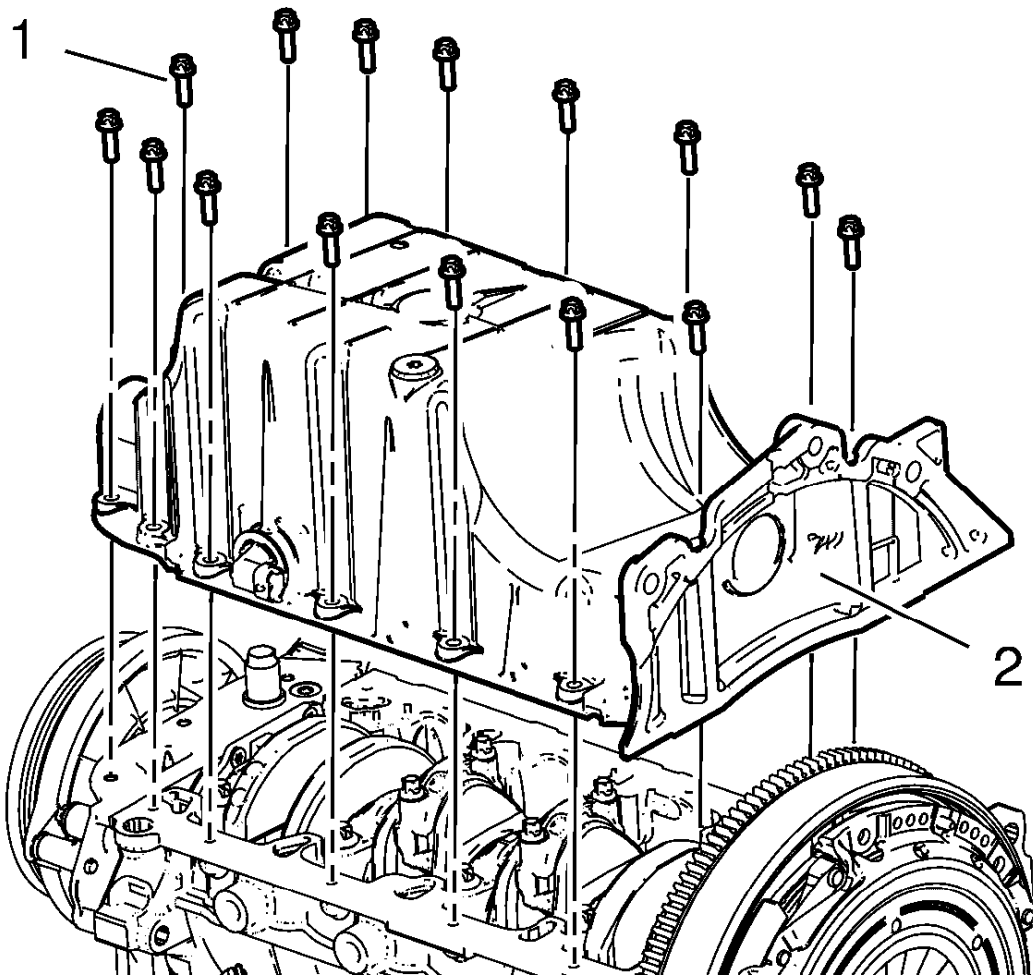

Fig. 397: Oil Pan And Bolts
Courtesy of GENERAL MOTORS COMPANY

1. Remove the 15 oil pan bolts (1) from the engine block.
2. Use a suitable tool to remove the oil pan (2) evenly all the way around.

ENGINE FRONT COVER AND OIL PUMP REMOVAL

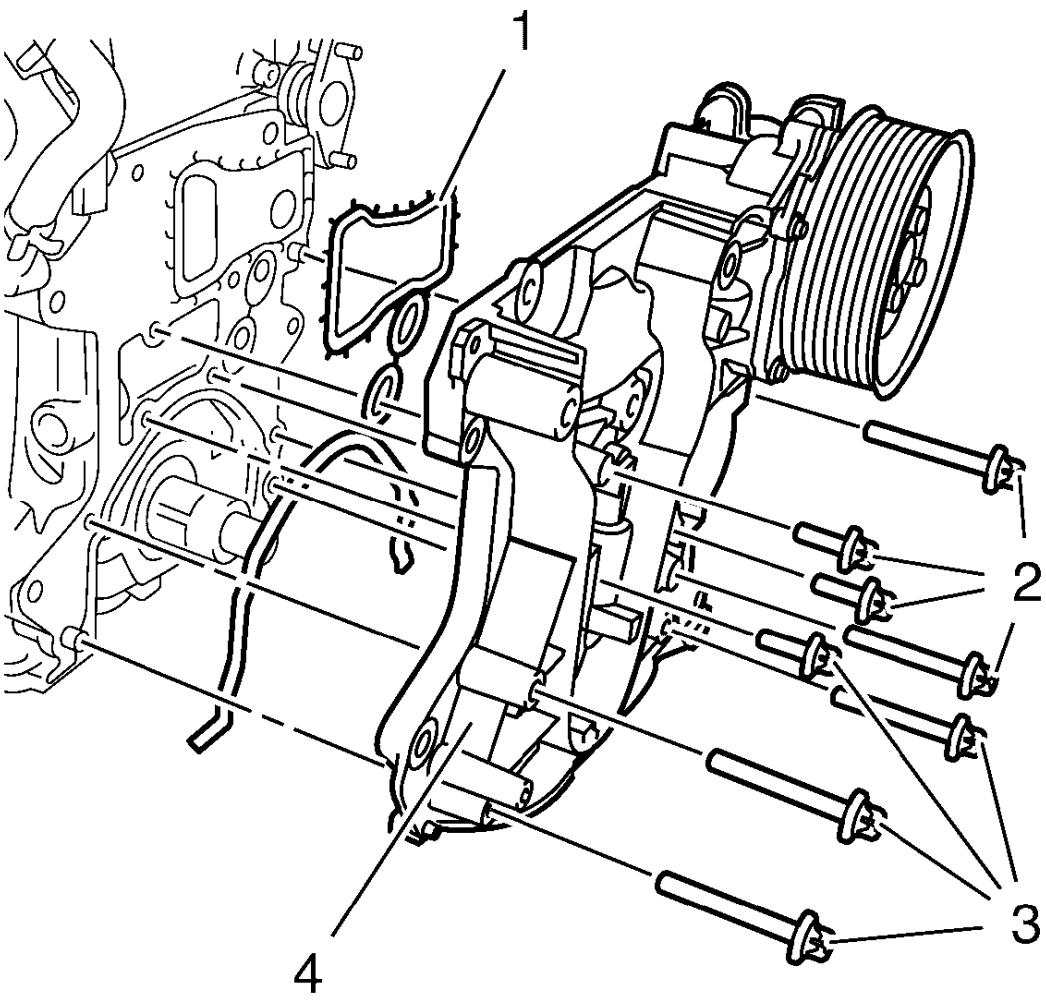

Fig. 398: Engine Oil Pump
Courtesy of GENERAL MOTORS COMPANY

NOTE: Note the different screw lengths.

1. Remove the 8 bolts (2, 3).
2. Remove the engine front cover with the included oil pump (4).
3. Remove the gasket (1).

NOTE: Do not damage the sealing surfaces.

4. Clean the sealing surface.

IGNITION COIL REMOVAL

Special Tools

EN-6009 Remover/Installer Ignition Module

For equivalent regional tools, refer to **Special Tools**.

NOTE: Note the arrow on the cover.

1. Remove the cover of the DIS ignition coil in the direction of the arrow.
2. Remove the 2 ignition coil bolts.

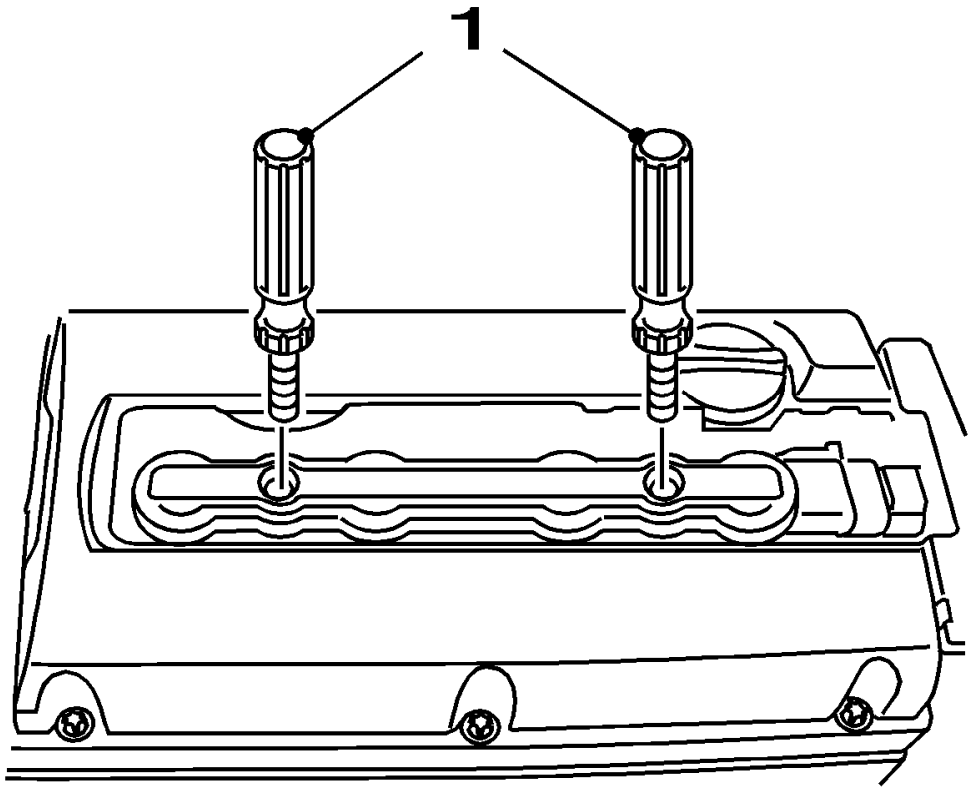

Fig. 399: View Of KM-6009
Courtesy of GENERAL MOTORS COMPANY

3. Install the **EN-6009** remover/installer (1).

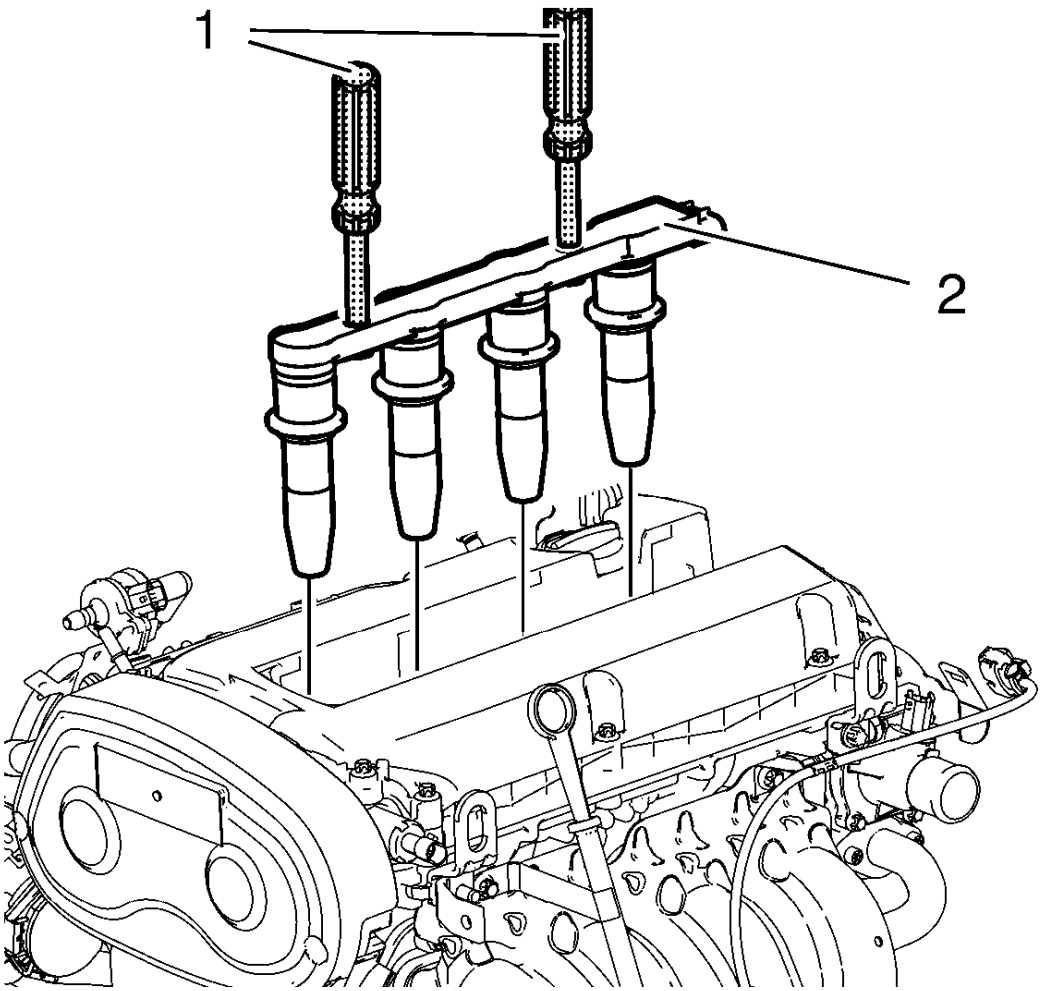

Fig. 400: Ignition Coil Module And Special Tool
Courtesy of GENERAL MOTORS COMPANY

4. Remove the ignition coil module (2) with the **EN-6009** remover/installer (1).

CAMSHAFT COVER REMOVAL

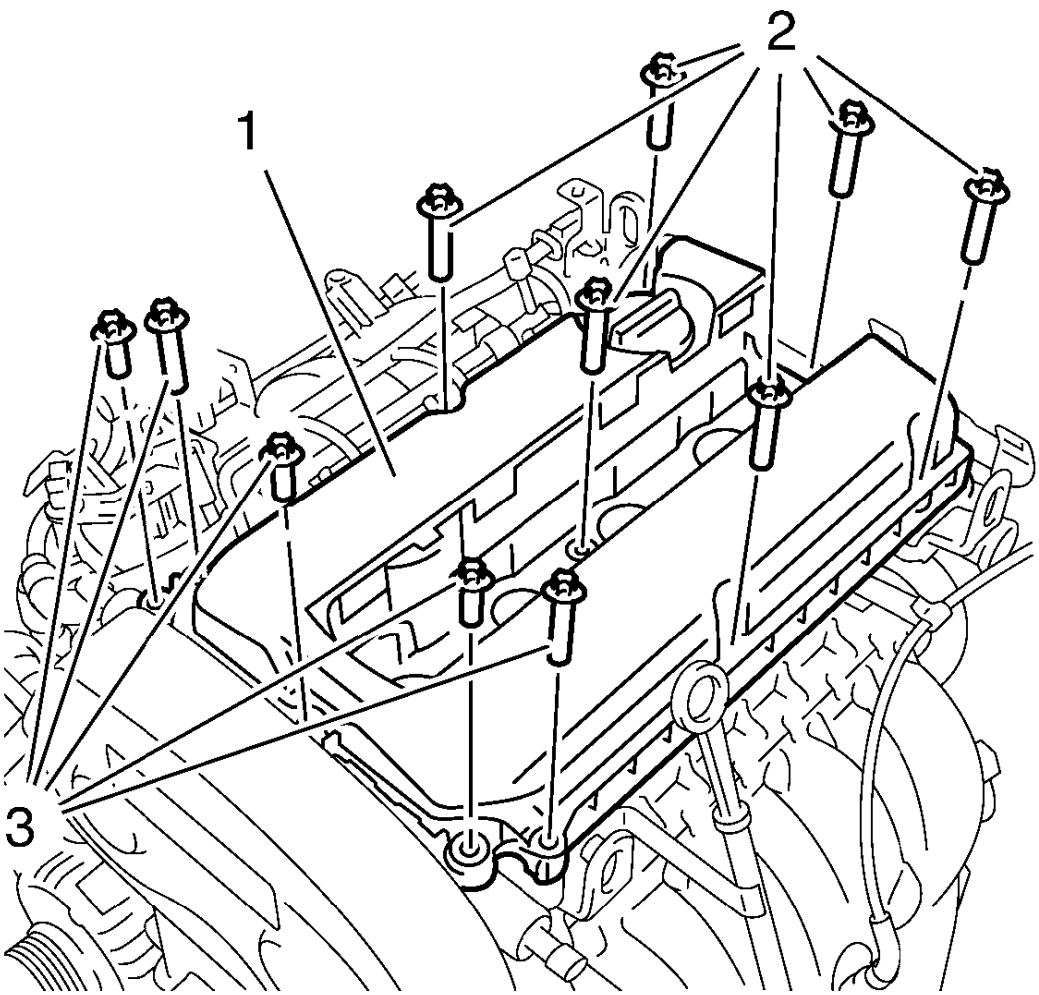

Fig. 401: Camshaft Cover And Bolts
Courtesy of GENERAL MOTORS COMPANY

1. Remove the 11 bolts (2, 3).
2. Remove the camshaft cover (1).

CAMSHAFT REMOVAL

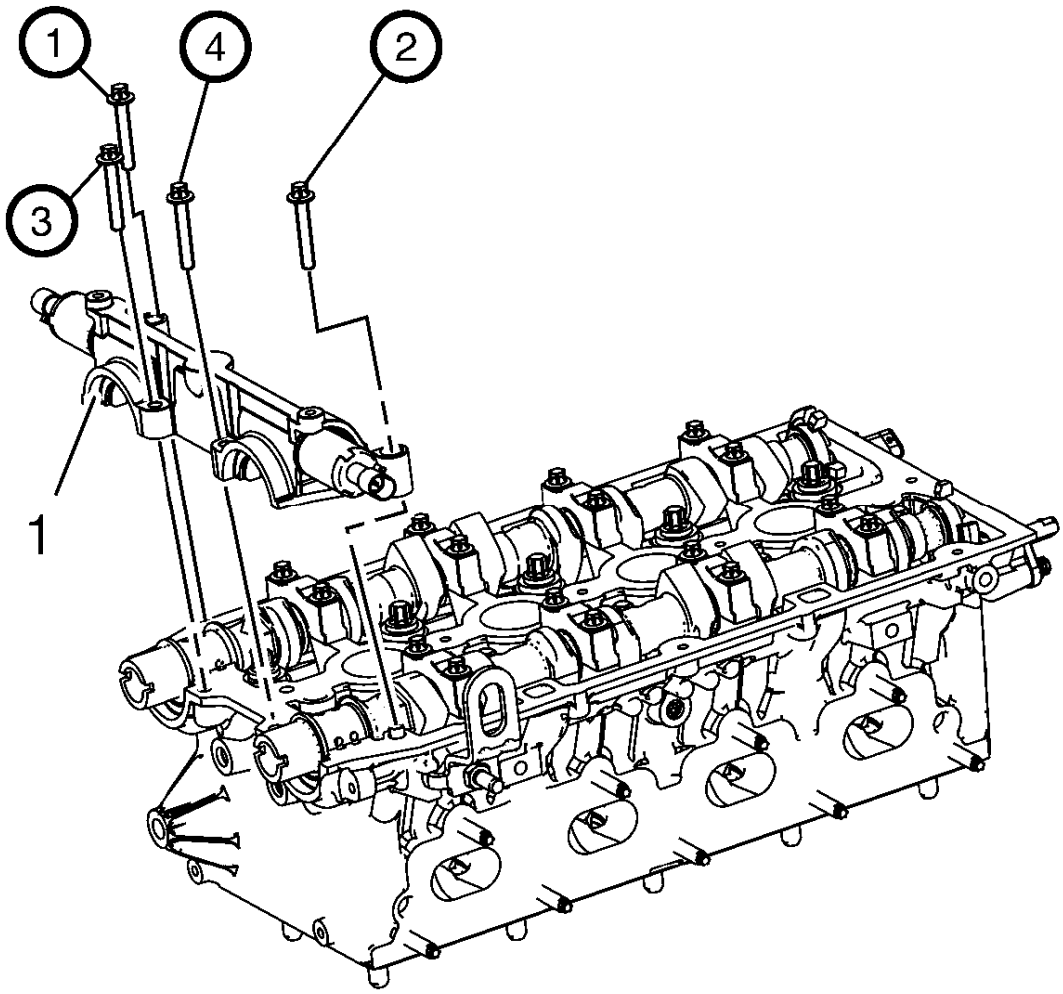

Fig. 402: Camshaft Bearing Cap And Camshaft Bearing Cap Bolts Removal Sequence
Courtesy of GENERAL MOTORS COMPANY

NOTE: Note removal sequence 1-4.

1. Remove the 4 camshaft bearing cap bolts.

NOTE: Release the bearing support by striking it gently with a plastic hammer.

2. Remove the first camshaft bearing cap (1).

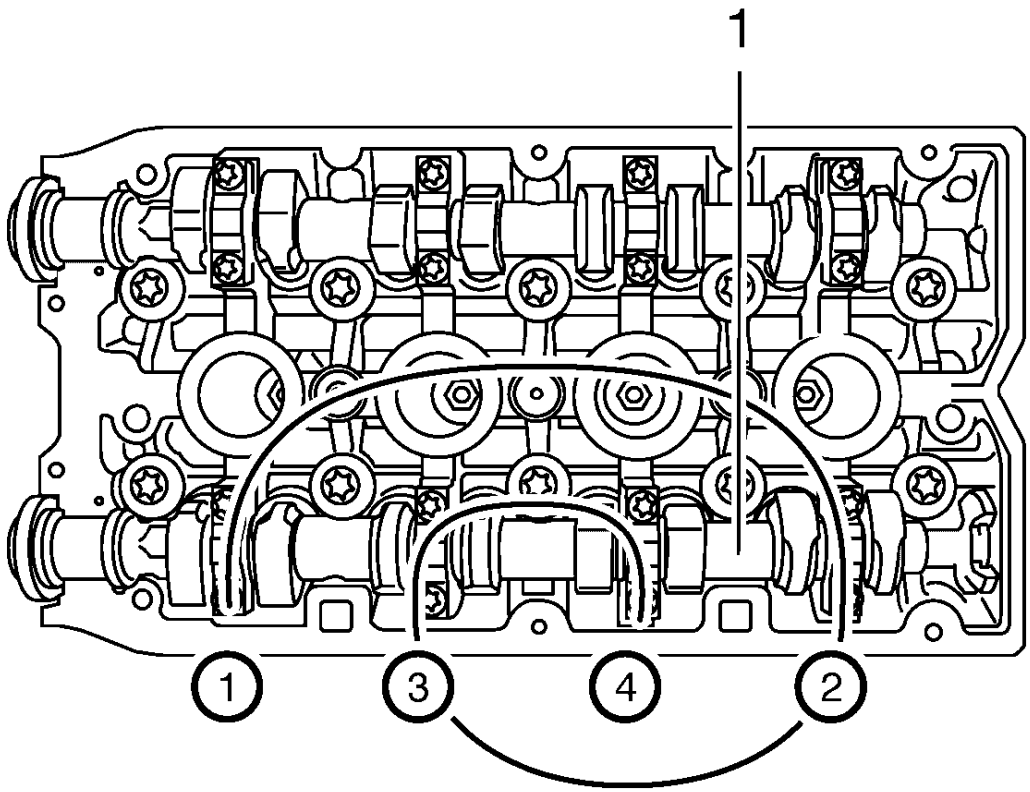

Fig. 403: Exhaust Camshaft Bearing Cap Bolts Loosening Sequence
Courtesy of GENERAL MOTORS COMPANY

3. Loosen the 8 exhaust camshaft bearing cap bolts working from outside to inside in a spiral in steps of 1/2 up to 1 turn.
4. Remove the 8 exhaust camshaft bearing cap bolts.

NOTE: Mark camshaft bearing caps before removal.

5. Remove the 4 exhaust camshaft bearing caps numbers 6-9 from the cylinder head.
6. Remove the exhaust camshaft (1).

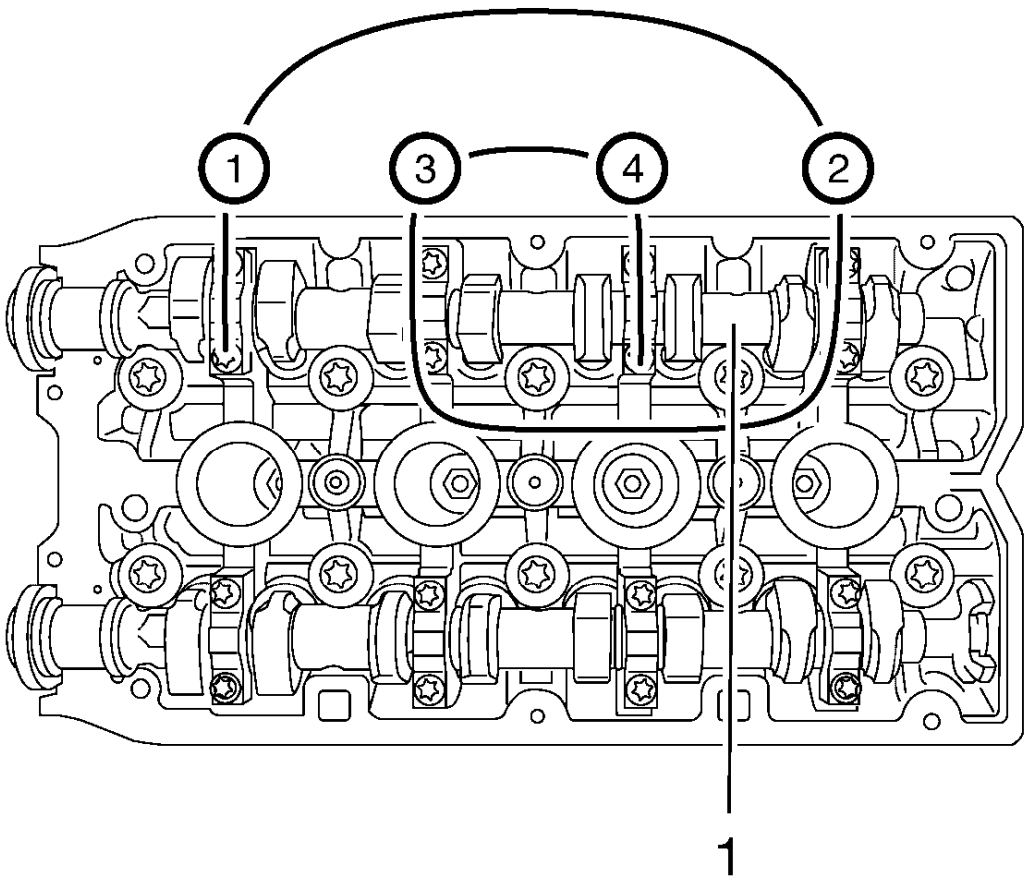

Fig. 404: Intake Camshaft Bearing Cap Bolts Loosening Sequence
Courtesy of GENERAL MOTORS COMPANY

7. Loosen the 8 intake camshaft bearing cap bolts working from outside to inside in a spiral in steps of 1/2 up to 1 turn.
8. Remove the 8 intake camshaft bearing cap bolts.

NOTE: Mark camshaft bearing caps before removal.

9. Remove the 4 intake camshaft bearing caps numbers 2-5 from the cylinder head.
10. Remove the intake camshaft (1).
11. Remove the camshaft seal rings.

VALVE LIFTER REMOVAL

Special Tools

EN-845 Suction Device

For equivalent regional tools, refer to **Special Tools**.

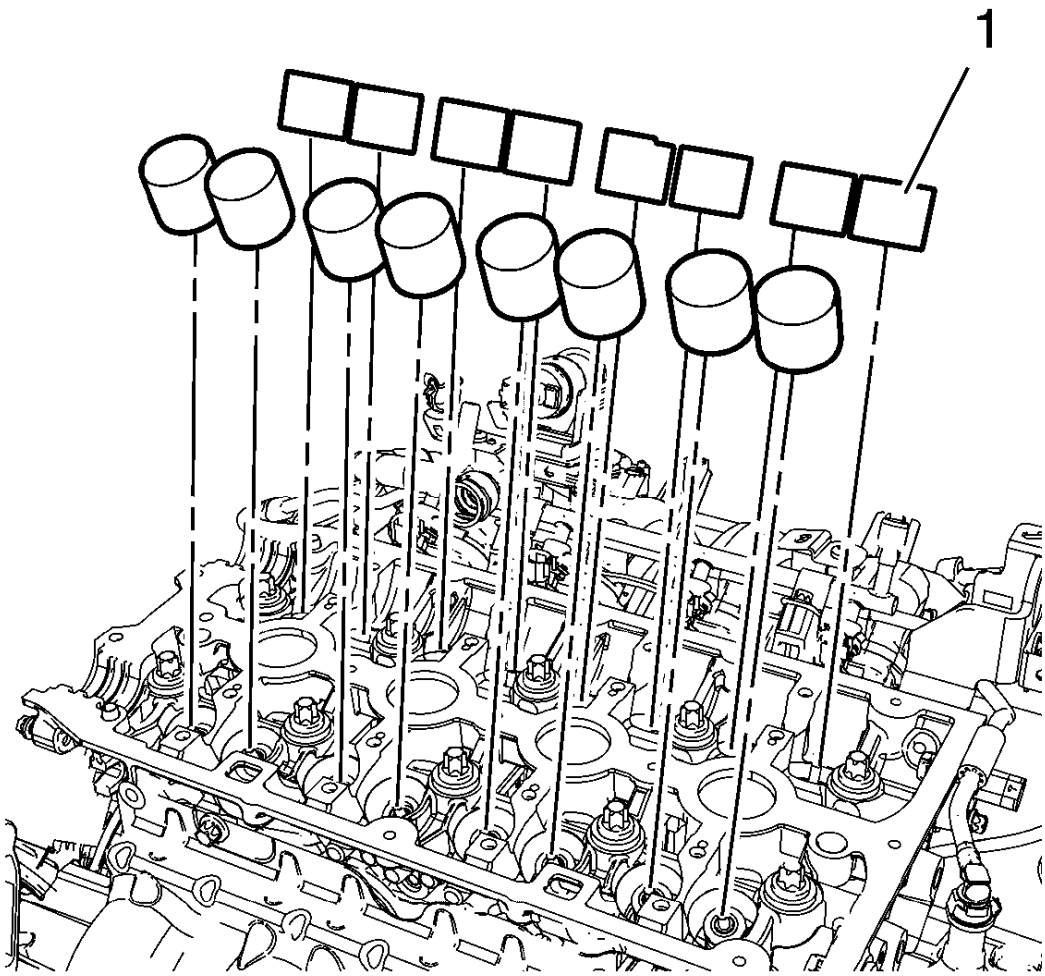

Fig. 405: Valve Lifters
Courtesy of GENERAL MOTORS COMPANY

NOTE: Mark the locations.

Remove the 16 valve lifter (1) use the **EN-845** suction device.

CYLINDER HEAD REMOVAL

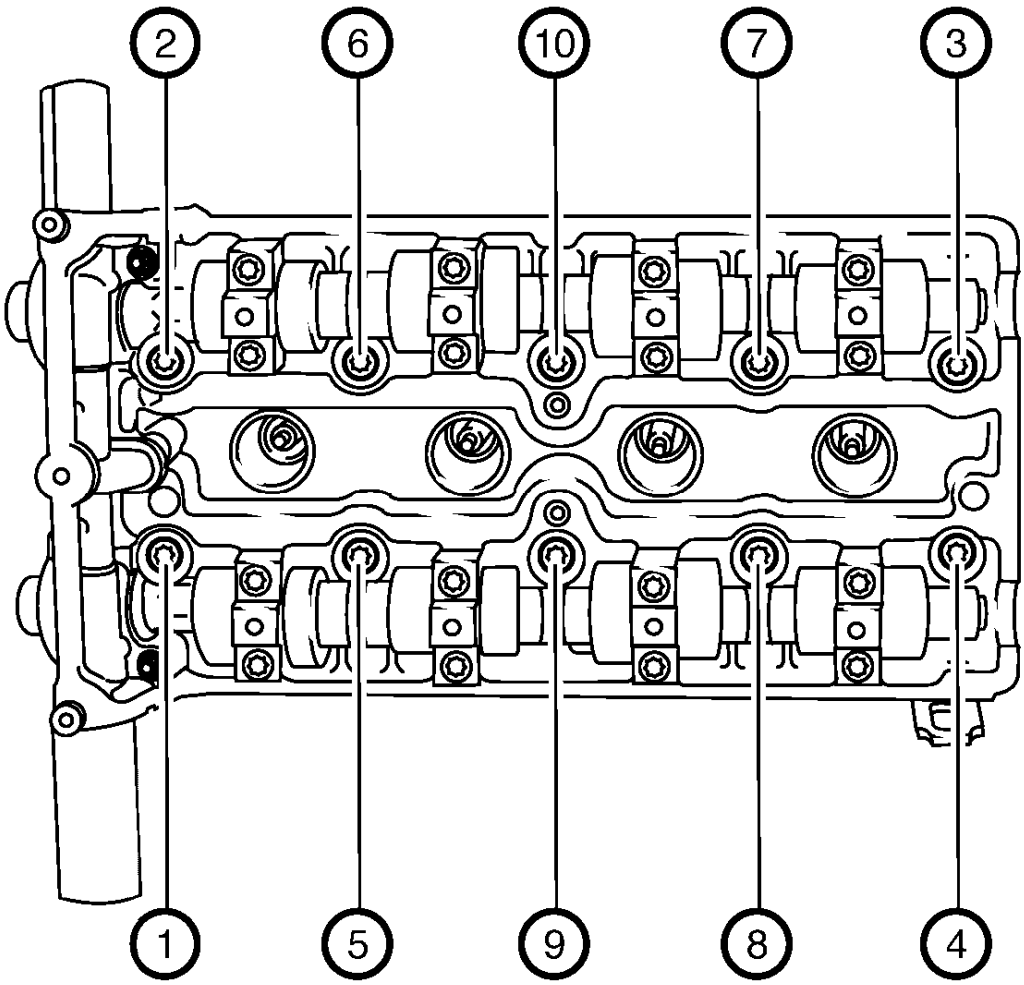

Fig. 406: Cylinder Head Bolts Tightening Sequence
Courtesy of GENERAL MOTORS COMPANY

1. Remove the 10 cylinder head bolts in sequence as shown.
    1. Loosen the 10 bolts 90°.
    2. Loosen the 10 bolts 180°.
2. Remove the cylinder head and place on a suitable base.
3. Remove the cylinder head gasket.

PISTON, CONNECTING ROD, AND BEARING REMOVAL

1. Install the crankshaft balancer bolt.
2. Set the pistons 1 and 4 to TDC in direction of engine rotation.

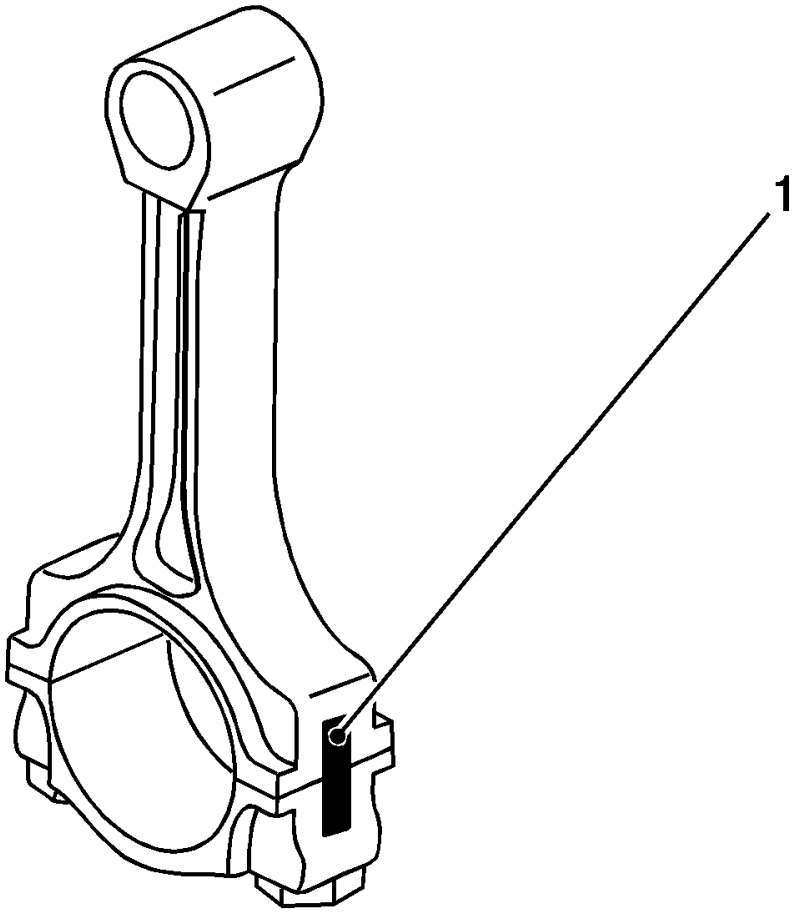

Fig. 407: View Of Con-Rod Bearing Caps
Courtesy of GENERAL MOTORS COMPANY

NOTE: Note cylinder sequence.

3. Mark the connecting rod with the connecting rod bearing cover (1).

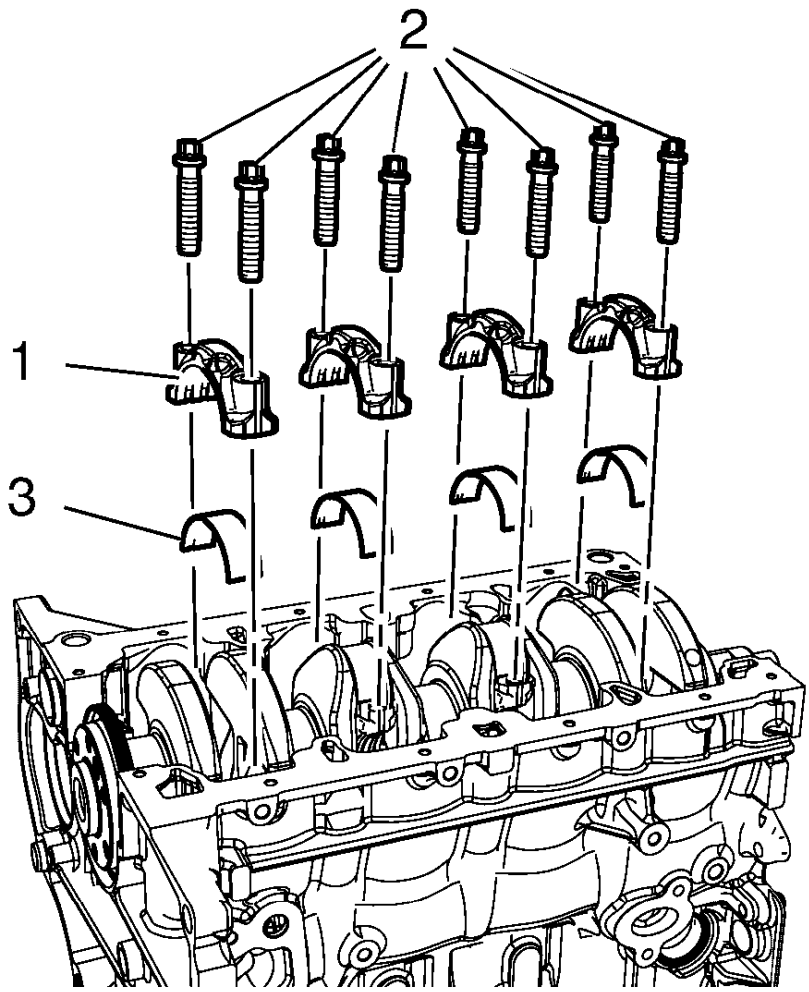

Fig. 408: Connecting Rod Bearing, Connecting Rod Bearing Caps And Bolts
Courtesy of GENERAL MOTORS COMPANY

4. Remove the 4 connecting rod bearing caps bolts (2) of cylinder 1 and 4.
5. Remove the connecting rod bearing caps (1) and the connecting rod bearing (3).

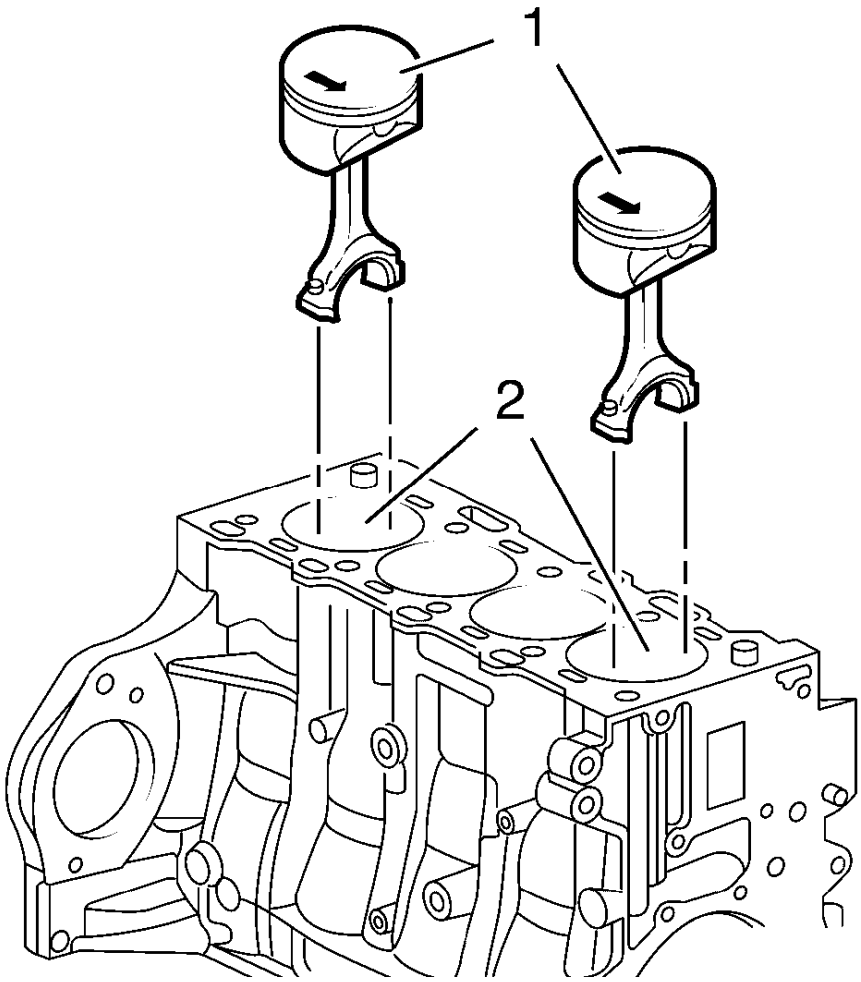

Fig. 409: Pistons 1, 4 And Cylinder Bore
Courtesy of GENERAL MOTORS COMPANY

6. Push the pistons 1 and 4 (1) out of the cylinder bore (2).

NOTE: The shear surfaces of the con-rod and the con-rod bearing cover form a unique fit and must not be swapped or damaged. Do not lay down on the shear surfaces.

7. Remove the pistons 1 and 4 (1).
8. Turn crankshaft on crankshaft balancer through 180° in direction of rotation of engine.

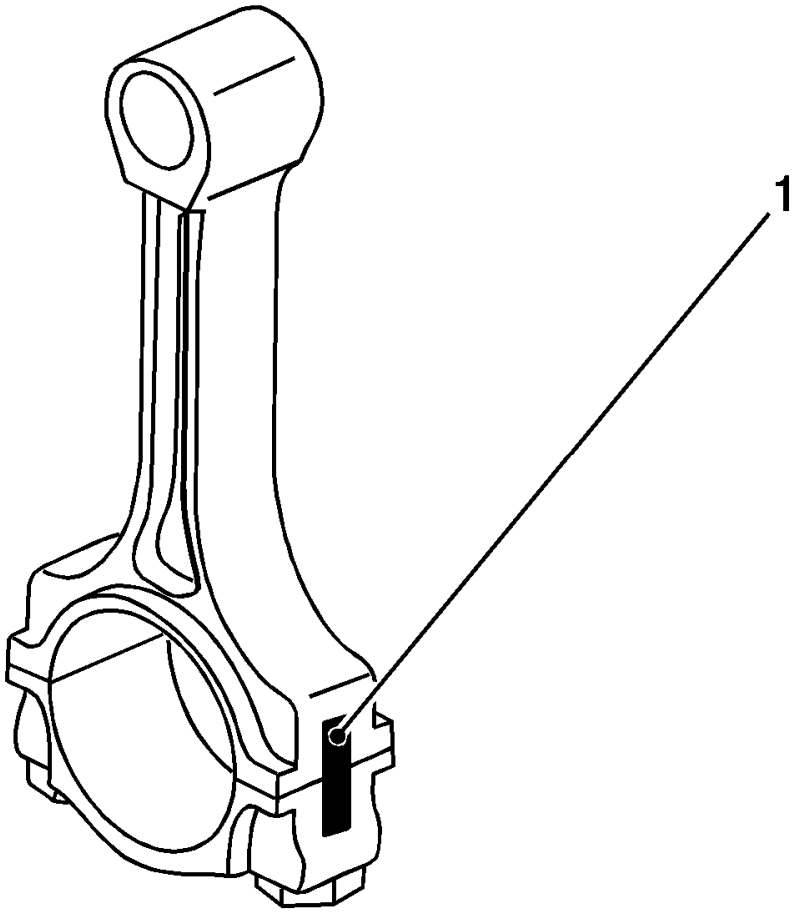

Fig. 410: View Of Con-Rod Bearing Caps
Courtesy of GENERAL MOTORS COMPANY

NOTE: Note cylinder sequence.

9. Mark the connecting rod with the connecting rod bearing cover (1).

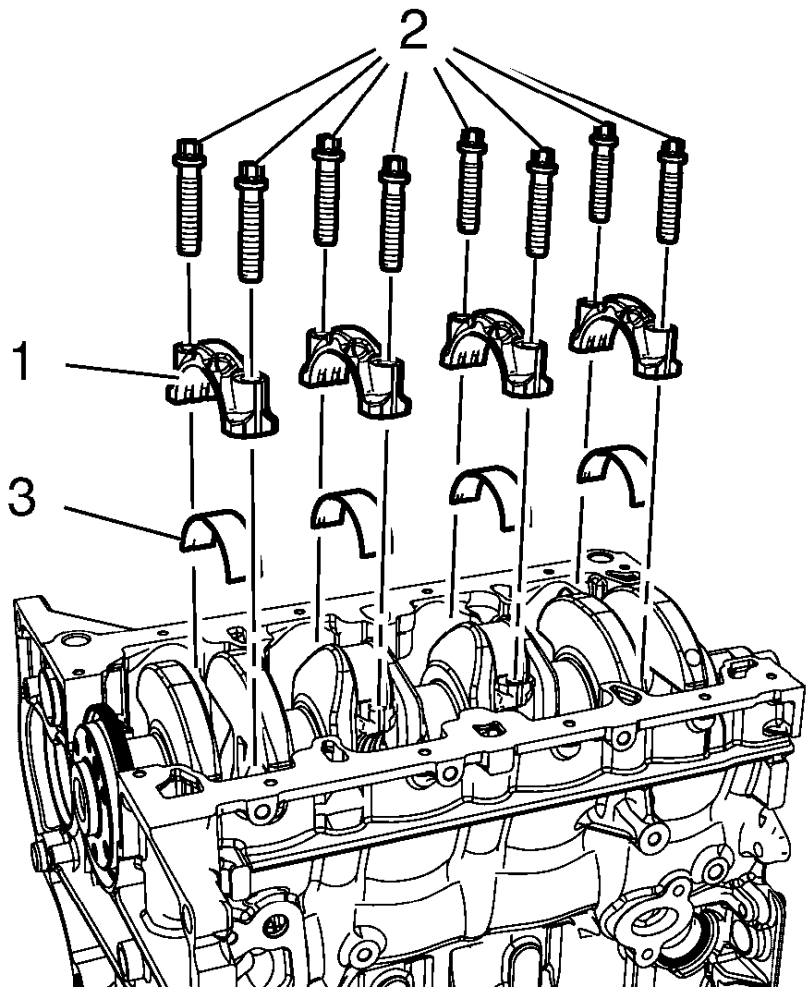

Fig. 411: Connecting Rod Bearing, Connecting Rod Bearing Caps And Bolts
Courtesy of GENERAL MOTORS COMPANY

10. Remove the 4 connecting rod bearing caps bolts (2) of cylinder 2 and 3.
11. Remove the connecting rod bearing caps (1) and the connecting rod bearing (3).

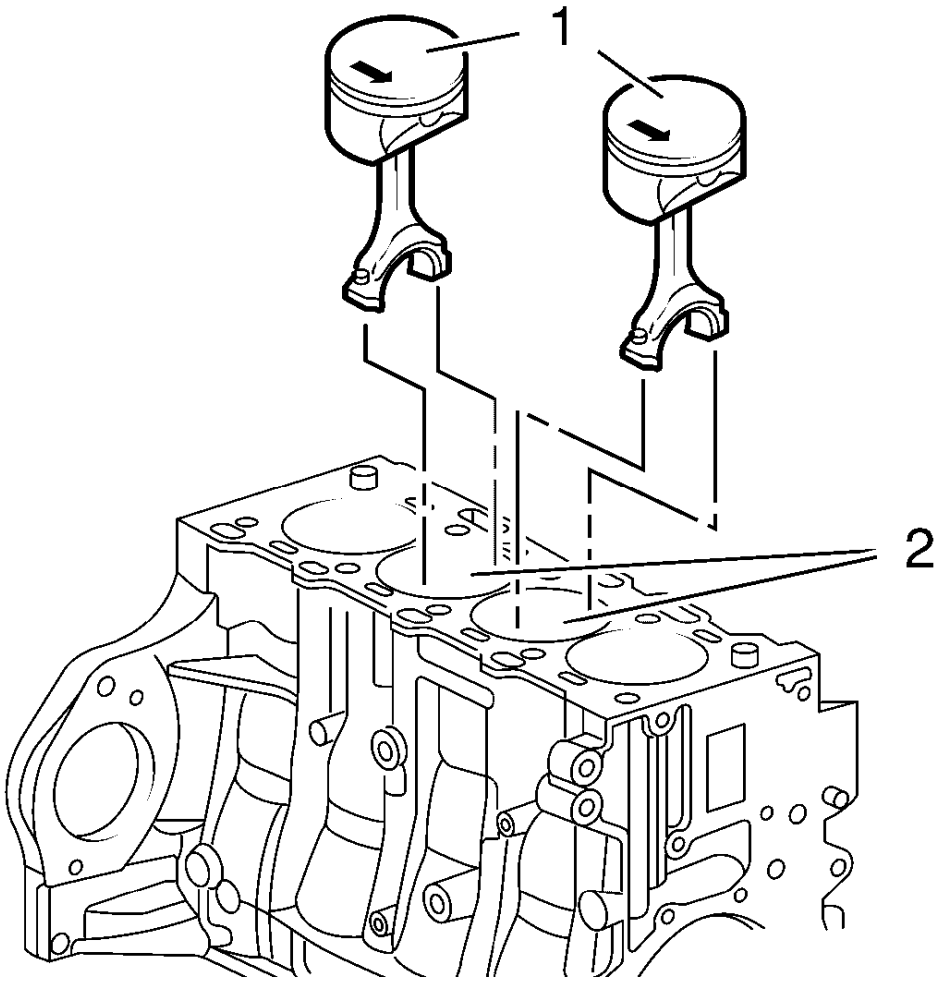

Fig. 412: Pistons 2, 3 And Cylinder Bore
Courtesy of GENERAL MOTORS COMPANY

12. Push the pistons 2 and 3 (1) out of the cylinder bore (2).

NOTE: The shear surfaces of the con-rod and the con-rod bearing cover form a unique fit and must not be swapped or damaged. Do not lay down on the shear surfaces.

13. Remove the pistons 2 and 3 (1).

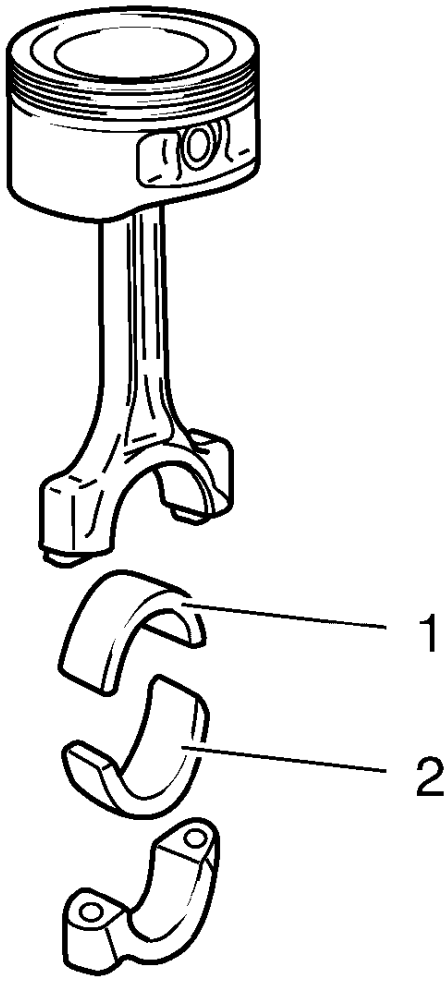

Fig. 413: Connecting Rod Bearing
Courtesy of GENERAL MOTORS COMPANY

NOTE: Observe correct fitting position, observe alignment.

14. Remove the connecting rod bearing (1, 2).
15. Check the components. Refer to **Piston, Connecting Rod, and Bearing Cleaning and Inspection**.

CRANKSHAFT AND BEARING REMOVAL

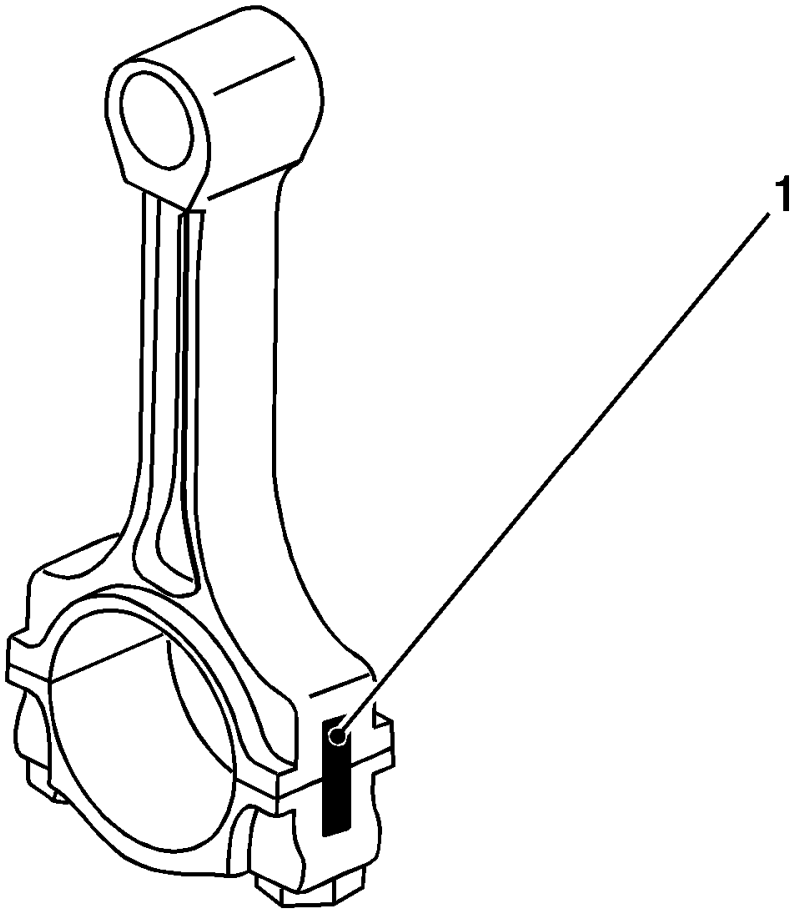

Fig. 414: View Of Con-Rod Bearing Caps
Courtesy of GENERAL MOTORS COMPANY

1. Identify all the connecting rod bearing caps (1).

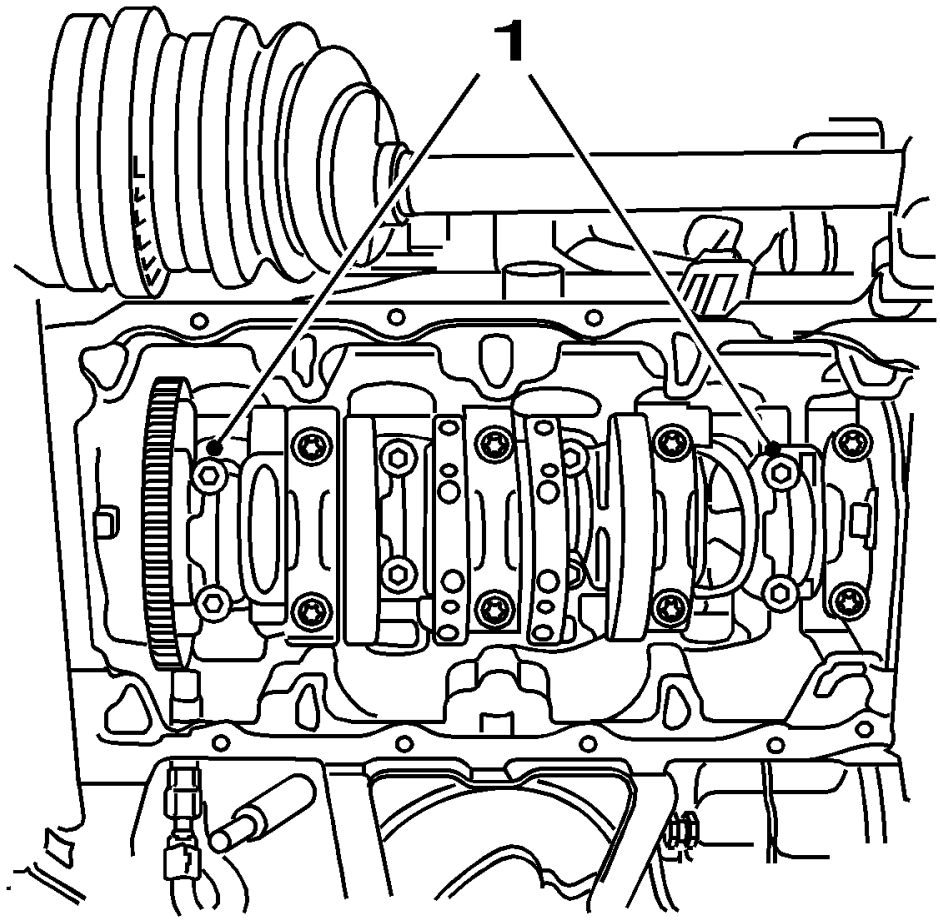

Fig. 415: View Of Con-Rod Bearing Caps
Courtesy of GENERAL MOTORS COMPANY

2. Remove the 4 bolts.
3. Remove the connecting rod bearing caps 1 and 4 (1).
4. Turn the crankshaft through 180°.

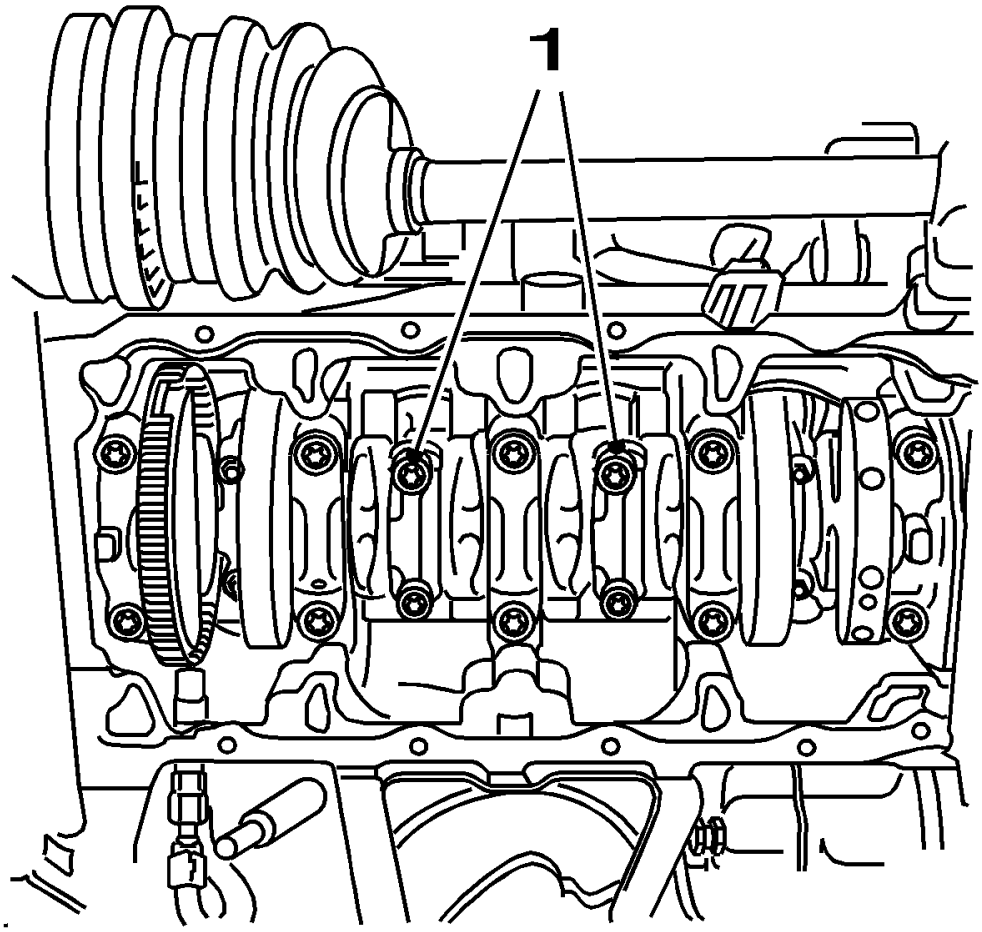

Fig. 416: View Of Con-Rod Bearing Caps
Courtesy of GENERAL MOTORS COMPANY

5. Remove the 4 bolts.
6. Remove the connecting rod bearing caps 2 and 3 (1).
7. Identify the crankshaft bearing caps.

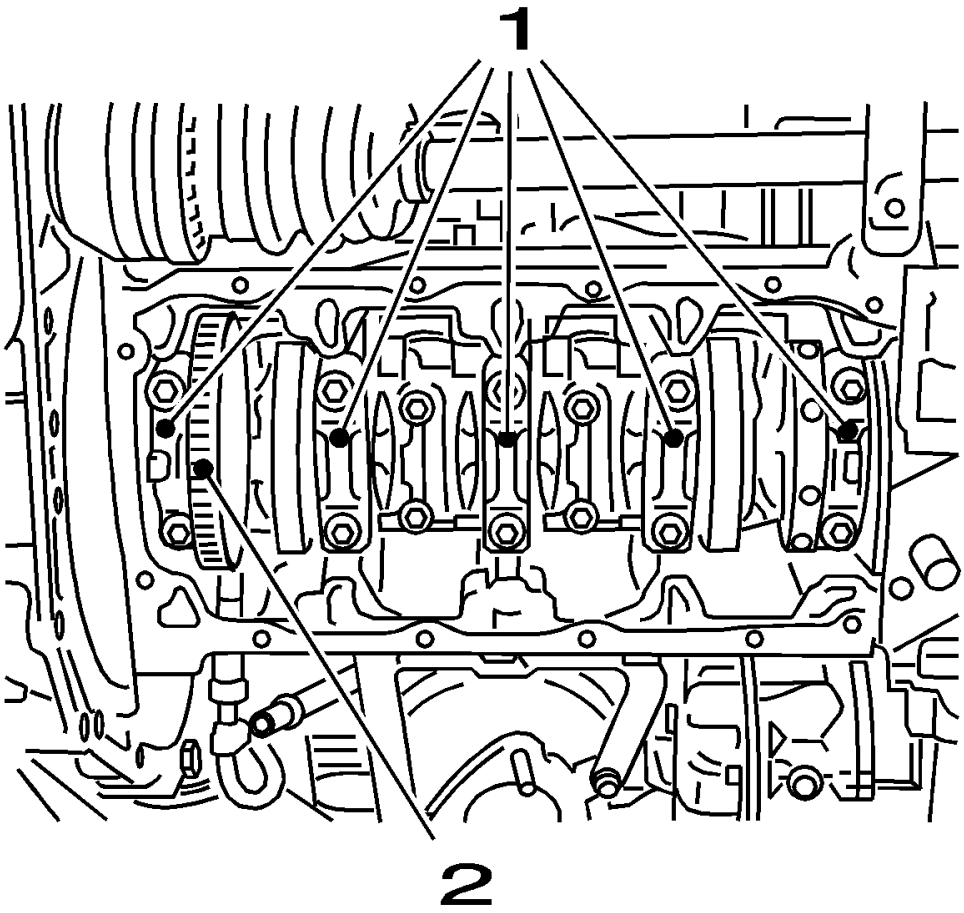

Fig. 417: View Of Crankshaft Bearing Cap Bolts
Courtesy of GENERAL MOTORS COMPANY

8. Remove the crankshaft bearing caps (1).
9. Remove the 10 bolts.
10. Remove the crankshaft (2).
11. Remove the crankshaft bearing clips.

INTAKE MANIFOLD DISASSEMBLE

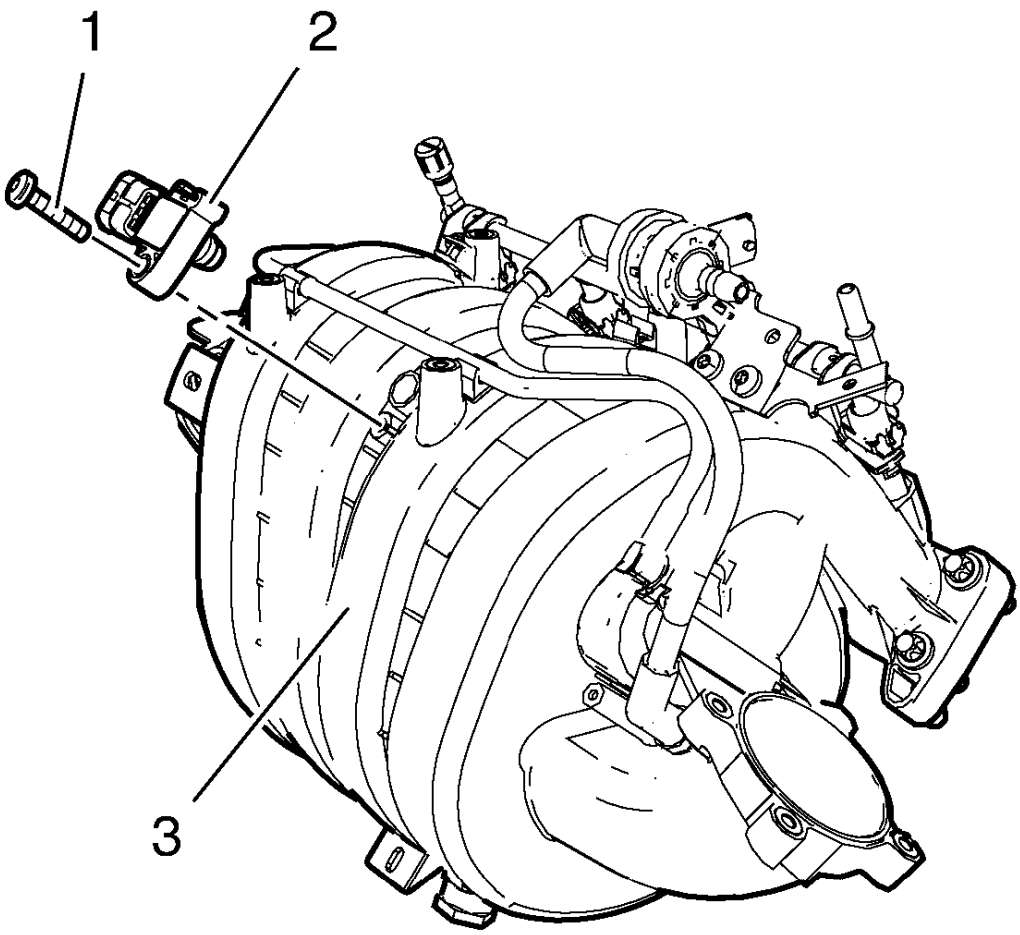

Fig. 418: Intake Manifold, Manifold Absolute Pressure Sensor And Bolt
Courtesy of GENERAL MOTORS COMPANY

1. Remove the intake manifold absolute pressure sensor bolt (1).
2. Remove the manifold absolute pressure sensor (2) from the intake manifold (3).

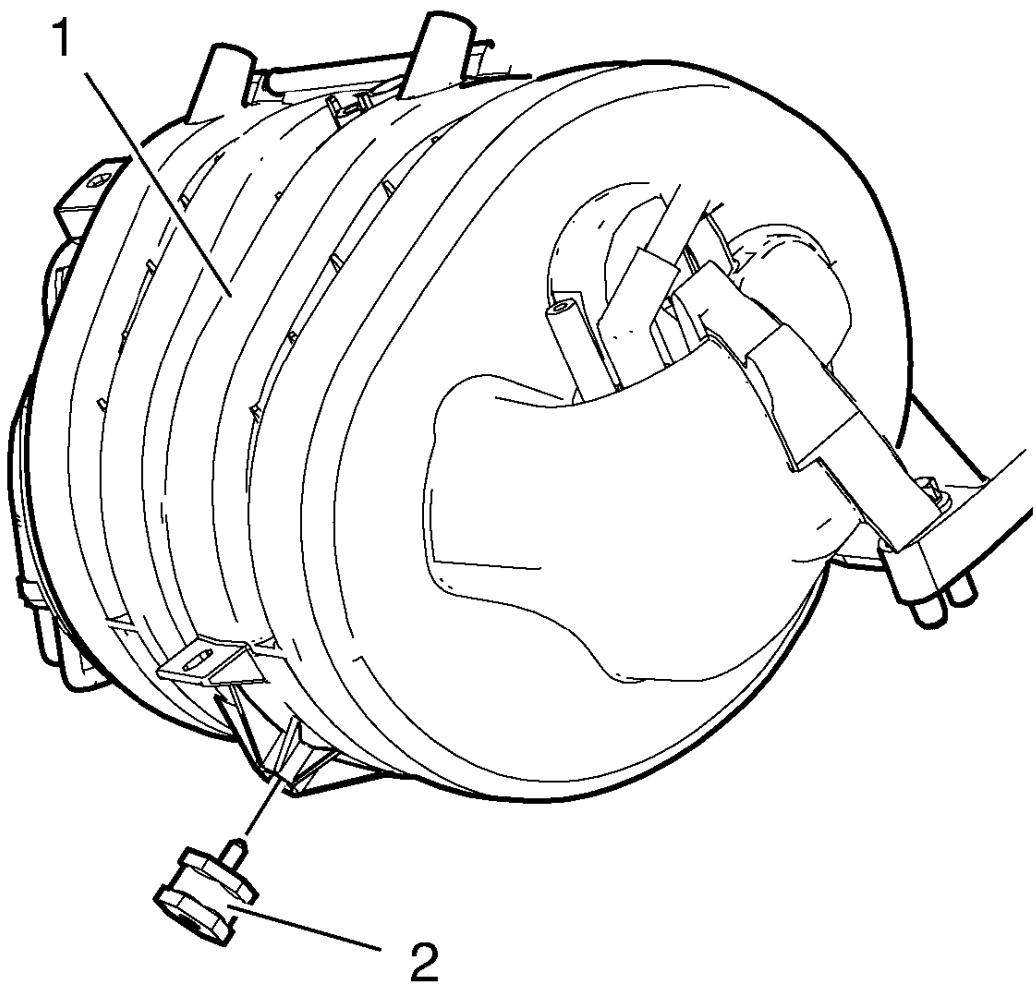

Fig. 419: Intake Manifold And Mount
Courtesy of GENERAL MOTORS COMPANY

3. Remove the intake manifold mount (2) from the intake manifold (1).

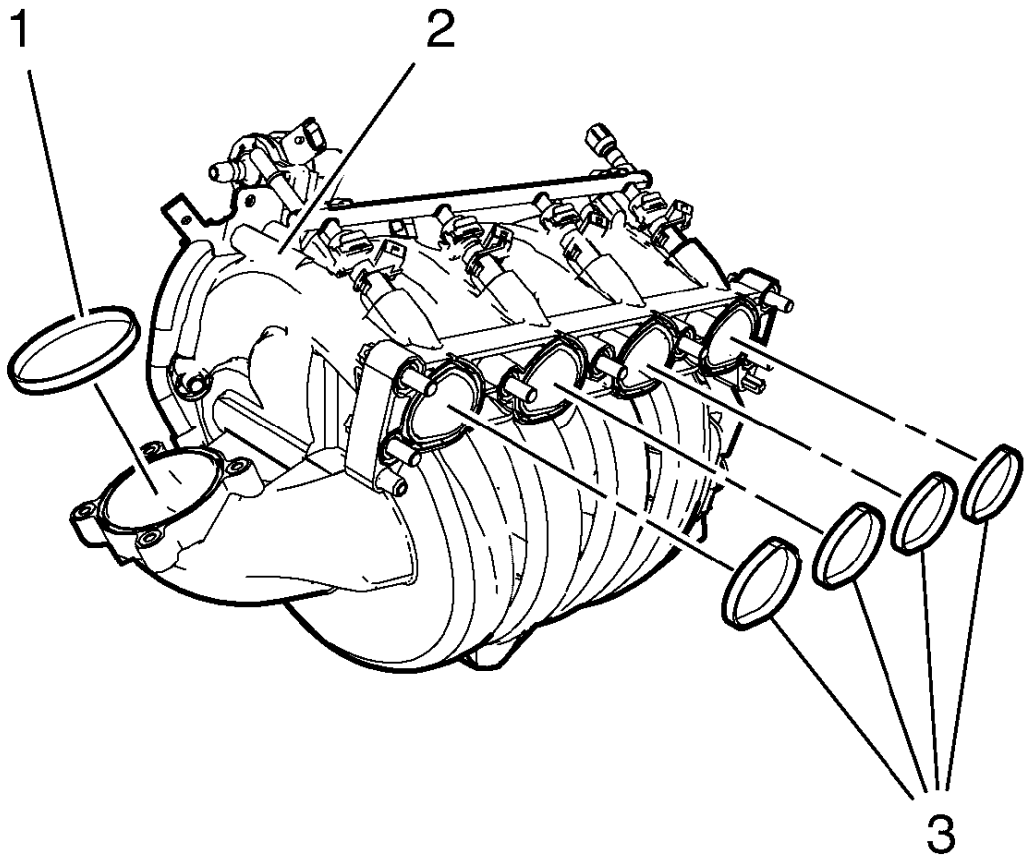

Fig. 420: Intake Manifold, Seal And Throttle Body Seal
Courtesy of GENERAL MOTORS COMPANY

4. Remove the throttle body seal (1).
5. Remove the intake manifold seal (3) from the intake manifold (2).

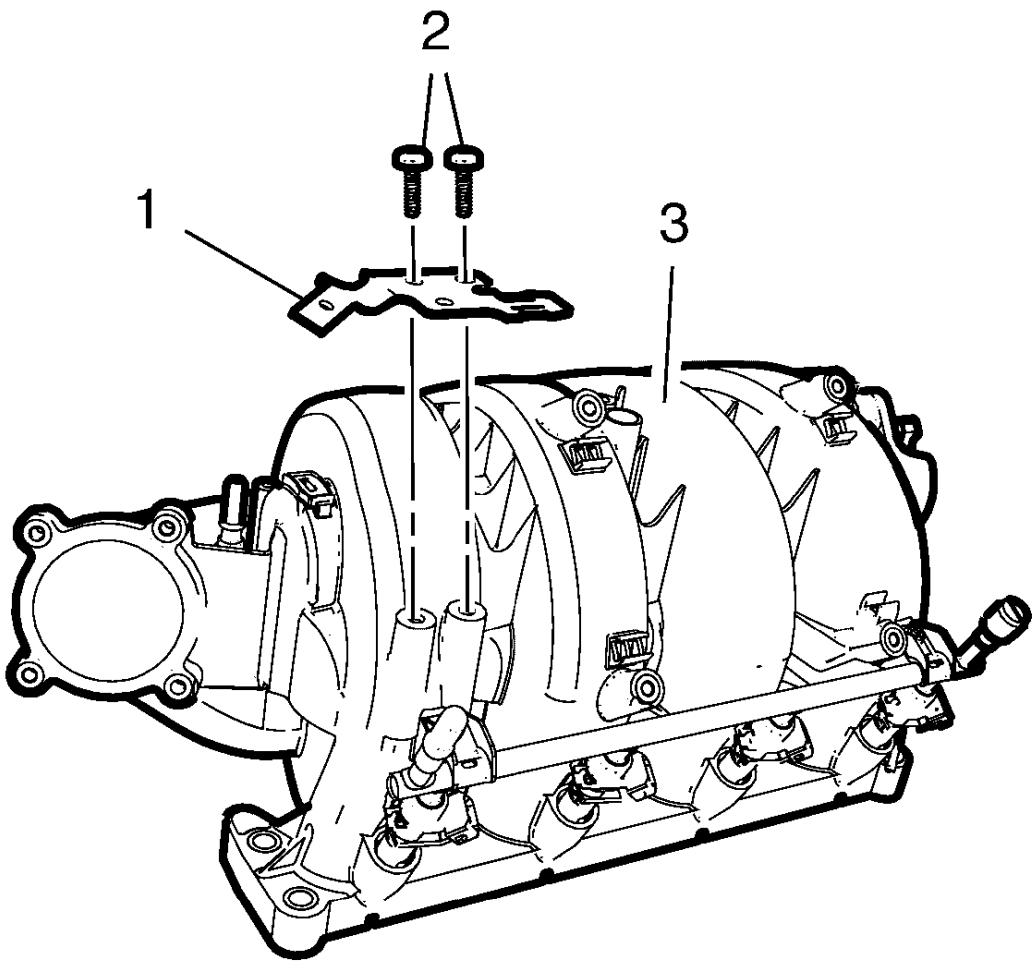

Fig. 421: Intake Manifold, Evaporative Emission Canister Purge Solenoid Valve Bracket And Bolts
Courtesy of GENERAL MOTORS COMPANY

6. Remove the 2 evaporative emission canister purge solenoid valve bracket bolts (2).
7. Remove the evaporative emission canister purge solenoid valve bracket (1) from the intake manifold (3).

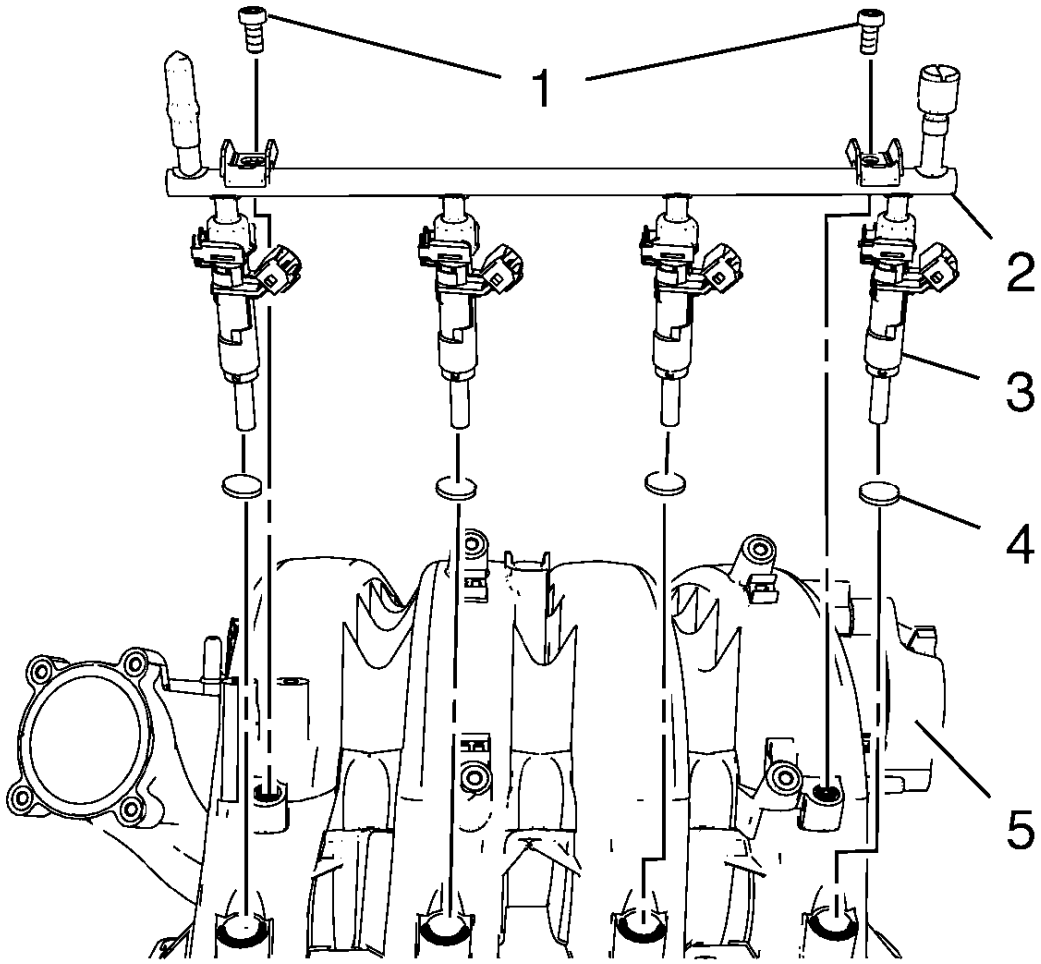

Fig. 422: Intake Manifold, Multiport Fuel Injection Fuel Rail, Fuel Injectors, Seals And Bolts
Courtesy of GENERAL MOTORS COMPANY

8. Remove the 2 multiport fuel injection fuel rail bolts (1).
9. Remove the multiport fuel injection fuel rail (2) and the fuel injectors (3) from the intake manifold (5).
10. Remove the 4 multiport fuel injector seals (4).

CYLINDER HEAD DISASSEMBLE

Special Tools

- **EN-840** Pliers/Remover
- **EN-8062** Valve Spring Compressor
- **EN-8062-5** Adapter
- **EN-50717-2** Compressor Assembly of **EN-50717** Kit

For equivalent regional tools, refer to **Special Tools**.

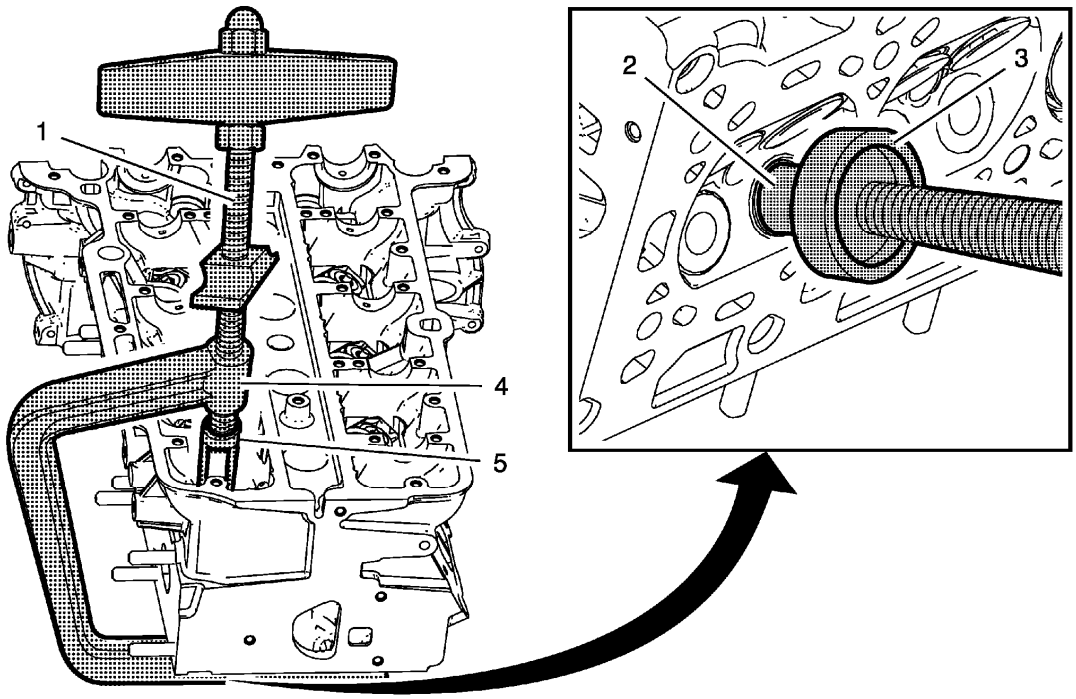

Fig. 423: Valve Spring Compressor And Adapter Assembly
Courtesy of GENERAL MOTORS COMPANY

1. Install the **EN-50717-2** assembly (1) to the **EN-8062** compressor (4).
2. Install the **EN-8062-5** adapter (3) to the **EN-8062** compressor.
3. Install the compressor assembly to the cylinder head, so that the adapter (5) of the **EN-50717-2** assembly (1) contacts the valve spring retainer properly and the **EN-8062-5** adapter (3) contacts the valve disc (2). Prefix the **EN-8062** compressor (4).

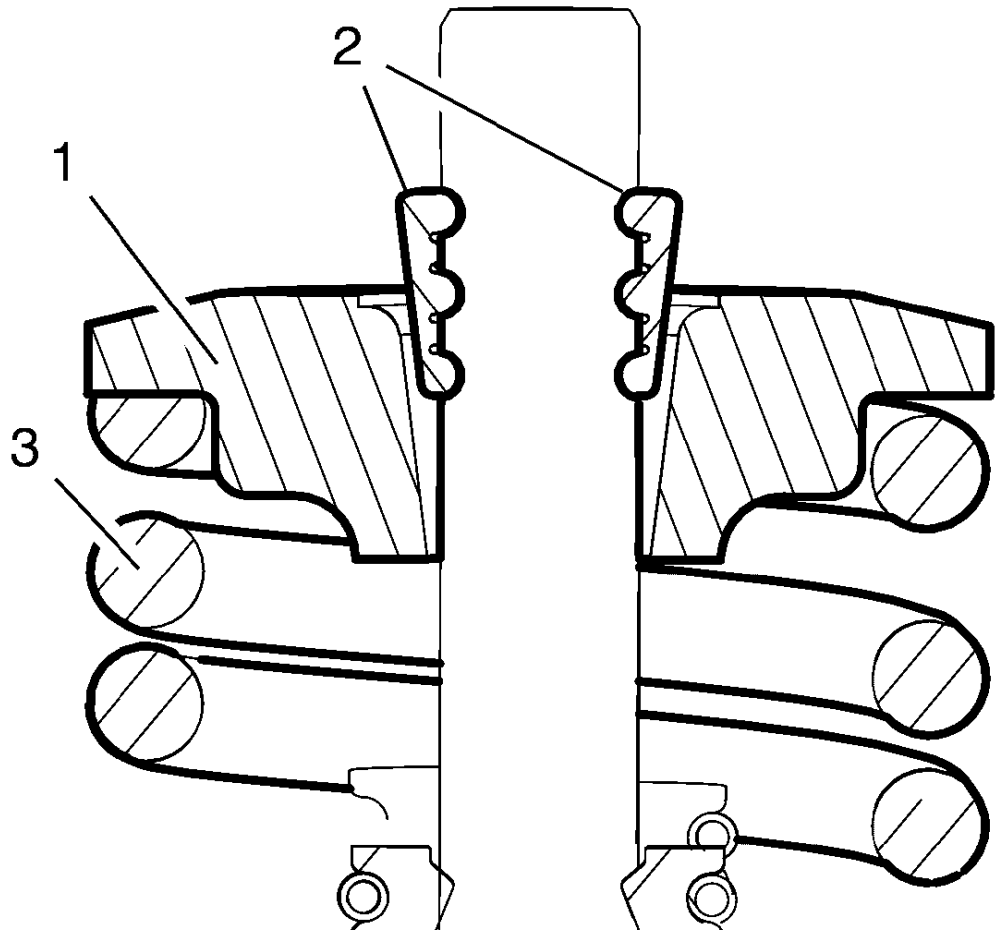

Fig. 424: Valve Spring Retainer And Valve Spring
Courtesy of GENERAL MOTORS COMPANY

WARNING: Valve springs can be tightly compressed. Use care when removing the retainers and plugs. Personal injury could result.

4. Apply pressure to the **EN-50717-2** assembly to push down the vale spring retainer (1) and compress the valve spring (3) until the valve keys (2) are free from tension. Carefully remove the valve keys.

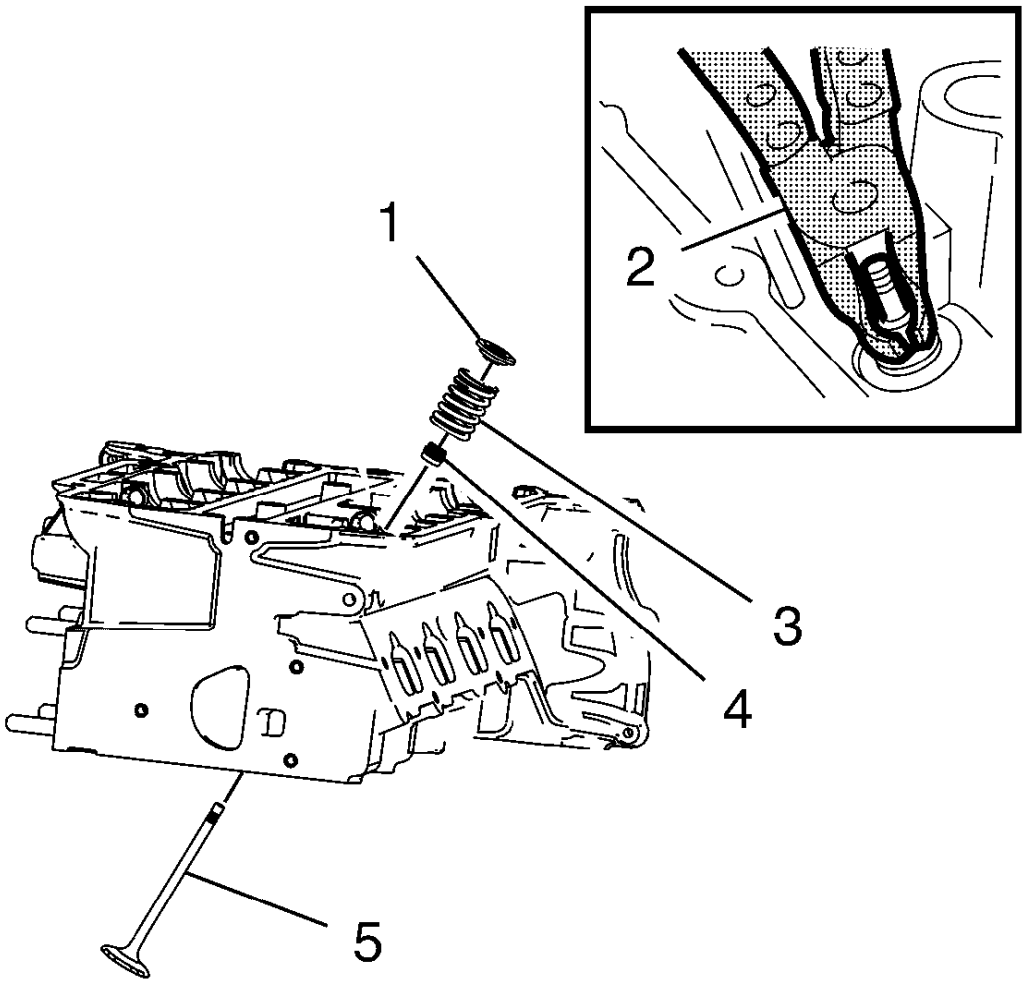

Fig. 425: Spring Compressor
Courtesy of GENERAL MOTORS COMPANY

5. Slowly and carefully loosen the **EN-50717-2** assembly until the valve spring is entirely expanded.
6. Remove the compressor assembly from the cylinder head.
7. Remove the valve spring retainer (1) and the valve spring (3).
8. Remove and DISCARD the valve stem oil seal (4), using the **EN-840** pliers (2).
9. Remove the valve (5).

NOTE: Ensure that the valve train components are kept together and identified in order for proper installation in their original position.

10. Repeat the procedure with the remaining valves.
11. In case of re-using the cylinder head, refer to **Cylinder Head Cleaning and Inspection**.

PISTON AND CONNECTING ROD DISASSEMBLE

1. Remove the piston with connection rod. Refer to **Piston, Connecting Rod, and Bearing Removal**.

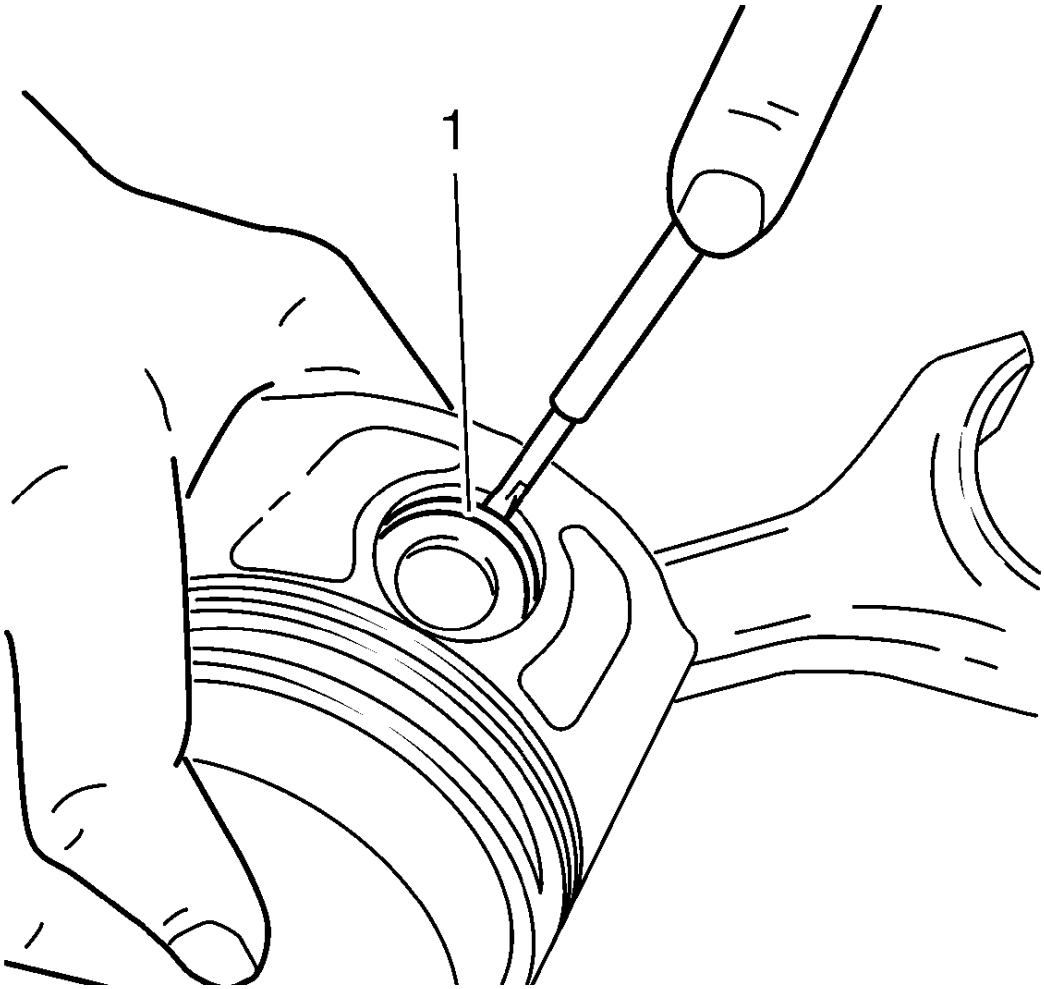

Fig. 426: Detaching Piston From Connecting Rod
Courtesy of GENERAL MOTORS COMPANY

NOTE: Note installation position of the piston in respect of the connection rod.

2. Detach the piston from the connection rod.

NOTE: Do not damage the bore.

3. Remove the retainer (1) from the piston eye.
4. Press the piston pin out of the piston.

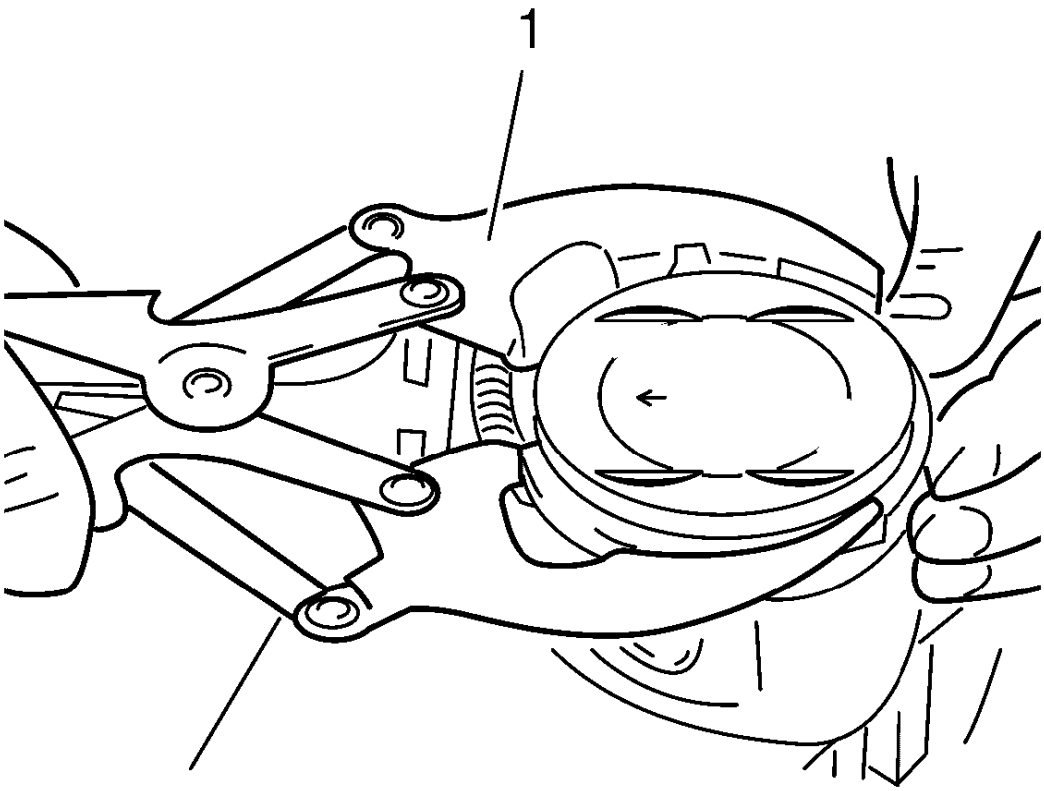

Fig. 427: Removing Piston Rings Using Piston Ring Pliers
Courtesy of GENERAL MOTORS COMPANY

5. Remove the piston rings, using piston ring pliers (1).

   Remove oil carbon from the groove with a split piston ring, filed to a wedge-shape.

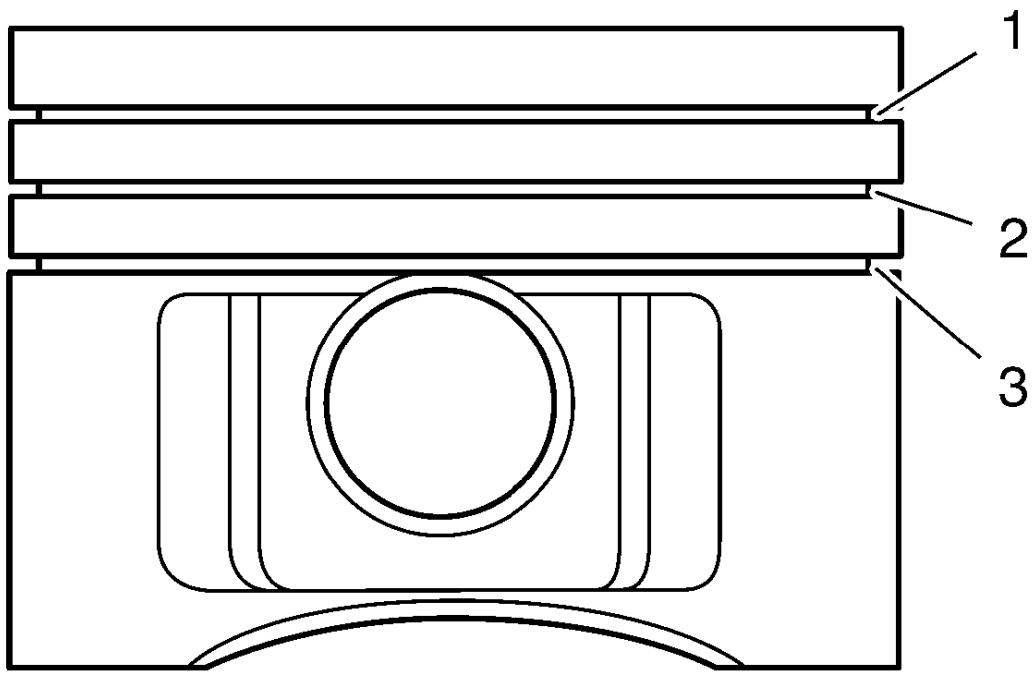

Fig. 428: Rectangular Compression Ring, Tapered Compression Ring And Oil Scraper Ring
Courtesy of GENERAL MOTORS COMPANY

6. Measure the piston ring gap.
    - Tension the piston ring in the cylinder and measure the gap with a feeler gauge.
    - Permissible ring gap:
        - Rectangular compression ring (1): 0.20-0.40 mm (0.007-0.015 in)
        - Tapered compression ring (2): 0.40-0.60 mm (0.015-0.023 in)
        - Oil scraper ring (3): 0.25-0.75 mm (0.009-0.029 in)

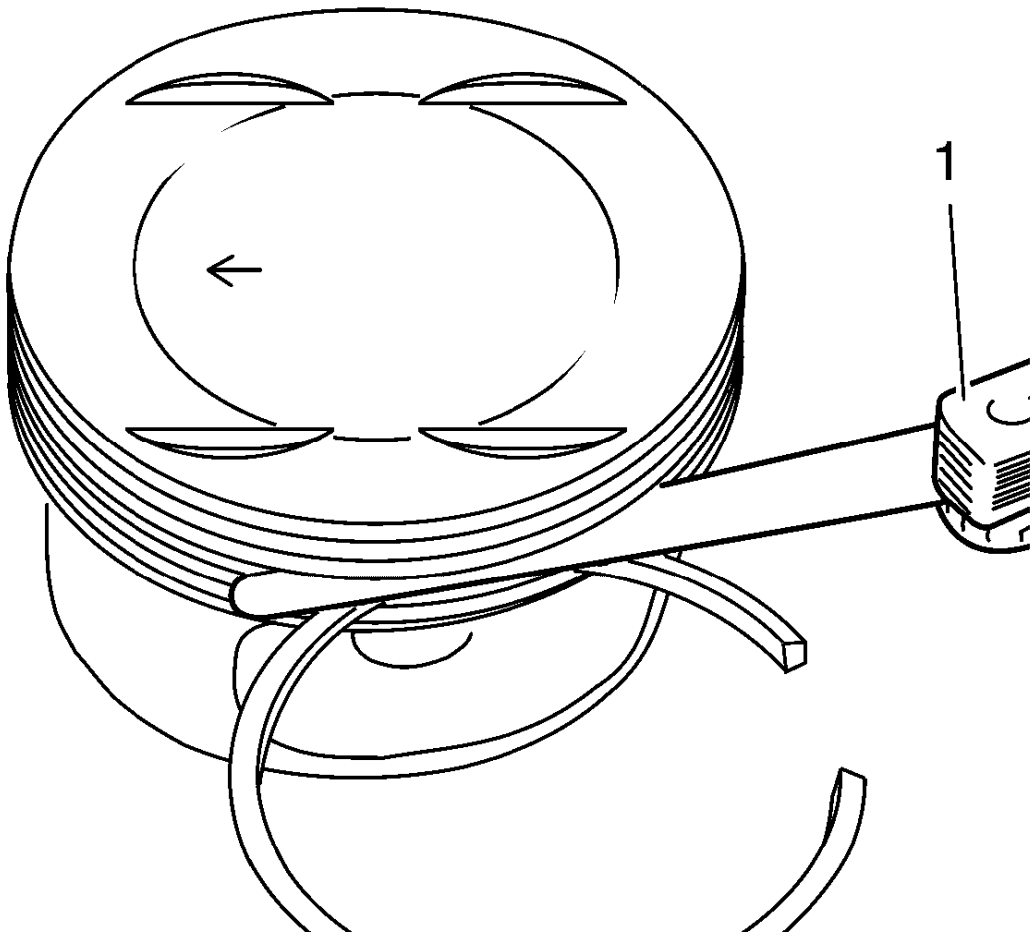

Fig. 429: Checking Piston Ring Vertical Play With Feeler Gauge
Courtesy of GENERAL MOTORS COMPANY

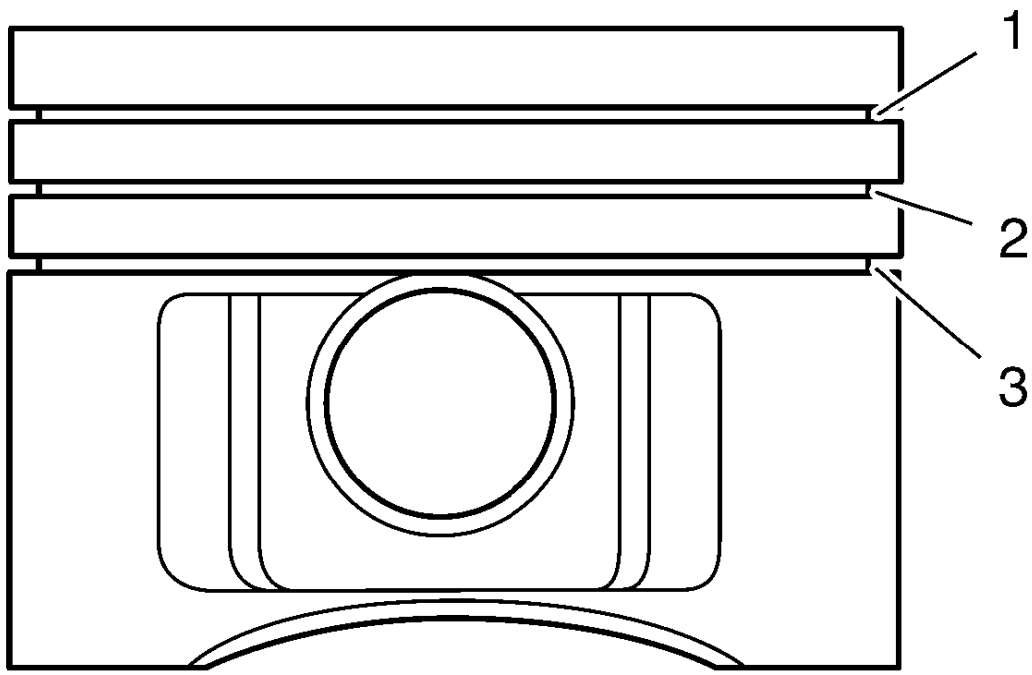

Fig. 430: Rectangular Compression Ring, Tapered Compression Ring And Oil Scraper Ring
Courtesy of GENERAL MOTORS COMPANY

7. Check piston ring vertical play with a feeler gauge (1) in the piston ring groove.

   Permissible vertical play:

   - Rectangular compression ring (1): 0.04-0.08 mm (0.001-0.003 in)
   - Tapered compression ring (2): 0.03-0.07 mm (0.001-0.002 in)
   - Oil scraper ring (3): 0.03-0.13 mm (0.001-0.005 in)

ENGINE BLOCK DISASSEMBLE

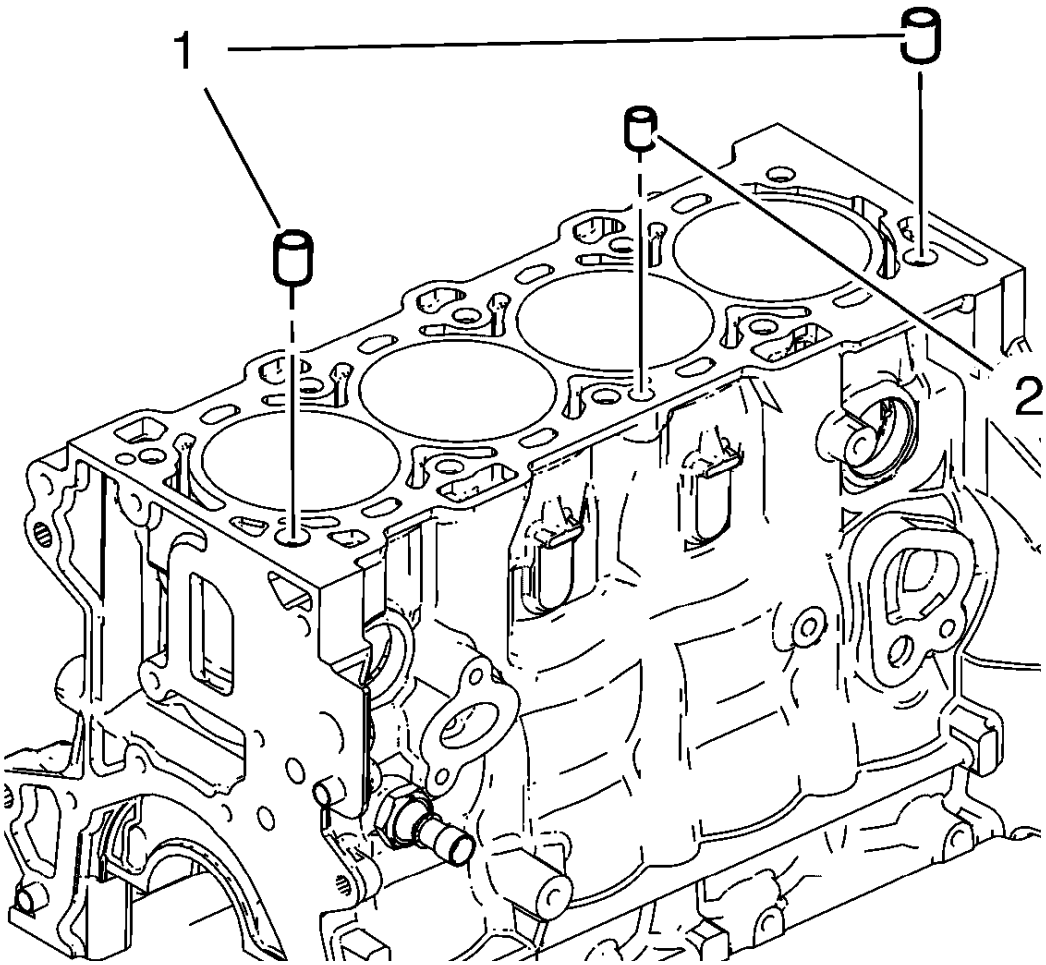

Fig. 431: Cylinder Head Locating Pins
Courtesy of GENERAL MOTORS COMPANY

1. Remove the cylinder head locating (1, 2).

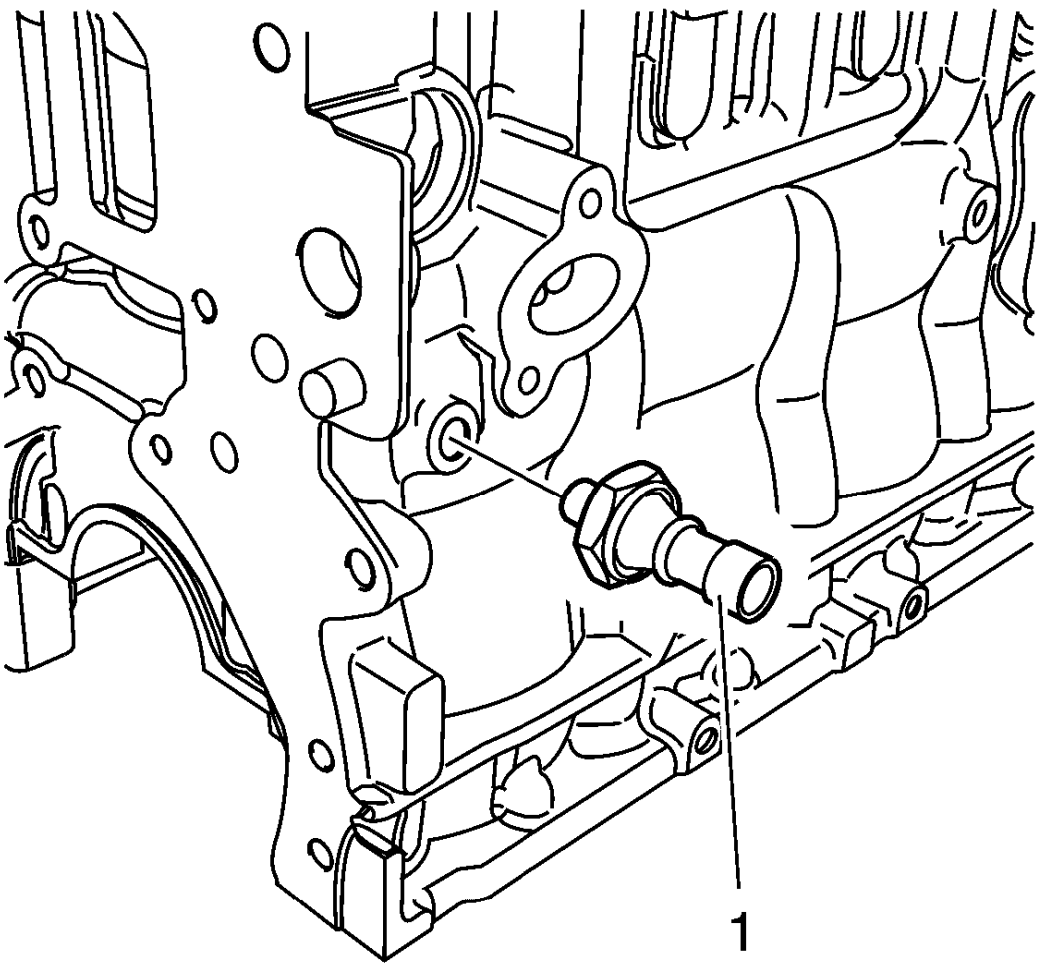

Fig. 432: Oil Pressure Switch
Courtesy of GENERAL MOTORS COMPANY

2. Remove the oil pressure switch (1).

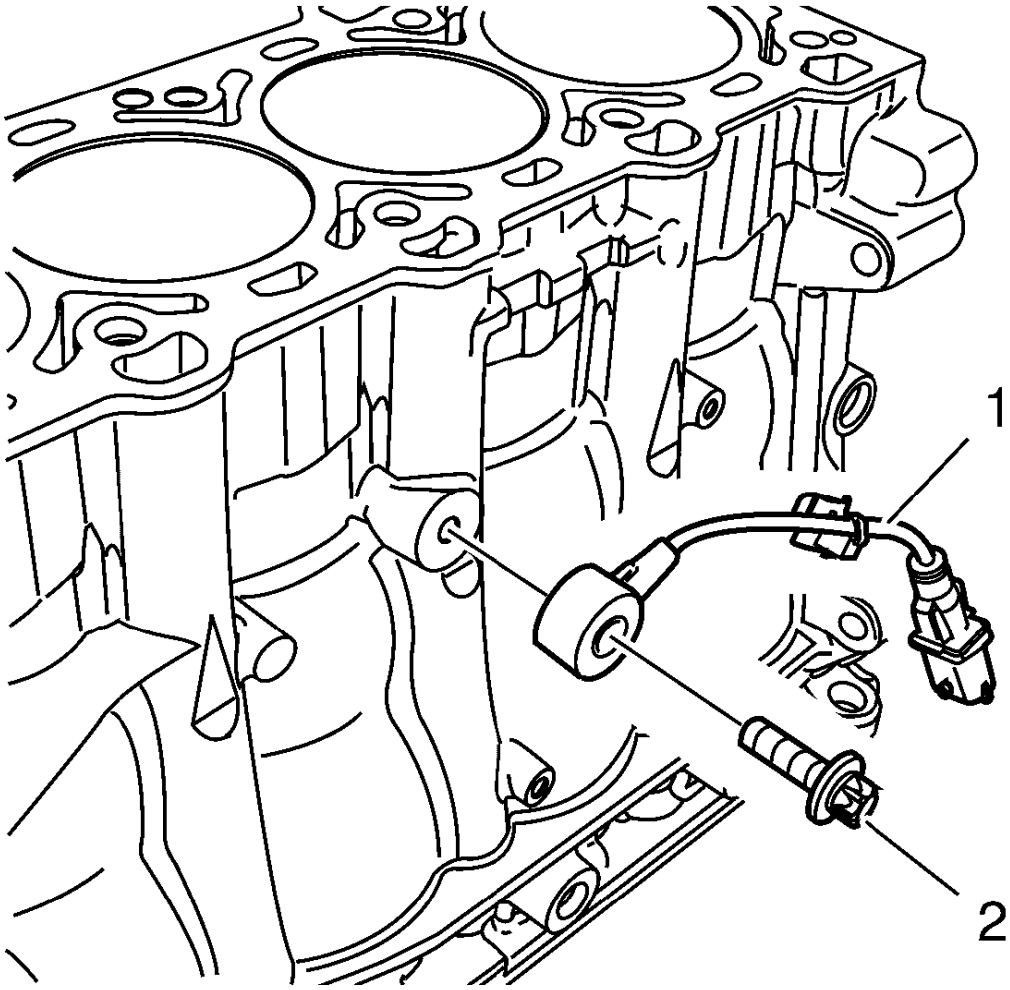

Fig. 433: Knock Sensor And Bolt
Courtesy of GENERAL MOTORS COMPANY

3. Remove the knock sensor bolt (2) and the knock sensor (1).
4. Clean the thread.

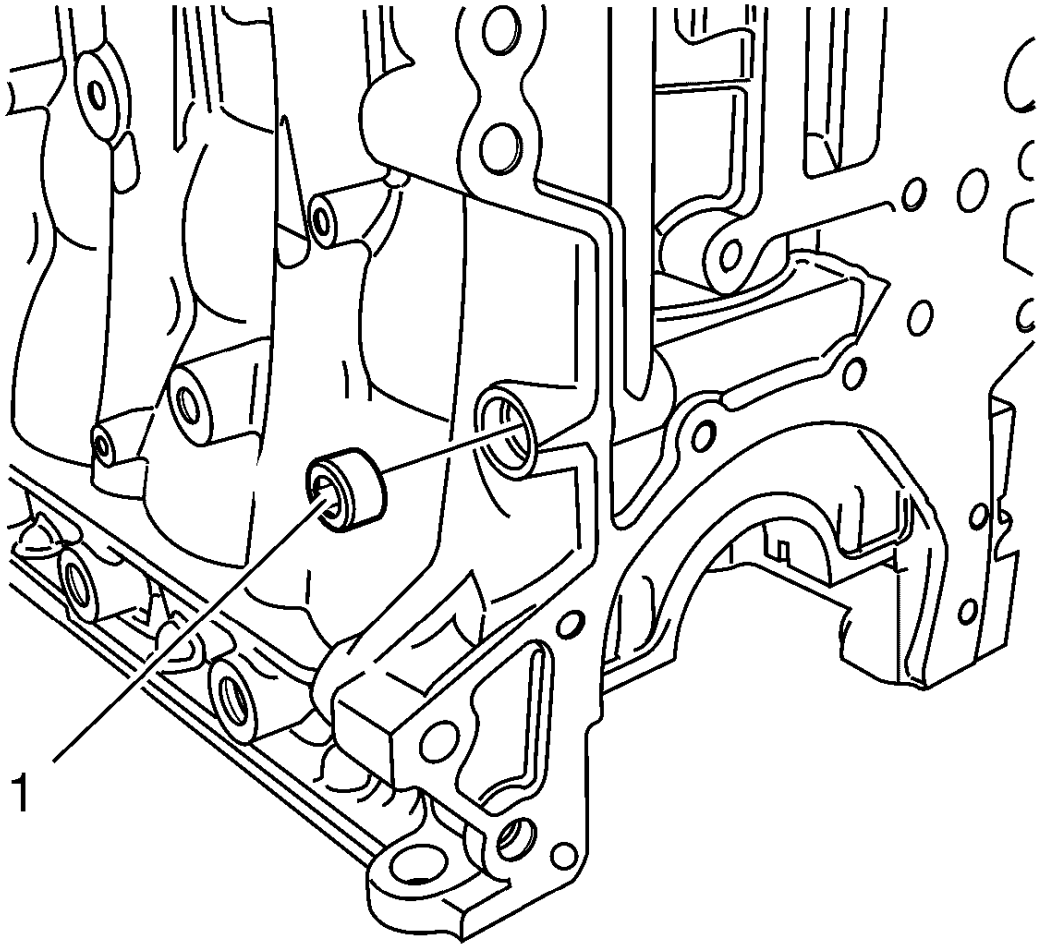

Fig. 434: Oil Flow Check Valve
Courtesy of GENERAL MOTORS COMPANY

5. Remove the oil flow check valve (1).

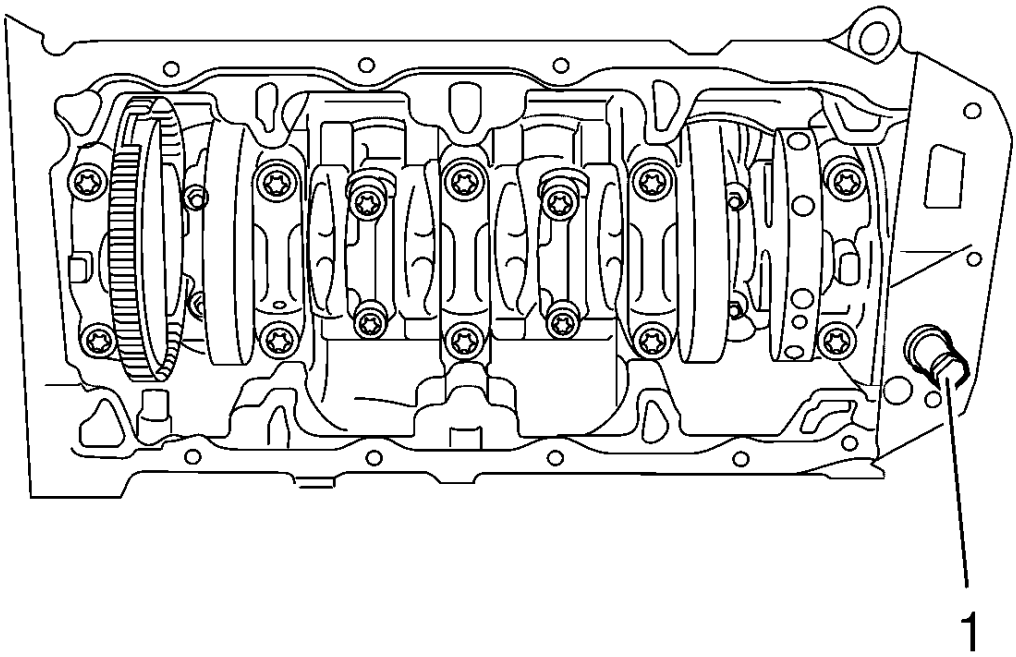

Fig. 435: Oil Pressure Relief Valve Closure Bolt
Courtesy of GENERAL MOTORS COMPANY

6. Remove the oil pressure relief valve closure bolt (1) and the oil pressure relief valve.

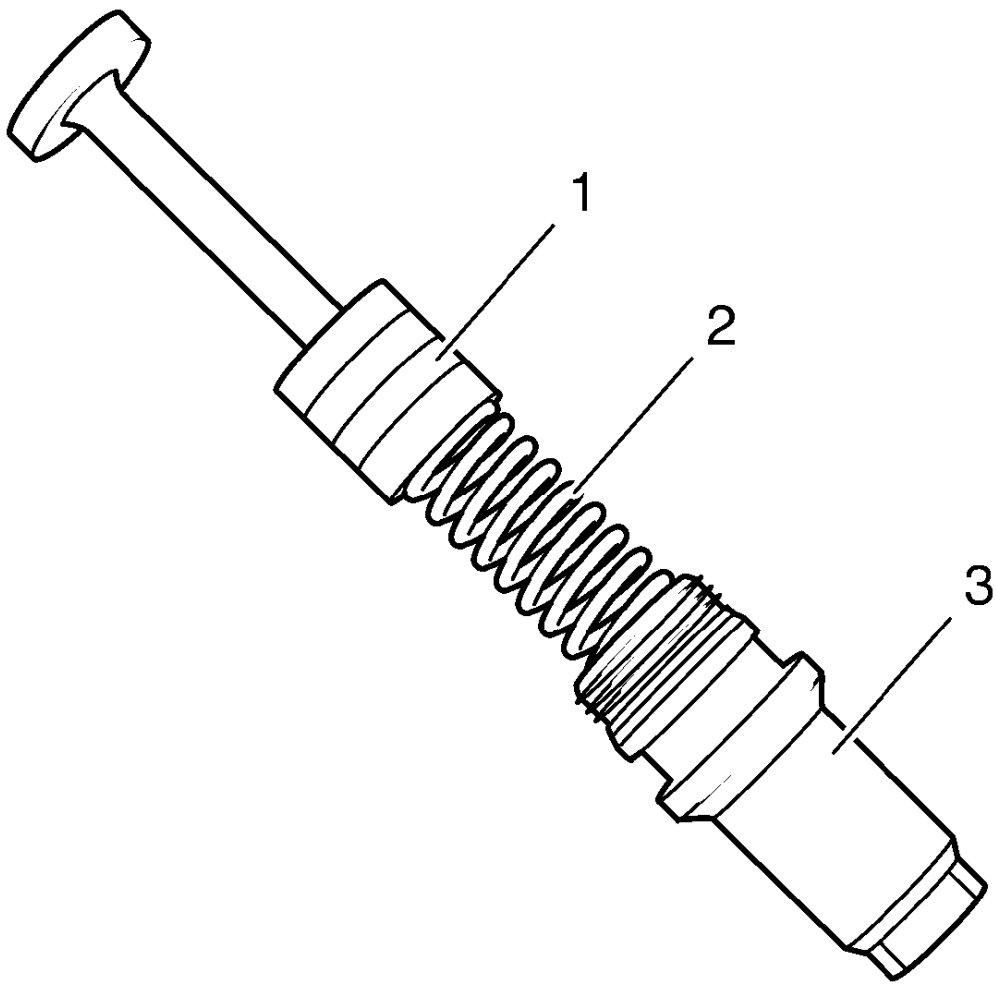

Fig. 436: Piston, Spring And Oil Pressure Relief Valve Closure Bolt
Courtesy of GENERAL MOTORS COMPANY

7. Remove the piston (1) and spring (2) from the oil pressure relief valve closure bolt (3).
8. Clean and inspect the components. Refer to **Engine Block Cleaning and Inspection**.
9. Clean the thread.

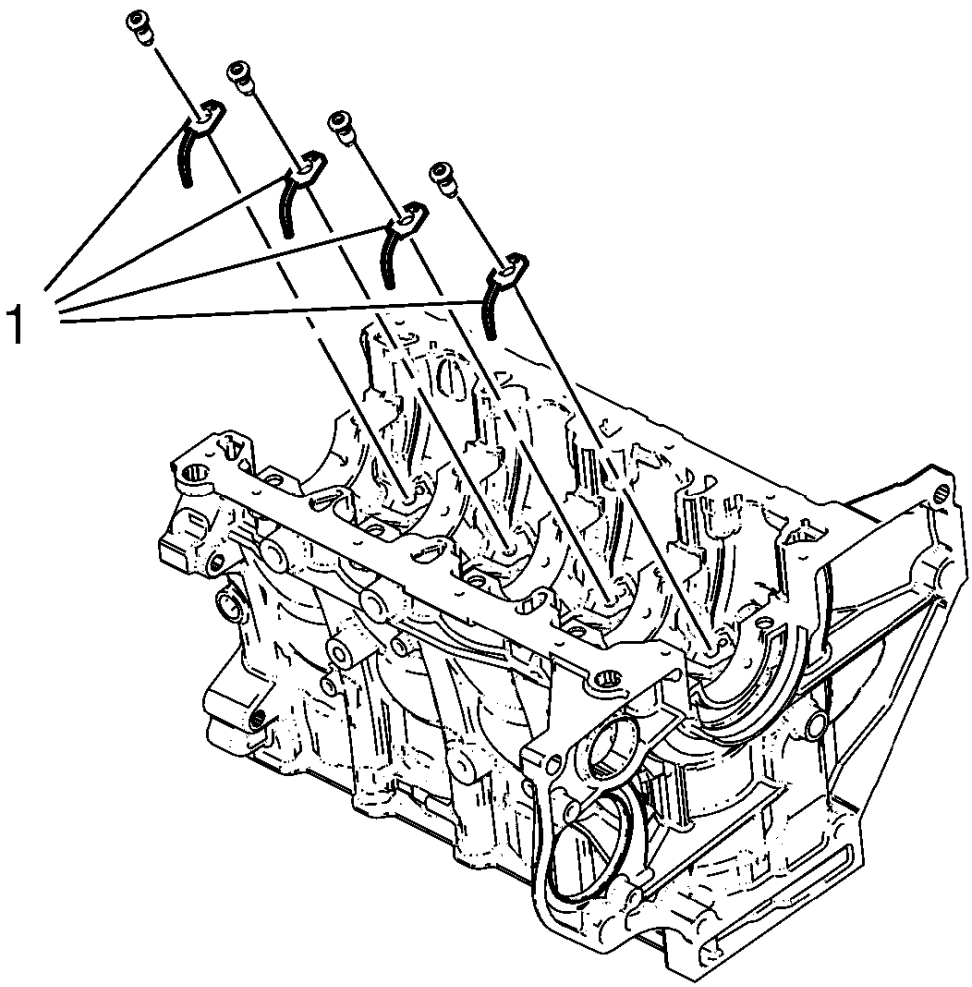

Fig. 437: Piston Oil Nozzles
Courtesy of GENERAL MOTORS COMPANY

10. Remove the 4 piston oil nozzles (1).

INTAKE MANIFOLD CLEANING AND INSPECTION

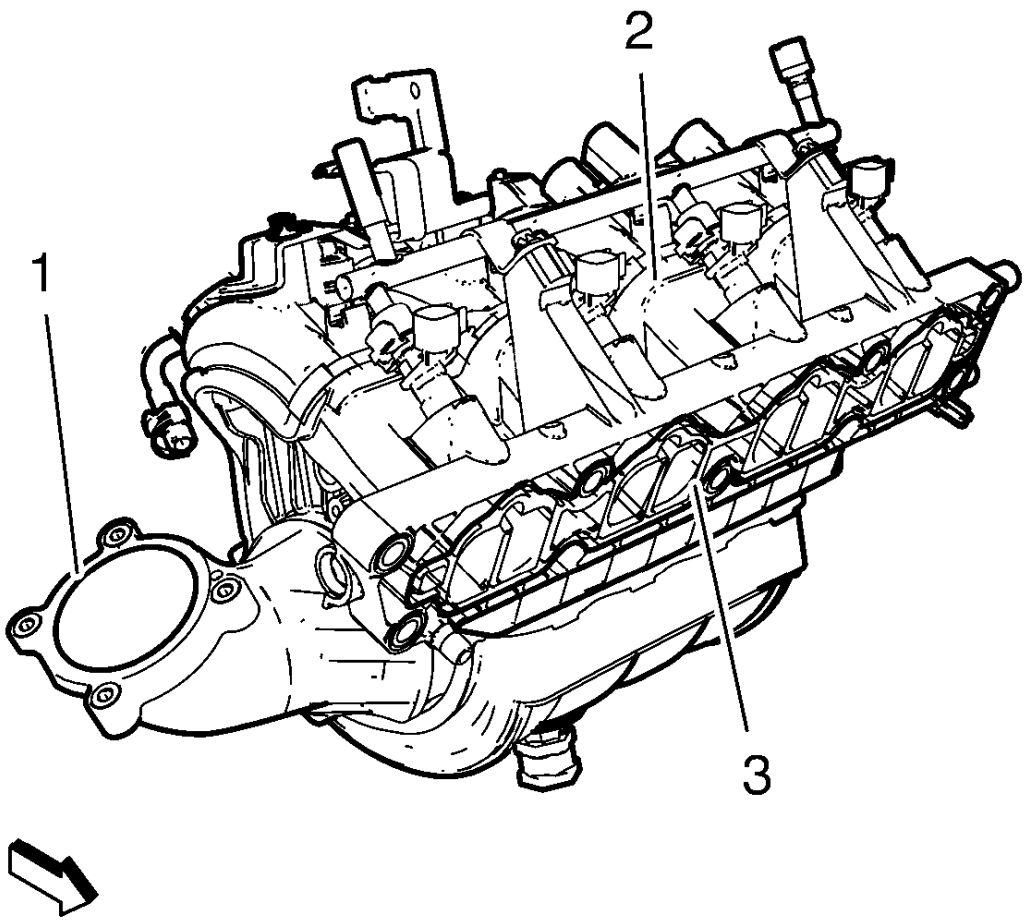

Fig. 438: Intake Manifold And Sealing Surfaces
Courtesy of GENERAL MOTORS COMPANY

1. Clean the intake manifold mating surfaces.
2. Inspect the intake manifold (2) for damage.
3. Inspect the intake manifold for cracks near metallic inserts.
4. Inspect the crankcase ventilation passages in the intake manifold face for blockage.

WARNING: Wear safety glasses in order to avoid eye damage.

5. Clean the crankcase ventilation passages with compressed air if necessary. Use a maximum of 172 kPa (25 psi) of air pressure.
6. Clean the throttle body sealing surface (1).
7. Clean the intake manifold to cylinder head sealing surface (3).

8. Replace the intake manifold as necessary.

EXHAUST MANIFOLD CLEANING AND INSPECTION

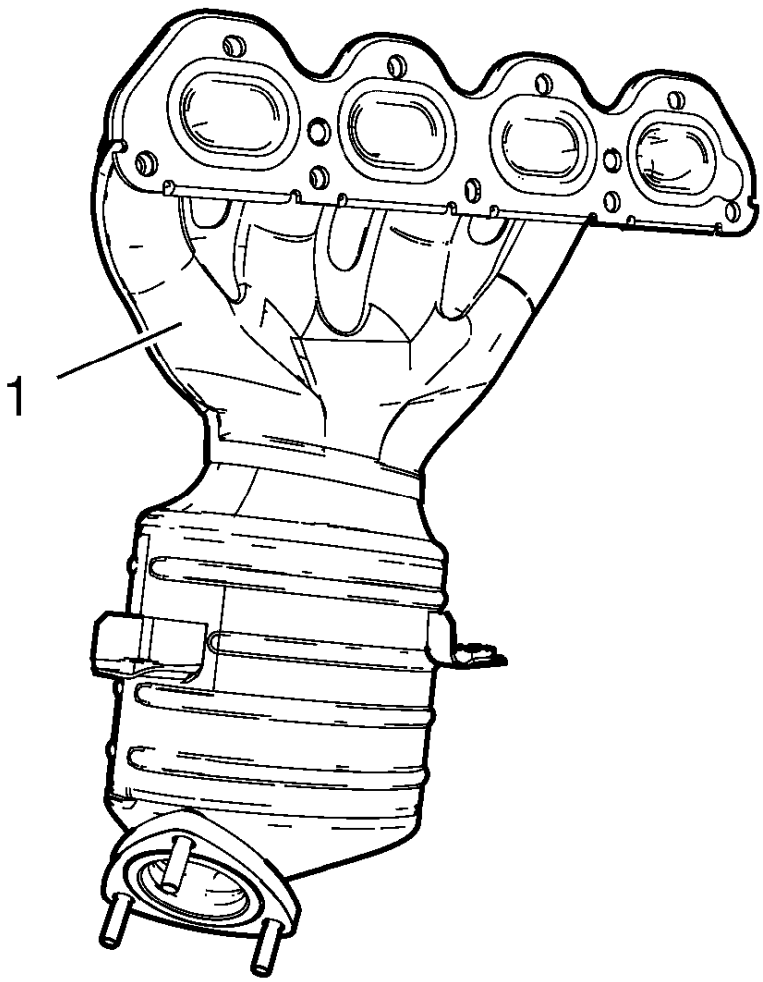

Fig. 439: Exhaust Manifold
Courtesy of GENERAL MOTORS COMPANY

1. Clean the exhaust manifold (1) in solvent.

WARNING: Wear safety glasses in order to avoid eye damage.

2. Dry the exhaust manifold (1) with compressed air.
3. An exhaust manifold leak or damage may cause an exhaust leak and may effect OBD II system performance. A damaged exhaust must be replaced.

OIL PAN CLEANING AND INSPECTION

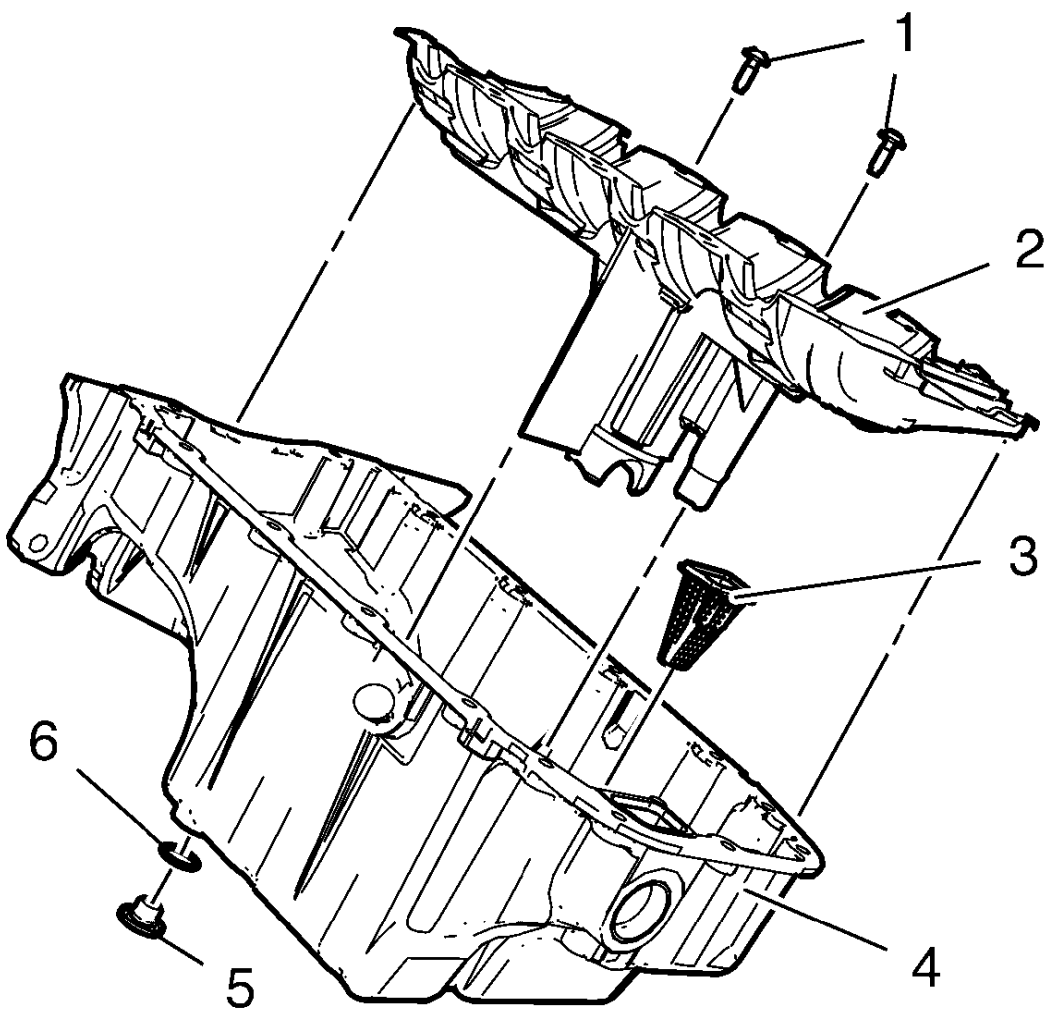

Fig. 440: Oil Pan Components
Courtesy of GENERAL MOTORS COMPANY

1. Remove the 2 oil pan baffle bolts (1) and the oil pan baffle (2).
2. Remove the oil pump screen (3).
3. Clean the oil pan (4). Remove all the sludge and the oil deposits.
4. Remove the oil pan drain plug (5) and the oil pan drain plug seal (6).
5. Inspect the thread of the oil pan drain plug.
6. Inspect the oil pan for cracking near the pan rail and the transmission mounting points.
7. Inspect the oil pan for cracking resulting from impact or flying road debris.
8. Inspect the oil pan baffle and oil pump screen.
9. Repair or replace the oil pan as necessary.

OIL PUMP CLEANING AND INSPECTION

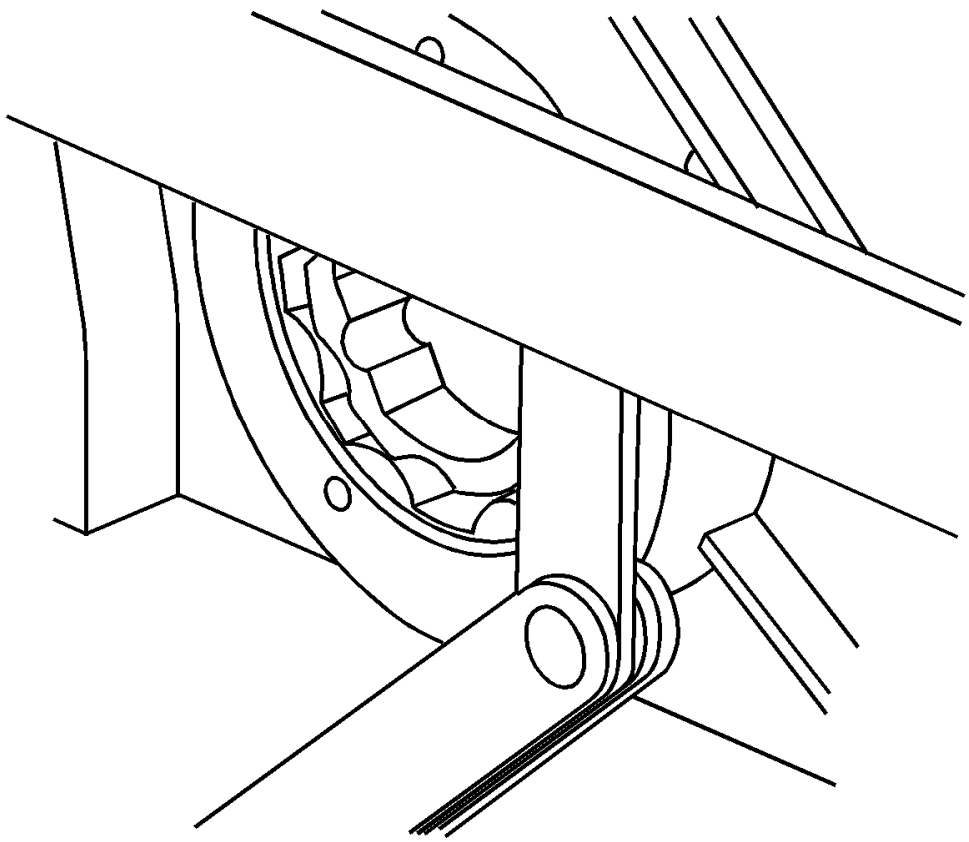

Fig. 441: Inspecting Axial Clearance
Courtesy of GENERAL MOTORS COMPANY

1. Remove the external rotor with the internal rotor.
2. Visually inspect the components.
3. Install the external and the internal rotors.
4. Inspect the axial clearance of the rotors in respect to the control unit housing upper edge.

Specifications

Permissible measurement is 0.02-0.058 mm (0.00079-0.00228 in).

CYLINDER HEAD CLEANING AND INSPECTION

Valve Cleaning and Inspection

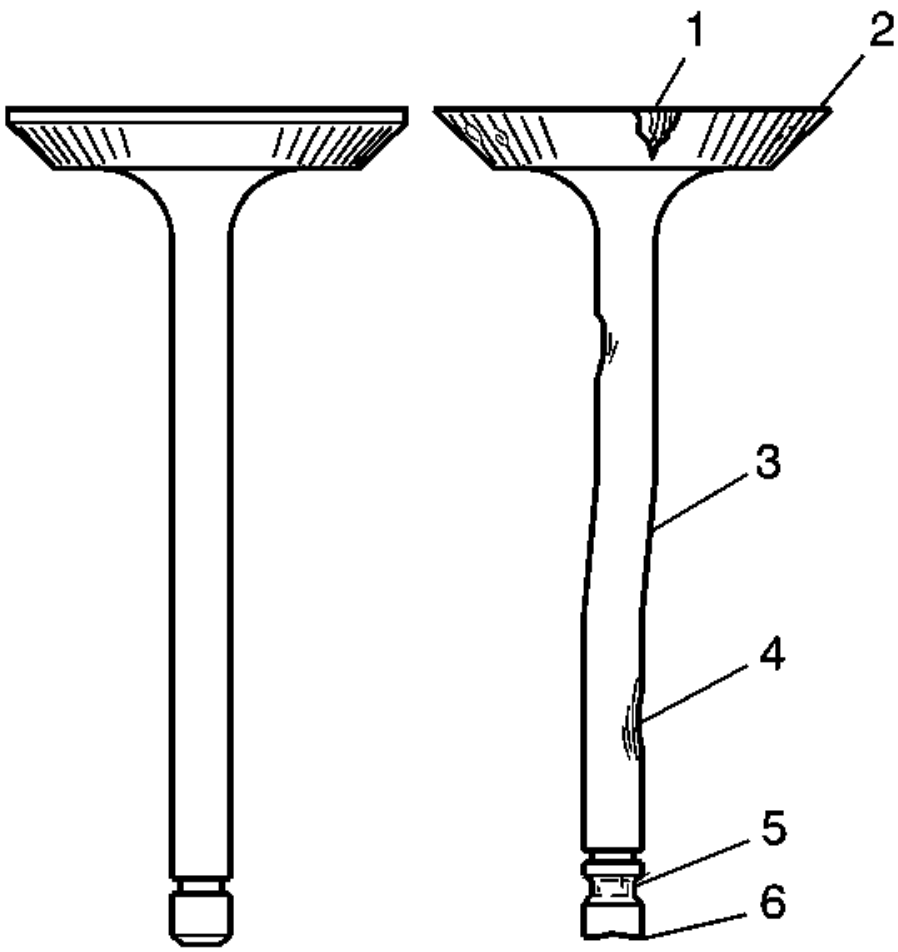

Fig. 442: Identifying Inspection Points For Valves Damage
Courtesy of GENERAL MOTORS COMPANY

WARNING: Bodily injury may occur if the cleaning solvent is inhaled or exposed to the skin.

NOTE: Do not scratch the valve stem with the wire brush.

1. Clean the valves of carbon, oil and varnish. Carbon can be removed with a wire brush. Varnish can be removed by soaking in Parts Immersion Solvent.
2. Clean the valve guides.
3. Inspect the valve stem for wear (4).
4. Inspect the valve key groove for chipping or wear (5). Replace the valve if chipped or worn.
5. Inspect the valve face for burning or cracking (1). If pieces are broken off, inspect the corresponding piston and cylinder head area for damage.

6. Inspect the valve stem for burrs and scratches. Burrs and minor scratches may be removed with an oil stone.
7. Inspect the valve stem for straightness and the valve head for bending or distortion (3) using V blocks. Bent or distorted valves must be replaced.
8. Clean the deposits from the valve face. Inspect the valve face for grooving.
9. Replace the valve if the face is grooved. Valve faces cannot be machined. If worn, or damaged, the valves must be replaced.
10. The valves may be lightly lapped to the valve seats.

Cylinder Head and Gasket Surface Cleaning and Inspection

1. Remove the spark plugs. Refer to **Spark Plug Replacement** .
2. Inspect the cylinder head gasket and mating surfaces for leaks, corrosion and blow-by. If the gasket has failed, use the following faults to determine the cause:
    1. Improper installation.
    2. Loose or warped cylinder head.
    3. Missing, off location or not fully seated dowel pins.
    4. Corrosion in the seal area around the coolant passages.
    5. Chips or debris in the cylinder head bolt holes.
    6. Bolt holes in the cylinder block not drilled or tapped deep enough.

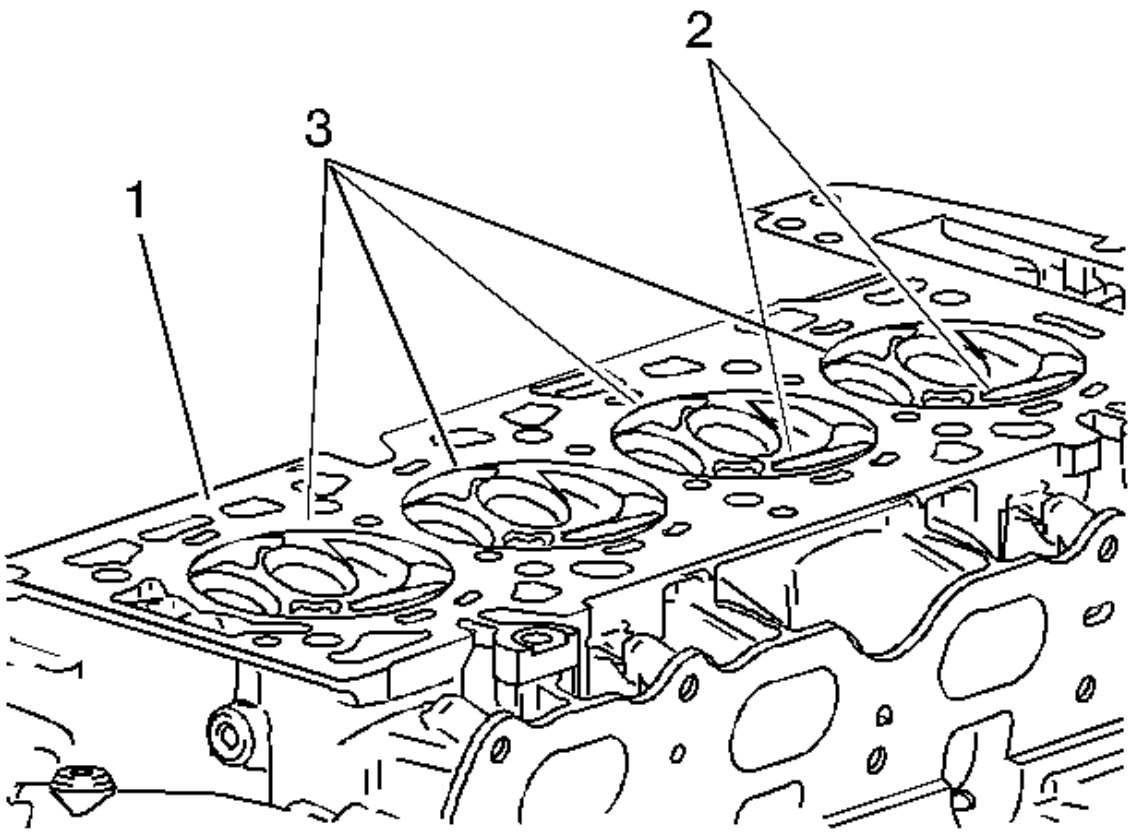

Fig. 443: Combustion Chambers
Courtesy of GENERAL MOTORS COMPANY

3. Inspect the cylinder head gasket surface.
   - Cylinder head may be reused if corrosion is found only outside a 4 mm (0.375 in) band around each combustion chamber (1).
   - Replace the cylinder head if the area between the valve seats is cracked (2).
   - Replace the cylinder head if corrosion has been found inside a 4 mm (0.375 in) band around each combustion chamber (3).
4. Clean the cylinder head bolts.

NOTE: Do not use a wire brush on any gasket sealing surface.

5. Clean the cylinder head. Remove all varnish, soot and carbon to the bare metal.

6. Clean the valve guides.
7. Clean the threaded holes. Use a nylon bristle brush.
8. Clean the remains of the sealer from the plug holes.
9. Inspect the cylinder head bolts for damaged threads or stretching and damaged heads caused by improper use of tools.
10. Replace all suspect bolts.
11. Inspect the cylinder head for cracks. Check between the valve seats and in the exhaust ports.

NOTE: Do not attempt to weld the cylinder head, replace it.

12. Inspect the cylinder head deck for corrosion, sand inclusions and blow holes.

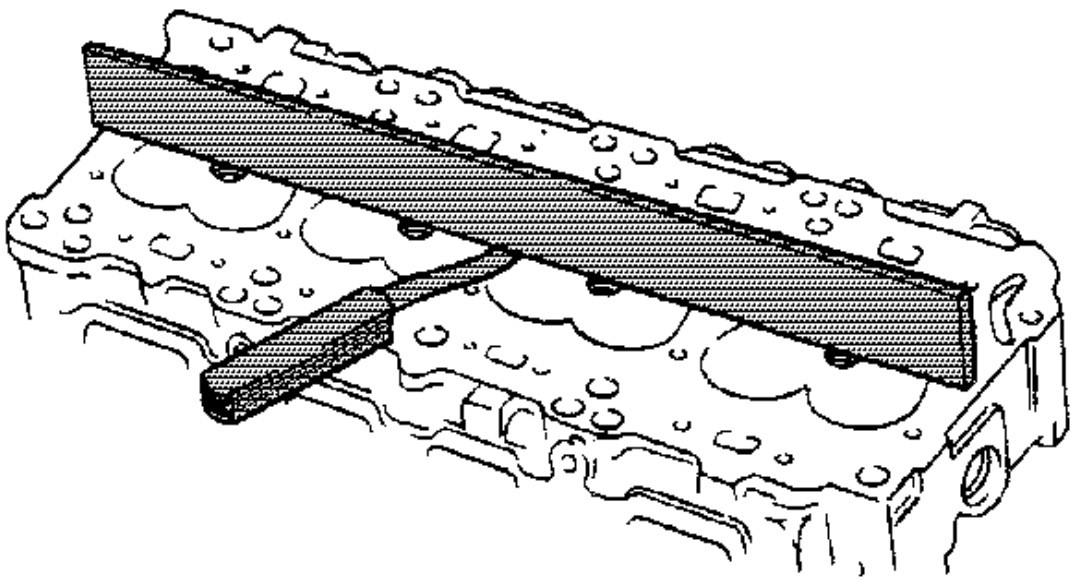

Fig. 444: Inspecting Cylinder Head Surfaces For Flatness
Courtesy of GENERAL MOTORS COMPANY

13. Inspect the cylinder head deck surface for flatness. Refer to **Engine Mechanical Specifications**. If the cylinder head is out of specification, replace the cylinder head. Do not machine the cylinder head.
14. Inspect all the threaded holes for damage. Threads may be reconditioned with thread inserts.
15. Inspect the sealing surfaces.
16. Inspect the cylinder head plugs.

PISTON, CONNECTING ROD, AND BEARING CLEANING AND INSPECTION

Special Tools

EN-45059 Torque Angle Sensor Kit

For equivalent regional tools, refer to **Special Tools**.

1. Remove the oil pan. Refer to **Oil Pan Removal**.

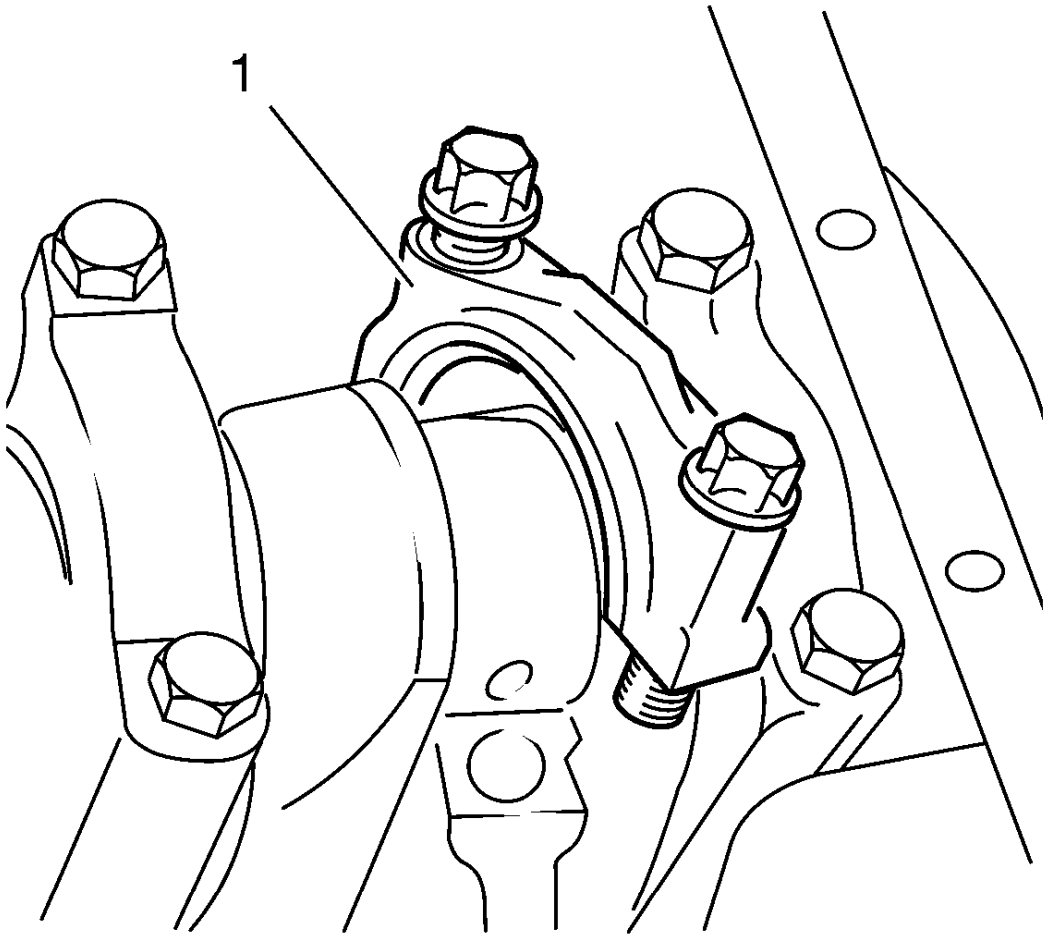

Fig. 445: Connecting Rod Bearing Cap
Courtesy of GENERAL MOTORS COMPANY

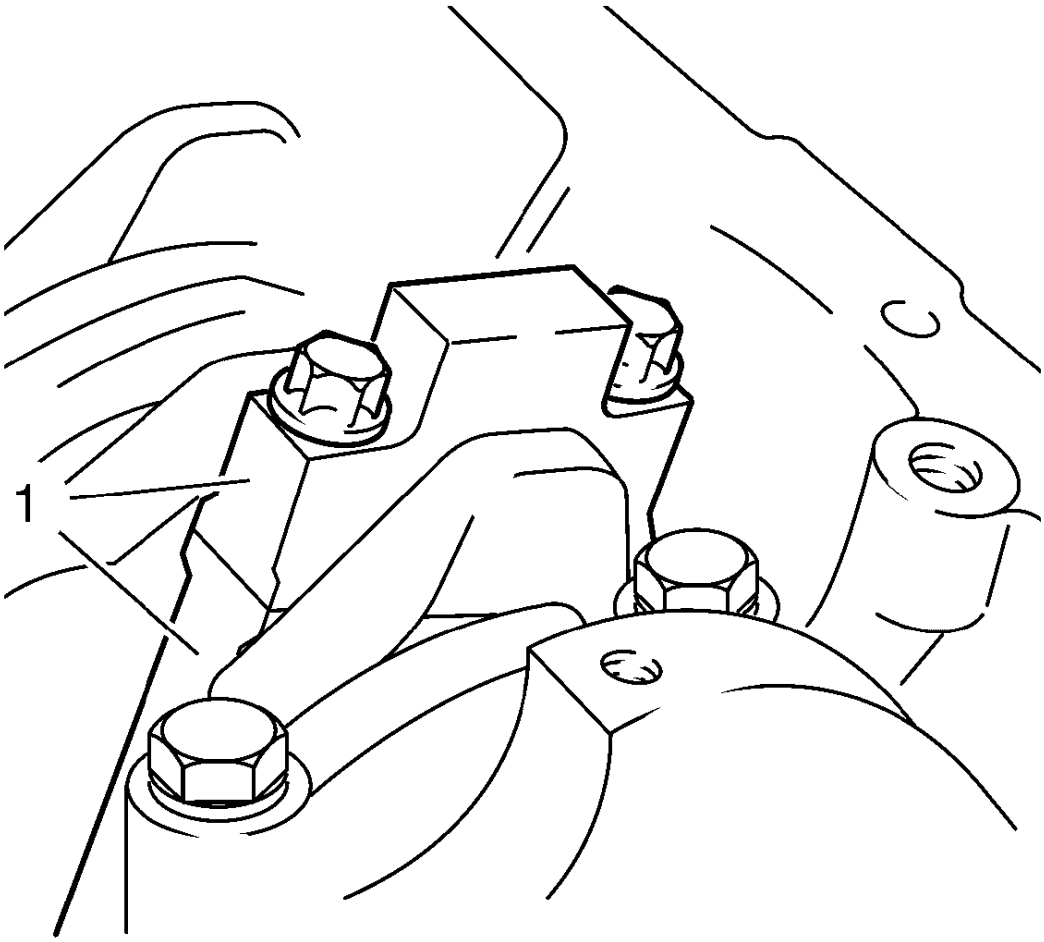

Fig. 446: Marking Position On Connecting Rod Bearing Cap
Courtesy of GENERAL MOTORS COMPANY

2. Remove the connecting rod bearing cap (1).
    1. Mark the installation position (1) of the connecting rod bearing cap.
    2. Remove the 2 bolts.
    3. Degrease the connecting rod bearing cap and wet the connecting rod bearing clip with engine oil.

NOTE: Do not rotate the crankshaft.

3. Lay on plastigage. Refer to **Adhesives, Fluids, Lubricants, and Sealers**.

    Lay plastigage (flexible plastic thread) over the entire width of the connecting rod bearing journal.

4. Install the connecting rod bearing cap.

CAUTION: Refer to Fastener Caution

5. Tighten the 2 bolts in three passes using the **EN-45059** sensor kit :
    1. First pass tighten to 35 N.m (26 lb ft).
    2. Second pass tighten to an additional 45°
    3. Third pass tighten to an additional 15°

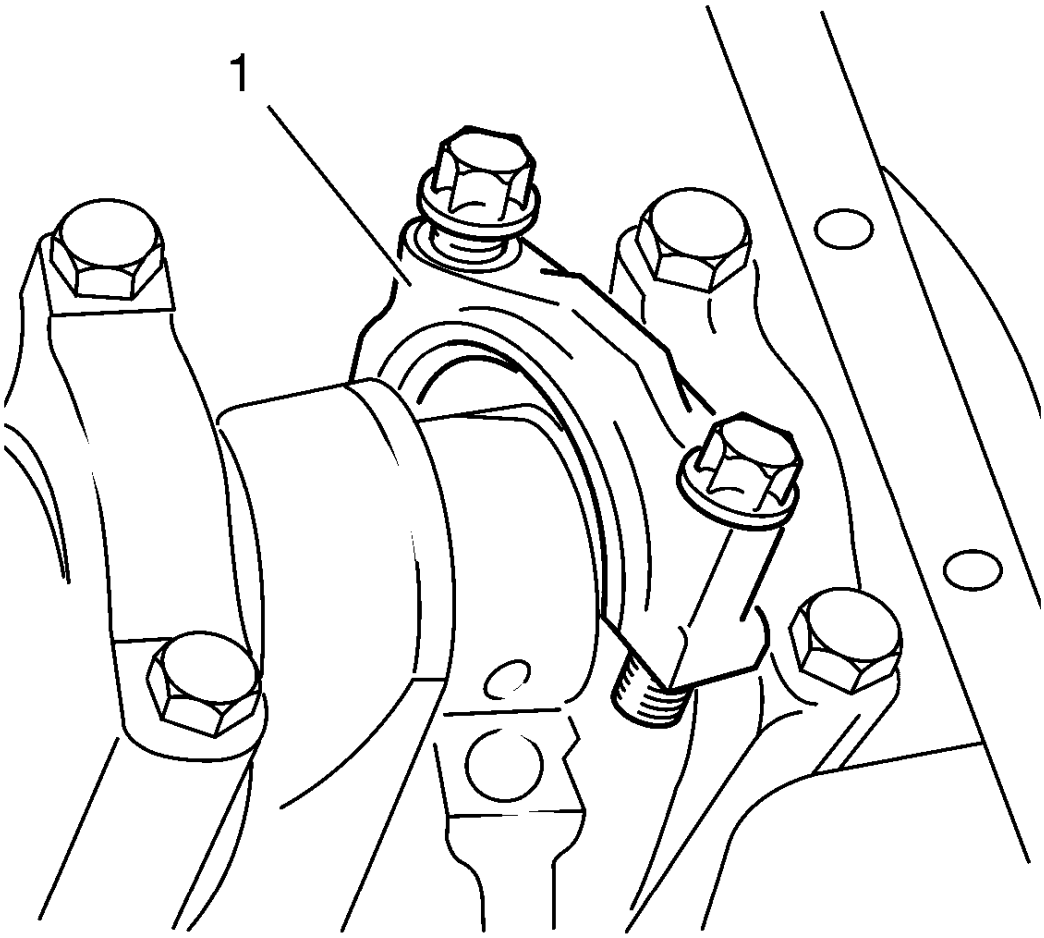

Fig. 447: Connecting Rod Bearing Cap
Courtesy of GENERAL MOTORS COMPANY

6. Remove the 2 bolts.
7. Remove the connecting rod bearing cap (1).

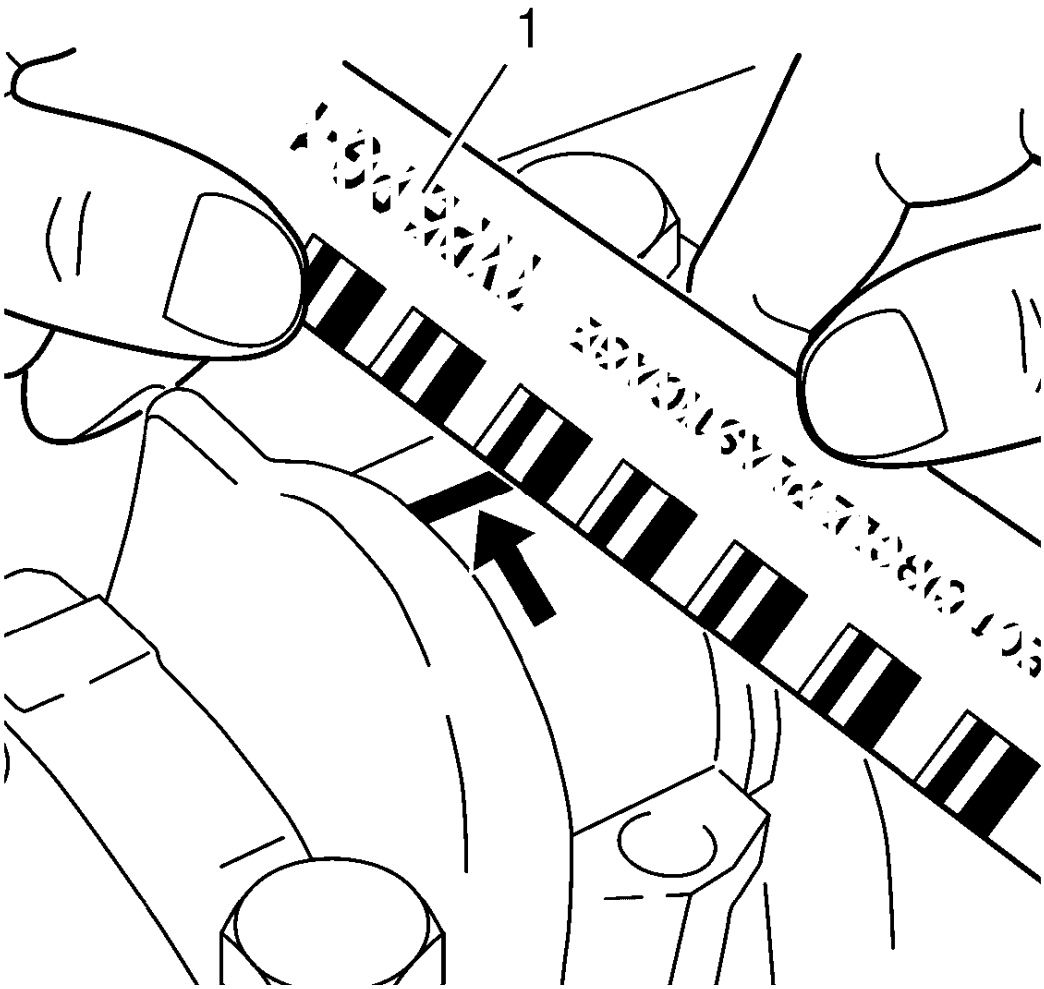

Fig. 448: Measuring Connecting Rod Bearing Play Using Measuring Scale
Courtesy of GENERAL MOTORS COMPANY

NOTE: When reading the value, do not confuse millimeters and inches on the measuring scale (1).

8. Measure the connecting rod bearing play.
   - Compare the width of the flattened plastic thread with the measuring scale.
   - Permissible connecting rod bearing play: 0.019-0.071 mm (0.0007-0.0028 in).

NOTE: Check markings on parts.

9. Install the connecting rod bearing cap.
   - Wet the connecting rod bearing journal and con-rod bearing clips with engine oil.
   - Renew the bolts.

10. Tighten the 2 bolts in three passes using the **EN-45059** sensor kit :
    1. First pass tighten to 35 N.m (26 lb ft)
    2. Second pass tighten to an additional 45°
    3. Third pass tighten to an additional 15°
11. Install the oil pan. Refer to **Oil Pan Installation**.

CRANKSHAFT AND BEARING CLEANING AND INSPECTION

Special Tools

- **EN-45059** Torque Angle Sensor Kit
- **GE-571-B** Dial Gauge

For equivalent regional tools, refer to **Special Tools**.

Crankshaft End Play, Check

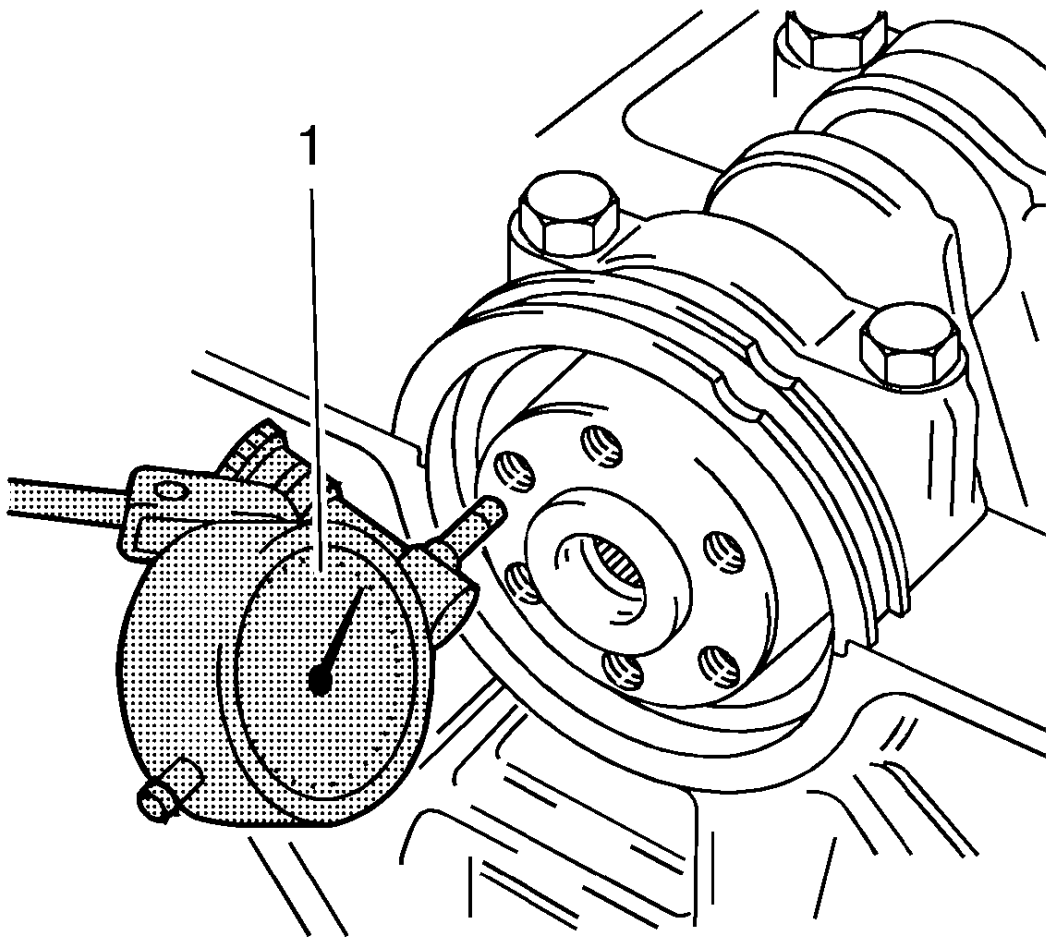

Fig. 449: Gauge Tool
Courtesy of GENERAL MOTORS COMPANY

NOTE: Crankshaft attached with crankshaft bearing caps.

1. Install the **GE-571-B** gauge (1).
    1. Install in the holder on the front of the engine block.
    2. Place the dial gauge plunger against the crankshaft and adjust.
2. Measure the longitudinal play of the crankshaft.
    1. Move the crankshaft in the longitudinal direction.
    2. Permissible crankshaft end play: 0.100-0.202 mm (0.0039-0.0080 in)
3. Remove the **GE-571-B** gauge.

Crankshaft Out-of-Round, Check

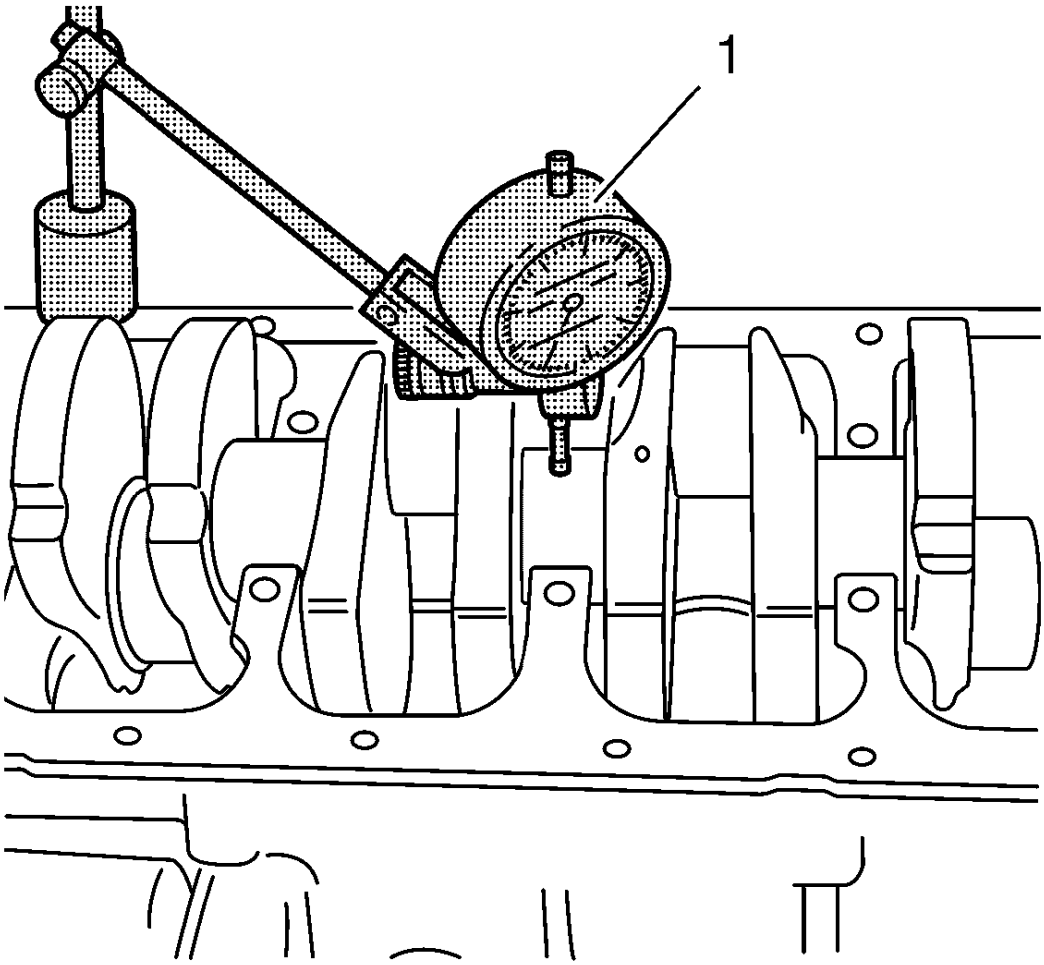

Fig. 450: Gauge Tool
Courtesy of GENERAL MOTORS COMPANY

NOTE: Crankshaft removed.

1. Insert the crankshaft in the engine block.
2. Install the **GE-571-B** gauge.
    1. Attach to the bracket on the engine block.
    2. Place the dial gauge plunger against the crankshaft bearing journal and adjust.
3. Check the rotational play of the crankshaft.
    1. Turn the crankshaft evenly.
    2. Maximum permissible rotational play: 0.03 mm (0.001 in).
4. Remove the **GE-571-B** gauge (1).

Check Crankshaft Bearing Clearance (With Plastigage)

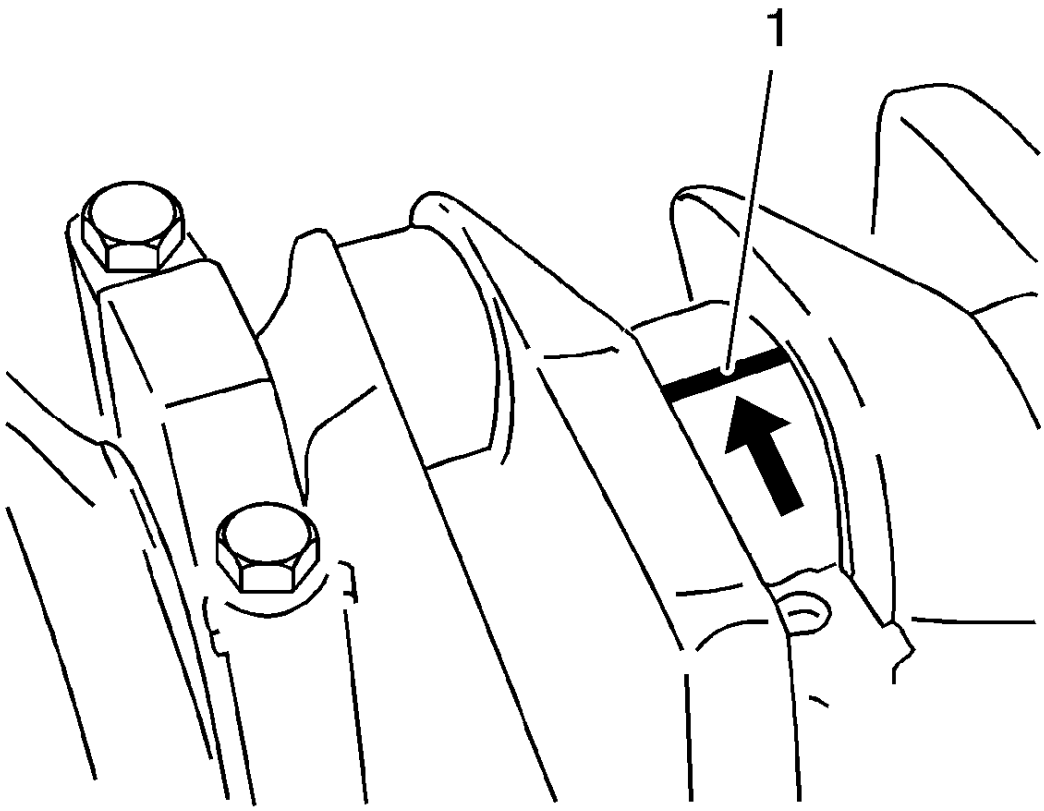

Fig. 451: Plastigage On Bearing Journal
Courtesy of GENERAL MOTORS COMPANY

NOTE:
- **Crankshaft removed.**
- **Do not rotate the crankshaft.**

1. Lay on plastigage.

   Lay out plastigage (flexible plastic thread) around the entire width of the con-rod bearing journal (1).

CAUTION: Refer to Fastener Caution .

NOTE:
- **Note the correct tightening sequence.**
- **The bolts can be reused for checking the crankshaft bearing play.**

2. Install the crankshaft bearing cap. Tighten the 2 crankshaft bearing cap bolts in 3 passes. Use the **EN-45059** sensor kit :
    1. First pass to 50 N.m (37 lb ft)
    2. Second pass to 45°
    3. Third pass to 15°
3. Remove the 2 crankshaft bearing cap bolts.

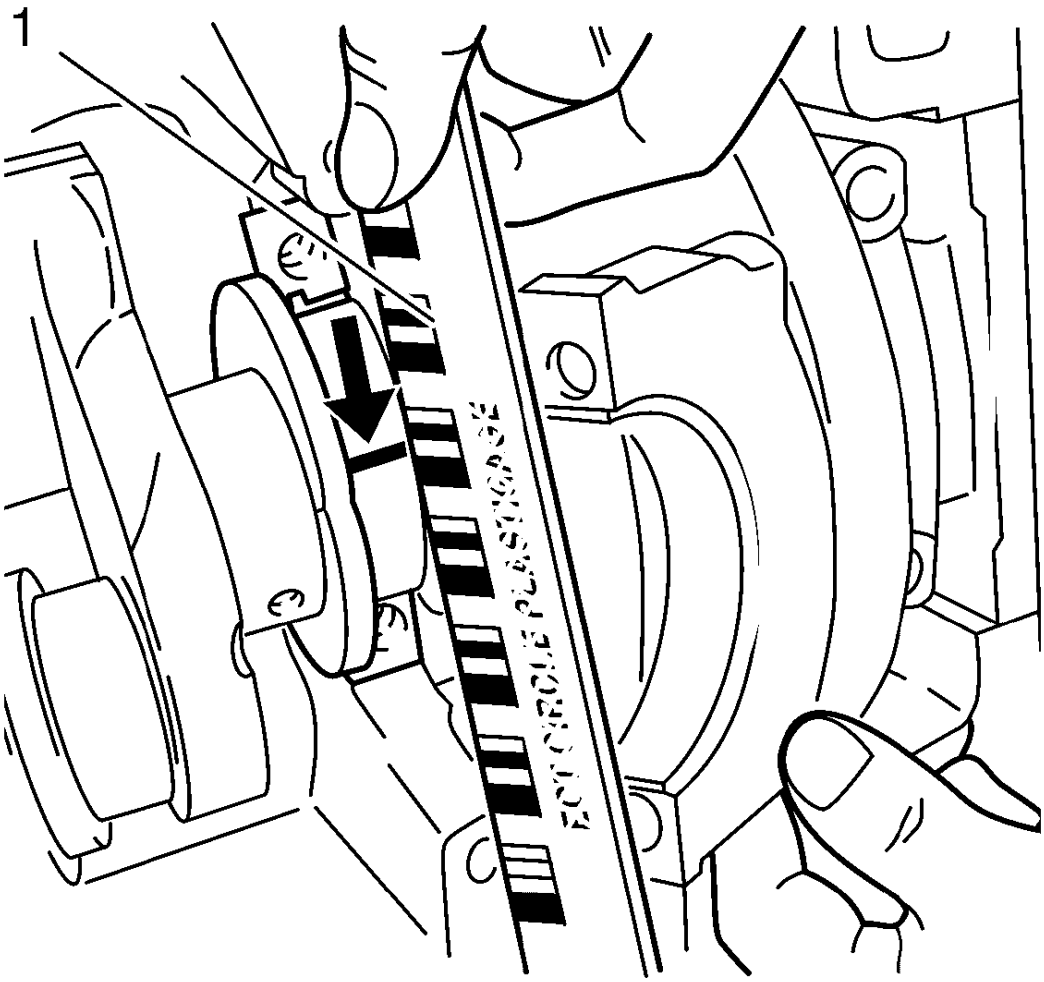

Fig. 452: Measuring Crankshaft Bearing Play Using Measuring Scale
Courtesy of GENERAL MOTORS COMPANY

NOTE: When reading the value, do not confuse millimeters and inches on the measuring scale (1).

4. Measure the crankshaft bearing play.
    1. Compare the width of the flattened plastic thread (arrow) to the measuring scale.

2. Permissible crankshaft bearing play: 0.005-0.059 mm (0.0002-0.0023 in).

Check Crankshaft Bearing Clearance (With Micrometer Gauge Internal Measuring Device)

NOTE:

- **Note the correct tightening sequence.**
- **The bolts can be reused for checking the crankshaft bearing play.**

1. Install the crankshaft bearing cap with the crankshaft bearing clips to the cylinder block.

   Tighten the 2 crankshaft bearing cap bolts in 3 passes. Use the **EN-45059** sensor kit :

   1. First pass to 50 N.m (37 lb ft)
   2. Second pass to 45°
   3. Third pass to 15°

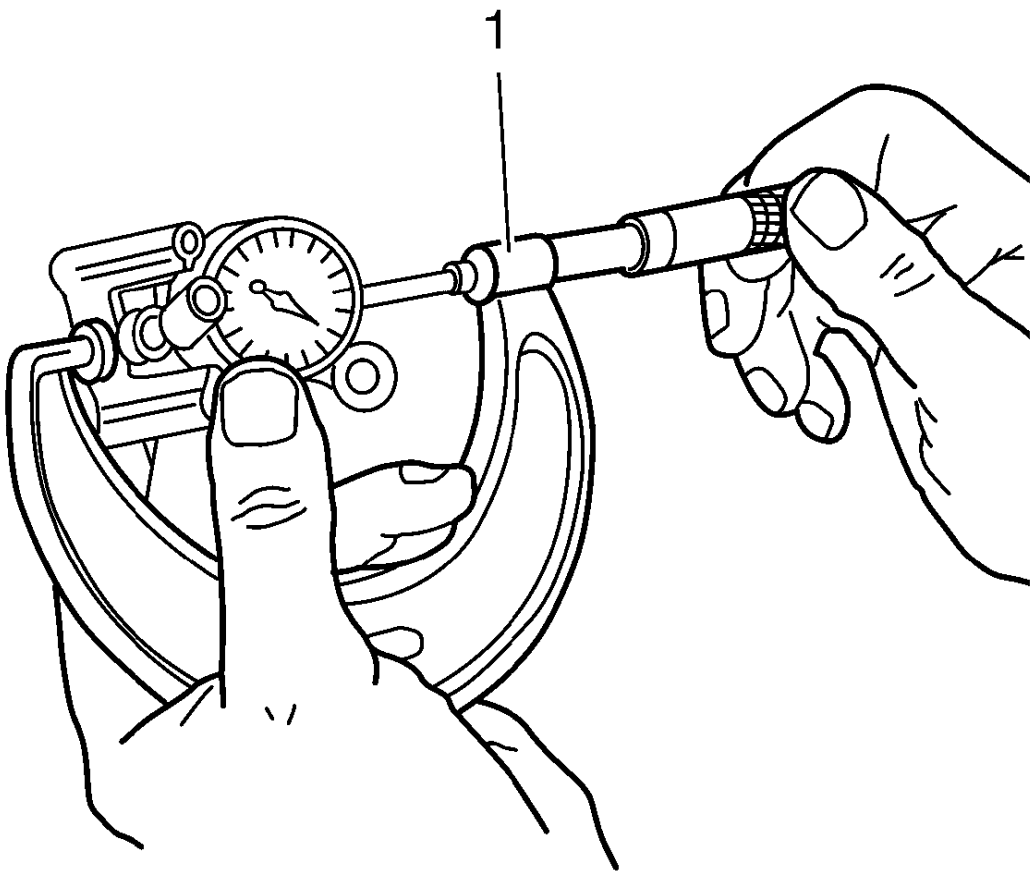

Fig. 453: Micrometer Gauge

Courtesy of GENERAL MOTORS COMPANY

2. Install the inner plunger and calibrate with the micrometer gauge (1).

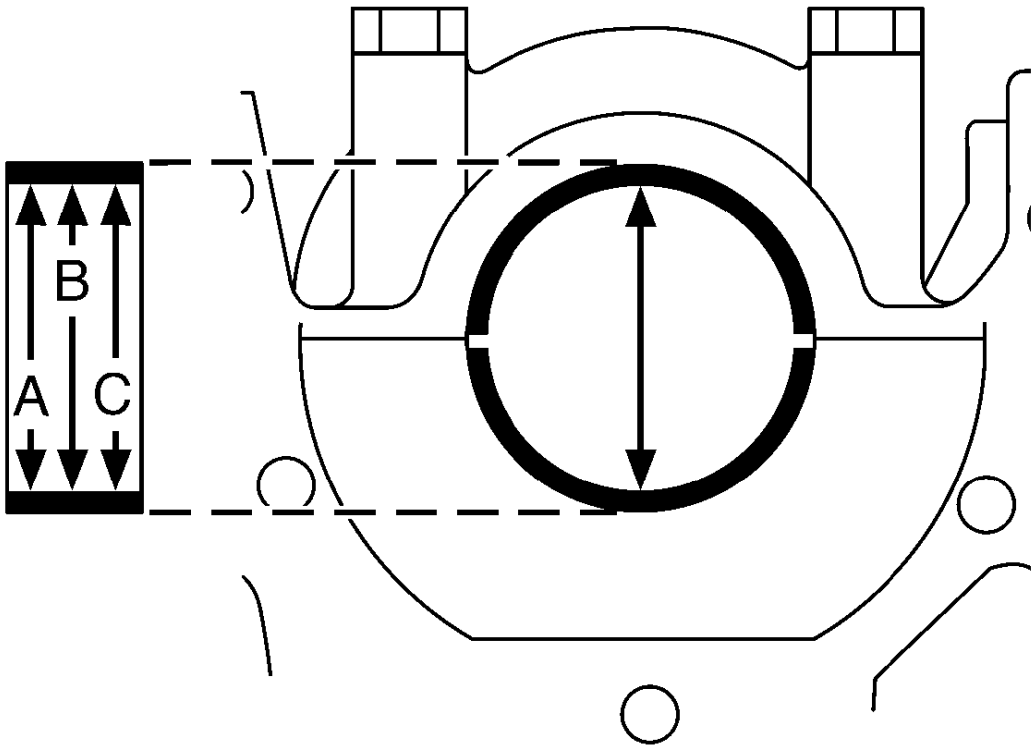

Fig. 454: Measuring Crankshaft Bearing Diameter At Points
Courtesy of GENERAL MOTORS COMPANY

3. Measure the crankshaft bearing diameter at 3 points.
    - Measure at points A, B and C with the internal measuring device.
    - Calculate the average crankshaft bearing diameter.
    - Formula: A + B + C /3.

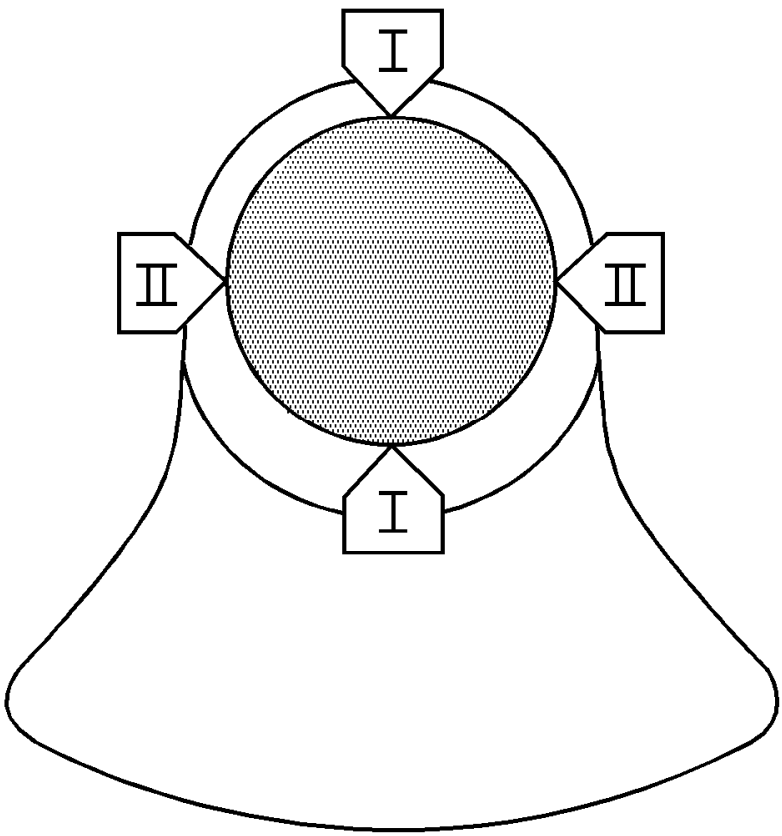

Fig. 455: Measuring Crankshaft Bearing Journal Diameter At 2 Points
Courtesy of GENERAL MOTORS COMPANY

4. Measure the crankshaft bearing journal diameter at 2 points.

   Measure at points I and II with the micrometer gauge.

5. Calculate the average crankshaft bearing journal diameter.

   Formula: I + II/2.

6. Determine the crankshaft bearing play.

   Calculation formula: average crankshaft bearing diameter minus average crankshaft bearing journal diameter.

7. Nominal-Actual comparison.

   Permissible crankshaft bearing play: 0.005-0.059 mm (0.0002-0.0023 in).

ENGINE BLOCK CLEANING AND INSPECTION

Special Tools

EN-8087 Cylinder Gauge

For equivalent regional tools, refer to **Special Tools**.

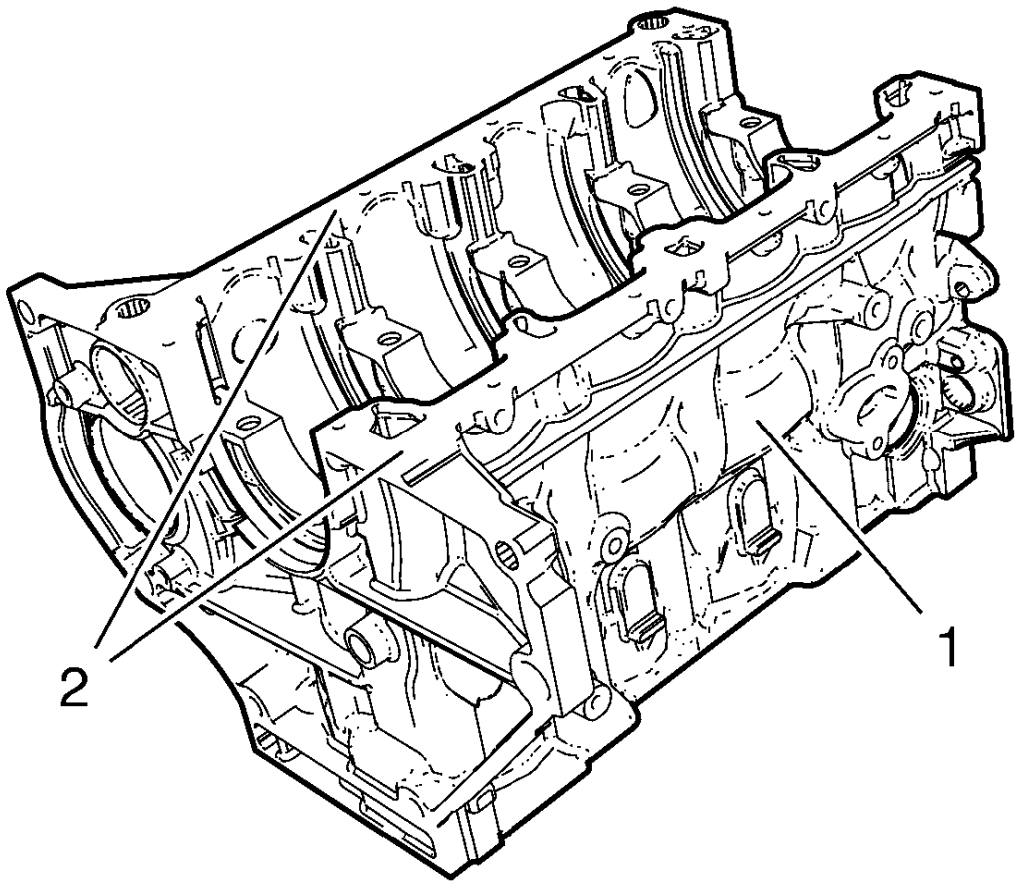

Fig. 456: Engine Block
Courtesy of GENERAL MOTORS COMPANY

1. Clean the sealing material from the gasket mating surfaces (2).
2. Clean the engine block (1) and lower crankcase in a cleaning tank with solvent appropriate for aluminum. Refer to **Adhesives, Fluids, Lubricants, and Sealers** for the recommended solvent.
3. Flush the engine block with clean water or steam.
4. Clean the oil passages.

5. Clean the blind holes.
6. Spray the cylinder bores and the machined surfaces with engine oil.
7. Inspect the threaded holes. Clean the threaded holes with a rifle brush. If necessary, drill out the holes and install thread inserts. Refer to **Thread Inserts** .

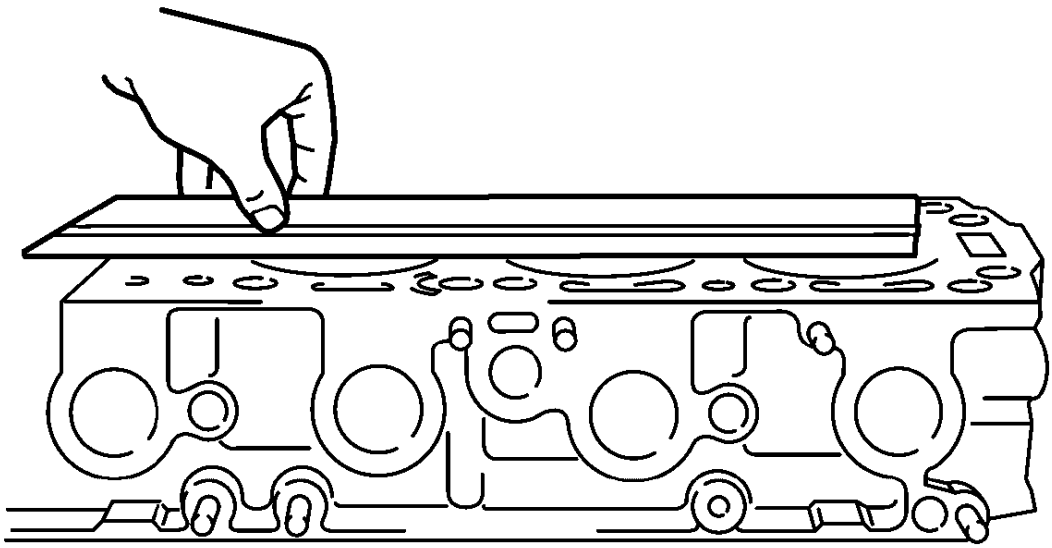

Fig. 457: Inspecting Engine Block For Sag In Length And Width On Sealing Surfaces
Courtesy of GENERAL MOTORS COMPANY

NOTE: Do not attempt to machine the lower crankcase to engine block surfaces.

8. Inspect the engine block for sag in length and width on the sealing surfaces.

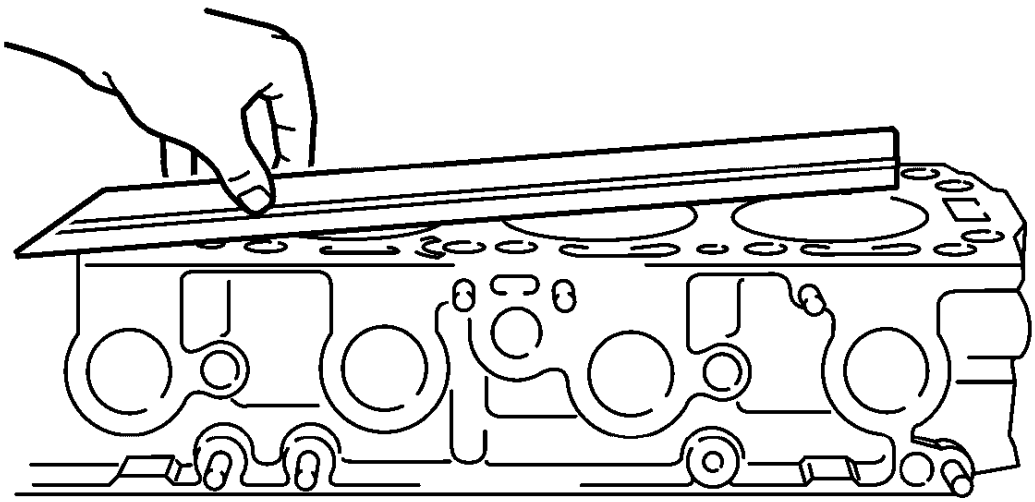

Fig. 458: Inspecting Engine Block For Distortion Along Diagonals
Courtesy of GENERAL MOTORS COMPANY

9. Inspect the engine block for distortion along the diagonals.

   If the deck surface is out of specification, replace the block. Do not machine the block.

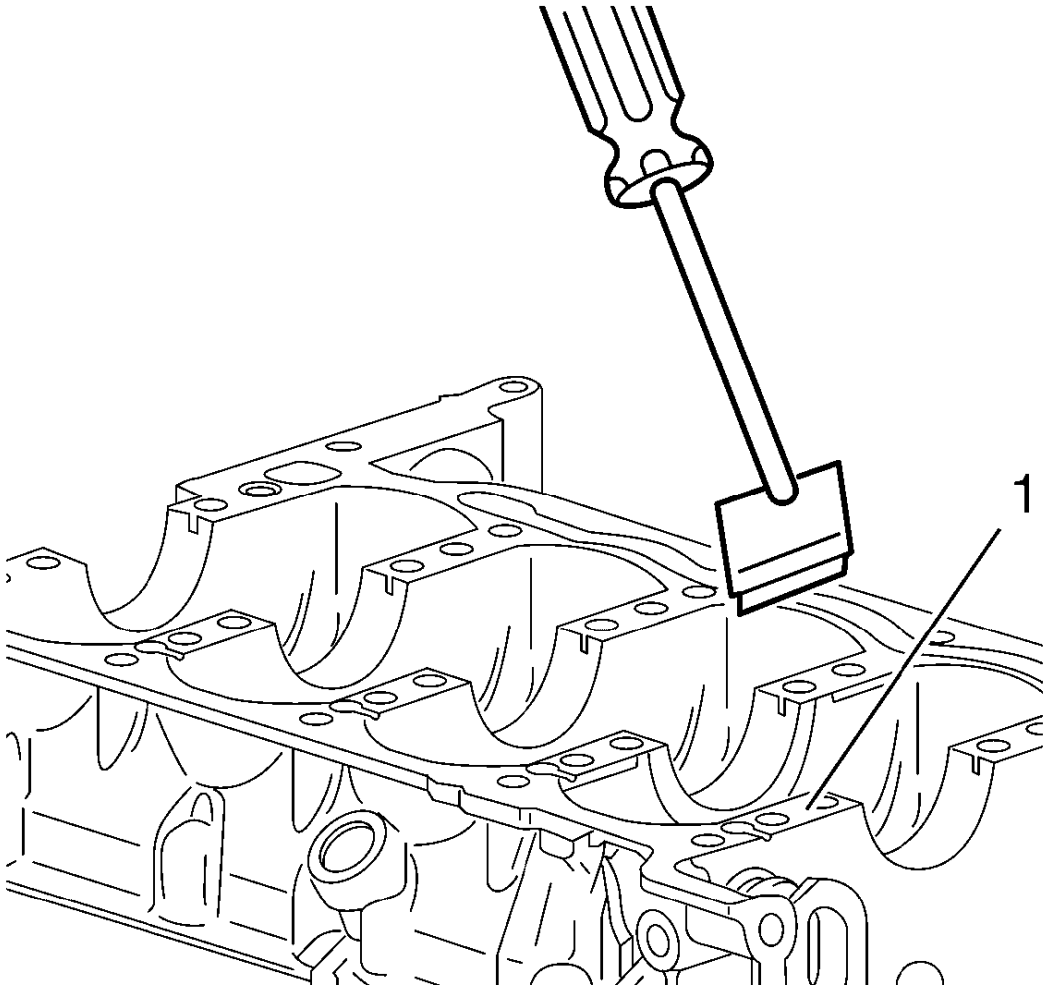

Fig. 459: Gasket Mating Surfaces
Courtesy of GENERAL MOTORS COMPANY

10. Clean the sealing material from the gasket mating surfaces (1) on the lower crankcase oil pan side.

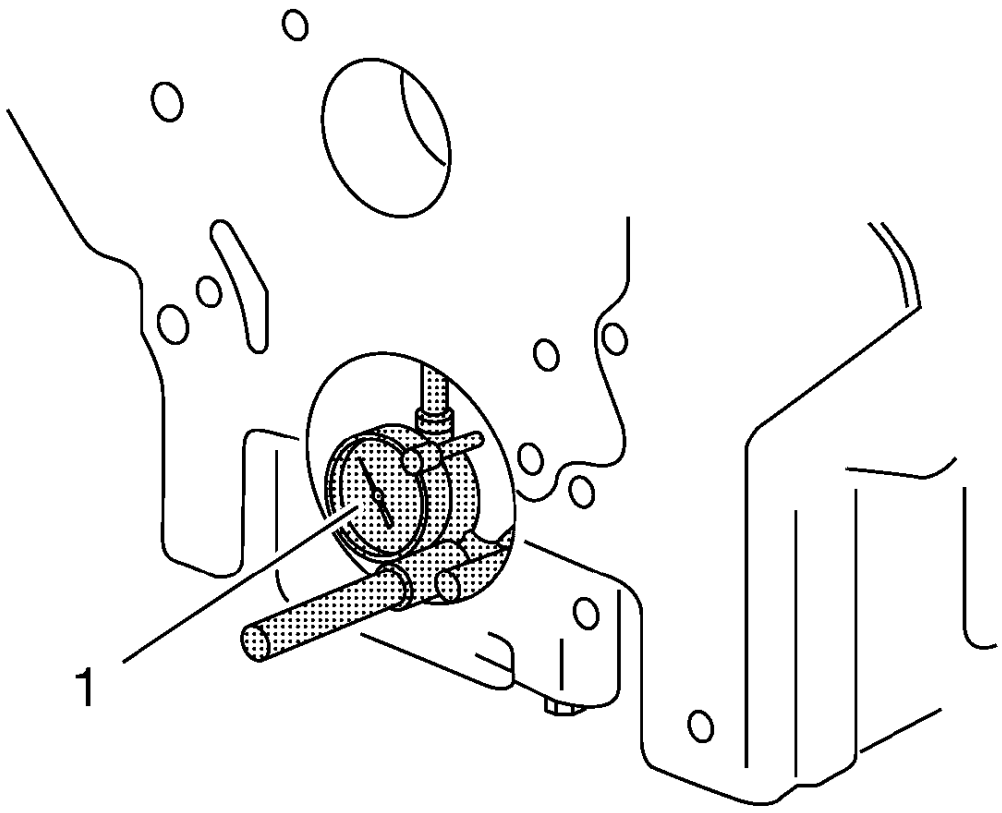

Fig. 460: Measuring Bearing Bore Concentricity And Alignment Using Gauge Tool
Courtesy of GENERAL MOTORS COMPANY

11. Inspect the crankshaft main bearing bores. Use the **EN-8087** gauge (1) to measure the bearing bore concentricity and alignment.
12. Replace the engine block and bed plate if the crankshaft bearing bores are out of specification.

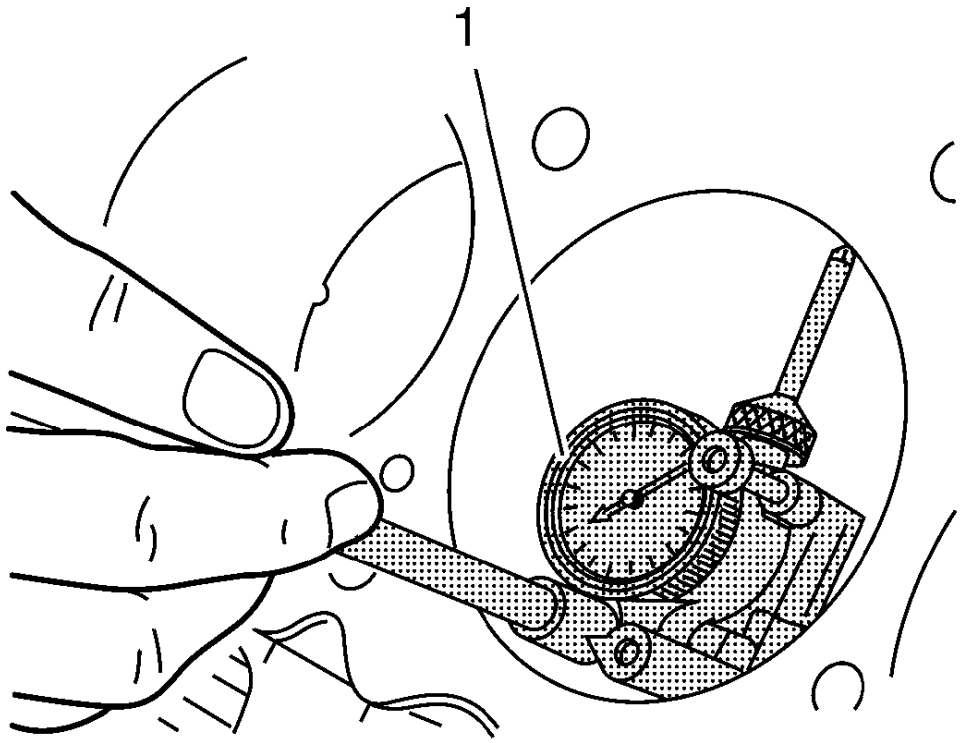

Fig. 461: Inspecting Cylinder Bore
Courtesy of GENERAL MOTORS COMPANY

13. Inspect the cylinder bores using the **EN-8087** gauge (1). Inspect for the following items:
    - Wear
    - Taper
    - Runout
    - Ridging
14. Check the cylinder bores specifications. Refer to **Engine Mechanical Specifications**.
15. If the cylinder bores are out of specification, replace the engine block.

SERVICE PRIOR TO ASSEMBLY

The importance of cleanliness during assembly cannot be overstated. Dirt or debris will cause engine damage. An automobile engine is a combination of many machined, honed, polished and lapped surfaces with minor tolerances. When any internal engine parts are serviced, care and cleanliness are important. A liberal coating of

engine oil should be applied to friction areas during assembly in order to protect and lubricate the surfaces on initial operation. Throughout this section, it should be understood that proper cleaning and protection of machined surfaces and friction areas are part of the repair procedure. This is considered standard shop practice even if not specifically stated.

Use the proper tools to measure the components when checking for excessive wear. Components not within the manufacturer's specification must be repaired or replaced.

Lubricate all moving parts with engine oil or a specified assembly lubricant. This will provide lubrication for initial start up.

When the components are reinstalled into an engine, return the components to their original location, position, and direction.

ENGINE BLOCK ASSEMBLE

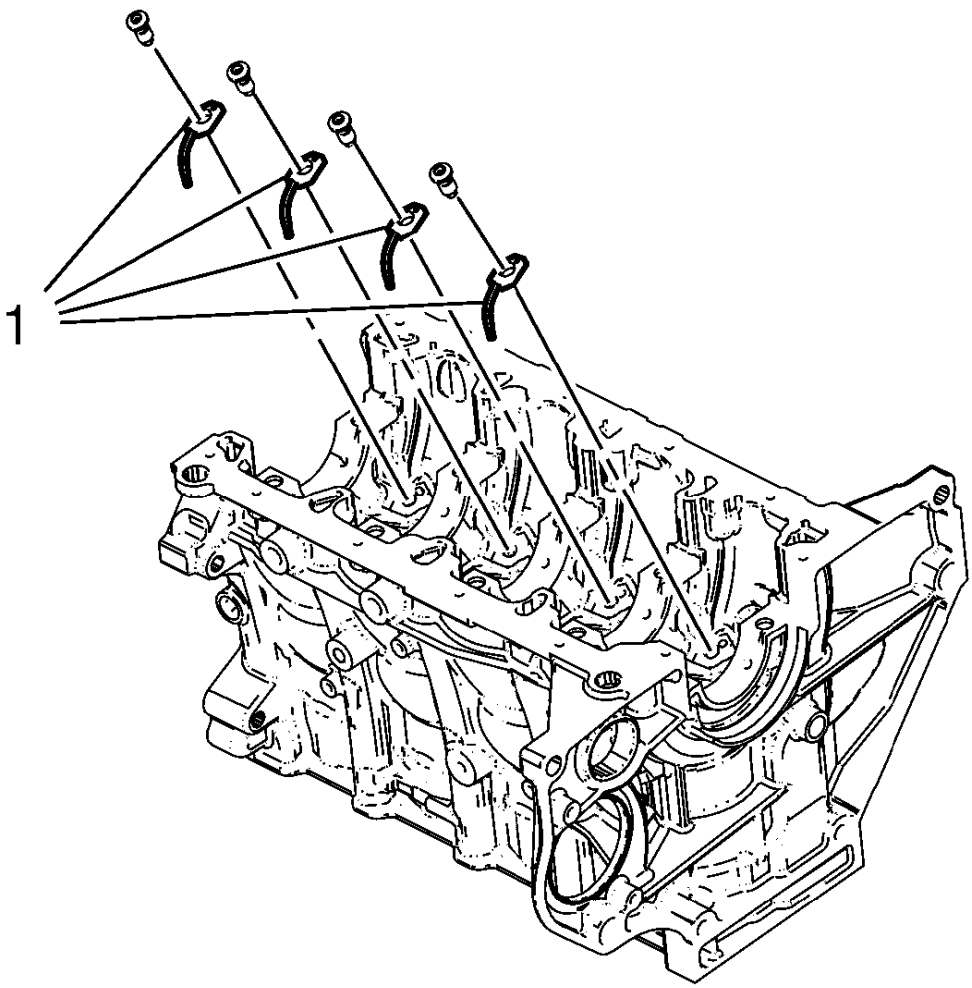

Fig. 462: Piston Oil Nozzles

Courtesy of GENERAL MOTORS COMPANY

1. Install the 4 piston oil nozzles (1).

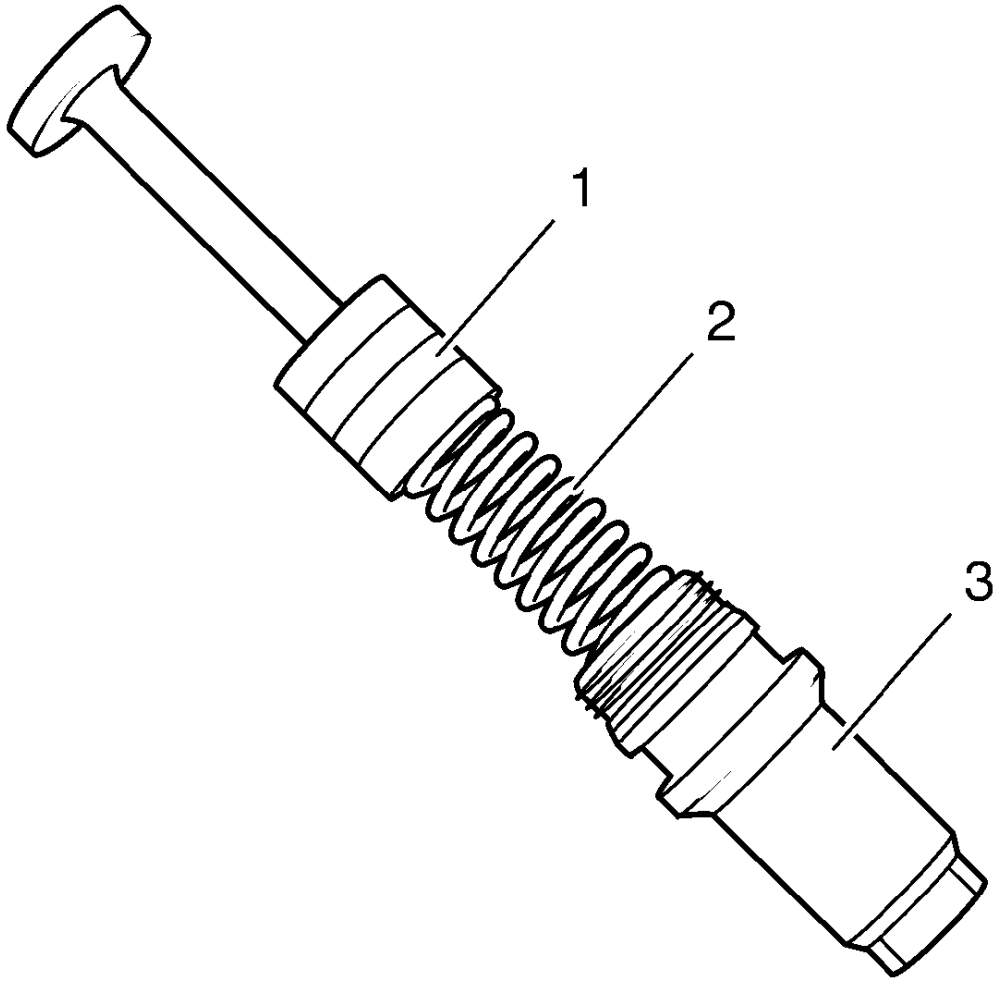

Fig. 463: Piston, Spring And Oil Pressure Relief Valve Closure Bolt
Courtesy of GENERAL MOTORS COMPANY

2. Install the piston (1) and spring (2) to the oil pressure relief valve closure bolt (3).

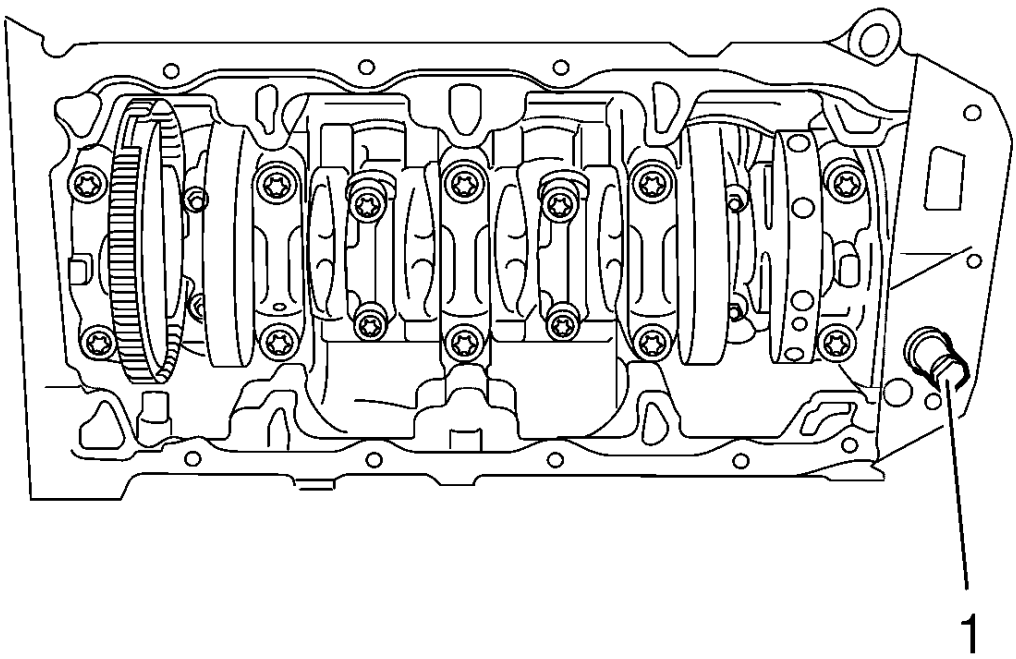

Fig. 464: Oil Pressure Relief Valve Closure Bolt
Courtesy of GENERAL MOTORS COMPANY

CAUTION: Refer to Fastener Caution .

3. Install the oil pressure relief valve and the oil pressure relief valve closure bolt (1) and tighten to 21 N.m (16 lb ft).

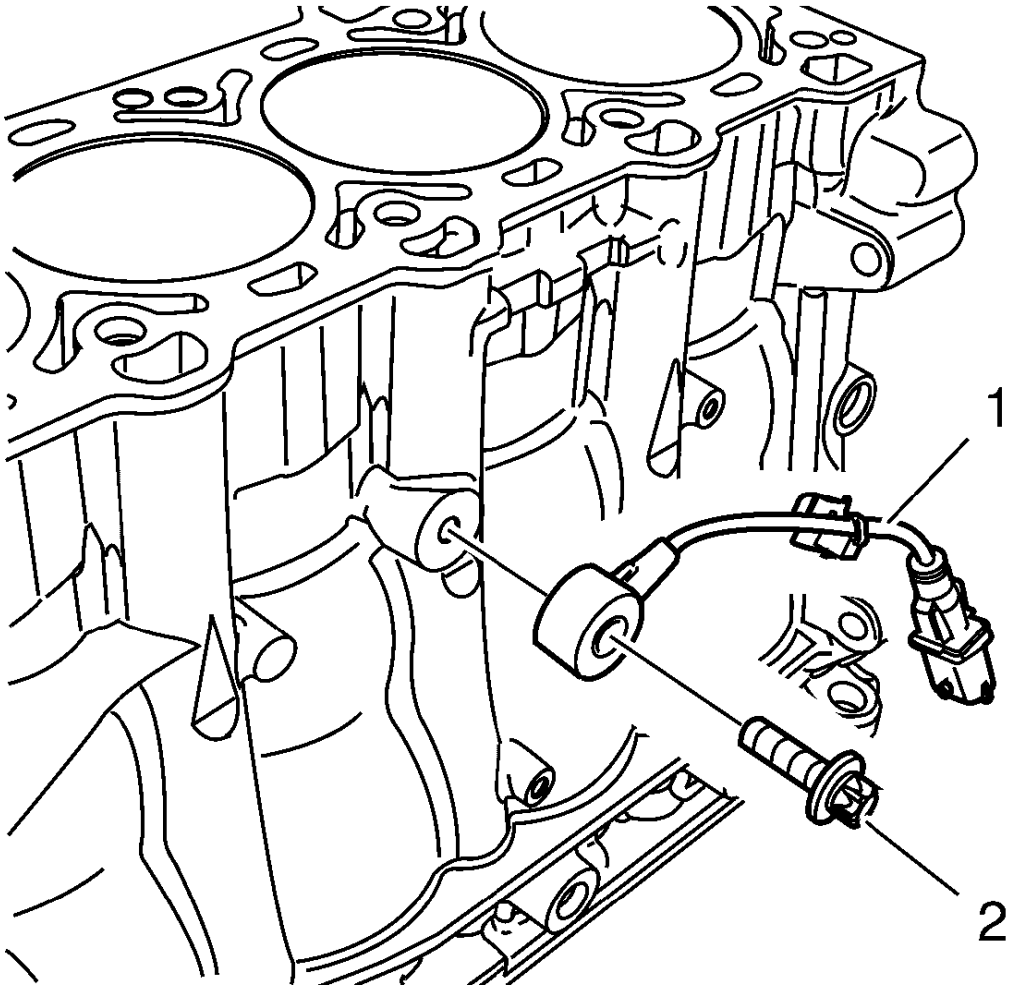

Fig. 465: Knock Sensor And Bolt
Courtesy of GENERAL MOTORS COMPANY

4. Install the knock sensor (1) and the knock sensor bolt (2) and tighten to 20 N.m (15 lb ft).

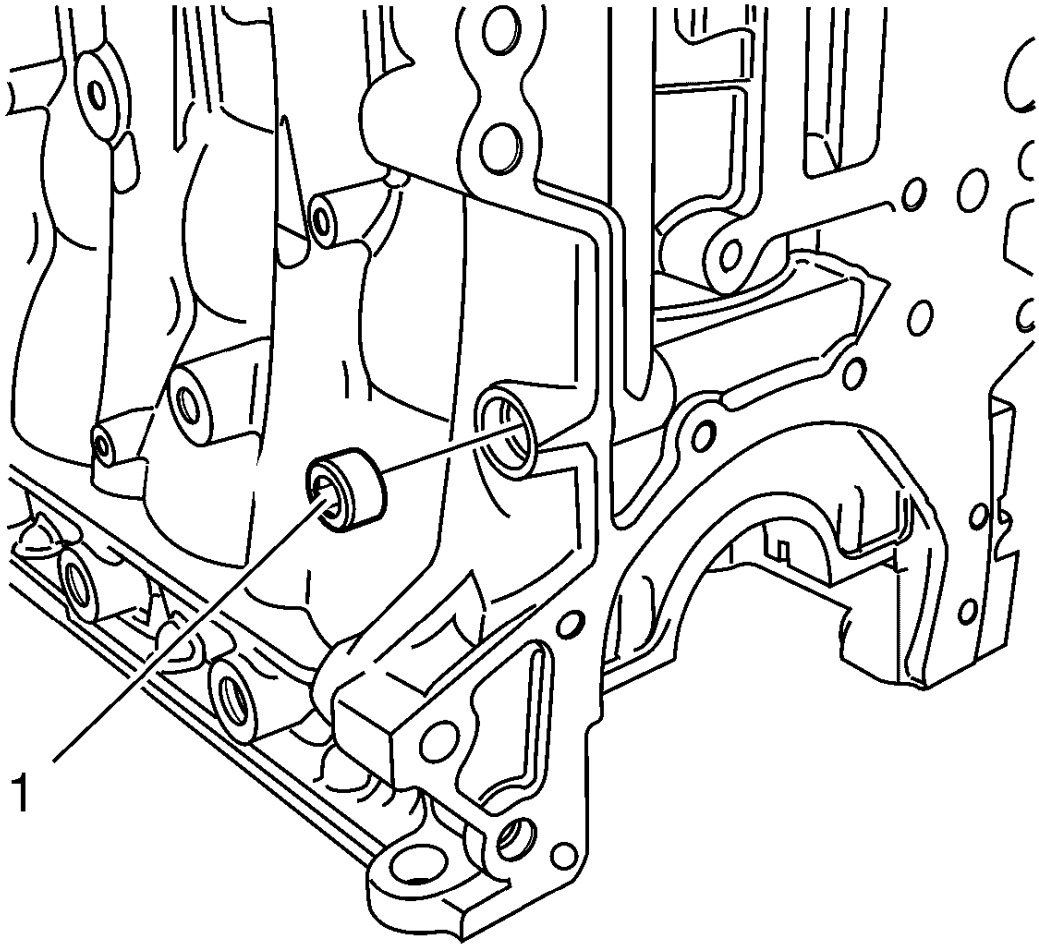

Fig. 466: Oil Flow Check Valve
Courtesy of GENERAL MOTORS COMPANY

5. Install the oil flow check valve (1).

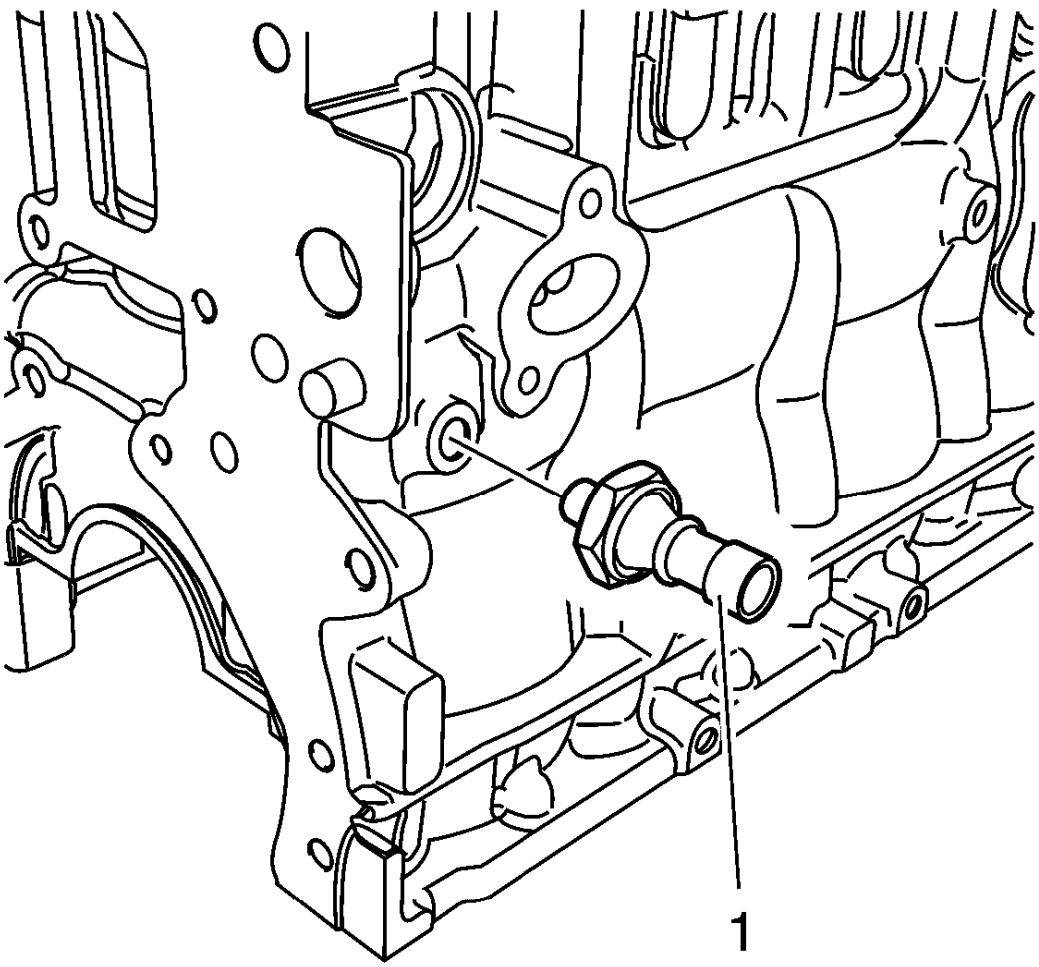

Fig. 467: Oil Pressure Switch
Courtesy of GENERAL MOTORS COMPANY

6. Install the oil pressure switch (1) and tighten to 20 N.m (15 lb ft).

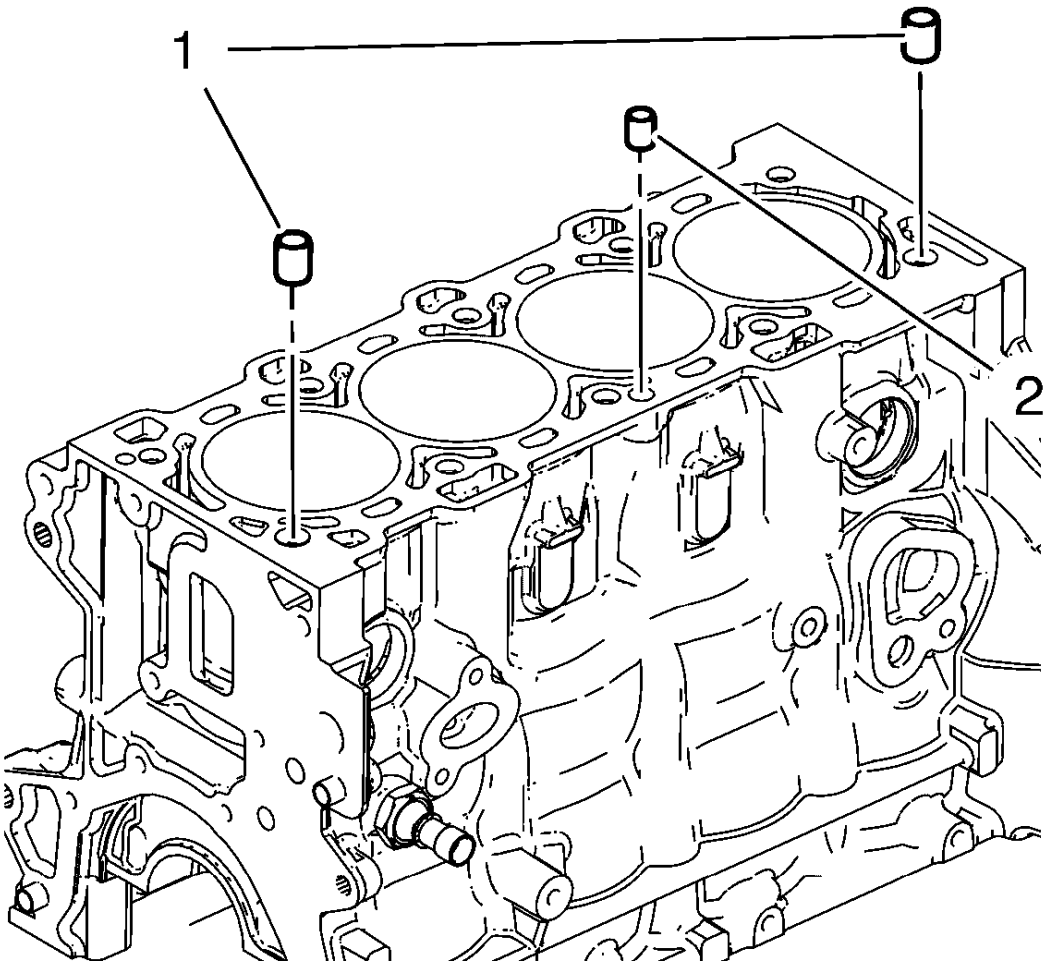

Fig. 468: Cylinder Head Locating Pins
Courtesy of GENERAL MOTORS COMPANY

7. Install the cylinder head locating (1, 2).

PISTON AND CONNECTING ROD ASSEMBLE

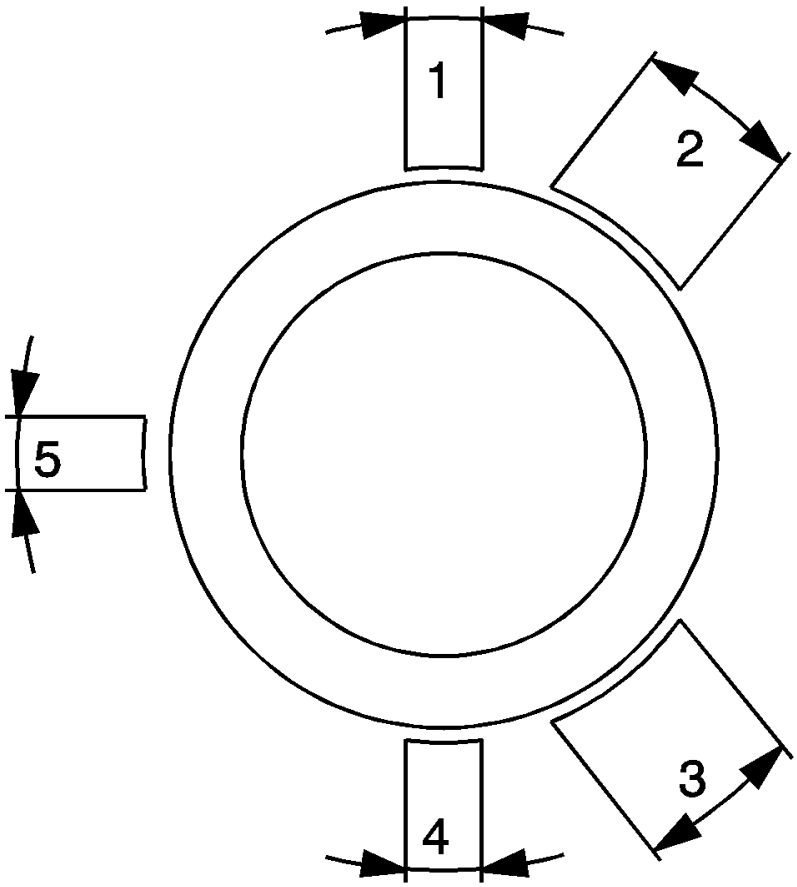

Fig. 469: View Of Piston Ring Joint Positions
Courtesy of GENERAL MOTORS COMPANY

1. Install the piston rings.
   - Insert into the pistons with piston ring wrench and "TOP" pointing upwards.
   - Set the piston ring gap.
     - First piston ring (right-hand ring) in position (1)
     - Second piston ring (minute ring) in position (2)
     - Interim ring of oil scraper ring in position (3), steel band rings of oil scraper ring in position (4 and/or 5)

NOTE: Note installation position of the piston in respect of the connection rod.

2. Attach the piston to the connection rod.
   1. Press the piston pin into the piston and the connection rod by hand.
   2. Insert the retainer in the annular groove on the piston.
   3. Ensure the retainer is firmly seated in the groove.

3. Install the piston with connection rod. Refer to **Piston, Connecting Rod, and Bearing Installation**.

CYLINDER HEAD ASSEMBLE

Special Tools

- **EN-958** Valve Stem Seal Installer
- **EN-8062** Valve Spring Compressor
- **EN-8062-5** Adapter
- **EN-50717-2** Compressor Assembly of **EN-50717** Kit

For equivalent regional tools, refer to **Special Tools**.

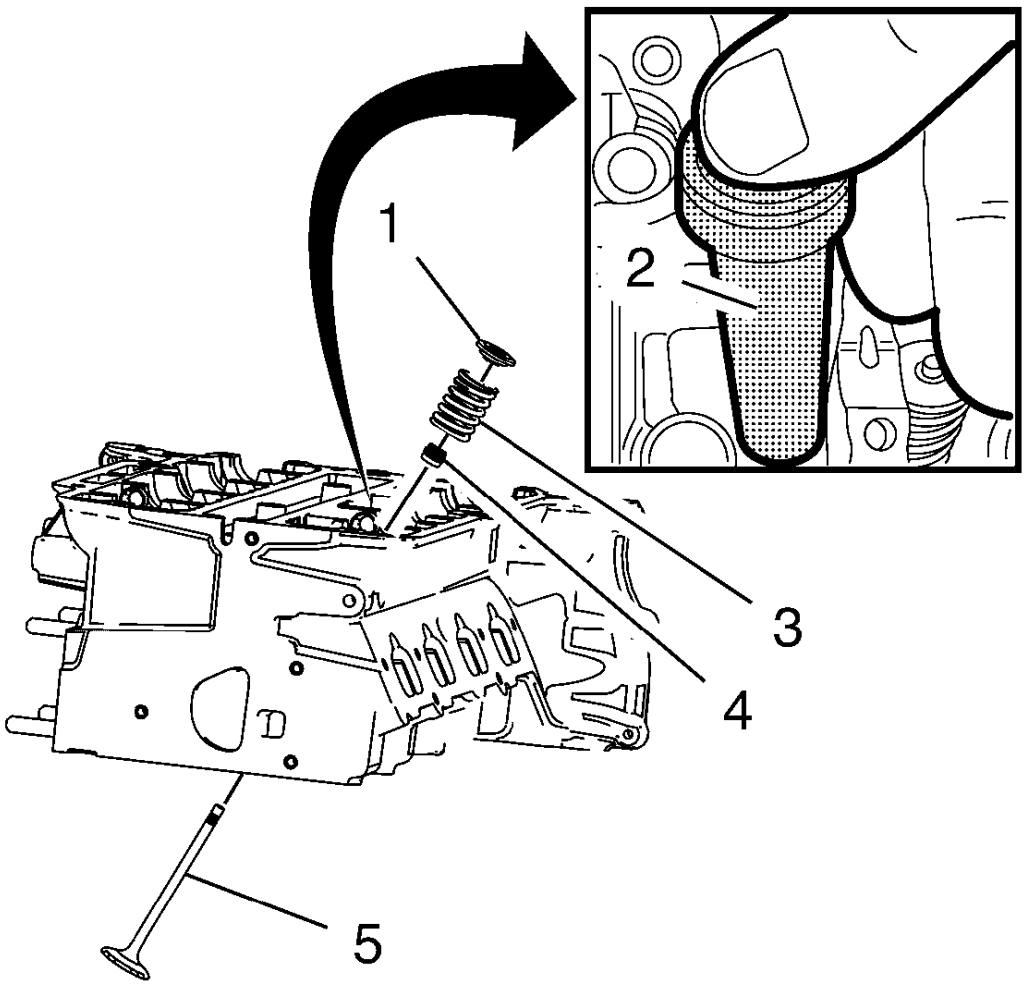

Fig. 470: Valve Stem Oil Seal And Installer
Courtesy of GENERAL MOTORS COMPANY

1. Lubricate the valve stem and the valve guide with clean engine oil.

NOTE: Ensure all valve train components will be installed in their original position.

2. Install the valve (5).
3. Install the NEW valve stem oil seal (4), using the **EN-958** installer (2).
4. Loosely install the valve spring (3) and the valve spring retainer (1).

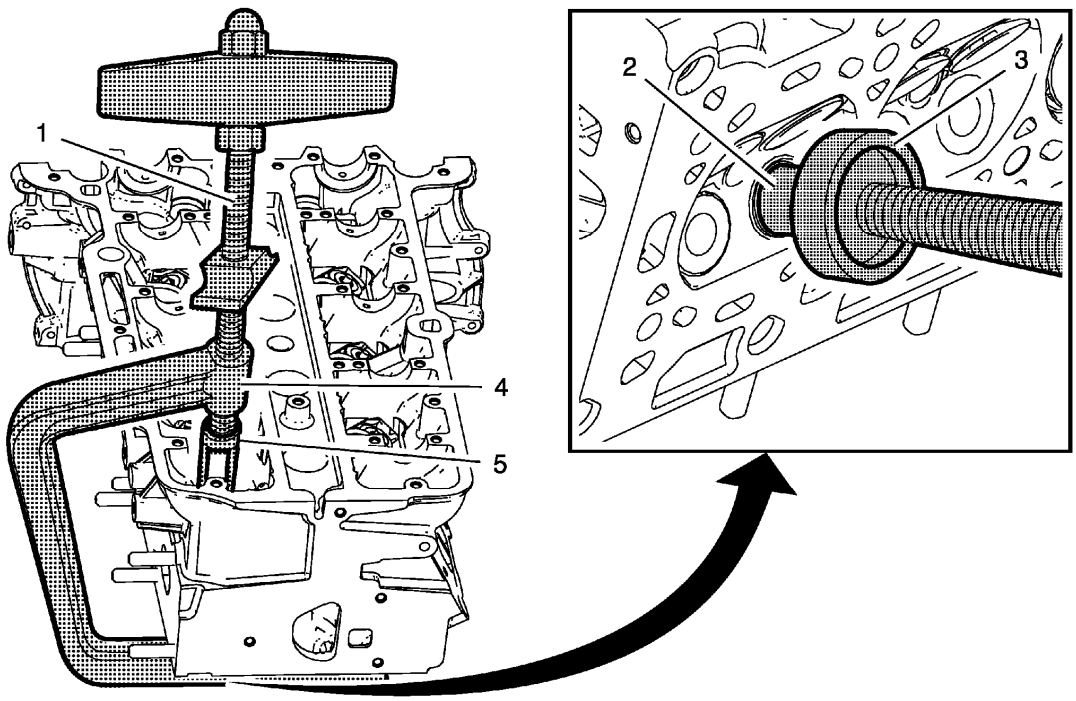

Fig. 471: Valve Spring Compressor And Adapter Assembly
Courtesy of GENERAL MOTORS COMPANY

5. Install the **EN-50717-2** assembly (1) to the **EN-8062** compressor (4).
6. Install the **EN-8062-5** adapter (3) to the **EN-8062** compressor.
7. Install the compressor assembly to the cylinder head, so that the adapter (5) of the **EN-50717-2** assembly (1) contacts the valve spring retainer properly and the **EN-8062-5** adapter (3) contacts the valve disc (2). Prefix the **EN-8062** compressor (4).

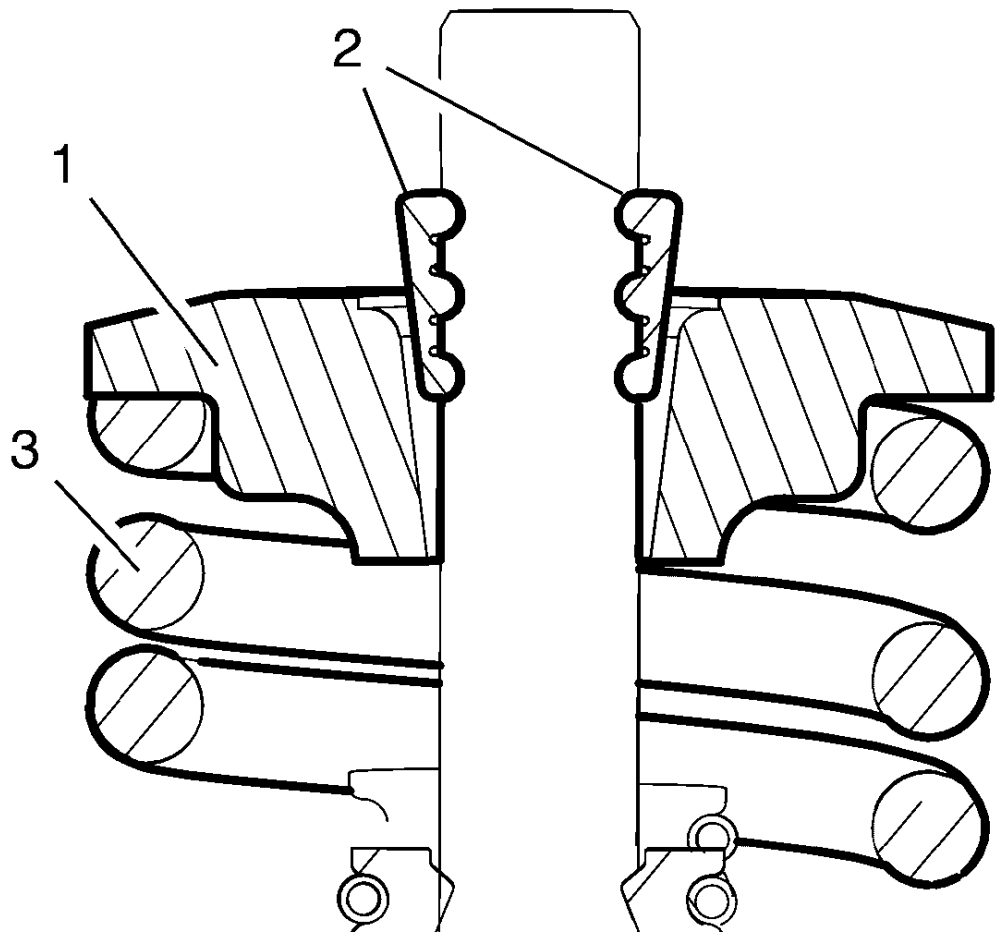

Fig. 472: Valve Spring Retainer And Valve Spring
Courtesy of GENERAL MOTORS COMPANY

CAUTION: The valve stem keys must correctly seat in the valve spring cap. Engine damage may occur by not installing properly.

8. Apply pressure to the **EN-50717-2** assembly to push down the vale spring retainer (1) and compress the valve spring (3) until the valve keys (2) can be inserted. Carefully insert the valve keys then, so that they are proper installed to the valve stem grooves.
9. Carefully release the tension from the **EN-50717-2** assembly.
10. Inspect the valve keys and valve spring retainers for proper seat.
11. Remove the compressor assembly from the cylinder head.
12. Repeat the procedure with the remaining valves.

INTAKE MANIFOLD ASSEMBLE

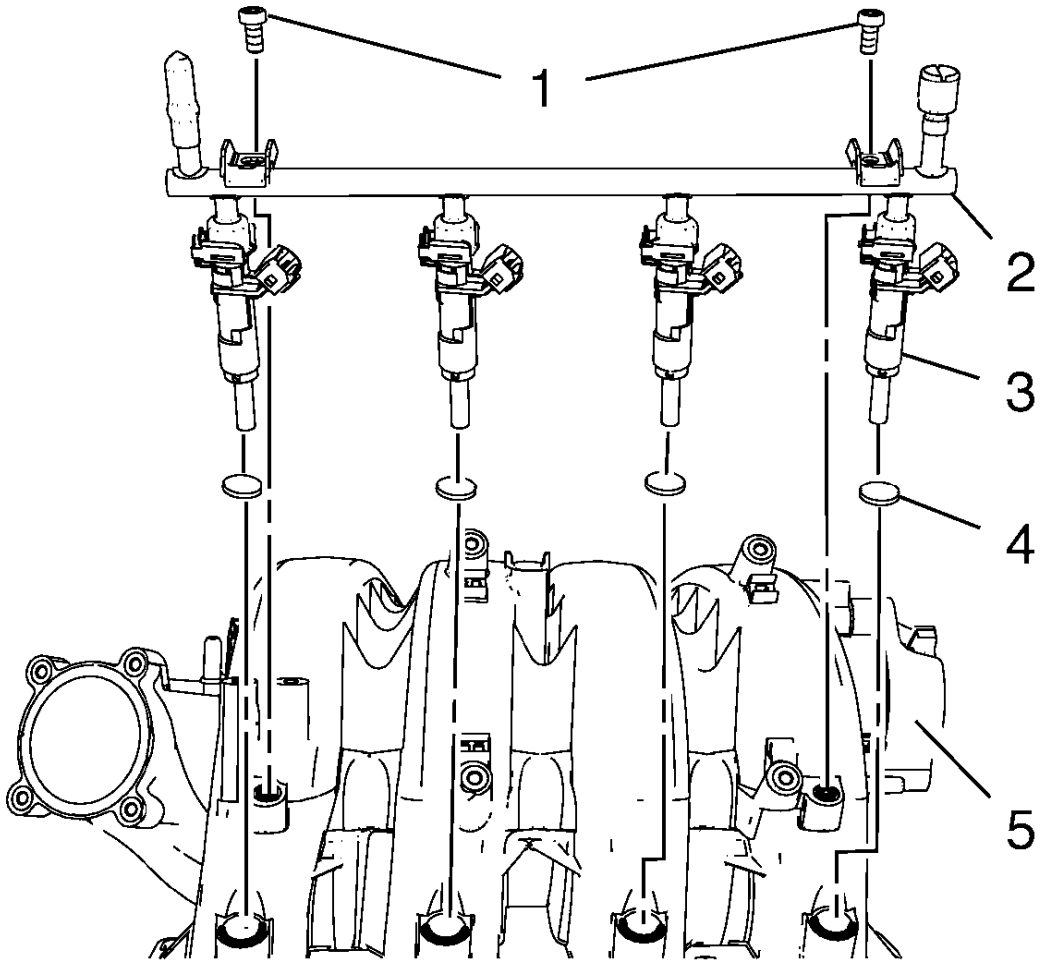

Fig. 473: Intake Manifold, Multiport Fuel Injection Fuel Rail, Fuel Injectors, Seals And Bolts
Courtesy of GENERAL MOTORS COMPANY

1. Install the 4 NEW multiport fuel injector seals (4).
2. Install the multiport fuel injection fuel rail (2) and the fuel injectors (3) to the intake manifold (5).

CAUTION: Refer to Fastener Caution .

3. Install the 2 multiport fuel injection fuel rail bolts (1) and tighten to 8 N.m (71 lb in).

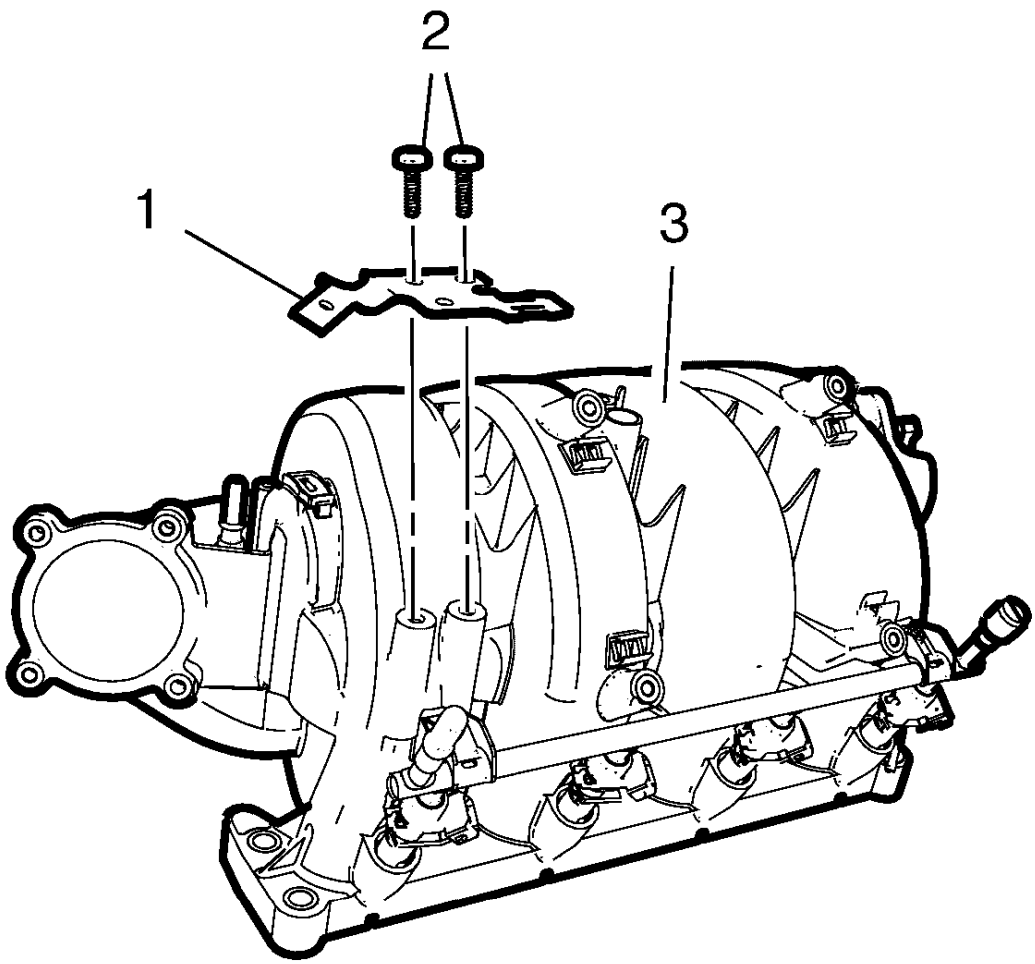

Fig. 474: Intake Manifold, Evaporative Emission Canister Purge Solenoid Valve Bracket And Bolts
Courtesy of GENERAL MOTORS COMPANY

4. Install the evaporative emission canister purge solenoid valve bracket (1) to the intake manifold (3).
5. Install the 2 evaporative emission canister purge solenoid valve bracket bolts (2) and tighten to 7 N.m (62 lb in).

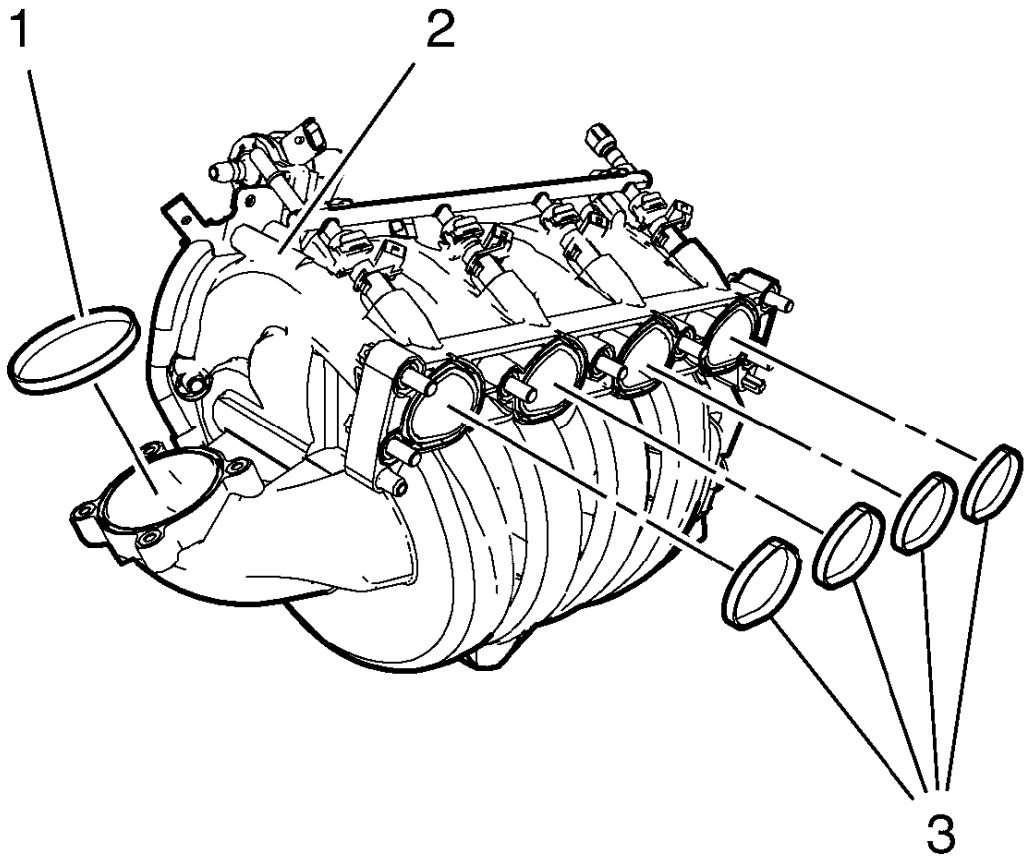

Fig. 475: Intake Manifold, Seal And Throttle Body Seal
Courtesy of GENERAL MOTORS COMPANY

6. Install the NEW intake manifold seal (3) to the intake manifold (2).
7. Install the NEW throttle body seal (1).

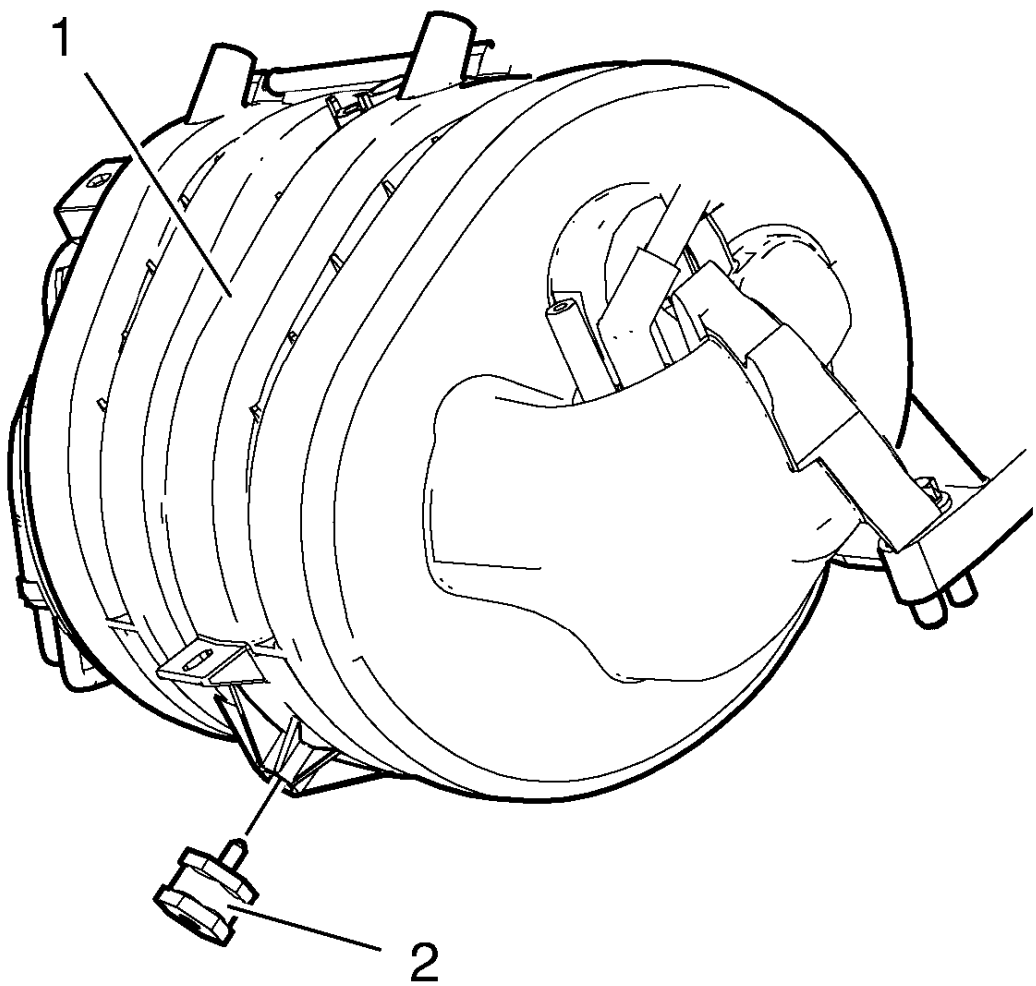

Fig. 476: Intake Manifold And Mount
Courtesy of GENERAL MOTORS COMPANY

8. Install the intake manifold mount (2) to the intake manifold (1) and tighten to 8 N.m (71 lb in).

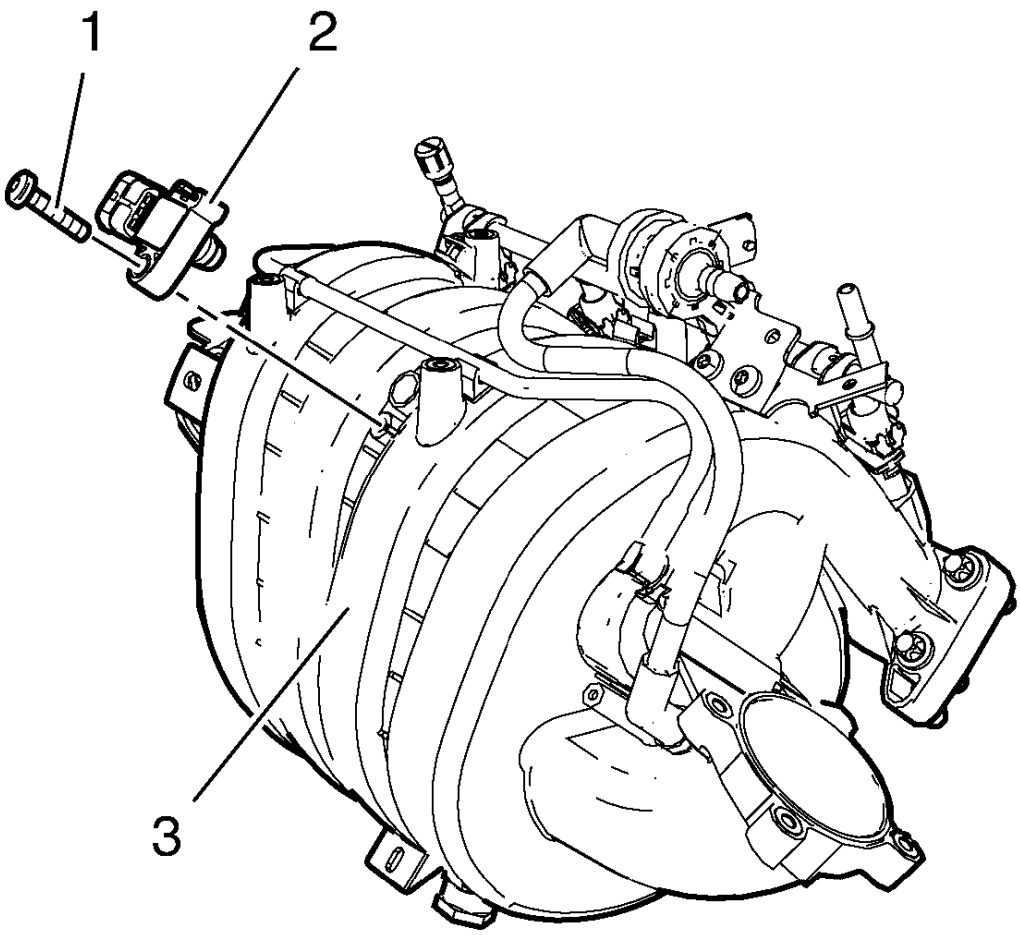

Fig. 477: Intake Manifold, Manifold Absolute Pressure Sensor And Bolt
Courtesy of GENERAL MOTORS COMPANY

9. Install the manifold absolute pressure sensor (2) to the intake manifold (3).
10. Install the intake manifold absolute pressure sensor bolt (1) and tighten to 6 N.m (53 lb in).

CRANKSHAFT AND BEARING INSTALLATION

Special Tools

EN-45059 Torque Angle Sensor Kit

For equivalent regional tools, refer to **Special Tools**

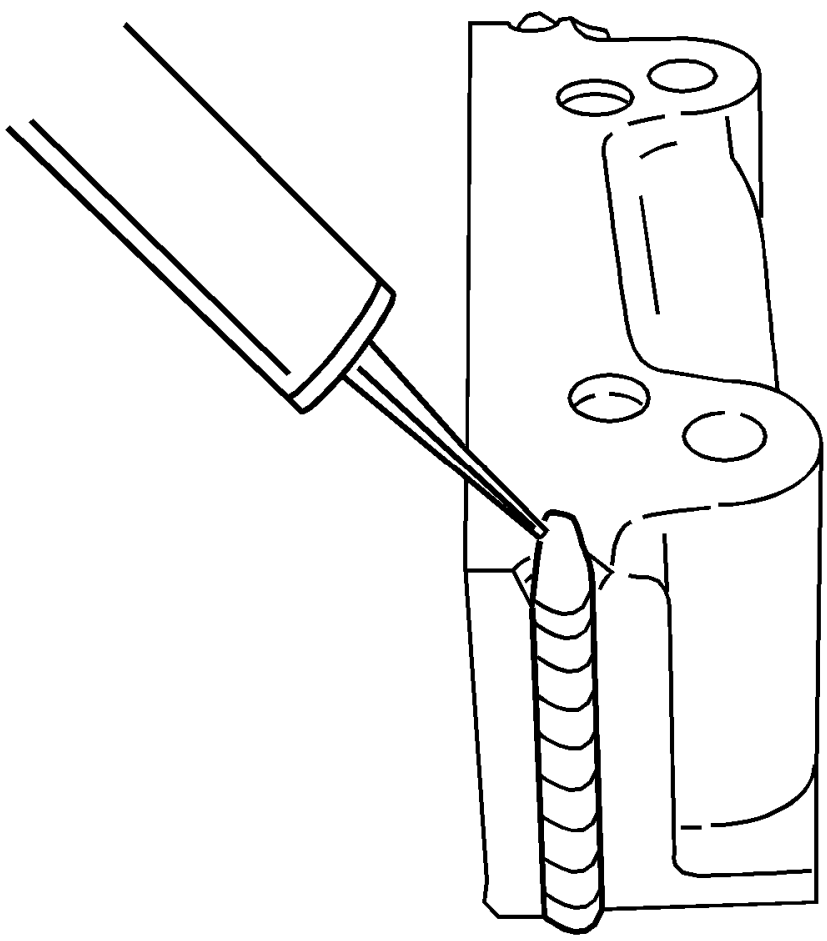

Fig. 478: View Of Crankshaft Bearing Clip
Courtesy of GENERAL MOTORS COMPANY

NOTE: Inspect the installation position.

1. Install the crankshaft bearing clips, oil bearing clips.
2. Install the crankshaft.

NOTE: Inspect the installation position.

3. Install the crankshaft bearing caps 1-4.
   - Oil bearing clips.
   - Install the 8 NEW crankshaft bearing cap bolts.

NOTE: Inspect the installation position.

4. Install the crankshaft bearing cap.

1. Apply black adhesive sealing compound to the grooves of the rear crankshaft bearing cap.
2. Install the 2 NEW crankshaft bearing cap bolts.

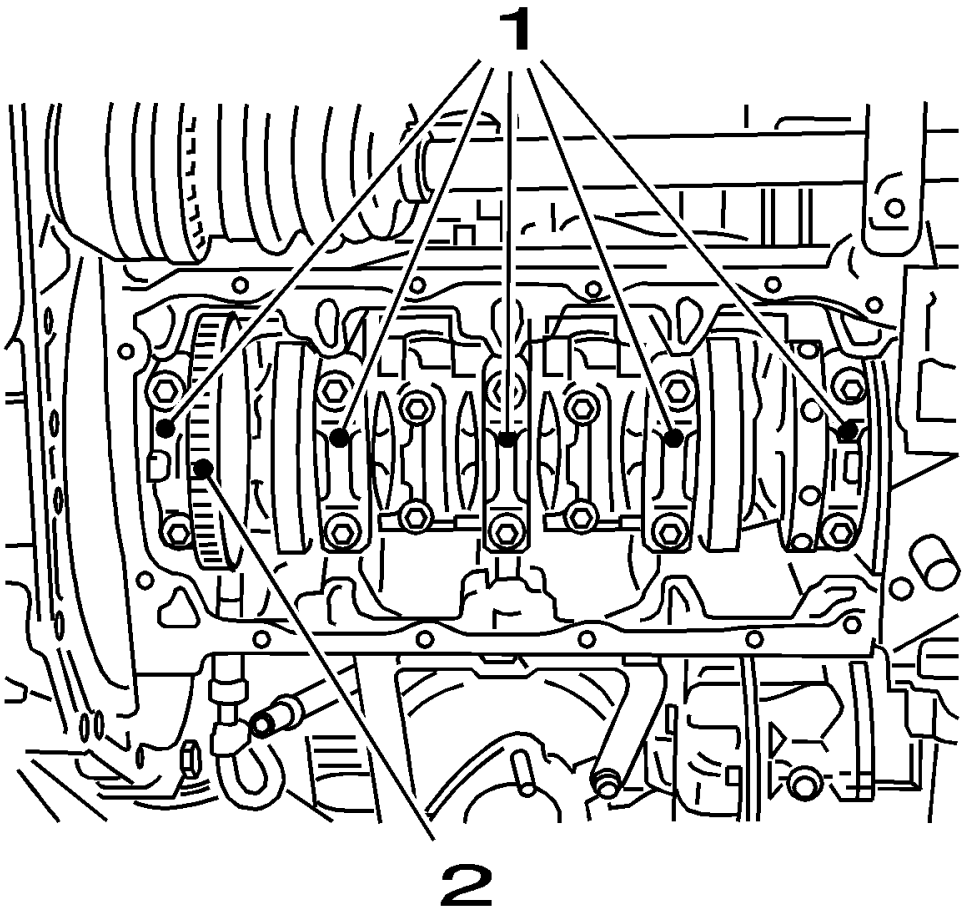

Fig. 479: View Of Crankshaft Bearing Cap Bolts
Courtesy of GENERAL MOTORS COMPANY

CAUTION: Refer to Fastener Caution .

CAUTION: Refer to Torque-to-Yield Fastener Caution .

5. Tighten the bolts for the crankshaft bearing caps (1) in 3 passes using the **EN-45059** sensor kit:
   - First pass to 50 N.m (37 lb ft)
   - Second pass to 45°
   - Third pass to 15°

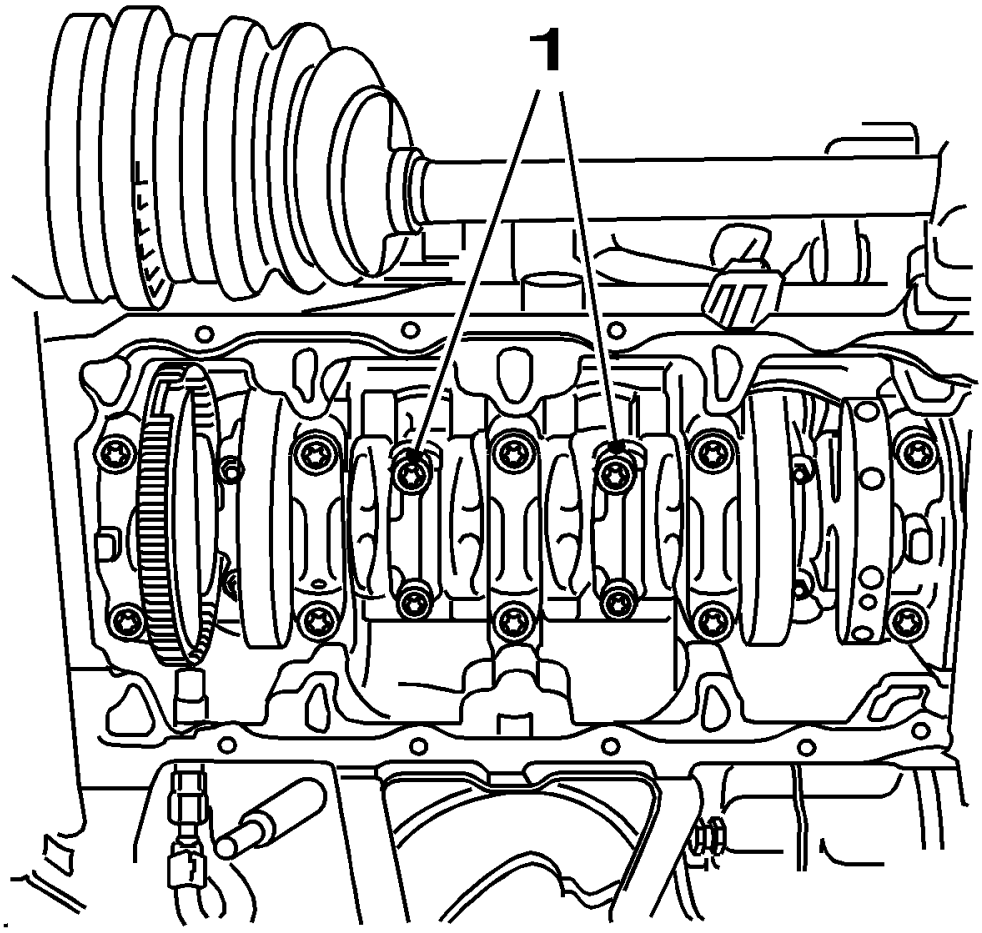

Fig. 480: View Of Con-Rod Bearing Caps
Courtesy of GENERAL MOTORS COMPANY

NOTE: Inspect the installation position.

6. Install the connecting rod bearing caps 2 and 3 (1) and oil the bearing clips.
7. Install 4 NEW connecting rod bearing cap bolts and tighten in 3 passes use the **EN-45059** sensor kit:
   - First pass to 35 N.m (26 lb ft)
   - Second pass to 45°
   - Third pass to 15°

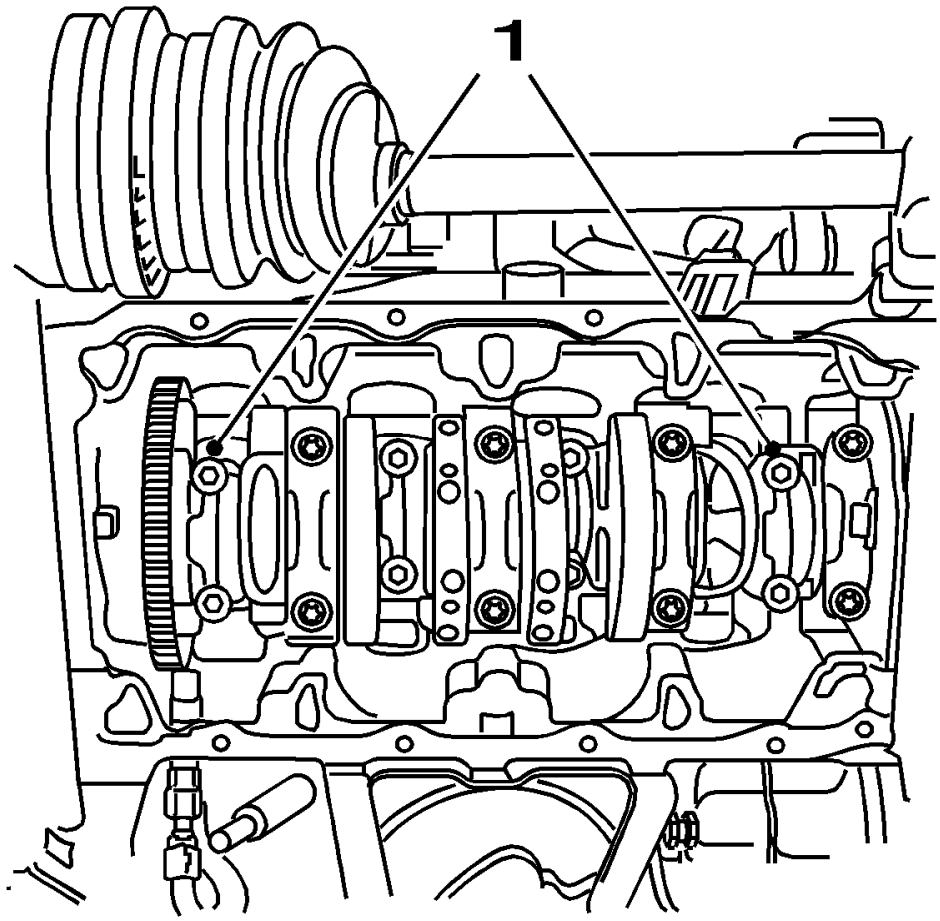

Fig. 481: View Of Con-Rod Bearing Caps
Courtesy of GENERAL MOTORS COMPANY

8. Turn the crankshaft through 180°.

NOTE: Inspect the installation position.

9. Install the connecting rod bearing caps 1 and 4 (1) and oil the bearing clips.
10. Install 4 NEW connecting rod bearing cap bolts and tighten in 3 passes use the **EN-45059** sensor kit:
    - First pass to 35 N.m (26 lb ft)
    - Second pass to 45°
    - Third pass to 15°

PISTON, CONNECTING ROD, AND BEARING INSTALLATION

Special Tools

EN-45059 Angle Meter

For equivalent regional tools, refer to **Special Tools**.

1. Lubricate the piston rings, piston, inner cylinder bore surface and a piston ring compressor with clean engine oil.
2. Install the piston ring compressor in order to compress the piston rings.

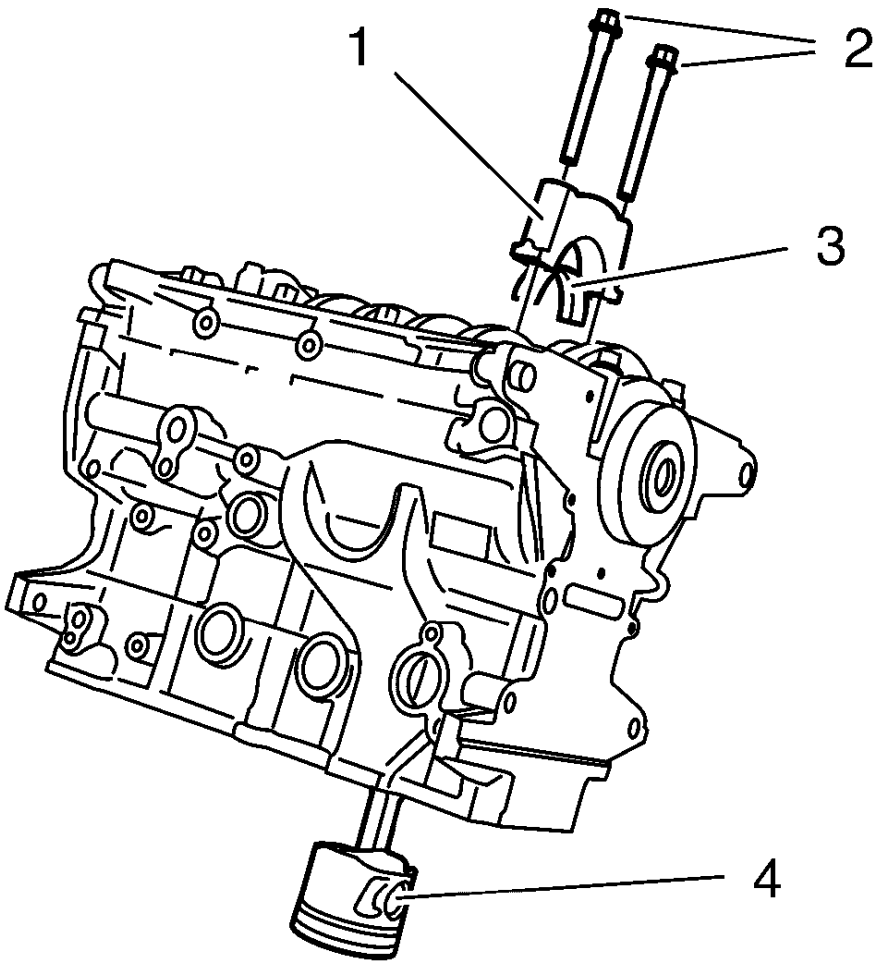

Fig. 482: Connecting Rod Assembly, Connecting Rod Bearing And Connecting Rod Cap
Courtesy of GENERAL MOTORS COMPANY

3. Install the piston and connecting rod assembly (4).
4. Install the connecting rod bearing (3).
5. Install the connecting rod cap (1).

CAUTION: Refer to Fastener Caution .

CAUTION: Refer to Torque-to-Yield Fastener Caution .

6. Install NEW connecting rod bolts (2) and tighten a first pass to 35 N.m (26 lb ft).
7. Tighten the NEW connecting rod bolts a second pass to an additional 45 degrees, using the **EN-45059** meter.
8. Tighten the NEW connecting rod bolts a final pass to an additional 15 degrees, using the **EN-45059** meter.
9. Assemble the caps and connecting rods in the marked position.
10. Rotate the crankshaft to a position where the connecting rod bolts are easy accessible.

CYLINDER HEAD INSTALLATION

Special Tools

EN-45059 Torque Angle Sensor Kit

For equivalent regional tools, refer to **Special Tools**.

1. Clean the sealing surfaces.
2. Inspect for plane surface.
    - Cylinder block, cylinder head
    - Straight-edge, feeler gauge
3. Install the cylinder head gasket.
4. Install the cylinder head.

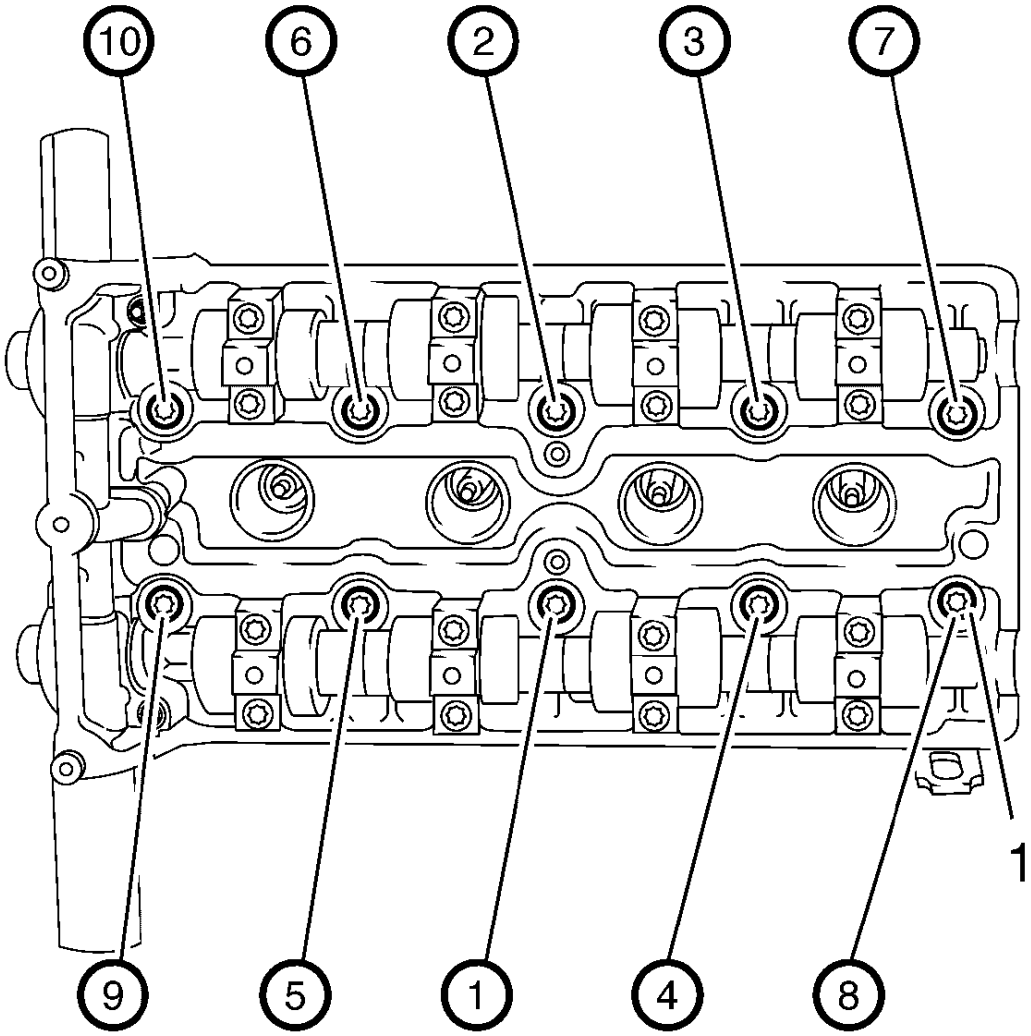

Fig. 483: Cylinder Head Bolts Tightening Sequence
Courtesy of GENERAL MOTORS COMPANY

CAUTION: Refer to Fastener Caution .

CAUTION: Refer to Torque-to-Yield Fastener Caution .

NOTE: Note the correct tightening sequence.

5. Install NEW cylinder head bolts.
6. Tighten the bolts (1) in 5 passes. Use the **EN-45059** sensor kit :
   - First pass to 25 N.m (18 lb ft)
   - Second pass to 90°

- Third pass to 90°
- Fourth pass to 90°
- Fifth pass to 45°

VALVE LIFTER INSTALLATION

Special Tool

EN-845 Suction Device

For equivalent regional tools, refer to **Special Tools**.

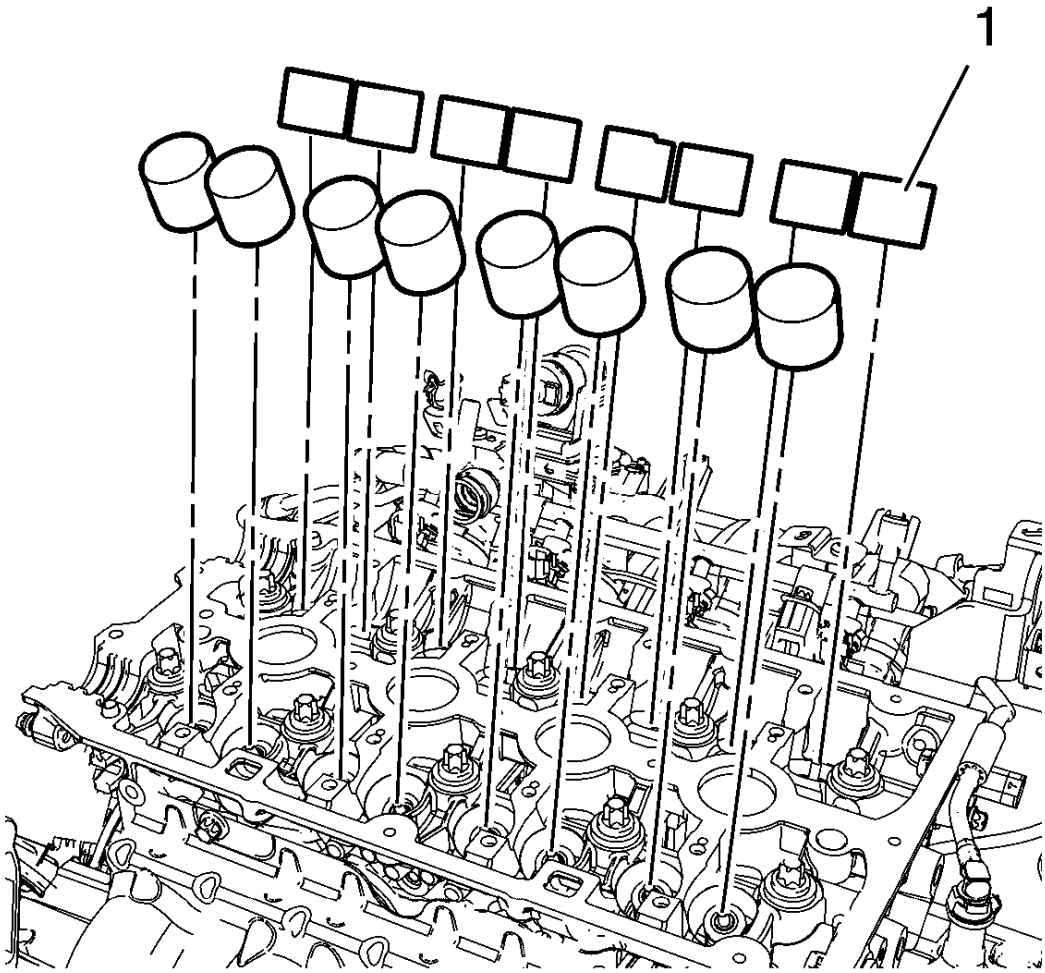

Fig. 484: Valve Lifters
Courtesy of GENERAL MOTORS COMPANY

NOTE: Observe the correct locations.

NOTE: Coat the sliding surfaces with NEW engine oil.

Install the 16 valve lifter (1), using the **EN-845** suction device.

CAMSHAFT INSTALLATION

Special Tools

EN-422 Installer

For equivalent regional tools, refer to **Special Tools**.

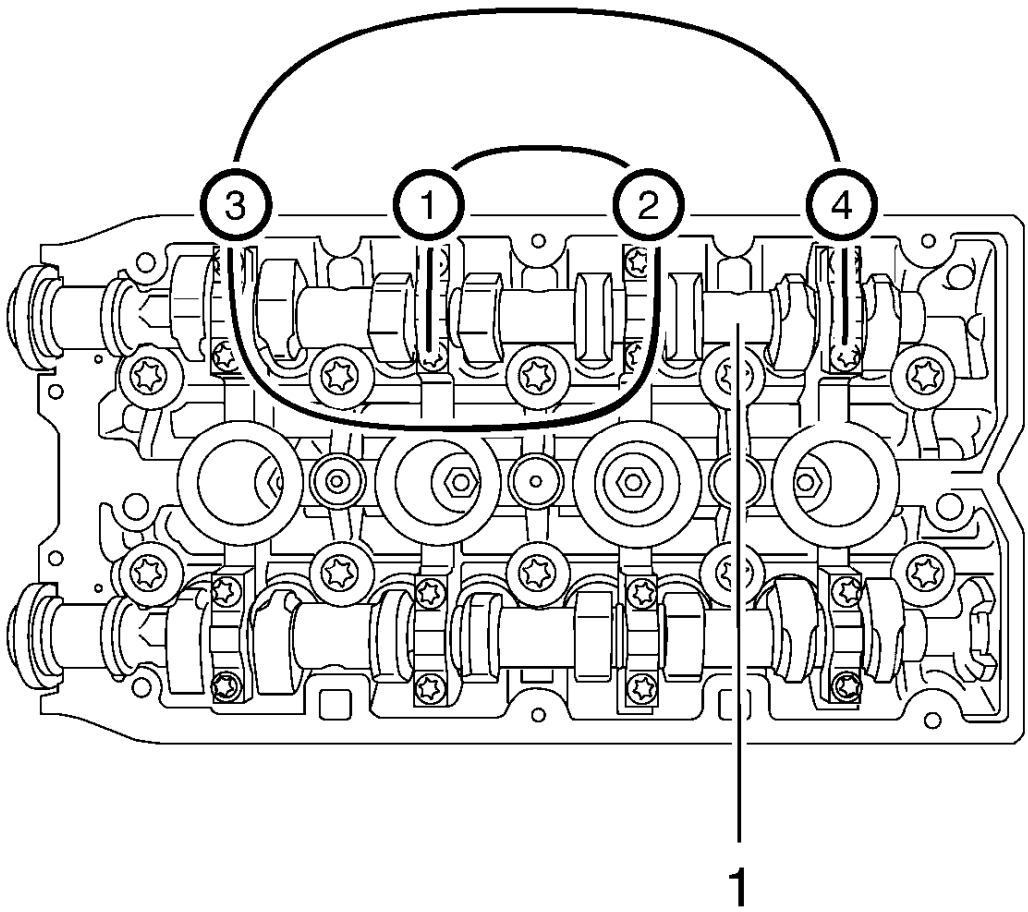

Fig. 485: Intake Camshaft Bearing Cover Bolts Tightening Sequence
Courtesy of GENERAL MOTORS COMPANY

NOTE: Coat with MoS 2 lubricating paste. Refer to Adhesives, Fluids, Lubricants, and Sealers.

1. Install the intake camshaft (1).

NOTE: Note the identification marking on the camshaft bearing cover.

2. Install the 4 intake camshaft bearing cover number 2-5.

CAUTION: Refer to Fastener Caution .

3. Install the 8 intake camshaft bearing cover bolts and tighten in a spiral from the inside to the outside to 8 N.m (71 lb in).

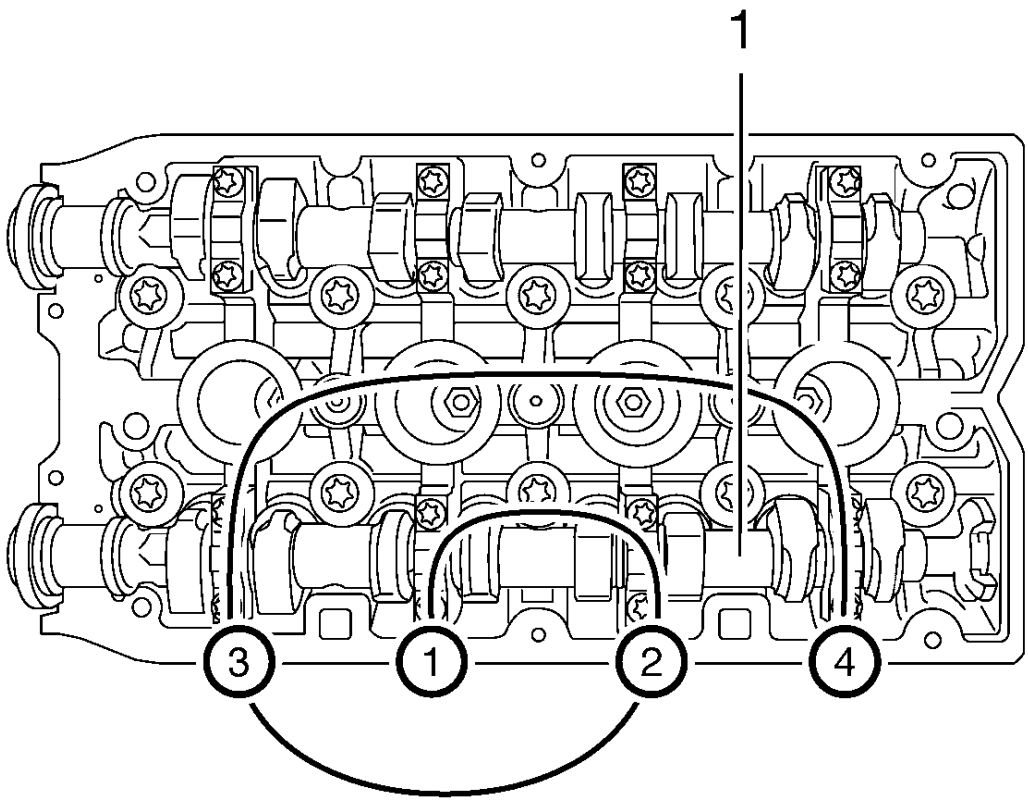

Fig. 486: Exhaust Camshaft Bearing Cover Bolts Tightening Sequence
Courtesy of GENERAL MOTORS COMPANY

NOTE: Coat with MoS 2 lubricating paste. Refer to Adhesives, Fluids, Lubricants,

and Sealers.

4. Install the exhaust camshaft (1).

NOTE: Note the identification marking on the camshaft bearing cover.

5. Install the 4 exhaust camshaft bearing cover number 6-9.
6. Install the 8 exhaust camshaft bearing cover bolts and tighten in a spiral from the inside to the outside to 8 N.m (71 lb in).

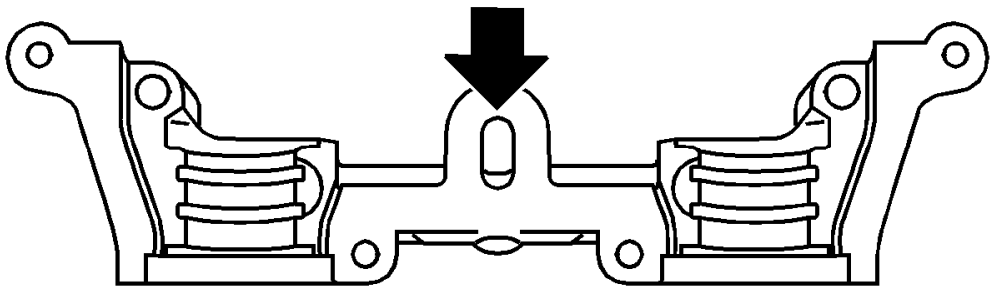

Fig. 487: View Of Oil Duct
Courtesy of GENERAL MOTORS COMPANY

NOTE: Sealing surfaces must be free from oil and grease.

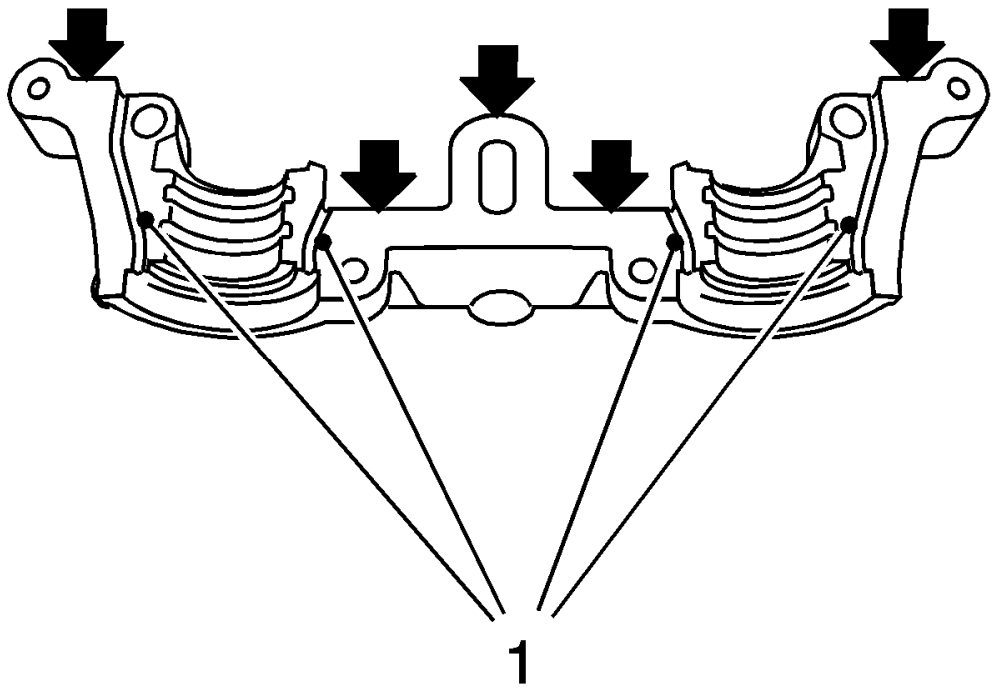

Fig. 488: View Of Sealing Surfaces And Grooves
Courtesy of GENERAL MOTORS COMPANY

NOTE:

- **Sealing surfaces (arrows) must be free from oil and grease.**
- **It is essential to ensure that no sealant is applied outside the marked sealing areas (1).**
- **The grooves adjacent to the sealing surfaces must remain free from sealant.**

7. Clean sealing surfaces of the first camshaft bearing support and the cylinder head with a suitable tool.

   Clean oil duct from any sealant residue.

8. Apply surface sealant to sealing surfaces of the first camshaft bearing cap thinly and evenly.
9. Position the first camshaft bearing cap on the cylinder block and tighten the bolts approximately to 2 N.m (18 lb in).

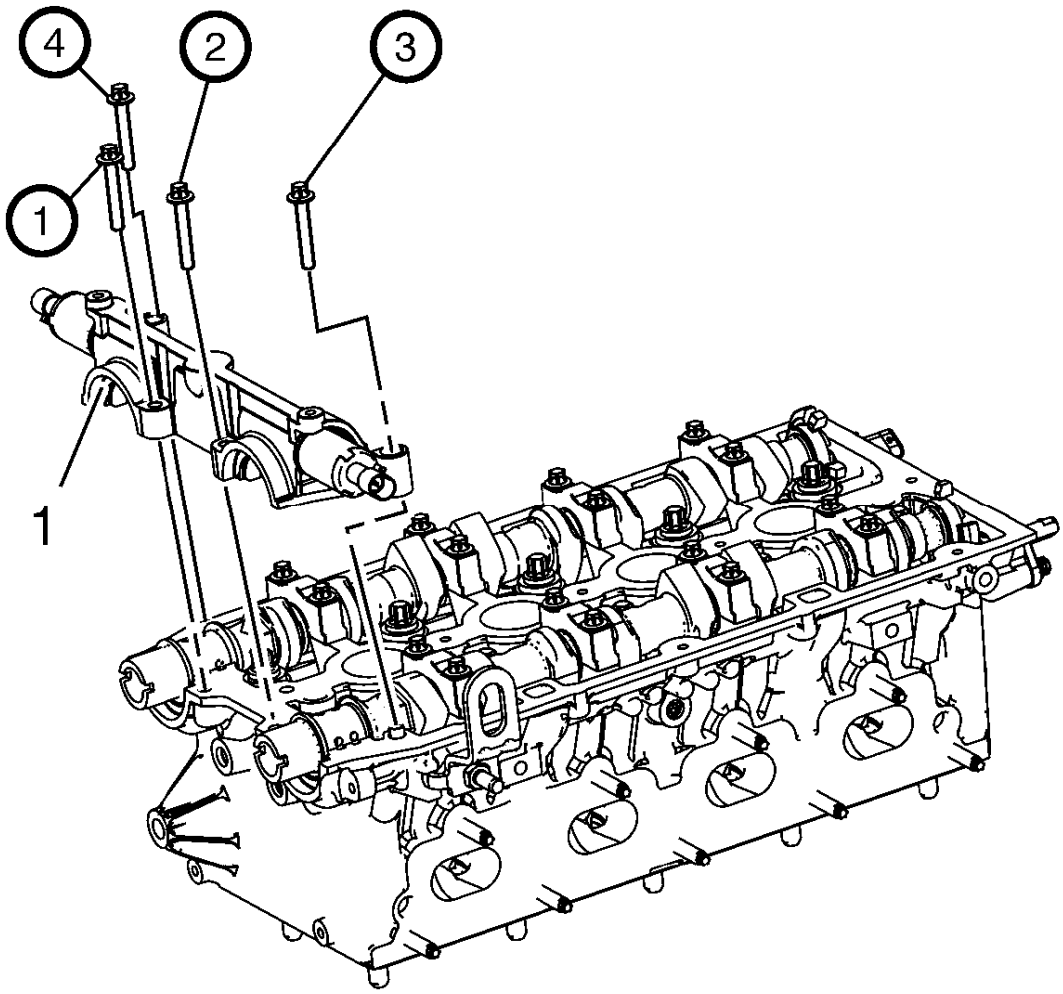

Fig. 489: Camshaft Bearing Cap
Courtesy of GENERAL MOTORS COMPANY

NOTE: No sealant may reach the camshafts.

10. Install the first camshaft bearing cap.

NOTE: Note installation sequence 1-4.

11. Install the first camshaft bearing cap (1) bolts and tighten to 8 N.m (71 lb in).

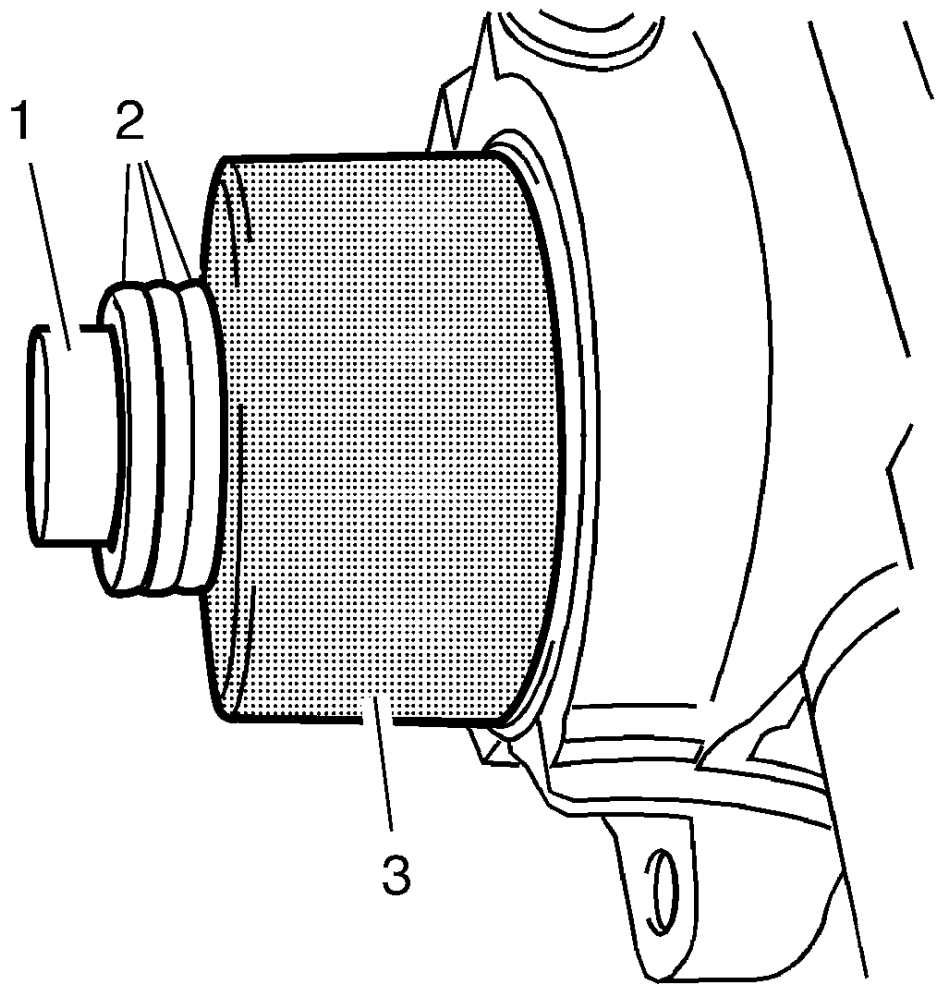

Fig. 490: Camshaft Sprocket Bolt, Shims And Tool
Courtesy of GENERAL MOTORS COMPANY

12. Install 2 NEW sealing rings to the camshafts.
13. Tighten the seal ring with **EN-422** installer (3) on the camshaft until this is in contact with the cylinder head.
14. To install, use camshaft sprocket bolt (1) in conjunction with shims (2) with a total thickness of approximately 10 mm.
15. Remove the **EN-422** installer (3).

CAMSHAFT COVER INSTALLATION

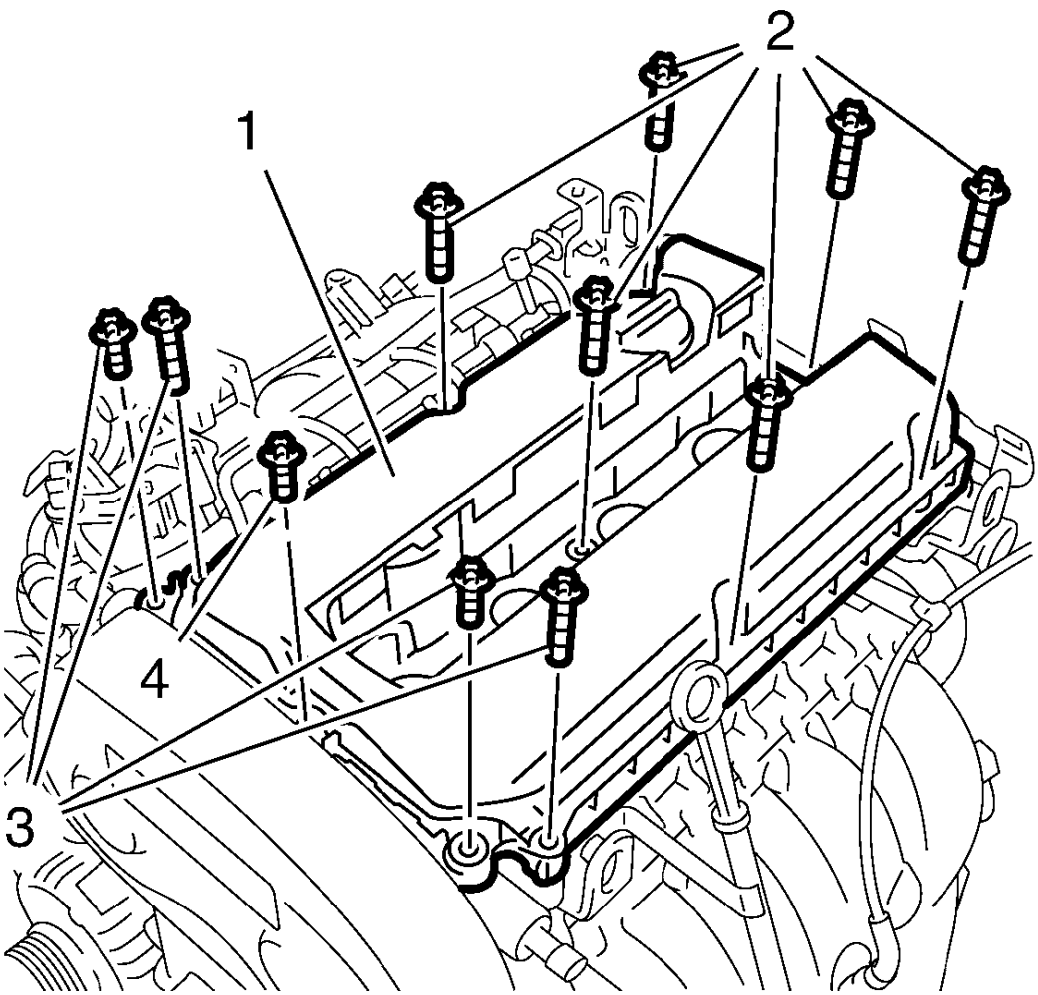

Fig. 491: Camshaft Cover Bolt
Courtesy of GENERAL MOTORS COMPANY

1. Clean the bolt and the camshaft cover bolt (4) thread.
2. Apply sealant to the camshaft cover bolt (4). Refer to **Adhesives, Fluids, Lubricants, and Sealers**.
3. Insert a NEW gasket in the camshaft cover.
4. Install the camshaft cover (1).

CAUTION: Refer to Fastener Caution .

5. Install the 11 bolts (2, 3, 4) and tighten to 8 N.m (71 lb in).

IGNITION COIL INSTALLATION

Special Tools

EN-6009 Remover/Installer Ignition Module

For equivalent regional tools, refer to **Special Tools**.

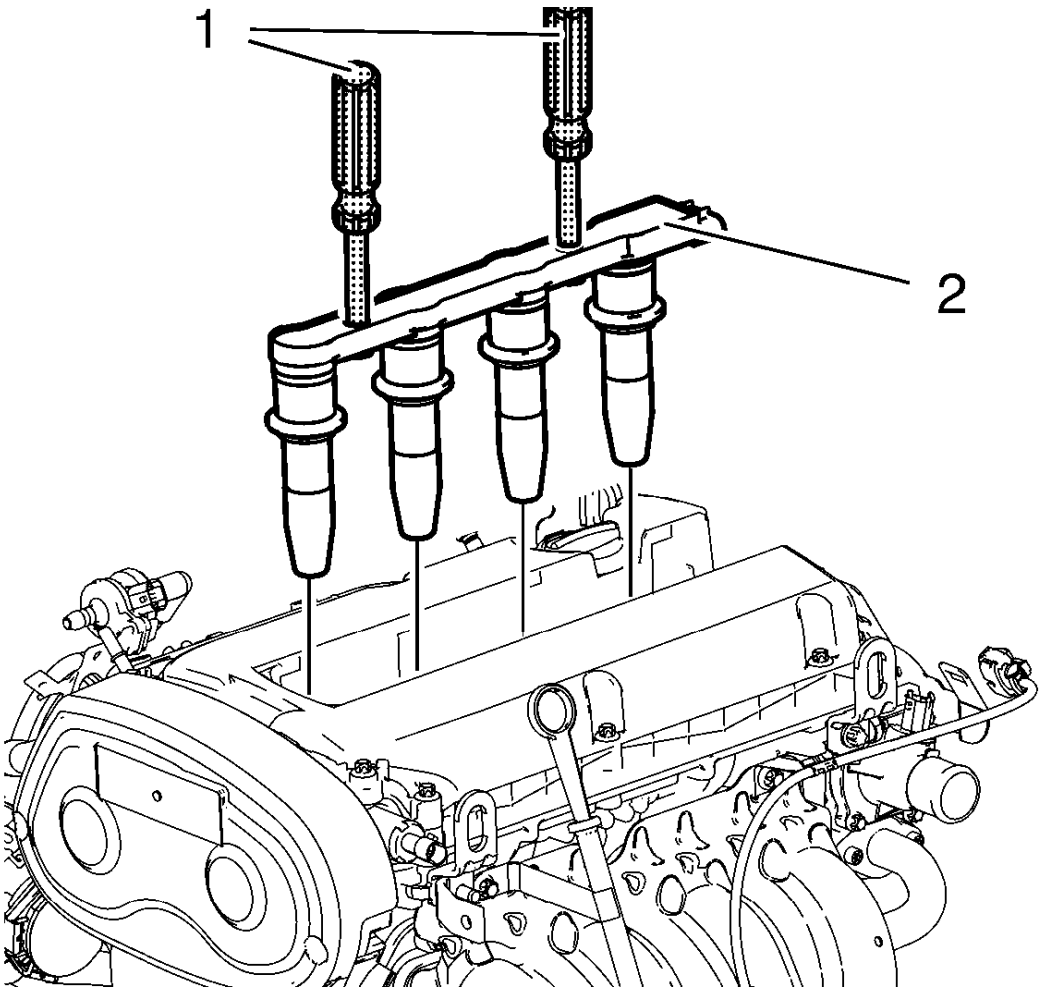

Fig. 492: Ignition Coil Module And Special Tool
Courtesy of GENERAL MOTORS COMPANY

1. Install the ignition coil module (2) with the **EN-6009** remover/installer (1).
2. Remove the **EN-6009** remover/installer (1).

CAUTION: Refer to Fastener Caution

NOTE: Note the arrow on the cover.

3. Install the 2 ignition coil bolts and tighten to 8 N.m (71 lb in).

NOTE: Note the arrow on the cover.

4. Install the cover of the DIS ignition coil against the direction of the arrow.

ENGINE FRONT COVER AND OIL PUMP INSTALLATION

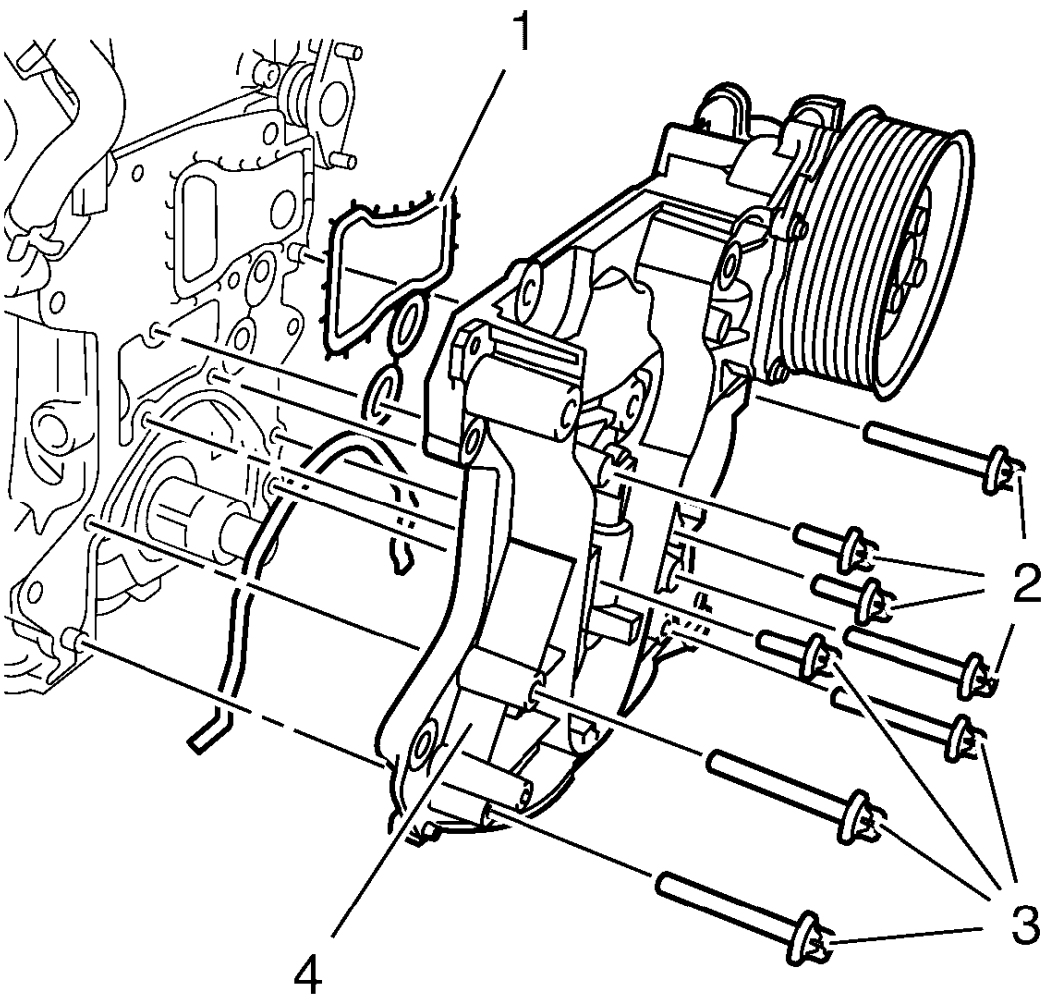

Fig. 493: Engine Oil Pump
Courtesy of GENERAL MOTORS COMPANY

1. Install the NEW engine cover gasket (1).
2. Install the engine cover with the included oil pump (4).

CAUTION: Refer to Fastener Caution .

3. Install the 8 engine cover bolts (2, 3) and tighten to 20 N.m (15 lb ft).

OIL PAN INSTALLATION

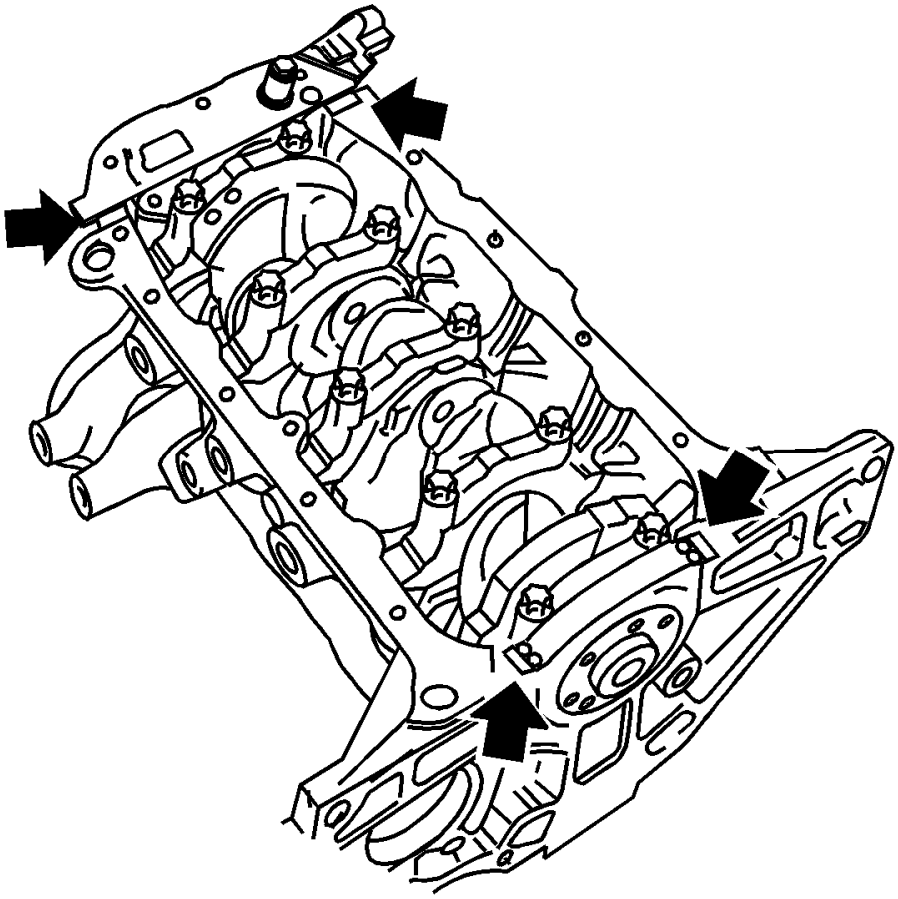

Fig. 494: View Of Joints For Sealant
Courtesy of GENERAL MOTORS COMPANY

1. Clean the sealing surfaces.
2. Apply approximately a 3.5 mm (0.138 in) thick bead of oil pan sealant to the joints (arrows). Refer to **Adhesives, Fluids, Lubricants, and Sealers** for the recommended sealant.

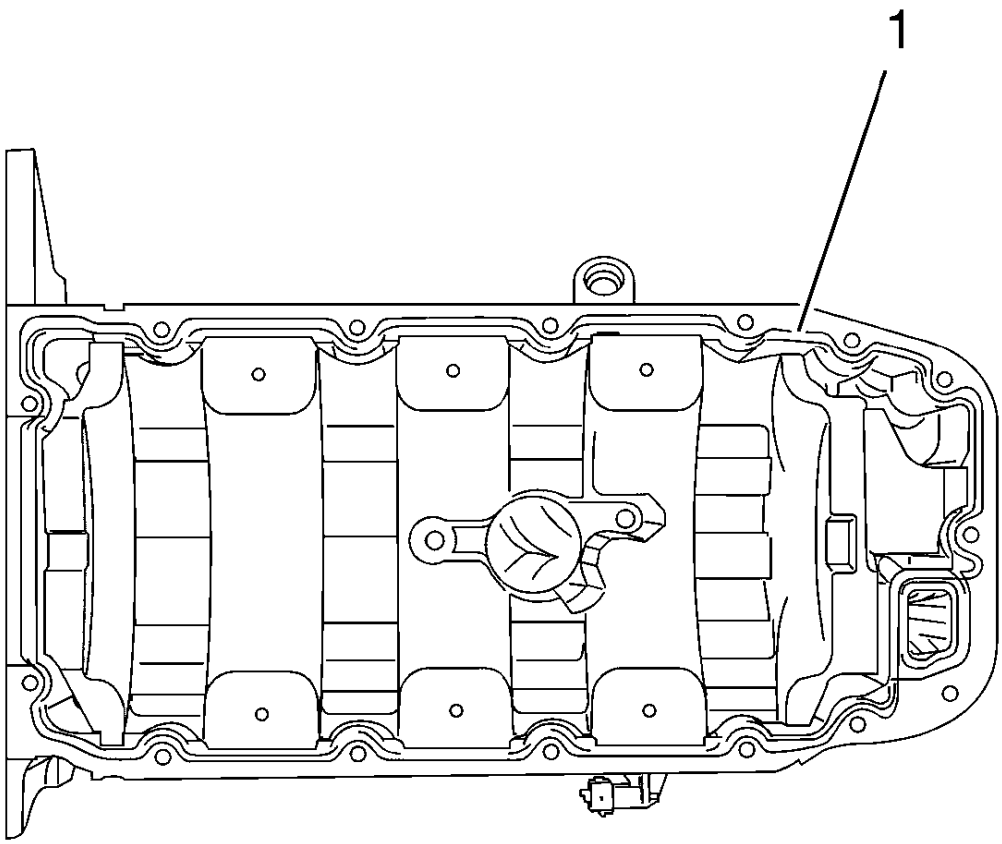

Fig. 495: Sealant Application Area
Courtesy of GENERAL MOTORS COMPANY

NOTE: The assembly time, including torque check, must take no longer than 10 minutes.

3. Apply approximately a 3.5 mm (0.138 in) thick bead of oil pan sealant (1) to the oil pan. Refer to **Adhesives, Fluids, Lubricants, and Sealers** for the recommended sealant.

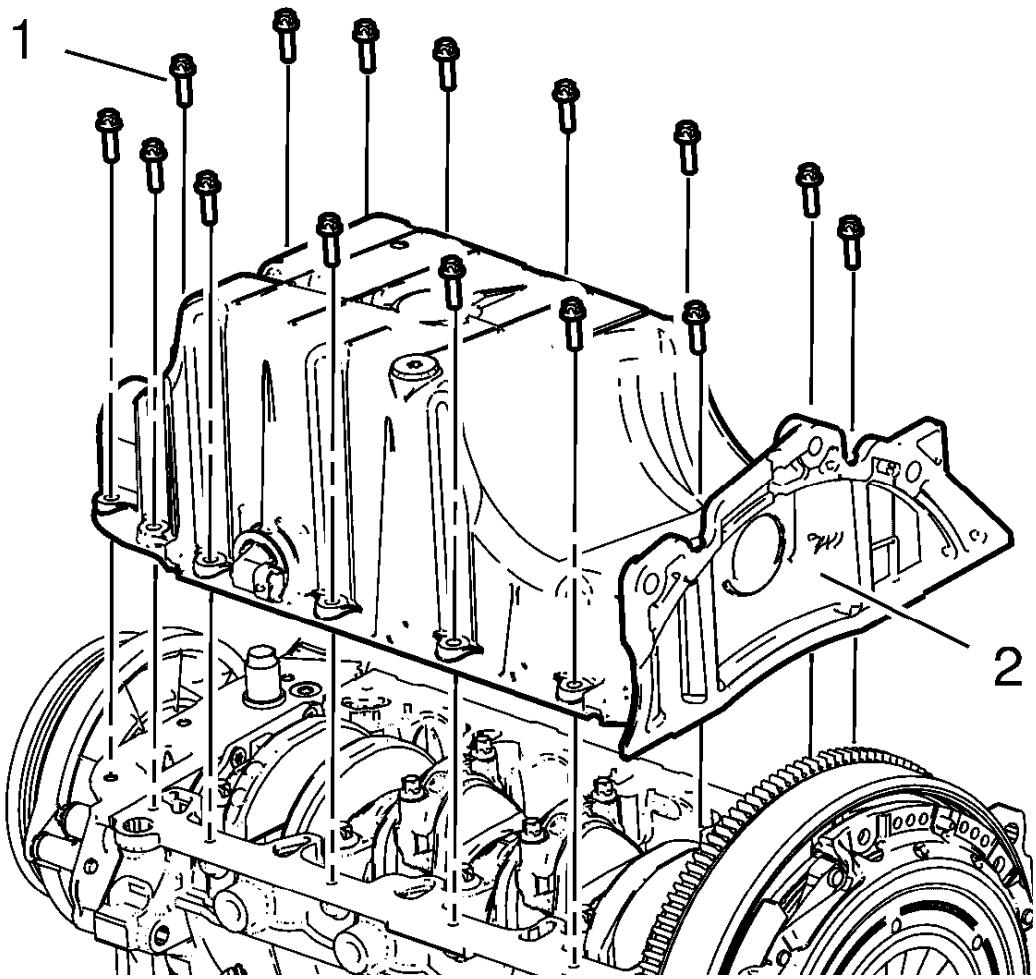

Fig. 496: Oil Pan And Bolts
Courtesy of GENERAL MOTORS COMPANY

4. Install the oil pan (2).

CAUTION: Refer to Fastener Caution

5. Install the 15 oil pan bolts (1) on the cylinder block and tighten to10 N.m (89 lb in).

ENGINE OIL HEATER INSTALLATION

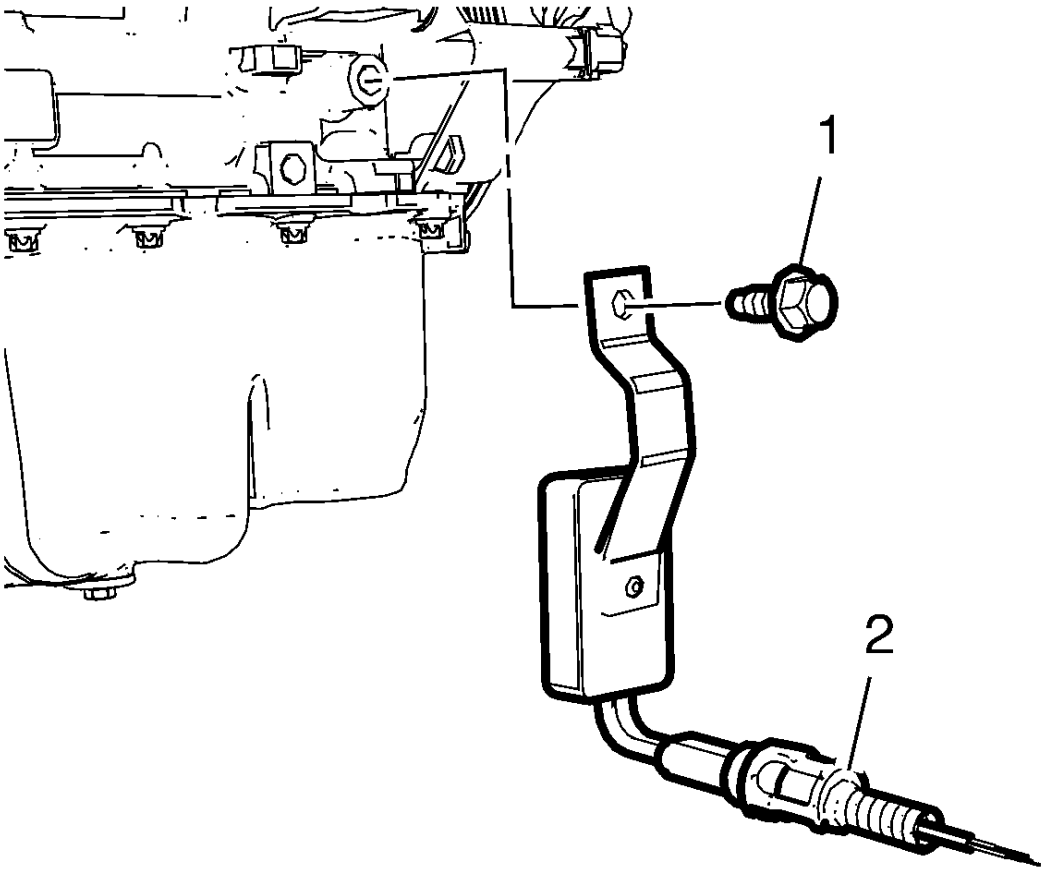

Fig. 497: Engine Oil Heater
Courtesy of GENERAL MOTORS COMPANY

1. Install the engine oil heater (2).

CAUTION: Refer to Fastener Caution .

2. Install the engine oil heater bolt (1) and tighten to 40 N.m (30 lb ft).

WATER PUMP INSTALLATION

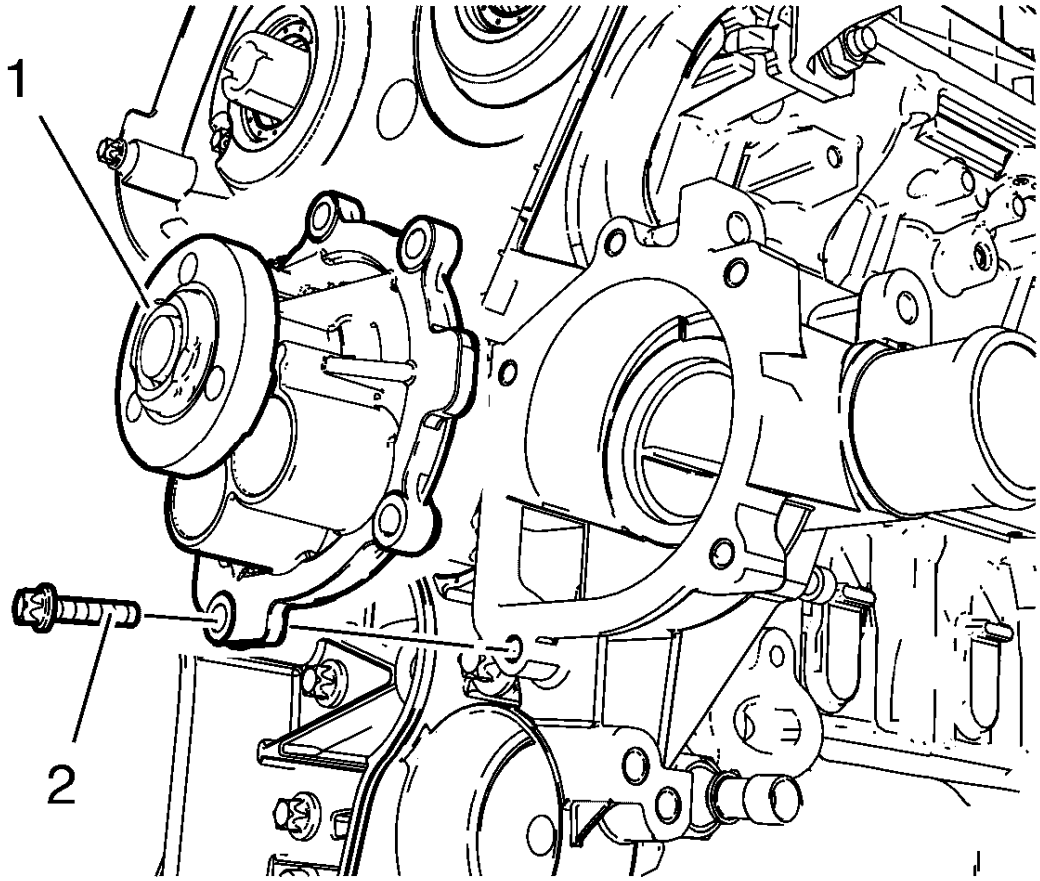

Fig. 498: Water Pump And Bolts
Courtesy of GENERAL MOTORS COMPANY

1. Clean the sealing surfaces and the 3 coolant pump threads.
2. Install NEW gasket.

CAUTION: Refer to Fastener Caution .

CAUTION: Refer to Torque-to-Yield Fastener Caution .

3. Install the coolant pump (1).
4. Install 5 NEW bolts (2) and tighten to 8 N.m (71 lb in).

WATER PUMP PULLEY INSTALLATION

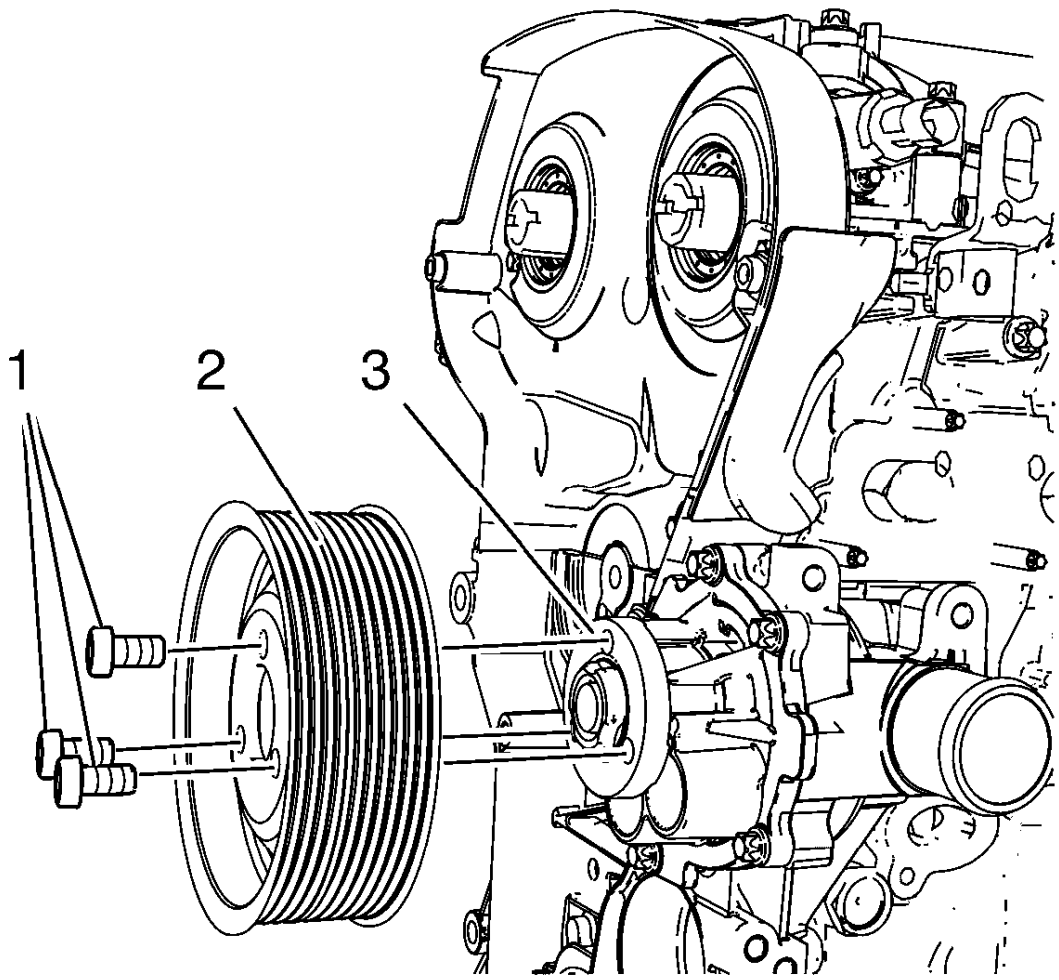

Fig. 499: Water Pump And Water Pump Pulley
Courtesy of GENERAL MOTORS COMPANY

NOTE: Counterhold the crankshaft balancer. The belt has to be installed for this procedure.

1. Install the water pump pulley (2) to the water pump (3).

   CAUTION: Refer to Fastener Caution .

2. Install the 3 water pump pulley bolts (1) with locking compound and tighten to 20 N.m (15 lb ft).

   Refer to **Adhesives, Fluids, Lubricants, and Sealers**.

ENGINE OIL COOLER INSTALLATION

1. Clean the engine oil cooler to the oil filter housing sealing surfaces.

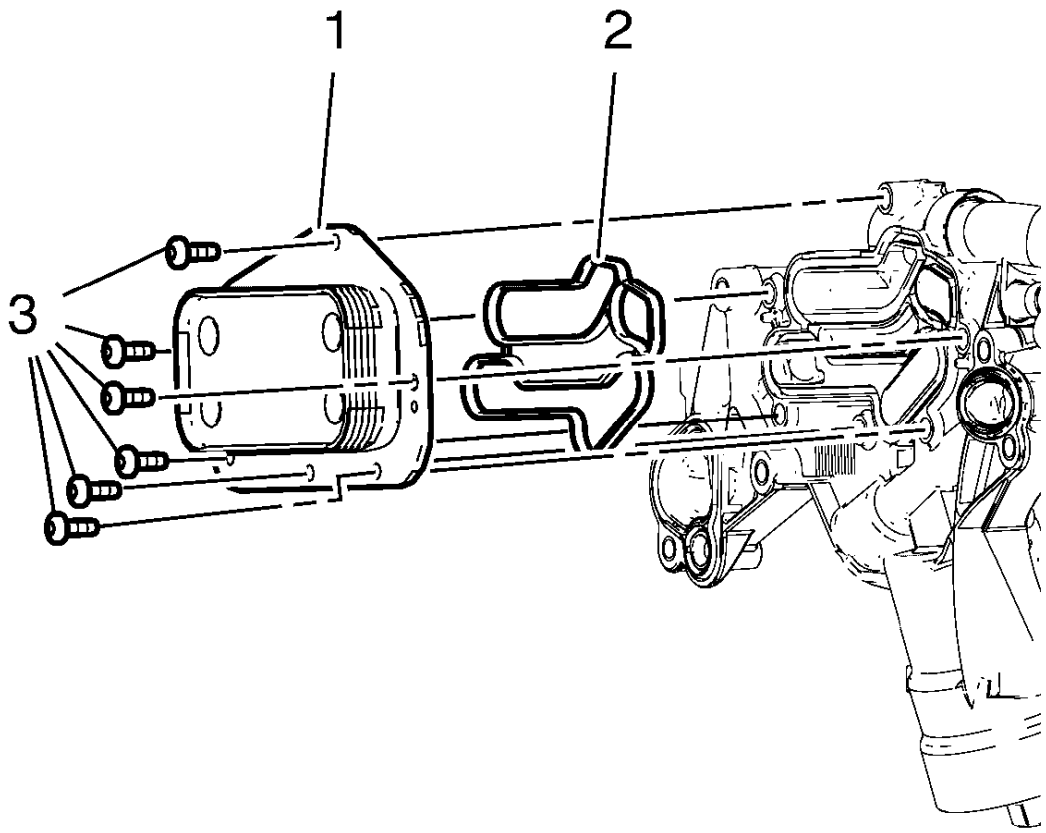

Fig. 500: Engine Oil Cooler
Courtesy of GENERAL MOTORS COMPANY

2. Install the NEW engine oil cooler gasket (2) and the engine oil cooler (1) to the engine oil cooler housing.

CAUTION: Refer to Fastener Caution .

3. Install the 6 engine oil cooler bolts (3) and tighten to 8 N.m (71 lb in).

ENGINE OIL COOLER HOUSING INSTALLATION

1. Clean the engine oil cooler housing to thermostat housing sealing surfaces.

2. Install 2 NEW gaskets.

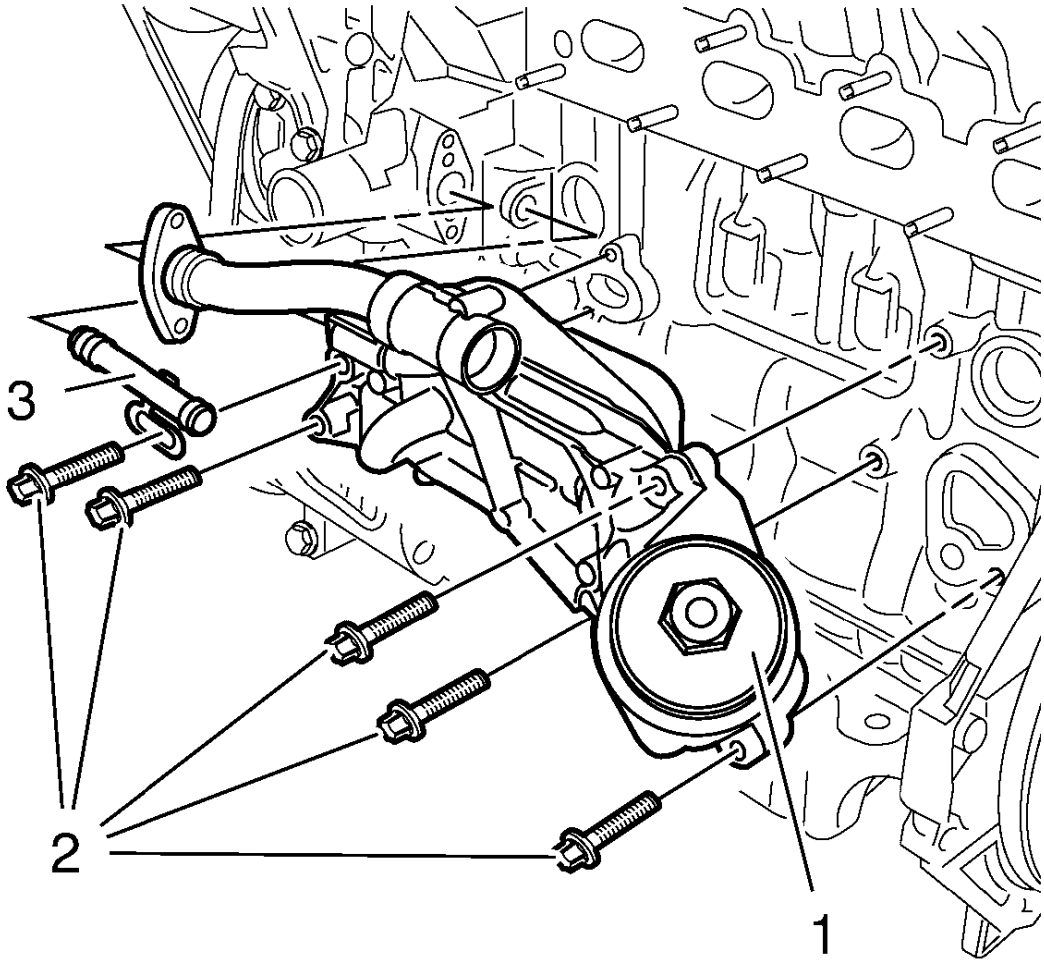

Fig. 501: Identifying Engine Oil Cooler Housing, Bolts And Engine Oil Cooler Inlet Pipe
Courtesy of GENERAL MOTORS COMPANY

3. Install the engine oil cooler inlet pipe (3).
4. Install the engine oil cooler housing (1) and the 5 engine oil cooler bolts (2) and tighten to 25 N.m (18 lb ft).

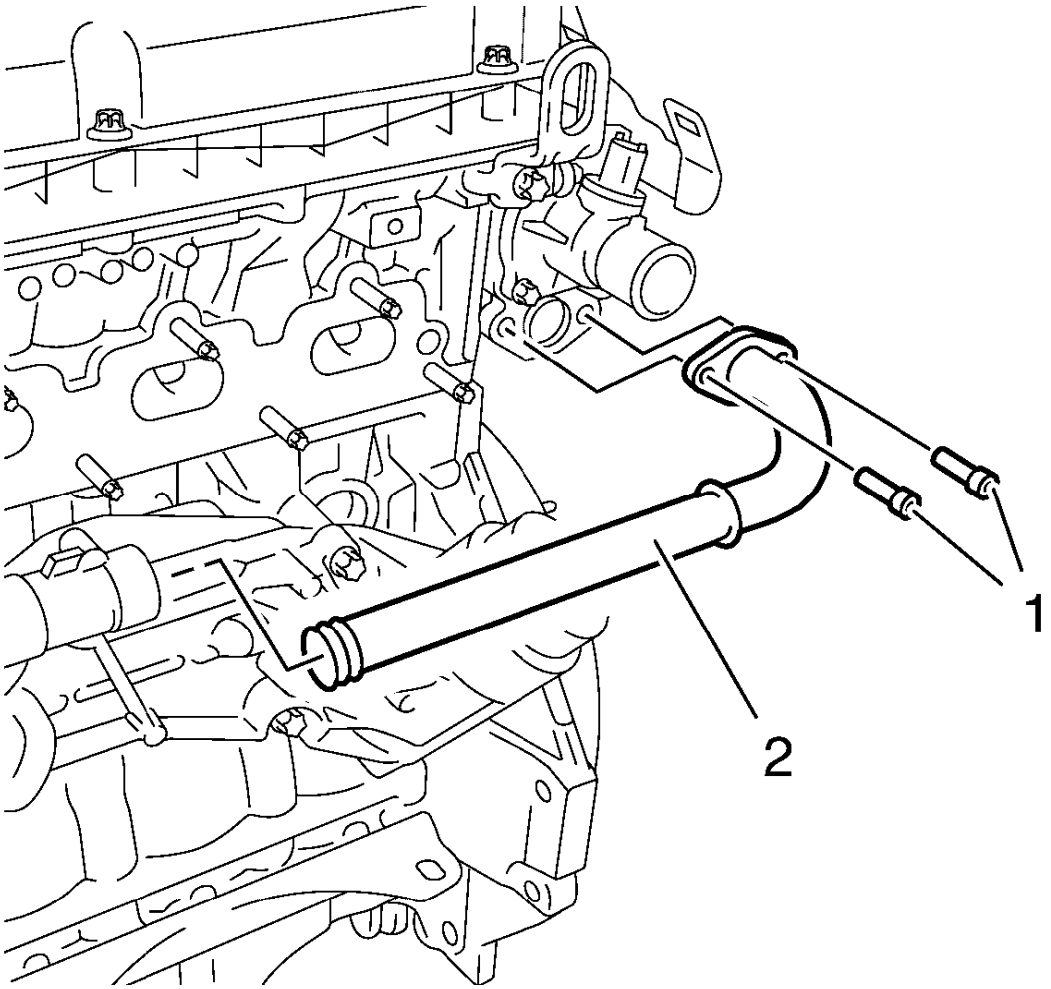

Fig. 502: Identifying Engine Oil Cooler Outlet Pipe And Bolts
Courtesy of GENERAL MOTORS COMPANY

5. Install the thermostat housing coolant pipe (2) to the engine oil cooler housing.
6. Install the 2 thermostat housing coolant pipe bolts (1) and tighten to 8 N.m (71 lb in).

ENGINE COOLANT THERMOSTAT HOUSING INSTALLATION

CAUTION: Refer to Engine Coolant Thermostat Housing Caution .

1. Clean sealing surface.
2. Install a NEW engine coolant thermostat housing seal.

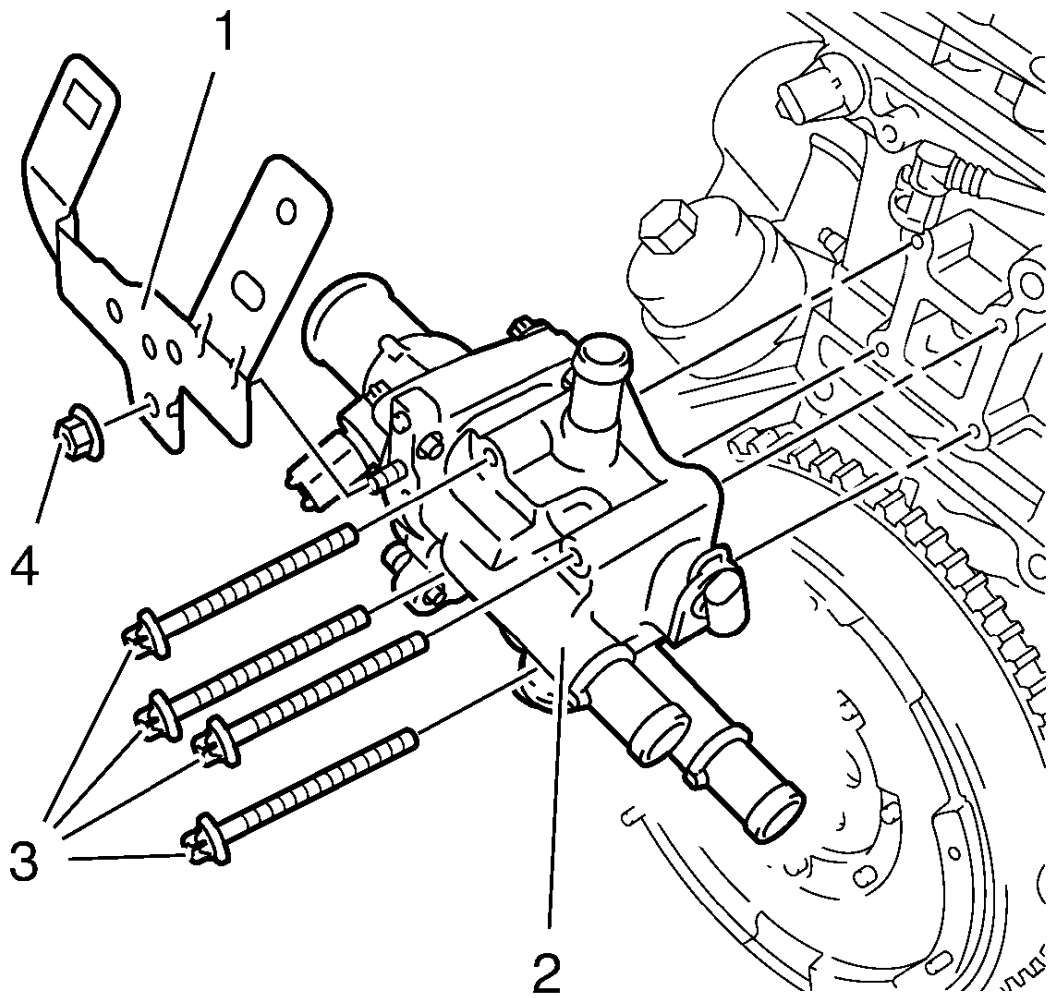

Fig. 503: Engine Coolant Thermostat Housing
Courtesy of GENERAL MOTORS COMPANY

3. Install the engine coolant thermostat housing (2).

CAUTION: Refer to Fastener Caution .

NOTE: Screw in the 4 bolts until the engine coolant thermostat housing is in contact with the cylinder head.

4. Install the 4 engine coolant thermostat housing bolts (3) and tighten to 2 N.m (18 lb in).

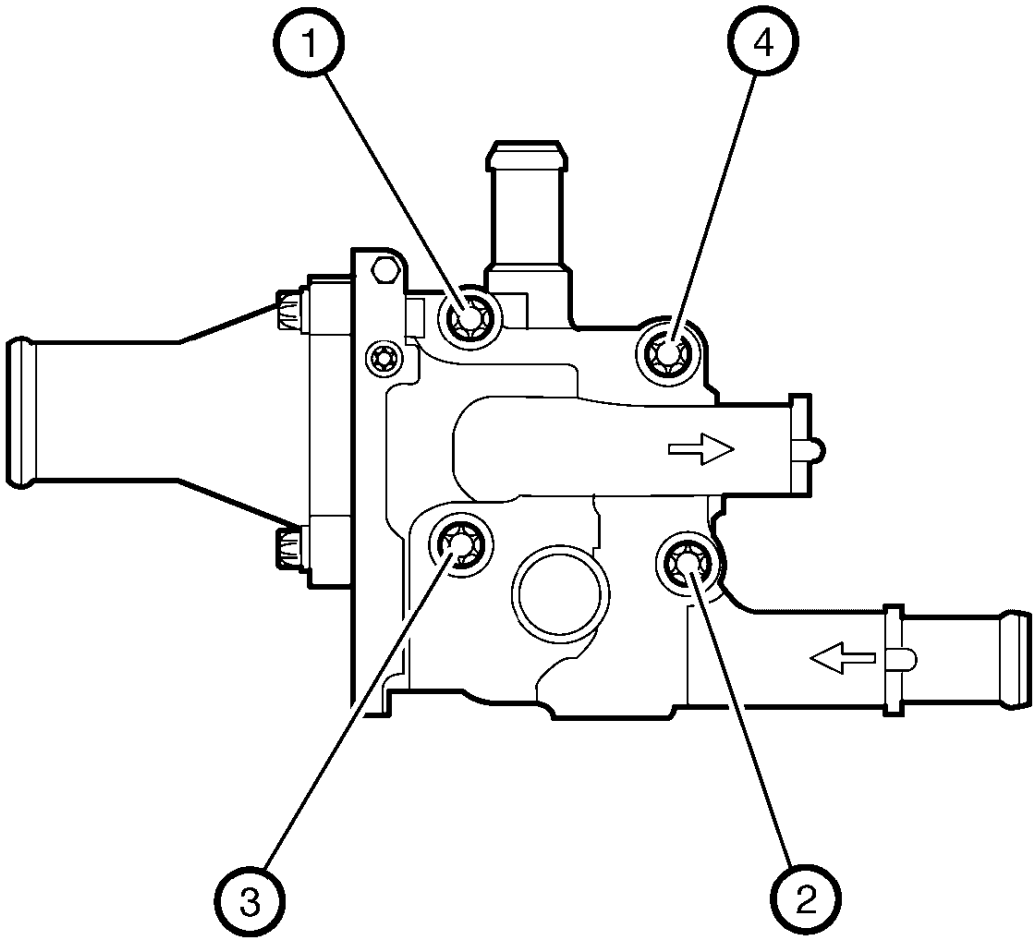

Fig. 504: Identifying Engine Coolant Thermostat Housing Bolts Tightening Sequence
Courtesy of GENERAL MOTORS COMPANY

CAUTION: Following the proper fastener tightening sequence and torque is essential. Failure to do so may fracture the thermostat housing.

5. Tighten the 4 engine coolant thermostat housing bolts to 8 N.m (71 lb in) in sequence (1-2-3-4).

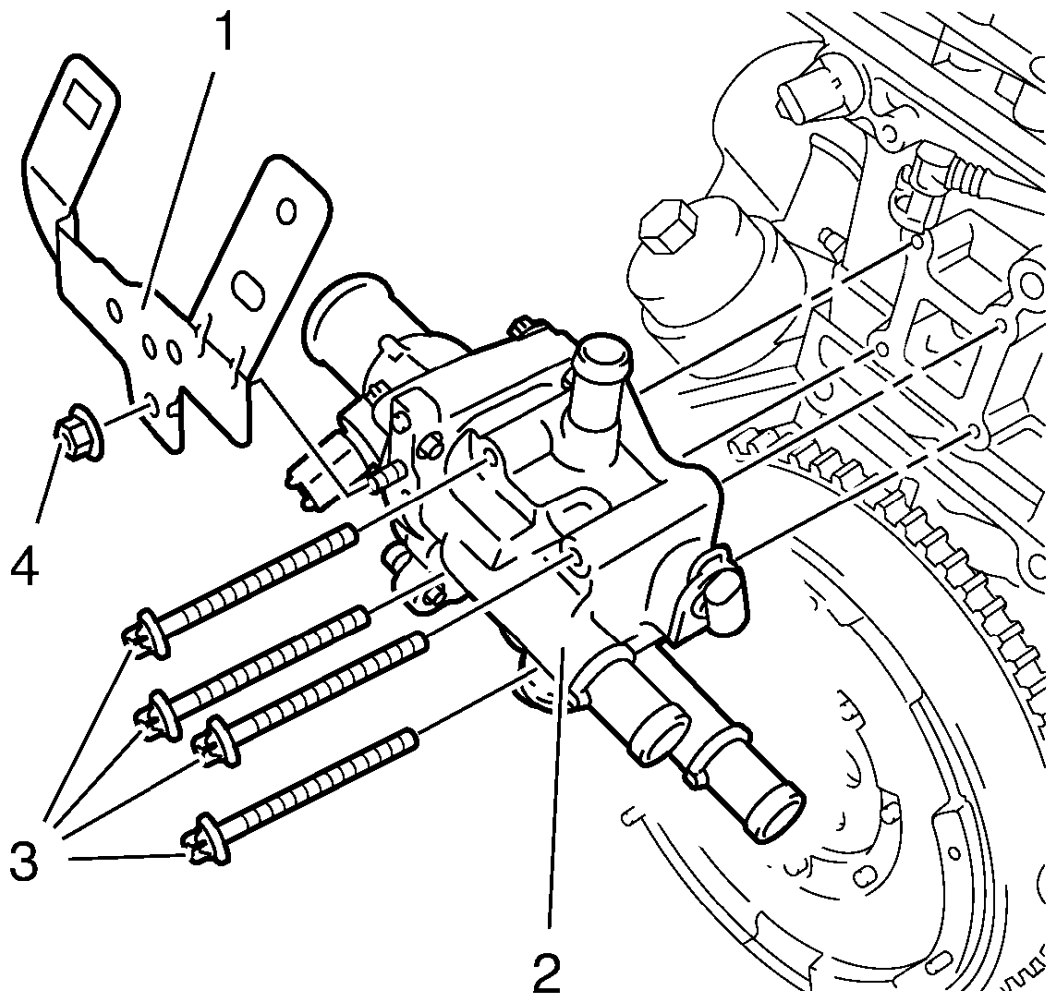

Fig. 505: Engine Coolant Thermostat Housing
Courtesy of GENERAL MOTORS COMPANY

6. Install the engine coolant thermostat housing retainer (1).
7. Install the engine coolant thermostat housing retainer nut (4) and tighten to 6 N.m (53 lb in).

ENGINE COOLANT THERMOSTAT INSTALLATION

CAUTION: Refer to Engine Coolant Thermostat Housing Caution .

1. Clean the engine coolant sealing surfaces.

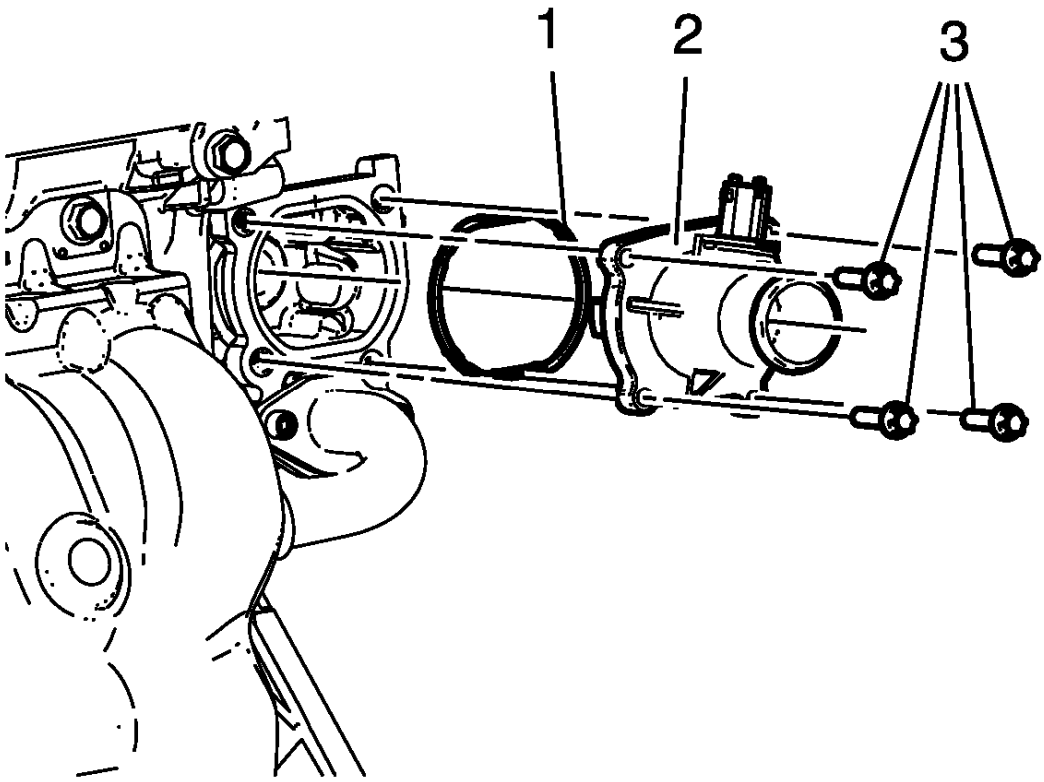

Fig. 506: Identifying Engine Coolant Thermostat Assembly
Courtesy of GENERAL MOTORS COMPANY

2. Install the engine coolant seal (1).
3. Install the engine coolant thermostat assembly (2).

CAUTION: Refer to Fastener Caution .

4. Install the 4 engine coolant thermostat bolts (3) and tighten to 8 N.m (71 lb in).

EXHAUST MANIFOLD INSTALLATION

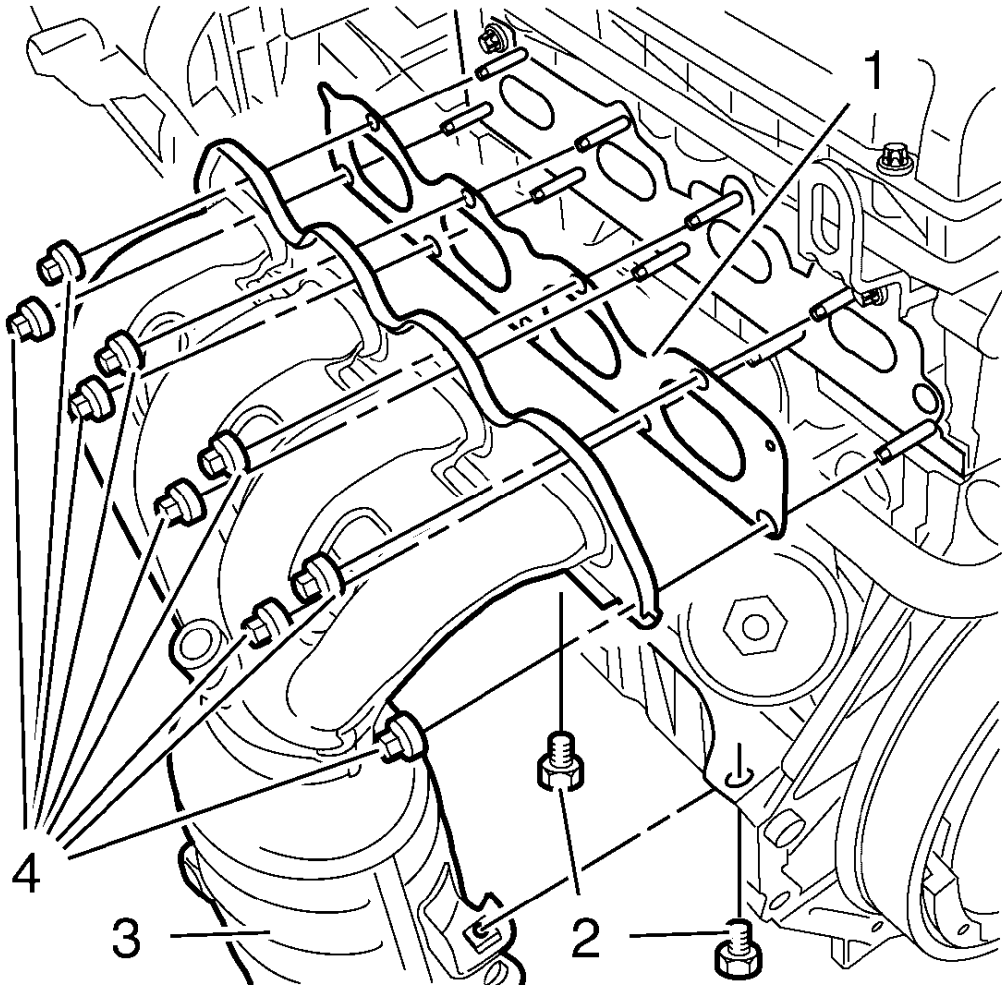

Fig. 507: Exhaust Manifold And Bolts
Courtesy of GENERAL MOTORS COMPANY

1. Clean the exhaust manifold sealing surface.
2. Install a NEW exhaust manifold gasket (1) to the cylinder head.

CAUTION: Refer to Fastener Caution .

CAUTION: Refer to Torque-to-Yield Fastener Caution .

3. Install the exhaust manifold (3) and tighten the NEW nuts (4) to 20 N.m (15 lb ft).
4. Install the 2 exhaust manifold bracket bolts (2) to 20 N.m (15 lb ft).

OIL LEVEL INDICATOR AND TUBE INSTALLATION

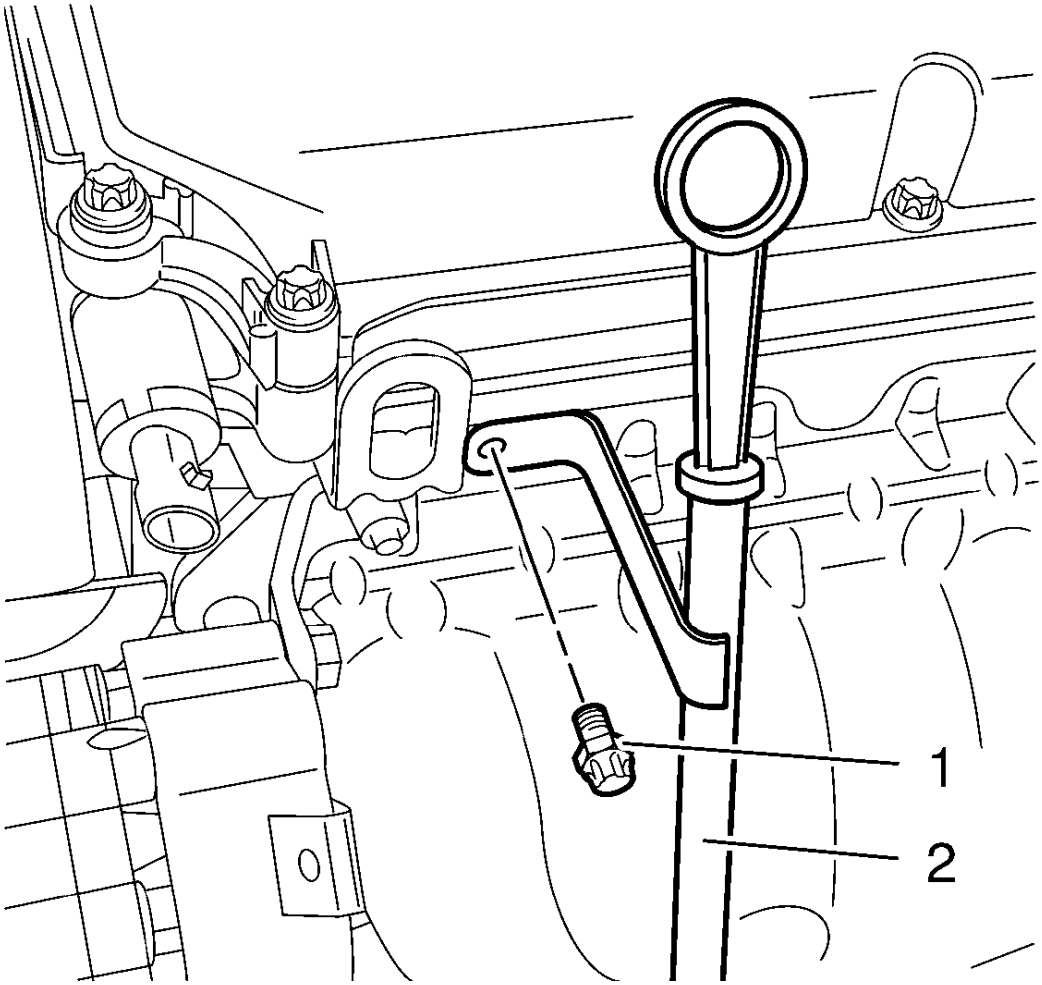

Fig. 508: Oil Level Indicator Tube And Bolt
Courtesy of GENERAL MOTORS COMPANY

1. Install a NEW oil level indicator tube gasket.
2. Install the oil level indicator tube (2).

CAUTION: Refer to Fastener Caution .

3. Install the oil level indicator tube bolt (1) and tighten to 15 N.m (11 lb ft).
4. Install the oil dipstick.

INTAKE MANIFOLD INSTALLATION

1. Clean the sealing surfaces.
2. Install 4 NEW gaskets.

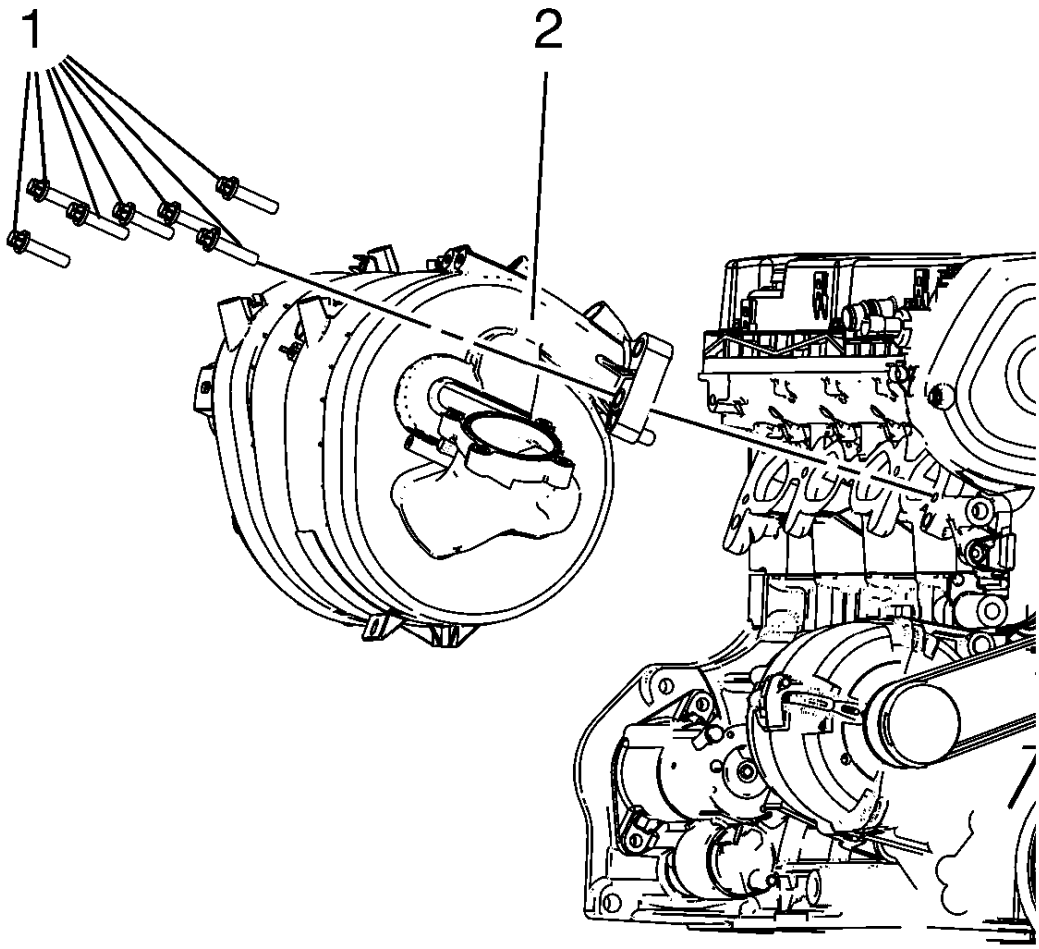

Fig. 509: Intake Manifold And Bolts
Courtesy of GENERAL MOTORS COMPANY

CAUTION: Refer to Fastener Caution .

3. Install the intake manifold (2) and the 7 intake manifold bolts (1) and tighten to 20 N.m (15 lb ft).

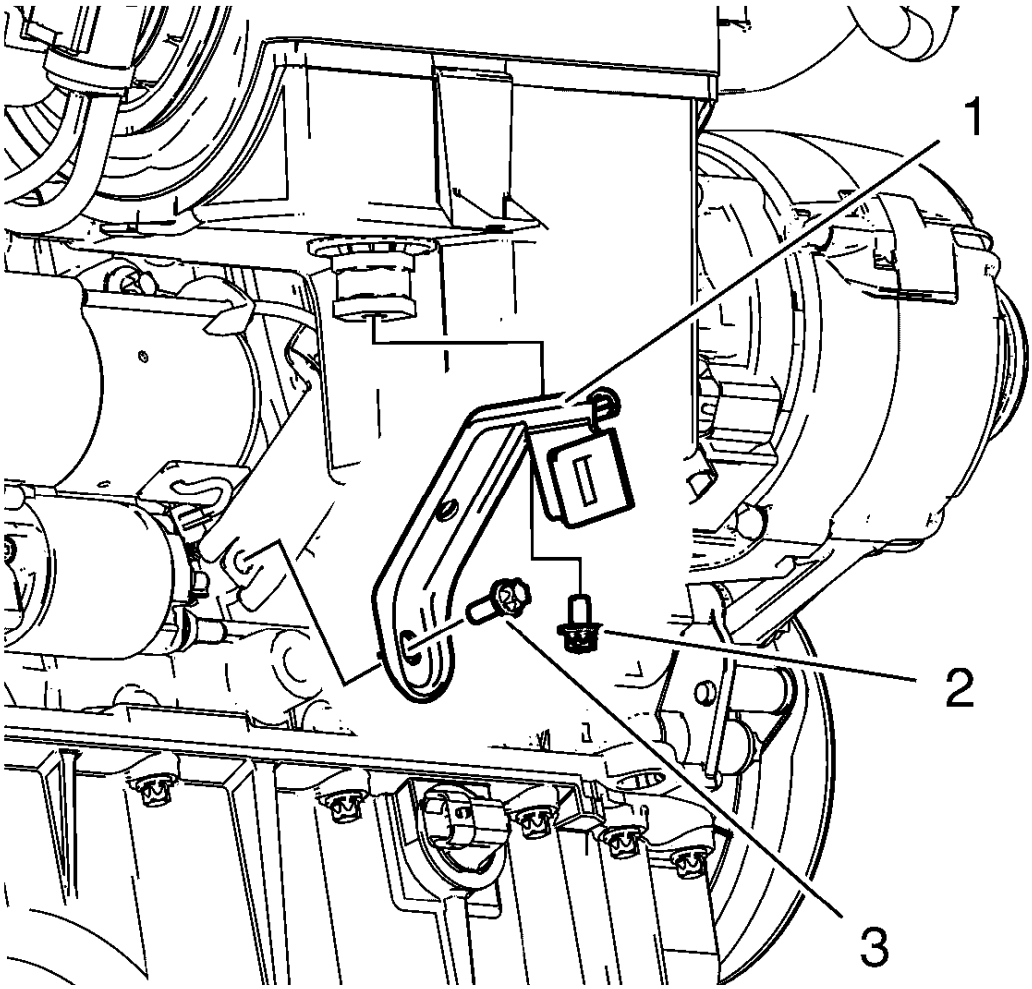

Fig. 510: Intake Manifold Bracket
Courtesy of GENERAL MOTORS COMPANY

4. Install the intake manifold brace (1).
5. Install the 2 intake manifold brace bolts (2, 3) and tighten to 8 N.m (71 lb in).

THROTTLE BODY ASSEMBLY INSTALLATION

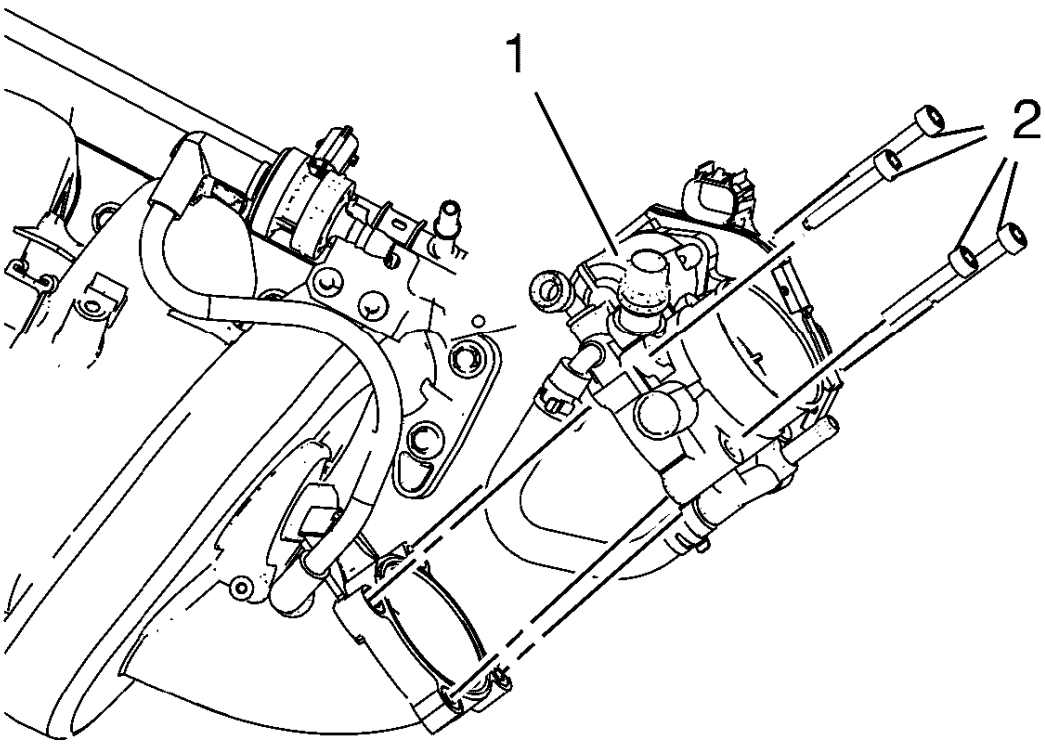

Fig. 511: Throttle Body And Bolts
Courtesy of GENERAL MOTORS COMPANY

1. Install a NEW throttle body seal.
2. Install the throttle body (1).

CAUTION: Refer to Fastener Caution .

3. Install the 4 throttle body bolts (2) and tighten to 8 N.m (71 lb in).

CRANKSHAFT FRONT OIL SEAL INSTALLATION

Special Tools

EN-6351 Mounting Sleeves

For equivalent regional tools, refer to **Special Tools**.

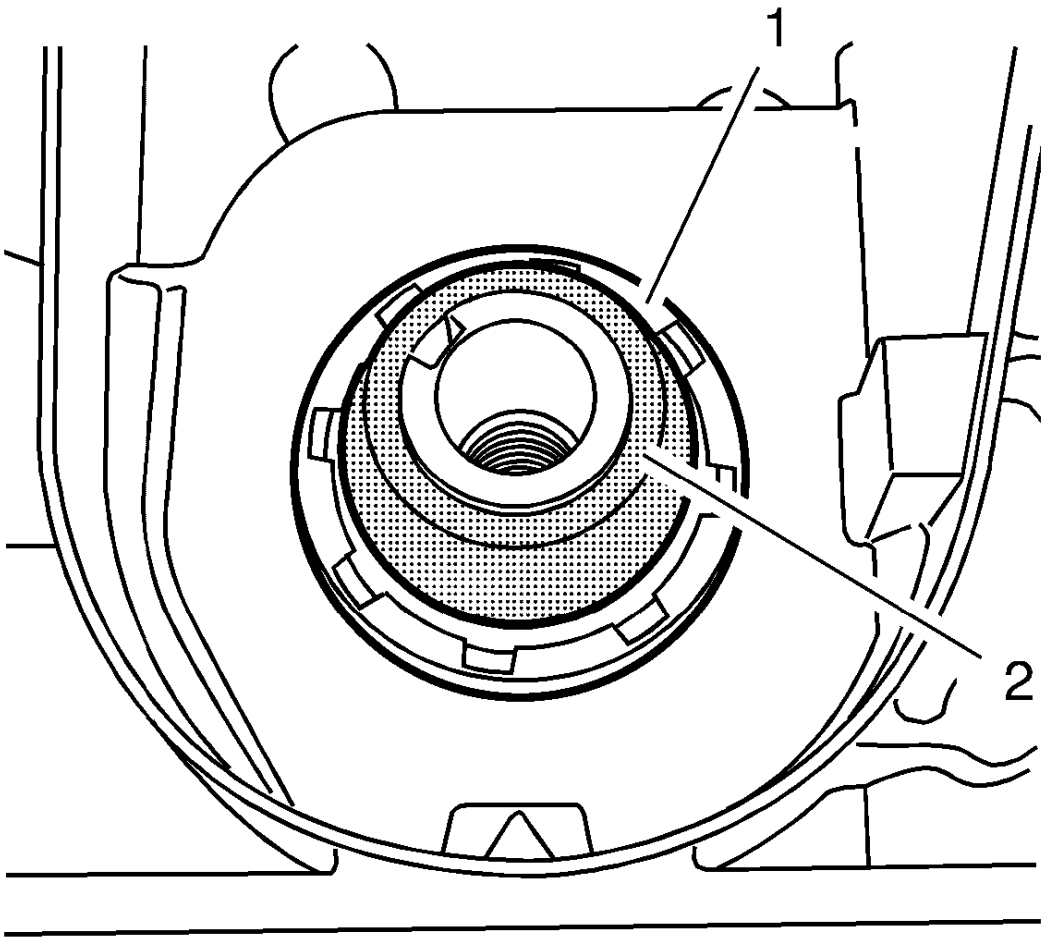

Fig. 512: Crankshaft And Crankshaft Front Oil Seal
Courtesy of GENERAL MOTORS COMPANY

1. Clean the sealing surfaces.
2. Slide the **EN-6351** sleeves (2) protective sleeve onto the crankshaft journal.
3. Slide the crankshaft front oil seal (1) over the protective sleeve on the crankshaft journal.

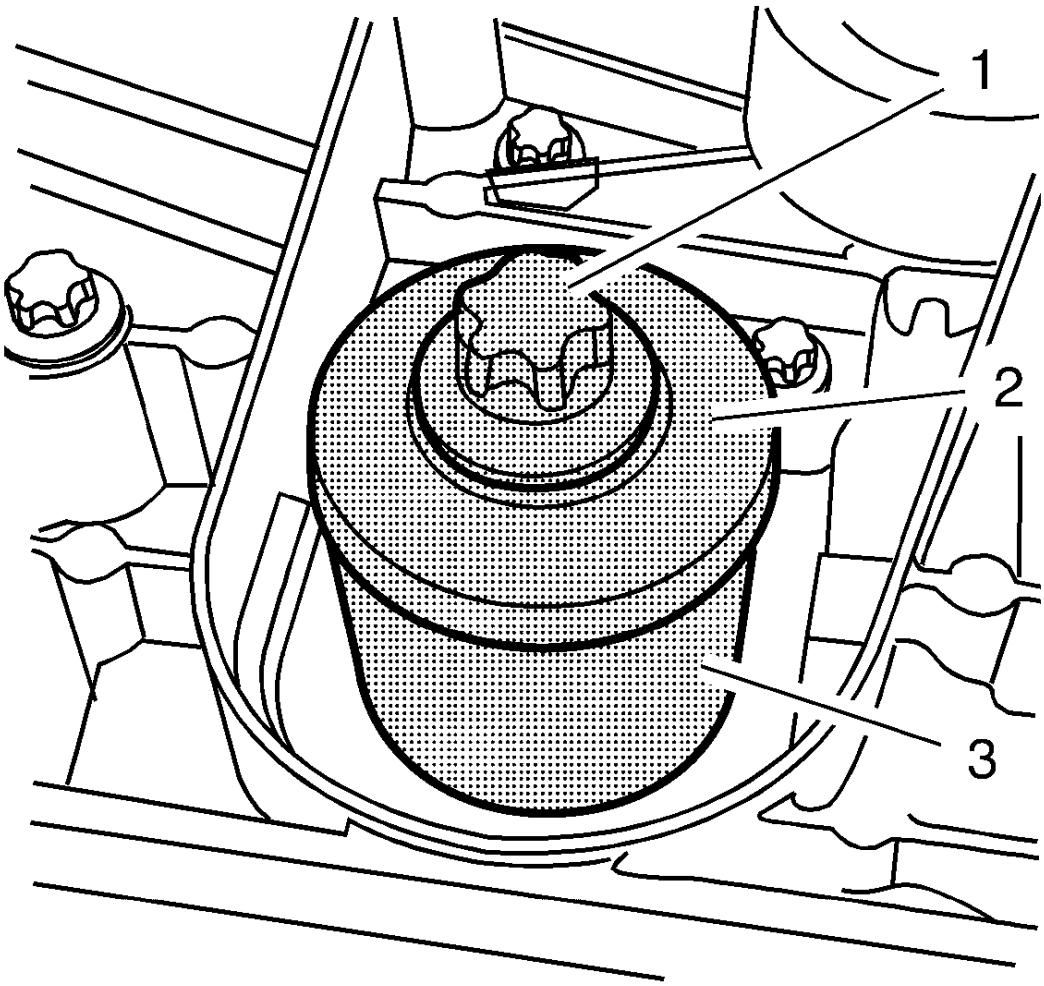

Fig. 513: Crankshaft Drive Gear Bolt, Washer And Sleeves
Courtesy of GENERAL MOTORS COMPANY

4. Remove the protective sleeve, and using the **EN-6351** sleeves (3), press the seal ring into the pump housing.
5. Use the crankshaft drive gear bolt (1) and washer (2) to press in the crankshaft front oil seal.

TIMING BELT REAR COVER INSTALLATION

1. Re-cut the 4 rear timing belt cover threads.

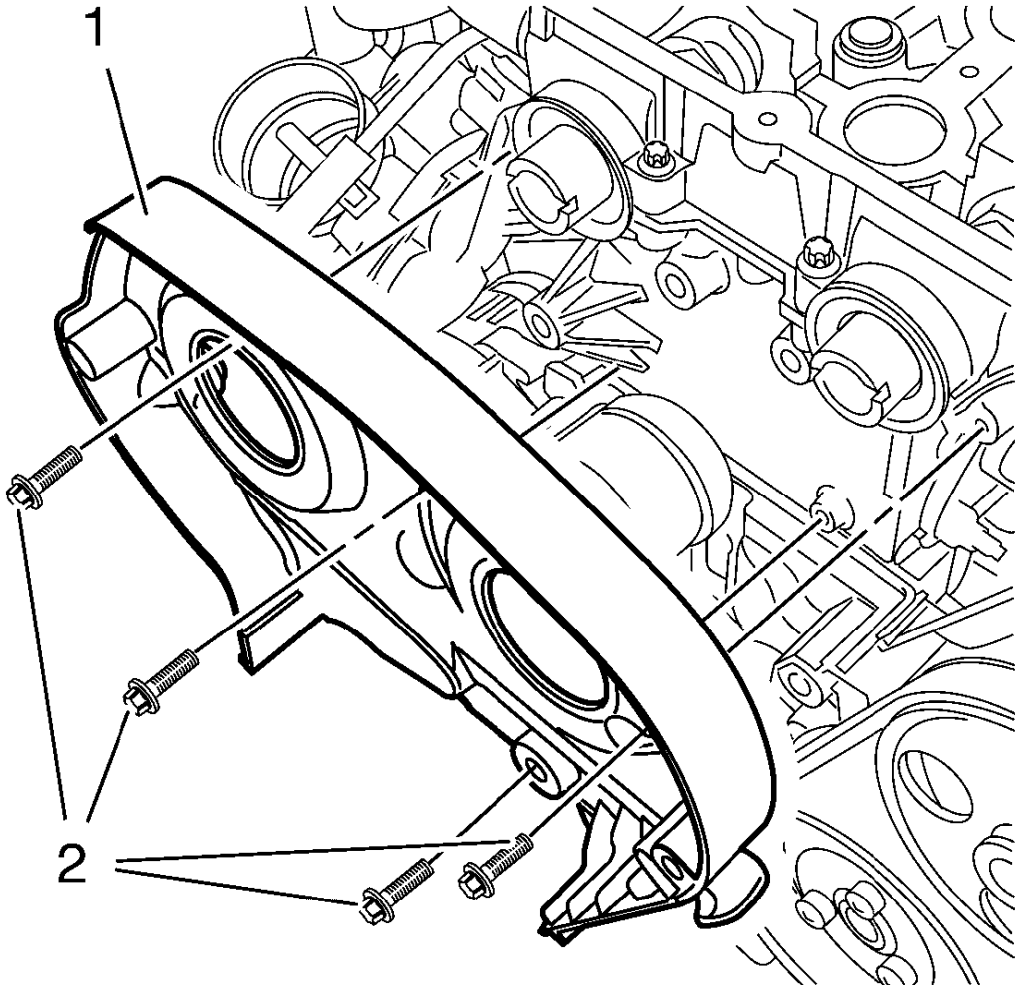

Fig. 514: Timing Belt Rear Cover And Bolts
Courtesy of GENERAL MOTORS COMPANY

2. Install the timing belt rear cover (1).

CAUTION: Refer to Fastener Caution .

NOTE: Service may offer bolts that are not microencapsulated. If this is the case apply thread lock agent to the bolt. If fastener is microencapsulated, install a NEW 4 timing belt rear cover bolts. DO NOT reuse the old bolt.

3. Install the 4 NEW timing belt rear cover bolts (2) and tighten to 6 N.m (53 lb in).

CAMSHAFT POSITION ACTUATOR ADJUSTER INSTALLATION

Special Tools

- **EN-6340** Camshaft Adjuster Locking Tool
- **EN-6628-A** Camshaft Locking Tool
- **EN-45059** Angle Meter

For equivalent regional tools, refer to **Special Tools**.

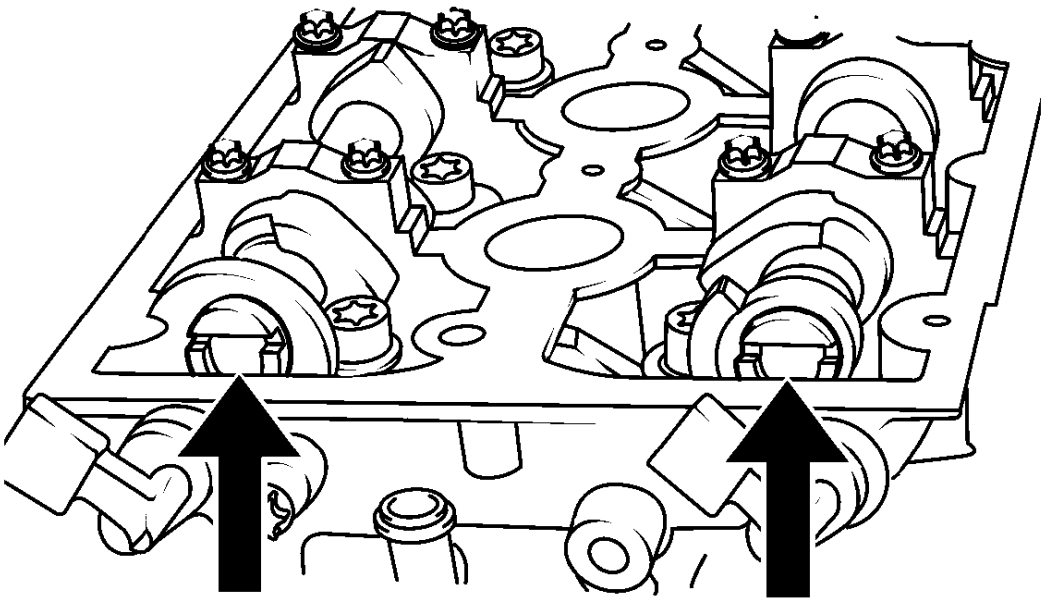

Fig. 515: Aligning Camshafts Horizontally
Courtesy of GENERAL MOTORS COMPANY

NOTE: Note the arrows.

1. Turn the camshaft by the hexagon until the groove on the end of the camshafts is horizontal.

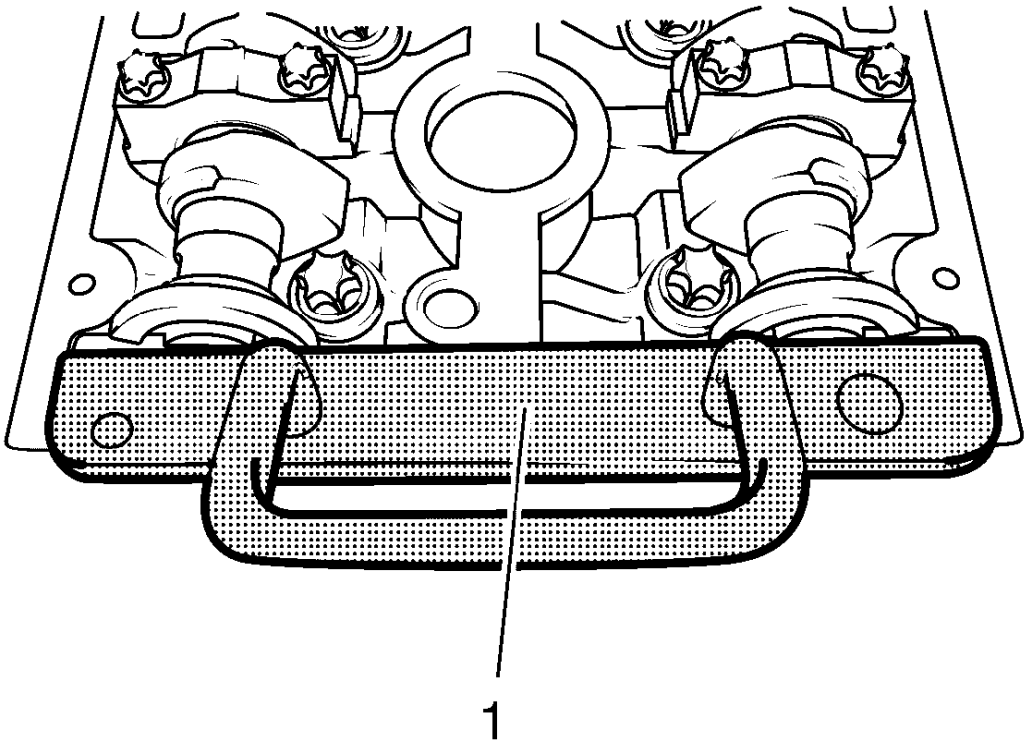

Fig. 516: Locking Tool
Courtesy of GENERAL MOTORS COMPANY

2. Install the **EN-6628-A** locking tool (1).

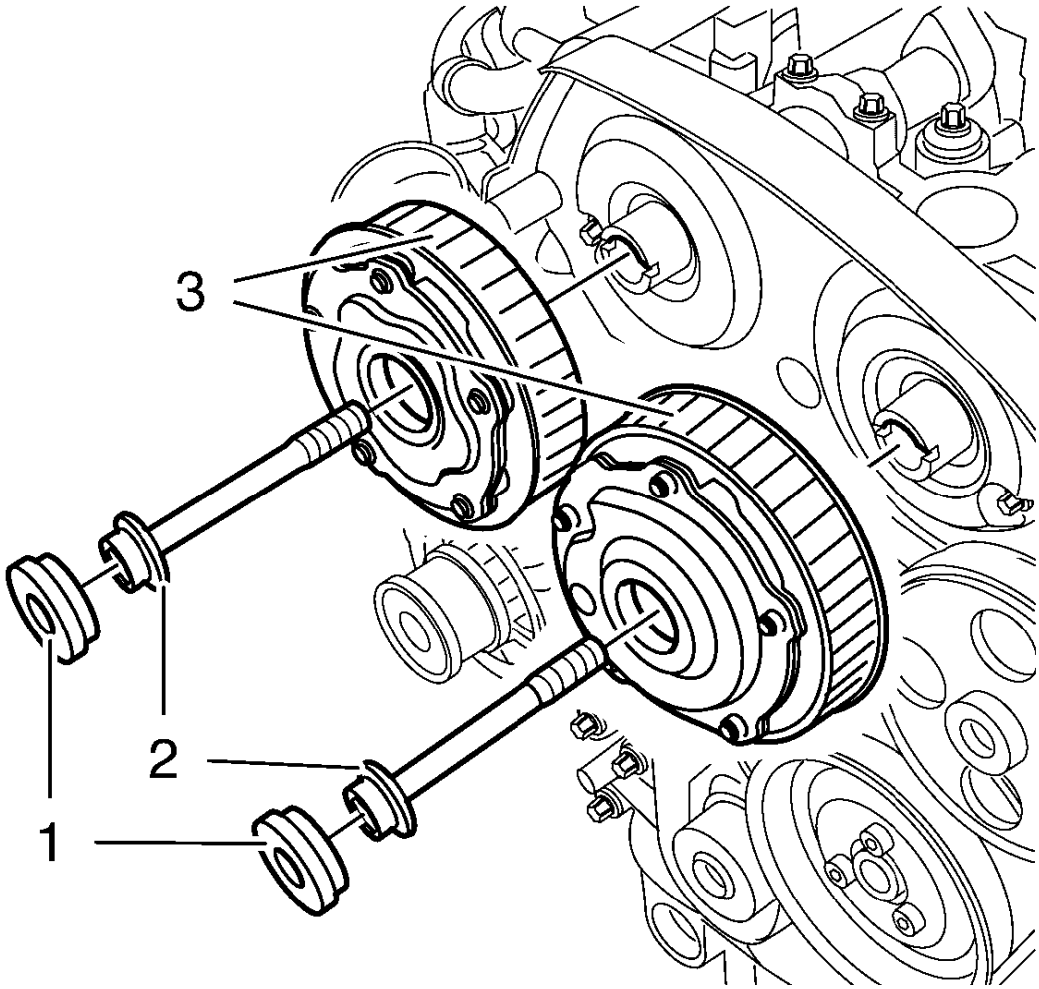

Fig. 517: Camshaft Position Actuator Adjuster Closure Bolt
Courtesy of GENERAL MOTORS COMPANY

NOTE: If the cover is contaminated with oil, you have to clean it close.

3. Install intake camshaft position actuator adjuster and/or the exhaust camshaft position actuator adjuster (3).
4. Install a NEW intake camshaft position actuator adjuster bolt and/or a NEW exhaust camshaft position actuator adjuster bolt (2). DO NOT tighten the bolts yet.

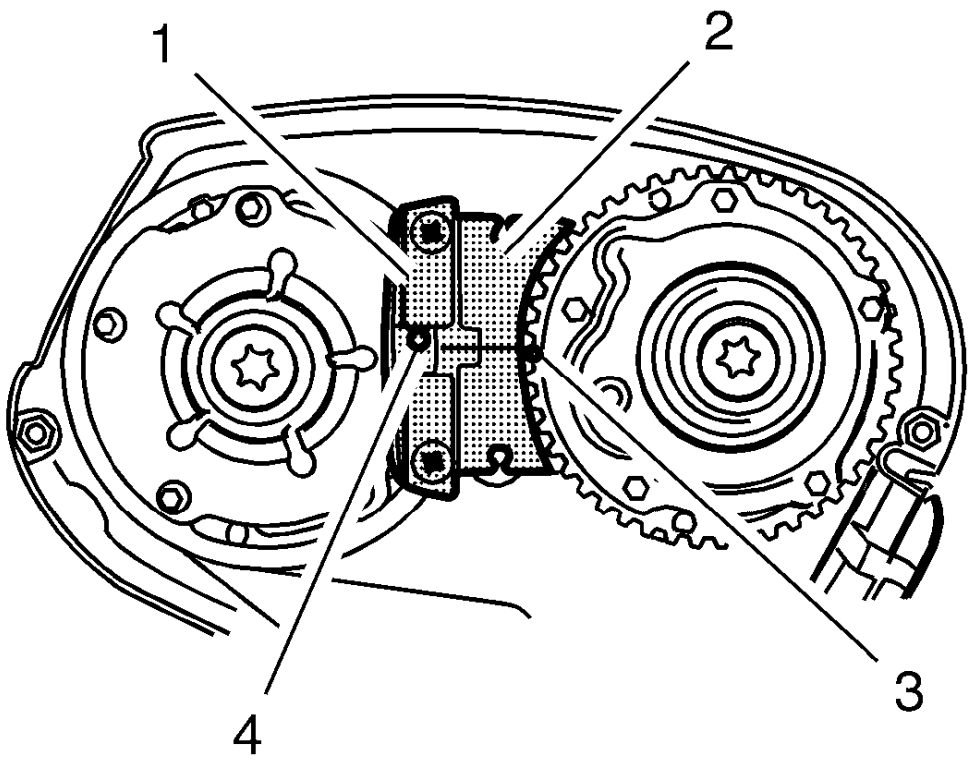

Fig. 518: Spot Type Markings And Special Tool
Courtesy of GENERAL MOTORS COMPANY

5. Install the **EN-6340** locking tool into the camshaft position actuator adjusters.

NOTE: The spot type marking (4) on the intake camshaft position actuator adjuster does not correspond to the groove of EN-6340-left locking tool - left during this process but must be somewhat above as shown.

1. Install the **EN-6340-left** locking tool (1) in the camshaft position actuator adjusters as shown.

NOTE: The spot type marking (3) on the exhaust camshaft position actuator adjuster must correspond to the groove on EN-6340-left locking tool - right.

2. Install the **EN-6340-right** locking tool (2) in the camshaft position actuator adjusters as shown.

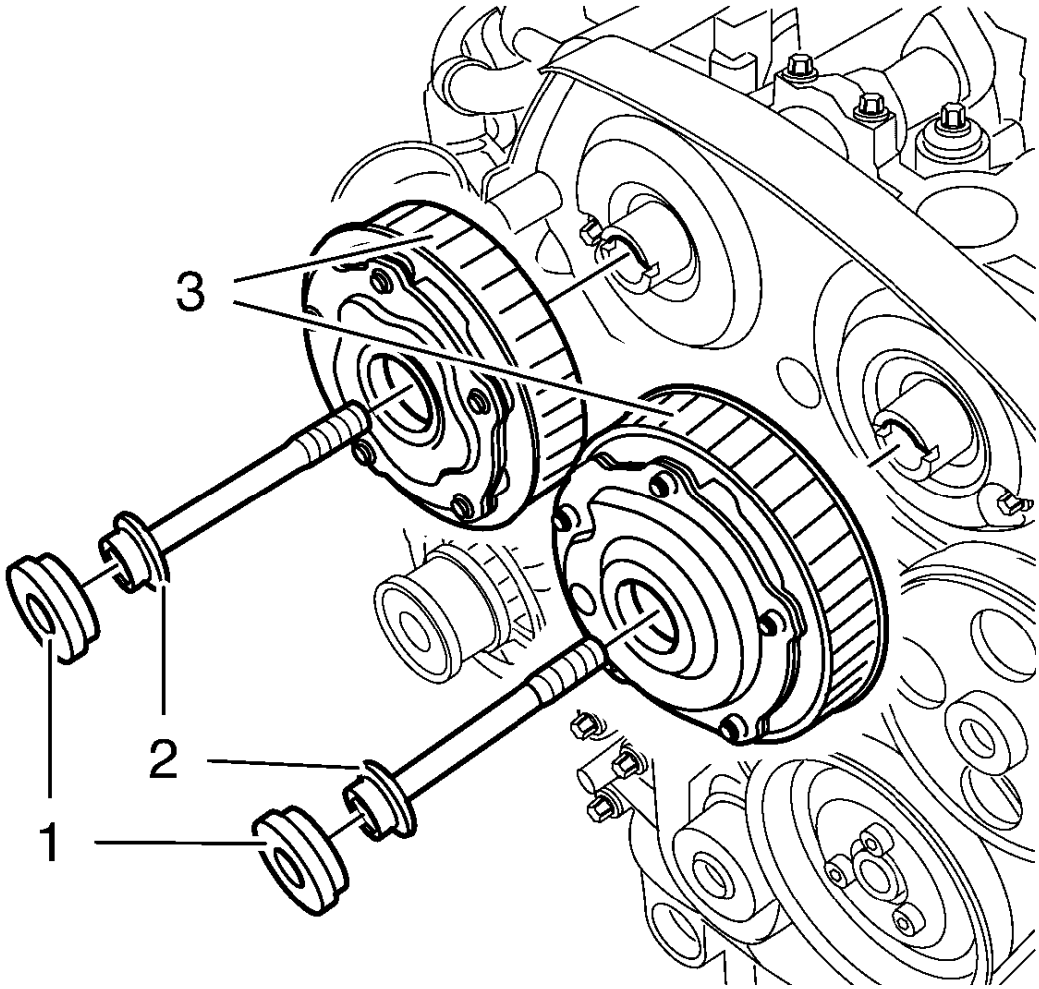

Fig. 519: Camshaft Position Actuator Adjuster Closure Bolt
Courtesy of GENERAL MOTORS COMPANY

CAUTION: Refer to Fastener Caution .

CAUTION: Refer to Torque-to-Yield Fastener Caution .

NOTE: A second technician is required.

NOTE: Use an appropriate open-end wrench in order to counterhold the camshaft hexagon. A thin cross-section wrench is required for a better fit. The usage of EN-6628-A locking tool is for the camshaft adjustment to prevent misalignment of the camshafts. The wrench is required to counterhold the

camshafts during bolt torque procedure.

6. Install the camshaft position actuator adjuster bolts (2) and tighten the bolts in 3 passes using the **EN-45059** meter.
    1. First pass to 50 N.m (37 lb ft)
    2. Second pass to an additional 150 degrees
    3. Final pass to an additional 15 degrees

NOTE: Check the closure bolt seal ring.

7. Install the 2 camshaft position actuator adjuster closure plugs (1) and tighten to 30 N.m (22 lb ft).
8. Remove the **EN-6628-A** locking tool.
9. After the installation of the timing belt, rotate the engine 720 degrees and check the position of the crankshaft and camshafts, again. Refer to **Timing Belt Adjustment**.

CAMSHAFT POSITION ACTUATOR SOLENOID VALVE INSTALLATION

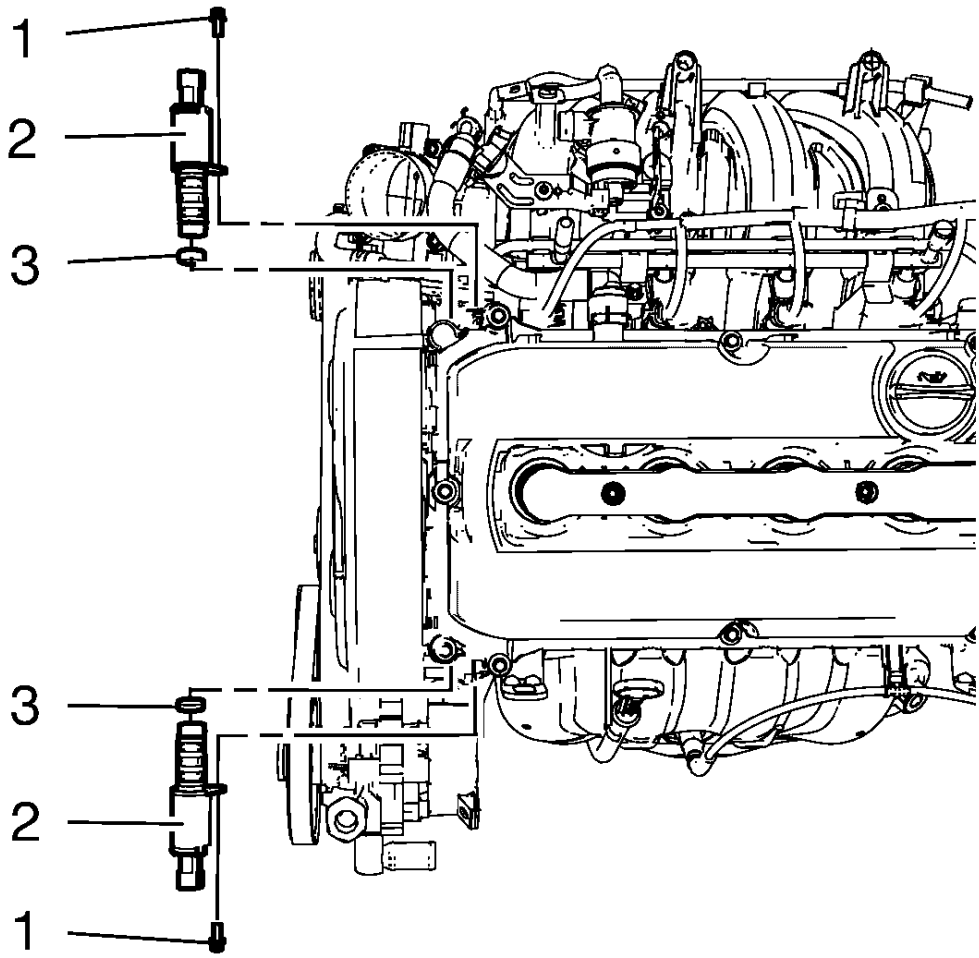

Fig. 520: Camshaft Position Actuator Solenoid Valves, Bolts And Seals
Courtesy of GENERAL MOTORS COMPANY

NOTE: Lubricate the NEW camshaft position actuator solenoid valve seals with NEW engine oil. Refer to Adhesives, Fluids, Lubricants, and Sealers.

1. Install NEW camshaft position actuator solenoid valve seals (3).
2. Install the camshaft position actuator solenoid valves (2).

CAUTION: Refer to Fastener Caution .

3. Install the camshaft position actuator solenoid valve bolts (1) and tighten to 6 N.m (53 lb in).

CRANKSHAFT SPROCKET INSTALLATION

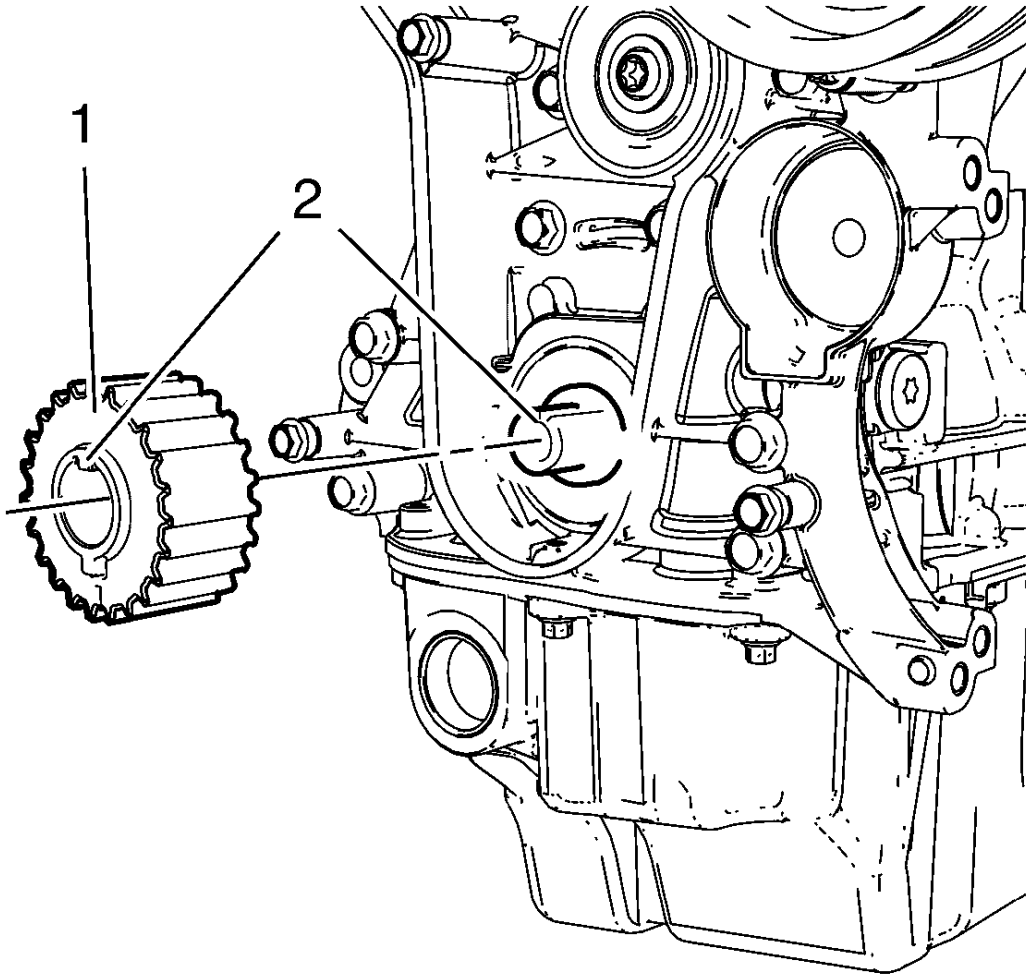

Fig. 521: Crankshaft Sprocket
Courtesy of GENERAL MOTORS COMPANY

NOTE: When installing the crankshaft sprocket, the cam and the groove must align (2).

Install the crankshaft sprocket (1).

TIMING BELT IDLER PULLEY INSTALLATION

Special Tools

EN-45059 Angle Meter

For equivalent tools, refer to **Special Tools**.

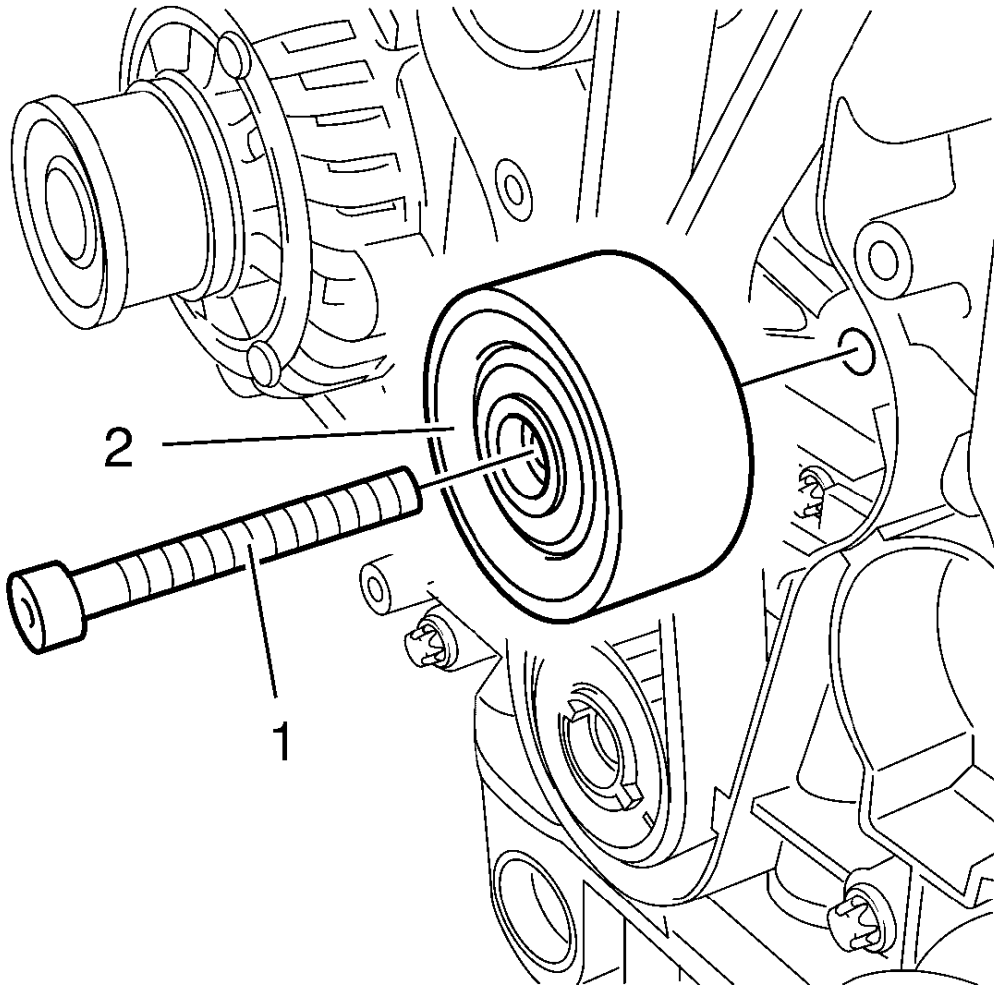

Fig. 522: Timing Belt Idler Pulley Bolt
Courtesy of GENERAL MOTORS COMPANY

CAUTION: Refer to Fastener Caution .

CAUTION: Refer to Torque-to-Yield Fastener Caution .

1. Install the timing belt idler pulley (1) and tighten the NEW bolt (2) in three passes use the **EN-45059** meter :
    1. First pass tighten to 20 N.m (15 lb ft).
    2. Second pass to 120 degrees.
    3. Final pass to 15 degrees.
2. Install the timing belt. Refer to **Timing Belt Replacement**.

TIMING BELT TENSIONER INSTALLATION

Special Tools

EN-45059 Angle Meter

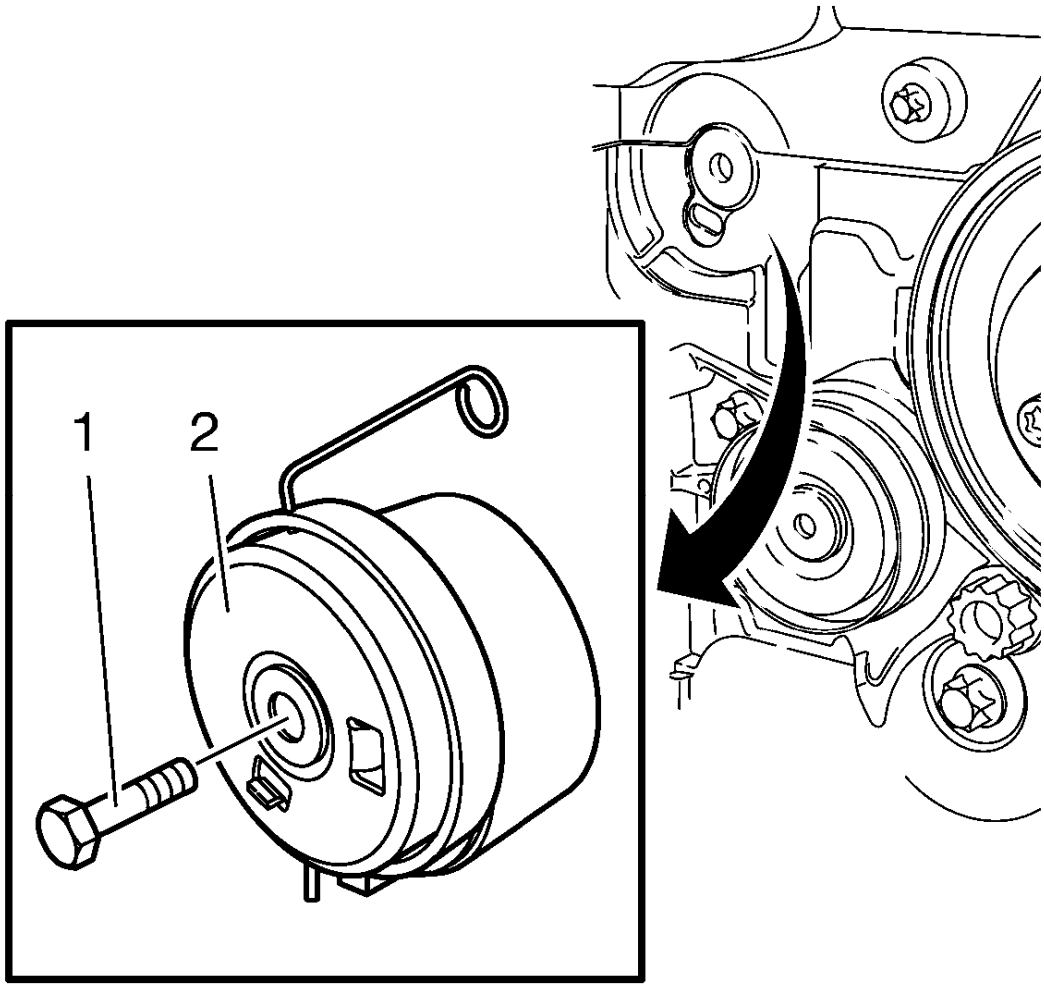

Fig. 523: Timing Belt Tensioner
Courtesy of GENERAL MOTORS COMPANY

1. Clean the timing belt tensioner thread.
2. Install the timing belt tensioner (2).

CAUTION: Refer to Fastener Caution .

CAUTION: Refer to Torque-to-Yield Fastener Caution .

3. Install a NEW timing belt tensioner bolt (1) and tighten the bolt in 3 passes using the **EN-45059** meter.
    1. First pass to 20 N.m (15 lb ft).
    2. Second pass to an additional 120 degrees.
    3. Final pass to an additional 15 degrees.

TIMING BELT INSTALLATION

Special Tools

- **EN-6333** Locking Pin
- **EN-6340** Locking Tool

For equivalent regional tools, refer to **Special Tools**.

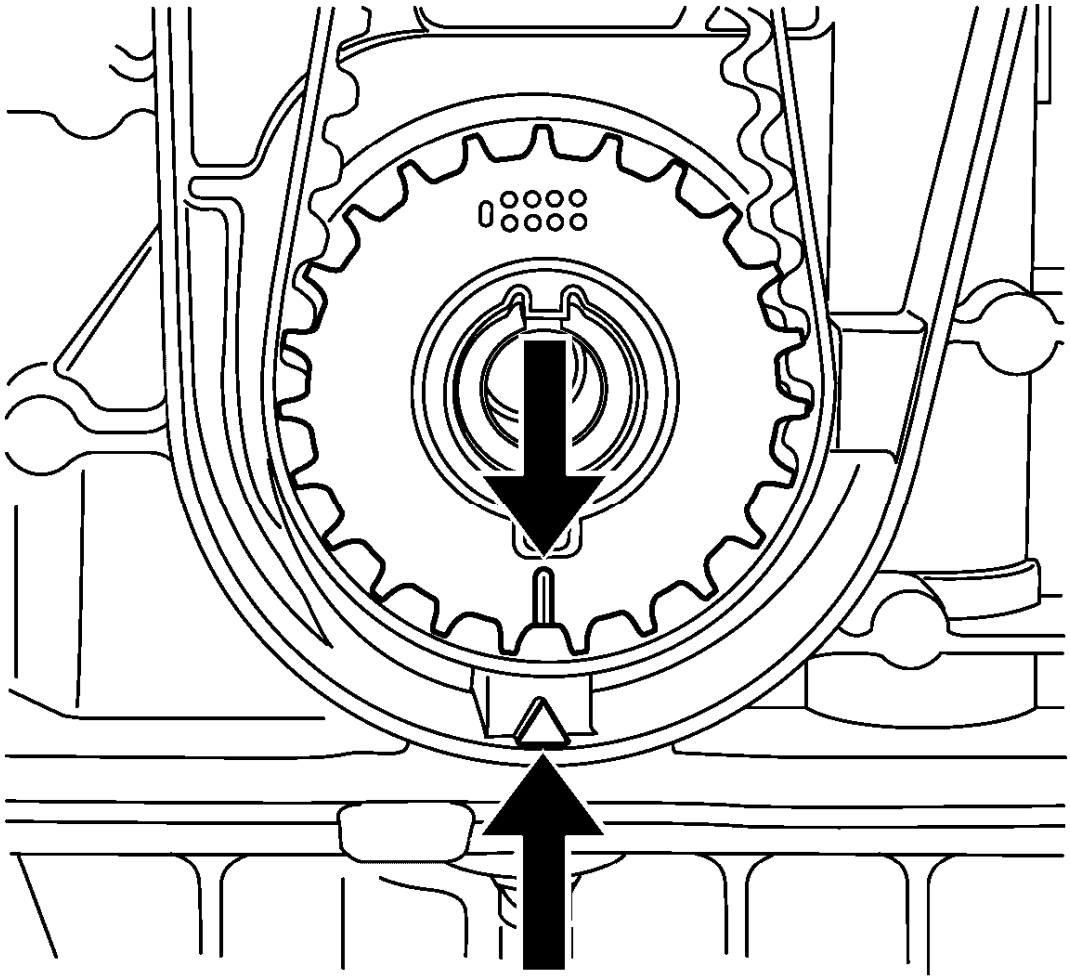

Fig. 524: Aligning Timing Belt Drive Gear And Oil Pump Housing
Courtesy of GENERAL MOTORS COMPANY

NOTE: The timing belt drive gear and oil pump housing must align.

1. Turn the crankshaft in the direction of engine rotation, by the crankshaft balancer bolt, to cylinder 1 TDC of combustion stroke.

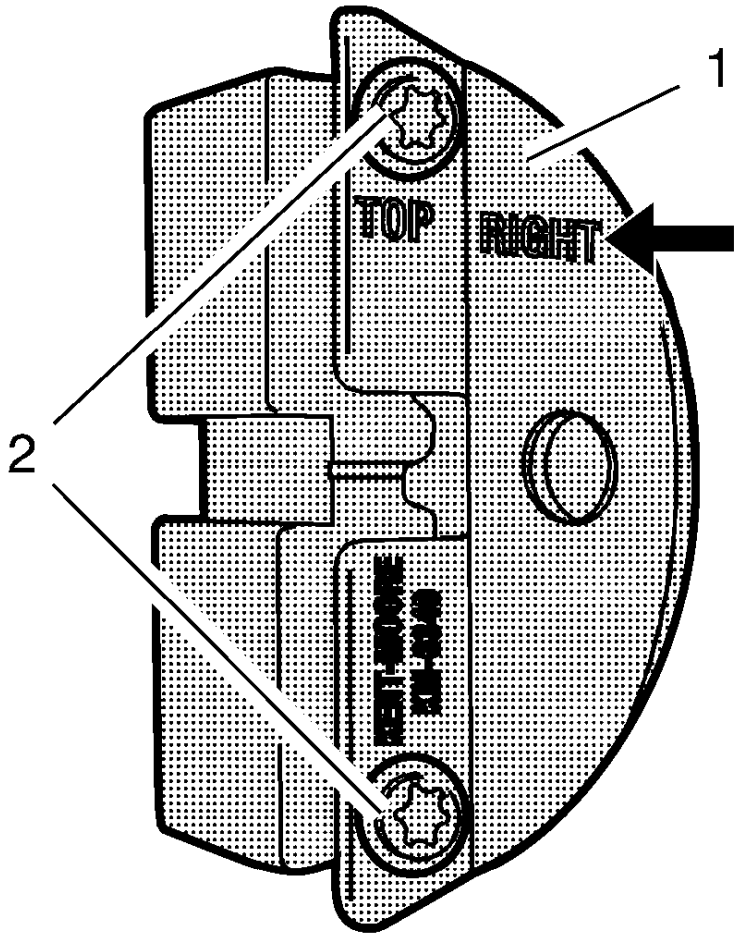

Fig. 525: Front Panel And Bolts
Courtesy of GENERAL MOTORS COMPANY

NOTE: The right half of the EN-6340 locking tool can be recognized by the lettering right, arrow, on the tool.

2. Prepare the right half of the **EN-6340** locking tool.
    1. Remove the 2 bolts (2).

2. Detach the front panel (1) from the **EN-6340** locking tool - right.

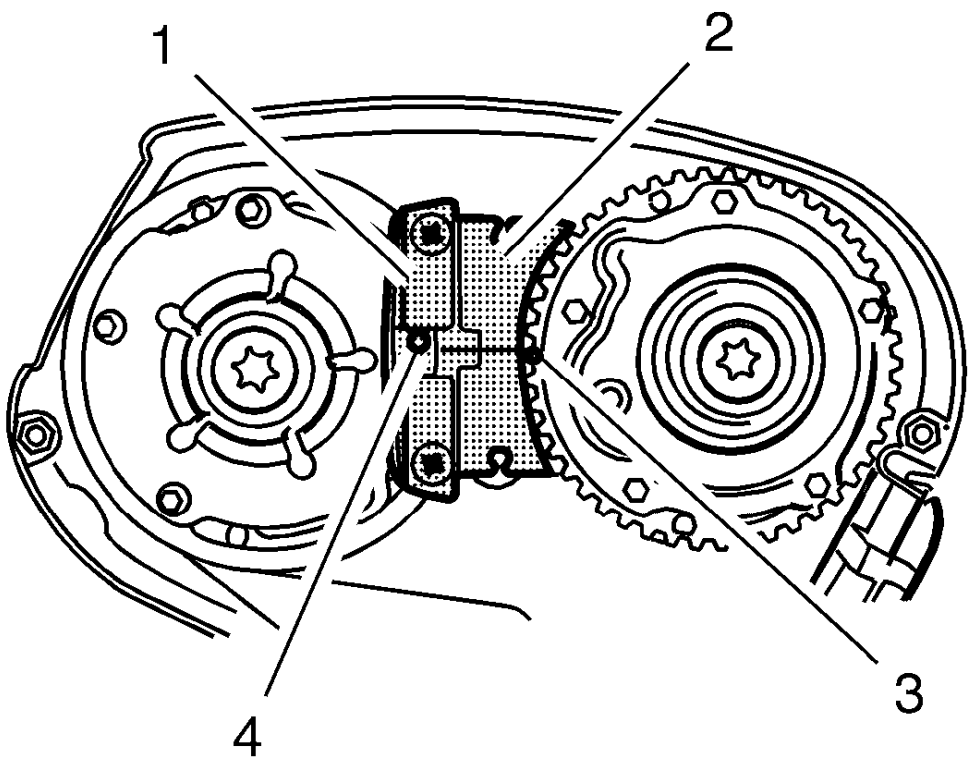

Fig. 526: Spot Type Markings And Special Tool
Courtesy of GENERAL MOTORS COMPANY

NOTE:

- **The spot type marking (4) on the intake camshaft adjuster does not correspond to the groove of the EN-6340 locking tool - left (1) during this process, but must be somewhat above.**
- **The spot type marking (3) on the exhaust camshaft adjuster must correspond to the groove on EN-6340 locking tool - right (2).**

3. Insert the **EN-6340** locking tool - left (1) and the **EN-6340** locking tool - right (2) in the camshaft adjuster.

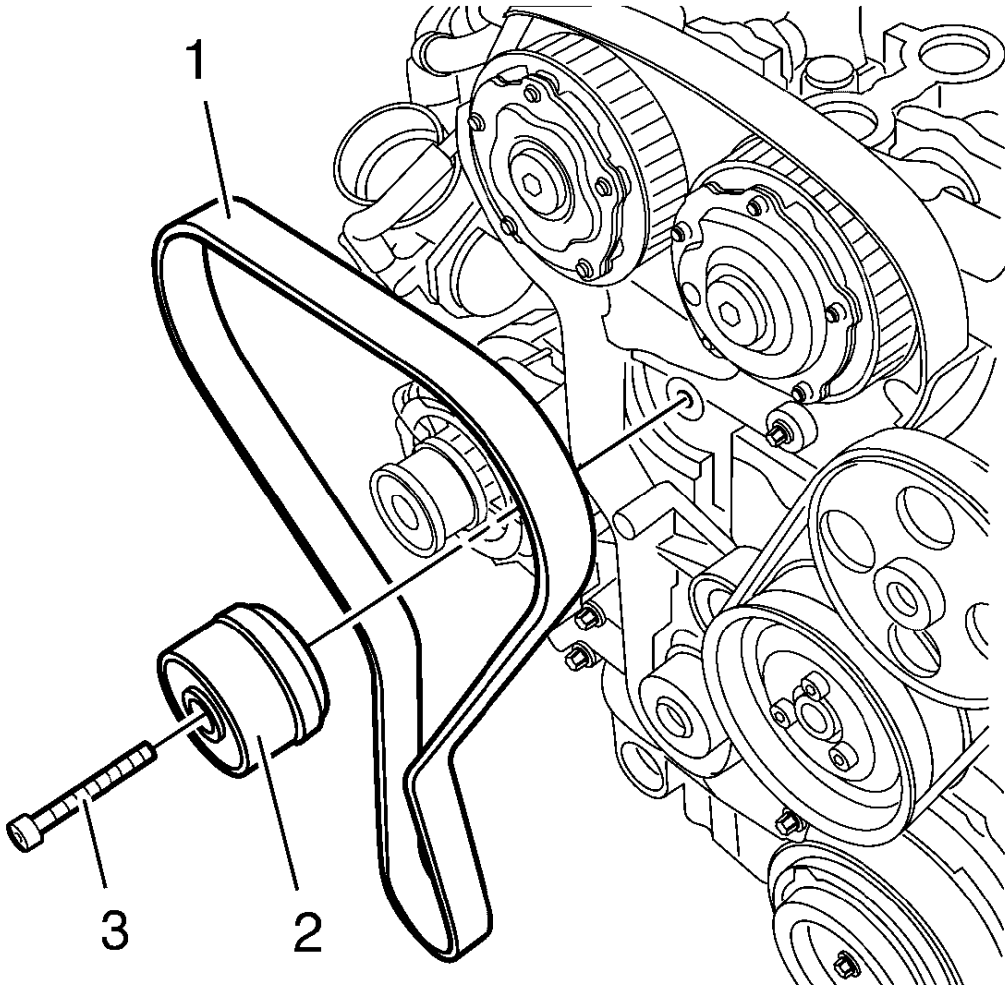

Fig. 527: Timing Belt, Timing Belt Tensioner
Courtesy of GENERAL MOTORS COMPANY

NOTE: Observe direction of rotation.

4. Insert the timing belt (1).

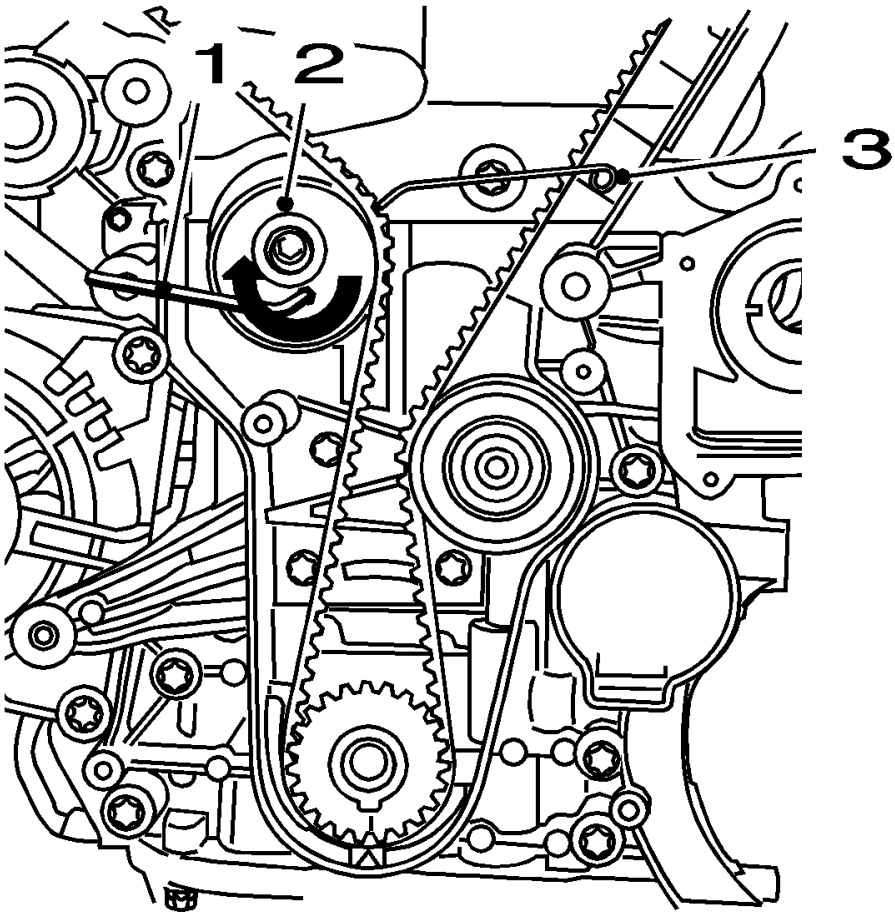

Fig. 528: View Of Drive Belt Tensioner, Allen Key And KM-6333
Courtesy of GENERAL MOTORS COMPANY

5. Apply tension to the timing belt tensioner (2) in the direction of the arrow, using an Allen key (1).
6. Remove the **EN-6333** locking pin (3).

NOTE: The timing belt tensioner moves automatically to the correct position.

7. Release tension on timing belt tensioner.
8. Remove the **EN-6340** locking tool.
9. Check position of the camshaft sprocket.
    1. Turn crankshaft 720° in the direction of engine rotation by the crankshaft balancer bolt.

NOTE: Note the marking on the camshaft sprocket.

    2. Insert **EN-6340** locking tool into camshaft sprockets.

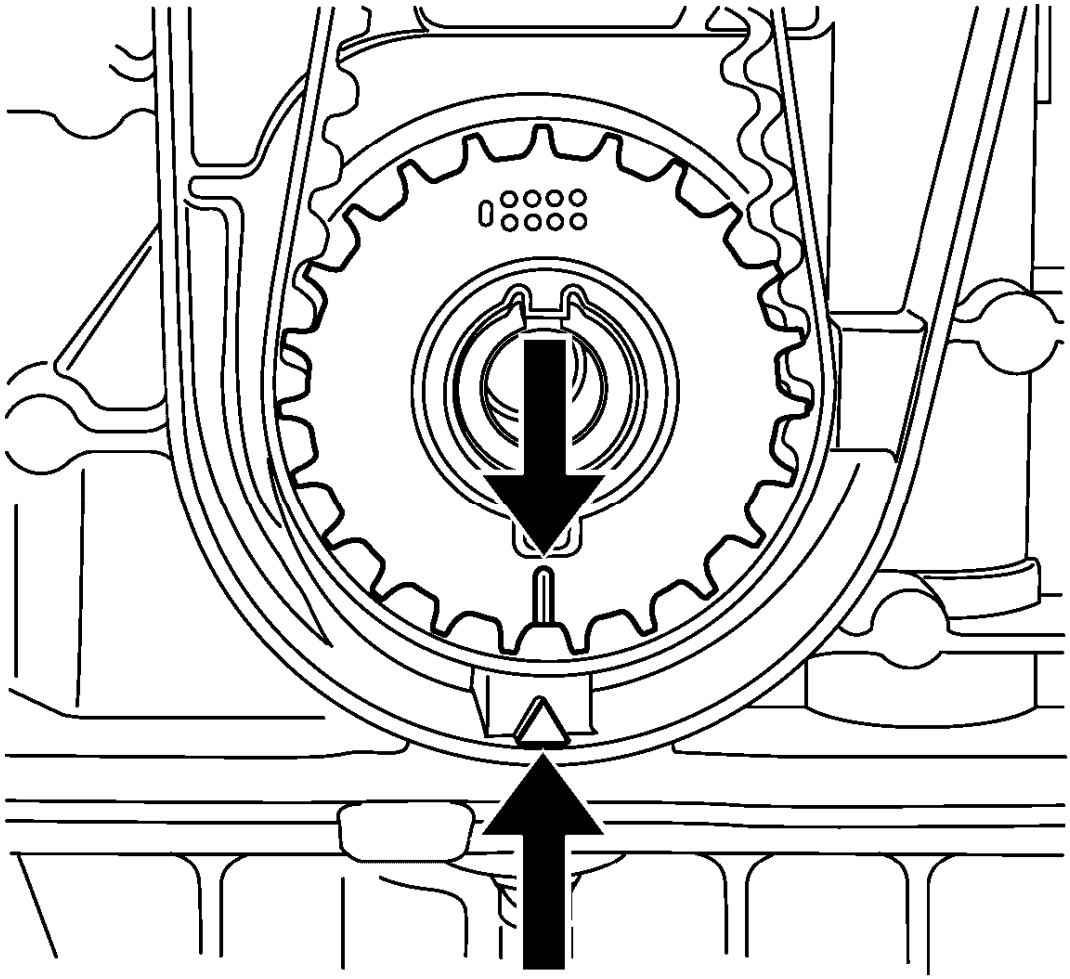

Fig. 529: Aligning Timing Belt Drive Gear And Oil Pump Housing
Courtesy of GENERAL MOTORS COMPANY

NOTE: The timing belt drive gear and oil pump housing must align.

10. Check the crankshaft position.

TIMING BELT LOWER FRONT COVER INSTALLATION

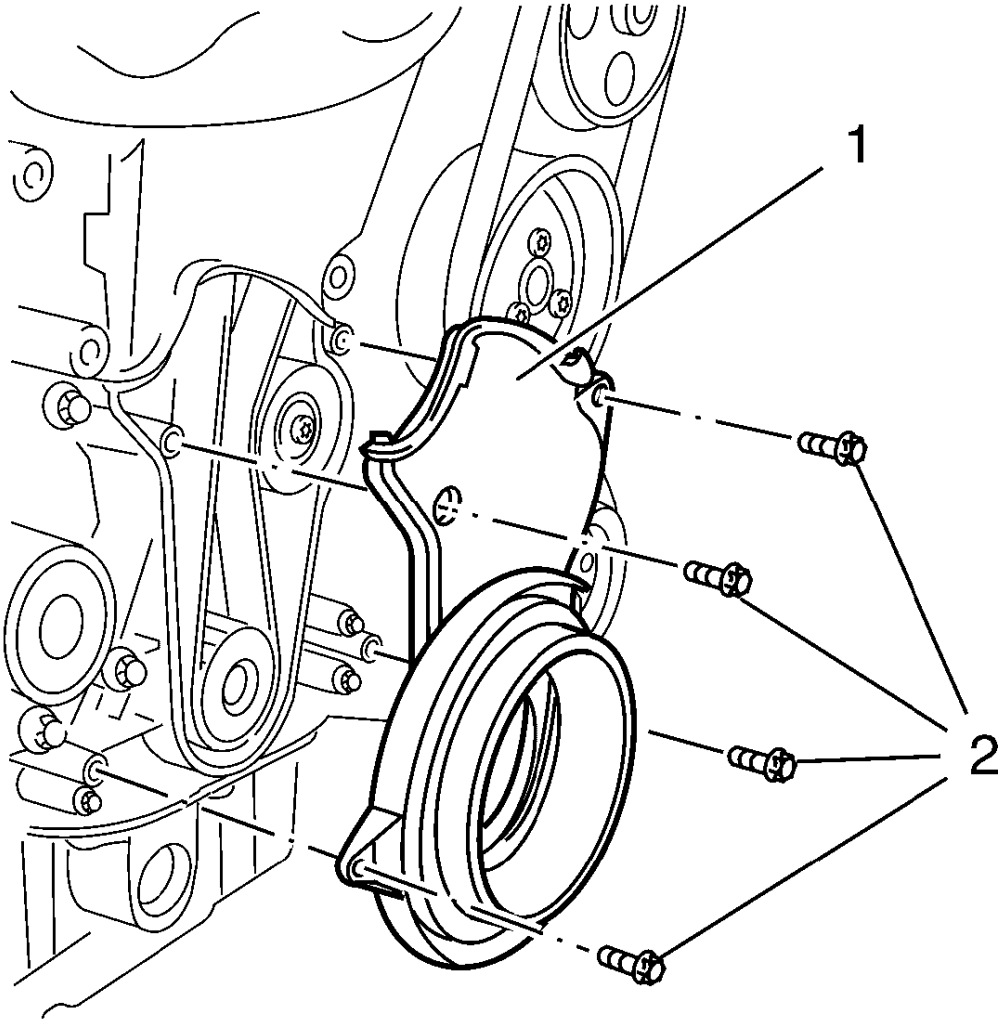

Fig. 530: Timing Belt Lower Front Cover
Courtesy of GENERAL MOTORS COMPANY

CAUTION: Refer to Fastener Caution .

Install the timing belt cover (1) and tighten the 4 timing belt lower front cover bolts (2) to 6 N.m (53 lb in).

CRANKSHAFT BALANCER INSTALLATION

Special Tools

- **EN-652** Flywheel Holder
- **EN-45059** Angle Meter

For equivalent regional tools, refer to **Special Tools**.

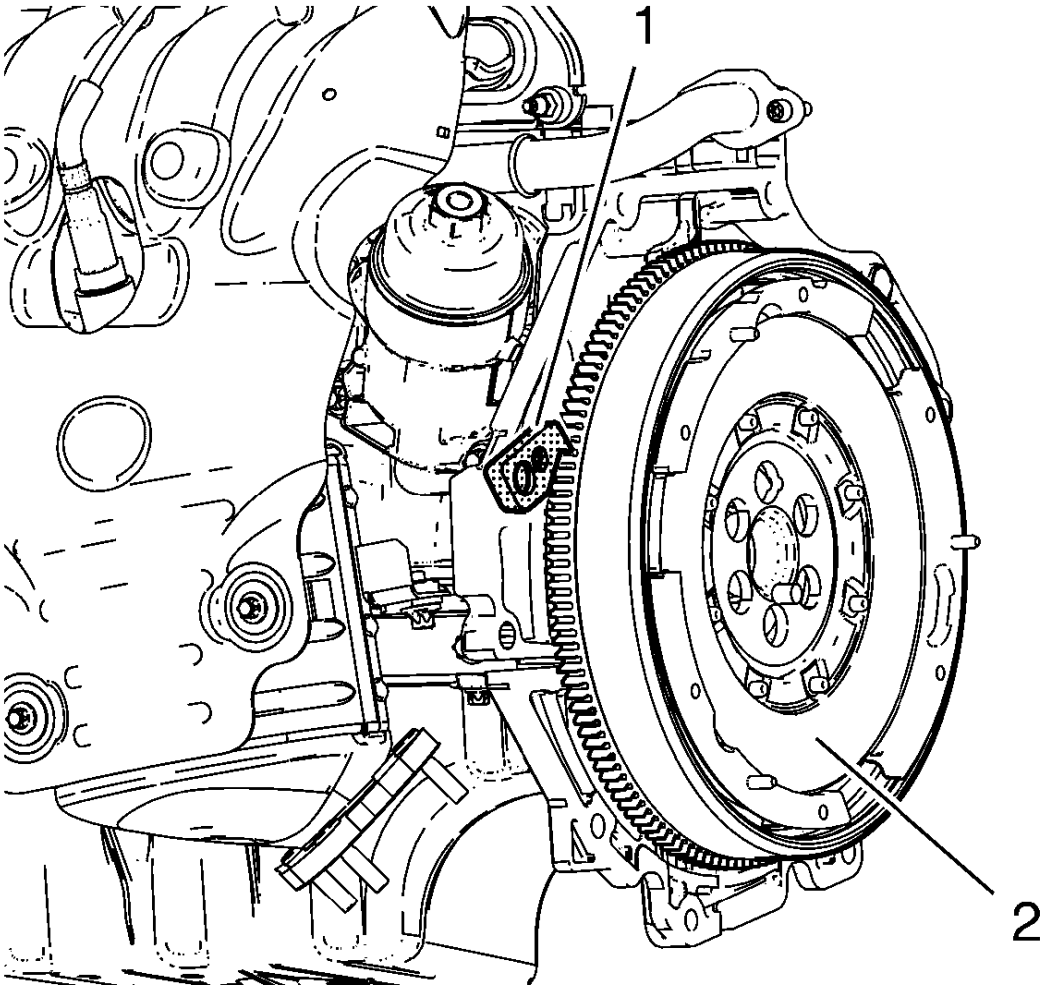

Fig. 531: Flywheel And Flywheel Holder
Courtesy of GENERAL MOTORS COMPANY

1. Install the **EN-652** holder (1), lock the flywheel (2) or the automatic transmission flex plate via the starter ring gear.

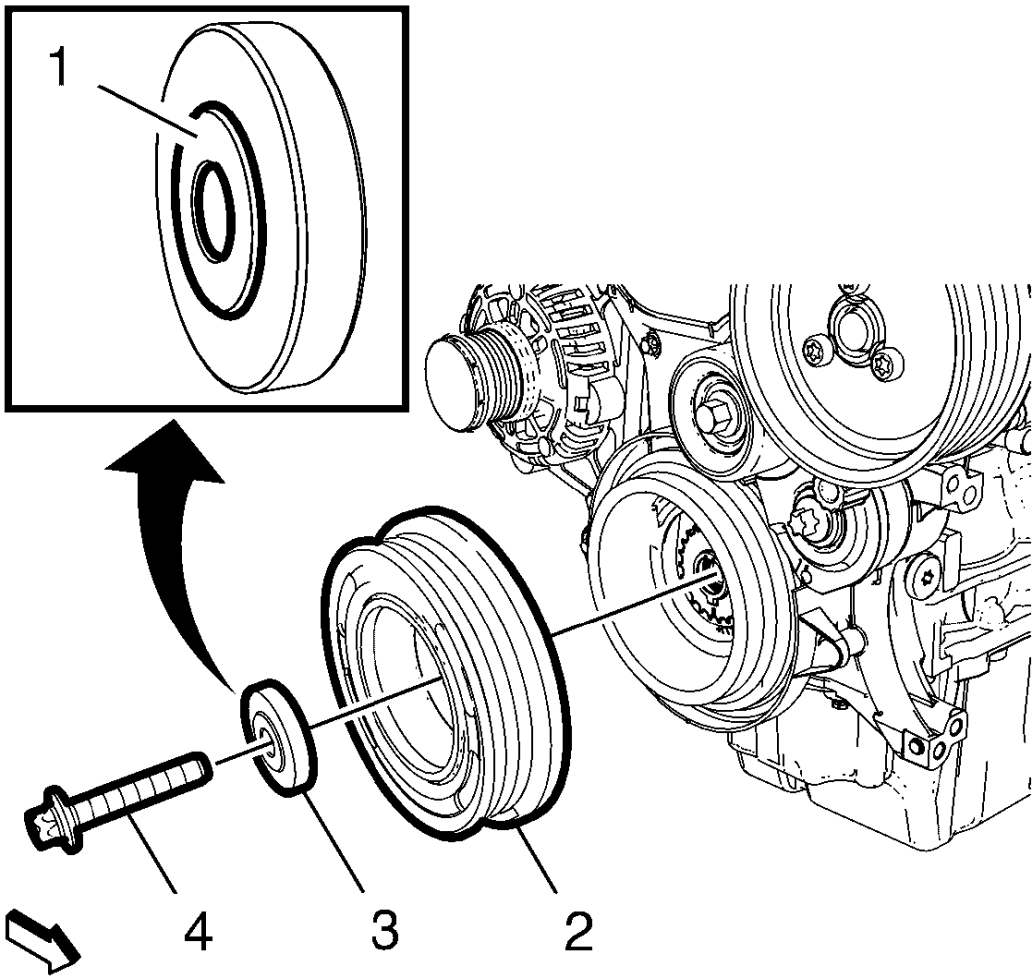

Fig. 532: Crankshaft Balancer, Washer And Bolt
Courtesy of GENERAL MOTORS COMPANY

NOTE: Use care that the height (1) of the washer is facing towards the bolt.

2. Install the crankshaft balancer (2) and the washer (3).

CAUTION: Refer to Fastener Caution .

CAUTION: Refer to Torque-to-Yield Fastener Caution .

3. Install a NEW crankshaft balancer bolt (4) and tighten the bolt in 3 passes using the **EN-45059** meter
    1. First pass to 95 N.m (70 lb ft).

2. Second pass to an additional 45°,
3. Final pass to an additional 15°.

TIMING BELT CENTER FRONT COVER INSTALLATION

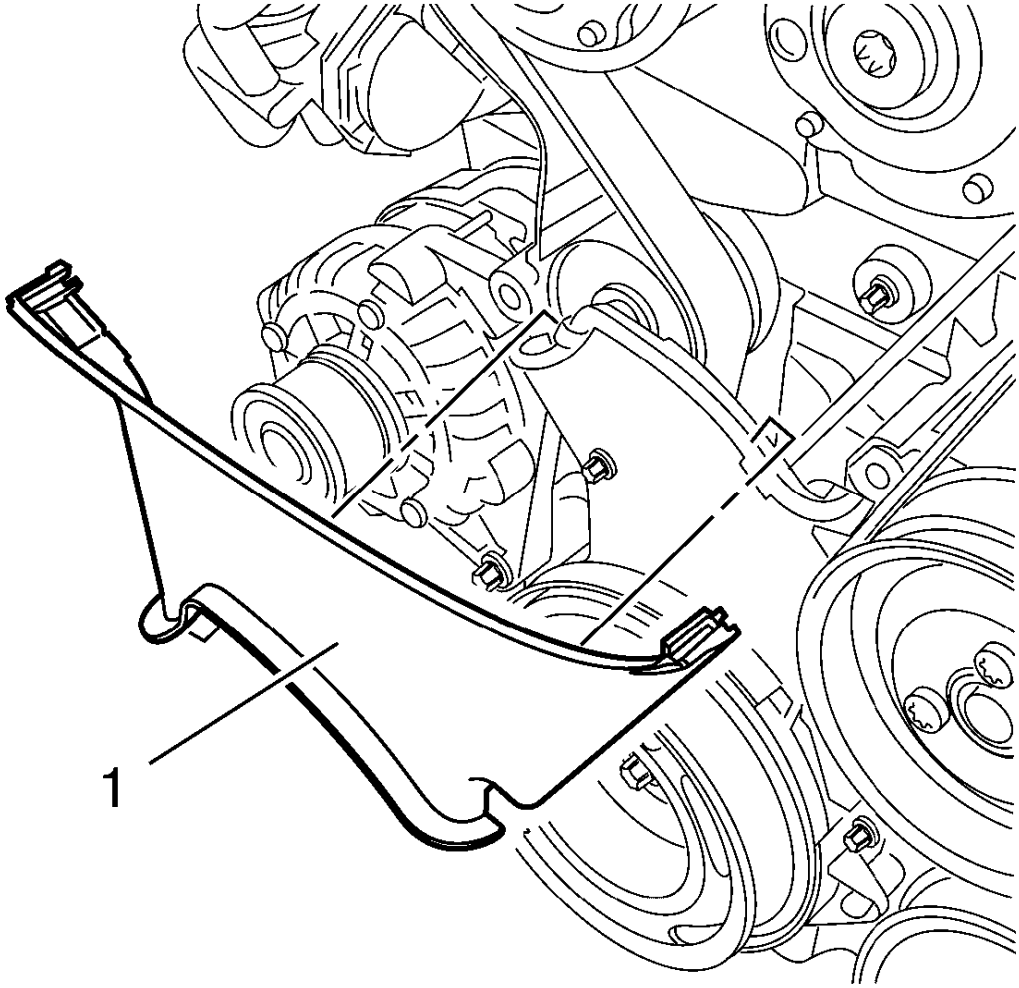

Fig. 533: Timing Belt Center Front Cover
Courtesy of GENERAL MOTORS COMPANY

Install the timing belt center front cover (1) to the timing belt rear cover at 2 locations.

TIMING BELT UPPER FRONT COVER INSTALLATION

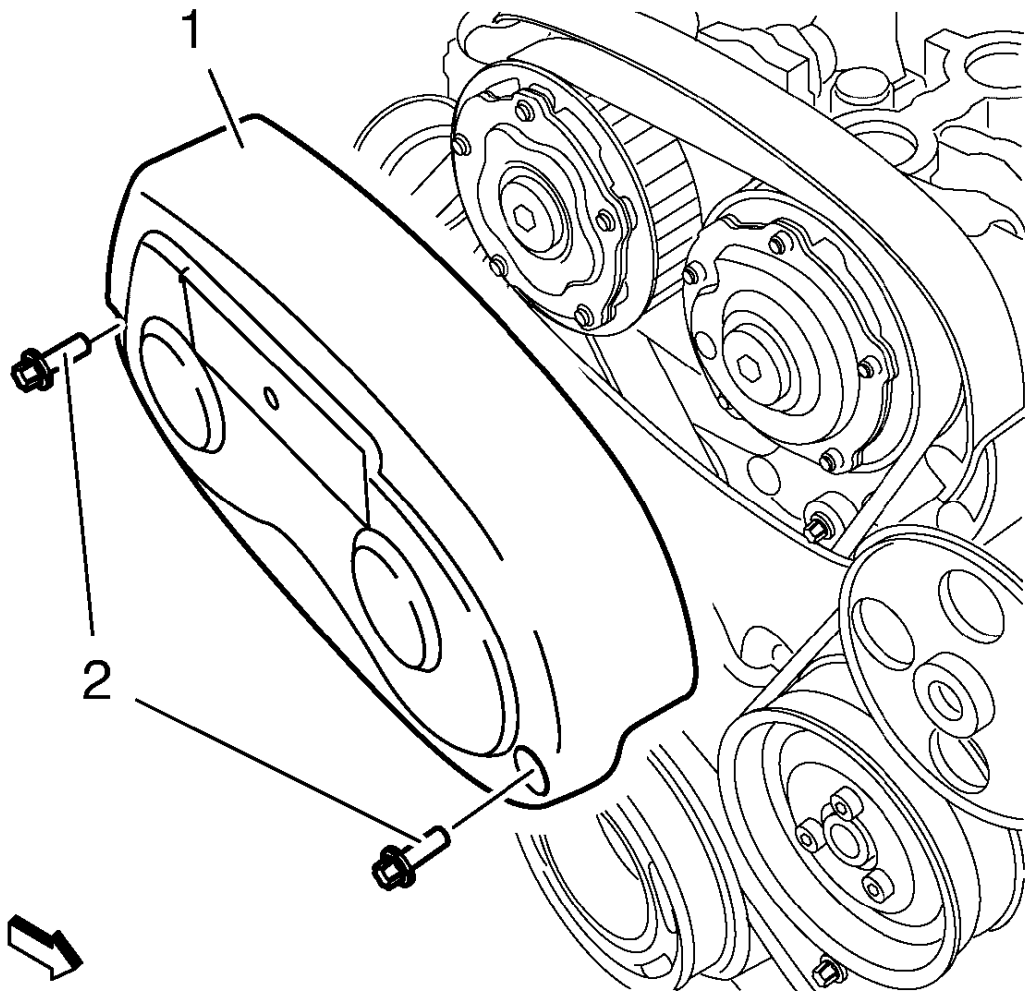

Fig. 534: Timing Belt Upper Front Cover
Courtesy of GENERAL MOTORS COMPANY

1. Install the timing belt upper front cover (1).

CAUTION: Refer to Fastener Caution .

2. Install the 2 timing belt upper front cover bolts (2) and tighten to 6 N.m(53 lb in).

DRIVE BELT INSTALLATION

Special Tools

EN-6349 Locking Pin

For equivalent regional tools, refer to **Special Tools**.

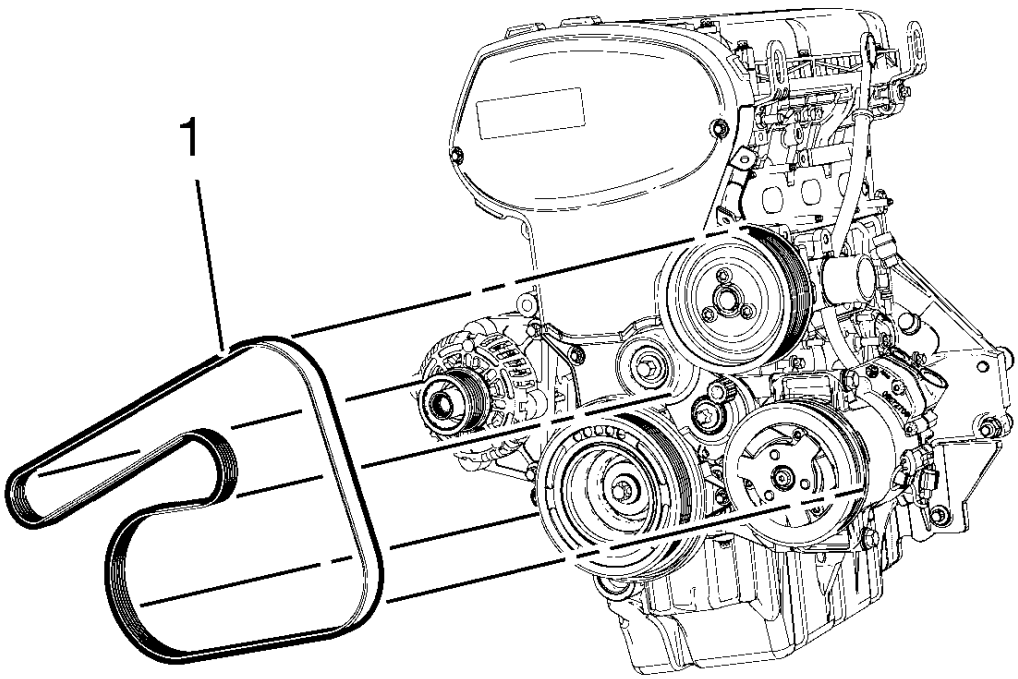

Fig. 535: Drive Belt Routing
Courtesy of GENERAL MOTORS COMPANY

1. Install the drive belt (1).

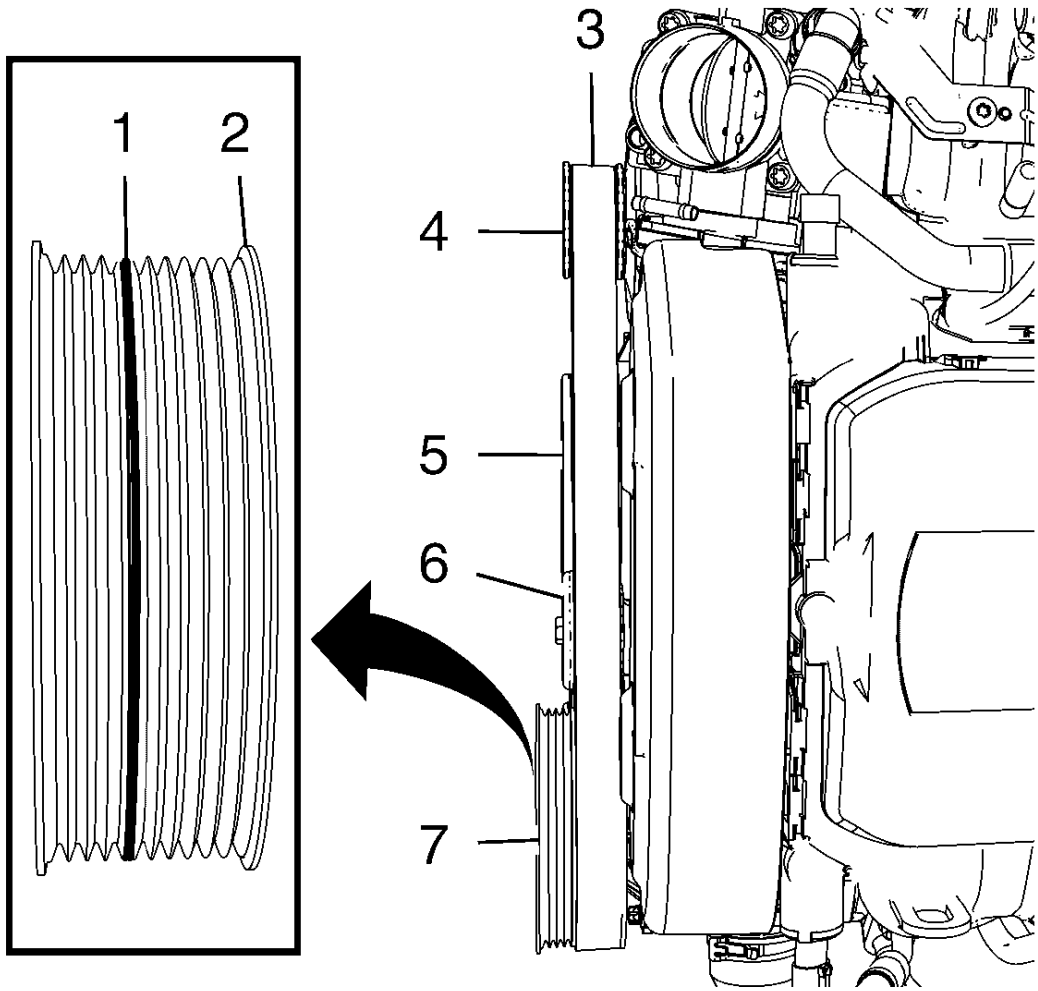

Fig. 536: Checking Drive Belt Position
Courtesy of GENERAL MOTORS COMPANY

NOTE: **Make sure that the drive belt is aligned on the generator pulley (4), crankshaft balancer (5), drive belt tensioner (6) and water pump pulley (7). The drive belt must lie on the water pump pulley between the flange (1) and (2).**

2. Check the position of the drive belt (3).

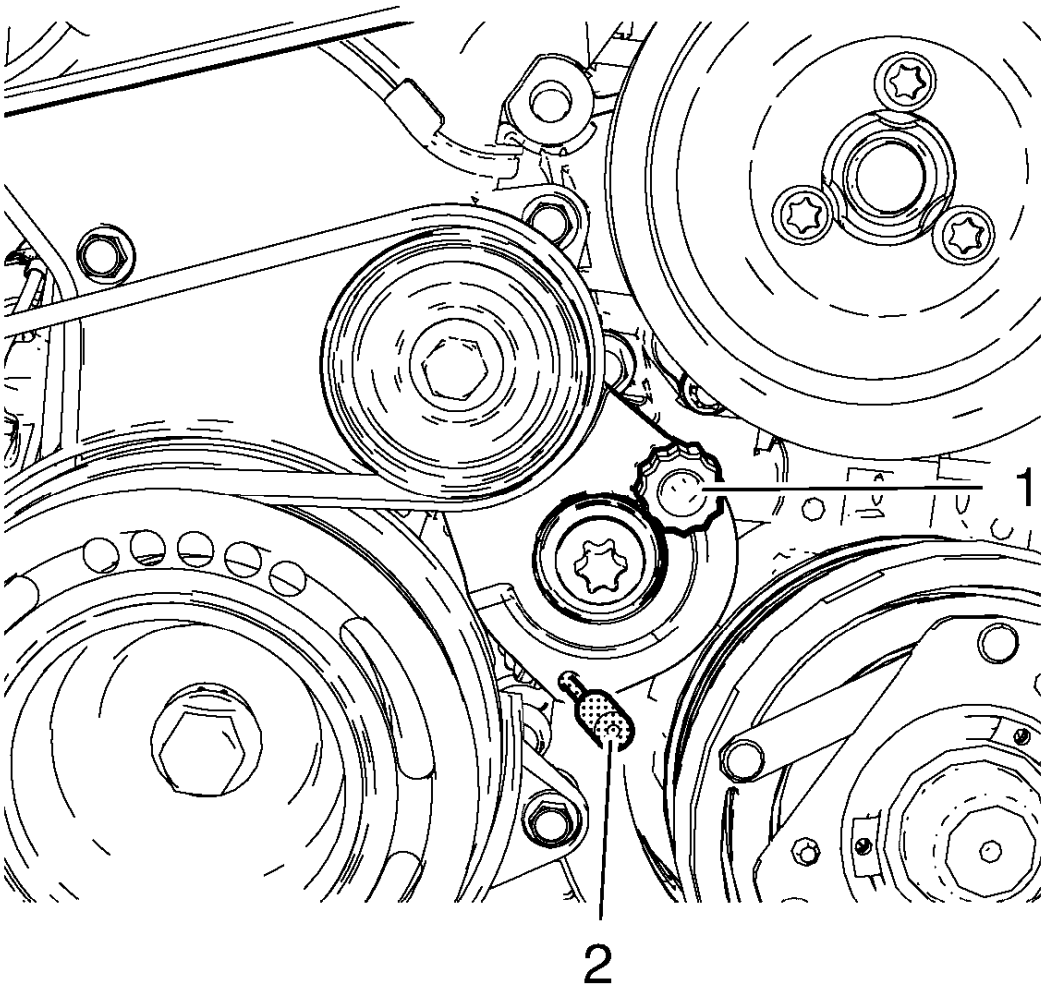

Fig. 537: Drive Belt Tensioner And Special Tool
Courtesy of GENERAL MOTORS COMPANY

3. Release tension to the tensioner counterclockwise (1).

NOTE: Allow tensioner to slide back slowly.

4. Remove **EN-6349** pin (2).
5. Apply tension to the tensioner at projection (1) clockwise.

DRIVE BELT TENSIONER INSTALLATION

1. Clean the drive belt tensioner thread.

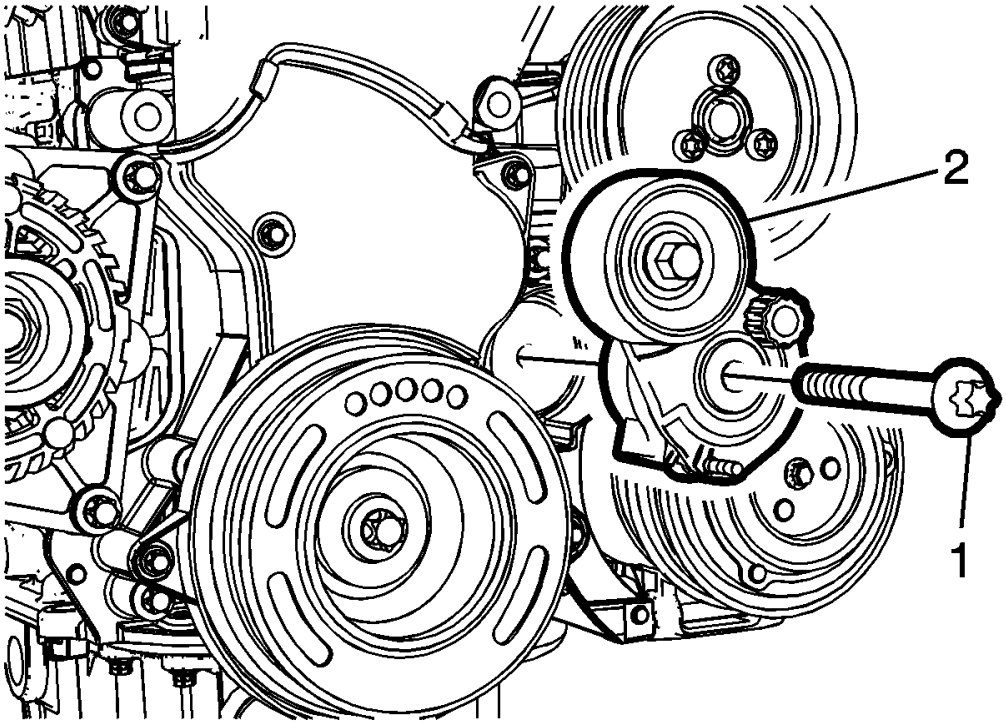

Fig. 538: Drive Belt Tensioner Bolt
Courtesy of GENERAL MOTORS COMPANY

2. Install drive belt tensioner (2).

CAUTION: Refer to Fastener Caution .

3. Install drive belt tensioner bolt (1) and tighten to 55 N.m (41 lb ft).

SECONDARY AIR INJECTION CHECK VALVE INSTALLATION

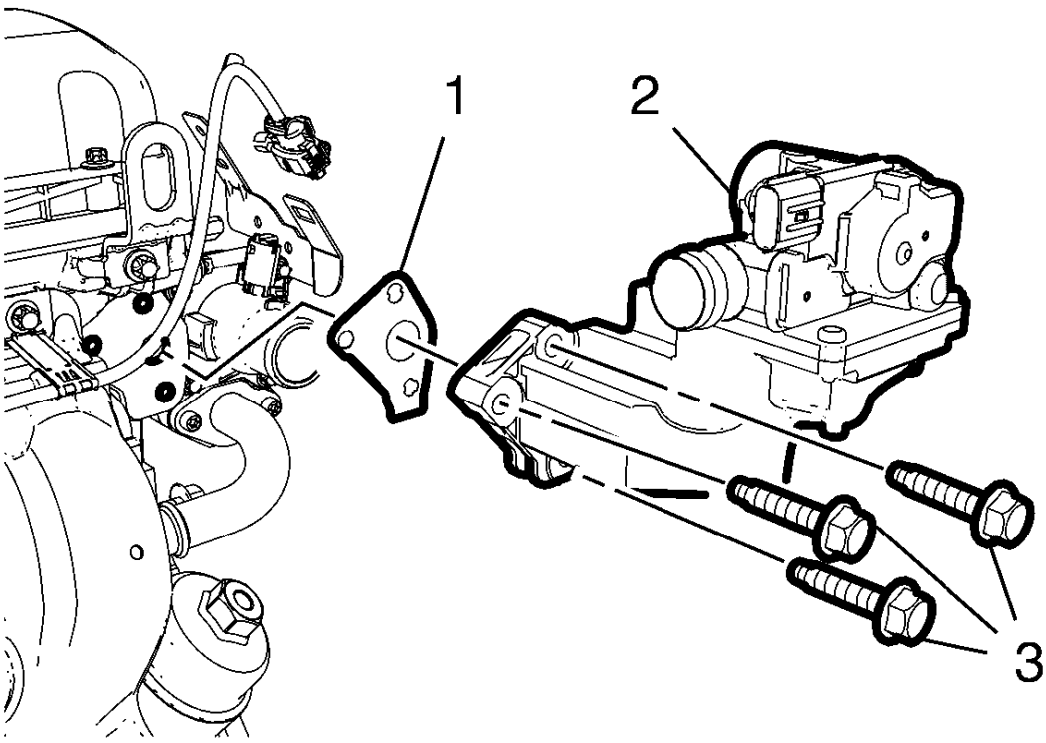

Fig. 539: Secondary Air Injection Check Valve Bolts
Courtesy of GENERAL MOTORS COMPANY

1. Install a NEW secondary air injection check valve gasket (1).
2. Install the secondary air injection check valve (2).

CAUTION: Refer to Fastener Caution .

3. Install the 3 secondary air injection check valve bolts (3) and tighten to 22 N.m (16 lb ft).

SECONDARY AIR INJECTION PUMP INSTALLATION

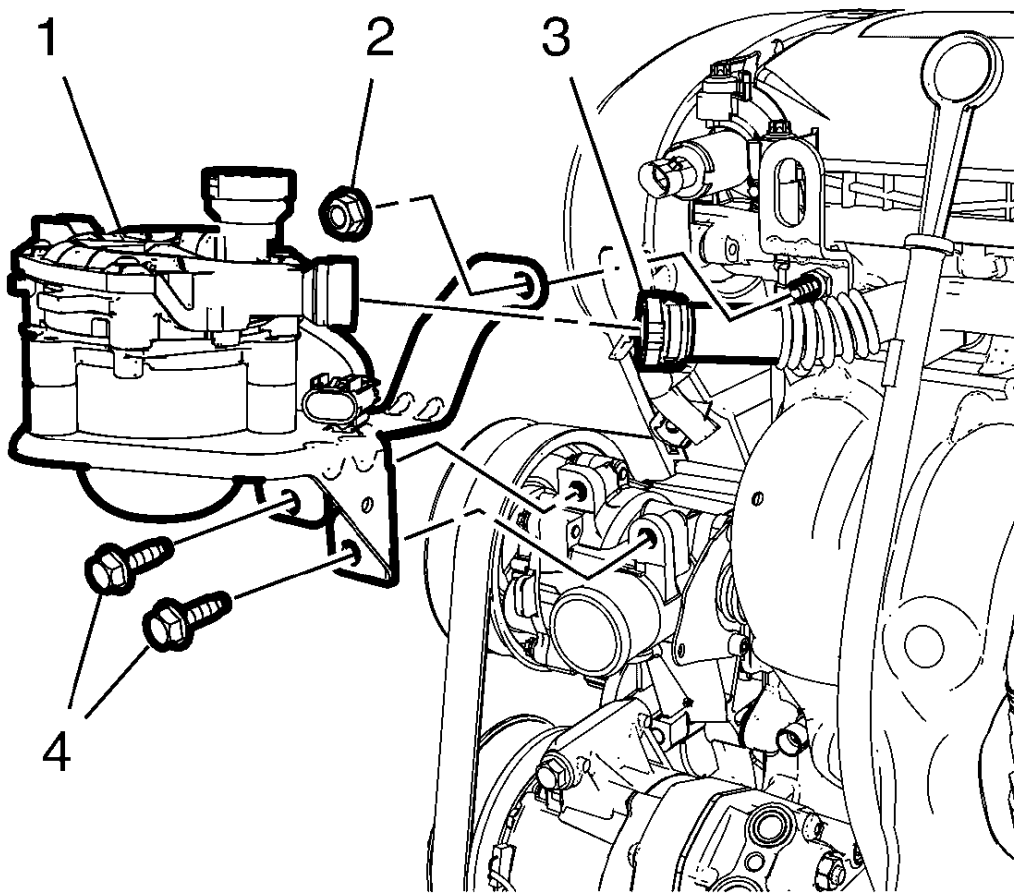

Fig. 540: Secondary Air Injection Pump Pipe
Courtesy of GENERAL MOTORS COMPANY

1. Install the secondary air injection pump (1).
2. Loosely install the secondary air injection pump nut (2) and the 2 secondary air injection pump bolts (4).

CAUTION: Refer to Fastener Caution .

3. Tighten the secondary air injection pump nut (2) and the 2 secondary air injection pump bolts (4) to 22 N.m (16 lb ft).
4. Connect the secondary air injection pump pipe (3). Refer to **Plastic Collar Quick Connect Fitting Service** .

SECONDARY AIR INJECTION PUMP PIPE INSTALLATION

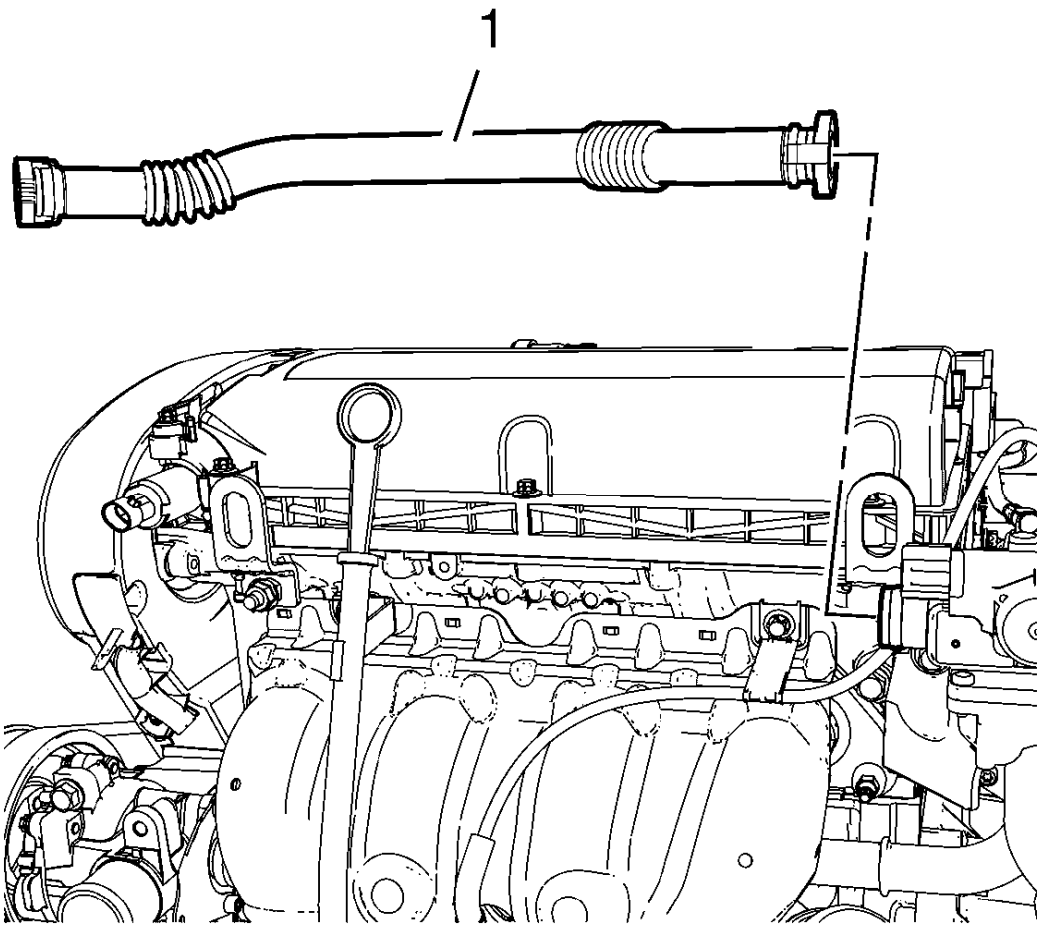

Fig. 541: Secondary Air Injection Pump Pipe
Courtesy of GENERAL MOTORS COMPANY

1. Connect the secondary air injection pump pipe (3) to the secondary air injection check valve. Refer to **Plastic Collar Quick Connect Fitting Service** .

POSITIVE CRANKCASE VENTILATION PIPE INSTALLATION

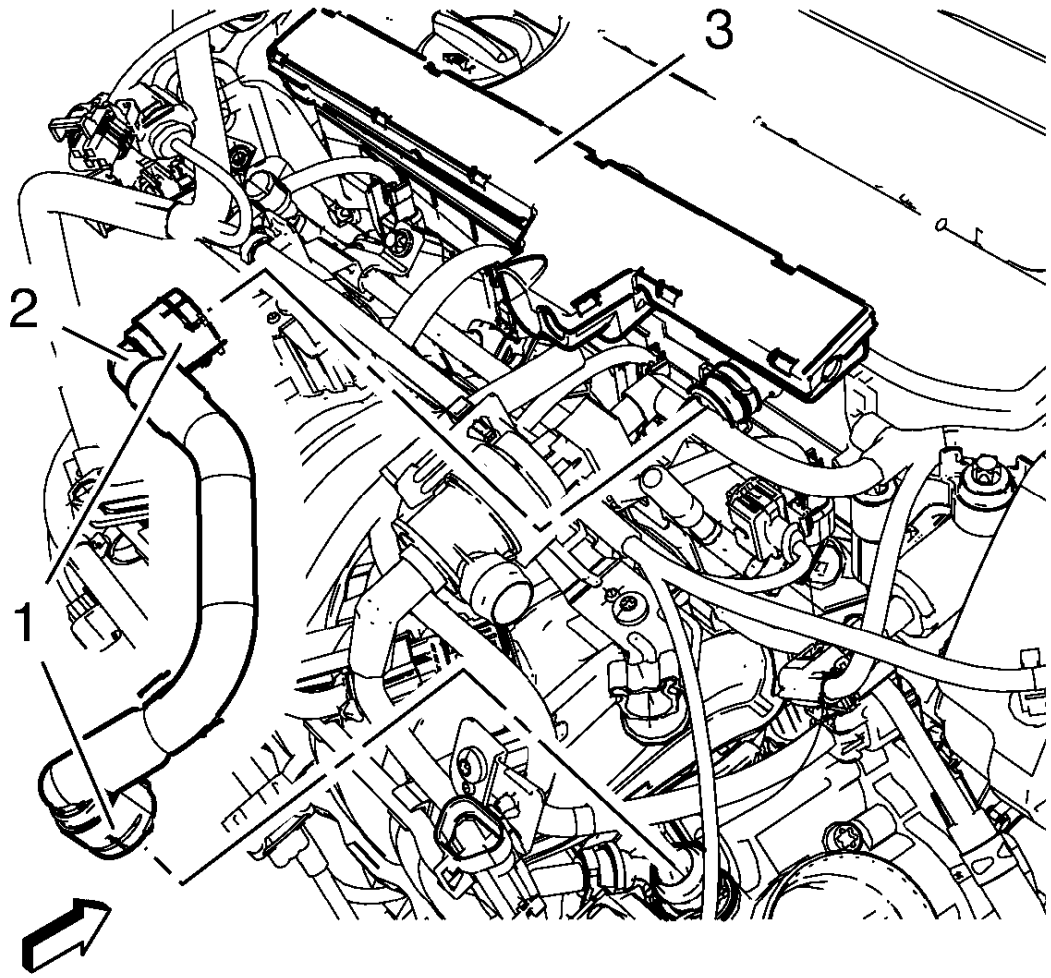

Fig. 542: Positive Crankcase Ventilation Tube, Connectors And ECM Wiring Harness Guide
Courtesy of GENERAL MOTORS COMPANY

1. Install the positive crankcase ventilation tube (2).
2. Connect the 2 positive crankcase ventilation tube connectors (1).
3. Clip in the ECM wiring harness guide (3) to the cylinder head cover.

ENGINE FLYWHEEL INSTALLATION

Special Tools

- **EN-652** Flywheel Holder
- **EN-45059** Torque Angle Sensor Kit

For equivalent regional tools, refer to **Special Tools**.

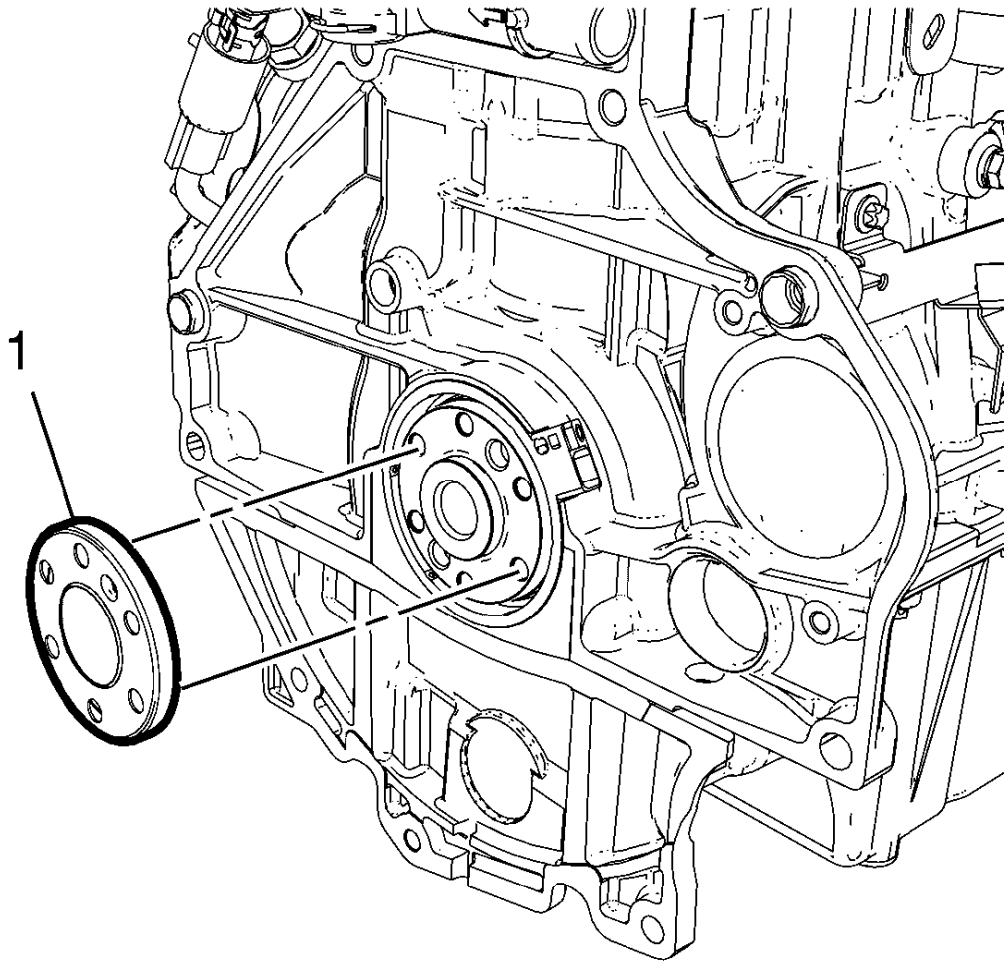

Fig. 543: Crankshaft Position Reluctor Ring
Courtesy of GENERAL MOTORS COMPANY

1. Install the crankshaft position reluctor ring (1).

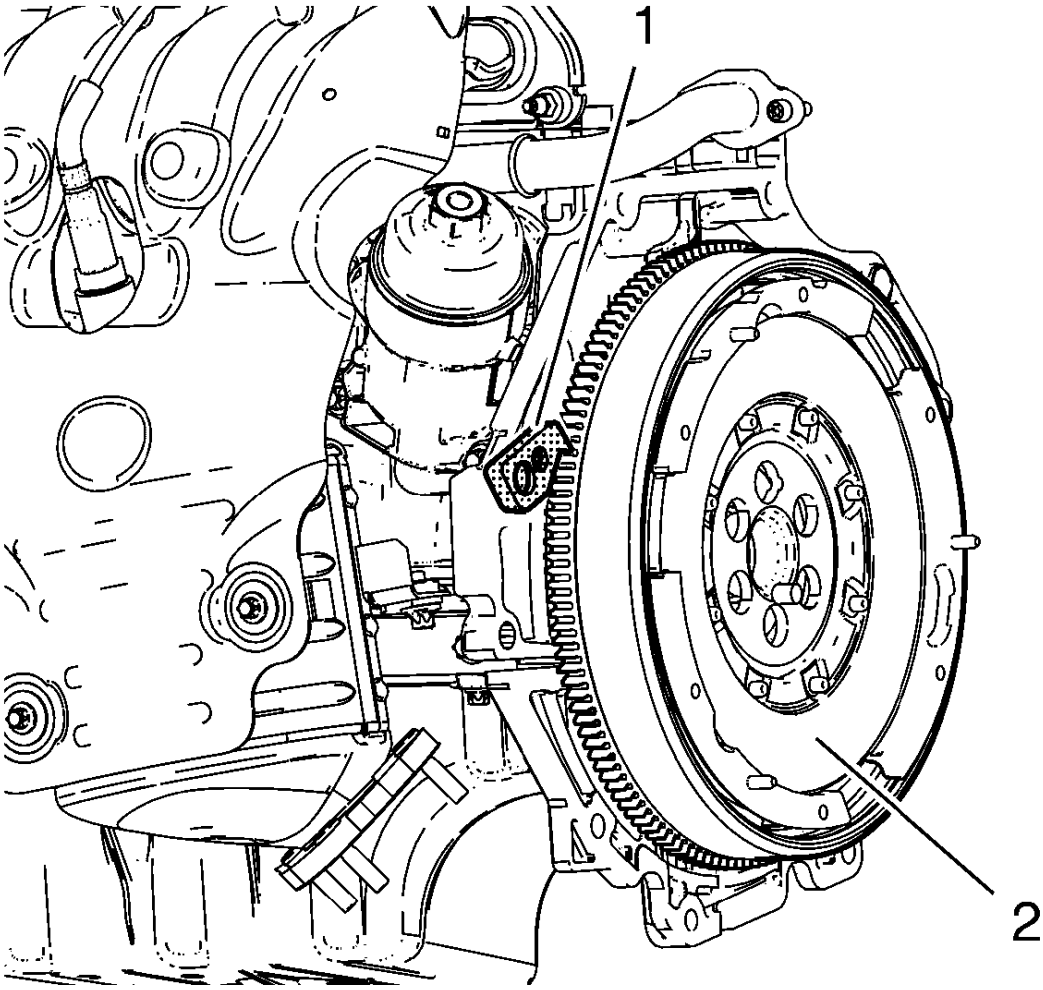

Fig. 544: Flywheel And Flywheel Holder
Courtesy of GENERAL MOTORS COMPANY

2. Install the flywheel (2).
3. Install the **EN-652** holder (1).

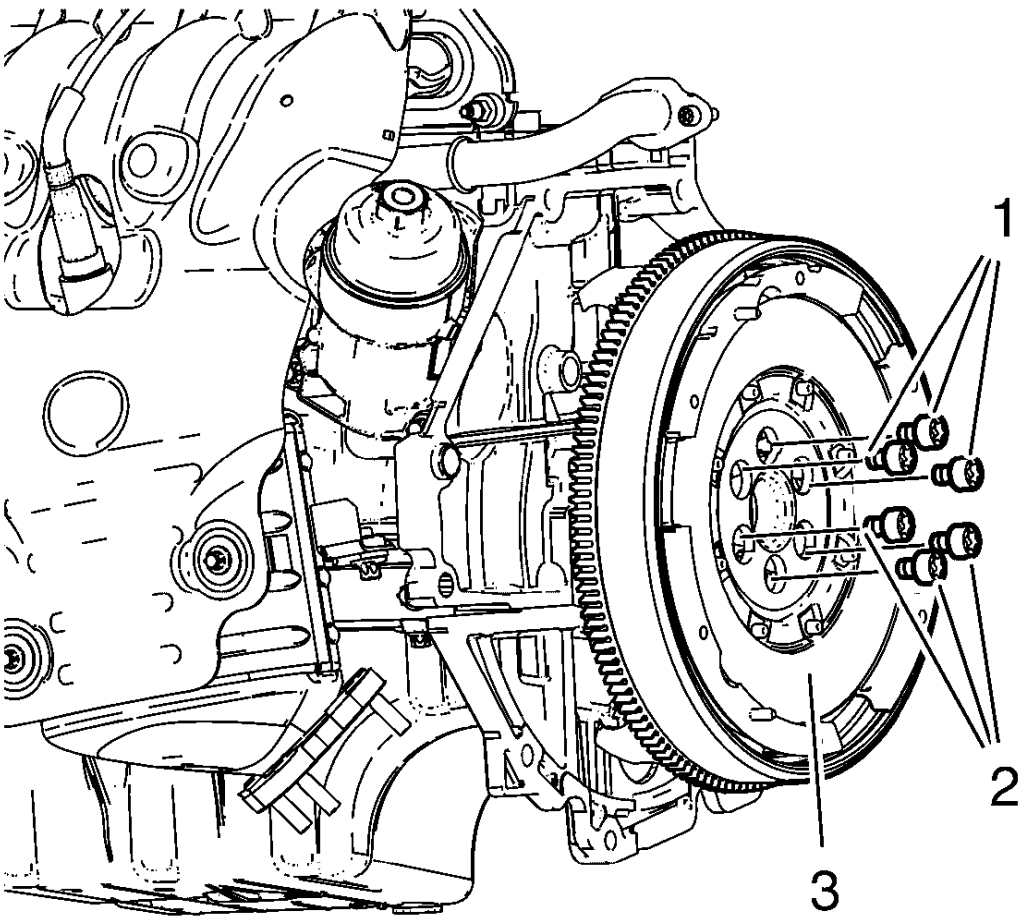

Fig. 545: Flywheel And Bolts
Courtesy of GENERAL MOTORS COMPANY

CAUTION: Refer to Fastener Caution .

CAUTION: Refer to Torque-to-Yield Fastener Caution .

4. Install the 6 NEW flywheel bolts (1, 2) and tighten the bolts in 3 passes using the **EN-45059** sensor kit :
    1. First pass to 60 N.m (44 lb ft).
    2. Second pass to additional 45°.
    3. Third pass to an additional 15°.
5. Remove the **EN-652** holder.

AUTOMATIC TRANSMISSION FLEX PLATE INSTALLATION

Special Tools

EN-652 Automatic Transmission Flex Plate Holder

For equivalent regional tools, refer to **Special Tools**.

1. Clean the automatic transmission flex plate bolt threads.

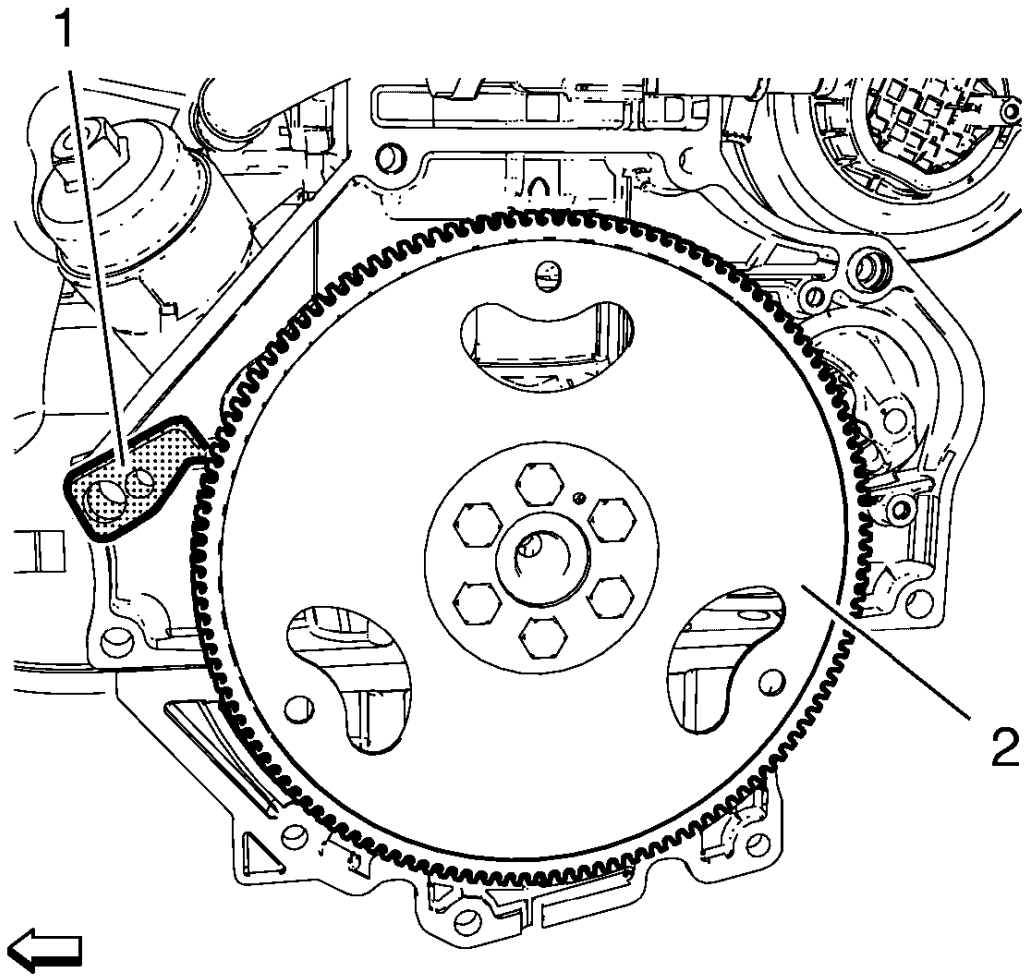

Fig. 546: Automatic Transmission Flex Plate And Holder
Courtesy of GENERAL MOTORS COMPANY

2. Install the automatic transmission flex plate (2) and the **EN-652** holder to hold the automatic transmission flex plate (2).

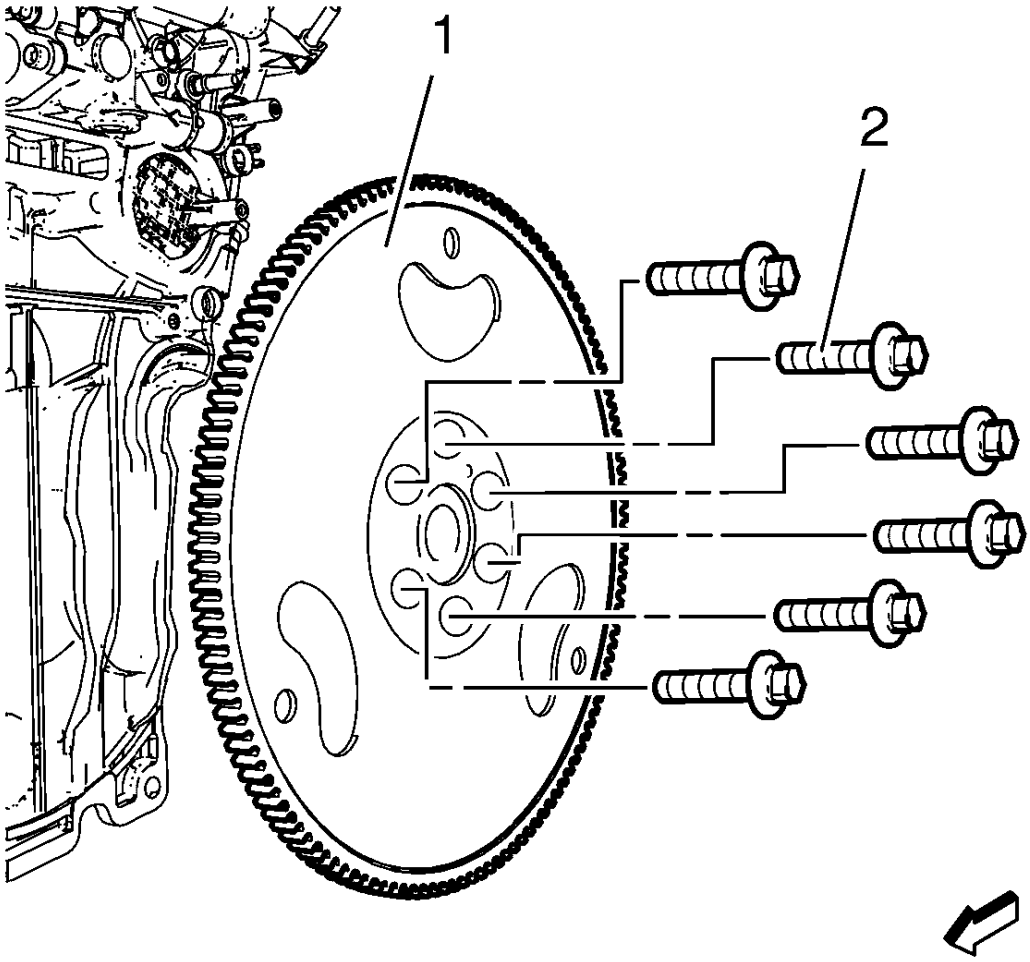

Fig. 547: Automatic Transmission Flex Plate And Bolts
Courtesy of GENERAL MOTORS COMPANY

CAUTION: Refer to Fastener Caution .

CAUTION: Refer to Torque-to-Yield Fastener Caution .

3. Install the 6 NEW automatic transmission flex plate bolts (2) and tighten the bolts to 60 N.m (44 lb ft) ± 5°.
4. Remove the **EN-652** holder.

CRANKSHAFT REAR OIL SEAL INSTALLATION

Special Tools

- **EN-658-1** Installer
- **EN-235-6** Installer

For equivalent regional tools, refer to **Special Tools**.

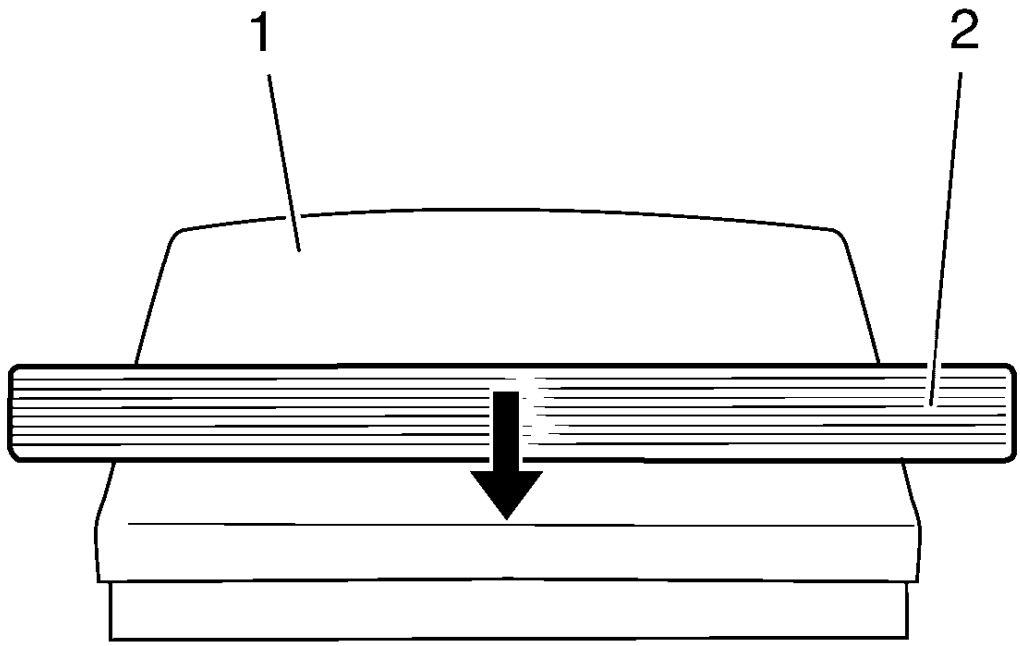

Fig. 548: Crankshaft Rear Oil Seal
Courtesy of GENERAL MOTORS COMPANY

1. Slide the crankshaft rear oil seal (2) across the **EN-235-6** installer (1).

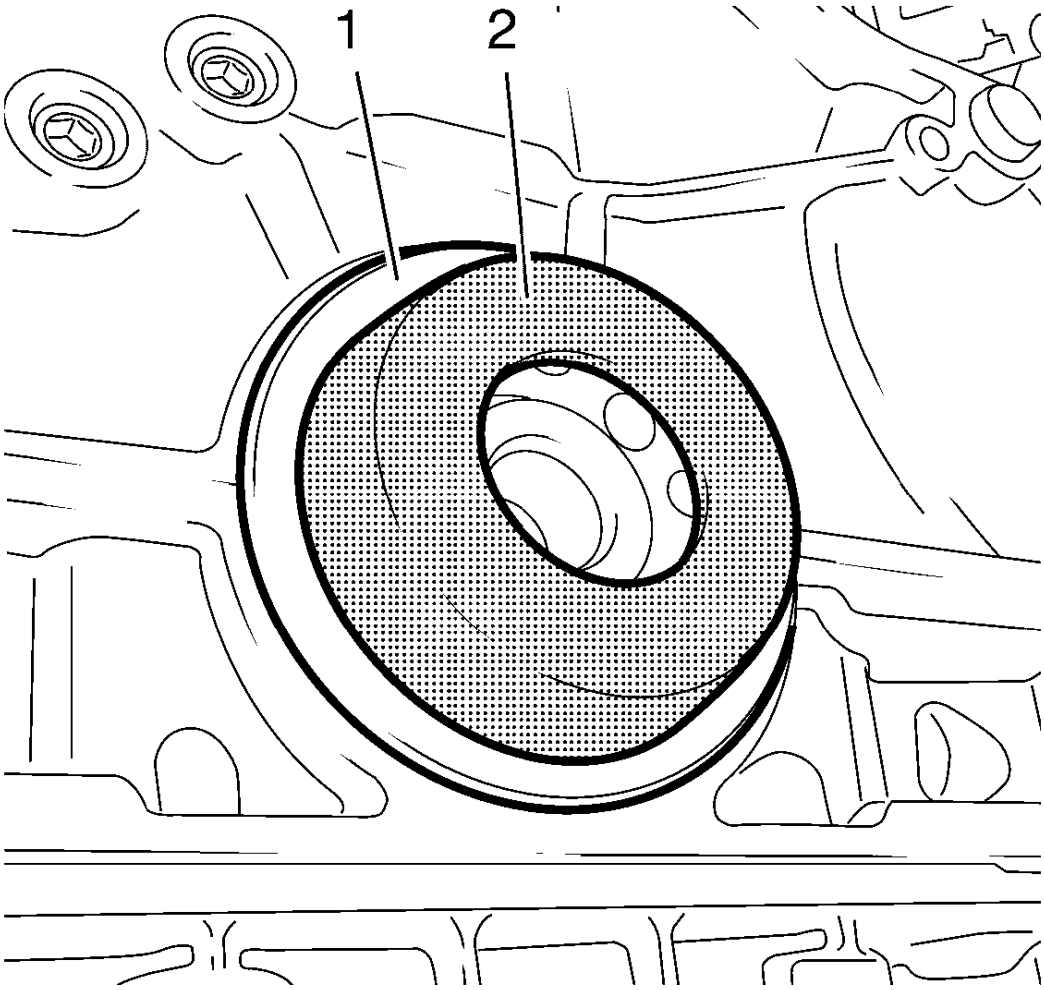

Fig. 549: Crankshaft Rear Oil Seal And Installer
Courtesy of GENERAL MOTORS COMPANY

2. Install the crankshaft rear oil seal (1) with **EN-235-6** installer (2) to the crankshaft.

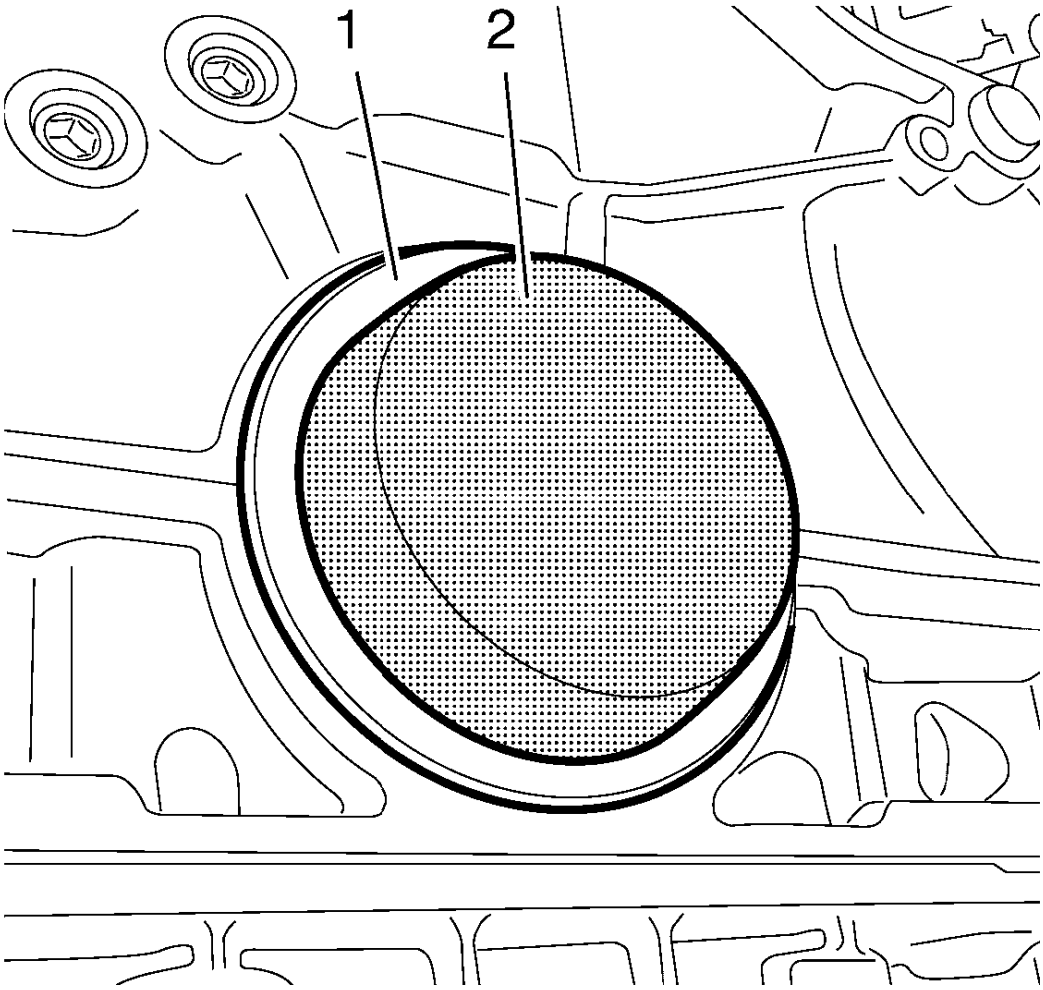

Fig. 550: Oil Seal Installer
Courtesy of GENERAL MOTORS COMPANY

3. Use **EN-658-1** installer (2) to strike the crankshaft rear oil seal (1)

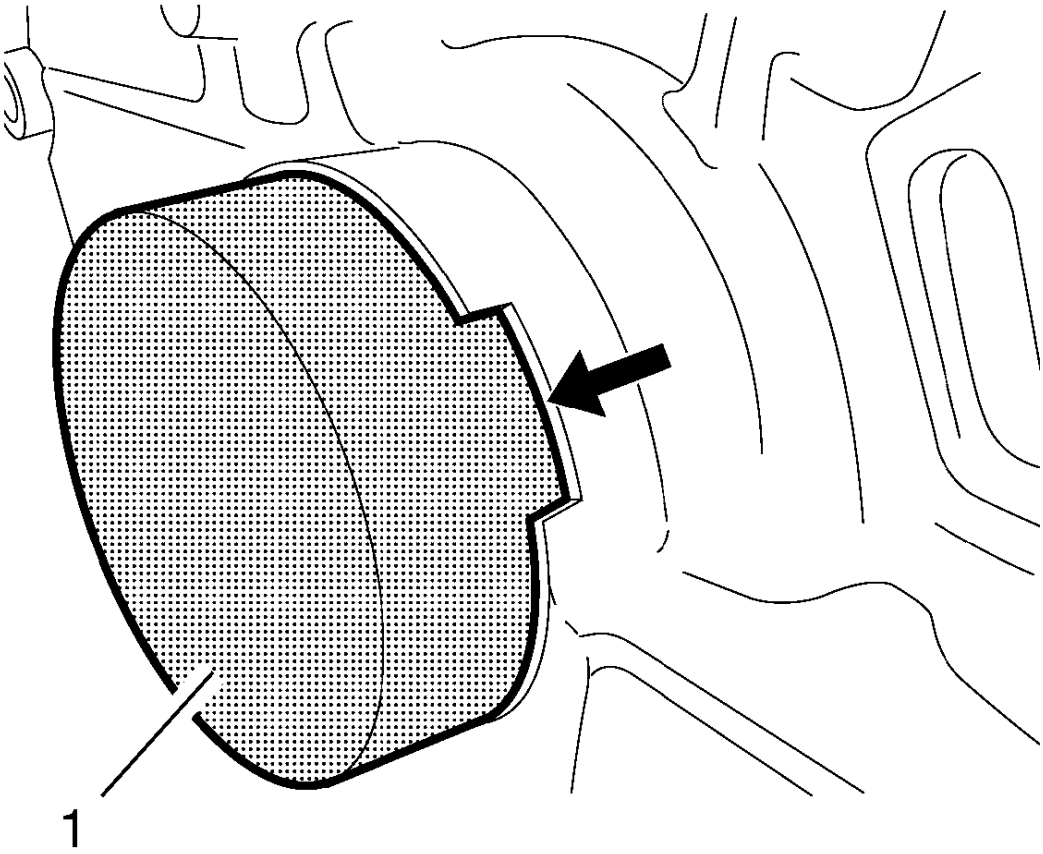

Fig. 551: Check Crankshaft Rear Oil Seal For Proper Seat
Courtesy of GENERAL MOTORS COMPANY

4. Check the crankshaft rear oil seal for proper seat, the **EN-658-1** installer must be flush with the cylinder block at the position (1).

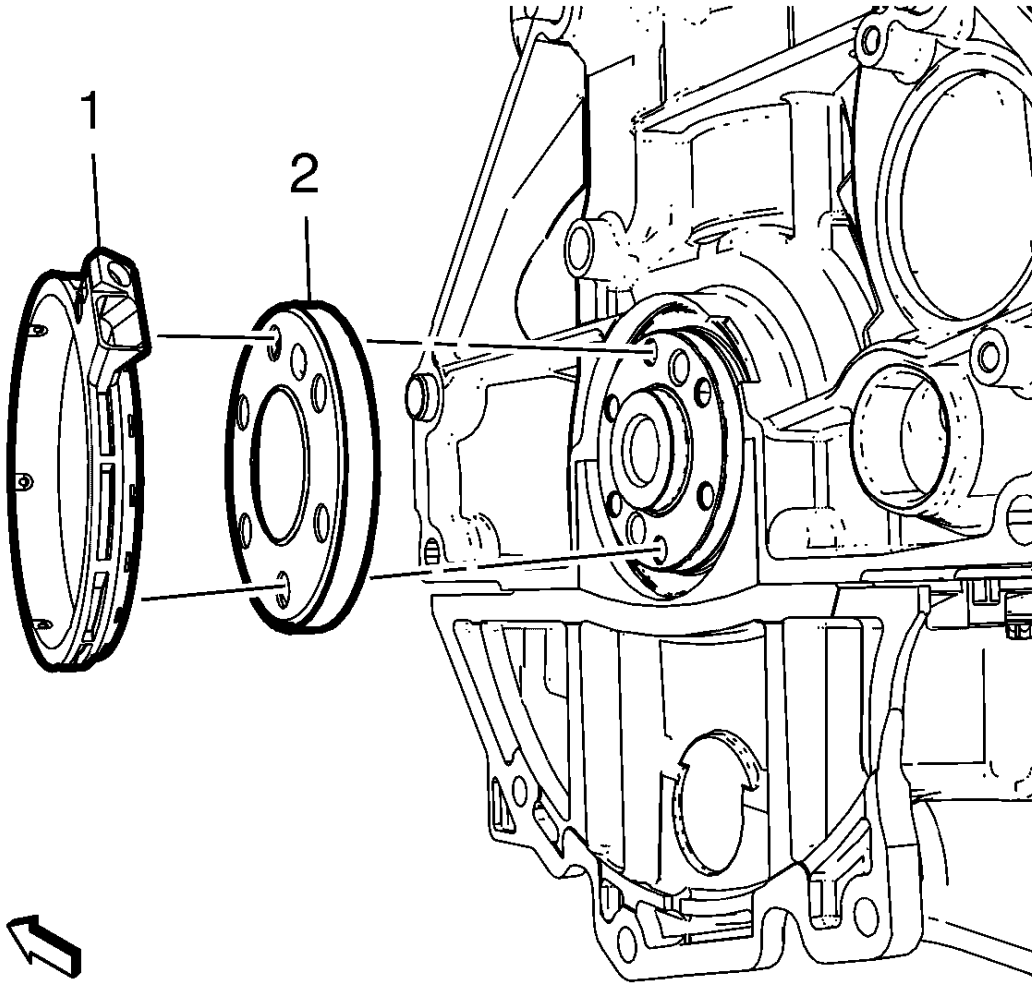

Fig. 552: Crankshaft Position Sensor Reluctor Ring And Oil Seal Housing
Courtesy of GENERAL MOTORS COMPANY

5. Install the reluctor ring (2).
6. Install the crankshaft rear oil seal housing (1).

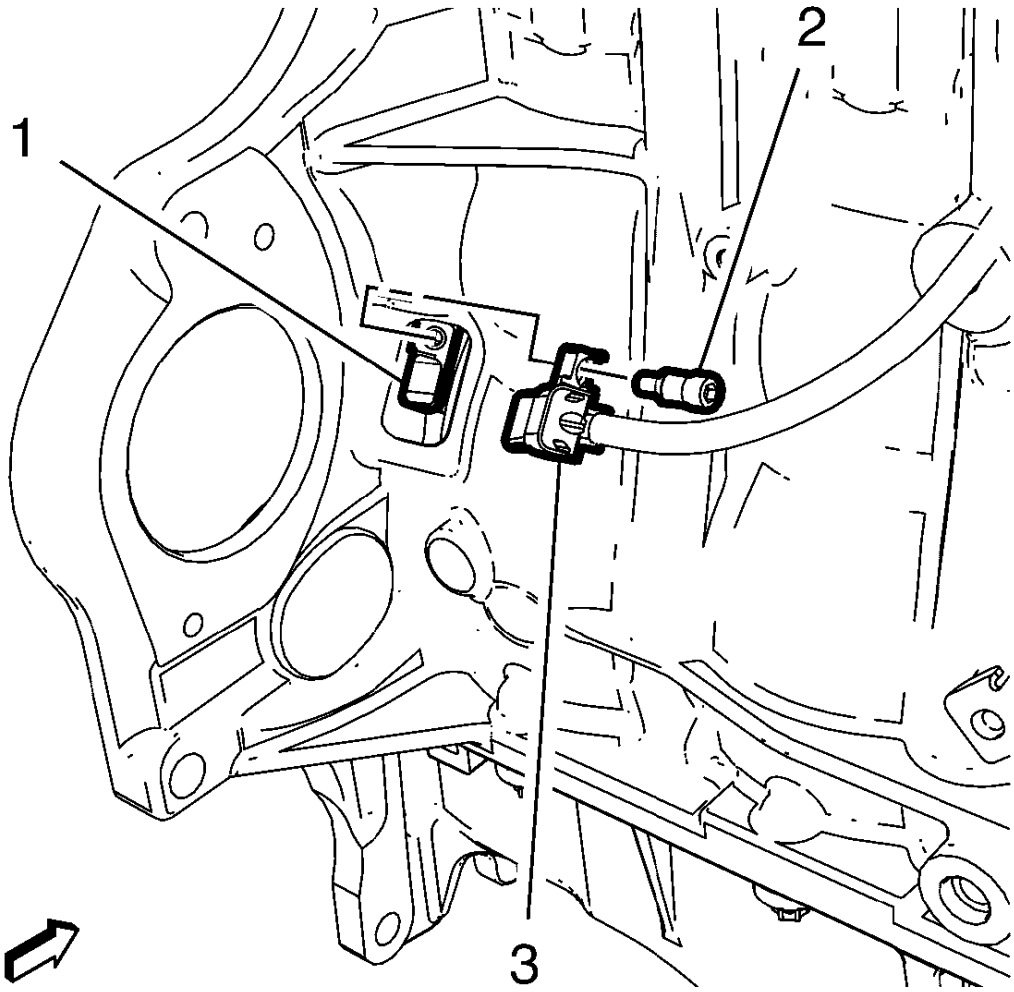

Fig. 553: Crankshaft Position Sensor And Bolt
Courtesy of GENERAL MOTORS COMPANY

7. Install the crankshaft position sensor (3) to the crankshaft rear oil seal housing (1).

CAUTION: Refer to Fastener Caution .

8. Install the crankshaft position sensor bolt (2) and tighten to 4.5 N.m (40 lb in).

DESCRIPTION AND OPERATION

CLEANLINESS AND CARE

An automobile engine is a combination of many machined, honed, polished, and lapped surfaces with tolerances that are measured in ten thousandths of an inch. When any internal engine parts are serviced, care and

cleanliness are important. A liberal coating of engine oil should be applied to friction areas during assembly to protect and lubricate the surfaces during initial operation. Throughout this section, it should be understood that proper cleaning and protection of machined surfaces and friction areas are part of the repair procedure. This is considered standard shop practice even if not specifically stated.

When valve train components are removed for service, they should be retained in order. At the time of installation, they should be installed in the same locations and with the same mating surfaces as when removed.

ENGINE COMPONENT DESCRIPTION

Cylinder Block

The cylinder hollow frame structured 4 cylinder in-line. The block has 5 crankshaft bearings with the thrust bearing located on the third bearing from the front of the engine.

Crankshaft

The crankshaft is a steel crankshaft. It is supported in 5 main journals with main bearings which have oil clearance for lubricating. The 3rd bearing of the 5 main bearing is the thrust bearing whose the crankshaft has properly axial end play. A harmonic damper is used to control torsional vibration.

Oil Pump

The oil pump is a crankshaft driven oil pump integrated in pump module. The oil pump draws engine oil from the oil pan and feeds it under pressure to the various parts of the engine. An oil strainer is mounted before the inlet of the oil pump to remove impurities which could clog or damage the oil pump or other engine components. When the crankshaft rotates, the oil pump driven gear rotates. This causes the space between the gears to constantly open and narrow, pulling oil in from the oil pan when the space opens and pumping the oil out to the engine as it narrows. At high engine speeds, the oil pump supplies a much higher amount of oil than required for lubrication of the engine. The oil pressure regulator prevents too much oil from entering the engine lubrication passages.

Oil Pan

The oil pan is a structural aluminum oil pan with transmission attachment. It includes the oil suction pipe, this pipe is connected with the oil pump. The oil pan is attached at the engine block.

Piston and Connecting Rod

The Pistons are aluminum pistons with top land and floating pin. The connecting rods are fractured steel connecting rods with bushing.

Cylinder Head

This cylinder head is double over head camshaft (DOHC) type and has 2 camshafts that open 4 valves per cylinder with tappets. The camshaft sprocket wheels are installed in front of the camshafts. The cylinder head is made of cast aluminum alloy for better strength in hardness with light weight. The combustion chamber of the cylinder head is designed for increasing of squish and swirl efficiency and then this is maximized to gasoline

combustion efficiency.

Valves

There are 2 intake and 2 exhaust valves with tappets per cylinder.

Camshaft

Two camshafts are used, one for all intake valves, the other for all exhaust valves. The camshafts are cast iron. The camshafts are driven by the crankshaft over the timing belt.

Camshaft Drive

A timing belt is used for camshaft drive. There is a tensioner to control the tension of the belt. Instead of camshaft gears or camshaft sprockets the engine is equipped with camshaft adjuster. The camshaft adjuster readjust itself at the engine speed. So the valve timing is adjusted for a low consumption, optimal power and torque.

Intake Manifold

The intake manifold is the air flow passage to the cylinder combustion chamber through the throttle body and has an effect on engine torque, power, noise, drivability, emission, fuel economy and performance. It is made of plastic for better strength in hardness with little weight.

Exhaust Manifold

The exhaust manifold is located to the cylinder head and channels the exhaust gas out of the combustion chamber. It is designed to endure on high pressure and high temperature. The exhaust manifold includes the catalytic converter.

Positive Crankcase Ventilation System

The crankcase ventilation system is used to consume crankcase vapors in the combustion process instead of venting vapors to the atmosphere. Fresh air from the intake system is supplied to the crankcase, mixed with blow-by gases and then passed through a calibrated orifice into the throttle body. The primary control is through the positive crankcase ventilation (PCV) orifice which meters the flow at a rate depending on inlet vacuum. The PCV orifice is an integral part of the camshaft cover. If abnormal operating conditions occur, the system is designed to allow excessive amounts of blow-by gases to back flow through the crankcase vent into the intake system to be consumed by normal combustion.

LUBRICATION DESCRIPTION

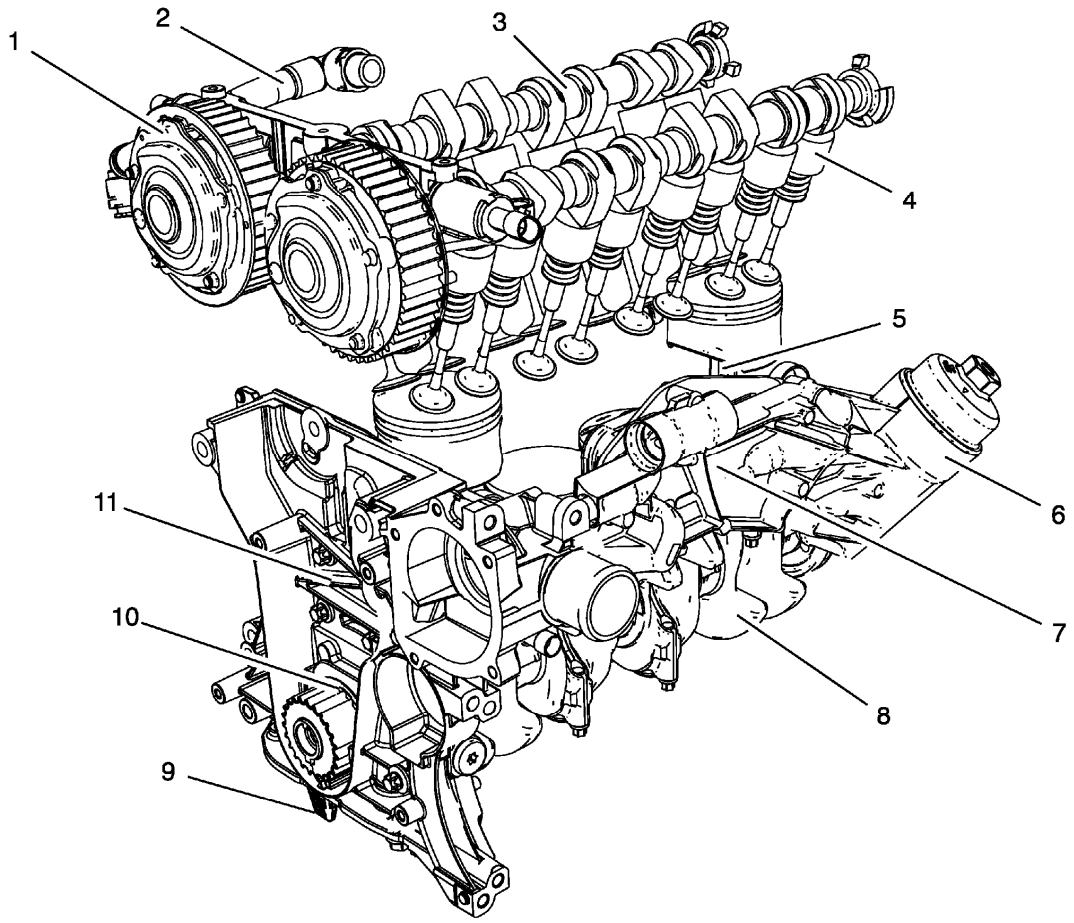

Fig. 554: Engine Lubrication System
Courtesy of GENERAL MOTORS COMPANY

Oil is applied under pressure to the crankshaft (8), connecting rods (5), camshaft adjuster (1), camshaft bearing surfaces (3) and valve tappets (4). All other moving parts are lubricated by gravity flow or splash. Oil enters the rotor type oil pump (10) through a fixed inlet screen (9). The oil pump is driven by the crankshaft. The oil pump body is within the engine front cover (11). The pressurized oil from the pump passes through the oil cooling system and the oil filter (6). The oil filter is integrated with the oil cooling system housing (7) that is connected to the front of the engine block. The oil filter is a disposable cartridge type. A by-pass valve in the filter cap allows continuous oil flow in case the oil filter should become restricted. The connecting rod bearings are oiled by constant oil flow passages through the crankshaft connecting the main journals to the rod journals. A groove around each upper main bearing furnishes oil to the drilled crankshaft passages. The pressurized oil passes through the cylinder head restrictor orifice into the cylinder head and then into each camshaft feed gallery. An engine oil pressure switch or sensor is installed at the end. Oil returns to the oil pan through passages cast into the cylinder head. The crankcase ventilation system does not contain to the lubrication system, but to the oil circuit. It is used to consume crankcase vapors in the combustion process instead of venting them to atmosphere. Fresh air from the intake system is supplied to the crankcase, mixed with blow by gases and then passed through a calibrated orifice of the crankcase ventilation tube (2) into the intake manifold.

REPLACING ENGINE GASKETS

Gasket Reuse and Applying Sealants

- Do not reuse any gasket unless specified.
- Gaskets that can be reused will be identified in the service procedure.
- Do not apply sealant to any gasket or sealing surface unless called out in the service information.

Separating Components

- Use a rubber mallet to separate components.
- Bump the part sideways to loosen the components.
- Bumping should be done at bends or reinforced areas to prevent distortion of parts.

Cleaning Gasket Surfaces

- Remove all gasket and sealing material from the part using a scraping tool.
- Care must be used to avoid gouging or scraping the sealing surfaces.
- Do not use any other method or technique to remove sealant or gasket material from a part.
- Do not use abrasive pads, sand paper, or power tools to clean the gasket surfaces.
    - These methods of cleaning can cause damage to the component sealing surfaces.
    - Abrasive pads also produce a fine grit that the oil filter cannot remove from the oil.
    - This grit is abrasive and has been known to cause internal engine damage.

Assembling Components

- When assembling components, use only the sealant specified or equivalent in the service procedure.
- Sealing surfaces should be clean and free of debris or oil.
- Specific components such as crankshaft oil seals or valve stem oil seals may require lubrication during assembly.
- Components requiring lubrication will be identified in the service procedure.
- When applying sealant to a component, apply the amount specified in the service procedure.
- Do not allow the sealant to enter into any blind threaded holes, as it may prevent the bolt from clamping properly or cause component damage when tightened.
- Tighten bolts to specifications. Do not overtighten.

SEPARATING PARTS

NOTE:

- **Disassembly of the piston, press fit design piston pin, and connecting rod may create scoring or damage to the piston pin and piston pin bore. If the piston, pin, and connecting rod have been disassembled, replace the components as an assembly.**
- **Many internal engine components will develop specific wear patterns on**

their friction surfaces.

- **When disassembling the engine, internal components MUST be separated, marked, or organized in a way to ensure installation to their original location and position.**

Separate, mark, or organize the following components:

- Piston and the piston pin
- Piston to the specific cylinder bore
- Piston rings to the piston
- Connecting rod to the crankshaft journal
- Connecting rod to the bearing cap-A paint stick or etching/engraving type tool are recommended. Stamping the connecting rod or cap near the bearing bore may affect component geometry.
- Crankshaft main and connecting rod bearings
- Camshaft and valve tappets
- Valve to the valve guide
- Valve spring and shim to the cylinder head location
- Engine block main bearing cap location and direction
- Oil pump drive and driven gears

TOOLS AND EQUIPMENT

Special tools are listed and illustrated throughout this section with a complete listing at the end of the section. These tools, or their equivalents, are specially designed to quickly and safely accomplish the operations for which they are intended. The use of these special tools will also minimize possible damage to engine components. Some precision measuring tools are required for inspection of certain critical components. Torque wrenches and a torque angle meter are necessary for the proper tightening of various fasteners.

To properly service the engine assembly, the following items should be readily available:

- Approved eye protection and safety gloves
- A clean, well lit, work area
- A suitable parts cleaning tank
- A compressed air supply
- Trays or storage containers to keep parts and fasteners organized
- An adequate set of hand tools
- Approved engine repair stand
- An approved engine lifting device that will adequately support the weight of the components

USE OF ROOM TEMPERATURE VULCANIZING (RTV) AND ANAEROBIC SEALANT

Pipe Joint Compound

NOTE: **Three types of sealer are commonly used in engines. These are RTV sealer, anaerobic gasket eliminator sealer, and pipe joint compound. The correct sealer and amount must be used in the proper location to prevent oil leaks. DO NOT interchange the 3 types of sealers. Use only the specific sealer or the equivalent as recommended in the service procedure.**

- Pipe joint compound is a pliable sealer that does not completely harden. This type sealer is used where 2 non-rigid parts, such as the oil pan and the engine block, are assembled together.
- Do not use pipe joint compound in areas where extreme temperatures are expected. These areas include: exhaust manifold, head gasket, or other surfaces where gasket eliminator is specified.
- Follow all safety recommendations and directions that are on the container.

To remove the sealant or the gasket material.

- Apply the pipe joint compound to a clean surface. Use a bead size or quantity as specified in the procedure. Run the bead to the inside of any bolt holes. Do not allow the sealer to enter any blind threaded holes, as it may prevent the bolt from clamping properly or cause component damage when the bolt is tightened.
- Apply a continuous bead of pipe joint compound to one sealing surface. Sealing surfaces to be resealed must be clean and dry.
- Tighten the bolts to specifications. Do not overtighten.

SPECIAL TOOLS AND EQUIPMENT

SPECIAL TOOLS

Illustration	Tool Number/Description
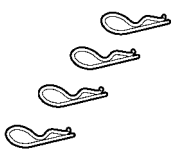	207649 Rod Hairpins
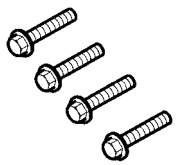	547324 Flange Screws
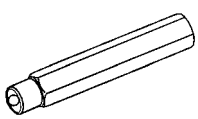	EN-232 KM-232 J-21867-L40 Oil Pressure Check Adapter

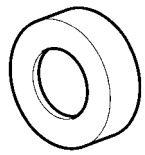	EN-235-6 KM-235-6 Installer
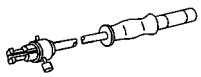	EN-328-B GE-328-B KM-328-B GE-6125-1B Remover
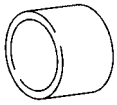	EN-422 KM-422 83 94 959 Installer
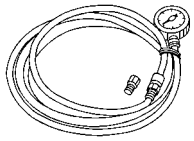	EN-498-B GE-21867-A J-21867-A KM-498-B CH-48027 Pressure Gauge and Adapter Set
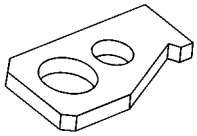	EN-652 KM-652 Flywheel Holder
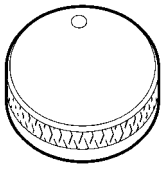	EN-658-1 KM-658-1 J-35264 Installer
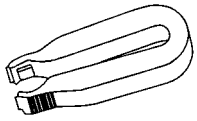	EN-796 KM-796-A Dismantler
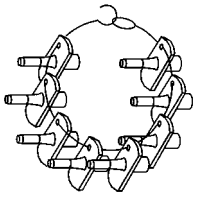	CH-807 KM-807 Closure Plugs
	EN-840

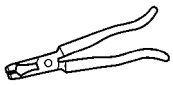	KM-840 J-36017 83 94 157 Remover
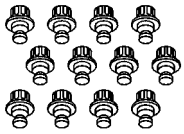	EN-845 KM-845 Suction Device
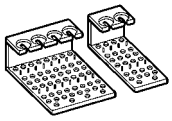	EN-849 KM-849 Assembly Tray
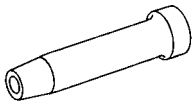	EN-958 KM-958 Valve Stem Seal Installer
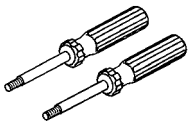	EN-6009 KM-6009 83 96 335 J-43301 Remover/Installer
	EN-6333 KM-6333 Locking Pin
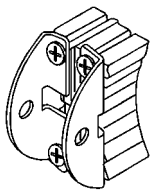	EN-6340 KM-6340 Locking Tool
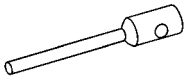	EN-6349 KM-6349 Locking Pin

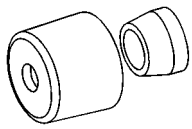	EN-6351 KM-6351 Assembly Sleeves
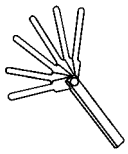	EN-6361 KM-6361 Feeler Gauge Set
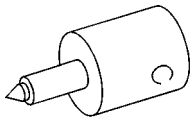	EN-6624 KM-6624 Remover
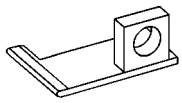	EN-6625 KM-6625 Flywheel Locking Device
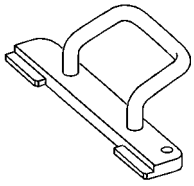	EN-6628-A KM-6628-A Locking Tool
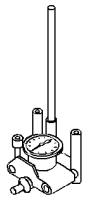	EN-8087 J-8087 Cylinder Bore Gauge
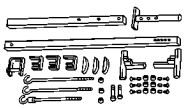	EN-28467-B J-28467-B Universal Engine Support Fixture
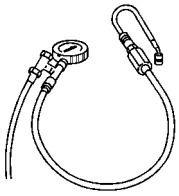	EN-34730-91 KM-34730-91 Pressure Tester

	EN-36857 J-36857 Engine Lift Bracket
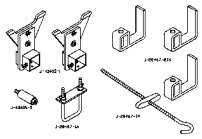	EN-43405 J-43405 Support Foot Set
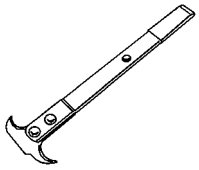	EN-45000 KM-45000 J-45000 Seal Remover
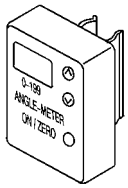	EN-45059 J-45059 Angle Meter
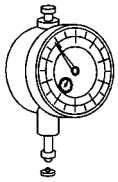	GE-571-B MKM-571-B GE-8001 J-8001 Dial Gauge
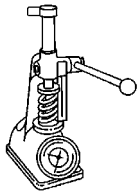	GE-22738-B J-22738-B Valve Spring Tester
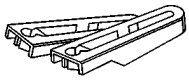	J-37088-A KM-37088A Fuel Line Disconnect Tool Set
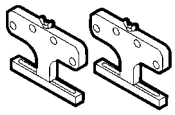	EN-50717-1 Stands

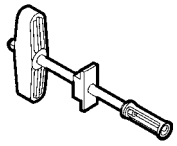	EN-50717-2 Compressor
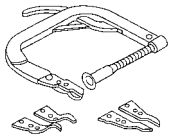	EN-8062 J-8062 Valve Spring Compressor

2013 ENGINE PERFORMANCE

Engine Controls and Fuel - 1.4L LUV - Description and Operation - Cruze

DESCRIPTION AND OPERATION

CAMSHAFT ACTUATOR SYSTEM DESCRIPTION

Camshaft Actuator System Overview

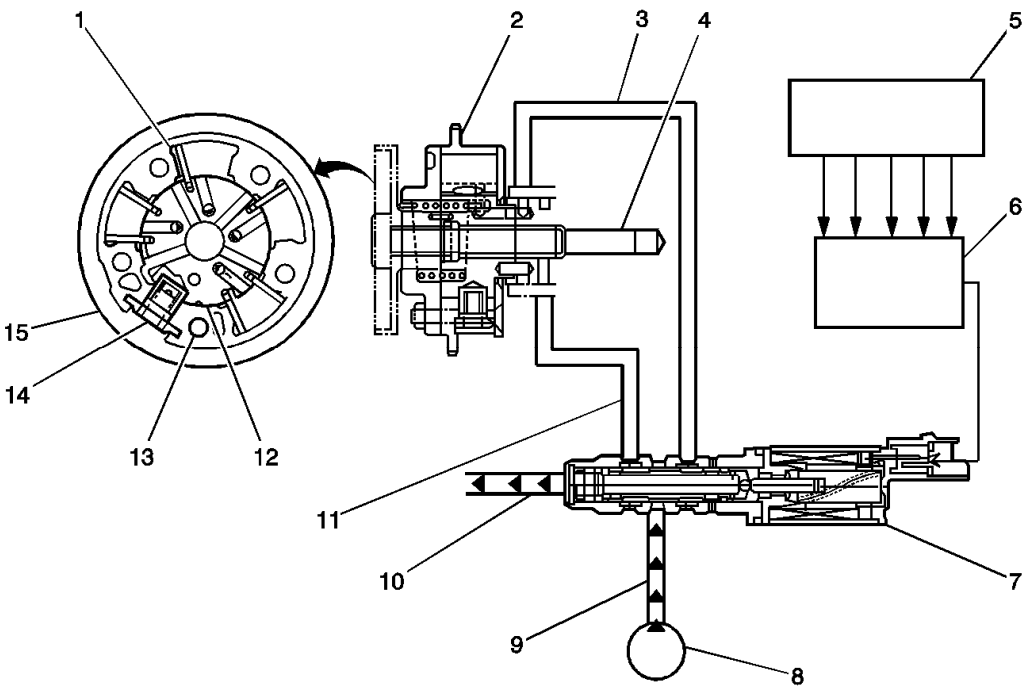

Fig. 1: Identifying Camshaft Actuator System Components
Courtesy of GENERAL MOTORS COMPANY

Callout	Component Name
1	Camshaft Actuator Vane
2	Timing Chain Sprocket
3	Engine Oil Pressure-For retarding the camshaft
4	Camshaft
5	Input Signals from Engine Sensors
6	Engine Control Module (ECM)
7	Camshaft Actuator Solenoid
8	Engine Oil Pump
9	Engine Oil Pressure Supply
10	Engine Oil Drain
11	Engine Oil Pressure-For advancing the camshaft

12	Camshaft Actuator Rotor
13	Camshaft Position Sensor Reluctor
14	Camshaft Actuator Lock Pin
15	Camshaft Actuator Housing

The camshaft actuator system enables the engine control module (ECM) to change camshaft timing of all 4 camshafts while the engine is operating. The camshaft position (CMP) actuator assembly (15) varies the camshaft position in response to directional changes in oil pressure. The CMP actuator solenoid valve controls the oil pressure that is applied to advance or retard a camshaft. Modifying camshaft timing under changing engine demand provides better balance between the following performance concerns:

- Engine power output
- Fuel economy
- Tailpipe emissions

The CMP actuator solenoid valve (7) is controlled by the ECM. The crankshaft position (CKP) sensor and the CMP sensors are used to monitor changes in camshaft positions. The ECM uses the following information in order to calculate the desired camshaft positions:

- Engine coolant temperature
- Calculated engine oil temperature (EOT)
- Mass air flow (MAF)
- Throttle position (TP)
- Vehicle speed
- Volumetric efficiency

Operation

The CMP actuator assembly has an outer housing that is driven by an engine timing chain. Inside the assembly is a rotor with fixed vanes that is attached to the camshaft. Oil pressure that is applied to the fixed vanes will rotate a specific camshaft in relationship to the crankshaft. The movement of the intake camshafts will advance the intake valve timing. The movement of the exhaust camshafts will retard the exhaust valve timing. When oil pressure is applied to the return side of the vanes, the camshafts will return to 0 crankshaft degrees, or top dead center (TDC). The CMP actuator solenoid valve directs the oil flow that controls the camshaft movement. The ECM commands the CMP solenoid to move the solenoid plunger and spool valve until oil flows from the advance passage (11). Oil flowing thru the CMP actuator assembly from the CMP solenoid advance passage applies pressure to the advance side of the vanes in the CMP actuator assembly. When the camshaft position is retarded, the CMP actuator solenoid valve directs oil to flow into the CMP actuator assembly from the retard passage (3). The ECM can also command the CMP actuator solenoid valve to stop oil flow from both passages in order to hold the current camshaft position.

The ECM operates the CMP actuator solenoid valve by pulse width modulation (PWM) of the solenoid coil. The higher the PWM duty cycle, the larger the change in camshaft timing. The CMP actuator assembly also contains a lock pin (14) that prevents movement between the outer housing and the rotor vane assembly. The lock pin is released by oil pressure before any movement in the CMP actuator assembly takes place. The ECM

is continuously comparing CMP sensor inputs with CKP sensor input in order to monitor camshaft position and detect any system malfunctions. If a condition exists in either the intake or exhaust camshaft actuator system, the opposite bank, intake or exhaust, camshaft actuator will default to 0 crankshaft degrees.

CMP Actuator System Operation

Driving Condition	Change in Camshaft Position	Objective	Result
Idle	No Change	Minimize Valve Overlap	Stabilized Idle Speed
Light Engine Load	Retarded Valve Timing	Decrease Valve Overlap	Stabled Engine Output
Medium Engine Load	Advanced Valve Timing	Increase Valve Overlap	Better Fuel Economy with Lower Emissions
Low to Medium RPM with Heavy Load	Advanced Valve Timing	Advance Intake Valve Closing	Improved Low to Mid-range Torque
High RPM with Heavy Load	Retarded Valve Timing	Retard Intake Valve Closing	Improved Engine Output

ELECTRONIC IGNITION SYSTEM DESCRIPTION

Electronic Ignition System Operation

The electronic ignition system produces and controls the high energy secondary spark. This spark ignites the compressed air/fuel mixture at precisely the correct time, providing optimal performance, fuel economy, and control of exhaust emissions. The engine control module (ECM) collects information from the crankshaft position sensor and the intake/exhaust camshaft position sensors to determine the sequence, dwell, and timing of the spark for each cylinder. The ECM transmits a frequency signal to the ignition coil module on the individual ignition control circuits to fire the spark plugs.

Crankshaft Position Sensor

The crankshaft position sensor is an externally magnetically biased digital output integrated circuit sensing device. The sensor provides a pulse for each magnetic pole of the encoder wheel on the crankshaft. The sensor produces an ON/OFF DC voltage of varying frequency, with 58 output pulses per crankshaft revolution. The frequency of the sensor output depends on the velocity of the crankshaft. The ECM uses sensor signal pulse to determine crankshaft speed and position to calculate the best timing for ignition and fuel injection. The ECM also uses the crankshaft position sensor information to control camshaft phasing and to detect cylinder misfire.

The ECM also has a dedicated replicated crankshaft position sensor signal output circuit that may be used as an input signal to other modules for monitoring engine RPM.

The crankshaft position sensor is connected to the engine control module by the circuits listed below:

- A 5 V reference circuit
- A low reference circuit
- A signal circuit

Crankshaft Encoder Wheel

The crankshaft encoder wheel is part of the crankshaft. The encoder wheel consists of 58 tooth and a reference gap. Each tooth on the encoder wheel is spaced 6° apart with a 12° space for the reference gap. The pulse from the reference gap is known as the sync pulse. The sync pulse is used to synchronize the ignition coil module firing sequence with the crankshaft position while the other tooth provides cylinder location during a revolution.

Camshaft Position Sensors

The intake and exhaust camshaft position sensors are each triggered by a notched reluctor wheel built onto the camshaft sprockets. The four signal pulses occur every camshaft revolution. Each notch is a different size which is used to identify the compression stroke of each cylinder and to enable sequential fuel injection. The camshaft position sensors are connected to the ECM by the circuits listed below:

- A 5 V reference circuit
- A low reference circuit
- A signal circuit

Ignition Coil Module

The ignition coil module integrates the 4 coils and the ignition control module within a single sealed component.

The ignition coil module has the following circuits:

- An ignition voltage circuit
- A ground
- A low reference circuit
- 4 ignition coil control circuits

The ECM controls the individual coils by transmitting timing pulses on the ignition coil control circuit to each ignition coil to enable a spark event.

The spark plugs are connected to each coil by a short boot. The boot contains a spring that conducts the spark energy from the coil to the spark plug. The spark plug electrode is coated with platinum for long wear and higher efficiency.

Engine Control Module (ECM)

The ECM controls all ignition system functions and constantly adjusts the spark timing. The ECM monitors information from various sensor inputs that include the following:

- The crankshaft position sensor
- The accelerator pedal position (APP)
- The manifold absolute pressure (MAP) sensor
- The intake air temperature (IAT) sensor
- The vehicle speed sensor (VSS)

- The engine knock sensor
- The engine coolant temperature (ECT) sensor
- The mass airflow (MAF) sensor
- The camshaft position sensors

ENGINE CONTROL MODULE DESCRIPTION

The Engine Control Module (ECM) interacts with many emission related components and systems, and monitors emission related components and systems for deterioration. OBD II diagnostics monitor the system performance and a diagnostic trouble code (DTC) sets if the system performance degrades. The ECM is part of a network and communicates with various other vehicle control modules.

Malfunction indicator lamp (MIL) operation and DTC storage are dictated by the DTC type. A DTC is ranked as a Type A or Type B if the DTC is emissions related. Type C is a non-emissions related DTC.

The ECM is the control center of the engine controls system. Review the components and wiring diagrams in order to determine which systems are controlled by the ECM.

The ECM constantly monitors the information from various sensors and other inputs, and controls the systems that affect engine performance and emissions. The ECM also performs diagnostic tests on various parts of the system and can turn on the MIL when it recognizes an operational problem that affects emissions. When the ECM detects a malfunction, the ECM stores a DTC. The condition area is identified by the particular DTC that is set. This aids the technician in making repairs.

ECM Function

The ECM can supply 5 V or 12 V to various sensors or switches. This is done through pull-up resistors to regulated power supplies within the ECM. In some cases, even an ordinary shop voltmeter will not give an accurate reading due to low input resistance. Therefore, a digital multimeter (DMM) with at least 10 megaohms input impedance is required in order to ensure accurate voltage readings.

The ECM controls the output circuits by controlling the ground or the power feed circuit through transistors or a device called an output driver module.

EEPROM

The electronically erasable programmable read only memory (EEPROM) is an integral part of the ECM. The EEPROM contains program and calibration information that the ECM needs in order to control engine operation.

Special equipment, as well as the correct program and calibration for the vehicle, are required in order to reprogram the ECM.

Data Link Connector (DLC)

The data link connector (DLC) provides serial data communication for ECM diagnosis. This connector allows the technician to use a scan tool in order to monitor various serial data parameters, and display DTC

information. The DLC is located inside the driver's compartment, underneath the instrument panel.

Malfunction Indicator Lamp (MIL)

The malfunction indicator lamp (MIL) is inside the instrument panel cluster (IPC). The MIL is controlled by the ECM and illuminates when the ECM detects a condition that affects vehicle emissions.

ECM Service Precautions

The ECM, by design, can withstand normal current draws that are associated with vehicle operations. However, care must be used in order to avoid overloading any of these circuits. When testing for opens or shorts, do not ground or apply voltage to any of the ECM circuits unless the diagnostic procedure instructs you to do so. These circuits should only be tested with a DMM unless the diagnostic procedure instructs otherwise.

Emissions Diagnosis For State I/M Programs

This OBD II equipped vehicle is designed to diagnose any conditions that could lead to excessive levels of the following emissions:

- Hydrocarbons (HC)
- Carbon monoxide (CO)
- Oxides of nitrogen (NOx)
- Evaporative emission (EVAP) system losses

Should this vehicle's on-board diagnostic system (ECM) detect a condition that could result in excessive emissions, the ECM turns ON the MIL and stores a DTC that is associated with the condition.

Aftermarket (Add-On) Electrical And Vacuum Equipment

CAUTION: Do not attach add-on vacuum operated equipment to this vehicle. The use of add-on vacuum equipment may result in damage to vehicle components or systems.

CAUTION: Connect any add-on electrically operated equipment to the vehicle's electrical system at the 12 V battery (power and ground) in order to prevent damage to the vehicle.

Aftermarket, add-on, electrical and vacuum equipment is defined as any equipment installed on a vehicle after leaving the factory that connects to the vehicle's electrical or vacuum systems. No allowances have been made in the vehicle design for this type of equipment.

Add-on electrical equipment, even when installed to these strict guidelines, may still cause the powertrain system to malfunction. This may also include equipment not connected to the vehicle electrical system, such as portable telephones and radios. Therefore, the first step in diagnosing any powertrain condition is to eliminate all of the aftermarket electrical equipment from the vehicle. After this is done, if the problem still exists, the problem may be diagnosed in the normal manner.

Electrostatic Discharge (ESD) Damage

NOTE: In order to prevent possible electrostatic discharge damage to the ECM, DO NOT touch the connector pins on the ECM.

The electronic components that are used in the control systems are often designed to carry very low voltage. These electronic components are susceptible to damage caused by electrostatic discharge. Less than 100 V of static electricity can cause damage to some electronic components. By comparison, it takes as much as 4, 000 V for a person to even feel a static discharge.

There are several ways for a person to become statically charged. The most common methods of charging are by friction and by induction. An example of charging by friction is a person sliding across a car seat.

Charging by induction occurs when a person with well insulated shoes stands near a highly charged object and momentarily touches ground. Charges of the same polarity are drained off leaving the person highly charged with the opposite polarity. Static charges can cause damage, therefore, it is important to use care when handling and testing electronic components.

Emissions Control Information Label

The underhood Vehicle Emissions Control Information Label contains important emission specifications. This identifies the year, the displacement of the engine in liters, and the class of the vehicle.

This label is located in the engine compartment of every General Motors vehicle. If the label has been removed, it can be ordered from GM service parts operations (GMSPO).

EVAPORATIVE EMISSION CONTROL SYSTEM DESCRIPTION

Typical Evaporative Emission (EVAP) System Hose Routing Diagram

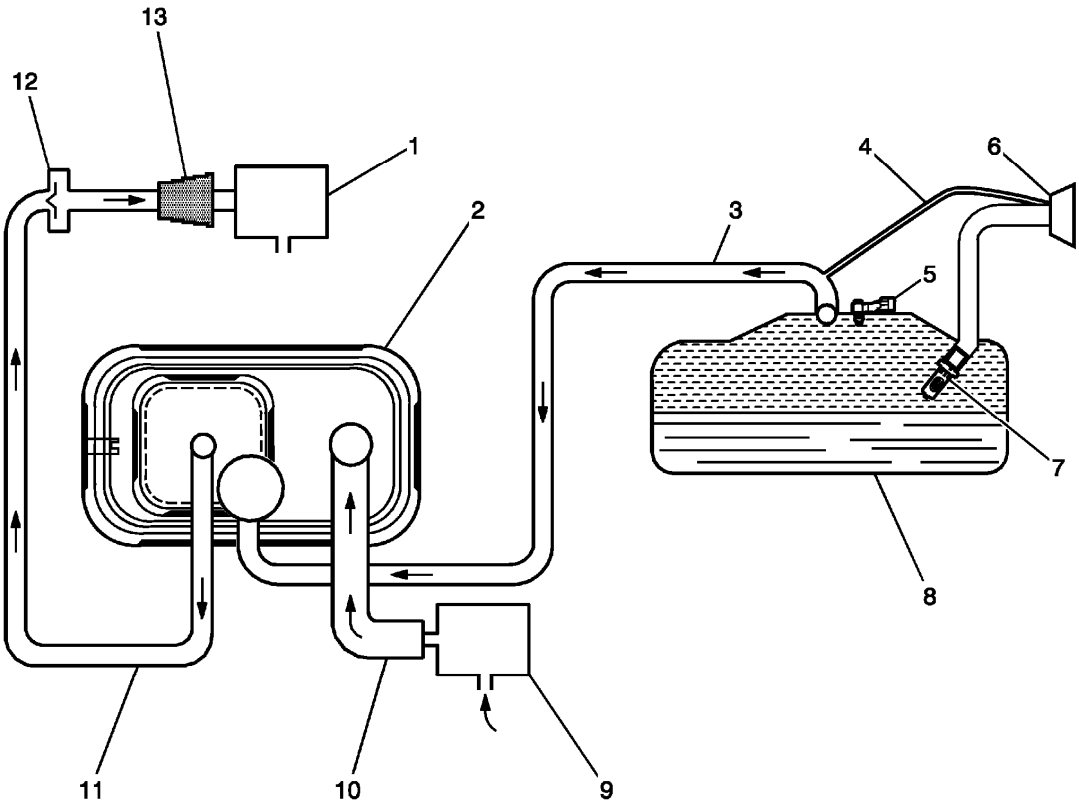

Fig. 2: View Of Evaporative Emission (EVAP) System Hose Routing Diagram
Courtesy of GENERAL MOTORS COMPANY

Callout	Component Name
1	Evaporative Emissions (EVAP) Purge Solenoid Valve
2	EVAP Canister
3	EVAP Vapor Tube
4	Vapor Recirculation Tube
5	Fuel Tank Pressure Sensor
6	Fuel Filler Cap (Some Vehicles May Have A Capless Design)
7	Fuel Fill Pipe Inlet Check Valve
8	Fuel Tank
9	EVAP Canister Vent Solenoid Valve
10	Vent hose
11	EVAP Purge Tube
12	Purge Tube Check Valve, Turbo-Charged Applications Only
13	EVAP Canister Purge Tube Connector

EVAP System Operation

The evaporative emission (EVAP) control system limits fuel vapors from escaping into the atmosphere. Fuel tank vapors are allowed to move from the fuel tank, due to pressure in the tank, through the EVAP vapor tube, into the EVAP canister. Carbon in the canister absorbs and stores the fuel vapors. Excess pressure is vented through the vent hose and EVAP vent solenoid valve to the atmosphere. The EVAP canister stores the fuel vapors until the engine is able to use them. At an appropriate time, the engine control module (ECM) will command the EVAP purge solenoid valve ON, allowing engine vacuum to be applied to the EVAP canister. With the normally open EVAP vent solenoid valve OFF, fresh air is drawn through the vent solenoid valve and the vent hose to the EVAP canister. Fresh air is drawn through the canister, pulling fuel vapors from the carbon. The air/fuel vapor mixture continues through the EVAP purge tube and EVAP purge solenoid valve into the intake manifold to be consumed during normal combustion. The ECM uses several tests to determine if the EVAP system is leaking or restricted.

Purge Solenoid Valve Leak Test

If the EVAP purge solenoid valve does not seal properly fuel vapors could enter the engine at an undesired time, causing driveability concerns. The ECM tests for this by commanding the EVAP purge solenoid valve OFF and the vent solenoid valve ON which seals the system. With the engine running, the ECM then monitors the fuel tank pressure (FTP) sensor for an increase in vacuum. The ECM will log a fault if a vacuum develops in the tank under these test conditions.

Large Leak Test

This diagnostic creates a vacuum condition in the EVAP system. When the enabling criteria has been met, the ECM commands the normally open EVAP vent solenoid valve closed and the EVAP purge solenoid valve open, creating a vacuum in the EVAP system. The ECM then monitors the FTP sensor voltage to verify that the system is able to reach a predetermined level of vacuum within a set amount of time. Failure to achieve the expected level of vacuum indicates the presence of a large leak in the EVAP system or a restriction in the purge path. The ECM will log a fault if it detects a weaker than expected vacuum level under these test conditions.

Canister Vent Restriction Test

If the EVAP vent system is restricted, fuel vapors will not be properly purged from the EVAP canister. The ECM tests this by commanding the EVAP purge solenoid valve ON while commanding the EVAP vent solenoid valve OFF, and then monitoring the FTP sensor for an increase in vacuum. If the vacuum increases more than the expected amount, in a set amount of time, a fault will be logged by the ECM.

Small Leak Test

The engine off natural vacuum diagnostic is the small-leak detection diagnostic for the EVAP system. The engine off natural vacuum diagnostic monitors the EVAP system pressure with the ignition OFF. Because of this, it may be normal for the ECM to remain active for up to 40 min after the ignition is turned OFF. This is important to remember when performing a parasitic draw test on vehicles equipped with engine off natural vacuum.

When the vehicle is driven, the temperature rises in the tank due to heat transfer from the exhaust system. After the vehicle is parked, the temperature in the tank continues to rise for a period of time, then starts to drop. The

engine off natural vacuum diagnostic relies on this temperature change, and the corresponding pressure change in a sealed system, to determine if an EVAP system leak is present.

The engine off natural vacuum diagnostic is designed to detect leaks as small as 0.51 mm (0.020 in).

EVAP System Components

The EVAP system consists of the following components:

EVAP Purge Solenoid Valve

The EVAP purge solenoid valve controls the flow of vapors from the EVAP system to the intake manifold. The purge solenoid valve opens when commanded ON by the ECM. This normally closed valve is pulse width modulated (PWM) by the ECM to precisely control the flow of fuel vapor to the engine. The valve will also be opened during some portions of the EVAP testing when the engine is running, allowing engine vacuum to enter the EVAP system.

Purge Tube Check Valve

Turbocharged vehicles have a check valve in the purge tube between the EVAP purge solenoid valve and the EVAP canister to prevent pressurization of the EVAP system under boost conditions. Note that the presence of this one-way check valve prevents pressure testing the EVAP system for leaks at the EVAP canister purge tube connector.

EVAP Canister

The canister is filled with carbon pellets used to absorb and store fuel vapors. Fuel vapor is stored in the canister until the ECM determines that the vapor can be consumed in the normal combustion process.

Vapor Recirculation Tube

A vapor path between the fuel fill pipe and the vapor tube to the carbon canister is necessary for Vehicle Onboard Diagnostics to fully diagnose the EVAP system. It also accommodates service diagnostic procedures by allowing the entire EVAP system to be diagnosed from either end of the system.

Fuel Tank Pressure Sensor

The FTP sensor measures the difference between the pressure or vacuum in the fuel tank and outside air pressure. The ECM provides a 5 V reference and a ground to the FTP sensor. Depending on the vehicle, the sensor can be located in the vapor space on top of the fuel tank, in the vapor tube between the canister and the tank, or on the EVAP canister. The FTP sensor provides a signal voltage back to the ECM that can vary between 0.1-4.9 V. A high FTP sensor voltage indicates a low fuel tank pressure or vacuum. A low FTP sensor voltage indicates a high fuel tank pressure.

Fuel Fill Pipe Check Valve

The check valve on the fuel fill pipe is there to prevent spit-back during refueling.

EVAP Vent Solenoid Valve

The EVAP vent solenoid valve controls fresh airflow into the EVAP canister. The valve is normally open. The canister vent solenoid valve is closed only during EVAP system tests performed by the ECM.

Fuel Fill Cap

The fuel fill cap is equipped with a seal and a vacuum relief valve.

Capless Fuel Fill

Some vehicles may have a capless fuel fill design behind a locking fuel door. There is no fuel fill cap to remove. One just fully inserts the fuel nozzle into the fill neck, making sure it latches before refueling. Flapper valves close to seal this interface once the fill nozzle is removed.

FUEL SYSTEM DESCRIPTION

Fuel System Overview

The fuel system is an electronic returnless on-demand design. A returnless fuel system reduces the internal temperature of the fuel tank by not returning hot fuel from the engine to the fuel tank. Reducing the internal temperature of the fuel tank results in lower evaporative emissions.

The fuel tank stores the fuel supply. An electric turbine style fuel pump attaches to the fuel tank fuel pump module inside the fuel tank. The fuel pump supplies fuel through the fuel feed pipe to the fuel injection system. The fuel tank fuel pump module contains a reverse flow check valve. The check valve maintains fuel pressure in the fuel feed pipe and the fuel rail in order to prevent long cranking times.

Electronic Returnless Fuel System

The electronic returnless fuel system is a microprocessor controlled fuel delivery system which transports fuel from the tank to the fuel rail. It functions as an electronic replacement for a traditional, mechanical fuel pressure regulator. A pressure relief regulator valve within the fuel tank provides an added measure of over pressure protection. Desired fuel pressure is commanded by the engine control module (ECM), and transmitted to the fuel pump flow control module via a GMLAN serial data message. A liquid fuel pressure sensor provides the feedback the fuel pump flow control module requires for Closed Loop fuel pressure control.

Fuel Pump Flow Control Module

The fuel pump flow control module is a serviceable GMLAN module. The fuel pump flow control module receives the desired fuel pressure message from the engine control module (ECM) and controls the fuel pump located within the fuel tank to achieve the desired fuel pressure. The fuel pump flow control module sends a 25 kHz PWM signal to the fuel pump, and pump speed is changed by varying the duty cycle of this signal. Maximum current supplied to the fuel pump is 15 A. A liquid fuel pressure sensor provides fuel pressure feedback to the fuel pump flow control module.

Fuel Pressure Sensor

The fuel pressure sensor is a serviceable 5 V, 3-pin device. It is located on the fuel feed line forward of the fuel tank, and receives power and ground from the fuel pump flow control module through a vehicle wiring harness. The sensor provides a fuel pressure signal to the fuel pump flow control module, which is used to provide Closed Loop fuel pressure control.

Fuel Tank

The fuel tank stores the fuel supply. The fuel tank is located in the rear of the vehicle. The fuel tank is held in place by 2 metal straps that are attached to the underbody. The fuel tank is molded from high-density polyethylene.

Fuel Filler Cap

The fuel fill pipe has a tethered fuel filler cap. A torque-limiting device prevents the cap from being overtightened. To install the cap, turn the cap clockwise until the cap clicks audibly. This indicates that the cap is correctly torqued and fully seated.

Fuel Tank Fuel Pump Module

The fuel tank fuel pump module consists of the following components:

- The fuel level sensor
- The fuel pump
- The fuel strainer
- The pressure relief regulator valve
- The jet pump

Fuel Level Sensor

The fuel level sensor consists of a float, a wire float arm, and a ceramic resistor card. The position of the float arm indicates the fuel level. The fuel level sensor contains a variable resistor which changes resistance in correspondence with the position of the float arm. The ECM sends the fuel level signal via a High Speed CAN-Bus signal to the body control module (BCM). The BCM then sends the information via a Low Speed CAN-Bus signal to the instrument cluster to display the fuel level. When the fuel level falls below 11% the instrument cluster illuminates the low fuel level indicator. The ECM also monitors the fuel level input for various diagnostics.

Fuel Pump

The fuel pump is mounted in the fuel tank fuel pump module reservoir. The fuel pump is an electric pump. Fuel is pumped to the fuel injection system at a pressure that is based on feedback from the fuel pressure sensor. The fuel pump delivers a constant flow of fuel even during low fuel conditions and aggressive vehicle maneuvers. The fuel pump flex pipe acts to dampen the fuel pulses and noise generated by the fuel pump.

Fuel Strainer

The fuel strainer is attached to the lower end of the fuel tank fuel pump module. The fuel strainer is made of

woven plastic. The functions of the fuel strainer are to filter contaminants and to wick away fuel. Normally, the fuel strainer does not require maintenance. Fuel stoppage at this point indicates that the fuel tank contains an abnormal amount of sediment or contamination.

Jet Pump

The jet pump is located in the fuel tank fuel pump module. Fuel pump flow loss, caused by vapor expulsion in the pump inlet chamber, is diverted to the jet pump through a restrictive orifice located on the pump cover. The jet pump fills the reservoir of the fuel tank fuel pump module.

Pressure Relief Regulator Valve

The pressure relief regulator valve replaces the typical fuel pressure regulator used on a mechanical returnless fuel system. The pressure relief regulator valve is closed during normal vehicle operation. The pressure relief regulator valve is used to vent pressure during hot soaks and also functions as a fuel pressure regulator in the event of the fuel pump flow control module defaulting to 100% pulse width modulation (PWM) of the fuel pump. Due to variation in the fuel system pressures, the opening pressure for the pressure relief regulator valve is set higher than the pressure that is used on a mechanical returnless fuel system pressure regulator.

Nylon Fuel Pipes

WARNING: Refer to Fuel and Evaporative Emission Pipe Warning .

Nylon pipes are constructed to withstand maximum fuel system pressure, exposure to fuel additives, and changes in temperature.

Heat resistant rubber hose or corrugated plastic conduit protect the sections of the pipes that are exposed to chafing, high temperature, or vibration.

Nylon fuel pipes are somewhat flexible and can be shaped around gradual turns under the vehicle. However, if nylon fuel pipes are forced into sharp bends, the pipes may kink and restrict the flow of fuel. Also, once exposed to fuel, nylon pipes may become stiffer and are more likely to kink if bent too far. Exercise special care when working on a vehicle with nylon fuel pipes.

Quick-Connect Fittings

Nylon fuel pipes are somewhat flexible and can be shaped around gradual turns under the vehicle. However, if nylon fuel pipes are forced into sharp bends, the pipes may kink and restrict the flow of fuel. Also, once exposed to fuel, nylon pipes may become stiffer and are more likely to kink if bent too far. Exercise special care when working on a vehicle with nylon fuel pipes.

Fuel Rail Assembly

The fuel rail assembly is attached to the engine intake manifold. The fuel rail assembly performs the following functions:

- Positions the injectors in the intake manifold
- Distributes fuel evenly to the injectors

Fuel Injectors

The fuel injector assembly is a solenoid device controlled by the ECM that meters pressurized fuel to a single engine cylinder. The ECM energizes the high-impedance, 12 ohms, injector solenoid to open a ball valve, normally closed. This allows fuel to flow into the top of the injector, past the ball valve, and through a director plate at the injector outlet. The director plate has machined holes that control the flow of fuel, generating a spray of finely atomized fuel at the injector tip. Fuel from the injector tip is directed at the intake valve, causing the fuel to become further atomized and vaporized before entering the combustion chamber. This fine atomization improves fuel economy and emissions.

Fuel Metering Modes of Operation

The ECM monitors voltages from several sensors in order to determine how much fuel to feed to the engine. The ECM controls the amount of fuel delivered to the engine by changing the fuel injector pulse width. The fuel is delivered under one of several modes.

Starting Mode

The ECM supplies voltage to the fuel pump control module when the ECM detects that the ignition is ON. The voltage from the ECM to the fuel pump control module remains active for 2 s, unless the engine is in Crank or Run. While this voltage is being received, the fuel pump control module closes the ground switch of the fuel tank fuel pump module and also supplies a varying voltage to the fuel tank fuel pump module in order to maintain the desired fuel line pressure. The ECM calculates the air/fuel ratio based on inputs from the engine coolant temperature (ECT), manifold absolute pressure (MAP), mass air flow (MAF), and throttle position sensors. The system stays in starting mode until the engine speed reaches a predetermined RPM.

Clear Flood Mode

If the engine is flooded with fuel during starting and will not start, the clear flood mode can be manually enabled. To enable Clear Flood Mode, press the accelerator to wide open throttle (WOT). The ECM will completely turn OFF the fuel injectors and will maintain this mode as long as the ECM detects a WOT condition with engine speed below a predetermined value.

Run Mode

The run mode has 2 conditions called Open Loop and Closed Loop. When the engine is first started and the engine speed is above a predetermined RPM, the system begins Open Loop operation. The ECM ignores the signal from the heated oxygen sensor (HO2S). The ECM calculates the air/fuel ratio based on inputs from the engine coolant temperature (ECT), manifold absolute pressure (MAP), mass air flow (MAF), and throttle position sensors. The system stays in Open Loop until meeting the following conditions:

- The HO2S has varying voltage output, showing that the HO2S is hot enough to operate properly.
- The ECT sensor is above a specified temperature.
- A specific amount of time has elapsed after starting the engine.

Specific values for the above conditions exist for each different engine, and are stored in the electrically erasable programmable read-only memory (EEPROM). The system begins Closed Loop operation after reaching these values. In Closed Loop, the ECM calculates the air/fuel ratio, injector ON time, based upon the signal from various sensors, but mainly from the HO2S. This allows the air/fuel ratio to stay very close to 14.7:1.

Acceleration Mode

When the driver pushes on the accelerator pedal, air flow into the cylinders increases rapidly. To prevent possible hesitation, the ECM increases the pulse width to the injectors to provide extra fuel during acceleration. This is also known as power enrichment. The ECM determines the amount of fuel required based upon throttle position, engine coolant temperature (ECT), manifold absolute pressure (MAP), mass air flow (MAF), and engine speed.

Deceleration Mode

When the driver releases the accelerator pedal, air flow into the engine is reduced. The ECM monitors the corresponding changes in throttle position, mass air flow (MAF), and manifold absolute pressure (MAP). The ECM shuts OFF fuel completely if the deceleration is very rapid, or for long periods, such as long, closed-throttle coast-down. The fuel shuts OFF in order to prevent damage to the catalytic converters.

Battery Voltage Correction Mode

When the battery voltage is low, the ECM compensates for the weak spark delivered by the ignition system in the following ways:

- Increasing the amount of fuel delivered
- Increasing the idle RPM
- Increasing the ignition dwell time

Fuel Cutoff Mode

The ECM cuts OFF fuel from the fuel injectors when the following conditions are met in order to protect the powertrain from damage and improve driveability:

- The ignition is OFF. This prevents engine run-on.
- The ignition is ON but there is no ignition reference signal. This prevents flooding or backfiring.
- The engine speed is too high, above red line.
- The vehicle speed is too high, above rated tire speed.
- During an extended, high speed, closed throttle coast down-This reduces emissions and increases engine braking.
- During extended deceleration, in order to prevent damage to the catalytic converters

Fuel Trim

The ECM controls the air/fuel metering system in order to provide the best possible combination of driveability,

fuel economy, and emission control. The ECM monitors the heated oxygen sensor (HO2S) signal voltage while in Closed Loop and regulates the fuel delivery by adjusting the pulse width of the injectors based on this signal. The ideal fuel trim values are around 0 percent for both short and long term fuel trim. A positive fuel trim value indicates the ECM is adding fuel in order to compensate for a lean condition by increasing the pulse width. A negative fuel trim value indicates that the ECM is reducing the amount of fuel in order to compensate for a rich condition by decreasing the pulse width. A change made to the fuel delivery changes the long and short term fuel trim values. The short term fuel trim values change rapidly in response to the HO2S signal voltage. These changes fine tune the engine fueling. The long term fuel trim makes coarse adjustments to fueling in order to re-center and restore control to short term fuel trim. A scan tool can be used to monitor the short and long term fuel trim values. The long term fuel trim diagnostic is based on an average of several of the long term speed load learn cells. The ECM selects the cells based on the engine speed and engine load. If the ECM detects an excessively lean or rich condition, the ECM will set a fuel trim diagnostic trouble code (DTC).

KNOCK SENSOR SYSTEM DESCRIPTION

Circuit/System Description

The knock sensor system enables the engine control module (ECM) to control the ignition timing for the best possible performance while protecting the engine from potentially damaging levels of detonation. The ECM uses the knock sensor system to test for abnormal engine noise that may indicate detonation, also known as spark knock.

Sensor Description

This knock sensor system uses one or two flat response dual-wire sensors. The sensor uses piezo-electric crystal technology that produces an alternating current (AC) voltage signal of varying amplitude and frequency based on the engine vibration or noise level. The amplitude and frequency are dependant upon the level of knock that the knock sensor detects. The ECM receives the knock sensor signal through 2 isolated signal circuits.

If the ECM has determined that knock is present, it will retard the ignition timing to attempt to reduce the knock. The ECM is capable of controlling spark retard on an individual cylinder basis. The ECM will always try to work back to a zero compensation level, or no spark retard. knock sensor diagnostics are calibrated to detect faults with the knock sensor circuitry inside the ECM, the knock sensor wiring, or the knock sensor voltage output. Some diagnostics are also calibrated to detect constant noise from an outside influence such as a loose/damaged component or excessive mechanical engine noise.

THROTTLE ACTUATOR CONTROL (TAC) SYSTEM DESCRIPTION

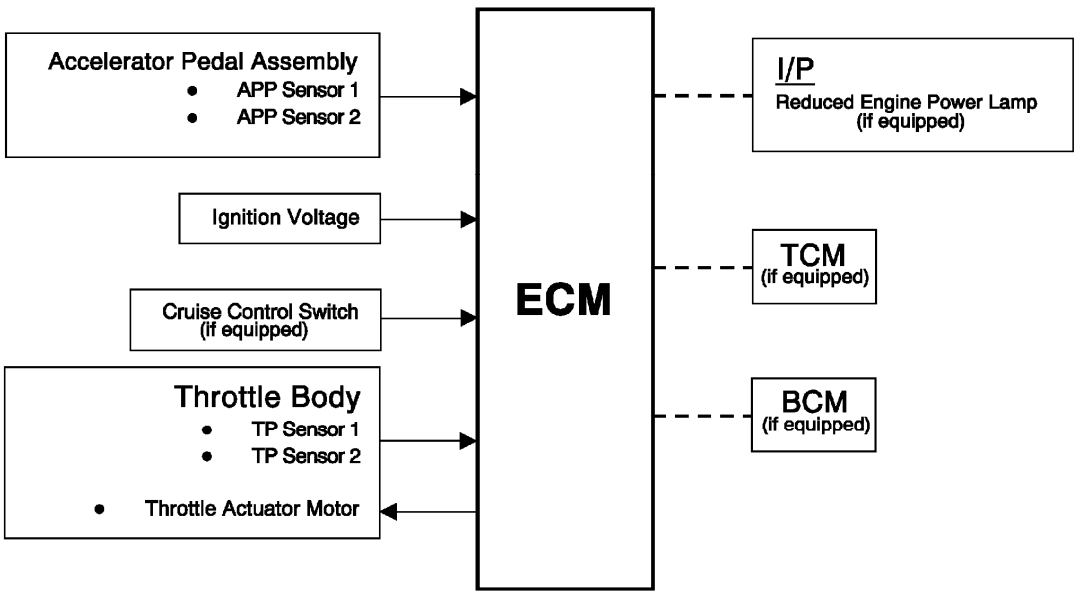

Fig. 3: Throttle Actuator Control (TAC) System
Courtesy of GENERAL MOTORS COMPANY

The engine control module (ECM) is the control center for the throttle actuator control (TAC) system. The ECM determines the driver's intent based on input from the accelerator pedal position sensors, then calculates the appropriate throttle response based on the throttle position sensors. The ECM achieves throttle positioning by providing a pulse width modulated voltage to the throttle actuator motor. The throttle blade is spring loaded in both directions, and the default position is slightly open.

Modes Of Operation

Normal Mode

During the operation of the TAC system, several modes, or functions, are considered normal. The following modes may be entered during normal operations:

- Minimum pedal value-At key-up, the ECM updates the learned minimum pedal value.
- Minimum throttle position values-At key-up, the ECM updates the learned minimum throttle position value. In order to learn the minimum throttle position value, the throttle blade is moved to the Closed position.
- Ice break mode-If the throttle blade is not able to reach a predetermined minimum throttle position, the ice break mode is entered. During the ice break mode, the ECM commands the maximum pulse width several times to the throttle actuator motor in the closing direction.
- Minimum pedal value-At key-up, the ECM updates the learned minimum pedal value.
- Battery saver mode-After a predetermined time without engine RPM, the ECM commands the Battery

Saver mode. During the Battery Saver mode, the TAC module removes the voltage from the motor control circuits, which removes the current draw used to maintain the idle position and allows the throttle to return to the spring loaded default position.

Reduced Engine Power Mode

When the ECM detects a condition with the TAC system, the ECM may enter a reduced engine power mode. Reduced engine power may cause one or more of the following conditions:

- Acceleration limiting-The ECM will continue to use the accelerator pedal for throttle control, however, the vehicle acceleration is limited.
- Limited throttle mode-The ECM will continue to use the accelerator pedal for throttle control, however, the maximum throttle opening is limited.
- Throttle default mode-The ECM will turn OFF the throttle actuator motor, and the throttle will return to the spring loaded default position.
- Forced idle mode-The ECM will perform the following actions:
  - Limit engine speed to idle positioning the throttle position, or by controlling the fuel and spark if the throttle is turned OFF.
  - Ignore the accelerator pedal input.
- Engine shutdown mode-The ECM will disable fuel and de-energize the throttle actuator.

TURBOCHARGER SYSTEM DESCRIPTION

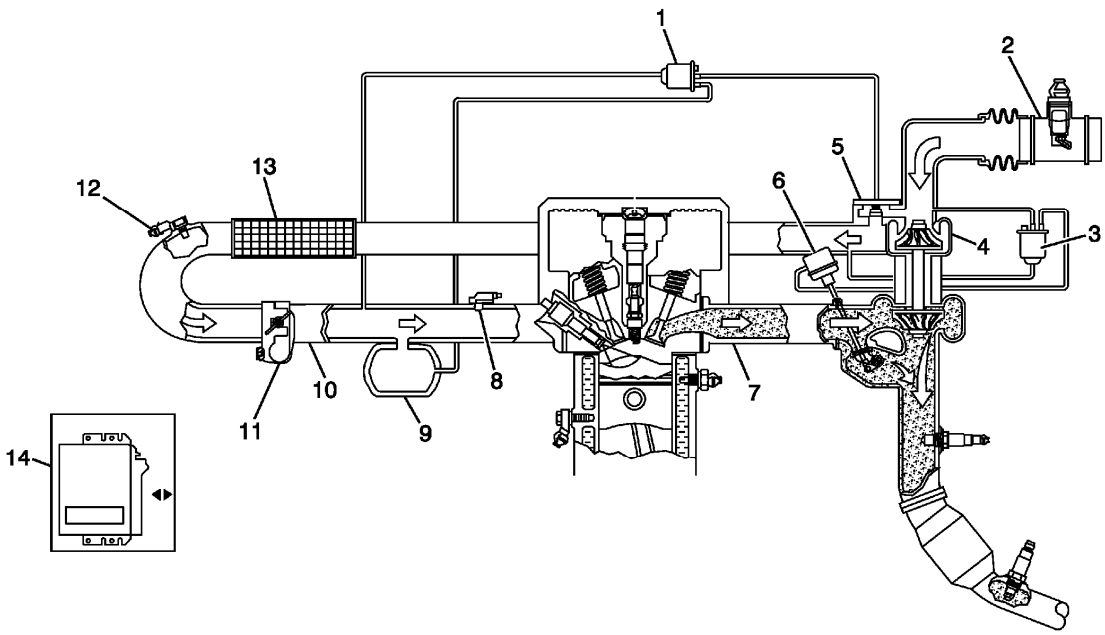

Fig. 4: Turbocharger System Description Diagram
Courtesy of GENERAL MOTORS COMPANY

Callout	Component Name
1	Turbocharger Bypass Solenoid Valve
2	Multifunction Intake Air Sensor
3	Turbocharger Wastegate Regulator Solenoid Valve
4	Turbocharger
5	Turbocharger Bypass Valve
6	Turbocharger Wastegate Actuator
7	Engine Exhaust Manifold
8	Manifold Absolute Pressure (MAP) Sensor
9	Vacuum Tank (Integral to Intake Manifold)
10	Intake Manifold
11	Throttle Body
12	Intake Air (Boost) Pressure and Temperature Sensor
13	Charge Air Cooler
14	Engine Control Module (ECM)

Turbocharger Description and Operation

A turbocharger is a forced induction device used for increasing power output of an internal combustion engine. By using the exhaust gas forces to compress intake air, a turbocharged engine is more powerful and efficient than a naturally aspirated engine with the same displacement. The dual-scroll turbocharger is mounted on the exhaust manifold and the lightweight turbine is driven by the waste energy generated by the flow of the exhaust gases. The turbine is connected by a shaft to the compressor which is mounted in the induction system of the engine. The compressor vanes compress the intake air above atmospheric pressure, thereby greatly increasing the density of the air entering the engine.

The turbocharger incorporates a wastegate that is controlled by the ECM, by means of a pulse width modulated (PWM) solenoid, to regulate the pressure ratio of the compressor. An integral turbocharger bypass valve, controlled by the ECM through a remotely mounted solenoid, is used to prevent compressor surging and damage by opening during abrupt closed throttle conditions. The bypass valve opens during closed throttle deceleration conditions, which allows the air to recirculate in the turbocharger and maintain compressor speed. During a wide open throttle command, the bypass valve closes to optimize turbo response.

The turbocharger is connected to the engine oiling system by a supply and drain tube and synthetic oil is installed at the factory. Synthetic oil is required for its friction-reducing capabilities and high-temperature performance. There is a cooling system circuit in the turbocharger that utilizes the engine coolant to further reduce operating temperatures.

Turbocharger Wastegate Solenoid Valve

The wastegate valve opens and closes a bypass passage beside the turbine wheel. A spiral spring works in the closing direction while the pressure in the diaphragm works in the opening direction. The ECM supplies a PWM signal to the solenoid valve, which then allows pressure from the turbo to come through. When the pressure overcomes the spring force the actuator rod begins to move, opening the wastegate valve to a corresponding degree. The ECM changes wastegate valve opening by varying the PWM signal, which regulates

the turbine speed.

At low loads, the wastegate valve is closed. All the exhaust gas then passes through the turbine. At high loads, the volume of exhaust gas is greater, which makes the turbine wheel rotate faster. This delivers a greater air displacement to the engine.

When the air displacement becomes so large that the current air mass per combustion cannot be controlled with the throttle alone, the turbo must be regulated. This is done by opening the wastegate valve so that some of the exhaust gas passes through the wastegate. Consequently, this gas does not contribute to driving the turbine and the turbine speed will be regulated so that the turbo air displacement will be correct.

When certain DTCs are set the ECM will limit the amount of available boost pressure. Limiting boost pressure is accomplished by the ECM controlling the wastegate actuator solenoid valve and maintaining the duty cycle at 0 %. This means that the ECM will not actively close the wastegate during greater engine loads. The system at this point is limited to mechanical boost. Mechanical boost means that the wastegate will still move, but the amount of motion is limited by the mechanical properties of the return spring within the diaphragm valve, the pneumatic properties of the actuator, and the physics of the exhaust gas flow in the exhaust system.

The turbocharger wastegate diaphragm valve assembly has a threaded rod and nut that connects the diaphragm of the valve to the wastegate. This rod is adjusted to factory specifications and is not adjustable.

The following diagrams illustrate the turbocharger wastegate closed and open conditions:

Turbocharger Wastegate Closed

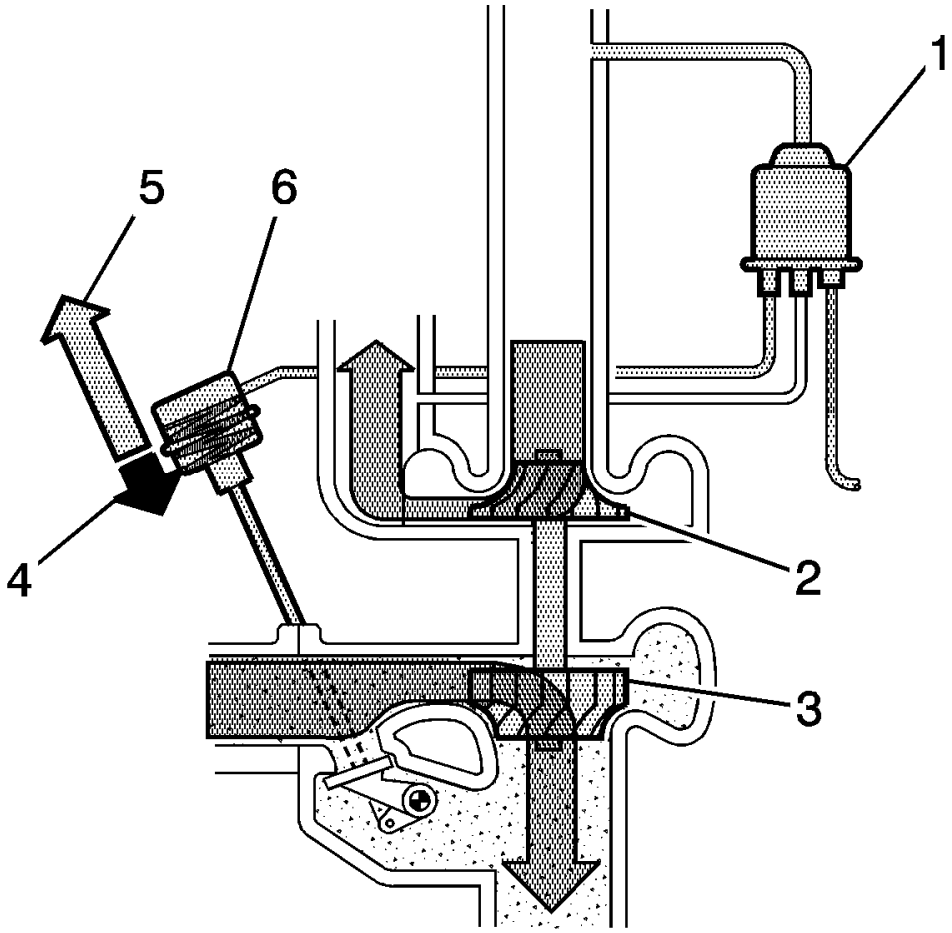

Fig. 5: TC Wastegate Closed
Courtesy of GENERAL MOTORS COMPANY

Callout	Component Name
1	Turbocharger Wastegate Actuator Solenoid Valve with Duty Cycle at 100 percent
2	Compressor
3	Turbine
4	Exhaust Gas Pressure
5	Spring Force
6	Turbocharger Wastegate Diaphragm Valve

Turbocharger Wastegate Open

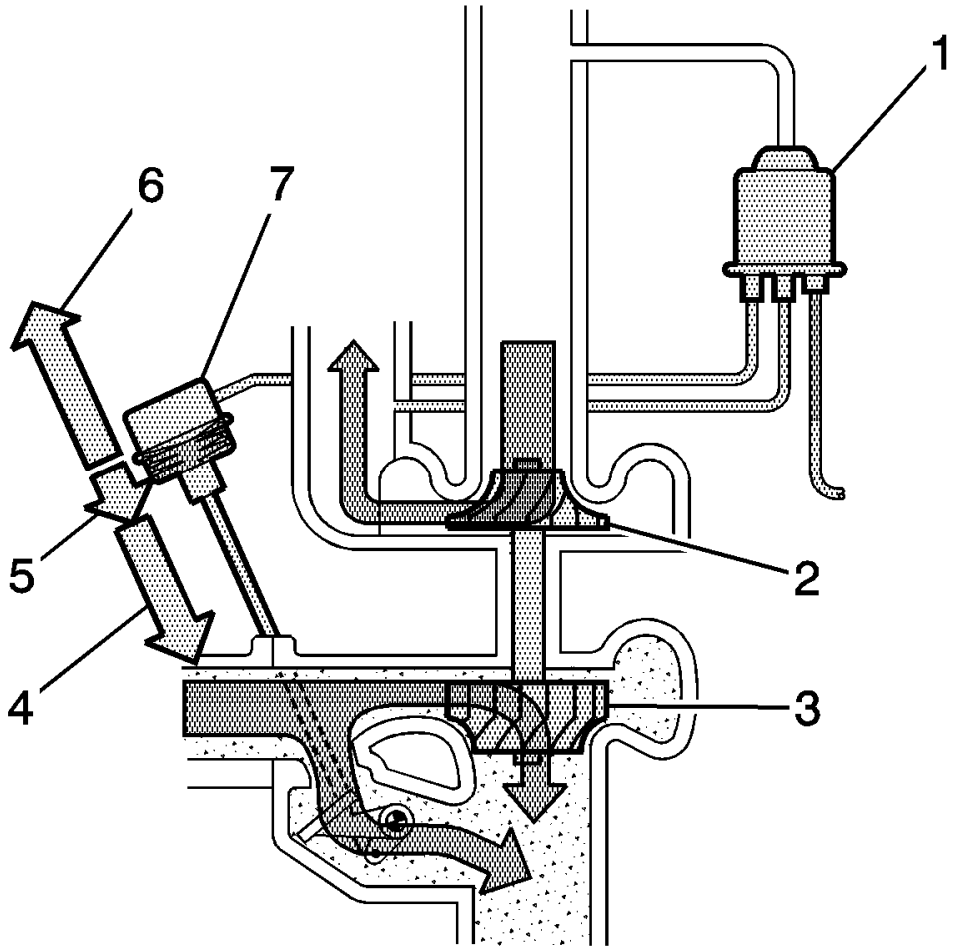

Fig. 6: TC Wastegate Open
Courtesy of GENERAL MOTORS COMPANY

Callout	Component Name
1	Turbocharger Wastegate Actuator Solenoid Valve with Duty Cycle at 0 percent
2	Compressor
3	Turbine
4	Regulating Pressure
5	Exhaust Gas Pressure
6	Spring Force
7	Turbocharger Wastegate Diaphragm Valve

The wastegate is completely closed at idle. All of the exhaust energy is passing through the turbine.

During normal operation, when wide open throttle is requested at lower engine speeds, the ECM commands the wastegate solenoid with a duty cycle of 100 % to minimize any turbo lag. During engine loads in the middle and upper RPM ranges, the ECM commands the solenoid with a duty cycle of about 65 %.

Turbocharger Bypass Solenoid Valve

The turbocharger bypass valve prevents the turbo from exceeding the pump limit at low flow and high pressure. This occurs when the engine is running with a load and the throttle suddenly closes. In this case, flow is almost null and pressure is very high. This not only is damaging to the turbocharger, but also generates noise and decelerates turbine speed. The ECM supplies a voltage signal to the solenoid valve output driver, which regulates the open or closed valve position.

Accelerator Pedal Depressed

The bypass valve is closed. The force in the return spring integrated in the valve presses the valve cone against its seat in the turbo housing. The valve is turned OFF.

Accelerator Pedal Released

In order to avoid pressure spikes in the intake manifold and unloading or overrunning the turbo, the ECM sends a voltage signal to the bypass valve, which will then open. The compressed air on the pressure side of the turbo is led to the intake via the open valve. When the pressure drops, the turbine speed can be kept relatively high and the turbocharger is prevented from exceeding the pump limit.

Charge Air Cooler

The turbocharger is supported by an air-to-air charge air cooler system, which uses fresh air drawn through a heat exchanger to reduce the temperature of the warmer compressed air forced through the intake system. Inlet air temperature can be reduced by up to 100°C (180°F), which enhances performance. This is due to the higher density of oxygen in the cooled air, which promotes optimal combustion. The charge air cooler is connected to the turbocharger and to the throttle body by flexible ductwork that requires the use of special high torque fastening clamps. In order to prevent any type of air leak when servicing the ductwork, the tightening specifications and proper positioning of the clamps is critical, and must be strictly adhered to.

2013 ENGINE PERFORMANCE

Engine Controls and Fuel - 1.4L LUV - Diagnostic Information and Procedures - Cruze

DIAGNOSTIC INFORMATION AND PROCEDURES

DTC P0010, P0013, OR P2088-P2091

Diagnostic Instructions

- Perform the **Diagnostic System Check - Vehicle** prior to using this diagnostic procedure.
- Review **Strategy Based Diagnosis** for an overview of the diagnostic approach.
- **Diagnostic Procedure Instructions** provides an overview of each diagnostic category.

DTC Descriptors

DTC P0010

Intake Camshaft Position Actuator Solenoid Valve Control Circuit

DTC P0013

Exhaust Camshaft Position Actuator Solenoid Valve Control Circuit

DTC P2088

Intake Camshaft Position Actuator Solenoid Control Circuit Low Voltage

DTC P2089

Intake Camshaft Position Actuator Solenoid Control Circuit High Voltage

DTC P2090

Exhaust Camshaft Position Actuator Solenoid Control Circuit Low Voltage

DTC P2091

Exhaust Camshaft Position Actuator Solenoid Control Circuit High Voltage

Diagnostic Fault Information

Circuit	Short to Ground	High Resistance	Open	Short to Voltage	Signal Performance
Camshaft Position Actuator Solenoid Valve	P0010, P0013,	P0010, P0013	P0010,	P0010, P0013,	P0011, P0014

High Control	P2088, P2090		P0013	P2089, P2091	
Camshaft Position Actuator Solenoid Valve Low Reference	-	P0010, P0013	P0010, P0013	-	-

Circuit/System Description

The camshaft position actuator system enables the Engine Control Module (ECM) to change the timing of the camshafts while the engine is operating. The Camshaft Position Actuator Solenoid Valve signal from the ECM is pulse width modulated (PWM). The ECM controls the Camshaft Position Actuator Solenoid Valve duty cycle by controlling the amount of solenoid valve ON time. The Camshaft Position Actuator Solenoid Valve controls the advance or the retard of each camshaft. The Camshaft Position Actuator Solenoid Valve controls the oil flow that applies the pressure to advance or retard the camshafts.

The ECM controls the Camshaft Position Actuator Solenoid Valve by suppling a 12 V pulse width modulated (PWM) signal. The ECM supplies a ground to the low reference circuit.

Conditions for Running the DTC

- The ignition voltage is greater than 11 V
- The ignition switch is in the crank or run position.
- The ECM has commanded the Camshaft Position Actuator Solenoid Valve ON.
- The DTCs run continuously once the above conditions are met.

Conditions for Setting the DTC

The ECM detects that the commanded state of the driver and the actual state of the control circuit do not match for greater than 5 seconds.

Action Taken When the DTC Sets

DTCs P0010, P0013, P2088, P2089, P2090 and P2091 are type B DTCs.

Conditions for Clearing the DTC

DTCs P0010, P0013, P2088, P2089, P2090 and P2091 are type B DTCs.

Diagnostic Aids

If the condition is intermittent, move the related harnesses and connectors, with the engine operating, while monitoring the scan tool Circuit Test Status parameters for the component. The Circuit Test Status parameters change from OK or Not Run to Malfunction if there is a condition with the circuit or a connection.

Reference Information

Schematic Reference

Engine Controls Schematics

Connector End View Reference

COMPONENT CONNECTOR END VIEWS - INDEX

Description and Operation

Camshaft Actuator System Description

Electrical Information Reference

- **Circuit Testing**
- **Connector Repairs**
- **Testing for Intermittent Conditions and Poor Connections**
- **Wiring Repairs**

DTC Type Reference

Powertrain Diagnostic Trouble Code (DTC) Type Definitions

Scan Tool Reference

Control Module References for scan tool information

Circuit/System Verification

NOTE: If a crankshaft or camshaft position sensor DTC is set, the Camshaft Position Actuator output control will not function.

1. Ignition ON.
2. Verify DTC P0335, P0336, P0340, and P0341 is not set.
   - **If any of the DTCs are set**

     Refer to **Diagnostic Trouble Code (DTC) List - Vehicle** for further diagnosis.

   - **If none of the DTCs are set**
3. Verify the scan tool parameters listed below do not display Malfunction:
   - Camshaft Position Actuator Solenoid Valve Control Circuit Open test status
   - Camshaft Position Actuator Solenoid Valve Control Circuit High Voltage test status
   - Camshaft Position Actuator Solenoid Valve Control Circuit Low Voltage test status
   - **If Malfunction is displayed**

     Refer to Circuit/System Testing below.

- **If Malfunction is not displayed**

4. Engine idling at normal operating temperature.
5. Verify the scan tool parameters listed below do not display Malfunction when commanding the appropriate scan tool Camshaft Position Actuator from 0-10° and back to 0° with a scan tool:
   - Camshaft Position Actuator Solenoid Valve Control Circuit Open test status
   - Camshaft Position Actuator Solenoid Valve Control Circuit High Voltage test status
   - Camshaft Position Actuator Solenoid Valve Control Circuit Low Voltage test status
   - **If Malfunction is displayed**

     Refer to Circuit/System Testing below.

   - **If Malfunction is not displayed**
6. Operate the vehicle within the Conditions for Running the DTC. You may also operate the vehicle within the conditions that you observed from the Freeze Frame/Failure Records data.
7. Verify the DTC does not set.
   - **If the DTC sets**

     Refer to Circuit/System Testing below.

   - **If the DTC does not set**
8. All OK.

Circuit/System Testing

1. Ignition OFF and all vehicle systems OFF, disconnect the harness connector at the appropriate Q6 Camshaft Position Actuator Solenoid Valve. It may take up to 2 minutes for all vehicle systems to power down.
2. Test for less than 5 ohms between the low reference circuit terminal 1and ground.
   - **If 5 ohms or greater**
   1. Ignition OFF, disconnect the harness connector at the K20 Engine Control Module.
   2. Test for less than 2 ohms in the low reference circuit end to end.
      - If 2 ohms or greater, repair the open/high resistance in the circuit.
      - If less than 2 ohms, replace the K20 Engine Control Module.
      - **If less than 5 ohms**
3. Ignition ON.

NOTE: A test lamp must be used for this test. The control circuit is pulled-up to a low current voltage. The current is too low to illuminate a test lamp. A voltage on the control circuit is normal.

4. Verify that a test lamp does not illuminate between the control circuit terminal 2and ground.
   - **If the test lamp illuminates**

1. Ignition OFF, disconnect the harness connector at the K20 Engine Control Module, ignition ON.
2. Test for less than 1 V between the control circuit and ground.
    - If 1 V or greater, repair the short to voltage on the circuit.
    - If less than 1 V, replace the K20 Engine Control Module.
    - **If the test lamp does not illuminate**

5. Remove the test lamp.
6. Verify the scan tool parameters listed below do not display Malfunction when commanding the Camshaft Position Actuator Solenoid Valve ON with a scan tool:
    - Intake Camshaft Position Actuator Solenoid Valve Control Circuit Low Voltage Test Status
    - Exhaust Camshaft Position Actuator Solenoid Valve Control Circuit Low Voltage Test Status
    - Intake Camshaft Position Actuator Solenoid Valve Control Circuit High Voltage Test Status
    - Exhaust Camshaft Position Actuator Solenoid Valve Control Circuit High Voltage Test Status
    - **If Malfunction is displayed**
    1. Ignition OFF, disconnect the harness connector at the K20 Engine Control Module.
    2. Test for less than 2 ohms in the control circuit end to end.
    - If 2 ohms or greater, repair the open/high resistance or short to ground in the circuit.
    - If less than 2 ohms, replace the K20 Engine Control Module.
    - **If Malfunction is not displayed**
7. Test or replace the Q6 Camshaft Position Actuator Solenoid Valve.

Component Testing

1. Ignition OFF, disconnect the harness connector at the Q6 Camshaft Position Actuator Solenoid Valve.
2. Test for 7-12 ohms between the control terminal 2 and the low reference terminal 1.
    - **If not between 7-12 ohms**

      Replace the Q6 Camshaft Position Actuator Solenoid Valve.

    - **If between 7-12 ohms**
3. Test for infinite resistance between each terminal and the Q6 Camshaft Position Actuator Solenoid Valve housing.
    - **If not infinite resistance**

      Replace the Q6 Camshaft Position Actuator Solenoid Valve.

    - **If infinite resistance**
4. All OK.

Repair Instructions

Perform the **Diagnostic Repair Verification** after completing the repair.

- **Camshaft Position Actuator Solenoid Valve Replacement**
- **Control Module References** for Engine Control Module replacement, programming and setup.

DTC P0011 OR P0014

Diagnostic Instructions

- Perform the **Diagnostic System Check - Vehicle** prior to using this diagnostic procedure.
- Review **Strategy Based Diagnosis** for an overview of the diagnostic approach.
- **Diagnostic Procedure Instructions** provides an overview of each diagnostic category.

DTC Descriptors

DTC P0011

Intake Camshaft Position System Performance

DTC P0014

Exhaust Camshaft Position System Performance

Diagnostic Fault Information

Circuit	Short to Ground	High Resistance	Open	Short to Voltage	Signal Performance
Camshaft Position Actuator Solenoid Valve High Control	P0010, P0013, P2088, P2090	P0010, P0013	P0010, P0013	P0010, P0013, P2089, P2091	P0011, P0014
Camshaft Position Actuator Solenoid Valve Low Reference	-	P0010, P0013	P0010, P0013	-	-

Circuit/System Description

The camshaft position (CMP) actuator system enables the engine control module (ECM) to change the timing of the camshafts while the engine is operating. The camshaft position actuator solenoid valves are operated hydraulically in order to change the angle of the camshaft relative to crankshaft position. The camshaft position actuator solenoid valves are controlled by the engine control module (ECM). The ECM sends a pulse width modulated signal to the camshaft position actuator solenoid valves. The camshaft position actuator solenoid valves control the amount of engine oil flow that applies the pressure to advance or retard the camshafts.

Conditions for Running the DTC

- DTC P0010, P0013, P0016, P0017, P0335, P0340, P0341, P0365, or P0366 is not set.
- The engine is running.

- The ignition voltage is between 11-32 V.
- The camshaft position actuator is enabled.
- The rate of change in the camshaft position is less than 3° for 4 s.
- DTCs P0011 and P0014 runs continuously once the above conditions are met for greater than 0.1 s.

Conditions for Setting the DTC

The ECM detects a difference between the camshaft position angle and the desired camshaft position angle is greater than 6 to 10° based on engine coolant temperature and engine speed.

Action Taken When the DTC Sets

DTCs P0011 and P0014 are Type B DTCs.

Conditions for Clearing the DTC

DTCs P0011 and P0014 are Type B DTCs.

Diagnostic Aids

- The engine oil condition has a major impact on the camshaft actuator system.
- A low oil level condition may set this DTC. The engine may require an oil change. Inquire with the customer when the last oil change was performed. You may also monitor the scan tool Engine Oil Life Remaining parameter. Advise the customer an oil change may be required.
- Inspect the engine for any recent engine mechanical repairs. An incorrectly installed camshaft, camshaft actuator, or timing belt can cause this DTC to set.
- A resistance greater than 8 ohms on the camshaft position actuator solenoid valve control circuit may set this DTC. If you suspect high resistance, ground the control circuit while the engine is idling. The scan tool Intake or Exhaust Camshaft Position Actuator Solenoid Valve Control Circuit Low Voltage Test Status should display Malfunction. If the parameter displays OK, test the control circuit for high resistance.

Reference Information

Schematic Reference

Engine Controls Schematics

Connector End View Reference

COMPONENT CONNECTOR END VIEWS - INDEX

Description and Operation

Camshaft Actuator System Description

Electrical Information Reference

- **Circuit Testing**
- **Connector Repairs**
- **Testing for Intermittent Conditions and Poor Connections**
- **Wiring Repairs**

DTC Type Reference

Powertrain Diagnostic Trouble Code (DTC) Type Definitions

Scan Tool Reference

Control Module References for scan tool information

Circuit/System Verification

NOTE:

- **The engine oil level and the oil pressure are critical to the correct operation of the camshaft position actuator system. Verify that the engine has the correct oil level and the correct oil pressure before continuing with this diagnostic.**
- **The engine oil condition has a major impact on the camshaft actuator system. Debris in the oil can interfere with the camshaft position actuator solenoid and the mechanical camshaft actuator operation. Inspect for dirty or degraded crankcase oil. The engine may require an oil change. Inquire with the customer when the last oil change was performed. You may also monitor the scan tool Engine Oil Life Remaining parameter. Advise the customer an oil change may be required.**

1. Ignition ON.
2. Verify the correct engine oil pressure. Refer to **Oil Pressure Diagnosis and Testing**
   - **If the oil level and the oil pressure are not correct**

     Repair as necessary

   - **If the oil level and the oil pressure are correct**

NOTE: **If a crankshaft or camshaft position sensor DTC is set, the scan tool Camshaft Position Actuator output control will not function.**

3. Verify DTC P0010, P0013, P0016, P0017, P0335, P0336, P0340, P0341, P0365, P0366, P2088, P2089, P2090 or P2091 is not set.
   - **If any of the DTCs are set**

Refer to **Diagnostic Trouble Code (DTC) List - Vehicle** for further diagnosis.

- **If none of the DTCs are set**

4. Engine idling.
5. Verify the scan tool parameters are less than 2° in each of the commanded states when commanding the Camshaft Position Actuator from 0-20° and back to 0° with the scan tool.
   - Intake Camshaft Position Variance
   - Exhaust Camshaft Position Variance
   - **If 2° or greater**

     Refer to Circuit/System Testing below.

   - **If less than 2°**
6. Verify that DTC P0011 or P0014 is not set.
   - **If any of the DTCs are set**

     Refer to Circuit/System Testing below.

   - **If none of the DTCs set**
7. Operate the vehicle within the Conditions for Running the DTC. You may also operate the vehicle within the conditions that you observed from the Freeze Frame/Failure Records data.
8. Verify the DTC does not set.
   - **If the DTC sets**

     Refer to Circuit/System Testing below.

   - **If the DTC does not set**
9. All OK.

Circuit/System Testing

1. Ignition OFF, disconnect the harness connector at the appropriate Q6 Camshaft Position Actuator Solenoid Valve. It may take up to 2 minutes for all vehicle systems to power down.
2. Test for less than 5 ohms between the low reference circuit terminal 1 and ground.
   - **If 5 ohms or greater**
   1. Ignition OFF, disconnect the harness connector at the K20 Engine Control Module.
   2. Test for less than 2 ohms in the low reference circuit end to end.
      - If 2 ohms or greater, repair the open/high resistance in the circuit.
      - If less than 2 ohms, replace the K20 Engine Control Module.
   - **If less than 5 ohms**
3. Ignition ON.

NOTE: A test lamp must be used for this test. The control circuit is pulled-up to a low current voltage, 1.5-4.5 V on the control circuit is normal.

4. Verify that a test lamp does not illuminate between the control circuit terminal 2 and ground.
   - **If the test lamp illuminates**
   1. Ignition OFF, disconnect the harness connector at the K20 Engine Control Module, ignition ON.
   2. Test for less than 1 V between the control circuit and ground.
      - If 1 V or greater, repair the short to voltage on the circuit.
      - If less than 1 V, replace the K20 Engine Control Module.
   - **If the test lamp does not illuminate**
5. Remove the test lamp.
6. Verify the scan tool parameters listed below do not display Malfunction when commanding the appropriate Camshaft Position Actuator Solenoid Valve ON with a scan tool.
   - Intake Camshaft Position Actuator Solenoid Valve Control Circuit Low Voltage Test Status
   - Exhaust Camshaft Position Actuator Solenoid Valve Control Circuit Low Voltage Test Status
   - Intake Camshaft Position Actuator Solenoid Valve Control Circuit High Voltage Test Status
   - Exhaust Camshaft Position Actuator Solenoid Valve Control Circuit High Voltage Test Status
   - **If Malfunction is displayed**
   1. Ignition OFF, disconnect the harness connector at the K20 Engine Control Module.
   2. Test for less than 2 ohms in the control circuit end to end.
      - If 2 ohms or greater, repair the open/high resistance or short to ground in the circuit.
      - If less than 2 ohms, replace the K20 Engine Control Module.
   - **If Malfunction is not displayed**
7. Ignition OFF, remove the Q6 Camshaft Position Actuator Solenoid Valve.
8. Verify the conditions listed below do not exist with the Q6 Camshaft Position Actuator Solenoid Valve:
   1. Torn, restricted, mis-positioned, or missing screens.
   2. Engine oil leak between the oil sealing lands of the solenoid. Inspect the lands of the solenoid for nicks.
   3. Oil seepage at the solenoid connector.
   - **If a condition is found**

     Replace the Q6 Camshaft Position Actuator Solenoid Valve.

   - **If a condition is not found**

NOTE: After swapping toe solenoids, install jumper wires to the appropriate terminals of the harness connectors and the solenoids.

9. Ignition OFF, swap the Q6 Camshaft Position Actuator Solenoid Valve with the Q6 Camshaft Position Actuator Solenoid Valve that is operating correctly.

10. Engine idling.
11. Verify the scan tool Camshaft Position Variance parameter is less than 2° in each of the commanded states when commanding the Camshaft Position Actuator from 0-20° and back to 0° with a scan tool.
    - **If 2° or greater**

      Replace the mechanical camshaft position actuator.

    - **If less than 2°**
12. Test or replace the Q6 Camshaft Position Actuator Solenoid Valve.

Component Testing

1. Ignition OFF, disconnect the harness connector at the Q6 Camshaft Position Actuator Solenoid Valve.
2. Test for 7-12 ohms between the control terminal 2 and the low reference circuit terminal 1.
    - **If not between 7-12 ohms**

      Replace the Q6 Camshaft Position Actuator Solenoid Valve.

    - **If between 7-12 ohms**
3. Test for infinite resistance between each terminal and the Q6 Camshaft Position Actuator Solenoid Valve housing.
    - **If not infinite resistance**

      Replace the Q6 Camshaft Position Actuator Solenoid Valve.

    - **If infinite resistance**
4. All OK

Repair Instructions

Perform the **Diagnostic Repair Verification** after completing the repair.

- **Camshaft Position Actuator Solenoid Valve Replacement**
- **Control Module References** for ECM replacement, programming and setup

DTC P0016 OR P0017

Diagnostic Instructions

- Perform the **Diagnostic System Check - Vehicle** prior to using this diagnostic procedure.
- Review **Strategy Based Diagnosis** for an overview of the diagnostic approach.
- **Diagnostic Procedure Instructions** provides an overview of each diagnostic category.

DTC Descriptors

DTC P0016

Crankshaft Position - Intake Camshaft Position Not Plausible

DTC P0017

Crankshaft Position - Exhaust Camshaft Position Not Plausible

Circuit/System Description

The engine control module (ECM) uses the crankshaft position sensor, intake camshaft position sensor, and the exhaust camshaft position sensor information to monitor the correlation between the crankshaft, intake camshaft, and exhaust camshaft position.

Conditions for Running the DTC

- DTCs P0335, P0336, P0340, P0341, P0365, P0366, P0641, or P0651 is not set
- The engine is running.
- The camshaft position actuator solenoid valves are in the parked position.

The DTCs run continuously once the above conditions are met.

Conditions for Setting the DTC

The ECM detects a camshaft to crankshaft misalignment. The DTC sets if the crankshaft position sensor signal is 10 degrees before or after the normal position in relation to the crankshaft angle while the engine is running.

Action Taken When the DTC Sets

DTCs P0016 and P0017 are Type B DTCs.

Conditions for Clearing the DTC

DTCs P0016 and P0017 are Type B DTCs.

Diagnostic Aids

The following conditions can also set the DTCs:

- A short to ground in a camshaft position actuator solenoid valve control circuit.
- Crankshaft end play out of specification.
- A crankshaft reluctor wheel that has moved in relationship to top dead center (TDC).

Reference Information

Description and Operation

Camshaft Actuator System Description

DTC Type Reference

Powertrain Diagnostic Trouble Code (DTC) Type Definitions

Scan Tool Reference

Control Module References for scan tool information

Circuit/System Verification

1. Ignition ON.
2. Verify DTC P0335, P0336, P0340, P0341, P0365, P0366, P0641 or P0651 is not set.
   - **If any of the DTCs are set**

     Refer to **Diagnostic Trouble Code (DTC) List - Vehicle** .

   - **If none of the DTCs are set**
3. Engine Running at normal operating temperature.
4. Verify DTC P0016 or P0017 is not set.
   - **If the DTC is set**

     Inspect for the following and repair as necessary:

     - A Q6 Camshaft Position Actuator Solenoid Valve that is stuck in the full advance or retard position.
     - The correct installation of the Q6 Camshaft Position Actuator Solenoid Valves.
     - The correct installation of the B23 Camshaft Position Sensors.
     - The correct installation of the B26 Crankshaft Position Sensor.
     - A timing chain tensioner condition.
     - An incorrectly installed timing chain.
     - Excessive play in the timing chain.
     - A crankshaft reluctor wheel that has moved in relationship to top dead center (TDC) on the crankshaft.
   - **If the DTC is not set**
5. Operate the vehicle within the Conditions for Running the DTC. You may also operate the vehicle within the conditions that you observed from the Freeze Frame/Failure Records data.
6. Verify the DTC does not set.
   - **If the DTC sets**

     A mechanical condition listed above still exists.

- **If the DTC does not set**

7. All OK.

Repair Instructions

Perform the **Diagnostic Repair Verification** after completing the repair.

- **Camshaft Position Actuator Solenoid Valve Replacement**
- **Camshaft Position Sensor Replacement**
- **Crankshaft Position Sensor Replacement**
- **Timing Chain Tensioner Replacement**

DTC P0030-P0032, P0036-P0038, P0053, P0054, P0135, OR P0141

Diagnostic Instructions

- Perform the **Diagnostic System Check - Vehicle** prior to using this diagnostic procedure.
- Review **Strategy Based Diagnosis** for an overview of the diagnostic approach.
- **Diagnostic Procedure Instructions** provide an overview of each diagnostic category.

DTC Descriptors

DTC P0030

HO2S Heater Control Circuit Sensor 1

DTC P0031

HO2S Heater Control Circuit Low Voltage Sensor 1

DTC P0032

HO2S Heater Control Circuit High Voltage Sensor 1

DTC P0036

HO2S Heater Control Circuit Sensor 2

DTC P0037

HO2S Heater Control Circuit Low Voltage Sensor 2

DTC P0038

HO2S Heater Control Circuit High Voltage Sensor 2

DTC P0053

HO2S Heater Resistance Sensor 1

DTC P0054

HO2S Heater Resistance Sensor 2

DTC P0135

HO2S Heater Performance Sensor 1

DTC P0141

HO2S Heater Performance Sensor 2

Diagnostic Fault Information

Circuit	Short to Ground	High Resistance	Open	Short to Voltage	Signal Performance
HO2S Heater Voltage Supply	P0030, P0036, P0102, P0132, P0134, P0135, P0138, P0141, P0443, *	P0030, P0036, P0132, P0134, P0135, P0138, P0140, P0141, P0154, P0155, P0158, P0160, P0161	P0030, P0036, P0132, P0134, P0135, P0138, P0140, P0141	P0690	P0135, P0141
HO2S Heater Control	P0030, P0031, P0036, P0037, P0053, P0054, P0135, P0141	P0030, P0036, P0053, P0132, P0135, P0138, P0140, P0141	P0030, P0036, P0132, P0134, P0135, P0138, P0140, P0141	P0030, P0032, P0036, P0038, P0132, P0134, P0135, P0138, P0140, P0141, P0690	P0135, P0141
*Opens Fuse					

Typical Scan Tool Data

HO2S Sensor 1 Current/HO2S Sensor 2 Current

Circuit	Short to Ground	Open	Short to Voltage
Parameter Normal Range: 0.2-1.5 A			

HO2S Heater Low Control	0 A	0 A	0 A
HO2S Heater Voltage Supply	0 A	0 A	0.2-2 A

Circuit/System Description

Heated oxygen sensors (HO2S) are used for fuel control and post-catalyst monitoring. Each HO2S compares the oxygen content of the surrounding air with the oxygen content in the exhaust stream. Each HO2S must reach operating temperature to provide an accurate voltage signal. A heating element inside each of the HO2S minimizes the time required for the sensor to reach operating temperature. Voltage is provided to the heater by an ignition voltage circuit through a fuse. With the engine running, ground is provided to the heater by the HO2S heater low control circuit, through a low side driver within the engine control module (ECM). The ECM uses pulse-width modulation (PWM) to control the HO2S heater operation to maintain a specific HO2S operating temperature range.

Conditions for Running the DTC

P0030, P0031, P0032, P0036, P0037 and P0038

- The system voltage is between 11-32 V.
- The engine speed is greater than 400 RPM.
- The DTCs run continuously when the above conditions are met for greater than 5 s.

P0053 and P0054

- DTCs P0111, P0112, P0113, P0114, P0116, P0117, P0118, P0119 or P2610 are not set.
- The system voltage is less than 32 V.
- The ignition is OFF for greater than 8 h.
- The engine is running.
- The ECT is between -30 to +45°C (-22 to +113°F).
- The engine coolant temperature (ECT) and the intake air temperature (IAT) are within 8°C (14°F).
- The DTCs run once per valid cold start-up when the above conditions are met.

P0135 and P0141

- DTCs P0116, P0117, P0118, P0119 or P0128 are not set.
- The system voltage is between 10-32 V.
- The HO2S heaters are at operating temperature.
- The scan tool HO2S Heater device control is not active.
- The commanded HO2S heater duty cycle is greater than 0%.
- The DTCs run twice per drive cycle when the above conditions are met for greater than 30 s.

Conditions for Setting the DTC

P0030, P0031, P0032, P0036, P0037 and P0038

The ECM detects that the commanded state of the driver and the actual state of the control circuit do not match for greater than 5 s.

P0053 and P0054

The ECM detects the HO2S heater is not within 7.5-13 ohms at engine start-up.

P0135 and P0141

The ECM detects the HO2S heater current is less than 0.30 A or greater than 2.5 A for greater than 8 s.

Action Taken When the DTC Sets

DTC P0030, P0031, P0032, P0036, P0037, P0038, P0053, P0054, P0135, and P0141 are Type B DTCs.

Conditions for Clearing the DTC

DTC P0030, P0031, P0032, P0036, P0037, P0038, P0053, P0054, P0135, and P0141 are Type B DTCs.

Diagnostic Aids

- If the condition is intermittent, move the related harnesses and connectors, with the engine operating, while monitoring the scan tool circuit status parameters for the component. The circuit status parameters will change from OK or Not Run to Malfunction if there is a condition with the circuit or a connection.
- An open fuse in the HO2S heater circuit may be caused by the heater element in one of the sensors. The condition may not be present until the sensor operates for a period of time. If no fault is present in the heater circuit, monitor the amperage of each heater with a scan tool to determine if one of the heater elements is the cause of the open fuse. Inspect the sensor pigtail or the harness for contacting the exhaust system.

Reference Information

Schematic Reference

Engine Controls Schematics

Connector End View Reference

COMPONENT CONNECTOR END VIEWS - INDEX

Electrical Information Reference

- **Circuit Testing**
- **Connector Repairs**
- **Testing for Intermittent Conditions and Poor Connections**
- **Wiring Repairs**

DTC Type Reference

Powertrain Diagnostic Trouble Code (DTC) Type Definitions

Scan Tool Reference

Control Module References for scan tool information

Circuit/System Verification

1. Engine idling.
2. Verify the parameters listed below do not display Malfunction.
   - HO2S 1 or 2 Heater Control Circuit Low Voltage Test Status
   - HO2S 1 or 2 Heater Control Circuit Open Test Status
   - HO2S 1 or 2 Heater Control Circuit High Voltage Test Status
   - **If Malfunction is displayed**

     Refer to Circuit/System Testing below.

   - **If Malfunction is not displayed**
3. Operate the vehicle within the conditions for running the DTC. You may also operate the vehicle within the conditions that you observed from the Freeze Frame/Failure Records data.
4. Verify the DTC does not set.
   - **If the DTC sets**

     Refer to Circuit/System Testing below.

   - **If the DTC does not set**
5. All OK.

Circuit/System Testing

1. Ignition OFF, disconnect the harness connector at the appropriate B52 Heated Oxygen Sensor. Ignition ON.
2. Verify that a test lamp illuminates between the ignition voltage circuit terminal 1 and ground.
   - **If the test lamp does not illuminate and the circuit fuse is good**

   1. Ignition OFF.
   2. Test for less than 2 ohms in the ignition circuit end to end.
      - If 2 ohms or greater, repair the open/high resistance in the circuit.
      - If less than 2 ohms, verify the fuse is OK and there is voltage at the fuse.
      - If the test lamp does not illuminate and the circuit fuse is open

   1. Ignition OFF, remove the test lamp.
   2. Test for infinite resistance between the ignition circuit and ground.

- If less than infinite resistance, repair the short to ground on the circuit.
- If infinite resistance, test all components connected to the fuse and replace as necessary.

- **If the test lamp illuminates**

3. Verify that a test lamp does not illuminate between the ignition voltage circuit terminal 1 and the control circuit terminal 2.
   - **If the test lamp illuminates**
   1. Ignition OFF, remove the test lamp, disconnect the harness connector at the K20 Engine Control Module.
   2. Test for infinite resistance between the control circuit and ground.
      - If less than infinite resistance, repair the short to ground on the circuit.
      - If infinite resistance, replace the K20 Engine Control Module.
   - **If the test lamp does not illuminate**
4. Remove the test lamp.
5. Verify the scan tool HO2S 1 or 2 Heater Control Circuit High Voltage Test Status parameter is OK when commanding the HO2S Heater Sensor 1 or 2 ON with a scan tool.
   - **If OK is not displayed**
   1. Ignition OFF, disconnect the harness connector at the K20 Engine Control Module, ignition ON.
   2. Test for less than 1 V between the control circuit and ground.
      - If 1 V or greater, repair the short to voltage on the circuit.
      - If less than 1 V, replace the K20 Engine Control Module.
   - **If OK is displayed**

NOTE:
- **Less than 10 ohms of additional resistance on the ignition voltage circuit, or control circuit may set a DTC. If there is a resistance on a circuit, the driver will remain ON and the scan tool HO2S High Voltage Test Status parameter will display OK.**
- **Performing this test may set additional DTCs.**

6. Install a 10 A fused jumper wire between the control circuit terminal 2 and the ignition voltage circuit terminal 1.

NOTE: **This test may only be performed once per key cycle. If test is repeated, ignition OFF, allow the engine control module to shut down completely, then ignition ON.**

7. Verify the scan tool HO2S 1 or 2 Heater Control Circuit High Voltage Test Status parameter is Malfunction when commanding the HO2S Heater Sensor 1 or 2 ON with a scan tool.
   - **If Malfunction is not displayed**
   1. Ignition OFF, remove the jumper wire, disconnect the harness connector at the K20 Engine Control Module.
   2. Test for less than 2 ohms in the control circuit end to end.

    - If 2 ohms or greater, repair the open/high resistance in the circuit.
    - If less than 2 ohms, replace the K20 Engine Control Module.
  - **If Malfunction is displayed**
8. Test or replace the B52 Heated Oxygen Sensor.

Component Testing

1. Ignition OFF, disconnect the harness connector at the appropriate B52 Heated Oxygen Sensor.
2. Test for 8-20 ohms between the ignition voltage circuit terminal 1 and the control circuit terminal 2.
   - **If not within the specified range, replace the B52 Heated Oxygen Sensor.**
   - **If within the specified range**
3. All OK.

Repair Instructions

Perform the **Diagnostic Repair Verification** after completing the repair.

- **Heated Oxygen Sensor Replacement - Sensor 1**
- **Heated Oxygen Sensor Replacement - Sensor 2**
- Perform the scan tool Heated Oxygen Sensor Resistance Learn Reset after replacing a HO2S.
- **Control Module References** for ECM replacement, programming and setup.

DTC P0033-P0035

Diagnostic Instructions

- Perform the **Diagnostic System Check - Vehicle** prior to using this diagnostic procedure.
- Review **Strategy Based Diagnosis** for an overview of the diagnostic approach.
- **Diagnostic Procedure Instructions** provides an overview of each diagnostic category.

DTC Descriptors

DTC P0033

Turbocharger Bypass Solenoid Valve Control Circuit

DTC P0034

Turbocharger Bypass Solenoid Valve Control Circuit Low Voltage

DTC P0035

Turbocharger Bypass Solenoid Valve Control Circuit High Voltage

Diagnostic Fault Information

Circuit	Short to Ground	Open/High Resistance	Short to Voltage	Signal Performance
Ignition Voltage Circuit	P0030, P0034, P0036, P0134, P0135, P0245, P0443, P0598*	P0030, P0033, P0034, P0036, P0134, P0135, P0140, P0141, P0243, P0245, P0443, P0597	-	-
Control Circuit	P0034	P0033	P0010, P0013, P0035, P0443, P0690	-
* Ignition fuse opens.				

Circuit/System Description

The turbocharger incorporates a wastegate that is controlled by a pressure differential, that is determined by the engine control module (ECM) by means of a PWM solenoid valve, in order to regulate the pressure ratio of the turbocharger. A turbocharger bypass valve also controlled by the ECM by utilizing a remotely mounted solenoid valve is integrated into the bypass valve to prevent turbocharger surging and damage from vibrations by opening during abrupt closed throttle conditions. When the valve is open during closed throttle deceleration conditions, the bypass valve allows the air to recirculate in the turbocharger and maintain turbocharger speed. Within a calibrated range during the closed throttle event, or upon a wide open throttle command the valve will then close to optimize turbo response. The bypass solenoid valve has the following circuits:

- Ignition voltage
- Turbocharger bypass solenoid valve control

As engine load and engine speed increases, the turbocharger bypass solenoid valve remains commanded ON by the ECM. As soon as the throttle closes the turbocharger bypass solenoid valve is commanded OFF by the ECM, in order to allow the turbocharger bypass valve to open and allow the turbocharger air to recirculate, there by preventing turbocharger surging.

Conditions for Running the DTC

- The engine is not cranking.
- The powertrain relay voltage is greater than 11 V.
- The run/crank voltage is greater than 6 V.
- The DTC run continuously when the above conditions are met.

Conditions for Setting the DTC

The ECM detects an open, a short to ground, or a short to voltage on the turbocharger bypass solenoid valve control circuit for greater than 1 s.

Action Taken When the DTC Sets

DTC P0033, P0034, P0035 are Type B DTCs.

Conditions for Clearing the DTC

DTC P0033, P0034, P0035 are Type B DTCs.

Reference Information

Schematic Reference

Engine Controls Schematics

Connector End View Reference

COMPONENT CONNECTOR END VIEWS - INDEX

Description and Operation

Turbocharger System Description

Electrical Information Reference

- **Circuit Testing**
- **Connector Repairs**
- **Testing for Intermittent Conditions and Poor Connections**
- **Wiring Repairs**

DTC Type Reference

Powertrain Diagnostic Trouble Code (DTC) Type Definitions

Scan Tool Reference

Control Module References for scan tool information

Circuit/System Verification

1. Ignition ON, Verify the parameters listed below do not display Malfunction when commanding the Turbocharger Bypass Solenoid Valve ON and OFF with a scan tool:
    - Turbocharger Bypass Solenoid Valve Control Circuit Low Voltage Test Status
    - Turbocharger Bypass Solenoid Valve Control Circuit Open Test Status
    - Turbocharger Bypass Solenoid Valve Control Circuit High Voltage Test Status
    - **If Malfunction is displayed**

Refer to Circuit/System Testing below.

- **If Malfunction is not displayed**

2. Operate the vehicle within the Conditions for Running the DTC. You may also operate the vehicle within the conditions that you observed from the Freeze Frame/Failure Records data.
3. Verify a DTC does not set.
   - **If a DTC sets**

     Refer to Circuit/System Testing below

   - **If a DTC does not set**
4. All OK

Circuit/System Testing

1. Ignition OFF, disconnect the harness connector at the Q40 Turbocharger Bypass Solenoid Valve. Ignition ON.
2. Verify a test lamp illuminates between the ignition circuit terminal 2 and ground.
   - **If the test lamp does not illuminate and the circuit fuse is good**
   1. Ignition OFF, remove the test lamp.
   2. Test for less than 2 ohms in the ignition circuit end to end.
      - If 2 ohms or greater, repair the open/high resistance in the circuit.
      - If less than 2 ohms, verify the fuse is not open and there is voltage at the fuse.
   - **If the test lamp does not illuminate and the circuit fuse is open**
   1. Ignition OFF, remove the test lamp.

      NOTE: An internal short in any component supplied by the fuse may cause the fuse to open and set a DTC when the component is activated.

   2. Test for infinite resistance between the ignition circuit and ground.
      - If less than infinite resistance, repair the short to ground on the circuit.
      - If infinite resistance, test all components connected to the ignition voltage circuit for a short and replace as necessary.
      - **If the test lamp illuminates**
3. Verify that a test lamp does not illuminate between the control circuit terminal 1 and the ignition circuit terminal 2.
   - **If the test lamp illuminates**
   1. Ignition OFF, disconnect the harness connector at the K20 Engine Control Module. Remove the test lamp.
   2. Test for infinite resistance between the control circuit and ground.
      - If less than infinite resistance, repair the short to ground on the circuit.
      - If infinite resistance, replace the K20 Engine Control Module.

- **If the test lamp does not illuminate**

4. Remove the test lamp.
5. Verify the scan tool Turbocharger Bypass Solenoid Valve Control Circuit High Voltage Test Status parameter is OK when commanding the Turbocharger Bypass Solenoid Valve Active with a scan tool.
   - **If OK is not displayed**
   1. Ignition OFF, disconnect the harness connector at the K20 Engine Control Module, ignition ON.
   2. Test for less than 1 V between the control circuit and ground.
      - If 1 V or greater, repair the short to voltage on the circuit.
      - If less than 1 V, replace the K20 Engine Control Module.
   - **If OK is displayed**
6. Install a 3 A fused jumper wire between the control circuit terminal 1 and the ignition circuit terminal 2.
7. Verify the scan tool Turbocharger Bypass Solenoid Valve Control Circuit High Voltage Test Status parameter is Malfunction when commanding the Turbocharger Bypass Solenoid Valve Active with a scan tool.
   - **If Malfunction is not displayed**
   1. Ignition OFF, disconnect the harness connector at the K20 Engine Control Module.
   2. Test for less than 2 ohms in the control circuit end to end.
      - If 2 ohms or greater, repair the open/high resistance in the circuit.
      - If less than 2 ohms, replace the K20 Engine Control Module.
   - **If Malfunction is displayed**
8. Test or replace the Q40 Turbocharger Bypass Solenoid Valve.

Repair Instructions

Perform the **Diagnostic Repair Verification** after completing the repair.

- **Charge Air Bypass Regulator Solenoid Valve Replacement**
- **Control Module References** for ECM replacement, programming and setup

DTC P0068 OR P1101

Diagnostic Instructions

- Perform the **Diagnostic System Check - Vehicle** prior to using this diagnostic procedure.
- Review **Strategy Based Diagnosis** for an overview of the diagnostic approach.
- **Diagnostic Procedure Instructions** provides an overview of each diagnostic category.

DTC Descriptor

DTC P0068

Throttle Body Air Flow Performance

DTC P1101

Intake Air Flow System Performance

Circuit/System Description

The engine control module (ECM) compares actual airflow based on throttle position (TP) to a calculated airflow based on manifold absolute pressure (MAP) sensor, and mass air flow (MAF).

Conditions for Running the DTC

DTC P0068

- The engine speed is at least 800 RPM.
- The ignition voltage is at least 6.4 V.
- The DTC runs continuously when the above conditions are met.

DTC P1101

- DTC P0102, P0103, P0107, P0111, P0112, P0113, P0116, P0117, P0118, P0335, or P0336 is not set
- The engine speed is between 400-7, 000 RPM
- The engine coolant temperature (ECT) is between -7 to +125°C (+19 to +257°F).
- The intake air temperature (IAT) is between -20 to +125°C (-4 to +257°F).
- The DTC runs continuously when the above conditions are met.

Conditions for Setting the DTCs

The ECM detects that the actual airflow rate is greater than the calculated airflow.

Action Taken When the DTCs Set

- DTC P0068 is a type A DTC.
- DTC P0068 is a type B DTC; with RPO LDD.
- DTC P1101 is a type B DTC.

Conditions for Clearing the DTCs

- DTC P0068 is a type A DTC.
- DTC P0068 is a type B DTC; with RPO LDD.
- DTC P1101 is a type B DTC.

Reference Information

Schematic Reference

Engine Controls Schematics

Connector End View Reference

COMPONENT CONNECTOR END VIEWS - INDEX

Electrical Information Reference

- **Circuit Testing**
- **Connector Repairs**
- **Testing for Intermittent Conditions and Poor Connections**
- **Wiring Repairs**

DTC Type Reference

Powertrain Diagnostic Trouble Code (DTC) Type Definitions

Scan Tool Reference

Control Module References for scan tool information

Circuit/System Verification

1. Ignition ON.
2. Verify that DTC DTC P0641, P0651, P0697, or P06A3 is not set.
   - **If any of the DTCs are set**

     Refer to **DTC P0641, P0651, P0697, or P06A3 (ECM)** for further diagnosis.

   - **If none of the DTCs are set**
3. Ignition ON.
4. Verify the scan tool Throttle Body Idle Airflow Compensation parameter is less than 90 %.
   - **If 90 % or greater**

     Refer to **Throttle Body Inspection and Cleaning** .

   - **If less than 90 %**
5. Verify the scan tool Throttle Position Sensors 1 and 2 Agree/Disagree parameter displays Agree while performing the Throttle Sweep Test with a scan tool.
   - **If Disagree**

     Refer to **DTC P0121-P0123, P0222, P0223, or P2135 (LUV)** for further diagnosis.

   - **If Agree**

6. Determine the current vehicle testing altitude.
7. Verify the scan tool MAP Sensor pressure parameter is within the range specified in the **Altitude Versus Barometric Pressure** table.
   - **If the MAP Sensor parameter is not in range**

     Refer to **DTC P0106** for further diagnosis.

   - **If the MAP Sensor parameter is within range**
8. Verify the engine is equipped with a turbocharger.
   - **If not equipped with a turbocharger**

     Refer to Step 11.

   - **If equipped with a turbocharger**
9. Verify the scan tool Boost Pressure Sensor parameter is within the range specified in the **Altitude Versus Barometric Pressure** table.
   - **If the Boost Pressure Sensor parameter is not in range**

     Refer to **DTC P0236** for further diagnosis.

   - **If the Boost Pressure Sensor parameter is within range**
10. Verify the scan tool Boost Pressure Sensor parameter decreases after starting the engine.
    - **If the Boost Pressure Sensor parameter does not decrease**

      Refer to **DTC P0236** for further diagnosis.

    - **If the Boost Pressure Sensor parameter is within range**
11. Engine idling, verify the scan tool MAP Sensor pressure parameter is between 26-52 kPa (3.8-7.5 PSI) and changes with accelerator pedal input.
    - **If not between 26-52 kPa (3.8-7.5 PSI) or does not change**

      Refer to **DTC P0106** for further diagnosis.

    - **If between 26-52 kPa (3.8-7.5 PSI) and changes**
12. Verify the scan tool MAF Sensor g/s parameter changes smoothly and gradually as the engine speed is increased and decreased while performing the actions listed below.
    1. Engine idling
    2. Perform the scan tool snapshot function.
    3. Increase the engine speed slowly to 3, 000 RPM and then back to idle.
    4. Exit from the scan tool snapshot and review the data.
    5. Observe the MAF Sensor parameter frame by frame with a scan tool.

    - **If the MAF Sensor parameter does not change smoothly and gradually**

Refer to **DTC P0101** for further diagnosis.

- **If the MAF Sensor parameter changes smoothly and gradually**

13. Operate the vehicle within the Conditions for Running the DTC. You may also operate the vehicle within the conditions that you observed from the Freeze Frame/Failure Records data.
14. Verify the DTC does not set.
    - **If the DTC does set**

      Refer to Circuit/System Testing below for further diagnosis.

    - **If the DTC does not set**
15. All OK

Circuit/System Testing

NOTE: You must perform the Circuit/System Verification before proceeding with Circuit/System Testing.

1. Verify the integrity of the entire air induction system by verifying that none of the following conditions exist:
   - Any damaged components
   - Improper operation of turbocharger wastegate actuator or bypass valve; where equipped
   - Improperly installed components
   - Collapsed, restricted, or damaged components
   - Loose clamps, cracks, or other damage
   - An air flow restriction
   - Restricted air filter
   - Splits, kinks, leaks, or improper connections at the vacuum hoses
   - Vacuum leaks at the intake manifold, MAP sensor, and throttle body
   - Water intrusion
   - Any snow or ice buildup, in cold climates
   - Contamination of the MAF sensor element
   - Missing, restricted, or leaking exhaust components-Refer to **Symptoms - Engine Exhaust** for further diagnosis.
   - **If a condition is found**

     Repair or replace component as appropriate.

   - **If no condition is found**
2. Test the engine for a mechanical condition. Refer to **Symptoms - Engine Mechanical** for diagnosis.
   - **If a condition is found**

Repair or replace component as appropriate.

- **If no condition is found**

3. All OK

Repair Instructions

Perform the **Diagnostic Repair Verification** after completing the repair.

Control Module References for engine control module replacement, programming, and setup

DTC P0096 OR P0111

Diagnostic Instructions

- Perform the **Diagnostic System Check - Vehicle** prior to using this diagnostic procedure.
- Review **Strategy Based Diagnosis** for an overview of the diagnostic approach.
- **Diagnostic Procedure Instructions** provides an overview of each diagnostic category.

DTC Descriptors

DTC P0096

Intake Air Temperature (IAT) Sensor 2 Performance

DTC P0111

Intake Air Temperature (IAT) Sensor 1 Performance

Diagnostic Fault Information

IAT Sensor 1

Circuit	Short to Ground	Open/High Resistance	Short to Voltage	Signal Performance
Sensor	P0112, P0114, P2199**	P0113, P0114, P2199**	P0113*, P0114, P2199**	P0111, P0114
Low Reference	-	P0097, P0113, P11C2, P2227, P2229	*	-
*Internal ECM or sensor damage may occur if the circuit is shorted to B+. **Where used.				

IAT Sensor 2

Circuit	Short to Ground	Open/High Resistance	Short to Voltage	Signal Performance

5 V Reference	P0097, P0651, P11C2, P2199**, P2227, P2228	P0096, P0097, P11C2, P2199**, P2227, P2228	P0097, P0651, P11C2, P2199**, P2227, P2228	-
Sensor	P0097, P11C3, P2199**	P0097, P11C2, P2199**	P0097*, P11C2, P2199**	-
Low Reference	-	P0097, P0113, P11C2, P2227, P2229	*	-
*Internal ECM or sensor damage may occur if the circuit is shorted to B+. **Where used.				

Typical Scan Tool Data

IAT Sensor 1

Circuit	Short to Ground	Open or High Resistance	Short to Voltage
Operating Conditions: Engine Running **Parameter Normal Range:** Varies with ambient temperature			
Sensor	150°C (302°F)	-40°C (-40°F)	-40°C (-40°F)*
Low Reference	-	-40°C (-40°F)	-40°C (-40°F)*
*Internal ECM or sensor damage may occur if the circuit is shorted to B+			

IAT Sensor 2

Circuit	Short to Ground	Open or High Resistance	Short to Voltage
Operating Conditions: Engine Running **Parameter Normal Range:** Varies with ambient temperature			
5 V Reference	-40°C (-40°F) 10 Hz	-40°C (-40°F) 10 Hz	-
Signal	-40°C (-40°F)	-40°C (-40°F)	-40°C (-40°F)* 10 Hz*
Ground	-	-40°C (-40°F) 10 Hz	-
*Internal ECM or sensor damage may occur if the circuit is shorted to B+			

Circuit/System Description

The sensors listed below are integrated within the multifunction intake air sensor:

- IAT sensor 1
- IAT sensor 2
- Humidity sensor
- MAF sensor
- BARO pressure sensor

The intake air temperature (IAT) sensor 1 is a variable resistor that changes the voltage on the engine control module (ECM) supplied 5 V signal circuit. The signal varies with inlet air temperature in the sensor bore and is displayed by the scan tool as °C (°F). The IAT sensor 2 and the humidity sensor share the same circuit. The IAT sensor 2 signal is displayed by the scan tool as Hz (Hertz) and °C (°F).

The IAT sensor 1 produces an analog signal on pin-8 of the sensor. The IAT sensor 2 produces a frequency modulated signal on pin-1 of the sensor.

The sensors listed below share an ECM supplied 5 V reference circuit:

- IAT sensor 2
- Humidity sensor
- Barometric pressure (BARO) sensor

The sensors listed below share an ECM supplied low reference circuit:

- IAT sensor 1
- IAT sensor 2
- Humidity sensor
- Barometric pressure (BARO) sensor

IAT Sensor 1 - Temperature, Resistance, Voltage Table

IAT Sensor 1	IAT Sensor 1 Resistance	IAT Sensor 1 Signal Voltage
Cold	High	High
Warm	Low	Low

IAT Sensor 2 - Temperature, Frequency Table

IAT Sensor 2	IAT Sensor 2 Frequency	IAT Sensor 2 Temperature
Cold	45 Hz	-40°C (-40°F)
Warm	302 Hz	104°C (219°F)

Conditions for Running the DTCs

P0096 and P0111

- DTCs P0097, P0098, P0111, P0112, P0113, P0117, P0118, P00EA, P00EB, or P1682 are not set.
- The ignition has been OFF at least 8 hours.
- Ignition voltage is at least 11 V.
- These DTCs run once per ignition cycle when the enabling conditions are met.

Conditions for Setting the DTCs

P0096

- The ECM determines the absolute difference between IAT sensor 1 start-up temperature and the IAT sensor 2 start-up temperature is greater than 25°C (45°F).

  AND

- The ECM determines the absolute difference between IAT sensor 2 start-up temperature and the IAT sensor 3 start-up temperature is greater than 25°C (45°F).

  AND

- The ECM determines the absolute difference between IAT sensor 1 start-up temperature and the IAT sensor 3 start-up temperature is less than or equal to 25°C (45°F).
- This DTC runs once per ignition cycle when the enabling conditions are met.

NOTE: P0111 Can fail under any of the following 3 sets of conditions.

P0111 - Condition 1

- The ECM determines the absolute difference between IAT sensor 1 start-up temperature and the IAT sensor 2 start-up temperature is greater than 25°C (45°F).

  AND

- The ECM determines the absolute difference between IAT sensor 1 start-up temperature and the IAT sensor 3 start-up temperature is greater than 25°C (45°F).

  AND

- The ECM determines the absolute difference between IAT sensor 2 start-up temperature and the IAT sensor 3 start-up temperature is less than or equal to 25°C (45°F).

P0111 - Condition 2

- The ECM determines the IAT sensor 2 start-up temperature is between the IAT sensor 1 and IAT sensor 3 start-up temperatures.

  AND

- The ECM determines the absolute difference between IAT sensor 1 start-up temperature and the IAT sensor 3 start-up temperature is greater than 25°C (45°F).

  AND

- The ECM determines the absolute difference between IAT sensor 2 and the IAT sensor 1 start-up temperatures is greater than absolute difference between IAT sensor 2 and the IAT sensor 3 start-up temperatures.

P0111 - Condition 3

- The ECM determines the IAT sensor 3 start-up temperature is between the IAT sensor 1 and IAT sensor 2 start-up temperatures.

  AND

- The ECM determines the absolute difference between IAT sensor 1 start-up temperature and the IAT sensor 2 start-up temperature is greater than 25°C (45°F).

  AND

- The ECM determines the absolute difference between IAT sensor 3 and the IAT sensor 1 start-up temperatures is greater than absolute difference between IAT sensor 3 and the IAT sensor 2 start-up temperatures.

DTC P0111 runs once an ignition cycle when the any one, of the above 3 enabling sets of conditions is met.

Action Taken When the DTCs Set

DTCs P0096 and P0111 are Type B DTCs.

Conditions for Clearing the DTCs

DTCs P0096 and P0111 are Type B DTCs.

Diagnostic Aids

- With the ignition ON, when the engine is OFF and is cold; properly functioning IAT sensors 1 and 2 will gradually increase the scan tool IAT Sensor 1 and 2 parameters. This is due to the heat that is generated by the multifunction intake air sensor internal heating elements.
- The Humidity sensor and the IAT sensor 2 signals are sent to the ECM on the same circuit. If the IAT Sensor 2 parameter displays the values: 10 Hz; -40°C (-40°F), and there are also Humidity Sensor DTCs, check for a circuit problem.

Reference Information

Schematic Reference

Engine Controls Schematics

Connector End View Reference

COMPONENT CONNECTOR END VIEWS - INDEX

Electrical Information Reference

- **Circuit Testing**
- **Connector Repairs**
- **Testing for Intermittent Conditions and Poor Connections**
- **Wiring Repairs**

DTC Type Reference

Powertrain Diagnostic Trouble Code (DTC) Type Definitions

Scan Tool Reference

Control Module References for scan tool information

Special Tools

EL-38522-A Variable Signal Generator

For equivalent regional tools, refer to **Special Tools** .

Circuit/System Verification

1. Ignition ON.
2. Verify that DTC DTC P0641, P0651, P0697, or P06A3 is not set.
   - **If any of the DTCs are set**

     Refer to **DTC P0641, P0651, P0697, or P06A3 (ECM)** for further diagnosis.

   - **If none of the DTCs are set**

NOTE: To minimize the effects of residual engine heat and sensor internal heating elements, perform Steps 3 and 4 of this verification procedure only if the ignition has been OFF for 8 hours or more.

3. Ignition ON.
4. Verify the following scan tool parameters are within 25°C (45°F) of each other.
   - Start-Up IAT Sensor 1
   - IAT Sensor 2
   - IAT Sensor 3; where equipped
   - **If not within 25°C (45°F)**

     Refer to Circuit/System Testing below.

   - **If within 25°C (45°F)**
5. Engine idling, verify the following scan tool parameters are between: -38 and +149°C (-36 and +300°F).

- IAT Sensor 1
- IAT Sensor 2
- **If not between: -38 and +149°C (-36 and +300°F)**

  Refer to Circuit System Testing below.

- **If between: -38 and +149°C (-36 and +300°F)**

6. Operate the vehicle within the conditions for running the DTC. You may also operate the vehicle within the conditions that you observed from the freeze frame/failure records data.
7. Verify the DTC does not set.
   - **If the DTC does set**

     Refer to Circuit/System Testing below.

   - **If the DTC does not set**
8. All OK

Circuit/System Testing

NOTE: You must perform the Circuit/System Verification before proceeding with Circuit/System Testing.

1. Check the integrity of the entire air induction system and verify that none of the following conditions exist:
   - A loose or disconnected charge air cooler hose or pipe; where equipped
   - A blocked or obstructed charge air cooler, including: after-market grill covers; where equipped
   - Any snow or ice build-up at the charge air cooler in cold climates; where equipped
   - Any mud or dirt build-up at the charge air cooler; where equipped
   - A restricted or collapsed air intake duct
   - An intake manifold leak
   - A MAP sensor seal that is leaking, missing, or damaged
   - A misaligned or damaged air intake duct
   - Any water intrusion in the induction system
   - An Intake Manifold Resonator with a leaking seal, or a cracked or broken housing
   - **If a condition exists**

     Repair or replace component as appropriate.

   - **If no condition exists**
2. Ignition OFF, and all vehicle systems OFF, it may take up to 2 min. for all vehicle systems to power down. Disconnect the harness connector at the B75C Multifunction Intake Air sensor.
3. Test for less than 2 ohms between the low reference circuit terminal 7 and ground.

- **If 2 ohms or greater**

1. Ignition OFF, disconnect the harness connector at the K20 Engine Control Module.
2. Test for less than 2 ohms in the low reference circuit end to end.
   - If 2 ohms or greater, repair the open or high resistance in the circuit.
   - If less than 2 ohms replace the K20 Engine Control Module.

- **If less than 2 ohms**

4. Ignition ON, test for 4.8-5.2 V between the 5 V reference circuit terminal 2 and ground.
   - **If less than 4.8 V**

   1. Ignition OFF, disconnect the harness connector at the K20 Engine Control Module.
   2. Test for infinite resistance between the signal circuit and ground.
      - If less than infinite resistance, repair the short to ground on the circuit.
      - If infinite resistance
   3. Test for less than 2 ohms in the signal circuit end to end.
      - If 2 ohms or greater, repair the open/high resistance in the circuit.
      - If less than 2 ohms, replace the K20 Engine Control Module.

   - **If greater than 5.2 V**

   NOTE: If the 5 V reference circuit is shorted to a voltage the engine control module or the sensor may be damaged.

   1. Ignition OFF, disconnect the harness connector at the K20 Engine Control Module.
   2. Ignition ON, test for less than 1 V between the 5 V reference circuit and ground.
      - If 1 V or greater, repair the short to voltage on the circuit.
      - If less than 1 V, replace the K20 Engine Control Module.

   - **If between 4.8-5.2 V**

5. Ignition ON, test for 4.8-5.2 V between the signal circuit terminal 8 and ground.
   - **If less than 4.8 V**

   1. Ignition OFF, disconnect the harness connector at the K20 Engine Control Module.
   2. Test for infinite resistance between the signal circuit and ground.
      - If less than infinite resistance, repair the short to ground on the circuit.
      - If infinite resistance
   3. Test for less than 2 ohms in the signal circuit end to end.
      - If 2 ohms or greater, repair the open/high resistance in the circuit.
      - If less than 2 ohms, replace the K20 Engine Control Module.

   - **If greater than 5.2 V**

   NOTE: If the signal circuit is shorted to a voltage the engine control module or the sensor may be damaged.

1. Ignition OFF, disconnect the harness connector at the K20 Engine Control Module.
2. Ignition ON, test for less than 1 V between the signal circuit and ground.
    - If 1 V or greater, repair the short to voltage on the circuit.
    - If less than 1 V, replace the K20 Engine Control Module.
- **If between 4.8-5.2 V**

6. Ignition ON, verify the scan tool IAT Sensor 1 parameter is colder than -39°C (-38°F).
- **If warmer than -39°C (-38°F).**
1. Ignition OFF, disconnect the harness connector at the K20 Engine Control Module.
2. Test for infinite resistance between the signal circuit terminal 8 and ground.
    - If less than infinite resistance, repair the short to ground on the circuit.
    - If infinite resistance
3. Test for less than 2 ohms in the signal circuit end to end.
    - If 2 ohms or greater, repair the open/high resistance in the circuit.
    - If less than 2 ohms, replace the K20 Engine Control Module.
- **If colder than -39°C (-38°F).**

7. Ignition OFF, install a 3 A fused jumper wire between the signal circuit terminal 8 and the low reference circuit terminal 7.
8. Verify the scan tool IAT Sensor 3 parameter is warmer than 150°C (302°F).
- **If colder than 150°C (302°F).**
1. Ignition OFF, remove the jumper wire, disconnect the harness connector at the K20 Engine Control Module, ignition ON.
2. Test for less than 1 V between the signal circuit and ground.
    - If 1 V or greater, repair the short to voltage on the circuit.
    - If less than 1 V
3. Ignition OFF.
4. Test for less than 2 ohms in the signal circuit end to end.
    - If 2 ohms or greater, repair the open/high resistance in the circuit.
    - If less than 2 ohms, replace the K20 Engine Control Module.
- **If warmer than 150°C (302°F).**

9. Ignition ON, test for 4.8-5.2 V between the signal terminal 1 and ground.
- **If less than 4.8 V**
1. Ignition OFF, disconnect the harness connector at the K20 Engine Control Module.
2. Test for infinite resistance between the signal circuit and ground.
    - If less than infinite resistance, repair the short to ground on the circuit.
    - If infinite resistance
3. Test for less than 2 ohms in the signal circuit end to end.
    - If 2 ohms or greater, repair the open/high resistance in the circuit.
    - If less than 2 ohms, replace the K20 Engine Control Module.

- **If greater than 5.2 V**

NOTE: If the signal circuit is shorted to a voltage the engine control module or the sensor may be damaged.

1. Ignition OFF, disconnect the harness connector at the K20 Engine Control Module.
2. Ignition ON, test for less than 1 V between the signal circuit and ground.
   - If 1 V or greater, repair the short to voltage on the circuit.
   - If less than 1 V, replace the K20 Engine Control Module.

- **If between 4.8-5.2 V**

10. Determine if **EL-38522-A** Variable Signal Generator or equivalent is available.
    - **EL-38522-A, Variable Signal Generator; or equivalent is not available**
    1. Replace the K20 Engine Control Module.
    2. Operate the vehicle within the Conditions for Running the DTC. You may also operate the vehicle within the conditions that you observed from the freeze frame/failure records data.
    3. Verify the DTC does not set.
       - **If the DTC sets**

         Refer to step 17.

       - **If no DTCs set**
    4. All OK.
    - **EL-38522-A, Variable Signal Generator; or equivalent is available**
11. Ignition OFF, connect the leads of the **EL-38522-A** Variable Signal Generator as follows:
    - Red lead to the signal circuit terminal 1 at the harness connector
    - Black leads to ground
    - Battery voltage supply lead to B+
12. Set the **EL-38522-A** Variable Signal Generator to the following specifications.
    - Signal switch to 5 V
    - Duty Cycle switch to 50 % (Normal)
    - Frequency switch to 30 Hz
13. Ignition ON, verify the scan tool IAT Sensor 2 parameter is between 28-32 Hz.
    - **If not between 28-32 Hz**

      Replace the K20 Engine Control Module.

    - **If between 28-32 Hz**
14. Ignition OFF and all vehicle systems OFF, disconnect the B111B Turbocharger Boost/Intake Air Temperature sensor. It may take up to 2 min for all vehicle systems to power down.
15. Test for less than 2 ohms between the low reference circuit terminal 1 and ground.

- **If 2 ohms or greater**

1. Ignition OFF, disconnect the harness connector at the K20 Engine Control Module.
2. Test for less than 2 ohms in the low reference circuit end to end.
   - If 2 ohms or greater, repair the open or high resistance in the circuit.
   - If less than 2 ohms replace the K20 Engine Control Module.

- **If less than 2 ohms**

16. Ignition ON, test for 4.8-5.2 V between the signal circuit terminal 2 and ground.
    - **If less than 4.8 V**

    1. Ignition OFF, disconnect the harness connector at the K20 Engine Control Module.
    2. Test for infinite resistance between the signal circuit and ground.
       - If less than infinite resistance, repair the short to ground on the circuit.
       - If infinite resistance
    3. Test for less than 2 ohms in the signal circuit end to end.
       - If 2 ohms or greater, repair the open/high resistance in the circuit.
       - If less than 2 ohms, replace the K20 Engine Control Module.

    - **If greater than 5.2 V**

    NOTE: If the signal circuit is shorted to a voltage the engine control module or the sensor may be damaged.

    1. Ignition OFF, disconnect the harness connector at the K20 Engine Control Module.
    2. Ignition ON, test for less than 1 V between the signal circuit and ground.
       - If 1 V or greater, repair the short to voltage on the circuit.
       - If less than 1 V, replace the K20 Engine Control Module.

    - **If between 4.8-5.2 V**

17. Ignition ON, verify the scan tool IAT Sensor 3 parameter is colder than -39°C (-38°F).
    - **If warmer than -39°C (-38°F).**

    1. Ignition OFF, disconnect the harness connector at the K20 Engine Control Module.
    2. Test for infinite resistance between the signal circuit terminal 2 and ground.
       - If less than infinite resistance, repair the short to ground on the circuit.
       - If infinite resistance
    3. Test for less than 2 ohms in the signal circuit end to end.
       - If 2 ohms or greater, repair the open/high resistance in the circuit.
       - If less than 2 ohms, replace the K20 Engine Control Module.

    - **If colder than -39°C (-38°F).**

18. Ignition OFF, install a 3 A fused jumper wire between the signal circuit terminal 1 and the low reference circuit terminal 2.
19. Verify the scan tool IAT Sensor 3 parameter is warmer than 150°C (302°F).

- **If colder than 150°C (302°F).**

1. Ignition OFF, remove the jumper wire, disconnect the harness connector at the K20 Engine Control Module, ignition ON.
2. Test for less than 1 V between the signal circuit and ground.
   - If 1 V or greater, repair the short to voltage on the circuit.
   - If less than 1 V
3. Ignition OFF.
4. Test for less than 2 ohms in the signal circuit end to end.
   - If 2 ohms or greater, repair the open/high resistance in the circuit.
   - If less than 2 ohms, replace the K20 Engine Control Module.

- **If warmer than 150°C (302°F).**

20. Test or replace the appropriate temperature sensor.

Component Testing

Multifunction Intake Air Sensor

1. Ignition OFF, disconnect the harness connector at the B75C Multifunction Intake Air sensor.

NOTE: A thermometer can be used to test the sensor off the vehicle.

2. Test the IAT sensor 1 by varying the sensor temperature while monitoring the sensor resistance. Compare the readings with the **Temperature Versus Resistance - Intake Air Temperature Sensor (Bosch Sensor)** , **Temperature Versus Resistance - Intake Air Temperature Sensor (Delco Sensor)** table for Bosch Sensors. The resistance values should be in range of the table values.
   - **If not within the specified range.**

     Replace the B75C Multifunction Intake Air sensor.

   - **If within the specified range.**
3. All OK

Multifunction Intake Air Sensor

1. Test the IAT Sensor 2 by varying the sensor temperature while monitoring the air temperature with a thermometer. Compare the readings with the scan tool IAT Sensor 2 parameter. The values should be within 5%.
   - **If not within 5%.**

     Replace the B75C Multifunction Intake Air sensor.

   - **If within 5%.**
2. All OK

Turbocharger Boost/Intake Air Temperature sensor

1. Ignition OFF, disconnect the harness connector at the B111B Turbocharger Boost/Intake Air Temperature sensor.

   NOTE: A thermometer can be used to test the sensor off the vehicle.

2. Test the IAT sensor 3 by varying the sensor temperature while monitoring the sensor resistance. Compare the readings with the **Temperature Versus Resistance - Intake Air Temperature Sensor (Bosch Sensor)** , **Temperature Versus Resistance - Intake Air Temperature Sensor (Delco Sensor)** table for the appropriate sensor. The resistance values should be in range of the table values.
   - **If not within the specified range.**

     Replace the B111B Turbocharger Boost/Intake Air Temperature sensor.

   - **If within the specified range.**
3. All OK

Repair Instructions

Perform the **Diagnostic Repair Verification** after completing the repair.

- **Intake Air Pressure and Temperature Sensor Replacement** for turbocharger boost/intake air temperature sensor replacement
- **Mass Airflow Sensor Replacement** for multifunction intake air sensor replacement
- **Control Module References** for Engine Control Module replacement, programming, and setup.

DTC P0097 OR P0098

Diagnostic Instructions

- Perform the **Diagnostic System Check - Vehicle** prior to using this diagnostic procedure.
- Review **Strategy Based Diagnosis** for an overview of the diagnostic approach.
- **Diagnostic Procedure Instructions** provides an overview of each diagnostic category.

DTC Descriptors

DTC P0097

Intake Air Temperature (IAT) Sensor 2 Circuit Low Voltage

DTC P0098

Intake Air Temperature (IAT) Sensor 2 Circuit High Voltage

Diagnostic Fault Information

IAT Sensor 2

Circuit	Short to Ground	Open/High Resistance	Short to Voltage	Signal Performance
5 V Reference	P0097, P0651, P11C2**, P2199**, P2227, P2228	P0096**, P0097, P11C2**, P2199**, P2227, P2228	P0097, P0651, P11C2**, P2199**, P2227, P2228	-
Sensor	P0097, P11C3**, P2199**	P0097, P11C2**, P2199**	P0097*, P11C2**, P2199**	-
Low Reference	-	P0097, P0113, P11C2**, P2227, P2229	*	-
*Internal ECM or sensor damage may occur if the circuit is shorted to B+. **Where used.				

Typical Scan Tool Data

IAT Sensor 2

Circuit	Short to Ground	Open or High Resistance	Short to Voltage
Operating Conditions: Engine Running **Parameter Normal Range:** Varies with ambient temperature			
5 V Reference	-40°C (-40°F) 10 Hz	-40°C (-40°F) 10 Hz	-
Signal	-40°C (-40°F)	-40°C (-40°F)	-40°C (-40°F)* 10 Hz*
Ground	-	-40°C (-40°F) 10 Hz	-
*Internal ECM or sensor damage may occur if the circuit is shorted to B+			

Circuit/System Description

The sensors listed below are integrated within the multifunction intake air sensor:

- Intake Air Temperature (IAT) sensor 1
- IAT sensor 2
- Humidity sensor
- Mass Air Flow (MAF) sensor
- Barometric (BARO) pressure sensor

The IAT sensor 2 and the humidity sensor share the same circuit. The IAT sensor 2 signal is displayed by the scan tool as Hertz (Hz) and °C (°F).

The sensors listed below share an ECM supplied 5 V reference circuit:

- IAT sensor 2
- Humidity sensor
- Barometric pressure (BARO) sensor

The sensors listed below share an ECM supplied low reference circuit:

- IAT sensor 1
- IAT sensor 2
- Humidity sensor
- Barometric pressure (BARO) sensor

IAT Sensor 2 - Temperature, Frequency Table

IAT Sensor 2	IAT Sensor 2 Frequency	IAT Sensor 2 Temperature
Cold	45 Hz	-40°C (-40°F)
Warm	302 Hz	104°C (219°F)

Conditions for Running the DTCs

P0097 and P0098

- The ignition is ON, or the engine is running.
- The Ignition voltage is at least 11 V.
- The DTCs run continuously within the enabling conditions.

Conditions for Setting the DTCs

P0097

NOTE: The scan tool display range is between -40 and +150°C (-40 and +302°F).

The ECM detects that the IAT sensor 2 signal is less than 10 Hz, colder than -60°C (-76°F), for greater than 5 s.

P0098

The ECM detects that the IAT sensor 2 signal is greater than 390 Hz, warmer than 150°C (302°F), for greater than 5 s.

Action Taken When the DTC Sets

- DTCs P0097 and P0098 are Type B DTCs.
- DTCs P0097 and P0098 are Type C DTCs; with RPO LDD.
- The ECM commands the cooling fans ON.

Conditions for Clearing the MIL/DTCs

- DTCs P0097 and P0098 are Type B DTCs.
- DTCs P0097 and P0098 are Type C DTCs; with RPO LDD.

Diagnostic Aids

- With the ignition ON, when the engine is cold and not running, properly functioning IAT sensor 2 will gradually increase the scan tool IAT Sensor 2 parameters. This is due to the heat that is generated by the multifunction intake air sensor heating elements.
- The humidity sensor and the IAT sensor 2 signals are sent to the ECM on the same circuit. If the IAT Sensor 2 parameter displays the values: 10 Hz; -40°C (-40°F), and there are also Humidity Sensor DTCs, check for a circuit problem.

Reference Information

Schematic Reference

Engine Controls Schematics

Connector End View Reference

COMPONENT CONNECTOR END VIEWS - INDEX

Electrical Information Reference

- **Circuit Testing**
- **Connector Repairs**
- **Testing for Intermittent Conditions and Poor Connections**
- **Wiring Repairs**

DTC Type Reference

Powertrain Diagnostic Trouble Code (DTC) Type Definitions

Scan Tool Reference

Control Module References Control Module References for scan tool information

Special Tools

EL-38522-A Variable Signal Generator

For equivalent regional tools, refer to **Special Tools** .

Circuit/System Verification

1. Ignition ON.

2. Verify that DTC DTC P0641, P0651, P0697, or P06A3 is not set.
   - **If any of the DTCs are set**

     Refer to **DTC P0641, P0651, P0697, or P06A3 (ECM)** for further diagnosis.

   - **If none of the DTCs are set**

NOTE: To minimize the effects of residual engine heat and sensor internal heating elements, perform Steps 3 and 4 of this verification procedure only if the ignition has been OFF for 8 hours or more.

3. Ignition ON.
4. Verify the following scan tool parameters are within 25°C (45°F) of each other.
   - Start-Up IAT Sensor 1
   - IAT Sensor 2
   - IAT Sensor 3; where equipped
   - **If not within 25°C (45°F)**

     Refer to Circuit/System Testing below.

   - **If within 25°C (45°F)**
5. Engine idling, verify the following scan tool parameters are between: -38 and +149°C (-36 and +300°F).
   - IAT Sensor 1
   - IAT Sensor 2
   - IAT Sensor 3; where equipped
   - **If not between: -38 and +149°C (-36 and +300°F)**

     Refer to Circuit System Testing below.

   - **If between: -38 and +149°C (-36 and +300°F)**
6. Operate the vehicle within the conditions for running the DTC. You may also operate the vehicle within the conditions that you observed from the freeze frame/failure records data.
7. Verify the DTC does not set.
   - **If the DTC does set**

     Refer to Circuit/System Testing below.

   - **If the DTC does not set**
8. All OK

Circuit/System Testing

NOTE: You must perform the Circuit/System Verification before proceeding with

Circuit/System Testing.

1. Ignition OFF, and all vehicle systems OFF, it may take up to 2 min. for all vehicle systems to power down. Disconnect the harness connector at the B75C Multifunction Intake Air sensor.
2. Test for less than 2 ohms between the low reference circuit terminal 7 and ground.
   - **If 2 ohms or greater**
   1. Ignition OFF, disconnect the harness connector at the K20 Engine Control Module.
   2. Test for less than 2 ohms in the low reference circuit end to end.
      - If 2 ohms or greater, repair the open or high resistance in the circuit.
      - If less than 2 ohms replace the K20 Engine Control Module.
   - **If less than 2 ohms**
3. Ignition ON, test for 4.8-5.2 V between the 5 V reference circuit terminal 2 and ground.
   - **If less than 4.8 V**
   1. Ignition OFF, disconnect the harness connector at the K20 Engine Control Module.
   2. Test for infinite resistance between the signal circuit and ground.
      - If less than infinite resistance, repair the short to ground on the circuit.
      - If infinite resistance
   3. Test for less than 2 ohms in the signal circuit end to end.
      - If 2 ohms or greater, repair the open/high resistance in the circuit.
      - If less than 2 ohms, replace the K20 Engine Control Module.
   - **If greater than 5.2 V**

     NOTE: If the 5 V reference circuit is shorted to a voltage the engine control module or the sensor may be damaged.

   1. Ignition OFF, disconnect the harness connector at the K20 Engine Control Module.
   2. Ignition ON, test for less than 1 V between the 5 V reference circuit and ground.
      - If 1 V or greater, repair the short to voltage on the circuit.
      - If less than 1 V, replace the K20 Engine Control Module.
   - **If between 4.8-5.2 V**
4. Ignition ON, test for 4.8-5.2 V between the signal circuit terminal 1 and ground.
   - **If less than 4.8 V**
   1. Ignition OFF, disconnect the harness connector at the K20 Engine Control Module.
   2. Test for infinite resistance between the signal circuit and ground.
      - If less than infinite resistance, repair the short to ground on the circuit.
      - If infinite resistance
   3. Test for less than 2 ohms in the signal circuit end to end.
      - If 2 ohms or greater, repair the open/high resistance in the circuit.
      - If less than 2 ohms, replace the K20 Engine Control Module.

- **If greater than 5.2 V**

NOTE: If the signal circuit is shorted to a voltage the engine control module or the sensor may be damaged.

1. Ignition OFF, disconnect the harness connector at the K20 Engine Control Module.
2. Ignition ON, test for less than 1 V between the signal circuit and ground.
   - If 1 V or greater, repair the short to voltage on the circuit.
   - If less than 1 V, replace the K20 Engine Control Module.

- **If between 4.8-5.2 V**

5. Determine if **EL-38522-A** Variable Signal Generator or equivalent is available.
   - **EL-38522-A, Variable Signal Generator; or equivalent is not available**
   1. Replace the K20 Engine Control Module.
   2. Operate the vehicle within the Conditions for Running the DTC. You may also operate the vehicle within the conditions that you observed from the freeze frame/failure records data.
   3. Verify the DTC does not set.
      - **If the DTC sets**

        Refer to step 9.

      - **If no DTCs set**
   4. All OK.
   - **EL-38522-A, Variable Signal Generator; or equivalent is available**
6. Ignition OFF, connect the leads of the **EL-38522-A** Variable Signal Generator as follows:
   - Red lead to the signal circuit terminal 1 at the harness connector
   - Black leads to ground
   - Battery voltage supply lead to B+
7. Set the **EL-38522-A** Variable Signal Generator to the following specifications.
   - Signal switch to 5 V
   - Duty Cycle switch to 50 % (Normal)
   - Frequency switch to 30 Hz
8. Ignition ON, verify the scan tool IAT Sensor 2 parameter is between 28-32 Hz.
   - **If not between 28-32 Hz**

     Replace the K20 Engine Control Module.

   - **If between 28-32 Hz**
9. Test or replace the B75C Multifunction Intake Air sensor.

Component Testing

Multifunction Intake Air Sensor

Test the IAT Sensor 2 by varying the sensor temperature while monitoring the air temperature with a thermometer. Compare the readings with the scan tool IAT Sensor 2 parameter. The values should be within 5%.

- **If not within 5%.**

  Replace the B75C Multifunction Intake Air sensor.

- **If within 5%.**

  All OK

Repair Instructions

Perform the **Diagnostic Repair Verification** after completing the repair.

- **Mass Airflow Sensor Replacement** for multifunction intake air sensor replacement.
- **Control Module References** for Engine Control Module replacement, programming, and setup.

DTC P00C7

Diagnostic Instructions

- Perform the **Diagnostic System Check - Vehicle** prior to using this diagnostic procedure.
- Review **Strategy Based Diagnosis** for an overview of the diagnostic approach.
- **Diagnostic Procedure Instructions** provides an overview of each diagnostic category.

DTC Descriptor

DTC P00C7

Intake Air Pressure Measurement System - Multiple Sensors Not Plausible

Circuit/System Description

The Intake Air Pressure Measurement System consists of 3 sensors:

- The barometric pressure (BARO) sensor
- The manifold absolute pressure (MAP) sensor
- The turbo boost sensor

Conditions for Running the DTC

- DTCs P0106, P0107, P0108, P2122, P2123, P2127, P2128, P2138 or P2610 are not set.

- The engine is running.
- Time between current ignition cycle and the last time the engine was running is greater than 10 s.
- Manifold pressure between 50-115 kPa (7.25-16.68 PSI).
- BARO pressure between 50-115 kPa (7.25-16.68 PSI).
- Turbocharger boost pressure between 50-115 kPa (7.25-16.68 PSI).
- This DTC runs continuously within the enabling conditions.

Conditions for Setting the DTC

The ECM detects an inconsistency between pressure sensors in the induction system in which a particular sensor cannot be identified as the failed sensor. The difference is greater than 10 kPa (1.5 PSI).

Action Taken When the DTC Sets

DTC P00C7 is a Type B DTC.

Conditions for Clearing the DTC

DTC P00C7 is a Type B DTC.

Reference Information

Schematic Reference

Engine Controls Schematics

Connector End View Reference

COMPONENT CONNECTOR END VIEWS - INDEX

Electrical Information Reference

- **Circuit Testing**
- **Connector Repairs**
- **Testing for Intermittent Conditions and Poor Connections**
- **Wiring Repairs**

DTC Type Reference

Powertrain Diagnostic Trouble Code (DTC) Type Definitions

Scan Tool Reference

Control Module References for scan tool information

Circuit/System Verification

1. Ignition ON, observe the DTC information with a scan tool. Verify that DTCs P0106, P0107, P0236, P0237, P0238, P2227, P2228, P2229, or P2230, are not set.
   - **If any of the DTCs are set**

     If a DTC is set, refer to **Diagnostic Trouble Code (DTC) List - Vehicle** for further diagnosis.

   - **If none of the DTCs is set**
2. Ignition ON, verify the following scan tool parameters are within range of the Altitude vs. Barometric Pressure table. Refer to: **Altitude Versus Barometric Pressure** table.
   - Barometric Pressure
   - Manifold Absolute Pressure
   - Boost Pressure
   - **If a sensor parameter is not within range**

     Refer to the appropriate diagnostic below for further diagnosis.

   - Barometric Pressure (BARO) Sensor. Refer to: **DTC P2227-P2230**
   - Manifold Absolute Pressure (MAP) Sensor. Refer to: **DTC P0106**
   - Turbocharger Boost Pressure Sensor. Refer to: **DTC P0236**
   - **If all sensor parameters are within range**
3. All OK

Repair Instructions

Perform the **Diagnostic Repair Verification** after completing the repair.

Control Module References for Engine Control Module replacement, programming and setup.

DTC P00EA OR P00EB

Diagnostic Instructions

- Perform the **Diagnostic System Check - Vehicle** prior to using this diagnostic procedure.
- Review **Strategy Based Diagnosis** for an overview of the diagnostic approach.
- **Diagnostic Procedure Instructions** provides an overview of each diagnostic category.

DTC Descriptors

DTC P00EA

Intake Air Temperature (IAT) Sensor 3 Circuit Low Voltage

DTC P00EB

Intake Air Temperature (IAT) Sensor 3 Circuit High Voltage

Diagnostic Fault Information

IAT Sensor 3

Circuit	Short to Ground	Open/High Resistance	Short to Voltage	Signal Performance
Sensor	P00EA, P00EB	P00E9, P00EB	P00EB*	P00E9
Low Reference	-	P00E9, P00EB	P00EB*	-
*Internal ECM or sensor damage may occur if the circuit is shorted to B+.				

Typical Scan Tool Data

IAT Sensor 3

Circuit	Short to Ground	Open or High Resistance	Short to Voltage
Operating Conditions: Engine Running **Parameter Normal Range:** Varies with ambient temperature; and engine bay conditions			
Sensor	130°C (266°F)	-40°C (-40°F)	-40°C (-40°F)*
Low Reference	-	-40°C (-40°F)	-40°C (-40°F)*
*Internal ECM or sensor damage may occur if the circuit is shorted to B+			

Circuit/System Description

The intake air temperature (IAT) sensor 3 is a variable resistor that changes an engine control module (ECM) supplied 5 V signal. The signal varies with inlet air temperature and is displayed by the scan tool as °C (°F). The IAT sensor 3 is integrated with the throttle inlet absolute pressure sensor in the sensor bore, which is located before the throttle body. The ECM provides a ground for the IAT sensor 3 low reference circuit.

Conditions for Running the DTCs

P00EA and P00EB

- The ignition is ON, or the engine is running.
- The DTCs run continuously when the above conditions are met.

Conditions for Setting the DTC

P00EA

The ECM detects that the IAT sensor 3 signal is warmer than 149°C (300°F) for at least 5 s.

P00EB

NOTE: The scan tool display range is between -40 and +150°C (-40 and +302°F).

The ECM detects that the IAT sensor 3 signal is colder than -60°C (-76°F) for at least 5 s.

Action Taken When the DTCs Set

- DTCs P00EA and P00EB are Type B DTCs.
- The ECM commands the cooling fans ON.

Conditions for Clearing the DTCs

DTCs P00EA and P00EB are Type B DTCs.

Reference Information

Schematic Reference

Engine Controls Schematics

Connector End View Reference

COMPONENT CONNECTOR END VIEWS - INDEX

Electrical Information Reference

- **Circuit Testing**
- **Connector Repairs**
- **Testing for Intermittent Conditions and Poor Connections**
- **Wiring Repairs**

DTC Type Reference

Powertrain Diagnostic Trouble Code (DTC) Type Definitions

Scan Tool Reference

Control Module References for scan tool information

Circuit/System Verification

1. Ignition ON.
2. Verify that DTC DTC P0641, P0651, P0697, or P06A3 is not set.
    - **If any of the DTCs are set**

      Refer to **DTC P0641, P0651, P0697, or P06A3 (ECM)** for further diagnosis.

    - **If none of the DTCs are set**

NOTE: To minimize the effects of residual engine heat and sensor internal heating elements, perform Steps 3 and 4 of this verification procedure only if the ignition has been OFF for 8 hours or more.

3. Ignition ON.
4. Verify the following scan tool parameters are within 25°C (45°F) of each other.
   - Start-Up IAT Sensor 1
   - IAT Sensor 2
   - IAT Sensor 3
   - **If not within 25°C (45°F)**

     Refer to Circuit/System Testing below.

   - **If within 25°C (45°F)**
5. Engine idling, verify the IAT Sensor 3 scan tool parameter is between: -38 and +128°C (-36 and +262°F).
   - **If not between: -38 and +128°C (-36 and +262°F)**

     Refer to Circuit System Testing below.

   - **If between: -38 and +128°C (-36 and +262°F)**
6. Operate the vehicle within the conditions for running the DTC. You may also operate the vehicle within the conditions that you observed from the freeze frame/failure records data.
7. Verify the DTC does not set.
   - **If the DTC does set**

     Refer to Circuit/System Testing below.

   - **If the DTC does not set**
8. All OK

Circuit/System Testing

NOTE: You must perform the Circuit/System Verification before proceeding with Circuit/System Testing.

1. Ignition OFF and all vehicle systems OFF, disconnect the B111B Turbocharger Boost/Intake Air Temperature sensor. It may take up to 2 min for all vehicle systems to power down.
2. Test for less than 2 ohms between the low reference circuit terminal 1 and ground.
   - **If 2 ohms or greater**
   1. Ignition OFF, disconnect the harness connector at the K20 Engine Control Module.
   2. Test for less than 2 ohms in the low reference circuit end to end.
      - If 2 ohms or greater, repair the open or high resistance in the circuit.

- If less than 2 ohms replace the K20 Engine Control Module.
- **If less than 2 ohms**

3. Ignition ON, test for 4.8-5.2 V between the signal circuit terminal 2 and ground.
   - **If less than 4.8 V**
   1. Ignition OFF, disconnect the harness connector at the K20 Engine Control Module.
   2. Test for infinite resistance between the signal circuit and ground.
      - If less than infinite resistance, repair the short to ground on the circuit.
      - If infinite resistance
   3. Test for less than 2 ohms in the signal circuit end to end.
      - If 2 ohms or greater, repair the open/high resistance in the circuit.
      - If less than 2 ohms, replace the K20 Engine Control Module.
   - **If greater than 5.2 V**

   NOTE: If the signal circuit is shorted to a voltage the engine control module or the sensor may be damaged.

   1. Ignition OFF, disconnect the harness connector at the K20 Engine Control Module.
   2. Ignition ON, test for less than 1 V between the signal circuit and ground.
      - If 1 V or greater, repair the short to voltage on the circuit.
      - If less than 1 V, replace the K20 Engine Control Module.
   - **If between 4.8-5.2 V**
4. Ignition ON, verify the scan tool IAT Sensor 3 parameter is colder than -39°C (-38°F).
   - **If warmer than -39°C (-38°F).**
   1. Ignition OFF, disconnect the harness connector at the K20 Engine Control Module.
   2. Test for infinite resistance between the signal circuit terminal 2 and ground.
      - If less than infinite resistance, repair the short to ground on the circuit.
      - If infinite resistance
   3. Test for less than 2 ohms in the signal circuit end to end.
      - If 2 ohms or greater, repair the open/high resistance in the circuit.
      - If less than 2 ohms, replace the K20 Engine Control Module.
   - **If colder than -39°C (-38°F).**
5. Ignition OFF, install a 3 A fused jumper wire between the signal circuit terminal 2 and the low reference circuit terminal 1.
6. Verify the scan tool IAT Sensor 3 parameter is warmer than 130°C (266°F).
   - **If colder than 130°C (266°F).**
   1. Ignition OFF, remove the jumper wire, disconnect the harness connector at the K20 Engine Control Module, ignition ON.
   2. Test for less than 1 V between the signal circuit and ground.
      - If 1 V or greater, repair the short to voltage on the circuit.

- If less than 1 V

3. Ignition OFF.
4. Test for less than 2 ohms in the signal circuit end to end.
   - If 2 ohms or greater, repair the open/high resistance in the circuit.
   - If less than 2 ohms, replace the K20 Engine Control Module.

- **If warmer than 130°C (266°F).**

7. Test or replace the B111B Turbocharger Boost/Intake Air Temperature sensor.

Component Testing

Turbocharger Boost/Intake Air Temperature sensor

1. Ignition OFF, disconnect the harness connector at the B111B Turbocharger Boost/Intake Air Temperature sensor.

NOTE: A thermometer can be used to test the sensor off the vehicle.

2. Test the IAT sensor 3 by varying the sensor temperature while monitoring the sensor resistance. Compare the readings with the **Temperature Versus Resistance - Intake Air Temperature Sensor (Bosch Sensor)** , **Temperature Versus Resistance - Intake Air Temperature Sensor (Delco Sensor)** table for the appropriate sensor. The resistance values should be in range of the table values.
   - **If not within the specified range.**

     Replace the B111B Turbocharger Boost/Intake Air Temperature sensor.

   - **If within the specified range.**
3. All OK

Repair Instructions

Perform the **Diagnostic Repair Verification** after completing the repair.

- **Intake Air Pressure and Temperature Sensor Replacement** for turbocharger boost/intake air temperature replacement
- **Control Module References** for Engine Control Module replacement, programming, and setup.

DTC P00E9

Diagnostic Instructions

- Perform the **Diagnostic System Check - Vehicle** prior to using this diagnostic procedure.
- Review **Strategy Based Diagnosis** for an overview of the diagnostic approach.
- **Diagnostic Procedure Instructions** provides an overview of each diagnostic category.

DTC Descriptor

DTC P00E9

Intake Air Temperature (IAT) Sensor 3 Circuit Performance

Diagnostic Fault Information

IAT Sensor 3

Circuit	Short to Ground	Open/High Resistance	Short to Voltage	Signal Performance
Sensor	P00EA, P00EB	P00E9, P00EB	P00EB*	P00E9
Low Reference	-	P00E9, P00EB	P00EB*	-
*Internal ECM or sensor damage may occur if the circuit is shorted to B+.				

Typical Scan Tool Data

IAT Sensor 3

Circuit	Short to Ground	Open or High Resistance	Short to Voltage
Operating Conditions: Engine Running **Parameter Normal Range:** Varies with ambient temperature; and engine bay conditions			
Sensor	130°C (266°F)	-40°C (-40°F)	-40°C (-40°F)*
Low Reference	-	-40°C (-40°F)	-40°C (-40°F)*
*Internal ECM or sensor damage may occur if the circuit is shorted to B+			

Circuit/System Description

The intake air temperature (IAT) sensor 3 is a variable resistor that changes an engine control module (ECM) supplied 5 V signal. The signal varies with inlet air temperature and is displayed by the scan tool as °C (°F). The IAT sensor 3 is integrated with the B111B Turbocharger Boost/Intake Air Temperature Sensor in the sensor bore, which is located before the throttle body. The ECM supplies a ground for the IAT sensor 3 low reference circuit.

The IAT sensor 1 and IAT sensor 2 are part of the B75C Multifunction Intake Air Sensor. The IAT sensor 1 produces an analog signal on pin-8 of the sensor. The IAT sensor 2 produces a frequency modulated signal on pin-1 of the sensor.

IAT Sensor 3 - Temperature, Resistance, Voltage Table

IAT Sensor 3	IAT Sensor 3 Resistance	IAT Sensor 3 Signal Voltage
Cold	High	High
Warm	Low	Low

Conditions for Running the DTC

P00E9

- DTCs P0097, P0098, P00EA, P00EB, P0111, P0112, P0113, P0117, P0118, or P1682 are not set.
- The vehicle has been OFF at least 8 hours.
- Ignition voltage is at least 11 V.
- This DTC runs once per ignition cycle when the enabling conditions are met.

Conditions for Setting the DTC

NOTE: P00E9 Can fail under any of the following 3 sets of conditions.

P00E9-Condition 1

- The ECM determines the absolute difference between IAT sensor 1 start-up temperature and the IAT sensor 2 start-up temperature is less or equal to 25°C (45°F).

  AND

- The ECM determines the absolute difference between IAT sensor 3 start-up temperature and the IAT sensor 1 start-up temperature is greater than 25°C (45°F).

  AND

- The ECM determines the absolute difference between IAT sensor 3 start-up temperature and the IAT sensor 2 start-up temperature is greater than 25°C (45°F).

P00E9-Condition 2

- The ECM determines the IAT sensor 1 start-up temperature is between the IAT sensor 3 and the IAT sensor 2 start-up temperatures

  AND

- The ECM determines the absolute difference between IAT sensor 3 start-up temperature and the IAT sensor 2 start-up temperature is greater than 25°C (45°F).

  AND

- The ECM determines the absolute difference between IAT sensor 3 and the IAT sensor 1 start-up temperatures is greater than the absolute difference between IAT sensor 2 and the IAT sensor 1 start-up temperatures.

P00E9-Condition 3

- The ECM determines the IAT sensor 2 start-up temperature is between the IAT sensor 3 and the IAT sensor 1 start-up temperatures

  AND

- The ECM determines the absolute difference between IAT sensor 3 and the IAT sensor 1 start-up temperatures is greater than 25°C (45°F).

  AND

- The absolute difference between IAT sensor 3 and the IAT sensor 2 start-up temperatures is greater than the absolute difference between IAT sensor 2 and the IAT sensor 1 start-up temperatures.

DTC P00E9 runs once an ignition cycle when one of the above 3 enabling sets of conditions are met.

Action Taken When the DTC Sets

DTC P00E9 is a Type B DTC.

Conditions for Clearing the DTCs

DTC P00E9 is a Type B DTC.

Reference Information

Schematic Reference

Engine Controls Schematics

Connector End View Reference

COMPONENT CONNECTOR END VIEWS - INDEX

Electrical Information Reference

- **Circuit Testing**
- **Connector Repairs**
- **Testing for Intermittent Conditions and Poor Connections**
- **Wiring Repairs**

DTC Type Reference

Powertrain Diagnostic Trouble Code (DTC) Type Definitions

Scan Tool Reference

Control Module References for scan tool information

Special Tools

EL-38522-A Variable Signal Generator

For equivalent regional tools, refer to **Special Tools** .

Circuit/System Verification

1. Ignition ON.
2. Verify that DTC DTC P0641, P0651, P0697, or P06A3 is not set.
   - **If any of the DTCs are set**

     Refer to **DTC P0641, P0651, P0697, or P06A3 (ECM)** for further diagnosis.

   - **If none of the DTCs are set**

NOTE: To minimize the effects of residual engine heat and sensor internal heating elements, perform Steps 3 and 4 of this verification procedure only if the ignition has been OFF for 8 hours or more.

3. Ignition ON.
4. Verify the following scan tool parameters are within 25°C (45°F) of each other.
   - Start-Up IAT Sensor 1
   - IAT Sensor 2
   - IAT Sensor 3
   - **If not within 25°C (45°F)**

     Refer to Circuit/System Testing below.

   - **If within 25°C (45°F)**
5. Engine idling, verify the IAT Sensor 3 scan tool parameter is between: -38 and +128°C (-36 and +262°F).
   - **If not between: -38 and +128°C (-36 and +262°F)**

     Refer to Circuit System Testing below.

   - **If between: -38 and +128°C (-36 and +262°F)**
6. Operate the vehicle within the conditions for running the DTC. You may also operate the vehicle within the conditions that you observed from the freeze frame/failure records data.
7. Verify the DTC does not set.
   - **If the DTC does set**

     Refer to Circuit/System Testing below.

   - **If the DTC does not set**
8. All OK

Circuit/System Testing

1. Check the integrity of the entire air induction system and verify that none of the following conditions exist:
   - A loose or disconnected charge air cooler hose or pipe
   - A blocked or obstructed charge air cooler, including: after-market grill covers
   - Any snow or ice build-up at the charge air cooler in cold climates
   - Any mud or dirt build-up at the charge air cooler
   - A restricted or collapsed air intake duct
   - An intake manifold leak
   - A MAP sensor seal that is leaking, missing, or damaged
   - A misaligned or damaged air intake duct
   - Any water intrusion in the induction system
   - An Intake Manifold Resonator with a leaking seal, or a cracked or broken housing
   - **If a condition exists**

     Repair or replace component as appropriate.

   - **If no condition exists**
2. Ignition OFF and all vehicle systems OFF, disconnect the B75C Multifunction Intake Air sensor. It may take up to 2 min for all vehicle systems to power down.
3. Test for less than 2 ohms between the low reference circuit terminal 7 and ground.
   - **If 2 ohms or greater**
   1. Ignition OFF, disconnect the harness connector at the K20 Engine Control Module.
   2. Test for less than 2 ohms in the low reference circuit end to end.
      - If 2 ohms or greater, repair the open or high resistance in the circuit.
      - If less than 2 ohms replace the K20 Engine Control Module.
   - **If less than 2 ohms**
4. Ignition ON, test for 4.8-5.2 V between the 5 V reference circuit terminal 2 and ground.
   - **If less than 4.8 V**
   1. Ignition OFF, disconnect the harness connector at the K20 Engine Control Module.
   2. Test for infinite resistance between the signal circuit and ground.
      - If less than infinite resistance, repair the short to ground on the circuit.
      - If infinite resistance
   3. Test for less than 2 ohms in the signal circuit end to end.
      - If 2 ohms or greater, repair the open/high resistance in the circuit.
      - If less than 2 ohms, replace the K20 Engine Control Module.
   - **If greater than 5.2 V**

NOTE: **If the 5 V reference circuit is shorted to a voltage the engine control module or the sensor may be damaged.**

1. Ignition OFF, disconnect the harness connector at the K20 Engine Control Module.
2. Ignition ON, test for less than 1 V between the 5 V reference circuit and ground.
    - If 1 V or greater, repair the short to voltage on the circuit.
    - If less than 1 V, replace the K20 Engine Control Module.

- **If between 4.8-5.2 V**

5. Ignition ON, test for 4.8-5.2 V between the signal terminal 8 and ground.
    - **If less than 4.8 V**
    1. Ignition OFF, disconnect the harness connector at the K20 Engine Control Module.
    2. Test for infinite resistance between the signal circuit and ground.
        - If less than infinite resistance, repair the short to ground on the circuit.
        - If infinite resistance
    3. Test for less than 2 ohms in the signal circuit end to end.
        - If 2 ohms or greater, repair the open/high resistance in the circuit.
        - If less than 2 ohms, replace the K20 Engine Control Module.
    - **If greater than 5.2 V**

NOTE: If the signal circuit is shorted to a voltage the engine control module or the sensor may be damaged.

    1. Ignition OFF, disconnect the harness connector at the K20 Engine Control Module.
    2. Ignition ON, test for less than 1 V between the signal circuit and ground.
        - If 1 V or greater, repair the short to voltage on the circuit.
        - If less than 1 V, replace the K20 Engine Control Module.
    - **If between 4.8-5.2 V**
6. Ignition ON, verify the scan tool IAT Sensor 1 parameter is colder than -39°C (-38°F).
    - **If warmer than -39°C (-38°F).**
    1. Ignition OFF, disconnect the harness connector at the K20 Engine Control Module.
    2. Test for infinite resistance between the signal circuit terminal 8 and ground.
        - If less than infinite resistance, repair the short to ground on the circuit.
        - If infinite resistance
    3. Test for less than 2 ohms in the signal circuit end to end.
        - If 2 ohms or greater, repair the open/high resistance in the circuit.
        - If less than 2 ohms, replace the K20 Engine Control Module.
    - **If colder than -39°C (-38°F).**
7. Ignition OFF, install a 3 A fused jumper wire between the signal circuit terminal 8 and the low reference circuit terminal 7.
8. Verify the scan tool IAT Sensor 3 parameter is warmer than 150°C (302°F).
    - **If colder than 150°C (302°F).**

1. Ignition OFF, remove the jumper wire, disconnect the harness connector at the K20 Engine Control Module, ignition ON.
2. Test for less than 1 V between the signal circuit and ground.
    - If 1 V or greater, repair the short to voltage on the circuit.
    - If less than 1 V
3. Ignition OFF.
4. Test for less than 2 ohms in the signal circuit end to end.
    - If 2 ohms or greater, repair the open/high resistance in the circuit.
    - If less than 2 ohms, replace the K20 Engine Control Module.

- **If warmer than 150°C (302°F).**

9. Ignition OFF and all vehicle systems OFF, disconnect the B111B Turbocharger Boost/Intake Air Temperature sensor. It may take up to 2 min for all vehicle systems to power down.
10. Test for less than 2 ohms between the low reference circuit terminal 1 and ground.

- **If 2 ohms or greater**

1. Ignition OFF, disconnect the harness connector at the K20 Engine Control Module.
2. Test for less than 2 ohms in the low reference circuit end to end.
    - If 2 ohms or greater, repair the open or high resistance in the circuit.
    - If less than 2 ohms replace the K20 Engine Control Module.

- **If less than 2 ohms**

11. Ignition ON, test for 4.8-5.2 V between the signal terminal 2 and ground.

- **If less than 4.8 V**

1. Ignition OFF, disconnect the harness connector at the K20 Engine Control Module.
2. Test for infinite resistance between the signal circuit and ground.
    - If less than infinite resistance, repair the short to ground on the circuit.
    - If infinite resistance
3. Test for less than 2 ohms in the signal circuit end to end.
    - If 2 ohms or greater, repair the open/high resistance in the circuit.
    - If less than 2 ohms, replace the K20 Engine Control Module.

- **If greater than 5.2 V**

NOTE: If the signal circuit is shorted to a voltage the engine control module or the sensor may be damaged.

1. Ignition OFF, disconnect the harness connector at the K20 Engine Control Module.
2. Ignition ON, test for less than 1 V between the signal circuit and ground.
    - If 1 V or greater, repair the short to voltage on the circuit.
    - If less than 1 V, replace the K20 Engine Control Module.

- **If between 4.8-5.2 V**

12. Ignition ON, verify the scan tool IAT Sensor 3 parameter is colder than -39°C (-38°F).

- **If warmer than -39°C (-38°F).**

1. Ignition OFF, disconnect the harness connector at the K20 Engine Control Module.
2. Test for infinite resistance between the signal circuit terminal 2 and ground.
   - If less than infinite resistance, repair the short to ground on the circuit.
   - If infinite resistance
3. Test for less than 2 ohms in the signal circuit end to end.
   - If 2 ohms or greater, repair the open/high resistance in the circuit.
   - If less than 2 ohms, replace the K20 Engine Control Module.

- **If colder than -39°C (-38°F).**

13. Ignition OFF, install a 3 A fused jumper wire between the signal circuit terminal 2 and the low reference circuit terminal 1.
14. Verify the scan tool IAT Sensor 3 parameter is warmer than 130°C (266°F).
    - **If colder than 130°C (266°F).**

    1. Ignition OFF, remove the jumper wire, disconnect the harness connector at the K20 Engine Control Module, ignition ON.
    2. Test for less than 1 V between the signal circuit and ground.
       - If 1 V or greater, repair the short to voltage on the circuit.
       - If less than 1 V
    3. Ignition OFF.
    4. Test for less than 2 ohms in the signal circuit end to end.
       - If 2 ohms or greater, repair the open/high resistance in the circuit.
       - If less than 2 ohms, replace the K20 Engine Control Module.

    - **If warmer than 130°C (266°F).**

15. Ignition ON, test for 4.8-5.2 V between the signal terminal 1 and ground.
    - **If less than 4.8 V**

    1. Ignition OFF, disconnect the harness connector at the K20 Engine Control Module.
    2. Test for infinite resistance between the signal circuit and ground.
       - If less than infinite resistance, repair the short to ground on the circuit.
       - If infinite resistance
    3. Test for less than 2 ohms in the signal circuit end to end.
       - If 2 ohms or greater, repair the open/high resistance in the circuit.
       - If less than 2 ohms, replace the K20 Engine Control Module.

    - **If greater than 5.2 V**

      NOTE: If the signal circuit is shorted to a voltage the engine control module or the sensor may be damaged.

      1. Ignition OFF, disconnect the harness connector at the K20 Engine Control Module.
      2. Ignition ON, test for less than 1 V between the signal circuit and ground.

- If 1 V or greater, repair the short to voltage on the circuit.
- If less than 1 V, replace the K20 Engine Control Module.

- **If between 4.8-5.2 V**

16. Determine if **EL-38522-A** Variable Signal Generator or equivalent is available.
    - **EL-38522-A, Variable Signal Generator; or equivalent is not available**
    1. Replace the K20 Engine Control Module.
    2. Operate the vehicle within the Conditions for Running the DTC. You may also operate the vehicle within the conditions that you observed from the freeze frame/failure records data.
    3. Verify the DTC does not set.
        - **If the DTC sets**

          Refer to step 20.

        - **If no DTCs set**
    4. All OK.
    - **EL-38522-A, Variable Signal Generator; or equivalent is available**
17. Ignition OFF, connect the leads of the **EL-38522-A** Variable Signal Generator as follows:
    - Red lead to the signal circuit terminal 1 at the harness connector
    - Black leads to ground
    - Battery voltage supply lead to B+
18. Set the **EL-38522-A** Variable Signal Generator to the following specifications.
    - Signal switch to 5 V
    - Duty Cycle switch to 50 % (Normal)
    - Frequency switch to 30 Hz
19. Ignition ON, verify the scan tool IAT Sensor 2 parameter is between 28-32 Hz.
    - **If not between 28-32 Hz**

      Replace the K20 Engine Control Module.

    - **If between 28-32 Hz**
20. Test or replace the appropriate temperature sensor.

Component Testing

Multifunction Intake Air Sensor

1. Ignition OFF, disconnect the harness connector at the B75C Multifunction Intake Air sensor.

NOTE: A thermometer can be used to test the sensor off the vehicle.

2. Test the IAT sensor 1 by varying the sensor temperature while monitoring the sensor resistance. Compare

the readings with the **Temperature Versus Resistance - Intake Air Temperature Sensor (Bosch Sensor)** , **Temperature Versus Resistance - Intake Air Temperature Sensor (Delco Sensor)** table for Bosch Sensors. The resistance values should be in range of the table values.

- **If not within the specified range.**

  Replace the B75C Multifunction Intake Air sensor.

- **If within the specified range.**

3. All OK

Multifunction Intake Air Sensor

1. Test the IAT Sensor 2 by varying the sensor temperature while monitoring the air temperature with a thermometer. Compare the readings with the scan tool IAT Sensor 2 parameter. The values should be within 5%.
   - **If not within 5%.**

     Replace the B75C Multifunction Intake Air sensor.

   - **If within 5%.**
2. All OK

Turbocharger Boost/Intake Air Temperature sensor

1. Ignition OFF, disconnect the harness connector at the B111B Turbocharger Boost/Intake Air Temperature sensor.

   NOTE: A thermometer can be used to test the sensor off the vehicle.

2. Test the IAT sensor 3 by varying the sensor temperature while monitoring the sensor resistance. Compare the readings with the **Temperature Versus Resistance - Intake Air Temperature Sensor (Bosch Sensor)** , **Temperature Versus Resistance - Intake Air Temperature Sensor (Delco Sensor)** table for the appropriate sensor. The resistance values should be in range of the table values.
   - **If not within the specified range.**

     Replace the B111B Turbocharger Boost/Intake Air Temperature sensor.

   - **If within the specified range.**
3. All OK

Repair Instructions

Perform the **Diagnostic Repair Verification** after completing the repair.

- **Intake Air Pressure and Temperature Sensor Replacement** for turbocharger boost/intake air temperature sensor replacement

- **Mass Airflow Sensor Replacement** for multifunction intake air sensor replacement
- **Control Module References** for Engine Control Module replacement, programming, and setup.

DTC P0101

Diagnostic Instructions

- Perform the **Diagnostic System Check - Vehicle** prior to using this diagnostic procedure.
- Review **Strategy Based Diagnosis** for an overview of the diagnostic approach.
- **Diagnostic Procedure Instructions** provides an overview of each diagnostic category.

DTC Descriptor

DTC P0101

Mass Air Flow (MAF) Sensor Performance

Diagnostic Fault Information

MAF Sensor

Circuit	Short to Ground	Open/High Resistance	Short to Voltage	Signal Performance
Ignition Voltage	P0102	P0102, P01101	P0690	P0101
Sensor	P0102, P1101	P0102, P1101	P0102*	P0101, P1101
Ground	-	P0102	-	-
*Internal ECM or sensor damage may occur if the circuit is shorted to B+.				

Typical Scan Tool Data

MAF Sensor

Circuit	Short to Ground	Open	Short to Voltage
Operating Conditions: Engine running at various operating conditions **Parameter Normal Range:** 2, 000-10, 000 Hz			
Ignition Voltage	0 Hz	0 Hz	-
Sensor	0 Hz	0 Hz	0 Hz*
Ground	-	0 Hz	-
*Internal ECM or sensor damage may occur if the circuit is shorted to B+			

Circuit Description

The sensors listed below are integrated within the multifunction intake air sensor:

- Intake Air Temperature (IAT) sensor 1
- IAT sensor 2

- Humidity sensor
- Mass Air Flow (MAF) sensor
- Barometric (BARO) pressure sensor

The MAF sensor is an air flow meter that measures the amount of air flowing in the sensor bore. The engine control module (ECM) uses the MAF sensor signal to provide the correct fuel delivery for all engine speeds and loads. A small quantity of air entering the engine indicates a deceleration or idle condition. A large quantity of air entering the engine indicates an acceleration or high load condition.

The ECM applies 5 V to the MAF sensor signal circuit. The sensor produces a variable frequency signal based on the inlet air flow through the sensor bore. The signal varies with engine load and is displayed by the scan tool as Hertz (Hz) and grams per second (g/s). Vehicle ignition voltage and ground circuits are also supplied to the MAF sensor.

The intake flow rationality diagnostic provides the within-range rationality check for the mass air flow (MAF), manifold absolute pressure (MAP), and the throttle position sensors. This is an explicit model-based diagnostic containing 4 separate models for the intake system.

The estimates of MAF and MAP obtained from this system of models and calculations are then compared to the actual measured values from the MAF, MAP, and the throttle position sensors and to each other to determine the appropriate DTC to fail.

The sensors listed below share an ECM supplied 5 V reference circuit:

- IAT sensor 2
- Humidity sensor
- Barometric pressure (BARO) sensor

The sensors listed below share an ECM supplied low reference circuit:

- IAT sensor 1
- IAT sensor 2
- Humidity sensor
- Barometric pressure (BARO) sensor

Conditions for Running the DTCs

- DTCs P0096, P0097, P0098, P0102, P0103, P0107, P0111, P0112, P0113, P0116, P0117, P0118, P0119, P0237, P0238, P0335, P0336, P2227, P2228, P2229, or P2230 are not set.
- The engine speed is between 400-6, 000 RPM.
- The engine coolant temperature (ECT) is between -7 and +125°C (+19 and +257°F).
- The intake air temperature (IAT) is between -20 and +100°C (-4 and +212°F).
- The DTC runs continuously when the above conditions are met.

Conditions for Setting the DTC

The engine control module (ECM) detects that the actual measured airflow from the MAF, MAP, and throttle position sensors is not within range of the calculated airflow that is derived from the system of models for greater than 2 s.

Action Taken When the DTC Sets

DTC P0101 is a Type B DTC.

Conditions for Clearing the MIL/DTC

DTC P0101 is a Type B DTC.

Diagnostic Aids

- Certain aftermarket air filters may cause this DTC to set.
- Certain aftermarket air induction systems may cause this DTC to set.
- Modifications to the air induction system may cause this DTC to set.

Reference Information

Schematic Reference

Engine Controls Schematics

Connector End View Reference

COMPONENT CONNECTOR END VIEWS - INDEX

Electrical Information Reference

- **Circuit Testing**
- **Connector Repairs**
- **Testing for Intermittent Conditions and Poor Connections**
- **Wiring Repairs**

DTC Type Reference

Powertrain Diagnostic Trouble Code (DTC) Type Definitions

Scan Tool Reference

Control Module References for scan tool information

Special Tools

EL-38522-A Variable Signal Generator

For equivalent regional tools, refer to **Special Tools** .

Circuit/System Verification

1. Ignition ON.
2. Verify that DTC DTC P0641, P0651, P0697, or P06A3 is not set.
   - **If any of the DTCs are set**

     Refer to **DTC P0641, P0651, P0697, or P06A3 (ECM)** for further diagnosis.

   - **If none of the DTCs are set**
3. If you were sent here from DTC P0068, P0106, P0121, P0236, or P1101; refer to Circuit/System Testing below.
4. Ignition ON.
5. Verify the scan tool Throttle Body Idle Airflow Compensation parameter is less than 90 %.
   - **If 90 % or greater**

     Refer to **Throttle Body Inspection and Cleaning** .

   - **If less than 90 %**
6. Verify the scan tool Throttle Position Sensors 1 and 2 Agree/Disagree parameter displays Agree while performing the Throttle Sweep Test with a scan tool.
   - **If Disagree**

     Refer to **DTC P0121-P0123, P0222, P0223, or P2135 (LUV)** for further diagnosis.

   - **If Agree**
7. Determine the current vehicle testing altitude.
8. Verify the scan tool MAP Sensor pressure parameter is within the range specified in the **Altitude Versus Barometric Pressure** table.
   - **If the MAP Sensor parameter is not in range**

     Refer to **DTC P0106** for further diagnosis.

   - **If the MAP Sensor parameter is within range**
9. Verify the engine is equipped with a turbocharger.
   - **If not equipped with a turbocharger**

     Refer to Step 12.

   - **If equipped with a turbocharger**
10. Verify the scan tool Boost Pressure Sensor parameter is within the range specified in the **Altitude Versus Barometric Pressure** table.
    - **If the Boost Pressure Sensor parameter is not in range**

Refer to **DTC P0236** for further diagnosis.

- **If the Boost Pressure Sensor parameter is within range**

11. Verify the scan tool Boost Pressure Sensor parameter decreases after starting the engine.
    - **If the Boost Pressure Sensor parameter does not decrease**

      Refer to **DTC P0236** for further diagnosis.

    - **If the Boost Pressure Sensor parameter does decrease**
12. Engine idling, verify the scan tool MAP Sensor pressure parameter is between 26-52 kPa (3.8-7.5 PSI) and changes with accelerator pedal input.
    - **If not between 26-52 kPa (3.8-7.5 PSI) or does not change**

      Refer to **DTC P0106** for further diagnosis.

    - **If between 26-52 kPa (3.8-7.5 PSI) and changes**
13. Verify the scan tool MAF Sensor g/s parameter changes smoothly and gradually as the engine speed is increased and decreased while performing the actions listed below.
    1. Engine idling
    2. Perform the scan tool snapshot function.
    3. Increase the engine speed slowly to 3, 000 RPM and then back to idle.
    4. Exit from the scan tool snapshot and review the data.
    5. Observe the MAF Sensor parameter frame by frame with a scan tool.
    - **If the MAF Sensor parameter does not change smoothly and gradually**

      Refer to Circuit/System Testing below.

    - **If the MAF Sensor parameter changes smoothly and gradually**
14. Operate the vehicle within the Conditions for Running the DTC. You may also operate the vehicle within the conditions that you observed from the Freeze Frame/Failure Records data.
15. Verify the DTC does not set.
    - **If the DTC does set**

      Refer to Circuit/System Testing for further diagnosis.

    - **If the DTC does not set**
16. All OK

Circuit/System Testing

NOTE: You must perform the Circuit/System Verification before proceeding with Circuit/System Testing.

1. Check the integrity of the entire air induction system by verifying that none of the following conditions exist:
    - Any damaged components
    - Improper operation of turbocharger wastegate actuator or bypass valve; where equipped
    - Improperly installed components
    - Collapsed, restricted, or damaged components
    - Loose clamps, cracks, or other damage
    - An air flow restriction
    - Restricted air filter
    - Splits, kinks, leaks, or improper connections at the vacuum hoses
    - Vacuum leaks at the intake manifold, MAP sensor, and throttle body
    - Water intrusion
    - Any snow or ice buildup, in cold climates
    - Contamination of the Multifunction Intake Air sensor element
    - **If a condition is found**

      Repair or replace component as appropriate.

    - **If no condition is found**
2. Ignition OFF, disconnect the harness connector at the B75C Multifunction Intake Air sensor.
3. Test for less than 2 ohms between the ground circuit terminal 4 and ground.
    - **If 2 ohms or greater**
    1. Ignition OFF.
    2. Test for less than 2 ohms in the ground circuit end to end.
        - If 2 ohms or greater, repair the open/high resistance in the circuit.
        - If less than 2 ohms, repair the open/high resistance in the ground connection.
    - **If less than 2 ohms**
4. Ignition ON.
5. Verify that a test lamp illuminates between the ignition circuit terminal 5 and ground.
    - **If the test lamp does not illuminate and the circuit fuse is good**
    1. Ignition OFF, remove the test lamp and remove the fuse for the ignition circuit.
    2. Test for less than 2 ohms in the ignition circuit end to end.
        - If 2 ohms or greater, repair the open/high resistance in the circuit.
        - If less than 2 ohms, verify the fuse is not open and there is voltage at the fuse.
    - **If the test lamp does not illuminate and the circuit fuse is open**
    1. Ignition OFF, remove the test lamp and remove the fuse for the ignition circuit.
    2. Test for infinite resistance between the ignition circuit and ground.
        - If less than infinite resistance, repair the short to ground on the circuit.
        - If infinite resistance

3. Test for greater than 2 ohms between the ignition circuit terminal 5 and ground.
    - If less than 2 ohms, repair the short to ground on the circuit.
    - If greater than 2 ohms, test all the components connected to the circuit and repair or replace as necessary.
- **If a test lamp illuminates**

6. Ignition ON, test for 4.8-5.2 V between the signal circuit terminal 3 and ground.
    - **If less than 4.8 V**
    1. Ignition OFF, disconnect the harness connector at the K20 Engine Control Module.
    2. Test for infinite resistance between the signal circuit and ground.
        - If less than infinite resistance, repair the short to ground on the circuit.
        - If infinite resistance
    3. Test for less than 2 ohms in the signal circuit end to end.
        - If 2 ohms or greater, repair the open/high resistance in the circuit.
        - If less than 2 ohms, replace the K20 Engine Control Module.
    - **If greater than 5.2 V**
    1. Ignition OFF, disconnect the harness connector at the K20 Engine Control Module.
    2. Ignition ON, test for less than 1 V between the signal circuit and ground.
        - If 1 V or greater, repair the short to voltage on the circuit.
        - If less than 1 V, replace the K20 Engine Control Module.
    - **If between 4.8-5.2 V**
7. Determine if **EL-38522-A** Variable Signal Generator or equivalent is available.
    - **EL-38522-A, Variable Signal Generator; or equivalent is not available**
    1. Replace the K20 Engine Control Module.
    2. Operate the vehicle within the Conditions for Running the DTC. You may also operate the vehicle within the conditions that you observed from the freeze frame/failure records data.
    3. Verify the DTC does not set.
        - **If the DTC sets**

          Refer to step 11.

        - **If no DTCs set**
    4. All OK.
    - **EL-38522-A, Variable Signal Generator; or equivalent is available**
8. Ignition OFF, connect the leads of the **EL-38522-A** Variable Signal Generator as follows:
    - Red lead to the signal circuit terminal 3 at the harness connector
    - Black leads to ground
    - Battery voltage supply lead to B+
9. Set the **EL-38522-A** Variable Signal Generator to the following specifications.
    - Signal switch to 5 V

- Frequency switch to 5 kHz
- Duty Cycle switch to 50 % (Normal)

10. Engine idling, verify the scan tool MAF Sensor parameter is between 4, 950-5, 050 Hz.
    - **If not between 4, 950-5, 050 Hz.**

      Replace the K20 Engine Control Module.

    - **If between 4, 950-5, 050 Hz.**
11. Test or replace the B75C Multifunction Intake Air sensor.

Repair Instructions

Perform the **Diagnostic Repair Verification** after completing the repair.

- **Mass Airflow Sensor Replacement** for multifunction intake air sensor replacement.
- **Control Module References** for Engine Control Module replacement, programming, and setup.

DTC P0102 OR P0103

Diagnostic Instructions

- Perform the **Diagnostic System Check - Vehicle** prior to using this diagnostic procedure.
- Review **Strategy Based Diagnosis** for an overview of the diagnostic approach.
- **Diagnostic Procedure Instructions** provides an overview of each diagnostic category.

DTC Descriptors

DTC P0102

Mass Air Flow (MAF) Sensor Circuit Low Frequency

DTC P0103

Mass Air Flow (MAF) Sensor Circuit High Frequency

Diagnostic Fault Information

MAF Sensor

Circuit	Short to Ground	Open/High Resistance	Short to Voltage	Signal Performance
Ignition Voltage	P0102	P0102, P01101	P0690	P0101
Sensor	P0102, P1101	P0102, P1101	P0102*	P0101, P1101
Ground	-	P0102	-	-
*Internal ECM or sensor damage may occur if the circuit is shorted to B+.				

Typical Scan Tool Data

MAF Sensor

Circuit	Short to Ground	Open	Short to Voltage
Operating Conditions: Engine running at various operating conditions **Parameter Normal Range:** 2, 000-10, 000 Hz			
Ignition Voltage	0 Hz	0 Hz	-
Sensor	0 Hz	0 Hz	0 Hz*
Ground	-	0 Hz	-
*Internal ECM or sensor damage may occur if the circuit is shorted to B+			

Circuit Description

The sensors listed below are integrated within the multifunction intake air sensor:

- Intake Air Temperature (IAT) sensor 1
- IAT sensor 2
- Humidity sensor
- Mass Air Flow (MAF) sensor
- Barometric (BARO) pressure sensor

The MAF sensor is an air flow meter that measures the amount of air flowing in the sensor bore. The engine control module (ECM) uses the MAF sensor signal to provide the correct fuel delivery for all engine speeds and loads. A small quantity of air entering the engine indicates a deceleration or idle condition. A large quantity of air entering the engine indicates an acceleration or high load condition.

The ECM applies 5 V to the MAF sensor signal circuit. The sensor produces a variable frequency signal based on the inlet air flow through the sensor bore. The signal varies with engine load and is displayed by the scan tool as Hertz (Hz) and grams per second (g/s). Vehicle ignition voltage and ground circuits are also supplied to the MAF sensor.

The sensors listed below share an ECM supplied 5 V reference circuit:

- IAT sensor 2
- Humidity sensor
- Barometric pressure (BARO) sensor

The sensors listed below share an ECM supplied low reference circuit:

- IAT sensor 1
- IAT sensor 2
- Humidity sensor
- Barometric pressure (BARO) sensor

Conditions for Running the DTCs

- The engine is running for at least 1 s.
- The engine speed is at least 300 RPM.
- The ignition signal is at least 10 V.
- The above conditions are met for at least 1 s.
- The DTC runs continuously when the above conditions are met.

Conditions for Setting the DTCs

P0102

The ECM detects that the MAF Sensor signal parameter is less than 1, 837 Hz (about 0.39 g/s) for at least 250 cylinder firing events.

P0103

The ECM detects that the MAF Sensor signal parameter is at least 13, 200 Hz (about 810 g/s) for at least 250 cylinder firing events.

Action Taken When the DTCs Set

DTCs P0102 and P0103 are Type B DTCs.

Conditions for Clearing the MIL/DTCs

DTCs P0102 and P0103 are Type B DTCs.

Diagnostic Aids

Verify that any electrical aftermarket devices are properly connected and grounded. Refer to **Checking Aftermarket Accessories** .

Reference Information

Schematic Reference

Engine Controls Schematics

Connector End View Reference

COMPONENT CONNECTOR END VIEWS - INDEX

Electrical Information Reference

- **Circuit Testing**
- **Connector Repairs**

- **Testing for Intermittent Conditions and Poor Connections**
- **Wiring Repairs**

DTC Type Reference

Powertrain Diagnostic Trouble Code (DTC) Type Definitions

Scan Tool Reference

Control Module References for scan tool information

Special Tools

EL-38522-A Variable Signal Generator

For equivalent regional tools, refer to **Special Tools** .

Circuit/System Verification

1. Engine idling, verify the scan tool MAF Sensor parameter is between 1.75-5.5 g/s.
   - **If not between 1.75-5.5 g/s**

     Refer to Circuit/System Testing below.

   - **If between 1.75-5.5 g/s**
2. Verify the scan tool MAF Sensor g/s parameter changes smoothly and gradually as the engine speed is increased and decreased while performing the actions listed below.
   1. Engine idling
   2. Perform the scan tool snapshot function.
   3. Increase the engine speed slowly to 3, 000 RPM and then back to idle.
   4. Exit from the scan tool snapshot and review the data.
   5. Observe the MAF Sensor parameter frame by frame with a scan tool.
   - **If the MAF Sensor parameter does not change smoothly and gradually**

     Refer to Circuit/System Testing below.

   - **If the MAF Sensor parameter changes smoothly and gradually**
3. Operate the vehicle within the Conditions for Running the DTC. You may also operate the vehicle within the conditions that you observed from the Freeze Frame/Failure Records data.
4. Verify the DTC does not set.
   - **If the DTC does set**

     Refer to Circuit/System Testing for further diagnosis.

- **If the DTC does not set**

5. All OK

Circuit/System Testing

NOTE: You must perform the Circuit/System Verification before proceeding with Circuit/System Testing.

1. Ignition OFF, disconnect the harness connector at the B75C Multifunction Intake Air sensor.
2. Test for less than 2 ohms between the ground circuit terminal 4 and ground.
   - **If 2 ohms or greater**
   1. Ignition OFF. Disconnect the sensor chassis ground.
   2. Test for less than 2 ohms in the ground circuit end to end.
      - If 2 ohms or greater, repair the open/high resistance in the circuit.
      - If less than 2 ohms, repair the open/high resistance in the chassis ground connection.
   - **If less than 2 ohms**
3. Ignition ON.
4. Verify that a test lamp illuminates between the ignition circuit terminal 5 and ground.
   - **If the test lamp does not illuminate and the circuit fuse is good**
   1. Ignition OFF, remove the test lamp and remove the fuse for the ignition circuit.
   2. Test for less than 2 ohms in the ignition circuit end to end.
      - If 2 ohms or greater, repair the open/high resistance in the circuit.
      - If less than 2 ohms, verify the fuse is not open and there is voltage at the fuse.
   - **If the test lamp does not illuminate and the circuit fuse is open**
   1. Ignition OFF, remove the test lamp and remove the fuse for the ignition circuit.
   2. Test for infinite resistance between the ignition circuit and ground.
      - If less than infinite resistance, repair the short to ground on the circuit.
      - If infinite resistance
   3. Test for greater than 2 ohms between the ignition circuit terminal 5 and ground.
      - If less than 2 ohms, repair the short to ground on the circuit.
      - If greater than 2 ohms, test all the components connected to the circuit and repair or replace as necessary.
   - **If a test lamp illuminates**
5. Ignition ON, test for 4.8-5.2 V between the signal circuit terminal 3 and ground.
   - **If less than 4.8 V**
   1. Ignition OFF, disconnect the harness connector at the K20 Engine Control Module.
   2. Test for infinite resistance between the signal circuit and ground.
      - If less than infinite resistance, repair the short to ground on the circuit.
      - If infinite resistance

3. Test for less than 2 ohms in the signal circuit end to end.
    - If 2 ohms or greater, repair the open/high resistance in the circuit.
    - If less than 2 ohms, replace the K20 Engine Control Module.
- **If greater than 5.2 V**

1. Ignition OFF, disconnect the harness connector at the K20 Engine Control Module.
2. Ignition ON, test for less than 1 V between the signal circuit and ground.
    - If 1 V or greater, repair the short to voltage on the circuit.
    - If less than 1 V, replace the K20 Engine Control Module.

- **If between 4.8-5.2 V**

6. Determine if **EL-38522-A** Variable Signal Generator or equivalent is available.
    - **EL-38522-A, Variable Signal Generator; or equivalent is not available**

    1. Replace the K20 Engine Control Module.
    2. Operate the vehicle within the Conditions for Running the DTC. You may also operate the vehicle within the conditions that you observed from the freeze frame/failure records data.
    3. Verify the DTC does not set.
        - **If the DTC sets**

          Refer to step 10.

        - **If no DTCs set**
    4. All OK.

    - **EL-38522-A, Variable Signal Generator; or equivalent is available**

7. Ignition OFF, connect the leads of the **EL-38522-A** Variable Signal Generator as follows:
    - Red lead to the signal circuit terminal 3 at the harness connector
    - Black leads to ground
    - Battery voltage supply lead to B+
8. Set the **EL-38522-A** Variable Signal Generator to the following specifications.
    - Signal switch to 5 V
    - Frequency switch to 5 kHz
    - Duty Cycle switch to 50 % (Normal)
9. Engine idling, verify the scan tool MAF Sensor parameter is between 4, 950-5, 050 Hz.
    - **If not between 4, 950-5, 050 Hz.**

      Replace the K20 Engine Control Module.

    - **If between 4, 950-5, 050 Hz.**
10. Test or replace the B75C Multifunction Intake Air sensor.

Repair Instructions

Perform the **Diagnostic Repair Verification** after completing the repair.

- **Mass Airflow Sensor Replacement** for multifunction intake air sensor replacement.
- **Control Module References** for Engine Control Module replacement, programming, and setup.

DTC P0106

Diagnostic Instructions

- Perform the **Diagnostic System Check - Vehicle** prior to using this diagnostic procedure.
- Review **Strategy Based Diagnosis** for an overview of the diagnostic approach.
- **Diagnostic Procedure Instructions** provides an overview of each diagnostic category.

DTC Descriptor

DTC P0106

Manifold Absolute Pressure (MAP) Sensor Performance

Diagnostic Fault Information

Circuit	Short to Ground	Open/High Resistance	Short to Voltage	Signal Performance
5 V Reference	P0107, P0697	P0106, P0107	P0108, P0697	P0106
Signal	P0107	P0106, P0107	P0108	P0106
Low Reference	-	P0106, P0108	-	P0106

Typical Scan Tool Data

MAP Sensor

Circuit	Short to Ground	Open	Short to Voltage
Operating Conditions: Engine running at various operating conditions **Parameter Normal Range:** 12-103 kPa (1.7-14.9 psi)			
5 V Reference	0 kPa (0 psi)	0 kPa (0 psi)	104 kPa (15.1 psi)
Signal	0 kPa (0 psi)	0 kPa (0 psi)	104 kPa (15.1 psi)*
Low Reference	-	80-103 kPa (11.6-14.9 psi)	-
*Internal ECM or sensor damage may occur if the circuit is shorted to B+.			

MAP Sensor, when equipped with Turbocharger

Circuit	Short to Ground	Open	Short to Voltage
Operating Conditions: Engine running at various operating conditions **Parameter Normal Range:** 12-225 kPa (1.7-32.6 psi)			
5 V Reference	0 kPa (0 psi)	0 kPa (0 psi)	255 kPa (36.9 psi)

Signal	0 kPa (0 psi)	0 kPa (0 psi)	255 kPa (36.9 psi)*
Low Reference	-	255 kPa (36.9 psi)	-
*Internal ECM or sensor damage may occur if the circuit is shorted to B+.			

Circuit Description

The manifold absolute pressure (MAP) sensor measures the pressure inside the intake manifold. Pressure in the intake manifold is affected by engine speed, throttle opening, air temperature, barometric pressure (BARO); and where equipped turbocharger output. A diaphragm within the MAP sensor is displaced by the pressure changes that occur from the varying load and operating conditions of the engine. The sensor translates this action into electrical resistance.

The MAP sensor wiring includes 3 circuits. The engine control module (ECM) supplies a regulated 5 volts to the sensor on a 5 V reference circuit. The ECM supplies a ground on a low reference circuit. The MAP sensor provides a signal voltage to the ECM, relative to the pressure changes, on the MAP sensor signal circuit. The ECM converts the signal voltage input to a pressure value.

Under normal operation the greatest pressure that can exist in the intake manifold is at ignition ON, engine OFF, which is equal to the BARO. Where equipped, a turbocharger can increase the pressure above BARO, when the vehicle is operated at wide-open throttle (WOT). The lowest manifold pressure occurs when the vehicle is idling or decelerating. The ECM monitors the MAP sensor signal for pressure outside of the normal range.

Conditions for Running the DTC

- DTCs P0107, P0108, P0111, P0112, P0113, P0114, P0116, P0117, P0118, P0119, P0128, P0335, P0336 are not set.
- The engine speed is between 400-6 500 RPM.
- The engine coolant temperature (ECT) sensor is between -7 to +125°C (19.4-257°F).
- The intake air temperature (IAT) sensor is between -20 to +125°C (-4 to +257°F).
- This DTC runs continuously when the above conditions are met.

Conditions for Setting the DTC

The ECM detects that the MAP sensor pressure is not within range of the calculated pressure that is derived from the system of models for more than 0.5 s.

Action Taken When the DTC Sets

DTC P0106 is a Type B DTC.

Conditions for Clearing the DTC

DTC P0106 is a Type B DTC.

Reference Information

Schematic Reference

Engine Controls Schematics

Connector End View Reference

COMPONENT CONNECTOR END VIEWS - INDEX

Description and Operation

Turbocharger System Description

Electrical Information Reference

- **Circuit Testing**
- **Connector Repairs**
- **Testing for Intermittent Conditions and Poor Connections**
- **Wiring Repairs**

DTC Type Reference

Powertrain Diagnostic Trouble Code (DTC) Type Definitions

Scan Tool Reference

Control Module References for scan tool information

Special Tools

EN-23738-A Vacuum Pump

For equivalent regional tools, refer to **Special Tools** .

Circuit/System Verification

1. Ignition ON.
2. Verify that DTC P0641, P0651, P0697, or P06A3 is not set.
    - **If any of the DTCs are set**

      Refer to **DTC P0641, P0651, P0697, or P06A3 (ECM)** for further diagnosis.

    - **If none of the DTC are set**
3. If you were sent here from DTC P0068, P0101, P0121, P0236, or P1101; refer to Circuit/System Testing below.
4. Ignition ON.

5. Verify the scan tool Throttle Body Idle Airflow Compensation parameter is less than 90 %.
   - **If 90% or greater**

     Refer to **Throttle Body Inspection and Cleaning** .

   - **If less than 90%**
6. Verify the scan tool Throttle Position Sensors 1 and 2 Agree/Disagree parameter displays Agree while performing the Throttle Sweep Test with a scan tool.
   - **If Disagree**

     Refer to **DTC P0121-P0123, P0222, P0223, or P2135 (LUV)** for further diagnosis.

   - **If Agree**
7. Determine the current vehicle testing altitude.
8. Verify the scan tool MAP Sensor pressure parameter is within the range specified in the **Altitude Versus Barometric Pressure** table.
   - **If the MAP Sensor parameter is not in range**

     Refer to Circuit/System Testing below.

   - **If the MAP Sensor parameter is in range**
9. Verify the engine is equipped with a turbocharger.
   - **If not equipped with a turbocharger**

     Refer to Step 12.

   - **If equipped with a turbocharger**
10. Verify the scan tool Boost Pressure Sensor parameter is within the range specified in the **Altitude Versus Barometric Pressure** table.
    - **If the Boost Pressure Sensor parameter is not in range**

      Refer to **DTC P0236** for further diagnosis.

    - **If the Boost Pressure Sensor parameter is in range**
11. Verify the scan tool Boost Pressure Sensor parameter decreases after starting the engine.
    - **If the Boost Pressure Sensor parameter does not decrease**

      Refer to **DTC P0236** for further diagnosis.

    - **If the Boost Pressure Sensor parameter is within range**
12. Engine idling, verify the scan tool MAP Sensor pressure parameter is between 26-52 kPa (3.8-7.5 psi) and changes with accelerator pedal input.
    - **If not between 26-52 kPa (3.8-7.5 psi) or does not change**

Refer to Circuit/System Testing below.

- **If between 26-52 kPa (3.8-7.5 psi) and changes**

13. Verify the scan tool MAF Sensor g/s parameter changes smoothly and gradually as the engine speed is increased and decreased while performing the actions listed below.
    1. Engine idling
    2. Perform the scan tool snapshot function.
    3. Increase the engine speed slowly to 3, 000 RPM and then back to idle.
    4. Exit from the scan tool snapshot and review the data.
    5. Observe the MAF Sensor parameter frame by frame with a scan tool.
    - **If the MAF Sensor parameter does not change smoothly and gradually**

      Refer to **DTC P0101**.

    - **If the MAF Sensor parameter does change smoothly and gradually**
14. Operate the vehicle within the Conditions for Running the DTC. You may also operate the vehicle within the conditions that you observed from the Freeze Frame/Failure Records data.
15. Verify a DTC does not set.
    - **If the DTC sets**

      Refer to Circuit/System Testing below.

    - **If the DTC does not set**
16. All OK.

Circuit/System Testing

1. Check the integrity of the entire air induction system and verify that none of the following conditions exist:
    - Any damaged components
    - Improper operation of turbocharger wastegate actuator or bypass valve, where equipped
    - Loose or improper installation of the turbocharger and the charge air cooler, including the flexible ductwork, where equipped
    - An air flow restriction
    - Any vacuum leak
    - Improperly routed vacuum hoses
    - In cold climates, inspect for any snow or ice buildup at the BARO port on the ECM, where equipped
    - A restriction in the MAP sensor port or the BARO port
    - Proper operation of the Positive Crankcase Ventilation (PCV) system
    - Missing, restricted or leaking exhaust components. Refer to **Symptoms - Engine Exhaust** .
    - Engine mechanical condition; for example: low compression or incorrect timing chain installation.

Refer to **Symptoms - Engine Mechanical** .

- **If a condition is found**

  Repair or replace the component as appropriate.

- **If no condition is found**

2. Ignition OFF and all vehicle systems OFF, disconnect the B74 Manifold Absolute Pressure sensor. It may take up to 2 minutes for all vehicle systems to power down.
3. Test for less than 2 ohms between the low reference circuit terminal 2 and ground.
   - **If 2 ohms or greater**
   1. Ignition OFF, disconnect the K20 Engine Control Module, listed below:
      - X2 harness connector, ECM with 2 face mounted connectors
      - X3 harness connector, ECM with 3 face mounted connectors
   2. Test for less than 2 ohms in the low reference circuit end to end.
      - If 2 ohms or greater, repair the open/high resistance in the circuit.
      - If less than 2 ohms, replace the K20 Engine Control Module.
   - **If less than 2 ohms**
4. Ignition ON.
5. Test for 4.8-5.2 V between the 5 V reference circuit terminal 1 and ground.
   - **If less than 4.8 V**
   1. Ignition OFF, disconnect the K20 Engine Control Module, listed below:
      - X2 harness connector, ECM with 2 face mounted connectors
      - X3 harness connector, ECM with 3 face mounted connectors
   2. Test for infinite resistance between the 5 V reference circuit and ground.
      - If less than infinite resistance, repair the short to ground on the circuit.
      - If infinite resistance
   3. Test for less than 2 ohms in the 5 V reference circuit end to end.
      - If 2 ohms or greater, repair the open/high resistance in the circuit.
      - If less than 2 ohms, replace the K20 Engine Control Module.

NOTE: If the signal circuit is shorted to a voltage the engine control module or the sensor may be damaged.

   -
   - **If greater than 5.2 V**
   1. Ignition OFF, disconnect the K20 Engine Control Module, listed below:
      - X2 harness connector, ECM with 2 face mounted connectors
      - X3 harness connector, ECM with 3 face mounted connectors
   2. Ignition ON, test for less than 1 V between the 5 V reference circuit and ground.
      - If 1 V or greater, repair the short to voltage on the circuit.

- If less than 1 V, replace the K20 Engine Control Module.
- **If between 4.8-5.2 V**

6. Ignition ON, verify the scan tool MAP Sensor parameter is less than 0.5 V.
   - **If 0.5 V or greater**
   1. Ignition OFF, disconnect the K20 Engine Control Module, listed below:
      - X2 harness connector, ECM with 2 face mounted connectors
      - X3 harness connector, ECM with 3 face mounted connectors
   2. Ignition ON, test for less than 1 V between the signal circuit terminal 3 and ground.
      - If 1 V or greater, repair the short to voltage on the circuit.
      - If less than 1 V, replace the K20 Engine Control Module.
   - **If less than 0.5 V**
7. Ignition OFF, install a 3 A fused jumper wire between the signal circuit terminal 3 and the 5 V reference circuit terminal 1.
8. Ignition ON, verify the scan tool MAP voltage parameter is greater than 4.5 V.
   - **If 4.5 V or less**
   1. Ignition OFF, disconnect the K20 Engine Control Module, listed below:
      - X2 harness connector, ECM with 2 face mounted connectors
      - X3 harness connector, ECM with 3 face mounted connectors
   2. Remove the jumper wire, test for infinite resistance between the signal circuit terminal 3 and ground.
      - If less than infinite resistance, repair the short to ground on the circuit.
      - If infinite resistance
   3. Test for less than 2 ohms in the signal circuit end to end.
      - If 2 ohms or greater, repair the open or high resistance in the circuit.
      - If less than 2 ohms, replace the K20 Engine Control Module.
   - **If greater than 4.5 V**
9. Test or replace the B74 Manifold Absolute Pressure sensor.

Component Testing

NOTE: You must perform the Circuit/System Testing in order to Check the integrity of the MAP sensor circuits before proceeding with the Component Testing.

Skewed Sensor Test

1. Ignition OFF, remove the B74 Manifold Absolute Pressure sensor from the engine. Connect the harness to the sensor, if disconnected.
2. Ignition ON, apply -17 kPa (5.0 inHg) of vacuum to the B74 Manifold Absolute Pressure sensor, with the **EN-23738-A** Vacuum Pump. Verify the scan tool MAP pressure parameter decreases between 13-21 kPa (1.8-3.0 psi).

- **If the parameter does not decrease between 13-21 kPa (1.8-3.0 psi).**

  Replace the B74 Manifold Absolute Pressure sensor.

- **If the parameter does decrease between 13-21 kPa (1.8-3.0 psi).**

3. Apply -34 kPa (10.0 inHg) of vacuum to the B74 Manifold Absolute Pressure sensor, with the **EN-23738-A** Vacuum Pump. Verify the scan tool MAP pressure parameter decreases between 30-38 kPa (4.4-5.5 psi).
   - **If the parameter does not decrease between 30-38 kPa (4.4-5.5 psi).**

     Replace the B74 Manifold Absolute Pressure sensor.

   - **If the parameter does decrease between 30-38 kPa (4.4-5.5 psi).**
4. All OK.

Erratic Signal Test

1. Ignition OFF, remove the B74 Manifold Absolute Pressure sensor and disconnect the harness.
2. Install a 3 A fused jumper wire between the 5 V reference circuit terminal 1 of the sensor and the sensor harness.
3. Install a jumper wire between the low reference circuit terminal 2 of the sensor and ground.
4. Install a jumper wire to the signal circuit terminal 3 of the sensor.
5. Connect a DMM between the jumper wire and ground.
6. Ignition ON, observe the DC voltage on the DMM. Slowly apply between 0-15kPa of vacuum to the sensor with the **EN-23738-A** Vacuum Pump. Verify the voltage changes, without any spikes or dropouts, between 4.9-0.2 V.
   - **If not between 4.9-0.2 V or has spikes or dropouts**

     Replace the B74 Manifold Absolute Pressure sensor.

   - **If between 4.9-0.2 V and there are no spikes or dropouts**
7. All OK.

Repair Instructions

Perform the **Diagnostic Repair Verification** after completing the diagnostic procedure.

- **Manifold Absolute Pressure Sensor Replacement**
- **Control Module References** for Engine Control Module replacement, programming and setup

DTC P0107 OR P0108

Diagnostic Instructions

- Perform the **Diagnostic System Check - Vehicle** prior to using this diagnostic procedure.
- Review **Strategy Based Diagnosis** for an overview of the diagnostic approach.
- **Diagnostic Procedure Instructions** provides an overview of each diagnostic category.

DTC Descriptors

DTC P0107

Manifold Absolute Pressure (MAP) Sensor Circuit Low Voltage

DTC P0108

Manifold Absolute Pressure (MAP) Sensor Circuit High Voltage

Diagnostic Fault Information

Circuit	Short to Ground	Open/High Resistance	Short to Voltage	Signal Performance
5 V Reference	P0107, P0697	P0106, P0107	P0108, P0697	P0106
Signal	P0107	P0106, P0107	P0108	P0106
Low Reference	-	P0106, P0108	-	P0106

Typical Scan Tool Data

MAP Sensor

Circuit	Short to Ground	Open	Short to Voltage
Operating Conditions: Engine running at various operating conditions **Parameter Normal Range:** 12-103 kPa (1.7-14.9 psi)			
5 V Reference	0 kPa (0 psi)	0 kPa (0 psi)	104 kPa (15.1 psi)
Signal	0 kPa (0 psi)	0 kPa (0 psi)	104 kPa (15.1 psi)*
Low Reference	-	80-103 kPa (11.6-14.9 psi)	-
*Internal ECM or sensor damage may occur if the circuit is shorted to B+.			

MAP Sensor, when equipped with Turbocharger

Circuit	Short to Ground	Open	Short to Voltage
Operating Conditions: Engine running at various operating conditions **Parameter Normal Range:** 12-225 kPa (1.7-32.6 psi)			
5 V Reference	0 kPa (0 psi)	0 kPa (0 psi)	255 kPa (36.9 psi)
Signal	0 kPa (0 psi)	0 kPa (0 psi)	255 kPa (36.9 psi)*
Low Reference	-	255 kPa (36.9 psi)	-
*Internal ECM or sensor damage may occur if the circuit is shorted to B+.			

Circuit Description

The manifold absolute pressure (MAP) sensor measures the pressure inside the intake manifold. Pressure in the intake manifold is affected by engine speed, throttle opening, air temperature, barometric pressure (BARO); and where equipped turbocharger output. A diaphragm within the MAP sensor is displaced by the pressure changes that occur from the varying load and operating conditions of the engine. The sensor translates this action into electrical resistance.

The MAP sensor wiring includes 3 circuits. The engine control module (ECM) supplies a regulated 5 volts to the sensor on a 5 V reference circuit. The ECM supplies a ground on a low reference circuit. The MAP sensor provides a signal voltage to the ECM, relative to the pressure changes, on the MAP sensor signal circuit. The ECM converts the signal voltage input to a pressure value.

Under normal operation the greatest pressure that can exist in the intake manifold is at ignition ON, engine OFF, which is equal to the BARO. Where equipped, a turbocharger can increase the pressure above BARO, when the vehicle is operated at wide-open throttle (WOT). The lowest manifold pressure occurs when the vehicle is idling or decelerating. The ECM monitors the MAP sensor signal for pressure outside of the normal range.

Conditions for Running the DTC

P0107

- DTCs P0120, P0121, P0122, P0123, P0220, P0221, P0222, P0223 or P0641 are not set
- The engine speed is between 400-6 500 RPM.
- The throttle position is greater than or equal to 0% when the engine speed is less than or equal to 1 000 RPM

  or

- The throttle position is greater than or equal to 12.5% when the engine speed is greater than 1 000 RPM.
- This DTC runs continuously when the above conditions are met.

P0108

- The engine has been running for a length of time that is determined by the start up coolant temperature. The length of time ranges from 5.5 minutes at colder than -30°C (-22°F) to 10 s at greater than 30°C (+86°F).
- DTCs P0120, P0121, P0122, P0123, P0220, P0221, P0222, P0223 or P0641 are not set
- The throttle position is less than or equal to 1% when the engine speed is less than or equal to 1 200 RPM.

  or

- The throttle position is less than or equal to 20% when the engine speed is greater than 1 200 RPM.
- This DTC runs continuously when the above conditions are met.

Conditions for Setting the DTC

P0107

The ECM detects that the MAP sensor voltage is less than 0.05 V for greater than 5 s.

P0108

The ECM detects that the MAP sensor voltage is more than 4.9 V for greater than 5 s.

Action Taken When the DTC Sets

DTCs P0107 and P0108 are Type B DTCs.

Conditions for Clearing the DTC

DTCs P0107 and P0108 are Type B DTCs.

Reference Information

Schematic Reference

Engine Controls Schematics

Connector End View Reference

COMPONENT CONNECTOR END VIEWS - INDEX

Electrical Information Reference

- **Circuit Testing**
- **Connector Repairs**
- **Testing for Intermittent Conditions and Poor Connections**
- **Wiring Repairs**

DTC Type Reference

Powertrain Diagnostic Trouble Code (DTC) Type Definitions

Scan Tool Reference

Control Module References for scan tool information

Special Tools

EN-23738-A Vacuum Pump

For equivalent regional tools, refer to **Special Tools** .

Circuit/System Verification

1. Ignition ON.
2. Verify that DTC P0641, P0651, P0697, or P06A3 is not set.
   - **If any of the DTCs are set**

     Refer to **DTC P0641, P0651, P0697, or P06A3 (ECM)** for further diagnosis.

   - **If none of the DTCs are set**
3. Engine idling, verify the scan tool MAP voltage parameter is between 0.3-4.8 V and changes with accelerator pedal input.
   - **If not between 0.3-4.8 V or does not change**

     Refer to Circuit/System Testing below.

   - **If between 0.3-4.8 V and changes**
4. Operate the vehicle within the Conditions for Running the DTC. You may also operate the vehicle within the conditions that you observed in the Freeze Frame/Failure Records data.
5. Verify the DTC does not set.
   - **If the DTC sets**

     Refer to Circuit/System Testing below.

   - **If the DTC does not set**
6. All OK.

Circuit/System Testing

1. Ignition OFF and all vehicle systems OFF, disconnect the B74 Manifold Absolute Pressure sensor. It may take up to 2 minutes for all vehicle systems to power down.
2. Test for less than 2 ohms between the low reference circuit terminal 2 and ground.
   - **If 2 ohms or greater**
     1. Ignition OFF, disconnect the K20 Engine Control Module, listed below:
        - X2 harness connector, ECM with 2 face mounted connectors
        - X3 harness connector, ECM with 3 face mounted connectors
     2. Test for less than 2 ohms in the low reference circuit end to end.
        - If 2 ohms or greater, repair the open/high resistance in the circuit.
        - If less than 2 ohms, replace the K20 Engine Control Module.
   - **If less than 2 ohms**
3. Ignition ON.
4. Test for 4.8-5.2 V between the 5 V reference circuit terminal 1 and ground.

- **If less than 4.8 V**

1. Ignition OFF, disconnect the K20 Engine Control Module, listed below:
   - X2 harness connector, ECM with 2 face mounted connectors
   - X3 harness connector, ECM with 3 face mounted connectors
2. Test for infinite resistance between the 5 V reference circuit and ground.
   - If less than infinite resistance, repair the short to ground on the circuit.
   - If infinite resistance
3. Test for less than 2 ohms in the 5 V reference circuit end to end.
   - If 2 ohms or greater, repair the open/high resistance in the circuit.
   - If less than 2 ohms, replace the K20 Engine Control Module.

NOTE: If the signal circuit is shorted to a voltage the engine control module or the sensor may be damaged.

-
- **If greater than 5.2 V**

1. Ignition OFF, disconnect the K20 Engine Control Module, listed below:
   - X2 harness connector, ECM with 2 face mounted connectors
   - X3 harness connector, ECM with 3 face mounted connectors
2. Ignition ON, test for less than 1 V between the 5 V reference circuit and ground.
   - If 1 V or greater, repair the short to voltage on the circuit.
   - If less than 1 V, replace the K20 Engine Control Module.

- **If between 4.8-5.2 V**

5. Ignition ON, verify the scan tool MAP Sensor parameter is less than 0.5 V.
   - **If 0.5 V or greater**

   1. Ignition OFF, disconnect the K20 Engine Control Module, listed below:
      - X2 harness connector, ECM with 2 face mounted connectors
      - X3 harness connector, ECM with 3 face mounted connectors
      - If 1 V or greater, repair the short to voltage on the circuit.
      - If less than 1 V, replace the K20 Engine Control Module.

   - **If less than 0.5 V**

6. Ignition OFF, install a 3 A fused jumper wire between the signal circuit terminal 3 and the 5 V reference circuit terminal 1.
7. Ignition ON, verify the scan tool MAP voltage parameter is greater than 4.5 V.
   - **If 4.5 V or less**

   1. Ignition OFF, disconnect the K20 Engine Control Module, listed below:
      - X2 harness connector, ECM with 2 face mounted connectors
      - X3 harness connector, ECM with 3 face mounted connectors

2. Remove the jumper wire, test for infinite resistance between the signal circuit terminal 3 and ground.
    - If less than infinite resistance, repair the short to ground on the circuit.
    - If infinite resistance
3. Test for less than 2 ohms in the signal circuit end to end.
    - If 2 ohms or greater, repair the open or high resistance in the circuit.
    - If less than 2 ohms, replace the K20 Engine Control Module.

- **If greater than 4.5 V**

8. Test or replace the B74 Manifold Absolute Pressure sensor.

Component Testing

NOTE: You must perform the Circuit/System Testing in order to Check the integrity of the MAP sensor circuits before proceeding with the Component Testing.

Skewed Sensor Test

1. Ignition OFF, remove the B74 Manifold Absolute Pressure sensor from the engine. Connect the harness to the sensor, if disconnected.
2. Ignition ON, apply -17 kPa (5.0 inHg) of vacuum to the B74 Manifold Absolute Pressure sensor, with the **EN-23738-A** Vacuum Pump. Verify the scan tool MAP pressure parameter decreases between 13-21 kPa (1.8-3.0 psi).
    - **If the parameter does not decrease between 13-21 kPa (1.8-3.0 psi).**

      Replace the B74 Manifold Absolute Pressure sensor.

    - **If the parameter does decrease between 13-21 kPa (1.8-3.0 psi).**
3. Apply -34 kPa (10.0 inHg) of vacuum to the B74 Manifold Absolute Pressure sensor, with the **EN-23738-A** Vacuum Pump. Verify the scan tool MAP pressure parameter decreases between 30-38 kPa (4.4-5.5 psi).
    - **If the parameter does not decrease between 30-38 kPa (4.4-5.5 psi).**

      Replace the B74 Manifold Absolute Pressure sensor.

    - **If the parameter does decrease between 30-38 kPa (4.4-5.5 psi).**
4. All OK.

Erratic Signal Test

1. Ignition OFF, remove the B74 Manifold Absolute Pressure sensor and disconnect the harness.
2. Install a 3 A fused jumper wire between the 5 V reference circuit terminal 1 of the sensor and the sensor harness.
3. Install a jumper wire between the low reference circuit terminal 2 of the sensor and ground.

4. Install a jumper wire to the signal circuit terminal 3 of the sensor.
5. Connect a DMM between the jumper wire and ground.
6. Ignition ON, observe the DC voltage on the DMM. Slowly apply between 0-15kPa of vacuum to the sensor with the **EN-23738-A** Vacuum Pump. Verify the voltage changes, without any spikes or dropouts, between 4.9-0.2 V.
    - **If not between 4.9-0.2 V or has spikes or dropouts**

      Replace the B74 Manifold Absolute Pressure sensor.

    - **If between 4.9-0.2 V and there are no spikes or dropouts**
7. All OK.

Repair Instructions

Perform the **Diagnostic Repair Verification** after completing the diagnostic procedure.

- **Manifold Absolute Pressure Sensor Replacement**
- **Control Module References** for Engine Control Module replacement, programming and setup

DTC P0112, P0113, OR P0114

Diagnostic Instructions

- Perform the **Diagnostic System Check - Vehicle** prior to using this diagnostic procedure.
- Review **Strategy Based Diagnosis** for an overview of the diagnostic approach.
- **Diagnostic Procedure Instructions** provides an overview of each diagnostic category.

DTC Descriptors

DTC P0112

Intake Air Temperature (IAT) Sensor Circuit Low Voltage

DTC P0113

Intake Air Temperature (IAT) Sensor Circuit High Voltage

DTC P0114

Intake Air Temperature (IAT) Sensor Circuit Intermittent

Diagnostic Fault Information

IAT Sensor 1

	Short to	Open/High	Short to	

Circuit	Ground	Resistance	Voltage	Signal Performance
Sensor	P0112, P0114, P2199**	P0113, P0114, P2199**	P0113*, P0114, P2199**	P0111**, P0114
Low Reference	-	P0097, P0113, P11C2**, P2227, P2229	*	-
*Internal ECM or sensor damage may occur if the circuit is shorted to B+. **Where used.				

Typical Scan Tool Data

IAT Sensor 1

Circuit	Short to Ground	Open or High Resistance	Short to Voltage
Operating Conditions: Engine Running **Parameter Normal Range:** Varies with ambient temperature			
Sensor	150°C (302°F)	-40°C (-40°F)	-40°C (-40°F)*
Low Reference	-	-40°C (-40°F)	-40°C (-40°F)*
*Internal ECM or sensor damage may occur if the circuit is shorted to B+			

Circuit/System Description

The sensors listed below are integrated within the multifunction intake air sensor:

- IAT sensor 1
- IAT sensor 2
- Humidity sensor
- MAF sensor
- BARO pressure sensor

The intake air temperature (IAT) sensor 1 is a variable resistor that changes the voltage on the engine control module (ECM) supplied 5 V signal circuit. The signal varies with inlet air temperature in the sensor bore and is displayed by the scan tool as °C (°F).

The IAT sensor 1 produces an analog signal on pin-8 of the sensor. The IAT sensor 2 produces a frequency modulated signal on pin-1 of the sensor.

The sensors listed below share an ECM supplied 5 V reference circuit:

- IAT sensor 2
- Humidity sensor
- BARO pressure sensor

The sensors listed below share an ECM supplied low reference circuit:

- IAT sensor 1
- IAT sensor 2
- Humidity sensor
- Barometric pressure (BARO) sensor

IAT Sensor 1 - Temperature, Resistance, Voltage Table

IAT Sensor 1	IAT Sensor 1 Resistance	IAT Sensor 1 Signal Voltage
Cold	High	High
Warm	Low	Low

Conditions for Running the DTCs

P0112, P0113, and P0114

- The ignition is ON, or the engine is running.
- The DTCs run continuously when the above conditions are met.

Conditions for Setting the DTCs

P0112

The ECM detects that the IAT sensor signal is warmer than 149°C (300°F) for at least 5 s.

P0113

NOTE: The scan tool display range is between -40 and +150°C (-40 and +302°F).

The ECM detects that the IAT sensor signal is colder than -60°C (-76°F) for at least 5 s.

P0114

The ECM detects that the IAT sensor signal is intermittent or has abruptly changed for at least 5 s.

Action Taken When the DTCs Set

- DTCs P0112, P0113, and P0114 are Type B DTCs.
- The ECM commands the cooling fans ON.

Conditions for Clearing the DTCs

DTCs P0112, P0113, and P0114 are Type B DTCs.

Diagnostic Aids

With the ignition ON, when the engine is cold and not running, a properly functioning IAT sensor 1 will

gradually increase the scan tool IAT Sensor 1 parameter. This is due to the heat that is generated by the multifunction intake air sensor internal heating elements.

Reference Information

Schematic Reference

Engine Controls Schematics

Connector End View Reference

COMPONENT CONNECTOR END VIEWS - INDEX

Electrical Information Reference

- **Circuit Testing**
- **Connector Repairs**
- **Testing for Intermittent Conditions and Poor Connections**
- **Wiring Repairs**

DTC Type Reference

Powertrain Diagnostic Trouble Code (DTC) Type Definitions

Scan Tool Reference

Control Module References for scan tool information

Circuit/System Verification

1. Ignition ON.
2. Verify that DTC DTC P0641, P0651, P0697, or P06A3 is not set.
   - **If any of the DTCs are set**

     Refer to **DTC P0641, P0651, P0697, or P06A3 (ECM)** for further diagnosis.

   - **If none of the DTCs are set**

NOTE: To minimize the effects of residual engine heat and sensor internal heating elements, perform Steps 3 and 4 of this verification procedure only if the ignition has been OFF for 8 hours or more.

3. Ignition ON.
4. Verify the following scan tool parameters are within 25°C (45°F) of each other.
   - Start-Up IAT Sensor 1

- IAT Sensor 2
- IAT Sensor 3; where equipped
- **If not within 25°C (45°F)**

  Refer to Circuit/System Testing below.

- **If within 25°C (45°F)**

5. Engine idling, verify the following scan tool parameters are between: -38 and +149°C (-36 and +300°F).
   - IAT Sensor 1
   - IAT Sensor 2
   - IAT Sensor 3; where equipped
   - **If not between: -38 and +149°C (-36 and +300°F)**

     Refer to Circuit System Testing below.

   - **If between: -38 and +149°C (-36 and +300°F)**
6. Operate the vehicle within the conditions for running the DTC. You may also operate the vehicle within the conditions that you observed from the freeze frame/failure records data.
7. Verify the DTC does not set.
   - **If the DTC does set**

     Refer to Circuit/System Testing below.

   - **If the DTC does not set**
8. All OK

Circuit/System Testing

NOTE: You must perform the Circuit/System Verification before proceeding with Circuit/System Testing.

1. Ignition OFF, and all vehicle systems OFF, it may take up to 2 min. for all vehicle systems to power down. Disconnect the harness connector at the B75C Multifunction Intake Air sensor.
2. Test for less than 2 ohms between the low reference circuit terminal 7 and ground.
   - **If 2 ohms or greater**
     1. Ignition OFF, disconnect the harness connector at the K20 Engine Control Module.
     2. Test for less than 2 ohms in the low reference circuit end to end.
        - If 2 ohms or greater, repair the open or high resistance in the circuit.
        - If less than 2 ohms replace the K20 Engine Control Module.
   - **If less than 2 ohms**
3. Ignition ON, test for 4.8-5.2 V between signal circuit terminal 8 and ground.
   - **If less than 4.8 V**

1. Ignition OFF, disconnect the harness connector at the K20 Engine Control Module.
2. Test for infinite resistance between the signal circuit and ground.
    - If less than infinite resistance, repair the short to ground on the circuit.
    - If infinite resistance
3. Test for less than 2 ohms in the signal circuit end to end.
    - If 2 ohms or greater, repair the open/high resistance in the circuit.
    - If less than 2 ohms, replace the K20 Engine Control Module.

- **If greater than 5.2 V**

NOTE: If the signal circuit is shorted to a voltage the engine control module or the sensor may be damaged.

1. Ignition OFF, disconnect the harness connector at the K20 Engine Control Module.
2. Ignition ON, test for less than 1 V between the signal circuit and ground.
    - If 1 V or greater, repair the short to voltage on the circuit.
    - If less than 1 V, replace the K20 Engine Control Module.

- **If between 4.8-5.2 V**

4. Ignition ON, verify the scan tool IAT Sensor 1 parameter is colder than -39°C (-38°F).
    - **If warmer than -39°C (-38°F).**
    1. Ignition OFF, disconnect the harness connector at the K20 Engine Control Module.
    2. Test for infinite resistance between the signal circuit terminal 8 and ground.
        - If less than infinite resistance, repair the short to ground on the circuit.
        - If infinite resistance
    3. Test for less than 2 ohms in the signal circuit end to end.
        - If 2 ohms or greater, repair the open/high resistance in the circuit.
        - If less than 2 ohms, replace the K20 Engine Control Module.
    - **If colder than -39°C (-38°F).**
5. Ignition OFF, install a 3 A fused jumper wire between the signal circuit terminal 8 and the low reference circuit terminal 7.
6. Verify the scan tool IAT Sensor 1 parameter is warmer than 148°C (298°F).
    - **If colder than 148°C (298°F).**
    1. Ignition OFF, remove the jumper wire, disconnect the harness connector at the K20 Engine Control Module, ignition ON.
    2. Test for less than 1 V between the signal circuit and ground.
        - If 1 V or greater, repair the short to voltage on the circuit.
        - If less than 1 V
    3. Ignition OFF.
    4. Test for less than 2 ohms in the signal circuit end to end.
        - If 2 ohms or greater, repair the open/high resistance in the circuit.

- If less than 2 ohms, replace the K20 Engine Control Module.
- **If warmer than 148°C (298°F).**

7. Test or replace the B75C Multifunction Intake Air sensor.

Component Testing

Multifunction Intake Air Sensor

1. Ignition OFF, disconnect the harness connector at the B75C Multifunction Intake Air sensor.

NOTE: A thermometer can be used to test the sensor off the vehicle.

2. Test the IAT sensor 1 by varying the sensor temperature while monitoring the sensor resistance. Compare the readings with the **Temperature Versus Resistance - Intake Air Temperature Sensor (Bosch Sensor)** , **Temperature Versus Resistance - Intake Air Temperature Sensor (Delco Sensor)** table for Bosch Sensors. The resistance values should be in range of the table values.
   - **If not within the specified range.**

     Replace the B75C Multifunction Intake Air sensor.

   - **If within the specified range.**
3. All OK

Repair Instructions

Perform the **Diagnostic Repair Verification** after completing the repair.

- **Mass Airflow Sensor Replacement** for multifunction intake air sensor replacement
- **Control Module References** for Engine Control Module replacement, programming, and setup.

DTC P0116

Diagnostic Instructions

- Perform the **Diagnostic System Check - Vehicle** prior to using this diagnostic procedure.
- Review **Strategy Based Diagnosis** for an overview of the diagnostic approach.
- **Diagnostic Procedure Instructions** provides an overview of each diagnostic category.

DTC Descriptor

DTC P0116

Engine Coolant Temperature (ECT) Sensor Performance

Diagnostic Fault Information

Circuit	Short to Ground	Open/High Resistance	Short to Voltage	Signal Performance
Signal Circuit	P0117	P0118	P0118*	P0116, P0119, P0128
Low Reference	-	P0118	P0118*	P0116, P0128
*ECM or sensor damage may occur if the circuit is shorted to B+				

Typical Scan Tool Data

ECT Sensor

Circuit	Short to Ground	Open	Short to Voltage
Operating Conditions: Engine operating in closed loop **Parameter Normal Range:** Varies with coolant temperature			
Signal	140°C (284°F)	-40°C (-40°F)	-40°C (-40°F)
Low Reference	-	-40°C (-40°F)	-40°C (-40°F)

Circuit/System Description

The engine coolant temperature (ECT) sensor is a variable resistor that measures the temperature of the engine coolant. The engine control module (ECM) supplies 5 V to the ECT sensor signal circuit and a ground for the low reference circuit.

The purpose of this diagnostic is to determine if the input from the ECT sensor is skewed warmer than normal. The internal clock of the ECM will record the amount of time the engine is OFF. If the required engine OFF time is met at start-up, the ECM will compare the temperature difference between the actual measured ECT and a calibrated ECT model. The information for this model is derived from the previous drive cycle and includes the accumulated mass air flow (MAF), the engine run time, the ambient air temperature and the ECT at the end of the drive cycle.

If the ECM detects that the temperature difference between the measured and modeled ECT is not within an acceptable operating range of each other, then the ECM will continue to run this diagnostic to determine if a block heater was active during the engine OFF time.

Conditions for Running the DTC

- The ignition is ON, or the engine is running.
- DTCs P0111, P0112, P0113, P0117, P0118, P0722, P0723 or P2610 are not set.
- The ignition has been off for greater than 8 h before the engine is started.
- This DTC runs continuously within the enabling conditions.

Conditions for Setting the DTC

P0116 Engine Running, Sensor Signal Stuck Test

- The ECM detects that the ECT sensor signal has abruptly changed a minimum of 20°C (68°F) warmer than intake air temperature (IAT) at engine start.

- The measured ECT is greater than measured IAT at engine start, is not within range of the calibrated model.

P0116 Engine Running, Sensor Within Range Test

- The ECT at engine start is not within range of the calibrated model.
- The ECT is greater than measured IAT at engine start, is not within range of the calibrated model.

Action Taken When the DTC Sets

- DTC P0116 is a Type B DTC.
- The cooling fans will be commanded ON.
- The A/C compressor will be commanded OFF.

Conditions for Clearing the DTC

DTC P0116 is a Type B DTC.

Diagnostic Aids

- Inspect the ECT sensor terminals for corrosion and for engine coolant leaking through the sensor. Engine coolant that is leaking through the sensor will create a high resistance short to ground. This condition results in less voltage on the ECT sensor signal circuit, which is interpreted by the ECM as a warmer ECT.
- An intake air temperature (IAT) sensor that is biased colder at various ambient temperatures due to greater resistance than is normal will increase the range between these 2 sensors. Measure and record the resistance of the IAT sensor at various ambient temperatures, then compare those measurements to the Temperature vs. Resistance table. Refer to **Temperature Versus Resistance (ECT)** .
- Test the ECT sensor at various temperature levels in order to evaluate the possibility of a biased sensor. A sensor that is biased warmer can result in a driveability condition. Refer to **Temperature Versus Resistance (ECT)** .
- A slight to moderate resistance in the IAT sensor signal circuit or low reference circuit will increase the range between these two sensors. This condition results in a greater voltage on the IAT sensor signal circuit, which is interpreted by the ECM as a colder IAT.
- If the condition is intermittent, allow the vehicle to sit for greater than 8 h with the ignition OFF, may help isolate the condition. Compare the scan tool and ECT Sensor temperature sensor values at ignition on. The Radiator Coolant Temperature Sensor and the ECT Sensor values should display within 3°C (5° F).

Reference Information

Schematic Reference

Engine Controls Schematics

Connector End View Reference

COMPONENT CONNECTOR END VIEWS - INDEX

Electrical Information Reference

- **Circuit Testing**
- **Connector Repairs**
- **Testing for Intermittent Conditions and Poor Connections**
- **Wiring Repairs**

DTC Type Reference

Powertrain Diagnostic Trouble Code (DTC) Type Definitions

Scan Tool Reference

Control Module References for scan tool information

Circuit/System Verification

1. Ignition ON, observe the DTC information with a scan tool. Verify that DTC P0112, P0113, P0117, or P0118 are not set.
    - If any of the DTCs are set, refer to **Diagnostic Trouble Code (DTC) List - Vehicle** .
2. Ignition off, inspect the cooling system surge tank for the proper coolant level. Refer to **Loss of Coolant** , and **Cooling System Draining and Filling (Static Fill)** , **Cooling System Draining and Filling (GE-47716 Fill)** .
3. If the ignition has been OFF for 8 h or greater, observe the scan tool parameters list below. The temperatures should be within 20°C (68°F).
    - ECT Sensor
    - IAT Sensor
4. Engine running, observe the ECT Sensor parameter. The reading should be between -39 to +120°C (-38 to +148°F) depending on the current ambient temperature and the vehicle operating conditions.
5. Operate the vehicle within the conditions for running the DTC to verify the DTC does not reset. You may also operate the vehicle within the conditions that you observed from the freeze frame/failure records data.

Circuit/System Testing

1. Ignition OFF, disconnect the harness connector at the B34 Engine Coolant Temperature Sensor.
2. Inspect the B34 Engine Coolant Temperature Sensor terminals for corrosion and for engine coolant leaking through the sensor.
3. Ignition OFF for 1 min, test for less than 5 ohms between the low reference circuit terminal 2 and ground.
    - If greater than the specified range, test the low reference circuit for an open/high resistance. If the circuit tests normal, replace the K20 Engine Control Module.
4. Ignition ON, verify the scan tool ECT Sensor parameter is colder than -39°C (-38°F).

- If greater than the specified range, test the signal circuit terminal 1 for a short to ground. If the circuit tests normal, replace the K20 Engine Control Module.

5. Install a 3 A fused jumper wire between the signal circuit terminal 1 and the low reference circuit terminal 2. Verify the scan tool ECT Sensor parameter is greater than 130°C (266°F).
   - If less than the specified range, test the signal circuit for a short to voltage or an open/high resistance. If the circuit tests normal, replace the K20 Engine Control Module.
6. If all circuits test normal, test or replace the B34 Engine Coolant Temperature Sensor.

Component Testing

Static Test

1. Ignition off, disconnect the harness connector at the B34 Engine Coolant Temperature Sensor.

   NOTE: A thermometer can be used to test the sensor off vehicle.

2. Test the B34 Engine Coolant Temperature Sensor by varying the sensor temperature while monitoring the sensor resistance. Compare the readings with the **Temperature Versus Resistance (ECT)** table and verify that the resistance is within 5% of the specification.
   - If not within the specified range, replace the B34 Engine Coolant Temperature Sensor.

Repair Instructions

Perform the **Diagnostic Repair Verification** after completing the diagnostic procedure.

- **Engine Coolant Temperature Sensor Replacement (Radiator)** , **Engine Coolant Temperature Sensor Replacement (Water Outlet)**
- **Control Module References** for ECM replacement, programming and setup

DTC P0117, P0118, OR P0119

Diagnostic Instructions

- Perform the **Diagnostic System Check - Vehicle** prior to using this diagnostic procedure.
- Review **Strategy Based Diagnosis** for an overview of the diagnostic approach.
- **Diagnostic Procedure Instructions** provides an overview of each diagnostic category.

DTC Descriptors

DTC P0117

Engine Coolant Temperature (ECT) Sensor Circuit Low Voltage

DTC P0118

Engine Coolant Temperature (ECT) Sensor Circuit High Voltage

DTC P0119

Engine Coolant Temperature (ECT) Sensor Circuit Intermittent

Diagnostic Fault Information

Circuit	Short to Ground	Open/High Resistance	Short to Voltage	Signal Performance
Signal	P0117	P0118, P0119	P0118*, P0119	P0116, P0128
Low Reference	-	P0118, P0119	-	P0128
*ECM or sensor damage may occur if the circuit is shorted to B+.				

Typical Scan Tool Data

ECT Sensor

Circuit	Short to Ground	Open	Short to Voltage
Operating Conditions: Engine running at various operating conditions **Parameter Normal Range:** Varies with engine coolant temperature			
Signal	140°C (284°F)	-40°C (-40°F)	-40°C (-40°F)
Low Reference	-	-40°C (-40°F)	-

Circuit/System Description

The engine coolant temperature (ECT) sensor is a variable resistor that measures the temperature of the engine coolant. The engine control module (ECM) supplies 5 V to the ECT sensor signal circuit and a ground for the low reference circuit. This diagnostic checks for an open, short to ground or an intermittent circuit condition between the ECM and ECT sensor.

Conditions for Running the DTC

P0117

- The ignition is ON.

  OR

- The engine is running for greater than 10 s.

  OR

- The engine run time is less than 10 s when the intake air temperature (IAT) is colder than 50°C (122°F).
- This DTC runs continuously within the enabling conditions.

P0118

- The ignition is ON.

  OR

- The engine is running for greater than 10 s.

  OR

- The engine run time is less than 10 s when the IAT is warmer than 0°C (32°F).
- This DTC runs continuously within the enabling conditions.

P0119

- This DTC runs continuously within the enabling conditions.

Conditions for Setting the DTC

P0117

The ECM detects that the ECT is warmer than 149°C (300°F) for greater than 5 s.

P0118

The ECM detects that the ECT is colder than -39°C (-38°F) for greater than 5 s.

P0119

The ECM detects that the ECT is intermittent or has abruptly changed for greater than 4 seconds.

Action Taken When the DTC Sets

- DTC P0117, P0118 or P0119 are a Type B DTC.
- The cooling fans will be commanded ON.
- The Engine Coolant Temperature Gauge is inoperative.
- The AC compressor will be commanded OFF.

Conditions for Clearing the DTC

DTC P0117, P0118 or P0119 are a Type B DTC.

Reference Information

Schematic Reference

Engine Controls Schematics

Connector End View Reference

COMPONENT CONNECTOR END VIEWS - INDEX

Electrical Information Reference

- **Circuit Testing**
- **Connector Repairs**
- **Testing for Intermittent Conditions and Poor Connections**
- **Wiring Repairs**

DTC Type Reference

Powertrain Diagnostic Trouble Code (DTC) Type Definitions

Scan Tool Reference

Control Module References for scan tool information

Circuit/System Verification

1. Ignition ON.
2. Verify the scan tool ECT Sensor parameter is between -39 to + 120°C (-38 to +248°F) and changes with engine run time.
    - **If not between -39 to + 120°C (-38 to +248°F) or does not change**

      Refer to Circuit/System Testing below.

    - **If between -39 to + 120°C (-38 to +248°F) and changes**
3. Operate the vehicle within the Conditions for Running the DTC. You may also operate the vehicle within the conditions that you observed from the Freeze Frame/Failure Records data.
4. Verify the DTC does not set.
    - **If the DTC sets**

      Refer to Circuit/System Testing below.

    - **If the DTC does not set**
5. All OK.

Circuit/System Testing

1. Ignition OFF and all vehicle systems OFF, disconnect the harness connector at the B34 Engine Coolant Temperature Sensor. It may take up to 2 minutes for all vehicle systems to power down.
2. Test for less than 5 ohms between the low reference circuit terminal 2 and ground.
    - **If 5 ohms or greater**

1. Ignition OFF, disconnect the harness connector at the K20 Engine Control Module.
2. Test for less than 2 ohms in the low reference circuit end to end.
    - If 2 ohms or greater, repair the open/high resistance in the circuit.
    - If less than 2 ohms, replace the K20 Engine Control Module.

- **If less than 5 ohms**

3. Ignition ON.
4. Verify the scan tool ECT Sensor parameter is colder than -39°C (-38°F).
    - **If warmer than -39°C (-38°F)**

    1. Ignition OFF, disconnect the harness connector at the K20 Engine Control Module.
    2. Test for infinite resistance between the signal circuit terminal 1 and ground.
        - If less than infinite resistance, repair the short to ground on the circuit.
        - If infinite resistance, replace the K20 Engine Control Module.

    - **If colder than -39°C (-38°F)**

5. Install a 3 A fused jumper wire between the signal circuit terminal 1 and the low reference circuit terminal 2.
6. Verify the scan tool ECT sensor parameter is warmer than 137°C (280°F).
    - **If colder than 137°C (280°F)**

    1. Ignition OFF, remove the jumper wire, disconnect the harness connector at the K20 Engine Control Module, ignition ON.
    2. Test for less than 1 V between the signal circuit and ground.
        - If 1 V or greater, repair the short to voltage on the circuit.
        - If less than 1 V
    3. Ignition OFF.
    4. Test for less than 2 ohms in the signal circuit end to end.
        - If 2 ohms or greater, repair the open/high resistance in the circuit.
        - If less than 2 ohms, replace the K20 Engine Control Module.

    - **If warmer than 137°C (280°F)**

7. Test or replace the B34 Engine Coolant Temperature Sensor.

Component Testing

1. Ignition OFF, disconnect the harness connector at the B34 Engine Coolant Temperature Sensor.
2. Test the ECT sensor by varying the sensor temperature while monitoring the sensor resistance. Compare the readings with the **Temperature Versus Resistance (ECT)** table. The resistance values should be in range of the table values.
    - **If not within the specified range**
    - Replace the B34 Engine Coolant Temperature Sensor.
    - **If within the specified range**
3. Test for infinite resistance between each terminal and the sensor housing.

- **If less than infinite resistance**

  Replace the B34 Engine Coolant Temperature Sensor.

- **If infinite resistance**

4. All OK.

Repair Instructions

Perform the **Diagnostic Repair Verification** after completing the repair.

- **Engine Coolant Temperature Sensor Replacement (Radiator)** , **Engine Coolant Temperature Sensor Replacement (Water Outlet)**
- **Engine Control Module Replacement** engine control module replacement, programming, and setup

DTC P0121-P0123, P0222, P0223, OR P2135 (LUV)

Diagnostic Instructions

- Perform the **Diagnostic System Check - Vehicle** prior to using this diagnostic procedure.
- Review **Strategy Based Diagnosis** for an overview of the diagnostic approach.
- **Diagnostic Procedure Instructions** provides an overview of each diagnostic category.

DTC Descriptors

DTC P0121

Throttle Position Sensor 1 Performance

DTC P0122

Throttle Position Sensor 1 Circuit Low Voltage

DTC P0123

Throttle Position Sensor 1 Circuit High Voltage

DTC P0222

Throttle Position Sensor 2 Circuit Low Voltage

DTC P0223

Throttle Position Sensor 2 Circuit High Voltage

DTC P2135

Throttle Position Sensors 1-2 Not Plausible

Diagnostic Fault Information

Circuit	Short to Ground	High Resistance	Open	Short to Voltage	Signal Performance
5 V Reference	P06A3	P2135	P0122, P0222	P06A3, P2135	P0068, P0121
Throttle Position Sensor 1 Signal	P0122	P2135	P0122	P0123	P0068, P0121
Throttle Position Sensor 2 Signal	P0222	P2135	P0223	P0223	P0068, P0121
Low Reference	-	P2135	P0123, P0223	-	P0068, P0121

Typical Scan Tool Data

Throttle Position Sensor 1

Circuit	Short to Ground	Open	Short to Voltage
Operating Conditions: Engine running at various operating conditions **Normal Range:** 4.75-0.35 V			
5 V Reference	0 V	0 V	5 V
Throttle Position Sensor 1 Signal	0 V	0 V	5 V
Low Reference	-	4-5 V	-

Throttle Position Sensor 2

Circuit	Short to Ground	Open	Short to Voltage
Operating Conditions: Engine running at various operating conditions **Parameter Normal Range:** 0.35-4.65 V			
5 V Reference	0 V	0 V	5 V
Throttle Position Sensor 2 Signal	0 V	5 V	5 V
Low Reference	-	5 V	-

Circuit/System Description

The throttle body assembly contains 2 throttle position sensors. The throttle position sensors are mounted to the throttle body assembly and are not serviceable. The throttle position sensors provide a signal voltage that changes relative to throttle blade angle. The engine control module (ECM) supplies the throttle position sensors with a common 5 V reference circuit, a common low reference circuit, and two independent signal circuits.

The throttle position sensors have opposite functionality. throttle position sensor 1 signal voltage decreases and throttle position sensor 2 signal voltage increases as the accelerator pedal increases to wide open throttle (WOT).

Conditions for Running the DTC

P0122, P0123, P0222, and P0223

- DTC P06A3 is not set.
- The run/crank or powertrain relay voltage is greater than 6 V and reduced power is not active.
- The ignition is ON or the engine is operating.
- DTC P0122, P0123, P0222, P0223 run continuously when the above conditions are met.

P0121

- No Active or Pending DTCs.
- The engine speed is between 400-7, 000 RPM.
- The engine coolant temperature (ECT) is between -7 to +125°C (19-257°F).
- The intake air temperature (IAT) is between -20 to +125°C (-4 to +257°F).
- DTC P0121 runs continuously when the above conditions are met.

P2135

- DTC P0122, P0123, P0222, P0223, or P06A3 is not set.
- The run/crank or powertrain relay voltage is greater than 6 V and reduced power is not active.
- The ignition is ON or the engine is operating.
- DTC P2135 runs continuously when the above conditions are met.

Conditions for Setting the DTC

P0121

The ECM detects the throttle position sensor is stuck within range for greater than 1 s.

P0122

The ECM detects the throttle position sensor 1 voltage is less than 0.325 V for greater than 1 s.

P0123

The ECM detects the throttle position sensor 1 voltage is greater than 4.75 V for greater than 1 s.

P0222

The ECM detects that the throttle position sensor 2 voltage is less than 0.25 V for greater than 1 s.

P0223

The ECM detects the throttle position sensor 2 voltage is greater than 4.59 V for greater than 1 s.

P2135

The ECM detects the difference between the throttle position sensor 1 and throttle position sensor 2 exceeds a predetermined value for greater than 1 s.

Action Taken When the DTC Sets

- DTC P0122, P0123, P0222, P0223, and P2135 are Type A DTCs.
- DTC P0121 is a Type B DTC.
- The ECM commands the TAC system to operate in the Reduced Engine Power mode.
- A message center or an indicator displays Reduced Engine Power.
- Under certain conditions the control module commands the engine OFF.

Conditions for Clearing the MIL/DTC

- DTCs P0122, P0123, P0222, P0223, and P2135 are Type A DTCs.
- DTC P0121 is a Type B DTC.

Diagnostic Aids

- A high resistance condition on the throttle position and throttle actuator control circuits could cause a DTC to set.
- If the accelerator pedal is pressed to the wide open throttle position, the throttle blade angle or Throttle Position angle is limited to less than 40 percent.

Reference Information

Schematic Reference

Engine Controls Schematics

Connector End View Reference

COMPONENT CONNECTOR END VIEWS - INDEX

Description and Operation

Throttle Actuator Control (TAC) System Description

Electrical Information Reference

- **Circuit Testing**
- **Connector Repairs**
- **Testing for Intermittent Conditions and Poor Connections**
- **Wiring Repairs**

DTC Type Reference

Powertrain Diagnostic Trouble Code (DTC) Type Definitions

Scan Tool Reference

Control Module References for scan tool information

Circuit/System Verification

1. Ignition ON.
2. If you were sent here from DTC P0068, P0101, P0106, or P1101 refer to Circuit/System Testing below.
3. Verify that DTC P0641, P0651, P0697, or P06A3 is not set.
   - **If any of the DTCs are set**

     Refer to **DTC P0641, P0651, P0697, or P06A3 (ECM)** for further diagnosis.

   - **If none of the DTCs are set**
4. Verify the scan tool Throttle Body Idle Airflow Compensation parameter is less than 90 %.
   - **90 % or greater**

     Refer to **Throttle Body Inspection and Cleaning** .

   - **If less than 90 %**
5. Verify the scan tool Throttle Position Sensor 1 and Throttle Position Sensor 2 voltage parameters are between 1.0-4.0 V and change with accelerator pedal input.
   - **If not between 1.0-4.0 V or does not change**

     Refer to Circuit/System Testing below

   - **If between 1.0-4.0 V and changes**
6. Verify the scan tool Throttle Position Sensor 1 and 2 Agree/Disagree parameter displays Agree while performing the Throttle Sweep Test with a scan tool.
   - **If Disagree**

     Refer to Circuit/System Testing below

   - **If Agree**
7. Determine the current vehicle testing altitude.
8. Verify the scan tool MAP Sensor pressure parameter is within range specified in the **Altitude Versus Barometric Pressure** table.
   - **The MAP Sensor pressure is not in range**

     Refer to **DTC P0106**.

   - **The MAP Sensor pressure is within range**

9. Engine idling.
10. Verify the scan tool MAP Sensor pressure parameter is between 26-52 kPa (3.8-7.5 psi) and changes with accelerator pedal input.
    - **If not between 26-52 kPa (3.8-7.5 psi) or does not change**

      Refer to **DTC P0106**.

    - **If between 26-52 kPa (3.8-7.5 psi) and changes**
11. Verify the scan tool MAF Sensor g/s parameter changes smoothly and gradually as the engine speed is increased and decreased while performing the actions listed below.
    1. Engine idling
    2. Perform the scan tool snapshot function.
    3. Increase the engine speed slowly to 3, 000 RPM and then back to idle.
    4. Exit from the scan tool snapshot and review the data.
    5. Observe the MAF Sensor parameter frame by frame with a scan tool.
    - **The MAF Sensor parameter does not change smoothly and gradually**

      Refer to **DTC P0101**.

    - **The MAF Sensor parameter changes smoothly and gradually**
12. Verify the scan tool Boost Pressure Sensor pressure and BARO parameters are within 3 kPa (0.4 psi).
    - **The parameters are not within 3 kPa (0.4 psi)**

      Refer to **DTC P0236**.

    - **The parameters are within 3 kPa (0.4 psi)**
13. Verify the scan tool MAP Sensor parameter and the Boost Pressure Sensor parameter are within 20 kPa (2.9 psi) during a WOT acceleration at the time of the 1-2 shift.
    - **The parameters are not within 20 kPa (2.9 psi)**

      Refer to **DTC P0236**.

    - **The parameters are within 20 kPa (2.9 psi)**
14. Operate the vehicle within the Conditions for Running the DTC. You may also operate the vehicle within the conditions that you observed from the Freeze Frame/Failure Records data.
15. Verify the DTC does not set.
    - **If the DTC sets**

      Refer to Circuit/System Testing below

    - **If the DTC does not set**
16. All OK

Circuit/System Testing

NOTE: Disconnecting the throttle body harness connector causes additional DTCs to set.

1. Ignition OFF, and all vehicle systems OFF, disconnect the harness connector at Q38 Throttle Body. It may take up to 2 minutes for all vehicle systems to power down.
2. Test for less than 5 ohms between the low reference circuit terminal C and ground.
   - **If 5 ohms or greater**
   1. Ignition OFF, disconnect the harness connector at the K20 Engine Control Module.
   2. Test for less than 2 ohms in the low reference circuit end to end.
      - If 2 ohms or greater, repair the open/high resistance in the circuit.
      - If less than 2 ohms, replace the K20 Engine Control Module.
   - **If less than 5 ohms**
3. Ignition ON.
4. Test for 4.8-5.2 V between the 5 V reference circuit terminal E and ground.
   - **If less than 4.8 V**
   1. Ignition OFF, disconnect the harness connector at the K20 Engine Control Module.
   2. Test for infinite resistance between the 5 V reference circuit and ground.
      - If less than infinite resistance, repair the short to ground on the circuit.
      - If infinite resistance
   3. Test for less than 2 ohms in the 5 V reference circuit end to end.
      - If 2 ohms or greater, repair the open/high resistance in the circuit.
      - If less than 2 ohms, replace the K20 Engine Control Module.
   - **If greater than 5.2 V**
   1. Ignition OFF, disconnect the harness connector at the K20 Engine Control Module, ignition ON.
   2. Test for less than 1 V between the 5 V reference circuit and ground.
      - If 1 V or greater, repair the short to voltage on the circuit.
      - If less than 1 V, replace the K20 Engine Control Module.
   - **If between 4.8-5.2 V**
5. Ignition ON.
6. Test for less than 1 V between the throttle position sensor 1 signal circuit terminal D and ground.
   - **If 1.0 V or greater**
   1. Ignition OFF, disconnect the harness connector at the K20 Engine Control Module, ignition ON.
   2. Test for less than 1 V between the signal circuit and ground.
      - If 1 V or greater, repair the short to voltage on the circuit.
      - If less than 1 V, replace the K20 Engine Control Module.
   - **If 1.0 V or less**
7. Install a 3 A fused jumper wire between throttle position sensor 1 signal circuit terminal D and the 5 V

reference circuit terminal E.

8. Verify the scan tool throttle position sensor 1 voltage parameter is greater than 4.8 V.
    - **If 4.8 V or less**
    1. Ignition OFF, disconnect the harness connector at the K20 Engine Control Module.
    2. Test for infinite resistance between the signal circuit and ground.
        - If less than infinite resistance, repair the short to ground on the circuit.
        - If infinite resistance
    3. Test for less than 2 ohms in the signal circuit end to end.
        - If 2 ohms or greater, repair the open/high resistance in the circuit.
        - If less than 2 ohms, replace the K20 Engine Control Module.
    - **If 4.8 or greater**
9. Test for 4.8-5.2 V between the throttle position sensor 2 signal circuit terminal F and ground.
    - **If less than 4.8 V**
    1. Ignition OFF, disconnect the harness connector at the K20 Engine Control Module.
    2. Test for infinite resistance between the signal circuit and ground.
        - If less than infinite resistance, repair the short to ground on the circuit.
        - If infinite resistance
    3. Test for less than 2 ohms in the signal circuit end to end.
        - If 2 ohms or greater, repair the open/high resistance in the circuit.
        - If less than 2 ohms, replace the K20 Engine Control Module.
    - **If greater than 5.2 V**
    1. Ignition OFF, disconnect the harness connector at the K20 Engine Control Module, ignition ON.
    2. Test for less than 1 V between the signal circuit and ground.
        - If 1 V or greater, repair the short to voltage on the circuit.
        - If less than 1 V, replace the K20 Engine Control Module.
    - **If between 4.8-5.2 V**
10. Test or replace the Q38 Throttle Body.

Repair Instructions

- **Throttle Body Assembly Replacement**
- **Control Module References** for engine control module replacement, programming, and setup

Repair Verification

1. Install any components that have been removed or replaced during diagnosis.
2. Perform any adjustments, programming or setup procedures that are required when a component is removed or replaced.
3. Clear the DTCs with a scan tool.
4. Ignition OFF and all vehicle systems OFF. It may take up to 2 minutes for all vehicle systems to power

down.

5. Ignition ON.
6. Verify the Throttle Position Sensors 1 and 2 Agree/Disagree parameter displays Agree while performing the Throttle Sweep Test with a scan tool.
   - **If Disagree**

     Test or replace the Q38 Throttle Body assembly.

   - **If Agree**
7. If the repair was related to a DTC, duplicate the Conditions for Running the DTC and use the Freeze Frame/Failure Records, if applicable, in order to verify the DTC does not set.
   - **If DTC sets**

     Refer to **Diagnostic Trouble Code (DTC) List - Vehicle** for further diagnosis.

   - **If DTC does not set**
8. All OK

DTC P0128

Diagnostic Instructions

- Perform the **Diagnostic System Check - Vehicle** prior to using this diagnostic procedure.
- Review **Strategy Based Diagnosis** for an overview of the diagnostic approach.
- **Diagnostic Procedure Instructions** provides an overview of each diagnostic category.

DTC Descriptor

DTC P0128

Engine Coolant Temperature (ECT) Below Thermostat Regulating Temperature

Circuit/System Description

The engine control module (ECM) monitors the temperature of the engine coolant for engine control and enabling criteria for some diagnostics. The amount of air flow into an engine is proportional to the amount of heat an engine generates. The ECM monitors the amount of air flow into the engine to calculate engine coolant temperature (ECT). The ECM uses the calculated temperature to determine if the engine has warmed up to the thermostat regulating temperature. If the ECT does not increase normally or does not reach the thermostat regulating temperature, diagnostics that use the ECT as enabling criteria, may not run when expected. If the ECT fails to reach the thermostat regulating temperature, before a predetermined amount of air flow enters the engine, the DTC sets.

Conditions for Running the DTC

- DTCs P00B3, P00B6, P0101, P0102, P0103, P0111, P0112, P0113, P0116, P0117 or P0118 are not set.

- Average Airflow is greater than 11 g/s.
- Thermostat Heater duty commanded cycle 10%.
- Engine not run time 30 min
- Engine run time between 22 s and 30 min
- The DTC runs once per ignition key cycle.

Conditions for Setting the DTC

The ECM detects that the actual engine coolant temperature is 26°C (78.8°F) colder than the commanded engine coolant temperature while the IAT is between 10-65°C (50-149°F)

or

The ECM detects that the actual engine coolant temperature is 46°C (114.8°F) colder than the commanded engine coolant temperature while the IAT is between -7°C to +10°C (-19.4 to+50°F)

Action Taken When the DTC Sets

DTC P0128 is a Type B DTC.

Conditions for Clearing the DTC

DTC P0128 is a Type B DTC.

Reference Information

Schematic Reference

Engine Controls Schematics

Connector End View Reference

COMPONENT CONNECTOR END VIEWS - INDEX

Electrical Information Reference

- **Circuit Testing**
- **Connector Repairs**
- **Testing for Intermittent Conditions and Poor Connections**
- **Wiring Repairs**

DTC Type Reference

Powertrain Diagnostic Trouble Code (DTC) Type Definitions

Scan Tool Reference

Control Module References for scan tool information

Circuit/System Verification

1. Verify the cooling system is filled to the correct coolant level. Refer to **Loss of Coolant** , and **Cooling System Draining and Filling (Static Fill)** , **Cooling System Draining and Filling (GE-47716 Fill)** .
   - **If the coolant level is not correct**

     Repair as necessary

   - **If the coolant level is correct**
2. Verify the DTC P00B7, P0116, P0117, P0118, P0597, P0598, or P0599 is not set.
   - **If a DTC is set**

     Refer to **Diagnostic Trouble Code (DTC) List - Vehicle**

   - **If a DTC is not set**
3. Engine running for 15 min with the A/C OFF, increase the engine speed to 3, 000 RPM.
4. Verify the scan tool ECT Sensor parameter is greater than 79°C (174°F) when commanding the Engine Coolant Thermostat Heater to 0%.
   - **If less than 79°C (174°F)**

     Replace the E41 Engine Coolant Thermostat Heater.

   - **If greater than 79°C (174°F)**
5. Operate the vehicle within the Conditions for Running the DTC. You may also operate the vehicle within the conditions that you observed from the Freeze Frame/Failure Records data.
6. Verify the DTC does not set.
   - **If the DTC sets**

     Refer to Step 1.

   - **If the DTC does not set**
7. All OK.

Component Testing

1. Ignition OFF, disconnect the B34 Engine Coolant Temperature Sensor harness connector at the sensor.
2. Test for refer to **Temperature Versus Resistance (ECT)** Temperature Versus Resistance between the signal circuit terminal 1 and the low reference terminal 2.
   - **If the temperature versus resistance are not within the specified ranges**

     Replace the B34 Engine Coolant Temperature Sensor.

- **If the temperature versus resistance are within the specified ranges**

3. Test for infinite resistance between each terminal and the sensor housing.
   - **If less than infinite resistance**

     Replace the B34 Engine Coolant Temperature Sensor.

   - **If infinite resistance**
4. All OK.

Repair Instructions

Perform the **Diagnostic Repair Verification** after completing the repair.

- **Engine Coolant Temperature Sensor Replacement (Radiator)** , **Engine Coolant Temperature Sensor Replacement (Water Outlet)**
- **Engine Coolant Thermostat Housing Removal**
- **Control Module References** for engine control module replacement, programming and setup.

DTC P0131, P0132, P0134, P0137, P0138, OR P0140

Diagnostic Instructions

- Perform the **Diagnostic System Check - Vehicle** prior to using this diagnostic procedure.
- Review **Strategy Based Diagnosis** for an overview of the diagnostic approach.
- **Diagnostic Procedure Instructions** provides an overview of each diagnostic category.

DTC Descriptors

DTC P0131

HO2S Circuit Low Voltage Sensor 1

DTC P0132

HO2S Circuit High Voltage Sensor 1

DTC P0134

HO2S Circuit Insufficient Activity Sensor 1

DTC P0137

HO2S Circuit Low Voltage Sensor 2

DTC P0138

HO2S Circuit High Voltage Sensor 2

DTC P0140

HO2S Circuit Insufficient Activity Sensor 2

Diagnostic Fault Information

HO2S 1 or 2

Circuit	Short to Ground	Open/High Resistance	Short to Voltage	Signal Performance
HO2S High Signal	P0131, P0137	P0132, P0134, P0138, P0140	P0132, P0134, P0138, P0140	P0133, P1133
HO2S Low Signal	P0131, P0137, P0171	P0132, P0134, P0138, P0140	P0132, P0134, P0138, P0140	P0133, P1133

Typical Scan Tool Data

HO2S 1 or 2

Circuit	Short to Ground	Open	Short to Voltage
Operating Conditions: Engine operating in Closed Loop **Parameter Normal Range:** 200-800 mV			
High Signal	0 mV	1, 700-2, 100 mV	1, 700-2, 100 mV
Low Signal	-	1, 700-2, 100 mV	1, 700-2, 100 mV

Circuit/System Description

The heated oxygen sensors (HO2S) are used for fuel control and catalyst monitoring. Each HO2S compares the oxygen content of the surrounding air with the oxygen content of the exhaust stream. When the engine is started, the control module operates in an open loop mode, ignoring the HO2S signal voltage while calculating the air to fuel ratio. While the engine runs, the HO2S heats up and begins to generate a voltage within a range of 0-1 275 mV. Once sufficient HO2S voltage fluctuation is observed by the control module, closed loop is entered. The control module uses the HO2S voltage to determine the air to fuel ratio. An HO2S voltage that increases toward 1 000 mV indicates a rich fuel mixture. An HO2S voltage that decreases toward 0 mV indicates a lean fuel mixture.

The heating elements inside each HO2S heat the sensor to bring the sensor up to operating conditions faster. This allows the system to enter closed loop earlier and the control module to calculate the air to fuel ratio sooner.

Conditions for Running the DTC

DTC P0131 or P0137

- DTCs P0068, P0106, P0107, P0108, P0121, P0122, P0123, P0222, P0223, P0442, P0443, P0446, P0449, P0451, P0452, P0453, P0454, P0455, P0496, P1101, P1516, P2101, P2119, P2135 and P2176 are not set.

- The ignition voltage is between 10-32 V.
- The fuel level is greater than 10%.
- The mass air flow (MAF) is between 2-60 g/s.
- The fuel composition is less than 87% ethanol.
- The fuel system is in Closed Loop.
- The vehicle is not decelerating.
- The DTC P0131 runs continuously when the above conditions are met for greater than 3 s.
- The DTC P0137 runs continuously when the above conditions are met for greater than 5 s.

DTC P0132 or P0138

- DTCs P0068, P0101, P0102, P0103, P0106, P0107, P0108, P0121, P0122, P0123, P0222, P0223, P0442, P0443, P0446, P0449, P0451, P0452, P0453, P0454, P0455, P0496, P1101, P1516, P2101, P2119, P2135 and P2176 are not set.
- The ignition voltage is between 10-32 V.
- The fuel level is greater than 10%.
- The fuel composition is less than 87% ethanol.
- The fuel system is in Closed Loop.
- Engine run time is greater than 5 s.
- The vehicle is not decelerating.
- The DTC P0132 and P0138 run continuously when the above conditions are met for greater than 3 s.

DTC P0134 or P0140

- DTCs P0068, P0101, P0102, P0103, P0121, P0122, P0123, P0222, P0223, P1516, P2101, P2119, P2135 and P2176 are not set.
- The ignition voltage is between 10-32 V.
- HO2S heater warm up is finished.
- Engine run time is greater than 5 s.
- The engine has been operating for greater than 50 s.
- The fuel composition is less than 87% ethanol.

Conditions for Setting the DTC

P0131

The engine control module (ECM) detects that the heated oxygen sensor (HO2S) voltage is less than 20 mV for greater than 38 s.

P0137

The engine control module (ECM) detects that the heated oxygen sensor (HO2S) is shorted to ground for

greater than 38 s.

P0132 or P0138

The ECM detects that the heated oxygen sensor (HO2S) voltage is greater than 1 050 mV for greater than 10 s.

P0134 or P0140

The ECM detects that the heated oxygen sensor (HO2S) voltage is greater than 1 700 mV for greater than 10 s.

Action Taken When the DTC Sets

DTCs P0131, P0132, P0134, P0137, P0138 and P0140 are Type B DTCs.

Conditions for Clearing the DTC

DTCs P0131, P0132, P0134, P0137, P0138 and P0140 are Type B DTCs.

Reference Information

Schematic Reference

Engine Controls Schematics

Connector End View Reference

COMPONENT CONNECTOR END VIEWS - INDEX

Electrical Information Reference

- **Circuit Testing**
- **Connector Repairs**
- **Testing for Intermittent Conditions and Poor Connections**
- **Wiring Repairs**

DTC Type Reference

Powertrain Diagnostic Trouble Code (DTC) Type Definitions

Scan Tool Reference

Control Module References for scan tool information

Circuit/System Verification

1. Ignition ON
2. Verify no HO2S heater DTCs are set.

- **If a DTC is set**

  Refer to **Diagnostic Trouble Code (DTC) List - Vehicle** .

- **If a DTC is not set**

3. Engine running.
4. Verify the scan tool HO2S 1 or 2 parameters are between 50-1, 050 mV.
   - **If not between 50-1, 050 mV**

     Refer to Circuit/System Testing below.

   - **If between 50-1, 050 mV**
5. Operate the vehicle within the Conditions for Running the DTC. You may also operate the vehicle within the conditions that you observed from the Freeze Frame/Failure Records data.
6. Verify the DTC does not set.
   - **If the DTC sets**

     Refer to Circuit/System Testing below.

   - **If the DTC does not set**
7. All OK.

Circuit/System Testing

1. Ignition OFF and all vehicle systems OFF, disconnect the appropriate B52 Heated Oxygen Sensor harness connector. It may take up to 2 minutes for all vehicle systems to power down. Ignition ON.
2. Test for 1.7-3.0 V between the high signal circuit terminal 4 and ground.
   - **If less than 1.7 V**
   1. Ignition OFF, disconnect the harness connector at the K20 Engine Control Module.
   2. Test for infinite resistance between the high signal circuit terminal 4 and ground.
      - If less than infinite resistance, repair the short to ground on the circuit.
      - If infinite resistance
   3. Test for less than 2 ohms in the high signal circuit end to end.
      - If 2 ohms or greater, repair the open/high resistance in the circuit.
      - If less than 2 ohms, replace the K20 Engine Control Module.
   - **If greater than 3 V**
   1. Ignition OFF, disconnect the harness connector at the K20 Engine Control Module. Ignition ON.
   2. Test for less than 1 V between the high signal circuit terminal 4 and ground.
      - If 1 V or greater, repair the short to voltage on the circuit.
      - If less than 1 V, replace the K20 Engine Control Module.
   - **If between 1.7-3.0 V**

3. Verify the scan tool HO2S 1 or 2 parameter is between 1.73.0 V.
    - **If less than 1.7 V**
    1. Ignition OFF, disconnect the harness connector at the K20 Engine Control Module. Ignition ON.
    2. Test for infinite resistance between the low signal circuit terminal 3 and ground.
        - If less than infinite resistance, repair the short to ground on the circuit.
        - If infinite resistance, replace the K20 Engine Control Module.
    - **If greater than 1.7 V**
4. Connect a 3 A fused jumper wire between the high signal circuit terminal 4 and the low signal circuit terminal 3.

    NOTE: The low signal circuit is tied to a pull-up circuit within the engine control module. A voltage of 0.0-1.1 V on the low signal circuit is normal.

5. Verify the scan tool HO2S 1 or 2 parameter displays 0.0 V.
    - **If greater than 0.0 V**
    1. Ignition OFF, disconnect the harness connector at the K20 Engine Control Module. Ignition ON.
    2. Test for less than 2 ohms in the low signal circuit end to end.
        - If 2 ohms or greater, repair the open/high resistance in the circuit.
        - If less than 2 ohms
    3. Test for less than 1 V between the low signal circuit terminal 3 and ground.
        - If 1 V or greater, repair the short to voltage on the circuit.
        - If less than 1 V, replace the K20 Engine Control Module.
    - **If 0.0 V**
6. Verify none of the conditions listed below exist:
    - Water intrusion in the B52 HO2S harness connector
    - Low or high fuel system pressure-Refer to **Fuel System Diagnosis** .
    - Fuel that is contaminated-Refer to **Alcohol/Contaminants-in-Fuel Diagnosis** .
    - Fuel saturation of the evaporative emission (EVAP) canister
    - Exhaust leaks
    - Engine vacuum leaks
    - **If any of the conditions exist**

      Repair as necessary.

    - **If none of the conditions exist**
7. Test or replace the B52 Heated Oxygen Sensor.

Repair Instructions

Perform the **Diagnostic Repair Verification** after completing the diagnostic procedure.

- **Heated Oxygen Sensor Replacement - Sensor 1**
- **Heated Oxygen Sensor Replacement - Sensor 2**
- Perform the scan tool Heated Oxygen Sensor Resistance Learn Reset after replacing an HO2S.
- **Control Module References** for ECM replacement, programming and setup

DTC P0133, P013A, P013B, P013E, P013F, P015A, P015B, P2270, OR P2271

Diagnostic Instructions

- Perform the **Diagnostic System Check - Vehicle** prior to using this diagnostic procedure.
- Review **Strategy Based Diagnosis** for an overview of the diagnostic approach.
- **Diagnostic Procedure Instructions** provide an overview of each diagnostic category.

DTC Descriptors

DTC P0133

HO2S Slow Response Sensor 1

DTC P013A

HO2S Slow Response Rich to Lean Sensor 2

DTC P013B

HO2S Slow Response Lean to Rich Sensor 2

DTC P013E

HO2S Delayed Response Rich to Lean Sensor 2

DTC P013F

HO2S Delayed Response Lean to Rich Sensor 2

DTC P015A

HO2S Delayed Response Rich to Lean Sensor 1

DTC P015B

HO2S Delayed Response Lean to Rich Sensor 1

DTC P2270

HO2S Signal Stuck Lean Sensor 2

DTC P2271

HO2S Signal Stuck Rich Sensor 2

Diagnostic Fault Information

Circuit	Short to Ground	Open/High Resistance	Short to Voltage	Signal Performance
HO2S High Signal	P0131, P0137	P0132, P0134, P0138, P0140	P0132, P0134, P0138, P0140	P0133
HO2S Low Signal	P0137	P0132, P0134, P0138, P0140	P0132, P0134, P0138, P0140	P0133

Typical Scan Tool Data

HO2S 1 or 2

Circuit	Short to Ground	Open	Short to Voltage
Operating Conditions: Engine operating in Closed Loop **Parameter Normal Range:** 200-800 mV			
HO2S 1 or 2 Signal	0 mV	1 700-2 100 mV	1 700-2 100 mV
HO2S 1 or 2 Low Signal	-	1 700-2 100 mV	1 700-2 100 mV

Circuit/System Description

The heated oxygen sensors (HO2S) are used for fuel control and catalyst monitoring. Each HO2S compares the oxygen content of the surrounding air with the oxygen content of the exhaust stream. When the engine is started, the control module operates in an open loop mode, ignoring the HO2S signal voltage while calculating the air to fuel ratio. While the engine runs, the HO2S heats up and begins to generate a voltage within a range of 0-1 275 mV. Once sufficient HO2S voltage fluctuation is observed by the control module, closed loop is entered. The control module uses the HO2S voltage to determine the air to fuel ratio. An HO2S voltage that increases toward 1 000 mV indicates a rich fuel mixture. An HO2S voltage that decreases toward 0 mV indicates a lean fuel mixture.

The heating elements inside each HO2S heat the sensor to bring the sensor up to operating conditions faster. This allows the system to enter closed loop earlier and the control module to calculate the air to fuel ratio sooner.

Conditions for Running the DTC

DTC P0133

- DTCs P0068, P0096, P0097, P0098, P00B3, P00B4, P00B6, P00C7, P0101, P0102, P0103, P0106, P0107, P0108, P0111, P0112, P0113, P0114, P0116, P0117, P0118, P0119, P0121, P0122, P0123, P0128, P0131, P0132, P0134, P0201, P0202, P0203, P0204, P0222, P0223, P0300, P0442, P0443, P0446, P0449, P0451, P0452, P0453, P0454, P0455, P0496, P1101, P1516, P2101, P2119, P2135, P2176 and P2450 are not set.

- The ignition voltage is between 10-32 V.
- The engine speed parameter is between 1 300-3 500 RPM.
- The engine coolant temperature (ECT) is hotter than 65°C (149°F).
- The intake air temperature (IAT) is hotter than -40°C (-40°F).
- The engine has been operating for greater than 100 s.
- The mass air flow (MAF) is between 10-35 g/s.
- The fuel system is in Closed Loop.
- The vehicle is not decelerating.
- The DTCs run continuously when the above conditions are met for greater than 1 s.

P013A

- DTCs P0068, P0096, P0097, P0098, P00B6, P0101, P0102, P0103, P0106, P0107, P0108, P0111, P0112, P0113, P0114, P0116, P0117, P0118, P0119, P0121, P0122, P0123, P0171, P0172, P0201, P0202, P0203, P0204, P0222, P0223, P0300, P1101, P1516, P2096, P2097, P2101, P2119, P2135, P2176 are not set.
- The ignition voltage is between 10-32 V.
- The fuel level is greater than 10%.
- DTC P013B, P013E, P013F, P2270 and P2271 have run.
- DTC P013E and P2270 have passed.
- DTC P013A runs once per trip.

P013B

- DTCs P0068, P0096, P0097, P0098, P00B6, P0101, P0102, P0103, P0106, P0107, P0108, P0111, P0112, P0113, P0114, P0116, P0117, P0118, P0119, P0121, P0122, P0123, P0171, P0172, P0201, P0202, P0203, P0204, P0222, P0223, P0300, P1101, P1516, P2096, P2097, P2101, P2119, P2135, P2176 are not set.
- The ignition voltage is between 10-32 V.
- The fuel level is greater than 10%.
- DTC P013A, P013E, P013F, P2270 and P2271 have run.
- DTC P013F and P2271 have passed.
- DTC P013B runs once per trip.

P013E

- DTCs P0068, P0096, P0097, P0098, P00B6, P0101, P0102, P0103, P0106, P0107, P0108, P0111, P0112, P0113, P0114, P0116, P0117, P0118, P0119, P0121, P0122, P0123, P0171, P0172, P0201, P0202, P0203, P0204, P0222, P0223, P0300, P1101, P1516, P2096, P2097, P2101, P2119, P2135, P2176 are not set.
- The ignition voltage is between 10-32 V.
- The fuel level is greater than 10%.

- DTC P013A, P013B, P013F, P2270 and P2271 have run.
- DTC P2270 have passed.
- DTC P013E runs once per trip.

P013F

- DTCs P0068, P0096, P0097, P0098, P00B6, P0101, P0102, P0103, P0106, P0107, P0108, P0111, P0112, P0113, P0114, P0116, P0117, P0118, P0119, P0121, P0122, P0123, P0171, P0172, P0201, P0202, P0203, P0204, P0222, P0223, P0300, P1101, P1516, P2096, P2097, P2101, P2119, P2135, P2176 are not set.
- The ignition voltage is between 10-32 V.
- The fuel level is greater than 10%.
- DTC P013A, P013B, P013E, P2270 and P2271 have run.
- DTC P2270 and P2271 have passed.
- DTC P013F runs once per trip.

P015A and P015B

- DTCs P0068, P0101, P0102, P0103, P0106, P0107, P0108, P0111, P0112, P0113, P0114, P0116, P0117, P0118, P0119, P0121, P0122, P0123, P0128, P0131, P0132, P0134, P0171, P0172, P0201, P0202, P0203, P0204, P0222, P0223, P0300, P0442, P0443, P0446, P0449, P0452, P0453, P0455, P0496, P16F3, P2101 or P2135 are not set.
- The ignition voltage is between 10-32 V.
- The device controls are not active.
- The fuel level is greater than 10%.
- The HO2S heater is commanded ON for greater than 40 s.
- The engine coolant temperature (ECT) is hotter than 60°C (140°F).
- The intake air temperature (IAT) is hotter than -40°C (-40°F).
- The engine has been operating for greater than 150 s.
- The engine speed is between 1 550-3 500 RPM to initially enable the test.
- The vehicle speed is between 70-125 km/h (44-78 mph) to initially enable the test.
- The engine speed is between 1 350-3 650 RPM to keep the test enabled.
- The vehicle speed is between 65-130 km/h (41-81 mph) to keep the test enabled.
- The mass air flow (MAF) is between 2-20 g/s.
- The fuel system is in Closed Loop.
- The evaporative emission (EVAP) diagnostics are not in control of purge.
- The predicted catalytic converter temperature is between 550-900°C (1 022-1 652°F).
- DTC P015A runs once per trip, during the deceleration fuel cut-off (DFCO) mode, when the above conditions are met.
- DTC P015B runs once per trip, during the fuel enrich mode, when the above conditions are met.

P2270

- DTCs P0068, P0096, P0097, P0098, P00B6, P0101, P0102, P0103, P0106, P0107, P0108, P0111, P0112, P0113, P0114, P0116, P0117, P0118, P0119, P0121, P0122, P0123, P0171, P0172, P0201, P0202, P0203, P0204, P0222, P0223, P0300, P1101, P1516, P2096, P2097, P2101, P2119, P2135, P2176 are not set.
- The ignition voltage is between 10-32 V.
- The fuel level is greater than 10%.
- The engine speed parameter is between 1 100-3 500 RPM.
- The mass air flow (MAF) is between 1-30 g/s.
- The fuel composition is less than 87% ethanol.
- The fuel system is in Closed Loop.
- DTC P013A, P013B, P013E, P013F, P2270 and P2271 have run.
- DTC P2270 and P2271 have passed.
- DTC P2270 runs once per drive cycle when the above conditions are met for 5 s.

P2271

- DTCs P0068, P0096, P0097, P0098, P00B6, P0101, P0102, P0103, P0106, P0107, P0108, P0111, P0112, P0113, P0114, P0116, P0117, P0118, P0119, P0121, P0122, P0123, P0171, P0172, P0201, P0202, P0203, P0204, P0222, P0223, P0300, P1101, P1516, P2096, P2097, P2101, P2119, P2135, P2176 are not set.
- The ignition voltage is between 10-32 V.
- The fuel level is greater than 10%.
- The engine speed parameter is between 1 100-3 500 RPM.
- The mass air flow (MAF) is between 1-30 g/s.
- The fuel composition is less than 87% ethanol.
- The fuel system is in Closed Loop.
- DTC P013A, P013B, P013E, P013F and P2270 have run.
- DTC P013A, P013E and P2270 have passed.
- DTC P2270 runs once per drive cycle when the above conditions are met for 5 s.

Conditions for Setting the DTC

P0133

- The ECM detects that the HO2S 1 average response time is more than a calculated value.
- DTC P0133 sets within 60 s when the above condition is met.

P013A

The ECM detects that the accumulated mass air flow monitored during rich to lean transitions between 150-450 mV is more than 6 g.

P013B

The ECM detects that the accumulated mass air flow monitored during rich to lean transitions between 335-650 mV is more than 25 g.

P013E

The ECM detects that the Post O2 sensor voltage is greater than 450 mV and the accumulated mass air flow monitored during the delayed Response Test is greater than 20 g.

P013F

The ECM detects that the Post O2 sensor voltage is less than 350 mV and the accumulated mass air flow monitored during the delayed Response Test is greater than 70 g.

P0140

The ECM detects that the heated oxygen sensor (HO2S) 2 parameter is greater than 1 700 mV.

P2270

- The ECM detects that the heated oxygen sensor (HO2S) 2 sensor cannot achieve voltage equal to or less than 775 mV.

  and

- The ECM detects that the accumulated mass air flow monitored during the Stuck Lean Voltage Test is more than 38 g.

P2271

- The ECM detects that the heated oxygen sensor (HO2S) 2 sensor cannot achieve voltage equal to or less than 100 mV.

  and

- The ECM detects that the accumulated mass air flow monitored during the stuck rich voltage test is more than 25 g.

Action Taken When the DTC Sets

- DTCs P0133, P0134, P013E, P013F, P0140, P2270 are P2271 Type B DTCs.
- DTCs P013A and P013B are Type A DTCs.

Conditions for Clearing the DTC

- DTCs P0133, P0134, P013E, P013F, P0140, P2270 are P2271 Type B DTCs.

- DTCs P013A and P013B are Type A DTCs.

Reference Information

Schematic Reference

Engine Controls Schematics

Connector End View Reference

COMPONENT CONNECTOR END VIEWS - INDEX

Electrical Information Reference

- **Circuit Testing**
- **Connector Repairs**
- **Testing for Intermittent Conditions and Poor Connections**
- **Wiring Repairs**

DTC Type Reference

Powertrain Diagnostic Trouble Code (DTC) Type Definitions

Scan Tool Reference

Control Module References for scan tool information

Circuit/System Verification

1. Ignition ON.
2. Verify no HO2S heater DTCs are set
   - **If a HO2S heater DTC is set**

     Refer to **DTC P0131, P0132, P0134, P0137, P0138, or P0140**.

   - **If no HO2S heater DTC is set**
3. Allow the engine to reach operating temperature, engine running.
4. Verify the scan tool HO2S Sensor 1 or 2 voltage parameters are between 50-1 050 mV.
   - **If not between 50-1 050 mV**

     Refer to **DTC P0131, P0132, P0134, P0137, P0138, or P0140**.

   - **If between 50-1 050 mV**
5. Verify none of the following conditions exist:
   - Lean or rich fuel injectors

- Water intrusion in the HO2S harness connector
- Low or high fuel system pressure-Refer to **Fuel System Diagnosis** .
- Fuel that is contaminated-Refer to **Alcohol/Contaminants-in-Fuel Diagnosis** .
- Fuel saturation of the evaporative emission (EVAP) canister
- Exhaust leaks
- Engine vacuum leaks
- Engine oil consumptions-Refer to **Symptoms - Engine Cooling** .
- Engine coolant consumption-Refer to **Symptoms - Engine Cooling** .
- **If any of the above conditions exist**

  Repair as necessary.

- **If none of the above conditions exist**

6. Operate the vehicle within the Conditions for Running the DTC. You may also operate the vehicle within the conditions that you observed from the Freeze Frame/Failure Records data.
7. Verify the DTC does not set.
   - **If the DTC sets**

     Replace the B52 Heated Oxygen Sensor.

8. All OK.

Repair Instructions

Perform the **Diagnostic Repair Verification** after completing the diagnostic procedure.

- **Heated Oxygen Sensor Replacement - Sensor 1**
- **Heated Oxygen Sensor Replacement - Sensor 2**
- Perform the scan tool Heated Oxygen Sensor Resistance Learn Reset after replacing a HO2S.
- **Control Module References** for ECM replacement, programming and setup

DTC P0171 OR P0172

Diagnostic Instructions

- Perform the **Diagnostic System Check - Vehicle** prior to using this diagnostic procedure.
- Review **Strategy Based Diagnosis** for an overview of the diagnostic approach.
- **Diagnostic Procedure Instructions** provides an overview of each diagnostic category.

DTC Descriptors

DTC P0171

Fuel Trim System Lean

DTC P0172

Fuel Trim System Rich

Circuit/System Description

The engine control module (ECM) controls a Closed Loop air/fuel metering system in order to provide the best possible combination of driveability, fuel economy, and emission control. The ECM monitors the heated oxygen sensor (HO2S) signal voltage, and adjusts the fuel delivery based on the signal voltage while in Closed Loop. A change made to the fuel delivery changes the long and short term fuel trim values. The short term fuel trim values change rapidly in response to the HO2S signal voltages. These changes fine tune the engine fueling. The long term fuel trim values change in response to trends in the short term fuel trim The long term fuel trim makes coarse adjustments to fueling in order to re-center and restore control to short term fuel trim. The ideal fuel trim values are around 0 %. A positive fuel trim value indicates that the ECM is adding fuel in order to compensate for a lean condition. A negative fuel trim value indicates that the ECM is reducing the amount of fuel in order to compensate for a rich condition.

Conditions for Running the DTC

- DTCs P0030, P0053, P0101, P0102, P0103, P0106, P0107, P0108, P0131-P0135, P0201-P0204, P0300-P0304, P0411, P0442, P0455, P0458, P0496, P0506, P0507, P1248, P1249, P124A, P124B, P2147, P2148, P2150, P2151, P2153, P2154, P2156, P2157, P2227, P2228, P2229, P2230, P2440, or P2444 are not set.
- The engine is in Closed Loop status.
- The catalyst monitor diagnostic intrusive test, post 02 diagnostic intrusive test, and EVAP diagnostic test are not active.
- The engine coolant temperature (ECT) is between -20°C and +150°C (-4°F and +302°F).
- The intake air temperature (IAT) is between -20°C and +150°C (-4°F and +302°F).
- The manifold absolute pressure (MAP) is between 10-255 kPa (1.5-37 psi).
- The engine speed is between 400-7, 000 RPM.
- The mass air flow (MAF) is between 1-512 g/s.
- The barometric pressure (BARO) is greater than 70 kPa (10.2 psi).
- The fuel level is greater than 10 % and no fuel sensor fault is present.
- This diagnostic runs continuously when the above conditions have been met.

Conditions for Setting the DTC

- The average long term fuel trim weighted average value is greater or less than a calibrated value.
- The above condition is present for approximately 3 min after the Conditions for Running the DTC have been met.

Action Taken When the DTC Sets

DTCs P0171 and P0172 are Type B DTCs.

Conditions for Clearing the MIL/DTC

DTCs P0171 and P0172 are Type B DTCs.

Diagnostic Aids

- Allow the engine to reach operating temperature. With the engine running, observe the HO2S parameter with a scan tool. The HO2S value should vary from approximately 40 mV to approximately 900 mV, and respond to fueling changes.
- The normal Short Term Fuel Trim and Long Term Fuel Trim parameters should be between +10 and -10 % with 0 % the optimum, with the engine running at operating temperature.
- It is very unlikely that an HO2S will cause this DTC to set without the occurrence of the circuit related HO2S DTCs. Do not replace an HO2S to address this DTC without first performing all the steps in Circuit/System Verification.
- Any un-metered air into the engine causes this DTC to set. Thoroughly inspect all areas of the engine for vacuum leaks.
- A MAF sensor condition can cause this DTC without setting a MAF DTC. If there is a MAF sensor condition, the MAF sensor parameters will appear to be within range.
- Inspect the air filter for being the correct one for this application. Make sure that the engine oil fill cap is in place and that it is tight. Verify that the engine oil dip stick is fully seated.
- Certain aftermarket air filters may cause a DTC to set.
- Certain aftermarket air induction systems or modifications to the air induction system may cause a DTC to set.
- Certain aftermarket exhaust system components may cause a DTC to set.

Reference Information

Electrical Information Reference

- **Circuit Testing**
- **Connector Repairs**
- **Testing for Intermittent Conditions and Poor Connections**
- **Wiring Repairs**

DTC Type Reference

Powertrain Diagnostic Trouble Code (DTC) Type Definitions

Scan Tool Reference

Control Module References for scan tool information

Circuit/System Verification

1. Ignition ON.
2. Verify no other DTCs are set.
   - **If any other DTCs are set**

     Refer to **Diagnostic Trouble Code (DTC) List - Vehicle** for further diagnosis.

   - **If no other DTCs are set**
3. Verify DTC P0171 or P0172 is not set.
   - **If a DTC is set**

     Refer to Circuit/System Testing below

   - **If no DTC is set**
4. Operate the vehicle within the Conditions for Running the DTC. You may also operate the vehicle within the conditions that you observed in the Freeze Frame/Failure Records data.
5. Verify DTC P0171 or P0172 is not set.
   - **If any of the DTCs set**

     Refer to Circuit/System Testing below

   - **If none of the DTCs set**
6. All OK.

Circuit/System Testing

1. Ignition ON.
2. Verify the manifold absolute pressure sensor is within the range specified for your altitude. Refer to **Altitude Versus Barometric Pressure**
   - **If not within the specified range**

     Refer to **DTC P0106**

   - **If within the specified range**
3. Engine running, allow the engine to reach operating temperature.
4. Verify the Long Term Fuel Trim parameter is between -30 % and +30 %.
   - **If not within the specified range, verify that none of the conditions listed below exist:**

P0171

- Mass air flow (MAF) sensor signal skewed. If the Short Term Fuel Trim parameter changes greater than 20 % when the MAF sensor is disconnected, refer to **DTC P0101**.
- Fuel contamination. Refer to **Alcohol/Contaminants-in-Fuel Diagnosis** .
- Missing, restricted, or leaking exhaust components. Refer to **Symptoms - Engine Exhaust** .

- Malfunctioning fuel injectors. Refer to **Fuel Injector Diagnosis** .
- Split, kinked, or improperly connected vacuum hoses
- Insufficient fuel in the tank
- Low fuel pressure. Refer to **Fuel System Diagnosis** .
- Vacuum leaks at the intake manifold, the throttle body, and the injector O-rings.
- Leaks in the air induction system and the air intake ducts
- Missing air filter element
- Cracked EVAP canister
- Evaporative pipes obstructed or leaking
- Leaks in the crankcase ventilation system

P0172

- Mass air flow (MAF) sensor signal skewed. If the Short Term Fuel Trim parameters for both banks changes greater than 20 % when the MAF sensor is disconnected, refer to **DTC P0101**.
- Fuel contamination. Refer to **Alcohol/Contaminants-in-Fuel Diagnosis** .
- Missing, restricted, or leaking exhaust components. Refer to **Symptoms - Engine Exhaust** .
- Malfunctioning fuel injectors. Refer to **Fuel Injector Diagnosis**
- Collapsed or restricted air intake duct
- Excessive fuel pressure. Refer to **Fuel System Diagnosis**
- Dirty or restricted air filter
- Objects blocking the throttle body
- Improper operation of the evaporative emissions control system
- Excessive fuel in the crankcase. Change the engine oil as necessary.
  - **If a condition is found**

    Repair as necessary.

  - **If no condition is found**

5. Test the engine for a mechanical condition. Refer to **Symptoms - Engine Mechanical** .

Repair Instructions

Perform the **Diagnostic Repair Verification** after completing the diagnostic procedure.

DTC P018B-P018D

Diagnostic Instructions

- Perform the **Diagnostic System Check - Vehicle** prior to using this diagnostic procedure.
- Review **Strategy Based Diagnosis** for an overview of the diagnostic approach.
- **Diagnostic Procedure Instructions** provides an overview of each diagnostic category.

DTC Descriptors

DTC P018B

Fuel Pressure Sensor Performance

DTC P018C

Fuel Pressure Sensor Circuit Low Voltage

DTC P018D

Fuel Pressure Sensor Circuit High Voltage

Diagnostic Fault Information

Circuit	Short to Ground	Open/High Resistance	Short to Voltage	Signal Performance
5 V Reference	P018C, P0641, P06A6	P018C	P018D	P06A6
Signal	P018C	P018C	P018D	P018B
Low Reference	-	P018D	-	P06A6

Circuit/System Description

The fuel pressure sensor is located on the fuel line. The fuel pressure sensor monitors the fuel pressure in the fuel line. The fuel pump control module monitors the voltage signal from the fuel pressure sensor.

Conditions for Running the DTC

- The engine is running.
- DTCs P018C, P018D, P0231, P0232, P023F, P064A, P1255 or P06A6 are not active.
- DTC P0641 has not failed this ignition cycle.
- Fuel pump control is enabled and the fuel pump control state is normal.
- The engine has been running for at least 5 seconds.

Conditions for Setting the DTC

The fuel pump control module does not detect a change in the fuel pressure of at least 30 kPa (4.4 psi) when the fuel pump is operating. The fuel pressure sensor performance diagnostic provides a means to detect fuel pressure sensor output that is stuck within the normal operating range of the sensor.

Action Taken When the DTC Sets

DTCs P018B, P018C and P018D are Type A DTCs.

Conditions for Clearing the DTC

DTCs P018B, P018C and P018D are Type A DTCs.

Diagnostic Aids

Using the Failure Records data may help locate an intermittent condition. If you cannot duplicate the DTC, the information in the Failure Records can help determine how many miles since the DTC set. The Fail Counter and Pass Counter can help determine how many ignition cycles that the diagnostic test reported a pass and/or a fail.

Reference Information

Schematic Reference

Engine Controls Schematics

Connector End View Reference

COMPONENT CONNECTOR END VIEWS - INDEX

Description and Operation

Fuel System Description

Electrical Information Reference

- **Circuit Testing**
- **Testing for Intermittent Conditions and Poor Connections**
- **Connector Repairs**
- **Wiring Repairs**

DTC Type Reference

Powertrain Diagnostic Trouble Code (DTC) Type Definitions

Scan Tool Reference

Control Module References for scan tool information

Circuit/System Verification

1. Engine running.
2. Verify the scan tool Fuel Pressure Sensor Voltage parameter is between 0.2-4.8 V.
    - **If not between 0.2-4.8 V**

      Refer to Circuit/System Testing below.

- **If between 0.2-4.8 V**

3. All OK.

Circuit/System Testing

NOTE: Verify that the fuel tank is not empty. Only perform this diagnostic if there is at least 2 gallons of fuel in the fuel tank. Clear the DTC, and start and run the engine. Verify that the DTC resets before proceeding with the circuit system testing. If the DTC does not reset, refer to diagnostic aids.

1. Ignition OFF and all vehicle systems OFF, disconnect the harness connector at the B47 Fuel Pressure Sensor. It may take up to 2 minutes for all vehicle systems to power down.
2. Test for less than 10 ohms between the low reference circuit terminal 2 and ground.
   - **If 10 ohms or greater**
   1. Ignition OFF, disconnect the harness connector at the K27 Fuel Pump Control Module.
   2. Test for less than 2 ohms in the low reference circuit end to end.
      - If 2 ohms or greater, repair the open/high resistance in the circuit.
      - If less than 2 ohms, replace the K27 Fuel Pump Control Module.
   - **If less than 10 ohms**
3. Ignition ON.
4. Test for 4.8-5.2 V between the 5 V reference circuit terminal 3 and ground.
   - **If less than 4.8 V**
   1. Ignition OFF, disconnect the harness connector at the K27 Fuel Pump Control Module.
   2. Test for infinite resistance between the 5 V reference circuit and ground.
      - If less than infinite resistance, repair the short to ground on the circuit.
      - If infinite resistance
   3. Test for less than 2 ohms in the 5 V reference circuit end to end.
      - If 2 ohms or greater, repair the open/high resistance in the circuit.
      - If less than 2 ohms, replace the K27 Fuel Pump Control Module.
   - **If greater than 5.2 V**
   1. Ignition OFF, disconnect the harness connector at the K27 Fuel Pump Control Module, ignition ON.
   2. Test for less than 1 V between the 5 V reference circuit and ground.
      - If 1 V or greater, repair the short to voltage on the circuit.
      - If less than 1 V, replace the K27 Fuel Pump Control Module.
   - **If between 4.8-5.2 V**
5. Verify the scan tool Fuel Pressure Sensor Voltage parameter is less than 1 V.
   - **If 1 V or greater**
   1. Ignition OFF, disconnect the harness connector at the K27 Fuel Pump Control Module, ignition ON.

2. Test for less than 1 V between the signal circuit terminal 1 and ground.
    - If 1 V or greater, repair the short to voltage on the circuit.
    - If less than 1 V, replace the K27 Fuel Pump Control Module.
- **If less than 1 V**

6. Install a 3 A fused jumper wire between the signal circuit terminal 1 and the 5 V reference circuit terminal 3, wait 15 seconds.
7. Verify the scan tool Fuel Pressure Sensor Voltage parameter is greater than 4.8 V.
    - **If 4.8 V or less**
    1. Ignition OFF, disconnect the harness connector at the K27 Fuel Pump Control Module.
    2. Test for infinite resistance between the signal circuit terminal 1 and ground.
        - If less than infinite resistance, repair the short to ground on the circuit.
        - If infinite resistance
    3. Test for less than 2 ohms in the signal circuit end to end.
        - If 2 ohms or greater, repair the open/high resistance in the circuit.
        - If less than 2 ohms, replace the K27 Fuel Pump Control Module.
    - **If greater than 4.8 V**
8. Test or replace the B47 Fuel Pressure Sensor.

Repair Instructions

Perform the **Diagnostic Repair Verification** after completing the repair.

Control Module References for fuel pump control module replacement, programming and setup

DTC P0201, P0202, P0203, P0204, P0261, P0262, P0264, P0265, P0267, P0268, P0270, OR P0271

Diagnostic Instructions

- Perform the **Diagnostic System Check - Vehicle** prior to using this diagnostic procedure.
- Review **Strategy Based Diagnosis** for an overview of the diagnostic approach.
- **Diagnostic Procedure Instructions** provides an overview of each diagnostic category.

DTC Descriptors

DTC P0201

Cylinder 1 Injector Control Circuit

DTC P0202

Cylinder 2 Injector Control Circuit

DTC P0203

Cylinder 3 Injector Control Circuit

DTC P0204

Cylinder 4 Injector Control Circuit

DTC P0261

Cylinder 1 Injector Control Circuit Low Voltage

DTC P0262

Cylinder 1 Injector Control Circuit High Voltage

DTC P0264

Cylinder 2 Injector Control Circuit Low Voltage

DTC P0265

Cylinder 2 Injector Control Circuit High Voltage

DTC P0267

Cylinder 3 Injector Control Circuit Low Voltage

DTC P0268

Cylinder 3 Injector Control Circuit High Voltage

DTC P0270

Cylinder 4 Injector Control Circuit Low Voltage

DTC P0271

Cylinder 4 Injector Control Circuit High Voltage

Diagnostic Fault Information

Circuit	Short to Ground	Open/High Resistance	Short to Voltage	Signal Performance
Ignition Voltage	P0201*, P0202*, P0203*, P0204*, P0261*,	P0201**, P0202**, P0203**, P0204**, P0261**, P0264**,	-	-

	P0264*, P0267*, P0270*	P0267**, P0270**		
Injector 1 Control	P0201, P0261	P0201, P0300	P0262, P0300	-
Injector 2 Control	P0202, P0264	P0202, P0300	P0265, P0300	-
Injector 3 Control	P0203, P0267	P0203, P0300	P0268, P0300	-
Injector 4 Control	P0204, P0270	P0204, P0300	P0271, P0300	-
* Open fuse, cranks no start. ** Cranks no start if the condition is between the fuse and the splice.				

Circuit/System Description

The engine control module (ECM) enables the appropriate fuel injector pulse for each cylinder. Ignition voltage is supplied to the fuel injectors. The ECM controls each fuel injector by grounding the control circuit via a solid state device called a driver. The ECM monitors the status of each driver. If the ECM detects an incorrect voltage for the commanded state of the driver, a fuel injector control circuit DTC sets.

Conditions for Running the DTC

- The engine is running for greater than 1 s.
- The ignition voltage is greater than 11 V.
- The DTCs run continuously when the above conditions are met for greater than 5 s.

Conditions for Setting the DTC

The control module detects an incorrect voltage on the fuel injector control circuit for greater than 5 s.

Action Taken When the DTC Sets

DTCs P0201, P0202, P0203, P0204, P0261, P0262, P0264, P0265, P0267, P0268, P0270, and P0271 are Type B DTCs.

Conditions for Clearing the DTC

DTCs P0201, P0202, P0203, P0204, P0261, P0262, P0264, P0265, P0267, P0268, P0270, and P0271 are Type B DTCs.

Diagnostic Aids

Performing the Fuel Injector Diagnosis may help isolate an intermittent condition. Refer to **Fuel Injector Diagnosis** .

Reference Information

Schematic Reference

Engine Controls Schematics

Connector End View Reference

COMPONENT CONNECTOR END VIEWS - INDEX

Electrical Information Reference

- **Circuit Testing**
- **Connector Repairs**
- **Testing for Intermittent Conditions and Poor Connections**
- **Wiring Repairs**

DTC Type Reference

Powertrain Diagnostic Trouble Code (DTC) Type Definitions

Scan Tool Reference

Control Module References for scan tool information

Special Tool

CH 34730-2C Noid Light, if available

Circuit/System Verification

1. Engine cranking or running.
2. Verify the scan tool parameters listed below do not display Malfunction.
   - Cylinder 1-4 Injector Control Circuit Low Voltage Test Status
   - Cylinder 1-4 Injector Control Circuit Open Test Status
   - Cylinder 1-4 Injector Control Circuit High Voltage Test Status
   - **If Malfunction is displayed**

     Refer to Circuit/System Testing below.

   - **If Malfunction is not displayed**
3. Operate the vehicle within the Conditions for Running the DTC. You may also operate the vehicle within the conditions that you observed from the Freeze Frame/Failure Records data.
4. Verify the DTC does not set.
   - **If the DTC sets**

     Refer to Circuit/System Testing below.

   - **If the DTC does not set**
5. All OK.

Circuit/System Testing

1. Ignition OFF, disconnect the harness connector at the appropriate Q17 Fuel Injector, ignition ON.
2. Verify a test lamp illuminates between the ignition circuit terminal 1 and ground.
    - **If the test lamp does not illuminate and the circuit fuse is good**
    1. Ignition OFF, remove the test lamp.
    2. Test for less than 2 ohms in the ignition circuit end to end.
        - If 2 ohms or greater, repair the open/high resistance in the circuit.
        - If less than 2 ohms, verify the fuse is not open and there is voltage at the fuse.
    - **If the test lamp does not illuminate and the circuit fuse is open**
    1. Ignition OFF, remove the test lamp, and disconnect all components on the circuit.
    2. Test for infinite resistance between the ignition circuit and ground.
        - If less than infinite resistance, repair the short to ground on the circuit.
        - If infinite resistance
    3. Replace the fuse, ignition ON.
    4. Verify the fuse is good after connecting each of the components one at a time.
        - If the fuse opens, replace the component that opens the fuse when connected.
        - If the fuse is good, all OK.
    - **If the test lamp illuminates**
3. Ignition OFF, connect the test lamp to the affected fuel injector connector.
4. Engine cranking.
5. Verify the test lamp turns ON and OFF.
    - **If the test lamp is always OFF**
    1. Ignition OFF, remove the test lamp, disconnect the X2 harness connector at the K20 Engine Control Module, ignition ON.
    2. Test for less than 1 V between the control circuit and ground.
        - If 1 V or greater, repair the short to voltage on the circuit.
        - If less than 1 V
    3. Ignition OFF.
    4. Test for less than 2 ohms in the control circuit end to end.
        - If 2 ohms or greater, repair the open/high resistance in the circuit.
        - If less than 2 ohms, replace the K20 Engine Control Module.
    - **If the test lamp is always ON**
    1. Ignition OFF, remove the test lamp, disconnect the X2 harness connector at the K20 Engine Control Module.
    2. Test for infinite resistance between the control circuit and ground.
        - If less than infinite resistance, repair the short to ground on the circuit.
        - If infinite resistance, replace the K20 Engine Control Module.
    - **If the test lamp turns ON and OFF**

6. Test or replace the appropriate Q17 Fuel Injector.

Component Testing

Fuel Injector Diagnosis

Repair Instructions

Perform the **Diagnostic Repair Verification** after completing the repair.

- **Fuel Injector Replacement**
- **Control Module References** for Engine Control Module replacement, programming, and setup

DTC P0231, P0232, OR P023F

Diagnostic Instructions

- Perform the **Diagnostic System Check - Vehicle** prior to using this diagnostic procedure.
- Review **Strategy Based Diagnosis** for an overview of the diagnostic approach.
- **Diagnostic Procedure Instructions** provides an overview of each diagnostic category.

DTC Descriptors

DTC P0231

Fuel Pump Control Circuit Low Voltage

DTC P0232

Fuel Pump Control Circuit High Voltage

DTC P023F

Fuel Pump Control Circuit

Diagnostic Fault Information

Circuit	Short to Ground	Open/High Resistance	Short to Voltage	Signal Performance
Control	P0231	P023F	P0232	P023F, P2635
Low Reference	-	P023F	-	P023F, P2635

Circuit/System Description

The engine control module (ECM) supplies voltage to the fuel pump control module when the ECM detects that the ignition is on. The voltage from the ECM to the fuel pump control module remains active for 2 seconds,

unless the engine is in crank or run. While this voltage is being received, the fuel pump control module supplies a varying voltage to the fuel tank pump module in order to maintain the desired fuel line pressure.

Conditions for Running the DTC

P0231, P023F

The ignition voltage is between 9-18 V.

P0232

The control enable voltage signal supplied for the ECM to fuel pump control module is inactive for 4 seconds after engine has been shut off.

Conditions for Setting the DTC

The fuel pump control module detects a fault on the fuel pump voltage circuit that is less than 11 V or greater than 18 V.

Action Taken When the DTC Sets

DTCs P0231, P0232, and P023F are Type A DTCs.

Conditions for Clearing the DTC

DTCs P0231, P0232, and P023F are Type A DTCs.

Diagnostic Aids

Using the Failure Records data may help locate an intermittent condition. If you cannot duplicate the DTC, the information in the Failure Records can help determine how many miles since the DTC set. The Fail Counter and Pass Counter can help determine how many ignition cycles that the diagnostic test reported a pass and/or a fail.

On vehicles equipped with a high pressure mechanical pump on Direct Fuel Injection engines, the vehicle may continue to run even though the pump in the fuel tank is not operating.

Reference Information

Schematic Reference

Engine Controls Schematics

Connector End View Reference

COMPONENT CONNECTOR END VIEWS - INDEX

Description and Operation

Fuel System Description

Electrical Information Reference

- **Circuit Testing**
- **Connector Repairs**
- **Testing for Intermittent Conditions and Poor Connections**
- **Wiring Repairs**

DTC Type Reference

Powertrain Diagnostic Trouble Code (DTC) Type Definitions

Scan Tool Reference

Control Module References for scan tool information

Circuit/System Testing

1. Ignition OFF and all vehicle systems OFF, disconnect the harness connector at the A7 Fuel Pump and Level Sensor Assembly. It may take up to 2 minutes for all vehicle systems to power down.
2. Test for less than 10 ohms between the low reference circuit terminal 2 and ground.
    - **If 10 ohms or greater**
    1. Ignition OFF, disconnect the harness connector at the K27 fuel pump control module.
    2. Test for less than 2 ohms in the low reference circuit end to end.
        - If 2 ohms or greater, repair the open/high resistance in the circuit.
        - If less than 2 ohms, replace the K27 fuel pump control module.
    - **If less than 10 ohms**
3. Connect a test lamp between the control circuit terminal 1 and the low reference circuit terminal 2.
4. Ignition ON.
5. Verify the test lamp turns ON and OFF when commanding the fuel pump ON and OFF using the scan tool ECM fuel pump enable control function.
    - **If the test lamp is always OFF**
    1. Ignition OFF, disconnect the harness connector at the K27 fuel pump control module.
    2. Test for infinite resistance between the control circuit and ground.
        - If less than infinite resistance, repair the short to ground on the circuit.
        - If infinite resistance
    3. Test for less than 2 ohms in the control circuit end to end.
        - If 2 ohms or greater, repair the open/high resistance in the circuit.
        - If less than 2 ohms, replace the K27 fuel pump control module.
    - **If the test lamp is always ON**

1. Ignition OFF, disconnect the harness connector at the K27 fuel pump control module, ignition ON.
2. Test for less than 1 V between the control circuit and ground.
    - If 1 V or greater, repair the short to voltage on the circuit.
    - If less than 1 V, replace the K27 fuel pump control module.
- **If the test lamp turns ON and OFF**

6. Replace the A7 Fuel Pump and Level Sensor Assembly.

Repair Instructions

Perform the **Diagnostic Repair Verification** after completing the repair.

- **Fuel Tank Fuel Pump Module Replacement**
- **Control Module References** for fuel pump control module replacement, programming and setup

DTC P0234 OR P0299

Diagnostic Instructions

- Perform the **Diagnostic System Check - Vehicle** prior to using this diagnostic procedure.
- Review **Strategy Based Diagnosis** for an overview of the diagnostic approach.
- **Diagnostic Procedure Instructions** provides an overview of each diagnostic category.

DTC Descriptors

DTC P0234

Engine Overboost

DTC P0299

Engine Underboost

Circuit Description

The boost pressure sensor is integrated with the turbocharger boost/intake air temperature sensor. The boost pressure sensor measures the range of pressures between the turbocharger and the throttle body. The sensor used on this engine is a three atmosphere sensor. Pressure in this portion of the induction system is affected by engine speed, throttle opening, turbocharger boost pressure, Intake air temperature (IAT), barometric pressure (BARO), and the efficiency of the charge air cooler.

The sensor provides a signal voltage to the engine control module (ECM), relative to the pressure changes. Under normal operation the greatest pressure that can exist in this portion of the induction system at ignition ON, engine OFF is equal to the BARO. When the engine is operated at wide-open throttle (WOT) the turbocharger can increase the pressure to near 240 kPa (34.8 psi). The pressure is equal to the BARO when the engine is idling or decelerating.

Conditions for Running the DTC

- DTCs P0010, P0011, P0013, P0014, P0033, P0034, P0035, P0068, P0101, P0102, P0103, P0106, P0107, P0108, P0111, P0112, P0113, P0114, P0116, P0117, P0118, P0119, P0121, P0122, P0123, P0128, P0222, P0223, P0234, P0236, P0237, P0238, P0243, P0245, P0246, P0299, P16F3, P2101, P2227, P2228, P2229 or P2230 are not set.
- Engine speed between 2, 450-6, 000 RPM.
- Desired boost pressure between 135-220 kPa (19.58-31.90 PSI).
- Ambient pressure between 60-120 kPa (8.70-17.40 PSI).
- Coolant temperature between -40 to +120°C (-40 to +248°F)
- Intake air temperature between -40 to +80°C (-40 to +176°F)

Conditions for Setting the DTC

P0234

The ECM detects that the actual boost pressure is greater than the desired boost pressure for greater than 2 s.

P0299

The ECM detects that the actual boost pressure is less than the desired boost pressure for greater than 2.5 s.

Action Taken When the DTC Sets

DTCs P0234 and P0299 are Type B DTCs.

The ECM will disable boost control and limit the system to mechanical boost only, resulting in a substantial decrease in engine power.

Conditions for Clearing the DTC

DTCs P0234 and P0299 are Type B DTCs.

Diagnostic Aids

- The charged air cooler is connected to the turbocharger and to the throttle body by flexible duct work that requires the use of special high torque fastening clamps. These clamps cannot be substituted. In order to prevent any type of air leak when servicing the duct work, the tightening specifications and proper positioning of the clamps is critical, and must be strictly adhered to.
- An excessively worn wastegate pivot pin may allow the wastegate to open slightly when commanded closed, which may result in P0299 being set.

Reference Information

Schematic Reference

Engine Controls Schematics

Connector End View Reference

COMPONENT CONNECTOR END VIEWS - INDEX

Description and Operation

Turbocharger System Description

Electrical Information Reference

- **Circuit Testing**
- **Connector Repairs**
- **Testing for Intermittent Conditions and Poor Connections**
- **Wiring Repairs**

DTC Type Reference

Powertrain Diagnostic Trouble Code (DTC) Type Definitions

Scan Tool Reference

Control Module References for scan tool information

Special Tools

GE-23738-A Vacuum Pump

For equivalent regional tools, refer to **Special Tools** .

Circuit/System Verification

1. Ignition ON.
2. Verify DTC P0033, P0034, P0035, P0236, P0237, P0238, P0243, P0245, or P0246 is not set.
   - **If any of the DTCs are set**

     Refer to **Diagnostic Trouble Code (DTC) List - Vehicle** .

   - **If none of the DTCs are set**
3. Verify the scan tool BARO Sensor parameter is within the range specified in the **Altitude Versus Barometric Pressure** table for the current testing altitude.
   - **If the parameter is not within the range specified in the table.**

     Refer to **DTC P2227-P2230** .

- **If the parameter is within the range specified in the table.**

4. Verify the scan tool MAP Sensor and BARO Sensor parameters are within 3 kPa (0.4 psi).
   - **If the parameters are not within 3 kPa (0.4 psi).**

     Refer to **DTC P0106**.

   - **If the parameters are within 3 kPa (0.4 psi).**
5. Verify the scan tool Boost Pressure Sensor and BARO Sensor parameters are within 3 kPa (0.4 psi).
   - **If the parameters are not within 3 kPa (0.4 psi).**

     Refer to **DTC P0236**.

   - **If the parameters are within 3 kPa (0.4 psi).**
6. Verify a click is heard or felt from the Q40 turbocharger bypass valve solenoid when commanding the Turbocharger Bypass Solenoid Valve between Active and Inactive with a scan tool.
   - **If a click is not heard or felt**

     Refer to Circuit/System Testing below.

   - **If a click is heard or felt**
7. Verify a series of clicks, which increase in frequency, are heard or felt from the Q42 turbocharger wastegate solenoid valve when commanding the Turbocharger Wastegate Solenoid Valve between 15-100 % with a scan tool.
   - **If a series of clicks in increasing frequency are not heard or felt**

     Refer to Circuit/System Testing below.

   - **If a series of clicks in increasing frequency is heard or felt**
8. Verify the scan tool MAP Sensor parameter and the Boost Pressure Sensor parameter are within 20 kPa (2.9 psi) during a WOT acceleration at the time of the 1-2 shift.
   - **If the parameters are not within 20 kPa (2.9 psi)**

     Refer to Circuit/System Testing below.

   - **If the parameter are within 20 kPa (2.9 psi)**
9. Operate the vehicle within the Conditions for Running the DTC. You may also operate the vehicle within the conditions that you observed from the Freeze Frame/Failure Records data.
10. Verify a DTC does not set.
    - **If a DTC sets**

      Refer to Circuit/System Testing below

    - **If a DTC does not set**

11. All OK

Circuit/System Testing

1. Verify the conditions listed below do not exist:
    - Loose clamps, cracks or other damage in the air intake duct system
    - Collapsed or restricted intake duct system
    - Restricted air filter
    - Any air flow restriction
    - Any air leak between the turbocharger and the throttle body, including the charge air cooler assembly
    - Splits, kinks or improper connections at the vacuum hoses
    - Any vacuum leak
    - Restricted, leaking or incorrect routing of hoses going to the components listed below:
        - Turbocharger wastegate solenoid valve
        - Turbocharger bypass solenoid valve
        - Intake manifold and turbocharger vacuum reservoir on the bottom of intake manifold
        - Turbocharger
        - Turbocharger wastegate actuator
        - Turbocharger bypass valve
    - Missing, restricted or leaking exhaust components. Refer to **Restricted Exhaust**
    - Exhaust leak between the turbocharger and the exhaust manifold
    - Restricted turbocharger oil supply line
    - Loose or incorrect installation of any components
        - **If a condition exists**

          Repair or replace the affected component as necessary.

        - **If none of the conditions exist**

NOTE: The hose is located between the air cleaner outlet hose and the turbocharger compressor.

2. Ignition OFF, disconnect the turbocharger wastegate solenoid valve hose at the turbocharger and apply 51 kPa (15 inches Hg) of vacuum to the hose with the **GE 23738-A** . Ignition ON.
3. Verify the pressure decreases to 0 kPa (0 inches Hg) when commanding the Turbocharger Wastegate Solenoid Valve to 15 % with a scan tool.
    - **If the pressure does not decrease to 0 kPa (0 inches Hg)**

      Replace the Q42 turbocharger wastegate solenoid valve

- **If the pressure decreases to 0 kPa (0 inches Hg)**

4. Connect the turbocharger wastegate solenoid valve hose to the turbocharger.
5. Disconnect the wastegate solenoid valve hose from the turbocharger wastegate actuator and connect the exhaust/pressure port of the **GE 23738-A** , or a suitable hand pressure pump, to the actuator.
6. Verify the wastegate actuator rod moves when applying pressure to the actuator.
   - **If the actuator does not move**
     1. Disconnect the wastegate actuator arm from the wastegate.
     2. Verify the wastegate actuator rod moves when applying pressure to the actuator.
        - If the actuator does not move, replace the turbocharger wastegate actuator
        - If the actuator moves, replace the turbocharger
   - **If the actuator moves**
7. Disconnect the Q40 Turbocharger Bypass Solenoid Valve vacuum supply hose at the intake manifold.
8. Connect the **GE 23738-A** to the manifold.

NOTE: Allow engine idle to stabilize before continuing.

9. Engine Idling, verify the vacuum gauge displays between 45-67 kPa (13-20 inches Hg) of vacuum.
   - **If not within the specified range**

     Repair the vacuum source.

   - **If within the specified range**

NOTE: The vacuum reservoir (tank) is integral to intake manifold and is located at the bottom of the manifold.

10. Ignition OFF, disconnect the vacuum hose at the turbocharger vacuum reservoir.
11. Connect the **GE 23738-A** to the vacuum reservoir and apply 34 kPa (10 inches Hg) of vacuum.
12. Verify the reservoir holds vacuum for at least 10 s.
    - **If the vacuum is not held for at least 10 s**

      Replace the intake manifold

    - **If the vacuum is held for at least 10 s**
13. Connect the vacuum hose to the reservoir.

NOTE: Disconnect the Q40 Turbocharger Bypass Solenoid Valve vacuum supply hose at the intake manifold if not still disconnected from step 7.

14. Disconnect the vacuum hose at the turbocharger bypass valve and connect the **GE 23738-A** to the hose.
15. Engine idling, command the Turbocharger Bypass Solenoid Valve ON and OFF with a scan tool.

16. Verify the vacuum toggles between 0 kPa (0 inches Hg) to greater than 45 kPa (13 inches Hg).
    - **If not within the specified range**

      Replace the Q40 turbocharger bypass solenoid valve

    - **If within the specified range**
17. Connect any hoses that were disconnected during previous steps.
18. Verify the conditions listed below do not exist with the turbocharger assembly. Refer to **Turbocharger Cleaning and Inspection**
    - Worn or damaged wastegate pivot pin
    - Cracked, damaged or worn turbine blades
    - Restricted wastegate, turbine, ports or passages
    - Foreign material
    - Damaged or restricted bypass valve assembly.
    - **If a condition exists**

      Repair or replace the turbocharger as necessary

    - **If none of the conditions exist**
19. Replace the turbocharger.

Repair Instructions

Perform the **Diagnostic Repair Verification** after completing the repair.

- **Charge Air Bypass Regulator Solenoid Valve Replacement**
- **Intake Manifold Replacement**
- **Turbocharger Replacement**
- **Turbocharger Wastegate Regulator Solenoid Valve Replacement**
- **Control Module References** for ECM replacement, programming and setup

DTC P0236

Diagnostic Instructions

- Perform the **Diagnostic System Check - Vehicle** prior to using this diagnostic procedure.
- Review **Strategy Based Diagnosis** for an overview of the diagnostic approach.
- **Diagnostic Procedure Instructions** provides an overview of each diagnostic category.

DTC Descriptor

DTC P0236

Turbocharger Boost Sensor Performance

Circuit Description

The boost pressure sensor is integrated with the turbocharger boost/intake air temperature sensor. The boost pressure sensor measures the range of pressures between the turbocharger and the throttle body. The sensor used on this engine is a three atmosphere sensor. Pressure in this portion of the induction system is affected by engine speed, throttle opening, turbocharger boost pressure, Intake air temperature (IAT), barometric pressure (BARO), and the efficiency of the charge air cooler.

The sensor provides a signal voltage to the engine control module (ECM), relative to the pressure changes. Under normal operation the greatest pressure that can exist in this portion of the induction system at ignition ON, engine OFF is equal to the BARO. When the engine is operated at wide-open throttle (WOT) the turbocharger can increase the pressure to near 240 kPa (34.8 psi). The pressure is equal to the BARO when the engine is idling or decelerating.

Conditions for Running the DTC

- DTC P0096, P0097, P0098, P0102, P0103, P0107, P0108, P0111, P0112, P0113, P0116, P0117, P0118, P0119, P0128, P0237, P0238, P0335, P0336, P2227, P2228, P2229, or P2230 is not active.
- Engine speed is between 400-7, 000 RPM.
- Engine Coolant Temperature (ECT) is between -7 to +125°C (19.4-257°F).
- Intake Air Temperature (IAT) is between -20 to +125°C (-4 to +257°F).
- The DTC runs continuously when the above conditions have been met.

OR

- DTC P0106, P0107, P0108, P0237, P0238, P2227, P2228, P2229, P2230, or P2610 s not active.
- DTC P0107, P0108, P0237, P0238, P2228, or P2229 is not pending.
- Ignition is ON.
- Engine is OFF
- The time between current ignition cycle and the last time the engine was running is greater than 6 s.
- The DTC runs continuously when the above conditions have been met.

Conditions for Setting the DTC

- The ECM detects that various combinations of Turbocharger Intake Flow Rationality Diagnostic Failure models, derived from engine speed, the BARO sensor, the MAF sensor, the MAP sensor, the throttle position sensor and the turbocharger boost pressure sensor have failed when the engine is running.

OR

- The ECM detects that the boost pressure sensor signal is less than 50 kPa (7.3 psi) or greater than 115 kPa (16.7 psi) when the ignition is ON and the engine is NOT rotating.

Action Taken When the DTC Sets

- DTC P0236 is a Type B DTC.
- The ECM will disable boost control and limit the system to mechanical boost only, resulting in a substantial decrease in engine power.

Conditions for Clearing the MIL/DTC

DTC P0236 is a Type B DTC.

Diagnostic Aids

- The charge air cooler is connected to the turbocharger and to the throttle body by flexible duct work that requires the use of special high torque fastening clamps. These clamps cannot be substituted. In order to prevent any type of air leak when servicing the duct work, the tightening specifications and proper positioning of the clamps is critical, and must be strictly adhered to.
- Use a smoke generating device or a solution of dish soap and water in a spray bottle to pinpoint any suspected air leaks in the induction system and in the charge air cooler assembly.

Reference Information

Schematic Reference

Engine Controls Schematics

Connector End View Reference

COMPONENT CONNECTOR END VIEWS - INDEX

Description and Operation

Turbocharger System Description

Electrical Information Reference

- **Circuit Testing**
- **Connector Repairs**
- **Testing for Intermittent Conditions and Poor Connections**
- **Wiring Repairs**

DTC Type Reference

Powertrain Diagnostic Trouble Code (DTC) Type Definitions

Scan Tool Reference

Control Module References for scan tool information

Circuit/System Verification

1. Verify that DTC P0641 is not set.
   - **If the DTC is set**

     Refer to **DTC P0641, P0651, P0697, or P06A3 (ECM)** .

   - **If the DTC is not set**
2. If you were sent here from DTC P0068, P0101, P0106, P0121, or P1101, refer to Circuit/System Testing below.
3. Ignition ON.
4. Verify the scan tool Throttle Body Idle Airflow Compensation parameter is less than 90%.
   - **90% or greater**

     Refer to **Throttle Body Inspection and Cleaning** .

   - **If less than 90%**
5. Verify the scan tool Throttle Position Sensors 1 and 2 Agree/Disagree parameter displays Agree while performing the Throttle Sweep Test with a scan tool.
   - **If Disagree**

     Refer to **DTC P0121-P0123, P0222, P0223, or P2135 (LUV)**.

   - **If Agree**
6. Verify the scan tool BARO parameter is within the range specified in the **Altitude Versus Barometric Pressure** table, for the current vehicle testing altitude.
   - **BARO is not in range**

     Refer to **DTC P2227-P2230** .

   - **BARO is within range**
7. Verify the scan tool MAP Sensor pressure and BARO parameters are within 3 kPa (0.4 psi).
   - **The parameters are not within 3 kPa (0.4 psi).**

     Refer to **DTC P0106**.

   - **The parameters are within 3 kPa (0.4 psi).**
8. Engine idling.
9. Verify the scan tool MAP Sensor pressure parameter is between 26-52 kPa (3.8-7.5 psi) and changes with accelerator pedal input.
   - **If not between 26-52 kPa (3.8-7.5 psi) or does not change**

     Refer to **DTC P0106**.

- **If between 26-52 kPa (3.8-7.5 psi) and changes**

10. Verify the scan tool MAF Sensor g/s parameter changes smoothly and gradually as the engine speed is increased and decreased while performing the actions listed below.
    1. Engine idling
    2. Perform the scan tool snapshot function.
    3. Increase the engine speed slowly to 3, 000 RPM and then back to idle.
    4. Exit from the scan tool snapshot and review the data.
    5. Observe the MAF Sensor parameter frame by frame with a scan tool.
    - **The MAF Sensor parameter does not change smoothly and gradually**

      Refer to **DTC P0101**.

    - **The MAF Sensor parameter changes smoothly and gradually**
11. Verify the scan tool Boost Pressure Sensor pressure and BARO parameters are within 3 kPa (0.4 psi).
    - **The parameters are not within 3 kPa (0.4 psi).**

      Refer to Circuit/System Testing below

    - **The parameters are within 3 kPa (0.4 psi).**
12. Verify the scan tool MAP Sensor parameter and the Boost Pressure Sensor parameter are within 20 kPa (2.9 psi) during a WOT acceleration at the time of the 1-2 shift.
    - **The parameters are not within 20 kPa (2.9 psi)**

      Refer to Circuit/System Testing below.

    - **The parameters are within 20 kPa (2.9 psi)**
13. Operate the vehicle within the Conditions for Running the DTC. You may also operate the vehicle within the conditions that you observed from the Freeze Frame/Failure Records data.
14. Verify a DTC does not set.
    - **If a DTC sets**

      Refer to Circuit/System Testing below.

    - **If a DTC does not set**
15. All OK.

Circuit/System Testing

1. Verify that DTC P0237 or P0238 is not set.
    - **If a DTC is set**

      Refer to **DTC P0237 or P0238**.

- **If none of the DTCs are set**

2. Verify the conditions listed below do not exist:
   - Loose clamps, cracks, or other damage in the air intake duct system
   - Collapsed or restricted air intake duct system
   - Restricted air filter
   - Splits, kinks or improper connections at the vacuum hoses
   - Missing, restricted or leaking exhaust components - Refer to **Symptoms - Engine Exhaust** .
   - Vacuum leaks at the intake manifold and throttle body
   - **If a condition exists**

     Repair as necessary.

   - **If none of the conditions exist**
3. Replace the B111B turbocharger boost/intake air temperature sensor.

Repair Instructions

Perform the **Diagnostic Repair Verification** after completing the repair.

- **Intake Air Pressure and Temperature Sensor Replacement** for turbocharger boost/intake air temperature sensor replacement.
- **Control Module References** for engine control module replacement, programming, and setup

DTC P0237 OR P0238

Diagnostic Instructions

- Perform the **Diagnostic System Check - Vehicle** prior to using this diagnostic procedure.
- Review **Strategy Based Diagnosis** for an overview of the diagnostic approach.
- **Diagnostic Procedure Instructions** provides an overview of each diagnostic category.

DTC Descriptors

DTC P0237

Turbocharger Boost Sensor Circuit Low Voltage

DTC P0238

Turbocharger Boost Sensor Circuit High Voltage

Diagnostic Fault Information

	Short to	Open/High	Short to	

Circuit	Ground	Resistance	Voltage	Signal Performance
5 V Reference	P0236, P0237, P0340, P0365, P0452, P0532, P0641, P2227	P0236, P0237, P2227	P0236, P0238, P0453, P0641, P2227	P0236
Intake Air Pressure Signal	P0236, P0237, P2227	P0236, P0237, P2227	P0236, P0238, P2227	P0236
Low Reference	-	P0098, P0236, P0238, P2227	-	-

Typical Scan Tool Data

Boost Pressure Sensor

Circuit	Short to Ground	Open	Short to Voltage
Parameter Normal Range: BARO to 240 kPa (34.8 psi) **Operating Conditions:** Engine running			
5 V Reference	0 kPa (0 psi)	0 kPa (0 psi)	269 kPa (39 psi)
Boost Pressure Signal	0 kPa (0 psi)	0 kPa (0 psi)	269 kPa (39 psi)
Low Reference	-	267 kPa (38.7 psi)	-

Circuit Description

The boost pressure sensor is integrated with the turbocharger boost/intake air temperature sensor. The boost pressure sensor measures the range of pressures between the turbocharger and the throttle body. The sensor used on this engine is a three atmosphere sensor. Pressure in this portion of the induction system is affected by engine speed, throttle opening, turbocharger boost pressure, intake air temperature (IAT), barometric pressure (BARO), and the efficiency of the charge air cooler.

The sensor provides a signal voltage to the engine control module (ECM), relative to the pressure changes. Under normal operation the greatest pressure that can exist in this portion of the induction system at ignition ON, engine OFF is equal to the BARO. When the engine is operated at wide-open throttle (WOT) the turbocharger can increase the pressure to near 240 kPa (34.8 psi). The pressure is equal to the BARO when the engine is idling or decelerating.

Conditions for Running the DTC

- Ignition is ON or the engine is running.
- The DTCs run continuously when the above conditions have been met.

Conditions for Setting the DTC

P0237

The ECM detects that the boost pressure sensor voltage is less than 1.0 V for greater than 5 s.

P0238

The ECM detects that the boost pressure sensor voltage is greater than 4.7 V for greater than 5 s.

Action Taken When the DTC Sets

- DTCs P0237 and P0238 are Type B DTCs.
- The ECM will disable boost control and limit the system to mechanical boost only, resulting in a substantial decrease in engine power.

Conditions for Clearing the MIL/DTC

DTCs P0237 and P0238 are Type B DTCs.

Reference Information

Schematic Reference

Engine Controls Schematics

Connector End View Reference

COMPONENT CONNECTOR END VIEWS - INDEX

Description and Operation

Turbocharger System Description

Electrical Information Reference

- **Circuit Testing**
- **Connector Repairs**
- **Testing for Intermittent Conditions and Poor Connections**
- **Wiring Repairs**

DTC Type Reference

Powertrain Diagnostic Trouble Code (DTC) Type Definitions

Scan Tool Reference

Control Module References for scan tool information

Circuit/System Verification

1. Verify that DTC P0641 is not set.
    - **If the DTC is set**

Refer to **DTC P0641, P0651, P0697, or P06A3 (ECM)** .

- **If the DTC is not set**

2. Verify the scan tool BARO parameter is within the range specified in the **Altitude Versus Barometric Pressure** table, for the current vehicle testing altitude.
   - **BARO is not in range.**

     Refer to **DTC P2227-P2230** .

   - **BARO is within range.**
3. Verify the scan tool Boost Pressure Sensor pressure and BARO parameters are within 3 kPa (0.4 psi).
   - **The parameters are not within 3 kPa (0.4 psi).**

     Refer to Circuit/System Testing below.

   - **The parameters are within 3 kPa (0.4 psi).**
4. Verify the scan tool MAP Sensor parameter and the Boost Pressure Sensor parameter are within 20 kPa (2.9 psi) during a WOT acceleration at the time of the 1-2 shift.
   - **The parameters are not within 20 kPa (2.9 psi).**

     Refer to Circuit/System Testing below.

   - **The parameters are within 20 kPa (2.9 psi).**
5. Operate the vehicle within the Conditions for Running the DTC. You may also operate the vehicle within the conditions that you observed from the Freeze Frame/Failure Records data.
6. Verify a DTC does not set.
   - **If the DTC sets**

     Refer to Circuit/System Testing below.

   - **If the DTC does not set**
7. All OK.

Circuit/System Testing

1. Ignition OFF, and all vehicle systems OFF, disconnect the harness connector at the B111B turbocharger boost/intake air temperature sensor. It may take up to 2 minutes for all vehicle systems to power down.
2. Test for less than 5 ohms between the low reference circuit terminal 1 and ground.
   - **If 5 ohms or greater**
   1. Ignition OFF, disconnect the X1 harness connector at the K20 engine control module.
   2. Test for less than 2 ohms in the low reference circuit end to end.
      - If 2 ohms or greater, repair the open/high resistance in the circuit.
      - If less than 2 ohms, replace the K20 engine control module.

- **If less than 5 ohms**

3. Ignition ON.
4. Test for 4.8-5.2 V between the 5 V reference circuit terminal 3 and ground.
   - **If less than 4.8 V**
   1. Ignition OFF, disconnect the X1 harness connector at the K20 engine control module.
   2. Test for infinite resistance between the 5 V reference circuit and ground.
      - If less than infinite resistance, repair the short to ground on the circuit.
      - If infinite resistance
   3. Test for less than 2 ohms in the 5 V reference circuit end to end.
      - If 2 ohms or greater, repair the open/high resistance in the circuit.
      - If less than 2 ohms, replace the K20 engine control module.

   NOTE: If the signal circuit is shorted to a voltage the engine control module or the sensor may be damaged.

   - **If greater than 5.2 V**
   1. Ignition OFF, disconnect the X1 harness connector at the K20 engine control module, ignition ON.
   2. Test for less than 1 V between the 5 V reference circuit and ground.
      - If 1 V or greater, repair the short to voltage on the circuit.
      - If less than 1 V, replace the K20 engine control module.
   - **If between 4.8-5.2 V**
5. Verify the scan tool Boost Pressure Sensor voltage parameter is less than 0.2 V.
   - **If 0.2 V or greater**
   1. Ignition OFF, disconnect the X1 harness connector at the K20 engine control module, ignition ON.
   2. Test for less than 1 V between the signal circuit terminal 4 and ground.
      - If 1 V or greater, repair the short to voltage on the circuit.
      - If less than 1 V, replace the K20 engine control module.
   - **If less than 0.2 V**
6. Install a 3 A fused jumper wire between the signal circuit terminal 4 and the 5 V reference circuit terminal 3.
7. Verify the scan tool Boost Pressure Sensor voltage parameter is greater than 4.5 V.
   - **If 4.5 V or less**
   1. Ignition OFF, remove the jumper wire, disconnect the X1 harness connector at the K20 engine control module.
   2. Test for infinite resistance between the signal circuit terminal 4 and ground.
      - If less than infinite resistance, repair the short to ground on the circuit.
      - If infinite resistance
   3. Test for less than 2 ohms in the signal circuit end to end.

- If 2 ohms or greater, repair the open or high resistance in the circuit.
- If less than 2 ohms, replace the K20 engine control module.

- **If greater than 4.5 V**

8. Test or replace the B111B turbocharger boost/intake air temperature sensor.

Repair Instructions

Perform the **Diagnostic Repair Verification** after completing the repair.

- **Intake Air Pressure and Temperature Sensor Replacement** for turbocharger boost/intake air temperature sensor replacement
- **Control Module References** for ECM replacement, programming, and setup

DTC P0243, P0245, OR P0246

Diagnostic Instructions

- Perform the **Diagnostic System Check - Vehicle** prior to using this diagnostic procedure.
- Review **Strategy Based Diagnosis** for an overview of the diagnostic approach.
- **Diagnostic Procedure Instructions** provides an overview of each diagnostic category.

DTC Descriptors

DTC P0243

Turbocharger Wastegate Solenoid Valve Control Circuit

DTC P0245

Turbocharger Wastegate Solenoid Valve Control Circuit Low Voltage

DTC P0246

Turbocharger Wastegate Solenoid Valve Control Circuit High Voltage

Diagnostic Fault Information

Circuit	Short to Ground	Open/High Resistance	Short to Voltage	Signal Performance
Ignition Voltage Circuit	P0030, P0034, P0036, P0134, P0135, P0245, P0443, P0598*	P0030, P0033, P0034, P0036, P0134, P0135, P0140, P0141, P0243, P0245, P0443, P0597	-	-

Control Circuit	P0245	P0243	P0010, P0013, P0246, P0443, P0690	P0243
* Ignition fuse opens.				

Circuit/System Description

The BorgWarner™ dual scroll turbocharger incorporates a wastegate that is controlled by a pressure differential, that is determined by the engine control module (ECM) by means of a pulse width modulation (PWM) solenoid, in order to regulate the pressure ratio of the compressor. A charge air bypass valve also controlled by the ECM by utilizing a remotely mounted solenoid is integrated into the bypass valve to prevent compressor surging and damage from vibrations by opening during abrupt closed throttle conditions. When the bypass valve is open during closed throttle deceleration conditions, the bypass valve allows the air to recirculate in the turbocharger and maintain compressor speed. Within a calibrated range during the closed throttle event, or upon a wide open throttle command the bypass valve will then close to optimize turbo response. The turbocharger wastegate actuator has the following circuits:

- Ignition voltage
- Turbocharger wastegate solenoid control

At idle the turbocharger wastegate solenoid parameter is commanded to 0% by the ECM. When the engine load and RPM first increases under a wide open throttle, the turbocharger wastegate solenoid parameter should briefly be commanded as great as 90-100%. When the proper level of boost pressure is attained, the ECM will decrease the PWM of the solenoid to a range of 65-85%. As soon as the throttle closes the ECM will command the turbocharger wastegate solenoid parameter back to 0%, in order to allow the turbocharger waste gate to open from the air pressure ratio differential, there by reducing the speed of the turbine.

Conditions for Running the DTC

- Ignition ON or engine running.
- The battery voltage is between 11-32 V.
- This DTC runs continuously within the enabling conditions.

Conditions for Setting the DTC

The ECM detects an open, a short to ground, or a short to voltage on the turbocharger wastegate solenoid control circuit for greater than 0.5 s.

Action Taken When the DTC Sets

DTCs P0243, P0245 and P0246 are Type B DTCs.

Conditions for Clearing the DTC

DTCs P0243, P0245 and P0246 are Type B DTCs.

Reference Information

Schematic Reference

Engine Controls Schematics

Connector End View Reference

COMPONENT CONNECTOR END VIEWS - INDEX

Description and Operation

Turbocharger System Description

Electrical Information Reference

- **Circuit Testing**
- **Connector Repairs**
- **Testing for Intermittent Conditions and Poor Connections**
- **Wiring Repairs**

DTC Type Reference

Powertrain Diagnostic Trouble Code (DTC) Type Definitions

Scan Tool Reference

Control Module References for scan tool information

Circuit/System Verification

1. Ignition ON
2. Verify a series of clicks, which increase in frequency, are heard or felt from the Q42 Turbocharger Wastegate Solenoid Valve when commanding the Turbocharger Wastegate Solenoid Valve between 15-100 % with a scan tool.
    - **If a series of clicks in increasing frequency are not heard or felt**

      Refer to Circuit/System Testing below.

    - **If a series of clicks in increasing frequency is heard or felt**
3. Verify the parameters listed below do not display Malfunction when commanding the Turbocharger Wastegate Solenoid Valve between 15-100 % with a scan tool.
    - Turbocharger Wastegate Solenoid Valve Control Circuit High Voltage Test Status
    - Turbocharger Wastegate Solenoid Valve Control Circuit Open Test Status
    - Turbocharger Wastegate Solenoid Valve Control Circuit Low Voltage Test Status
    - **If Malfunction is displayed**

Refer to Circuit/System Testing below.

- **If Malfunction is not displayed**

4. Operate the vehicle within the Conditions for Running the DTC. You may also operate the vehicle within the conditions that you observed from the Freeze Frame/Failure Records data.
5. Verify a DTC does not set.
   - **If a DTC sets**

     Refer to Circuit/System Testing below

   - **If a DTC does not set**
6. All OK

Circuit/System Testing

1. Ignition OFF, disconnect the harness connector at the Q42 Turbocharger Wastegate Solenoid Valve. Ignition ON.
2. Verify a test lamp illuminates between the ignition circuit terminal 2 and ground.
   - **If the test lamp does not illuminate and the circuit fuse is good**
   1. Ignition OFF, remove the test lamp.
   2. Test for less than 2 ohms in the ignition circuit end to end.
      - If 2 ohms or greater, repair the open/high resistance in the circuit.
      - If less than 2 ohms, verify the fuse is not open and there is voltage at the fuse.
   - **If the test lamp does not illuminate and the circuit fuse is open**
   1. Ignition OFF, remove the test lamp.

      NOTE: An internal short in any component supplied by the fuse may cause the fuse to open and set a DTC when the component is activated.

   2. Test for infinite resistance between the ignition circuit and ground.
      - If less than infinite resistance, repair the short to ground on the circuit.
      - If infinite resistance, test all components connected to the ignition voltage circuit for a short and replace as necessary.
   - **If the test lamp illuminates**
3. Remove the test lamp.
4. Verify the scan tool Turbocharger Wastegate Solenoid Valve Control Circuit Low Voltage Test Status parameter is OK.
   - **If OK is not displayed**
   1. Ignition OFF, disconnect the harness connector at the K20 Engine Control Module.
   2. Test for infinite resistance between the control circuit and ground.
      - If less than infinite resistance, repair the short to ground on the circuit.

- If infinite resistance, replace the K20 Engine Control Module.
- **If OK is displayed**

5. Verify the scan tool Turbocharger Wastegate Solenoid Valve Control Circuit High Voltage Test Status parameter is OK.
   - **If OK is not displayed**
   1. Ignition OFF, disconnect the harness connector at the K20 Engine Control Module, ignition ON.
   2. Test for less than 1 V between the control circuit and ground.
      - If 1 V or greater, repair the short to voltage on the circuit.
      - If less than 1 V, replace the K20 Engine Control Module.
   - **If OK is displayed**
6. Install a 3 A fused jumper wire between the control circuit terminal 1 and the ignition circuit terminal 2.
7. Verify the scan tool Turbocharger Wastegate Solenoid Valve Control Circuit High Voltage Test Status parameter is Malfunction.
   - **If Malfunction is not displayed**
   1. Ignition OFF, remove the jumper wire, disconnect the harness connector at the K20 Engine Control Module.
   2. Test for less than 2 ohms in the control circuit end to end.
      - If 2 ohms or greater, repair the open/high resistance in the circuit.
      - If less than 2 ohms, replace the K20 Engine Control Module.
   - **If Malfunction is displayed**
8. Test or replace the Q42 Turbocharger Wastegate Solenoid Valve.

Repair Instructions

Perform the **Diagnostic Repair Verification** after completing the repair.

- **Turbocharger Wastegate Regulator Solenoid Valve Replacement**
- **Control Module References** for ECM replacement, programming and setup

DTC P025A

Diagnostic Instructions

- Perform the **Diagnostic System Check - Vehicle** prior to using this diagnostic procedure.
- Review **Strategy Based Diagnosis** for an overview of the diagnostic approach.
- **Diagnostic Procedure Instructions** provides an overview of each diagnostic category.

DTC Descriptor

DTC P025A

Fuel Pump Control Module Enable Circuit

Diagnostic Fault Information

Circuit	Short to Ground	Open/High Resistance	Short to Voltage	Signal Performance
Control	P025A	P025A	-	P025A

Circuit/System Description

The engine control module (ECM) supplies voltage to the fuel pump control module when the ECM detects that the ignition is on. The voltage from the ECM to the fuel pump control module remains active for 2 seconds, unless the engine is in crank or run. While this voltage is being received, the fuel pump control module supplies a varying voltage to the fuel tank pump module in order to maintain the desired fuel line pressure.

Conditions for Running the DTC

The ignition is ON.

Conditions for Setting the DTC

The serial data message from the ECM to the fuel pump control module does not agree with the state of the control enable voltage signal supplied from the ECM to the fuel pump control module for more than 2 seconds.

Action Taken When the DTC Sets

DTC P025A is a Type A DTC.

Conditions for Clearing the DTC

DTC P025A is a Type A DTC.

Reference Information

Schematic Reference

Engine Controls Schematics

Connector End View Reference

COMPONENT CONNECTOR END VIEWS - INDEX

Description and Operation

Fuel System Description

Electrical Information Reference

- **Circuit Testing**

- **Connector Repairs**
- **Testing for Intermittent Conditions and Poor Connections**
- **Wiring Repairs**

DTC Type Reference

Powertrain Diagnostic Trouble Code (DTC) Type Definitions

Scan Tool Reference

Control Module References for scan tool information

Circuit/System Testing

NOTE: Verify that the fuel tank is not empty. Only perform this diagnostic if there is at least 2 gallons of fuel in the fuel tank. Clear the DTC, and start and run the engine. Verify that the DTC resets before proceeding with the circuit system testing. If the DTC does not reset, refer to diagnostic aids.

1. Ignition OFF and all vehicle systems OFF, disconnect the harness connector at the K27 fuel pump control module, ignition ON.
2. Connect a test lamp between the control circuit terminal 20 and ground.
3. Verify the test lamp turns ON and OFF when commanding the fuel pump ON and OFF using the scan tool ECM fuel pump enable control function.
    - **If the test lamp is always OFF**
    1. Ignition OFF, disconnect the harness connector at the K20 engine control module.
    2. Test for infinite resistance between the control circuit and ground.
        - If less than infinite resistance, repair the short to ground on the circuit.
        - If infinite resistance
    3. Test for less than 2 ohms in the control circuit end to end.
        - If 2 ohms or greater, repair the open/high resistance in the circuit.
        - If less than 2 ohms, replace the K20 engine control module.
    - **If the test lamp is always ON**
    1. Ignition OFF, disconnect the harness connector at the K20 engine control module, ignition ON.
    2. Test for less than 1 V between the control circuit and ground.
        - If 1 V or greater, repair the short to voltage on the circuit.
        - If less than 1 V, replace the K20 engine control module.
    - **If the test lamp turns ON and OFF**
4. Test or replace the K27 fuel pump control module.

Repair Instructions

Perform the **Diagnostic Repair Verification** after completing the repair.

Control Module References for ECM or fuel pump control module replacement, programming and setup

DTC P0300-P0304

Diagnostic Instructions

- Perform the **Diagnostic System Check - Vehicle** prior to using this diagnostic procedure.
- Review **Strategy Based Diagnosis** for an overview of the diagnostic approach.
- **Diagnostic Procedure Instructions** provides an overview of each diagnostic category.

DTC Descriptors

DTC P0300

Engine Misfire Detected

DTC P0301

Cylinder 1 Misfire Detected

DTC P0302

Cylinder 2 Misfire Detected

DTC P0303

Cylinder 3 Misfire Detected

DTC P0304

Cylinder 4 Misfire Detected

Circuit/System Description

The engine control module (ECM) uses information from the crankshaft position sensor and the camshaft position sensors in order to determine when an engine misfire is occurring. By monitoring variations in the crankshaft rotation speed for each cylinder, the ECM is able to detect individual misfire events. A misfire rate that is high enough can cause 3-way catalytic converter damage. The malfunction indicator lamp (MIL) will flash ON and OFF when the conditions for catalytic converter damage are present. DTCs P0301 through P0304 correspond to cylinders 1 through 4. If the ECM is able to determine that a specific cylinder is misfiring, the DTC for that cylinder will set, and the corresponding fuel injector is disabled and/or add fuel. The ECM will re-enable the fuel injector after 3 crankshaft revolutions (6 for manual transmission vehicles) to determine if a misfire is still present and either disable for 3 crankshaft revolutions (6 for manual transmission vehicles) again or stay enabled, depending on whether the misfire is still present.

Conditions for Running the DTC

- DTC 0010, P0011, P0013, P0014, P0016, P0017, P0018, P0019, P0020, P0021, P0023, P0024, P0068, P00C8, P00C9, P0101, P0102, P0103, P0106, P0107, P0108, P0111, P0112, P0113, P0114, P0117, P0118, P0119, P0122, P0123, P0191, P0192, P0193, P0222, P0223, P0335, P0336, P0340, P0341, P0345, P0346, P0365, P0366, P0390, P0391, P0601, P0604, P0606, P0651, P16A0, P16A1, P16A2, P16F3, P2101, P2135, P2227, P2228, P2229, or P2230 is not set.
- The engine speed is between 600-6 528 RPM.
- The ignition voltage is between 11-18 V.
- The engine coolant temperature (ECT) sensor is between -7 to +125°C (+19 to +257°F).
- The A/C compressor clutch is not changing states.
- The fuel tank level is greater than 15%.
- The ECM is not in fuel cut-off or deceleration fuel cut-off mode.
- The ECM is not receiving a rough road signal.
- The throttle angle is steady within 5%.
- The throttle angle is greater than 3% when the vehicle speed is greater than 5 km/h (3 MPH).
- The transmission is not changing gears.
- The antilock brake system (ABS) and the traction control system, if equipped, is not active.
- DTCs P0300, P0301, P0302, P0303, and P0304 run continuously when the above conditions are met.

Conditions for Setting the DTC

The ECM is detecting a crankshaft rotation speed variation indicating a misfire sufficient to cause emission or catalyst damaging levels to exceed mandated standards.

Action Taken When the DTC Sets

- DTCs P0300-P0304 are Type B DTCs.
- The ECM may disable up to two fuel injector's of the misfiring cylinder's when a catalyst damaging level of misfire is present. And will flash the malfunction indicator lamp (MIL).

Conditions for Clearing the DTC

DTCs P0300-P0304 are Type B DTCs.

Diagnostic Aids

- A misfire may only occur when the engine is under a load or when the engine is cold.
- A misfire DTC may be caused by an excessive vibration from sources other than the engine. Inspect for the following possible sources:
    - A tire or wheel that is out of round or out of balance
    - Variable thickness brake rotors
    - Certain rough road conditions

  - A damaged accessory drive component or belt
  - A damaged reluctor wheel
- High resistance in the circuits of the injectors may set a misfire DTC without setting an injector DTC. Test the injector circuits of the affected cylinder(s) for a high resistance if you suspect a condition.
- The MIL indicator flashes when there is an engine misfire.

Reference Information

Schematic Reference

Engine Controls Schematics

Connector End View Reference

COMPONENT CONNECTOR END VIEWS - INDEX

Electrical Information Reference

- **Circuit Testing**
- **Connector Repairs**
- **Testing for Intermittent Conditions and Poor Connections**
- **Wiring Repairs**

DTC Type Reference

Powertrain Diagnostic Trouble Code (DTC) Type Definitions

Scan Tool Reference

Control Module References for scan tool information

Special Tools

- **EL 26792** HEI Spark Tester
- **EN 36012-A** Ignition System Diagnostic Harness

For equivalent regional tools, refer to **Special Tools** .

Circuit/System Verification

NOTE: Before starting vehicle, review freeze frame data to determine if misfire sets during cold start or warmed up operation. If the vehicle has a cold start problem and the vehicle is started, the vehicle will require to be not started for many hours before next attempt to operate the vehicle within the fail conditions.

1. Engine idling at the normal operating temperature, verify there is no abnormal engine noise.
2. Verify there is no abnormal engine noise.
   - **If abnormal engine noises are present**

     Refer to **Symptoms - Engine Mechanical** .

   - **If there are no abnormal engine noises**
3. Verify no DTCs other than P0300-P0304 are set.
   - **If any DTCs other than P0300-P0304 are set**

     Refer to **Diagnostic Trouble Code (DTC) List - Vehicle** .

   - **If only DTCs P0300-P0304 are set**

     Refer to Circuit/System Testing below.

   - **If no DTCs are set**
4. Verify the scan tool Cylinder 1-4 Current Misfire Counter Misfire parameters do not increment.
   - **If Misfire Current Counters are incrementing**

     Refer to Circuit/System Testing below

   - **If Misfire Current Counters are not incrementing**
5. Engine idling.
6. Verify the engine speed changes when performing the Cylinder Power Balance Test with a scan tool.
   - **If engine speed does not change**

     Refer to Circuit/System Testing below.

   - **If engine speed does change**
7. Operate the vehicle within the Conditions for Running the DTC. You may also operate the vehicle within the conditions that you observed from the Freeze Frame/Failure Records data.
8. Verify the DTCs are not set.
   - **If any of the DTCs set**

     Refer to Circuit/System Testing below.

   - **If none of the DTCs set**
9. All OK.

Circuit/System Testing

1. Perform the **Crankshaft Position System Variation Learn** procedure. Verify the scan tool displays Learned Successful.

- **If the scan tool did not display Learned Successful**

  Inspect for the following conditions and repair as necessary:

  - Worn crankshaft main bearings
  - A damaged or misaligned reluctor wheel
  - Excessive crankshaft runout
  - Interference in the signal circuit of the crankshaft position sensor
  - The ignition switch is in the ON position until there is insufficient system voltage.
  - An ECM power disconnect with the ignition ON that may have erased the crankshaft position system variation values and set DTC P0315
  - Debris between the crankshaft position sensor and the reluctor wheel
- If the engine control module is still unable to complete the learn procedure, replace the K20 Engine Control Module..
- **If the scan tool displays Learned Successful**

2. Verify that the following conditions do not exist:
   - Vacuum hose splits, kinks, and incorrect connections
   - Engine vacuum leaks
   - Crankcase ventilation system for vacuum leaks
   - Fuel pressure that is too low or too high-Refer to **Fuel System Diagnosis** .
   - Contaminated fuel-Refer to **Alcohol/Contaminants-in-Fuel Diagnosis** .
   - Exhaust system restrictions
     - **If a condition exist**

       Repair or replace as necessary.

     - **If no conditions exist**
3. Ignition OFF, remove the K35 Ignition Coil Module and connect the **(EL 26792)** HEI Spark Tester to the coil of the misfiring cylinder.
4. Verify none of the conditions listed below exist with the boot of the K35 Ignition Coil Module:
   - Holes
   - Tears
   - Carbon tracking
   - Oil contamination
   - Water intrusion
   - **If a condition exist**

     Repair or replace as necessary.

   - **If no conditions exist**

NOTE: An erratic or weak spark is considered a no spark condition.

5. Verify the **(EL 26792)** HEI Spark Tester sparks while cranking or starting the engine.
   - **If there is no spark**

     Refer to **Electronic Ignition System Diagnosis** for diagnosis of the ignition coil.

   - **If there is spark**
6. Ignition OFF, remove the spark plug from the misfiring cylinder.
7. Exchange the suspected spark plug with another cylinder that is operating correctly.
8. Engine idling.
9. Verify the scan tool Cylinder 1-4 Current Misfire Counter parameter does not increment on the spark plug coil it was removed from.
   - **If the misfire does follow the spark plug exchange**

     Replace the spark plug.

   - **If the misfire does not follow the spark plug exchange**
10. Test or inspect for the following:
    - A lean or rich Q17 Fuel Injector-Refer to **Fuel System Diagnosis** .
    - An engine mechanical condition-Refer to **Symptoms - Engine Mechanical** .

Repair Instructions

- **Ignition Coil Replacement**
- **Spark Plug Replacement**

Repair Verification

1. If the customer concern was a flashing MIL, operate the vehicle within the conditions for running DTC P0420. Refer to **DTC P0420** .
2. Clear the DTCs with a scan tool.
3. Turn OFF the ignition for 60 s.
4. Start the engine.
5. Operate the vehicle within the conditions for running the DTC. You may also operate the vehicle within the conditions that you observed from the freeze frame/failure records.
6. If the DTC fails this ignition, a misfire still exists.

DTC P0315

Diagnostic Instructions

- Perform the **Diagnostic System Check - Vehicle** prior to using this diagnostic procedure.

- Review **Strategy Based Diagnosis** for an overview of the diagnostic approach.
- **Diagnostic Procedure Instructions** provides an overview of each diagnostic category.

DTC Descriptor

DTC P0315

Crankshaft Position System Variation Not Learned

Circuit/System Description

The crankshaft position sensor system variation learn feature is used to calculate reference period errors caused by slight tolerance variations in the crankshaft, and the crankshaft position sensor. The calculated error allows the engine control module (ECM) to accurately compensate for reference period variations. This enhances the ability of the ECM to detect misfire events over a wider range of engine speed and load.

The crankshaft position sensor system variation compensating values are stored in ECM memory after a learn procedure has been performed. If the actual crankshaft position sensor variation is not within the crankshaft position sensor system variation compensating values stored in the ECM, DTC P0300 may set.

If the crankshaft position sensor system variation values are not stored in the ECM memory, DTC P0315 sets.

Conditions for Running the DTC

- The engine is running.
- The DTC runs continuously.

Conditions for Setting the DTC

The crankshaft position sensor system variation values are not stored in the ECM memory.

Action Taken When the DTC Sets

DTC P0315 is a Type A code.

Conditions for Clearing the DTC

DTC P0315 is a Type A code.

Diagnostic Aids

This test procedure requires that the vehicle battery has passed a load test and is completely charged. Refer to **Battery Inspection/Test** .

Reference Information

Schematic Reference

Engine Controls Schematics

Connector End View Reference

COMPONENT CONNECTOR END VIEWS - INDEX

Electrical Information Reference

- **Circuit Testing**
- **Connector Repairs**
- **Testing for Intermittent Conditions and Poor Connections**
- **Wiring Repairs**

DTC Type Reference

Powertrain Diagnostic Trouble Code (DTC) Type Definitions

Scan Tool Reference

Control Module References for scan tool information

Circuit/System Testing

NOTE: The crankshaft position sensor system variation learn procedure may have to be repeated up to 5 times before the procedure is learned.

1. Perform the crankshaft position variation learn procedure. Refer to **Crankshaft Position System Variation Learn** .
2. If the crankshaft position variation learn procedure cannot be performed successfully, inspect for the following conditions:
    - Any worn crankshaft main bearings
    - A damaged or misaligned reluctor wheel
    - Excessive crankshaft runout
    - Interference in the signal circuit of the B26 Crankshaft Position Sensor
    - The ignition switch is left in the ON position, until the battery is discharged
    - An ECM power disconnect, with the ignition ON, that may have erased the crankshaft position sensor system variation values and set DTC P0315.
    - Any debris between the crankshaft position sensor and the reluctor wheel
    - If the ECM is still unable to complete the learn procedure, replace the K20 Engine Control Module.

Repair Instructions

Perform the **Diagnostic Repair Verification** after completing the diagnostic procedure.

Control Module References

2013 ENGINE PERFORMANCE

Engine Controls and Fuel - 1.4L LUV - Diagnostic Information and Procedures - Cruze

DIAGNOSTIC INFORMATION AND PROCEDURES

DTC P0324, P0326, OR P06B6

Diagnostic Instructions

- Perform the **Diagnostic System Check - Vehicle** prior to using this diagnostic procedure.
- Review **Strategy Based Diagnosis** for an overview of the diagnostic approach.
- **Diagnostic Procedure Instructions** provides an overview of each diagnostic category.

DTC Descriptor

DTC P0324

Knock Sensor Module Performance

DTC P0326

Knock Sensor Performance

DTC P06B6

Control Module Knock Sensor Processor Performance

Diagnostic Fault Information

Circuit	Short to Ground	Open/High Resistance	Short to Voltage	Signal Performance
Signal	P0327	P0325	P0328	P0326
Low Reference	P0327	-	P0325, P0328	-

Circuit/System Description

The knock sensor enables the engine control module (ECM) to control the ignition timing for the best possible performance while protecting the engine from potentially damaging levels of detonation. The knock sensor produces an alternating current (AC) voltage signal that varies depending on the vibration level during engine operation. The ECM adjusts the spark timing based on the amplitude and the frequency of the knock sensor signal. The ECM receives the knock sensor signal through a signal circuit. The ECM supplies a ground circuit to the knock sensor through a low reference circuit. The ECM also supplies a shielded ground circuit to the knock sensor. The ECM learns a knock sensor noise level at idle and uses calibrated values for the rest of the engine speed range. The ECM should monitor a normal knock sensor signal within the noise channel.

Conditions for Running the DTC

P0324, and P0326 Excessive Knock Detection Mode

- Engine speed is between 580-8 500 RPM.
- The ECT is greater than -40°C (-40°F).
- The IAT is greater than -40°C (-40°F).
- The DTCs run continuously when the above conditions are met.

P0324 and P0326 Abnormal Noise Detection Mode, Improperly Bolted Knock Sensor

- Engine speed is between 2 500-8 500 RPM.
- The ECT is greater than -40°C (-40°F).
- The IAT is greater than -40°C (-40°F).
- The DTCs run continuously when the above conditions are met.

P06B6

- Engine speed is greater than 580 RPM.
- The ECT is greater than -40°C (-40°F).
- The IAT is greater than -40°C (-40°F).
- The DTC runs continuously when the above conditions are met.

Conditions for Setting the DTC

P0324

The knock sensor signal indicates an excessive engine knock is present for greater than 10 s for at least 1 single cylinder.

P0326

- The signal indicates the sensor harness is connected, but the sensor is not properly bolted to the engine.
- The above condition exist for greater than 10 s.

  or

- The knock sensor signal indicates an excessive engine knock is present.
- The above condition exist for greater than 10 s.

P06B6

The ECM has detected an internal knock sensor processor fault.

Action Taken When the DTC Sets

- DTCs P0324, P0326 and P06B6 are Type B DTCs.
- The ignition timing is retarded to reduce the potential of engine damaging spark knock.

Conditions for Clearing the DTC

DTCs P0324, P0326 and P06B6 are Type B DTCs.

Diagnostic Aids

- Inspect the knock sensor for physical damage and proper installation. A knock sensor that is dropped or damaged may cause a DTC to set.
- Inspect the knock sensor for proper installation. A knock sensor that is loose or over torqued may cause a DTC to set. The knock sensor should be free of thread sealant.
- The knock sensor mounting surface should be free of burrs, casting flash, and foreign material.

Reference Information

Schematic Reference

Engine Controls Schematics

Connector End View Reference

COMPONENT CONNECTOR END VIEWS - INDEX

Description and Operation

Knock Sensor System Description

Electrical Information Reference

- **Circuit Testing**
- **Connector Repairs**
- **Testing for Intermittent Conditions and Poor Connections**
- **Wiring Repairs**

DTC Type Reference

Powertrain Diagnostic Trouble Code (DTC) Type Definitions

Scan Tool Reference

Control Module References for scan tool information

Circuit/System Verification

1. Ignition ON.
2. Engine running, observe the DTC information with a scan tool.
3. Verify DTC P0325, P0327, P0328 and P06B6 is not set.
   - **IF DTC P0325, P0327, or P0328 is set with P06B6**

     Refer to **DTC P0325, P0327, or P0328** for further diagnosis.

   - **If only DTC P06B6 is set**

     Verify that no external knock sensor circuit issues exist, then; replace the K20 engine control module.

   - **If none of the DTCs is set**
4. Vehicle OFF, inspect for the following:
   - The affected B68 knock sensor for physical damage. A sensor that is dropped or damaged may cause a DTC to set
   - The sensor for proper installation. A sensor that is loose or not at the correct torque may cause a DTC to set. Refer to **Fastener Tightening Specifications** .
   - The sensor mounting surface for burrs, casting flash, and foreign material
   - The sensor must be clear of hoses, brackets, and engine electrical wiring
   - Loose brackets
   - Loose or broken accessory drive belts, brackets, components
   - An engine mechanical condition-Refer to **Symptoms - Engine Mechanical**
   - **If a condition is found**

     Repair or replace component as appropriate.

   - **If no condition is found**
5. Operate the vehicle within the conditions for running the DTC. You may also operate the vehicle within the conditions that you observed from the freeze frame/failure Records data.
   - **If any of the DTCs set**

     Test or replace the B68 knock sensor.

   - **If none of the DTCs set**
6. All OK

Repair Instructions

Perform the **Diagnostic Repair Verification** after completing the diagnostic procedure.

- **Knock Sensor Replacement**
- **Control Module References** for ECM replacement, programming and setup

DTC P0325, P0327, OR P0328

Diagnostic Instructions

- Perform the **Diagnostic System Check - Vehicle** prior to using this diagnostic procedure.
- Review **Strategy Based Diagnosis** for an overview of the diagnostic approach.
- **Diagnostic Procedure Instructions** provides an overview of each diagnostic category.

DTC Descriptors

DTC P0325

Knock Sensor Circuit

DTC P0327

Knock Sensor Circuit Low Voltage

DTC P0328

Knock Sensor Circuit High Voltage

Diagnostic Fault Information

Circuit	Short to Ground	Open/High Resistance	Short to Voltage	Signal Performance
Signal	P0327	P0325	P0328	P0326
Low Reference	P0327	-	P0325, P0328	-

Circuit/System Description

The knock sensor system enables the engine control module (ECM) to control the ignition timing for the best possible performance while protecting the engine from potentially damaging levels of detonation. The knock sensor produces an alternating current (AC) voltage signal that varies depending on the vibration level during engine operation. The ECM adjusts the spark timing based on the amplitude and the frequency of the knock sensor signal. The ECM receives the knock sensor signal through a signal circuit and a low reference circuit. The ECM learns a minimum knock sensor noise level at idle and uses calibrated values for the rest of the RPM range. The ECM should monitor a normal knock sensor signal within the noise channel.

Conditions for Running the DTC

P0325

- Engine speed is between 580-8 500 RPM.
- The ECT is greater than -40°C (-40°F).
- The IAT is greater than -40°C (-40°F).

- This DTC runs continuously within the enabling conditions.
- The DTCs run continuously when the above conditions are met.

P0327 or P0328

- Engine speed is between 0-8 500 RPM.
- DTCs P0327 and P0328 run continuously once the above condition is met.

Conditions for Setting the DTC

P0325

The ECM detects the knock sensor signal circuit is open for greater than 5 s.

P0327

The ECM detects the knock sensor signal circuit is shorted to ground for greater than 5 s.

P0328

The ECM detects the knock sensor signal circuit is shorted to voltage for greater than 5 s.

Action Taken When the DTC Sets

- DTCs P0325, P0327, and P0328 are Type B DTCs.
- The ignition timing is retarded to reduce the potential of engine damaging spark knock.

Conditions for Clearing the DTC

DTCs P0325, P0327, and P0328 are Type B DTCs.

Diagnostic Aids

- Inspect the knock sensor for physical damage and proper installation. A knock sensor that is dropped or damaged may cause a DTC to set.
- Inspect the knock sensor for proper installation. A knock sensor that is loose or over torqued may cause a DTC to set. The knock sensor should be free of thread sealant.
- The knock sensor mounting surface should be free of burrs, casting flash, and foreign material.

Reference Information

Schematic Reference

Engine Controls Schematics

Connector End View Reference

COMPONENT CONNECTOR END VIEWS - INDEX

Description and Operation

Knock Sensor System Description

Electrical Information Reference

- **Circuit Testing**
- **Connector Repairs**
- **Testing for Intermittent Conditions and Poor Connections**
- **Wiring Repairs**

DTC Type Reference

Powertrain Diagnostic Trouble Code (DTC) Type Definitions

Scan Tool Reference

Control Module References for scan tool information

Circuit/System Verification

1. Engine running
2. Verify DTC P0325, P0327, P0328 or P06B6 is not set.
    - **If DTC P0325, P0327 or P0328 is set with P06B6**

      Refer to Circuit/System Testing below.

    - **If only DTC P06B6 is set**

      Replace the K20 Engine Control Module.

    - **If none of the DTCs are set**
3. Verify the affected B68 Knock Sensor is properly tightened. Refer to **Fastener Tightening Specifications** .
4. Verify the scan tool parameters below display NO while moving the related harnesses and connectors for the affected B68 Knock Sensor.
    - Cylinder 1 Knock Detected
    - Cylinder 2 Knock Detected
    - Cylinder 3 Knock Detected
    - Cylinder 4 Knock Detected
        - **If NO is not displayed**

Refer to Circuit/System Testing below.

- **If NO is displayed**

5. Operate the vehicle within the conditions for running the DTC. You may also operate the vehicle within the conditions that you observed from the freeze frame/failure Records data.
   - **If any of the DTCs set**

     Refer to Circuit/System Testing below.

   - **If none of the DTCs set**
6. All OK

Circuit/System Testing

1. Ignition OFF, disconnect the harness connector at the B68 Knock Sensor, ignition ON.
2. Test for 1-4 V between each of the following circuits and ground:
   - Signal terminal 1
   - Low reference terminal 2
   - **If less than 1 V**
   1. Ignition OFF, disconnect the X2 harness connector at the K20 Engine Control Module.
   2. Test for infinite resistance between the affected circuit and ground.
      - If less than infinite resistance, repair the short to ground on the circuit.
      - If infinite resistance
   3. Test for less than 2 ohms in the affected circuit end to end.
      - If 2 ohms or greater, repair the open/high resistance in the circuit.
      - If less than 2 ohms, replace the K20 Engine Control Module.
   - **If greater than 4 V**
   1. Ignition OFF, disconnect the X2 harness connector at the K20 Engine Control Module, ignition ON.
   2. Test for less than 1 V between the affected circuit and ground.
      - If 1 V or greater, repair the short to voltage on the circuit.
      - If less than 1 V, replace the K20 Engine Control Module.
   - **If between 1-4 V**
3. Replace the B68 Knock Sensor.

Repair Instructions

Perform the **Diagnostic Repair Verification** after completing the diagnostic procedure.

- **Knock Sensor Replacement**
- **Control Module References** for ECM replacement, setup, and programming

DTC P0335 OR P0336

Diagnostic Instructions

- Perform the **Diagnostic System Check - Vehicle** prior to using this diagnostic procedure.
- Review **Strategy Based Diagnosis** for an overview of the diagnostic approach.
- **Diagnostic Procedure Instructions** provides an overview of each diagnostic category.

DTC Descriptors

DTC P0335

Crankshaft Position Sensor Circuit

DTC P0336

Crankshaft Position Sensor Performance

Diagnostic Fault Information

Circuit	Short to Ground	Open/High Resistance	Short to Voltage	Signal Performance
5 V Reference	P057C, P0335, P0651	P0335	P0651	P0336
Signal	P0335, P0506	P0335	P0335	P0336
Low Reference	-	P0335	-	P0336

Circuit/System Description

The crankshaft position sensor circuits consist of an engine control module (ECM) supplied 5 V reference circuit, low reference circuit, and an output signal circuit. The crankshaft position sensor is an internally magnetic biased digital output integrated circuit sensing device. The sensor detects magnetic flux changes of the teeth and slots of a 58-tooth reluctor wheel on the crankshaft. Each tooth on the reluctor wheel is spaced at 60-tooth spacing, with 2 missing teeth for the reference gap. The crankshaft position sensor produces an ON/OFF DC voltage of varying frequency, with 58 output pulses per crankshaft revolution. The frequency of the crankshaft position sensor output depends on the velocity of the crankshaft. The crankshaft position sensor sends a digital signal, which represents an image of the crankshaft reluctor wheel, to the ECM as each tooth on the wheel rotates past the crankshaft position sensor. The ECM uses each crankshaft position signal pulse to determine crankshaft speed and decodes the crankshaft reluctor wheel reference gap to identify crankshaft position. This information is then used to determine the optimum ignition and injection points of the engine. The ECM also uses crankshaft position sensor output information to determine the camshaft relative position to the crankshaft, to control camshaft phasing, and to detect cylinder misfire.

Conditions for Running the DTC

P0335 Condition 1

- The starter is engaged and the engine control module detects camshaft position (CMP) sensor pulses.

  OR

- DTCs P0101, P0102 and P0103 are not set.

  AND

- The airflow into the engine is greater than 2 g/s.

Condition 2

- The engine is running and the starter is not engaged.
- DTC P0651 is not set.

Condition 3

- The engine is running or the starter is engaged.
- DTCs P0365, P0366, P0641, or P0651 are not set.

P0336 Condition 1

- The airflow into the engine is greater than 2 g/s.
- Engine speed is greater than 450 RPM.
- DTCs P0335 or P0651 are not set.

Condition 2

- The engine is running and the starter is not engaged.
- DTC P0651 is not set.

Condition 3

- The starter is engaged and the engine control module detects camshaft position (CMP) sensor pulses.

  OR

- DTCs P0101, P0102, and P0103 are not set.
- The airflow into the engine is greater than 2 g/s.

Condition 4

- The engine is running or the starter is engaged.
- DTCs P0365, P0366, P0641, or P0651 are not set.

The DTCs run continuously once the above conditions are met.

Conditions for Setting the DTC

P0335 Condition 1

The ECM does not detect a crankshaft position sensor pulse for greater than 4 s.

Condition 2

The ECM does not detect a crankshaft position sensor pulse for greater than 0.1 s.

Condition 3

The ECM does not detect a crankshaft position sensor pulse for 2 out of 10 engine revolutions.

P0336 Condition 1

The ECM detects that 10 or more crankshaft resynchronization have occurred within 10 s.

Condition 2

The ECM does not detect the synchronization gap on the reluctor wheel for greater than 0.4 s.

Condition 3

The ECM does not detect the synchronization gap on the reluctor wheel for greater than 1.5 s after the starter was engaged.

Condition 4

The ECM detects less than 51 or greater than 65 crankshaft position sensor pulses during 1 engine revolution for 8 out of 10 engine revolutions.

Action Taken When the DTC Sets

- DTCs P0335 and P0336 are Type B DTCs.
- The camshaft position sensor is used to determine engine position.
- The camshaft actuators are commanded to the parked position.

Conditions for Clearing the DTC

DTCs P0335 and P0336 are Type B DTCs.

Reference Information

Schematic Reference

Engine Controls Schematics

Connector End View Reference

COMPONENT CONNECTOR END VIEWS - INDEX

Description and Operation

Electronic Ignition System Description

Electrical Information Reference

- **Circuit Testing**
- **Connector Repairs**
- **Testing for Intermittent Conditions and Poor Connections**
- **Wiring Repairs**

DTC Type Reference

Powertrain Diagnostic Trouble Code (DTC) Type Definitions

Scan Tool Reference

Control Module References for scan tool information

Circuit/System Verification

1. Ignition ON.
2. Verify DTC P0651 is not set.
   - **If the DTC is set**

     Refer to **DTC P0641, P0651, P0697, or P06A3 (ECM)**.

   - **If the DTC is not set**
3. Engine Running.
4. Verify the scan tool Crankshaft Position Active Counter parameter increments.
   - **If the counter does not increment**

     Refer to Circuit/System Testing below.

   - **If the counter increments**
5. Verify the scan tool Crankshaft Position Resync Counter parameter displays 0 counts and the engine does not stumble or stall while moving the related harness/connectors of the B26 Crankshaft Position Sensor.
   - **If greater than 0 counts and the engine stumbles or stalls**

Refer to Circuit/System Testing below.

- **If 0 counts and the engine does not stumble or stall**

6. Operate the vehicle within the Conditions for Running the DTC. You may also operate the vehicle within the conditions that you observed from the Freeze Frame/Failure Records data.
7. Verify the DTC does not set.
   - **If the DTC sets**

     Refer to Circuit/System Testing below.

   - **If the DTC does not set**
8. All OK.

Circuit/System Testing

1. Ignition OFF and all vehicle systems OFF, disconnect the harness connector at the B26 Crankshaft Position Sensor. It may take up to 2 minutes for all vehicle systems to power down.
2. Test for less than 5 ohms between the low reference circuit terminal 2 and ground.
   - **If 5 ohms or greater**
   1. Ignition OFF, disconnect the X2 harness connector at the K20 Engine Control Module.
   2. Test for less than 2 ohms in the low reference circuit end to end.
      - If 2 ohms or greater, repair the open/high resistance in the circuit.
      - If 2 ohms or less, replace the K20 Engine Control Module.
   - **If less than 5 ohms**
3. Ignition ON.
4. Test for 4.8-5.2 V between the 5 V reference circuit terminal 1 and ground.
   - **If less than 4.8 V**
   1. Ignition OFF, disconnect the X2 harness connector at the K20 Engine Control Module.
   2. Test for infinite resistance between the 5 V reference circuit and ground.
      - If less than infinite resistance, repair the short to ground on the circuit.
      - If infinite resistance
   3. Test for less than 2 ohms in the 5 V reference circuit end to end.
      - If 2 ohms or greater, repair the open/high resistance in the circuit.
      - If less than 2 ohms, replace the K20 Engine Control Module.
   - **If greater than 5.2 V**
   1. Ignition OFF, disconnect the X2 harness connector at the K20 Engine Control Module, ignition ON.
   2. Test for less than 1 V between the 5 V reference and ground.
      - If 1 V or greater, repair the short to voltage on the circuit.
      - If less than 1 V, replace the K20 Engine Control Module.
   - **If between 4.8-5.2 V**

5. Test for 4.8-5.2 V between the signal circuit terminal 3 and ground.
   - **If less than 4.8 V**
   1. Ignition OFF, disconnect the X2 harness connector at the K20 Engine Control Module.
   2. Test for infinite resistance between the signal circuit and ground.
      - If less than infinite resistance, repair the short to ground on the circuit.
      - If infinite resistance.
   3. Test for less than 2 ohms in the signal circuit end to end.
      - If 2 ohms or greater, repair the open/high resistance in the circuit.
      - If less than 2 ohms, replace the K20 Engine Control Module.
   - **If greater than 5.2 V**
   1. Ignition OFF, disconnect the X2 harness connector at the K20 Engine Control Module, ignition ON.
   2. Test for less than 1 V between the signal circuit and ground.
      - If 1 V or greater, repair the short to voltage on the circuit.
      - If less than 1 V, replace the K20 Engine Control Module.
   - **If between 4.8-5.2 V**
6. Ignition OFF, connect a 3 A fused jumper wire to the signal circuit terminal 3, ignition ON.

NOTE: Additional DTCs may set when performing this test.

7. Verify the scan tool Crankshaft Position Sensor Active Counter parameter increments while rapidly tapping the fused jumper wire end to ground.
   - **If the counter does not increment**

     Replace the K20 Engine Control Module.

   - **If the counter increments**
8. Verify DTC P0336 is not set.
   - **If the DTC is set**

     Inspect for the conditions listed below:

     - Excessive play or looseness of the B26 Crankshaft Position Sensor or the reluctor wheel
     - Improper installation of the B26 Crankshaft Position Sensor
     - Foreign material passing between the B26 Crankshaft Position Sensor and the reluctor wheel
     - Damaged reluctor wheel
     - Excessive air gap between the B26 Crankshaft Position Sensor and the reluctor wheel
     - Engine oil for debris
     - Timing chain, tensioner, and sprockets for wear or damage

   - If any of the conditions above are found, repair as necessary.

- If all components test normal, test or replace the B26 Crankshaft Position Sensor.
- **If the DTC is not set**

9. Test or replace the B26 Crankshaft Position Sensor.

Repair Instructions

Perform the **Diagnostic Repair Verification** after completing the repair.

- **Crankshaft Position Sensor Replacement**
- **Control Module References** for engine control module replacement, programming, and setup

DTC P0340, P0341, P0365, OR P0366

Diagnostic Instructions

- Perform the **Diagnostic System Check - Vehicle** prior to using this diagnostic procedure.
- Review **Strategy Based Diagnosis** for an overview of the diagnostic approach.
- **Diagnostic Procedure Instructions** provides an overview of each diagnostic category.

DTC Descriptors

DTC P0340

Intake Camshaft Position Sensor Circuit

DTC P0341

Intake Camshaft Position Sensor Performance

DTC P0365

Exhaust Camshaft Position Sensor Circuit

DTC P0366

Exhaust Camshaft Position Sensor Performance

Diagnostic Fault Information

Circuit	Short to Ground	Open/High Resistance	Short to Voltage	Signal Performance
5 V Reference	P0107, P0452, P0532, P0641	P0340, P0365	P0641	-
Signal	P0340, P0365	P0340, P0365	P0340, P0365	P0341, P0366
Low Reference	-	P0340, P0365	P0340, P0365	-

Circuit/System Description

The camshaft position sensors each have 3 circuits consisting of an engine control module (ECM) supplied 5 V reference circuit, low reference circuit, and an output signal circuit. The camshaft position sensor is an internally magnetic biased digital output integrated circuit sensing device. The sensor detects magnetic flux changes of the teeth and slots of a 4-tooth reluctor wheel attached to the camshaft. As each reluctor wheel tooth rotates past the camshaft position sensor, the resulting change in the magnetic field is used by the sensor electronics to produce a digital output pulse. The sensor returns a digital ON/OFF DC voltage pulse of varying frequency with 4 varying width output pulses per camshaft revolution that represent an image of the camshaft reluctor wheel. The frequency of the camshaft position sensor output depends on the velocity of the camshaft. The ECM decodes the narrow and wide tooth pattern to identify camshaft position. This information is then used to determine the optimum ignition and injection points of the engine. The ECM uses the exhaust camshaft position sensor to determine injector and ignition system synchronization. The intake and exhaust camshaft position sensors are also used to determine camshaft to crankshaft relationship. The ECM also uses camshaft position sensor output information to determine the camshaft relative position to the crankshaft to control camshaft phasing and limp-home operation.

Conditions for Running the DTC

P0340 or P0365 Condition 1

- The starter is engaged and the engine control module detects camshaft position sensor pulses.

  OR

- DTCs P0101, P0102, and P0103 are not set.
- The airflow into the engine is greater than 2 g/s.

Condition 2

- The engine is running and the starter is not engaged.
- DTC P0651 is not set.

Condition 3

- The crankshaft is synchronized.
- The starter is engaged.
- DTC P0335, P0336, P0641, or P0651 are not set.

Condition 4

- The crankshaft is synchronized.
- DTC P0335, P0336, P0641, or P0651 are not set.

P0341 or P0366 Condition 1

- The crankshaft is synchronized.
- The starter is engaged.
- DTC P0335, P0336, P0641, or P0651 are not set.

Condition 2

- The crankshaft is synchronized.
- DTC P0335, P0336, P0641, or P0651 are not set.

The DTCs run continuously once the above conditions are met.

Conditions for Setting the DTC

P0340 or P0365 Condition 1

The ECM does not detect a camshaft position sensor pulse for greater than 5.5 s or greater than 4.0 s since the time the starter has been engaged.

Condition 2

The ECM detects less than 4 camshaft position sensor pulses for greater than 3.0 s.

Condition 3

The ECM does not detect a camshaft position sensor pulse during the first 2 engine revolutions.

Condition 4

The ECM does not detect a camshaft position sensor pulse during 200 engine revolutions.

P0341 or P0366 Condition 1

The ECM detects less than 4 or greater than 6 camshaft position sensor pulses during the first 2 engine revolutions.

Condition 2

The ECM detects less than 398 or greater than 402 camshaft position sensor pulses during 200 engine revolutions.

Action Taken When the DTC Sets

- DTCs P0340, P0341, P0365, and P0366 are Type B DTCs.
- The camshaft position actuator is commanded to the Home or Parked position.
- The ignition system defaults to a failed camshaft position sensor limp home mode.

Conditions for Clearing the MIL/DTC

DTCs P0340, P0341, P0365, and P0366 are Type B DTCs.

Diagnostic Aids

- With a DTC set, the engine may crank for an extended period of time at start-up
- The exhaust camshaft position sensor is used for injector and ignition system synchronization. A stalling condition will occur if the camshaft positionsensor signal is intermittent and a DTC may not set. Inspect the intake and exhaust camshaft position sensor circuits for poor connections.

Reference Information

Schematic Reference

Engine Controls Schematics

Connector End View Reference

COMPONENT CONNECTOR END VIEWS - INDEX

Description and Operation

Electronic Ignition System Description

Electrical Information Reference

- **Circuit Testing**
- **Connector Repairs**
- **Testing for Intermittent Conditions and Poor Connections**
- **Wiring Repairs**

DTC Type Reference

Powertrain Diagnostic Trouble Code (DTC) Type Definitions

Scan Tool Reference

Control Module References for scan tool information

Circuit/System Verification

1. Ignition ON.
2. Verify DTC P0641 or P0651 is not set.
    - **If any of the DTCs are set**

Refer to **DTC P0641, P0651, P0697, or P06A3 (ECM)**.

- **If none of the DTCs are set**

3. Engine Running.
4. Verify the scan tool parameters listed below increment:
   - Exhaust Camshaft Position Active Counter
   - Intake Camshaft Position Active Counter
   - **If any counter does not increment**

     Refer to Circuit/System Testing below.

   - **If all counters increment**
5. Operate the vehicle within the Conditions for Running the DTC. You may also operate the vehicle within the conditions that you observed from the Freeze Frame/Failure Records data.
6. Verify the DTC does not set.
   - **If the DTC sets**

     Refer to Circuit/System Testing below.

   - **If the DTC does not set**
7. All OK.

Circuit/System Testing

1. Ignition OFF and all vehicle systems OFF, disconnect the harness connector at the appropriate B23 Camshaft Position Sensor. It may take up to 2 minutes for all vehicle systems to power down.
2. Test for less than 5 ohms between the low reference circuit terminal 2 and ground.
   - **If 5 ohms or greater**
   1. Ignition OFF, disconnect the X2 harness connector at the K20 Engine Control Module.
   2. Test for less than 2 ohms in the low reference circuit end to end.
      - If 2 ohms or greater, repair the open/high resistance in the circuit.
      - If 2 ohms or less, replace the K20 Engine Control Module.
   - **If less than 5 ohms**
3. Ignition ON.
4. Test for 4.8-5.2 V between the 5 V reference circuit terminal 1 and ground.
   - **If less than 4.8 V**
   1. Ignition OFF, disconnect the X2 harness connector at the K20 Engine Control Module.
   2. Test for infinite resistance between the 5 V reference circuit and ground.
      - If less than infinite resistance, repair the short to ground on the circuit.
      - If infinite resistance.
   3. Test for less than 2 ohms in the 5 V reference circuit end to end.

- If 2 ohms or greater, repair the open/high resistance in the circuit.
- If less than 2 ohms, replace the K20 Engine Control Module.

- **If greater than 5.2 V**

1. Ignition OFF, disconnect the X2 harness connector at the K20 Engine Control Module, ignition ON.
2. Test for less than 1 V between the 5 V reference circuit and ground.
   - If 1 V or greater, repair the short to voltage on the circuit.
   - If less than 1 V, replace the K20 Engine Control Module.

- **If between 4.8-5.2 V**

5. Test for 4.8-5.2 V between the signal circuit terminal 3 and ground.
   - **If less than 4.8 V**

   1. Ignition OFF, disconnect the X2 harness connector at the K20 Engine Control Module.
   2. Test for infinite resistance between the signal circuit and ground.
      - If less than infinite resistance, repair the short to ground on the circuit.
      - If infinite resistance.
   3. Test for less than 2 ohms in the signal circuit end to end.
      - If 2 ohms or greater, repair the open/high resistance in the circuit.
      - If less than 2 ohms, replace the K20 Engine Control Module.

   - **If greater than 5.2 V**

   1. Ignition OFF, disconnect the X2 harness connector at the K20 Engine Control Module, ignition ON.
   2. Test for less than 1 V between the signal circuit and ground.
      - If 1 V or greater, repair the short to voltage on the circuit.
      - If less than 1 V, replace the K20 Engine Control Module.

   - **If between 4.8-5.2 V**

6. Verify DTC P0341 or P0366 is not set.
   - **If any of the DTCs are set**

     Inspect for the conditions listed below:

     - Excessive play or looseness of the B23 Camshaft Position Sensor or the reluctor wheel
     - Improper installation of the B23 Camshaft Position Sensor
     - Foreign material passing between the B23 Camshaft Position Sensor and the reluctor wheel
     - Damaged reluctor wheel
     - Excessive air gap between the B23 Camshaft Position Sensor and the reluctor wheel
     - Engine oil for debris
     - Timing chain, tensioner, and sprockets for wear or damage

   - If any of the conditions above are found, repair as necessary.
   - If all components test normal, test or replace the B23 Camshaft Position Sensor.

- **If none of the DTCs are set**

7. Test or replace the B23 Camshaft Position Sensor.

Repair Instructions

Perform the **Diagnostic Repair Verification** after completing the repair.

- **Camshaft Position Sensor Replacement**
- **Control Module References** for engine control module replacement, programming, and setup

DTC P0351-P0354

Diagnostic Instructions

- Perform the **Diagnostic System Check - Vehicle** prior to using this diagnostic procedure.
- Review **Strategy Based Diagnosis** for an overview of the diagnostic approach.
- **Diagnostic Procedure Instructions** provides an overview of each diagnostic category.

DTC Descriptors

DTC P0351

Ignition Coil 1 Control Circuit

DTC P0352

Ignition Coil 2 Control Circuit

DTC P0353

Ignition Coil 3 Control Circuit

DTC P0354

Ignition Coil 4 Control Circuit

Diagnostic Fault Information

Circuit	Short to Ground	Open/High Resistance	Short to Voltage	Signal Performance
Ignition Coil 1 Control	P0300, P0351	P0300, P0351	P0300, P0351	P0300, P0351
Ignition Coil 2 Control	P0300, P0352	P0300, P0352	P0300, P0352	P0300, P0352
Ignition Coil 3 Control	P0300, P0353	P0300, P0353	P0300, P0353	P0300, P0353
Ignition Coil 4 Control	P0300, P0354	P0300, P0354	P0300, P0354	P0300, P0354

Circuit/System Description

The ignition system on this engine uses an ignition coil module. The engine control module (ECM) controls the spark event for each cylinder through the individual ignition coil control circuits. When the ECM commands the ignition control circuit ON, electrical current will flow through the primary winding of the ignition coil, creating a magnetic field. When a spark event is requested, the ECM will command the ignition control circuit OFF, interrupting current flow through the primary winding. The magnetic field created by the primary winding will collapse across the secondary coil windings, producing a high voltage across the spark plug electrodes. The ECM uses information from the crankshaft position sensor, and the camshaft position sensor for sequencing and timing of the spark events. The ECM monitors each ignition control circuit for improper voltage levels.

Conditions for Running the DTC

- The engine is running.
- Ignition voltage is greater than 5 V.

The DTCs run continuously when the above conditions are met.

Conditions for Setting the DTC

The engine control module detects that the voltage command state of the driver and the actual state of the control circuit do not match.

Action Taken When the DTC Sets

DTCs P0351, P0352, P0353, and P0354 are Type B DTCs.

Conditions for Clearing the MIL/DTC

DTCs P0351, P0352, P0353, and P0354 are Type B DTCs.

Reference Information

Schematic Reference

Engine Controls Schematics

Connector End View Reference

COMPONENT CONNECTOR END VIEWS - INDEX

Description and Operation

Electronic Ignition System Description

Electrical Information Reference

- **Circuit Testing**
- **Connector Repairs**

- **Testing for Intermittent Conditions and Poor Connections**
- **Wiring Repairs**

DTC Type Reference

Powertrain Diagnostic Trouble Code (DTC) Type Definitions

Scan Tool Reference

Control Module References for scan tool information

Circuit/System Verification

1. Engine Running.
2. Verify the scan tool parameters listed below do not display Malfunction:
   - Ignition Coil 1-4 Control Circuit High Voltage Test Status
   - Ignition Coil 1-4 Control Circuit Low Voltage Test Status
   - Ignition Coil 1-4 Control Circuit Open Test Status
   - **If Malfunction is displayed**

     Refer to Circuit/System Testing below.

   - **If Malfunction is not displayed**
3. Operate the vehicle within the Conditions for Running the DTC. You may also operate the vehicle within the conditions that you observed from the Freeze Frame/Failure Records data.
4. Verify the DTC does not set.
   - **If the DTC sets**

     Refer to Circuit/System Testing below.

   - **If the DTC does not set**
5. All OK.

Circuit/System Testing

1. Ignition OFF and all vehicle systems OFF, disconnect the harness connector at the K35 Ignition Coil Module.
2. Remove the fuel injector fuse.
3. Connect a DMM between the appropriate K35 Ignition Coil Module control circuit listed below and ground. Set the DMM to the DC Hz scale and utilize the Min-Max function:
   - Ignition Coil 1 terminal D
   - Ignition Coil 2 terminal E
   - Ignition Coil 3 terminal F

- Ignition Coil 4 terminal G

4. Verify the DMM displays greater than 1.5 Hz while cranking the engine.
   - **If less than 1.5 Hz**
   1. Ignition OFF, disconnect the X2 harness connector at the K20 Engine Control Module.
   2. Test for infinite resistance between the control circuit and ground.
      - If less than infinite resistance, repair the short to ground on the circuit.
      - If infinite resistance
   3. Test for less than 2 ohms in the control circuit end to end.
      - If 2 ohms or greater, repair the open/high resistance in the circuit.
      - If less than 2 ohms
   4. Ignition ON.
   5. Test for less than 1 V between the control circuit and ground.
      - If 1 V or greater, repair the short to voltage on the circuit.
      - If less than 1 V, replace the K20 Engine Control Module.
   - **If greater than 1.5 Hz**
5. Replace the K35 Ignition Coil Module.

Repair Instructions

Perform the **Diagnostic Repair Verification** after completing the repair.

- **Ignition Coil Replacement**
- **Control Module References** for engine control module replacement, programming, and setup

DTC P0420

Diagnostic Instructions

- Perform the **Diagnostic System Check - Vehicle** prior to using this diagnostic procedure.
- Review **Strategy Based Diagnosis** for an overview of the diagnostic approach.
- **Diagnostic Procedure Instructions** provides an overview of each diagnostic category.

DTC Descriptor

DTC P0420

Catalyst System Low Efficiency

Circuit/System Description

A 3-way catalytic converter controls emissions of hydrocarbons, CO and NOx. The catalyst within the converter promotes a chemical reaction, which oxidizes the hydrocarbons and the CO that are present in the exhaust gas. This process converts the hydrocarbons and the CO into water vapor and CO2, and reduces the

NOx, by converting the NOx into nitrogen. The catalytic converter also stores oxygen. The ECM monitors this process by using a Heated Oxygen Sensor (HO2S) that is in the exhaust stream after the 3-way catalytic converter. The HO2S 2 produces an output signal that the ECM uses to calculate the oxygen storage capacity of the catalyst. This indicates the ability of the catalyst to convert the exhaust emissions efficiently. The ECM monitors the efficiency of the catalyst by allowing the catalyst to heat, then wait for a stabilization period while the engine is idling. The ECM then adds and removes fuel while monitoring the HO2S 2. When the catalyst is functioning properly, the HO2S 2 response to the extra fuel is slow compared to the response of the HO2S 1, which is located before the 3-way catalytic converter. When the HO2S 2 response is near that of the HO2S 1, the oxygen storage capability and efficiency of the catalyst may be degraded below an acceptable threshold.

Conditions for Running the DTC

- DTC P0016, P0017, P0030, P0036, P0053, P0054, P0068, P0101, P0102, P0103, P0106, P0107, P0108, P0111, P0112, P0113, P0114, P0116, P0117, P0118, P0119, P0121, P0122, P0123, P0128, P0131, P0132, P0133, P0134, P0135, P0137, P0138, P013A, P013B, P013E, P013F, P0140, P0141, P015A, P015B, P16F3, P0171, P0172, P0222, P0223, P0300, P0301, P0302, P0303, P0304, P0335, P0336, P0340, P0341, P0365, P0366, P0443, P0502, P0503, P0506, P0507, P0606, P0697, P06A3, P2101, P2122, P2123, P2127, P2128, P2135, P2138, P2270 or P2271 is not set.
- Before the ECM performs the idle test, the vehicle must be driven under the following conditions:
  - The engine speed is greater than 1, 100 RPM for a minimum of 5 s.
  - The vehicle speed is less than 2 km/h (1.24 mph).
  - The engine runtime is greater than 120 s.
- The run/crank voltage is greater than 11 V.
- The intake air temperature (IAT) is between -20 to +250°C (-4 to +482°F).
- The engine coolant temperature (ECT) is between 40-140°C (104-284°F).
- The engine has been idling less than 50 s.
- The short term fuel trim is between -20 to +30.
- The barometric pressure (BARO) is greater than 70 kPa.
- The intake mass air flow (MAF) is between 1.50-7.00 g/s.
- The engine is operating in closed loop.
- The calculated catalyst temperature is between 550-950°C (1, 022-1, 742°F).
- The automatic transmission is in drive range.
- This diagnostic attempts one test during each valid idle period once the above conditions have been met. This diagnostic attempts up to 8 tests during each drive cycle.

Conditions for Setting the DTC

The ECM determines that the efficiency of the catalyst has degraded below a calibrated threshold.

Action Taken When the DTC Sets

DTC P0420 is a Type A DTC.

Conditions for Clearing the DTC

DTC P0420 is a Type A DTC.

Diagnostic Aids

Inspect for the conditions listed below, which may cause a catalytic converter to degrade:

- An engine misfire
- High engine oil or high coolant consumption
- Retarded spark timing
- A weak or poor spark
- A lean fuel mixture
- A rich fuel mixture
- A damaged oxygen sensor or wiring harness

Reference Information

Electrical Information Reference

- **Circuit Testing**
- **Connector Repairs**
- **Testing for Intermittent Conditions and Poor Connections**
- **Wiring Repairs**

DTC Type Reference

Powertrain Diagnostic Trouble Code (DTC) Type Definitions

Scan Tool Reference

Control Module References for scan tool information

Circuit/System Verification

1. Ignition ON.
2. Verify there are no other DTCs set.
    - **If a DTC is set**

      Refer to **Diagnostic Trouble Code (DTC) List - Vehicle** .

    - **If a DTC is not set**
3. Operate the vehicle within the Conditions for Running the DTC.
4. Verify the scan tool Catalyst Monitor Not At Idle Test Conditions Met parameter changes to Yes.
    - **The parameter does not change to Yes**

Operate the vehicle within the Conditions for Running the DTC.

- **The parameter changes to Yes**

5. When the conditions are safe, stop and idle the vehicle in gear.
6. Apply the service brake.
7. Monitor the scan tool Catalyst Monitor Test State parameter. When the parameter indicates Active, the Catalyst Monitor Test is running.
8. Continue to monitor the parameter. When the parameter indicates Inactive, the Catalyst Monitor Test has completed.
9. When the test has completed, the Catalyst Monitor Test Counter parameter will increment by one and the Catalyst Monitor Test Result parameter will indicate Passed, Failed or No Result.
   - **The parameter indicates No Result**

     Repeat steps 3-8 until the Test Result parameter indicates Passed or Failed

   - **The parameter indicates Failed**

     Refer to Circuit /System Testing below.

   - **The parameter indicates Passed**
10. All OK.

Circuit/System Testing

1. Verify the conditions listed below do not exist with the catalytic converters:
   - Dents
   - Severe discoloration caused by excessive temperatures
   - Road damage
   - Internal rattles caused by damaged catalyst substrate
   - Restrictions
   - **If a condition is found**

     Replace the catalytic converter

   - **If no condition is found**
2. Verify the conditions listed below do not exist with the exhaust system:
   - Leaks
   - Physical damage
   - Loose or missing hardware
   - **If a condition is found**

     Repair or replace the affected component as necessary.

- **If no condition is found**

3. Verify the conditions listed below do not exist with the B52B Heated Oxygen Sensor 2:
   - Incorrect torque
   - Damage
   - **If a condition is found**

     Replace the B52B Heated Oxygen Sensor 2 or repair the condition as necessary.

   - **If no condition is found**
4. Test or replace the catalytic converter and the warm up three-way catalytic converter.

Repair Instructions

NOTE: A new converter with less than 160 km (100 mi) on it may set DTC P0420 due to outgassing of the internal matting. Operating the vehicle at highway speeds for approximately 1 h may correct the condition.

- **Catalytic Converter Replacement (1.4L LUV)**
- **Warm Up Three-Way Catalytic Converter Replacement**
- **Heated Oxygen Sensor Replacement - Sensor 2**

Repair Verification

1. Install any components that have been removed or replaced during diagnosis.
2. Perform any adjustments, programming or setup procedures that are required when a component is removed or replaced.
3. Clear the DTCs with a scan tool.
4. Turn OFF the ignition for 60 s
5. Operate the vehicle within the Conditions for Running the DTC.
6. Verify the scan tool Catalyst Monitor Not At Idle Test Conditions Met parameter changes to Yes.
   - **The parameter does not change to Yes**

     Operate the vehicle within the Conditions for Running the DTC.

   - **The parameter changes to Yes**
7. When the conditions are safe, stop and idle the vehicle in gear.
8. Apply the service brake.
9. Monitor the scan tool Catalyst Monitor Test State parameter. When the parameter indicates Active, the Catalyst Monitor Test is running.
10. Continue to monitor the parameter. When the parameter indicates Inactive, the Catalyst Monitor Test has completed.
11. When the test has completed, the Catalyst Monitor Test Counter parameter will increment by one and the

Catalyst Monitor Test Result parameter will indicate Passed, Failed or No Result.

- **The parameter indicates No Result**

  Repeat steps 5-10 until the Test Result parameters indicate Passed or Failed

- **The parameter indicates Failed**

  Refer to Circuit /System Testing below.

- **The parameters indicates Pass**

12. All OK.

DTC P0442

Diagnostic Instructions

- Perform the **Diagnostic System Check - Vehicle** prior to using this diagnostic procedure.
- Review **Strategy Based Diagnosis** for an overview of the diagnostic approach.
- **Diagnostic Procedure Instructions** provides an overview of each diagnostic category.

DTC Descriptor

DTC P0442

Evaporative Emission (EVAP) System Small Leak Detected

Circuit/System Description

The engine off natural vacuum (EONV) test is the small leak detection diagnostic for the evaporative emission (EVAP) system. This diagnostic tests the EVAP system for a small leak when the key is turned OFF and the correct conditions are met. Heat from the exhaust system is transferred into the fuel tank while the vehicle is operating. When the vehicle is turned OFF and the EVAP system is sealed a change in the fuel tank vapor temperature occurs which results in a corresponding pressure change in the fuel tank vapor space. This change is monitored by the ECM using the fuel tank pressure (FTP) sensor input. With a leak in the system, the amount of pressure change will be less than that of a sealed system.

Conditions for Running the DTC

- DTCs P010C, P010D, P0101, P0102, P0103, P0106, P0107, P0108, P0111, P0112, P0113, P0114, P0116, P0117, P0118, P0125, P0128, P0443, P0446, P0449, P0452, P0453, P0455, P0496, P0461, P0462, P0463, P0464, P0496, P0502, P0503, P0722, P0723, P2227, P2228, P2229, P2230, P2610. are not set.
- The barometric pressure (BARO) is greater than 70 kPa.
- The engine coolant sensor (ECT) is greater than 63°C (145°F)
- No fuel filling during the EONV test period.
- The fuel level is between 10-90%.

- The start-up engine coolant temperature (ECT) and the start-up intake air temperature (IAT) are within 8° C (46°F).
- The engine run time before shut-off was greater than 10 min.
- The drive distance before engine shut-off was more than 5 km (3 mi).
- The ambient air temperature at the end of the drive cycle is between 0-34°C (32-93°F).
- DTC P0442 runs once per drive cycle during the hot soak period after the ignition is turned OFF and may require up to 40 min to complete. The controller will not make more than 2 test attempts per day. The time since the last completed EONV test must be at least 17 h if passed or 10 h if failed.

Conditions for Setting the DTC

- The ECM detects a leak in the EVAP system that is greater than a calibrated amount.
- The ECM must complete several EONV tests before the diagnostic can turn the MIL on or off.

Action Taken When the DTC Sets

DTC P0442 is a Type A DTC.

Conditions for Clearing the DTC

DTC P0442 is a Type A DTC.

Diagnostic Aids

- The EVAP system can be filled with smoke more quickly and completely by opening the system opposite the end where the smoke is injected. When injecting smoke at the service port tool temporarily leave the EVAP vent solenoid valve open until smoke is observed then close the system and continue testing.
- To help locate intermittent leaks using the **GE 41413-A** , move all EVAP components while observing smoke with the **GE 41413-SPT** .
- Individual components can be isolated and tested using adapters in the **GE 41413-300** .
- When servicing the EVAP system, test pressure must not exceed 13 in H20 (0.5 PSI) as pressure in excess of this could cause system components to perform inaccurately.
- A condition may exist where a leak in the EVAP system only exists under a vacuum condition. This type of leak may be detected by using the scan tool Purge/Seal function to create a vacuum in the EVAP system and then observe the FTP parameter for vacuum decay.

Reference Information

Schematic Reference

Engine Controls Schematics

Connector End View Reference

COMPONENT CONNECTOR END VIEWS - INDEX

Description and Operation

Evaporative Emission Control System Description

Electrical Information Reference

- **Circuit Testing**
- **Connector Repairs**
- **Testing for Intermittent Conditions and Poor Connections**
- **Wiring Repairs**

DTC Type Reference

Powertrain Diagnostic Trouble Code (DTC) Type Definitions

Scan Tool Reference

Control Module References for scan tool information

Special Tools

- **CH 48096** EVAP Service Port Access Tool
- **GE 41413-A** Evaporative Emissions System Tester (EEST)
- **GE 41413-300** EVAP Cap and Plug Kit
- **GE 41413-SPT** High Intensity White Light

For equivalent regional tools, refer to **Special Tools** .

Circuit/System Testing

NOTE:

- **Refer to the GE 41413-A operation manual for detailed instructions in Evaporative Emission Control System Diagnosis**
- **Larger volume fuel tanks and/or those with lower fuel levels may require several minutes for the floating indicator to stabilize or produce smoke from a leak.**
- **Ensure that the underbody temperature of the vehicle and the tester are similar.**

1. Disconnect the purge tube at the quick connector on the EVAP canister side of the Q12 Evaporative Emission Canister Purge Solenoid Valve and install the **CH 48096** .
2. Connect the **GE 41413-A** to the **CH 48096** .
3. Command the EVAP Purge/Seal function to System Seal with a scan tool to seal the EVAP system.
4. Use the flow meter on the **GE 41413-A** , calibrated to 0.51 mm (0.020 in) to determine if there is a leak.
    - **If a leak is detected**

1. Use the **GE 41413-A** to apply smoke to the EVAP system at the purge tube until the leak is located using the **GE 41413-SPT**
   - **No leak in the EVAP system**
5. All OK.

Repair Instructions

Perform the **Diagnostic Repair Verification** after completing the repair.

DTC P0443

Diagnostic Instructions

- Perform the **Diagnostic System Check - Vehicle** prior to using this diagnostic procedure.
- Review **Strategy Based Diagnosis** for an overview of the diagnostic approach.
- **Diagnostic Procedure Instructions** provides an overview of each diagnostic category.

DTC Descriptor

DTC P0443

Evaporative Emission (EVAP) Purge Solenoid Valve Control Circuit

Diagnostic Fault Information

Circuit	Short to Ground	Open / High Resistance	Short to Voltage
Ignition - Purge Supply	P0031, P0033, P0034, P0037, P0132, P0134, P0135, P0138, P0140, P0245, P0443, P0597, P0507, P0598	P0443	P0690
EVAP Purge Solenoid Valve Control	P0443	P0443	P0443, P0690

Circuit/System Description

An ignition voltage is supplied directly to the evaporative emission (EVAP) purge solenoid valve. The engine control module (ECM) grounds the EVAP purge solenoid valve control circuit through an internal switch called a driver. The ECM monitors the status of the driver. The EVAP purge solenoid valve is pulse width modulated (PWM). A scan tool will display the amount of ON time as a percentage. If the ECM detects an incorrect voltage for the commanded state of the driver this DTC sets.

Conditions for Running the DTC

- The system voltage is greater than 11 V.
- DTC P0443 runs continuously when the above conditions are met.

Conditions for Setting the DTC

The ECM detects that the commanded state of the driver and the actual state of the control circuit do not match for a minimum of 0.25 s.

Action Taken When the DTC Sets

DTC P0443 is a Type B DTC.

Conditions for Clearing the MIL/DTC

DTC P0443 is a Type B DTC.

Reference Information

Schematic Reference

Engine Controls Schematics

Connector End View Reference

COMPONENT CONNECTOR END VIEWS - INDEX

Description and Operation

Evaporative Emission Control System Description

Electrical Information Reference

- **Circuit Testing**
- **Connector Repairs**
- **Testing for Intermittent Conditions and Poor Connections**
- **Wiring Repairs**

DTC Type Reference

Powertrain Diagnostic Trouble Code (DTC) Type Definitions

Scan Tool Reference

Control Module References for scan tool information

Circuit/System Verification

1. Ignition ON.
2. Verify the parameters listed below do not display malfunction when commanding the EVAP purge solenoid valve from 0 to 50 % and back to 0 % with a scan tool.
    - EVAP Purge Solenoid Valve Control Circuit Low Voltage Test Status
    - EVAP Purge Solenoid Valve Control Circuit Open Test Status
    - EVAP Purge Solenoid Valve Control Circuit High Voltage Test Status
    - **If Malfunction is displayed**

      Refer to Circuit/System Testing below.

    - **If Malfunction is not display**
3. All OK.

Circuit/System Testing

1. Ignition OFF, disconnect the harness connector at the Q12 Evaporative Emission Purge Solenoid Valve, ignition ON.
2. Verify that a test lamp illuminates between the ignition circuit terminal 2 and ground.
    - **If the test lamp does not illuminate and the circuit fuse is good**
    1. Ignition OFF, remove the test lamp.
    2. Test for less than 2 ohms in the ignition circuit end to end.
        - If 2 ohms or greater, repair the open/high resistance in the circuit.
        - If less than 2 ohms verify the fuse is not open and there is voltage at the fuse.
    - **If the test lamp does not illuminate and the circuit fuse is open**
    1. Ignition OFF, remove the test lamp.
    2. Test for infinite resistance between the ignition circuit and ground.
        - If less than infinite resistance, repair the short to ground in the circuit.
        - If infinite resistance, test the Q12 Evaporative Emission Purge Solenoid Valve and replace as necessary.
    - **If the test lamp illuminates**
3. Verify that a test lamp does not illuminate between the ignition circuit terminal 2 and the control circuit terminal 1.
    - **If the test lamp illuminates**
    1. Ignition OFF, disconnect the harness connector at the K20 Engine Control Module.
    2. Test for infinite resistance between the control circuit and ground.
        - If less than infinite resistance, repair the short to ground on the circuit.
        - If infinite resistance, replace the K20 Engine Control Module.
    - **If the test lamp does not illuminate**
4. Remove the test lamp.
5. Verify the scan tool EVAP Purge Solenoid Valve Control Circuit High Voltage Test Status parameter is

OK when commanding the EVAP purge solenoid valve ON with a scan tool.

- **If the Parameter is not OK**

1. Ignition OFF, disconnect the harness connector at the K20 Engine Control Module, ignition ON.
2. Test for less than 1 V between the control circuit and ground.
   - If 1 V or greater, repair the short to voltage on the circuit.
   - If less than 1 V, replace the K20 Engine Control Module.

- **If the Parameter is OK**

6. Install a 3 A fused jumper wire between the control circuit terminal 1 and the ignition circuit terminal 2.
7. Verify the scan tool EVAP Purge Solenoid Valve Control Circuit High Voltage Test Status parameter is Malfunction when commanding the EVAP Purge Solenoid Valve ON with a scan tool.
   - **If the Parameter is not Malfunction.**

   1. Ignition OFF, disconnect the harness connector at the K20 Engine Control Module.
   2. Test for less than 2 ohms in the control circuit end to end.
      - If 2 ohms or greater, repair the open/high resistance in the circuit.
      - If less than 2 ohms replace the K20 Engine Control Module.

   - **If the parameter is Malfunction**
8. Test or replace the Q12 Evaporative Emission Purge Solenoid Valve.

Component Testing

Static Test

1. Ignition OFF, disconnect the harness connector at the Q12 Evaporative Emission Purge Solenoid Valve.
2. Test for 10.0-30.0 ohms between the control circuit terminal 1 and the ignition circuit terminal 2 of the Q12 Evaporative Emission Purge Solenoid Valve.
   - **If not between 10.0-30.0 ohms**

     Replace the Q12 Evaporative Emission Purge Solenoid Valve

   - **If between 10.0-30.0 ohms**
3. All OK.

Repair Instructions

Perform the **Diagnostic Repair Verification** after completing the repair.

- **Evaporative Emission Canister Purge Solenoid Valve Replacement**
- **Control Module References** for ECM replacement, setup, and programming

DTC P0446

Diagnostic Instructions

- Perform the **Diagnostic System Check - Vehicle** prior to using this diagnostic procedure.
- Review **Strategy Based Diagnosis** for an overview of the diagnostic approach.
- **Diagnostic Procedure Instructions** provides an overview of each diagnostic category.

DTC Descriptor

DTC P0446

Evaporative Emission (EVAP) Vent System Performance

Typical Scan Tool Data

Fuel Tank Pressure Sensor Signal Voltage	Fuel Tank Pressure
1.5 V	Atmospheric Pressure / BARO
Less than 1.5 V	Positive Pressure
More than 1.5 V	Negative Pressure / Vacuum

Circuit/System Description

This DTC tests the evaporative emission (EVAP) system for a restricted or blocked EVAP vent path that would cause excess amounts of vacuum to be developed in the EVAP system. The engine control module (ECM) uses the fuel tank pressure (FTP) sensor to monitor EVAP system vacuum. With the purge valve and vent valve open, if the EVAP system vacuum goes above a calibrated threshold, P0446 will set.

The following table illustrates the relationship between the ON and OFF states, and the OPEN or CLOSED states of the EVAP purge and vent solenoid valves.

ECM Command	EVAP Purge Solenoid Valve	EVAP Vent Solenoid Valve
ON	Open	Closed
OFF	Closed	Open

Conditions for Running the DTC

- DTCs P00C8, P00C9, P010C, P010D, P0068, P16F3, P0102, P0103, P0111, P0112, P0113, P0114, P0116, P0117, P0118, P0122, P0123, P0125, P0128, P160E, P160D, P0191, P0192, P0193, P0222, P0223, P0443, P0449, P0452, P0453, P0454, P0502, P0503, P0606, P0722, P0723, P1104, P2100, P2101, P2102, P2103, P2135, P2227, P2228, P2229, or P2230 is not set
- The ignition voltage is between 11-32 V.
- The barometric pressure (BARO) is more than 70 kPa.
- The fuel level is between 10-90 %.
- The startup engine coolant temperature (ECT) is less than 35°C (95°F).
- The startup intake air temperature (IAT) is between 4-30°C (39-86°F).
- DTC P0446 runs once per cold start, for up to 17 min, when the above conditions are met.

Conditions for Setting the DTC

NOTE: There are two stages to setting this DTC. Stage one, prep test, then stage two test.

- If fuel tank pressure sensor reading is greater than 2.5 in H2O of pressure or less than -5 in H2O of vacuum for 60 s.

  OR

- If fuel tank pressure sensor reading is less than -12 in H2O of vacuum for 5 s before 10 L (2.6 gal) of purge volume.
- After setting the DTC for the first time, 2 liters (0.5 gallons) of fuel must be consumed before setting the DTC for the second time.

Action Taken When the DTC Sets

DTC P0446 is a Type B DTC.

Conditions for Clearing the MIL/DTC

DTC P0446 is a Type B DTC.

Diagnostic Aids

- An intermittent condition could be caused by a damaged EVAP vent housing, a temporary blockage at the EVAP vent solenoid valve inlet, or a pinched vent hose. A blockage in the vent system may also cause a poor fuel fill condition.
- An EVAP canister filter that is restricted can cause this DTC to set.

Reference Information

Schematic Reference

Engine Controls Schematics

Connector End View Reference

COMPONENT CONNECTOR END VIEWS - INDEX

Description and Operation

Evaporative Emission Control System Description

Electrical Information Reference

- **Circuit Testing**

- **Connector Repairs**
- **Testing for Intermittent Conditions and Poor Connections**
- **Wiring Repairs**

DTC Type Reference

Powertrain Diagnostic Trouble Code (DTC) Type Definitions

Scan Tool Reference

Control Module References for scan tool information

Special Tools

- CH 41415-30 Fuel Tank Cap Adapter
- GE 41413-A Evaporative Emissions System Tester (EEST)

For equivalent regional tools, refer to **Special Tools**

Circuit/System Verification

1. Ignition ON.
2. Verify DTC P0443 is not set.
   - **If the DTC is set**

     Refer to **Diagnostic Trouble Code (DTC) List - Vehicle**

   - **If the DTC is not set**
3. Ignition OFF, remove the fuel tank filler cap. Ignition ON.
4. Verify the scan tool Fuel Tank Pressure Sensor parameter is between 1.3-1.7 V.
   - **If not between the 1.3-1.7 V**

     Refer to P0452, P0453 within **DTC P0451-P0454**

   - **If between the 1.3-1.7 V**
5. Install the fuel tank filler cap. Engine idling at operating temperature for 5 min.
6. Verify the scan tool Fuel Tank Pressure Sensor parameter does not increase to greater than 2.5 V when commanding the EVAP Purge Solenoid Valve to 50 %.
   - **If greater than 2.5 V**

     Refer to Circuit/System Testing below.

   - **If 2.5 V or less**
7. Operate the vehicle within the conditions for running the DTC. You may also operate the vehicle within

the conditions that you observed from the freeze frame/failure records data.

- **If the DTC sets**

  Refer to Circuit/System Testing below.

- **If the DTC does not set**

8. All OK.

Circuit/System Testing

NOTE: Perform the Circuit/System Verification before proceeding with the Circuit/System Testing.

1. Test for a blockage or restrictions in the EVAP system components listed below and repair as necessary.
   - Evaporative Emission Vent System Hoses
   - Evaporative Emission Canister
   - Q13 Evaporative Emission Vent Solenoid Valve
   - Evaporative Emission Vent Filter
2. Reconnect all previously disconnected EVAP hardware.

   NOTE: Refer to the GE 41413-A operation manual for detailed instructions in Evaporative Emission Control System Diagnosis .

3. Remove the fuel fill cap and connect the CH 41415-30 to the fuel tank filler neck. Connect the GE 41413-A to the CH 41415-30.
4. Command the EVAP Purge/Seal function to System Seal with a scan tool to seal the EVAP system.
5. Turn the nitrogen/smoke valve on the GE 41413-A to nitrogen.

   NOTE: DO NOT exceed the specified value in this step. Exceeding the specified value may produce incorrect test results.

6. Use the remote switch to activate the GE 41413-A and pressurize the fuel tank to 5.0 in H2O.
7. Verify the scan tool Fuel Tank Pressure Sensor parameter is 0 in H2O when commanding the EVAP Vent Solenoid Valve to OFF.
   - **If not 0 in H20**

     Test for a blockage or a restriction in the EVAP vent hose or inlet. If the inlet or hose test normal, replace the Q13 Evaporative Emission Vent Solenoid Valve.

   - **If 0 in H2O**
8. Operate the vehicle within the conditions for running the DTC. You may also operate the vehicle within the conditions that you observed from the freeze frame/failure records data.
   - **If the DTC sets**

Refer to step 1 above.

- **If the DTC does not set**

9. All OK.

Repair Instructions

Perform the **Diagnostic Repair Verification** after completing the repair.

- **Evaporative Emission Canister Vent Solenoid Valve Replacement**
- **Evaporative Emission Canister Replacement**
- **Fuel Tank Pressure Sensor Replacement**

DTC P0449

Diagnostic Instructions

- Perform the **Diagnostic System Check - Vehicle** prior to using this diagnostic procedure.
- Review **Strategy Based Diagnosis** for an overview of the diagnostic approach.
- **Diagnostic Procedure Instructions** provides an overview of each diagnostic category.

DTC Descriptors

DTC P0449

Evaporative Emission (EVAP) Vent Solenoid Valve Control Circuit

Diagnostic Fault Information

Circuit	Short to Ground	Open / High Resistance	Short to Voltage
Battery - Vent Supply	P0449	P0449	-
EVAP Vent Solenoid Valve Control	P0449	P0449	P0449

Circuit/System Description

Battery voltage is supplied to the evaporative emissions (EVAP) vent solenoid valve. The engine control module (ECM) grounds the EVAP vent solenoid valve control circuit through an internal switch called a driver. The ECM monitors the status of the driver for the control circuit. A scan tool will display the commanded state of the EVAP vent solenoid valve as OFF - Venting or ON - Not Venting.

Conditions for Running the DTC

DTC P0449 runs continuously when the above conditions are met.

Conditions for Setting the DTC

The ECM detects that the commanded state of the driver and the actual state of the control circuit do not match for a minimum of 0.25 s.

Action Taken When the DTC Sets

DTC P0449 is a Type B DTC.

Conditions for Clearing the MIL/DTC

DTC P0449 is a Type B DTC.

Reference Information

Schematic Reference

Engine Controls Schematics

Connector End View Reference

COMPONENT CONNECTOR END VIEWS - INDEX

Description and Operation

Evaporative Emission Control System Description

Electrical Information Reference

- **Circuit Testing**
- **Connector Repairs**
- **Testing for Intermittent Conditions and Poor Connections**
- **Wiring Repairs**

DTC Type Reference

Powertrain Diagnostic Trouble Code (DTC) Type Definitions

Scan Tool Reference

Control Module References for scan tool information

Circuit/System Verification

1. Ignition ON, engine OFF,
2. Command the EVAP Vent Solenoid Valve ON - Not Venting and OFF - Venting with a scan tool.
3. You should hear the solenoid click when commanded ON and OFF.
    - **No clicking heard**

Refer to Circuit/System Testing below.

- **Clicking is heard**

4. Engine idling, command the EVAP Vent Solenoid Valve ON - Not Venting and OFF - Venting with a scan tool while observing the following control circuit status parameters:
   - EVAP Vent Solenoid Valve Control Circuit Low Voltage Test Status
   - EVAP Vent Solenoid Valve Control Circuit Open Test Status
   - EVAP Vent Solenoid Valve Control Circuit High Voltage Test Status
   - **If the Parameters display Malfunction**

     Refer to Circuit/System Testing below.

   - **If the Parameters display OK or Not Run**
5. Operate the vehicle within the conditions for running the DTC. You may also operate the vehicle within the conditions that you observed from the freeze frame/failure records data.
6. Verify the DTC does not set.
   - **If the DTC sets**

     Refer to Circuit/System Testing below.

   - **If the DTC does not set**
7. All OK.

Circuit/System Testing

1. Ignition OFF, disconnect the harness connector at the Q13 Evaporative Emissions Vent Solenoid Valve, ignition ON.
2. Verify that a test lamp illuminates between the B+ circuit terminal 2 and ground.
   - **If the test lamp does not illuminate and the circuit fuse is good**
   1. Ignition OFF, remove the test lamp.
   2. Test for less than 2 ohms in the B+ circuit end to end.
      - If 2 ohms or greater, repair the open/high resistance in the circuit.
      - If less than 2 ohms verify the fuse is not open and there is voltage at the fuse.
   - **If the test lamp does not illuminate and the circuit fuse is open**
   1. Ignition OFF, remove the test lamp.
   2. Test for infinite resistance between the B+ circuit and ground.
      - If less than infinite resistance, repair the short to ground in the circuit.
      - If infinite resistance, test the Q13 Evaporative Emissions Vent Solenoid Valve for a short and replace as necessary.
   - **If the test lamp illuminates**
3. Verify that a test lamp does not illuminate between the B+ circuit terminal 2 and the control circuit terminal 1.

- **If the test lamp illuminates**

1. Ignition OFF, disconnect the harness connector at the Q13 Evaporative Emissions Vent Solenoid Valve.
2. Test for infinite resistance between the control circuit and ground.
   - If less than infinite resistance, repair the short to ground on the circuit.
   - If infinite resistance, replace the K20 Engine Control Module.

- **If the test lamp does not illuminate**

4. Remove the test lamp.
5. Verify the scan tool EVAP Vent Solenoid Valve Control Circuit High Voltage Test Status parameter is OK when commanding the EVAP Vent Solenoid Valve ON with a scan tool.
   - **If the Parameter is not OK**

   1. Ignition OFF, disconnect the harness connector at the K20 Engine Control Module, ignition ON.
   2. Test for less than 1 V between the control circuit terminal 1 and ground.
      - If 1 V or greater, repair the short to voltage on the circuit.
      - If less than 1 V, replace the K20 Engine Control Module.

   - **If the Parameter is OK**
6. Install a 3 A fused jumper wire between the control circuit terminal 1 and the B+ circuit terminal 2.
7. Verify the scan tool EVAP Vent Solenoid Valve Control Circuit High Voltage Test Status parameter is Malfunction when commanding the EVAP Vent Solenoid Valve ON with a scan tool.
   - **If the Parameter is not Malfunction**

   1. Ignition OFF, disconnect the harness connector at the K20 Engine Control Module.
   2. Test for less than 2 ohms in the control circuit end to end.
      - If 2 ohms or greater, repair the open/high resistance in the circuit.
      - If less than 2 ohms replace the K20 Engine Control Module.

   - **If the Parameter is Malfunction**
8. Test or replace the Q13 Evaporative Emission Vent Solenoid Valve.

Component Testing

Static Test

1. Ignition OFF, disconnect the harness connector at the Q13 Evaporative Emission Vent Solenoid Valve.
2. Test for 10-30 ohms between the control terminal 1 and the B+ voltage terminal 2.
   - **If not between 10.0-30.0 ohms**

     Replace the Q13 Evaporative Emission Vent Solenoid Valve.

   - **If between 10.0-30.0 ohms**
3. All OK.

Repair Instructions

Perform the **Diagnostic Repair Verification** after completing the repair.

- **Evaporative Emission Canister Vent Solenoid Valve Replacement**
- **Control Module References** for ECM replacement, setup, and programming.

DTC P0451-P0454

Diagnostic Instructions

- Perform the **Diagnostic System Check - Vehicle** prior to using this diagnostic procedure.
- Review **Strategy Based Diagnosis** for an overview of the diagnostic approach.
- **Diagnostic Procedure Instructions** provides an overview of each diagnostic category.

DTC Descriptors

DTC P0451

Fuel Tank Pressure Sensor Performance

DTC P0452

Fuel Tank Pressure Sensor Circuit Low Voltage

DTC P0453

Fuel Tank Pressure Sensor Circuit High Voltage

DTC P0454

Fuel Tank Pressure Sensor Circuit Intermittent

Diagnostic Fault Information

Circuit	Short to Ground	High Resistance	Open	Short to Voltage	Signal Performance
5 V Reference	P0236, P0237, P0452, P0532, P0641	P0451	P0452	P0236, P0238, P0453, P0641, P1101, P2227	-
Signal	P0452	P0451	P0452	P0453	P0451, P0454
Low Reference	-	P0446, P0451	P0453, P0463	-	P0451

Typical Scan Tool Data

FTP Sensor Voltage

Circuit	Short to Ground	Open	Short to Voltage
Operating Conditions: Ignition ON, Engine OFF **Parameter Normal Range:** 1.3-1.7 V			
FTP Sensor 5 V Reference	0 V	0 V	4.2-5 V
FTP Sensor Signal	0 V	0 V	5 V
FTP Sensor Low Reference	-	4.5 V	-

Circuit/System Description

The Fuel Tank Pressure (FTP) sensor measures pressure or vacuum in the evaporative emission (EVAP) system. The engine control module (ECM) supplies a 5 V reference and a low reference circuit to the FTP sensor. The FTP sensor signal voltage varies depending on EVAP system pressure or vacuum. The controller also uses this FTP signal to determine atmospheric pressure for use in the engine-off small leak test, DTC P0442. Before using this signal as an atmospheric reference it must first be re-zeroed.

Conditions for Running the DTC

P0451

- DTC P0451 runs only when the engine-off natural vacuum small leak test, P0442, executes.
- The number of times this test runs can range from 0-2 per engine-off period. The length of the test can be up to 10 min.

P0452 and P0453

DTC P0452 and P0453 run continuously when the ignition is ON.

P0454

- DTC P0454 runs only when the engine-off natural vacuum small leak test, P0442, executes and the EVAP Vent Solenoid Valve is closed.
- This test can run once per engine-off period. The length of the test can be up to 10 min.
- A refueling event is not detected. A refueling event is confirmed if the fuel level has a persistent change of 10 % for 30 s.

Conditions for Setting the DTC

P0451

This DTC will set if the controller is unable to re-zero the FTP sensor voltage within a calibrated range during the engine-off small leak test, P0442.

P0452

The FTP sensor voltage is less than 0.15 V for more than 10 s.

P0453

The FTP sensor voltage is more than 4.9 V for more than 10 s.

P0454

If, during the engine-off natural vacuum small leak test, P0442, the ECM detects an abrupt FTP signal change, other than a refueling event, this DTC will set. An abrupt change is defined as a change of 0.45 in H2O in the span of 1 s but less than 1 in H2O in 12.5 ms.

Action Taken When the DTC Sets

- DTCs P0451 and P0454 are Type A DTCs.
- DTCs P0452 and P0453 are Type B DTCs.

Conditions for Clearing the MIL/DTC

- DTCs P0451 and P0454 are Type A DTCs.
- DTCs P0452 and P0453 are Type B DTCs.

Diagnostic Aids

P0451 and P0454

- A restriction in the EVAP canister or vent lines could prevent fuel vapor pressure from bleeding off fast enough. If the vent system cannot bleed off pressure fast enough, the re-zero procedure may not complete successfully, which could cause this code to set.
- Ensure that the reference port on the FTP sensor is unobstructed.
- An FTP sensor that is skewed or does not have a linear transition from low to high may cause this code to set. Scan tool output controls, snapshot, and plot functions can help detect erratic sensor response. To test the sensor signal under vacuum conditions, use the Quick Snapshot and the Purge/Seal functions to capture data while commanding purge to 20 %, then plot the data to look for erratic sensor operation. A similar test can be done for the pressure side of the sensor operation by applying pressure with the **GE 41413-A** while taking a snapshot.

Reference Information

Schematic Reference

Engine Controls Schematics

Connector End View Reference

COMPONENT CONNECTOR END VIEWS - INDEX

Description and Operation

Evaporative Emission Control System Description

Electrical Information Reference

- **Circuit Testing**
- **Connector Repairs**
- **Testing for Intermittent Conditions and Poor Connections**
- **Wiring Repairs**

DTC Type Reference

Powertrain Diagnostic Trouble Code (DTC) Type Definitions

Scan Tool Reference

Control Module References for scan tool information

Special Tools

GE 41413-A Evaporative Emission System Tester (EEST)

For equivalent regional tools, refer to **Special Tools**

Circuit/System Verification

1. Remove the fuel cap.
2. Ignition ON, engine OFF.
3. Verify the scan tool FTP sensor parameter is between 1.3 and 1.7 V.
    - **If not between 1.3-1.7 V**

      Refer to Circuit/System Testing below.

    - **If between 1.3-1.7 V**
4. All OK.

Circuit/System Testing

1. Ignition OFF, all vehicle systems OFF, this may take up to 2 min, for all vehicle systems to power down. Disconnect the harness connector at the B150 Fuel Tank Pressure Sensor.
2. Test for less than 5 ohms of resistance between the low reference circuit terminal 2 and ground.
    - **If 5 ohms or greater**
    1. Ignition OFF, disconnect the harness connector at the K20 Engine Control Module.
    2. Test for less than 2 ohms in the low reference circuit end to end.
        - If 2 ohms or greater, repair the open/high resistance in the circuit.

- If less than 2 ohms, replace the K20 Engine Control Module.
- **If less than 5 ohms**

3. Ignition ON.
4. Test for 4.8-5.2 V between the 5 V reference circuit terminal 3 and ground.
   - **If less than 4.8 V**
   1. Ignition OFF, disconnect the harness connector at the K20 Engine Control Module.
   2. Test for infinite resistance between the 5 V reference circuit and ground.
      - If less than infinite resistance, repair the short to ground on the circuit.
      - If infinite resistance
   3. Test for less than 2 ohms in the 5 V reference circuit end to end.
      - If 2 ohms or greater, repair the open/high resistance in the circuit.
      - If less than 2 ohms, replace the K20 Engine Control Module.
   - **If greater than 5.2 V**
   1. Ignition OFF, disconnect the harness connector at the K20 Engine Control Module, ignition ON.
   2. Test for less than 1 V between the 5 V reference circuit and ground.
   - If 1 V or greater, repair the short to voltage on the circuit.
   - If less than 1 V, replace the K20 Engine Control Module.
   - **If between 4.8-5.2 V**
5. Verify the scan tool FTP parameter is less than 0.2 V.
   - **If 0.2 V or greater**
   1. Ignition OFF, disconnect the harness connector at the K20 Engine Control Module, ignition ON
   2. Test for less than 1 V between the signal circuit terminal 1 and ground.
   - If 1 V or greater, repair the short to voltage on the circuit.
   - If less than 1 V, replace the K20 Engine Control Module.
   - **If less than 0.2 V**
6. Install a 3 A fused jumper wire between the signal circuit terminal 1 and the 5 V reference circuit terminal 3.
7. Verify the scan tool FTP sensor parameter is greater than 4.7 V.
   - **If 4.7 V or less**
   1. Ignition OFF, disconnect the harness connector at the K20 Engine Control Module.
   2. Test for infinite resistance between the signal circuit terminal 1 and ground.
      - If less than infinite resistance, repair the short to ground on the circuit.
      - If infinite resistance
   3. Test for less than 2 ohms in the signal circuit end to end.
   - If 2 ohms or greater, repair the open/high resistance in the circuit.
   - If less than 2 ohms, replace the K20 Engine Control Module.
   - **If greater than 4.7 V**
8. Test or replace the B150 Fuel Tank Pressure Sensor.

Repair Instructions

Perform the **Diagnostic Repair Verification** after completing the repair.

- **Fuel Tank Pressure Sensor Replacement**
- **Control Module References** for ECM replacement, setup, and programming.

DTC P0455

Diagnostic Instructions

- Perform the **Diagnostic System Check - Vehicle** prior to using this diagnostic procedure.
- Review **Strategy Based Diagnosis** for an overview of the diagnostic approach.
- **Diagnostic Procedure Instructions** provides an overview of each diagnostic category.

DTC Descriptor

DTC P0455

Evaporative Emission (EVAP) System Large Leak Detected

Circuit/System Description

The engine control module (ECM) tests the evaporative emission (EVAP) system for a large leak or restrictions to the purge path in the EVAP system. When the enabling criteria has been met, the ECM commands the EVAP vent solenoid valve and purge solenoid valve ON, allowing vacuum into the EVAP system. The ECM monitors the fuel tank pressure (FTP) sensor voltage to verify that the system is able to reach a predetermined level of vacuum within a set amount of time.

Conditions for Running the DTC

- DTCs P00C8, P00C9, P010C, P010D, P16A0, P16A1, P16A2, P160E, P160D, P16F3, P0068, P0101, P0102, P0103, P0111, P0112, P0113, P0114 P0116, P0117, P0118, P0122, P0123, P0125, P0128, P0191, P0192, P0193, P0222, P0223, P0443, P0449, P0452, P0453, P0454, P0502, P0503, P0601, P0604, P0606, P0722, P0723, P1104, P1682, P2100, P2101, P2102, P2103, P2135, P2176, P2227, P2228, P2229, P2230 are not set.
- The ignition voltage is between 11-32 V.
- The barometric pressure (BARO) is greater than 70 kPa.
- The fuel level is between 10-90%.
- The EVAP purge flow is greater than 4.50%
- The cold startup engine coolant temperature (ECT) and the startup intake air temperature (IAT) are within 8°C (46°F).
- The startup engine coolant temperature (ECT) is less than 35°C (95°F).
- The startup intake air temperature (IAT) is between 4-30°C (39-86°F).
- DTC P0455 runs once per cold start, for up to 17 min, when the above conditions are met.

Conditions for Setting the DTC

- The EVAP system is not able to achieve or maintain a calibrated level of vacuum within a set amount of time.
- After setting the DTC for the first time, 2 L (0.5 gal) of fuel must be consumed before setting the DTC for the second time.
- With a DTC P0455 detected a weak vacuum follow-up test (fuel cap replacement test) will run and passes if tank vacuum is greater than 2.74 kPa (11 in H20). This test will run for a maximum of 21 min. This test runs until it passes.

Action Taken When the DTC Sets

DTC P0455 is a Type B DTC.

Conditions for Clearing the MIL/DTC

DTC P0455 is a Type B DTC.

Diagnostic Aids

- Inspect for a loose, missing, damaged, or incorrect fuel fill cap.
- Inspect for a damaged fuel filler neck seal surface.
- A blockage or restriction in the EVAP purge solenoid valve, purge pipe, EVAP canister, or vapor pipe, can cause this DTC to set.
- The EVAP system can be filled with smoke more quickly and completely by opening the system opposite the end where the smoke is injected. For example, when injecting smoke at the service port remove the fuel fill cap, or temporarily leave the vent open, until smoke is observed, then close the system and continue testing. If using a fuel cap adapter at the filler neck, use the **J 41413-VLV** at the service port to allow the system to fill faster.
- To help locate intermittent leaks using the **GE 41413-A** , move all EVAP components while observing smoke with the **GE 41413-SPT** .
- Individual components can be isolated and tested using adapters in the **J 41413-300** .
- When servicing the EVAP system, test pressure must not exceed 13 in H20 (0.5 PSI) as pressure in excess of this could cause system components to perform inaccurately.
- A condition may exist where a leak in the EVAP system only exists under a vacuum condition. This type of leak may be detected by using the scan tool Purge/Seal function to create a vacuum in the EVAP system and then observe the FTP Sensor parameter for vacuum decay.

Reference Information

Schematic Reference

Engine Controls Schematics

Connector End View Reference

COMPONENT CONNECTOR END VIEWS - INDEX

Description and Operation

Evaporative Emission Control System Description

Electrical Information Reference

- **Circuit Testing**
- **Connector Repairs**
- **Testing for Intermittent Conditions and Poor Connections**
- **Wiring Repairs**

DTC Type Reference

Powertrain Diagnostic Trouble Code (DTC) Type Definitions

Scan Tool Reference

Control Module References for scan tool information

Special Tools

- **CH 48096** EVAP Service Access Port Tool
- **GE 41415-30** Fuel Tank Cap Adapter
- **GE 41413-A** Evaporative Emissions System Tester (EEST)
- **J 41413-300** EVAP Cap and Plug Kit
- **GE 41413-SPT** High Intensity White Light
- **J 41413-311** EVAP Plug (Brass Nozzle)
- **J 41413-VLV** EVAP Service Port Vent Fitting

For equivalent regional tools, refer to **Special Tools**

Circuit/System Testing

IMPORTANT:

- **Larger volume fuel tanks and/or those with lower fuel levels may require several minutes for the floating indicator to stabilize or produce smoke from a leak.**
- **Refer to the GE 41413-A operation manual for detailed instructions in Evaporative Emission Control System Diagnosis.**

1. Disconnect the purge tube at the quick connector on the EVAP canister side of the purge solenoid valve and install the **CH 48096** .
2. Connect the **GE 41413-A** to the vehicle EVAP service port adapter.

3. Command the EVAP Purge/Seal function to System Seal with a scan tool to seal the EVAP system.
4. Verify that there is no leak in the EVAP system using the flow meter on the **GE 41413-A** , calibrated to 0.51 mm (0.020 in)..
    - **If a leak is detected**
    1. Apply smoke to the EVAP system at the service access port adapter with the **GE 41413-A** .
    2. Locate the leak using the **GE 41413-SPT**
    - When the leak is located, repair or replace the affected component as necessary.
    - **If no leak detected**

NOTE: The steps below test for a restriction in the purge path.

5. Connect the **GE 41413-A** nitrogen/smoke hose to the **J 41413-311** .
6. Disconnect the hose at the fuel cap end of the **GE 41415-30** and connect to the **J 41413-311** .
7. Install the **GE 41415-30** , filler neck end only, to the vehicle.
8. Engine idling, command the Purge/Seal function to System Seal with a scan tool to seal the system.
9. Command the EVAP Purge Solenoid Valve to 30% with a scan tool.
10. Verify the vacuum/pressure gauge on the **GE 41413-A** and the scan tool Fuel Tank Pressure Sensor parameter both show vacuum.
    - **If the vacuum/pressure gauge shows vacuum, but the FTP parameter does not show vacuum**

      Replace the B150 Fuel Tank Pressure Sensor.

    - **If neither the FTP parameter nor the vacuum/pressure gauge shows vacuum**

      Repair the restriction in the purge path.

11. Verify that the Fuel Tank Pressure Sensor parameter increases to greater than 3.2 V, and the pressure values are similar between the scan tool Fuel Tank Pressure Sensor and the vacuum/pressure gauge on the **GE 41413-A** .
    - **If not within the specified range**

      Replace the B150 Fuel Tank Pressure Sensor.

    - **If within the specified range**
12. All OK

Repair Instructions

Perform the **Diagnostic Repair Verification** after completing the repair.

- **Fuel Tank Pressure Sensor Replacement**
- **Control Module References** for ECM replacement, programming and setup

DTC P0496

Diagnostic Instructions

- Perform the **Diagnostic System Check - Vehicle** prior to using this diagnostic procedure.
- Review **Strategy Based Diagnosis** for an overview of the diagnostic approach.
- **Diagnostic Procedure Instructions** provides an overview of each diagnostic category.

DTC Descriptor

DTC P0496

Evaporative Emission (EVAP) System Flow During Non-Purge

Circuit/System Description

This DTC tests for undesired intake manifold vacuum flow to the evaporative emission (EVAP) system. The engine control module (ECM) seals the EVAP system by commanding the EVAP purge solenoid valve OFF and the vent solenoid valve ON. The ECM monitors the fuel tank pressure (FTP) sensor to determine if a vacuum is being drawn on the EVAP system. If vacuum in the EVAP system is more than a predetermined value within a predetermined time, this DTC sets.

The following table illustrates the relationship between the ON and OFF states, and the Open or Closed states of the EVAP purge and vent solenoid valves.

ECM Command	EVAP Purge Solenoid Valve	EVAP Vent Solenoid Valve
ON	Open	Closed
OFF	Closed	Open

Conditions for Running the DTC

- DTCs P0068, P00C8, P00C9, P00CA, P0090, P0091, P0092, P0106, P0107, P0108, P0111, P0112, P0113, P0114, P0116, P0117, P0118, P0122, P0123, P0125, P0128, P0191, P0192, P0193, P0222, P0223, P0601, P0604, P0606, P0697, P06A3, P06DB, P06DE, P0A1D, P1104, P127A, P127C, P127D, P15F2, P160D, P160E, P1682, P16A0, P16A1, P16A2, P16F3, P0443, P0449, P0452, P0453, P0454, P0502, P0503, P0722, P0723, P2100, P2101, P2102, P2103, P2122, P2123, P2127, P2128, P2135, P2138, P215B, P2176, P228C, P228D, U0073, U0074, U0293, U1817, are not set.
- The ignition voltage is between 11-32 V.
- The engine OFF time is greater than 48 min,
- The barometric pressure (BARO) is greater than 70 kPa.
- The fuel level is between 10-90 %.
- The startup engine coolant temperature (ECT) is less than 35°C (95°F).
- The startup intake air temperature (IAT) is between 4-34°C (39-93°F).
- DTC P0496 runs once per cold start, for up to 17 min, when the above conditions are met.

Conditions for Setting the DTC

- The ECM detects more than 10 in H2O vacuum for 5 s during a non-purge condition.
- This test will run with the purge valve closed and the vent valve closed.

Action Taken When the DTC Sets

DTC P0496 is a Type B DTC.

Conditions for Clearing the MIL/DTC

DTC P0496 is a Type B DTC.

Diagnostic Aids

An intermittent condition could be caused by an improperly installed or damaged EVAP Purge Solenoid Valve or by a temporary blockage or restriction in the EVAP Purge Solenoid Valve or system tubing.

Reference Information

Schematic Reference

Engine Controls Schematics

Connector End View Reference

COMPONENT CONNECTOR END VIEWS - INDEX

Description and Operation

Evaporative Emission Control System Description

Electrical Information Reference

- **Circuit Testing**
- **Connector Repairs**
- **Testing for Intermittent Conditions and Poor Connections**
- **Wiring Repairs**

DTC Type Reference

Powertrain Diagnostic Trouble Code (DTC) Type Definitions

Scan Tool Reference

Control Module References for scan tool information

Circuit/System Verification

1. Operate the vehicle within the Conditions for Running the DTC. You may also operate the vehicle within the conditions that you observed from the Freeze Frame/Failure Records data.
2. Verify the DTC does not set.
   - **If the DTC sets**

     Refer to Circuit/System Testing below.

   - **If the DTC does not set**
3. All OK

Circuit/System Testing

1. Ignition ON, engine OFF.
2. Command the EVAP Purge/Seal function to System Seal with a scan tool to seal the EVAP system.
3. Start the engine.
4. Observe the Fuel Tank Pressure Sensor with a scan tool. The Fuel Tank Pressure Sensor parameter should be less than 1.7 V after 90 s.
   - **If not within specifications**

     Replace the Q12 Evaporative Emission Purge Solenoid Valve

   - **Within Specifications**
5. All OK

Repair Instructions

Perform the **Diagnostic Repair Verification** after completing the repair.

Evaporative Emission Canister Purge Solenoid Valve Replacement

DTC P0506 OR P0507

Diagnostic Instructions

- Perform the **Diagnostic System Check - Vehicle** prior to using this diagnostic procedure.
- Review **Strategy Based Diagnosis** for an overview of the diagnostic approach.
- **Diagnostic Procedure Instructions** provide an overview of each diagnostic category.

DTC Descriptors

DTC P0506

Idle Speed Low

DTC P0507

Idle Speed High

Circuit/System Description

The throttle actuator control (TAC) motor is controlled by the engine control module (ECM). The DC motor located in the throttle body drives the throttle blade. In order to decrease idle speed, along with spark and fuel delivery changes the ECM commands the throttle closed reducing air flow into the engine and the idle speed decreases. In order to increase idle speed, the ECM commands the throttle plate open allowing more air to pass the throttle plate.

Conditions for Running the DTC

- DTCs P0068, P0101, P0102, P0103, P0112, P0113, P0116, P0117, P0118, P0120, P0121, P0122, P0123, P0128, P0171, P0172, P0201-P0204, P0220, P0222, P0223, P0300-P0304, P0351-P0354, P0461- P0463, P0496, P0606, P0722, P0723, P1516, P2066-P2068, P2101, P2135 are not set.
- The engine is operating for at least 60 s.
- The barometric pressure (BARO) is greater than 70 kPa (11 psi).
- The engine coolant temperature (ECT) is greater than 60°C (140°F).
- The system voltage is between 11-32 V.
- The transmission is not changing gears.
- The torque converter clutch (TCC) is not changing states.
- The intake air temperature (IAT) is warmer than -20°C (-4°F).
- The vehicle speed is less than 3 km/h (2 mph).
- The commanded engine speed is steady within 25 RPM.
- The engine is idling for greater than 5 s.
- A scan tool output control is not active.
- DTC P0506 and P0507 run continuously when the above conditions are met for greater than 10 s.

Conditions for Setting the DTC

P0506

The actual idle speed is approximately 91 RPM lower than the desired idle speed.

P0507

The actual idle speed is approximately 182 RPM greater than the desired idle speed.

Action Taken When the DTC Sets

DTCs P0506 and P0507 are Type B DTCs.

Conditions for Clearing the MIL/DTC

DTCs P0506 and P0507 are Type B DTCs.

Diagnostic Aids

- A stalling condition can cause DTC P0506 to set.
- An intermittent vehicle speed sensor (VSS) signal can cause DTC P0507 to set.
- An intermittent clutch pedal position sensor signal, if equipped, can cause DTC P0506 to set.

Reference Information

Schematic Reference

Engine Controls Schematics

Connector End View Reference

COMPONENT CONNECTOR END VIEWS - INDEX

Description and Operation

Throttle Actuator Control (TAC) System Description

Electrical Information Reference

- **Circuit Testing**
- **Connector Repairs**
- **Testing for Intermittent Conditions and Poor Connections**
- **Wiring Repairs**

DTC Type Reference

Powertrain Diagnostic Trouble Code (DTC) Type Definitions

Scan Tool Reference

Control Module References for scan tool information

Circuit/System Verification

1. Ignition ON.
2. Verify no other DTCs set.
    - **If any other DTC is set**

      Refer to **Diagnostic Trouble Code (DTC) List - Vehicle** for further diagnosis.

    - **If no other DTC is set**

3. Verify the scan tool Throttle Body Idle Airflow Compensation parameter is less than 90 %.
   - **90 % or greater**

     Refer to **Throttle Body Inspection and Cleaning** .

   - **If less than 90 %**
4. Engine Idling at the normal operating temperature.

   NOTE: The engine must run for greater than 60 s, then idle at a steady state for an additional 10 s before comparing the actual and desired engine speed parameters.

5. Verify the actual Engine Speed is not 100 RPM less than the Desired Idle Speed.
   - **If 100 RPM less than the Desired Idle Speed**

     Refer to Circuit/System Testing below.

   - **If 100 RPM greater than the Desired Idle Speed**
6. Verify the actual Engine Speed is not 200 RPM greater than the Desired Idle Speed.
   - **If 200 RPM greater than the Desired Idle Speed**

     Refer to Circuit/System Testing below.

   - **If 200 RPM less than the Desired Idle Speed**
7. Operate the vehicle within the Conditions for Running the DTC. You may also operate the vehicle within the conditions that you observed from the Freeze Frame/Failure Records data.
8. Verify the DTC does not set.
   - **If the DTC sets**

     Refer to Circuit/System Testing below.

   - **If the DTC does not set**
9. All OK

Circuit/System Testing

P0506

1. Verify the conditions listed below do not exist.
   - Restricted exhaust
   - Mechanical conditions that limits engine speed
   - Parasitic load on the engine-For example, a transmission condition, a belt driven accessory condition.

- **If a condition is found**

  Repair as necessary.

- **If a condition is not found**

2. All OK.

P0507

1. Verify the conditions listed below do not exist.
   - Vacuum leaks
   - A throttle valve that does not close correctly
   - Verify the correct operation of the crankcase ventilation system. Inspect for the conditions listed below:
     - Improper routing of the positive crankcase ventilation (PCV) system
     - Vacuum leaks in the PCV system.
   - **If a condition is found**

     Repair as necessary.

   - **If a condition is not found**
2. All OK.

Repair Instructions

Perform the **Diagnostic Repair Verification** after completing the repair.

Throttle Body Assembly Replacement

DTC P0601-P0604, P0606, OR P062F (FUEL PUMP CONTROL MODULE)

Diagnostic Instructions

- Perform the **Diagnostic System Check - Vehicle** prior to using this diagnostic procedure.
- Review **Strategy Based Diagnosis** for an overview of the diagnostic approach.
- **Diagnostic Procedure Instructions** provides an overview of each diagnostic category.

DTC Descriptors

DTC P0601

Control Module Read Only Memory Performance

DTC P0602

Control Module Not Programmed

DTC P0603

Control Module Long Term Memory Reset

DTC P0604

Control Module Random Access Memory Performance

DTC P0606

Control Module Processor Performance

DTC P062F

Control Module Long Term Memory Performance

Circuit/System Description

The internal fault detection is handled inside the fuel pump control module. No external circuits are involved.

Conditions for Running the DTC

The fuel pump control module runs the program to detect an internal fault when power up is commanded. The only requirements are voltage and ground. This program runs even if the voltage is out of the valid operating range.

Conditions for Setting the DTC

The fuel pump control module has detected an internal malfunction.

Action Taken When the DTC Sets

DTC P0601, P0602, P0603, P0604, P0606 and P062F are type A DTCs.

Conditions for Clearing the DTC

DTC P0601, P0602, P0603, P0604, P0606 and P062F are type A DTCs.

Reference Information

Description and Operation

Engine Controls Schematics

Electrical Information Reference

- **Circuit Testing**
- **Connector Repairs**
- **Testing for Intermittent Conditions and Poor Connections**
- **Wiring Repairs**

DTC Type Reference

Powertrain Diagnostic Trouble Code (DTC) Type Definitions

Circuit/System Verification

NOTE: This DTC may be stored as a history DTC without affecting the operation of the module. If stored only as a history DTC and not retrieved as a current DTC, do not replace the module.

1. Ignition ON.
2. Verify DTC P0602 is not set.
    - **If DTC P0602 is set**
    1. Program the K27 fuel pump control module.
    2. Verify the DTC does not set.
        - If the DTC sets, replace the K27 fuel pump control module.
        - If the DTC does not set.
    3. All OK.
    - **If DTC P0602 is not set**
3. Verify DTCs P0601, P0603, P0604, P0606, and P062F are not set.
    - **If any of the DTCs are set**
    1. Program the K27 fuel pump control module.
    2. Verify the DTC does not set.
        - If the DTC sets, replace the K27 fuel pump control module.
        - If the DTC does not set.
    3. All OK.
    - **If none of the DTCs are set**
4. All OK

Repair Instructions

Perform the **Diagnostic Repair Verification** after completing the repair.

Control Module References for fuel pump control module replacement, programming and setup

DTC P0601-P0604, P0606, P062B, P062F, P0630, P16F3, OR P262B (ECM)

Diagnostic Instructions

- Perform the **Diagnostic System Check - Vehicle** prior to using this diagnostic procedure.
- Review **Strategy Based Diagnosis** for an overview of the diagnostic approach.
- **Diagnostic Procedure Instructions** provides an overview of each of the diagnostic category.

DTC Descriptors

DTC P0601

Control Module Read Only Memory Performance

DTC P0602

Control Module Not Programmed

DTC P0603

Control Module Long Term Memory Reset

DTC P0604

Control Module Random Access Memory Performance

DTC P0606

Control Module Processor Performance

DTC P062F

Control Module Long Term Memory Performance

DTC P0630

VIN Not Programmed or Mismatched - Engine Control Module (ECM)

DTC P16F3

Control Module Redundant Memory Performance

DTC P262B

Control Module Power Off Timer Performance

Circuit/System Description

This diagnostic applies to internal microprocessor integrity conditions within the engine control module (ECM).

This diagnostic also addresses if the ECM is not programmed.

Conditions for Running the DTCs

P0601, P0602, P0630

These DTCs run continuously when the ignition is in ON.

P0603, P062F

These DTCs run once per ignition cycle.

P0604

DTC P0604 runs continuously when the ignition is ON for greater than 30 s.

P0606

DTC P0606 runs continuously when Ignition 1 Signal voltage is greater than 11 V.

P16F3

- The engine speed is greater than 500 RPM.
- DTCs P0101, P0102, P0103, P0106, P0107, P0108, P2227, P2228, P2229, or P2230 are not set.
- DTC P16F3 runs continuously when the above conditions are met.

P262B

DTC P262B runs on ECM power down.

Conditions for Setting the DTCs

The ECM detects an internal failure or incomplete programming for more than 10 s.

Actions Taken When the DTC Sets

- DTCs P0601, P0602, P0603, P0604, P0606, P062F, P0630, and P16F3 are Type A DTCs.
- DTC P262B is a Type B DTC.

Conditions for Clearing the MIL/DTC

- DTCs P0601, P0602, P0603, P0604, P0606, P062F, P0630, and P16F3 are Type A DTCs.
- DTC P262B is a Type B DTC.

Diagnostic Aids

Low voltage or a momentary loss of power or ground to the ECM may cause a DTC to set. Verify the

following:

- The battery cables are clean and tight, and the battery is fully charged. Refer to **Battery Inspection/Test** .
- The ECM ground circuits do not have an open or high resistance.
- The ECM power circuits do not have an open, short to ground, or high resistance.

Reference Information

Schematic Reference

Engine Controls Schematics

Connector End View Reference

COMPONENT CONNECTOR END VIEWS - INDEX

Electrical Information Reference

- **Circuit Testing**
- **Connector Repairs**
- **Testing for Intermittent Conditions and Poor Connections**
- **Wiring Repairs**

DTC Type Reference

Powertrain Diagnostic Trouble Code (DTC) Type Definitions

Scan Tool Reference

Control Module References for scan tool information

Circuit/System Verification

1. Ignition ON, clear the DTC information with a scan tool. Observe the DTC information with a scan tool.
2. Verify that DTC P0641, P0651, P0697, or P06A3 does not set.
    - **If a DTC is set**

      Refer to **DTC P0641, P0651, P0697, or P06A3 (ECM)** for further diagnosis.

    - **If DTC P0641, P0651, P0697, or P06A3 does not set**
3. Observe the DTC information with a scan tool. Verify DTC P0602 or P0630 is not set.
    - **If DTC P0602 or P0630 is set**
    1. Program the K20 Engine Control Module. Refer to **Control Module References** .
    2. Verify DTC P0602 or P0630 is not set.

- If DTC P0602 or P0630 sets, replace the K20 Engine Control Module.
- If DTC P0602 or P0630 does not set

3. All OK.
   - **If DTC P0602 or P0630 is not set**
4. Verify DTC P0601, P0603, P0604, P0606, P062F, P16F3, or P262B is not set.
   - **If DTC P0601, P0603, P0604, P0606, P062F, P16F3, or P262B is set**

     Replace the K20 Engine Control Module.

   - **If DTC P0601, P0603, P0604, P0606, P062F, P16F3, or P262B is not set**
5. All OK.

Repair Instructions

Perform the **Diagnostic Repair Verification** after completing the diagnostic procedure.

Control Module References for Engine Control Module replacement, programming and setup

DTC P0627-P0629

Diagnostic Instructions

- Perform the **Diagnostic System Check - Vehicle** prior to using this diagnostic procedure.
- Review **Strategy Based Diagnosis** for an overview of the diagnostic approach.
- **Diagnostic Procedure Instructions** provides an overview of each diagnostic category.

DTC Descriptors

DTC P0627

Fuel Pump Enable Circuit

DTC P0628

Fuel Pump Enable Circuit Low Voltage

DTC P0629

Fuel Pump Enable Circuit High Voltage

Diagnostic Fault Information

Circuit	Short to Ground	Open/High Resistance	Short to Voltage	Signal Performance
Control	P0628	P0627, P0628	P0629	-

Circuit/System Description

The engine control module (ECM) provides ignition voltage to the fuel pump flow control module whenever the engine is cranking or running. The control module enables the fuel pump flow control module as long as the engine is cranking or running, and ignition system reference pulses are received. While this enable voltage is being received, the fuel pump flow control module supplies a varying voltage to the in-tank fuel pump module in order to maintain the desired fuel line pressure.

Conditions for Running the DTC

P0627 and P0629

- The ignition voltage is between 11-32 V.
- The ECM has commanded the fuel pump OFF.
- The DTCs run continuously when the above conditions are met for greater than 1 s.

P0628

- The ignition voltage is between 11-32 V.
- The ECM has commanded the fuel pump ON.
- The DTC runs continuously when the above conditions are met for greater than 1 s.

Conditions for Setting the DTC

The ECM detects that the commanded state of the driver and the actual state of the control circuit do not match for greater than 2.5 s.

Action Taken When the DTC Sets

DTCs P0627, P0628, and P0629 are Type B DTCs.

Conditions for Clearing the DTC

DTCs P0627, P0628, and P0629 are Type B DTCs.

Reference Information

Schematic Reference

Engine Controls Schematics

Connector End View Reference

COMPONENT CONNECTOR END VIEWS - INDEX

Electrical Information Reference

- **Circuit Testing**
- **Connector Repairs**
- **Testing for Intermittent Conditions and Poor Connections**
- **Wiring Repairs**

DTC Type Reference

Powertrain Diagnostic Trouble Code (DTC) Type Definitions

Scan Tool Reference

Control Module References for scan tool information

Circuit/System Verification

1. Ignition ON.
2. Verify that DTC P0627, P0628, or P0629 is not set.
   - **If a DTC is set**

     Refer to Circuit/System Testing below.

   - **If a DTC is not set**
3. Verify the parameters listed below do not display Malfunction when commanding the Fuel Pump Enable On and Off with a scan tool.
   - Fuel Pump Enable Circuit Low Voltage Test Status
   - Fuel Pump Enable Circuit Open Test Status
   - Fuel Pump Enable Circuit High Voltage Test Status
   - **If Malfunction is displayed**

     Refer to Circuit/System Testing below.

   - **If Malfunction is not displayed**
4. Operate the vehicle within the Conditions for Running the DTC. You may also operate the vehicle within the conditions that you observed from the Freeze Frame/Failure Records data.
5. Verify the DTC does not set.
   - **If the DTC sets**

     Refer to Circuit/System Testing below.

   - **If the DTC does not set**
6. All OK.

Circuit/System Testing

1. Ignition OFF, disconnect the harness connector at the K27 Fuel Pump Control Module.
2. Install two 3 A fused jumper wires at the harness connector between the following terminals:
   - Terminal 5 and terminal 6
   - Terminal 17 and terminal 18
3. Ignition ON for 10 s.
4. Verify that a test lamp does not illuminate between the control circuit terminal 20 and ground.
   - **If the test lamp illuminates**
   1. Ignition OFF, remove the test lamp, disconnect the harness connector at the K20 Engine Control Module, ignition ON.
   2. Test for less than 1 V between the control circuit and ground.
      - If 1 V or greater, repair the short to voltage on the circuit.
      - If less than 1 V, replace the K20 Engine Control Module.
   - **If the test lamp does not illuminate**
5. Remove the test lamp.
6. Verify the scan tool Fuel Pump Enable Circuit Low Voltage Test Status parameter is OK when commanding the Fuel Pump Enable On with a scan tool.
   - **If OK is not displayed**
   1. Ignition OFF, disconnect the harness connector at the K20 Engine Control Module.
   2. Test for infinite resistance between the control circuit and ground.
      - If less than infinite resistance, repair the short to ground on the circuit.
      - If infinite resistance, replace the K20 Engine Control Module.
   - **If OK is displayed**
7. Install a 3 A fused jumper wire between the control circuit terminal 20 and ground.
8. Verify the scan tool Fuel Pump Enable Circuit Low Voltage Test Status parameter is Malfunction when commanding the Fuel Pump Enable On with a scan tool.
   - **If Malfunction is not displayed**
   1. Ignition OFF, remove the jumper wire, disconnect the harness connector at the K20 Engine Control Module.
   2. Test for less than 2 ohms in the control circuit end to end.
      - If 2 ohms or greater, repair the open/high resistance in the circuit.
      - If less than 2 ohms, replace the K20 Engine Control Module.
   - **If Malfunction is displayed**
9. Replace the K27 Fuel Pump Control Module.

Repair Instructions

Perform the **Diagnostic Repair Verification** after completing the diagnostic procedure.

Control Module References for Engine Control Module or Fuel Pump Flow Control Module replacement, programming, and setup

DTC P0641 OR P06A6 (FUEL PUMP CONTROL MODULE)

Diagnostic Instructions

- Perform the **Diagnostic System Check - Vehicle** prior to using this diagnostic procedure.
- Review **Strategy Based Diagnosis** for an overview of the diagnostic approach.
- **Diagnostic Procedure Instructions** provides an overview of each diagnostic category.

DTC Descriptors

DTC P0641

5 V Reference Circuit

DTC P06A6

5 V Reference 1 Performance

Diagnostic Fault Information

Circuit	Short to Ground	Open/High Resistance	Short to Voltage	Signal Performance
5 V Reference	P018C, P0641, P06A6	P018C	P018D, P0641, P06A6	P06A6
Signal	P018C	P018B, P018C	P018D	P018B
Low Reference	-	P0641, P06A6	-	P06A6

Circuit/System Description

The fuel pressure sensor is located on the fuel line. The fuel pressure sensor monitors the fuel pressure in the fuel line. The fuel pump control module monitors the voltage signal from the fuel pressure sensor.

Conditions for Running the DTC

The ignition is ON.

Conditions for Setting the DTC

The fuel pump control module detects that the fuel pressure 5 V reference is above or below a predetermined voltage threshold.

Action Taken When the DTC Sets

DTCs P0641 and P06A6 are Type A DTCs.

Conditions for Clearing the DTC

DTCs P0641 and P06A6 are Type A DTCs.

Diagnostic Aids

Using the Failure Records data may help locate an intermittent condition. If you cannot duplicate the DTC, the information in the Failure Records can help determine how many miles since the DTC set. The Fail Counter and Pass Counter can help determine how many ignition cycles that the diagnostic test reported a pass and/or a fail.

Reference Information

Schematic Reference

Engine Controls Schematics

Connector End View Reference

COMPONENT CONNECTOR END VIEWS - INDEX

Description and Operation

Fuel System Description

Electrical Information Reference

- **Circuit Testing**
- **Connector Repairs**
- **Testing for Intermittent Conditions and Poor Connections**
- **Wiring Repairs**

DTC Type Reference

Powertrain Diagnostic Trouble Code (DTC) Type Definitions

Scan Tool Reference

Control Module References for scan tool information

Circuit/System Testing

1. Ignition OFF and all vehicle systems OFF, disconnect the harness connector at the B47 Fuel Pressure Sensor. It may take up to 2 minutes for all vehicle systems to power down.
2. Test for less than 10 ohms between the low reference circuit terminal 2 and ground.
    - **If 10 ohms or greater**
    1. Ignition OFF, disconnect the harness connector at the K27 Fuel Pump Control Module.
    2. Test for less than 2 ohms in the low reference circuit end to end.

- If 2 ohms or greater, repair the open/high resistance in the circuit.
- If less than 2 ohms, replace the K27 Fuel Pump Control Module.

- **If less than 10 ohms**

3. Ignition ON.
4. Test for 4.8-5.2 V between the 5 V reference circuit terminal 3 and ground.
   - **If less than 4.8 V**
   1. Ignition OFF, disconnect the harness connector at the K27 Fuel Pump Control Module.
   2. Test for infinite resistance between the 5 V reference circuit and ground.
      - If less than infinite resistance, repair the short to ground on the circuit.
      - If infinite resistance
   3. Test for less than 2 ohms in the 5 V reference circuit end to end.
      - If 2 ohms or greater, repair the open/high resistance in the circuit.
      - If less than 2 ohms, replace the K27 Fuel Pump Control Module.
   - **If greater than 5.2 V**
   1. Ignition OFF, disconnect the harness connector at the K27 Fuel Pump Control Module, ignition ON.
   2. Test for less than 1 V between the 5 V reference circuit and ground.
      - If 1 V or greater, repair the short to voltage on the circuit.
      - If less than 1 V, replace the K27 Fuel Pump Control Module.
   - **If between 4.8-5.2 V**
5. Verify the scan tool Fuel Pressure Sensor Voltage parameter is less than 1 V.
   - **If 1 V or greater**
   1. Ignition OFF, disconnect the harness connector at the K27 Fuel Pump Control Module, ignition ON.
   2. Test for less than 1 V between the signal circuit terminal 1 and ground.
      - If 1 V or greater, repair the short to voltage on the circuit.
      - If less than 1 V, replace the K27 Fuel Pump Control Module.
   - **If less than 1 V**
6. Install a 3 A fused jumper wire between the signal circuit terminal 1 and the 5 V reference circuit terminal 3, wait 15 seconds.
7. Verify the scan tool Fuel Pressure Sensor Voltage parameter is greater than 4.8 V.
   - **If 4.8 V or less**
   1. Ignition OFF, disconnect the harness connector at the K27 Fuel Pump Control Module.
   2. Test for infinite resistance between the signal circuit terminal 1 and ground.
      - If less than infinite resistance, repair the short to ground on the circuit.
      - If infinite resistance
   3. Test for less than 2 ohms in the signal circuit end to end.
      - If 2 ohms or greater, repair the open/high resistance in the circuit.

- If less than 2 ohms, replace the K27 Fuel Pump Control Module.
- **If greater than 4.8 V**

8. Test or replace the B47 Fuel Pressure Sensor.

Repair Instructions

Perform the **Diagnostic Repair Verification** after completing the repair.

Control Module References for fuel pump control module replacement, programming and setup

DTC P0641, P0651, P0697, OR P06A3 (ECM)

Diagnostic Instructions

- Perform the **Diagnostic System Check - Vehicle** prior to using this diagnostic procedure.
- Review **Strategy Based Diagnosis** for an overview of the diagnostic approach.
- **Diagnostic Procedure Instructions** provides an overview of each diagnostic category.

DTC Descriptors

DTC P0641

5V Reference 1 Circuit

DTC P0651

5V Reference 2 Circuit

DTC P0697

5V Reference 3 Circuit

DTC P06A3

5V Reference 4 Circuit

Circuit/System Description

The engine control module (ECM) has 4 internal 5V reference circuits. Each internal reference circuit provides external 5V reference circuits for more than one sensor. A short to ground or short to voltage on one external 5 V reference circuit can affect all the components connected to the same internal 5V reference circuit.

Conditions for Running the DTC

These DTCs run continuously when the ignition voltage is greater than 6.4 V.

Conditions for Setting the DTC

The ECM detects a short to ground or voltage on any of the 5V reference circuits for greater than 0.5 s.

Action Taken When the DTC Sets

DTCs P0641, P0651, P0697, and P06A3 are Type A DTCs.

Conditions for Clearing the DTC

DTCs P0641, P0651, P0697, and P06A3 are Type A DTCs.

Diagnostic Aids

P0641

The 5V reference 1 circuit provides 5 V circuits to the sensors listed below:

- Air conditioning (A/C) refrigerant pressure sensor
- Exhaust and intake camshaft position sensors
- Fuel tank pressure sensor
- Intake manifold pressure and air temperature sensor

P0651

The 5V reference 2 circuit provides 5 V circuits to the sensors listed below:

- Brake pedal position sensor (automatic transmission)
- Clutch pedal position sensor (manual transmission)
- Crankshaft position sensor
- Multifunction intake air sensor
- Vehicle speed sensor (manual transmission)

P0697

The 5V reference 3 circuit provides 5 V circuits to the sensors listed below:

- Accelerator pedal position sensor 2
- Manifold absolute pressure sensor

P06A3

The 5V reference 4 circuit provides 5 V circuits to the sensors listed below:

- Accelerator pedal position sensor 1
- Throttle position sensor 1 and 2

Disconnecting one component at a time from the affected 5V reference circuit while observing the scan tool 5V Reference Circuit Status parameter may help locate the fault. The scan tool parameter will change from Malfunction to OK when the source of the fault is disconnected. If all 5V reference components have been disconnected and a fault is still indicated, the fault may exist in the wiring harness.

Reference Information

Schematic Reference

Engine Controls Schematics

Connector End View Reference

COMPONENT CONNECTOR END VIEWS - INDEX

Component View Reference

Powertrain Component Views

Electrical Information Reference

- **Circuit Testing**
- **Connector Repairs**
- **Testing for Intermittent Conditions and Poor Connections**
- **Wiring Repairs**

DTC Type Reference

Powertrain Diagnostic Trouble Code (DTC) Type Definitions

Scan Tool Reference

Control Module References for scan tool information

Circuit/System Verification

1. Ignition ON.
2. Verify all scan tool 5V Reference Circuit Status parameters do not display Malfunction.
    - **If Malfunction is displayed**

      Refer to Circuit/System Testing below.

    - **If Malfunction is not displayed**
3. Operate the vehicle within the Conditions for Running the DTC. You may also operate the vehicle within the conditions that you observed from the Freeze Frame/Failure Records data.
4. Verify the DTC does not set.

- **If the DTC sets**

  Refer to Circuit/System Testing below.

- **If the DTC does not set**

5. All OK.

Circuit/System Testing

NOTE: Additional DTCs will set when disconnecting the components.

1. Ignition OFF, disconnect the harness connector at all appropriate sensors for the applicable DTC. Refer to Diagnostic Aids.
2. Ignition ON.
3. Test for 4.8-5.2 V between one of the 5V reference circuits and ground.
   - **If less than 4.8 V**
   1. Ignition OFF, disconnect the harness connectors at the K20 Engine Control Module.
   2. Test for infinite resistance between the 5V reference circuit for each applicable component and ground.
      - If less than infinite resistance, repair the short to ground on the circuit.
      - If infinite resistance, replace the K20 Engine Control Module.
   - **If greater than 5.2 V**
   1. Ignition OFF, disconnect the harness connectors at the K20 Engine Control Module.
   2. Test for less than 1 V between the 5V reference circuit for each applicable component and ground.
      - If 1 V or greater, repair the short to voltage on the circuit.
      - If less than 1 V, replace the K20 Engine Control Module.
   - **If between 4.8-5.2 V**

   NOTE: A short to voltage or ground on the signal circuit of certain components may cause this DTC to set.

4. Verify the appropriate scan tool 5V Reference 1, 2, 3, or 4 Circuit Status parameter displays OK while connecting each component associated with the 5V reference circuit one at a time.
   - **If OK is not displayed when a component is connected**

     Replace the component.

   - **If OK is displayed after all components have been connected**
5. All OK.

Repair Instructions

Perform the **Diagnostic Repair Verification** after completing the repair.

- **Accelerator Pedal Position Sensor Replacement**
- **Air Conditioning (A/C) Refrigerant Pressure Sensor Replacement**
- **Brake Pedal Position Sensor Replacement**
- **Camshaft Position Sensor Replacement**
- **Clutch Pedal Position Sensor Replacement**
- **Crankshaft Position Sensor Replacement**
- **Fuel Tank Pressure Sensor Replacement**
- **Intake Air Pressure and Temperature Sensor Replacement**
- **Manifold Absolute Pressure Sensor Replacement**
- **Mass Airflow Sensor Replacement**
- **Throttle Body Assembly Replacement**
- **Vehicle Speed Sensor Replacement**
- **Control Module References** for engine control module replacement, programming, and setup.

DTC P0650

Diagnostic Instructions

- Perform the **Diagnostic System Check - Vehicle** prior to using this diagnostic procedure.
- Review **Strategy Based Diagnosis** for an overview of the diagnostic approach.
- **Diagnostic Procedure Instructions** provides an overview of each diagnostic category.

DTC Descriptor

DTC P0650

Malfunction Indicator Lamp (MIL) Control Circuit

Diagnostic Fault Information

Circuit	Short to Ground	Open/High Resistance	Short to Voltage	Signal Performance
Ignition Voltage	P0650	P0650	-	-
MIL Control	* P0650	P0650	P0650	-
* The MIL remains ON				

Circuit/System Description

The malfunction indicator lamp (MIL) illuminates to inform the driver that an emission system fault has occurred and the engine control system requires service. Ignition voltage is supplied directly to the MIL. The engine control module (ECM) turns the MIL ON by grounding the MIL control circuit when the emission fault

occurs. Under normal operating conditions, the MIL should be ON only when the ignition is ON and the engine is OFF.

Conditions for Running the DTC

- DTCs P0601, P0604, P0605, P0606, P0607, and P2610 are not set
- The DTC runs continuously when the above conditions are met.

Conditions for Setting the DTC

- The ECM detects that the commanded state of the MIL driver and the actual state of the control circuit do not match for more than 1 s.
- Should a short circuit to B+ or an open circuit occur on the MIL control circuit, the MIL must be commanded ON for the DTC to set. A short circuit to ground on the MIL control circuit can be detected immediately by the ECM in the commanded OFF state.

Action Taken When the DTC Sets

DTC P0650 is a Type B DTC, with no MIL request.

Conditions for Clearing the DTC

DTC P0650 is a Type B DTC, with no MIL request.

Diagnostic Aids

If the condition is intermittent, move the related harnesses and connectors while monitoring the scan tool MIL control circuit status parameters. Perform this test with the ignition ON and the engine OFF, and with the engine running. The MIL control circuit status parameters change from OK or Not Run to Fault if there is a condition with a circuit or a connection.

Reference Information

Schematic Reference

- **Engine Controls Schematics**
- **Instrument Cluster Schematics**

Connector End View Reference

COMPONENT CONNECTOR END VIEWS - INDEX

Electrical Information Reference

- **Circuit Testing**
- **Connector Repairs**
- **Testing for Intermittent Conditions and Poor Connections**

- **Wiring Repairs**

DTC Type Reference

Powertrain Diagnostic Trouble Code (DTC) Type Definitions

Scan Tool Reference

Control Module References for scan tool information

Circuit/System Verification

1. Ignition ON.
2. Command the malfunction indicator lamp ON and OFF with a scan tool.
3. Verify that the malfunction indicator lamp turns ON and OFF as commanded.
   - **If the malfunction indicator lamp does not turn ON and OFF as commanded**

     Refer to Circuit/System Testing below.

   - **If the malfunction indicator lamp turns ON and OFF as commanded**
4. Ignition ON.
5. Command the malfunction indicator lamp ON and OFF with a scan tool and verify that the control circuit status parameters listed below display OK or Not Run.
   - The MIL Control Circuit Low Voltage Test Status
   - The MIL Control Circuit Open Test Status
   - The MIL Control Circuit High Voltage Test Status
   - **If Malfunction is displayed**

     Refer to Circuit/System Testing below.

   - **If OK or Not Run is displayed**
6. Engine running.
7. Command the malfunction indicator lamp ON and OFF with a scan tool and verify that the control circuit status parameters listed below display OK or Not Run.
   - The MIL Control Circuit Low Voltage Test Status
   - The MIL Control Circuit Open Test Status
   - The MIL Control Circuit High Voltage Test Status
   - **If Malfunction is displayed**

     Refer to Circuit/System Testing below.

   - **If OK or Not Run is displayed**
8. Operate the vehicle within the Conditions for Running the DTC. You may also operate the vehicle within

the conditions that you observed from the Freeze Frame/Failure Records data.

- **If the DTC sets**

  Refer to Circuit/System Testing below.

- **If the DTC does not set**

9. All OK.

Circuit/System Testing

1. Ignition OFF.
2. Disconnect the X1 harness connector at the K20 Engine Control Module.
3. Ignition ON.
4. Verify the malfunction indicator lamp does not illuminate.
   - **If the malfunction indicator lamp illuminates**
   1. Test for infinite resistance between the malfunction indicator lamp control circuit terminal X1 52 and ground.
      - If less than infinite resistance, repair the short to ground in the circuit.
      - If resistance is infinite, replace the P16 instrument cluster.
   - **If the malfunction indicator lamp does not illuminate**
5. Connect a 3 A fused jumper wire between the malfunction indicator lamp control circuit terminal X1 52 and ground.
6. Verify the malfunction indicator lamp illuminates.
   - **If the malfunction indicator lamp does not illuminate**
   1. Test the malfunction indicator lamp control circuit terminal X1 52 for a short to voltage or an open/high resistance.
      - If the malfunction indicator lamp control circuit terminal X1 52 is shorted to voltage or has an open/high resistance, repair as necessary.
      - If the malfunction indicator lamp control circuit terminal X1 52 tests normal
   2. Test the instrument cluster ignition voltage circuit for a short to ground or an open/high resistance.
      - If the instrument cluster ignition voltage circuit is shorted to ground or has an open/high resistance, repair as necessary.
      - If the instrument cluster ignition voltage circuit tests normal, replace the P16 instrument panel cluster/bulb.
   - **If the malfunction indicator lamp illuminates**
7. Replace the K20 Engine Control Module.

Repair Instructions

Perform the **Diagnostic Repair Verification** after completing the repair.

- **Instrument Cluster Replacement**

- **Control Module References** for ECM replacement, programming and setup

DTC P0685, P0686, P0687, P0689, P0690, OR P1682

Diagnostic Instructions

- Perform the **Diagnostic System Check - Vehicle** prior to using this diagnostic procedure.
- Review **Strategy Based Diagnosis** for an overview of the diagnostic approach.
- **Diagnostic Procedure Instructions** provides an overview of each diagnostic category.

DTC Descriptors

DTC P0685

Engine Controls Ignition Relay Control Circuit

DTC P0686

Engine Controls Ignition Relay Control Circuit Low Voltage

DTC P0687

Engine Controls Ignition Relay Control Circuit High Voltage

DTCP0689

Engine Controls Ignition Relay Feedback Circuit Low Voltage

DTC P0690

Engine Controls Ignition Relay Feedback Circuit High Voltage

DTC P1682

Ignition 1 Switch Circuit 2

Diagnostic Fault Information

Powertrain Relay

Circuit	Short to Ground	Open/High Resistance	Short to Voltage
Relay Coil Supply Voltage	P0689, P1682	P0685, P0689, P1682	-
Relay Control Circuit	P0686, P0690	P0685, P0689, P1682	P0685, P0687, P0689, P1682
Relay Feedback Circuit	P0689, P1682	P0689, P1682	P0690

Ignition Main Relay

Circuit	Short to Ground	Open/High Resistance	Short to Voltage
Ignition 1 Signal	1	1	2
1. No Crank condition. 2. Engine continues to operate with ignition OFF.			

Typical Scan Tool Data

Engine Controls Ignition Relay Control Circuit Low Voltage, Open, and High Voltage Test Status-Component Commanded OFF

Circuit	Short to Ground	Open	Short to Voltage
Operating Conditions: Component commanded OFF **Parameter Normal Range:** The following illustrates the normal parameter state with no circuit conditions: • Component OFF - OK for Open/Low Voltage Test Status and Not Run for High Voltage Test Status • Component ON - Not Run for Open/Low Voltage Test Status and OK for High Voltage Test Status			
Battery Voltage	Malfunction	Malfunction	-
Engine Controls Ignition Relay Control Circuit	Malfunction	Malfunction	Not Run

Engine Controls Ignition Relay Control Circuit Low Voltage, Open, and High Voltage Test Status-Component Commanded ON

Circuit	Short to Ground	Open	Short to Voltage
Operating Conditions: Component commanded ON **Parameter Normal Range:** The following illustrates the normal parameter state with no circuit conditions: • Component OFF - OK for Open/Low Voltage Test Status and Not Run for High Voltage Test Status • Component ON - Not Run for Open/Low Voltage Test Status and OK for High Voltage Test Status			
Battery Voltage	Not Run	Not Run	-
Engine Controls Ignition Relay Control Circuit	Not Run	Not Run	Malfunction

Circuit/System Description

There are 2 ignition voltage circuits supplied to the engine control module (ECM). One is supplied by the powertrain relay, and the other is supplied by the ignition main relay. The ECM monitors and compares the ignition voltage supplied by the 2 relays.

Conditions for Running the DTC

P0685, P0686, P0687

The DTC runs when Ignition 1 signal voltage is greater than 11 V.

P0689

- DTC P0685 is not set.
- The powertrain relay is commanded ON.
- Ignition 1 signal voltage is greater than 11 V.
- The DTC runs continuously when the above conditions are met.

P0690

- P0685 is not set.
- The powertrain relay is commanded OFF.
- The DTC runs continuously when the above conditions are met.

P1682

- The powertrain relay is commanded ON.
- Ignition voltage is greater than 5.5 V.
- The DTC runs continuously when the above conditions are met.

Conditions for Setting the DTC

P0685

The ECM detects that the commanded state of the driver and the actual state of the control circuit do not match for greater than 2 s.

P0686

The ECM detects a short to ground on the control circuit for greater than 2 s.

P0687

The ECM detects a short to voltage on the control circuit for greater than 2 s.

P0689

The ECM detects the engine controls ignition relay feedback circuit is less than 5 V when the powertrain relay is commanded ON.

P0690

- The ECM detects the engine controls ignition relay feedback circuit is greater than 4 V when the powertrain relay is commanded OFF.

- The condition is present for greater than 5 s.

P1682

The ECM detects that the voltage level difference is greater than 3 V between the 2 ignition voltage circuits for less than 1 s.

Action Taken When the DTC Sets

- DTCs P0685, P0686, P0687, P0689, and P0690 are Type B DTCs.
- DTC P1682 is a Type A DTC.

Conditions for Clearing the DTC

- DTCs P0685, P0686, P0687, P0689, and P0690 are Type B DTCs.
- DTC P1682 is a Type A DTC.

Diagnostic Aids

The powertrain relay may also be labeled the engine controls ignition relay, the engine control module relay, or the main relay. The ignition main relay may also be labeled the run/crank relay, the ignition run relay, the ignition 1 relay, or the ignition relay.

Reference Information

Schematic Reference

- **Engine Controls Schematics**
- **Power Distribution Schematics**

Connector End View Reference

COMPONENT CONNECTOR END VIEWS - INDEX

Electrical Information Reference

- **Circuit Testing**
- **Connector Repairs**
- **Electrical Center Identification Views**
- **Testing for Intermittent Conditions and Poor Connections**
- **Wiring Repairs**

DTC Type Reference

Powertrain Diagnostic Trouble Code (DTC) Type Definitions

Scan Tool Reference

Control Module References for scan tool information

Circuit/System Verification

NOTE:

- **A short to voltage on other components may cause DTC P0690 to set. If any other DTC is set, diagnose that DTC first.**
- **If you were sent here from Engine Cranks But Does Not Run, proceed to Circuit/System Testing.**

1. Ignition ON, observe the scan tool DTC information. Verify DTC P0685, P0686, P0687, P0689, P0690, or P1682 is not set.
   - **If any of the DTCs are set**

     Refer to Circuit/System Testing below

   - **If none of the DTCs are set**
2. Operate the vehicle within the Conditions for Running the DTC. You may also operate the vehicle within the conditions that you observed from the Freeze Frame/Failure Records data.
   - **If any of the DTCs are set**

     Refer to Circuit/System Testing below

   - **If none of the DTCs are set**
3. All OK.

Circuit/System Testing

NOTE: You must perform the Circuit/System Verification before proceeding with Circuit/System Testing unless sent here from Engine Cranks But Does Not Run.

1. Ignition OFF, disconnect the KR75 Powertrain Relay.
2. Verify a test lamp illuminates between ground and the relay circuit terminals listed below:
   - Terminal 1
   - Terminal 3
   - **If the test lamp does not illuminate**

     Replace the front compartment fuse block. Refer to **Front Compartment Fuse Block Replacement** .

   - **If the test lamp illuminates**

     NOTE:

     - **High resistance in the circuit/underhood fuse block for either**

the powertrain relay or the ignition main relay can cause DTC P1682 to set.

- **A short to voltage on any of the circuits supplied by the powertrain relay can cause DTC P0690 to set.**

3. Ignition ON.
4. Verify that a test lamp does not illuminate between the ignition voltage circuit terminal 5 and ground.
   - **If the test lamp illuminates**
   1. Ignition OFF, disconnect the X2 harness connector at the K20 Engine Control Module.
   2. Ignition ON.
   3. Test for less than 1 V between ground and connector terminals 28.
      - If 1 V or greater, repair the short to voltage in the circuit.
      - If less than 1 V, replace the K20 Engine Control Module.
   - **If the test lamp does not illuminate**
5. Ignition OFF, connect a 20 A fused jumper wire between the relay switch B+ circuit terminal 3 and the relay switch ignition voltage circuit terminal 5.
6. Ignition ON.
7. Observe the scan tool Engine Controls Ignition Relay Feedback Signal parameter. The K20 Engine Control Module should communicate, and the parameter should display B+.
   - **If the parameter does not display B+ or the K20 Engine Control Module does not communicate and the circuit fuse is good**
   1. Ignition OFF, disconnect the X2 harness connector at the K20 Engine Control Module
   2. Test for less than 2 ohms in the relay switch ignition voltage circuit end to end.
      - If 2 ohms or greater, repair the open/high resistance in the circuit.
      - If less than 2 ohms verify the fuse is not open and there is voltage at the fuse.
   - **If the parameter does not display B+ or the K20 Engine Control Module does not communicate and the circuit fuse is open**
   1. Ignition OFF, disconnect the X2 harness connector at the K20 Engine Control Module
   2. Test for infinite resistance between the relay switch ignition voltage circuit and ground.
      - If less than infinite resistance, repair the short to ground on the circuit.
      - If infinite resistance, replace the K20 Engine Control Module.
   - **If the parameter displays B+**
8. Ignition OFF, connect a DMM, set to the diode setting, between control circuit terminal 2 and ground.
9. Verify the DMM displays OL.
   - **If the DMM does not display OL**
   1. Disconnect the X1 harness connector at the K20 Engine Control Module.
   2. Test for infinite resistance between ground and the relay control circuit.
      - If less than infinite resistance, repair the short to ground in the circuit.
      - If infinite resistance, replace the K20 Engine Control Module.

- **If the DMM displays OL**

10. Ignition ON.
11. Verify the DMM displays less than 1 V.
    - **If the DMM does not display less than 1 V**
    1. Ignition OFF, disconnect the X1 connector at the K20 Engine Control Module.
    2. Ignition ON.
    3. Test for less than 1 V on the relay control circuit.
        - If 1 V or greater, repair the short to voltage on the circuit.
        - If less than 1 V
    4. Test for less than 2 ohms in the control circuit end to end.
        - If 2 ohms or greater, repair the open/high resistance in the circuit.
        - if less than 2 ohms, replace the K20 Engine Control Module.
    - **If the DMM displays less than 1 V**
12. Test or replace the KR75 Powertrain Relay.

Component Testing

Relay Test

1. Ignition OFF, disconnect the KR75 Powertrain Relay.
2. Test for 70-110 ohms between terminals 1 and 2:
    - **If less than 70 ohms or greater than 110 ohms**

      Replace the relay.

    - **If between 70-110 ohms**
3. Test for infinite resistance between the terminals listed below:
    - 3 and 2
    - 3 and 5
    - 3 and 1
    - 1 and 5
    - **If less than infinite resistance**

      Replace the relay.

    - **If infinite resistance**
4. Install a 20 A fused jumper wire between relay terminal 1 and 12 V. Install a jumper wire between relay terminal 2 and ground.
5. Test for less than 2 ohms between terminals 3 and 5.
    - **If 2 ohms or greater**

Replace the relay.

- **If less than 2 ohms**

6. All OK.

Repair Instructions

Perform the **Diagnostic Repair Verification** after completing the diagnostic procedure.

- **Relay Replacement (Within an Electrical Center)** , **Relay Replacement (Attached to Wire Harness)**
- **Control Module References** for Engine Control Module replacement, programming, and setup

DTC P069E

Diagnostic Instructions

- Perform the **Diagnostic System Check - Vehicle** Prior to using this diagnostic procedure.
- Review **Strategy Based Diagnosis** for an overview of the diagnostic approach.
- **Diagnostic Procedure Instructions** provides an overview of each diagnostic category.

DTC Descriptor

DTC P069E

Fuel Pump Control Module Requested MIL Illumination

Circuit/System Description

The fuel pump control module monitors the fuel pump control system for any conditions which may adversely affect vehicle emissions. If an adverse condition is detected, the fuel pump control module sets a fuel pump control system DTC. The fuel pump control module then sends a serial data message to the engine control module (ECM) requesting malfunction indicator lamp (MIL) illumination. When the ECM receives the message from the fuel pump control module, DTC P069E will set in the ECM.

Conditions for Running the DTC

The ignition is ON, or the engine is running for greater than 3 s.

Conditions for Setting the DTC

The fuel pump control module requests the ECM to illuminate the MIL.

Action Taken When the DTC Sets

- DTC P069E is a Type A DTC.
- DTC P069E will continue to be current or active as long as the fuel pump control module is requesting MIL illumination.

Conditions for Clearing the DTC

DTC P069E is a Type A DTC.

Diagnostic Aids

Communication codes, U-codes, as well as powertrain codes, P-codes, set in the fuel pump control module will cause the fuel pump control module to request DTC P069E to be set in the ECM.

Reference Information

DTC Type Reference

Powertrain Diagnostic Trouble Code (DTC) Type Definitions

Scan Tool Reference

Control Module References for scan tool information

Circuit/System Verification

NOTE:

- **Do not replace the engine control module for this DTC. DTC P069E is an informational DTC.**
- **Correct any engine control and communication DTCs before diagnosing fuel pump control module DTCs.**

1. Verify there are no engine control or communication DTCs set.
   - **If a DTC is set**

     Refer to **Diagnostic Trouble Code (DTC) List - Vehicle** .

   - **If a DTC is not set**
2. Verify there are no fuel pump control module DTCs set.
   - **If a DTC is set**

     Refer to **Diagnostic Trouble Code (DTC) List - Vehicle** .

   - **If a DTC is not set**
3. Operate the vehicle within the Conditions for Running the DTC. You may also operate the vehicle within the conditions that you observed from the Freeze Frame/Failure Records data.
4. Verify the DTC does not set.
   - **If the DTC sets**

     Refer to **Diagnostic Trouble Code (DTC) List - Vehicle** .

- **If the DTC does not set**

5. All OK.

Repair Instructions

Perform the **Diagnostic Repair Verification** after completing the repair.

DTC P0700

Diagnostic Instructions

- Perform the **Diagnostic System Check - Vehicle** prior to using this diagnostic procedure.
- Review **Strategy Based Diagnosis** for an overview of the diagnostic approach.
- **Diagnostic Procedure Instructions** provides an overview of each of the diagnostic category.

DTC Descriptor

DTC P0700

Transmission Control Module Requested MIL Illumination

Circuit/System Description

Diagnostic trouble code (DTC) P0700 is an informational DTC that indicates that an emission related transmission DTC has set in the transmission control module (TCM). The engine control module (ECM) turns ON the malfunction indicator lamp (MIL) when the TCM sends a message over the serial data circuit requesting MIL illumination. The DTC information for the ECM will only display DTC P0700, and the ECM Freeze Frame/Failure Records data will display the engine operating conditions that were present when the transmission DTC was set. The TCM Freeze Frame/Failure records data is available from the DTC that was set in the TCM.

Conditions for Running the DTC

- The ignition is ON or the engine is operating.
- DTC P0700 runs continuously.

Conditions for Setting the DTC

The ECM receives a serial data message from the TCM requesting the ECM to turn ON the MIL.

Action Taken When the DTC Sets

DTC P0700 is a Type A DTC.

Conditions for Clearing the MIL/DTC

DTC P0700 is a Type A DTC.

Diagnostic Aids

Communication codes, U-codes, as well as powertrain codes, P-codes, set in the TCM can cause the TCM to request DTC P0700 to be set in the ECM.

Reference Information

DTC Type Reference

Powertrain Diagnostic Trouble Code (DTC) Type Definitions

Scan Tool Reference

Control Module References for scan tool information

Circuit/System Verification

NOTE:

- **Do not replace the engine control module for this DTC. DTC P0700 is an informational DTC.**
- **Correct any engine control and communication DTCs before diagnosing transmission control module DTCs.**

1. Verify there are no engine control or communication DTCs set.
   - **If a DTC is set**

     Refer to **Diagnostic Trouble Code (DTC) List - Vehicle** .

   - **If a DTC is not set**
2. Verify there are no transmission control module DTCs set.
   - **If a DTC is set**

     Refer to **Diagnostic Trouble Code (DTC) List - Vehicle** .

   - **If a DTC is not set**
3. Operate the vehicle within the Conditions for Running the DTC. You may also operate the vehicle within the conditions that you observed from the Freeze Frame/Failure Records data.
4. Verify the DTC does not set.
   - **If the DTC sets**

     Refer to **Diagnostic Trouble Code (DTC) List - Vehicle** .

   - **If the DTC does not set**
5. All OK.

Repair Instructions

Perform the **Diagnostic Repair Verification** after completing the repair.

DTC P11C2 OR P11C3

Diagnostic Instructions

- Perform the **Diagnostic System Check - Vehicle** prior to using this diagnostic procedure.
- Review **Strategy Based Diagnosis** for an overview of the diagnostic approach.
- **Diagnostic Procedure Instructions** provides an overview of each diagnostic category.

DTC Descriptors

DTC P11C2

Intake Air Humidity Sensor Circuit Low Voltage

DTC P11C3

Intake Air Humidity Sensor Circuit High Voltage

Diagnostic Fault Information

Intake Air Humidity Sensor

Circuit	Short to Ground	Open/High Resistance	Short to Voltage	Signal Performance
5 V Reference	P0097**, P0651, P11C2, P2199**, P2227, P2228	P0096**, P0097**, P11C2, P2199**, P2227, P2228	P0097**, P0651, P11C2, P2199**, P2227, P2228	-
Signal	P0097**, P11C3, P2199**	P0097**, P11C2, P2199**	P0097**, P11C2*, P2199**	-
Low Reference	-	P0097**, P0113, P11C2, P2227, P2229	*	-
*Internal ECM or sensor damage may occur if the circuit is shorted to B+. **Where				

Typical Scan Tool Data

Intake Air Humidity

Circuit	Short to Ground	Open or High Resistance	Short to Voltage
Operating Conditions: Engine Running **Parameter Normal Range:** Varies with ambient humidity and temperature; and engine bay conditions			
5 V Reference	0 %	0 %	-
Signal	100 %	0 %	0 %*

Low Reference	-	0 %	*
*Internal ECM or sensor damage may occur if the circuit is shorted to B+			

Circuit/System Description

The sensors listed below are integrated within the multifunction intake air sensor:

- IAT sensor 1
- IAT sensor 2
- Humidity sensor
- MAF sensor
- BARO pressure sensor

The intake air humidity sensor measures the ambient humidity of the air in the sensor bore. The signal varies with intake air humidity and is displayed by the scan tool as duty cycle %. The engine control module (ECM) applies 5 V to the signal circuit. The humidity sensor and the IAT sensor 2 share the same circuit.

The sensors listed below share an ECM supplied 5 V reference circuit:

- IAT sensor 2
- Humidity sensor
- Barometric pressure (BARO) sensor

The sensors listed below share an ECM supplied low reference circuit:

- IAT sensor 1
- IAT sensor 2
- Humidity sensor
- Barometric pressure (BARO) sensor

Conditions for Running the DTCs

P11C2 and P11C3

- DTC P1682 is not set.
- The ignition is ON.
- The Ignition voltage is at least 11 V.
- These DTCs run continuously within the enabling conditions.

Conditions for Setting the DTCs

P11C2

The ECM detects that the humidity sensor signal is less than or equal to 5 % for greater than 5 s.

P11C3

The ECM detects that the humidity sensor signal is greater than or equal to 95 % for greater than 5 s.

Action Taken When the DTC Sets

- DTCs P11C2 and P11C3 are Type B DTCs.
- DTCs P11C2 and P11C3 are Type C DTCs; with RPO LDD.

Conditions for Clearing the MIL/DTC

- DTCs P11C2 and P11C3 are Type B DTCs.
- DTCs P11C2 and P11C3 are Type C DTCs; with RPO LDD.

Diagnostic Aids

- The Intake Air Humidity Signal parameter displays the measured humidity within the air intake system and may differ from atmospheric humidity measured outside the air intake system.
- The humidity sensor and the IAT sensor 2 signals are sent to the ECM on the same circuit. If the Intake Air Humidity parameter displays the value: 0 % or 100 %, and there are also IAT Sensor 2 DTCs, check for a circuit problem.

Reference Information

Schematic Reference

Engine Controls Schematics

Connector End View Reference

COMPONENT CONNECTOR END VIEWS - INDEX

Electrical Information Reference

- **Circuit Testing**
- **Connector Repairs**
- **Testing for Intermittent Conditions and Poor Connections**
- **Wiring Repairs**

DTC Type Reference

Powertrain Diagnostic Trouble Code (DTC) Type Definitions

Scan Tool Reference

Control Module References for scan tool information

Special Tools

EL-38522-A Variable Signal Generator

For equivalent regional tools, refer to **Special Tools** .

Circuit/System Verification

1. Ignition ON, verify that DTC DTC P0641, P0651, P0697, or P06A3 is not set.
   - **If any of the DTCs are set**

     Refer to **DTC P0641, P0651, P0697, or P06A3 (ECM)** for further diagnosis.

   - **If none of the DTCs are set**

NOTE: To minimize the effects of residual engine heat and sensor internal heating elements, perform Steps 2 and 3 of this verification procedure only if the ignition has been OFF for 8 hours or more.

2. Ignition ON.
3. Verify the following scan tool parameters are within 25°C (45°F) of each other.
   - Start-Up IAT Sensor 1
   - IAT Sensor 2
   - IAT Sensor 3; where equipped
   - **If not within 25°C (45°F)**

     Refer to Circuit/System Testing below.

   - **If within 25°C (45°F)**
4. Engine idling, verify the scan tool Intake Air Humidity parameter is between 5 and 90 %.
   - **If not between 5 and 90 %**

     Refer to Circuit/System Testing below.

   - **If between 5 and 90 %**
5. Operate the vehicle within the conditions for running the DTC. You may also operate the vehicle within the conditions that you observed from the freeze frame/failure records data.
6. Verify the DTC does not set.
   - **If the DTC does set**

     Refer to Circuit/System Testing below.

   - **If the DTC does not set**
7. All OK

Circuit/System Testing

NOTE: You must perform the Circuit/System Verification before proceeding with Circuit/System Testing.

1. Ignition OFF, and all vehicle systems OFF, it may take up to 2 min. for all vehicle systems to power down. Disconnect the harness connector at the B75C Multifunction Intake Air sensor.
2. Test for less than 2 ohms between the low reference circuit terminal 7 and ground.
   - **If 2 ohms or greater**
   1. Ignition OFF, disconnect the harness connector at the K20 Engine Control Module.
   2. Test for less than 2 ohms in the low reference circuit end to end.
      - If 2 ohms or greater, repair the open or high resistance in the circuit.
      - If less than 2 ohms replace the K20 Engine Control Module.
   - **If less than 2 ohms**
3. Ignition OFF, all vehicle systems OFF, test for less than 2 ohms between the ground circuit terminal 4 and ground.
   - **If 2 ohms or greater**
   1. Ignition OFF, disconnect the harness connector at the K20 Engine Control Module.
   2. Test for less than 2 ohms in the ground circuit end to end.
      - If 2 ohms or greater, repair the open or high resistance in the circuit.
      - If less than 2 ohms, repair the open/high resistance in the ground connection.
   - **If less than 2 ohms**
4. Ignition ON, test for 4.8-5.2 V between the 5 V reference circuit terminal 2 and ground.
   - **If less than 4.8 V**
   1. Ignition OFF, disconnect the harness connector at the K20 Engine Control Module.
   2. Test for infinite resistance between the signal circuit and ground.
      - If less than infinite resistance, repair the short to ground on the circuit.
      - If infinite resistance
   3. Test for less than 2 ohms in the signal circuit end to end.
      - If 2 ohms or greater, repair the open/high resistance in the circuit.
      - If less than 2 ohms, replace the K20 Engine Control Module.
   - **If greater than 5.2 V**

     NOTE: If the 5 V reference circuit is shorted to a voltage the engine control module or the sensor may be damaged.

   1. Ignition OFF, disconnect the harness connector at the K20 Engine Control Module.
   2. Ignition ON, test for less than 1 V between the 5 V reference circuit and ground.
      - If 1 V or greater, repair the short to voltage on the circuit.
      - If less than 1 V, replace the K20 Engine Control Module.

- **If between 4.8-5.2 V**

5. Ignition ON, test for 4.8-5.2 V between the humidity signal circuit terminal 1 and ground.
   - **If less than 4.8 V**
   1. Ignition OFF, disconnect the harness connector at the K20 Engine Control Module.
   2. Test for infinite resistance between the signal circuit and ground.
      - If less than infinite resistance, repair the short to ground on the circuit.
      - If infinite resistance
   3. Test for less than 2 ohms in the signal circuit end to end.
      - If 2 ohms or greater, repair the open/high resistance in the circuit.
      - If less than 2 ohms, replace the K20 Engine Control Module.
   - **If greater than 5.2 V**

     NOTE: If the signal circuit is shorted to a voltage the engine control module or the sensor may be damaged.

   1. Ignition OFF, disconnect the harness connector at the K20 Engine Control Module.
   2. Ignition ON, test for less than 1 V between the signal circuit and ground.
      - If 1 V or greater, repair the short to voltage on the circuit.
      - If less than 1 V, replace the K20 Engine Control Module.
   - **If between 4.8-5.2 V**
6. Determine if **EL-38522-A** Variable Signal Generator or equivalent is available.
   - **EL-38522-A, Variable Signal Generator; or equivalent is not available**
   1. Replace the K20 Engine Control Module.
   2. Operate the vehicle within the Conditions for Running the DTC. You may also operate the vehicle within the conditions that you observed from the freeze frame/failure records data.
   3. Verify the DTC does not set.
      - **If the DTC sets**

        Refer to step 10.

      - **If no DTCs set**
   4. All OK.
   - **EL-38522-A, Variable Signal Generator; or equivalent is available**
7. Ignition OFF, connect the leads of the **EL-38522-A** Variable Signal Generator as follows:
   - Red lead to the signal circuit terminal 1 at the harness connector
   - Black leads to ground
   - Battery voltage supply lead to B+
8. Set the **EL-38522-A** Variable Signal Generator to the following specifications.
   - Signal switch to 5 V

- Frequency switch to 250 Hz
- Duty Cycle switch to 50 % (Normal)

9. Ignition ON, verify the scan tool Intake Air Humidity parameter is between 45-55 %.
   - **If not between 45-55 %**

     Replace the K20 Engine Control Module.

   - **If between 45-55 %**
10. Test or replace the B75C Multifunction Intake Air sensor.

Component Testing

Multifunction Intake Air Sensor

1. Test the Intake Air Humidity Sensor by varying the air humidity in the intake duct near the sensor, while observing the scan tool Intake Air Humidity Sensor parameter. The parameter should change and be within 5-95%.
   - **If not within 5-95%.**

     Replace the B75C Multifunction Intake Air sensor.

   - **If within 5-95%.**
2. All OK

Repair Instructions

Perform the **Diagnostic Repair Verification** after completing the repair.

- **Mass Airflow Sensor Replacement** for multifunction intake air sensor replacement.
- **Control Module References** for Engine Control Module replacement, programming, and setup.

DTC P1255 OR P064A

Diagnostic Instructions

- Perform the **Diagnostic System Check - Vehicle** prior to using this diagnostic procedure.
- Review **Strategy Based Diagnosis** for an overview of the diagnostic approach.
- **Diagnostic Procedure Instructions** provides an overview of each diagnostic category.

DTC Descriptors

DTC P064A

Fuel Pump Control Module Performance

DTC P1255

Fuel Pump Control Module Driver High Temperature

Circuit/System Description

The engine control module (ECM) supplies voltage to the fuel pump control module when the ECM detects that the ignition is on. The voltage from the ECM to the fuel pump control module remains active for 2 seconds, unless the engine is in crank or run. While this voltage is being received, the fuel pump control module supplies a varying voltage to the fuel tank pump module in order to maintain the desired fuel pressure.

Conditions for Running the DTC

The engine is running.

Conditions for Setting the DTC

The fuel pump control module detects an over-temperature fault.

Action Taken When the DTC Sets

DTCs P064A and P1255 are Type A DTCs.

Conditions for Clearing the DTC

DTCs P064A and P1255 are Type A DTCs.

Diagnostic Aids

Using the Failure Records data may help locate an intermittent condition. If you cannot duplicate the DTC, the information in the Failure Records can help determine how many miles since the DTC set. The Fail Counter and Pass Counter can help determine how many ignition cycles that the diagnostic test reported a pass and/or a fail.

Reference Information

Schematic Reference

Engine Controls Schematics

Connector End View Reference

COMPONENT CONNECTOR END VIEWS - INDEX

Description and Operation

Fuel System Description

Electrical Information Reference

- **Circuit Testing**
- **Connector Repairs**
- **Testing for Intermittent Conditions and Poor Connections**
- **Wiring Repairs**

DTC Type Reference

Powertrain Diagnostic Trouble Code (DTC) Type Definitions

Scan Tool Reference

Control Module References for scan tool information

Circuit/System Verification

1. Ignition ON.
2. Verify DTC P0231, P0232 or P023F is not set.
   - **If any of the DTCs are set**

     Refer to **Diagnostic Trouble Code (DTC) List - Vehicle** .

   - **If none of the DTCs are set**
3. Verify that the area where the K27 fuel pump control module is located is free of debris, clutter, or any insulating material that would cause the K27 fuel pump control module to overheat.
   - **If any debris, clutter, or other material is found**
   1. Clear the area where the K27 fuel pump control module is located.
   2. Clear the DTC and test drive the vehicle.
   3. Verify DTC P1255 or P064A is not set.
      - If DTC P1255 or P064A is set, replace the K27 fuel pump control module.
      - If DTC P1255 or P064A is not set
   4. All OK.
   - **If no debris, clutter, or other material is found**
4. Clear the DTC and test drive the vehicle.
5. Verify DTC P1255 or P064A is not set.
   - **If DTC P1255 or P064A is set**

     Replace the K27 fuel pump control module.

   - **If DTC P1255 or P064A is not set.**
6. All OK.

Repair Instructions

Perform the **Diagnostic Repair Verification** after completing the repair.

Control Module References for fuel pump control module replacement, programming and setup

DTC P1400

Diagnostic Instructions

- Perform the **Diagnostic System Check - Vehicle** prior to using this diagnostic procedure.
- Review **Strategy Based Diagnosis** for an overview of the diagnostic approach.
- **Diagnostic Procedure Instructions** provide an overview of each diagnostic category.

DTC Descriptor

DTC P1400

Cold Start Emission Reduction Control System

Circuit/System Description

The catalyst must be warmed to efficiently reduce the emissions. The cold start strategy is to reduce the amount of time it takes to warm the catalyst. During a cold start, the engine idle speed is elevated and spark timing is retarded to allow the catalyst to warm quickly. This diagnostic monitors the following to build an exhaust energy model:

- Engine speed
- Spark advance
- Throttle position
- Engine airflow
- Engine coolant temperature
- Engine run time
- Park/neutral position
- Vehicle speed

The actual model is then compared to the expected exhaust energy model.

Conditions for Running the DTC

- DTCs P0101, P0102, P0103, P0106, P0107, P0108, P0112, P0113, P0114, P0116, P0117, P0118, P0121, P0122, P0123, P0222, P0223, P0201, P0202, P0203, P0204, P0300, P0301, P0302, P0303, P0304, P0335, P0336, P0351, P0352, P0353, P0354, P0502, P0503, P0506, P0507, P0641, P0651, P0697, P06A3, P0806, P0807, P080A, P2122, P2123, P2125, P2127, P2128, P2135, P2138, and P2544 are not set.
- The engine is idling less than 30 s.
- The engine coolant temperature (ECT) sensor is greater than -10°C (14°F).

- The calculated 3-way catalyst temperature is less than 350°C (662°F).
- The ECM will exit the diagnostic if the calculated 3-way catalyst temperature is greater than 420°C (788° F) when the engine run time is greater than 30 s.
- The ECM will exit the diagnostic if the engine run time is greater than 90 s.
- The vehicle speed is less than 2 km/h (1 MPH).
- The engine is at idle with no input from the accelerator pedal.

This DTC runs within the first 90 s of start-up. This diagnostic runs once per trip when a cold start has been determined.

Conditions for Setting the DTC

The actual exhaust energy model does not match the expected exhaust energy model.

Action Taken When the DTC Sets

DTC P1400 is a Type A DTC.

Conditions for Clearing the DTC

DTC P1400 is a Type A DTC.

Reference Information

DTC Type Reference

Powertrain Diagnostic Trouble Code (DTC) Type Definitions

Scan Tool Reference

Control Module References for scan tool information

Circuit/System Verification

1. Ignition OFF, allow the engine to cool.
2. Engine idling for at least 2 min, observe the scan tool DTC information. DTC P1400 should run and pass.
3. Operate the vehicle within the Conditions for Running the DTC to verify the DTC does not reset. You may also operate the vehicle within the conditions that you observed from the Freeze Frame/Failure Records data.

Circuit/System Testing

1. Inspect the air intake system for the following:
    - Damage, restriction, or modification
    - Dirty or deteriorating air filter element

- Crankcase ventilation system for correct operation.
- Water intrusion
- Vacuum leak and other unmetered air downstream of the mass air flow (MAF) sensor
- Intake manifold leak

2. Inspect the exhaust system for the following:
   - Water intrusion
   - Exhaust leak
   - Damaged, restricted, or modified exhaust system. Refer to **Symptoms - Engine Exhaust** .
3. Inspect for an engine mechanical condition that could alter the air flow into the combustion chamber. Refer to **Symptoms - Engine Mechanical** .

Repair Instructions

Perform the **Diagnostic Repair Verification** after completing the diagnostic procedure.

DTC P150C

Diagnostic Instructions

- Perform the **Diagnostic System Check - Vehicle** prior to using this diagnostic procedure.
- Review **Strategy Based Diagnosis** for an overview of the diagnostic approach.
- **Diagnostic Procedure Instructions** provides an overview of each diagnostic category.

DTC Descriptor

DTC P150C

Transmission Control Module Engine Speed Request Signal Message Counter Incorrect

Circuit/System Description

This diagnostic applies to communication integrity between the engine control module (ECM) and the transmission control module (TCM). The ECM determines that the engine speed signal counter is incorrect for the current vehicle operation.

Conditions for Running the DTC

- The ignition switch is in Unlock, Accessory, Run or Crank.
- The system voltage is more than 5.23 V.
- DTCs P0601, P0602, P0603, P0604, P0606, P0607, P062F, P0641, P0651, P2610 and U0101 are not set.

Conditions for Setting the DTC

The ECM detects that the TCM engine speed request circuit does not match the expected engine speed request circuit. Each test runs in 5 milliseconds. This DTC runs continuously.

Action Taken When the DTC Sets

DTC P150C is a Type B DTC.

Conditions for Clearing the DTC

DTC P150C is a Type B DTC.

Reference Information

Description and Operation

Engine Control Module Description

DTC Type Reference

Powertrain Diagnostic Trouble Code (DTC) Type Definitions

Scan Tool Reference

K20 Engine Control Module: Scan Tool Information for scan tool information

Circuit/System Verification

1. Ignition ON, observe the DTC information with a scan tool. DTC U0101 should not be set.
    - If DTC U0101 is set, repair that DTC first.
2. Observe the DTC information with a scan tool. DTCs P0601, P0603, P0604, P0606, P0607, P0610, P062B, P0630, P167D or P2610 should not set. If a DTC failed this ignition, replace the K20 Engine Control Module. Operate the vehicle within the Conditions for Running the DTC to verify the DTC does not reset. You may also operate the vehicle within the conditions that you observed from the Freeze Frame/Failure Records data.

Circuit/System Testing

Replace the K71 Transmission Control Module.

Repair Instructions

Perform the **Diagnostic Repair Verification** after completing the diagnostic procedure.

Control Module References for ECM replacement, programming and setup

DTC P1516, P2101, P2119, OR P2176

Diagnostic Instructions

- Perform the **Diagnostic System Check - Vehicle** prior to using this diagnostic procedure.

- Review **Strategy Based Diagnosis** for an overview of the diagnostic approach.
- **Diagnostic Procedure Instructions** provides an overview of each diagnostic category.

DTC Descriptors

DTC P1516

Throttle Actuator Control (TAC) Module Throttle Actuator Position Performance

DTC P2101

Throttle Actuator Position Performance

DTC P2119

Throttle Closed Position Performance

DTC P2176

Minimum Throttle Position Not Learned

Diagnostic Fault Information

Circuit	Short to Ground	Open/High Resistance	Short to Voltage	Signal Performance
TAC Motor Control Closed	P1516, P2101, P2176	P1516, P2101, P2176	P1516, P2101, P2176	P1516, P2101, P2176
TAC Motor Control Open	P1516, P2101, P2176	P1516, P2101, P2176	P1516, P2101, P2176	P1516, P2101, P2176

Circuit/System Description

The Engine Control Module (ECM) controls the throttle valve by applying a varying voltage to the control circuits of the throttle actuator control (TAC) motor. The ECM monitors the duty cycle that is required to actuate the throttle valve. The ECM monitors the throttle position (TP) sensors 1 and 2 to determine the actual throttle valve position.

Conditions for Running the DTC

P1516

- DTC P1682 is not set.
- The run/crank or powertrain relay voltage is greater than 6.41 V and reduced power is not active.
- DTC P1516 runs continuously when the above conditions are met.

P2101

- DTC P1682 is not set.
- The run/crank or powertrain relay voltage is greater than 5.5 V and reduced power is not active.
- The engine is running or the following conditions are met:
  - The engine is not running.
  - The ignition voltage is greater than 11 V.
  - The TAC system is not in the Battery Saver mode.
  - The ECM is commanding the throttle.
  - The ECM has learned the minimum throttle position.
- DTC P2101 runs continuously when the above conditions are met.

P2119

- The ignition is ON.
- DTC P0121, P0122, P0123, P0222, P0223, P0697, P06A3, or P2135 is not set.
- The run/crank or powertrain relay voltage is greater than 6.41 V and reduced power is not active.
- DTC P2119 runs continuously when the above conditions are met.

P2176

- The ignition is ON.
- The run/crank or powertrain relay voltage is greater than 6.41 V and reduced power is not active.
- The ECM enable the minimum throttle learn procedure.
- DTC P2176 run continuously when the above conditions are met.

Conditions for Setting the DTC

P1516

The ECM detects an unstable throttle position for greater than 1 s.

P2101

The ECM detects the actual throttle position does not match the predicted throttle position for greater than 1 s.

P2119

The ECM detects the throttle blade did not return to the default position when the TAC motor is de-energized for greater than 1 s.

P2176

The ECM detects that both throttle position (TP) sensors were greater than a predetermined voltage during the minimum throttle learn procedure for greater than 2 s.

Action Taken When the DTC Sets

- DTCs P2101 and P2176 are Type A DTCs.
- DTC P1516 is a Type B DTC.
- DTC P2119 is a Type C DTC.
- The control module commands the TAC system to operate in the Reduced Engine Power mode.
- A message center or an indicator displays Reduced Engine Power.
- Under certain conditions, the control module commands the engine OFF.

Conditions for Clearing the MIL/DTC

- DTCs P2101 and P2176 are Type A DTCs.
- DTC P1516 is a Type B DTC.
- DTC P2119 is a Type C DTC.

Diagnostic Aids

- Depending on the Start Up ECT, the Desired Throttle Position percentage maybe greater or less than the Throttle Position with the TAC motor at rest. When the ignition is initially turned ON, or when the engine is cranking or running the Desired and Actual Throttle positions should closely match.
- Inspect for a condition in which the throttle valve may have been held open. For example, ice may have formed in the throttle bore causing the throttle valve not to close.
- A high resistance condition on the throttle position and throttle actuator control circuits could cause a DTC to set.
- A low battery condition may cause a DTC to set.

Reference Information

Schematic Reference

Engine Controls Schematics

Connector End View Reference

COMPONENT CONNECTOR END VIEWS - INDEX

Description and Operation

Throttle Actuator Control (TAC) System Description

Electrical Information Reference

- **Circuit Testing**
- **Connector Repairs**
- **Testing for Intermittent Conditions and Poor Connections**

- **Wiring Repairs**

DTC Type Reference

Powertrain Diagnostic Trouble Code (DTC) Type Definitions

Scan Tool Reference

Control Module References for scan tool information

Circuit/System Verification

1. Ignition ON.

   NOTE: A low battery voltage or charging system condition may cause a DTC to set.

2. Verify DTC P0121, P0122, P0123, P0222, P0223, P0562, P0621, P0622, or P2135 is not set.
   - **If any of the DTCs are set**

     Refer to **Diagnostic Trouble Code (DTC) List - Vehicle** for further diagnosis.

   - **If none of the DTCs are set**
3. Verify the scan tool Throttle Body Idle Air flow Compensation parameter is less than 90 %.
   - **90 % or greater**

     Refer to **Throttle Body Inspection and Cleaning** .

   - **If less than 90 %**
4. Clear the DTCs with a scan tool.
5. Ignition OFF and all vehicle systems OFF. It may take up to 2 minutes for all vehicle systems to power down.
6. Ignition ON.
7. Verify the scan tool TAC Motor parameter displays Enabled while slowly depressing the accelerator pedal.
   - **If Enabled is not displayed**

     Refer to Circuit/System Testing below.

   - **If Enabled is displayed**
8. Verify DTC P1516, P2101, P2119, or P2176 is not set.
   - **If any of the DTCs are set**

     Refer to Circuit/System Testing below.

- **If none of the DTCs are set**

NOTE: If there is a condition with the throttle body, the TAC Motor Command parameter will go to 99 % for a predetermined amount of time and then a DTC sets. Once a DTC is set, the TAC Motor Command parameter will go to 0 % and the TAC Motor parameter will display Disabled.

9. Verify the scan tool TAC Motor parameter displays Enabled while performing the Throttle Sweep Test with a scan tool.
   - **If Enabled is not displayed**

     Test or replace the Q38 Throttle Body assembly.

   - **If Enabled is displayed**
10. Operate the vehicle within the Conditions for Running the DTC. You may also operate the vehicle within the conditions that you observed from the Freeze Frame/Failure Records data.
11. Verify the DTC does not set.
    - **If the DTC sets**

      Refer to Circuit/System Testing below.

    - **If the DTC does not set**
12. All OK.

Circuit/System Testing

1. Ignition OFF.

WARNING: Turn OFF the ignition before inserting fingers into the throttle bore. Unexpected movement of the throttle blade could cause personal injury.

2. Verify the conditions listed below do not exist with the Q38 Throttle Body assembly:

NOTE:

- **The rest position is defined as the actual Throttle Position percentage when the ignition is OFF or with the ignition ON for greater than 30 seconds.**
- **When the ignition is OFF, spring tension should hold the throttle plate in the rest position. You should be able to open the throttle plate to wide open throttle (WOT) or push the throttle plate to the fully closed position. In each case, the throttle plate should return to the rest position without assistance.**

- A throttle blade that is not in the rest position
- A throttle blade that is binding open or closed
- A throttle blade that is free to move open or closed without spring pressure
- **If a condition is found**

  Test or replace the Q38 Throttle Body Assembly.

- **If a condition is not found**

3. Ignition OFF.

NOTE:

- **Disconnecting the throttle body harness connector may cause additional DTCs to set.**
- **The Test Lamp must be connected to circuit before turning ignition on or incorrect diagnosis may occur.**

4. Disconnect the harness connector at the Q38 Throttle Body assembly.
5. Cycle the Ignition ON and OFF and then ON again.
6. Verify that a test lamp illuminates between each motor control circuit listed below and ground.
   - TAC Motor Control Closed circuit terminal A
   - TAC Motor Control Open circuit terminal B
   - **If the test lamp does not illuminate**

   1. Ignition OFF, disconnect the harness connector at the K20 Engine Control Module.
   2. Test for infinite resistance between the appropriate control circuit and ground.
      - If less than infinite resistance, repair the short to ground on the circuit.
      - If infinite resistance
   3. Test for less than 2 ohms on the control circuit from end to end.
      - If greater than 2 ohms, repair the open or high resistance on the circuit.
      - If less than 2 ohms, replace the K20 Engine Control Module.

   - **If the test lamp illuminates**
7. Disconnect the harness connector at the K20 Engine Control Module.
8. Test for less than 1 V between each motor control circuit listed below and ground.
   - TAC Motor Control Closed circuit terminal A
   - TAC Motor Control Open circuit terminal B
   - **If greater than 1 V**

     Repair the short to voltage on the circuit.

   - **If less than 1 V**
9. Test or replace the Q38 Throttle Body assembly.

Repair Instructions

- **Throttle Body Assembly Replacement**
- **Control Module References** for Engine Control Module replacement, programming, and setup

Repair Verification

1. Ignition OFF.
2. Install any components that have been removed or replaced during diagnosis.
3. Perform any adjustments, programming or setup procedures that are required when a component is removed or replaced.
4. Ignition ON.
5. Clear the DTCs with a scan tool.
6. Turn the ignition OFF for 60 s.
7. Ignition ON.
8. Verify the scan tool TAC Motor parameter displays Enabled while performing the Throttle Sweep Test with a scan tool.
   - **If Enabled is not displayed**

     Test or replace the Q38 Throttle Body assembly.

   - **If Enabled is displayed**
9. If the repair was related to a DTC, duplicate the Conditions for Running the DTC and use the Freeze Frame/Failure Records, if applicable, in order to verify the DTC does not set.
   - **If DTC sets**

     Refer to **Diagnostic Trouble Code (DTC) List - Vehicle** for further diagnosis.

   - **If DTC does not set**
10. All OK.

DTC P2096

Diagnostic Instructions

- Perform the **Diagnostic System Check - Vehicle** prior to using this diagnostic procedure.
- Review **Strategy Based Diagnosis** for an overview of the diagnostic approach.
- **Diagnostic Procedure Instructions** provides an overview of each diagnostic category.

DTC Descriptor

DTC P2096

Post Catalyst Fuel Trim System Low Limit

Circuit Description

Fuel trim bias is used to keep the post catalyst air/fuel ratio within a predetermined range. This allows optimal catalyst efficiency under various operating conditions. The engine control module (ECM) constantly monitors how lean or rich the fuel trim bias is commanded, to determine if the fuel trim bias is greater than a calibrated amount.

Conditions for Running the DTC

- DTC P0016, P0017, P0030, P0036, P0053, P0054, P0101, P0102, P0103, P0106, P0107, P0108, P0111, P0112, P0113, P0114, P0116, P0117, P0118, P0128, P0131, P0132, P0133, P0134, P0135, P0137, P0138, P013A, P013B, P013E, P013F, P0140, P0141, P015A, P015B, P0201, P0202, P0203, P0204, P0261, P0262, P0264, P0265, P0267, P0268, P0270, P0271, P0300, P0301, P0302, P0303, P0304, P0340, P0341, P0365, P0366, P0411, P0442, P0443, P0446, P0449, P0452, P0453, P0455, P0496, P1248, P1249, P124A, P124B, P2147, P2148, P2150, P2151, P2153, P2154, P2156, P2157, P219A, P2227, P2228, P2229, P2230, P2270, P2271, P2440, or P2444 is not set.
- The barometric pressure (BARO) is greater than 70 kPa (10.2 PSI).
- The mass air flow (MAF) is between 0-100 g/s.
- The manifold absolute pressure (MAP) is between 0-200 kPa (0-29 PSI).
- The intake air temperature (IAT) is between -20°C and +200°C (-4 and +392°F).
- The start up engine coolant temperature is warmer than -20°C (-4°F).
- The fuel control intrusive diagnostics are not active.
- The engine is operating under cruise conditions.
- DTC P2096 runs continuously when the conditions above have been met.

Conditions for Setting the DTC

The lean correction limit for a condition causing a rich air/fuel ratio has been exceeded.

Action Taken when the DTC Sets

- DTCs P2096 is a Type B DTC.
- The ECM records the operating conditions at the time the diagnostic fails. The first time the diagnostic fails, the ECM stores this information in the Failure records. If the diagnostic reports a failure on the second ignition cycle, the ECM records the operating conditions at the time of the failure. The ECM writes the operating conditions to the Freeze Frame and updates the Failure records. The ECM illuminates the malfunction indicator lamp (MIL) when one of the following occurs:
    - The ECM detects the same fuel trim failure during 2 consecutive trips.
    - The ECM detects any fuel trim failure during any subsequent trip if the conditions at the time of failure meet the following criteria:
        - The engine load is within 20 percent of the previous test that failed.
        - The engine speed is within 375 RPM of the previous test that failed.
        - The engine coolant temperature is in the same range of the previous test that failed.

Conditions for Clearing the MIL/DTC

- DTCs P2096 is a Type B DTC.
- The ECM turns OFF the malfunction indicator lamp (MIL) at the beginning of the fourth ignition cycle, after 3 ignition cycles that the diagnostic runs and does not fail.
- A current DTC, Last Test Failed, clears when the diagnostic runs and passes.

Diagnostic Aids

- It is very unlikely that an HO2S will cause this DTC to set without the occurrence of circuit related HO2S DTCs. Do not replace an HO2S to address this DTC without first performing all the steps in Circuit/System Verification and Circuit/System Testing.
- The post catalyst fuel trim diagnostic is very sensitive to heated oxygen sensor (HO2S) design. A non-OE sensor or an incorrect part number may cause a DTC to set.
- Certain aftermarket air filters may cause a DTC to set.
- Certain aftermarket air induction systems or modifications to the air induction system may cause a DTC to set.
- Certain aftermarket exhaust system components may cause a DTC to set.

Reference Information

Schematic Reference

Engine Controls Schematics

Connector End View Reference

COMPONENT CONNECTOR END VIEWS - INDEX

Electrical Information Reference

- **Circuit Testing**
- **Connector Repairs**
- **Testing for Intermittent Conditions and Poor Connections**
- **Wiring Repairs**

DTC Type Reference

Powertrain Diagnostic Trouble Code (DTC) Type Definitions

Scan Tool Reference

Control Module References for scan tool information

Circuit/System Verification

1. Ignition ON.

2. Verify no other HO2S or fuel trim DTC is set.
    - **If any other HO2S or fuel trim DTC is set**

      Refer to **Diagnostic Trouble Code (DTC) List - Vehicle** for further diagnosis.

    - **If no other HO2S or fuel trim DTC is set**
3. Verify DTC P2096 is not set.
    - **If a DTC is set**

      Refer to Circuit/System Testing below

    - **If no DTC is set**
4. Operate the vehicle within the Conditions for Running the DTC. You may also operate the vehicle within the conditions that you observed in the Freeze Frame/Failure Records data.
5. Verify DTC P2096 is not set.
    - **If a DTC is set**

      Refer to Circuit/System Testing below.

    - **If no DTC is set**
6. All OK.

Circuit/System Testing

Verify none of the conditions listed below exist:

- Air intake duct collapsed or restricted.
- Air filter dirty or restricted.
- Objects blocking the throttle body.
- Excessive fuel in the crankcase. Change engine oil as necessary.
- Rich fuel injectors. Refer to **Fuel Injector Diagnosis**.
- Excessive fuel system pressure. Refer to **Fuel System Diagnosis**.
- Fuel contamination. Refer to **Alcohol/Contaminants-in-Fuel Diagnosis**.
- Fuel saturation of the evaporative emissions (EVAP) canister
- Stuck open or leaking EVAP purge valve
- Restricted exhaust. Refer to **Symptoms - Engine Exhaust** .
- Improper operation of the crankcase ventilation system.

- If a condition is found

  Repair as necessary.

Repair Instructions

Perform the **Diagnostic Repair Verification** after completing the diagnostic procedure.

DTC P2097

Diagnostic Instructions

- Perform the **Diagnostic System Check - Vehicle** prior to using this diagnostic procedure.
- Review **Strategy Based Diagnosis** for an overview of the diagnostic approach.
- **Diagnostic Procedure Instructions** provides an overview of each diagnostic category.

DTC Descriptor

DTC P2097

Post Catalyst Fuel Trim System High Limit

Circuit Description

Fuel trim bias is used to keep the post catalyst air/fuel ratio within a predetermined range. This allows optimal catalyst efficiency under various operating conditions. The engine control module (ECM) constantly monitors how lean or rich the fuel trim bias is commanded, to determine if the fuel trim bias is greater than a calibrated amount.

Conditions for Running the DTC

- DTC P0016, P0017, P0030, P0036, P0053, P0054, P0101, P0102, P0103, P0106, P0107, P0108, P0111, P0112, P0113, P0114, P0116, P0117, P0118, P0128, P0131, P0132, P0133, P0134, P0135, P0137, P0138, P013A, P013B, P013E, P013F, P0140, P0141, P015A, P015B, P0201, P0202, P0203, P0204, P0261, P0262, P0264, P0265, P0267, P0268, P0270, P0271, P0300, P0301, P0302, P0303, P0304, P0340, P0341, P0365, P0366, P0411, P0442, P0443, P0446, P0449, P0452, P0453, P0455, P0496, P1248, P1249, P124A, P124B, P2147, P2148, P2150, P2151, P2153, P2154, P2156, P2157, P219A, P2227, P2228, P2229, P2230, P2270, P2271, P2440, or P2444 is not set.
- The barometric pressure (BARO) is greater than 70 kPa (10.2 PSI).
- The mass air flow (MAF) is between 0-100 g/s.
- The manifold absolute pressure (MAP) is between 0-200 kPa (0-29 PSI).
- The intake air temperature (IAT) is between -20°C and +200°C (-4 and +392°F).
- The start up engine coolant temperature is warmer than -20°C (-4°F).
- The fuel control intrusive diagnostics are not active.
- The engine is operating under cruise conditions.
- DTC P2097 runs continuously when the conditions above have been met.

Conditions for Setting the DTC

The rich correction limit for a condition causing a lean air/fuel ratio has been exceeded.

Action Taken when the DTC Sets

- DTCs P2097 is a Type B DTC.
- The ECM records the operating conditions at the time the diagnostic fails. The first time the diagnostic fails, the ECM stores this information in the Failure records. If the diagnostic reports a failure on the second ignition cycle, the ECM records the operating conditions at the time of the failure. The ECM writes the operating conditions to the Freeze Frame and updates the Failure records. The ECM illuminates the malfunction indicator lamp (MIL) when one of the following occurs:
    - The ECM detects the same fuel trim failure during 2 consecutive trips.
    - The ECM detects any fuel trim failure during any subsequent trip if the conditions at the time of failure meet the following criteria:
        - The engine load is within 20 percent of the previous test that failed.
        - The engine speed is within 375 RPM of the previous test that failed.
        - The engine coolant temperature is in the same range of the previous test that failed.

Conditions for Clearing the MIL/DTC

- DTCs P2097 is a Type B DTC.
- The ECM turns OFF the malfunction indicator lamp (MIL) at the beginning of the fourth ignition cycle, after 3 ignition cycles that the diagnostic runs and does not fail.
- A current DTC, Last Test Failed, clears when the diagnostic runs and passes.

Diagnostic Aids

- It is very unlikely that an HO2S will cause this DTC to set without the occurrence of circuit related HO2S DTCs. Do not replace an HO2S to address this DTC without first performing all the steps in Circuit/System Verification and Circuit/System Testing.
- The post catalyst fuel trim diagnostic is very sensitive to heated oxygen sensor (HO2S) design. A non-OE sensor or an incorrect part number may cause a DTC to set.
- Certain aftermarket air filters may cause a DTC to set.
- Certain aftermarket air induction systems or modifications to the air induction system may cause a DTC to set.
- Certain aftermarket exhaust system components may cause a DTC to set.

Reference Information

Schematic Reference

Engine Controls Schematics

Connector End View Reference

COMPONENT CONNECTOR END VIEWS - INDEX

Electrical Information Reference

- **Circuit Testing**
- **Connector Repairs**
- **Testing for Intermittent Conditions and Poor Connections**
- **Wiring Repairs**

DTC Type Reference

Powertrain Diagnostic Trouble Code (DTC) Type Definitions

Scan Tool Reference

Control Module References for scan tool information

Circuit/System Verification

1. Ignition ON.
2. Verify no other HO2S or fuel trim DTC is set.
   - **If any other HO2S or fuel trim DTC is set**

     Refer to **Diagnostic Trouble Code (DTC) List - Vehicle** for further diagnosis.

   - **If no other HO2S or fuel trim DTC is set**
3. Verify DTC P2097 is not set.
   - **If a DTC is set**

     Refer to Circuit/System Testing below

   - **If no DTC is set**
4. Operate the vehicle within the Conditions for Running the DTC. You may also operate the vehicle within the conditions that you observed in the Freeze Frame/Failure Records data.
5. Verify DTC P2097 is not set.
   - **If a DTC is set**

     Refer to Circuit/System Testing below

   - **If no DTC is set**
6. All OK.

Circuit/System Testing

Verify none of the conditions listed below exist:

- Exhaust system leaks. Refer to **Symptoms - Engine Exhaust** .
- Vacuum hoses for splits, kinks, and proper connections

- Insufficient fuel in the tank
- Air induction system and air intake ducts for leaks
- Missing air filter element
- Cracked evaporative canister
- Evaporative pipes plugged, obstructed, or leaking
- Crankcase ventilation system leaking.
- Engine vacuum leaks
- Low fuel system pressure. Refer to **Fuel System Diagnosis**.
- Contaminated fuel. Refer to **Alcohol/Contaminants-in-Fuel Diagnosis**.
- Lean fuel injectors. Refer to **Fuel Injector Diagnosis**.

- If a condition is found

  Repair as necessary.

Repair Instructions

Perform the **Diagnostic Repair Verification** after completing the diagnostic procedure.

DTC P2122, P2123, P2127, P2128, OR P2138

Diagnostic Instructions

- Perform the **Diagnostic System Check - Vehicle** prior to using this diagnostic procedure.
- Review **Strategy Based Diagnosis** for an overview of the diagnostic approach.
- **Diagnostic Procedure Instructions** provides an overview of each diagnostic category.

DTC Descriptors

DTC P2122

Accelerator Pedal Position (APP) Sensor 1 Circuit Low Voltage

DTC P2123

Accelerator Pedal Position (APP) Sensor 1 Circuit High Voltage

DTC P2127

Accelerator Pedal Position (APP) Sensor 2 Circuit Low Voltage

DTC P2128

Accelerator Pedal Position (APP) Sensor 2 Circuit High Voltage

DTC P2138

Accelerator Pedal Position (APP) Sensors 1-2 Not Plausible

Diagnostic Fault Information

Circuit	Short to Ground	Open/High Resistance	Short to Voltage	Signal Performance
APP Sensor 1 5V Reference	P2122	P2122	P2123	-
APP Sensor 1 Signal	P2122	P2122	P2123	P2138
APP Sensor 1 Low Reference	-	P2123	-	-
APP Sensor 2 5V Reference	P2127	P2127	P2128	-
APP Sensor 2 Signal	P2127	P2127	P2128	P2138
APP Sensor 2 Low Reference	-	P2128	-	-

Typical Scan Tool Data

APP Sensor 1

Circuit	Short to Ground	Open	Short to Voltage
Operating Conditions: The engine is operating at idle **Parameter Normal Range:** 0.13-4.88 V			
APP Sensor 1 5V Reference	0 V	0 V	5 V
APP Sensor 1 Signal	0 V	0 V	5 V
APP Sensor 1 Low Reference	-	4.96 V	-

APP Sensor 2

Circuit	Short to Ground	Open	Short to Voltage
Operating Conditions: The engine is operating at idle **Parameter Normal Range:** 0.12-2.64 V			
APP Sensor 2 5V Reference	0 V	0 V	5 V
APP Sensor 2 Signal	0 V	0 V	5 V
APP Sensor 2 Low Reference	-	4.92 V	-

Circuit/System Description

The throttle actuator control (TAC) system uses two accelerator pedal position (APP) sensors to monitor the accelerator pedal position. The APP sensors 1 and 2 are located within the pedal assembly. Each sensor has a 5 V reference circuit, a low reference circuit, and a signal circuit.

Two processors are also used to monitor the TAC motor system data. Both processors are located within the ECM. Each signal circuit provides both processors with a signal voltage proportional to pedal movement. The

processors share and monitor data to verify that the indicated APP sensor calculation is correct.

Conditions for Running the DTC

P2122 and P2123

- DTC P0642, or P0643 is not set.
- The ignition is ON.
- The DTCs run continuously when the above conditions are met.

P2127 and P2128

- DTC P0652, or P0653 is not set.
- The ignition is ON.
- The DTCs run continuously when the above conditions are met.

P2138

- DTCs P0642, P0643, P0652, or P0653 is not set.
- The ignition is ON.
- The DTC runs continuously when the above conditions are met.

Conditions for Setting the DTC

P2122

The ECM detects that APP sensor 1 voltage is less than 0.61 V for greater than 0.5 s.

P2123

The ECM detects that APP sensor 1 voltage is greater than 4.59 V for greater than 0.5 s.

P2127

The ECM detects that APP sensor 2 voltage is less than 0.10 V for greater than 0.5 s.

P2128

The ECM detects that APP sensor 2 voltage is greater than 2.5 V for greater than 0.5 s.

P2138

The ECM detects that the difference between APP sensor 1 and APP sensor 2 exceeds a predetermined value for greater than 2 s.

Action Taken When the DTC Sets

- DTCs P2122, P2123, P2127, P2128 and P2138 are Type A DTCs.
- The ECM commands the TAC motor system to operate in reduced engine power mode.

Conditions for Clearing the DTC

DTCs P2122, P2123, P2127, P2128, and P2138 are Type A DTCs.

Reference Information

Schematic Reference

Engine Controls Schematics

Connector End View Reference

COMPONENT CONNECTOR END VIEWS - INDEX

Description and Operation

Throttle Actuator Control (TAC) System Description

Electrical Information Reference

- **Circuit Testing**
- **Connector Repairs**
- **Testing for Intermittent Conditions and Poor Connections**
- **Wiring Repairs**

DTC Type Reference

Powertrain Diagnostic Trouble Code (DTC) Type Definitions

Scan Tool Reference

Control Module References

Circuit/System Verification

1. Ignition ON.
2. Verify that DTC P0697, or P06A3 is not set.
    - **If any of the DTCs are set**

      Refer to **DTC P0641, P0651, P0697, or P06A3 (ECM)**.

    - **If none of the DTCs are set**

3. Verify the scan tool APP Sensor 1 parameter. The reading should be between 0.32-4.87 V, and change with the accelerator pedal input.
4. Verify the scan tool APP Sensor 2 parameter. The reading should be between 0.16-2.30 V, and change with the accelerator pedal input.
    - **If the reading does not change**

      Refer to Circuit/System Testing below.

    - **If the reading does change**
5. Operate the vehicle within the Conditions for Running the DTC. You may also operate the vehicle within the conditions that you observed from the Freeze Frame/Failure Records data.
6. Verify the DTC does not set.
    - **If the DTC sets**

      Refer to Circuit/System Testing below.

    - **If the DTC does not set**
7. All OK.

Circuit/System Testing

1. Ignition OFF and all vehicle systems OFF, disconnect the harness connector at the B107 Accelerator Pedal Position Sensor. It may take up to 2 minutes for all vehicle systems to power down.
2. Test for less than 5 ohms between each low reference circuit terminal listed below and ground.
    - Low reference circuit terminal 4
    - Low reference circuit terminal 5
    - **If 5 ohms or greater**
    1. Ignition OFF, disconnect the harness connector at the K20 Engine Control Module.
    2. Test for less than 2 ohms in the low reference circuit end to end.
        - If 2 ohms or greater, repair the open/high resistance in the circuit.
        - If less than 2 ohms, replace the K20 Engine Control Module.
    - **If less than 5 ohms**
3. Ignition ON.
4. Test for 4.8-5.2 V between each 5 V reference circuit terminal listed below and ground.
    - 5 V reference circuit terminal 1
    - 5 V reference circuit terminal 2
    - **If less than 4.8 V**
    1. Ignition OFF, disconnect the harness connector at the K20 Engine Control Module.
    2. Test for infinite resistance between the 5 V reference circuit and ground.
        - If less than infinite resistance, repair the short to ground on the circuit.
        - If infinite resistance

3. Test for less than 2 ohms in the 5 V reference circuit end to end.
    - If 2 ohms or greater, repair the open/high resistance in the circuit.
    - If less than 2 ohms, replace the K20 Engine Control Module.
- **If greater than 5.2 V**

1. Ignition OFF, disconnect the harness connector at the K20 Engine Control Module, ignition ON.
2. Test for less than 1 V between the 5 V reference circuit and ground.
    - If 1 V or greater, repair the short to voltage on the circuit.
    - If less than 1 V, replace the K20 Engine Control Module.

- **If between 4.8-5.2 V**

5. Verify the scan tool APP sensor 1 and 2 voltage parameter is less than 0.1 V.
    - **If 0.1 V or greater**

    1. Ignition OFF, disconnect the harness connector at the K20 Engine Control Module, ignition ON.
    2. Test for less than 1 V between the signal circuit terminal listed below and ground.
        - APP sensor 1 signal circuit terminal 3
        - APP sensor 2 signal circuit terminal 6
        - If 1 V or greater, repair the short to voltage on the circuit.
        - If less than 1 V, replace the K20 Engine Control Module.

    - **If less than 0.1 V**

6. Install a 3 A fused jumper wire between each signal circuit terminal listed below and the 5 V reference circuit terminal 1.
    - APP sensor 1 signal circuit terminal 3
    - APP sensor 2 signal circuit terminal 6
7. Verify the scan tool APP sensor 1 and 2 voltage parameter is greater than 4.8 V.
    - **If 4.8 V or less**

    1. Ignition OFF, disconnect the harness connector at the K20 Engine Control Module.
    2. Test for infinite resistance between the signal circuit terminal and ground.
        - If less than infinite resistance, repair the short to ground on the circuit.
        - If infinite resistance
    3. Test for less than 2 ohms in the signal circuit end to end.
        - If 2 ohms or greater, repair the open/high resistance in the circuit.
        - If less than 2 ohms, replace the K20 Engine Control Module.

    - **If greater than 4.8 V**

8. Test or replace the B107 Accelerator Pedal Position Sensor.

Repair Instructions

Perform the **Diagnostic Repair Verification** after completing the repair.

- **Accelerator Pedal Position Sensor Replacement**

- **Control Module References** for ECM replacement, programming, and setup.

DTC P2199

Diagnostic Instructions

- Perform the **Diagnostic System Check - Vehicle** prior to using this diagnostic procedure.
- Review **Strategy Based Diagnosis** for an overview of the diagnostic approach.
- **Diagnostic Procedure Instructions** provides an overview of each diagnostic category.

DTC Descriptor

DTC P2199

Intake Air Temperature (IAT) Sensors 1-2 Not Plausible

Diagnostic Fault Information

IAT Sensor 1

Circuit	Short to Ground	Open/High Resistance	Short to Voltage	Signal Performance
Sensor	P0112, P0114, P2199	P0113, P0114, P2199	P0113, P0114, P2199*	P0111, P0114
Low Reference	-	P0097, P0113, P11C2**, P2227, P2229	*	-
*Internal ECM or sensor damage may occur if the circuit is shorted to B+. **Where used.				

IAT Sensor 2

Circuit	Short to Ground	Open/High Resistance	Short to Voltage	Signal Performance
5 V Reference	P0097, P0651, P11C2**, P2199, P2227, P2228	P0096, P0097, P11C2**, P2199, P2227, P2228	P0097, P0651, P11C2**, P2199, P2227, P2228	-
Sensor	P0097, P11C3**, P2199	P0097, P11C2**, P2199	P0097, P11C2**, P2199*	-
Low Reference	-	P0097, P0113, P11C2**, P2227, P2229	*	-
*Internal ECM or sensor damage may occur if the circuit is shorted to B+. **Where used.				

Typical Scan Tool Data

IAT Sensor 1

Circuit	Short to Ground	Open or High Resistance	Short to Voltage
Operating Conditions: Engine Running **Parameter Normal Range:** Varies with ambient temperature			
Sensor	150°C (302°F)	-40°C (-40°F)	-40°C (-40°F)*
Low Reference	-	-40°C (-40°F)	-40°C (-40°F)*
*Internal ECM or sensor damage may occur if the circuit is shorted to B+			

IAT Sensor 2

Circuit	Short to Ground	Open or High Resistance	Short to Voltage
Operating Conditions: Engine Running **Parameter Normal Range:** Varies with ambient temperature			
5 V Reference	-40°C (-40°F) 10 Hz	-40°C (-40°F) 10 Hz	-
Signal	-40°C (-40°F)	-40°C (-40°F)	-40°C (-40°F)* 10 Hz*
Ground	-	-40°C (-40°F) 10 Hz	-
*Internal ECM or sensor damage may occur if the circuit is shorted to B+			

Circuit/System Description

The sensors listed below are integrated within the multifunction intake air sensor:

- IAT sensor 1
- IAT sensor 2
- Humidity sensor
- MAF sensor
- BARO pressure sensor

The intake air temperature (IAT) sensor 1 is a variable resistor that changes the voltage on the engine control module (ECM) supplied 5 V signal circuit. The signal varies with inlet air temperature in the sensor bore and is displayed by the scan tool as °C (°F). The IAT sensor 2 and the humidity sensor share the same circuit. The IAT sensor 2 signal is displayed by the scan tool as Hz (Hertz) and °C (°F).

The IAT sensor 1 produces an analog signal on pin-8 of the sensor. The IAT sensor 2 produces a frequency modulated signal on pin-1 of the sensor.

The sensors listed below share an ECM supplied 5 V reference circuit:

- IAT sensor 2
- Humidity sensor
- Barometric pressure (BARO) sensor

The sensors listed below share an ECM supplied low reference circuit:

- IAT sensor 1
- IAT sensor 2
- Humidity sensor
- Barometric pressure (BARO) sensor

IAT Sensor 1 - Temperature, Resistance, Voltage Table

IAT Sensor 1	IAT Sensor 1 Resistance	IAT Sensor 1 Signal Voltage
Cold	High	High
Warm	Low	Low

IAT Sensor 2 - Temperature, Frequency Table

IAT Sensor 2	IAT Sensor 2 Frequency	IAT Sensor 2 Temperature
Cold	45 Hz	-40°C (-40°F)
Warm	302 Hz	104°C (219°F)

Conditions for Running the DTC

- DTC P1682 is not set.
- The ignition is ON.
- Ignition voltage is at least 11 V.
- This DTC runs continuously within the enabling conditions.

Conditions for Setting the DTC

The ECM detects that the absolute difference between the IAT sensor 1 and the IAT sensor 2 temperatures is greater than 55°C (99°F) for longer than 5 s.

Action Taken When the DTC Sets

DTC P2199 is a Type B DTC.

Conditions for Clearing the MIL/DTC

DTC P2199 is a Type B DTC.

Diagnostic Aids

- With the ignition ON, when the engine is OFF and is cold; properly functioning IAT sensors 1 and 2 will gradually increase the scan tool IAT Sensor 1 and 2 parameters. This is due to the heat that is generated by the multifunction intake air sensor internal heating elements.
- The Humidity sensor and the IAT sensor 2 signals are sent to the ECM on the same circuit. If the IAT Sensor 2 parameter displays the values: 10 Hz; -40°C (-40°F), and there are also Humidity Sensor DTCs, check for a circuit problem.

Reference Information

Schematic Reference

Engine Controls Schematics

Connector End View Reference

COMPONENT CONNECTOR END VIEWS - INDEX

Electrical Information Reference

- **Circuit Testing**
- **Connector Repairs**
- **Testing for Intermittent Conditions and Poor Connections**
- **Wiring Repairs**

DTC Type Reference

Powertrain Diagnostic Trouble Code (DTC) Type Definitions

Scan Tool Reference

Control Module References for scan tool information

Special Tools

EL-38522-A Variable Signal Generator

For equivalent regional tools, refer to **Special Tools** .

Circuit/System Verification

1. Ignition ON.
2. Verify that DTC DTC P0641, P0651, P0697, or P06A3 is not set.
    - **If any of the DTCs are set**

      Refer to **DTC P0641, P0651, P0697, or P06A3 (ECM)** for further diagnosis.

    - **If none of the DTCs are set**

NOTE: To minimize the effects of residual engine heat and sensor internal heating elements, perform Steps 3 and 4 of this verification procedure only if the ignition has been OFF for 8 hours or more.

3. Ignition ON.

4. Verify the following scan tool parameters are within 25°C (45°F) of each other.
   - Start-Up IAT Sensor 1
   - IAT Sensor 2
   - IAT Sensor 3; where equipped
   - **If not within 25°C (45°F)**

     Refer to Circuit/System Testing below.

   - **If within 25°C (45°F)**
5. Engine idling, verify the following scan tool parameters are between: -38 and +149°C (-36 and +300°F).
   - IAT Sensor 1
   - IAT Sensor 2
   - **If not between: -38 and +149°C (-36 and +300°F)**

     Refer to Circuit System Testing below.

   - **If between: -38 and +149°C (-36 and +300°F)**
6. Operate the vehicle within the conditions for running the DTC. You may also operate the vehicle within the conditions that you observed from the freeze frame/failure records data.
7. Verify the DTC does not set.
   - **If the DTC does set**

     Refer to Circuit/System Testing below.

   - **If the DTC does not set**
8. All OK

Circuit/System Testing

NOTE: You must perform the Circuit/System Verification before proceeding with Circuit/System Testing.

1. Ignition OFF, and all vehicle systems OFF, it may take up to 2 min. for all vehicle systems to power down. Disconnect the harness connector at the B75C Multifunction Intake Air sensor.
2. Test for less than 2 ohms between the low reference circuit terminal 7 and ground.
   - **If 2 ohms or greater**
     1. Ignition OFF, disconnect the harness connector at the K20 Engine Control Module.
     2. Test for less than 2 ohms in the low reference circuit end to end.
        - If 2 ohms or greater, repair the open or high resistance in the circuit.
        - If less than 2 ohms replace the K20 Engine Control Module.
   - **If less than 2 ohms**
3. Ignition ON, test for 4.8-5.2 V between the 5 V reference circuit terminal 2 and ground.

- **If less than 4.8 V**

1. Ignition OFF, disconnect the harness connector at the K20 Engine Control Module.
2. Test for infinite resistance between the signal circuit and ground.
   - If less than infinite resistance, repair the short to ground on the circuit.
   - If infinite resistance
3. Test for less than 2 ohms in the signal circuit end to end.
   - If 2 ohms or greater, repair the open/high resistance in the circuit.
   - If less than 2 ohms, replace the K20 Engine Control Module.

- **If greater than 5.2 V**

NOTE: If the 5 V reference circuit is shorted to a voltage the engine control module or the sensor may be damaged.

1. Ignition OFF, disconnect the harness connector at the K20 Engine Control Module.
2. Ignition ON, test for less than 1 V between the 5 V reference circuit and ground.
   - If 1 V or greater, repair the short to voltage on the circuit.
   - If less than 1 V, replace the K20 Engine Control Module.

- **If between 4.8-5.2 V**

4. Ignition ON, test for 4.8-5.2 V between the signal circuit terminal 8 and ground.
   - **If less than 4.8 V**

1. Ignition OFF, disconnect the harness connector at the K20 Engine Control Module.
2. Test for infinite resistance between the signal circuit and ground.
   - If less than infinite resistance, repair the short to ground on the circuit.
   - If infinite resistance
3. Test for less than 2 ohms in the signal circuit end to end.
   - If 2 ohms or greater, repair the open/high resistance in the circuit.
   - If less than 2 ohms, replace the K20 Engine Control Module.

   - **If greater than 5.2 V**

NOTE: If the signal circuit is shorted to a voltage the engine control module or the sensor may be damaged.

1. Ignition OFF, disconnect the harness connector at the K20 Engine Control Module.
2. Ignition ON, test for less than 1 V between the signal circuit and ground.
   - If 1 V or greater, repair the short to voltage on the circuit.
   - If less than 1 V, replace the K20 Engine Control Module.

   - **If between 4.8-5.2 V**

5. Ignition ON, verify the scan tool IAT Sensor 1 parameter is colder than -39°C (-38°F).
   - **If warmer than -39°C (-38°F).**

1. Ignition OFF, disconnect the harness connector at the K20 Engine Control Module.
2. Test for infinite resistance between the signal circuit terminal 8 and ground.
   - If less than infinite resistance, repair the short to ground on the circuit.
   - If infinite resistance
3. Test for less than 2 ohms in the signal circuit end to end.
   - If 2 ohms or greater, repair the open/high resistance in the circuit.
   - If less than 2 ohms, replace the K20 Engine Control Module.

- **If colder than -39°C (-38°F).**

6. Ignition OFF, install a 3 A fused jumper wire between the signal circuit terminal 8 and the low reference circuit terminal 7.
7. Verify the scan tool IAT Sensor 3 parameter is warmer than 150°C (302°F).
   - **If colder than 150°C (302°F).**
   1. Ignition OFF, remove the jumper wire, disconnect the harness connector at the K20 Engine Control Module, ignition ON.
   2. Test for less than 1 V between the signal circuit and ground.
      - If 1 V or greater, repair the short to voltage on the circuit.
      - If less than 1 V
   3. Ignition OFF.
   4. Test for less than 2 ohms in the signal circuit end to end.
      - If 2 ohms or greater, repair the open/high resistance in the circuit.
      - If less than 2 ohms, replace the K20 Engine Control Module.

   - **If warmer than 150°C (302°F).**
8. Ignition ON, test for 4.8-5.2 V between the signal terminal 1 and ground.
   - **If less than 4.8 V**
   1. Ignition OFF, disconnect the harness connector at the K20 Engine Control Module.
   2. Test for infinite resistance between the signal circuit and ground.
      - If less than infinite resistance, repair the short to ground on the circuit.
      - If infinite resistance
   3. Test for less than 2 ohms in the signal circuit end to end.
      - If 2 ohms or greater, repair the open/high resistance in the circuit.
      - If less than 2 ohms, replace the K20 Engine Control Module.

   - **If greater than 5.2 V**

NOTE: If the signal circuit is shorted to a voltage the engine control module or the sensor may be damaged.

1. Ignition OFF, disconnect the harness connector at the K20 Engine Control Module.
2. Ignition ON, test for less than 1 V between the signal circuit and ground.
   - If 1 V or greater, repair the short to voltage on the circuit.

- If less than 1 V, replace the K20 Engine Control Module.
- **If between 4.8-5.2 V**

9. Determine if **EL-38522-A** Variable Signal Generator or equivalent is available.
   - **EL-38522-A, Variable Signal Generator; or equivalent is not available**
   1. Replace the K20 Engine Control Module.
   2. Operate the vehicle within the Conditions for Running the DTC. You may also operate the vehicle within the conditions that you observed from the freeze frame/failure records data.
   3. Verify the DTC does not set.
      - **If the DTC sets**

        Refer to step 13.

      - **If no DTCs set**
   4. All OK.
   - **EL-38522-A, Variable Signal Generator; or equivalent is available**
10. Ignition OFF, connect the leads of the **EL-38522-A** Variable Signal Generator as follows:
    - Red lead to the signal circuit terminal 1 at the harness connector
    - Black leads to ground
    - Battery voltage supply lead to B+
11. Set the **EL-38522-A** Variable Signal Generator to the following specifications.
    - Signal switch to 5 V
    - Duty Cycle switch to 50 % (Normal)
    - Frequency switch to 30 Hz
12. Ignition ON, verify the scan tool IAT Sensor 2 parameter is between 28-32 Hz.
    - **If not between 28-32 Hz**

      Replace the K20 Engine Control Module.

    - **If between 28-32 Hz**
13. Test or replace the B75C Multifunction Intake Air sensor.

Component Testing

Multifunction Intake Air Sensor

1. Ignition OFF, disconnect the harness connector at the B75C Multifunction Intake Air sensor.

NOTE: A thermometer can be used to test the sensor off the vehicle.

2. Test the IAT sensor 1 by varying the sensor temperature while monitoring the sensor resistance. Compare the readings with the **Temperature Versus Resistance - Intake Air Temperature Sensor (Bosch Sensor)** , **Temperature Versus Resistance - Intake Air Temperature Sensor (Delco Sensor)** table for

Bosch Sensors. The resistance values should be in range of the table values.

- **If not within the specified range.**

  Replace the B75C Multifunction Intake Air sensor.

- **If within the specified range.**

3. All OK

Multifunction Intake Air Sensor

1. Test the IAT Sensor 2 by varying the sensor temperature while monitoring the air temperature with a thermometer. Compare the readings with the scan tool IAT Sensor 2 parameter. The values should be within 5%.
   - **If not within 5%.**

     Replace the B75C Multifunction Intake Air sensor.

   - **If within 5%.**
2. All OK

Repair Instructions

Perform the **Diagnostic Repair Verification** after completing the repair.

- **Mass Airflow Sensor Replacement** for multifunction intake air sensor replacement
- **Control Module References** for Engine Control Module replacement, programming, and setup.

DTC P219A

Diagnostic Instructions

- Perform the **Diagnostic System Check - Vehicle** prior to using this diagnostic procedure.
- Review **Strategy Based Diagnosis** for an overview of the diagnostic approach.
- **Diagnostic Procedure Instructions** provides an overview of each diagnostic category.

DTC Descriptor

DTC P219A

Fuel Trim Cylinder Balance

Circuit/System Description

The Air Fuel Imbalance diagnostic detects a rich or lean cylinder to cylinder air/fuel ratio imbalance. The diagnostic monitors the pre-catalyst heated oxygen sensor (HO2S) signal's frequency and amplitude characteristics by calculating an accumulated voltage over a predetermined sample period. An imbalance is

indicated when multiple samples of the accumulated voltage are consistently higher than the desired value.

Conditions for Running the DTC

- DTCs P0016, P0017, P0068, P0101, P0102, P0103, P0106, P0107, P0108, P0116, P0117, P0118, P0122, P0123, P0128, P0201-P0204, P0222, P0223, P0261, P0262, P0264, P0265, P0267, P0268, P0270, P0271, P0300, P0301-P0304, P0340, P0341, P0365, P0366, P0411, P0442, P0455, P0496, P1248, P1249, P124A, P124B, P2101, P2135, P2147, P2148, P2150. P2151, P2153, P2154, P2156, P2157, P2440, P2444 are not set.
- The EVAP device control and intrusive diagnostics are not active.
- The engine overspeed protection is not active.
- The engine is in closed loop status.
- The system voltage is greater than 11 V.
- The engine coolant temperature (ECT) is warmer than -20°C (-4°F).
- The engine speed is between 1, 200-3, 200 RPM.
- The mass air flow is between 10-100 g/s.
- The AIR pump is not ON.
- Engine run time is greater than 30 s.
- Fuel level is greater than 10% and no fuel level sensor fault is present.
- The DTC runs continuously when the above conditions have been met.

Conditions for Setting the DTC

Multiple samples of the pre-catalyst HO2S accumulated voltage are consistently greater than the desired value.

Action Taken When the DTC Sets

DTC P219A is a Type A DTC.

Conditions for Clearing the MIL/DTC

DTC P219A is a Type A DTC.

Diagnostic Aids

- The air fuel imbalance diagnostic is very sensitive to heated oxygen sensor (HO2S) design. A non-OE sensor or an incorrect part number may cause a DTC to set.
- Monitoring the misfire current counters, or misfire graph, may help to isolate the cylinder that is causing the condition.
- Certain aftermarket air filters may cause a DTC to set.
- Certain aftermarket air induction systems or modifications to the air induction system may cause a DTC to set.
- Certain aftermarket exhaust system components may cause a DTC to set.

Reference Information

Schematic Reference

Engine Controls Schematics

Connector End View Reference

COMPONENT CONNECTOR END VIEWS - INDEX

Electrical Information Reference

- **Circuit Testing**
- **Troubleshooting with a Test Lamp**
- **Testing for Intermittent Conditions and Poor Connections**
- **Wiring Repairs**
- **Connector Repairs**

DTC Type Reference

Powertrain Diagnostic Trouble Code (DTC) Type Definitions

Scan Tool Reference

Control Module References for scan tool information

Circuit/System Verification

1. Ignition ON.
2. Verify no other DTCs are set.
   - **If any other DTCs are set**

     Refer to **Diagnostic Trouble Code (DTC) List - Vehicle** for further diagnosis.

   - **If no other DTCs are set**
3. Verify DTC P219A is not set.
   - **If a DTC is set**

     Refer to Circuit/System Testing below.

   - **If no DTC is set**
4. Operate the vehicle within the Conditions for Running the DTC. You may also operate the vehicle within the conditions that you observed in the Freeze Frame/Failure Records data.
5. Verify DTC P219A is not set.
   - **If a DTC is set**

Refer to Circuit/System Testing below.

- **If no DTC is set**

6. All OK.

Circuit/System Testing

1. Engine idling, verify the manifold absolute pressure (MAP) sensor parameter is between 20-48 kPa.
   - **If not within the specified range** .

     Refer to **DTC P0106** , or **DTC P0107 or P0108**

   - **If within the specified range, verify that none of the conditions listed below exist:**
   - Modified, damaged, leaking, or restricted air induction system components.
   - Improper operation of the crankcase ventilation system.
   - Split, kinked, or improperly connected vacuum hoses.
   - Restricted, damaged, leaking, or modified exhaust system from the catalytic converter forward. Refer to **Symptoms - Engine Exhaust** .
   - Improperly operating fuel injectors. Refer to **Fuel Injector Diagnosis**.
   - Contaminated fuel. Refer to **Alcohol/Contaminants-in-Fuel Diagnosis**.
   - Excessive fuel in the crankcase due to leaking injectors. Change engine oil as necessary.
   - Improper ignition system operation. Refer to **Electronic Ignition System Diagnosis**.
   - **If a condition is found**

     Repair as necessary.

   - **If no condition is found**
2. Test the engine for any mechanical conditions such as sticking valves, lifters, etc., which could alter the flow into the combustion chamber. Refer to **Symptoms - Engine Mechanical** .

Repair Instructions

Perform the **Diagnostic Repair Verification** after completing the diagnostic procedure.

DTC P2227-P2230

Diagnostic Instructions

- Perform the **Diagnostic System Check - Vehicle** prior to using this diagnostic procedure.
- Review **Strategy Based Diagnosis** for an overview of the diagnostic approach.
- **Diagnostic Procedure Instructions** provides an overview of each diagnostic category.

DTC Descriptors

DTC P2227

Barometric Pressure (BARO) Sensor Performance

DTC P2228

Barometric Pressure (BARO) Sensor Circuit Low Voltage

DTC P2229

Barometric Pressure (BARO) Sensor Circuit High Voltage

DTC P2230

Barometric Pressure (BARO) Sensor Circuit Erratic - (If used)

Diagnostic Fault Information

Circuit	Short to Ground	Open/High Resistance	Short to Voltage	Signal Performance
5V Reference	P0641, P2228	P2228	P0641, P2229	P2227
Signal	P2228	P2228	P2229	P2227
Low Reference	-	P2229	-	P2227

Typical Scan Tool Data

BARO

Circuit	Short to Ground	Open	Short to Voltage
Operating Conditions: Ignition ON, Engine OFF **Parameter Normal Range:** 56-105 kPa, varies with altitude			
5V Reference	0 kPa	0 kPa	127 kPa
Signal	0 kPa	0 kPa	127 kPa
Low Reference	-	127 kPa	-

Circuit/System Description

The barometric pressure (BARO) sensor responds to changes in altitude and atmospheric conditions. This gives the engine control module (ECM) an indication of barometric pressure. The ECM uses this information to calculate fuel delivery. The BARO sensor provides a voltage signal to the ECM relative to the atmospheric pressure changes. The ECM monitors the BARO sensor signal for a voltage outside of the normal range.

Conditions for Running the DTC

P2227

- DTCs P0068, P0101, P0102, P0103, P0106, P0107, P0108, P0112, P0113, P0117, P0118, P0121, P0122,

P0123, P0222, P0223, P1516, P2135, P2228 and P2229 are not set.

- Engine is running.

OR

- DTCs P0106, P0107, P0108, P2228, P2229 and P2230 are not set and are not pending.
- Ignition ON, engine OFF.
- DTC P2227 runs continuously when the above conditions are met.

P2228 or P2229

- The engine is running.
- The DTCs run continuously when the above condition is met.

P2230

- The engine is running.
- DTCs P0068, P0101, P0102, P0103, P0106, P0107, P0108, P0112, P0113, P0117, P0118, P0121, P0122, P0123, P0222, P0223, P1516, P2135, P2228 and P2229 are not set.
- DTC P2230 runs continuously when the above conditions are met.

Conditions for Setting the DTC

P2227

- Engine running, the ECM detects that the difference between the BARO signal and the calculated BARO is greater than 15 kPa (2.17 PSI) when the vehicle has traveled no more than 0.1 km (0.06 mi) since the last calculated BARO update, or if the difference is greater than 25 kPa (3.62 PSI) when the vehicle has traveled greater than 0.1 km (0.06 mi) since the last calculated BARO update.
- Ignition ON, engine OFF, the ECM detects that the BARO pressure is less than 50 kPa (7.25 PSI) or greater than 115 kPa (16.76 PSI).

P2228

The ECM detects that the BARO sensor voltage is less than 2 V.

P2229

The ECM detects that the BARO sensor voltage is greater than 4.5 V.

P2230

The ECM detects that the difference between the current BARO sensor reading and the previous BARO sensor reading is greater than 10 kPa (1.45 PSI).

Action Taken When the DTC Sets

DTCs P2227, P2228, P2229, and P2230 are Type B DTCs.

Conditions for Clearing the DTC

DTCs P2227, P2228, P2229, and P2230 are Type B DTCs.

Diagnostic Aids

Inspect the inlet port on the Barometric Pressure Sensor for moisture or debris and attempt to dry or clean the inlet, if contaminated.

Reference Information

Schematic Reference

Engine Controls Schematics

Connector End View Reference

COMPONENT CONNECTOR END VIEWS - INDEX

Electrical Information Reference

- **Circuit Testing**
- **Connector Repairs**
- **Testing for Intermittent Conditions and Poor Connections**
- **Wiring Repairs**

DTC Type Reference

Powertrain Diagnostic Trouble Code (DTC) Type Definitions

Scan Tool Reference

Control Module References for scan tool information

Circuit/System Verification

1. Ignition ON.
2. Verify the scan tool BARO pressure parameter is within the range specified in the **Altitude Versus Barometric Pressure** table.
    - **If the BARO is not within the specified range**

      Refer to Circuit/System Testing below.

    - **If the BARO is within the specified range**

3. Operate the vehicle within the Conditions for Running the DTC. You may also operate the vehicle within the conditions that you observed in the Freeze Frame/Failure Records data.
4. Verify the DTC does not set.
    - **If the DTC sets**

      Refer to Circuit/System Testing below.

    - **If the DTC does not set**
5. All OK.

Circuit/System Testing

1. Verify the conditions listed below do not exist with the B75C Multifunction Intake Air Sensor:
    - Damage
    - Restrictions in the inlet port
    - **If a condition exists**

      Repair or replace the B75C Multifunction Intake Air Sensor as necessary.

    - **If none of the conditions exist**
2. Ignition OFF, and all vehicle systems OFF, it may take up to 2 minutes for all vehicle systems to power down. Disconnect the harness connector at the B75C Multifunction Intake Air Sensor.
3. Test for less than 5 ohms between the low reference circuit terminal 7 and ground.
    - **If 5 ohms or greater**
    1. Ignition OFF, disconnect the harness connector at the K20 Engine Control Module.
    2. Test for less than 2 ohms in the low reference circuit end to end.
        - If greater than the specified value, repair the open or high resistance in the circuit.
        - If 2 ohms or less replace the K20 Engine Control Module.
    - **If less than 5 ohms**
4. Ignition ON.
5. Test for 4.8-5.2 V between the 5 V reference circuit terminal 2 and ground.
    - **If less than 4.8 V**
    1. Ignition OFF, disconnect the harness connector at the K20 Engine Control Module.
    2. Test for infinite resistance between the 5 V reference circuit and ground.
        - If less than infinite resistance, repair the short to ground on the circuit.
        - If infinite resistance
    3. Test for less than 2 ohms in the 5 V reference circuit end to end.
        - If 2 ohms or greater, repair the open/high resistance in the circuit.
        - If less than 2 ohms, replace the K20 Engine Control Module.
    - **If greater than 5.2 V**

1. Ignition OFF, disconnect the harness connector at the K20 Engine Control Module, ignition ON.
2. Test for less than 1 V between the 5 V reference circuit and ground.
    - If 1 V or greater, repair the short to voltage on the circuit.
    - If less than 1 V, replace the K20 Engine Control Module.

- **If between 4.8-5.2 V**

6. Verify the scan tool BARO Sensor parameter is less than 0.2 V.
    - **If 0.2 V or greater**
    1. Ignition OFF, disconnect the harness connector at the K20 Engine Control Module, ignition ON.
    2. Test for less than 1 V between the signal circuit terminal 6 and ground.
        - If 1 V or greater, repair the short to voltage on the circuit.
        - If less than 1 V, replace the K20 Engine Control Module.
    - **If less than 0.2 V**
7. Install a 3 A fused jumper wire between the signal circuit terminal 6 and the 5 V reference circuit terminal 2.
8. Verify the scan tool BARO Sensor parameter is greater than 4.5 V.
    - **If 4.5 V or less**
    1. Ignition OFF, remove the jumper wire, disconnect the harness connector at the K20 Engine Control Module.
    2. Test for infinite resistance between the signal circuit terminal 6 and ground.
        - If less than infinite resistance, repair the short to ground on the circuit.
        - If infinite resistance
    3. Test for less than 2 ohms in the signal circuit end to end.
        - If 2 ohms or greater, repair the open/high resistance in the circuit.
        - If less than 2 ohms, replace the K20 Engine Control Module.
    - **If greater than 4.5 V**
9. Test or replace the B75C Multifunction Intake Air Sensor.

Repair Instructions

Perform the **Diagnostic Repair Verification** after completing the repair.

- **Mass Airflow Sensor Replacement** for multifunction intake air sensor replacement
- **Control Module References** for engine control module replacement, programming and setup

DTC P2261

Diagnostic Instructions

- Perform the **Diagnostic System Check - Vehicle** prior to using this diagnostic procedure.
- Review **Strategy Based Diagnosis** for an overview of the diagnostic approach.
- **Diagnostic Procedure Instructions** provides an overview of each diagnostic category.

DTC Descriptor

DTC P2261

Turbocharger Bypass Valve Stuck

Circuit/System Description

The turbocharger incorporates a bypass valve which is controlled by the Engine Control Module (ECM), by utilizing a remotely mounted solenoid valve, to prevent turbocharger surging and damage from vibrations by opening during abrupt closed throttle conditions. When the valve is open during closed throttle deceleration conditions, it allows the air to recirculate in the turbocharger and maintain turbocharger speed. Within a calibrated range during the closed throttle event, or upon a wide open throttle command the valve will then close to optimize turbo response. The bypass solenoid valve has the following circuits:

- Ignition voltage
- Turbocharger bypass solenoid valve control

As engine load and engine speed increases, the turbocharger bypass solenoid valve remains commanded ON by the ECM. As soon as the throttle closes the turbocharger bypass solenoid valve is commanded OFF by the ECM, in order to allow the turbocharger bypass valve to open and allow the turbocharger air to recirculate, there by preventing turbocharger surging.

Conditions for Running the DTC

- DTCs P0033, P0034, P0035, P0097, P0098, P0100, P0101, P0102, P0103, P0121, P0122, P0123, P0221, P0222, P0223, P0234, P0237, P0238, P0299, P2228, or P2229, are not set.
- The boost pressure versus the barometric pressure (BARO) ratio is between 1.1-3.3.
- The charge air bypass valve has been commanded ON for greater than 1 s immediately after an abrupt closed throttle has occurred and the resulting pressure ratio across the compressor exceeds the calibrated pressure ratio limit.
- The engine speed is greater than 1, 800 RPM.
- This DTC runs continuously within the enabling conditions.

Conditions for Setting the DTC

The ECM has detected a series of pulsations in the induction system that exceed a calibrated threshold.

Action Taken When the DTC Sets

DTC P2261 is a Type B DTC.

Conditions for Clearing the DTC

DTC P2261 is a Type B DTC.

Reference Information

Schematic Reference

Engine Controls Schematics

Connector End View Reference

COMPONENT CONNECTOR END VIEWS - INDEX

Description and Operation

Turbocharger System Description

Electrical Information Reference

- **Circuit Testing**
- **Connector Repairs**
- **Testing for Intermittent Conditions and Poor Connections**
- **Wiring Repairs**

DTC Type Reference

Powertrain Diagnostic Trouble Code (DTC) Type Definitions

Scan Tool Reference

Control Module References for scan tool information

Circuit/System Verification

1. Ignition ON.
2. Verify DTC P0033, P0034, or P0035 is not set.
   - **If any of the DTCs are set**

     Refer to **DTC P0033-P0035** .

   - **If none of the DTCs are set**
3. Verify the scan tool BARO Sensor parameter is within the range specified in the **Altitude Versus Barometric Pressure** table for the current testing altitude.
   - **If the parameter is not within the range specified in the table**

     Refer to **DTC P2227-P2230**.

   - **If the parameter is within the range specified in the table**
4. Verify the scan tool Boost Pressure Sensor and BARO Sensor parameters are within 3 kPa (0.4 psi).
   - **If the parameters are not within 3 kPa (0.4 psi)**

Refer to **DTC P0236** .

- **If the parameters are within 3 kPa (0.4 psi)**

5. Verify a click is heard or felt from the Q40 Turbocharger Bypass Solenoid Valve when commanding the Turbocharger Bypass Solenoid Valve ON and OFF with a scan tool.
   - **If a click is not heard or felt**

     Refer to Circuit/System Testing below.

   - **If a click is heard or felt**
6. Operate the vehicle within the Conditions for Running the DTC. You may also operate the vehicle within the conditions that you observed from the Freeze Frame/Failure Records data.
7. Verify a DTC does not set.
   - **If a DTC sets**

     Refer to Circuit/System Testing below.

   - **If a DTC does not set**
8. All OK

Circuit/System Testing

1. Verify the conditions listed below do not exist:
   - Vacuum leaks
   - Vacuum line restrictions
   - Improper routing or connecting of the vacuum hoses on the Q40 Turbocharger Bypass Solenoid Valve, the bypass valve, and the bypass valve vacuum reservoir
   - **If a condition exists**

     Repair or replace the component as necessary.

   - **If none of the conditions exist**
2. Disconnect the Q40 Turbocharger Bypass Solenoid Valve vacuum supply hose at the intake manifold.
3. Connect the **GE 23738-A** to the manifold.

NOTE: Allow engine idle to stabilize before continuing.

4. Engine Idling, verify the vacuum gauge displays between 45-67 kPa (13-20 inches Hg) of vacuum.
   - **If not within the specified range**

     Repair the vacuum source.

   - **If within the specified range**

NOTE: The vacuum reservoir (tank) is integral to intake manifold and is located at the bottom of the manifold.

5. Ignition OFF, disconnect the vacuum hose at the turbocharger vacuum reservoir.
6. Connect the **GE 23738-A** to the vacuum reservoir and apply 34 kPa (10 inches Hg) of vacuum.
7. Verify the reservoir holds vacuum for at least 10 s.
   - **If the vacuum is not held for at least 10 s**

     Replace the intake manifold

   - **If the vacuum is held for at least 10 s**
8. Connect the vacuum hose to the reservoir.

NOTE: Disconnect the Q40 Turbocharger Bypass Solenoid Valve vacuum supply hose at the intake manifold if not still disconnected from step 2.

9. Disconnect the vacuum hose at the turbocharger bypass valve and connect the **GE 23738-A** to the hose.
10. Engine idling, command the Turbocharger Bypass Solenoid Valve ON and OFF with a scan tool.
11. Verify the vacuum toggles between 0 kPa (0 inches Hg) to greater than 45 kPa (13 inches Hg).
    - **If not within the specified range**

      Replace the Q40 turbocharger bypass solenoid valve

    - **If within the specified range**
12. Connect any hoses that were disconnected during previous steps.
13. Verify damage to the turbocharger bypass valve assembly does not exist. Refer to **Turbocharger Cleaning and Inspection** .
    - **If the turbocharger bypass valve assembly is damaged**

      Repair or replace the turbocharger bypass valve assembly as necessary.

    - **If the turbocharger bypass valve assembly is not damaged**
14. Replace the turbocharger.

Repair Instructions

Perform the **Diagnostic Repair Verification** after completing the repair.

- **Charge Air Bypass Regulator Solenoid Valve Replacement** for turbocharger bypass solenoid valve replacement
- **Intake Manifold Replacement**
- **Turbocharger Replacement**
- **Control Module References** for ECM replacement, programming and setup

DTC P2534 (FUEL PUMP CONTROL MODULE)

Diagnostic Instructions

- Perform the **Diagnostic System Check - Vehicle** prior to using this diagnostic procedure.
- Review **Strategy Based Diagnosis** for an overview of the diagnostic approach.
- **Diagnostic Procedure Instructions** provides an overview of each diagnostic category.

DTC Descriptor

DTC P2534

Ignition On/Start Switch Circuit Low Voltage

Diagnostic Fault Information

Circuit	Short to Ground	Open/High Resistance	Short to Voltage	Signal Performance
Ignition	P2534	P2534	-	-

Circuit/System Description

The fuel pump control module monitors the ignition voltage circuit in order to determine if the voltage is within the normal operating range.

Conditions for Running the DTC

The engine is running.

Conditions for Setting the DTC

The fuel pump control module detects that the ignition voltage is less than 6.0 V.

Action Taken When the DTC Sets

DTC P2534 is a Type A DTC.

Conditions for Clearing the DTC

DTC P2534 is a Type A DTC.

Reference Information

Schematic Reference

Engine Controls Schematics

Connector End View Reference

COMPONENT CONNECTOR END VIEWS - INDEX

Description and Operation

Fuel System Description

Electrical Information Reference

- **Circuit Testing**
- **Connector Repairs**
- **Testing for Intermittent Conditions and Poor Connections**
- **Wiring Repairs**

DTC Type Reference

Powertrain Diagnostic Trouble Code (DTC) Type Definitions

Scan Tool Reference

Control Module References for scan tool information

Circuit/System Testing

1. Ignition ON.
2. Verify DTC P0562 is not set.
    - **If the DTC is set**

      Refer to **Diagnostic Trouble Code (DTC) List - Vehicle** .

    - **If the DTC is not set**
3. Ignition OFF, disconnect the harness connector at the K27 fuel pump control module, ignition ON.
4. Verify a test lamp illuminates between the ignition circuit terminal 21 and ground.
    - **If the test lamp does not illuminate and the circuit fuse is good**
    1. Ignition OFF.
    2. Test for less than 2 ohms in the ignition circuit end to end.
        - If 2 ohms or greater, repair the open/high resistance in the circuit.
        - If less than 2 ohms, verify the fuse is not open and there is voltage at the fuse.
    - **If the test lamp does not illuminate and the circuit fuse is open**
    1. Ignition OFF.
    2. Test for infinite resistance between the ignition circuit and ground.
        - If less than infinite resistance, repair the short to ground on the circuit.

- If infinite resistance, replace the K27 fuel pump control module.
- **If the test lamp illuminates**

5. Replace the K27 fuel pump control module.

Repair Instructions

Perform the **Diagnostic Repair Verification** after completing the repair.

Control Module References for fuel pump control module replacement, programming and setup.

DTC P2544

Diagnostic Instructions

- Perform the **Diagnostic System Check - Vehicle** prior to using this diagnostic procedure.
- Review **Strategy Based Diagnosis** for a overview of the diagnostic approach.
- **Diagnostic Procedure Instructions** provides an overview of each diagnostic category.

DTC Descriptors

DTC P2544

Transmission Torque Request Signal Message Counter Incorrect

Circuit/System Description

To improve shift feel, the transmission control module (TCM) is constantly sending the engine control module (ECM) serial data messages with information regarding it's request for modifying engine speed or torque. The serial data messages are sent through two circuits which are part of a communication network called the controller area network (CAN). The ECM sets DTC P2544 when it detects a discrepancy in the structure of the message causing the integrity of the message to be questioned.

An intermittent fault in the CAN circuits will cause the ECM to set DTC P2544.

Conditions for Running the DTC

- The engine run time is greater than 0.5 s.
- No other CAN errors are present.

Conditions for Setting the DTC

The ECM detects that the engine speed and torque modification messages from the TCM are either corrupted or intermittently missing for greater than 4 s.

Action Taken When the DTC Sets

- DTC P2544 is a Type B DTC.
- The TCM commands maximum line pressure during shifts, which results in harsh shifts.
- The TCM freezes adaptive functions.

Conditions for Clearing the DTC

DTC P2544 is a Type B DTC.

Reference Information

DTC Type Reference

Powertrain Diagnostic Trouble Code (DTC) Type Definitions

Circuit/System Verification

NOTE:

- **DTC P2544 is an informational DTC.**
- **Diagnose all other engine control module DTCs prior to DTC P2544.**

1. Verify there are no other engine control module or communication DTCs set.
   - **If a DTC is set**

     Refer to **Diagnostic Trouble Code (DTC) List - Vehicle**

   - **If a DTC is not set**
2. Complete the diagnosis by looking for an intermittent CAN circuit fault. Refer to **Scan Tool Does Not Communicate with High Speed GMLAN Device** .
   - **If an intermittent CAN circuit fault is found**

     Repair as necessary.

   - **If an intermittent CAN circuit fault is not found**
3. All OK.

Repair Instructions

Perform the **Diagnostic Repair Verification** after completing the diagnostic procedure.

Control Module References for TCM replacement, setup, and programming.

DTC P2635 (FUEL PUMP CONTROL MODULE)

Diagnostic Instructions

- Perform the **Diagnostic System Check - Vehicle** prior to using this diagnostic procedure.

- Review **Strategy Based Diagnosis** for an overview of the diagnostic approach.
- **Diagnostic Procedure Instructions** provides an overview of each diagnostic category.

DTC Descriptor

DTC P2635

Fuel Pump Flow Performance

Diagnostic Fault Information

Circuit	Short to Ground	Open/High Resistance	Short to Voltage	Signal Performance
Control	P0231	P023F	P0232	P023F, P2635
Low Reference	-	P023F	-	P023F, P2635

Circuit/System Description

The engine control module (ECM) supplies voltage to the fuel pump control module when the ECM detects that the ignition is on. The voltage from the ECM to the fuel pump control module remains active for 2 seconds, unless the engine is in crank or run. While this voltage is being received, the fuel pump control module closes the ground switch of the fuel pump and also supplies a varying voltage to the fuel tank pump module in order to maintain the desired fuel line pressure.

Conditions for Running the DTC

- DTC P018B, P018C, P018D, P0231, P0232, P023F, P064A, P1255 or P06A6 are not active.
- DTC P0641 has not failed this ignition cycle.
- Fuel pump control is enabled and the fuel pump control state is normal.
- The system voltage is greater than 11 V.
- The engine has been running for more than 30 seconds.
- Low fuel level warning not present.

Conditions for Setting the DTC

This DTC sets when the fuel pump control module detects a predetermined fuel pressure performance degradation between the desired fuel pressure and the current fuel pressure.

Action Taken When the DTC Sets

DTC P2635 is a Type B DTC.

Conditions for Clearing the DTC

DTC P2635 is a Type B DTC.

Diagnostic Aids

Using the Failure Records data may help locate an intermittent condition. If you cannot duplicate the DTC, the information in the Failure Records can help determine how many miles since the DTC set. The Fail Counter and Pass Counter can help determine how many ignition cycles that the diagnostic test reported a pass and/or a fail.

On vehicles equipped with a high pressure mechanical pump on Direct Fuel Injection engines, the vehicle may continue to run even though the pump in the fuel tank is not operating.

Reference Information

Schematic Reference

Engine Controls Schematics

Connector End View Reference

COMPONENT CONNECTOR END VIEWS - INDEX

Description and Operation

Fuel System Description

Electrical Information Reference

- **Circuit Testing**
- **Connector Repairs**
- **Testing for Intermittent Conditions and Poor Connections**
- **Wiring Repairs**

DTC Type Reference

Powertrain Diagnostic Trouble Code (DTC) Type Definitions

Scan Tool Reference

Control Module References for scan tool information

Circuit/System Testing

NOTE: Do not replace the fuel pump control module based on a history DTC P2635. The DTC P2635 may be stored but that does not indicate a failure of the fuel pump control module. Refer to Strategy Based Diagnosis for further history DTC diagnostics.

1. Ignition ON.

2. Verify DTCs P018B, P018C, P018D, P0231, P0232 or P023F are not set.
   - **If any of the DTCs are set**

     Refer to **Diagnostic Trouble Code (DTC) List - Vehicle** .

   - **If none of the DTCs are set**
3. Verify the proper fuel system pressure. Perform the fuel system pressure test, refer to **Fuel System Diagnosis**.
   - **If the fuel system pressure test is not normal**

     Replace the G12 Fuel Pump.

   - **If the fuel system pressure test is normal**
4. Ignition OFF and all vehicle systems OFF, disconnect the harness connector at the G12 Fuel Pump. It may take up to 2 minutes for all vehicle systems to power down.
5. Test for less than 10 ohms between the low reference circuit terminal 2 and ground.
   - **If 10 ohms or greater**
   1. Ignition OFF, disconnect the harness connector at the K27 Fuel Pump Control Module.
   2. Test for less than 2 ohms in the low reference circuit end to end.
      - If 2 ohms or greater, repair the open/high resistance in the circuit.
      - If less than 2 ohms, replace the K27 Fuel Pump Control Module.
   - **If less than 10 ohms**
6. Connect a test lamp between the control circuit terminal 1 and the low reference circuit terminal 2.
7. Ignition ON.
8. Verify the test lamp turns ON and OFF when commanding the fuel pump ON and OFF with a scan tool.
   - **If the test lamp is always OFF**
   1. Ignition OFF, disconnect the harness connector at the K27 Fuel Pump Control Module.
   2. Test for infinite resistance between the control circuit and ground.
      - If less than infinite resistance, repair the short to ground on the circuit.
      - If infinite resistance
   3. Test for less than 2 ohms in the control circuit end to end.
      - If 2 ohms or greater, repair the open/high resistance in the circuit.
      - If less than 2 ohms, replace the K27 Fuel Pump Control Module.
   - **If the test lamp is always ON**
   1. Ignition OFF, disconnect the harness connector at the K27 Fuel Pump Control Module, ignition ON.
   2. Test for less than 1 V between the control circuit and ground.
      - If 1 V or greater, repair the short to voltage on the circuit.
      - If less than 1 V, replace the K27 Fuel Pump Control Module.
   - **If the test lamp turns ON and OFF**

9. All OK.

Repair Instructions

Perform the **Diagnostic Repair Verification** after completing the repair.

- **Fuel Tank Fuel Pump Module Replacement**
- **Control Module References** for fuel pump control module replacement, programming and setup

SYMPTOMS - ENGINE CONTROLS

Diagnostic Instructions

- Perform the **Diagnostic System Check - Vehicle** prior to using this diagnostic procedure.
- Review **Strategy Based Diagnosis** for an overview of the diagnostic approach.
- **Diagnostic Procedure Instructions** provides an overview of each diagnostic category.

Symptoms Description

Symptoms cover conditions that are not covered by DTCs. Certain conditions can cause multiple symptoms. These conditions are listed together under Symptoms Testing. Conditions that may only cause specific symptoms are listed separately under additional symptoms testing. Perform the symptoms testing before using the additional symptoms testing.

Symptoms Definition

Backfire

Fuel ignites in the intake manifold or in the exhaust system, making a loud popping noise.

Cuts Out, Misses

A steady pulsation or jerking that follows engine speed, which is usually more pronounced as the engine load increases. This condition is not normally felt above 1 500 RPM or 48 km/h (30 MPH). The exhaust has a steady spitting sound at idle or at low speed.

Detonation/Spark Knock

A mild to severe ping which usually gets worse while under acceleration. The engine makes sharp metallic knocks that change with throttle opening.

Dieseling, Run-On

Fuel ignites in the intake manifold or in the exhaust system, making a loud popping noise.

Engine Control Module (ECM) Commanded Reduced Engine Power

The ECM illuminates the Reduced Engine Power lamp and will limit engine power under potential engine/vehicle damaging or emissions related conditions. A DTC may not be set.

Hard Start

Engine cranks OK, but does not start for a long time. The vehicle does eventually run, or may start but immediately stalls.

Hesitation, Sag, Stumble

Momentary lack of response as the accelerator is pushed down. This condition can occur at any vehicle speed. This condition is usually more pronounced when first trying to make the vehicle move, as from a stop. This condition may cause the engine to stall in severe conditions.

Lack of Power, Sluggishness, or Sponginess

The engine delivers less than expected power. Little or no increase in speed when the accelerator pedal is pushed down part way.

Poor Fuel Economy

Fuel economy, as measured by an actual road test, is noticeably lower than expected. Also, the fuel economy is noticeably lower than it was on this vehicle at one time, as previously shown by an actual road test.

Poor Fuel Fill Quality

Difficulty when refueling the vehicle.

Rough, Unstable, or Incorrect Idle and Stalling

The engine runs unevenly at idle. If severe, the engine or the vehicle may shake. Engine idle may vary in speed. Either condition may be severe enough to stall the engine.

Surges/Chuggles

Engine power variation under steady throttle or cruise. Feels like the vehicle speeds up and slows down with no change in the accelerator pedal position.

Symptoms Verification

Before using the Symptom tables, perform the following inspections:

- Verify that the malfunction indicator lamp (MIL) is operating correctly. Use the scan tool to command the lamp ON and OFF.
- Verify that there are no DTCs stored.
- Verify that the scan tool data is within the normal operating range. Refer to **Control Module References**

for scan tool information.

- Verify that there are no Bulletins concerning the current symptom.
- Verify that the vehicle tires are correctly inflated and meet original equipment specifications.
- Verify the customer concern.
- Perform the Visual/Physical Inspection in this section. The visual/physical inspection is extremely important, and can lead to correcting a condition without additional testing. It may also help reveal the cause of an intermittent condition.

Identifying Intermittent Conditions

Many intermittent conditions occur with harness or connector movement due to engine torque, rough pavement, vibration or physical movements of a component. Refer to the following for a list of issues that may cause an intermittent condition:

- Moisture and water intrusion in connectors, terminals, and components
- Incomplete connector mating
- Poor terminal contact
- High circuit or component resistance-High resistance can include any resistance, regardless of the amount, which can interrupt the operation of the component.
- Harness that is too short or tight
- Wire insulation that is chaffed or cut
- High or low ambient temperature
- High or low engine coolant temperatures
- High underhood temperatures
- Heat build up in component or circuit due to circuit resistance, poor terminal contact, or high electrical load
- High or low system voltage
- High vehicle load conditions
- Rough road surfaces
- Electro-magnetic interference (EMI)/circuit interference from relays, solenoids or other electrical surge
- Incorrect installation of aftermarket, add on accessories

Visual/Physical Check

- Verify that the control module grounds are clean, tight, and correctly located.
- Verify that the vacuum hoses are not split or kinked, and are properly connected, as shown on the Vehicle Emission Control Information label.
- Verify that the air filter is clean and free from restrictions.
- Verify that there is no water intrusion in connectors terminals and components.
- Inspect the air intake ducts for the following conditions:
    - Collapsed

  - Damaged areas
  - Looseness
  - Incorrect installation
  - Leaking
- Inspect for air leaks at the throttle body mounting area, the mass air flow (MAF) sensor and intake manifold sealing surfaces.
- Inspect the wiring harness for the following conditions:
  - Poor connections
  - Pinches
  - Cuts
- Inspect for loose, damaged, unseated, or missing sensors/components.
- Inspect the terminals for corrosion and correct contact.

Symptoms Testing

Backfire, Cuts Out/Misses, Detonation/Spark Knock, Dieseling/Run-On, Engine Control Module (ECM) Commanded Reduced Engine Power, Hard Start, Hesitation/Sag/Stumble, Lack of Power/Sluggishness/Sponginess, Poor Fuel Economy, Rough, Unstable, or Incorrect Idle and Stalling, or Surges/Chuggles

1. Test for the following conditions:
   - An incorrectly operating fuel system. Test for the following:
     - Correct operation and pressure-Refer to **Fuel System Diagnosis**.
     - Leaking or improperly operating fuel injectors - Refer to **Fuel Injector Diagnosis**.
     - Contaminated or a poor quality fuel - Refer to **Alcohol/Contaminants-in-Fuel Diagnosis**.
   - An incorrectly operating ignition system. Test for the following:
     - Spark plugs with an incorrect heat range or an abnormal condition - Refer to **Spark Plug Inspection** , and **Ignition System Specifications** .
     - Coolant or oil fouled spark plugs.
     - Secondary ignition system susceptible to moisture. Engine running, wet down the secondary ignition system with water from a spray bottle to help locate damaged or deteriorated components. Look/listen for arcing or misfiring as the water is applied.
     - Weak spark using the **EL 26792** HEI spark tester. For equivalent regional tools, refer to **Special Tools** . Refer to **Electronic Ignition System Diagnosis**.
   - An incorrectly operating turbocharger system. Refer to **Turbocharger System Description** , and **Turbocharger Cleaning and Inspection** .
   - Incorrect operation of the transmission torque converter clutch (TCC) - The scan tool should indicate an engine speed drop when the TCC is commanded ON.
   - Incorrect operation of the A/C compressor
   - Items that can cause an engine to run lean or rich - Refer to **DTC P0171 or P0172** .
   - An incorrectly installed Mass Air Flow (MAF) / Intake Air Temperature (IAT) Sensor

- Engine oil contaminated by fuel
- Split or kinked vacuum hoses - Verify that the routing and connections are as shown on the vehicle emission control information label.
- Excessive knock sensor spark retard activity - Refer to **Knock Sensor Replacement** , and **DTC P0324, P0326, or P06B6**.
- Fuel octane switch setting - Verify the fuel octane switch is set to the proper fuel octane rating for the fuel being used in the vehicle.
- Electromagnetic interference on the reference circuit, which can cause a misfire condition. You can usually detect electromagnetic interference with a scan tool by monitoring the engine speed parameter. A sudden increase in the engine speed parameter with little change in actual engine speed indicates that electromagnetic interference is present. Inspect the high voltage components near the ignition control circuit if a condition exists.
- A crankshaft position sensor with an incorrect resistance - The crankshaft position sensor resistance may be out of range after a hot soak. The resistance should be between 700-1 200 ohms.
- A stuck open evaporative emission (EVAP) canister purge solenoid valve.
- Incorrect operation of the positive crankcase ventilation system - check all connections for leaks or restrictions.
- An exhaust system condition. Test for the following:
  - Physical damage or possible internal failure
  - Restricted 3-way catalytic converters

    For more information, refer to **Symptoms - Engine Exhaust** .

- An engine cooling system condition. Test for the following:
  - A thermostat with incorrect heat range. Refer to **Thermostat Diagnosis (1.4L LUV)** .
  - Incorrect engine coolant level - Refer to **Cooling System Draining and Filling (Static Fill)** , **Cooling System Draining and Filling (GE-47716 Fill)** .
  - An incorrectly operating engine coolant thermostat heater - Refer to **DTC P0597-P0599** .
- An engine mechanical condition. Test for the following mechanical conditions - Refer to **Symptoms - Engine Mechanical** .
  - Excessive oil in the combustion chamber or leaking valve seals
  - Oil Consumption
  - Incorrect cylinder compression
  - Sticking or leaking valves
  - Worn camshaft lobes
  - Incorrect valve timing
  - Broken valve springs
  - Excessive carbon buildup in the combustion chambers. Clean the chambers with top engine cleaner, if necessary. Follow the instructions on the can.
  - Incorrect engine parts

2. If the above conditions do not address the symptom, refer to the additional symptoms tests.

Additional Symptoms Tests

Detonation/Spark Knock:

- Test the engine for an overheating condition. Refer to **Symptoms - Engine Cooling** .
- Inspect for excessive carbon buildup in the combustion chambers. Clean the chambers with Top Engine Cleaner, if necessary. Follow the instructions on the can.
- If there are no engine mechanical faults, fill the fuel tank with a known high quality fuel that meets the vehicle minimum octane requirements.

ECM Commanded Reduced Engine Power

Under certain conditions the ECM may limit engine power by reducing engine torque and, for some vehicles, fuel pressure as well. For most, but not all of the conditions, the ECM will illuminate the reduced engine power lamp on the instrument panel cluster, however a DTC may not be set. Observe the scan tool Reduced Engine Power History parameter, if applicable, or refer to **K20 Engine Control Module: Scan Tool Information** to determine the reason for the reduced engine power event.

Verify or inspect for the following:

- Vehicle being operated at sustained high engine speeds, or, towing heavy loads up an incline for an extended period of time, which may cause the engine oil or coolant to overheat. A repair may not be necessary. Inspect the airflow passageways in front of the engine for obstructions and clear away any debris or foreign material that is found. If no obstructions are found, review approved driving habits with the customer. The customer may need to operate the vehicle at a higher engine speed to improve cooling system performance, or, at a slower engine speed to reduce engine load.
- A cooling fan condition which may cause the ECM to reduce engine power. Refer to **Cooling Fan Description and Operation** , and **Cooling System Description and Operation (1.4L LUV)** , to verify correct operation of the cooling fan.
- If equipped with the OnStar® feature, reduced engine power may be due to OnStar® remote command. Verify the vehicle is not in the OnStar® initiated Stolen Vehicle Slowdown mode.
- Excessively high fuel pressure condition. Refer to **Fuel System Description** , and **Fuel System Diagnosis** to verify fuel system operation.
- Maximum recommended engine oil life exceeded. Refer to the Owners Manual for scheduled maintenance recommendations.
- Turbocharger boost pressure out of range. Refer to **DTC P0234 or P0299** .
- Intake air temperature out of range too high. Observe the scan tool IAT Sensor 1 and IAT Sensor 2 parameters. The readings should be within 9°C (16°F) of a each other. Refer to **DTC P0096 or P0111** for more information.
- If equipped with automatic transmission, an incorrect learned brake pedal position (BPP) sensor. Verify the following actions have not occurred:
    - An engine control module (ECM) has been replaced
    - A BPP sensor has been replaced
    - A BPP sensor is misaligned or incorrectly installed

If any of the above actions have occurred, the **Brake Pedal Position Sensor Learn** procedure must be performed.

Fuel Odor

- Inspect for leaking, damaged, or deteriorated fuel lines.
- Inspect for a saturated EVAP canister - Refer to **Evaporative Emission Control System Description** .
- Inspect for a condition with the internal components of the fuel tank assembly-Refer to **Fuel System Description** .

Hard Start

- Observe the scan tool Throttle Body Idle Airflow Compensation parameter. A value greater than 90% may indicate an excessive accumulation of deposits in the throttle bore. Inspect the throttle body and bore and clean, if necessary. Refer to **Throttle Body Inspection and Cleaning** .
- Test the engine coolant temperature (ECT) sensor. Compare the ECT sensor value to the intake air temperature (IAT) sensor value on a cold engine. The ECT and IAT sensor values should be within approximately 3°C (5°F). If the ECT sensor is out of range with the IAT sensor, test the resistance of the ECT sensor. Refer to **Temperature Versus Resistance (ECT)** for resistance specifications. Replace the ECT sensor if the resistance is not within specification. If the sensor is within the specification, test the ECT circuits for a high resistance.
- Verify that the fuel pump turns ON for 2 s when the ignition is turned ON. Refer to **Fuel System Diagnosis** for additional information.

Hesitation, Sag, Stumble

- Test the fuel pressure. Refer to **Fuel System Diagnosis**.
- Test the manifold absolute pressure (MAP) sensor. Refer to **DTC P0106** .
- Test the generator. Refer to **Symptoms - Engine Electrical** . Repair the charging system if the generator output voltage is less than 9 V or more than 16 V.

NOTE: The following actions may need to be repeated in order to verify an intermittent intake or exhaust camshaft actuator condition.

- Engine warm and idling, verify the correct operation of the camshaft actuator system. Command the intake and exhaust camshaft actuators from 0 degrees to 25 degrees and back to zero while observing the scan tool Intake Camshaft Position Variance and Exhaust Camshaft Position Variance parameters. Each parameter should be less than 2 degrees in each of the commanded states.
    - If any of the parameters is greater than 2 degrees, inspect the suspect camshaft actuator and camshaft actuator solenoid valve and valve bore for contamination, obstruction, and damage. Refer to **Camshaft Actuator System Description** , and **Camshaft Position Actuator Solenoid Valve Replacement** .

Lack of Power, Sluggishness, or Sponginess

- Inspect the engine electrical system for correct operation. Refer to **Symptoms - Engine Electrical** .
- Verify that each injector harness is connected to the correct injector.
- Inspect the mass air flow (MAF) sensor for obstruction, contamination, and damage. Refer to **Mass Airflow Sensor Replacement** .

NOTE: The following actions may need to be repeated in order to verify an intermittent intake or exhaust camshaft actuator condition.

- Engine warm and idling, verify the correct operation of the camshaft actuator system. Command the intake and exhaust camshaft actuators from 0 degrees to 25 degrees and back to zero while observing the scan tool Intake Camshaft Position Variance and Exhaust Camshaft Position Variance parameters. Each parameter should be less than 2 degrees in each of the commanded states.
  - If any of the parameters is greater than 2 degrees, inspect the suspect camshaft actuator and camshaft actuator solenoid valve and valve bore for contamination, obstruction, and damage. Refer to **Camshaft Actuator System Description** , and **Camshaft Position Actuator Solenoid Valve Replacement** .
- Verify the correct operation of the turbocharger system. Perform the following:
  - Inspect the turbocharger moving components for looseness, binding, wear, and damage.
  - Verify that the turbocharger air inlet ducts and outlet ducts are tightly sealed and that the air passages are not obstructed. Engine running, use a solution of dish soap and water in a spray bottle to pinpoint any air leaks.
  - Inspect the turbocharger system components for external fluid leaks. Inspect the gaskets and sealing surfaces and look for cracks in the turbocharger components.
  - Inspect for a loss of turbocharger pressure. Ignition ON, verify the scan tool Turbo Boost Sensor parameter is within the range specified in the **Altitude Versus Barometric Pressure** .
    - If not within the range specified, refer to **DTC P0236**
  - For additional information, refer to **Turbocharger System Description** , and **Turbocharger Cleaning and Inspection** .

Poor Fuel Economy

- Inspect for heavy loads being carried or towed
- Inspect for acceleration rate too much or too often
- Inspect for incorrect operation of the speedometer.
- Observe the scan tool Throttle Body Idle Airflow Compensation parameter. A value greater than 90% may indicate an excessive accumulation of deposits in the throttle bore. Inspect the throttle body and bore and clean, if necessary. Refer to **Throttle Body Inspection and Cleaning** .
- Inspect the brake system for brake drag.

Poor Fuel Fill Quality

- Inspect for restricted vent lines
- Inspect for high fuel temperature

- Inspect for a condition with the internal components of the fuel tank assembly

  For more information, refer to **Fuel System Description** , and **Evaporative Emission Control System Description** .

Rough, Unstable, or Incorrect Idle and Stalling

- Observe the scan tool Throttle Body Idle Airflow Compensation parameter. A value greater than 90% may indicate an excessive accumulation of deposits in the throttle bore. Inspect the throttle body and bore and clean, if necessary. Refer to **Throttle Body Inspection and Cleaning** .
- Inspect the engine mounts for looseness, wear, and damage.
- Inspect the intake and exhaust manifolds for casting flash.
- An excessively high idle may be due to the floor mat interfering with the accelerator pedal. With this condition present, it may not be possible to shift the transmission into gear. Inspect the accelerator pedal for binding and verify that the floor mat is not interfering with the aceclerator pedal movement.

Surges/Chuggles

- Verify that each injector harness is connected to the correct injector.
- Inspect the mass air flow (MAF) sensor for obstruction, contamination, and damage. Refer to **Mass Airflow Sensor Replacement** .
- Inspect for slow responding heated oxygen sensors (HO2S). The heated oxygen sensors should respond quickly to a change in throttle position. If the heated oxygen sensors do not respond to different throttle positions, inspect for contamination from fuel, silicon, or the incorrect use of room temperature vulcanizing sealant. The sensors may have a white powdery coating and result in a high, but false, signal voltage, which gives a rich exhaust indication. The ECM reduces the amount of fuel delivered to the engine, causing a driveability condition.

MALFUNCTION INDICATOR LAMP (MIL) DIAGNOSIS

Diagnostic Instructions

- Perform the **Diagnostic System Check - Vehicle** prior to using this diagnostic procedure.
- Review **Strategy Based Diagnosis** for an overview of the diagnostic approach.
- **Diagnostic Procedure Instructions** provides an overview of each diagnostic category.

Circuit/System Description

The malfunction indicator lamp (MIL) illuminates to inform the driver that an emission system fault has occurred and the engine control system requires service. Ignition voltage is supplied directly to the MIL. The engine control module (ECM) turns the MIL ON by grounding the MIL control circuit when the emission system fault occurs. Under normal operating conditions, the MIL should be ON only when the ignition is ON and the engine is OFF.

Diagnostic Aids

If the condition is intermittent, move the related harnesses and connectors while monitoring the scan tool MIL control circuit status parameters. Perform this test with the ignition ON and the engine OFF, and with the engine running. The MIL control circuit status parameters change from OK or Not Run to Fault if there is a condition with a circuit or a connection.

Reference Information

Schematic Reference

- **Engine Controls Schematics**
- **Instrument Cluster Schematics**

Connector End View Reference

COMPONENT CONNECTOR END VIEWS - INDEX

Electrical Information Reference

- **Circuit Testing**
- **Connector Repairs**
- **Testing for Intermittent Conditions and Poor Connections**
- **Wiring Repairs**

Scan Tool Reference

Control Module References for scan tool information

Circuit/System Verification

NOTE: Any MIL requesting DTCs that may be set should be diagnosed first.

1. Ignition ON.
2. Command the malfunction indicator lamp ON and OFF with a scan tool.
3. Verify that the malfunction indicator lamp turns ON and OFF as commanded.
    - **If the malfunction indicator lamp does not turn ON and OFF as commanded**

      Refer to Circuit/System Testing below.

    - **If the malfunction indicator lamp turns ON and OFF as commanded**
4. Command the malfunction indicator lamp ON and OFF with a scan tool.
5. Verify that the control circuit status parameters listed below display OK or Not Run
    - The MIL Control Circuit Low Voltage Test Status
    - The MIL Control Circuit Open Test Status
    - The MIL Control Circuit High Voltage Test Status

- **If Malfunction is displayed**

  Refer to Circuit/System Testing below.

- **If OK or Not Run is displayed**

6. Engine running.
7. Command the malfunction indicator lamp ON and OFF with a scan tool.
8. Verify that the control circuit status parameters listed below display OK or Not Run
   - The MIL Control Circuit Low Voltage Test Status
   - The MIL Control Circuit Open Test Status
   - The MIL Control Circuit High Voltage Test Status
   - **If Malfunction is displayed**

     Refer to Circuit/System Testing below.

   - **If OK or Not Run is displayed**
9. All OK.

Circuit/System Testing

1. Ignition OFF.
2. Disconnect the X1 harness connector at the K20 Engine Control Module.
3. Ignition ON.
4. Verify the malfunction indicator lamp does not illuminate.
   - **If the malfunction indicator lamp illuminates**
   1. Test for infinite resistance between the malfunction indicator lamp control circuit terminal X1 52 and ground.
      - If less than infinite resistance, repair the short to ground in the circuit.
      - If infinite resistance, replace the P16 instrument cluster.
   - **If the malfunction indicator lamp does not illuminate**
5. Connect a 3 A fused jumper wire between the malfunction indicator lamp control circuit terminal X1 52 and ground.
6. Verify the malfunction indicator lamp illuminates.
   - **If the malfunction indicator lamp does not illuminate**
   1. Test the malfunction indicator lamp control circuit terminal X1 52 for a short to voltage or an open/high resistance.
      - If the malfunction indicator lamp control circuit terminal X1 52 is shorted to voltage or has an open/high resistance, repair as necessary.
      - If the malfunction indicator lamp control circuit terminal X1 52 tests normal
   2. Test the instrument cluster ignition voltage circuit for a short to ground or open/high resistance.
      - If the instrument cluster ignition voltage circuit is shorted to ground or has an open/high

resistance, repair as necessary.
    - If the instrument cluster ignition voltage circuit tests normal, replace the P16 instrument panel cluster/bulb.
  - **If the malfunction indicator lamp illuminates**
7. Replace the K20 Engine Control Module.

Repair Instructions

Perform the **Diagnostic Repair Verification** after completing the repair.

- **Instrument Cluster Replacement**
- **Control Module References** for replacement, programming, and setup.

ENGINE CRANKS BUT DOES NOT RUN

Diagnostic Instructions

- Perform the **Diagnostic System Check - Vehicle** prior to using this diagnostic procedure.
- Review **Strategy Based Diagnosis** for an overview of the diagnostic approach.
- **Diagnostic Procedure Instructions** provides an overview of each diagnostic category.

Circuit/System Description

The engine cranks but does not run is an organized approach to identify a condition which causes the engine to crank but not start. This diagnostic directs the technician to the appropriate system diagnosis.

This diagnostic assumes the system voltage levels are adequate for starter motor operation. Fuel level and fuel quality must be determined for correct diagnosis.

Diagnostic Aids

Inspect for any of the following conditions:

- Insufficient fuel can cause a no start condition. Thoroughly inspect the fuel delivery system for sufficient fuel volume to the fuel injectors. Inspect the fuel supply components for partial blockage or restrictions.
- Fuel injectors with partially blocked and restricted nozzles, or a malfunctioning solenoid, can cause a no start condition. Refer to **Fuel Injector Diagnosis**.
- There may be fuel spray at the fuel injectors and the indicated fuel pressure may be correct, yet there may not be enough fuel to start the engine. If the fuel injectors and the injector circuit are OK, and fuel spray is detected, the fuel injector ON time may be inadequate. If the engine control module (ECM) receives incorrect inputs from the various information sensors, the fuel delivered by the fuel injectors may be inadequate to start the engine. Check all the engine data parameters with a scan tool and compare the values indicated with the expected values or the values from a known vehicle in good condition.
- Check the crankshaft position sensor engine reference signal with a scan tool. Observe the engine speed parameter while cranking the engine. The scan tool should indicate a steady 200-300 RPM while cranking. If erratic values, such as sudden spikes in the engine speed, are displayed, the engine reference

signal is not stable enough for the engine to start and run properly.

- Inspect the engine for good secure electrical grounds.
- If the engine almost starts and then stalls, check for an open in the ground circuits of the crankshaft position sensor and the camshaft position sensor - intake or camshaft position sensor - exhaust.
- Water or foreign material in the fuel can cause a no start or engine will not stay running condition. During freezing weather water can freeze inside the fuel system. The engine may start after 30 min in a heated repair shop. The malfunction may not recur until parked overnight in freezing temperatures. Extreme weather conditions can cause contaminated fuel to prevent the vehicle from starting.
- A vehicle that starts and runs after being brought to the repair shop for a no start condition, may have an ignition system that is susceptible to moisture. Spray water on the ignition system components and the wiring in order to check for an engine starting or will not stay running concern.

Reference Information

Schematic Reference

Engine Controls Schematics

Connector End View Reference

COMPONENT CONNECTOR END VIEWS - INDEX

Electrical Information Reference

- **Circuit Testing**
- **Connector Repairs**
- **Testing for Intermittent Conditions and Poor Connections**
- **Wiring Repairs**

Scan Tool Reference

Control Module References for scan tool information

Special Tools

- **EL 26792** HEI Spark Tester
- **EN 36012-A** Ignition System Diagnostic Harness

For equivalent regional tools, refer to **Special Tools** .

Circuit/System Verification

NOTE: This diagnostic assumes the following:

- **The battery is completely charged. Refer to Battery Inspection/Test .**

- **The engine cranking speed is acceptable. Refer to Engine Cranks Slowly .**
- **There is adequate fuel in the fuel tank.**

Circuit/System Testing

1. Crank the engine for up to 15 s.
2. Verify that DTC P0117, P0118, P0122, P0123, P0222, P0223, P0335, P0336, P0513, P0562, P0563, P0601, P0602, P0603, P0604, P0606, P062F, P0633, P0685, P0689, P0690, P1516, P1631, P1682, P16F3, P2101, P2119, or P2610 is not set.
   - **If any of the DTCs are set**

     Refer to **Diagnostic Trouble Code (DTC) List - Vehicle** .

   - **If none of the DTCs are set**
3. Ignition ON.
4. Verify the security indicator on the instrument panel cluster illuminates momentarily.
   - **If the indicator stays ON or is flashing**

     Refer to **Diagnostic Trouble Code (DTC) List - Vehicle** , and **Immobilizer Description and Operation** .

   - **If the indicator does not stay ON and is not flashing**
5. Verify the scan tool Engine Speed parameter is greater than 0 RPM while cranking the engine.
   - **If 0 RPM**

     Refer to **DTC P0335 or P0336** for further diagnosis.

   - **If greater than 0 RPM**

NOTE: It may be necessary to secure the EN 36012-A ignition system diagnostic harness to the spark plug boots with electrical tape.

6. Install the **EN 36012-A** ignition system diagnostic harness to the spark plug boots.
7. Connect the **EL 26792** HEI spark tester between the boot of a spark plug wire and ground.
8. Connect the remaining wires to the appropriate cylinders.

NOTE: An erratic or weak spark is considered a no spark condition.

9. Verify that the spark tester sparks while cranking the engine.
   - **If the spark tester does not spark**

     Refer to **Electronic Ignition System Diagnosis** for further diagnosis.

- **If the spark tester sparks**

10. Verify that the fuel system operates correctly and produces the correct fuel pressure-Perform the **Fuel System Diagnosis**.
    - **If the fuel system does not operate correctly or does not produce the correct fuel pressure**

      Refer to **Fuel System Diagnosis**.

    - **If the fuel system operates correctly and produces the correct fuel pressure**
11. Verify the following conditions do not exist:
    - Collapsed air intake duct to the throttle body
    - Restricted or obstructed air filter or air intake system
    - Spark plugs gas or coolant fouled
    - A skewed manifold absolute pressure (MAP) sensor. Refer to **DTC P0106** .
    - A skewed engine coolant temperature (ECT) sensor. Refer to **DTC P0116**
    - A restricted exhaust system. Refer to **Restricted Exhaust** .
    - Contaminated fuel. Refer to **Alcohol/Contaminants-in-Fuel Diagnosis**.
    - Engine mechanical condition, for example, worn timing chain and gears or low compression-Refer to **Symptoms - Engine Mechanical** .
        - **If a condition exists**

          Repair as necessary.

        - **If no conditions exist**
12. All OK

Repair Verification

Perform the **Diagnostic Repair Verification** after completing the diagnostic procedure.

Spark Plug Replacement

FUEL SYSTEM DIAGNOSIS

Diagnostic Instructions

- Perform the **Diagnostic System Check - Vehicle** prior to using this diagnostic procedure.
- Review **Strategy Based Diagnosis** for an overview of the diagnostic approach.
- **Diagnostic Procedure Instructions** provides an overview of each diagnostic category.

Circuit/System Description

The engine control module (ECM) supplies voltage to the fuel pump control module when the ECM detects that the ignition is ON. The voltage from the ECM to the fuel pump control module remains active for 2 s, unless

the engine is in Crank or Run. While this voltage is being received, the fuel pump control module closes the ground switch of the fuel pump and also supplies a varying voltage to the fuel tank fuel pump module in order to maintain the desired fuel line pressure.

The fuel system is an electronic returnless on-demand design. A returnless fuel system reduces the internal temperature of the fuel tank by not returning hot fuel from the engine to the fuel tank. Reducing the internal temperature of the fuel tank results in lower evaporative emissions.

The fuel tank stores the fuel supply. An electric turbine style fuel pump attaches to the fuel tank fuel pump module inside the fuel tank. The fuel pump supplies high pressure fuel through the fuel feed pipe to the fuel injection system. The fuel pump also supplies fuel to a venturi pump located on the bottom of the fuel tank fuel pump module. The function of the venturi pump is to fill the fuel tank fuel pump module reservoir. The fuel tank fuel pump module contains a reverse flow check valve. The check valve maintains fuel pressure in the fuel feed pipe and the fuel rail in order to prevent long cranking times.

Diagnostic Aids

Observe the Misfire Counters or perform the Fuel Injector Balance Test to help identify a leaking fuel injector.

Reference Information

Description and Operation

Fuel System Description

Electrical Information Reference

- **Circuit Testing**
- **Connector Repairs**
- **Testing for Intermittent Conditions and Poor Connections**
- **Wiring Repairs**

Scan Tool Reference

Control Module References for scan tool information

Special Tools

- **CH 48027** Digital Pressure Gauge
- **EN 37287** Fuel Line Shut-off Adapter

For equivalent regional tools, refer to **Special Tools** .

Circuit/System Verification

NOTE:

- **Repair all fuel system related DTCs, except P2635, before performing this**

diagnostic.

- **Inspect the fuel system for damage or external leaks before proceeding.**
- **Verify that adequate fuel is in the fuel tank before proceeding.**
- **The Fuel Pump Enable may need to be commanded On a few times in order to obtain the highest possible fuel pressure.**
- **Before proceeding with this test review the User Manual CH 48027-5 for Safety Information and Instructions.**

1. Ignition OFF, all accessories OFF, install a **CH 48027** Gauge.

NOTE: DO NOT perform the Fuel System Diagnosis if the engine coolant temperature is above 60°C (150°F). High fuel pressure readings may result due to hot soak fuel boiling. With the engine OFF, the fuel pressure may increase beyond the pressure relief regulator valve's setting point of 690 kPa (100 psi) ± 5 percent.

2. Ignition ON, engine OFF, command the Fuel Pump Enable On several times with a scan tool.
3. Verify the fuel pressure is between 345-650 kPa (50-94 psi) with the fuel pump running.
   - **If less than 345 kPa (50 psi)**

     Refer to Circuit/System Testing below - Fuel Pressure Low.

   - **If greater than 650 kPa (94 psi)**

     Replace the G12 Fuel Pump.

   - **If between 345-650 kPa (50-94 psi)**
4. Verify that the fuel pressure decreases to less than 600 kPa (87 psi) after the fuel pump is turned off.
   - **If greater than 600 kPa (87 psi)**

     Replace the G12 Fuel Pump.

   - **If less than 600 kPa (87 psi)**
5. Verify that the fuel pressure does not decrease more than 34 kPa (5 psi) in 1 minute.
   - **If greater than 34 kPa (5 psi)**

     Refer to Circuit/System Testing below - Fuel Pressure Leaks Down.

   - **If less than 34 kPa (5 psi)**
6. Relieve the fuel pressure to 69 kPa (10 psi).
7. Verify that the fuel pressure does not decrease more than 14 kPa (2 psi) in 5 min.
   - **If greater than 14 kPa (2 psi)**

Replace the G12 Fuel Pump.

- **If less than 14 kPa (2 psi)**

8. Engine idling at normal operating temperature.
9. Verify the Fuel Pump Control Module Fuel Pressure Sensor parameter is between 300-400 kPa (43-58 psi).
   - **If less than 300 kPa (43 psi)**

     Refer to Circuit/System Testing below- Fuel Pressure Low.

   - **If greater than 400 kPa (58 psi)**

     Replace the G12 Fuel Pump.

   - **If between 300-400 kPa (43-58 psi)**
10. Verify the scan tool Short Term Fuel Pump Trim and the Long Term Fuel Pump Trim when multiplied together are less than 1.5.
    - **If greater than 1.5**

      Refer to Circuit/System Testing below- Fuel Pressure Low.

    - **If less than 1.5**
11. Verify the scan tool Fuel Pressure Sensor and the Desired Fuel Pressure are within 45 kPa (6.5 psi) at 300 kPa (43.5 psi) request or 60 kPa (8.7 psi) at 400 kPa (58 psi) request of each other while operating the vehicle through varying loads.
    - **If greater than 45 kPa (6.5 psi)/60 kPa (8.7 psi)**

      Refer to Circuit/System Testing below- Fuel Pressure Drops Off.

    - **If less than 45 kPa (6.5 psi)/60 kPa (8.7 psi)**
12. If the fuel system components test normal, refer to **Symptoms - Engine Controls**, and **Fuel Injector Diagnosis**.

Circuit/System Testing

Fuel Pressure Low

1. Verify none of the conditions listed below exist:
   - Restricted fuel feed pipe
   - Inspect the harness connectors and the ground circuits of the fuel pump for poor connections.
   - **If a condition exists**

     Repair as necessary.

   - **If none of the conditions exist**

Replace the G12 Fuel Pump.

Fuel Pressure Leaks Down

1. Ignition OFF, relieve the fuel pressure. Refer to **Fuel Pressure Relief** .
2. Install the **EN 37287** Adapter between the chassis fuel feed hose and the engine compartment fuel feed pipe.
3. Open the valve on the **EN 37287** Adapter.
4. Ignition ON, command the Fuel Pump Enable On with a scan tool and bleed the air from the **CH 48027** Gauge.
5. Command the Fuel Pump Enable On and then Off with a scan tool.
6. Close the valve on the **EN 37287** Adapter.
7. Verify that the fuel pressure does not decrease more than 34 kPa (5 psi) in 1 min.
    - **If greater than 34 kPa (5 psi)**

      Locate and replace the leaking Q17 Fuel Injector.

    - **If less than 34 kPa (5 psi)**

      Replace the G12 Fuel Pump.

Fuel Pressure Drops Off

1. Verify none of the conditions listed below exist:
    - Restricted fuel feed pipe
    - Inspect the harness connectors and the ground circuits of the fuel pump for poor connections.
    - **If a condition exists**

      Repair as necessary.

    - **If none of the conditions exist**

      Replace the G12 Fuel Pump.

Repair Instructions

Perform the **Diagnostic Repair Verification** after completing the diagnostic procedure.

- **Fuel Feed Pipe Replacement**
- **Fuel Injector Replacement**
- **Fuel Tank Fuel Pump Module Replacement**

FUEL INJECTOR DIAGNOSIS

Diagnostic Instructions

- Perform the **Diagnostic System Check - Vehicle** prior to using this diagnostic procedure.
- Review **Strategy Based Diagnosis** for an overview of the diagnostic approach.
- **Diagnostic Procedure Instructions** provides an overview of each diagnostic category.

Circuit/System Description

The engine control module (ECM) enables the appropriate fuel injector pulse for each cylinder. The ignition voltage is supplied directly to the fuel injectors. The ECM controls each fuel injector by grounding the control circuit via a solid state device called a driver. A fuel injector coil winding resistance that is too high or too low will affect the engine driveability. A fuel injector control circuit DTC may not set, but a misfire may be apparent. The fuel injector coil windings are affected by temperature. The resistance of the fuel injector coil windings will increase as the temperature of the fuel injector increases.

When performing the fuel injector balance test with the fuel injector tester or the scan tool, the scan tool is first used to enable the fuel pump. The fuel injector tester or the scan tool is then used to pulse each injector for a precise amount of time, allowing a measured amount of fuel to be injected. This causes a drop in the system fuel pressure that can be recorded and used to compare each injector.

Diagnostic Aids

- Operating the vehicle over a wide temperature range may help isolate the fuel injector that is causing the condition.
- Perform the fuel injector coil test within the conditions of the concern from the customer. A fuel injector condition may only be apparent at a certain temperature, or under certain conditions.
- Monitoring the Current Misfire Counters, or misfire graph, may help to isolate the fuel injector that is causing the condition.

Reference Information

Schematic Reference

Engine Controls Schematics

Connector End View Reference

COMPONENT CONNECTOR END VIEWS - INDEX

Description and Operation

Fuel System Description

Electrical Information Reference

- **Circuit Testing**
- **Connector Repairs**

- **Testing for Intermittent Conditions and Poor Connections**
- **Wiring Repairs**

Special Tools

- **CH 48027** Digital Pressure Gauge
- **EL 39021** Fuel Injector Coil and Balance Tester

For equivalent regional tools, refer to **Special Tools** .

Fuel Injector Coil Test

Verify the resistance of each Q17 Fuel Injector with one of the following methods:

- If the engine coolant temperature (ECT) sensor is between 10-32°C (50-90°F), the resistance of each fuel injector should be 11-14 ohms. If the injectors measure OK, perform the Fuel Injector Balance Test.
  - If not within the specified range, replace the Q17 Fuel Injector.
- If the ECT sensor is not between 10-32°C (50-90°F), measure and record the resistance of each fuel injector. Subtract the lowest resistance value from the highest resistance value. The difference between the lowest value and the highest value should be equal to or less than 3 ohms. If the injectors measure OK, perform the Fuel Injector Balance Test.
  - If not within the specified range, add all of the fuel injector resistance values to obtain a total resistance value. Divide the total resistance value by the number of fuel injectors to obtain an average resistance value. Subtract the lowest individual fuel injector resistance value from the average resistance value. Compute the difference between the highest individual fuel injector resistance value and the average resistance value. Replace the Q17 Fuel Injector that displays the greatest difference above or below the average.

Fuel Injector Balance Test with Special Tool

NOTE:

- **DO NOT perform this test if the engine coolant temperature (ECT) is above 94°C (201°F). Irregular fuel pressure readings may result due to hot soak fuel boiling.**
- **Verify that adequate fuel is in the fuel tank before proceeding with this diagnostic.**
- **Before proceeding with this test review the User Manual CH 48027-5 for Safety Information and Instructions.**

1. Verify the correct fuel system pressure. Refer to **Fuel System Diagnosis**.
2. Set the amperage supply selector switch on the fuel injector tester to the Balance Test 0.5-2.5 A position.
3. Connect the **EL 39021** fuel injector coil and balance tester to a Q17 Fuel Injector.
4. Command the Fuel Pump Enable On and then Off three times with a scan tool. On the last command, as the fuel pressure begins to slowly degrade and stabilize, select a fuel pressure within 34 kPa (5 psi) of the maximum pump pressure. Record this fuel pressure. This is the starting pressure at which you will pulse

each injector.

5. Command the Fuel Pump Enable On one more time and energize the fuel injector by depressing the Push to Start Test button on the **EL 39021** fuel injector coil and balance tester at the previously selected pressure.
6. After the injector stops pulsing, select Min from the Display Mode on the **CH 48027** gauge and record the Min pressure.

NOTE: New test results will not be recorded if the Min/Max results are not cleared after each injector is tested.

7. Clear the Min/Max results on the **CH 48027** gauge.
8. Select Normal from the Display Mode on the **CH 48027** gauge.
9. Repeat steps 3 and 5 through 8 for each fuel injector.
10. Subtract the minimum pressure from the starting pressure for one fuel injector. The result is the pressure drop value.
11. Obtain a pressure drop value for each fuel injector.
12. Add all of the individual pressure drop values except for the injector suspected of being faulty. This is the total pressure drop.
13. Divide the total pressure drop by the number of fuel injectors that were added together. This is the average pressure drop. The difference between any individual pressure drop and the average pressure drop should not be more than 20 kPa (3 psi).
    - If the difference between any individual pressure drop and the average pressure drop is more than 20 kPa (3 psi), replace the Q17 Fuel Injector.

Fuel Injector Balance Test with Scan Tool

1. Verify the correct fuel system pressure. Refer to **Fuel System Diagnosis**.
2. Command the Fuel Pump Enable On and then Off three times with a scan tool. On the last command, as the fuel pressure begins to slowly degrade and stabilize, select a fuel pressure within 34 kPa (5 psi) of the maximum pump pressure. Record this fuel pressure. This is the starting pressure at which you will pulse each injector.
3. With a scan tool, select the Fuel Injector Balance Test function within the Special Functions menu.
4. Select an injector to be tested.
5. Press Enter to prime the fuel system.
6. Energize the fuel injector by depressing the Pulse Injector button on the scan tool at the previously selected pressure.
7. After the injector stops pulsing, select Min from the Display Mode on the **CH 48027** gauge and record the Min pressure.

NOTE: New test results will not be recorded if the Min/Max results are not cleared after each injector is tested.

8. Clear the Min/Max results on the **CH 48027** gauge.

9. Select Normal from the Display Mode on the **CH 48027** gauge.
10. Press Enter on the scan tool to bring you back to the Select Injector screen.
11. Repeat steps 4 through 10 for each fuel injector.
12. Subtract the minimum pressure from the starting pressure for one fuel injector. The result is the pressure drop value.
13. Obtain a pressure drop value for each fuel injector.
14. Add all of the individual pressure drop values except for the injector suspected of being faulty. This is the total pressure drop.
15. Divide the total pressure drop by the number of fuel injectors that were added together. This is the average pressure drop. The difference between any individual pressure drop and the average pressure drop should not be more than 20 kPa (3 psi).
    - If the difference between any individual pressure drop and the average pressure drop is more than 20 kPa (3 psi), replace the Q17 Fuel Injector.

Repair Instructions

Perform the **Diagnostic Repair Verification** after completing the diagnostic procedure.

Fuel Injector Replacement

FUEL INJECTOR CIRCUIT DIAGNOSIS

Diagnostic Instructions

- Perform the **Diagnostic System Check - Vehicle** prior to using this diagnostic procedure.
- Review **Strategy Based Diagnosis** for an overview of the diagnostic approach.
- **Diagnostic Procedure Instructions** provides an overview of each diagnostic category.

Diagnostic Fault Information

Circuit	Short to Ground	Open/High Resistance	Short to Voltage	Signal Performance
Ignition Voltage	P0201*, P0202*, P0203*, P0204*, P0261*, P0264*, P0267*, P0270*	P0201**, P0202**, P0203**, P0204**, P0261**, P0264**, P0267**, P0270**	-	-
Injector 1 Control	P0201, P0261	P0201, P0300	P0262, P0300	-
Injector 2 Control	P0202, P0264	P0202, P0300	P0265, P0300	-
Injector 3 Control	P0203, P0267	P0203, P0300	P0268, P0300	-
Injector 4 Control	P0204, P0270	P0204, P0300	P0271, P0300	-

* Open fuse, cranks no start.
** Cranks no start if the condition is between the fuse and the splice.

Circuit/System Description

The engine control module (ECM) enables the appropriate fuel injector pulse for each cylinder. Ignition voltage is supplied to the fuel injectors. The ECM controls each fuel injector by grounding the control circuit via a solid state device called a driver.

Reference Information

Schematic Reference

Engine Controls Schematics

Connector End View Reference

COMPONENT CONNECTOR END VIEWS - INDEX

Electrical Information Reference

- **Circuit Testing**
- **Connector Repairs**
- **Testing for Intermittent Conditions and Poor Connections**
- **Wiring Repairs**

Scan Tool Reference

Control Module References

Special Tool

CH 34730-2C Noid Light

Circuit/System Verification

1. Engine cranking or running.
2. Verify the scan tool parameters listed below do not display Malfunction.
    - Cylinder 1-4 Injector Control Circuit Low Voltage Test Status
    - Cylinder 1-4 Injector Control Circuit Open Test Status
    - Cylinder 1-4 Injector Control Circuit High Voltage Test Status
    - **If Malfunction is displayed**

      Refer to Circuit/System Testing below.

- **If Malfunction is not displayed**

3. All OK.

Circuit/System Testing

1. Ignition OFF, disconnect the harness connector at a Q17 Fuel Injector, ignition ON.
2. Verify a test lamp illuminates between the ignition circuit terminal 1 and ground.
   - **If the test lamp does not illuminate and the circuit fuse is good**
   1. Ignition OFF, remove the test lamp.
   2. Test for less than 2 ohms in the ignition circuit end to end.
      - If 2 ohms or greater, repair the open/high resistance in the circuit.
      - If less than 2 ohms, verify the fuse is not open and there is voltage at the fuse.
   - **If the test lamp does not illuminate and the circuit fuse is open**
   1. Ignition OFF, remove the test lamp.
   2. Test for infinite resistance between the ignition circuit and ground.
      - If less than infinite resistance, repair the short to ground on the circuit.
      - If infinite resistance, test all components connected to the ignition voltage circuit for a short and replace as necessary.
   - **If the test lamp illuminates**
3. Verify that a test lamp does not illuminate between the ignition circuit 1 and the control circuit 2.
   - **If the test lamp illuminates**
   1. Ignition OFF, remove the test lamp, disconnect the harness connector at the K20 Engine Control Module.
   2. Test for infinite resistance between the control circuit and ground.
      - If less than infinite resistance, repair the short to ground on the circuit.
      - If infinite resistance, replace the K20 Engine Control Module.
   - **If the test lamp does not illuminate**
4. Ignition OFF, connect the **CH 34730-2C** Noid Light to a fuel injector connector.
5. Engine cranking.
6. Verify the **CH 34730-2C** Noid Light turns ON and OFF for each fuel injector connector.
   - **If the CH 34730-2C is always OFF**
   1. Ignition OFF, remove the **CH 34730-2C** Noid Light, disconnect the harness connector at the K20 Engine Control Module, ignition ON.
   2. Test for less than 1 V between the control circuit and ground.
      - If 1 V or greater, repair the short to voltage on the circuit.
      - If less than 1 V
   3. Ignition OFF.
   4. Test for less than 2 ohms in the control circuit end to end.
      - If 2 ohms or greater, repair the open/high resistance in the circuit.

- If less than 2 ohms, replace the K20 Engine Control Module.

- **If the CH 34730-2C is always ON**

1. Ignition OFF, remove the **CH 34730-2C** Noid Light, disconnect the harness connector at the K20 Engine Control Module.
2. Test for infinite resistance between the control circuit and ground.
   - If less than infinite resistance, repair the short to ground on the circuit.
   - If infinite resistance, replace the K20 Engine Control Module.

- **If the CH 34730-2C turns ON and OFF**

7. Test or replace the Q17 Fuel Injector.

Component Testing

Fuel Injector Diagnosis

Repair Instructions

Perform the **Diagnostic Repair Verification** after completing the repair.

- **Fuel Injector Replacement**
- **Control Module References** for Engine Control Module replacement, programming, and setup.

ALCOHOL/CONTAMINANTS-IN-FUEL DIAGNOSIS

Diagnostic Instructions

- Perform the **Diagnostic System Check - Vehicle** prior to using this diagnostic procedure.
- Review **Strategy Based Diagnosis** for an overview of the diagnostic approach.
- **Diagnostic Procedure Instructions** provides an overview of each diagnostic category.

Test Description

Water contamination in the fuel system may cause driveability conditions such as hesitation, stalling, no start, or misfires in one or more cylinders. Water may collect near a single fuel injector at the lowest point in the fuel injection system and cause a misfire in that cylinder. If the fuel system is contaminated with water, inspect the fuel system components for rust or deterioration.

Ethanol concentrations of greater than 10 percent can cause driveability conditions and fuel system deterioration. Fuel with more than 10 percent ethanol could result in driveability conditions such as hesitation, lack of power, stalling, or no start. Excessive concentrations of ethanol used in vehicles not designed for it may cause fuel system corrosion, deterioration of rubber components, and fuel filter restriction.

Reference Information

Special Tool

CH 44175-A Fuel Composition Tester, if available

For equivalent regional tools, refer to **Special Tools** .

System Verification

The fuel sample should be drawn from the bottom of the tank so that any water present in the tank will be detected. The sample should be bright and clear.

- If the sample appears cloudy, or contaminated with water, as indicated by a water layer at the bottom of the sample, perform the Particulate Contaminants in Fuel Testing Procedure.
- If alcohol contamination is suspected, perform the Alcohol in Fuel Testing procedure.

Alcohol in Fuel Testing with Special Tool, If Available

1. Test the fuel composition using the **CH 44175-A** Fuel Composition Tester and the Instruction Manual.
2. If water appears in the fuel sample, clean the fuel system.
3. Subtract 50 from the reading on the DMM in order to obtain the percentage of alcohol in the fuel sample.
4. If the fuel sample contains more than 15 percent ethanol, add fresh, regular gasoline to the vehicle's fuel tank.
5. Test the fuel composition.
6. If testing shows the ethanol percentage is still more than 15 percent, replace the fuel in the vehicle.

Alcohol in Fuel Testing without Special Tool

1. Using a 100 ml (3.38 oz) specified cylinder with 1 ml (0.034 oz) graduation marks, fill the cylinder with fuel to the 90 ml (3.04 oz) mark.
2. Add 10 ml (0.34 oz) of water in order to bring the total fluid volume to 100 ml (3.38 oz) and install a stopper.
3. Shake the cylinder vigorously for 10-15 seconds.
4. Carefully loosen the stopper in order to release the pressure.
5. Re-install the stopper and shake the cylinder vigorously again for 10-15 seconds.
6. Put the cylinder on a level surface for approximately 5 min in order to allow adequate liquid separation. If alcohol is present in the fuel, the volume of the lower layer, which would now contain both alcohol and water, will be more than 10 ml (0.34 oz). For example, if the volume of the lower layer is increased to 15 ml (0.51 oz), this indicates at least 5 percent alcohol in the fuel. The actual amount of alcohol may be somewhat more because this procedure does not extract all of the alcohol from the fuel.

Particulate Contaminants in Fuel Testing Procedure

1. Using an approved fuel container, draw approximately 0.5 liter (0.53 qt) of fuel.
2. Place the container on a level surface for approximately 5 min in order to allow settling of the particulate contamination. Particulate contamination will show up in various shapes and colors. Sand will typically be identified by a white or light brown crystals. Rubber will appear as black and irregular particles.
3. Observe the fuel sample. If any physical contaminants or water are present, clean the fuel system.

Repair Instructions

Perform the **Diagnostic Repair Verification** after completing the diagnostic procedure.

- **Fuel System Cleaning**
- **Fuel Tank Draining**

EVAPORATIVE EMISSION CONTROL SYSTEM DIAGNOSIS

Special Tools

EN 41413-VLV EVAP Service Port Vent Fitting

Operating Instructions for the Evaporative Emission System Tester (EEST)

Vehicle Setup

WARNING: Refer to Fuel and Evaporative Emission Pipe Warning .

CAUTION: Refer to Clean, Dry, Low Pressure Gas Source Caution .

NOTE: When servicing the EVAP system, test pressure must not exceed 13 in H20 (0.5 PSI) as pressure in excess of this could cause system components to perform inaccurately.

NOTE: A large difference between the vehicle temperature and shop temperature will seriously affect the accuracy of the tests. Always allow at least 15 min for the vehicle temperature to adjust to the shop temperature. Refer to Temperature Variation Instructions for more information about vehicle versus shop temperatures.

1. Engine OFF, open the hood. Position a large fan to blow air under the vehicle onto the fuel tank area.
2. Connect the red battery clip from the tester to the positive battery terminal.

NOTE: The vehicle battery must be fully charged for optimum tester performance.

3. Connect the black battery clip from the tester to chassis ground.

Flow Meter Test - Leak Detection

CAUTION: Refer to Fuel and Evaporative Emission Hose/Pipe Connection Cleaning Caution .

1. Open the Nitrogen tank valve and turn the NITROGEN/SMOKE valve on the front control panel to NITROGEN.
2. Connect the hose to the correct test orifice on the bottom front of the tester. For orifice size, refer to the vehicle specific information found in service procedures for DTCs that relate to evaporative emission (EVAP) system leaks.
3. Press and release the remote switch to activate the tester.

NOTE: The tester will time out after about 15 min. You may press the remote switch to reactivate the tester as desired.

4. Position the sliding red flag on the flow meter to align with the floating indicator. When the red flag is set, press and release the remote switch to deactivate the tester.
5. Remove the hose from the test orifice and install the hose onto the vehicle. For proper connection location, and the special tool numbers for any adapters that may be required, refer to the service procedures for DTCs that relate to EVAP system leaks.
6. Ignition ON, seal the EVAP system per instructions in the service procedures for DTCs that relate to EVAP system leaks. Most systems can be sealed using a scan tool output control for the EVAP vent solenoid valve, other systems require that the vent system be plugged.

NOTE:

- **Larger volume fuel tanks, and/or those with lower fuel levels, may require several minutes to fill with nitrogen.**
- **Static buildup may cause the float indicator to stick. It may be necessary to tap on the flow meter to free up the float.**
- **If fuel level is 90 % or greater it will take longer to fill the system with smoke because the fuel fill tube check valve will be closed and force any smoke to pass through the ORVR pipe and orifice.**

7. Press and release the remote switch to activate the nitrogen flow and fill the system.
8. Compare the stable floating indicator position to the red flag.
   - Below the red flag, the result is acceptable, Pass. Test complete
   - Above the red flag, the result is unacceptable, Fail. Go to the Smoke Procedure
9. Press and release the remote switch to deactivate the tester.

Smoke Procedure - Locate the Leak

NOTE: It is not recommended to use the tester in an outside repair bay area because wind and sunlight may affect temperature and your ability to see the smoke.

1. Turn OFF any fans that may cause air movement around or near the vehicle.

NOTE: Completely unwind the nitrogen/smoke hose from the bracket to optimize the tester's performance.

2. Connect the nitrogen/smoke hose to the vehicle as directed in the service procedures. Some vehicles require that the nitrogen/smoke hose be connected at the front of the EVAP system at the EVAP service port. An adapter may be necessary. Other vehicles require the connection be made at the rear of the system using an adapter at the fuel fill cap. Consult the service procedures for DTCs that relate to evaporative emission (EVAP) system leaks for vehicle specific instructions regarding connection location and adapters.
3. Open the nitrogen tank valve and turn the nitrogen/smoke valve on the control panel to smoke.

NOTE: The remote switch operates on a push ON, push OFF fashion.

4. Press and release the remote switch to activate the tester and inject smoke into the EVAP system.
5. Verify smoke has filled the EVAP system by opening the system opposite the end where smoke is injected. When injecting smoke at the service port, remove the fuel fill cap until smoke is observed. Then close the system and continue testing. If using a special tool fuel fill cap adapter at the filler neck, vent the system at the service port, with special tool EN 41413-VLV EVAP Service Port Vent Fitting, until smoke is observed then remove the vent fitting tool and close the system to continue with the test.

NOTE: Inject smoke in less than 2 min cycles for optimum tester performance.

6. Press and release the remote switch to deactivate the tester.

NOTE: For optimum visual smoke performance, deactivate the smoke flow and allow the system pressure to drop. Allowing the smoke to exit small holes at a low flow rate greatly enhances visibility.

7. Introduce smoke into the system for an additional 60 s. Continue introducing smoke at 15 s intervals, as necessary.
8. Using a high-intensity white light, inspect the entire EVAP system path, and look for the source of the leak indicated by the exiting smoke. Introduce smoke at 15 s intervals, as needed, until leak source is identified.

Temperature Variation Instructions

The Concern

Ideal circumstances for conducting the EVAP flow meter test require equal temperatures between the nitrogen gas and the vehicle EVAP system. Significant differences in temperature between them can result in a flow or pressure change during testing, causing misleading results. Typically, the EEST is stored indoors, approximately 21°C (70°F). Vehicles brought in for diagnosis may have an EVAP system at significantly different temperatures.

For Example

NOTE: With no temperature difference between the nitrogen gas and EVAP system, the resulting vehicle EVAP system pressure will remain stable at 3.2 kPa, 13 in. H2O

(0.5 PSI) once pressurized, providing no leaks are present.

When the EVAP flow meter tests are performed with significant differences in temperature between the nitrogen gas and the vehicle EVAP system, the following results can occur:

- An increase in flow during the flow meter test can be caused by a vehicle's warm EVAP system cooling down.
- A decrease in flow during the flow meter test can be caused by a vehicle's cool EVAP system warming up.

The Solution

When working on a vehicle with significant temperature differences between the vehicle EVAP system and the nitrogen gas, allow the vehicle EVAP system temperature to stabilize as close as possible to the temperature of the nitrogen gas before conducting the Flow Meter Test.

ELECTRONIC IGNITION SYSTEM DIAGNOSIS

Diagnostic Instructions

- Perform the **Diagnostic System Check - Vehicle** prior to using this diagnostic procedure.
- Review **Strategy Based Diagnosis** for an overview of the diagnostic approach.
- **Diagnostic Procedure Instructions** provides an overview of each diagnostic category.

Circuit/System Description

This ignition system uses an ignition coil module. The engine control module (ECM) controls the spark events by transmitting the timing pulses on the ignition control (IC) circuits to the cylinder ignition coils in firing order sequence.

Diagnostic Aids

- An open/high resistance on the low reference circuit to the ignition coil may cause a misfire.
- An erratic or weak spark is considered a no spark condition.

Reference Information

Schematic Reference

Engine Controls Schematics

Connector End View Reference

COMPONENT CONNECTOR END VIEWS - INDEX

Description and Operation

Electronic Ignition System Description

Electrical Information Reference

- **Circuit Testing**
- **Connector Repairs**
- **Testing for Intermittent Conditions and Poor Connections**
- **Wiring Repairs**

Scan Tool Reference

Control Module References

Circuit/System Testing

NOTE: Do not perform this diagnostic procedure unless you were sent here from a misfire DTC or the Engine Cranks But Does Not Run diagnostic.

1. Ignition OFF and all vehicle systems OFF, disconnect the harness connector at the K35 Ignition Coil Module. It may take up to 2 min for all vehicle systems to power down.
2. Test for less than 5 ohms between the ground circuit terminal B and ground.
    - **If 5 ohms or greater**
    1. Ignition OFF.
    2. Test for less than 2 ohms in the ground circuit end to end.
        - If 2 ohms or greater, repair the open/high resistance in the circuit.
        - If less than 2 ohms, repair the open/high resistance in the ground connection.
    - **If less than 5 ohms**
3. Test for less than 5 ohms between the low reference circuit terminal C and ground.
    - **If 5 ohms or greater**
    1. Ignition OFF, disconnect the X2 harness connector at the K20 Engine Control Module.
    2. Test for less than 2 ohms in the low reference circuit end to end.
        - If 2 ohms or greater, repair the open/high resistance in the circuit.
        - If less than 2 ohms, replace the K20 Engine Control Module.
    - **If less than 5 ohms**
4. Ignition ON.
5. Verify a test lamp illuminates between the ignition circuit terminal A and ground.
    - **If the test lamp does not illuminate and the circuit fuse is good**
    1. Ignition OFF, remove the test lamp.
    2. Test for less than 2 ohms in the ignition circuit end to end.
        - If 2 ohms or greater, repair the open/high resistance in the circuit.
        - If less than 2 ohms, verify the fuse is not open and there is voltage at the fuse.

- **If the test lamp does not illuminate and the circuit fuse is open**

NOTE: The ignition circuit may supply voltage to other components. Make sure to test all circuits and components for a short to ground that share the ignition circuit.

1. Ignition OFF, remove the test lamp, and disconnect all components on the circuit.
2. Test for infinite resistance between the ignition circuit and ground.
   - If less than infinite resistance, repair the short to ground on the circuit.
   - If infinite resistance
3. Replace the fuse, ignition ON.
4. Verify the fuse is good after connecting each of the components one at a time.
   - If the fuse opens, replace the component that opens the fuse when connected.
   - If the fuse is good, all OK.

- **If the test lamp illuminates**

6. Replace the K35 Ignition Coil Module.

Repair Instructions

Perform the **Diagnostic Repair Verification** after completing the repair.

- **Ignition Coil Replacement**
- **Control Module References** for engine control module replacement, programming, and setup.

INSPECTION/MAINTENANCE SYSTEM CHECK

Diagnostic Instructions

- Perform the **Diagnostic System Check - Vehicle** prior to using this diagnostic procedure.
- Review **Diagnostic System Check - Vehicle** for an overview of the diagnostic approach.
- **Diagnostic Procedure Instructions** provides an overview of each diagnostic category.

Circuit/System Description

Several states require for a vehicle to pass on-board diagnostic (OBD) system tests and the inspection/maintenance emission inspection in order to renew license plates. This is accomplished by viewing the inspection/maintenance system status display on a scan tool. Using a scan tool, the technician can observe the inspection/maintenance system status in order to verify that the vehicle meets the criteria that comply with the local area requirements.

Condition for Updating the Inspection/Maintenance Emission System Status

Each system monitor requires at least one, and sometimes several, diagnostic tests. The result of each test is reported by a diagnostic trouble code (DTC). A system monitor is complete when either all of the DTCs

composing the monitor have Run and Passed, or when any one of the DTCs comprising the monitor has illuminated the malfunction indicator lamp (MIL). Once the system monitor is complete, the inspection/maintenance system status display will indicate YES in the completed column.

For example, when the HO2S heater status indicates YES, either all of the oxygen sensor heater tests have passed or one of the tests has illuminated the MIL. If the vehicle has two heated oxygen sensors, either both heater circuit tests have passed or one of the heater circuit tests has illuminated the MIL. The inspection/maintenance system status will indicate NO under the completed column when any of the required tests for that system have not run. The following is a list of conditions that may set the inspection/maintenance system status indicator to NO:

- The vehicle is new from the factory and has not yet been driven through the necessary drive conditions to complete the tests.
- The battery has been disconnected or discharged below operating voltage.
- The engine control module (ECM) power or ground has been interrupted.
- The ECM has been reprogrammed.
- The ECM DTCs have been cleared.

Monitored Emission Control Systems

The OBD II System monitors all emission control systems that are on-board. The OBD II regulations require monitoring of the following:

- The air conditioning system
- The catalyst efficiency
- Comprehensive component monitoring, emission related inputs and outputs
- The evaporative emission (EVAP) system
- The fuel delivery system
- Heated catalyst monitoring
- Misfire monitoring
- The oxygen sensor system (HO2S)
- The oxygen sensor heater system (HO2S heater)

For the specific DTCs required for each system, refer to **Inspection/Maintenance (I/M) System DTC Table**. Systems such as fuel delivery, misfire, and comprehensive components may not be listed in a system status list. These tests run continuously and do not require an inspection/maintenance system status indicator.

Circuit/System Verification

Review the inspection/maintenance system DTC Table System Status indicators. All inspection/maintenance system DTC Table system status indicators should report YES.

Circuit/System Testing

NOTE: Many DTC related repairs will instruct the technician to clear the DTC information. Clearing the DTC will reset the inspection/maintenance system DTC Table system status indicators to NO. Performing the inspection/maintenance complete system set procedure will set each of the inspection/maintenance system status indicators to YES.

1. Observe the Engine DTC information with a scan tool.
    - If a DTC is set that may prevent the inspection/maintenance system status tests from completing, diagnose that DTC before continuing. Refer to **Inspection/Maintenance (I/M) System DTC Table**.
2. Review applicable service bulletins for software updates that may prevent the inspection/maintenance system status tests from completing.
    - If a control module reprogram or other repair is required, perform the. **Inspection/Maintenance Complete System Set Procedure**
3. Observe the inspection/maintenance system status indicators.
    - If any inspection/maintenance system status indicators report NO, perform the **Inspection/Maintenance Complete System Set Procedure**.

INSPECTION/MAINTENANCE COMPLETE SYSTEM SET PROCEDURE

Diagnostic Instructions

- Perform the **Diagnostic System Check - Vehicle** prior to using this diagnostic procedure.
- Review **Strategy Based Diagnosis** for an overview of the diagnostic approach.
- **Diagnostic Procedure Instructions** provides an overview of each diagnostic category.

Circuit/System Description

The purpose of the inspection/maintenance complete system set procedure is to satisfy the enable criteria necessary to execute all of the inspection/maintenance readiness diagnostics and complete the trips for those particular diagnostics. When all inspection/maintenance monitored diagnostic tests are completed, the inspection/maintenance system status indicators are set to yes. Perform the inspection/maintenance complete system set procedure if any inspection/maintenance system status indicators are set to NO.

Condition for Meeting a Cold Start

- The ignition voltage between 10-18 V.
- The barometric pressure (BARO) is more than 75 kPa (10.15 PSI).
- The engine coolant temperature (ECT) at start-up is greater than -5°C (23°F).
- The intake air temperature (IAT) at start-up is less than 40°C (104°F).
- The difference between the start-up IAT and ECT are within 3°C (5°F).
- The engine is OFF for greater than 6 h or the following conditions must be met:
    - The start-up IAT minus start-up ECT 1 are within 12°C (22°F).
    - The start-up ECT minus start-up IAT are within 50°C (90°F).

- Fuel level is between 25-75%.

Circuit/System Verification

Review the inspection/maintenance system status indicators. All inspection/maintenance system status indicators should report yes.

Inspection/Maintenance System Set Procedure

NOTE: Whenever the ignition is turned ON, ignition positive voltage is supplied to the heated oxygen sensor (HO2S) heaters. After verifying the enable criteria, turn OFF the ignition for approximately 5 minutes to allow the sensors to cool before continuing with the test. Once the engine is started, do NOT turn the engine OFF for the remaining portion of the set procedure.

1. Ensure that the vehicle meets the conditions for a cold start listed above.
    - If the Evaporative Emission (EVAP) inspection/maintenance system status indicator displays NO, perform the EVAP Service Bay test if applicable.
2. Turn OFF all accessories; HVAC system, other electrical loads, including aftermarket/add-on equipment, etc., and open the hood.
3. Set the vehicle parking brake and ensure the vehicle is in park for automatic transmission or neutral for manual transmission.
4. Turn the ignition ON for 1 min.
5. Start and idle the engine for 5 min.
6. Run the engine for 6 min within the following conditions:
    - Calculated air flow is between 9-30 g/s
    - Engine speed is steady between 1 300-3 000 RPM
7. Apply and hold brake pedal, and shift to Drive for automatic, or apply clutch pedal for manual and operate the vehicle within the following conditions for 2 min:
    - Manifold Absolute Pressure (MAP) signal is greater than 12 g/s
    - Engine speed is greater than 1 000 RPM

    NOTE: Do NOT touch the accelerator pedal until told to do so. A change in throttle position sensor angle or an increase in engine speed may invalidate this portion of the test.

8. Release the accelerator pedal and shift the vehicle to Park for automatic, or Neutral and release clutch pedal for manual, and allow the engine to idle for 2 min.
9. Close the hood, release the parking brake and drive vehicle at 90 km/h (55 MPH) for 2 min.
10. Release the accelerator pedal for at least 10 s. This will allow the vehicle to enter the deceleration fuel cut off.
11. Safely stop the vehicle, with the engine in drive for automatic or neutral with the clutch pedal depressed and parking brake applied for manual. Allow the vehicle to idle for 2 min.

NOTE: Do NOT disturb the vehicle or turn ON the ignition until told to do so. Disturbing the vehicle may invalidate this portion of the test.

12. Shift the vehicle to park for automatic and neutral for manual. Turn OFF the ignition and exit the vehicle. Do NOT disturb the vehicle for 45 min.
13. Observe the Inspection/Maintenance System Status with a scan tool. All of the inspection/maintenance System Status indicators should display YES.
    - If the EVAP inspection/maintenance system status indicator displays NO, turn OFF the ignition, ensure that the vehicle meets the conditions for a cold start, and repeat steps 6 through 11 three more times, or until the EVAP inspection/maintenance system status indicator transitions to yes. If the indicator continues to display NO, refer to the **Inspection/Maintenance (I/M) System DTC Table** to identify the DTCs that did not run.
    - If any of the inspection/maintenance system status indicators display NO, refer to the **Inspection/Maintenance (I/M) System DTC Table** for the indicator which did not display yes. The inspection/maintenance system DTC table identifies the DTCs associated with each inspection/maintenance system status Indicator.

INSPECTION/MAINTENANCE (I/M) SYSTEM DTC TABLE

Inspection/Maintenance (I/M) System DTC Table

System	DTCs Required to Set System Status to YES
If an inspection/maintenance system status indicator did not update to yes during the **Inspection/Maintenance Complete System Set Procedure**, review each indicator and reference this table to determine each DTC associated with the inspection/maintenance system status indicator. Each DTC listed below has specific conditions that must be met for the diagnostic to run. Included within the conditions are additional DTCs which, if set, may inhibit the DTCs listed below from running. Reviewing and operating the vehicle within the conditions for running for each DTC listed below will allow the inspection/maintenance system status indicators to transition to yes.	
Camshaft System	**DTC P0011 or P0014**
Catalyst Monitor	**DTC P0420**
Evaporative Emission (EVAP)	• **DTC P0442** • **DTC P0446** • **DTC P0455**
Fuel System	**DTC P219A**
Oxygen Sensor	• **DTC P0131, P0132, P0134, P0137, P0138, or P0140** • **DTC P0133, P013A, P013B, P013E, P013F, P015A, P015B, P2270, or P2271**
Oxygen Sensor Heater	**DTC P0030-P0032, P0036-P0038, P0053, P0054, P0135, or P0141**

FUEL PRESSURE MEASUREMENT

Special Tools

EN 34730-91 Pressure Tester

For equivalent regional tools, refer to **Special Tools**

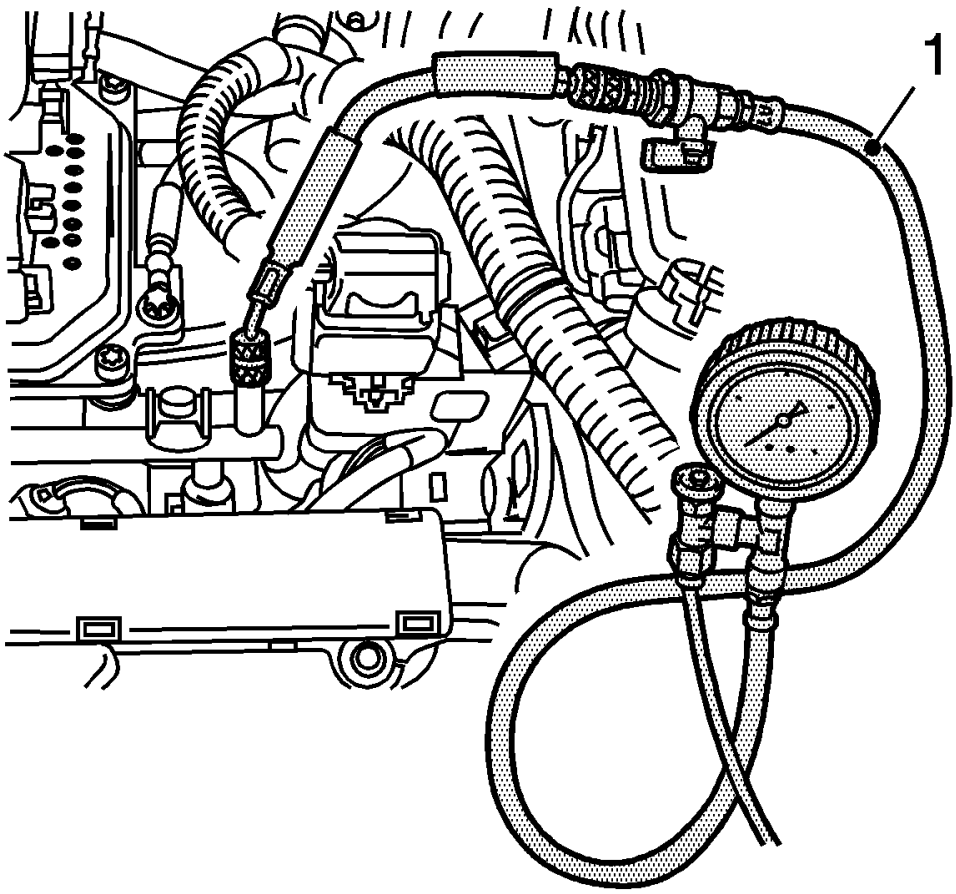

Fig. 1: View Of Fuel Pressure Tester
Courtesy of GENERAL MOTORS COMPANY

WARNING: Gasoline or gasoline vapors are highly flammable. A fire could occur if an ignition source is present. Never drain or store gasoline or diesel fuel in an open container, due to the possibility of fire or explosion. Have a dry chemical (Class B) fire extinguisher nearby.

WARNING: Remove the fuel tank cap and relieve the fuel system pressure before servicing the fuel system in order to reduce the risk of personal injury. After you relieve the fuel system pressure, a small amount of fuel may be released when servicing the fuel lines, the fuel injection pump, or the connections. In order to reduce the risk of personal injury, cover the fuel system components with a shop towel

before disconnection. This will catch any fuel that may leak out. Place the towel in an approved container when the disconnection is complete.

1. Remove the protective cap from the test connection.
2. Attach the **EN 34730-91** tester (1) to the test connection.
3. Start the engine.
   - Bleed the pressure tester at idling speed.
   - Collect the exiting fuel in a suitable container.
   - Read the fuel pressure from the pressure gauge.

CAUTION: Clean all of the following areas before performing any disconnections in order to avoid possible contamination in the system:

- **The fuel pipe connections**
- **The hose connections**
- **The areas surrounding the connections**

4. Detach the pressure gauge **EN 34730-91** tester from the test connection.

2013 ENGINE PERFORMANCE

Engine Controls and Fuel - 1.4L LUV - Repair Instructions - Cruze

REPAIR INSTRUCTIONS

ENGINE CONTROL MODULE REPLACEMENT

Removal Procedure

CAUTION:

- **Turn the ignition OFF when installing or removing the control module connectors and disconnecting or reconnecting the power to the control module (battery cable, powertrain control module (PCM)/engine control module (ECM)/transaxle control module (TCM) pigtail, control module fuse, jumper cables, etc.) in order to prevent internal control module damage.**
- **Control module damage may result when the metal case contacts battery voltage. DO NOT contact the control module metal case with battery voltage when servicing a control module, using battery booster cables, or when charging the vehicle battery.**
- **In order to prevent any possible electrostatic discharge damage to the control module, do no touch the connector pins or the soldered components on the circuit board.**
- **Remove any debris from around the control module connector surfaces before servicing the control module. Inspect the control module connector gaskets when diagnosing or replacing the control module. Ensure that the gaskets are installed correctly. The gaskets prevent contaminant intrusion into the control module.**
- **The replacement control module must be programmed.**

NOTE: **It is necessary to record the engine oil life percentage remaining. Use the scan tool to reset the engine oil life remaining back to the original percentage recorded.**

NOTE: **It is necessary to record the remaining automatic transmission fluid life. If the replacement module is not programmed with the remaining automatic transmission fluid life, the automatic transmission fluid life will default to 100 percent. If the replacement module is not programmed with the remaining automatic transmission fluid life, the automatic transmission fluid will need to be changed at 83000 km (50.000 mi) from the last automatic transmission fluid change.**

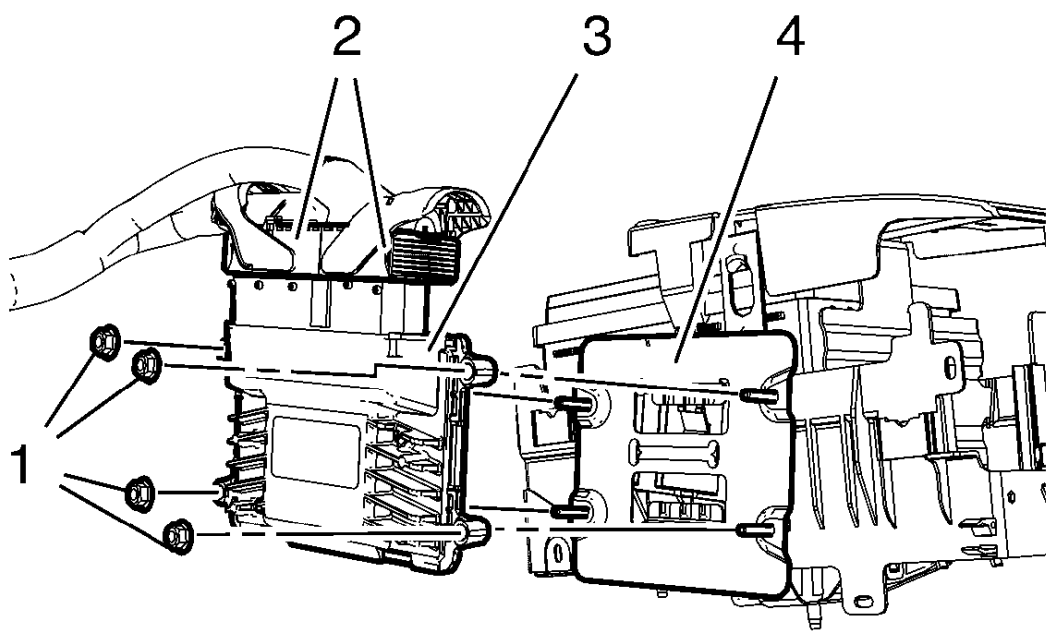

Fig. 1: Engine Control Module Components
Courtesy of GENERAL MOTORS COMPANY

1. Prepare the engine control module for the replacement. Refer to **Control Module References** .
2. Using a scan tool, retrieve the percentage of remaining engine oil. Record the remaining engine oil life.
3. Disconnect battery negative cable. Refer to **Battery Negative Cable Disconnection and Connection** .
4. Disconnect the 2 wiring harness plug (2) from the engine control module (3).
5. Unclip the engine control module bracket (4) from the battery tray.
6. Remove the 4 nuts (1).
7. Remove the engine control module (3) from the engine control module bracket (4).

Installation Procedure

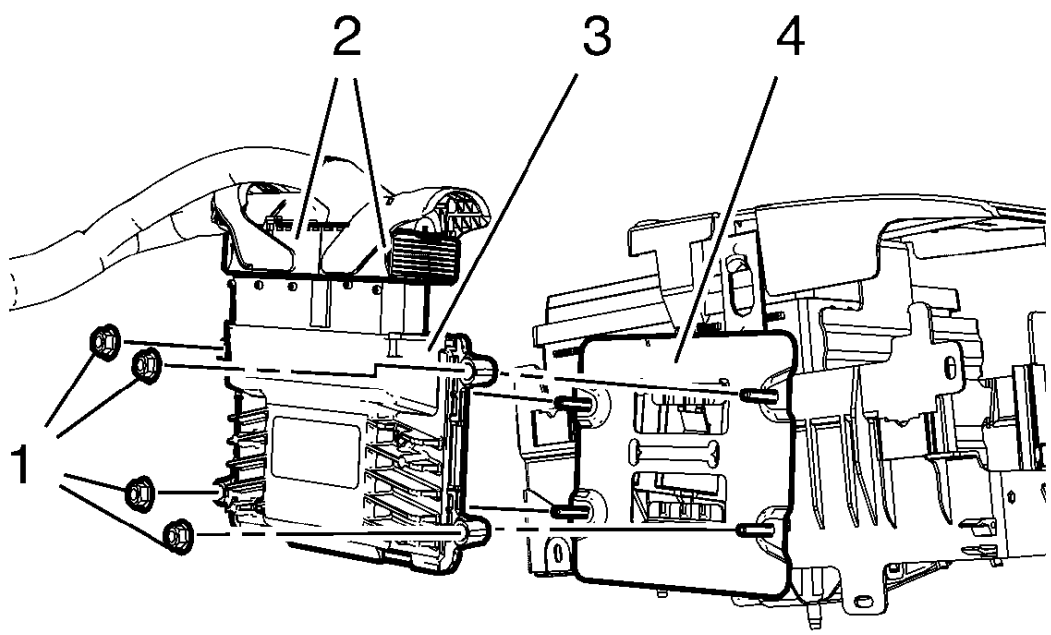

Fig. 2: Engine Control Module Components
Courtesy of GENERAL MOTORS COMPANY

1. Install the engine control module (3) to the engine control module bracket (4).

CAUTION: Refer to Fastener Caution .

2. Install the 4 nuts (1) and tighten to 9 N.m (80 lb in).
3. Clip the engine control module bracket (4) to the battery tray.
4. Connect the 2 wiring harness plug (2) to the engine control module (3).
5. Connect battery negative cable. Refer to **Battery Negative Cable Disconnection and Connection** .
6. Program the ECM. Refer to **Control Module References** .

CRANKSHAFT POSITION SYSTEM VARIATION LEARN

NOTE: The crankshaft position sensor system variation learn procedure is required when the following service procedures have been performed, regardless of whether DTC P0315 is set:

- **Engine replacement**
- **Engine control module (ECM) replacement**
- **Crankshaft damper replacement**
- **Crankshaft replacement**
- **Crankshaft Position Sensor Replacement**
- **Any engine repairs which disturb the crankshaft to crankshaft position sensor relationship.**

NOTE: The scan tool monitors certain component signals to determine if all the conditions are met to continue with the crankshaft position sensor system variation learn procedure. The scan tool only displays the condition that inhibits the procedure. The scan tool monitors the following components:

- **Crankshaft Position Sensor activity - If there is a crankshaft position sensor condition, refer to the applicable DTC that set.**
- **Camshaft position signal activity - If there is a camshaft position sensor signal condition, refer to the applicable DTC that set.**
- **Engine coolant temperature (ECT) - If the engine coolant temperature is not warm enough, idle the engine until the engine coolant temperature reaches the correct temperature.**

1. Install a scan tool.
2. Monitor the ECM for DTCs with a scan tool. If other DTCs are set, except DTC P0315, refer to **Diagnostic Trouble Code (DTC) List - Vehicle** for the applicable DTC that set.
3. With a scan tool, select the Crankshaft Position System Variation Learn procedure and perform the following:
    1. Observe the fuel cut-off for the applicable engine.
    2. Block the drive wheels.
    3. Set the parking brake.
    4. Place the vehicles transmission in Park or Neutral.
    5. Turn the air conditioning (A/C) OFF.
    6. Cycle the ignition from OFF to ON.
    7. Apply and hold the brake pedal for the duration of the procedure.
    8. Start and idle the engine.
    9. Accelerate to wide open throttle (WOT). The engine should not accelerate beyond the calibrated fuel cut-off RPM value noted in step 3.1. Release the throttle immediately if the value is exceeded.

NOTE: While the learn procedure is in progress, release the throttle

immediately when the engine starts to decelerate. The engine control is returned to the operator and the engine responds to throttle position after the learn procedure is complete.

10. Release the throttle when fuel cut-off occurs.
11. Accelerate to wide open throttle (WOT). The engine should not accelerate beyond the calibrated fuel cut-off RPM value noted in step 3.1. Release the throttle immediately if the value is exceeded.

NOTE: While the learn procedure is in progress, release the throttle immediately when the engine starts to decelerate. The engine control is returned to the operator and the engine responds to throttle position after the learn procedure is complete.

4. The scan tool displays Learn Status: Learned this Ignition. If the scan tool indicates that DTC P0315 ran and passed, the crankshaft position sensor variation learn procedure is complete. If the scan tool indicates DTC P0315 failed or did not run, refer to **DTC P0315** . If any other DTCs set, refer to **Diagnostic Trouble Code (DTC) List - Vehicle** for the applicable DTC that set.
5. Turn OFF the ignition for 30 s after the learn procedure is completed successfully.

ENGINE COOLANT TEMPERATURE SENSOR REPLACEMENT (RADIATOR)

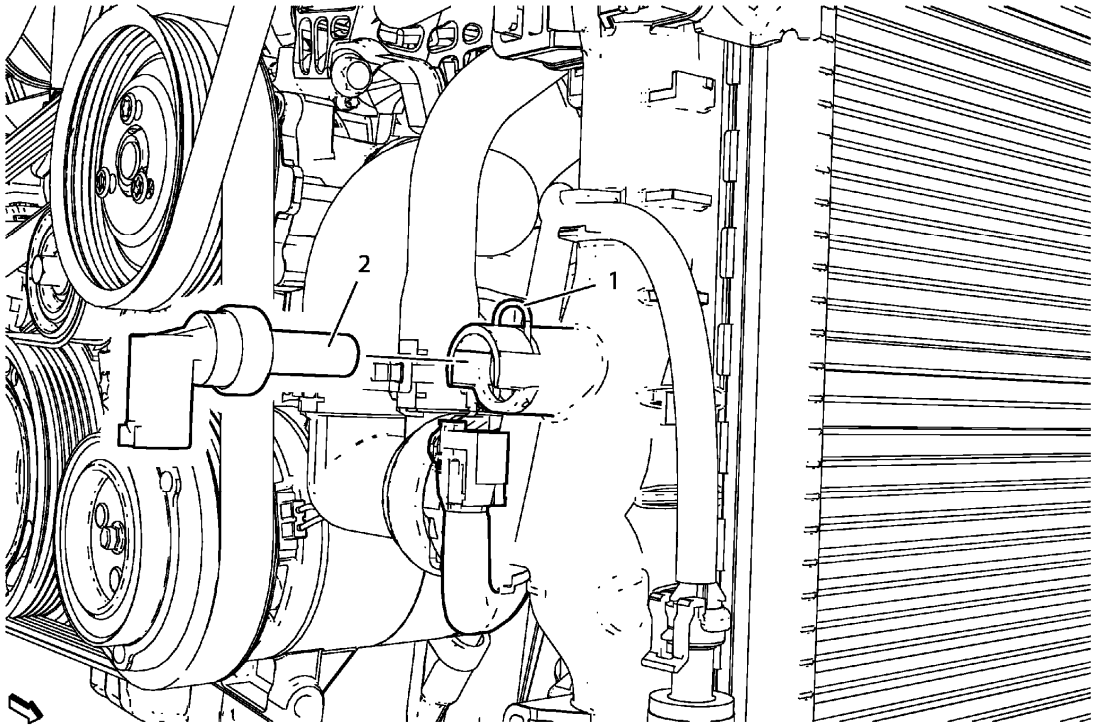

Fig. 3: Engine Coolant Temperature Sensor (Radiator) Side
Courtesy of GENERAL MOTORS COMPANY

Engine Coolant Temperature Sensor Replacement (Radiator)

Callout	Component Name
Preliminary Procedures Drain the cooling system. Refer to **Cooling System Draining and Filling (Static Fill)** , **Cooling System Draining and Filling (GE-47716 Fill)** .	
1	Retaining Clamp
2	Engine Coolant Temperature Sensor **Procedure** Disconnect the electrical connector.

ENGINE COOLANT TEMPERATURE SENSOR REPLACEMENT (WATER OUTLET)

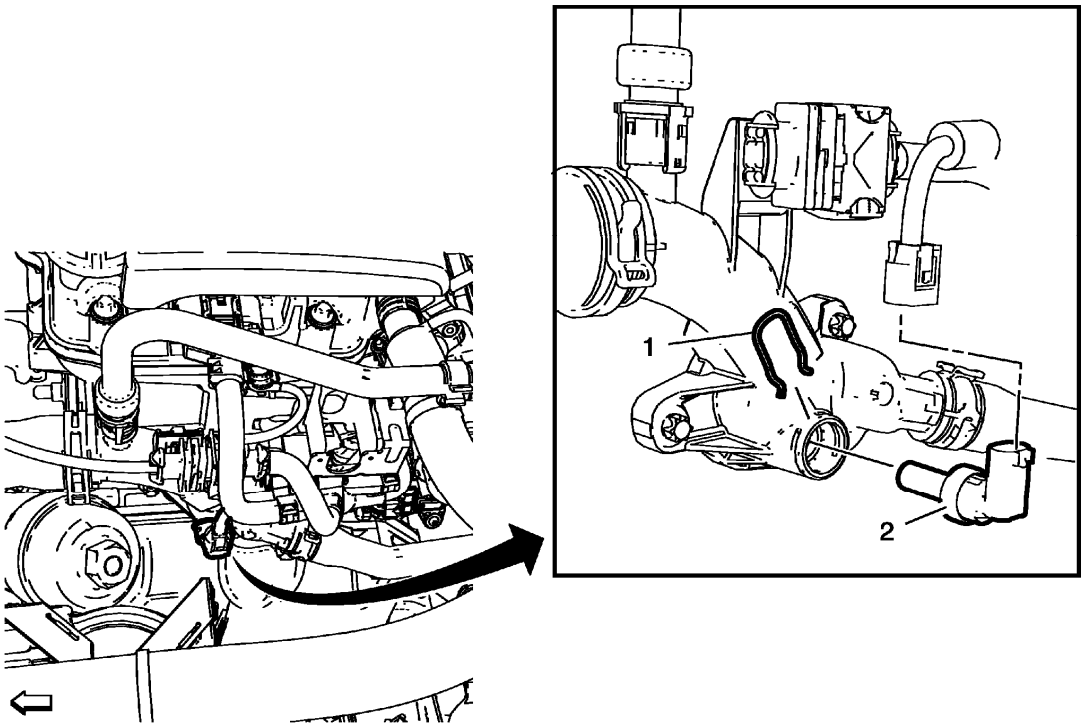

Fig. 4: Engine Coolant Temperature Sensor (Water Outlet)
Courtesy of GENERAL MOTORS COMPANY

Engine Coolant Temperature Sensor Replacement (Water Outlet)

Callout	Component Name
WARNING: **Allow sufficient time for the engine to cool before removing the ECT sensor. A hot engine may cause an excessive coolant loss or a personal injury.** **Preliminary Procedures** Drain the cooling system. Refer to **Cooling System Draining and Filling (Static Fill)** , **Cooling System Draining and Filling (GE-47716 Fill)** .	
1	Engine Coolant Temperature Sensor Retainer Clip
	Engine Coolant Temperature Sensor

2	**Procedure** Disconnect electrical connector.

MASS AIRFLOW SENSOR REPLACEMENT

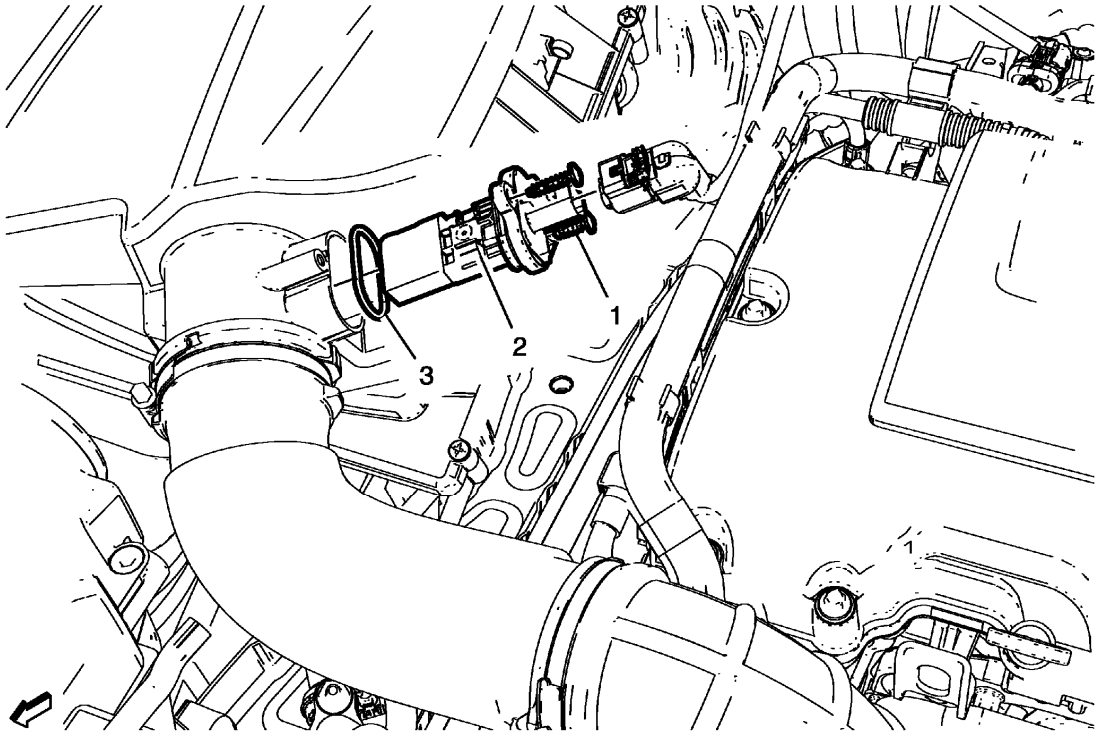

Fig. 5: Mass Airflow Sensor
Courtesy of GENERAL MOTORS COMPANY

Mass Airflow Sensor Replacement

Callout	Component Name
1	Mass Air Flow Sensor Bolt (Qty: 2)
2	Mass Air Flow Sensor **Procedure** 1. Disconnect electrical connector 2. After replacement of mass air flow sensor, use a scan tool to perform the learn functions. Refer to **K20 Engine Control Module: Programming and Setup** .
3	Mass Air Flow Sensor Seal Ring

INTAKE AIR PRESSURE AND TEMPERATURE SENSOR REPLACEMENT

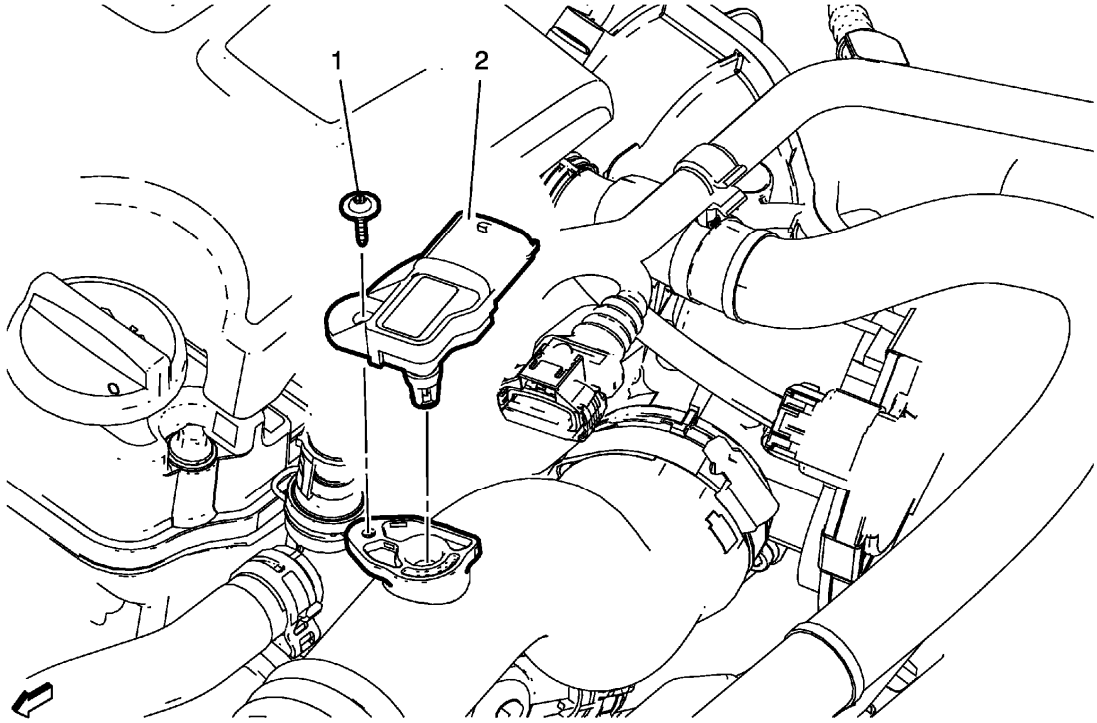

Fig. 6: Intake Air Pressure And Temperature Sensor
Courtesy of GENERAL MOTORS COMPANY

Intake Air Pressure and Temperature Sensor Replacement

Callout	Component Name
1	Intake Air Temperature and Pressure Sensor Bolt **CAUTION:** **Refer to Fastener Caution .**
2	Intake Air Temperature and Pressure Sensor **Procedure** Disconnect the electrical connector.

MANIFOLD ABSOLUTE PRESSURE SENSOR REPLACEMENT

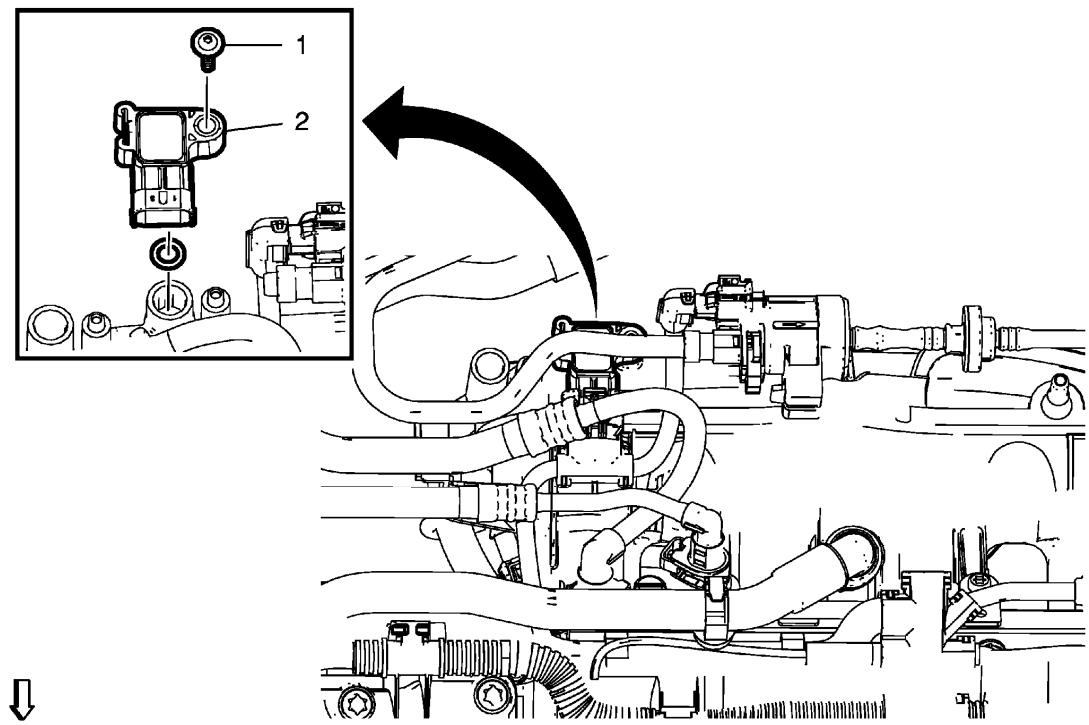

Fig. 7: Manifold Absolute Pressure Sensor
Courtesy of GENERAL MOTORS COMPANY

Manifold Absolute Pressure Sensor Replacement

Callout	Component Name
1	Manifold Absolute Pressure Sensor Bolt
2	Manifold Absolute Pressure Sensor **Procedure** 1. Disconnect the electrical connector. 2. After replacement of the manifold absolute pressure sensor use a scan tool to speed up the learn process. Refer to **K20 Engine Control Module: Programming and Setup** .

TURBOCHARGER WASTEGATE REGULATOR SOLENOID VALVE REPLACEMENT

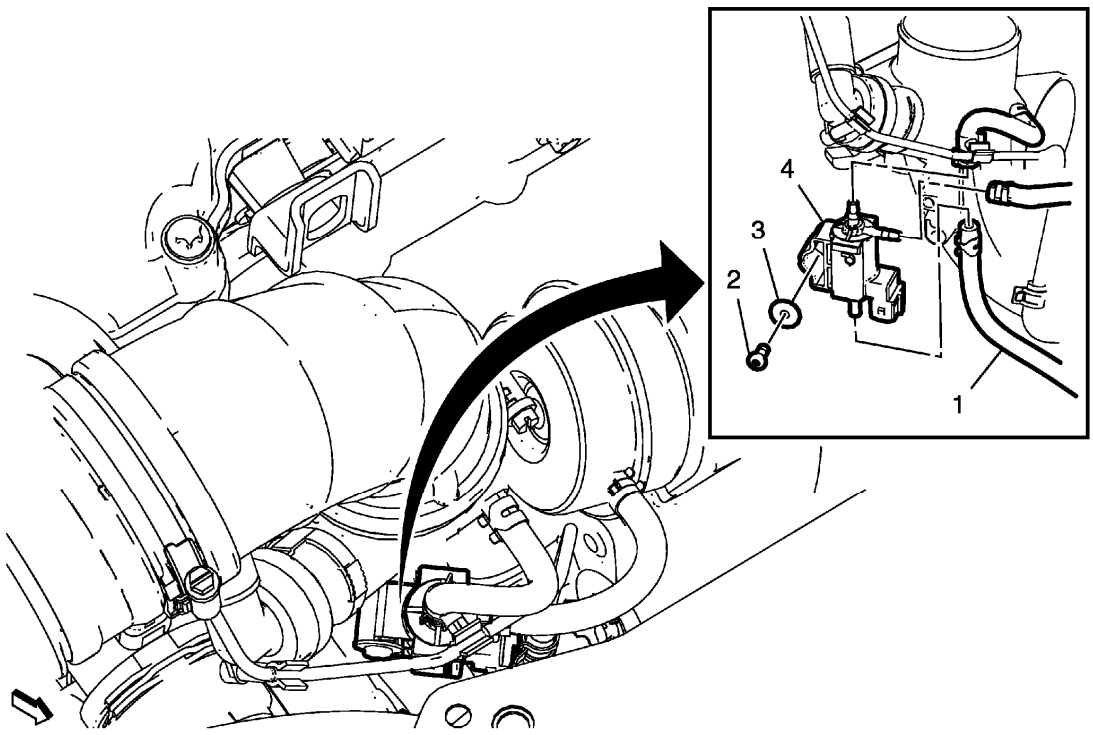

Fig. 8: Turbocharger Wastegate Regulator Solenoid Valve
Courtesy of GENERAL MOTORS COMPANY

Turbocharger Wastegate Regulator Solenoid Valve Replacement

Callout	Component Name
Preliminary Procedure Disconnect the turbocharger wastegate regulator solenoid valve electrical connector.	
1	Turbocharger Wastegate Regulator Solenoid Valve Vacuum Hose (Qty: 3)
2	Turbocharger Wastegate Regulator Solenoid Valve Bolt
3	Turbocharger Wastegate Regulator Solenoid Valve Bolt Washer
4	Turbocharger Wastegate Regulator Solenoid Valve

HEATED OXYGEN SENSOR REPLACEMENT - SENSOR 1

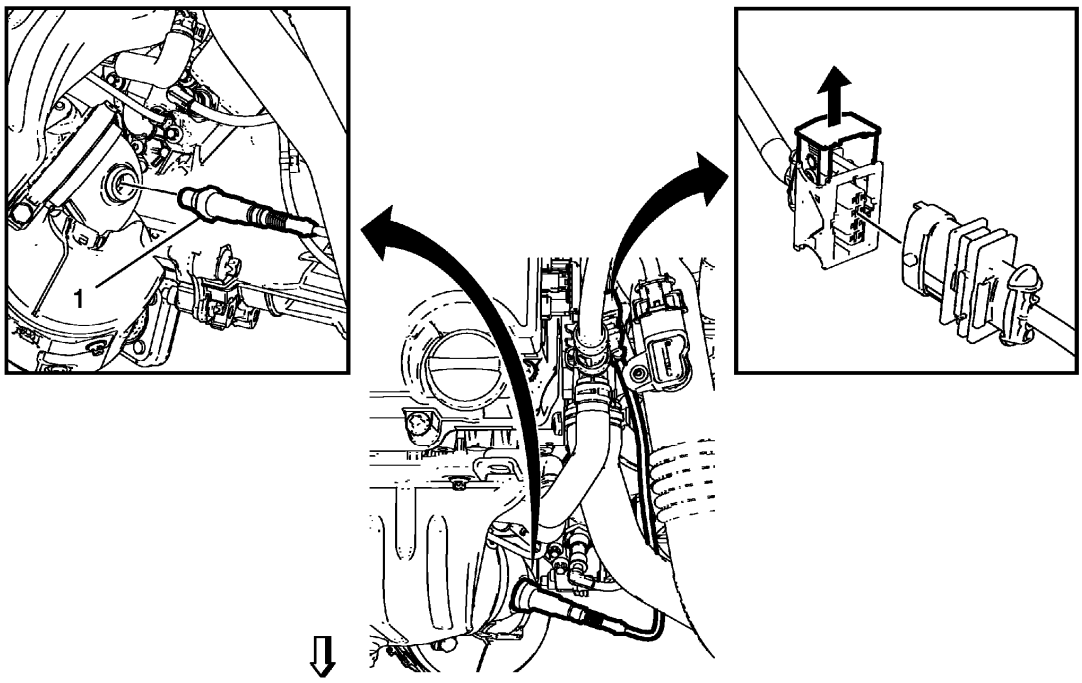

Fig. 9: Heated Oxygen Sensor - Sensor 1
Courtesy of GENERAL MOTORS COMPANY

Heated Oxygen Sensor Replacement - Sensor 1

Callout	Component Name
WARNING: **In order to avoid being burned, do not service the exhaust system while it is still hot. Service the system when it is cool.** **Preliminary Procedure** Disconnect battery negative cable. Refer to **Battery Negative Cable Disconnection and Connection** .	
1	Heated Oxygen Sensor 1 **CAUTION:** **Refer to Fastener Caution .** **Procedure** 1. Remove the wiring harness from retainer clip. 2. Disconnect electrical connector. 3. After replacement of the heated oxygen sensor, use a scan tool to speed up learn functions. Refer to **K20 Engine Control Module: Programming and Setup** . 4. If reusing the heated oxygen sensor, coat the thread with assembly

	paste. **Tighten** 42 N.m(31 lb ft) **Special Tools** **EN-48259** Installer/Remover For equivalent regional tools, refer to **Special Tools**

HEATED OXYGEN SENSOR REPLACEMENT - SENSOR 2

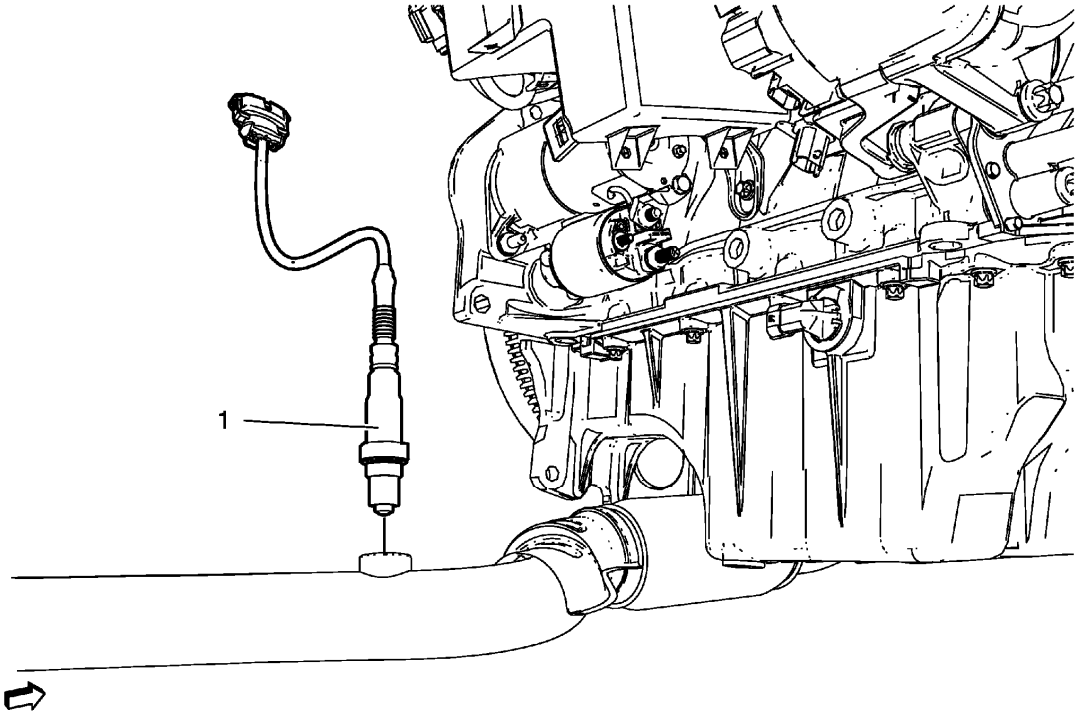

Fig. 10: Heated Oxygen Sensor - Sensor 2
Courtesy of GENERAL MOTORS COMPANY

Heated Oxygen Sensor Replacement - Sensor 2

Callout	Component Name
WARNING: **In order to avoid being burned, do not service the exhaust system while it is still hot. Service the system when it is cool.** **Preliminary Procedure** Raise and support the vehicle. Refer to **Lifting and Jacking the Vehicle** .	
	Heated Oxygen Sensor 2 **CAUTION:**

1	**Refer to Fastener Caution .** **Procedure** 1. Disconnect electrical connector. 2. After replacement of the heated oxygen sensor, use a scan tool to speed up learn functions. Refer to **K20 Engine Control Module: Programming and Setup** . 3. If reusing the heated oxygen sensor, coat the thread with assembly paste. **Tighten** 42 N.m(31 lb ft) **Special Tools** **EN-48259** Installer/Remover For equivalent regional tools, refer to **Special Tools**

ENGINE OIL PRESSURE INDICATOR SWITCH REPLACEMENT

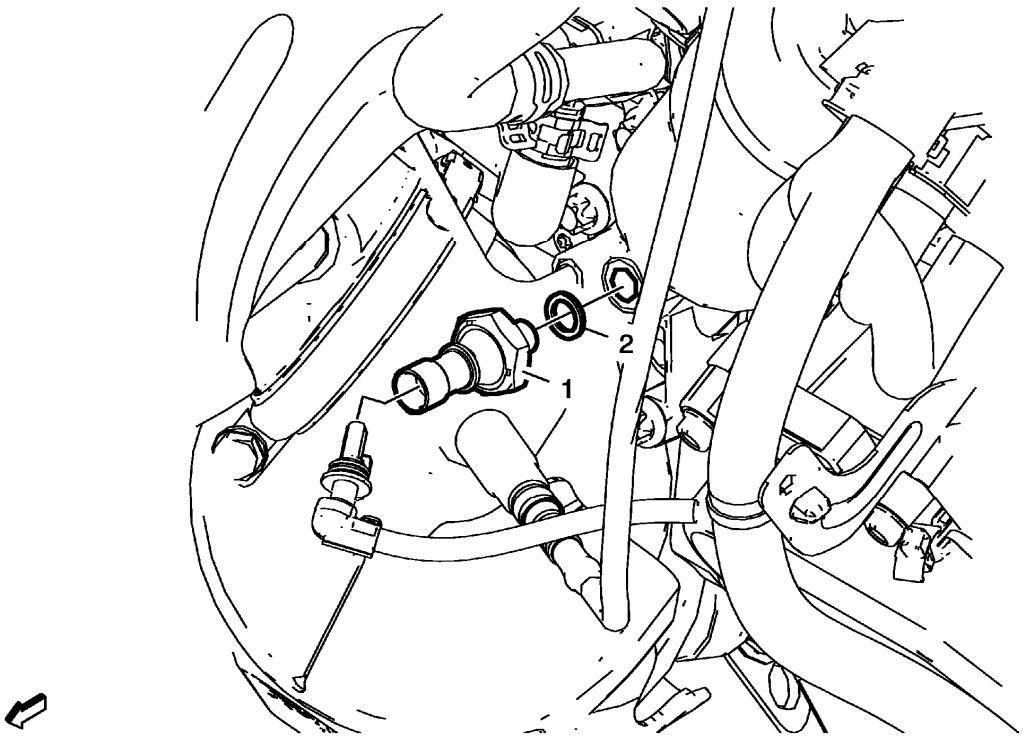

Fig. 11: Engine Oil Pressure Indicator Switch
Courtesy of GENERAL MOTORS COMPANY

Engine Oil Pressure Indicator Switch Replacement

Callout	Component Name

1	Engine Oil Pressure Indicator Switch **CAUTION:** **Refer to Fastener Caution .** **Procedure** 1. Place collecting basin underneath. 2. Disconnect the electrical connector. 3. Check engine oil level after replacement. **Tighten** 20 N.m (15 lb ft)
2	Engine Oil Pressure Indicator Switch Seal Ring

ACCELERATOR PEDAL POSITION SENSOR REPLACEMENT

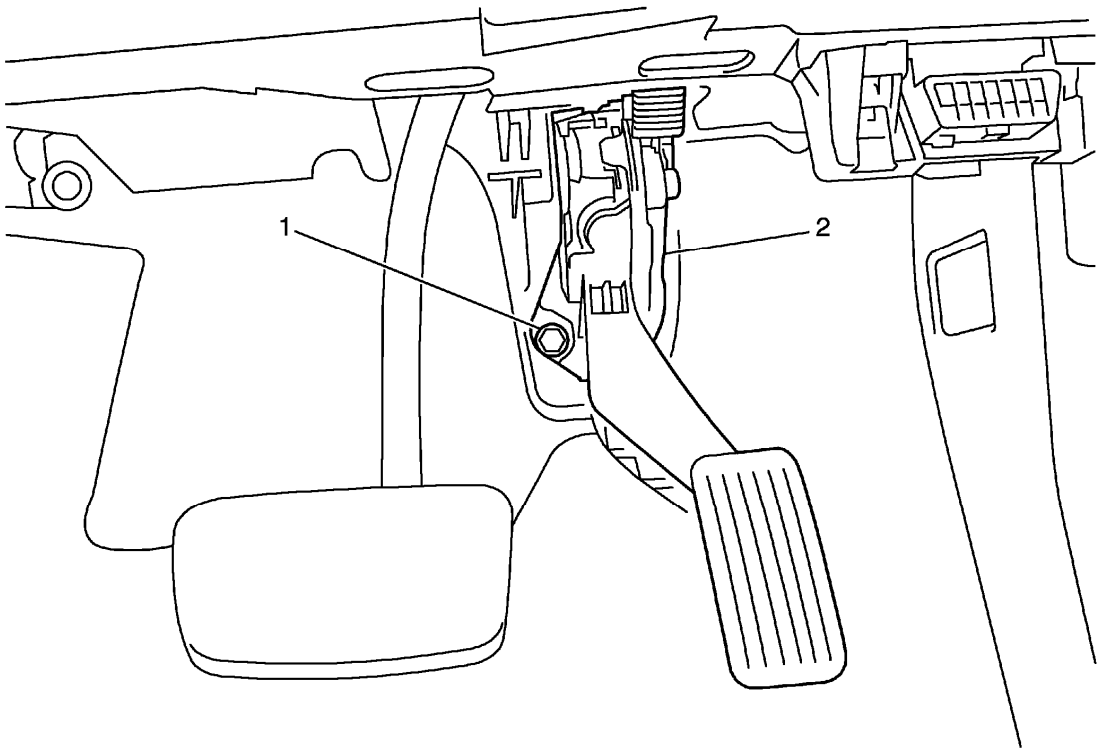

Fig. 12: Accelerator Pedal Position Sensor & Fastener
Courtesy of GENERAL MOTORS COMPANY

Accelerator Pedal Position Sensor Replacement

Callout	Component Name
	Accelerator Pedal Position Sensor Fastener

1	**CAUTION:** **Refer to Fastener Caution .** **Tighten** 10 N.m (89 lb in)
2	Accelerator Pedal Position Sensor **Procedure** Disconnect electrical connector.

THROTTLE BODY ASSEMBLY REPLACEMENT

Removal Procedure

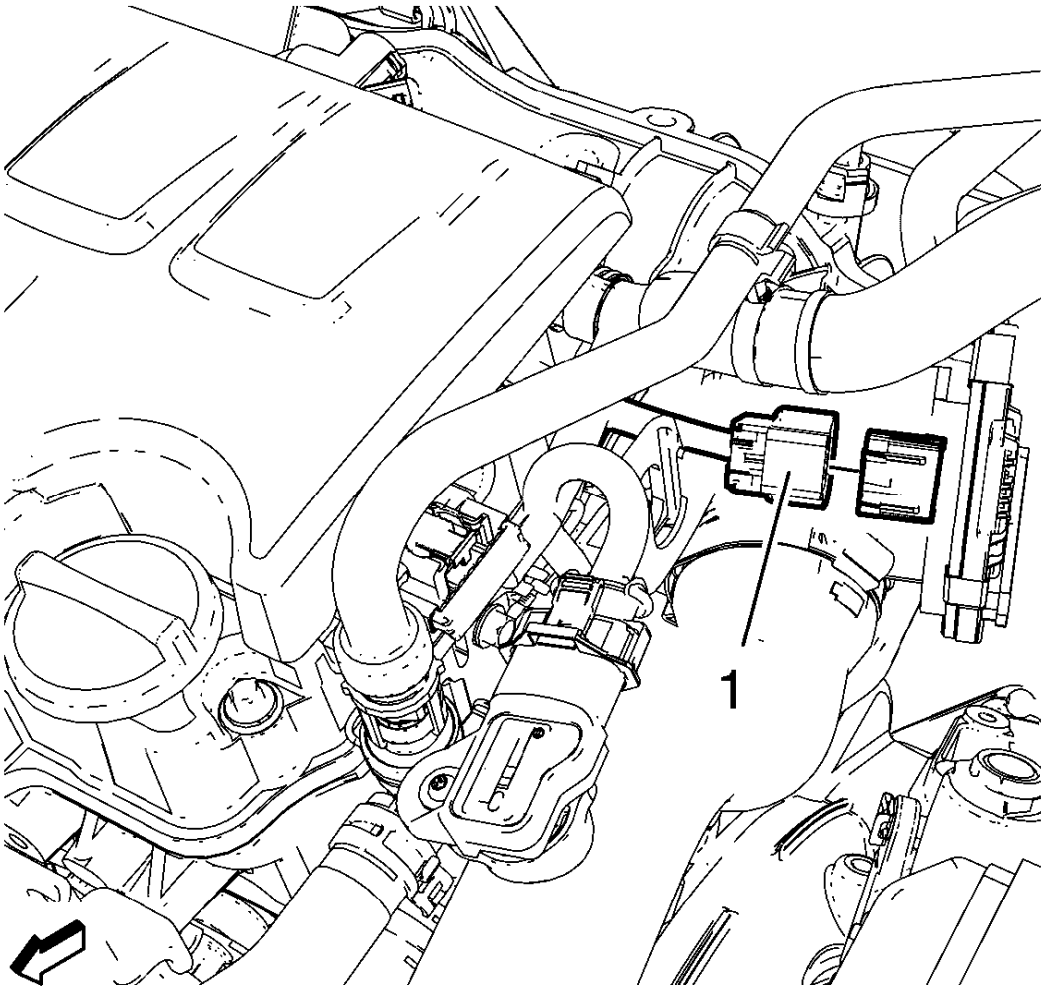

Fig. 13: Throttle Body Wiring Harness Plug
Courtesy of GENERAL MOTORS COMPANY

1. Disconnect the throttle body wiring harness plug (1).
2. Remove the charge air cooler outlet air hose from the throttle body. Refer to **Charge Air Cooler Outlet Air Hose Replacement (Automatic Transmission)**, **Charge Air Cooler Outlet Air Hose Replacement (Manual Transmission)**.

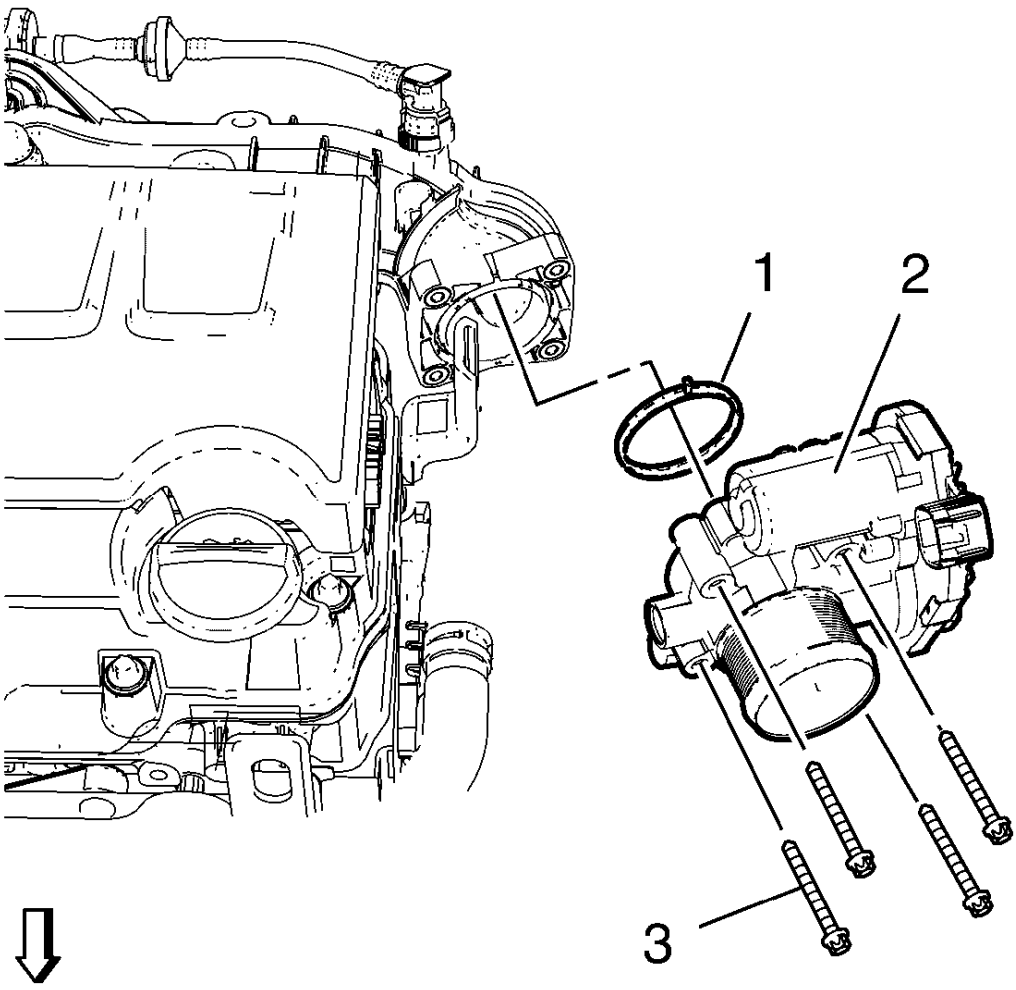

Fig. 14: Throttle Body
Courtesy of GENERAL MOTORS COMPANY

3. Remove the 4 throttle body bolts (3).
4. Remove the throttle body (2) along with the throttle body seal ring (1).

Installation Procedure

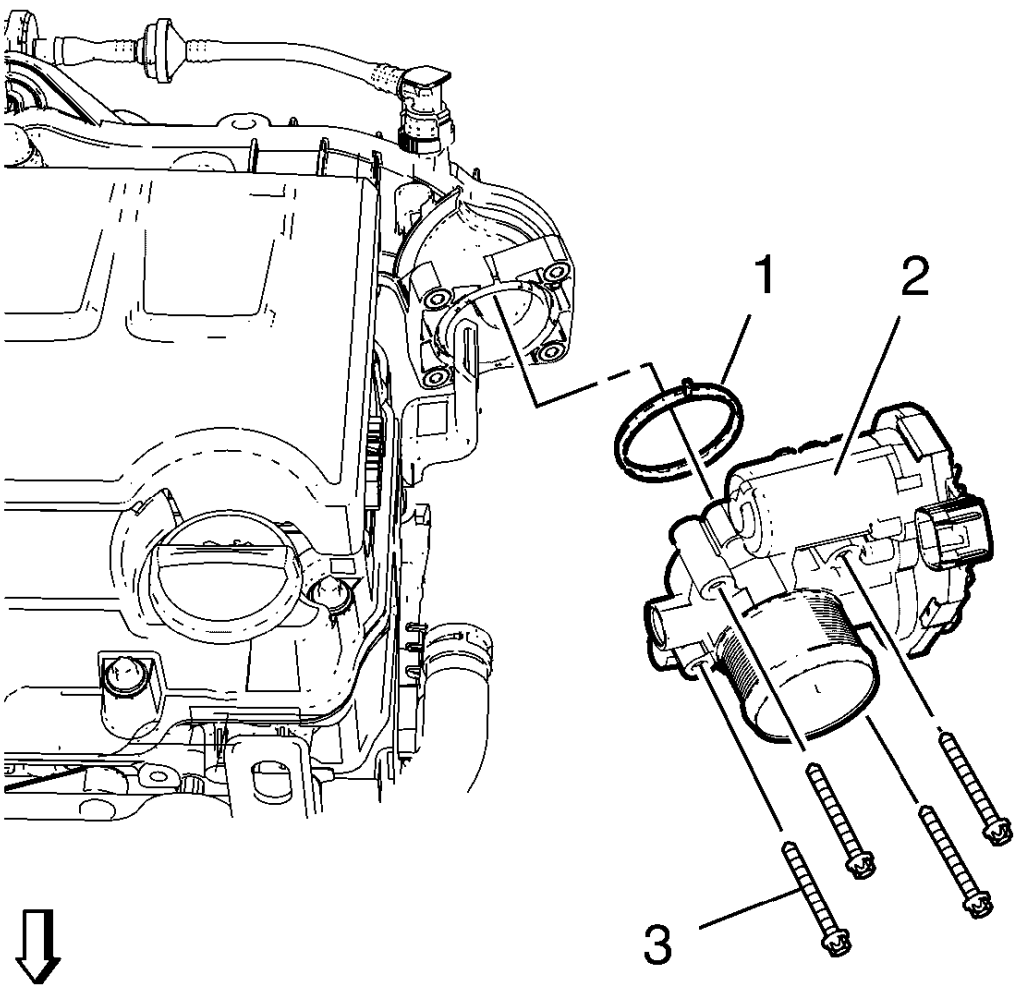

Fig. 15: Throttle Body
Courtesy of GENERAL MOTORS COMPANY

1. Install the throttle body (2) along with a NEW throttle body seal ring (1).

CAUTION: Refer to Fastener Caution .

2. Install the 4 throttle body bolts (3) and tighten to 8 N.m (71 lb in).
3. Install the charge air cooler outlet air hose to the throttle body. Refer to **Charge Air Cooler Outlet Air Hose Replacement (Automatic Transmission)**, **Charge Air Cooler Outlet Air Hose Replacement (Manual Transmission)**.

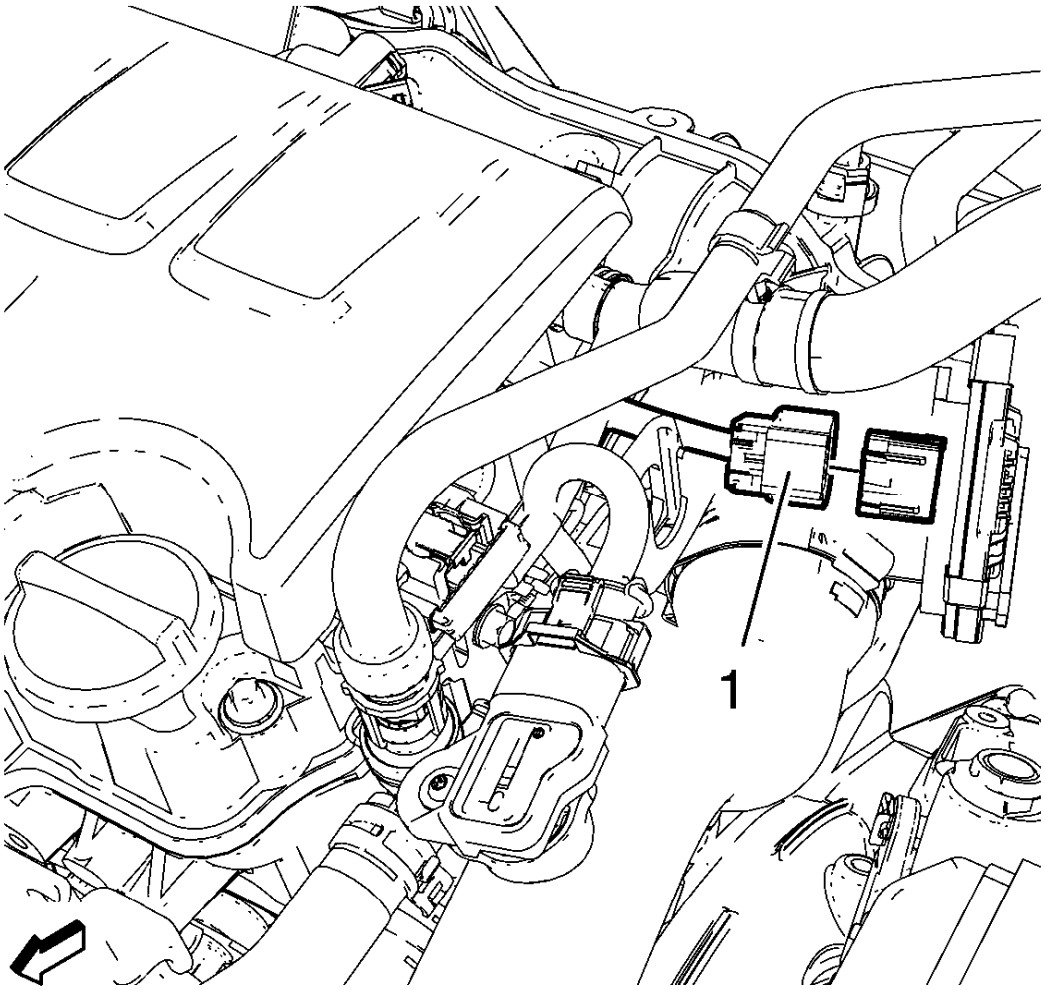

Fig. 16: Throttle Body Wiring Harness Plug
Courtesy of GENERAL MOTORS COMPANY

4. Connect the throttle body wiring harness plug (1).
5. Perform the throttle/idle learn procedure. Refer to **Q38 Throttle Body: Throttle/Idle Learn**.

THROTTLE BODY INSPECTION AND CLEANING

NOTE: Over extended time and mileage, deposits may accumulate on the back of the throttle valve plate. The source of the deposit is exhaust gas. Typically these deposits pose no problem. Occasionally the deposit may accumulate to a point where perceived pedal effort or throttle valve movement is effected. This procedure should not be performed on vehicles with mileage under 80, 450 km (50, 000 mi).

1. Remove the air cleaner outlet duct. Refer to **Air Cleaner Outlet Duct Replacement**.

WARNING: Turn OFF the ignition before inserting fingers into the throttle bore. Unexpected movement of the throttle blade could cause personal injury.

CAUTION: Do not insert any tools into the throttle body bore in order to avoid damage to the throttle valve plate.

2. Inspect the throttle body bore and the throttle valve plate for deposits. You will need to open the throttle valve in order to inspect all surfaces.

CAUTION: Do not use any solvent that contains Methyl Ethyl Ketone (MEK). This solvent may damage fuel system components.

3. Clean the throttle body bore and the throttle valve plate using a clean shop towel with an appropriate cleaner.
4. Install the air cleaner outlet duct. Refer to **Air Cleaner Outlet Duct Replacement**.

FUEL PRESSURE RELIEF

Special Tools

EN-34730-91 Pressure Tester

For equivalent regional tools, refer to **Special Tools** .

WARNING: Gasoline or gasoline vapors are highly flammable. A fire could occur if an ignition source is present. Never drain or store gasoline or diesel fuel in an open container, due to the possibility of fire or explosion. Have a dry chemical (Class B) fire extinguisher nearby.

WARNING: Relieve the fuel system pressure before servicing fuel system components in order to reduce the risk of fire and personal injury.

After relieving the system pressure, a small amount of fuel may be released when servicing the fuel lines or connections. In order to reduce the chance of personal injury, cover the regulator and the fuel line fittings with a shop towel before disconnecting. This will catch any fuel that may leak out. Place the towel in an approved container when the disconnection is complete.

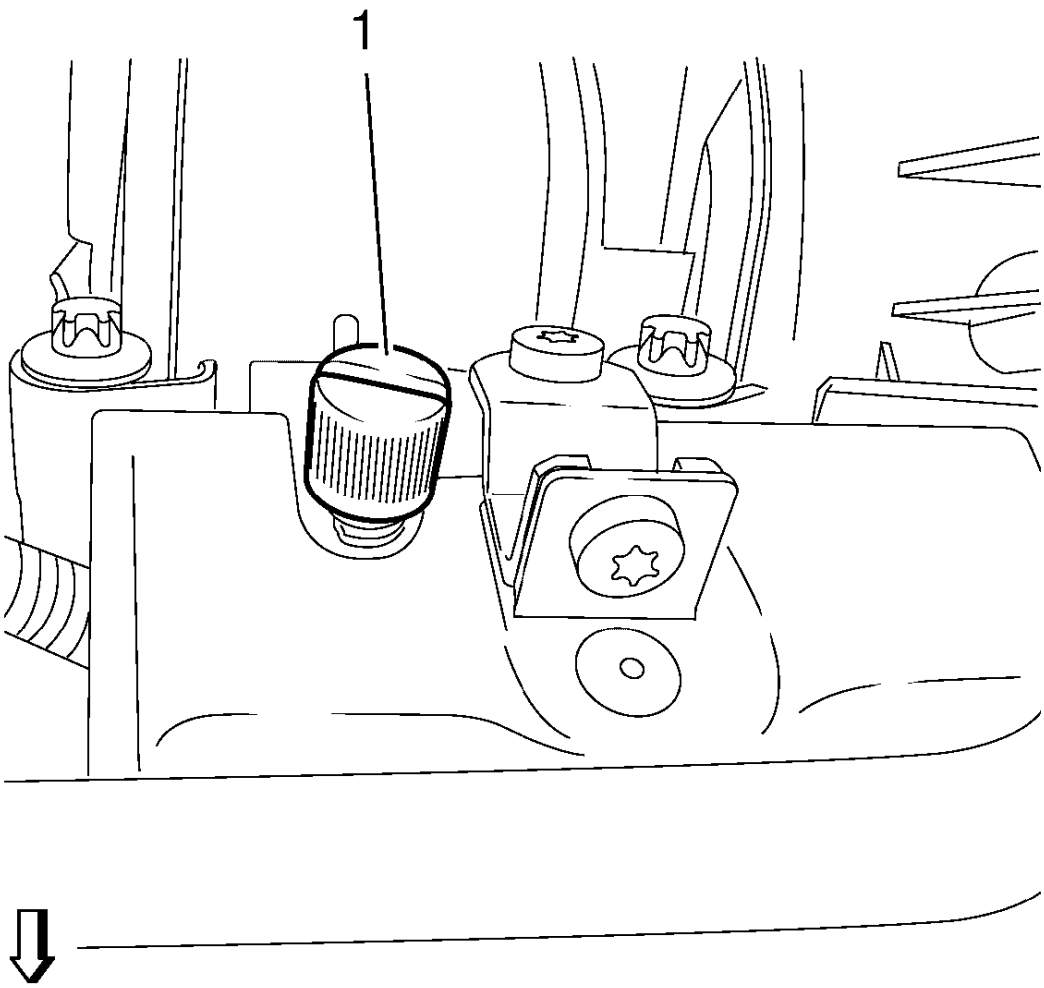

Fig. 17: Fuel Injector Rail Cap
Courtesy of GENERAL MOTORS COMPANY

1. Remove the fuel injector rail cap (1).

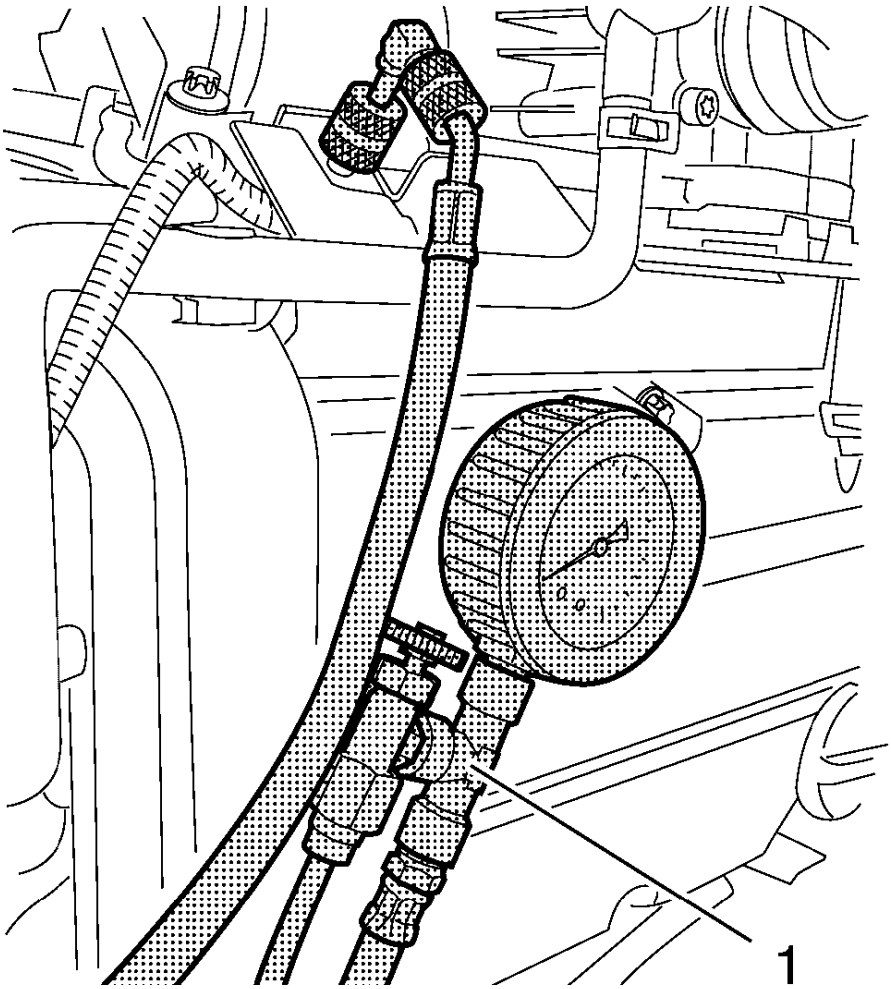

Fig. 18: Pressure Tester
Courtesy of GENERAL MOTORS COMPANY

2. Relieve the fuel pressure. Use **EN-34730-91** pressure tester (1).

FUEL TANK DRAINING

WARNING: Refer to Gasoline/Gasoline Vapors Warning .

NOTE: The fuel tank must be drained with a suitable, commercially-available fuel removal unit and suction hose - follow safety regulations and national legislation. The fuel tank is fitted with a refill limit float valve. This is located on the filler neck in the fuel tank. To prevent damaging the refill limit float valve, a suitable suction hose must be used. In the presence of fuel vapors or escaping fuel - observe safety regulations and national

legislation. Store drained fuel in a suitable, sealable container.

1. Disconnect the negative battery cable. Refer to **Battery Negative Cable Disconnection and Connection** .
2. Remove the fuel tank filler cap.
3. Insert a suitable suction hose into the fuel tank filler pipe.
4. Attach a suitable suction hose to the hose used with the hand or air operated pump devise.
5. Using a hand or air operated pump drain as much fuel from the tank as possible.

FUEL TANK REPLACEMENT

Removal Procedure

1. Open the hood.
2. Disconnect the battery. Refer to **Battery Negative Cable Disconnection and Connection** .
3. Raise and support the vehicle. Refer to **Lifting and Jacking the Vehicle** .
4. Remove the right rear tire and wheel assembly. Refer to **Tire and Wheel Removal and Installation** .
5. Remove the rear wheelhouse panel liner. Refer to **Rear Wheelhouse Liner Replacement** .
6. Drain the fuel tank. Refer to **Fuel Tank Draining**.

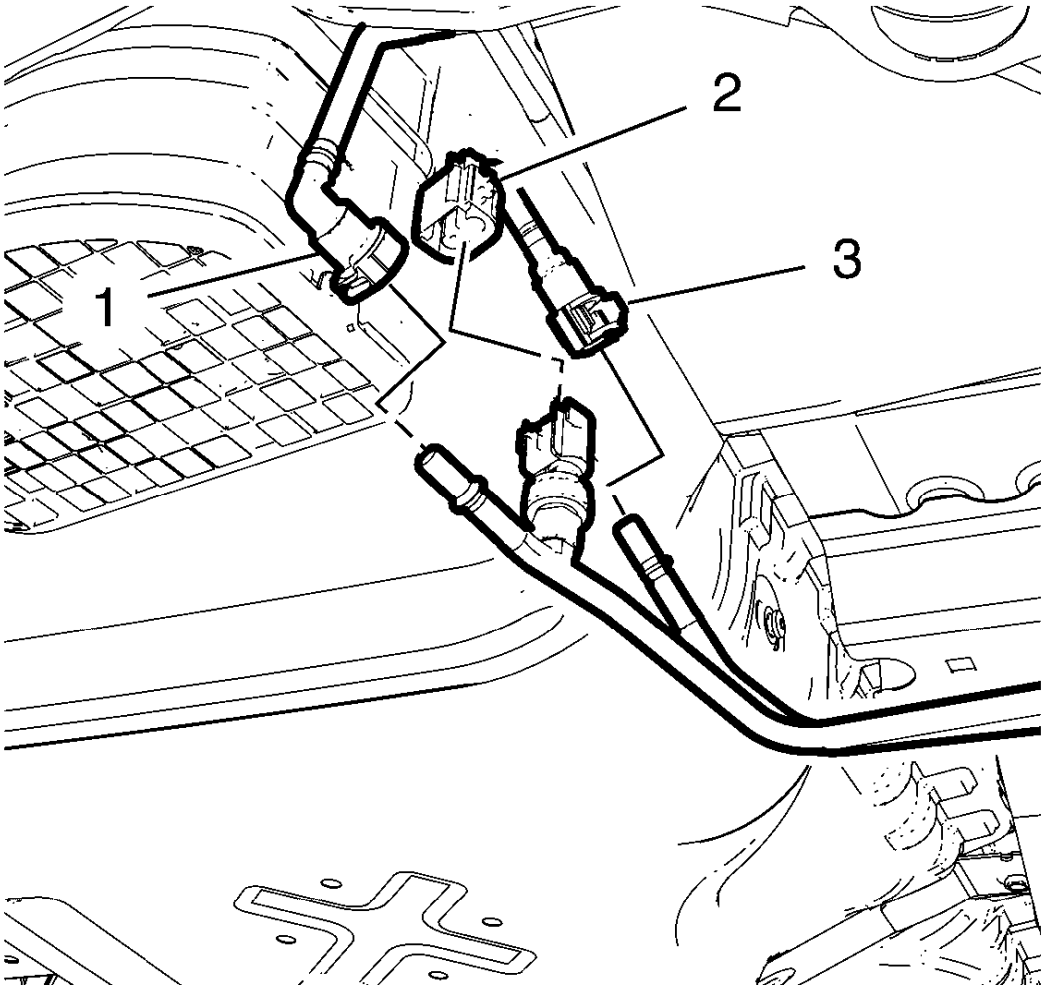

Fig. 19: Fuel Pressure Sensor Wiring Harness Plug, Fuel Tank Vent Pipe, Fuel Feed Pipe Connector And Fuel Tank Vent Pipe Connector
Courtesy of GENERAL MOTORS COMPANY

7. Disconnect the fuel pressure sensor wiring harness plug (2).
8. Disconnect the fuel feed pipe connector (1) from the fuel feed pipe. Refer to **Plastic Collar Quick Connect Fitting Service**.
9. Disconnect the fuel tank vent pipe connector (3) from the fuel tank vent pipe (3). Refer to **Plastic Collar Quick Connect Fitting Service**.
10. Install suitable caps the to the fuel pipes.

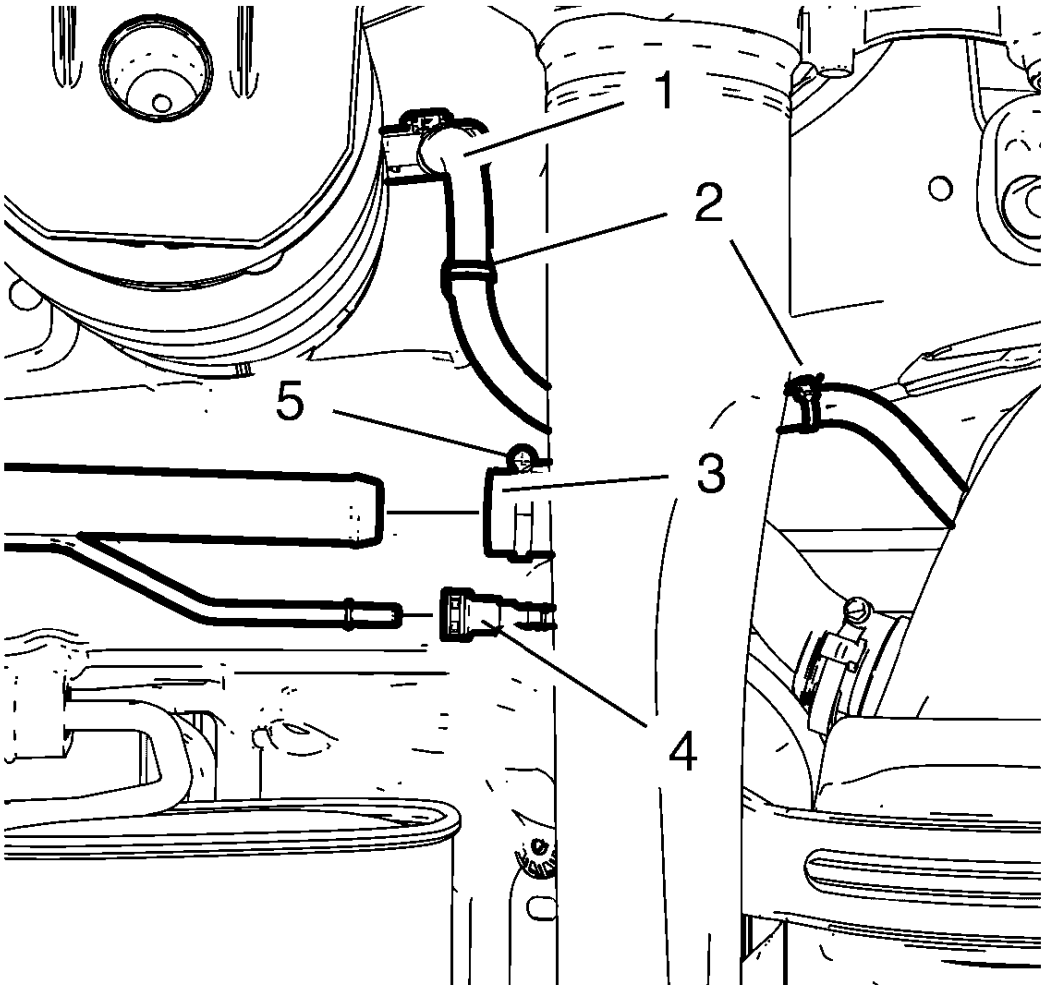

Fig. 20: Fuel Tank Wiring Harness Inline Connector
Courtesy of GENERAL MOTORS COMPANY

WARNING: Do not breathe the air through the EVAP component tubes or hoses. The fuel vapors inside the EVAP components may cause personal injury.

11. Loosen the clamp (5).
12. Remove the fuel tank filler hose (3) from the fuel tank filler pipe.
13. Disconnect the fuel tank filler vent pipe connector (4) from the fuel tank filler vent pipe. Refer to **Plastic Collar Quick Connect Fitting Service**.
14. Plug the fuel tank filler vent pipe with a suitable cap.
15. Disconnect the fuel tank wiring harness inline connector (1) and unclip the wiring harness from 2 retainer clips (2).

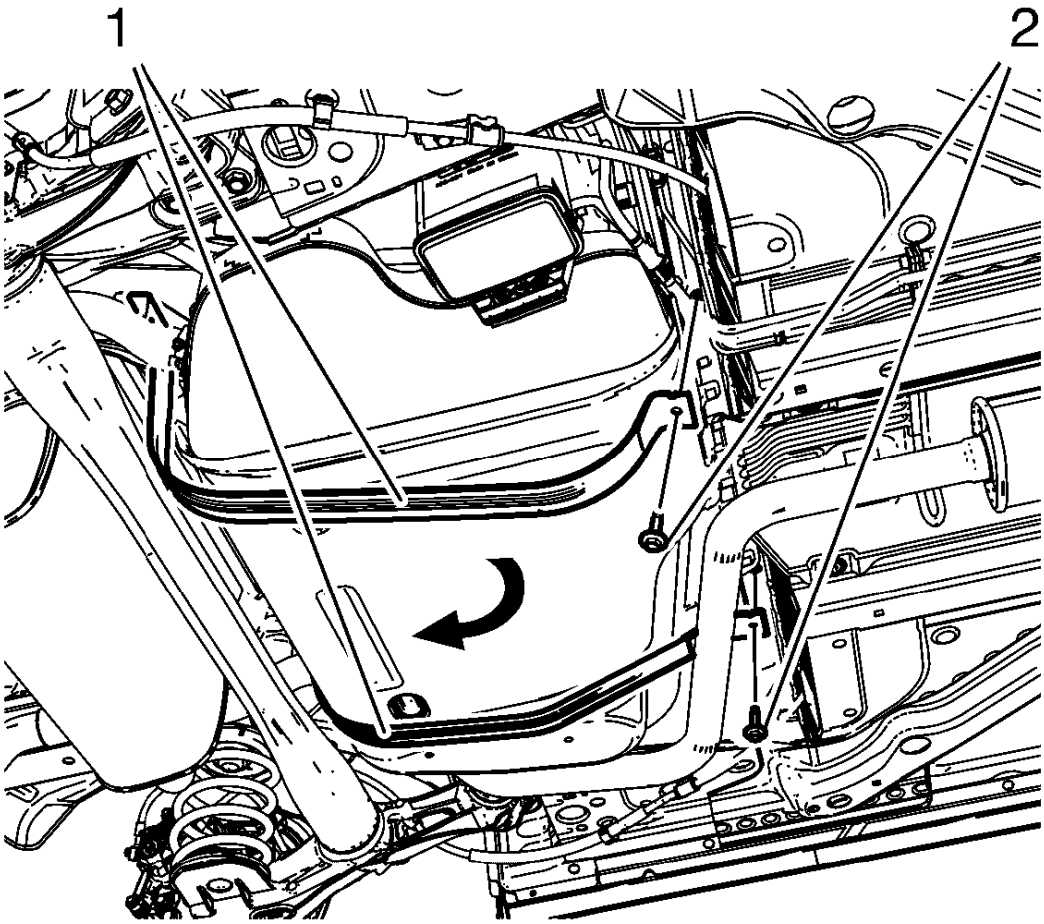

Fig. 21: Fuel Tank Straps
Courtesy of GENERAL MOTORS COMPANY

WARNING: To help avoid personal injury, always use jack stands when you are working on or under any vehicle that is supported only by a jack.

CAUTION: When you are jacking or lifting a vehicle at the frame side rails or other prescribed lift points, be certain that the lift pads do not contact the catalytic converter, the brake pipes or the fuel lines. If such contact occurs, vehicle damage or unsatisfactory vehicle performance may result.

16. Place a suitable adjustable jack under the fuel tank.
17. Remove the 2 fuel tank strap bolts (2).
18. Remove the 2 fuel tank straps (1).

NOTE: Second technician required.

NOTE: Retract the jack.

19. Remove the fuel tank.

Disassemble Procedure

1. Remove the fuel tank fuel pump module. Refer to **Fuel Tank Fuel Pump Module Replacement**.

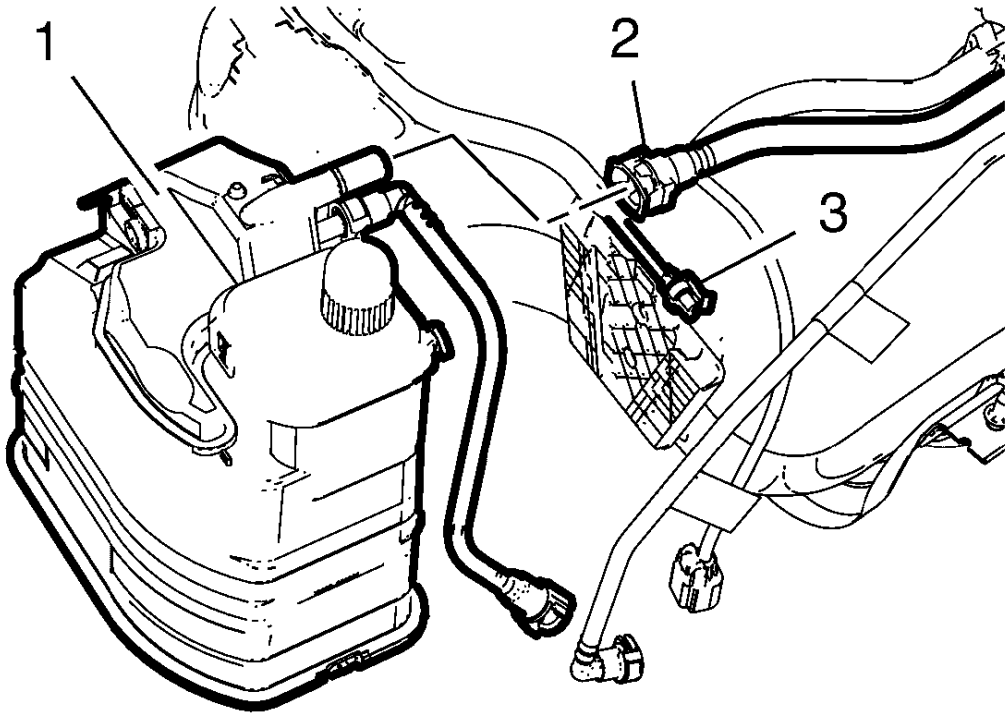

Fig. 22: Evaporative Emission Canister
Courtesy of GENERAL MOTORS COMPANY

WARNING: Always wear safety goggles when working with fuel in order to protect the eyes from fuel splash.

2. Disconnect the fuel tank vent pipe (2).
3. Disconnect the evaporative emission canister wiring harness plug (3).
4. Remove the evaporative emission canister (1) from the evaporative emission canister bracket by releasing tab and lifting it upwards.
5. Remove the fuel tank baffles. Refer to **Fuel Tank Baffle Replacement**.

Assemble Procedure

1. Install the fuel tank baffles. Refer to **Fuel Tank Baffle Replacement**.

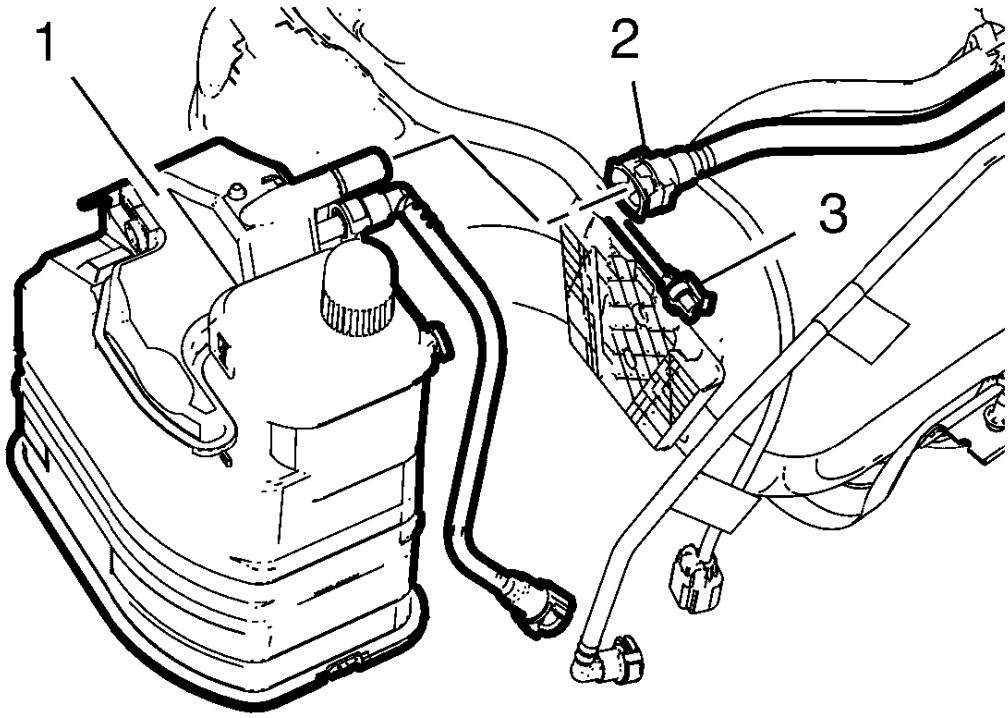

Fig. 23: Evaporative Emission Canister
Courtesy of GENERAL MOTORS COMPANY

2. Install the evaporative emission canister (1) to the evaporative emission canister bracket.
3. Connect the evaporative emission canister wiring harness plug (3).
4. Connect the fuel tank vent pipe (2).

5. Install the fuel tank fuel pump module. Refer to **Fuel Tank Fuel Pump Module Replacement**.

Installation Procedure

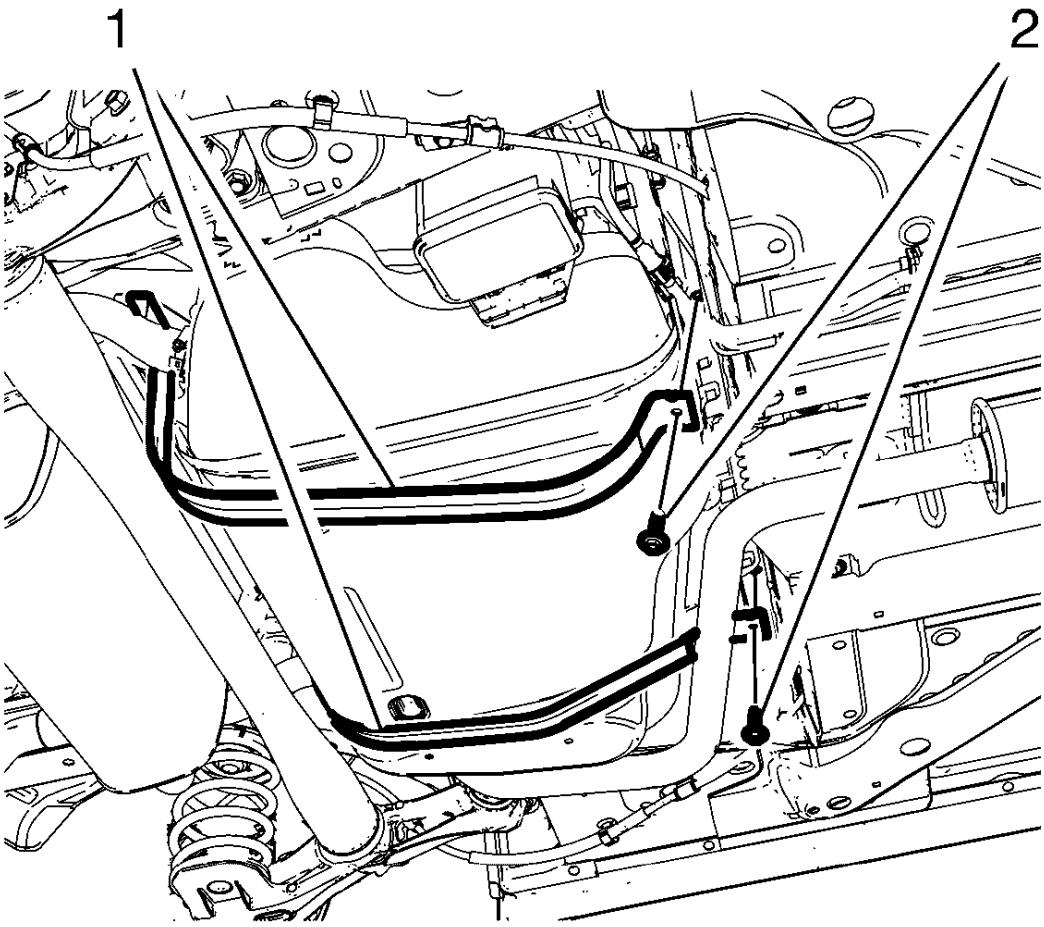

Fig. 24: Fuel Tank Straps
Courtesy of GENERAL MOTORS COMPANY

NOTE: Second technician required.

NOTE: Extend the jack.

1. Install the fuel tank.
2. Install the 2 fuel tank straps (1).

CAUTION: Refer to Fastener Caution .

3. Install the 2 fuel tank strap bolts (2) and tighten to 22 N.m (16 lb ft).

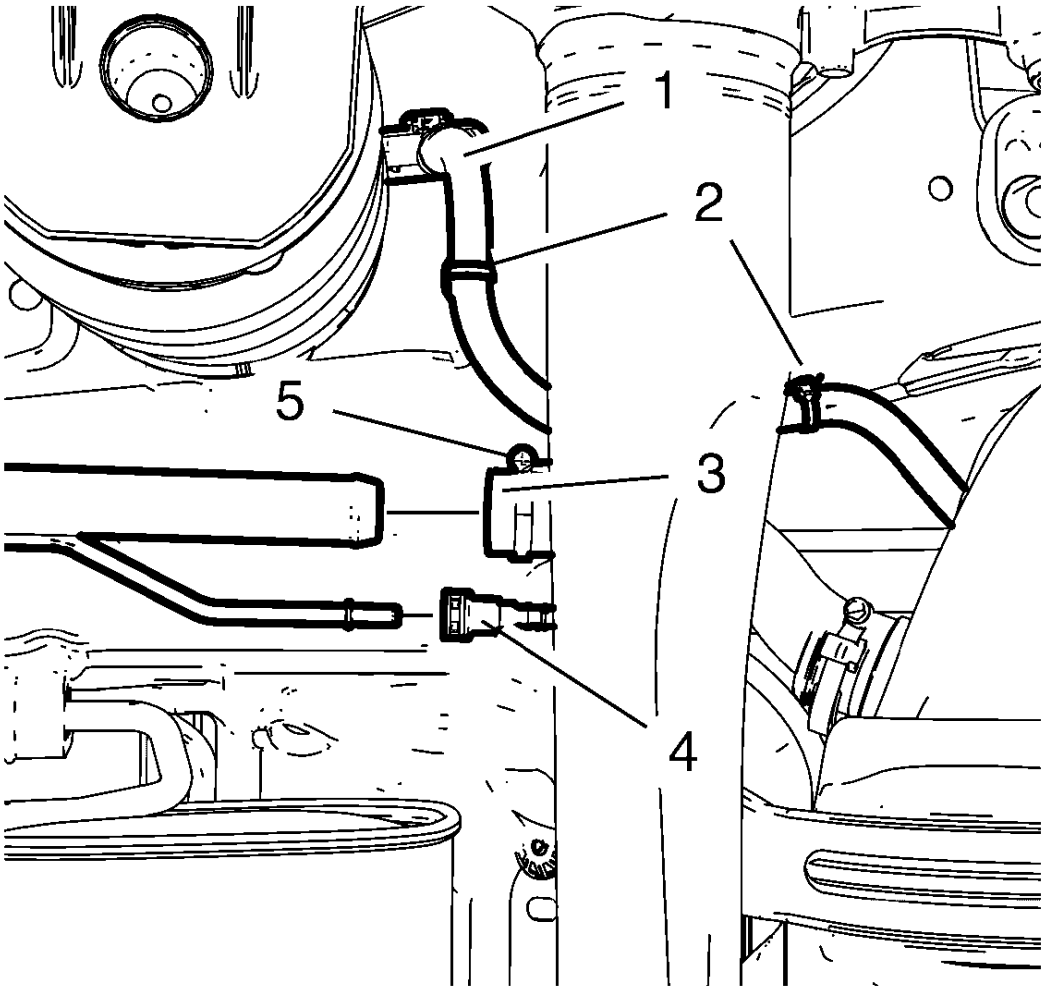

Fig. 25: Fuel Tank Wiring Harness Inline Connector
Courtesy of GENERAL MOTORS COMPANY

4. Install the fuel tank filler hose (3) to the fuel tank filler pipe.
5. Tighten the clamp (5).
6. Connect the fuel tank filler vent pipe connector (4) to the fuel tank filler vent pipe. Refer to **Plastic Collar Quick Connect Fitting Service**.
7. Connect the fuel tank wiring harness inline connector (1) and clip in the wiring harness to 2 retainer clips (2).

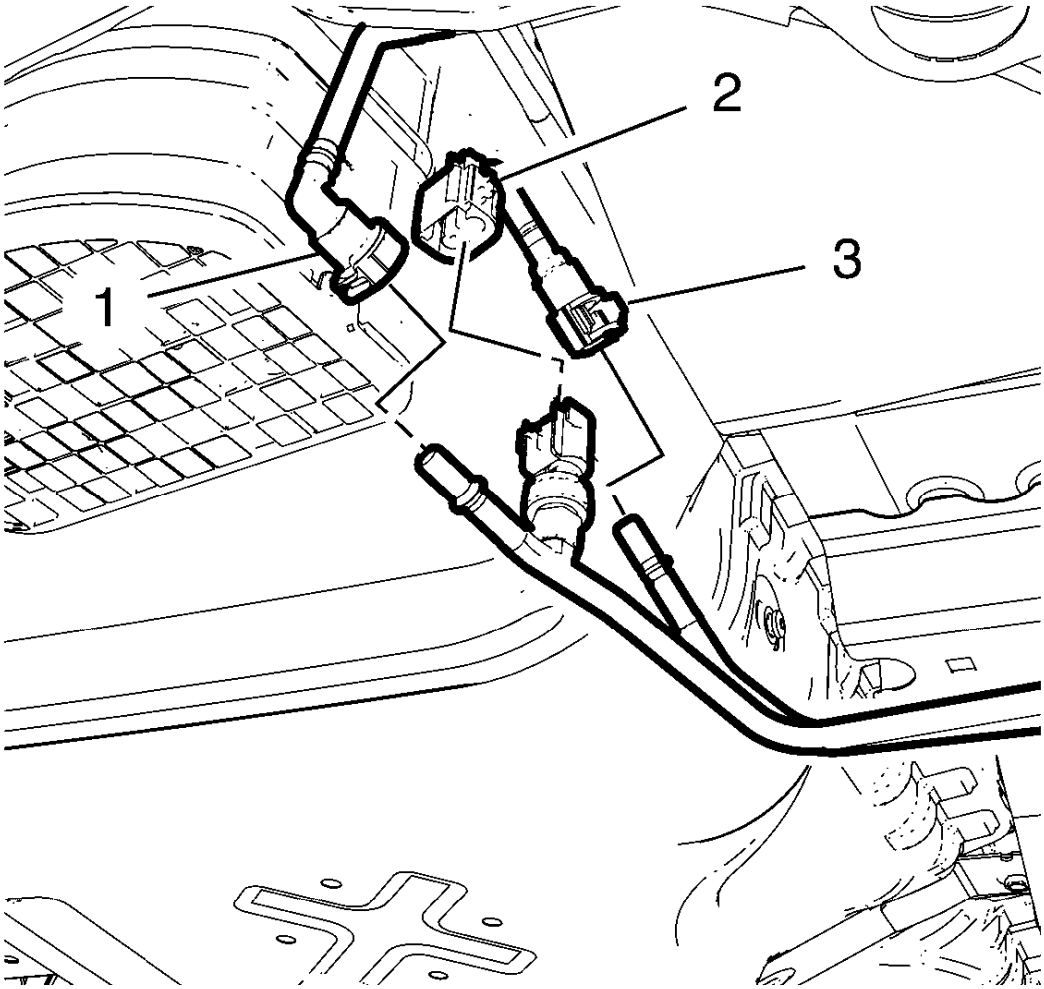

Fig. 26: Fuel Pressure Sensor Wiring Harness Plug, Fuel Tank Vent Pipe, Fuel Feed Pipe Connector And Fuel Tank Vent Pipe Connector
Courtesy of GENERAL MOTORS COMPANY

8. Connect the fuel tank vent pipe connector (3) to the fuel tank vent pipe (3). Refer to **Plastic Collar Quick Connect Fitting Service**.
9. Connect the fuel feed pipe connector (1) to the fuel feed pipe. Refer to **Plastic Collar Quick Connect Fitting Service**.
10. Connect the fuel pressure sensor wiring harness plug (2).
11. Install the rear wheel house panel liner. Refer to **Rear Wheelhouse Liner Replacement** .
12. Install the right rear tire and wheel assembly. Refer to **Tire and Wheel Removal and Installation** .
13. Lower the vehicle.
14. Connect the battery. Refer to **Battery Negative Cable Disconnection and Connection** .

FUEL TANK BAFFLE REPLACEMENT

Removal Procedure

WARNING: Refer to Fuel Vapors in Evaporative Emission Components Warning .

WARNING: Refer to Gasoline/Gasoline Vapors Warning .

WARNING: Refer to Safety Goggles and Fuel Warning .

1. Remove the fuel tank. Refer to **Fuel Tank Replacement**.
2. Place the fuel tank onto a workbench.
3. Remove the fuel tank fuel pump module. Refer to **Fuel Tank Fuel Pump Module Replacement**.

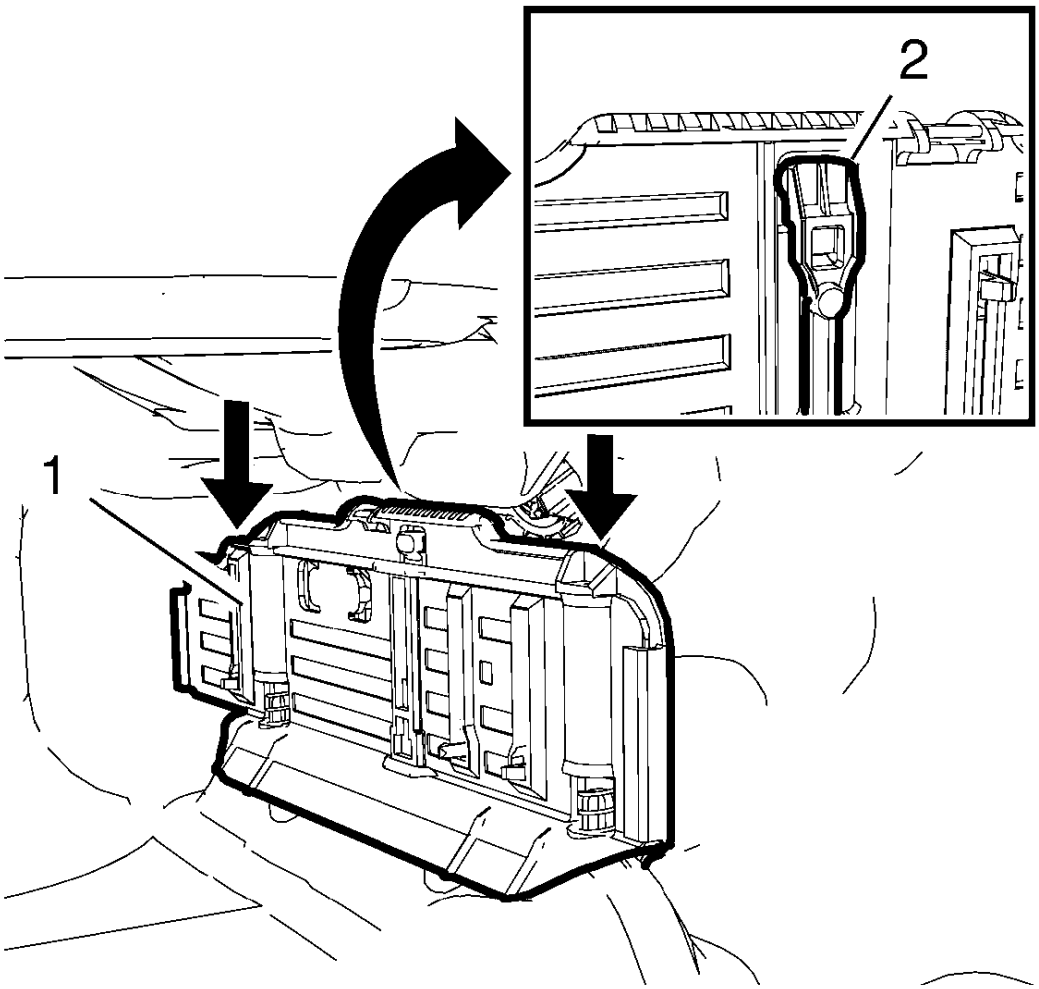

Fig. 27: Fuel Tank Baffle And Lug
Courtesy of GENERAL MOTORS COMPANY

4. Press the fuel tank baffle (1) completely down as shown in the picture.
5. Push the lug (2) toward the baffle and hold it.
6. Release tension from the fuel tank baffle (1) until the lug (2) engages safely.

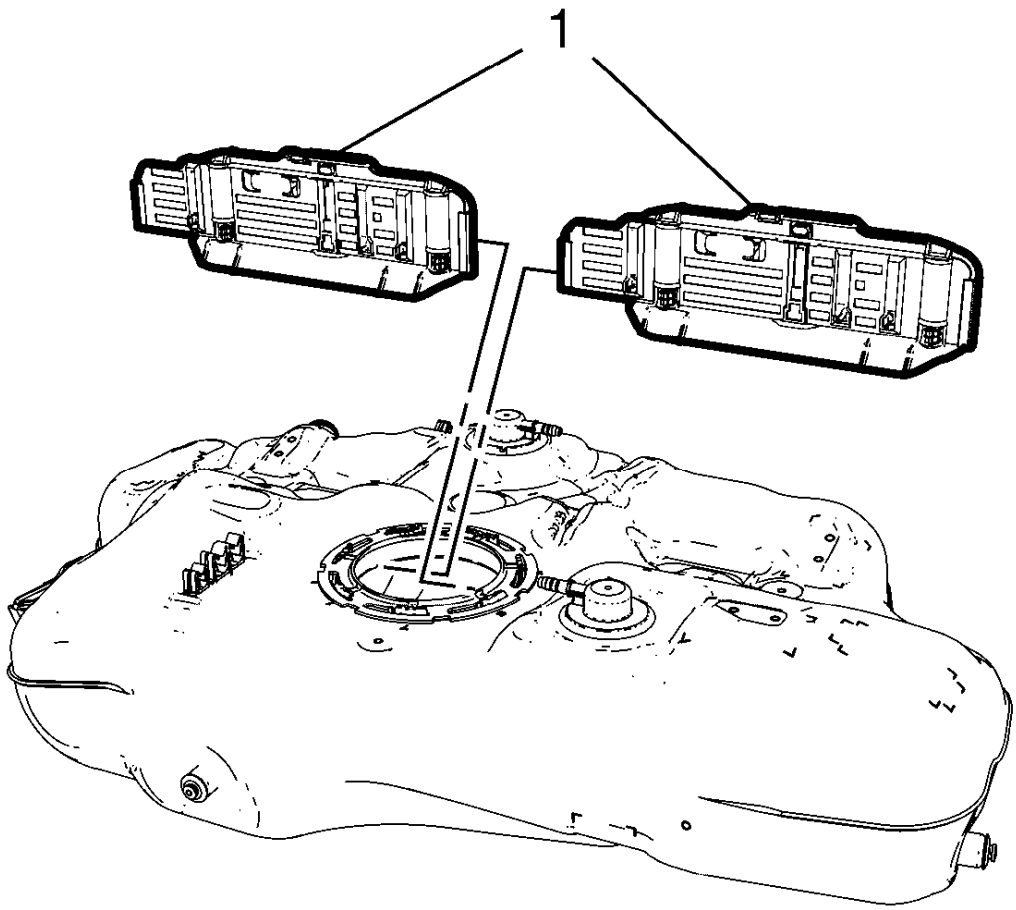

Fig. 28: Fuel Tank Baffles
Courtesy of GENERAL MOTORS COMPANY

7. Remove the baffles (1) one by one.
8. Repeat steps 5 to 8 to remove the other baffle.

Installation Procedure

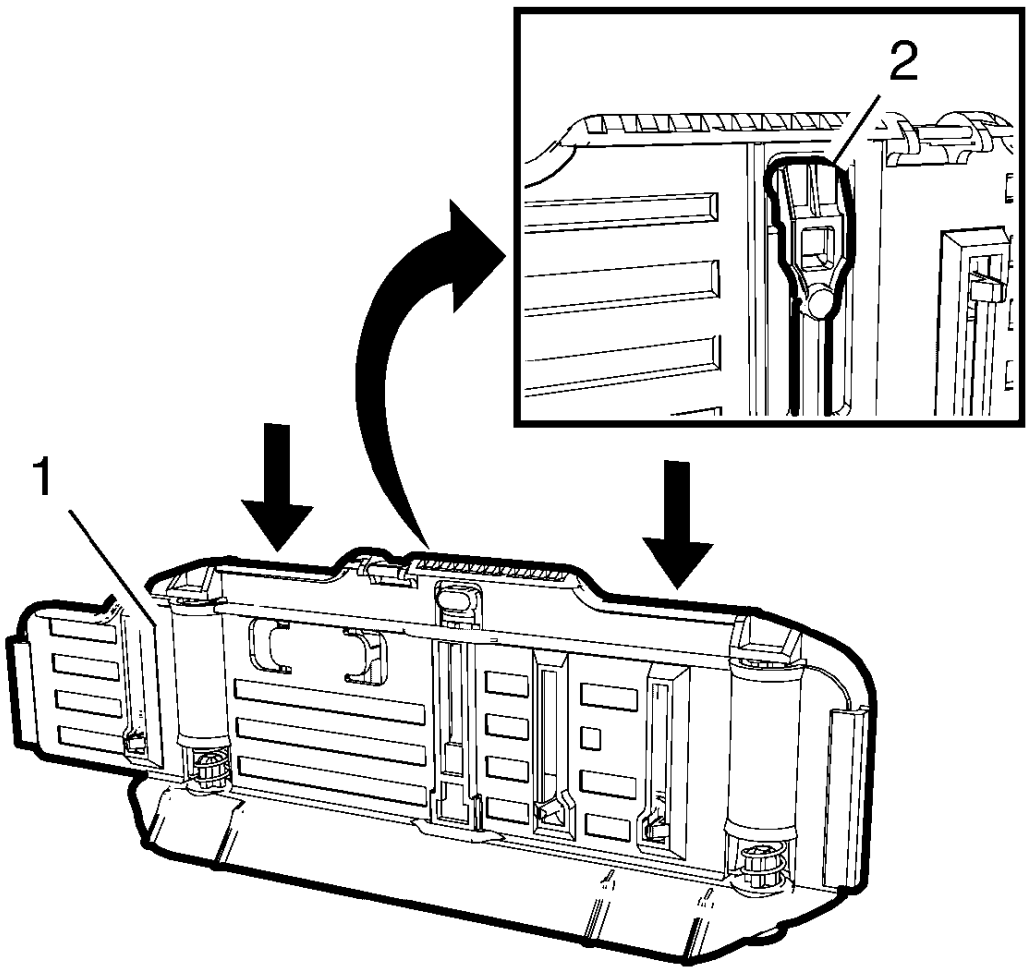

Fig. 29: Fuel Tank Baffle And Lugs
Courtesy of GENERAL MOTORS COMPANY

NOTE: Perform the steps 1-3 only when the fuel tank baffles are not transferred from the OLD to the NEW tank.

1. Tension the fuel tank baffle (1) completely by pressing it down.
2. Push the lug (2) toward the baffle and hold it.
3. Release tension from the fuel tank baffle (1) until the lug (2) engages safely.

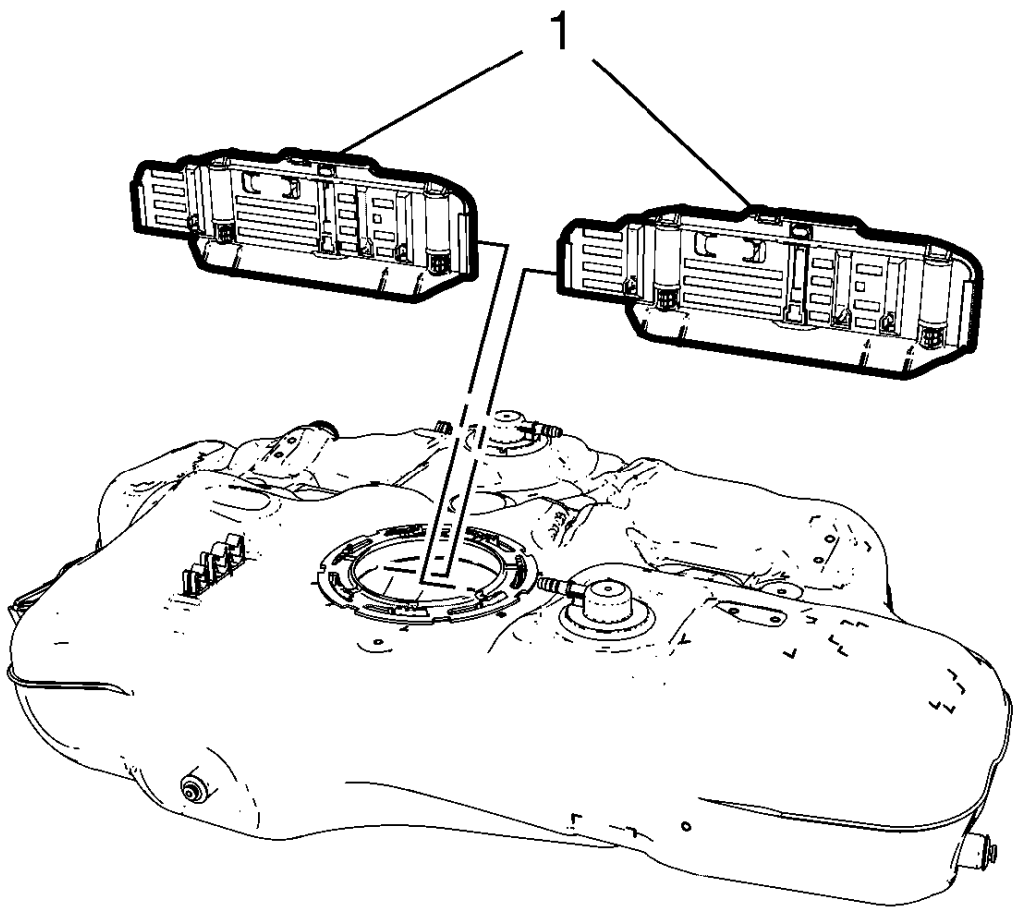

Fig. 30: Fuel Tank Baffles
Courtesy of GENERAL MOTORS COMPANY

4. Install the baffles (1) one by one.

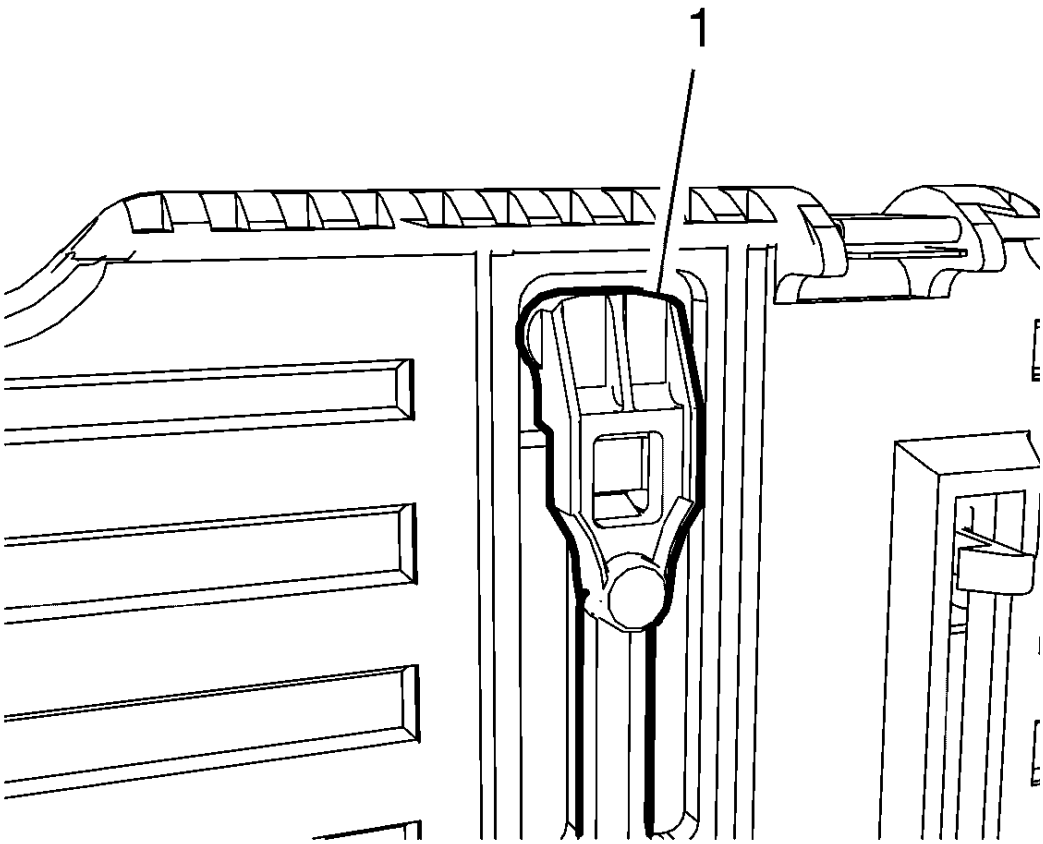

Fig. 31: Fuel Tank Baffle Lug
Courtesy of GENERAL MOTORS COMPANY

5. Press the fuel tank baffle together until the lug (1) becomes unlocked.
6. Release tension slowly from the fuel tank baffle and let the baffle engage safely in the installation site.

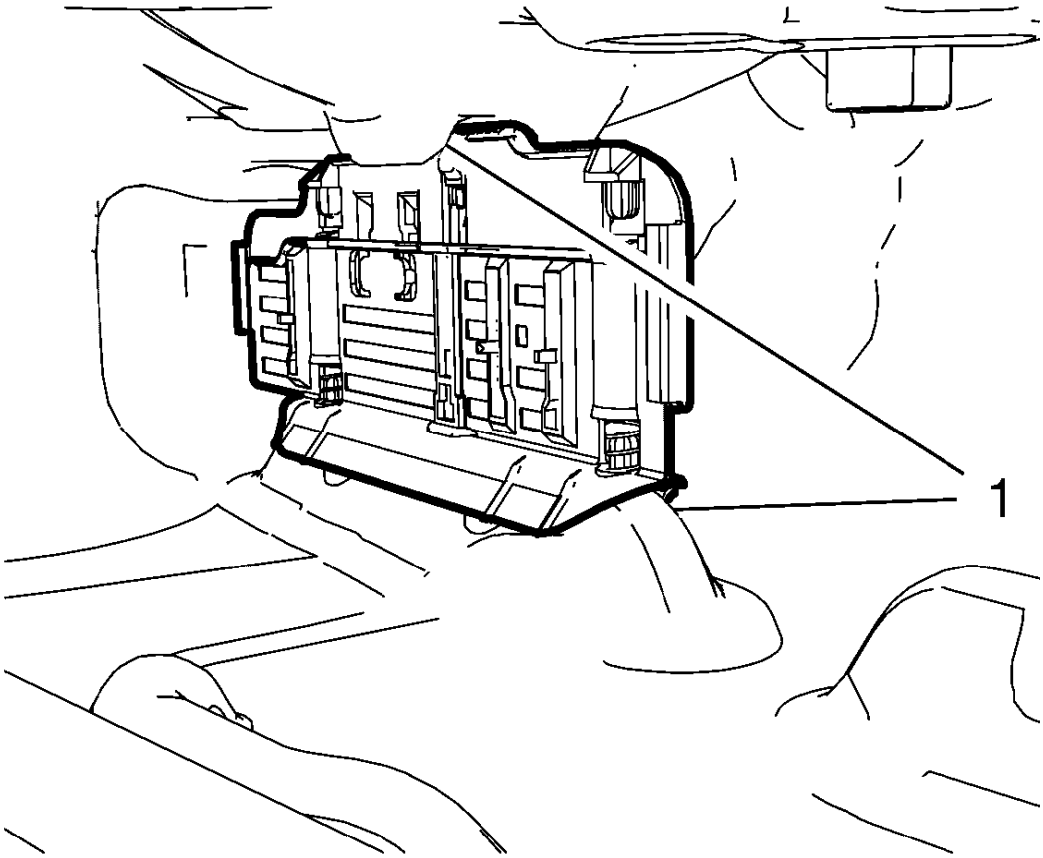

Fig. 32: Fuel Tank Installation Sites
Courtesy of GENERAL MOTORS COMPANY

7. Check the proper seat of the fuel tank baffle at the fuel tank installation sites (1). Use a mirror if necessary.
8. Repeat steps 1 to 7 to install the other baffle.
9. Install the fuel tank fuel pump module. Refer to **Fuel Tank Fuel Pump Module Replacement**.
10. Install the fuel tank. Refer to **Fuel Tank Replacement**.

FUEL TANK FILLER PIPE REPLACEMENT

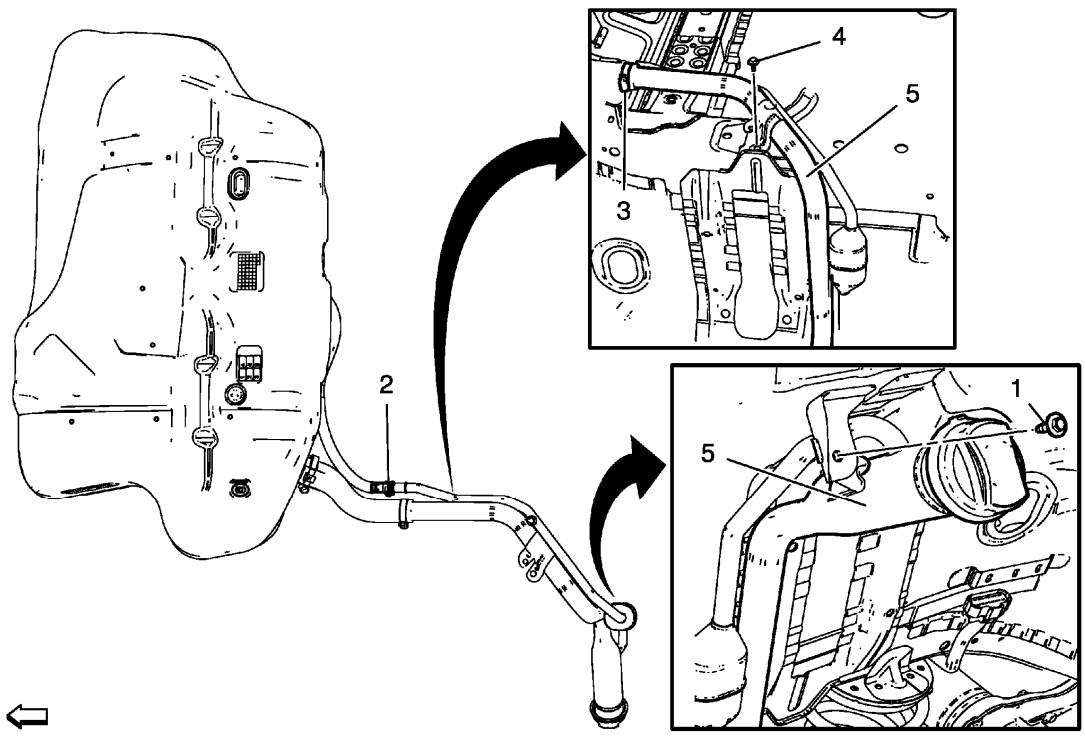

Fig. 33: Fuel Tank Filler Pipe
Courtesy of GENERAL MOTORS COMPANY

Fuel Tank Filler Pipe Replacement

Callout	Component Name
WARNING: **Gasoline or gasoline vapors are highly flammable. A fire could occur if an ignition source is present. Never drain or store gasoline or diesel fuel in an open container, due to the possibility of fire or explosion. Have a dry chemical (Class B) fire extinguisher nearby.** **Preliminary Procedure** 1. Disconnect battery negative cable. Refer to **Battery Negative Cable Disconnection and Connection** . 2. Remove the fuel tank filler pipe housing. Refer to **Fuel Tank Filler Pipe Housing Replacement** . 3. Drain the fuel tank. Refer to **Fuel Tank Draining**.	
1	Fuel Tank Filler Pipe Bracket Bolt **CAUTION:** **Refer to Fastener Caution .** **Tighten** 9 N.m (80 lb in)

2	Lower Recirculation Tube Quick Release Fitting
3	Fuel Tank Filler Pipe Clamp
4	Fuel Tank Filler Pipe Ground Bolt **Tighten** 9 N.m (80 lb in)
5	Fuel Tank Filler Pipe

FUEL FEED PIPE REPLACEMENT

Removal Procedure

WARNING: Refer to Gasoline/Gasoline Vapors Warning .

1. Open the hood.
2. Disconnect the battery negative cable. Refer to **Battery Negative Cable Disconnection and Connection** .
3. Relieve the fuel pressure. Refer to **Fuel Pressure Relief**.

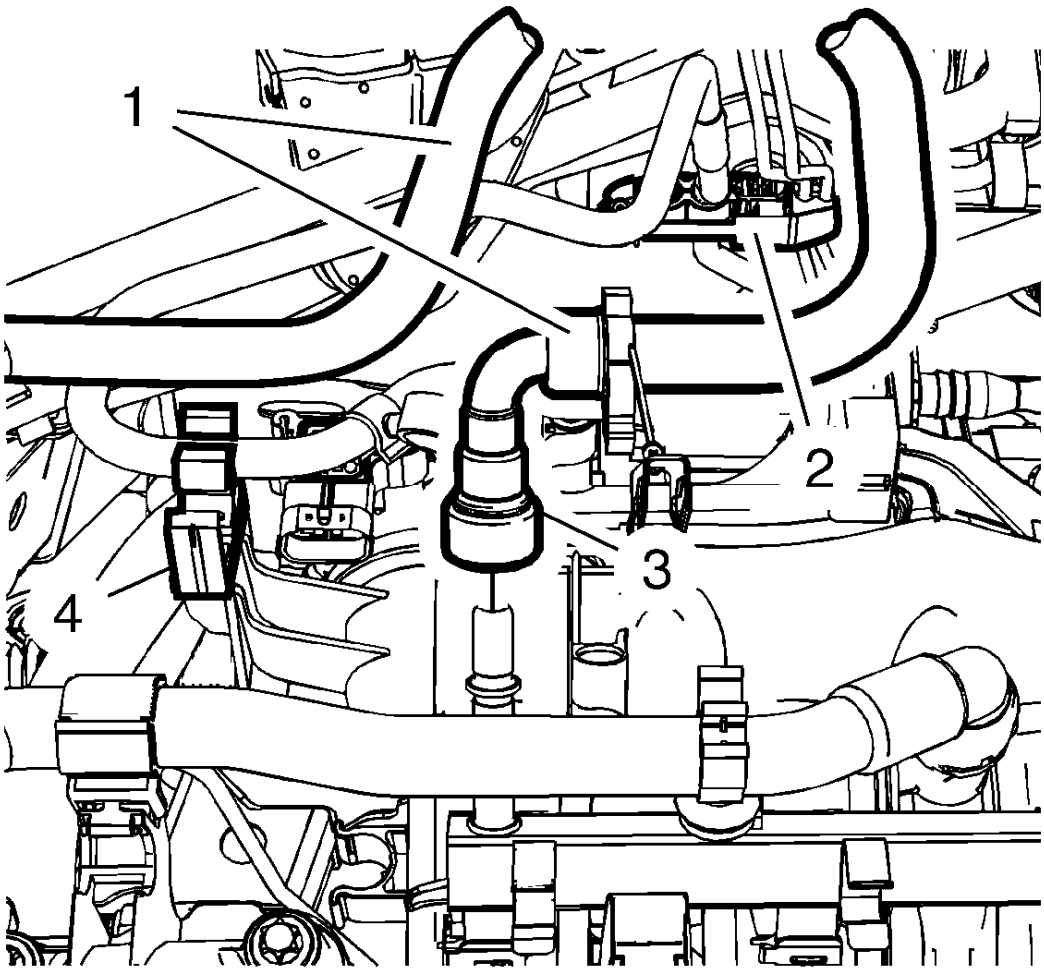

Fig. 34: Fuel Feed Pipe
Courtesy of GENERAL MOTORS COMPANY

4. Disconnect the fuel feed pipe connector (3) from fuel injector rail. Refer to **Metal Collar Quick Connect Fitting Service**.
5. Unclip the fuel feed pipe (1) from the retainer clip (4).
6. Close the fuel feed pipe connector with a suitable cap.
7. Unclip the fuel feed pipe from the bulk head retainer clip (2).
8. Raise and support the vehicle. Refer to **Lifting and Jacking the Vehicle** .

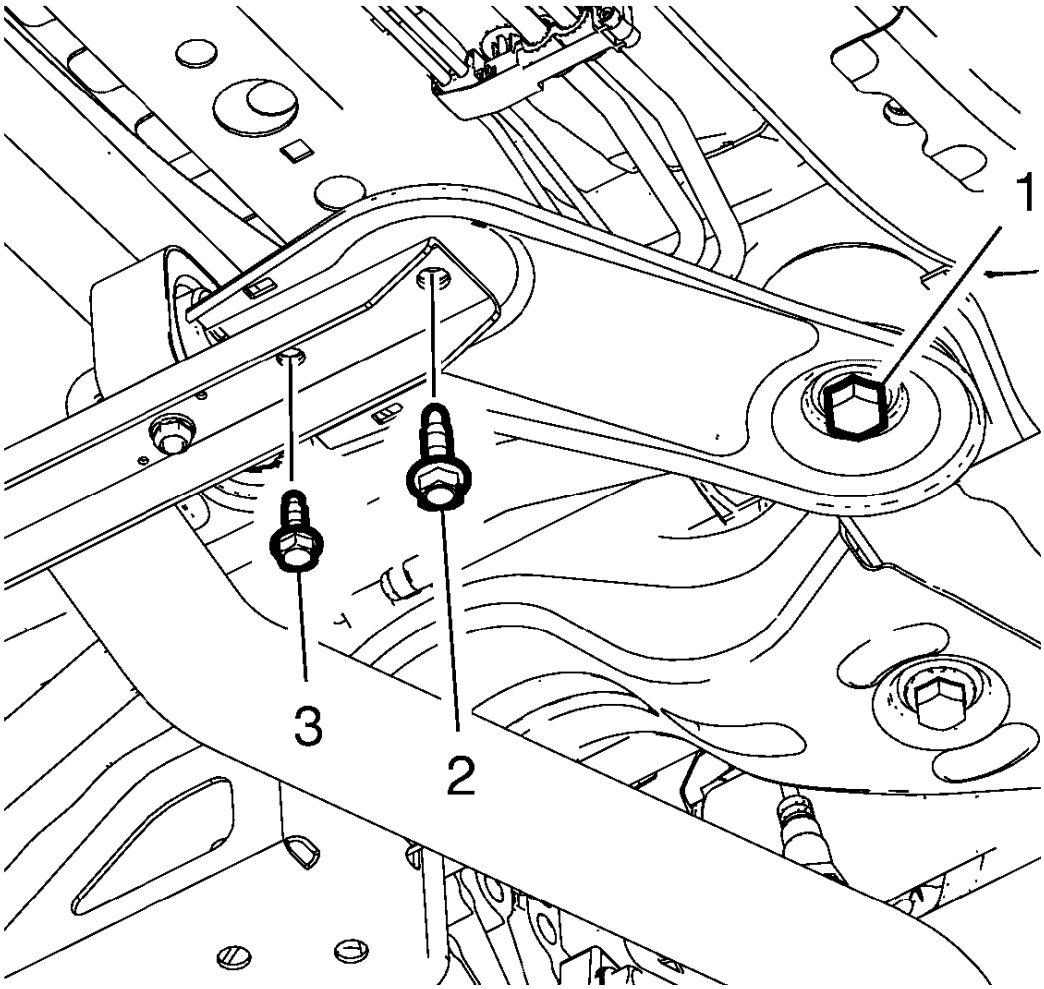

Fig. 35: Front Exhaust Hanger Bracket And Bolt
Courtesy of GENERAL MOTORS COMPANY

9. Remove and DISCARD the exhaust front hanger bracket bolt (3).
10. Remove and DISCARD the frame reinforcement bolt (2).
11. Loosen the drivetrain and front suspension frame bolt (1).

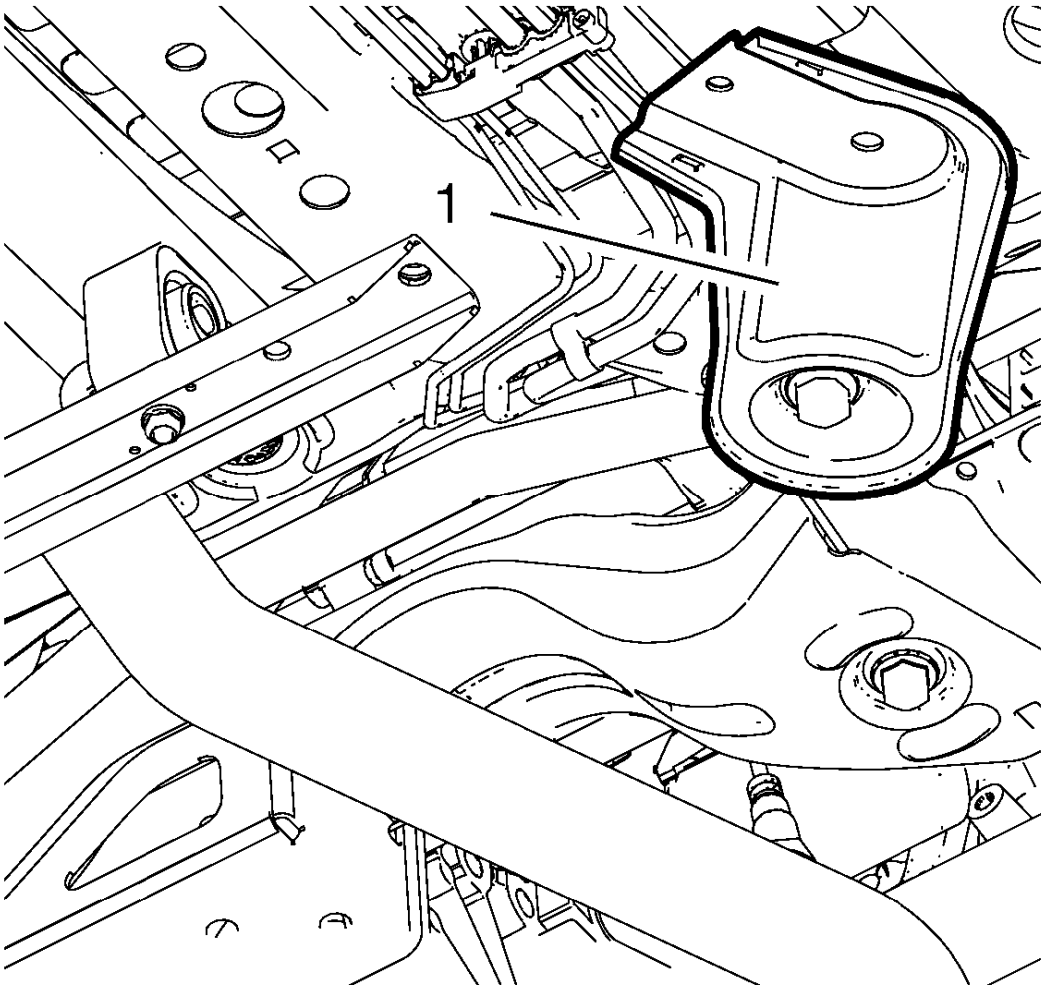

Fig. 36: Right Frame Reinforcement
Courtesy of GENERAL MOTORS COMPANY

12. Rotate the right frame reinforcement (1) to a position shown to get access to the fuel pipes.

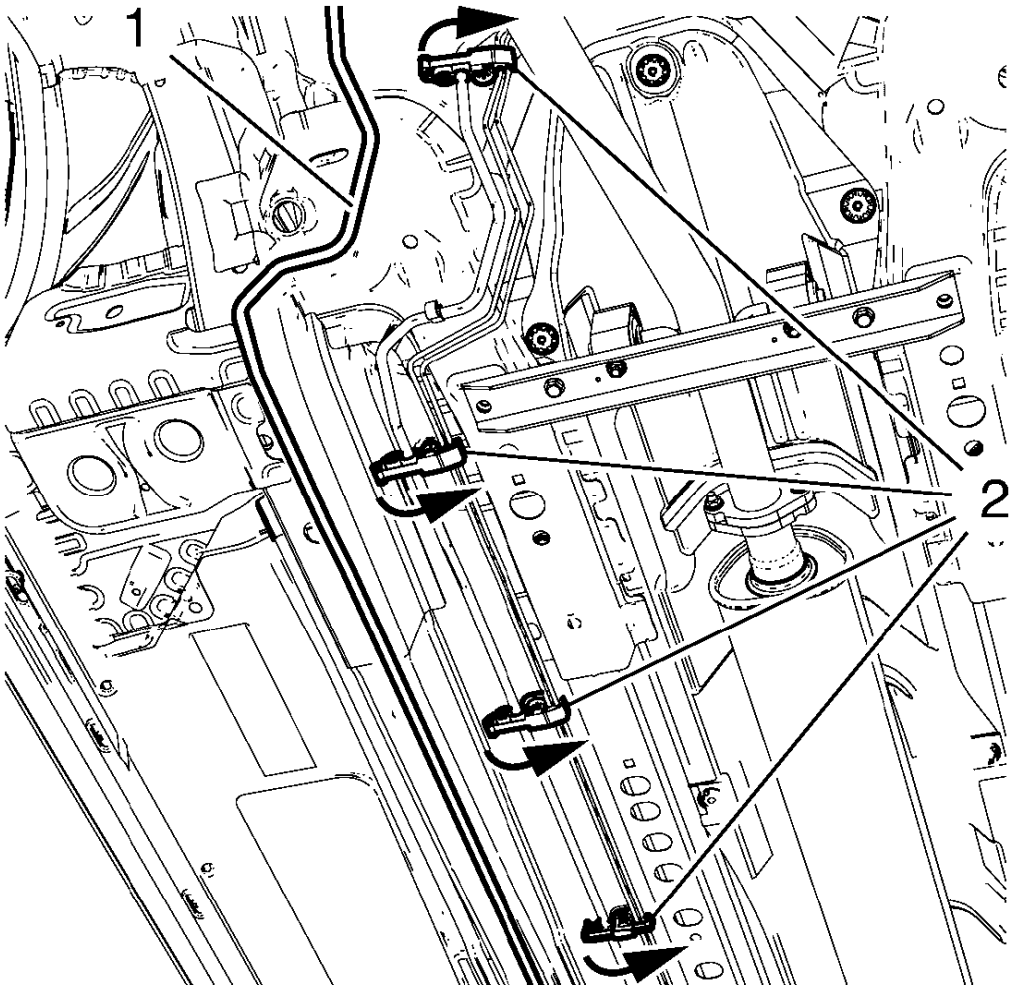

Fig. 37: Fuel Feed Pipe And Clips
Courtesy of GENERAL MOTORS COMPANY

13. Open the 4 fuel pipe clips (2).
14. Remove the fuel feed pipe (1) from lower bulkhead and underbody.

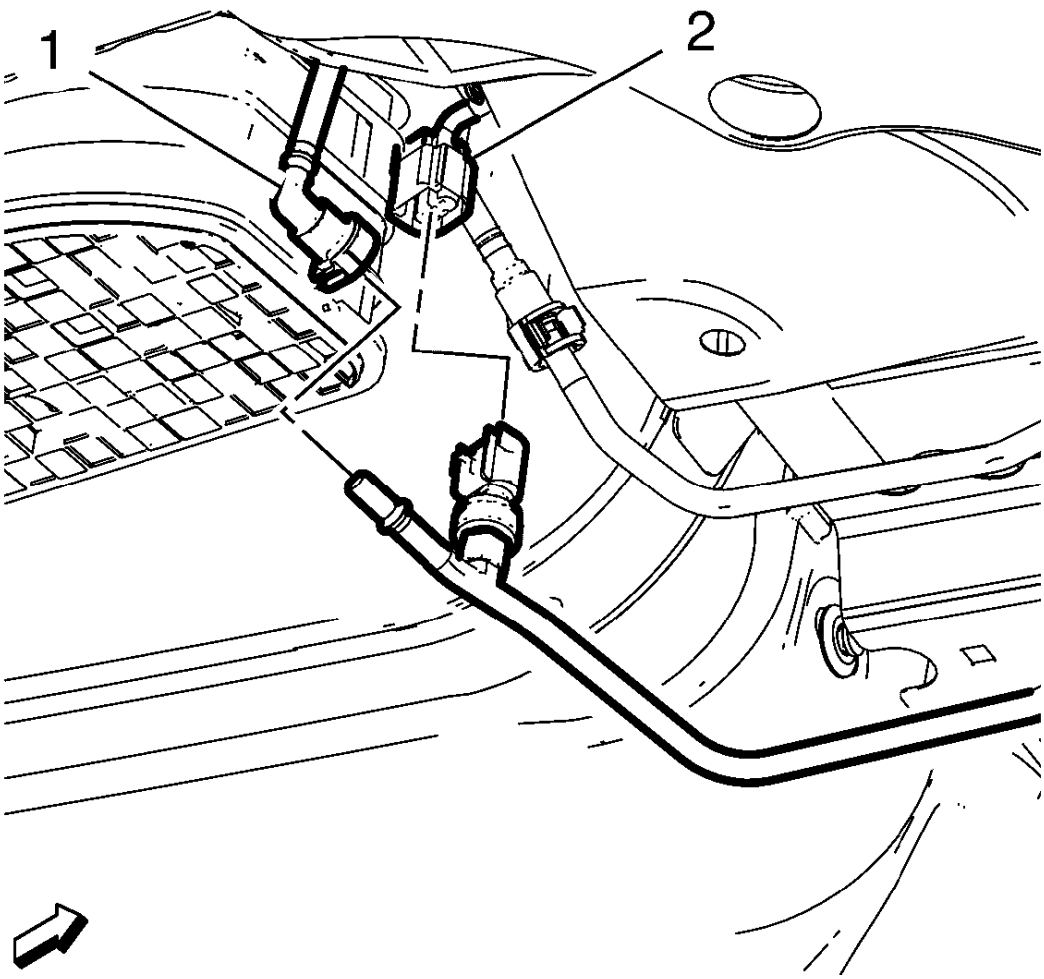

Fig. 38: Fuel Tank Feed Pipe Connector
Courtesy of GENERAL MOTORS COMPANY

15. Disconnect the fuel tank feed pipe connector (1) from the fuel feed pipe. Refer to **Plastic Collar Quick Connect Fitting Service**.
16. Close the fuel feed pipe and fuel tank feed pipe with suitable caps.
17. Disconnect the fuel pressure sensor wiring harness plug (2).
18. Open the rear fuel pipe clip and remove the fuel feed pipe.

Installation Procedure

1. Remove the caps from fuel feed tank pipe and fuel feed pipe.

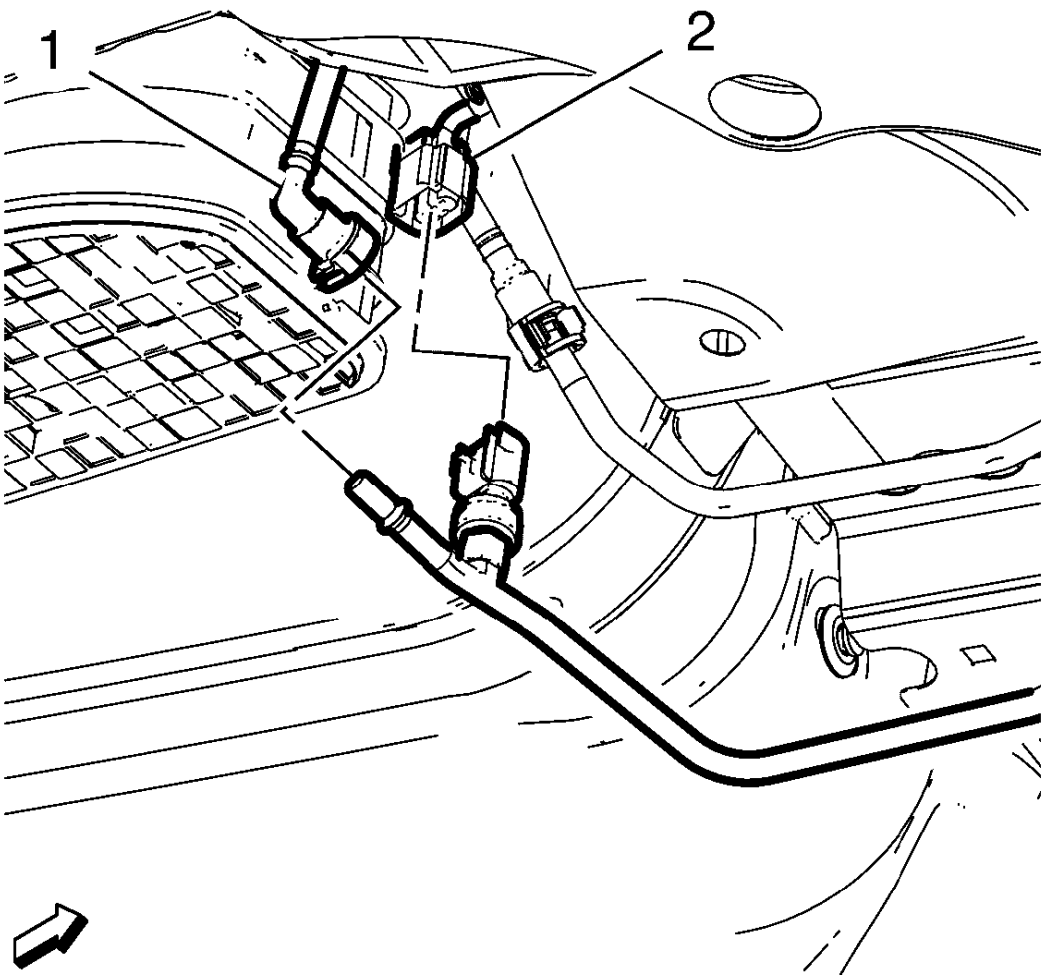

Fig. 39: Fuel Tank Feed Pipe Connector
Courtesy of GENERAL MOTORS COMPANY

2. Install the fuel feed pipe and secure with the rear fuel pipe clip.
3. Connect the fuel tank feed pipe connector (1) to the fuel feed pipe. Refer to **Plastic Collar Quick Connect Fitting Service**.
4. Connect the fuel pressure sensor wiring harness plug (2).

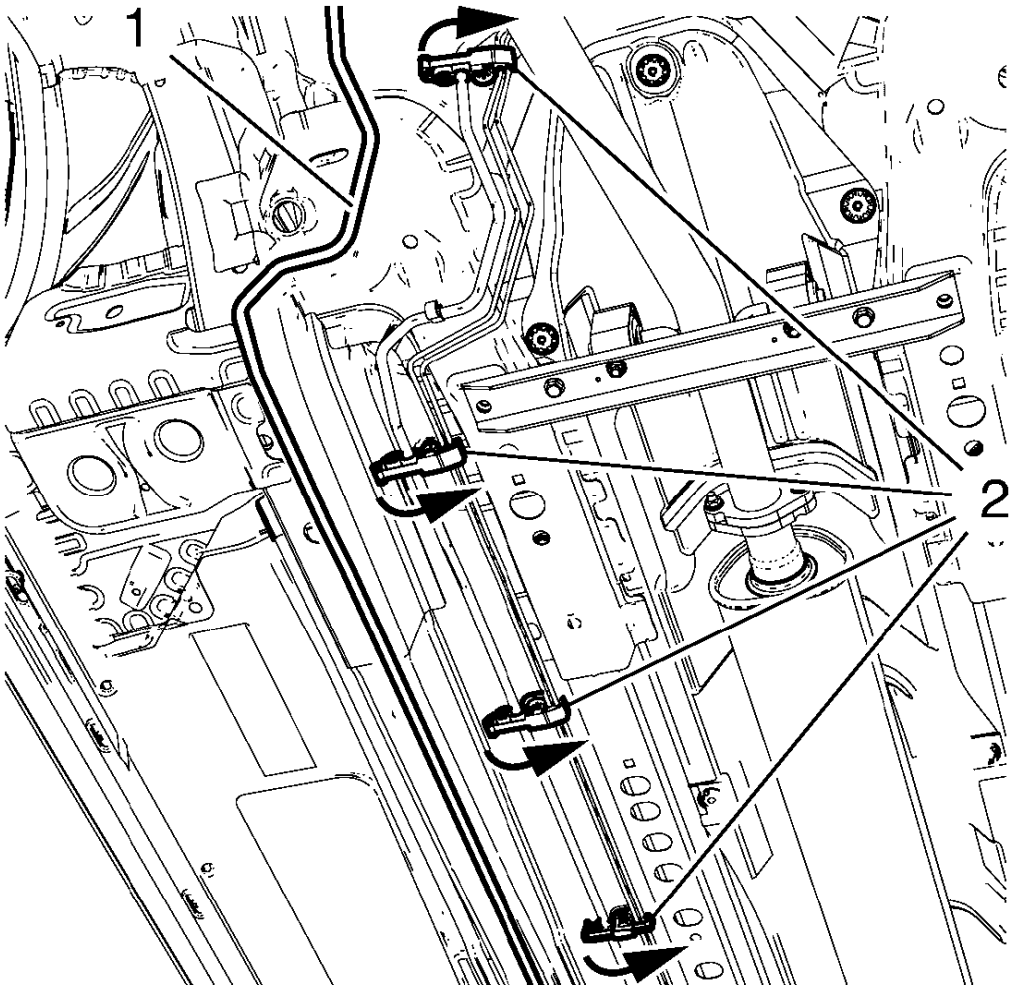

Fig. 40: Fuel Feed Pipe And Clips
Courtesy of GENERAL MOTORS COMPANY

5. Install the fuel feed pipe (1) to lower bulkhead and underbody.
6. Close the 4 fuel pipe clips (2).

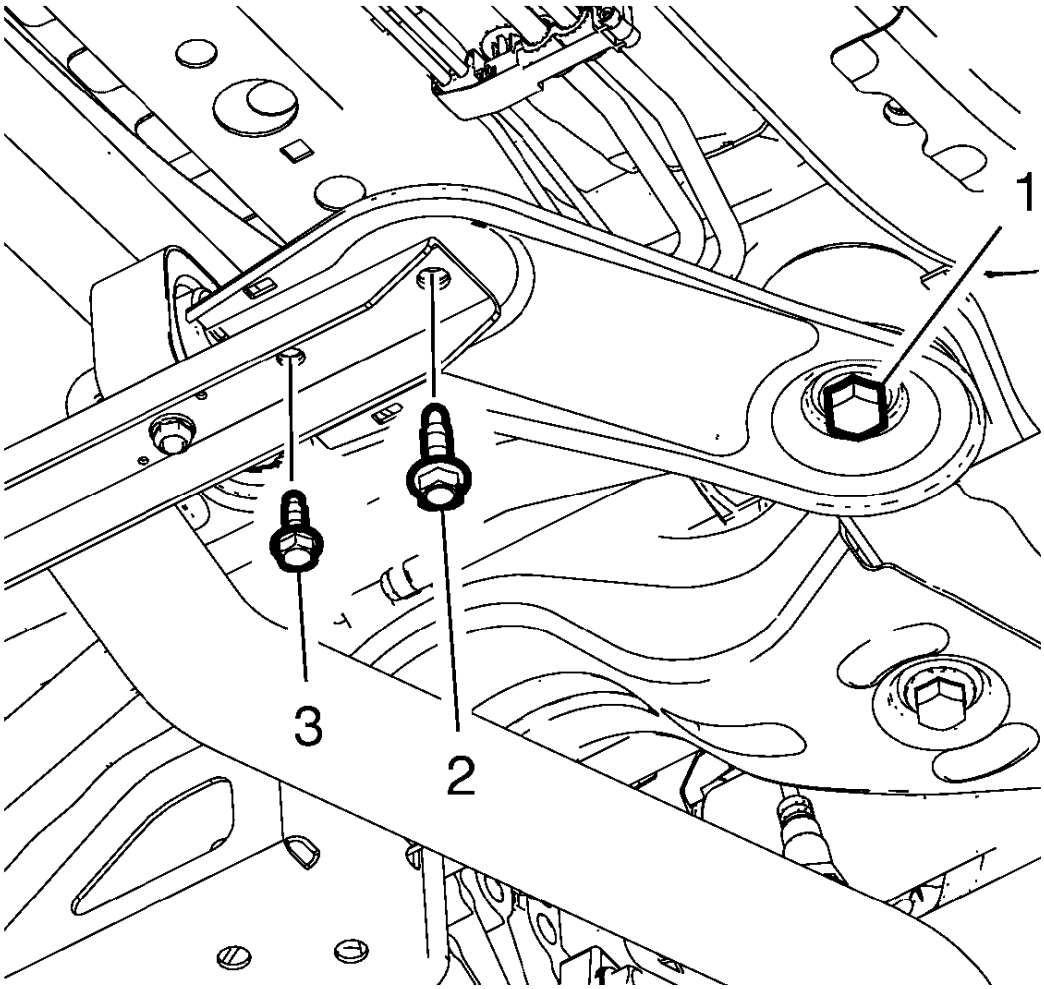

Fig. 41: Front Exhaust Hanger Bracket And Bolt
Courtesy of GENERAL MOTORS COMPANY

7. Rotate the right frame reinforcement to its original position.
8. Install the exhaust front hanger bracket bolts (3).
9. Install the frame reinforcement bolt (2).

CAUTION: Refer to Fastener Caution .

CAUTION: Refer to Torque-to-Yield Fastener Caution .

10. Tighten the NEW exhaust front hanger bracket bolt (3) to 22 Y (16 lb ft).
11. Tighten the NEW frame reinforcement bolt (2) to 60 Y (44 lb ft).

12. Tighten the drivetrain and front suspension frame bolt (1) to 160 Y (118 lb ft).
13. Lower the vehicle.

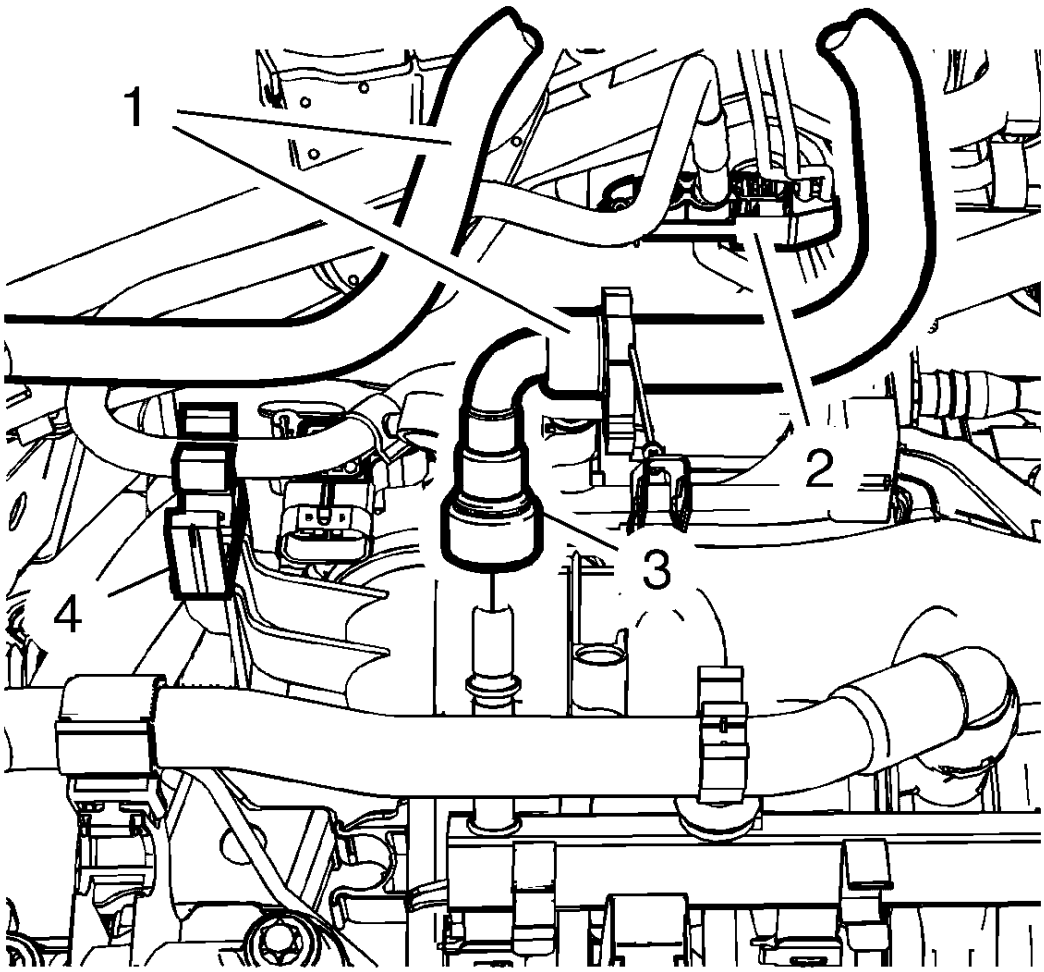

Fig. 42: Fuel Feed Pipe
Courtesy of GENERAL MOTORS COMPANY

14. Clip the fuel feed pipe to the bulk head retainer clip (2).
15. Clip the fuel feed pipe (1) to the retainer clip (4).
16. Connect the fuel feed pipe connector (3) to the fuel injector rail. Refer to **Plastic Collar Quick Connect Fitting Service**.
17. Connect the battery negative cable. Refer to **Battery Negative Cable Disconnection and Connection** .
18. Close the hood.

FUEL TANK FUEL PUMP MODULE REPLACEMENT

Special Tools

CH-45722 Fuel Sender Lock Ring Wrench

For equivalent regional tools, refer to **Special Tools** .

Removal Procedure

1. Remove the fuel tank. Refer to **Fuel Tank Replacement**.

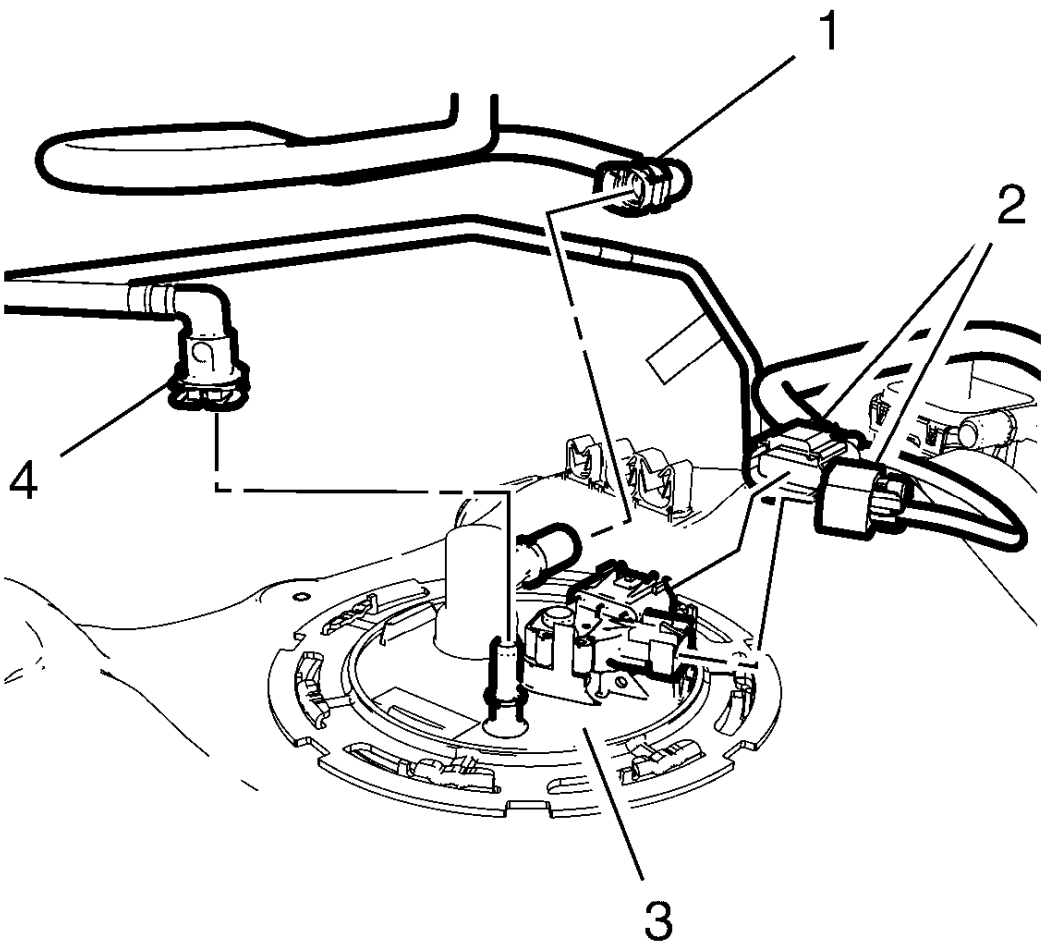

Fig. 43: Fuel Tank Fuel Pump Module, Fuel Tank Vent Pipe And Fuel Feed Pipe
Courtesy of GENERAL MOTORS COMPANY

2. Disconnect the fuel tank vent pipe (1) and the fuel feed pipe (4) from the fuel tank fuel pump module (3).
3. Disconnect the fuel tank fuel pump module wiring harness (2) from the fuel tank fuel pump module (3).
4. Close the fuel feed pipe and the fuel tank vent feed pipe with suitable caps.

NOTE: Do NOT use impact tools. Significant force will be required to release the lock ring. The use of a hammer and screwdriver is not recommended.

Secure the fuel tank in order to prevent fuel tank rotation.

5. Using the **CH-45722** wrench and a long breaker-bar, rotate the fuel pump module lock ring in a counterclockwise direction in order to unlock the lock ring.

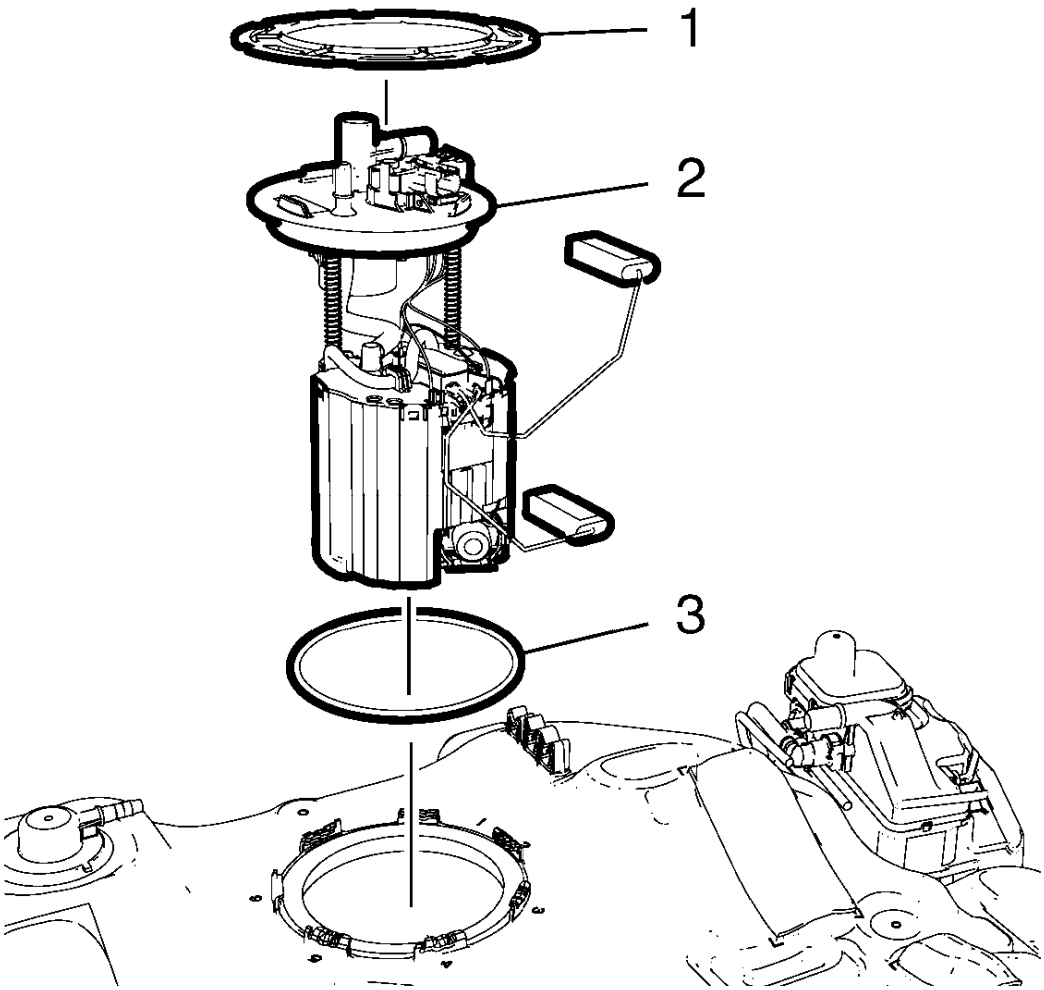

Fig. 44: Fuel Tank Fuel Pump Module
Courtesy of GENERAL MOTORS COMPANY

6. Remove fuel tank fuel pump module lock ring (1).
7. Remove the fuel tank fuel pump module (2).

NOTE: Lift the fuel tank fuel pump module up slightly.

8. Remove and discard the fuel pump module seal (3).
9. Remove the fuel level sensor from the fuel tank fuel pump module. Refer to **Fuel Level Sensor Replacement**.

Installation Procedure

1. Install the fuel level sensor to the fuel tank fuel pump module. Refer to **Fuel Level Sensor Replacement**.

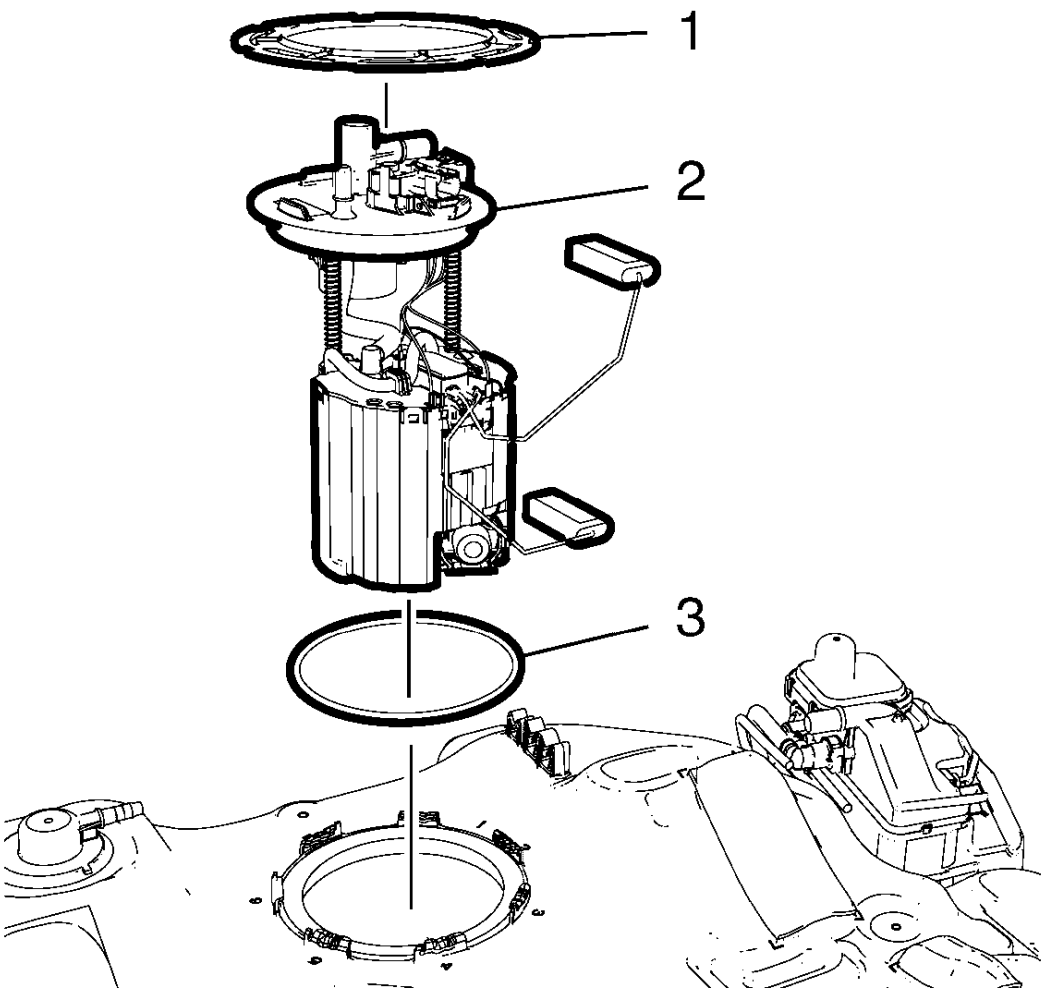

Fig. 45: Fuel Tank Fuel Pump Module
Courtesy of GENERAL MOTORS COMPANY

2. Install a NEW fuel tank module seal (3).
3. Install the fuel tank fuel pump module (2).
4. Install the fuel pump module lock ring (1).

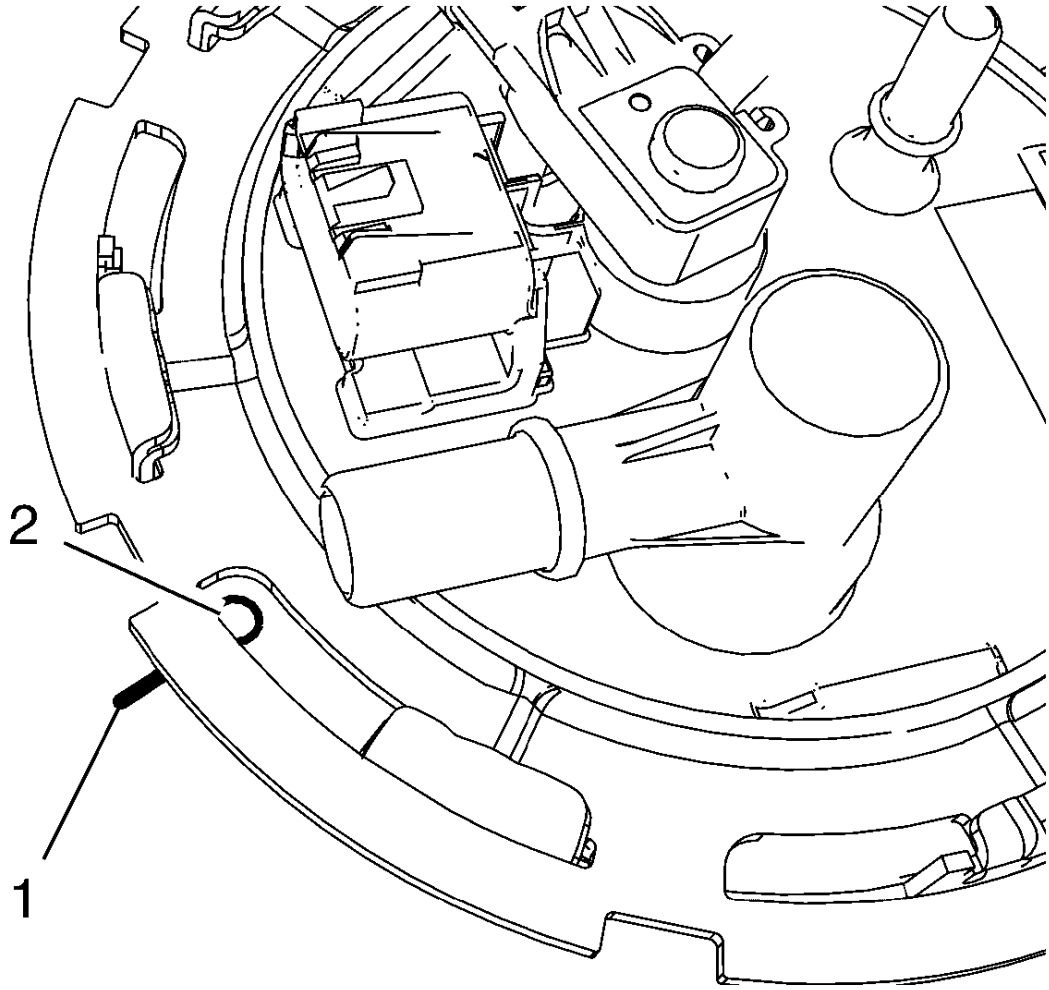

Fig. 46: Fuel Tank Fuel Pump Module Alignment Mark
Courtesy of GENERAL MOTORS COMPANY

5. Make sure that the fuel tank fuel pump module (2) align with the fuel tank line (1).

NOTE: **Do NOT use impact tools. Significant force will be required to release the lock ring. The use of a hammer and screwdriver is not recommended. Secure the fuel tank in order to prevent fuel tank rotation.**

6. Using the **CH-45722** wrench and a long breaker-bar, rotate the lock ring in a clockwise direction in order to lock the lock ring.

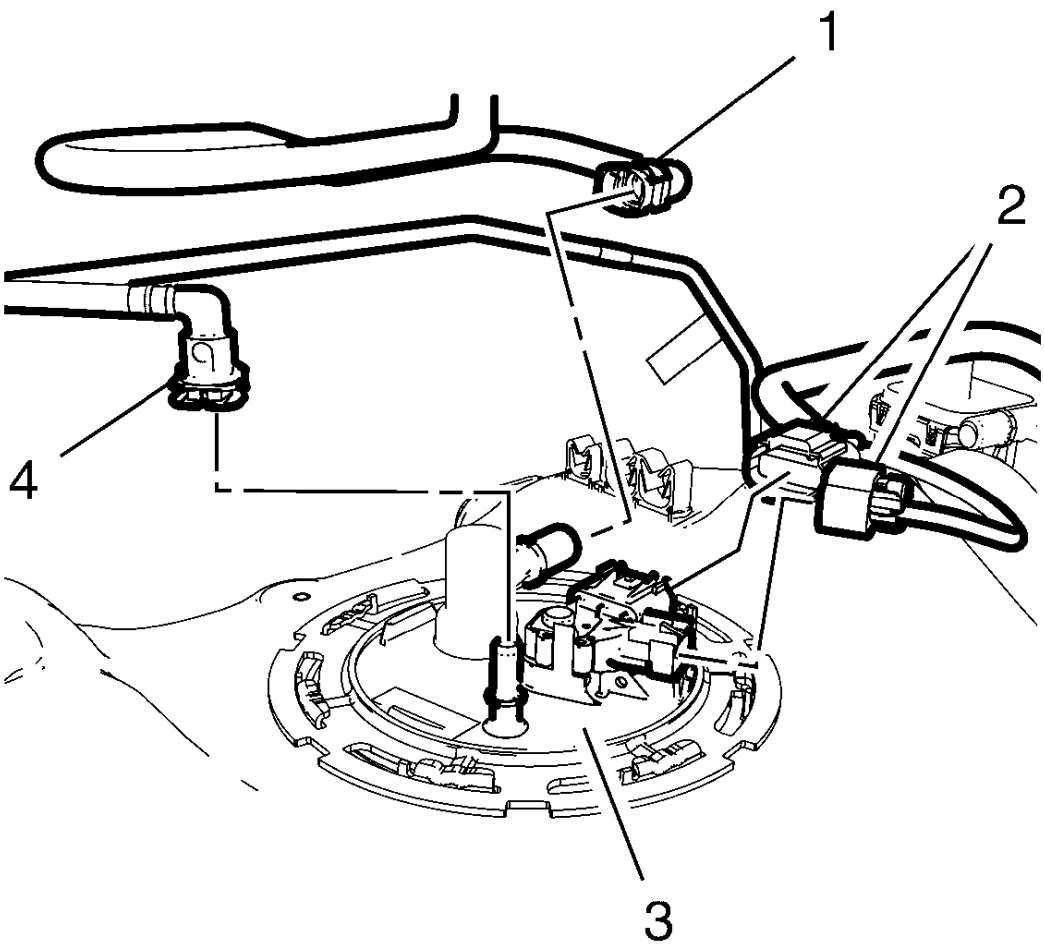

Fig. 47: Fuel Tank Fuel Pump Module, Fuel Tank Vent Pipe And Fuel Feed Pipe
Courtesy of GENERAL MOTORS COMPANY

7. Connect the fuel tank fuel pump module wiring harness (2) to the fuel tank fuel pump module (3).
8. Remove the caps from the fuel feed pipe and the fuel tank vent feed pipe.
9. Connect the fuel tank vent pipe (1) and the fuel feed pipe (4) to the fuel tank fuel pump module (3).
10. Install the fuel tank. Refer to **Fuel Tank Replacement**.

FUEL TANK PRESSURE SENSOR REPLACEMENT

Removal Procedure

1. Disconnect the battery negative cable. Refer to **Battery Negative Cable Disconnection and Connection** .
2. Remove the fuel tank. Refer to **Fuel Tank Replacement**.

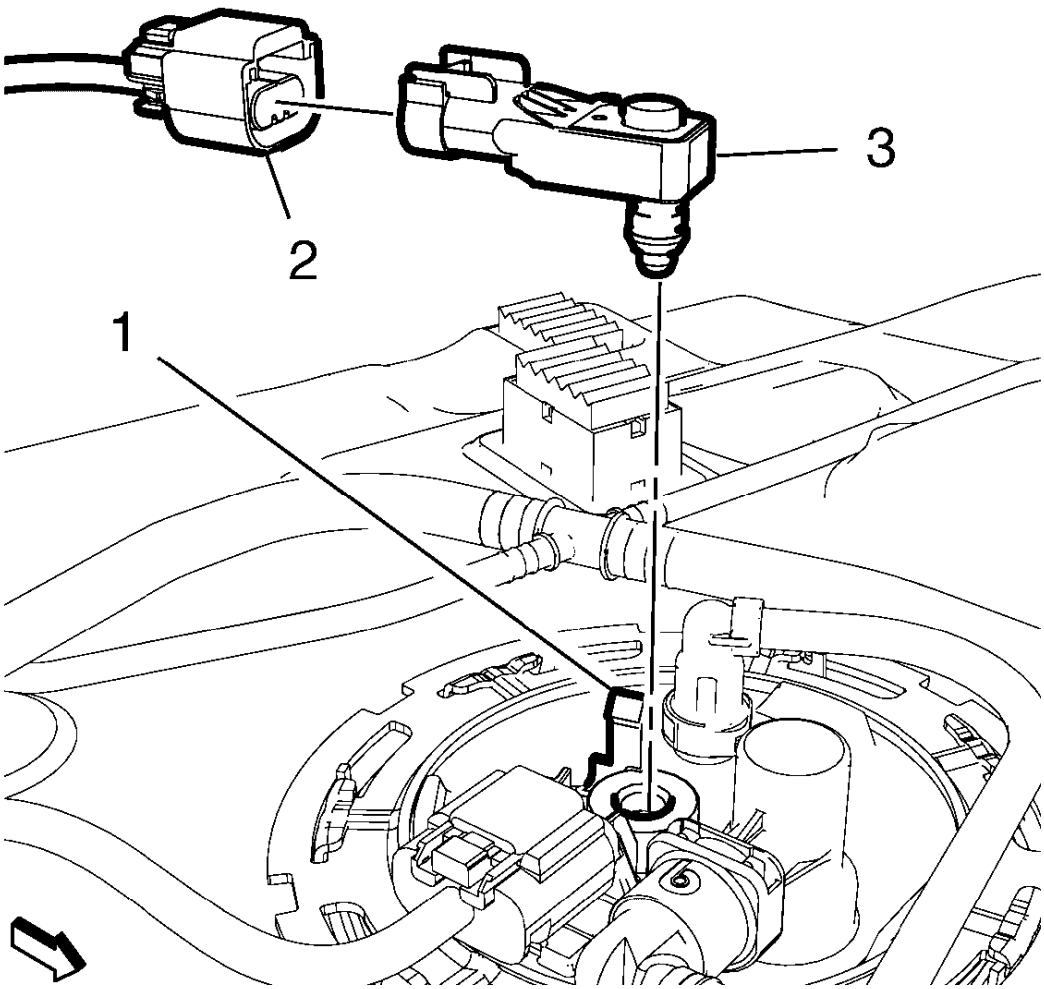

Fig. 48: Fuel Tank Pressure Sensor, Wiring Harness Plug And Pump Module Clip
Courtesy of GENERAL MOTORS COMPANY

3. Disconnect the fuel tank pressure sensor wiring harness plug (2).
4. Unclip the fuel tank pressure sensor (3) from the fuel tank pump module clip (1).

Installation Procedure

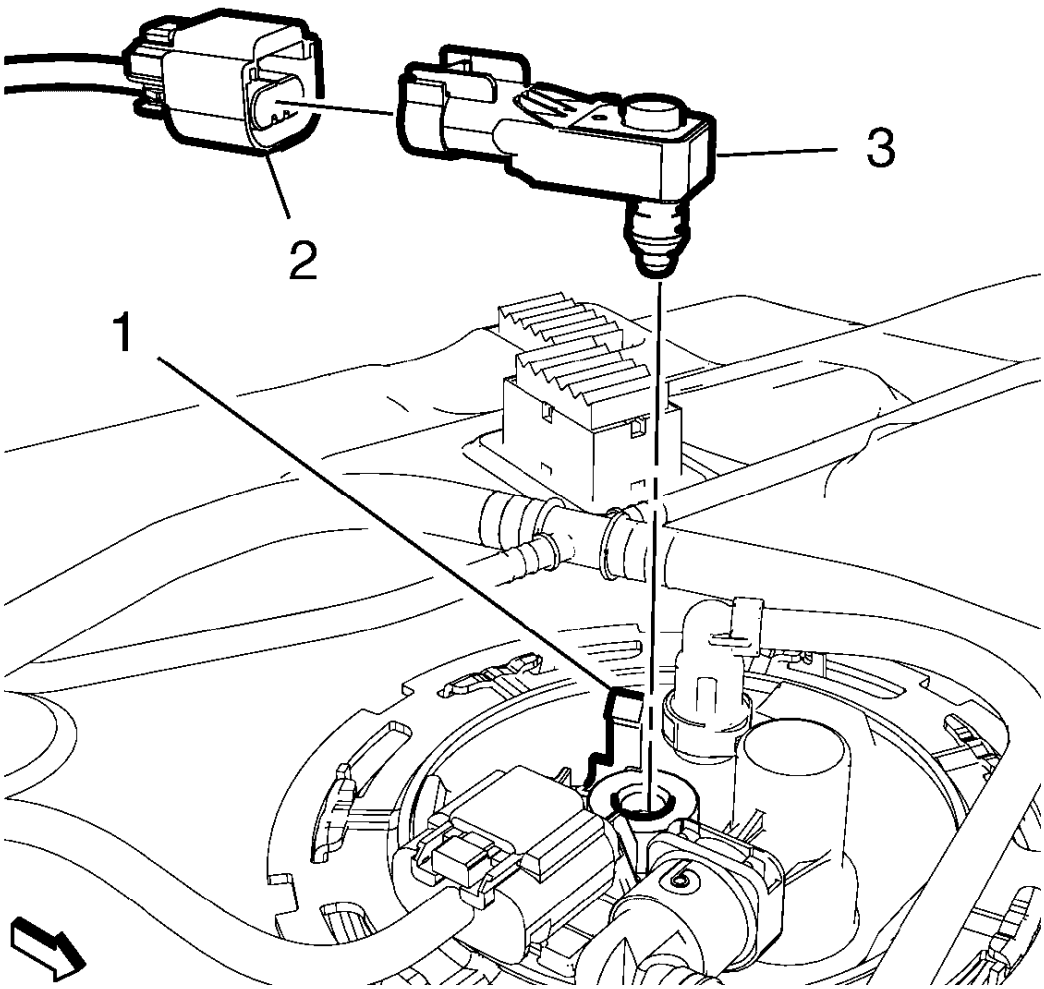

Fig. 49: Fuel Tank Pressure Sensor, Wiring Harness Plug And Pump Module Clip
Courtesy of GENERAL MOTORS COMPANY

1. Clip the fuel tank pressure sensor (3) to the fuel tank pump module clip (1).
2. Connect the fuel tank pressure sensor wiring harness plug (2).
3. Install the fuel tank. Refer to **Fuel Tank Replacement**.
4. Connect the battery negative cable. Refer to **Battery Negative Cable Disconnection and Connection** .

FUEL PUMP FLOW CONTROL MODULE REPLACEMENT

Removal Procedure

1. Open the rear lid.
2. Remove the rear compartment side trim - right side. Refer to **Rear Compartment Side Trim Replacement - Right Side** .

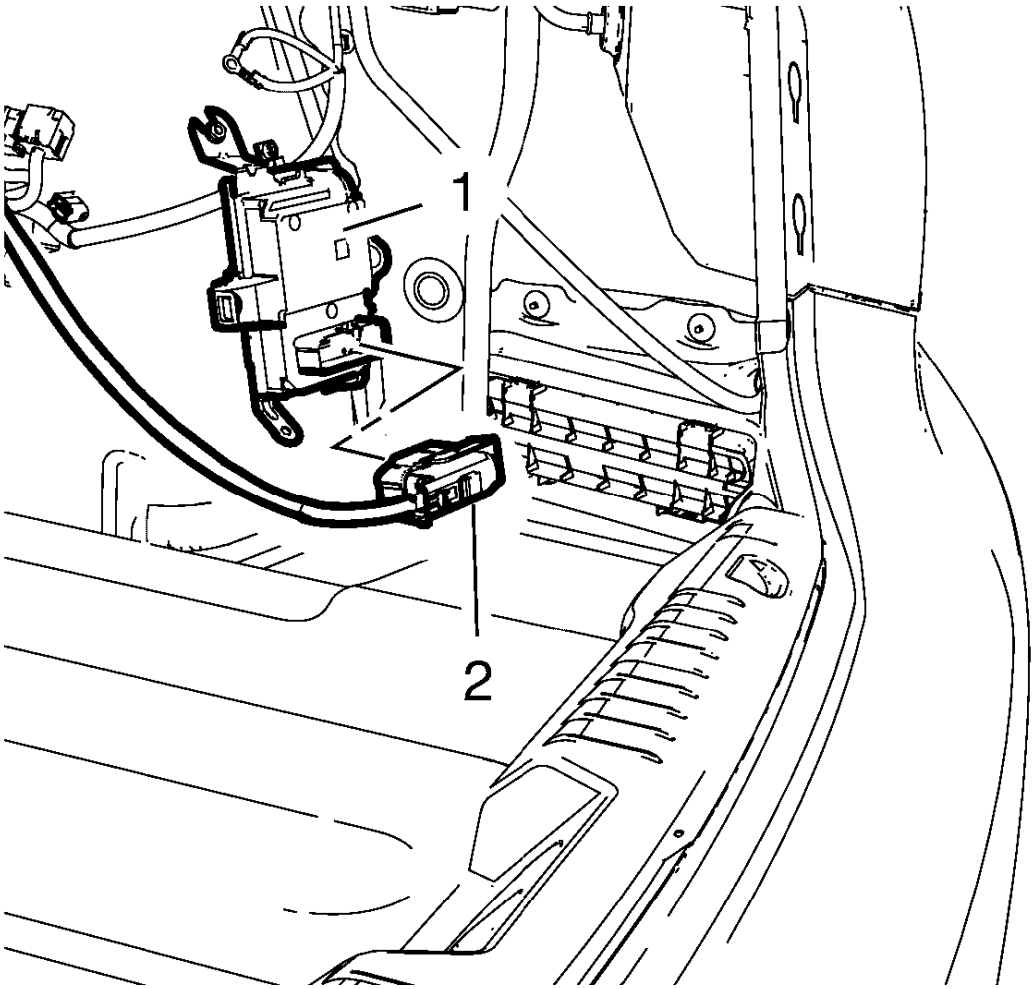

Fig. 50: Fuel Pump Flow Control Module
Courtesy of GENERAL MOTORS COMPANY

3. Remove the fuel pump flow control module wiring harness plug (2) from the fuel pump flow control module (1).

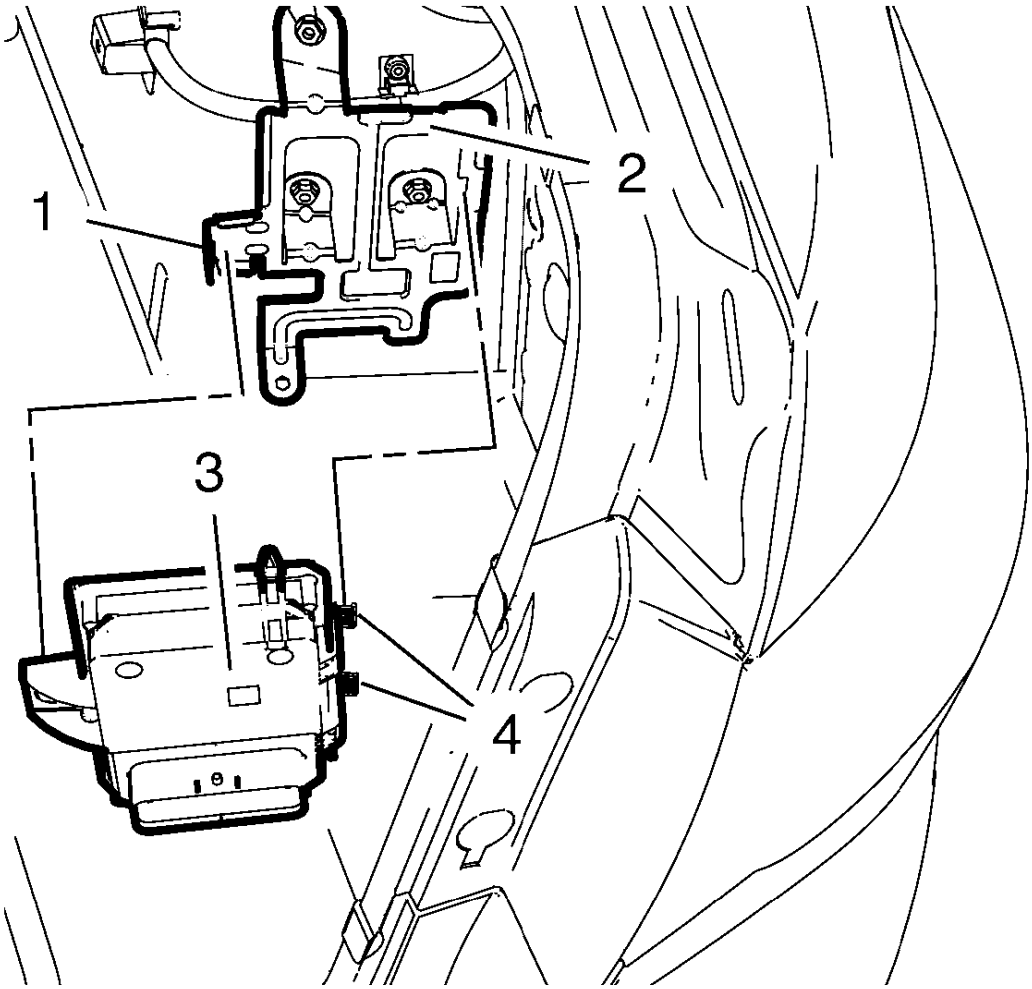

Fig. 51: Fuel Pump Flow Control Module
Courtesy of GENERAL MOTORS COMPANY

4. Unclip the fuel pump flow control module bracket clip (1) from the fuel pump flow control module (3).
5. Unclip the 2 fuel pump flow control module clips (4) from the fuel pump flow control module bracket (2).

Installation Procedure

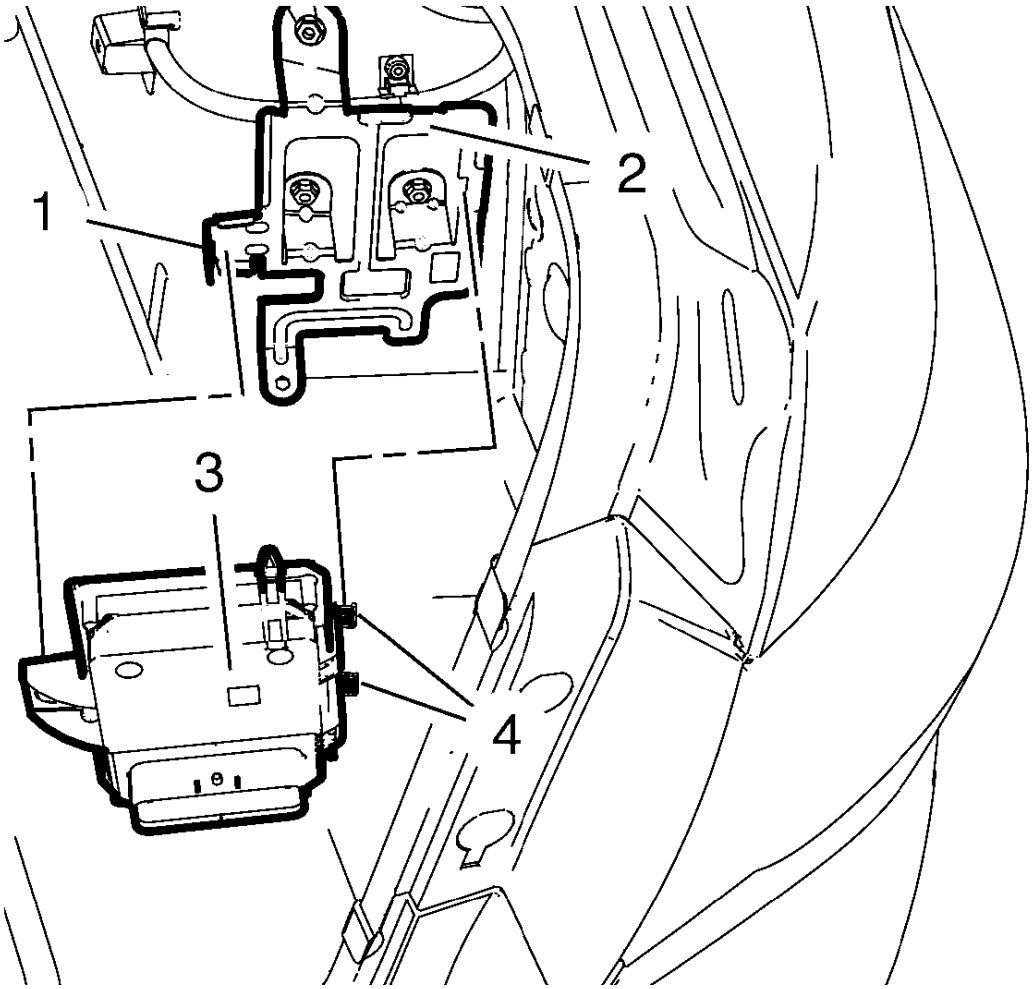

Fig. 52: Fuel Pump Flow Control Module
Courtesy of GENERAL MOTORS COMPANY

1. Clip the 2 fuel pump flow control module clips (4) to the fuel pump flow control module bracket (2).
2. Clip the fuel pump flow control module (3) to the fuel pump flow control module bracket clip (1).

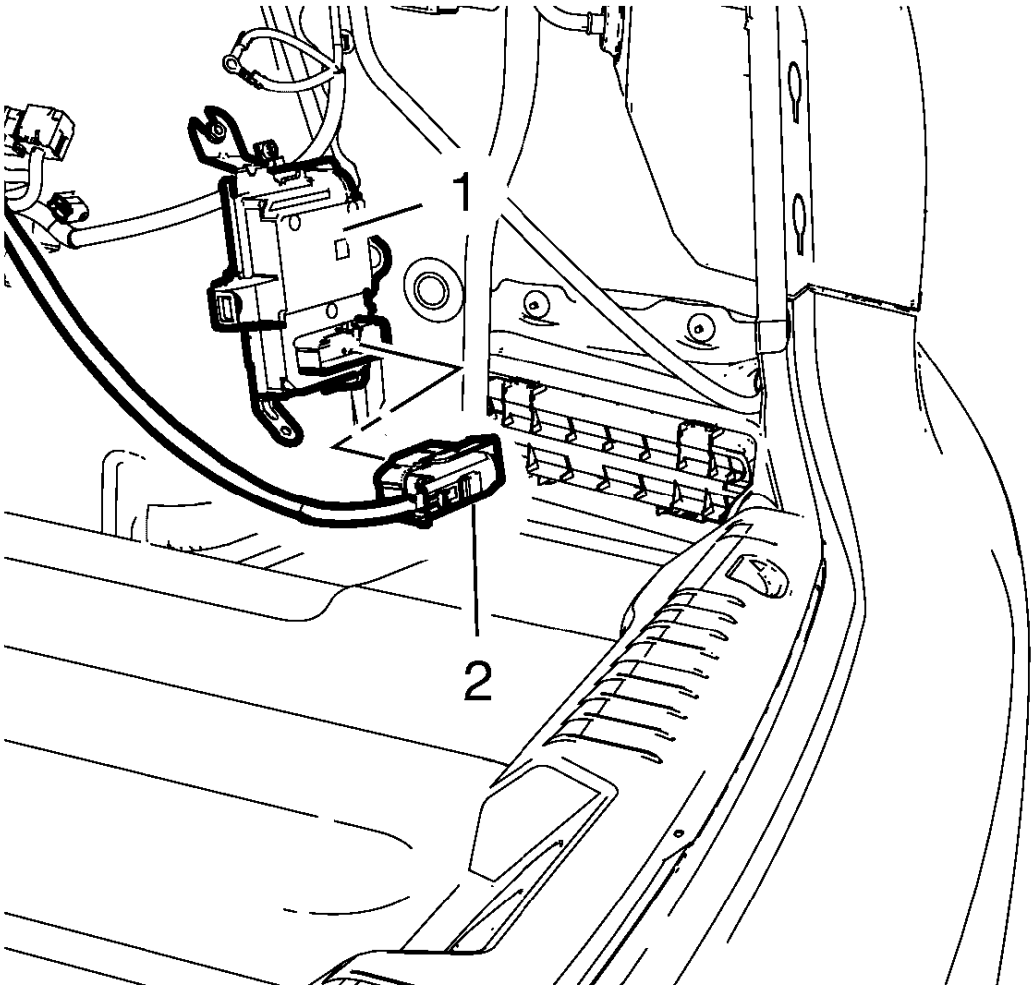

Fig. 53: Fuel Pump Flow Control Module
Courtesy of GENERAL MOTORS COMPANY

3. Plug the fuel pump flow control module wiring harness plug (2) to the fuel pump flow control module (1).
4. Install the rear compartment side trim - right side. Refer to **Rear Compartment Side Trim Replacement - Right Side** .
5. Close the rear lid.
6. Program the control module. Refer to **Fuel Pump Control Module Programming and Setup**

FUEL LEVEL SENSOR REPLACEMENT

Removal Procedure

WARNING: Refer to Gasoline/Gasoline Vapors Warning .

WARNING: Refer to Safety Goggles and Fuel Warning .

CAUTION: Use care while handling the fuel sender to prevent damage and incorrect fuel level readings.

1. Remove the fuel tank fuel pump module. Refer to **Fuel Tank Fuel Pump Module Replacement**.

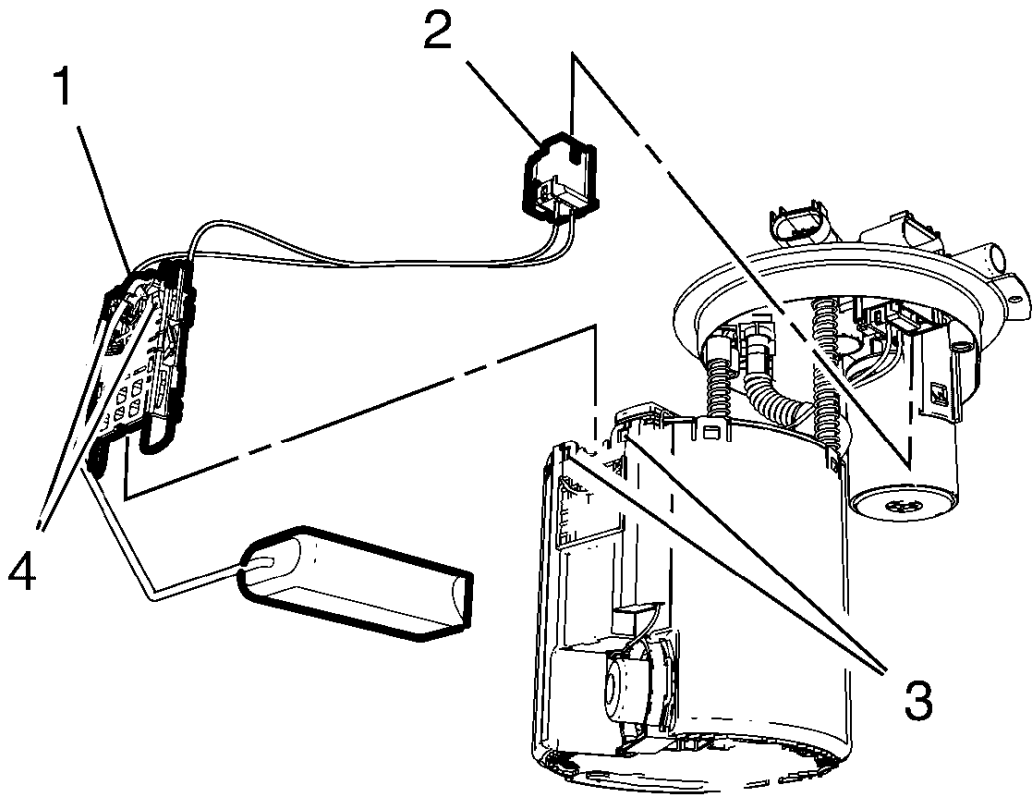

Fig. 54: Fuel Level Sensor And Components
Courtesy of GENERAL MOTORS COMPANY

2. Disconnect the fuel level sensor wiring harness plug (2) from the fuel tank fuel pump module.
3. Unclip the 2 fuel level sensor retainer pins (4) from the fuel level sensor retainer pin holes (3).
4. Remove the fuel level sensor (1) from the fuel tank fuel pump module.

Installation Procedure

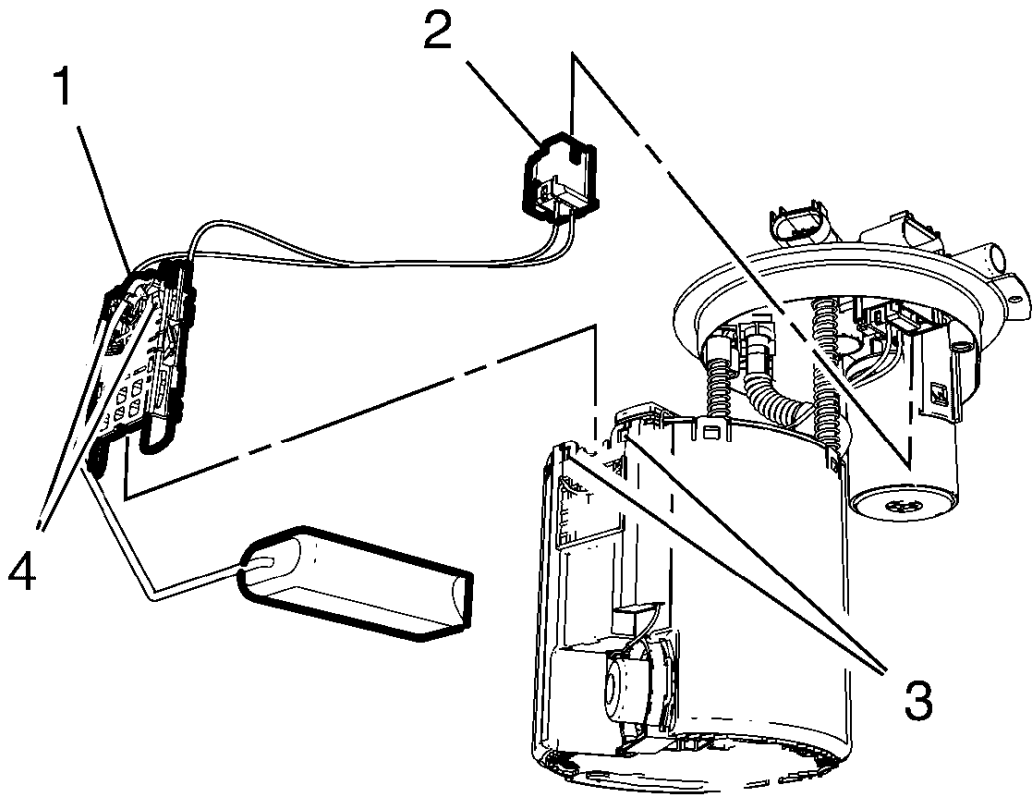

Fig. 55: Fuel Level Sensor And Components
Courtesy of GENERAL MOTORS COMPANY

1. Install the fuel level sensor (1) to the fuel tank fuel pump module.
2. The fuel level sensor retainer pins (4) must engage audible in the fuel level sensor retainer pin holes (3).
3. Connect the fuel level sensor wiring harness plug (2) to the fuel tank fuel pump module.
4. Install the fuel tank fuel pump module. Refer to **Fuel Tank Fuel Pump Module Replacement**.

FUEL PRESSURE SENSOR REPLACEMENT

Removal Procedure

WARNING: Refer to Gasoline/Gasoline Vapors Warning .

WARNING: Refer to Safety Goggles and Fuel Warning .

1. Relieve the fuel system pressure. Refer to **Fuel Pressure Relief**.
2. Disconnect the battery negative cable. Refer to **Battery Negative Cable Disconnection and Connection** .
3. Raise and support the vehicle. Refer to **Lifting and Jacking the Vehicle** .

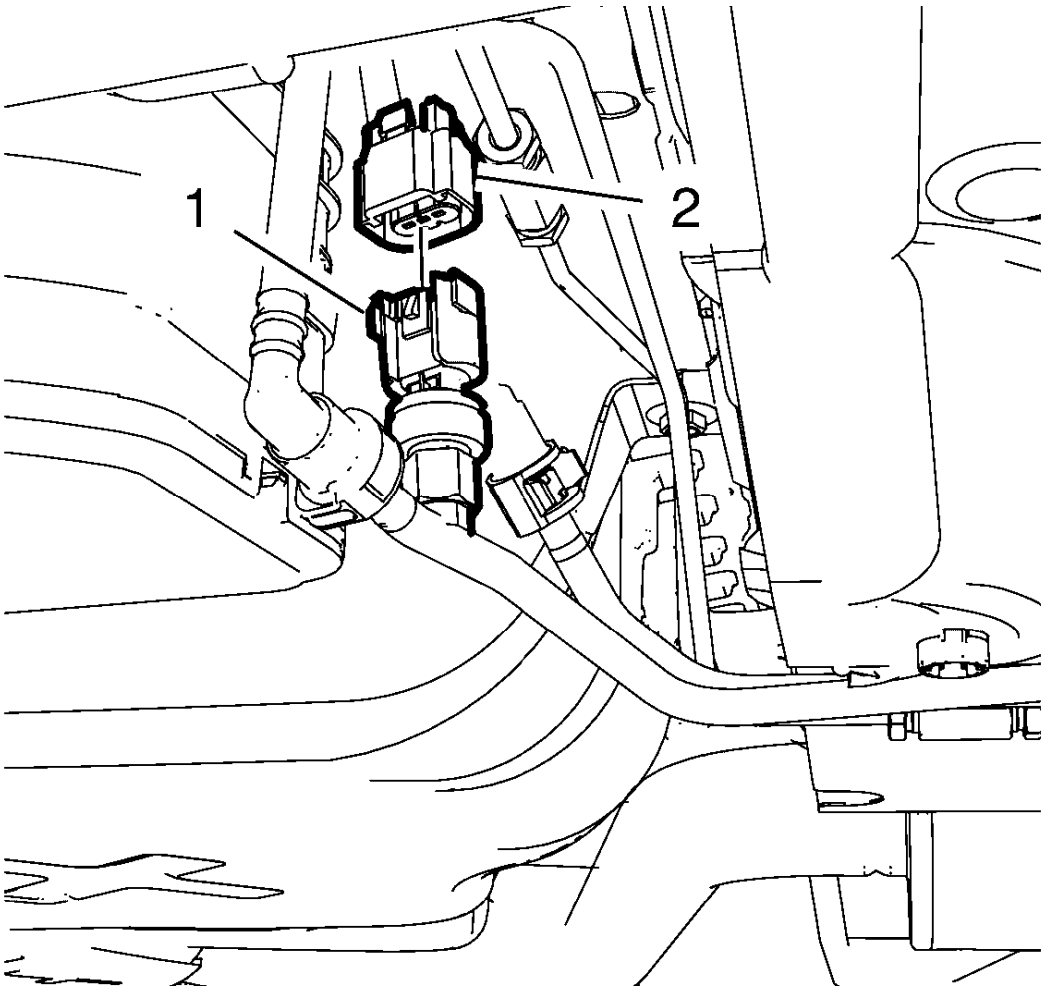

Fig. 56: Fuel Pressure Sensor
Courtesy of GENERAL MOTORS COMPANY

4. Remove the fuel pressure sensor wiring harness plug (2) from the fuel pressure sensor (1).

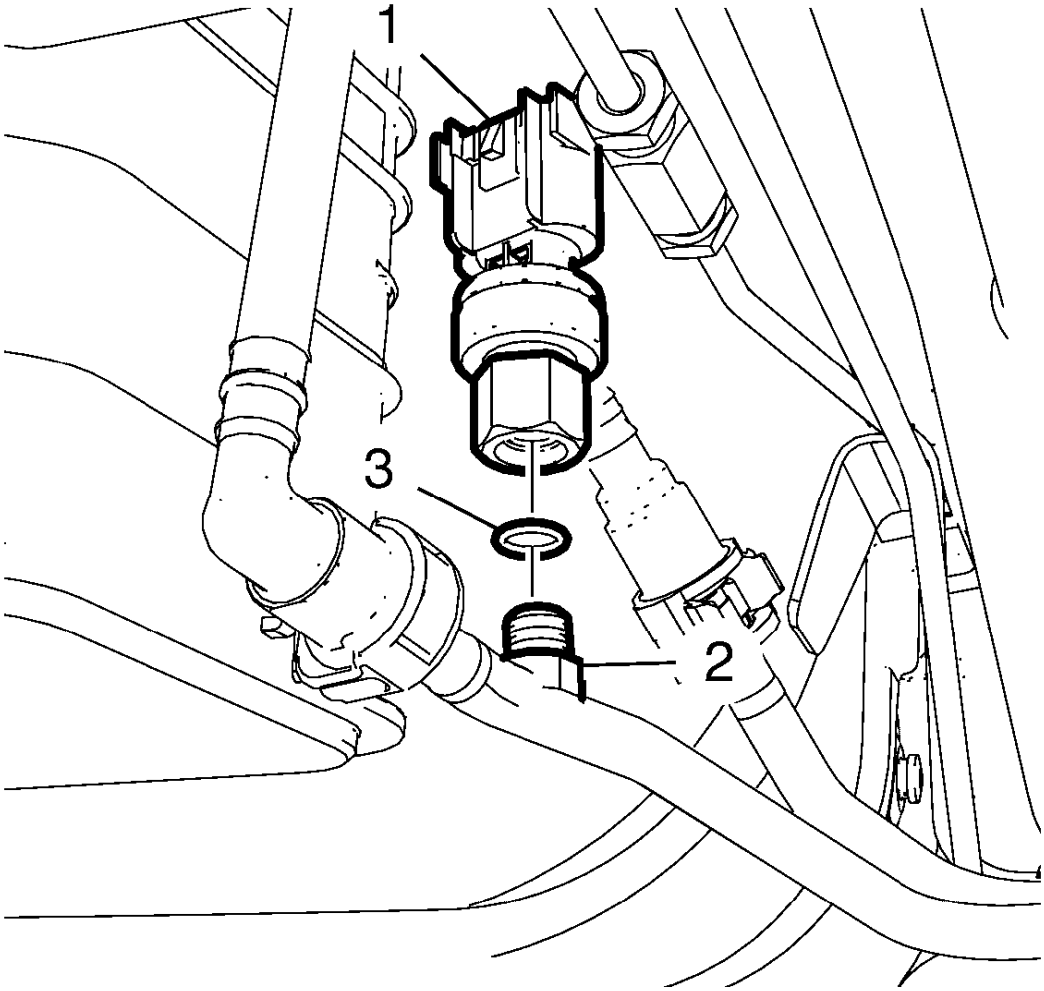

Fig. 57: Fuel Pressure Sensor And Fuel Pressure Relief Valve
Courtesy of GENERAL MOTORS COMPANY

5. Place a appropriate container/drain pan to catch excess fuel.
6. Remove the fuel pressure sensor (1) from the fuel pressure line (2).
7. Remove the fuel pressure sensor seal ring (3).

Installation Procedure

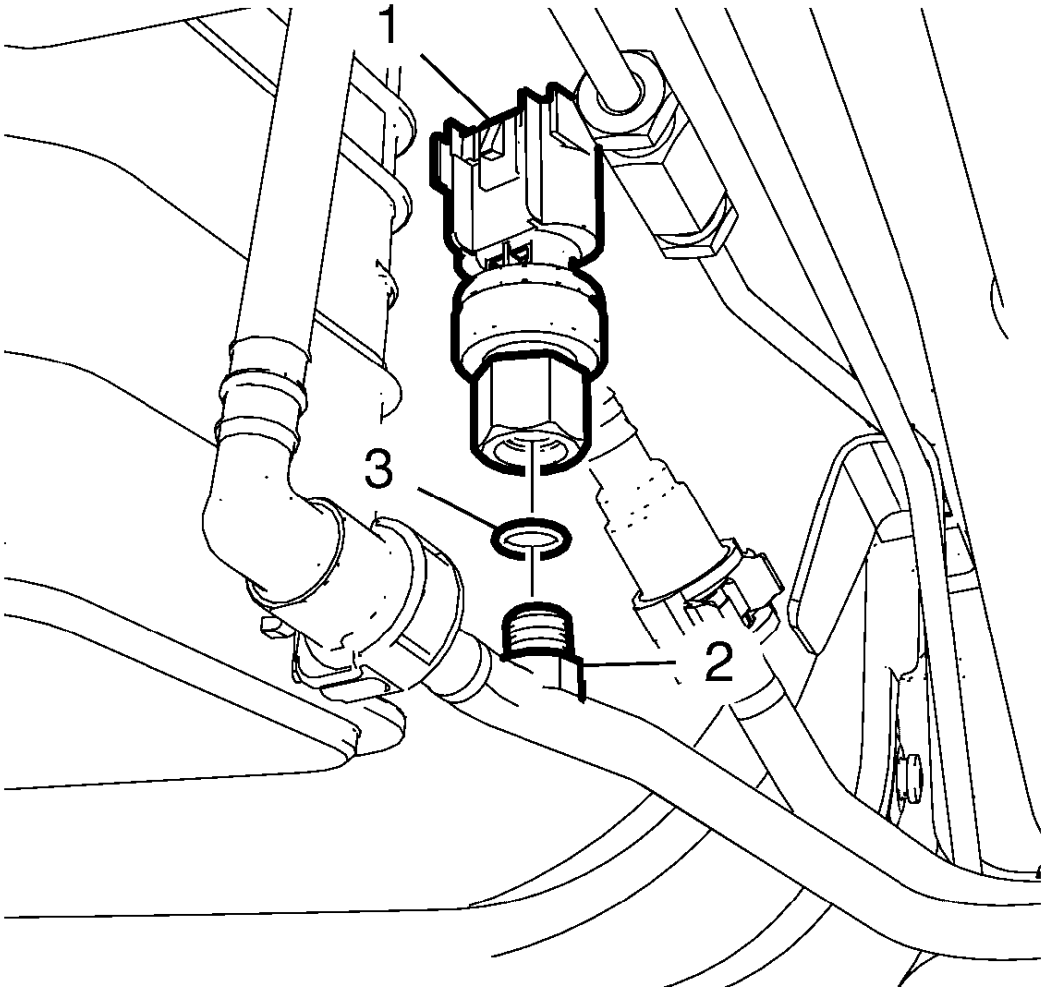

Fig. 58: Fuel Pressure Sensor And Fuel Pressure Relief Valve
Courtesy of GENERAL MOTORS COMPANY

1. Install a NEW fuel pressure sensor seal ring (3).

CAUTION: Refer to Fastener Caution .

2. Install the fuel pressure sensor (1) to the fuel pressure line (2) and tighten to 19 N.m (14 lb ft).

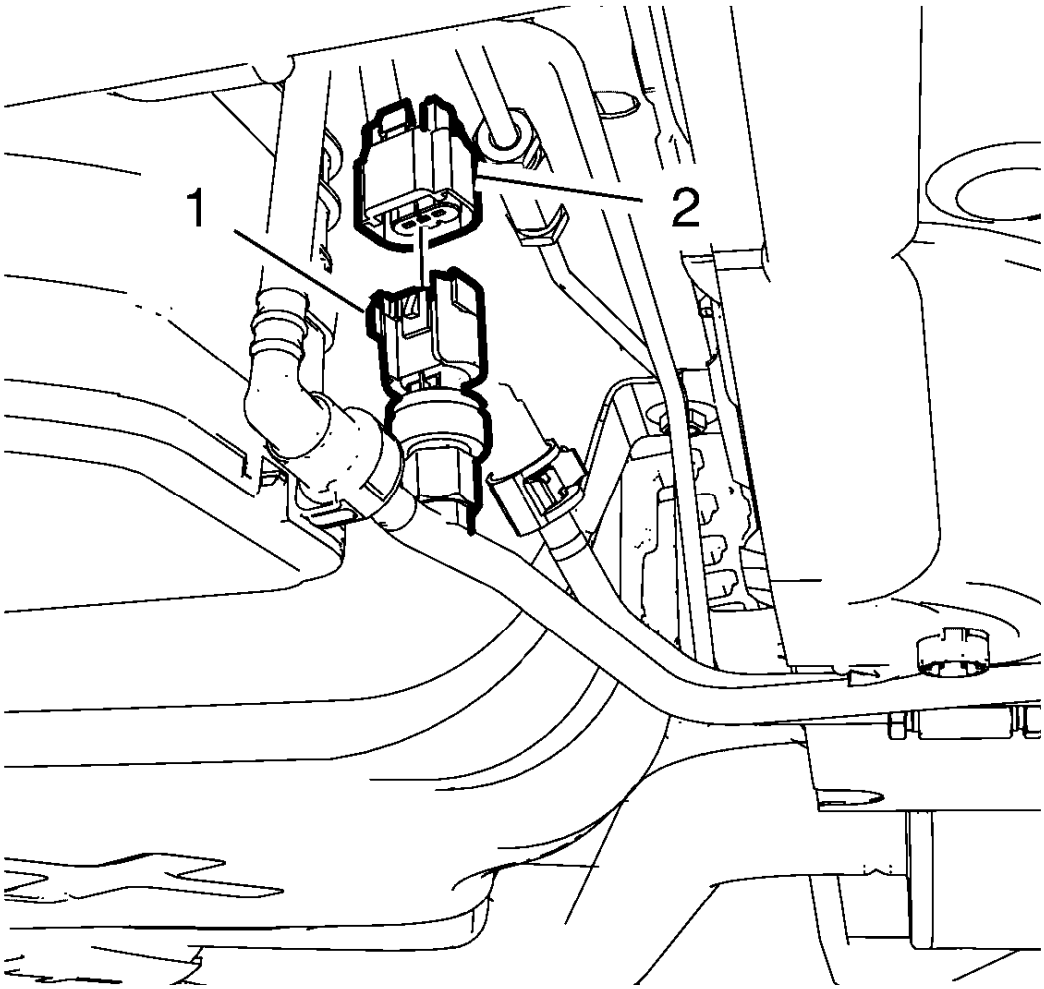

Fig. 59: Fuel Pressure Sensor
Courtesy of GENERAL MOTORS COMPANY

3. Plug the fuel pressure sensor wiring harness plug (2) to the fuel pressure sensor (1).
4. Lower the vehicle.
5. Connect the battery negative cable. Refer to **Battery Negative Cable Disconnection and Connection** .

METAL COLLAR QUICK CONNECT FITTING SERVICE

Special Tools

CH-41769 Fuel Line Disconnect Tool Set

For equivalent regional tools, refer to **Special Tools** .

Removal Procedure

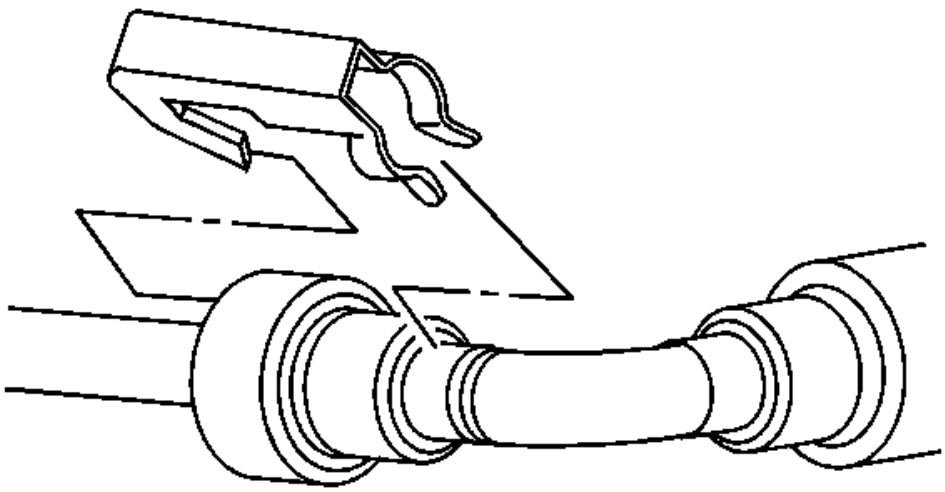

Fig. 60: View Of Quick-Connect Fitting Retainer (Metal Collar)
Courtesy of GENERAL MOTORS COMPANY

1. Relieve the fuel system pressure before servicing any fuel system connection. Refer to **Fuel Pressure Relief**.
2. Remove the retainer from the quick connect fitting.

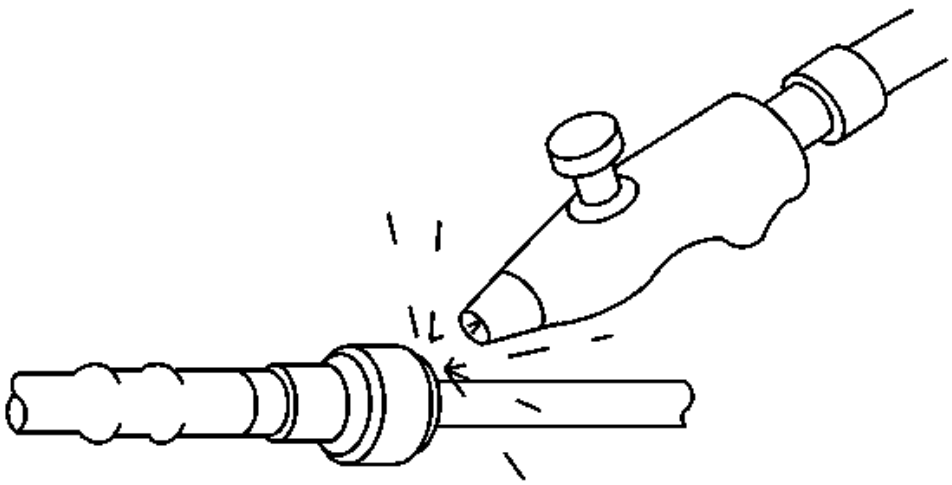

Fig. 61: Blowing Dirt Out Of Fitting (Metal Collar)
Courtesy of GENERAL MOTORS COMPANY

WARNING: Wear safety glasses when using compressed air, as flying dirt particles may cause eye injury.

3. Blow dirt out of the fitting using compressed air.

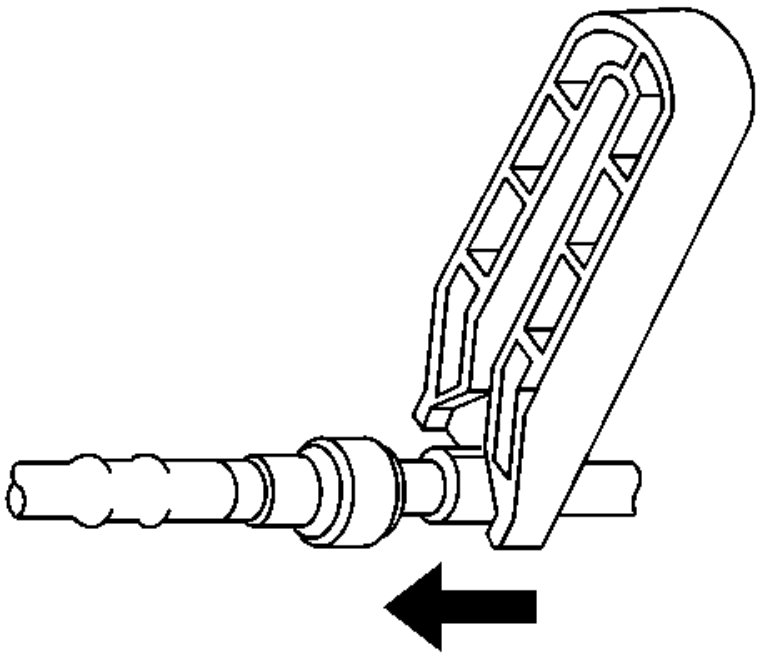

Fig. 62: View Of Quick Connect Locking Tabs (Metal Collar)
Courtesy of GENERAL MOTORS COMPANY

4. Choose the correct tool from the **CH-41769** set for the size of the fitting. Insert the tool into the female connector, then push inward in order to release the locking tabs.

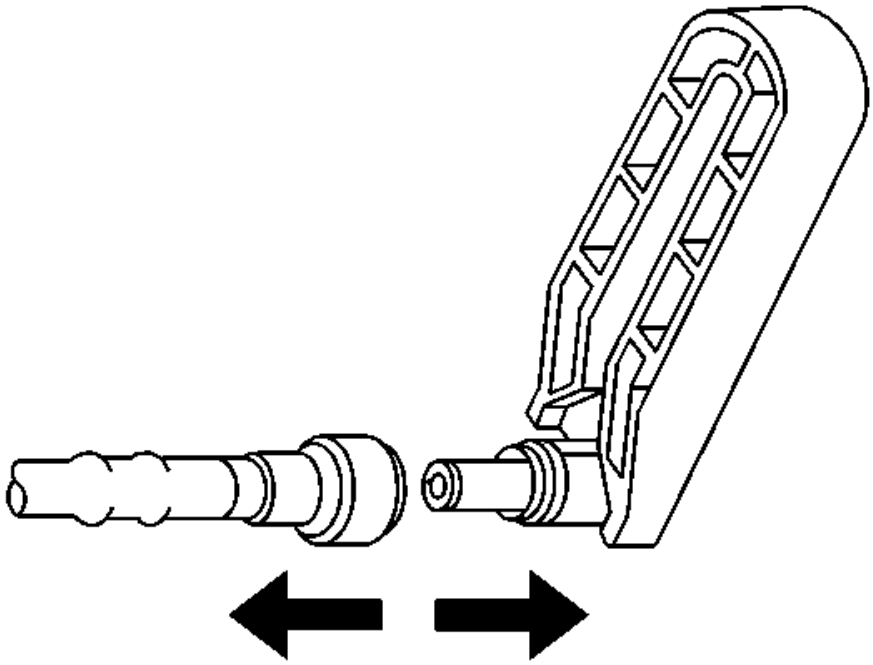

Fig. 63: View Of Quick Connect Locking Tabs (Metal Collar)
Courtesy of GENERAL MOTORS COMPANY

5. Pull the connection apart.

CAUTION: If necessary, remove rust or burrs from the fuel pipes with an emery cloth. Use a radial motion with the fuel pipe end in order to prevent damage to the O-ring sealing surface. Use a clean shop towel in order to wipe off the male tube ends. Inspect all the connections for dirt and burrs. Clean or replace the components and assemblies as required.

6. Use a clean shop towel in order to wipe off the male pipe end.
7. Inspect both ends of the fitting for dirt and burrs. Clean or replace the components as required.

Installation Procedure

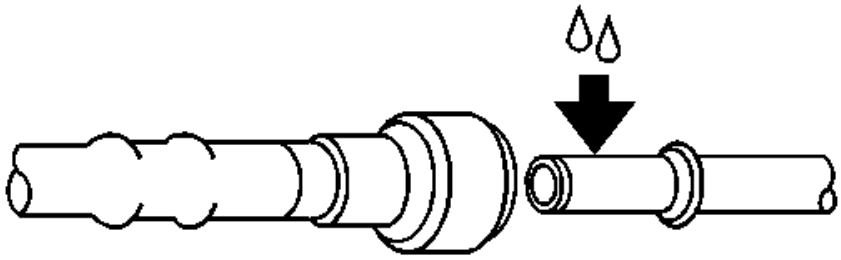

Fig. 64: Oiling Male Pipe Ends (Metal Collar)
Courtesy of GENERAL MOTORS COMPANY

WARNING: In order to reduce the risk of fire and personal injury, before connecting fuel pipe fittings, always apply a few drops of clean engine oil to the male pipe ends.

This will ensure proper reconnection and prevent a possible fuel leak.

During normal operation, the O-rings located in the female connector will swell and may prevent proper reconnection if not lubricated.

1. Apply a few drops of clean engine oil to the male pipe end.

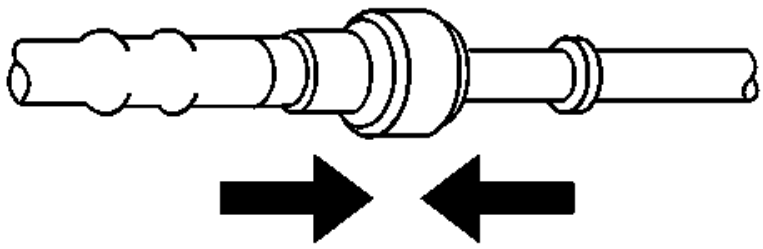

Fig. 65: View Of Connectors (Metal Collar)
Courtesy of GENERAL MOTORS COMPANY

2. Push both sides of the fitting together in order to snap the retaining tabs into place.

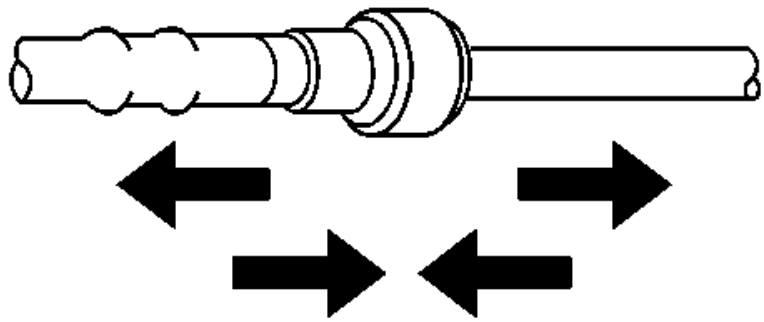

Fig. 66: Ensuring Connection (Metal Collar) Is Secure
Courtesy of GENERAL MOTORS COMPANY

3. Once installed, pull on both sides of the fitting in order to make sure the connection is secure.

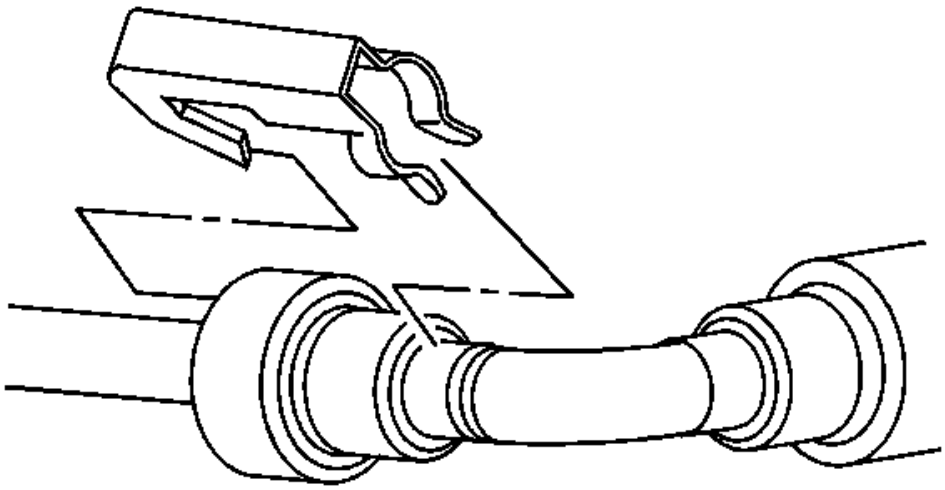

Fig. 67: View Of Quick-Connect Fitting Retainer (Metal Collar)
Courtesy of GENERAL MOTORS COMPANY

4. Install the retainer to the quick connect fitting.

PLASTIC COLLAR QUICK CONNECT FITTING SERVICE

Plastic Quick Connect Fitting Type Identification

Plastic Quick Connect Fitting Type A

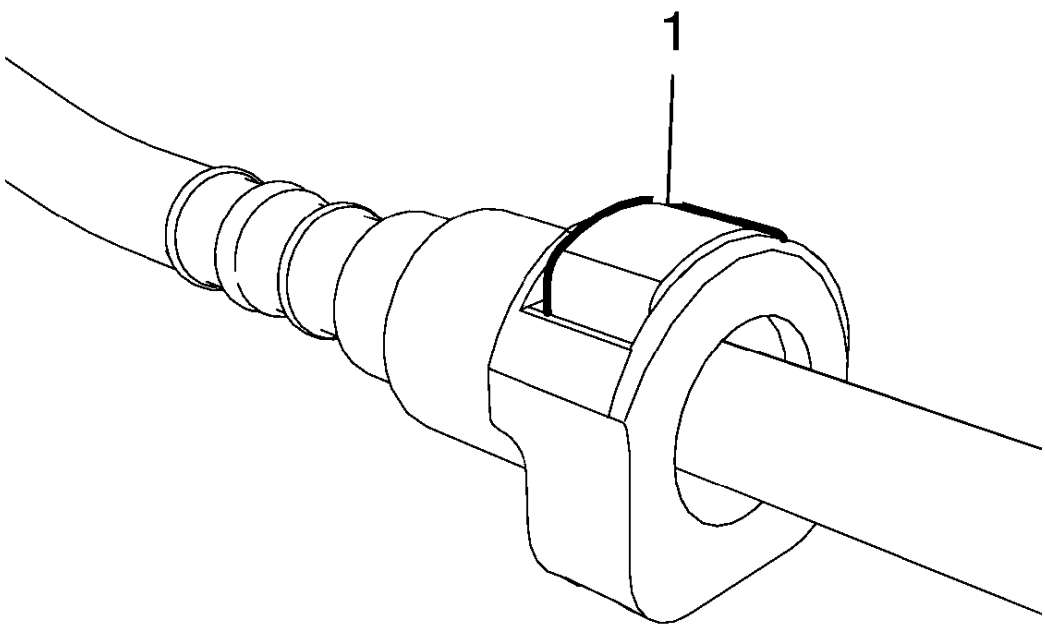

Fig. 68: Quick Connect Fitting Type A
Courtesy of GENERAL MOTORS COMPANY

Quick connect fitting type A - TI loc with one latch (1).

Plastic Quick Connect Fitting Type B

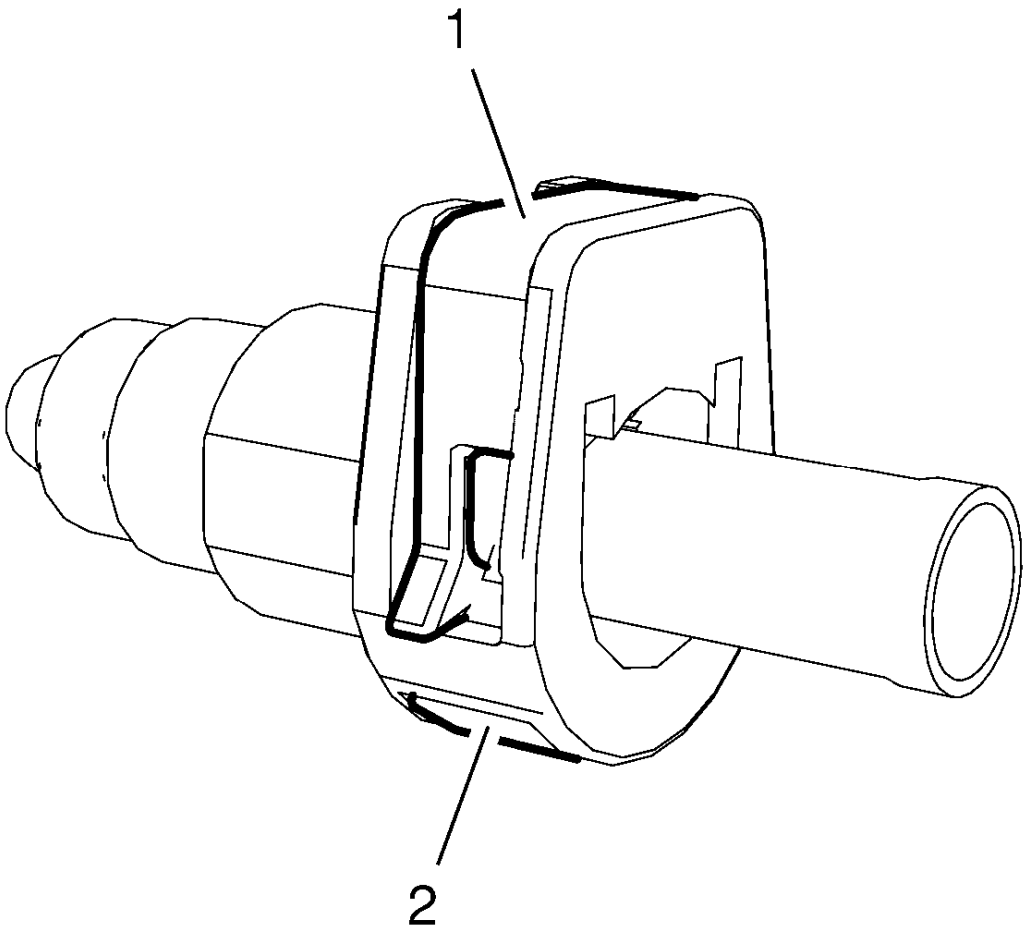

Fig. 69: Quick Connect Fitting Type B
Courtesy of GENERAL MOTORS COMPANY

- Quick connect fitting type B - TI loc upper latch (1).
- Quick connect fitting type B - TI loc lower latch (2).

Plastic Quick Connect Fitting Type C

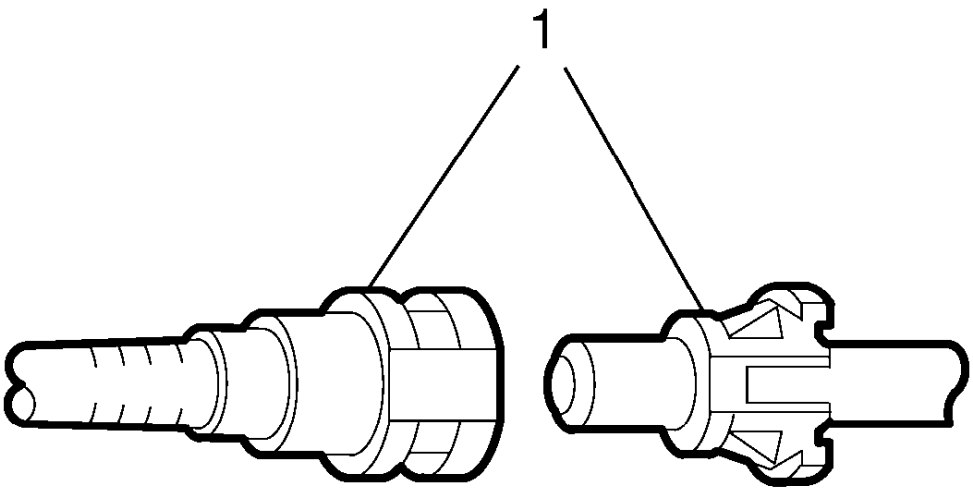

Fig. 70: Quick Connect Fitting Type C
Courtesy of GENERAL MOTORS COMPANY

Quick connect fitting type C (1).

Plastic Quick Connect Fitting Type D

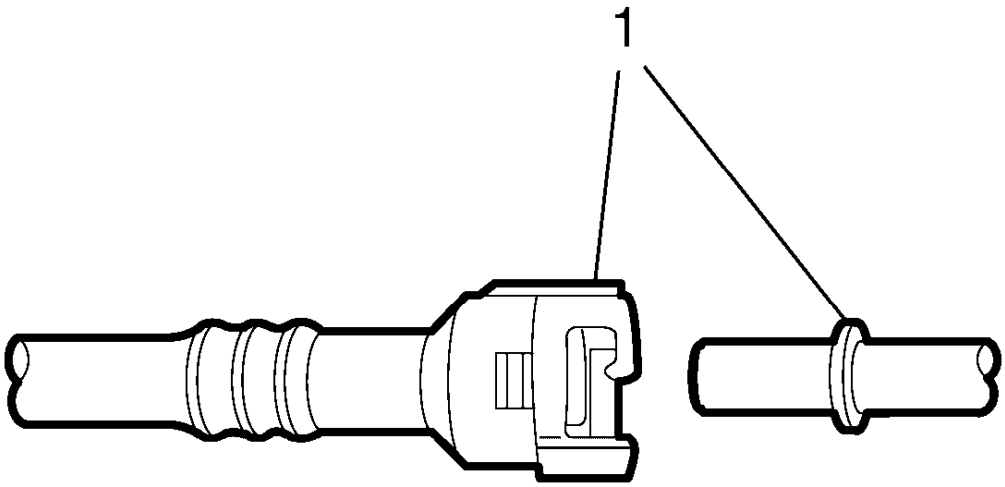

Fig. 71: Quick Connect Fitting Type D
Courtesy of GENERAL MOTORS COMPANY

Quick connect fitting type D (1).

Plastic Quick Connect Fitting Type E

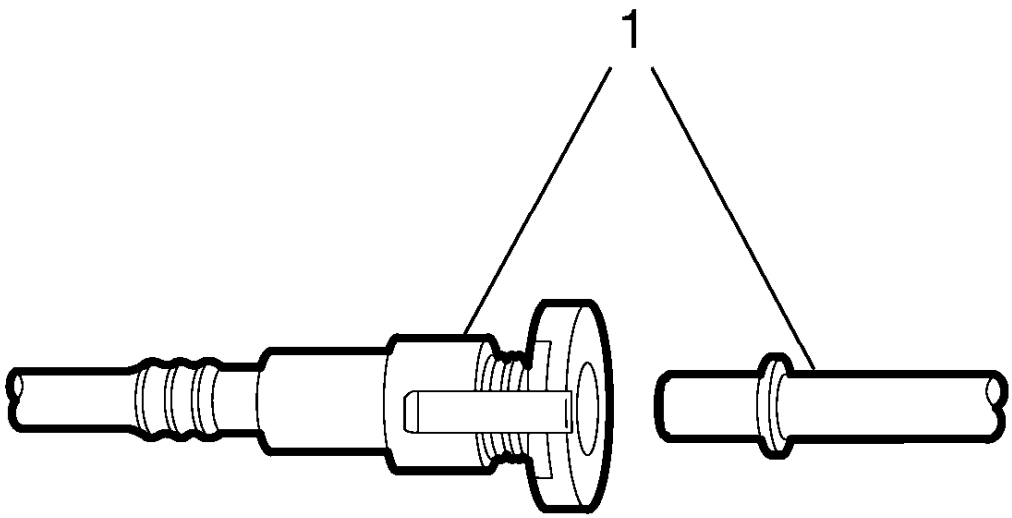

Fig. 72: Quick Connect Fitting Type E
Courtesy of GENERAL MOTORS COMPANY

Quick connect fitting type E (1).

Plastic Quick Connect Fitting Type F

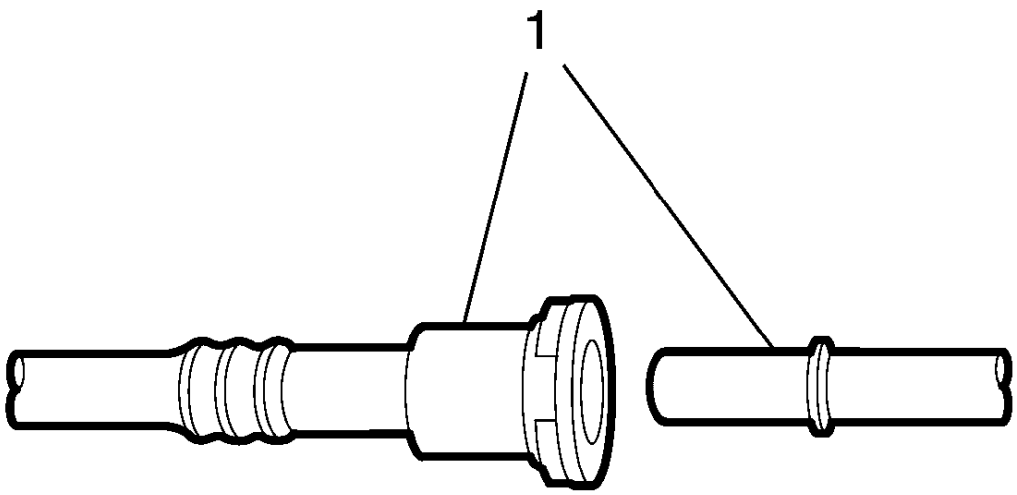

Fig. 73: Quick Connect Fitting Type F
Courtesy of GENERAL MOTORS COMPANY

Quick connect fitting type F (1).

Plastic Quick Connect Fitting Type G

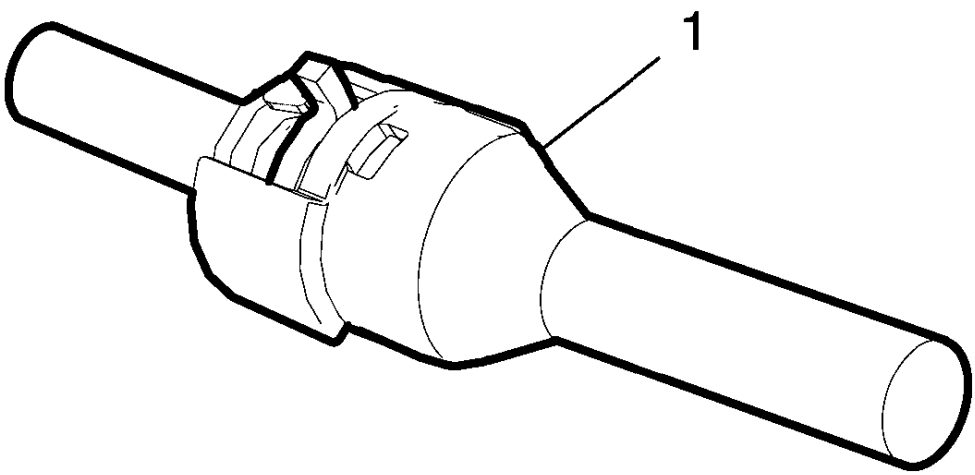

Fig. 74: Quick Connect Fitting Type G
Courtesy of GENERAL MOTORS COMPANY

Quick connect fitting type G (1).

Plastic Quick Connect Fitting Type H

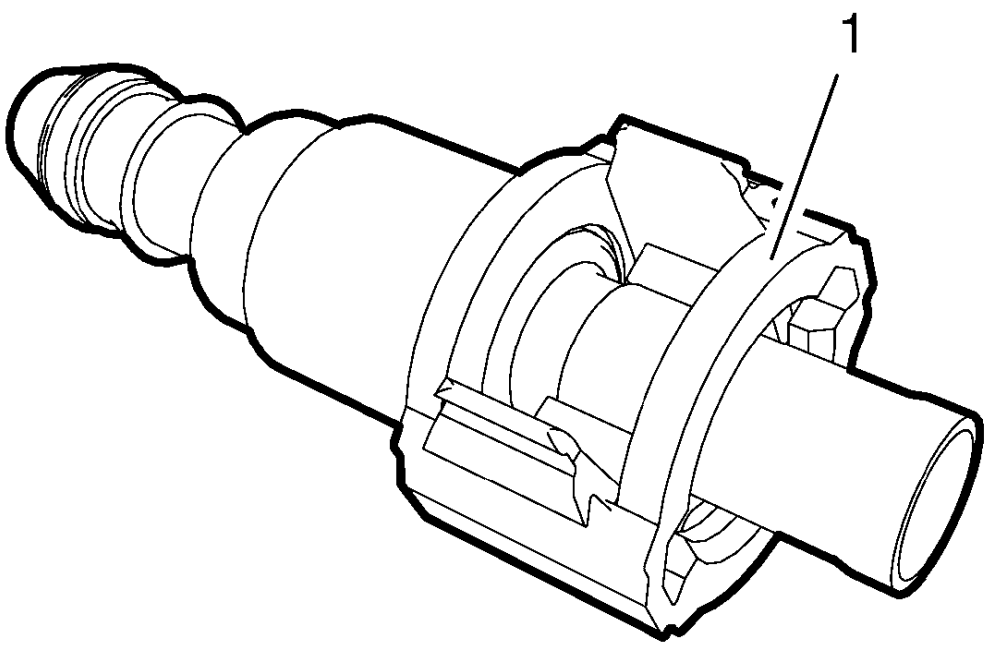

Fig. 75: Quick Connect Fitting Type H
Courtesy of GENERAL MOTORS COMPANY

Quick connect fitting type H (1).

General Instructions for Handling the Connectors

Before Disconnection

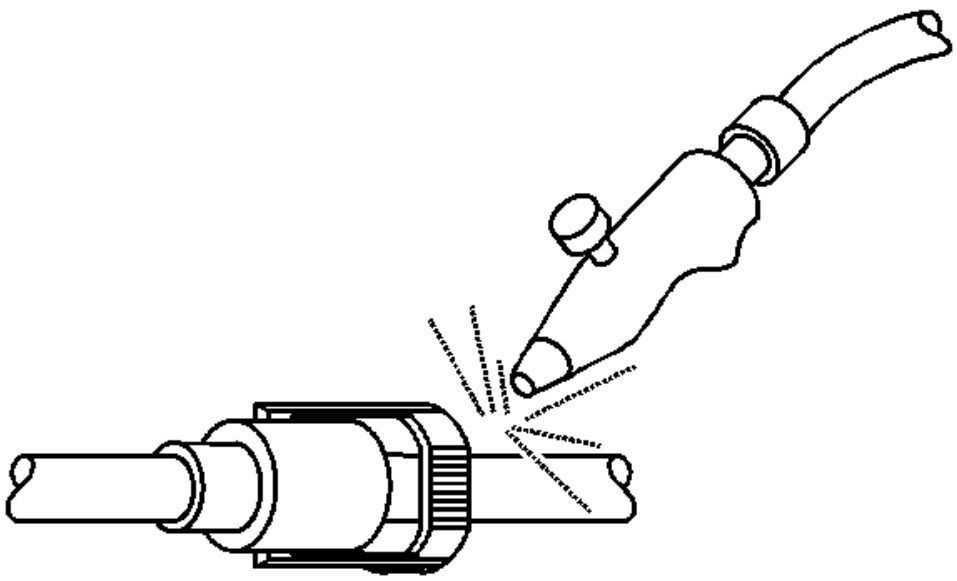

Fig. 76: Blowing Dirt Out Of Fitting (Plastic Collar)
Courtesy of GENERAL MOTORS COMPANY

WARNING: Wear safety glasses when using compressed air, as flying dirt particles may cause eye injury.

NOTE: The following instructions apply to all of these types of fittings.

Using compressed air, to blow any dirt out of the quick connect fitting.

After Disconnection

- Wipe off the male pipe end using a clean shop towel.
- Inspect both ends of the fitting for dirt and burrs.
- Clean components as required.
- Replace damaged components.

Type A - Disconnect/Connect

Disconnect

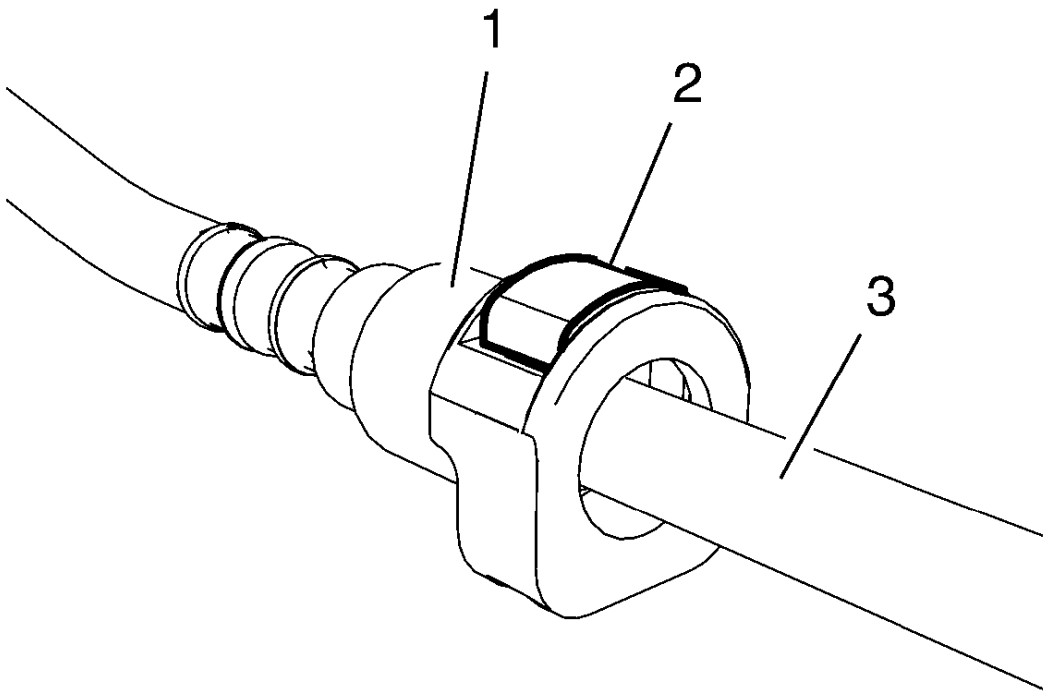

Fig. 77: Pushing Latch Down
Courtesy of GENERAL MOTORS COMPANY

NOTE: Mechanical violence is not necessary for a successful disconnection/connection.

1. Push the tube (3) into the connector (1) and push down the latch (2).

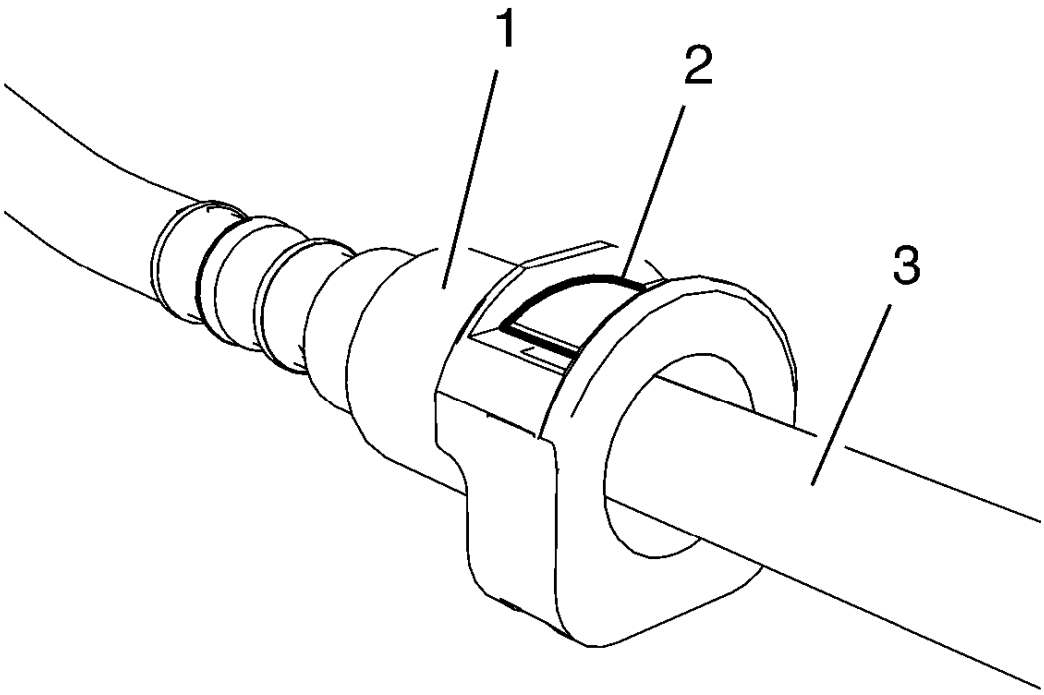

Fig. 78: Pushing Latch Into Connector
Courtesy of GENERAL MOTORS COMPANY

2. Push the latch (2) into the connector (1).

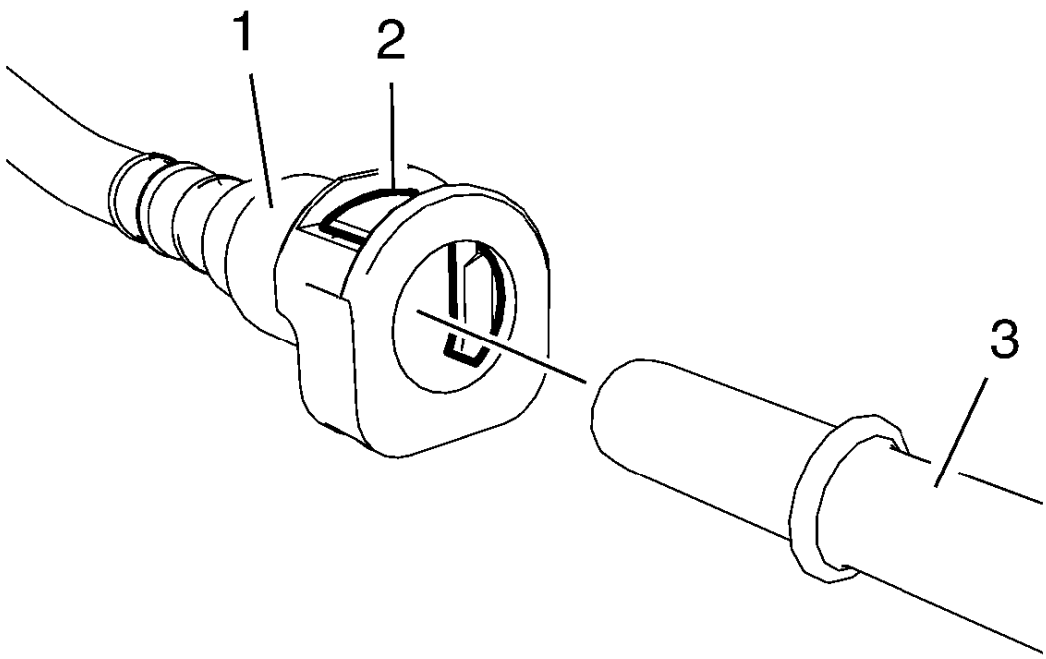

Fig. 79: Pulling Pipe Out Of Connector
Courtesy of GENERAL MOTORS COMPANY

3. Pull the pipe (3) out of the connector (1).
4. Release the latch (2).

Connect

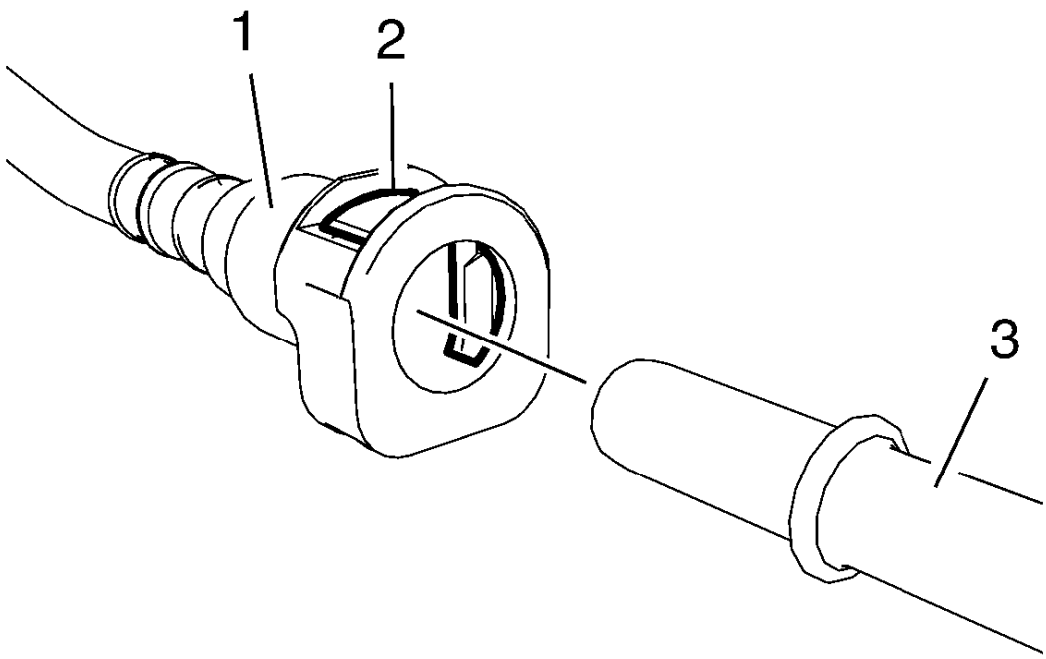

Fig. 80: Pulling Pipe Out Of Connector
Courtesy of GENERAL MOTORS COMPANY

1. Push the pipe (3) into the connector (1).

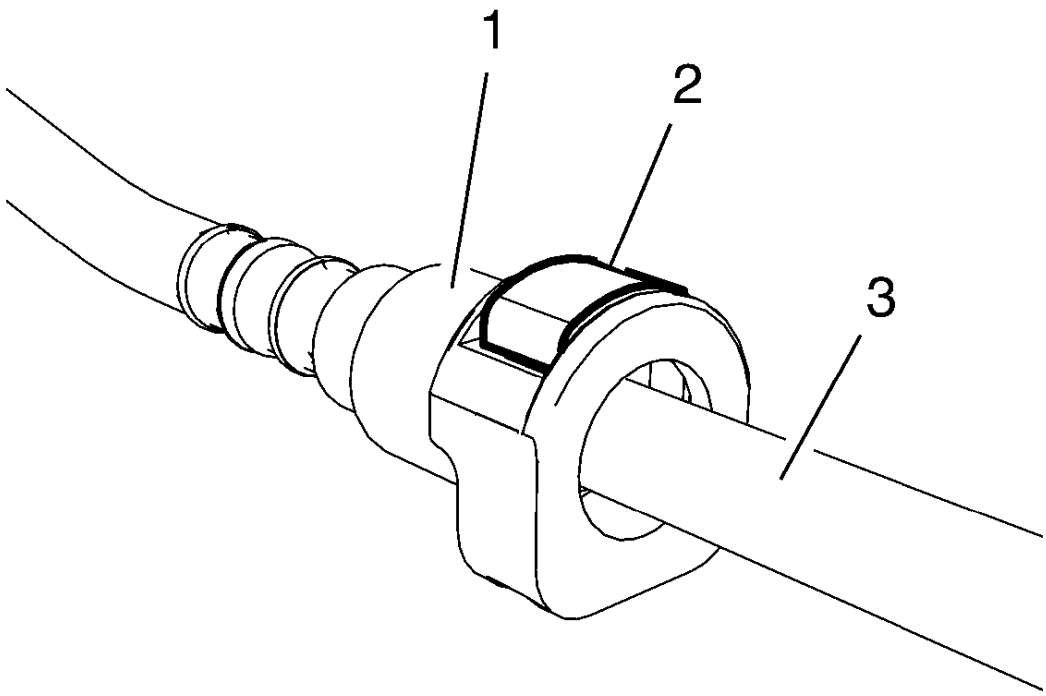

Fig. 81: Pushing Latch Down
Courtesy of GENERAL MOTORS COMPANY

2. When the connector is locked correctly, the latch (2) must align to the connector (1).
3. Do not rely only on the audible click to confirm a secure connection has been made.

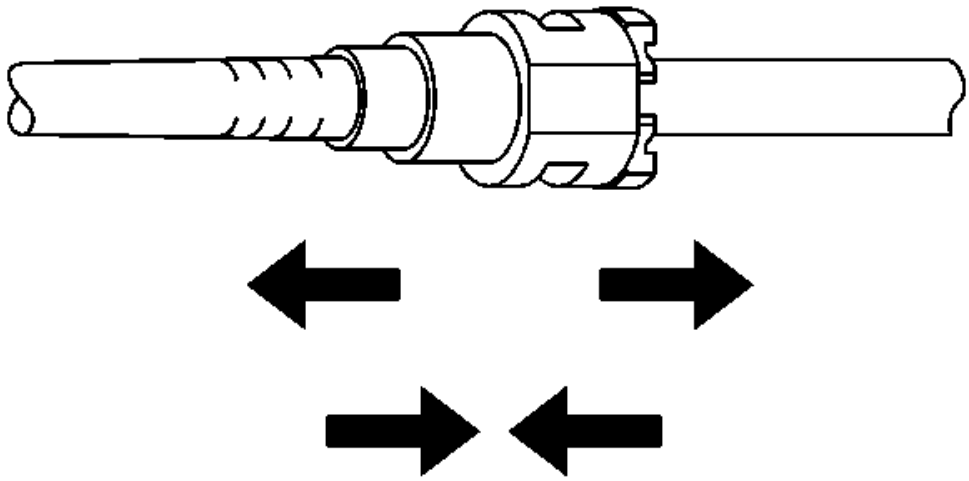

Fig. 82: View Of Quick-Connect Fitting
Courtesy of GENERAL MOTORS COMPANY

4. Pull on both sides of the quick connect fitting in order to make sure the connection is secure.

Type B - Disconnect/Connect

Disconnect

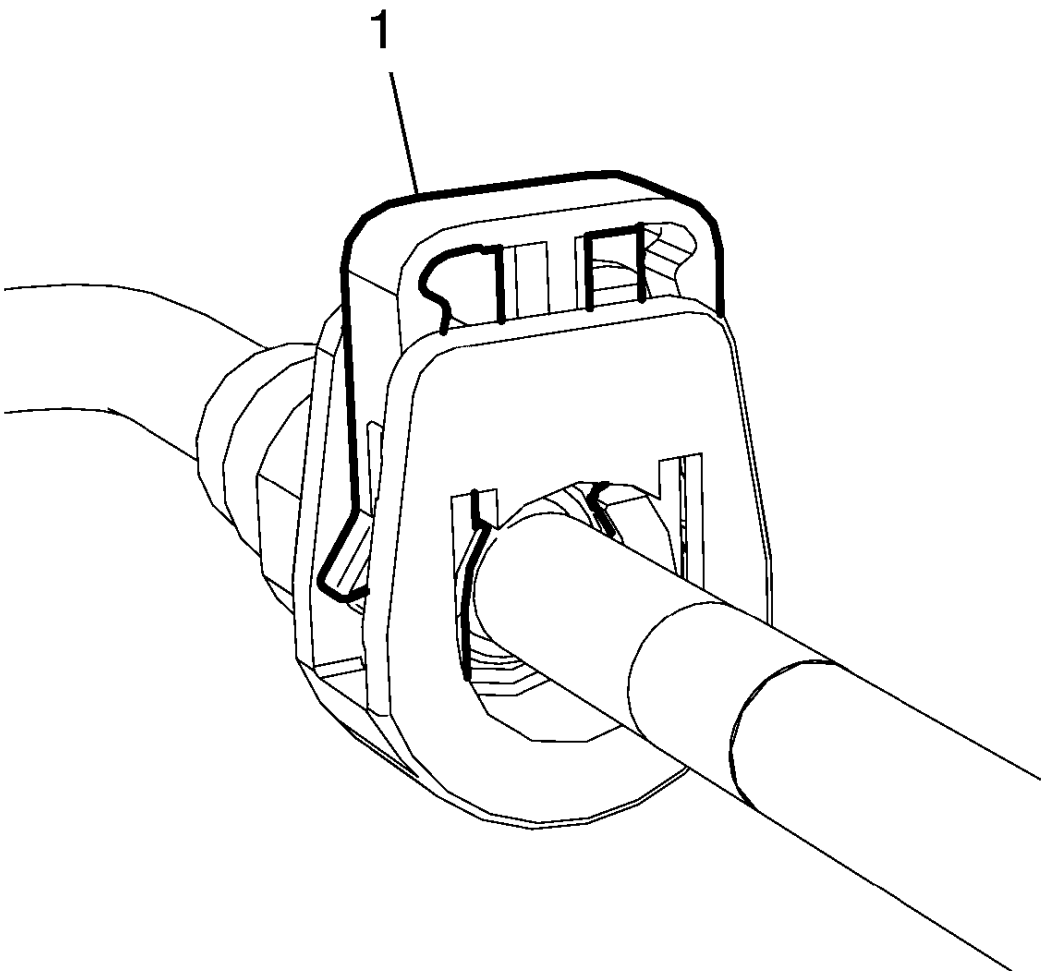

Fig. 83: Pulling Latch Out Of Connector
Courtesy of GENERAL MOTORS COMPANY

NOTE: Mechanical violence is not necessary for a successful disconnection/connection.

1. Unlock the connector by pulling the latch (1) out of the connector. Use a suitable tool if necessary.

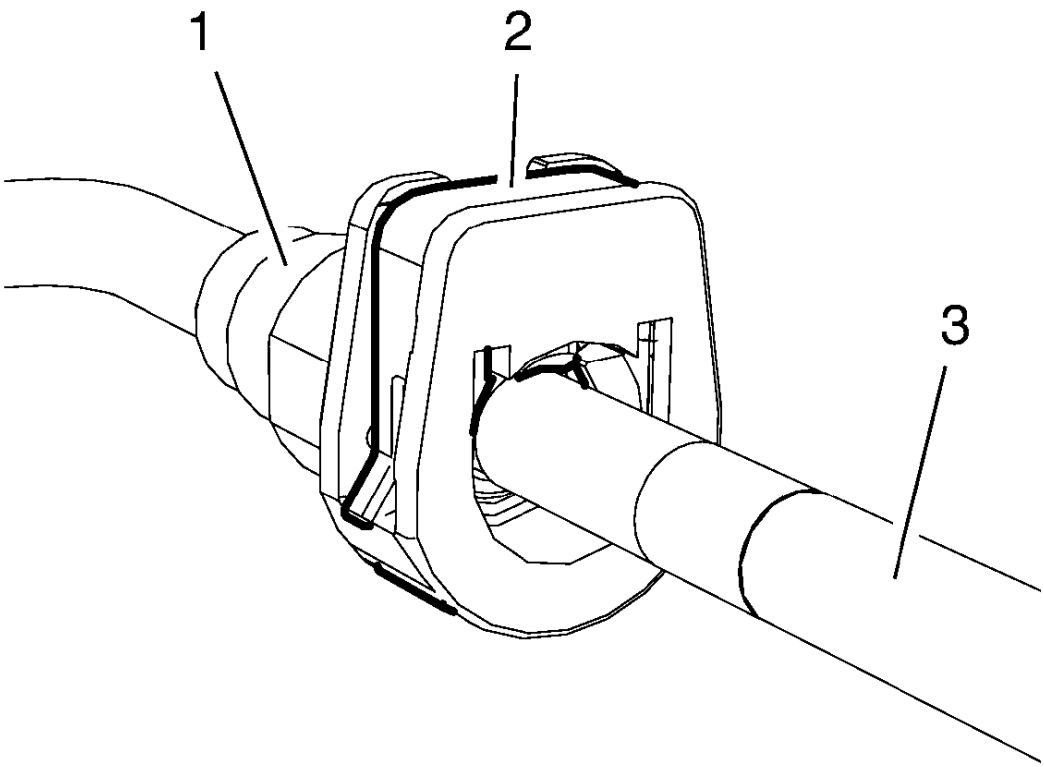

Fig. 84: Pushing Pipe Into Connector
Courtesy of GENERAL MOTORS COMPANY

2. Push the pipe (3) into the connector (1).

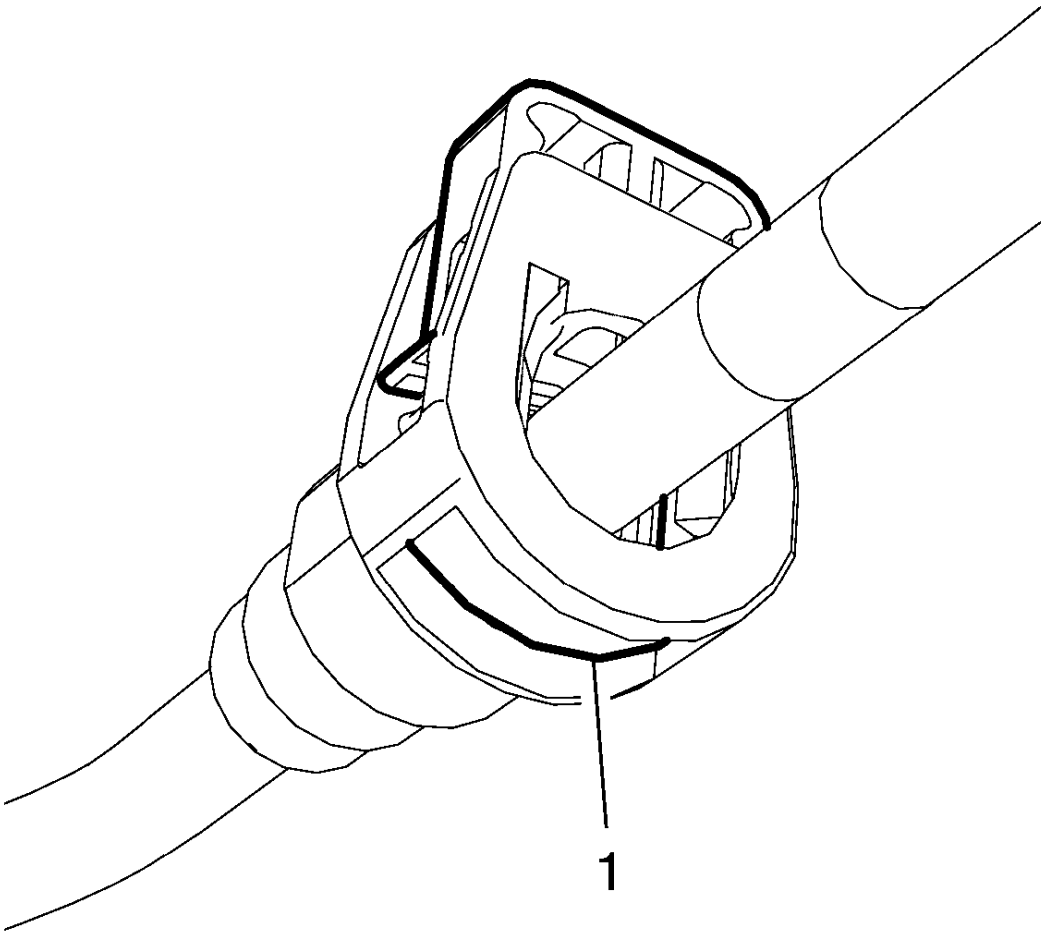

Fig. 85: Pushing Latch Into Connector
Courtesy of GENERAL MOTORS COMPANY

3. Push the latch (1) into the connector.

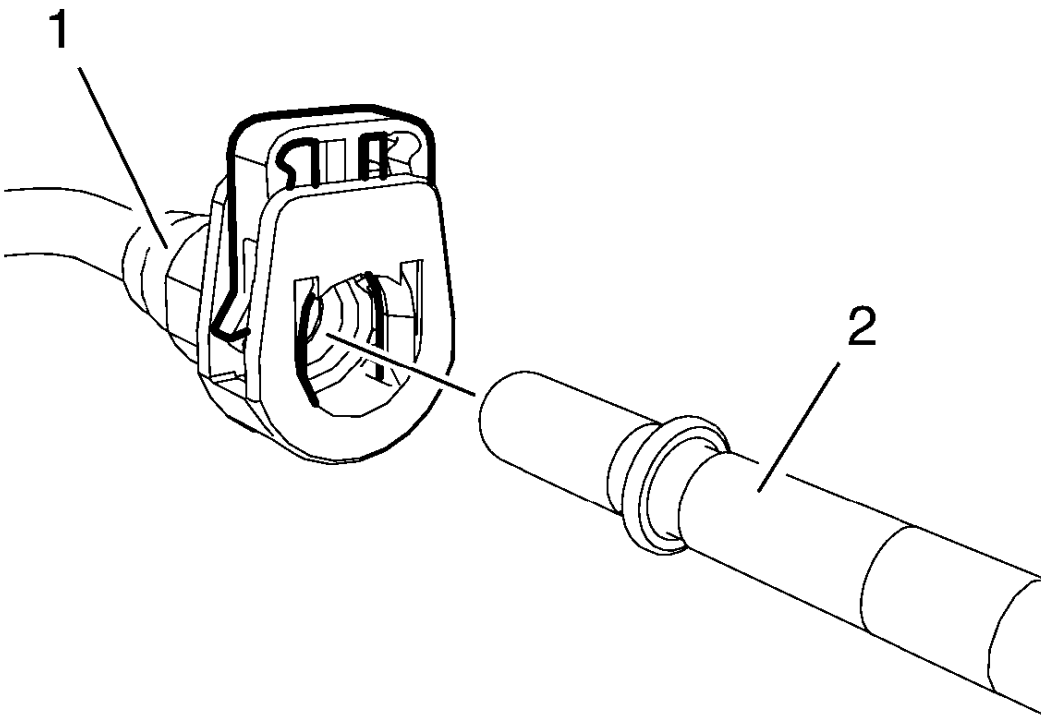

Fig. 86: Pulling Pipe Out Of Connector
Courtesy of GENERAL MOTORS COMPANY

4. Pull the pipe (2) out of the connector (1).
5. Release the latch.

Connect

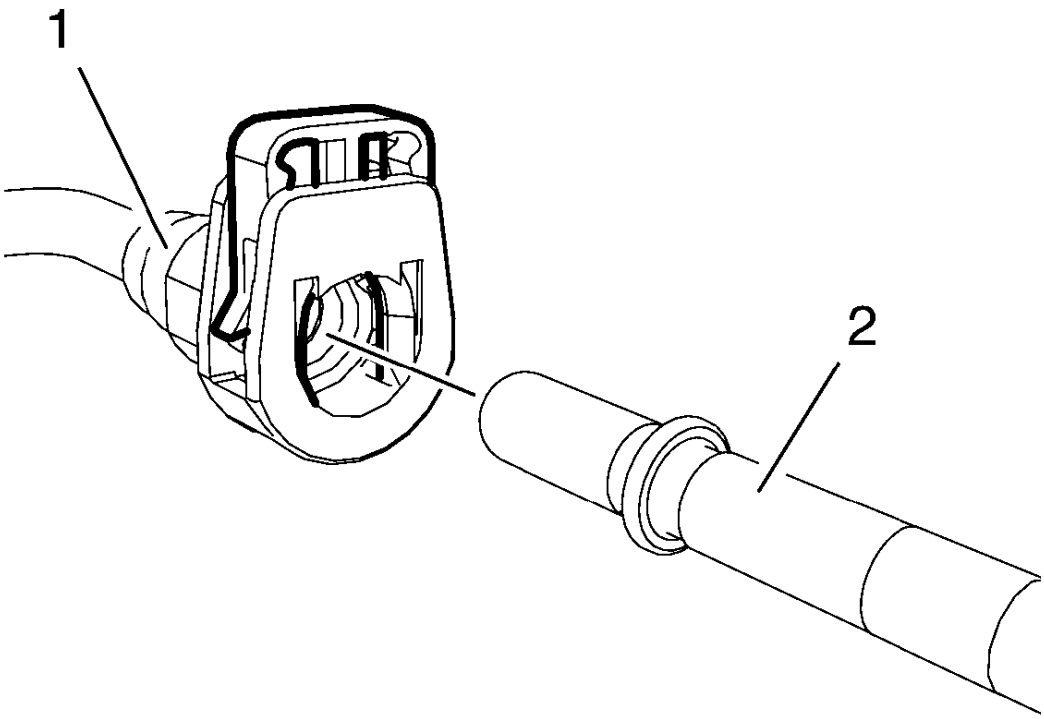

Fig. 87: Pulling Pipe Out Of Connector
Courtesy of GENERAL MOTORS COMPANY

1. Push the pipe (2) into the connector (1).

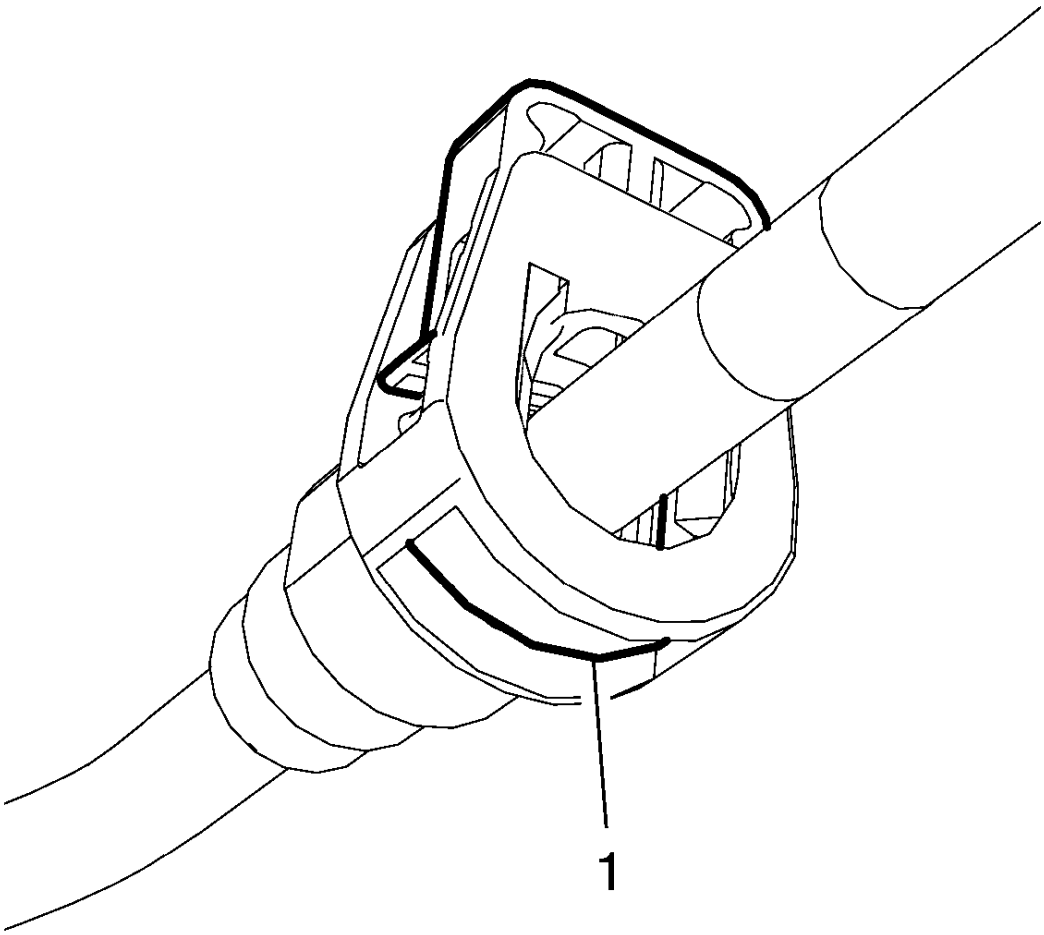

Fig. 88: Pushing Latch Into Connector
Courtesy of GENERAL MOTORS COMPANY

2. When the connector is locked correctly, the latch (1) must align to the connector.

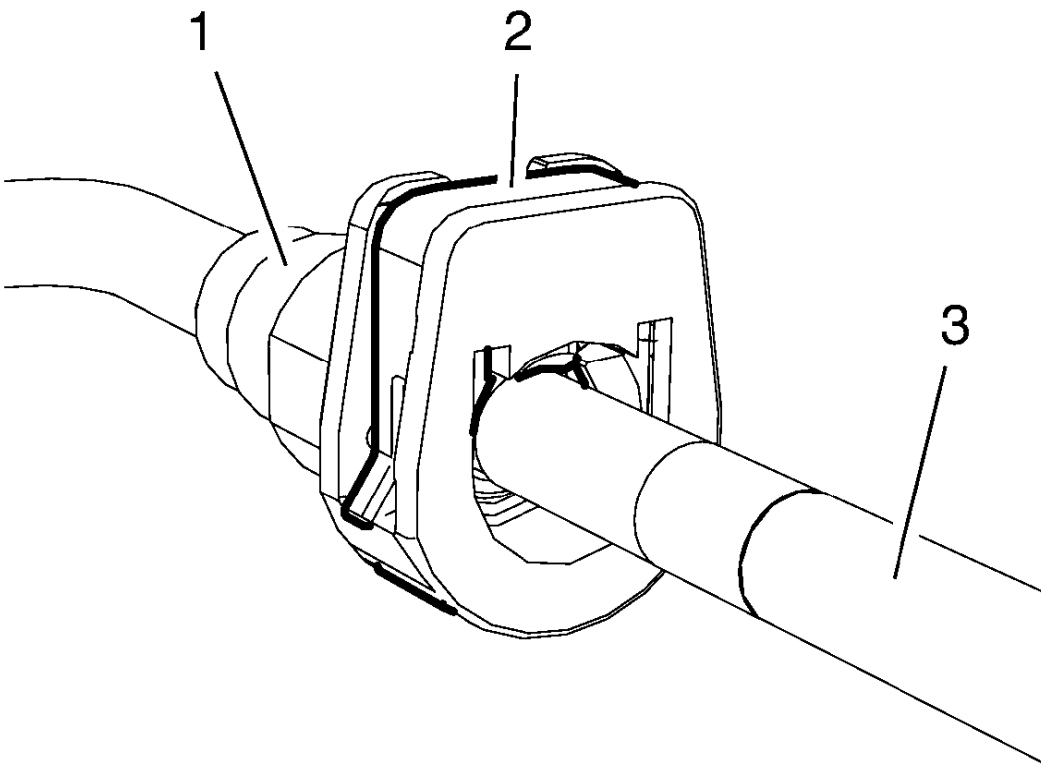

Fig. 89: Pushing Pipe Into Connector
Courtesy of GENERAL MOTORS COMPANY

NOTE: The latch (2) can only pushed into the connector (1) when the pipe (3) is connected correctly.

3. Push the latch (2) into the connector (1) to secure the connection.
4. Do not rely only on the audible click to confirm a secure connection has been made.

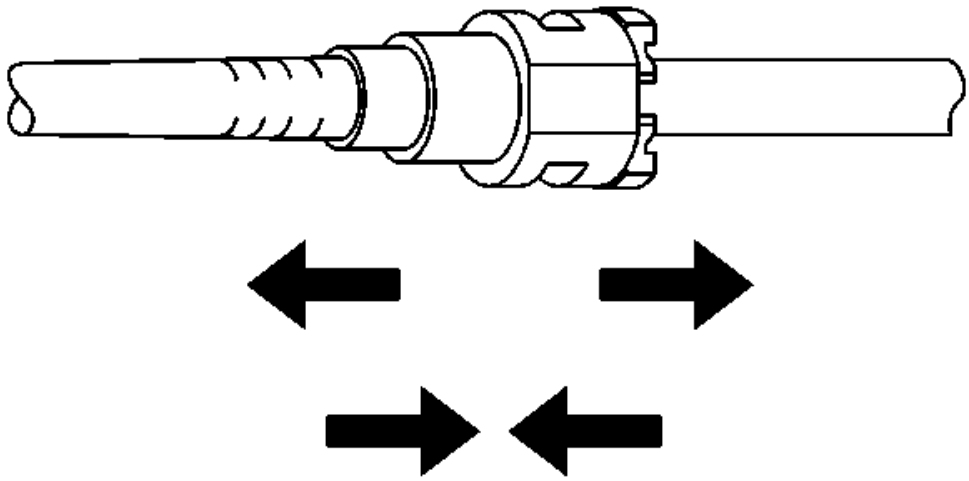

Fig. 90: View Of Quick-Connect Fitting
Courtesy of GENERAL MOTORS COMPANY

5. Pull on both sides of the quick connect fitting in order to make sure the connection is secure.

Type C - Disconnect/Connect

Disconnect

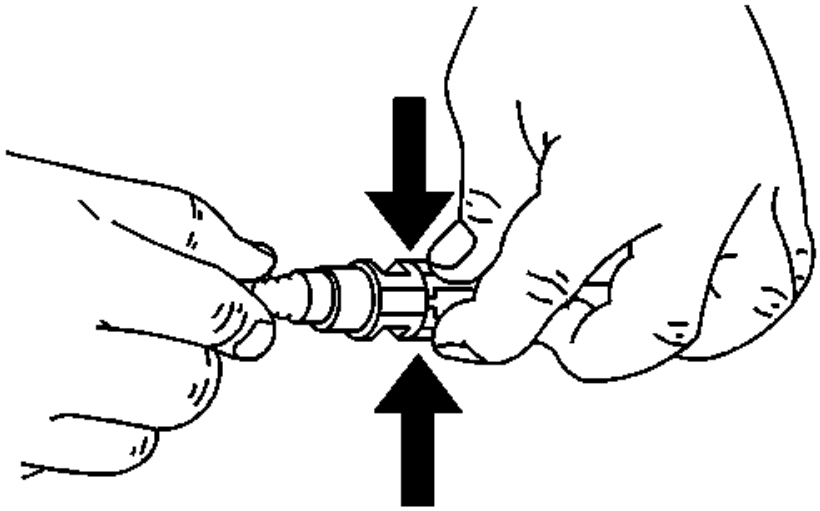

Fig. 91: View Of Quick Connect Fitting Release Tabs (Plastic Collar)
Courtesy of GENERAL MOTORS COMPANY

NOTE: Mechanical violence is not necessary for a successful disconnection/connection.

1. Squeeze the plastic quick connect fitting release tabs with the **EN-796-A** release tool.

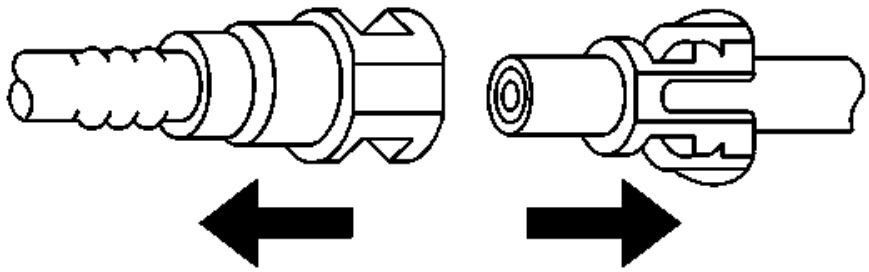

Fig. 92: View Of Pulling Connection Apart (Plastic Collar)
Courtesy of GENERAL MOTORS COMPANY

2. Pull the connection apart.

Connect

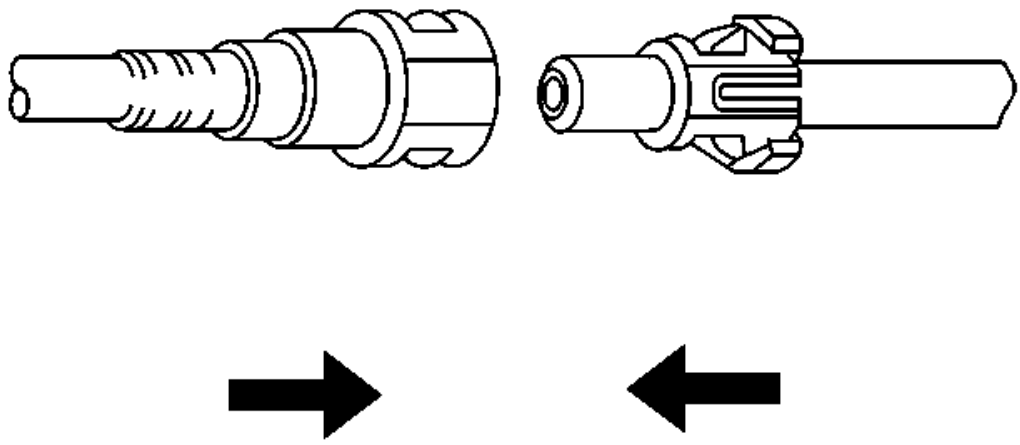

Fig. 93: Connecting Fittings (Plastic Collar)
Courtesy of GENERAL MOTORS COMPANY

1. Push both sides of the quick connect fitting together in order to cause the retaining feature to snap into place.
2. Do not rely only on the audible click to confirm a secure connection has been made.

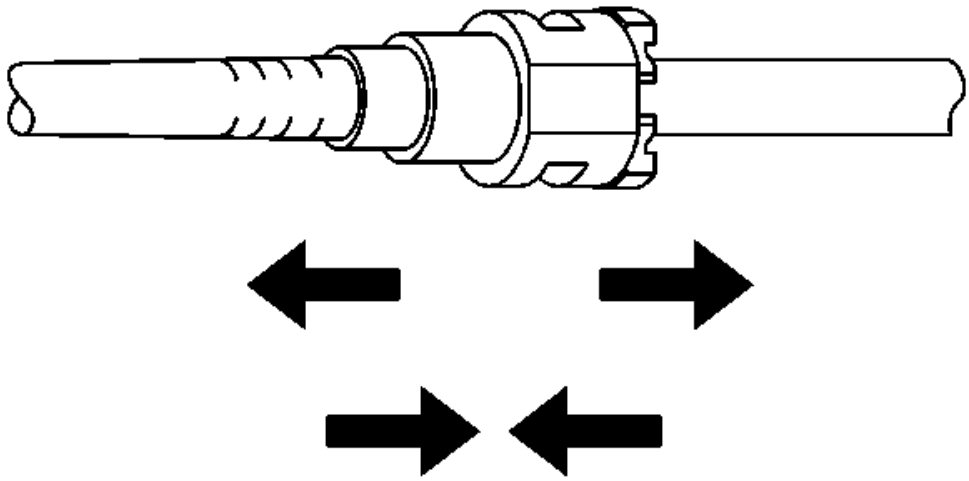

Fig. 94: View Of Quick-Connect Fitting
Courtesy of GENERAL MOTORS COMPANY

3. Once installed, pull on both sides of the quick connect fitting in order to make sure the connection is secure.

Type D - Disconnect/Connect

Disconnect

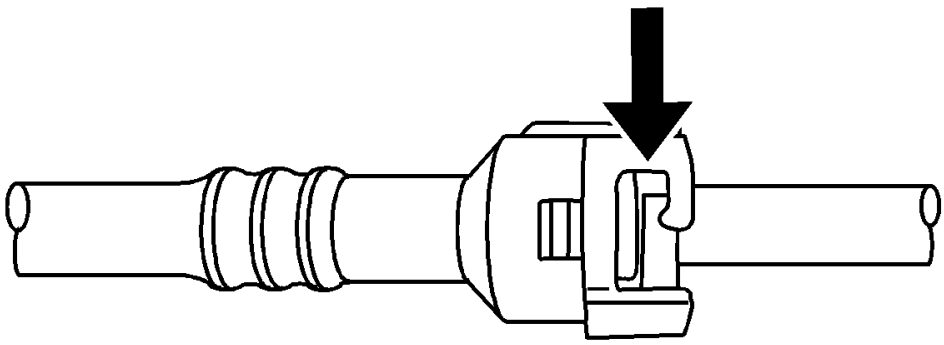

Fig. 95: Releasing Q Release Style Connectors (Plastic Collar)
Courtesy of GENERAL MOTORS COMPANY

NOTE: Mechanical violence is not necessary for a successful disconnection/connection.

1. Release the fitting by pushing the tab toward the other side of the slot in the fitting.

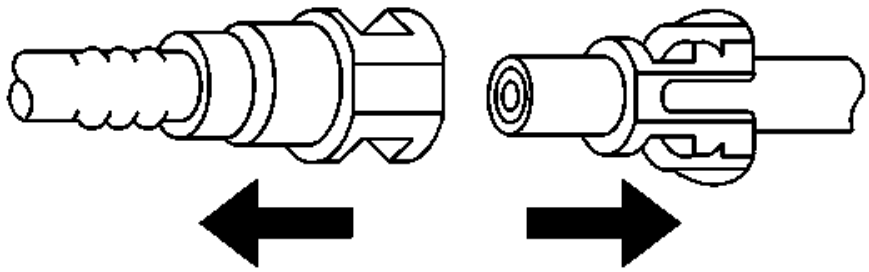

Fig. 96: View Of Pulling Connection Apart (Plastic Collar)
Courtesy of GENERAL MOTORS COMPANY

2. Pull the connection apart.

Connect

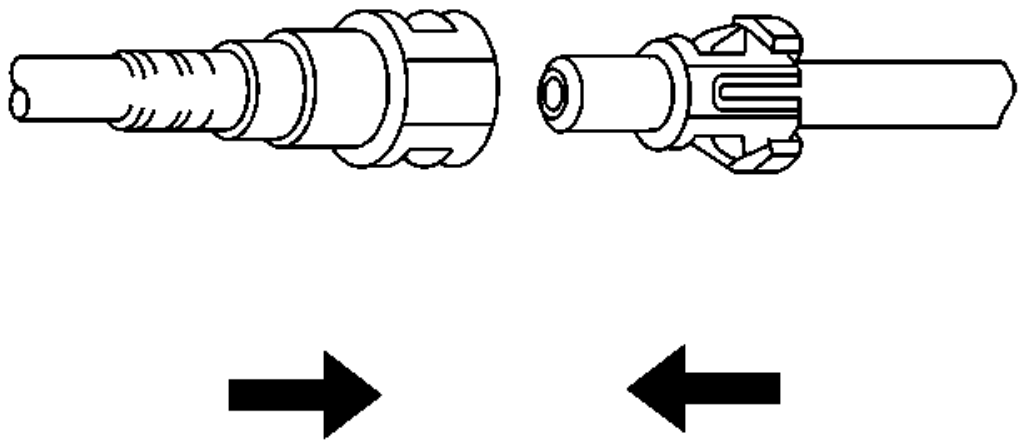

Fig. 97: Connecting Fittings (Plastic Collar)
Courtesy of GENERAL MOTORS COMPANY

1. Push both sides of the quick connect fitting together in order to cause the retaining feature to snap into place.
2. Do not rely only on the audible click to confirm a secure connection has been made.

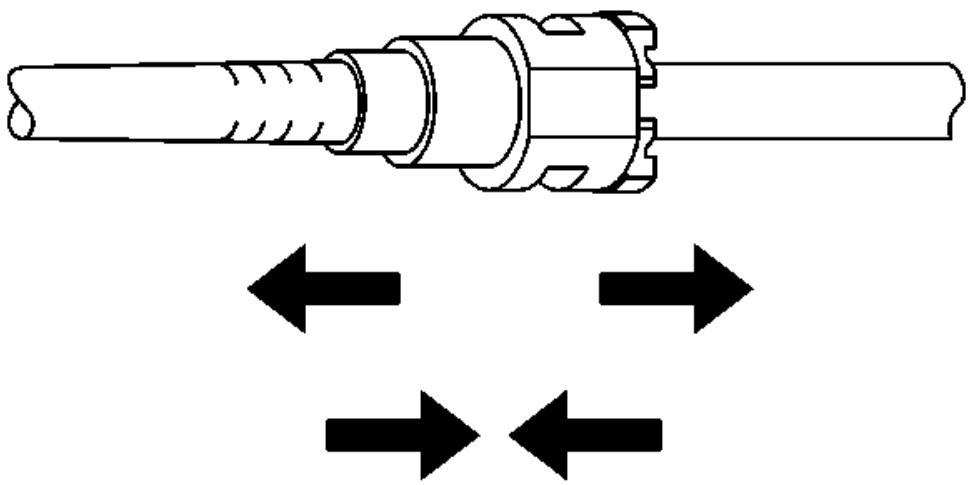

Fig. 98: View Of Quick-Connect Fitting
Courtesy of GENERAL MOTORS COMPANY

3. Once installed, pull on both sides of the quick connect fitting in order to make sure the connection is secure.

Type E - Disconnect/Connect

Disconnect

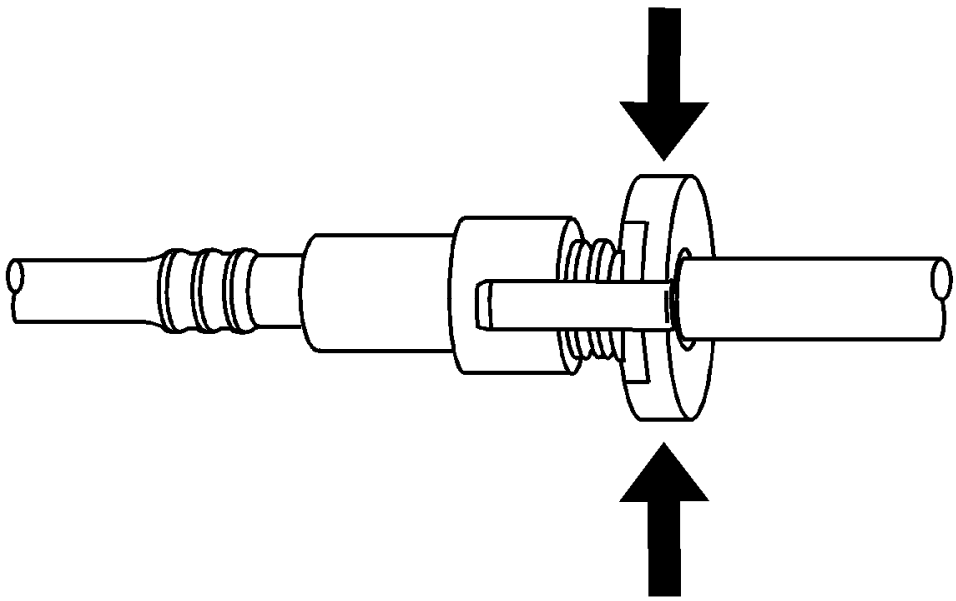

Fig. 99: Quick Connect Fitting (Plastic Collar)
Courtesy of GENERAL MOTORS COMPANY

NOTE: Mechanical violence is not necessary for a successful disconnection/connection.

1. Squeeze where indicated by arrows on both sides of the plastic ring surrounding the quick connect fitting.

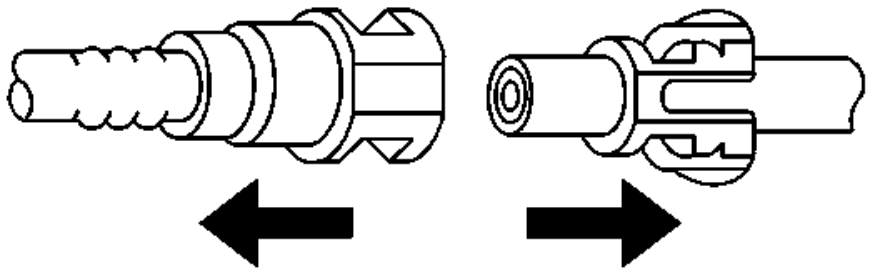

Fig. 100: View Of Pulling Connection Apart (Plastic Collar)
Courtesy of GENERAL MOTORS COMPANY

2. Pull the connection apart.

Connect

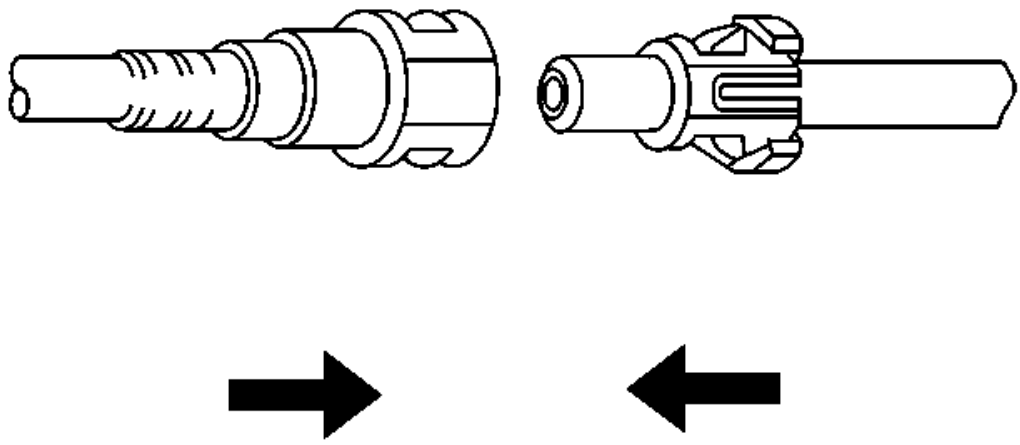

Fig. 101: Connecting Fittings (Plastic Collar)
Courtesy of GENERAL MOTORS COMPANY

1. Push both sides of the quick connect fitting together in order to cause the retaining feature to snap into place.
2. Do not rely only on the audible click to confirm a secure connection has been made.

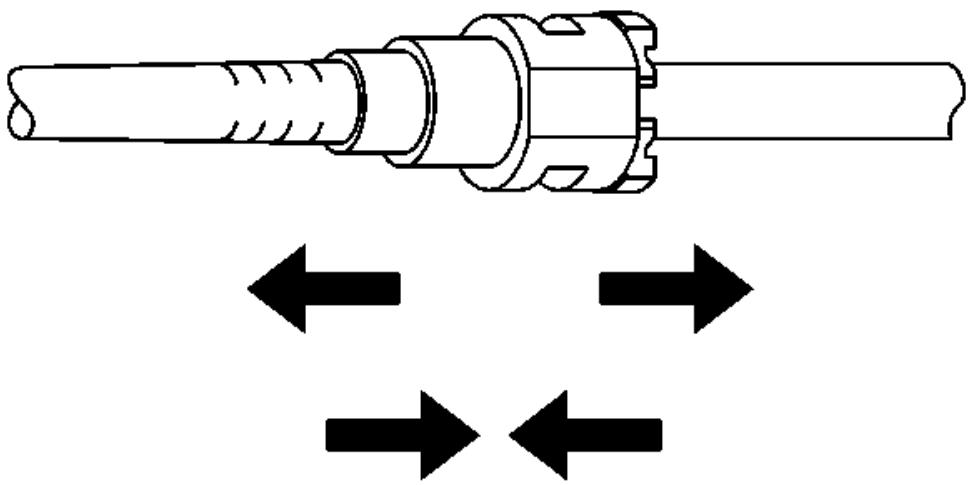

Fig. 102: View Of Quick-Connect Fitting
Courtesy of GENERAL MOTORS COMPANY

3. Once installed, pull on both sides of the quick connect fitting in order to make sure the connection is secure.

Type F - Disconnect/Connect

Disconnect

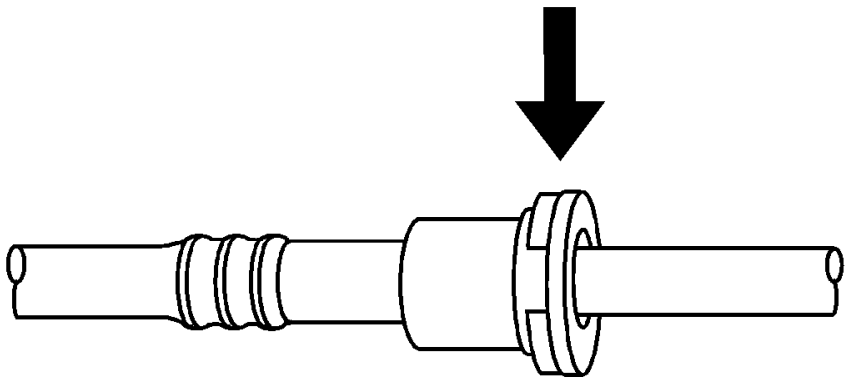

Fig. 103: View Of Sliding Retainer Style Connector
Courtesy of GENERAL MOTORS COMPANY

NOTE: Mechanical violence is not necessary for a successful disconnection/connection.

1. Release the fitting by pressing on one side of the release tab causing it to push in slightly. If the tab does not move, try pressing the tab in from the opposite side. The tab will only move in one direction.

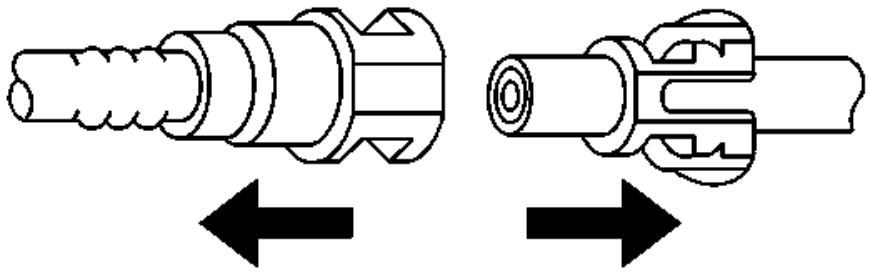

Fig. 104: View Of Pulling Connection Apart (Plastic Collar)
Courtesy of GENERAL MOTORS COMPANY

2. Pull the connection apart.

Connect

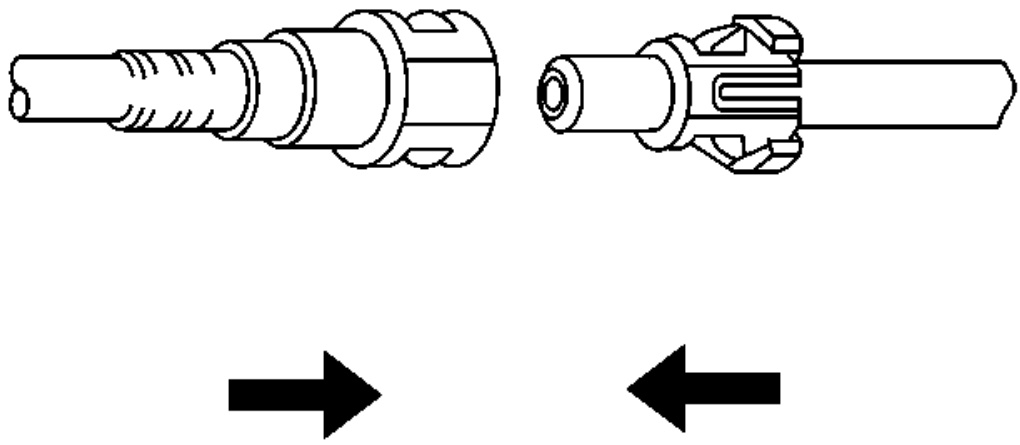

Fig. 105: Connecting Fittings (Plastic Collar)
Courtesy of GENERAL MOTORS COMPANY

1. Push both sides of the quick connect fitting together in order to cause the retaining feature to snap into place.
2. Do not rely only on the audible click to confirm a secure connection has been made.

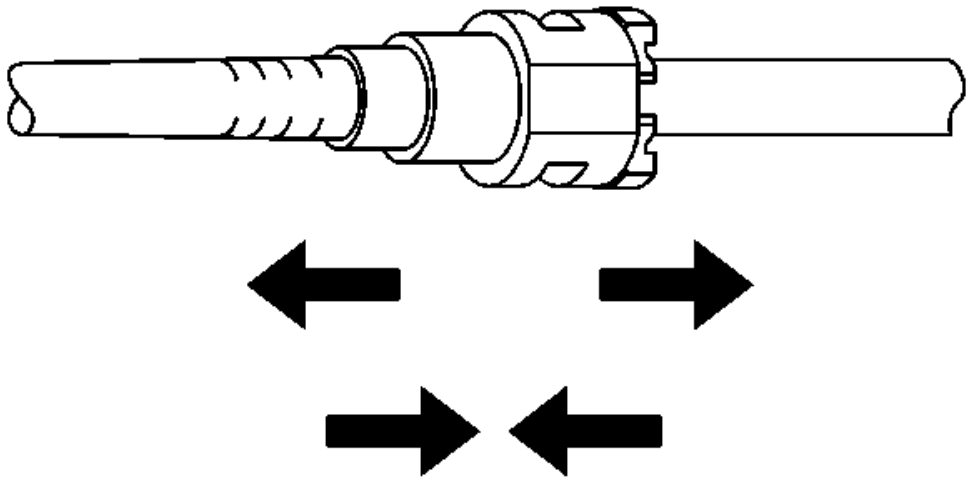

Fig. 106: View Of Quick-Connect Fitting
Courtesy of GENERAL MOTORS COMPANY

3. Once installed, pull on both sides of the quick connect fitting in order to make sure the connection is secure.

Type G - Disconnect/Connect

Disconnect

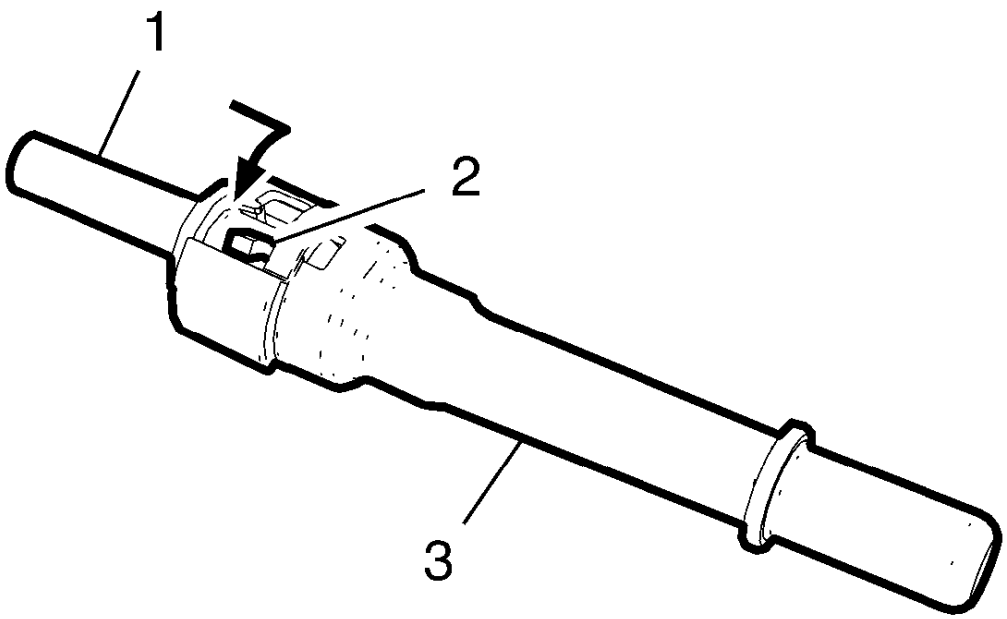

Fig. 107: View Of Connector Latch
Courtesy of GENERAL MOTORS COMPANY

NOTE: Mechanical violence is not necessary for a successful disconnection/connection.

1. Push the tube (3) into the connector (1) and push down the latch (2) as the arrow shows.
2. Hold the latch (2) in this position.

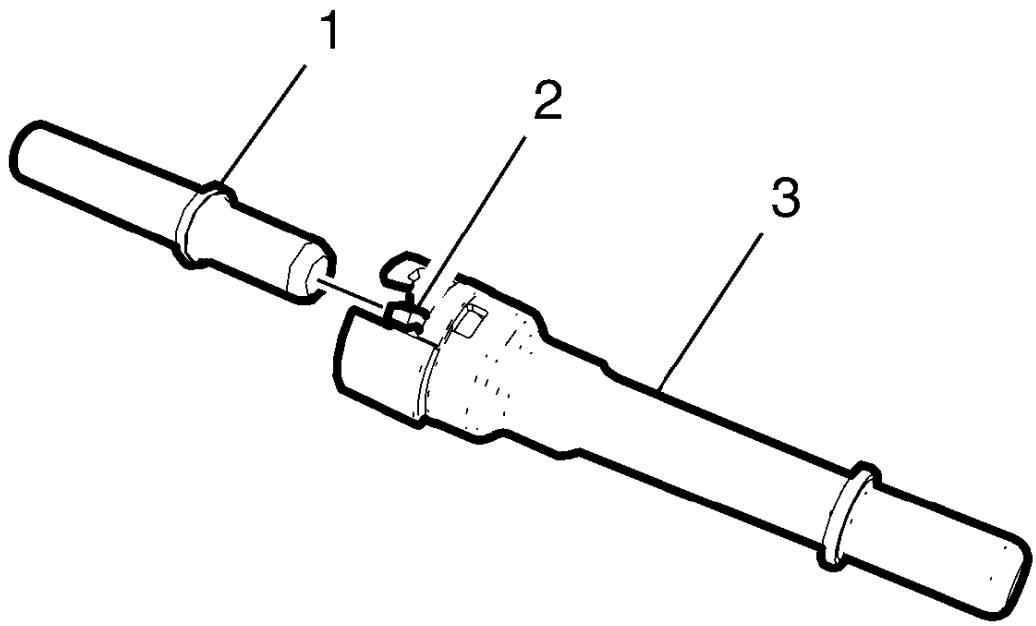

Fig. 108: Pulling Pipe Out Of Connector
Courtesy of GENERAL MOTORS COMPANY

3. Pull the pipe (3) out of the connector (1).
4. Release the latch (2).

Connect

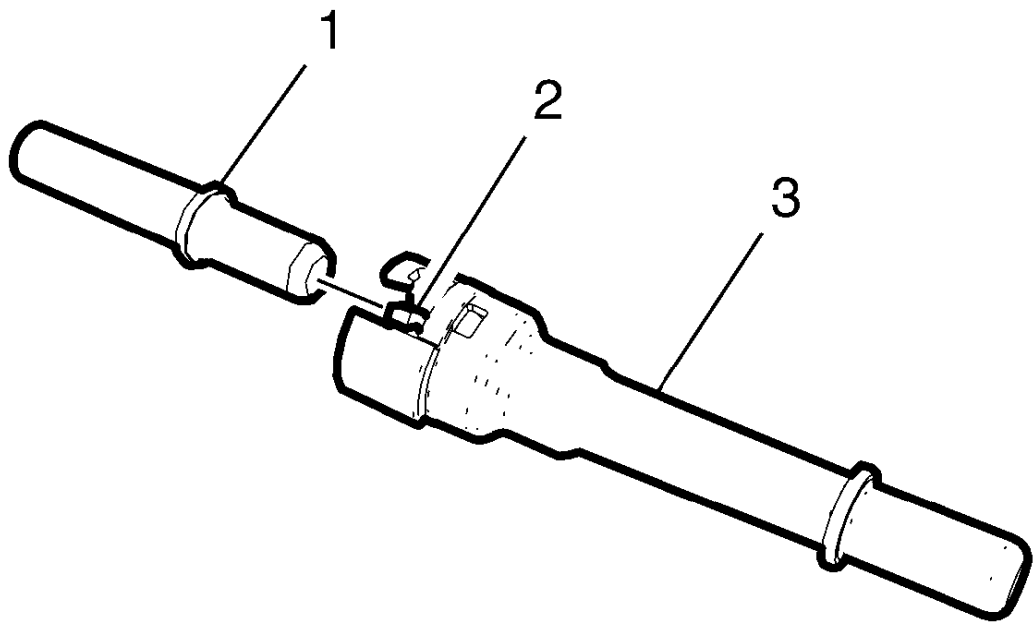

Fig. 109: Pulling Pipe Out Of Connector
Courtesy of GENERAL MOTORS COMPANY

1. Push the pipe (3) into the connector (1).

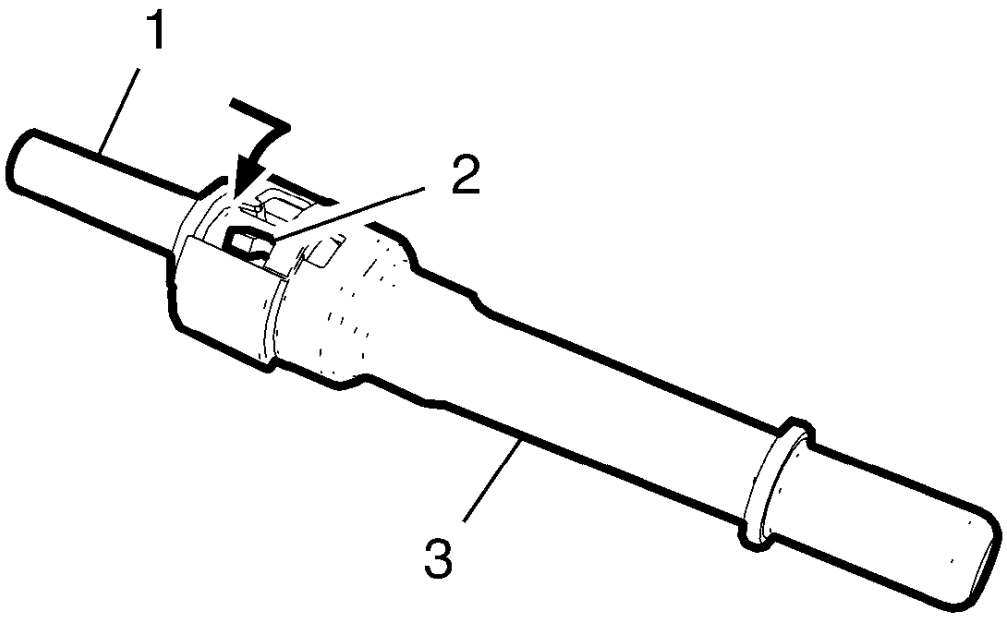

Fig. 110: View Of Connector Latch
Courtesy of GENERAL MOTORS COMPANY

2. When the connector is locked correctly, the latch (2) must go back in opposite arrow direction.
3. Do not rely only on the audible click to confirm a secure connection has been made.

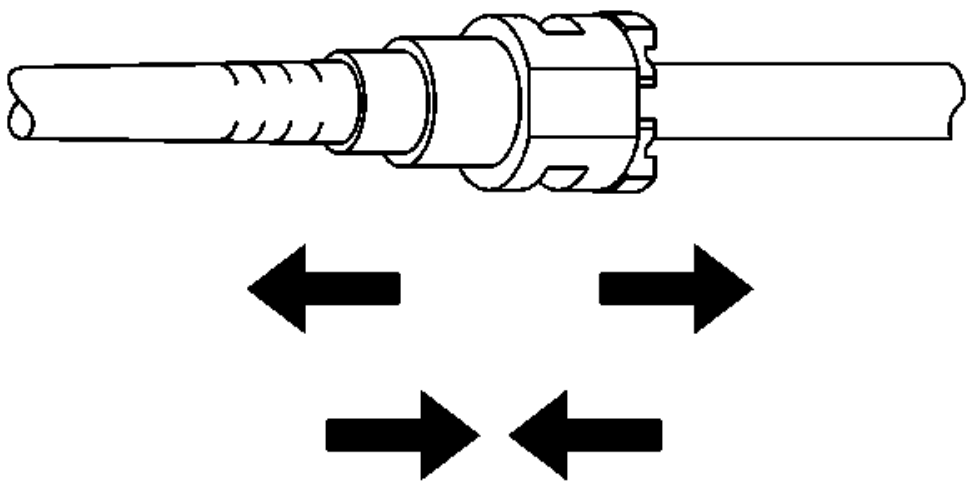

Fig. 111: View Of Quick-Connect Fitting
Courtesy of GENERAL MOTORS COMPANY

4. Pull on both sides of the quick connect fitting in order to make sure the connection is secure.

Type H - Disconnect/Connect

Disconnect

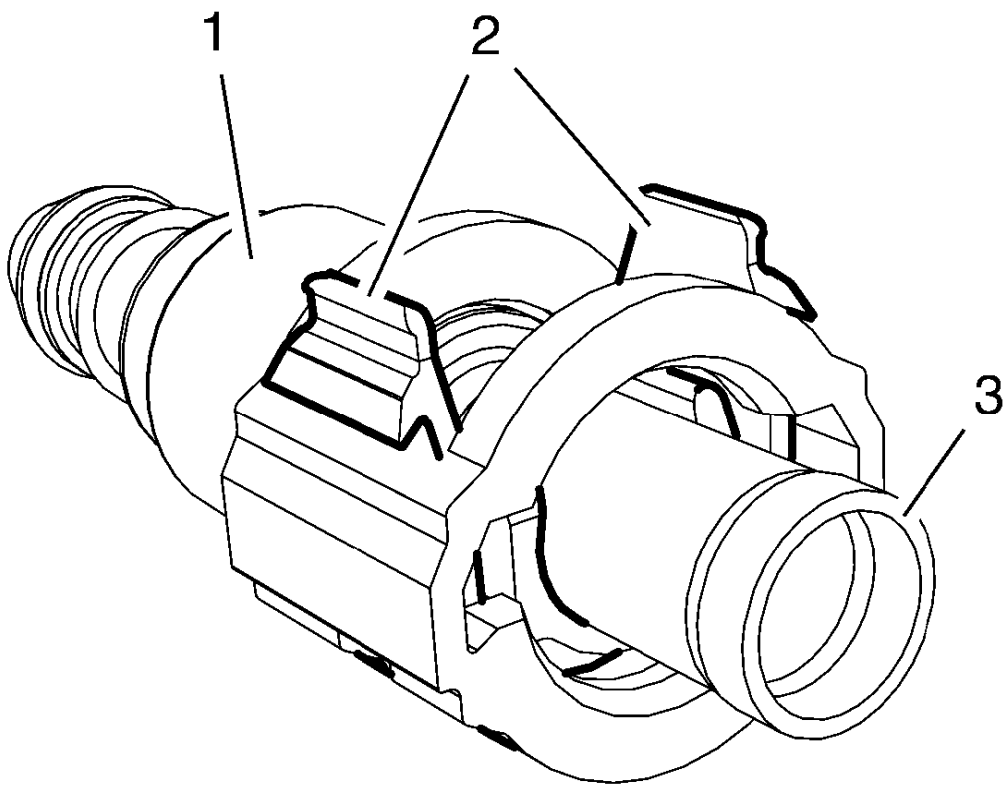

Fig. 112: Connector And Latches
Courtesy of GENERAL MOTORS COMPANY

NOTE: Mechanical violence is not necessary for a successful disconnection/connection.

1. Push the tube (3) into the connector (1) and press the latches (2) together.
2. Hold the latch (2) in this position.

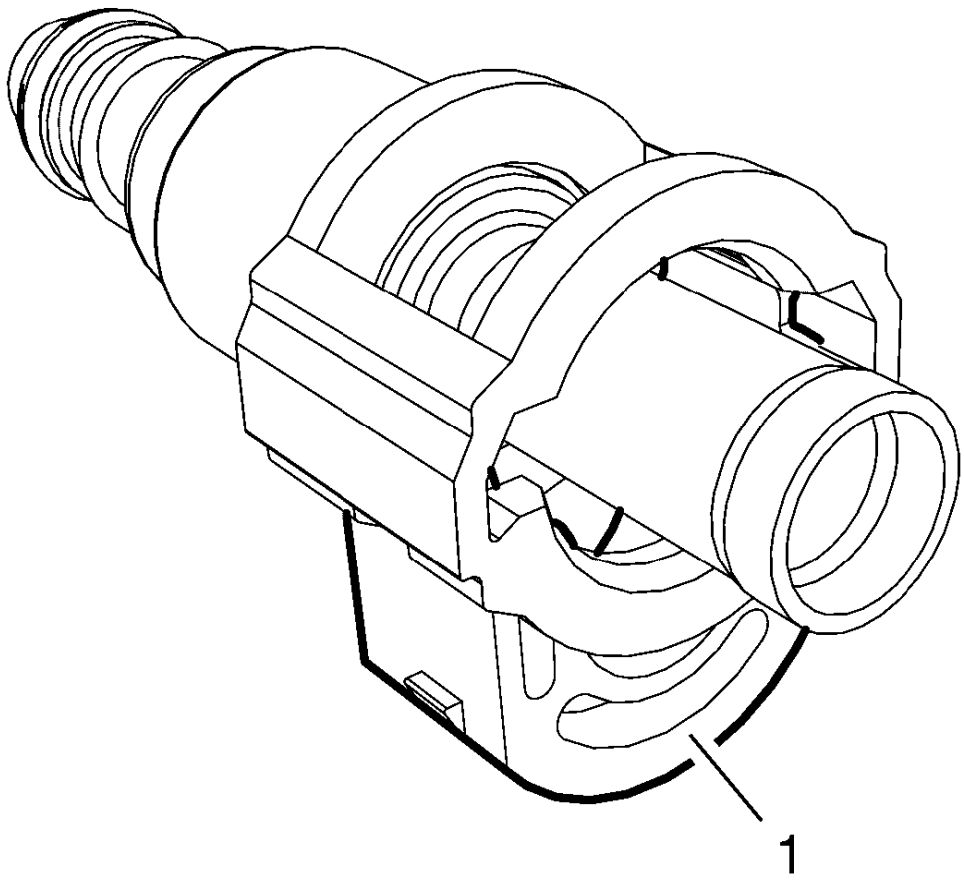

Fig. 113: Connector Latch
Courtesy of GENERAL MOTORS COMPANY

3. Push the latch (1) completely down into the connector.

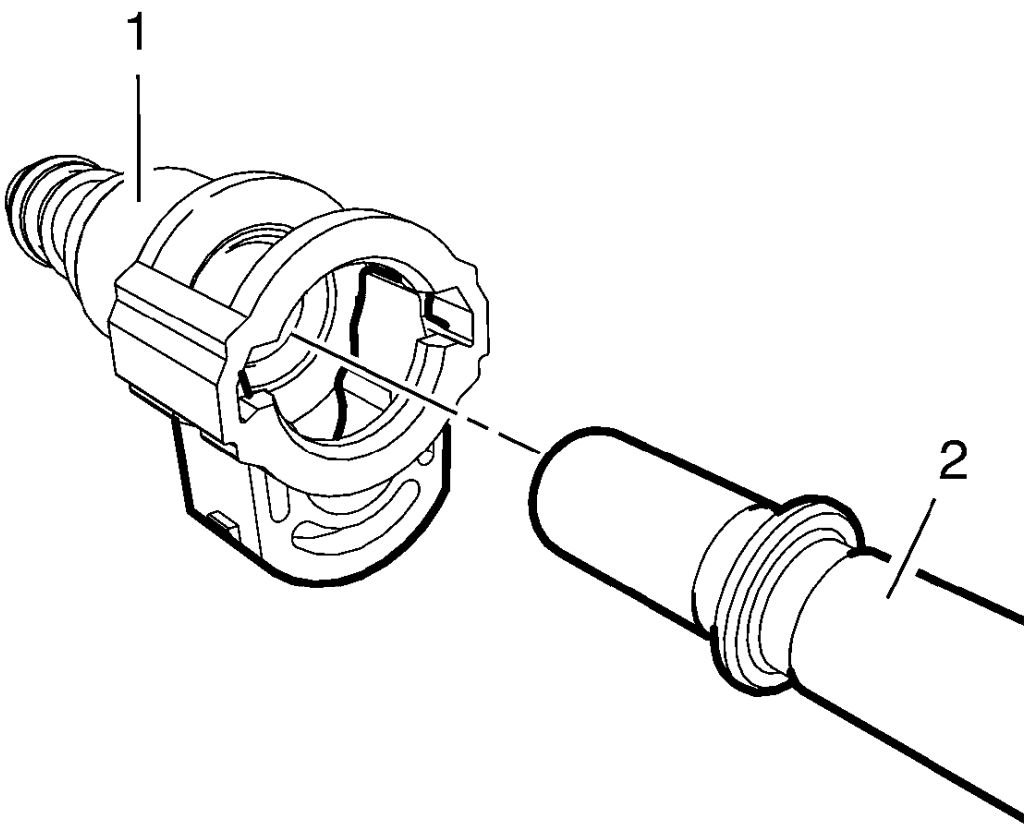

Fig. 114: Pipe And Connector
Courtesy of GENERAL MOTORS COMPANY

4. Pull the pipe (2) out of the connector (1).

Connect

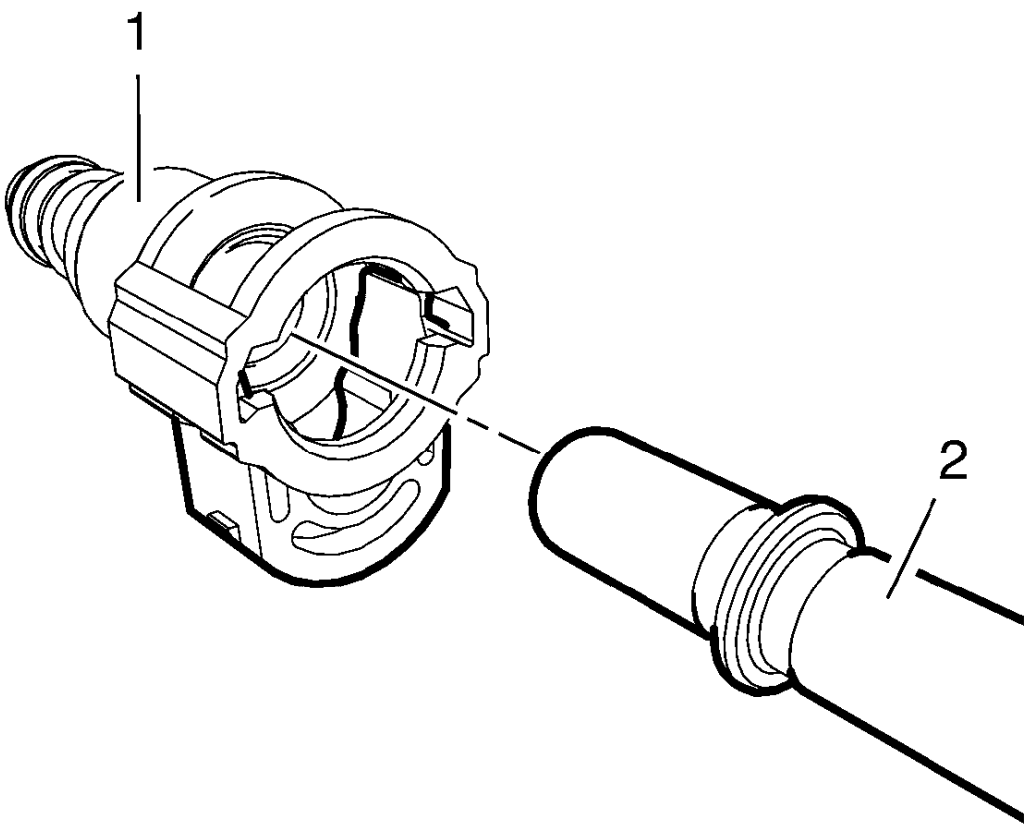

Fig. 115: Pipe And Connector
Courtesy of GENERAL MOTORS COMPANY

1. Push the pipe (2) into the connector (1).

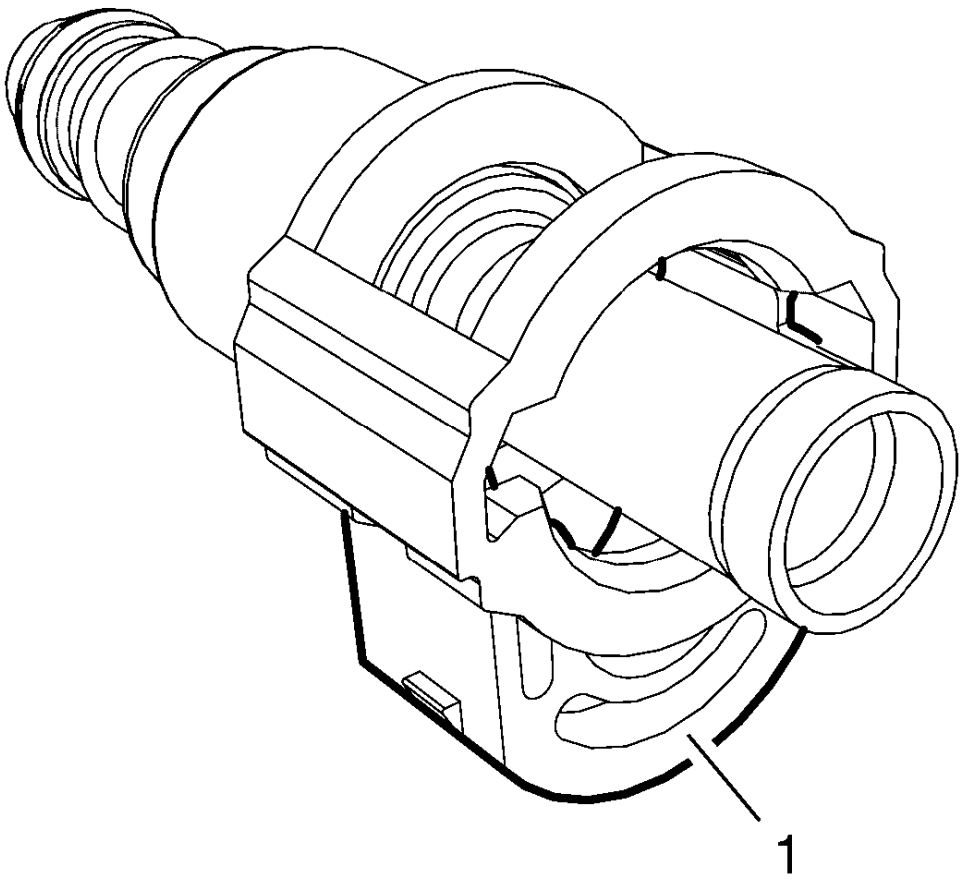

Fig. 116: Connector Latch
Courtesy of GENERAL MOTORS COMPANY

NOTE: The latch (1) can only pushed into the connector when the pipe is connected correctly.

2. When the connector is connected completely, push the latch (1) back into the connector.

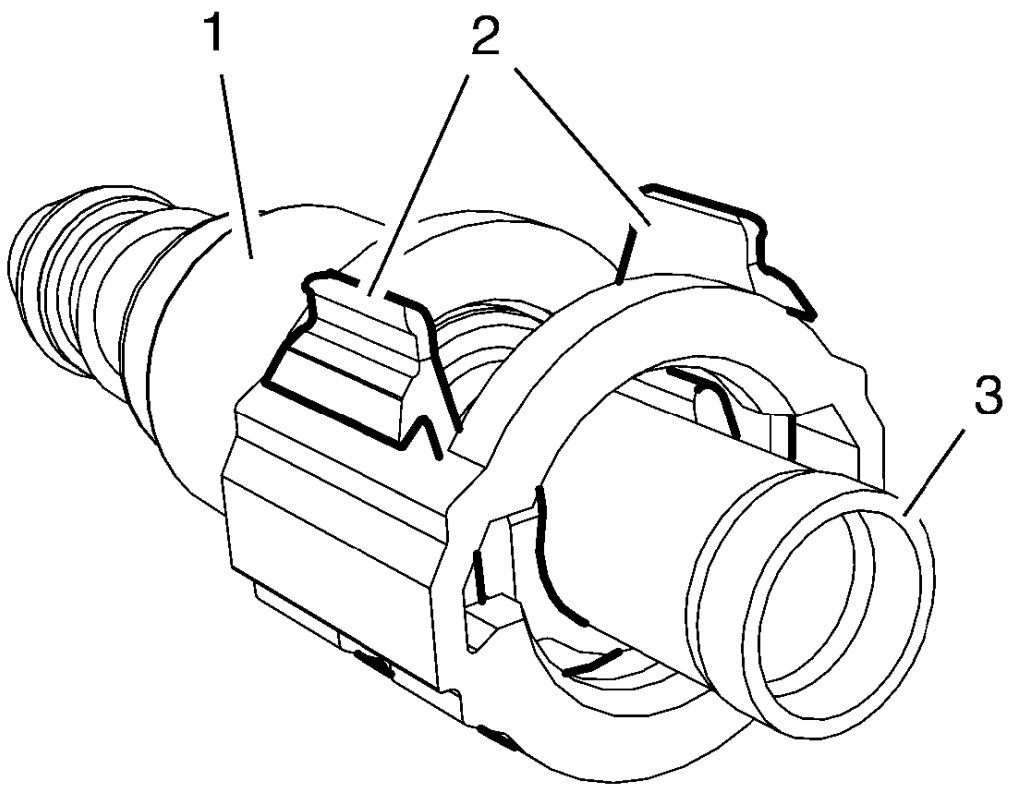

Fig. 117: Connector And Latches
Courtesy of GENERAL MOTORS COMPANY

3. The latch (2) must completely lock at the outside at the connector (1).
4. Do not rely only on the audible click to confirm a secure connection has been made.

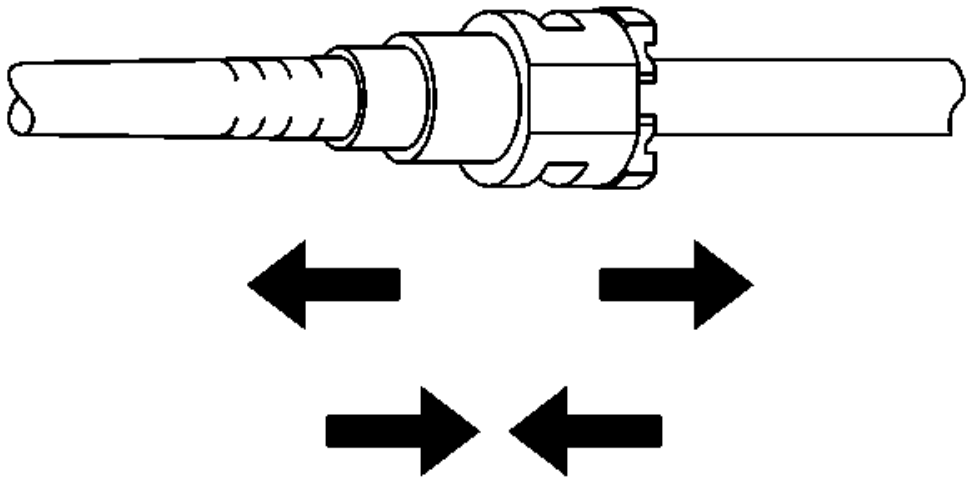

Fig. 118: View Of Quick-Connect Fitting
Courtesy of GENERAL MOTORS COMPANY

5. Pull on both sides of the quick connect fitting in order to make sure the connection is secure.

FUEL SYSTEM CLEANING

NOTE: If the fuel filter is plugged, the fuel tank should be inspected internally and cleaned if necessary.

1. Remove the fuel pump module assembly.
2. Inspect the fuel pump module strainer. Replace the pump module assembly if the fuel strainer is contaminated.

NOTE: When flushing the fuel tank, handle the fuel and water mixture as a hazardous material. Handle the fuel and water in accordance with all applicable local, state, and federal laws and regulations.

3. Flush the fuel tank with hot water.
4. Pour the water out of the fuel sender assembly opening in the fuel tank. Rock the fuel tank in order to be sure that the removal of the water from the fuel tank is complete.
5. Allow the tank to dry completely before reassembly.
6. Disconnect the fuel feed pipe at the engine fuel rail.

NOTE: Only use oil-free compressed air to blow out the fuel pipes.

7. Clean the fuel pipes by applying air pressure in the opposite direction of the fuel flow.
8. Connect the fuel feed pipe to the engine fuel rail.
9. Install the fuel pump module assembly.

FUEL INJECTION FUEL RAIL ASSEMBLY REPLACEMENT

Removal Procedure

1. Disconnect battery negative cable. Refer to **Battery Negative Cable Disconnection and Connection** .
2. Remove engine sight shield.
3. Remove the fuel feed pipe from fuel injection fuel rail. Refer to **Fuel Feed Pipe Replacement**.
4. Remove the positive crankcase ventilation pipe from the intake manifold. Refer to **Positive Crankcase Ventilation Hose/Pipe/Tube Replacement** .

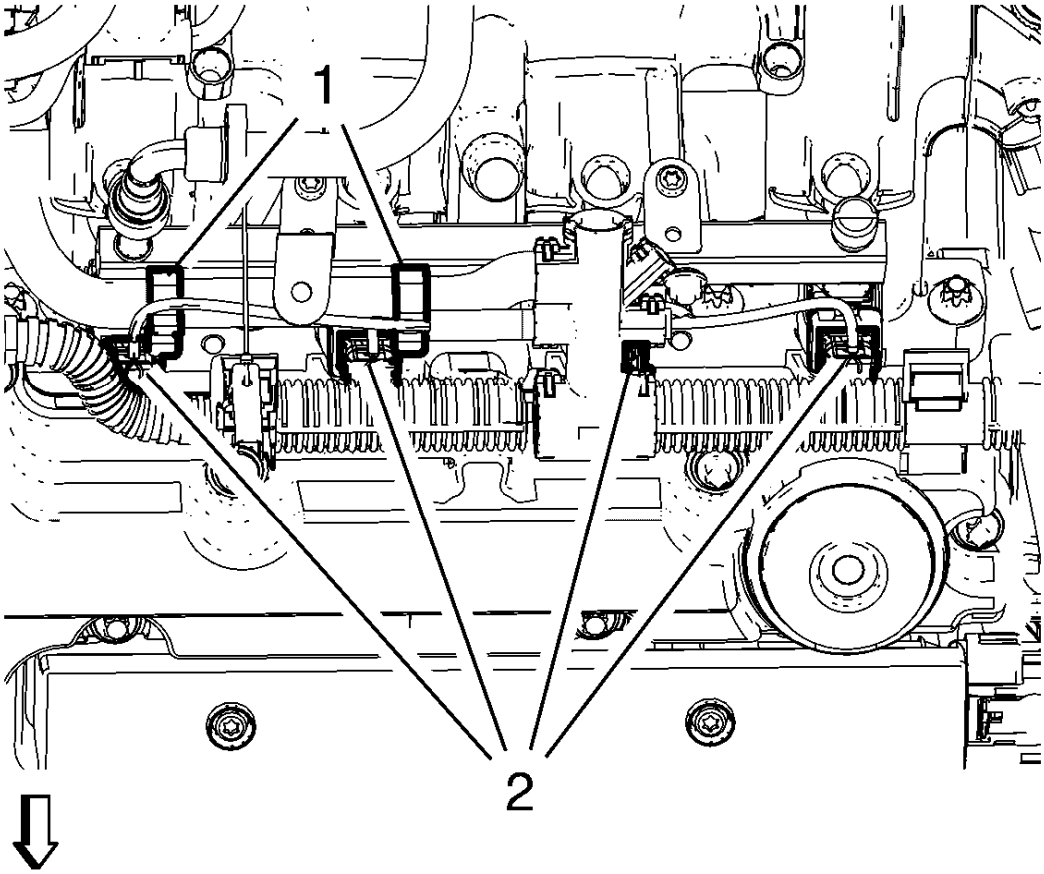

Fig. 119: Fuel Injector Wiring Harness Plugs
Courtesy of GENERAL MOTORS COMPANY

5. Disconnect the 4 fuel injector wiring harness plugs (2).
6. Unclip the ECM wiring harness from retainer clips (1) and the camshaft cover.

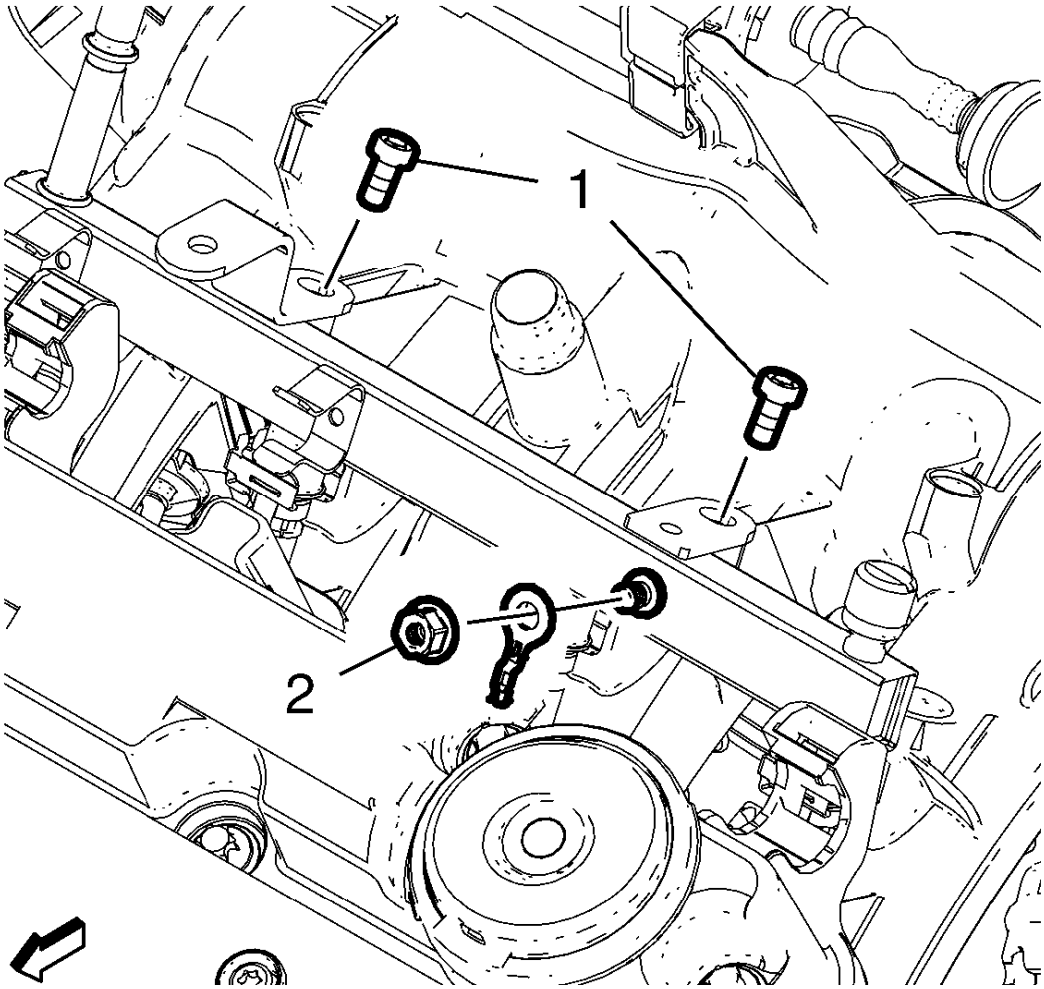

Fig. 120: Fuel Injection Fuel Rail Bolts And Ground Cable Nut
Courtesy of GENERAL MOTORS COMPANY

7. Remove the ground cable nut (2) and the ground cable.
8. Remove the 2 fuel injection fuel rail bolts (1).

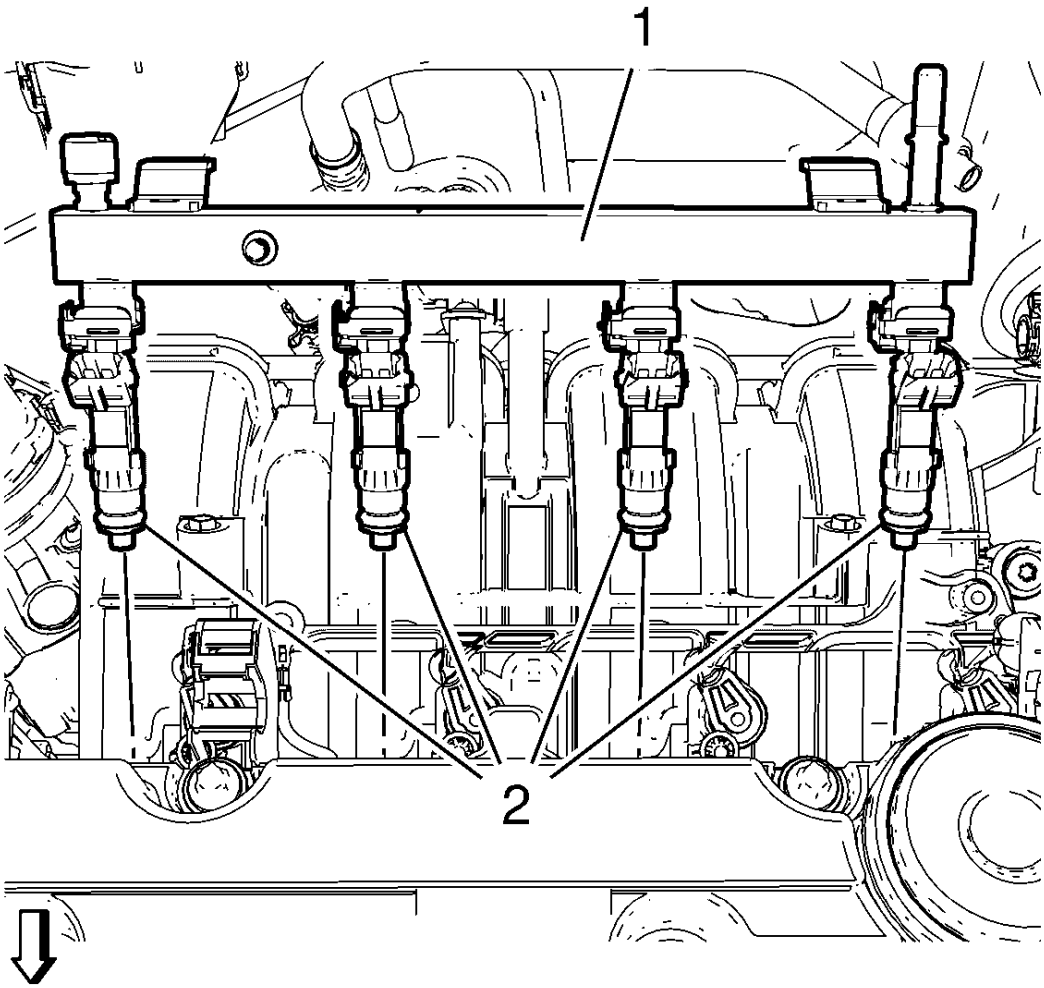

Fig. 121: Fuel Injection Fuel Rail Assembly
Courtesy of GENERAL MOTORS COMPANY

9. Remove the fuel injection fuel rail assembly (1) and the 4 fuel injector seal rings (2).

Installation Procedure

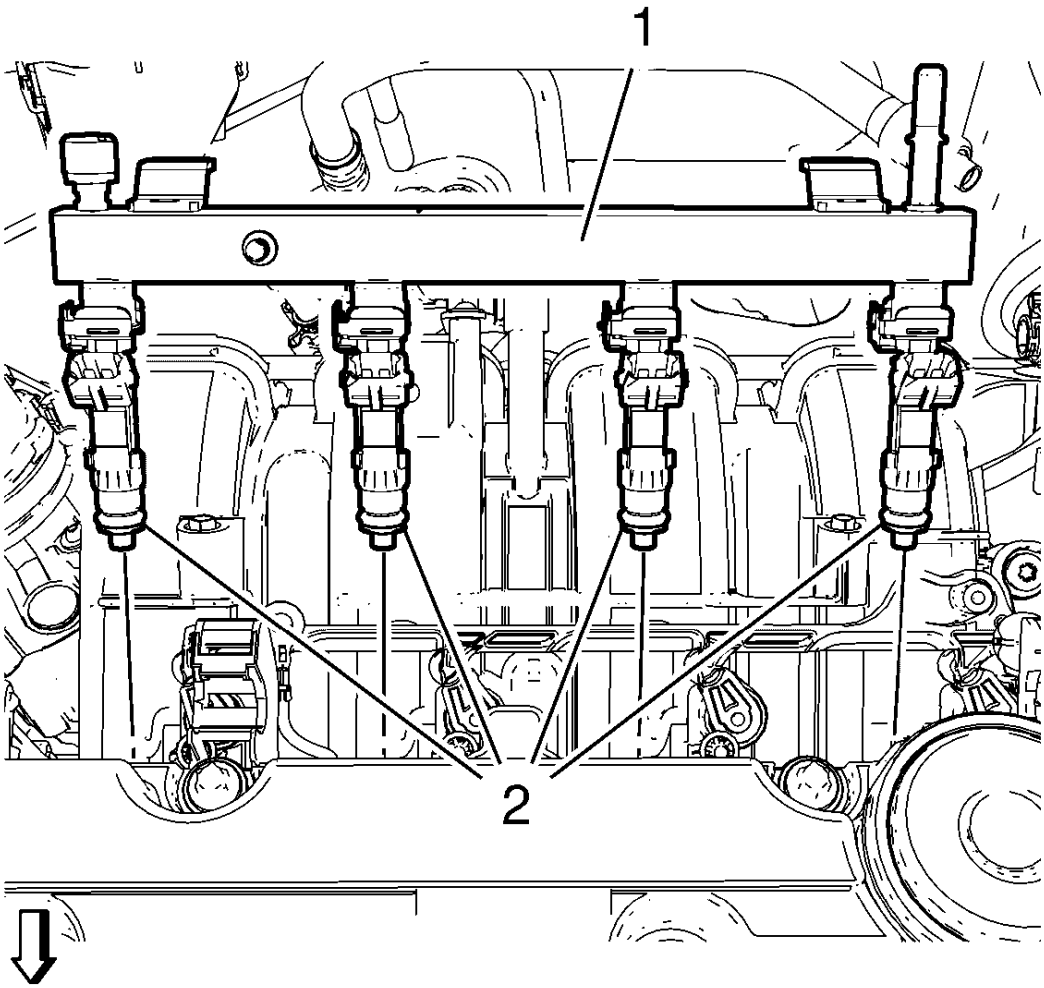

Fig. 122: Fuel Injection Fuel Rail Assembly
Courtesy of GENERAL MOTORS COMPANY

NOTE: Lubricate the 4 fuel injector seal rings (2) with clean engine oil.

1. Install the fuel injection fuel rail assembly (1) to the intake manifold. Use NEW fuel injector seal rings (2).

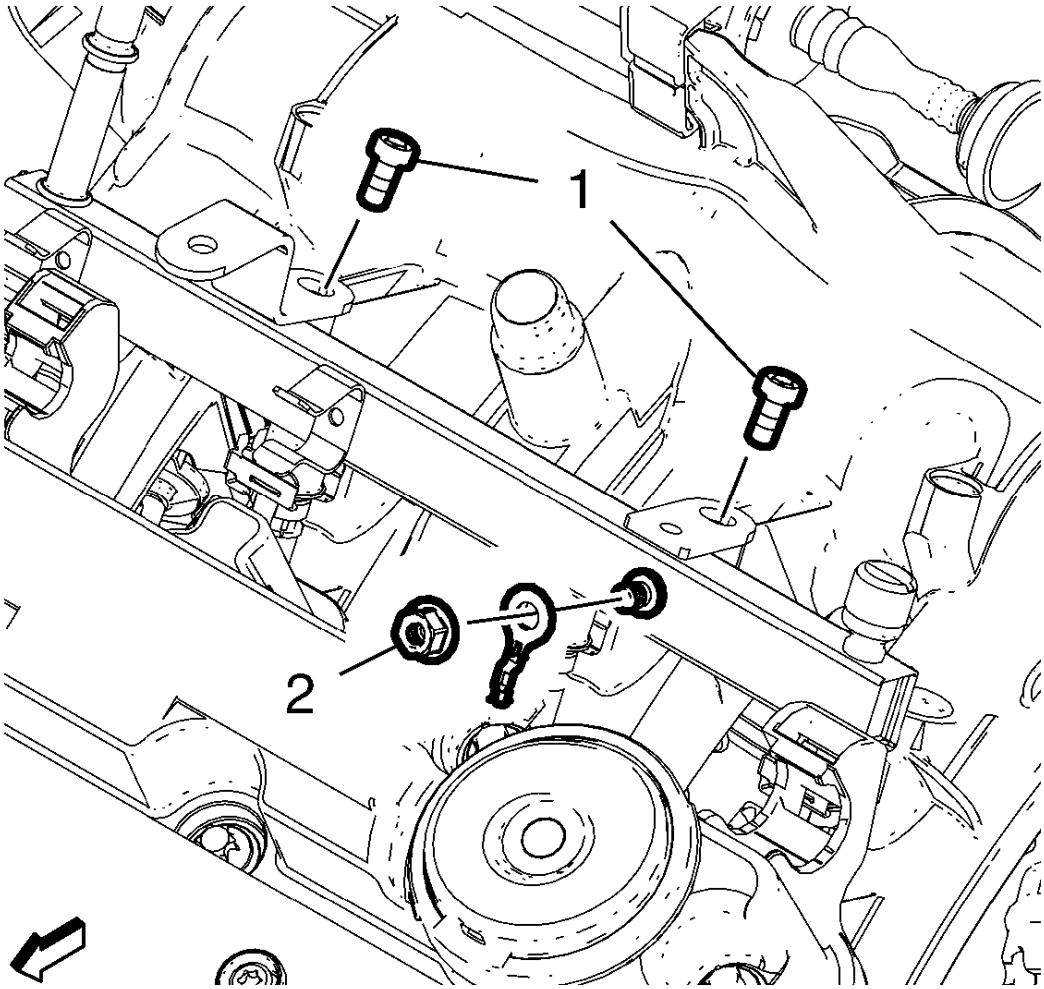

Fig. 123: Fuel Injection Fuel Rail Bolts And Ground Cable Nut
Courtesy of GENERAL MOTORS COMPANY

CAUTION: Refer to Fastener Caution .

2. Install the 2 fuel injection fuel rail bolts (1) and tighten to 7 N.m (62 lb in).
3. Install the ground cable and the ground cable nut (2) and tighten.

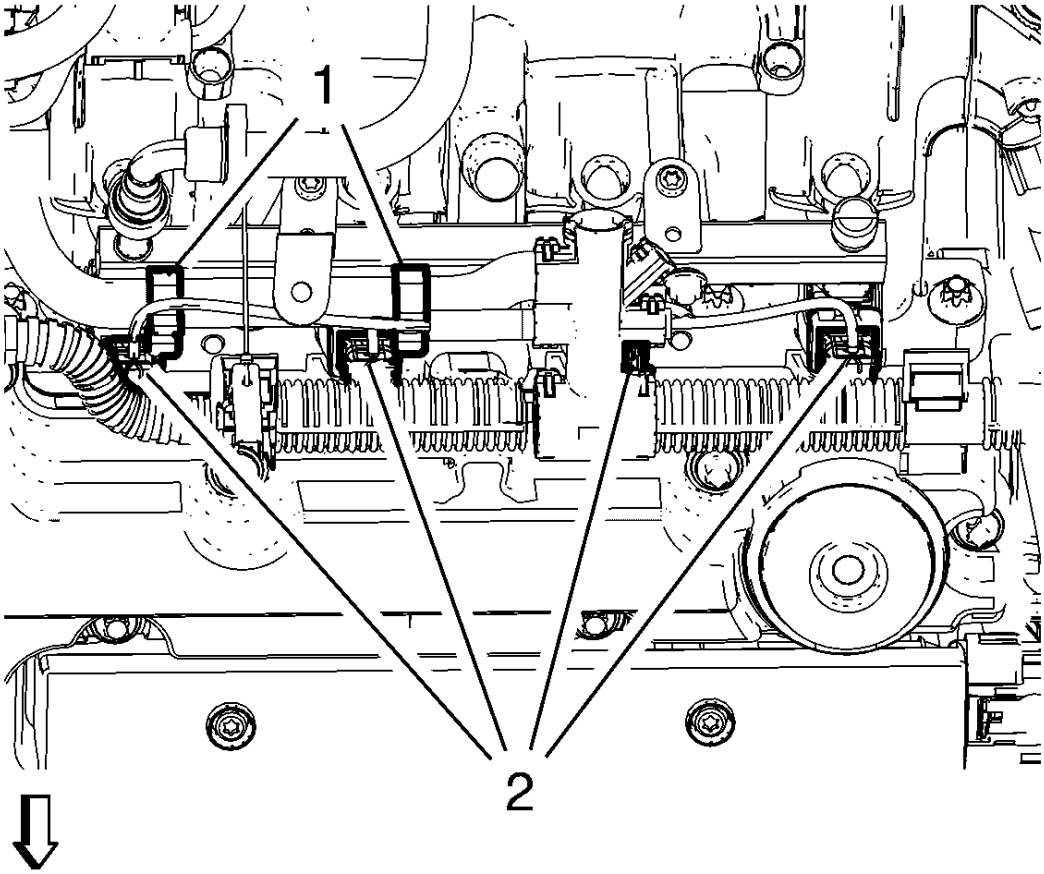

Fig. 124: Fuel Injector Wiring Harness Plugs
Courtesy of GENERAL MOTORS COMPANY

4. Connect the 4 fuel injector wiring harness plugs (2).
5. Clip the ECM wiring harness to the retainer clip (1) and the camshaft cover.
6. Install the positive crankcase ventilation pipe to the intake manifold. Refer to **Positive Crankcase Ventilation Hose/Pipe/Tube Replacement** .
7. Install the fuel feed pipe to the fuel injection fuel rail. Refer to **Fuel Feed Pipe Replacement**.
8. Install the engine sight shield.
9. Connect battery negative cable. Refer to **Battery Negative Cable Disconnection and Connection** .

FUEL INJECTOR REPLACEMENT

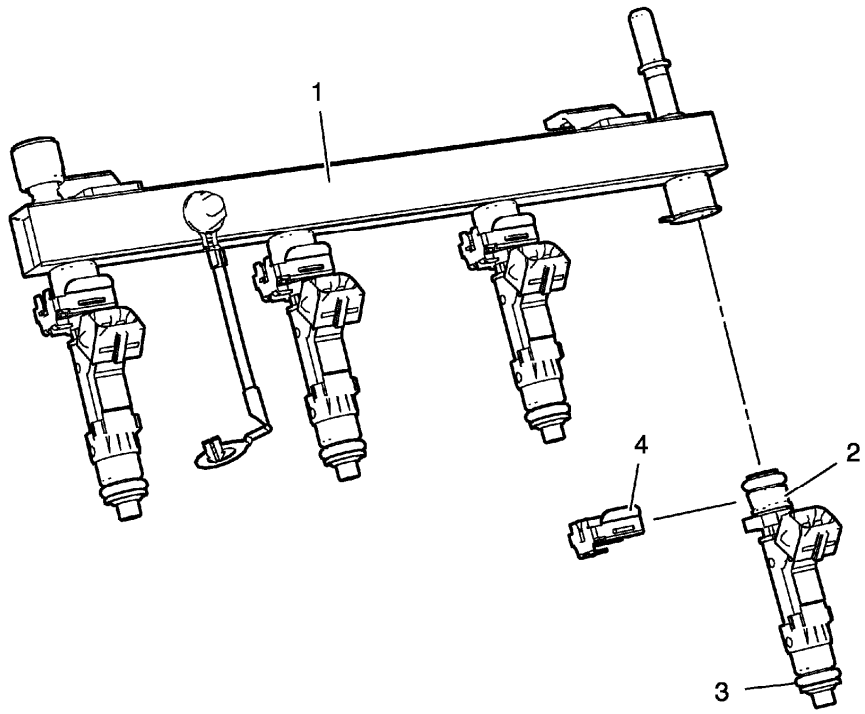

Fig. 125: Fuel Injector, Rail & Components
Courtesy of GENERAL MOTORS COMPANY

Fuel Injector Replacement

Callout	Component Name
Preliminary Procedure 1. Disconnect battery negative cable. Refer to **Battery Negative Cable Disconnection and Connection** . 2. Remove the fuel injection fuel rail assembly. Refer to **Fuel Injection Fuel Rail Assembly Replacement**.	
1	Fuel Rail
2	Fuel Injector
3	Fuel Injector Seal Ring
4	Fuel Injector Retainer Clamp

EVAPORATIVE EMISSION CANISTER VENT SOLENOID VALVE REPLACEMENT

Removal Procedure

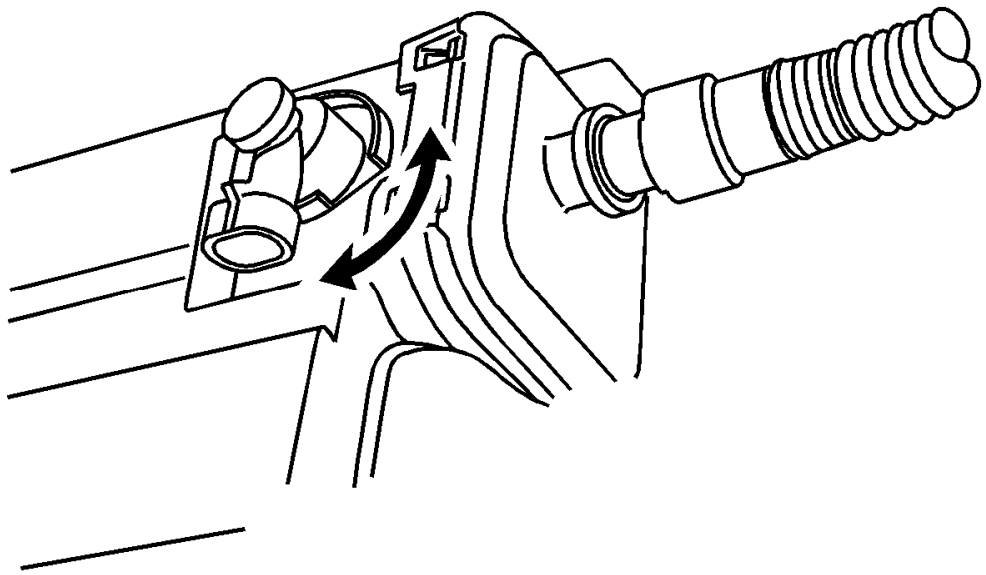

Fig. 126: Rotating EVAP Canister Vent Valve
Courtesy of GENERAL MOTORS COMPANY

1. Remove the evaporative emission (EVAP) canister. Refer to **Evaporative Emission Canister Replacement**.
2. Rotate the EVAP canister vent valve counterclockwise to release from the locked position.

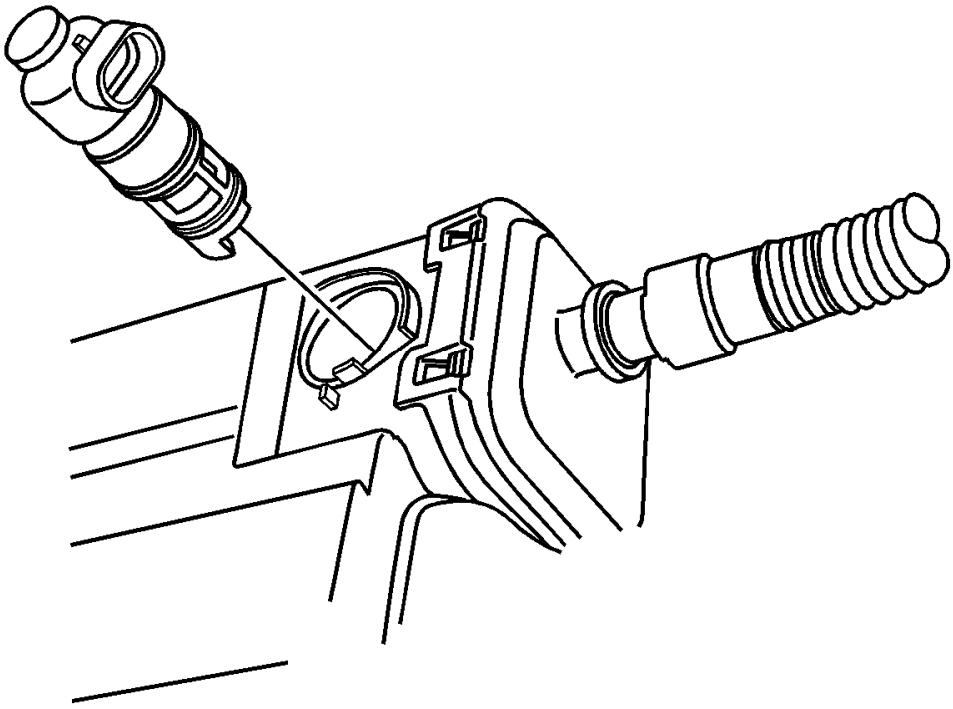

Fig. 127: View Of EVAP Canister Vent Valve
Courtesy of GENERAL MOTORS COMPANY

3. Remove the vent valve from the EVAP canister.

Installation Procedure

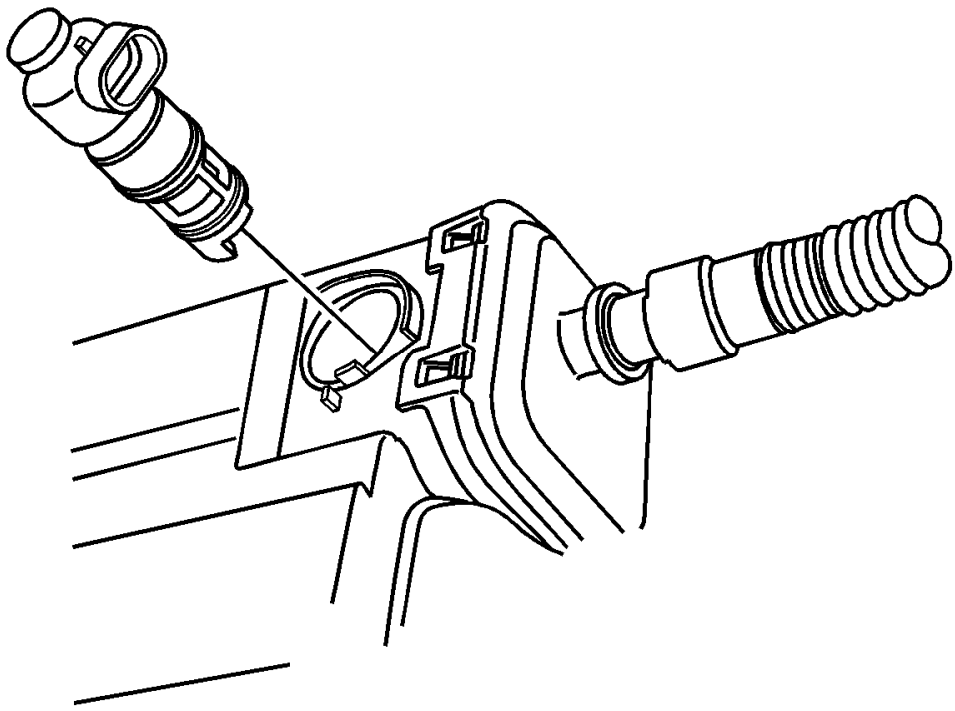

Fig. 128: View Of EVAP Canister Vent Valve
Courtesy of GENERAL MOTORS COMPANY

1. Insert the EVAP canister vent solenoid valve into the EVAP canister, with the valve aligned to the released position.

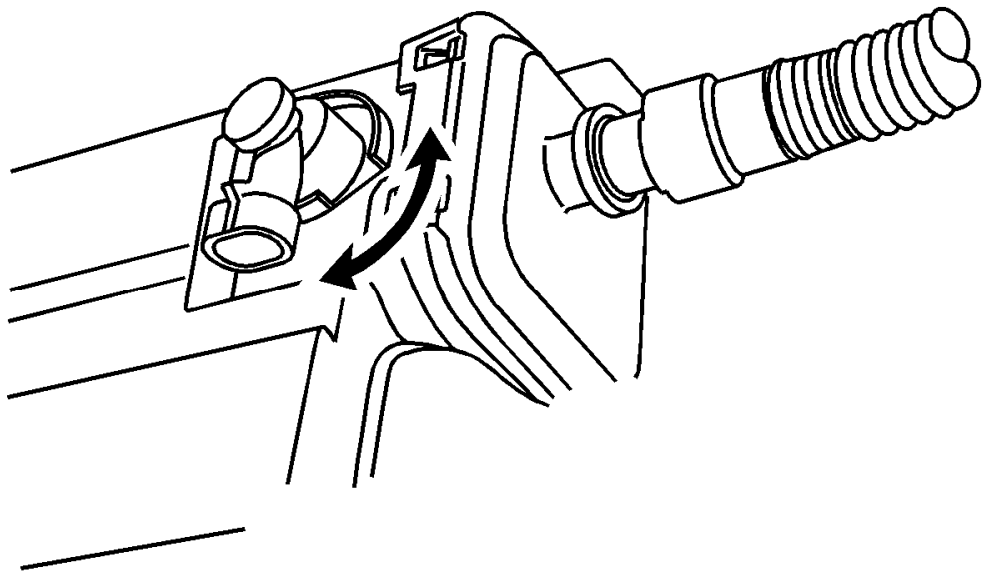

Fig. 129: Rotating EVAP Canister Vent Valve
Courtesy of GENERAL MOTORS COMPANY

2. Rotate vent valve clockwise to secure into the locked position.
3. Install the EVAP canister. Refer to **Evaporative Emission Canister Replacement**.

EVAPORATIVE EMISSION CANISTER REPLACEMENT

Removal Procedure

WARNING: Refer to Gasoline/Gasoline Vapors Warning .

WARNING: Refer to Safety Goggles and Fuel Warning .

1. Open the hood.

2. Disconnect the negative battery cable. Refer to **Battery Negative Cable Disconnection and Connection** .
3. Raise and support the vehicle. Refer to **Lifting and Jacking the Vehicle** .

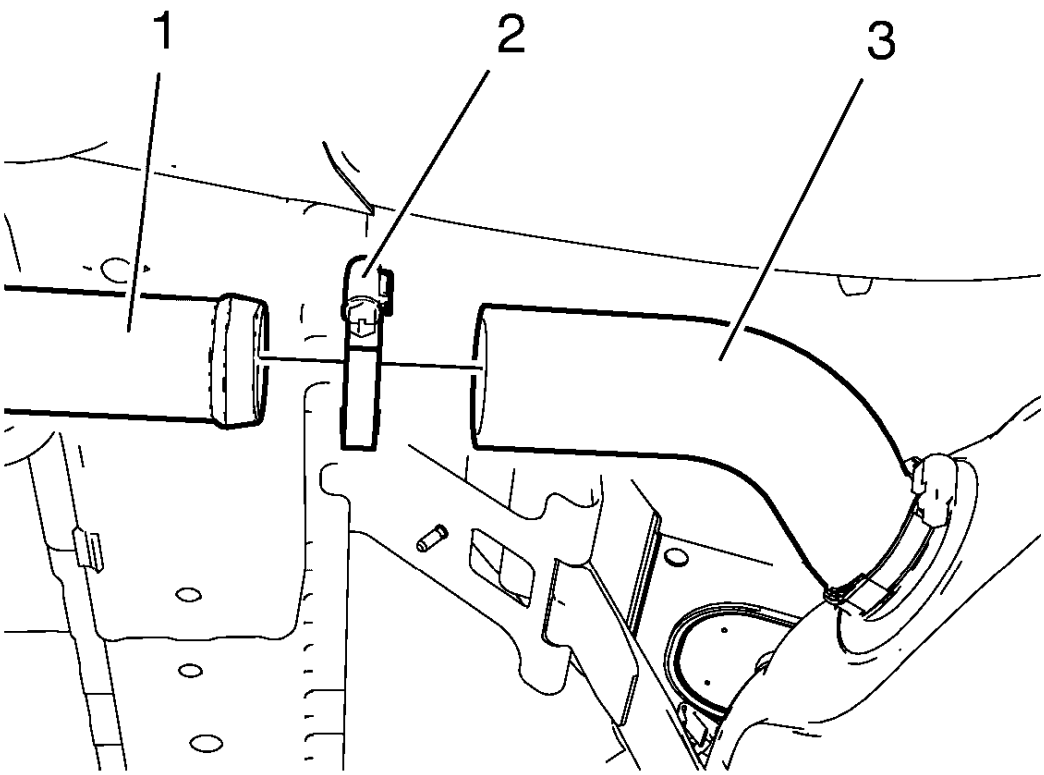

Fig. 130: Fuel Tank Filler Pipe
Courtesy of GENERAL MOTORS COMPANY

WARNING: Do not breathe the air through the EVAP component tubes or hoses. The fuel vapors inside the EVAP components may cause personal injury.

NOTE: Do not remove the fuel tank filler hose when the fuel tank is over half filled with fuel.

4. Remove the clamp (2).

If the fuel level is over half filled. Refer to **Fuel Tank Draining**.

5. Remove the fuel tank filler hose (3) from the fuel tank filler pipe (1).

WARNING: To help avoid personal injury, always use jack stands when you are working on or under any vehicle that is supported only by a jack.

CAUTION: When you are jacking or lifting a vehicle at the frame side rails or other prescribed lift points, be certain that the lift pads do not contact the catalytic converter, the brake pipes or the fuel lines. If such contact occurs, vehicle damage or unsatisfactory vehicle performance may result.

6. Place a suitable adjustable jack under the fuel tank.

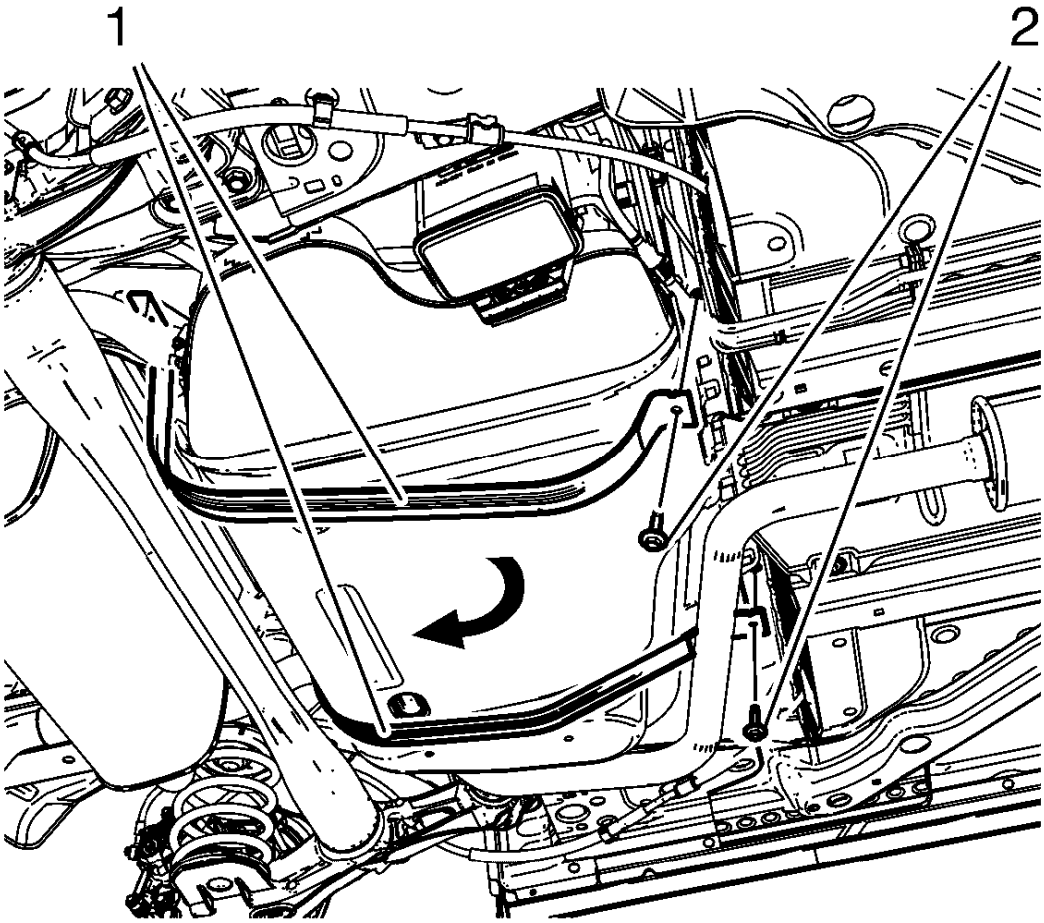

Fig. 131: Fuel Tank Straps

Courtesy of GENERAL MOTORS COMPANY

7. Remove the 2 fuel tank strap bolts (2).
8. Remove the 2 fuel tank straps (1).

NOTE: Closely watch parts like pipes or hoses that are still installed to the fuel tank. If lowering the fuel tank slightly does not provide enough access to remove the fuel tank, refer to Fuel Tank Replacement.

9. Lower the fuel tank to a height where the evaporative emission canister is easily accessible.

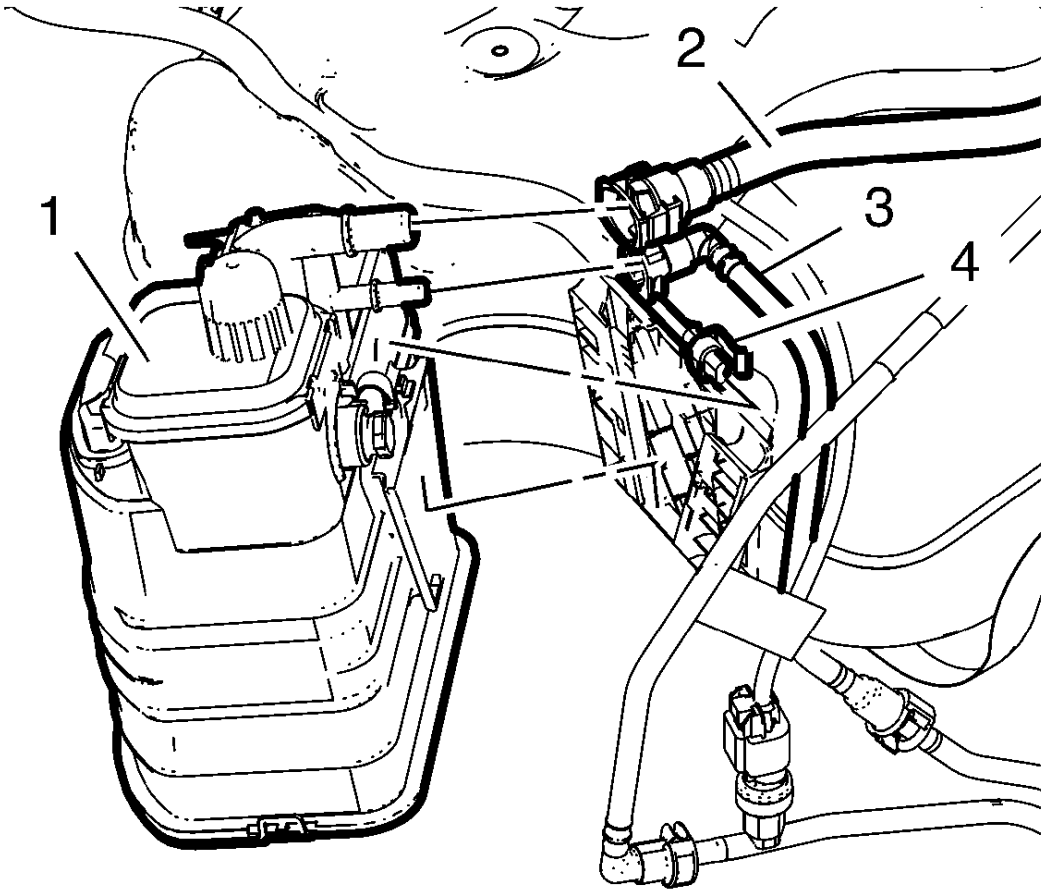

Fig. 132: Evaporative Emission Canister
Courtesy of GENERAL MOTORS COMPANY

WARNING: Always wear safety goggles when working with fuel in order to protect the eyes from fuel splash.

10. Disconnect the evaporative emission vent pipe (2).
11. Disconnect the evaporative emission canister wiring harness plug (4).
12. Disconnect the evaporative emission canister purge pipe (3).
13. Remove the evaporative emission canister (1) from the evaporative emission canister bracket.

Installation Procedure

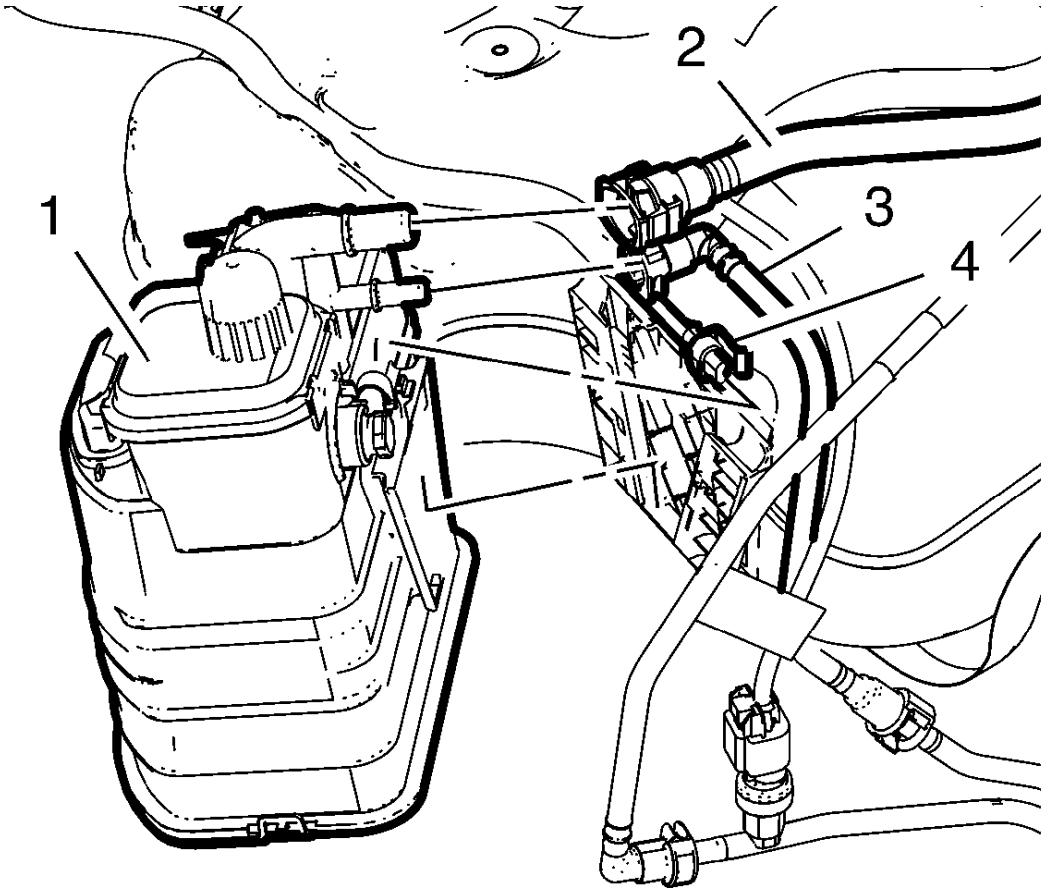

Fig. 133: Evaporative Emission Canister
Courtesy of GENERAL MOTORS COMPANY

1. Install the evaporative emission canister (1) to the evaporative emission canister bracket.
2. Connect the evaporative emission canister purge pipe (3).
3. Connect the evaporative emission canister wiring harness plug (4).
4. Connect the evaporative emission vent pipe (2).
5. Raise the fuel tank to its original position.

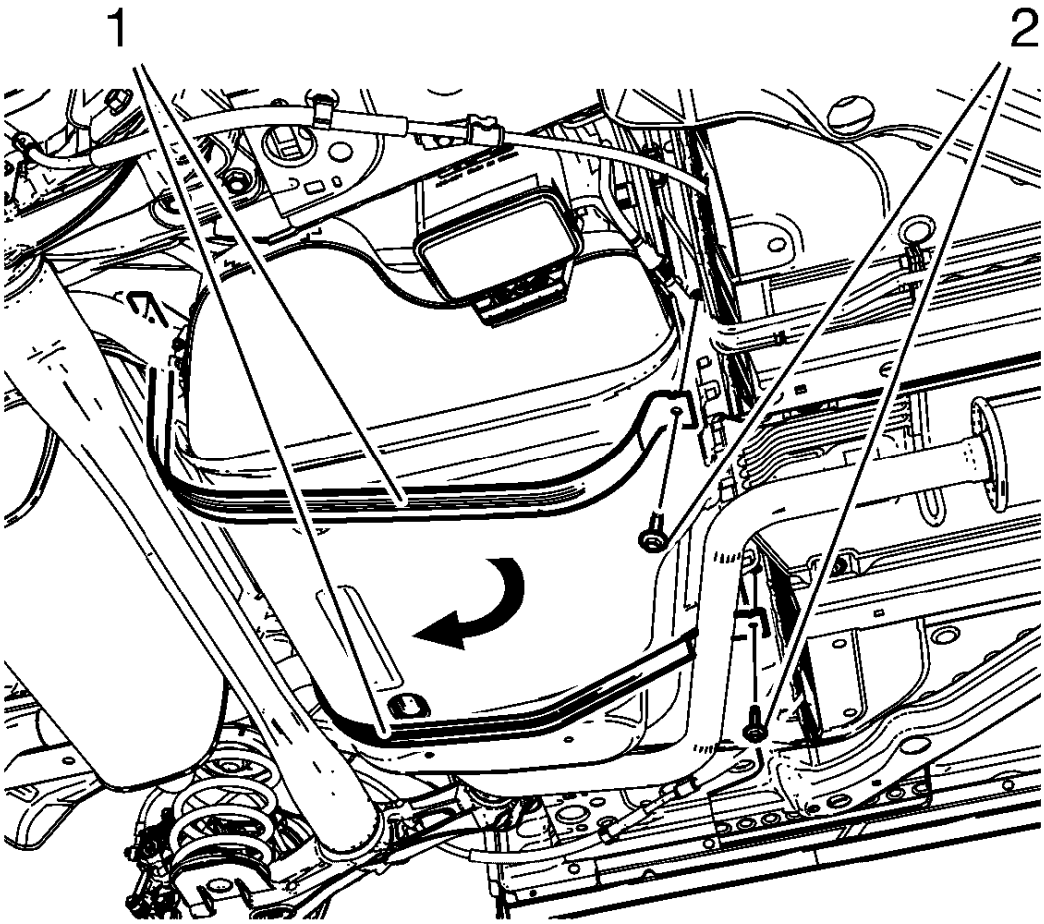

Fig. 134: Fuel Tank Straps
Courtesy of GENERAL MOTORS COMPANY

6. Install the 2 fuel tank straps (1).

CAUTION: Refer to Fastener Caution .

7. Install the 2 fuel tank strap bolts (2) and tighten to 22 Y (16 lb ft).
8. Remove the suitable adjustable jack.

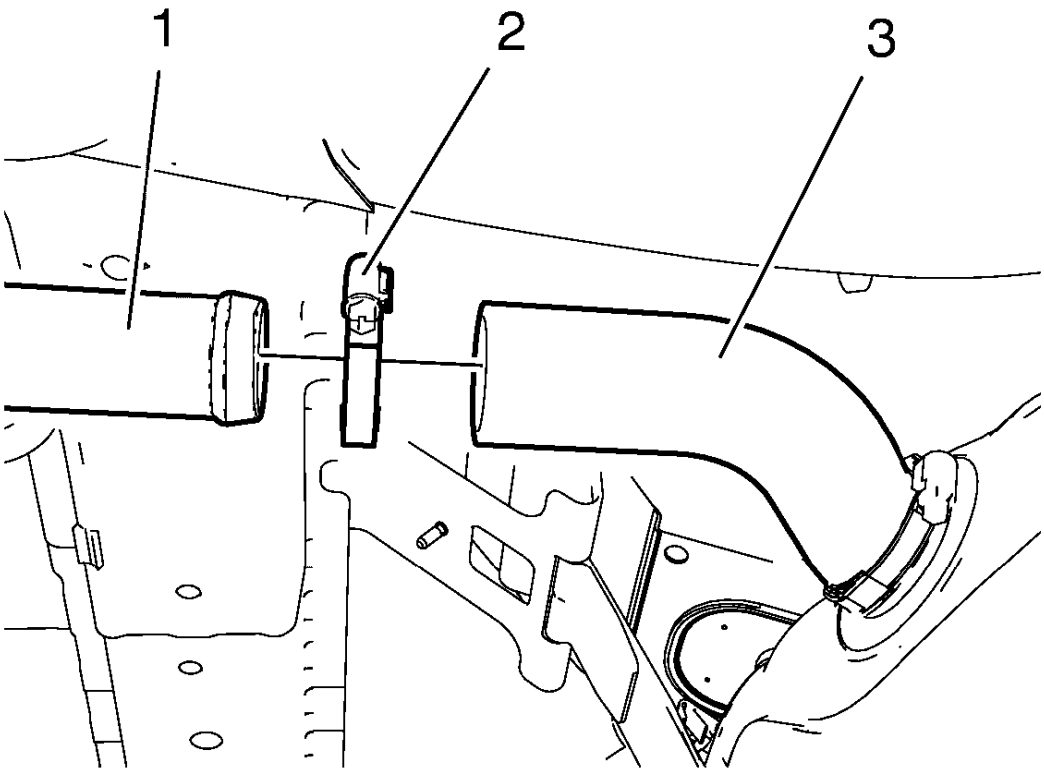

Fig. 135: Fuel Tank Filler Pipe
Courtesy of GENERAL MOTORS COMPANY

9. Install the fuel tank filler hose (3) to the fuel tank filler pipe (1).
10. Install the clamp (2).
11. Lower the vehicle.
12. Connect the negative battery cable. Refer to **Battery Negative Cable Disconnection and Connection** .
13. Close the hood.

EVAPORATIVE EMISSION CANISTER PURGE SOLENOID VALVE REPLACEMENT

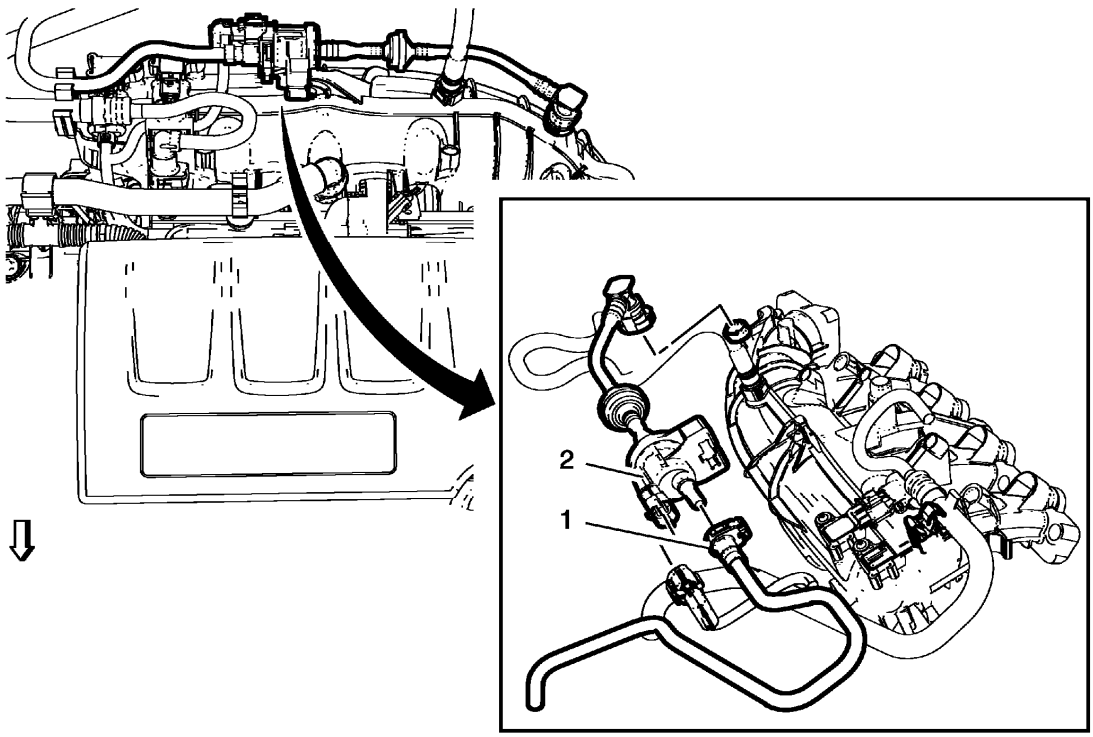

Fig. 136: Evaporative Emission Canister Purge Solenoid Valve
Courtesy of GENERAL MOTORS COMPANY

Evaporative Emission Canister Purge Solenoid Valve Replacement

Callout	Component Name
WARNING: **Gasoline or gasoline vapors are highly flammable. A fire could occur if an ignition source is present. Never drain or store gasoline or diesel fuel in an open container, due to the possibility of fire or explosion. Have a dry chemical (Class B) fire extinguisher nearby.** **Preliminary Procedure** Disconnect battery negative cable. Refer to **Battery Negative Cable Disconnection and Connection** .	
1	Fuel Ventilation Pipe
2	Evaporative Emission Canister Purge Solenoid Valve **Procedure** Disconnect the electrical connector.

IGNITION COIL REPLACEMENT

Special Tools

EN-6009 Remover and Installer Ignition Module

For equivalent regional tools, refer to **Special Tools** .

Removal Procedure

1. Remove the engine sight shield. Refer to **Engine Sight Shield Replacement** .

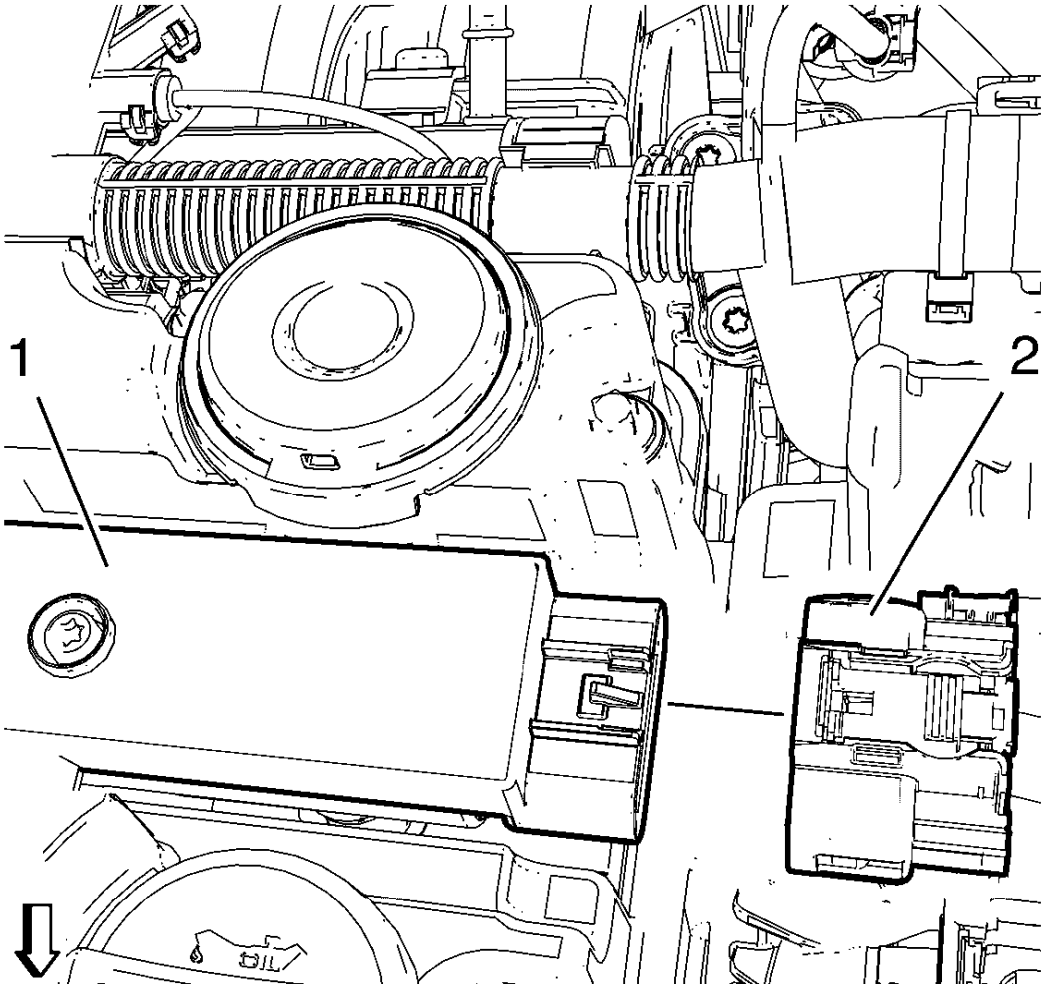

Fig. 137: Ignition Coil And Ignition Coil Wiring Harness Plug
Courtesy of GENERAL MOTORS COMPANY

2. Disconnect the ignition coil wiring harness plug (2) from the ignition coil (1).

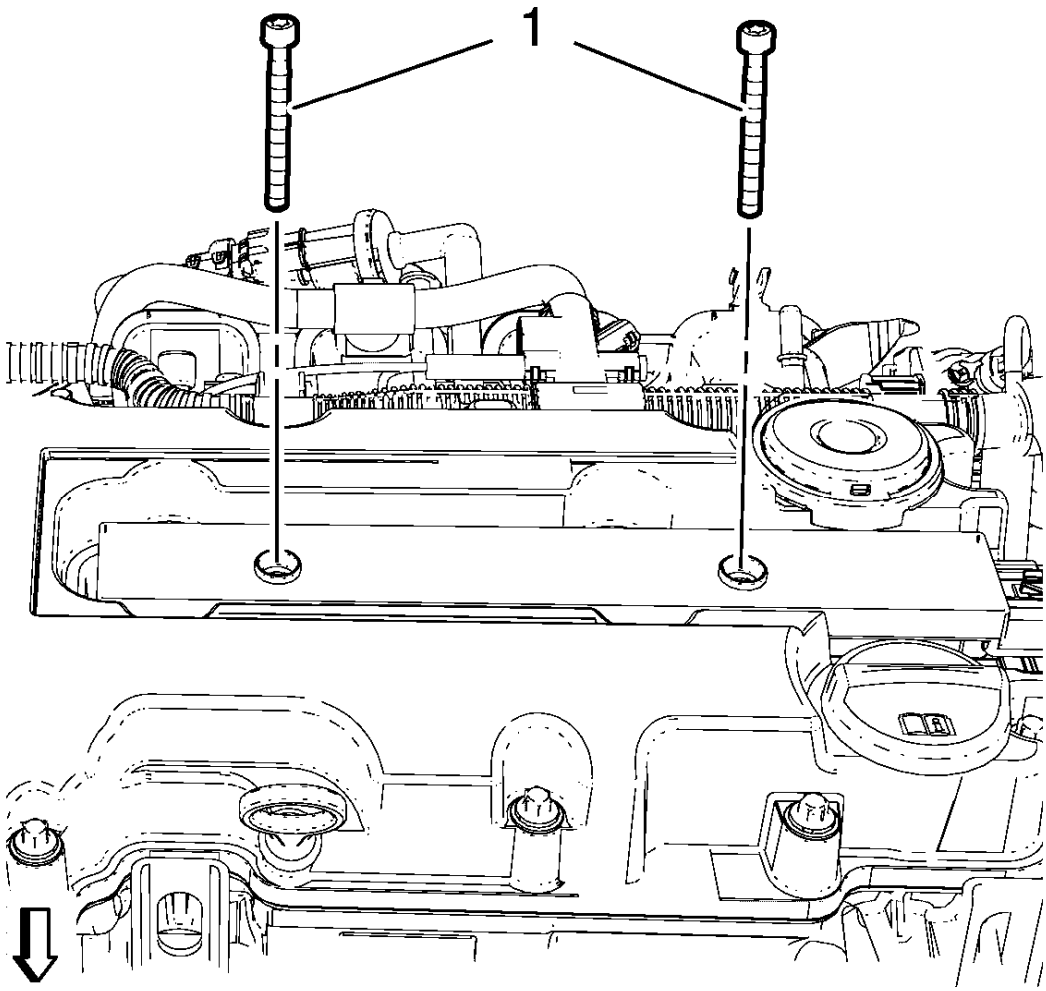

Fig. 138: Ignition Coil Bolts
Courtesy of GENERAL MOTORS COMPANY

3. Remove the 2 ignition coil bolts (1).

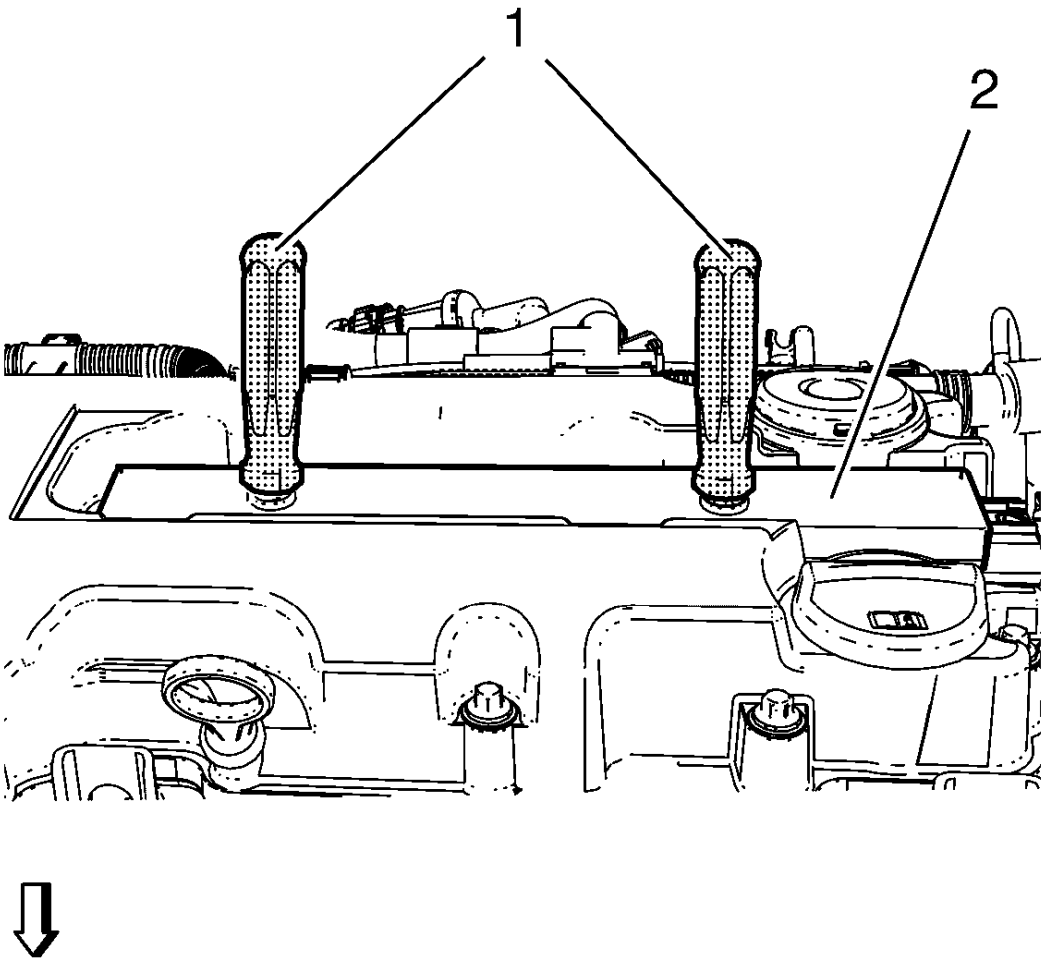

Fig. 139: Ignition Coil And Special Tool
Courtesy of GENERAL MOTORS COMPANY

4. Install **EN-6009** remover/installer (1) to the ignition coil (2).
5. Remove the ignition coil.

Installation Procedure

1. Install the ignition coil.

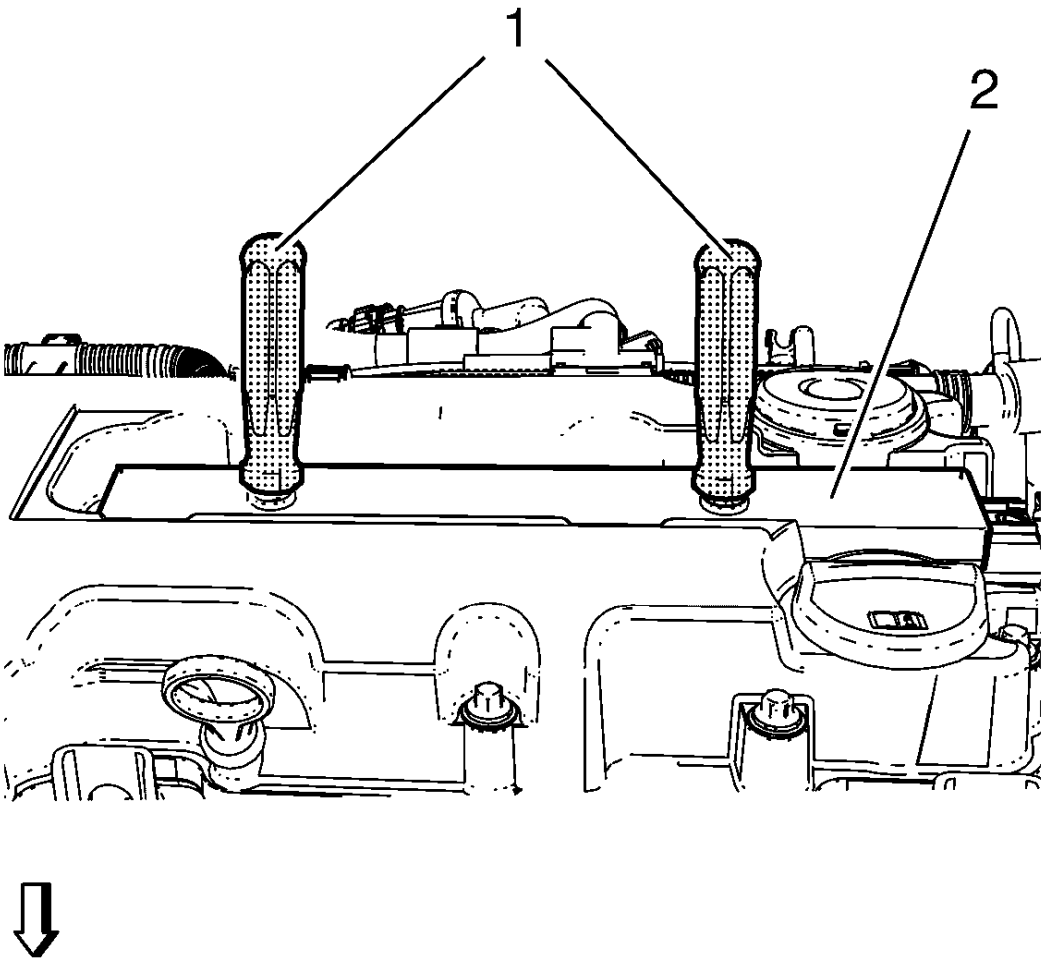

Fig. 140: Ignition Coil And Special Tool
Courtesy of GENERAL MOTORS COMPANY

2. Remove **EN-6009** remover (1) from the ignition coil (2).

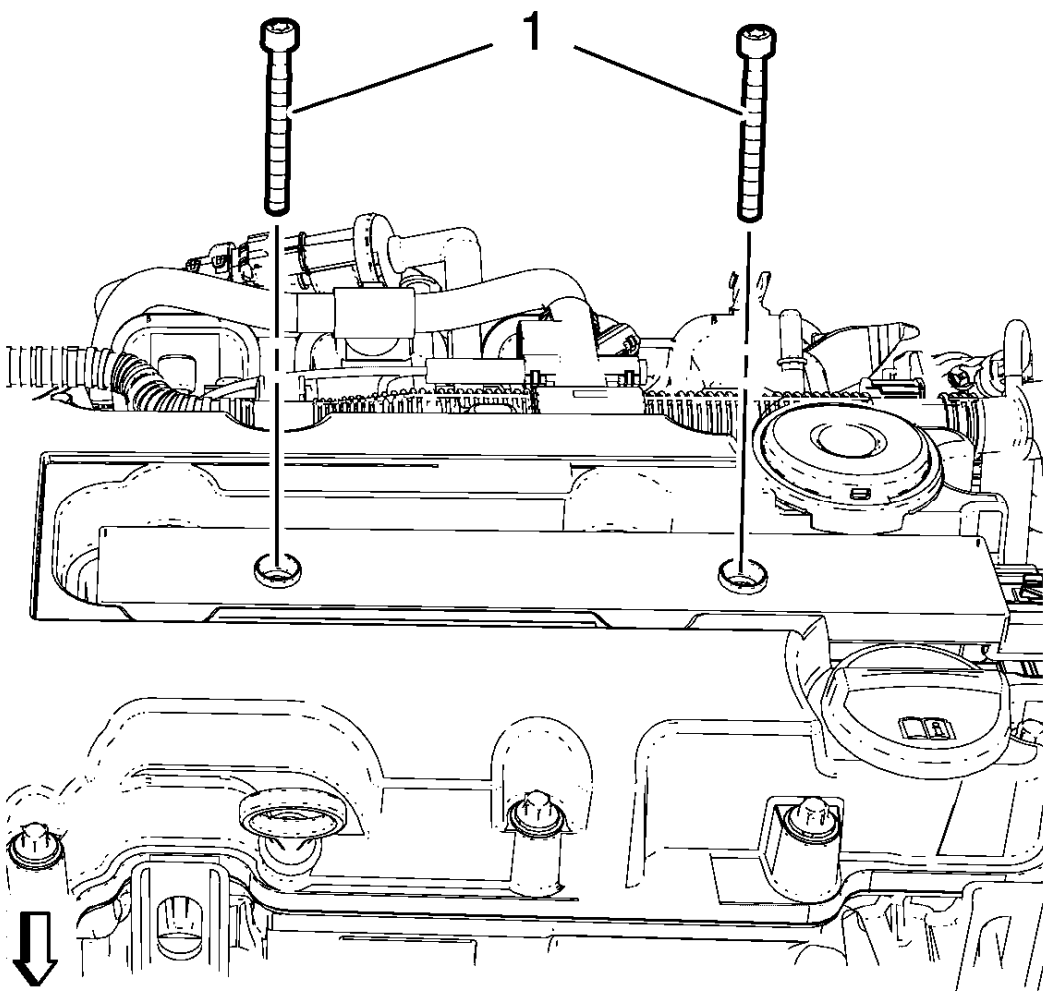

Fig. 141: Ignition Coil Bolts
Courtesy of GENERAL MOTORS COMPANY

CAUTION: Refer to Fastener Caution .

3. Install the 2 ignition coil bolts (1) and tighten to 8 (71 lb in).

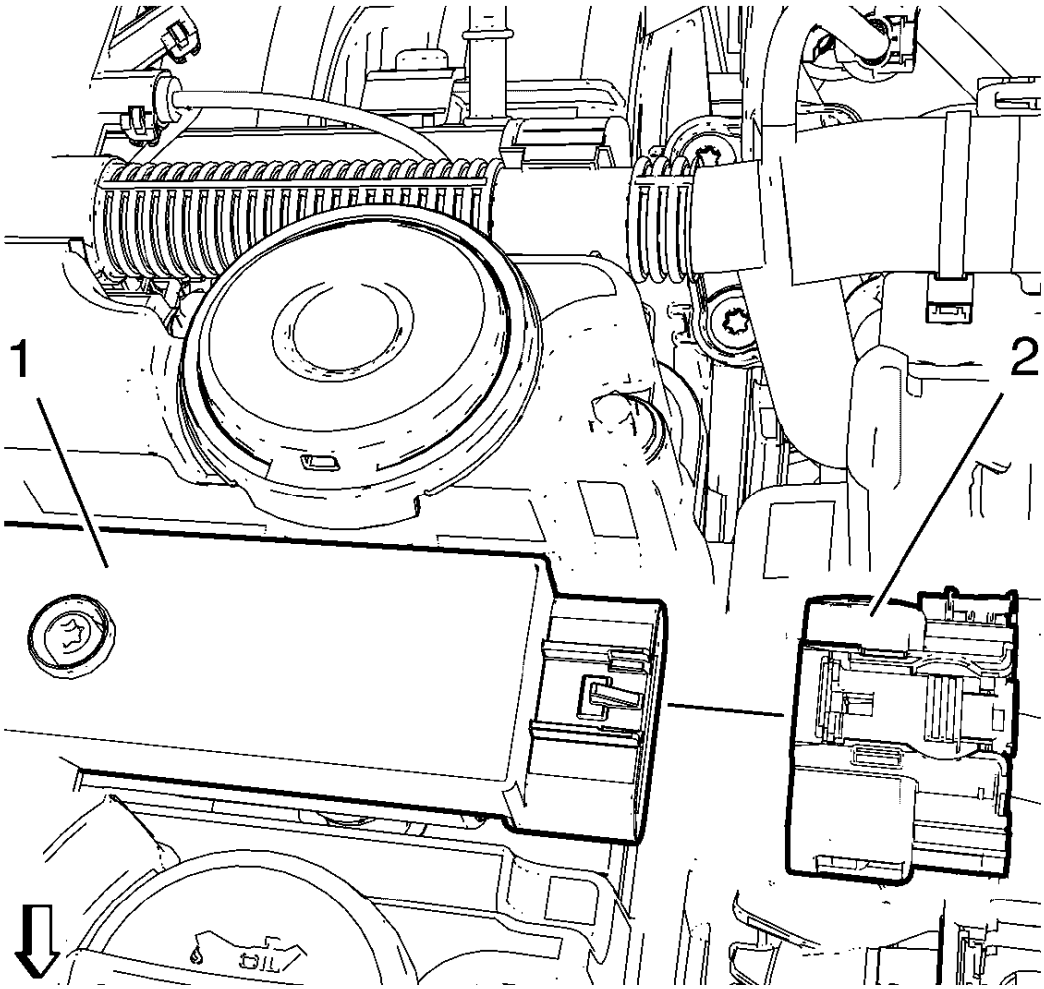

Fig. 142: Ignition Coil And Ignition Coil Wiring Harness Plug
Courtesy of GENERAL MOTORS COMPANY

4. Connect the ignition coil wiring harness plug (2) to the ignition coil (1).
5. Install the engine sight shield. Refer to **Engine Sight Shield Replacement** .

Q38 THROTTLE BODY: THROTTLE/IDLE LEARN

Description

The engine control module (ECM) learns the airflow through the throttle body to ensure the correct idle. The learned airflow values are stored within the ECM. These values are learned to adjust for production variation and will continuously learn during the life of the vehicle to compensate for reduced airflow due to throttle body coking. Anytime the throttle body airflow rate changes, for example due to cleaning or replacing, the values must be relearned.

An engine that had a heavily coked throttle body that has been cleaned or replaced may take several drive

cycles to learn out the coking. To accelerate the process, the scan tool has the ability to reset all learned values back to zero. A new ECM will also have values set to zero.

The idle may be unstable or a DTC may set if the learned values do not match the actual airflow.

Conditions for Running the Throttle Learn Procedure

Scan tool Idle Learn or Idle Learn Reset Procedure

- DTCs P0068, P0101, P0102, P0103, P0106, P0107, P0108, P0116, P0117, P0118, P0120, P0122, P0123, P0128, P0171, P0172, P0174, P0175, P0201-P0208, P0220, P0222, P0223, P0261, P0262, P0264, P0265, P0267, P0268, P0270, P0271, P0273, P0274, P0276, P0277, P0279, P0280, P0282, P0283, P0300-P0308, P0351-P0358, P0496, P0601, P0604, P0606, P060D, P0641, P0651, P1516, P2101, P2119, P2120, P2122, P2123, P2125, P2127, P2128, P2135, P2138, or P2176 are not set.
- Ignition ON, engine OFF.
- The vehicle speed sensor (VSS) is 0 km/h (0 mph).

Service Bay/On Road Learn Procedure

- DTCs P0068, P0101, P0102, P0103, P0106, P0107, P0108, P0116, P0117, P0118, P0120, P0122, P0123, P0128, P0171, P0172, P0174, P0175, P0201-P0208, P0220, P0222, P0223, P0261, P0262, P0264, P0265, P0267, P0268, P0270, P0271, P0273, P0274, P0276, P0277, P0279, P0280, P0282, P0283, P0300-P0308, P0351-P0358, P0496, P0601, P0604, P0606, P060D, P0641, P0651, P1516, P2101, P2119, P2120, P2122, P2123, P2125, P2127, P2128, P2135, P2138, or P2176 are not set.
- The engine speed is between 450-4, 000 RPM.
- The manifold absolute pressure (MAP) is greater than 5 kPa.
- The mass air flow (MAF) is greater than 2 g/s.
- The ignition voltage is greater than 10 volts.

Throttle Learn

Scan Tool Idle Learn or Idle Learn Reset Procedure - Performed after the throttle body is cleaned or replaced

1. Ignition ON, engine OFF, perform the Idle Learn or Idle Learn Reset in Configuration/Reset or Module Setup.
2. Engine idling, observe the scan tool Throttle Body Idle Airflow Compensation parameter. The Throttle Body Idle Airflow Compensation value should equal 0 % and the engine should be idling at a normal idle speed.
3. Clear the DTCs and return to the diagnostic that referred you here.

Service Bay/On Road Idle Learn Procedure - Performed after the ECM is programmed or replaced

NOTE: Do NOT perform this procedure if DTCs are set. Refer to Diagnostic Trouble Code (DTC) List - Vehicle .

1. Engine idling for 3 minutes.
2. Observe the scan tool Desired Idle Speed and the actual Engine Speed parameters.
3. The ECM will start to learn the new idle cells and the Desired Idle Speed should start to decrease.
4. Ignition OFF for 60 seconds.
5. Start and idle the engine for 3 minutes.
6. After the 3 minute run time the engine should be idling normal.

NOTE: During the drive cycle the check engine light may come on with idle speed DTCs. If idle speed codes are set, clear codes so the ECM can continue to learn.

   - If the engine idle speed has not been learned the vehicle will need to be driven at speeds above 70 km/h (44 mph) with several decelerations and extended idles.
7. After the drive cycle, the engine should be idling normally.
   - If the engine idle speed has not been learned, turn OFF the ignition for 60 seconds and repeat step 6.
8. Once the engine speed has returned to normal, clear DTCs and return to the diagnostic that referred you here.

SPARK PLUG INSPECTION

Spark Plug Usage

1. Ensure that the correct spark plug is installed. An incorrect spark plug causes driveability conditions. Refer to **Ignition System Specifications** for the correct spark plug.
2. Ensure that the spark plug has the correct heat range. An incorrect heat range causes the following conditions:
   - Spark plug fouling-Colder plug
   - Pre-ignition causing spark plug and/or engine damage-Hotter plug

Spark Plug Inspection

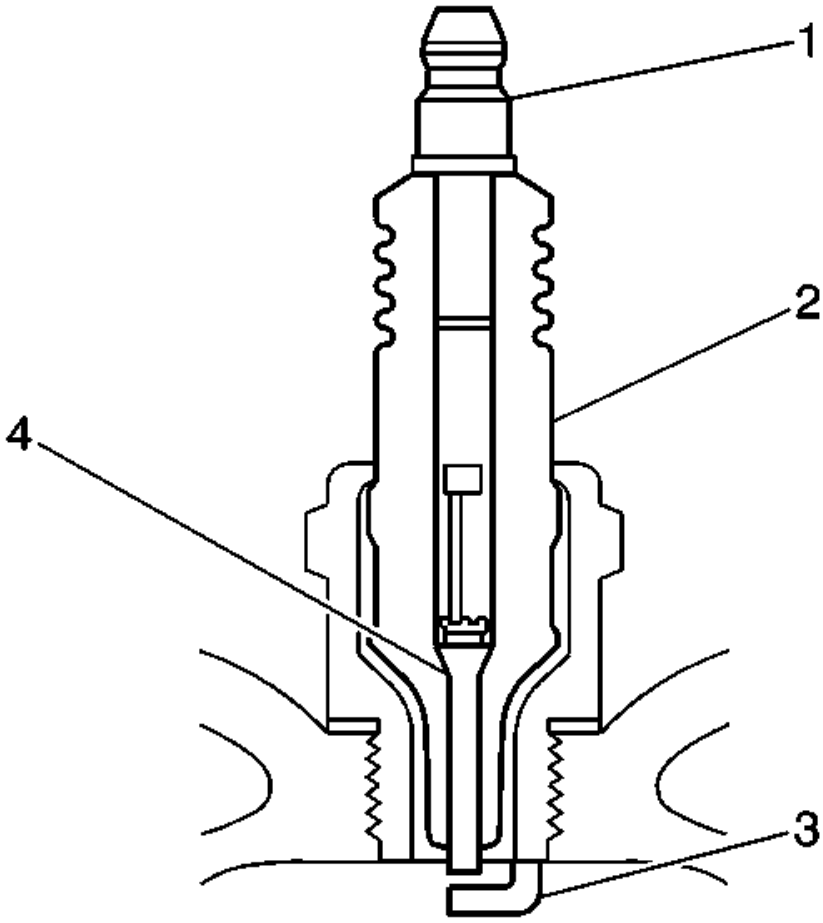

Fig. 143: Cross Sectional View Of Spark Plug
Courtesy of GENERAL MOTORS COMPANY

1. Inspect the terminal post (1) for damage.
    - Inspect for a bent or broken terminal post (1).
    - Test for a loose terminal post (1) by twisting and pulling the post. The terminal post (1) should NOT move.

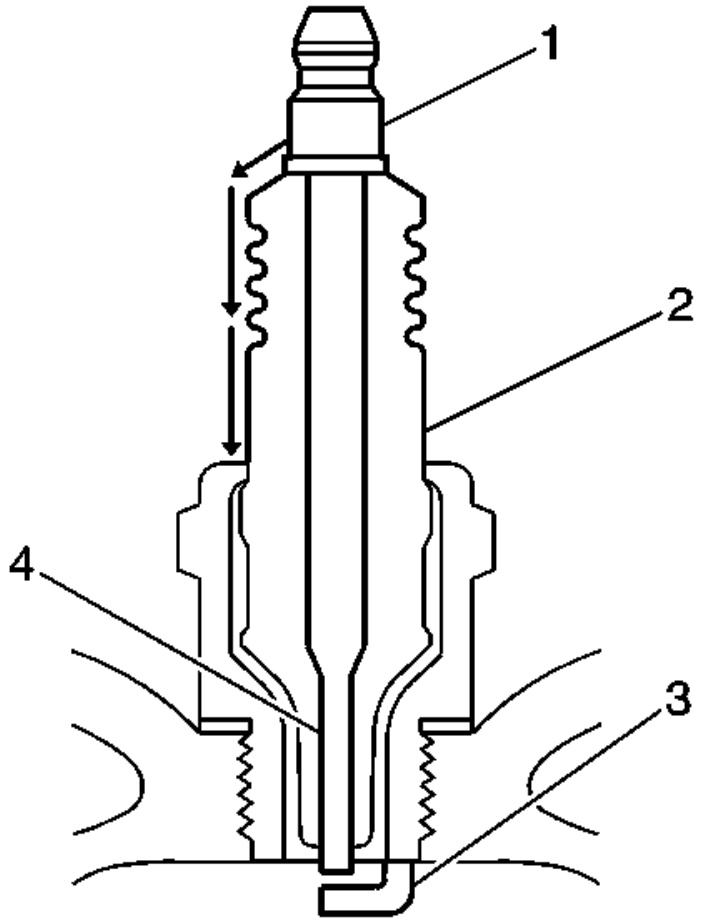

Fig. 144: Identifying Points For Inspecting Spark Plug For Flashover Or Carbon Tracking Soot
Courtesy of GENERAL MOTORS COMPANY

2. Inspect the insulator (2) for flashover or carbon tracking, soot. This is caused by the electrical charge traveling across the insulator (2) between the terminal post (1) and ground. Inspect for the following conditions:
    - Inspect the spark plug boot for damage.
    - Inspect the spark plug recess area of the cylinder head for moisture, such as oil, coolant, or water. A spark plug boot that is saturated causes arcing to ground.

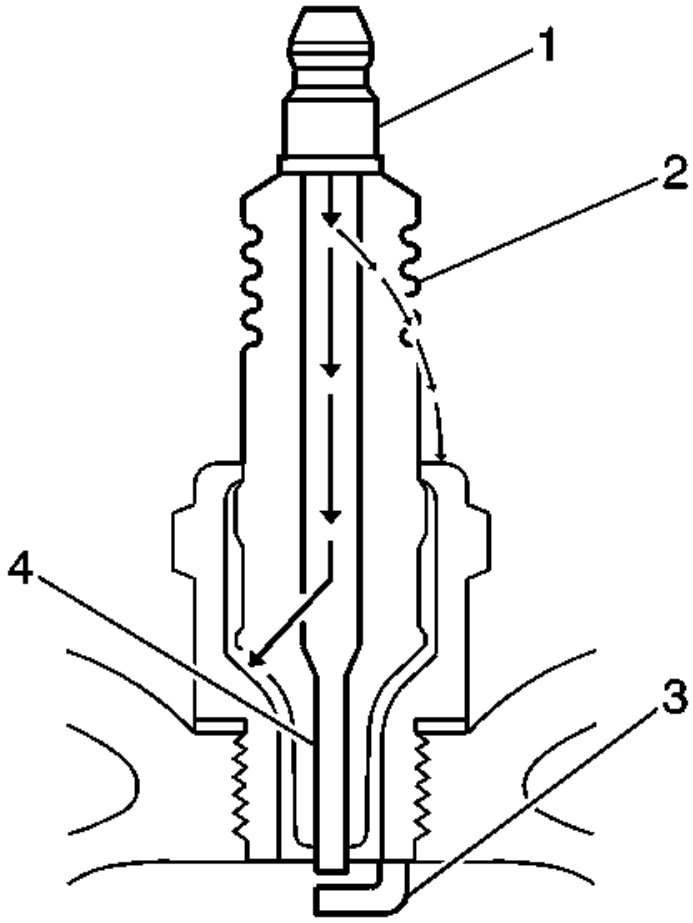

Fig. 145: Inspecting Spark Plug Insulator
Courtesy of GENERAL MOTORS COMPANY

3. Inspect the insulator (2) for cracks. All or part of the electrical charge may arc through the crack instead of the electrodes (3, 4).

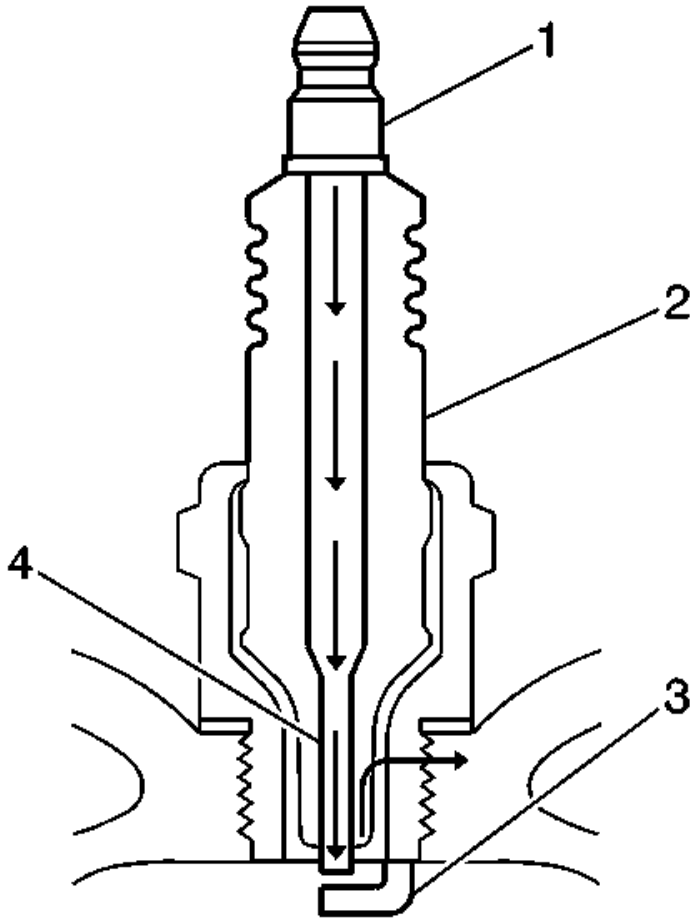

Fig. 146: Cutaway/Description View Of Spark Plug
Courtesy of GENERAL MOTORS COMPANY

4. Inspect for evidence of improper arcing.
    - Measure the gap between the center electrode (4) and the side electrode (3) terminals. Refer to **Ignition System Specifications** . An excessively wide electrode gap can prevent correct spark plug operation.
    - Inspect for the correct spark plug torque. Refer to **Ignition System Specifications** . Insufficient torque can prevent correct spark plug operation. An over torqued spark plug, causes the insulator (2) to crack.
    - Inspect for signs of tracking that occurred near the insulator tip instead of the center electrode (4).
    - Inspect for a broken or worn side electrode (3).
    - Inspect for a broken, worn, or loose center electrode (4) by shaking the spark plug.
5. A rattling sound indicates internal damage.
6. A loose center electrode (4) reduces the spark intensity.
    - Inspect for bridged electrodes (3, 4). Deposits on the electrodes (3, 4) reduce or eliminates the gap.

- Inspect for worn or missing platinum pads on the electrodes (3, 4) If equipped.
- Inspect for excessive fouling.
- Inspect the spark plug recess area of the cylinder head for debris. Dirty or damaged threads can cause the spark plug not to seat correctly during installation.

Spark Plug Visual Inspection

1. Normal operation-Brown to grayish-tan with small amounts of white powdery deposits are normal combustion by-products from fuels with additives.
2. Carbon Fouled-Dry, fluffy black carbon, or soot caused by the following conditions:
   - Rich fuel mixtures
   - Leaking fuel injectors
   - Excessive fuel pressure
   - Restricted air filter element
   - Incorrect combustion
   - Reduced ignition system voltage output
   - Weak coils
   - Worn ignition wires
   - Incorrect spark plug gap
   - Excessive idling or slow speeds under light loads can keep spark plug temperatures so low that normal combustion deposits may not burn off.
   - Deposit Fouling-Oil, coolant, or additives that include substances such as silicone, very white coating, reduces the spark intensity. Most powdery deposits will not effect spark intensity unless they form into a glazing over the electrode.

SPARK PLUG REPLACEMENT

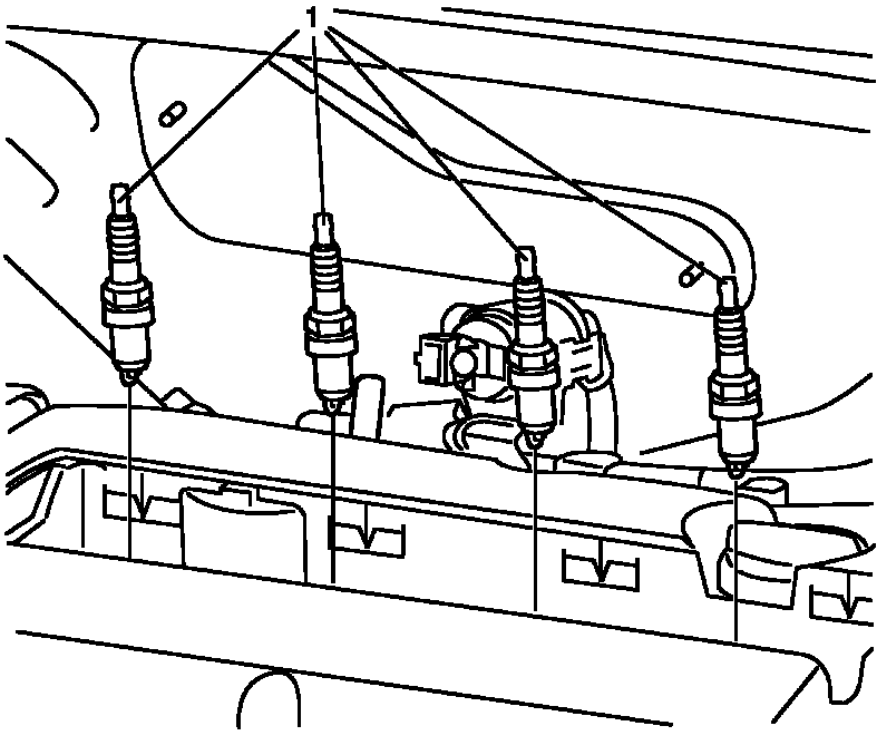

Fig. 147: Spark Plugs
Courtesy of GENERAL MOTORS COMPANY

Spark Plug Replacement

Callout	Component Name
Preliminary Procedure 1. Open the hood. 2. Remove the engine sight shield. 3. Remove the ignition coil. Refer to **Ignition Coil Replacement**.	
1	Spark Plugs **CAUTION:** **Refer to Fastener Caution .** **Tighten** 25 N.m (18 lb ft)

CAMSHAFT POSITION ACTUATOR SOLENOID VALVE REPLACEMENT

Removal Procedure

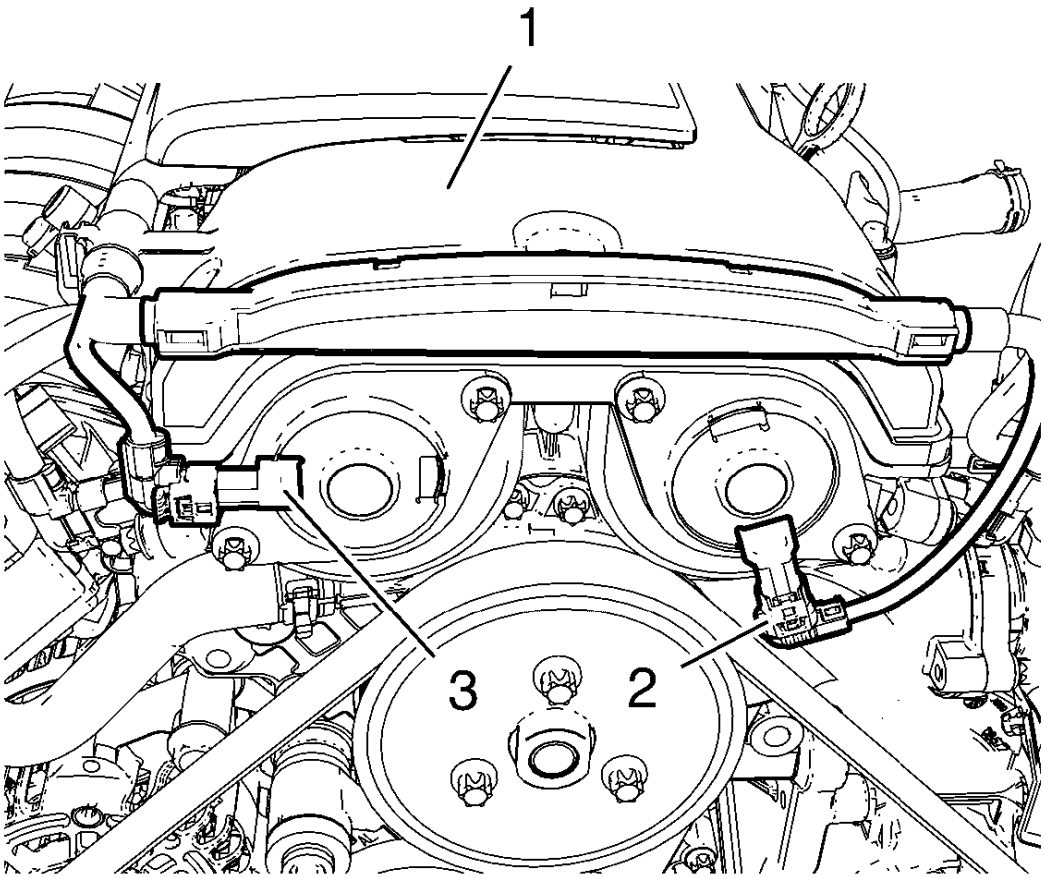

Fig. 148: ECM Wiring Harness
Courtesy of GENERAL MOTORS COMPANY

1. Disconnect the intake camshaft position actuator solenoid valve wiring harness plug (3).
2. Disconnect the exhaust camshaft position actuator solenoid valve wiring harness plug (2).
3. Unclip ECM wiring harness (1) from camshaft cover.

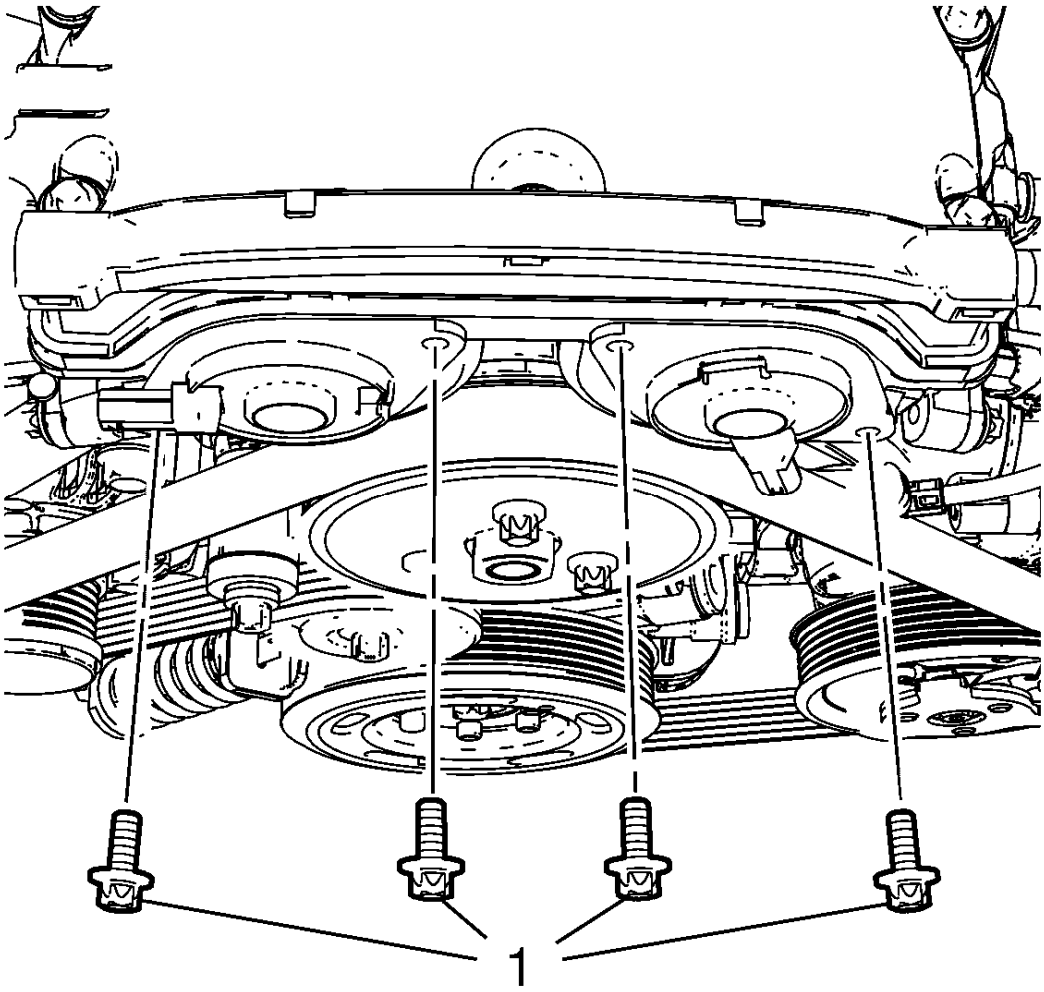

Fig. 149: Camshaft Position Actuator Solenoid Valve Bolts
Courtesy of GENERAL MOTORS COMPANY

4. Remove the 4 camshaft position actuator solenoid valve bolts (1).

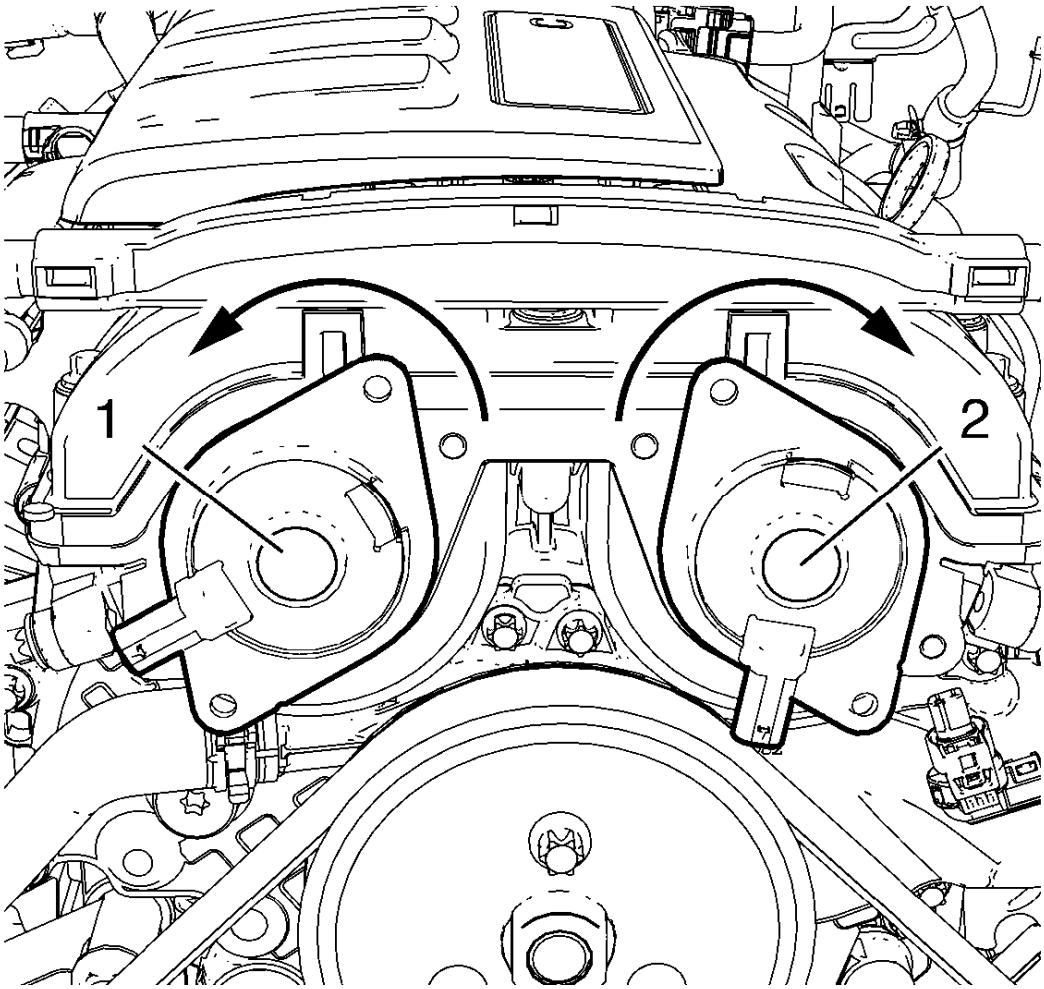

Fig. 150: Intake Camshaft Position Actuator Solenoid Valve And Exhaust Camshaft Position Actuator Solenoid Valve
Courtesy of GENERAL MOTORS COMPANY

5. Carefully rotate the intake camshaft position actuator solenoid valve (1) counter clockwise as shown.
6. Carefully rotate the exhaust camshaft position actuator solenoid valve (2) clockwise as shown.

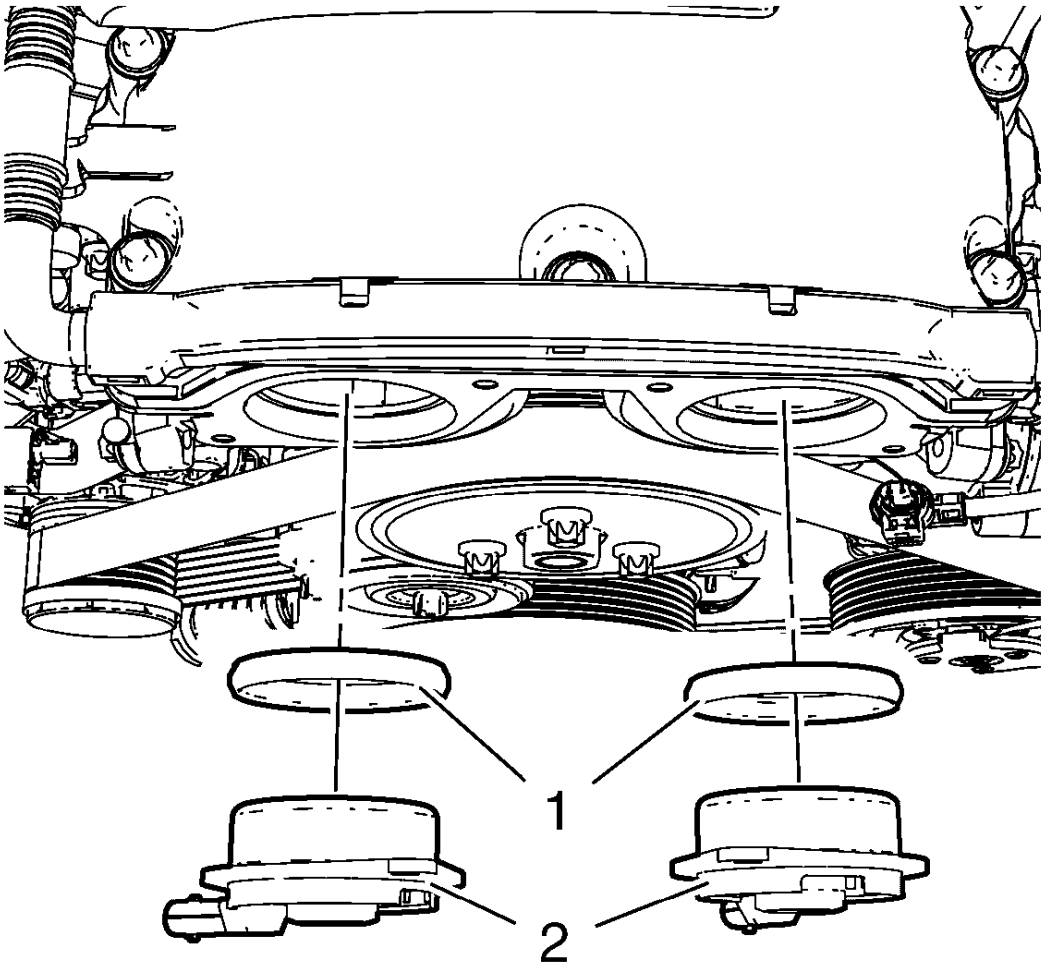

Fig. 151: Camshaft Position Actuator Solenoid Valves
Courtesy of GENERAL MOTORS COMPANY

CAUTION: The camshaft position actuator solenoid valves must be kept parallel to the engine front cover during removal and installation. The camshaft position actuator solenoid valves can be damaged if they become wedged or stuck during this process.

7. Carefully remove the 2 camshaft position actuator solenoid valves (2) and the seal rings (1).

Installation Procedure

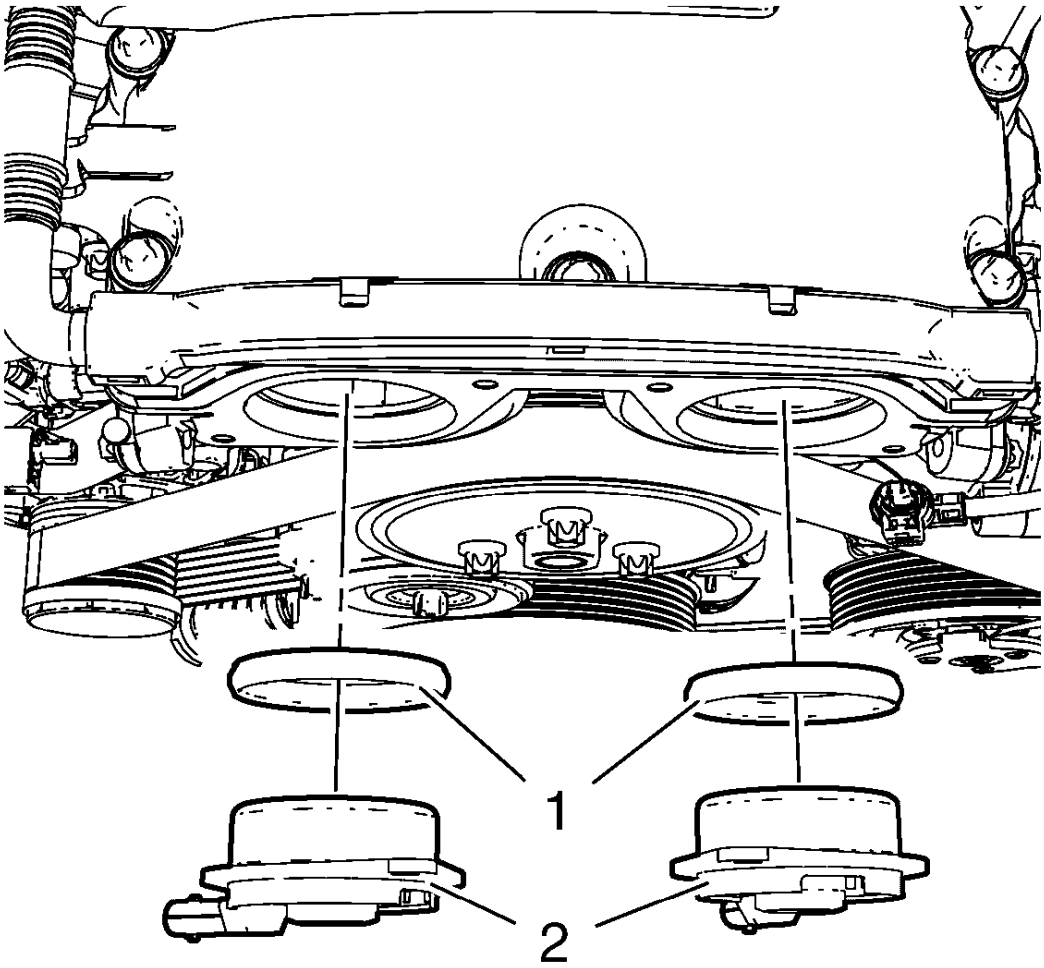

Fig. 152: Camshaft Position Actuator Solenoid Valves
Courtesy of GENERAL MOTORS COMPANY

CAUTION: The camshaft position actuator solenoid valves must be kept parallel to the engine front cover during removal and installation. The camshaft position actuator solenoid valves can be damaged if they become wedged or stuck during this process.

NOTE: Lubricate the seal rings with oil in order to make the installation easier.

1. Carefully install the 2 camshaft position actuator solenoid valves (2) and the 2 seal rings (1) by gently pressing into position.

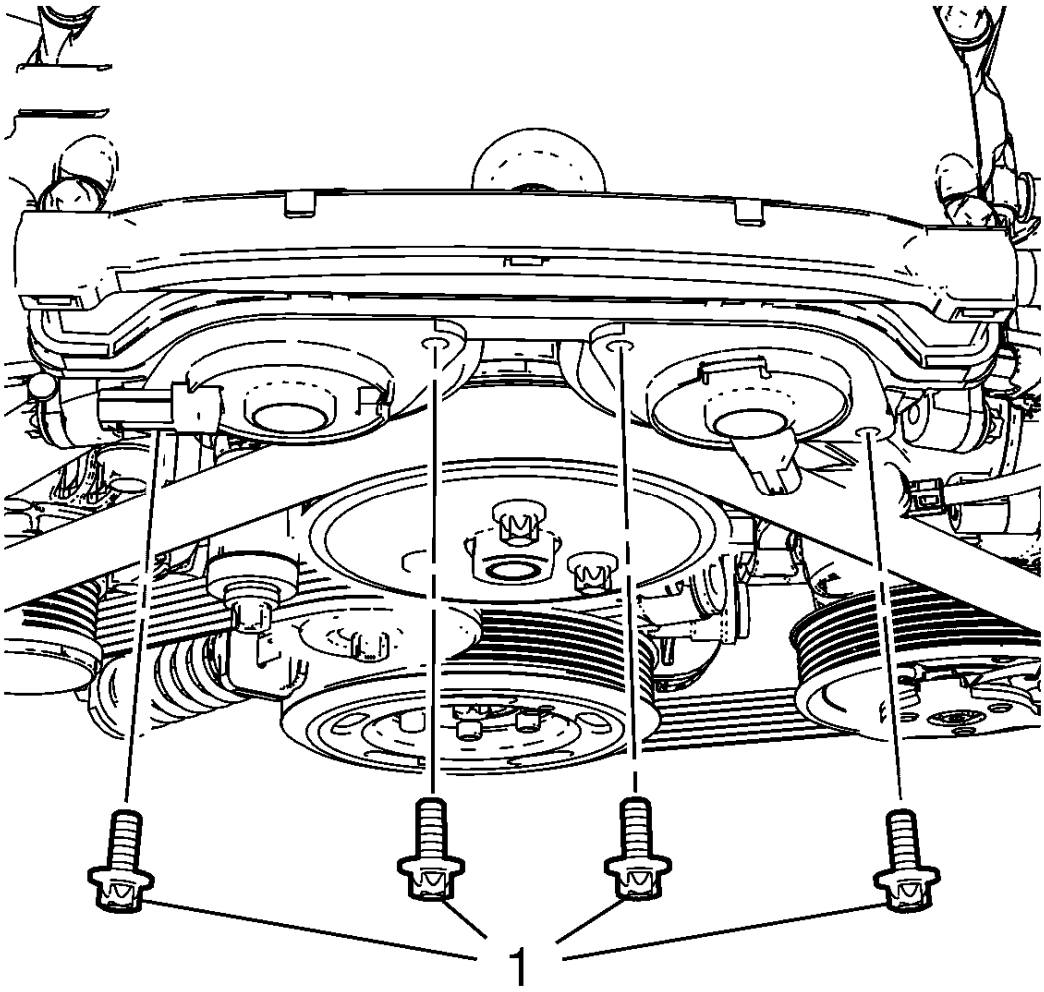

Fig. 153: Camshaft Position Actuator Solenoid Valve Bolts
Courtesy of GENERAL MOTORS COMPANY

CAUTION: Refer to Fastener Caution .

2. Install the 4 camshaft position actuator solenoid valve bolts (1) and tighten to 8 N.m (71 lb in).

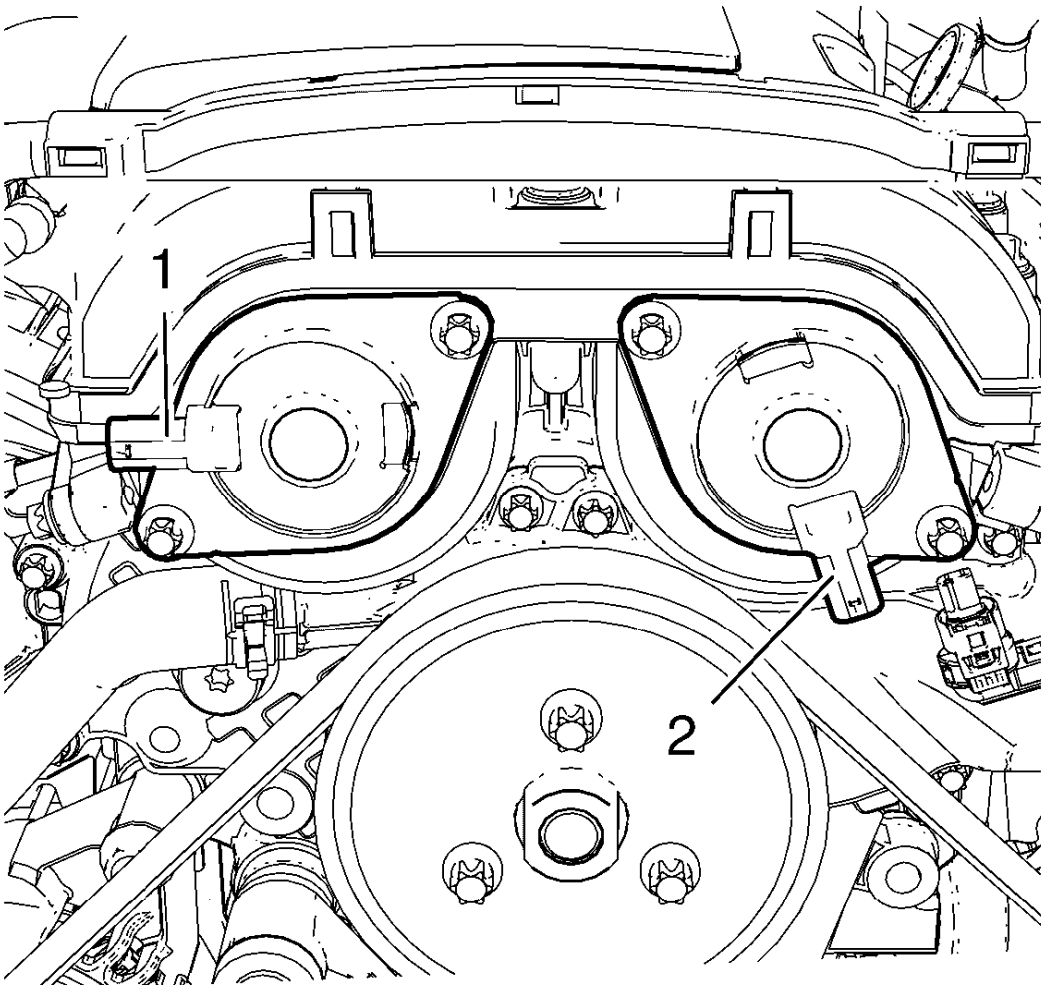

Fig. 154: Camshaft Position Actuator Solenoid Valves Proper Position
Courtesy of GENERAL MOTORS COMPANY

3. The 2 camshaft position actuator solenoid valves should be installed in the position as shown (1) and (2).

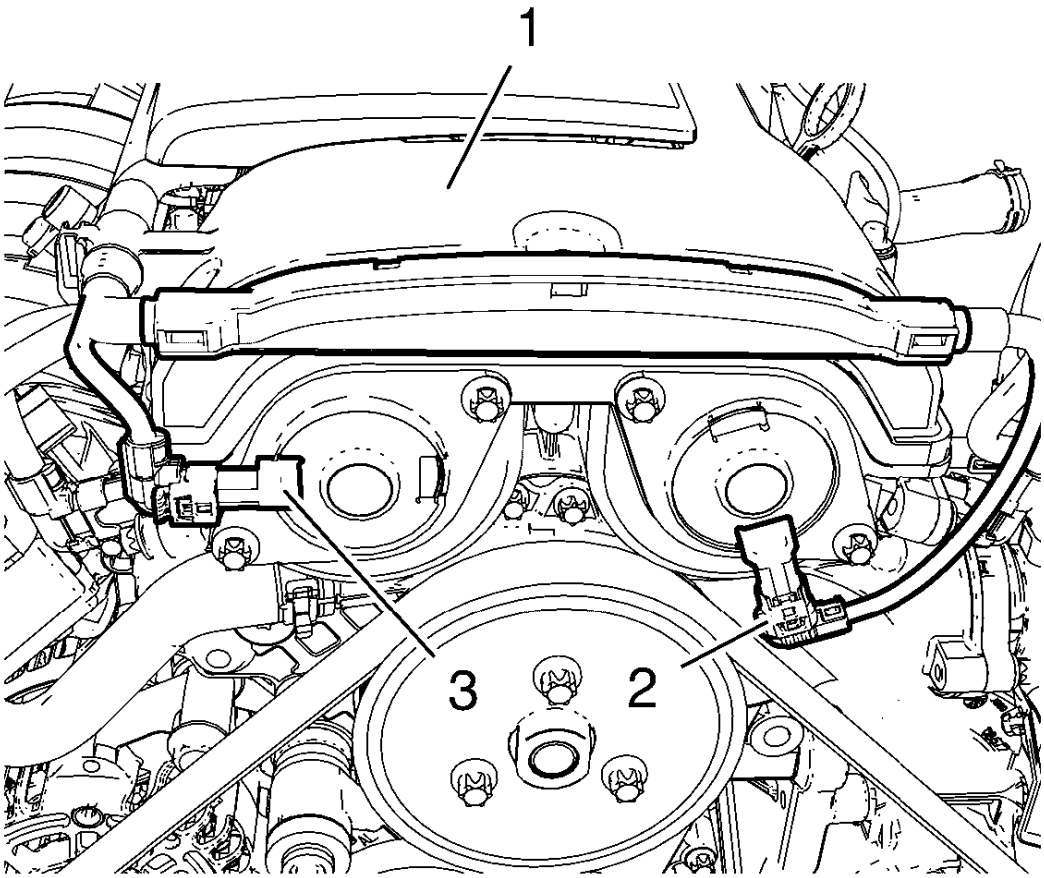

Fig. 155: ECM Wiring Harness
Courtesy of GENERAL MOTORS COMPANY

4. Clip ECM wiring harness (1) to camshaft cover.
5. Connect the exhaust camshaft position actuator solenoid valve wiring harness plug (2).
6. Connect the intake camshaft position actuator solenoid valve wiring harness plug (3).

CRANKSHAFT POSITION SENSOR REPLACEMENT

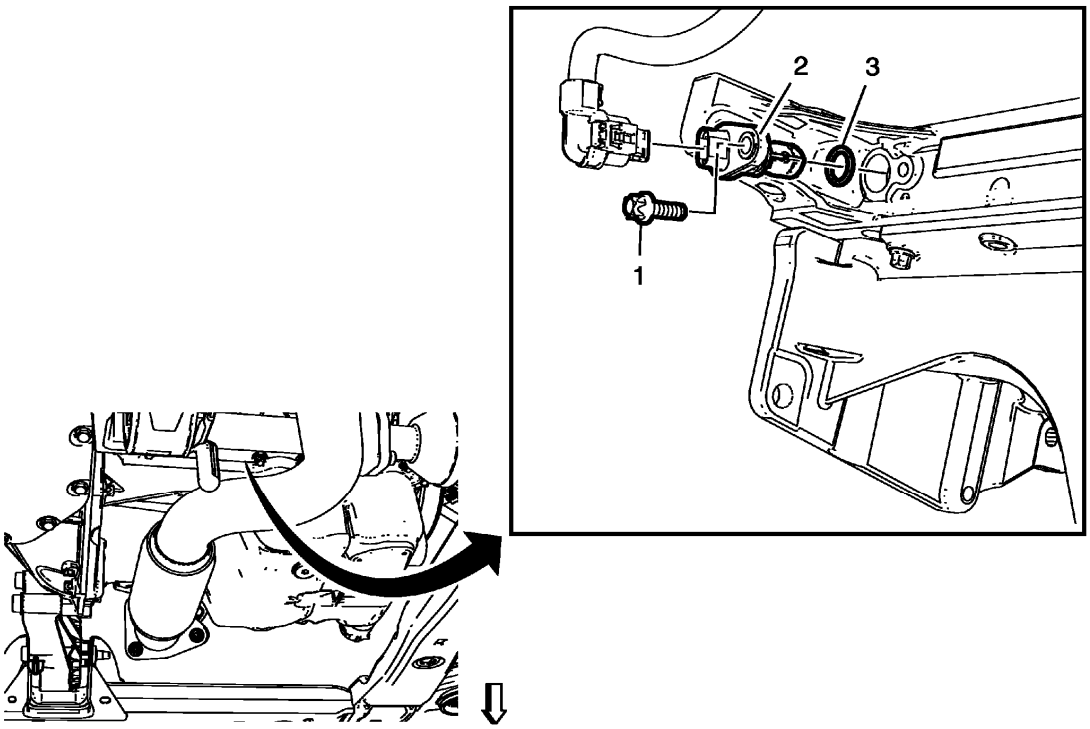

Fig. 156: Crankshaft Position Sensor
Courtesy of GENERAL MOTORS COMPANY

Crankshaft Position Sensor Replacement

Callout	Component Name
Preliminary Procedures Raise and support the vehicle. Refer to **Lifting and Jacking the Vehicle**	
1	Crankshaft Position Sensor Bolt **CAUTION:** **Refer to Fastener Caution .** **Tighten** 8 N.m (71 lb in)
2	Crankshaft Position Sensor **Procedure** 1. Disconnect the electrical connector. 2. After replacement of crankshaft position sensor, use a scan tool to speed up learn function. Refer to **K20 Engine Control Module: Programming and Setup** .
3	Crankshaft Position Sensor Seal Ring

CAMSHAFT POSITION SENSOR REPLACEMENT

Removal Procedure

1. Open hood.

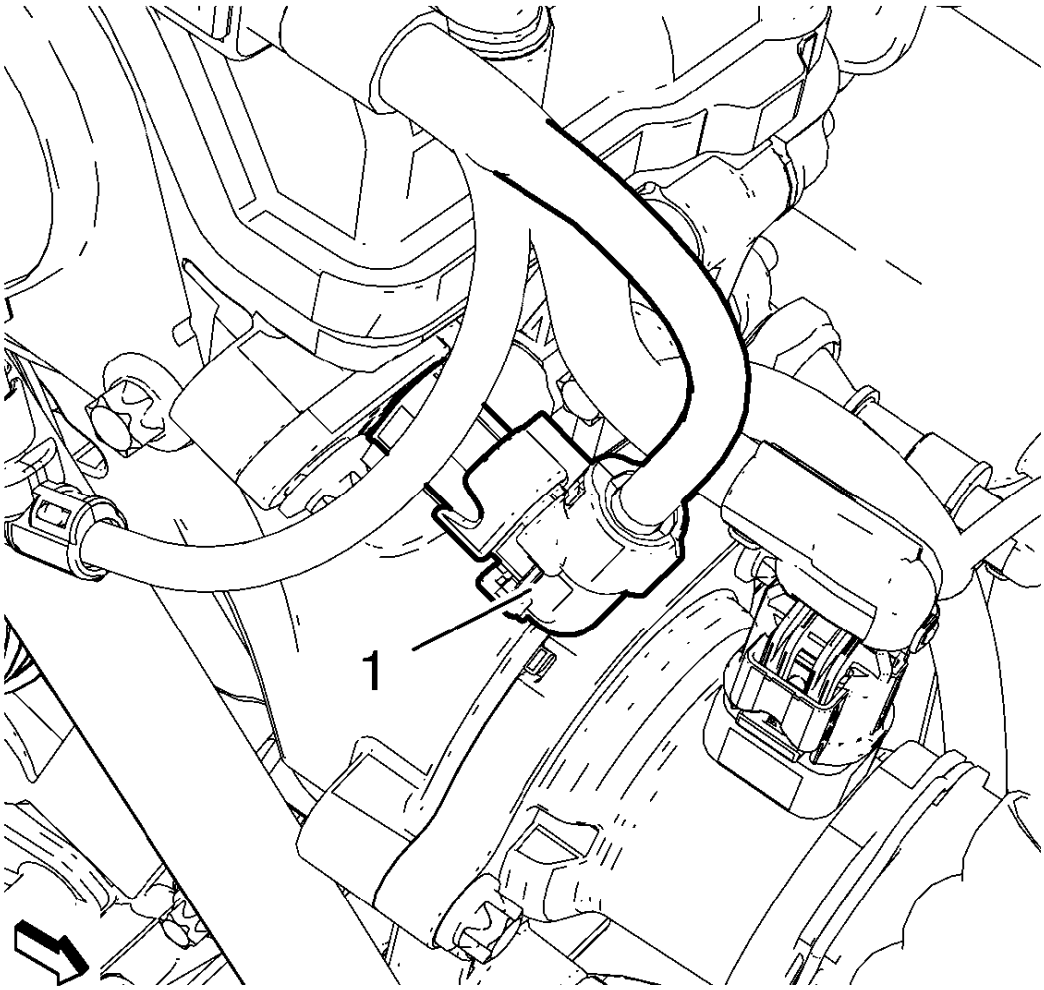

Fig. 157: Camshaft Position Sensor Wiring Harness Plug
Courtesy of GENERAL MOTORS COMPANY

NOTE: Graphic shows exhaust camshaft position sensor. Use same procedure for Intake camshaft position sensor.

2. Disconnect the camshaft position sensor wiring harness plug (1).

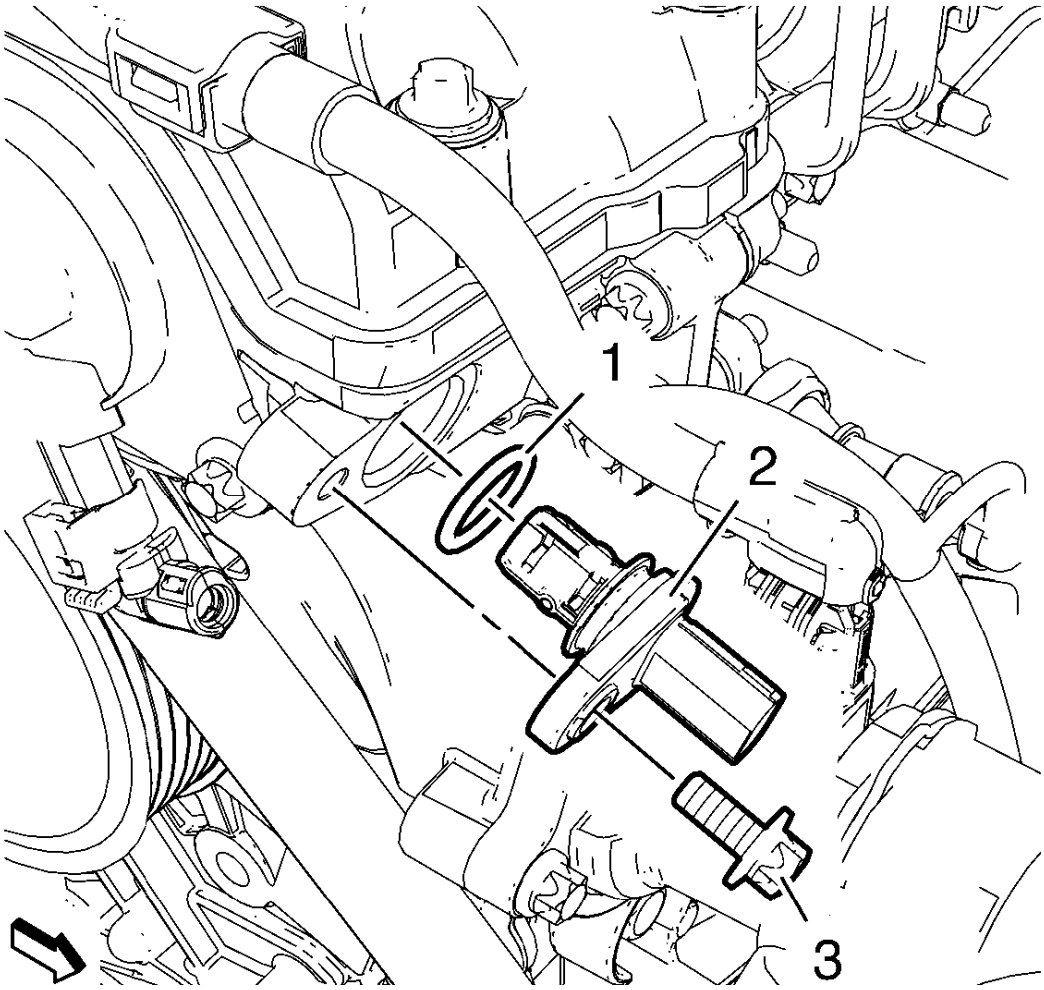

Fig. 158: Camshaft Position Sensor
Courtesy of GENERAL MOTORS COMPANY

NOTE: Graphic shows exhaust camshaft position sensor. Use same procedure for Intake camshaft position sensor.

3. Remove the camshaft position sensor bolt (3).
4. Remove the camshaft position sensor (2) and the seal ring (1).

Installation Procedure

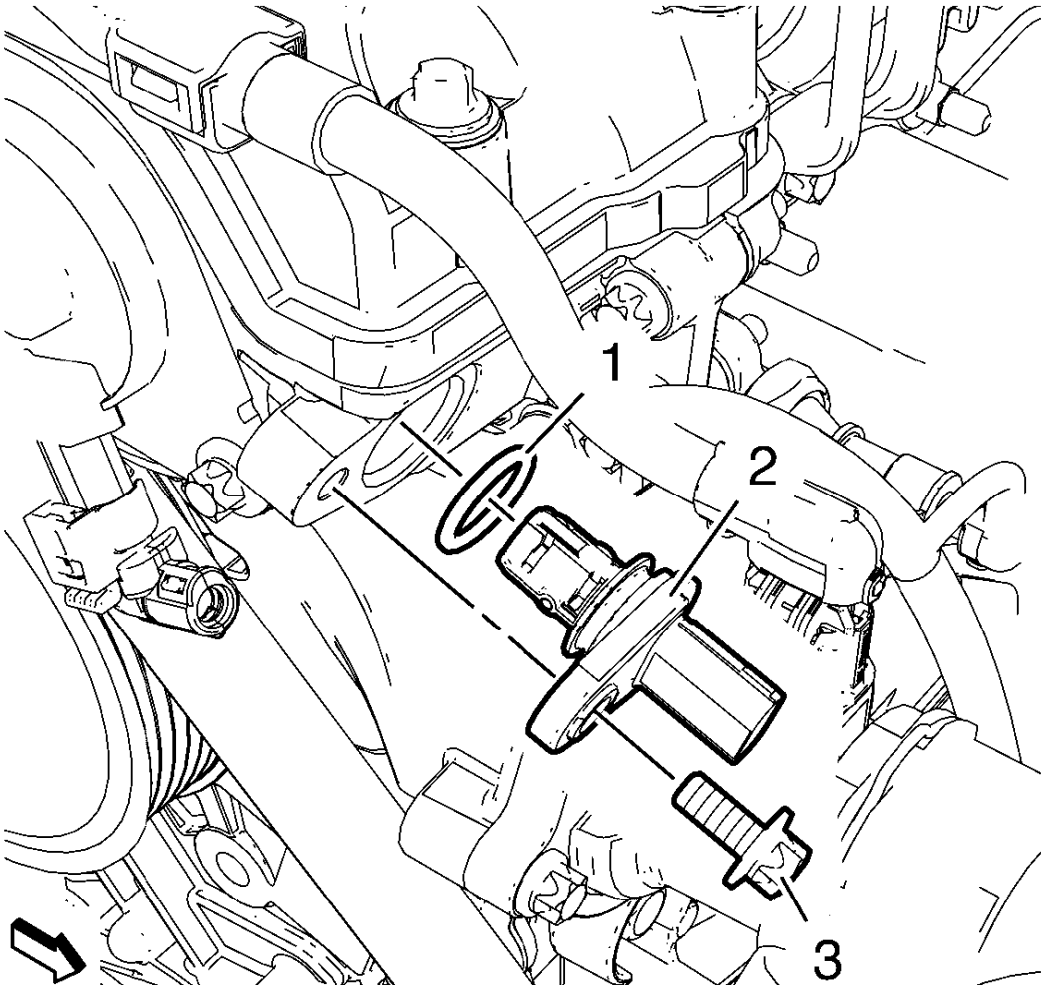

Fig. 159: Camshaft Position Sensor
Courtesy of GENERAL MOTORS COMPANY

NOTE: Graphic shows exhaust camshaft position sensor. Use same procedure for Intake camshaft position sensor.

1. Install the camshaft position sensor (2) and the seal ring (1).

CAUTION: Refer to Fastener Caution

2. Install the camshaft position sensor bolt (3) and tighten to 8 N.m (71 lb in).

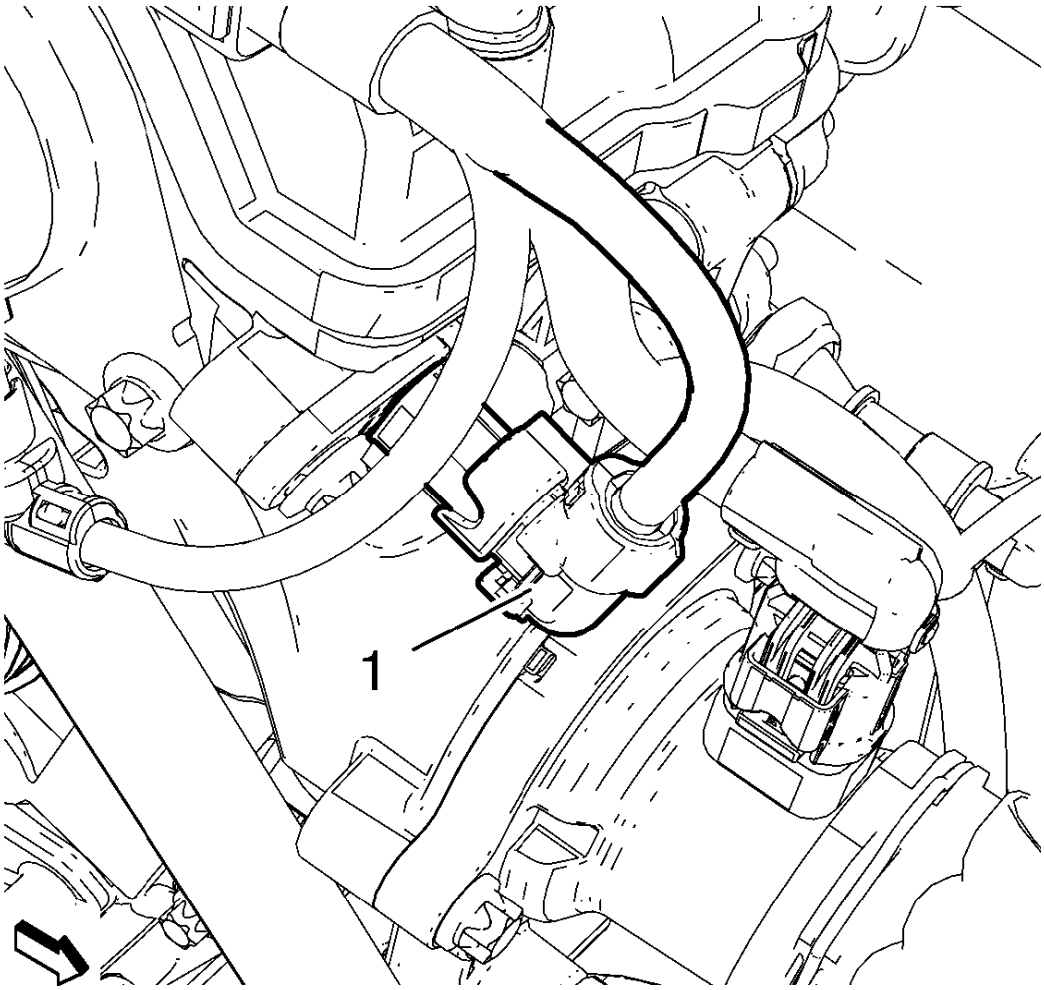

Fig. 160: Camshaft Position Sensor Wiring Harness Plug
Courtesy of GENERAL MOTORS COMPANY

NOTE: Graphic shows exhaust camshaft position sensor. Use same procedure for Intake camshaft position sensor.

3. Connect the camshaft position sensor wiring harness plug (1).
4. After replacement of an camshaft position sensor, use a scan tool to speed up learn function. Refer to **K20 Engine Control Module: Programming and Setup**
5. Close hood.

KNOCK SENSOR REPLACEMENT

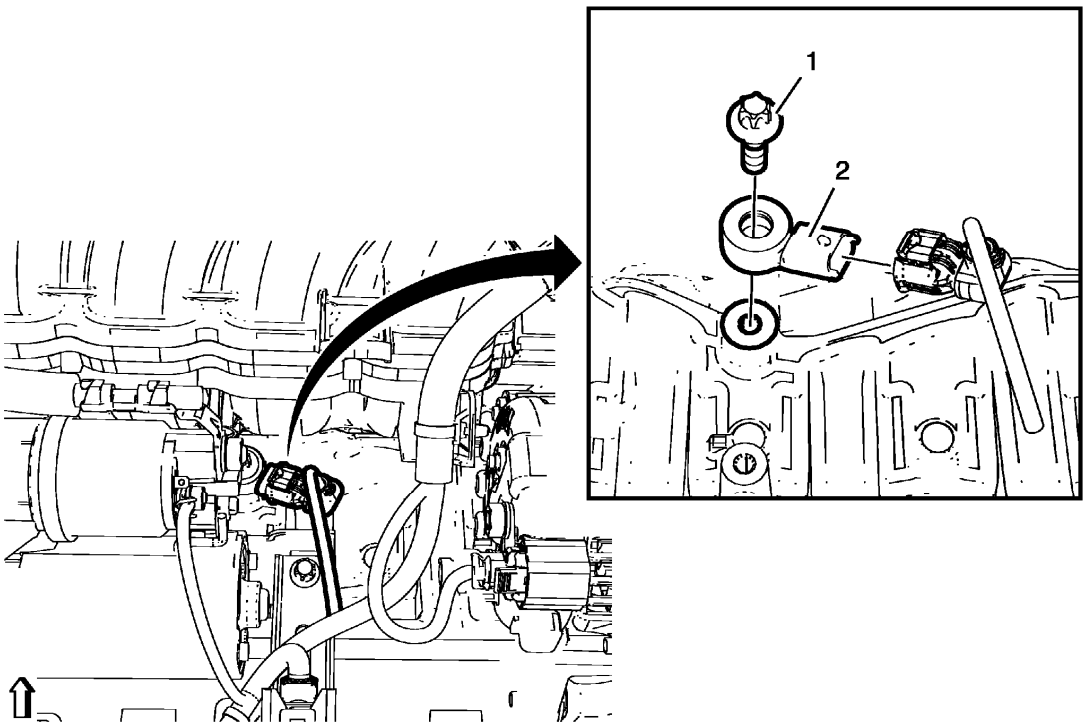

Fig. 161: Knock Sensor
Courtesy of GENERAL MOTORS COMPANY

Knock Sensor Replacement

Callout	Component Name
Preliminary Procedures 1. Disconnect battery negative cable. Refer to **Battery Negative Cable Disconnection and Connection** . 2. Raise and support the vehicle. Refer to **Lifting and Jacking the Vehicle**	
1	Knock Sensor Bolt **CAUTION:** **Refer to Fastener Caution .** **Procedure** 1. Disconnect the electrical connector. 2. DO NOT mistake the knock sensor electrical connector with the generator electrical connector. **Tighten** 25 N.m (18 lb ft)

2	Knock Sensor

AIR CLEANER INLET DUCT REPLACEMENT

Removal Procedure

1. Remove the front bumper fascia. Refer to **Front Bumper Fascia Replacement** .

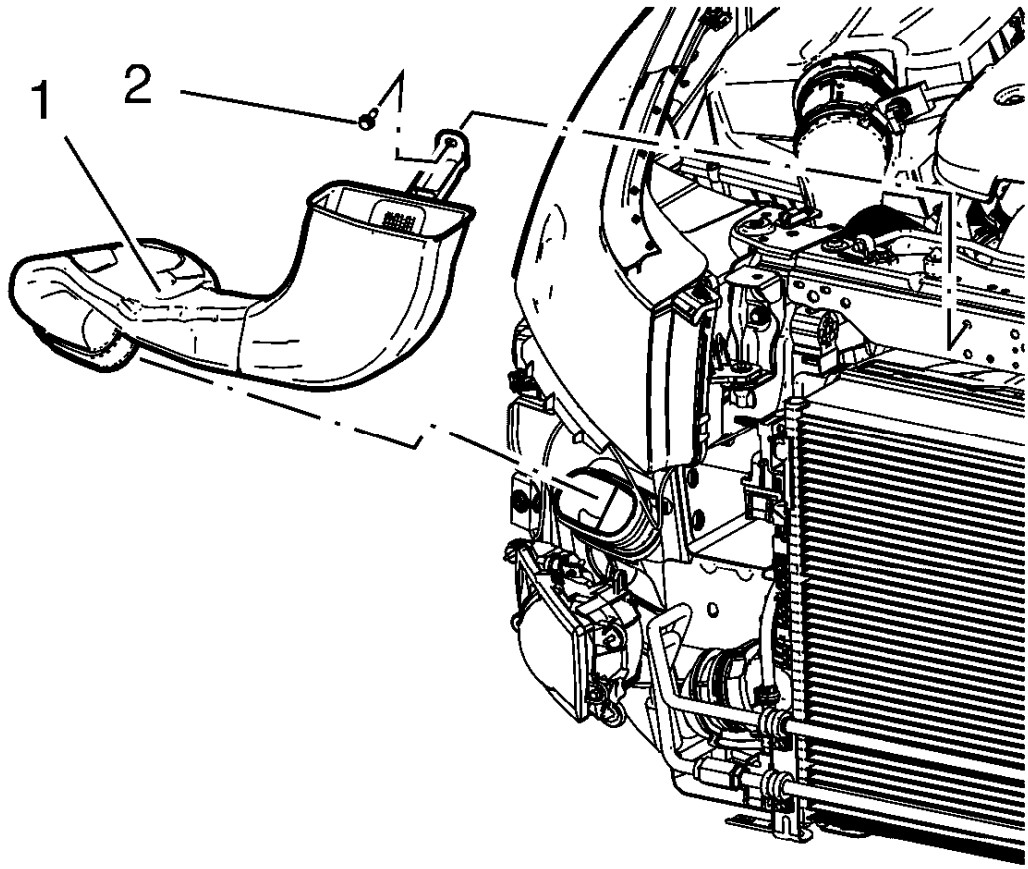

Fig. 162: Intake Air Duct And Bolt
Courtesy of GENERAL MOTORS COMPANY

2. Remove the intake air duct bolt (2).
3. Remove the intake air duct (1)

Installation Procedure

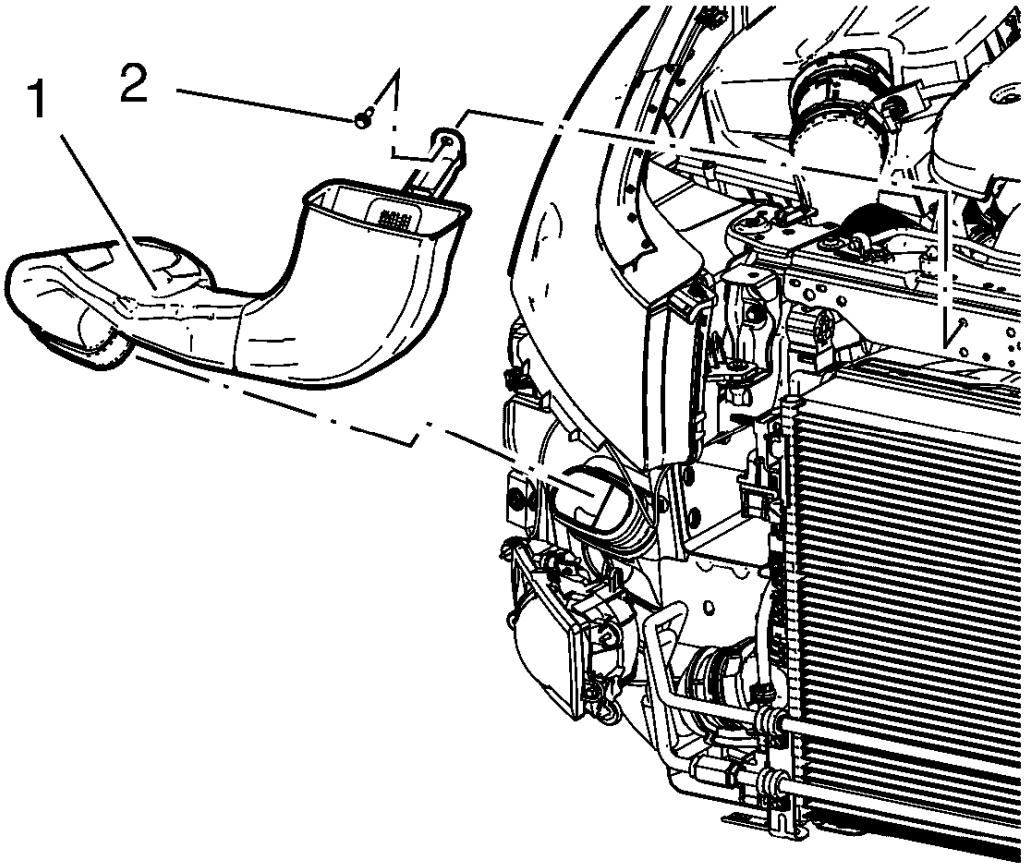

Fig. 163: Intake Air Duct And Bolt
Courtesy of GENERAL MOTORS COMPANY

1. Install the intake air duct (1).

CAUTION: Refer to Fastener Caution .

2. Install and tighten the intake air duct bolt (2).
3. Install the front bumper fascia. Refer to **Front Bumper Fascia Replacement** .

AIR CLEANER OUTLET DUCT REPLACEMENT

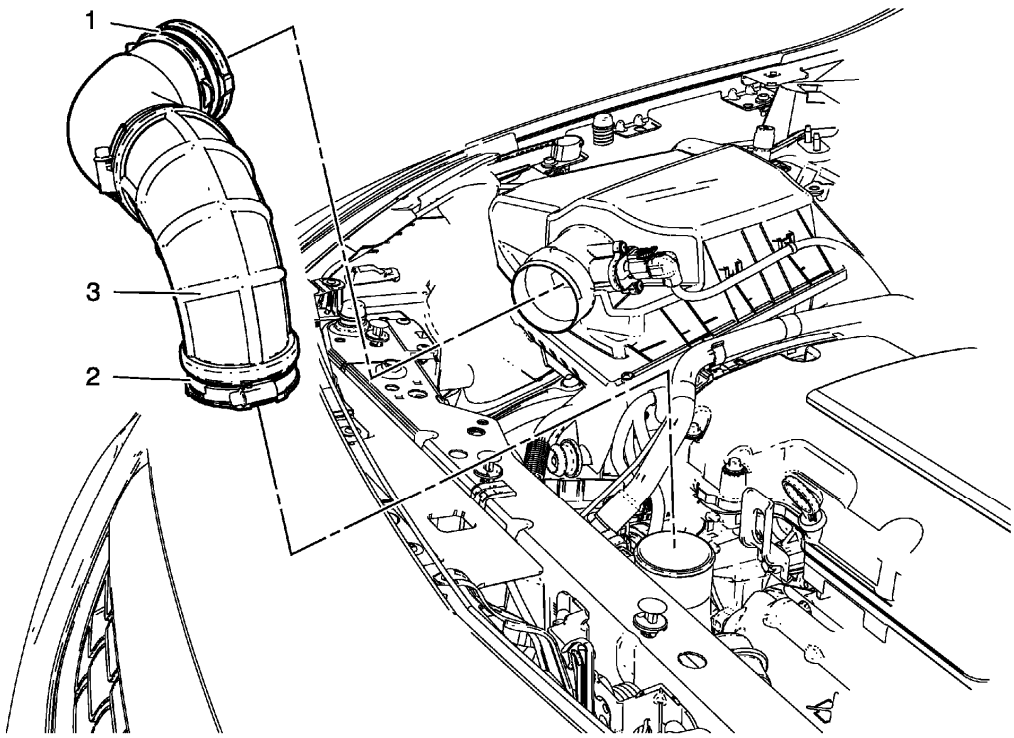

Fig. 164: Air Cleaner Outlet Duct
Courtesy of GENERAL MOTORS COMPANY

Air Cleaner Outlet Duct Replacement

Callout	Component Name
1	Air Cleaner Outlet Duct Clamp
2	Air Cleaner Outlet Duct Clamp
3	Air Cleaner Outlet Duct **TIP:** Air cleaner outlet front duct and air cleaner outlet rear duct are one part.

AIR CLEANER ELEMENT REPLACEMENT

Removal Procedure

1. Open hood.

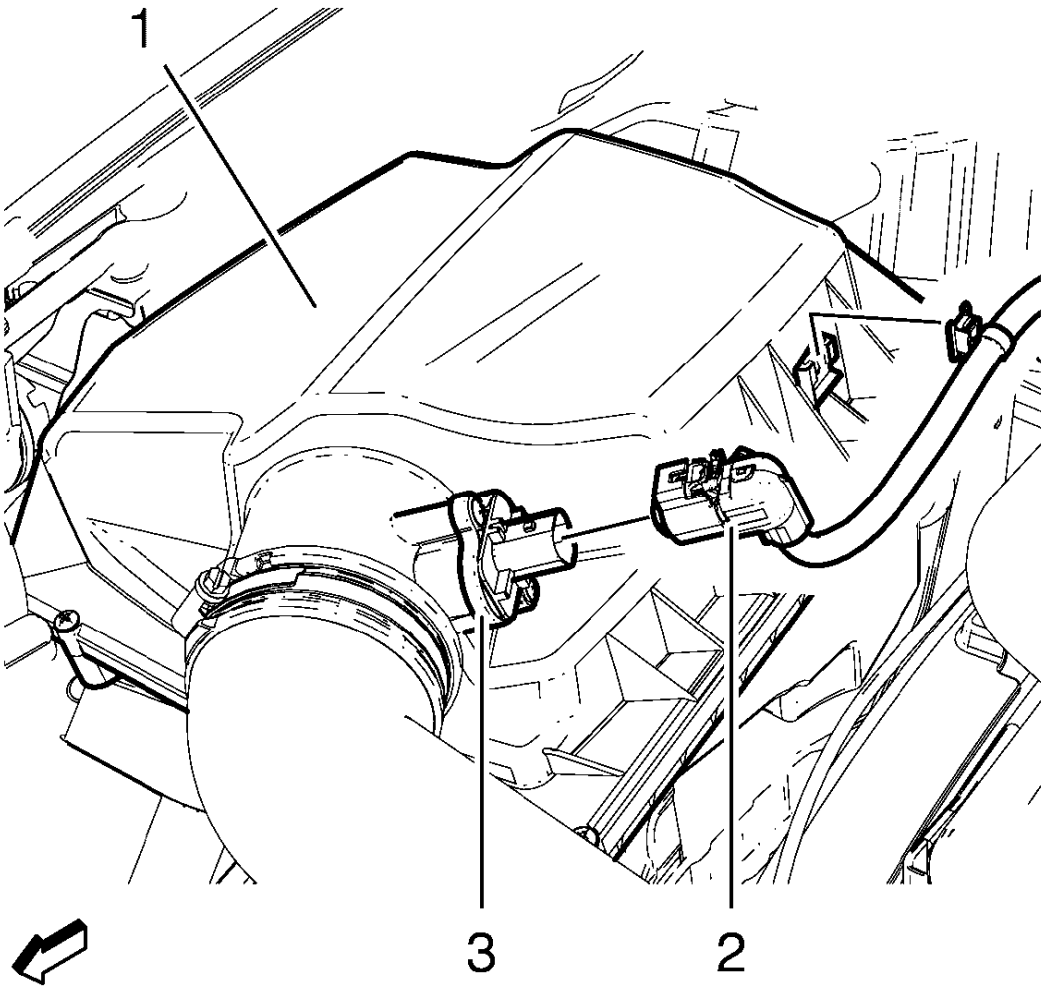

Fig. 165: Air Cleaner Housing, Mass Air Flow Sensor Wiring Harness Plug And Mass Air Flow Sensor
Courtesy of GENERAL MOTORS COMPANY

2. Disconnect mass air flow sensor wiring harness plug (2) from mass air flow sensor (3).
3. Unclip mass air flow sensor wiring harness retainer clip from air cleaner housing (1).

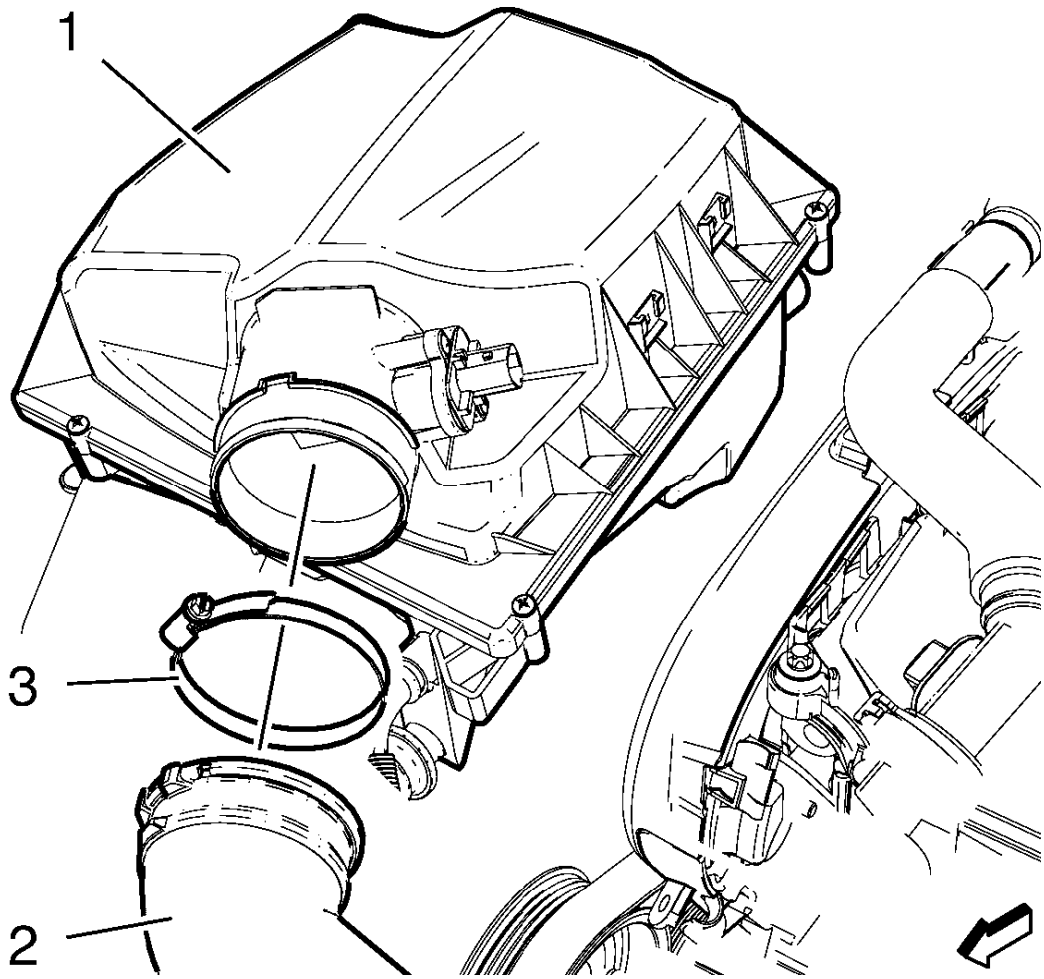

Fig. 166: Air Cleaner Housing Air Cleaner Housing, Mass Air Flow Sensor Wiring Harness Plug And Mass Air Flow Sensor
Courtesy of GENERAL MOTORS COMPANY

4. Remove the air cleaner outlet duct clamp (3).
5. Remove the air cleaner outlet duct (2) from air cleaner housing (1).

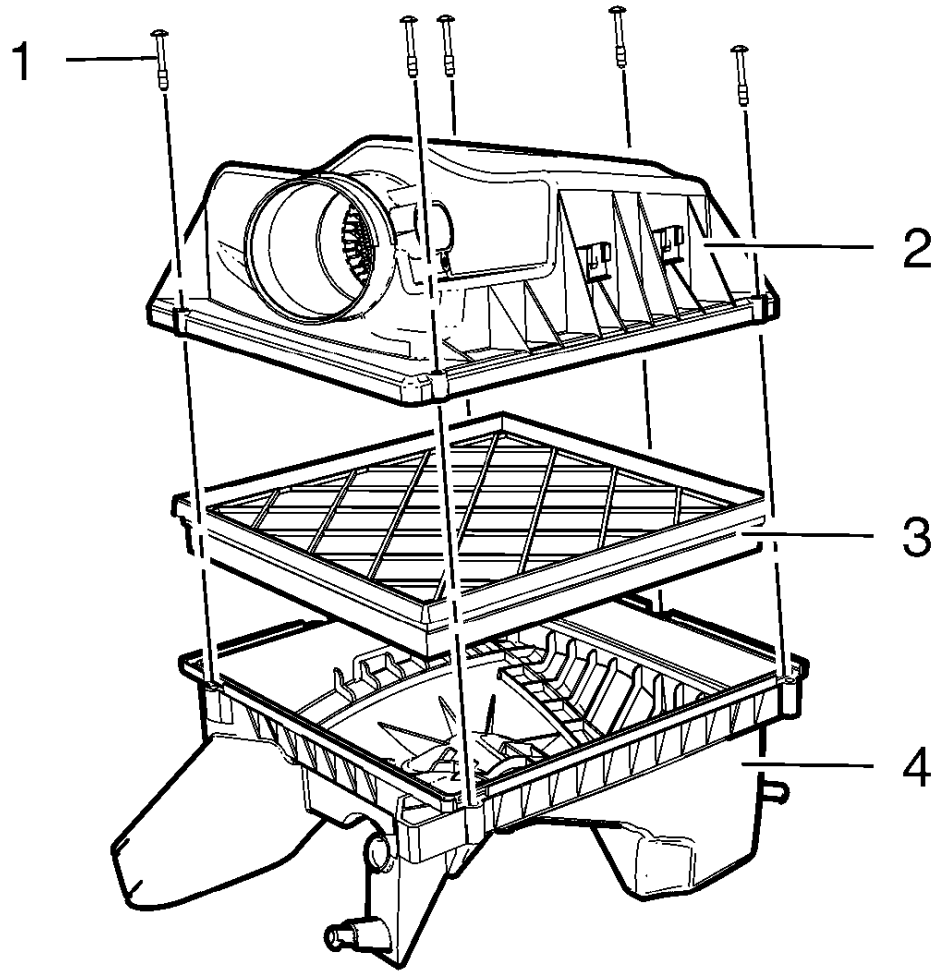

Fig. 167: Air Cleaner Element
Courtesy of GENERAL MOTORS COMPANY

6. Remove the 5 air cleaner housing bolts (1).
7. Remove the air cleaner upper housing (2) from the air cleaner lower housing (4).
8. Remove the air cleaner element (3).

Installation Procedure

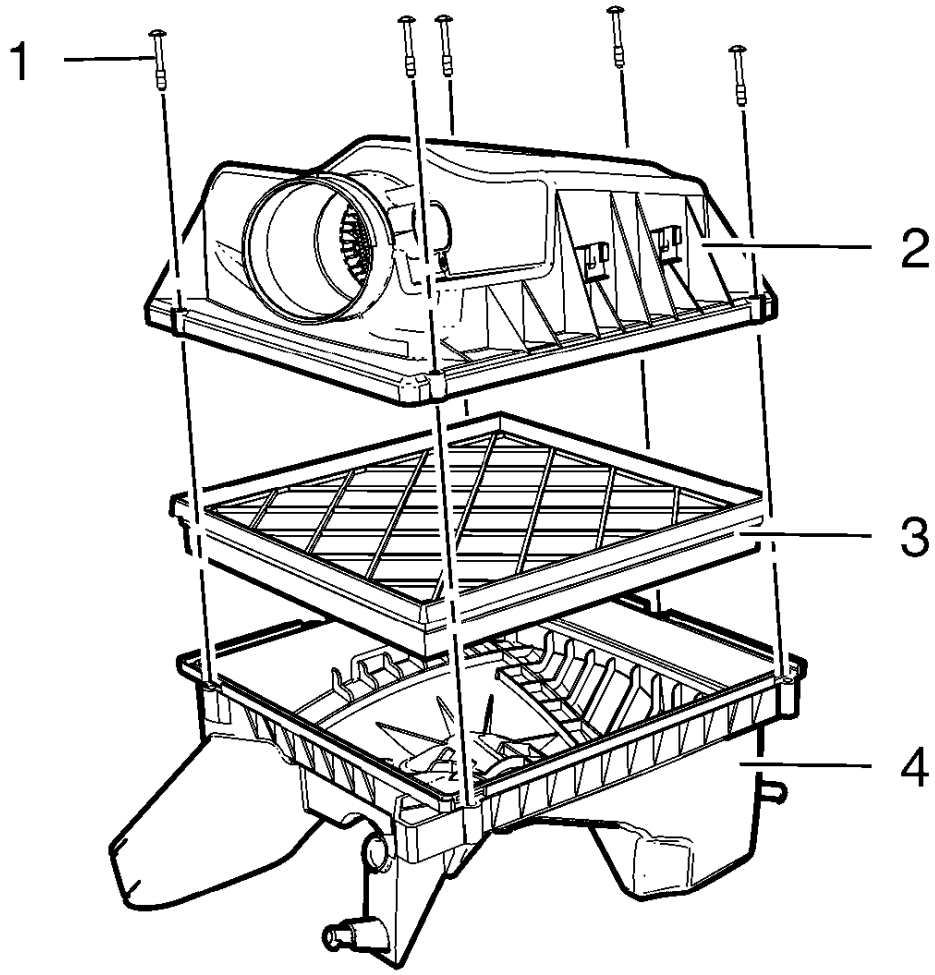

Fig. 168: Air Cleaner Element
Courtesy of GENERAL MOTORS COMPANY

1. Install the air cleaner element (3).
2. Install the air cleaner upper housing (2) to the air cleaner lower housing (4).

CAUTION: Refer to Fastener Caution .

3. Install the 5 air cleaner housing bolts (1).

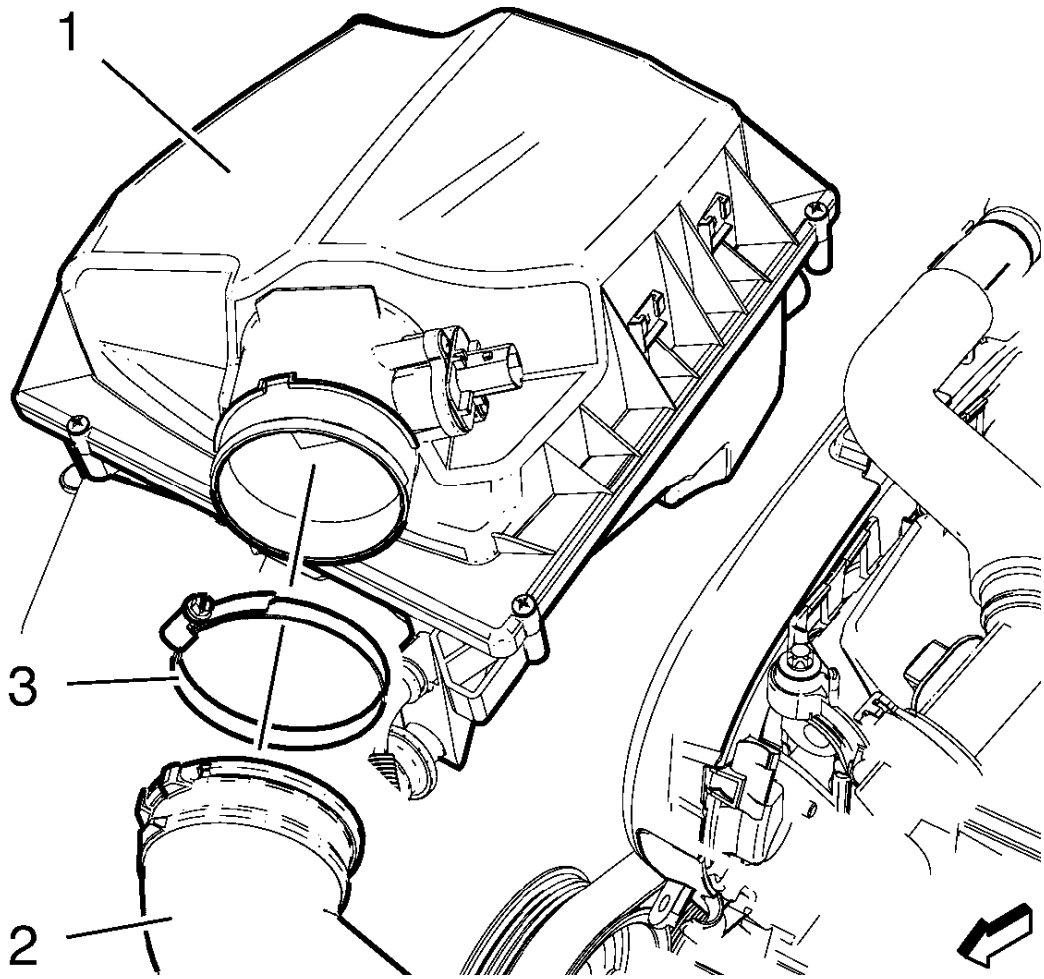

Fig. 169: Air Cleaner Housing Air Cleaner Housing, Mass Air Flow Sensor Wiring Harness Plug And Mass Air Flow Sensor
Courtesy of GENERAL MOTORS COMPANY

4. Install the air cleaner outlet duct (2) to the air cleaner housing (1).
5. Install the air cleaner outlet duct clamp (3).

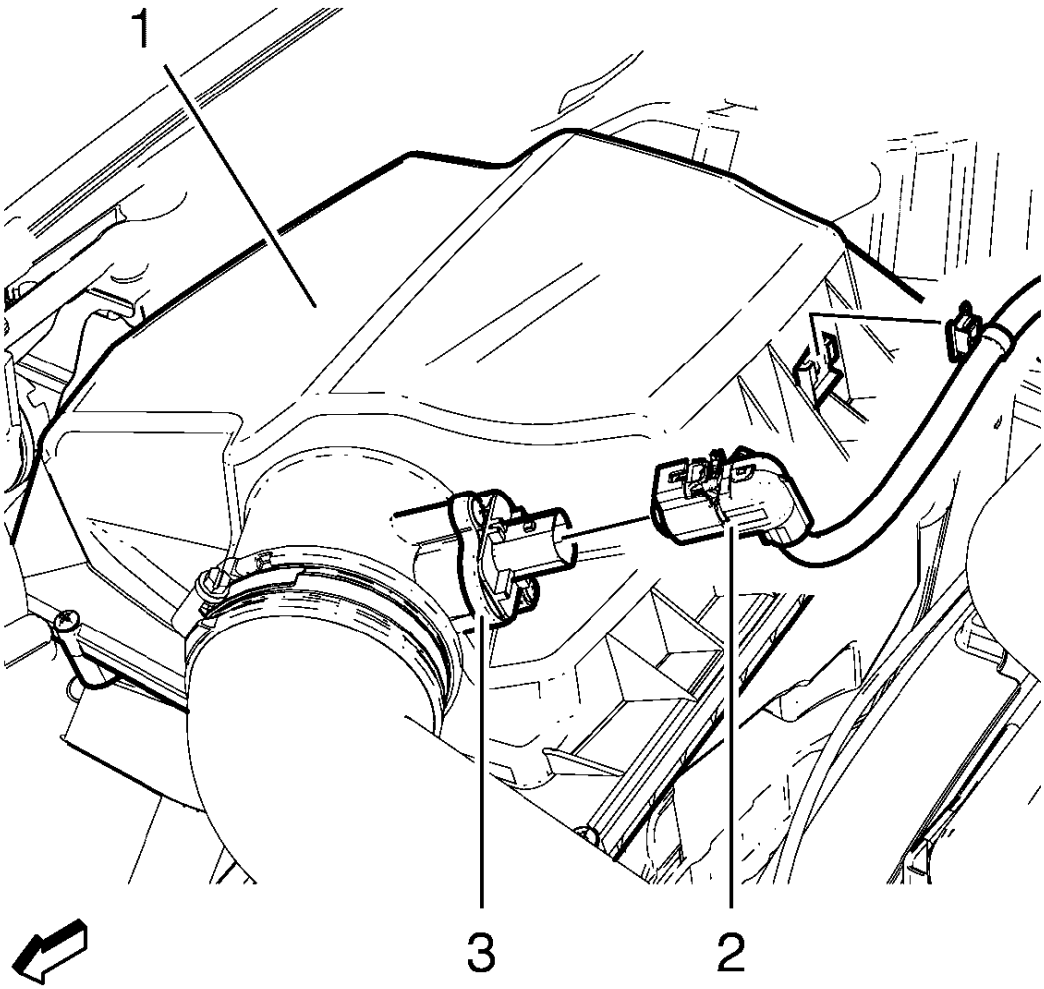

Fig. 170: Air Cleaner Housing, Mass Air Flow Sensor Wiring Harness Plug And Mass Air Flow Sensor
Courtesy of GENERAL MOTORS COMPANY

6. Clip in mass air flow sensor wiring harness retainer clip to air cleaner housing (1).
7. Connect the mass air flow sensor wiring harness plug 2) to the mass air flow sensor (3).
8. Close hood.

AIR CLEANER ASSEMBLY REPLACEMENT

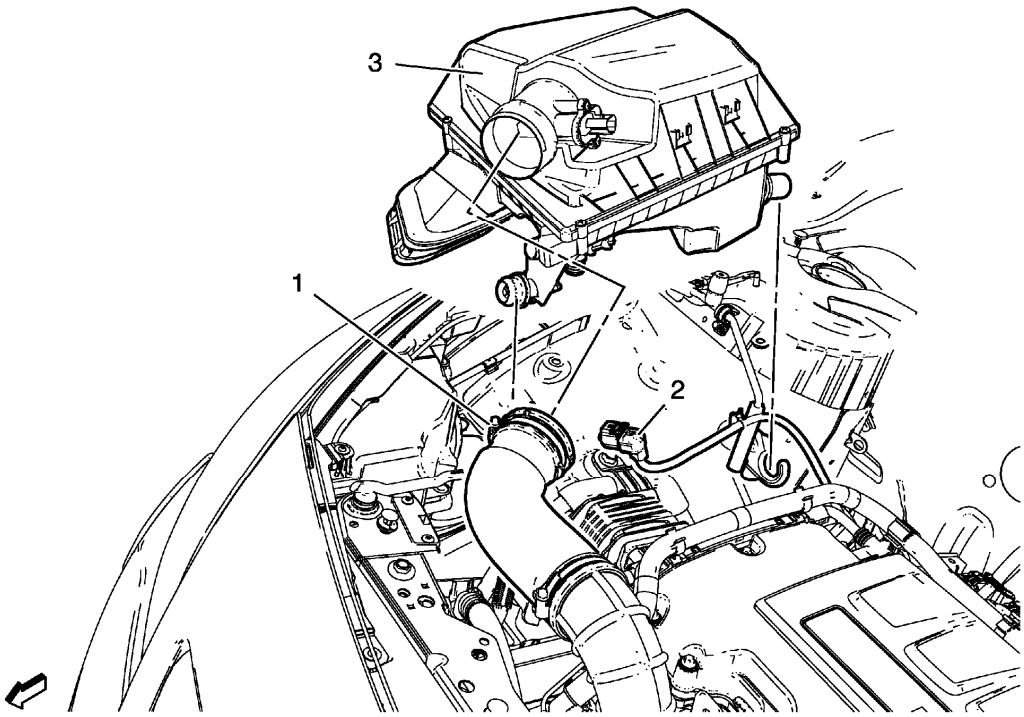

Fig. 171: Air Cleaner Assembly
Courtesy of GENERAL MOTORS COMPANY

Air Cleaner Assembly Replacement

Callout	Component Name
1	Air Cleaner Outlet Duct Clamp. **Procedure** Loosen clamp and remove air cleaner outlet duct from air cleaner assembly.
2	Mass Flow Sensor **Procedure** Disconnect mass air flow sensor wiring harness plug from mass air flow sensor and unclip from retainer clip.
3	Air Cleaner Assembly

AIR CLEANER UPPER HOUSING REPLACEMENT

Removal Procedure

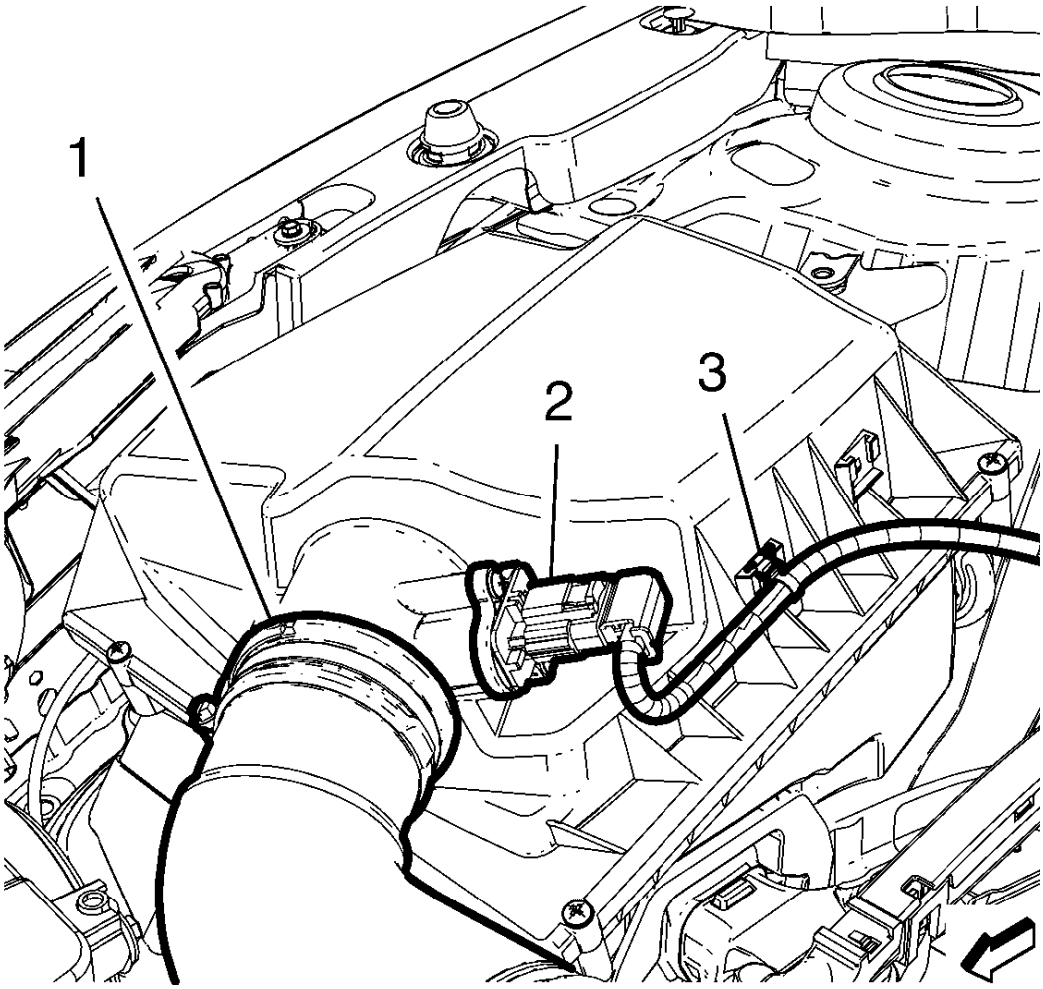

Fig. 172: Mass Airflow Sensor Wiring Harness Plug
Courtesy of GENERAL MOTORS COMPANY

1. Disconnect the mass airflow sensor wiring harness plug (2).
2. Unclip the ECM wiring harness (3) from the air cleaner housing.
3. Remove the air cleaner outlet duct (1). Refer to **Air Cleaner Outlet Duct Replacement**.

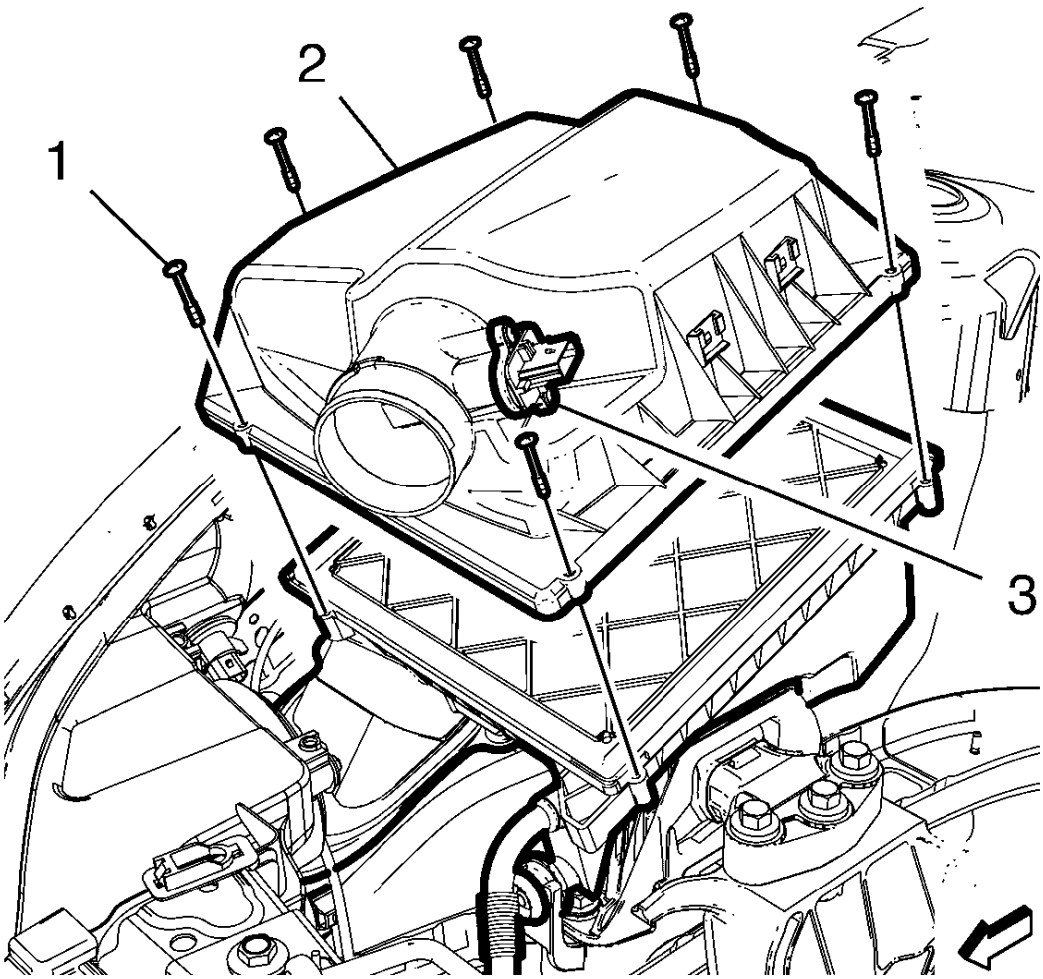

Fig. 173: Mass Air Flow Sensor
Courtesy of GENERAL MOTORS COMPANY

4. Remove the mass air flow sensor (3) from the air cleaner upper housing (2). Refer to **Mass Airflow Sensor Replacement**.
5. Remove the 6 air cleaner housing cover bolts (1).
6. Remove the air cleaner upper housing (2).

Installation Procedure

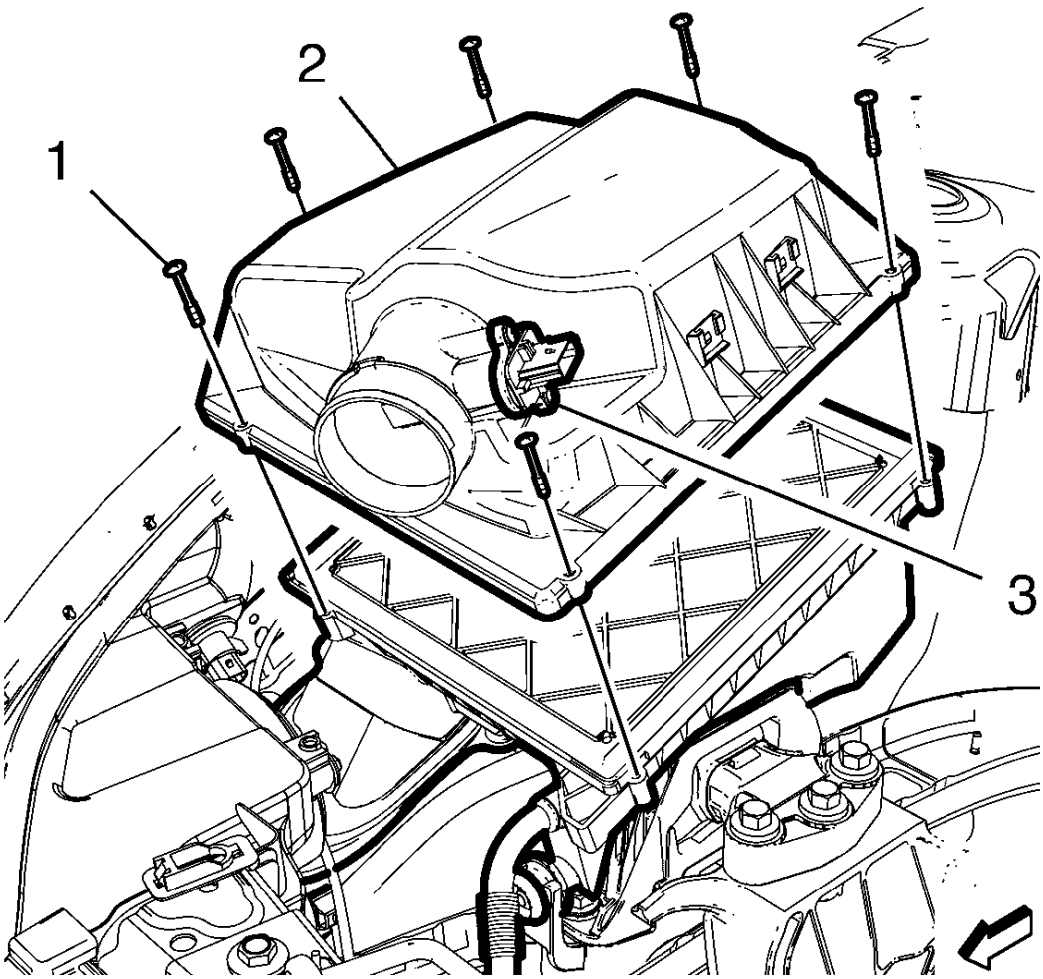

Fig. 174: Mass Air Flow Sensor
Courtesy of GENERAL MOTORS COMPANY

1. Install the air cleaner upper housing (2).

CAUTION: Refer to Fastener Caution .

2. Install the 6 air cleaner housing cover bolts (1) and tighten to 5 N.m (44 lb in).
3. Install the mass air flow sensor (3) to the air cleaner upper housing (2). Refer to **Mass Airflow Sensor Replacement**.

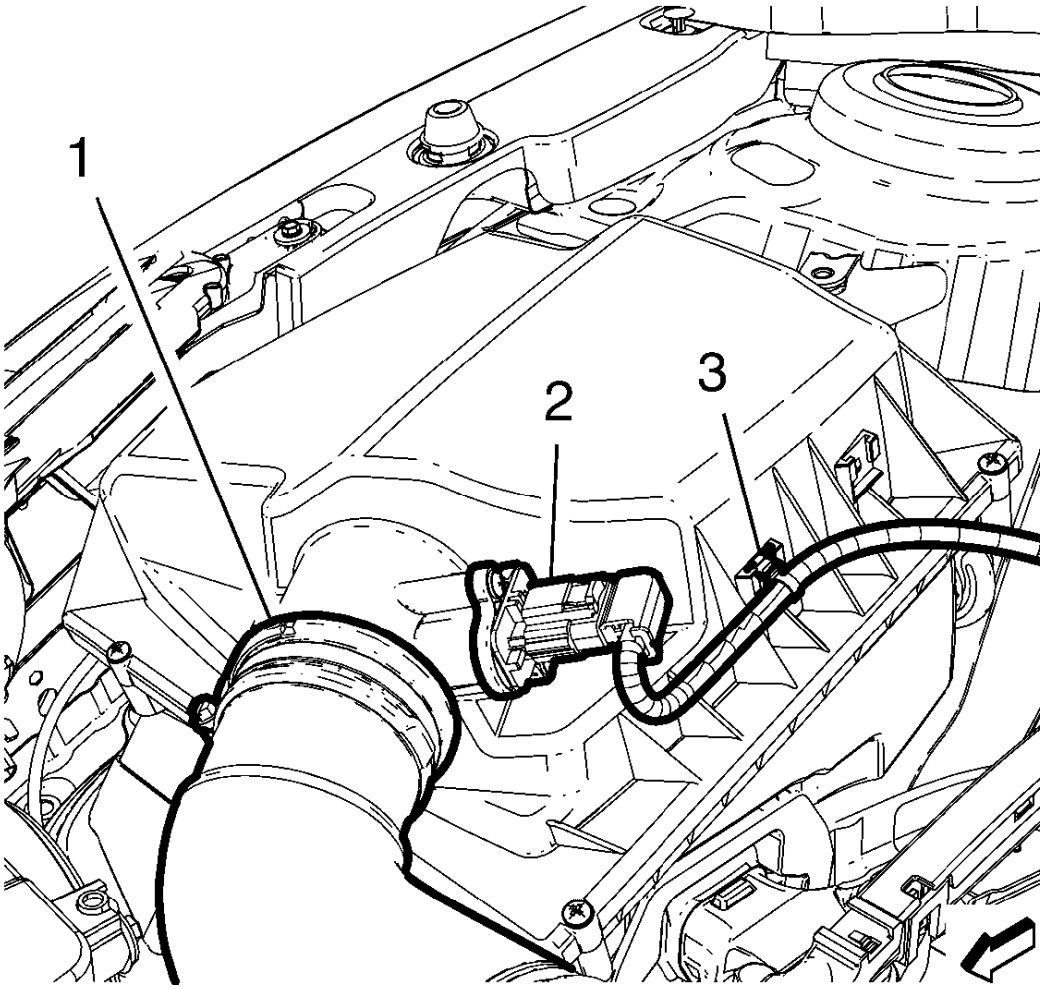

Fig. 175: Mass Airflow Sensor Wiring Harness Plug
Courtesy of GENERAL MOTORS COMPANY

4. Install the air cleaner outlet duct (1). Refer to **Air Cleaner Outlet Duct Replacement**.
5. Connect the mass airflow sensor wiring harness plug (2).
6. Clip in the ECM wiring harness (3) the air cleaner housing.

AIR CLEANER LOWER HOUSING REPLACEMENT

Removal Procedure

1. Remove the air cleaner upper housing. Refer to **Air Cleaner Upper Housing Replacement**.
2. Remove the air cleaner element. Refer to **Air Cleaner Element Replacement**.

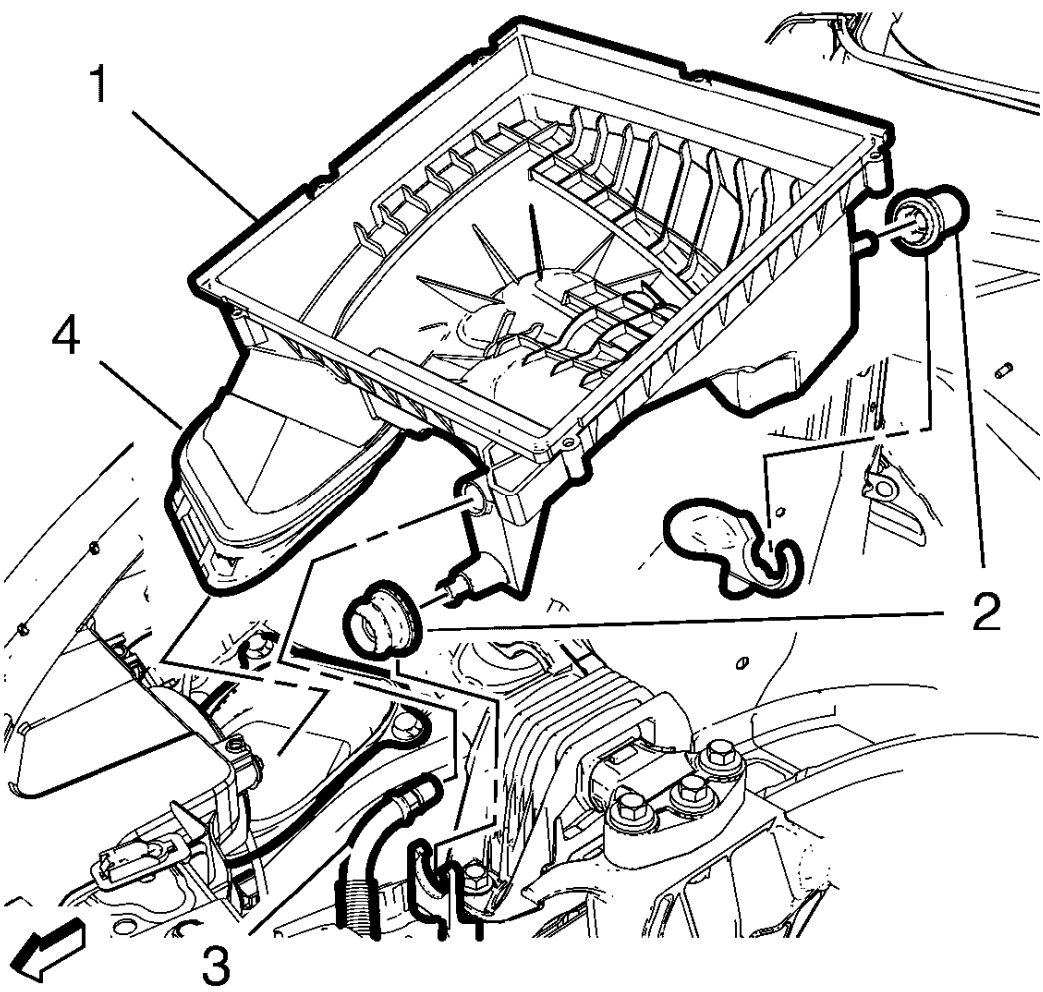

Fig. 176: Water Drain Hose
Courtesy of GENERAL MOTORS COMPANY

3. Unclip the water drain hose (3) from the air cleaner lower housing (1) if equipped.
4. Remove the air cleaner lower housing (1) from the air cleaner brackets.
5. Remove the air cleaner bracket insulators (2) from the air cleaner lower housing (1).
6. Remove the air cleaner insulator (4) from the air cleaner lower housing (1).

Installation Procedure

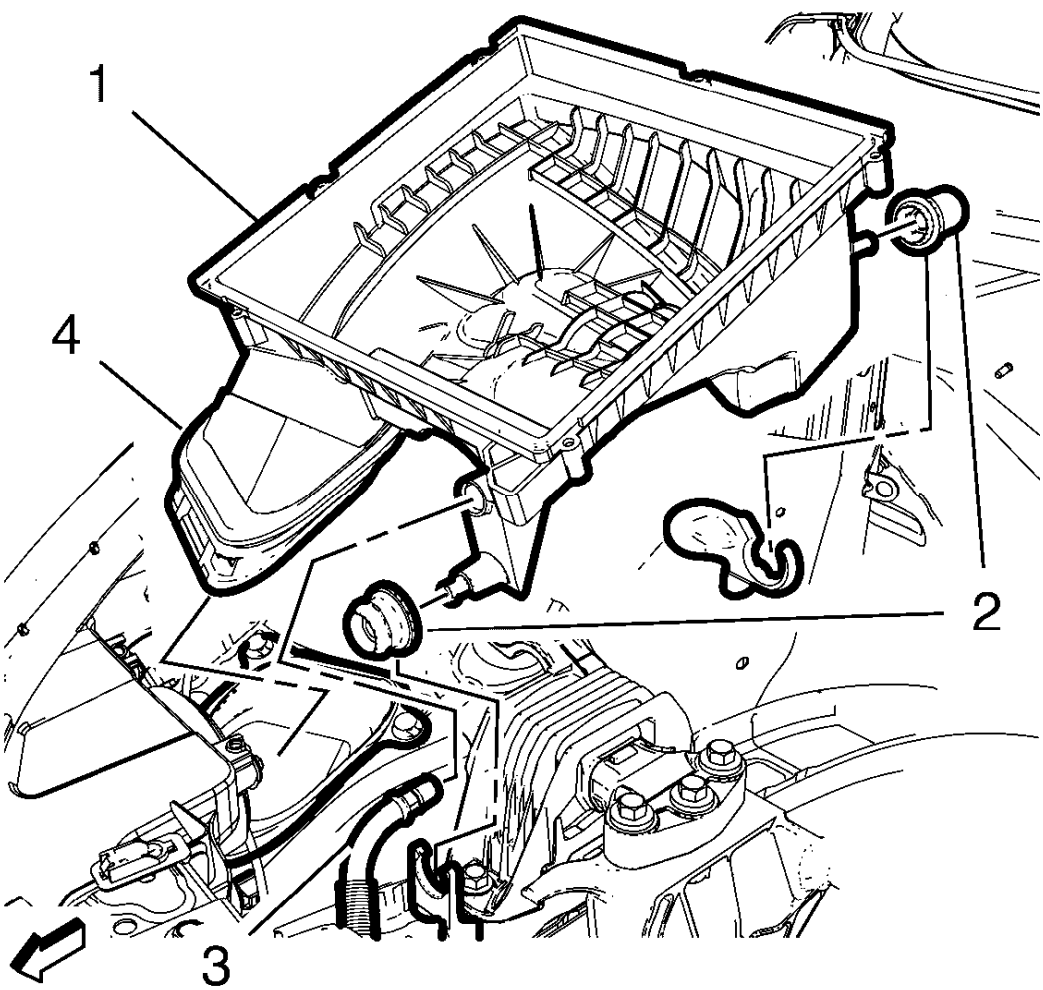

Fig. 177: Water Drain Hose
Courtesy of GENERAL MOTORS COMPANY

1. Install the air cleaner insulator (4) to the air cleaner lower housing (1).
2. Install the air cleaner bracket insulators (2) to the air cleaner lower housing (1).
3. Install the air cleaner lower housing (1) to the air cleaner brackets.
4. Install the water drain hose (3) to the air cleaner lower housing (1) if equipped.
5. Install the air cleaner element. Refer to **Air Cleaner Element Replacement**.
6. Install the air cleaner upper housing. Refer to **Air Cleaner Upper Housing Replacement**.

CHARGE AIR COOLER INLET AIR HOSE REPLACEMENT

Removal Procedure

1. Open the hood.
2. Disconnect the battery. Refer to **Battery Negative Cable Disconnection and Connection** .

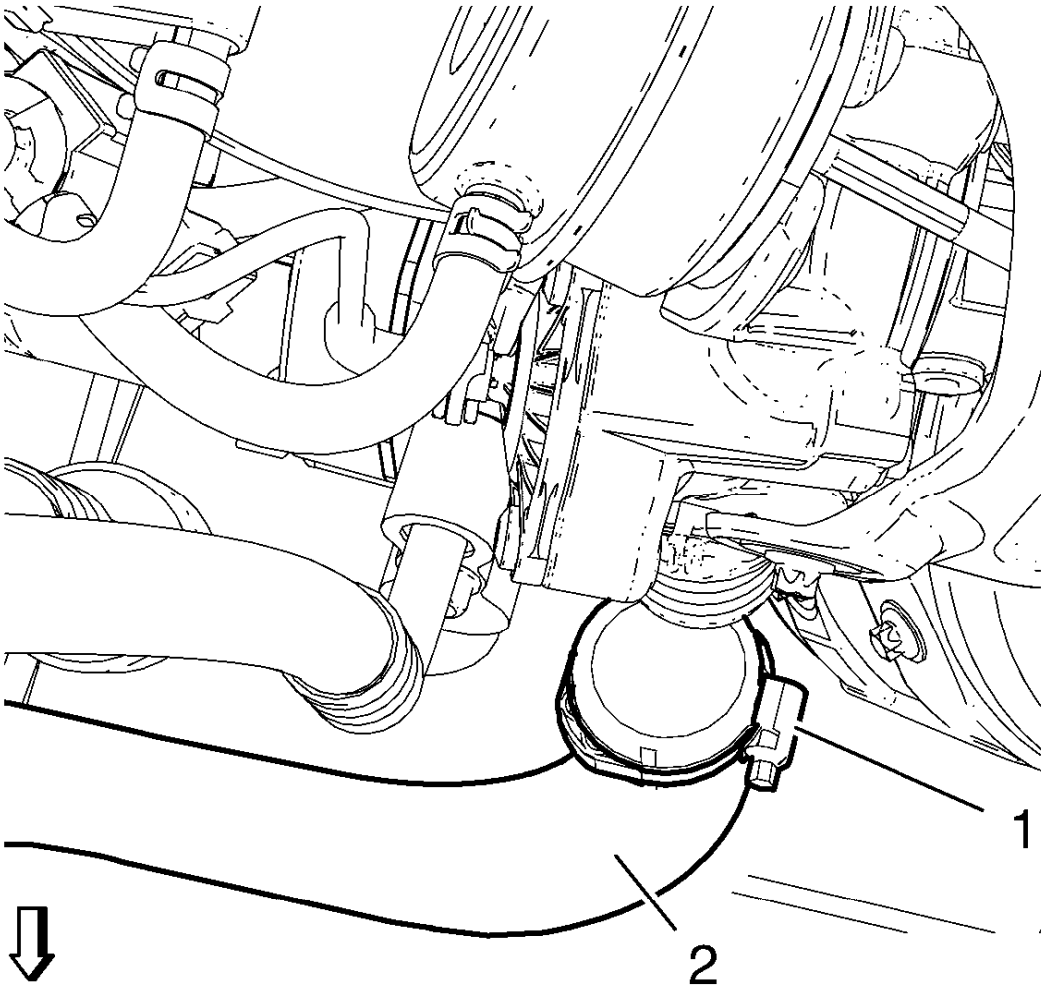

Fig. 178: Charge Air Cooler Inlet Air Hose
Courtesy of GENERAL MOTORS COMPANY

3. Loosen the charge air cooler inlet air hose clamp (1).
4. Remove the charge air cooler inlet air hose (2) from the turbocharger.
5. Remove the front bumper fascia. Refer to **Front Bumper Fascia Replacement** .

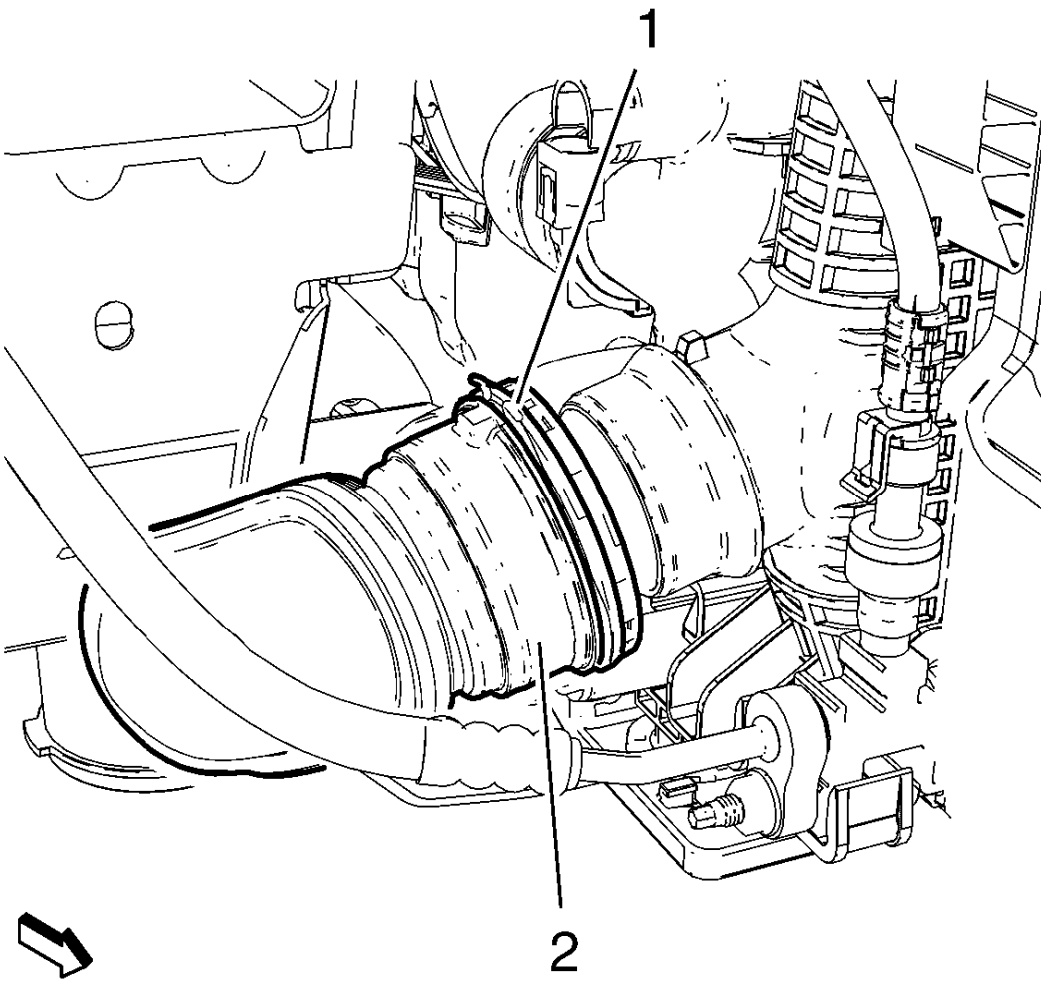

Fig. 179: Charge Air Cooler Inlet Air Hose Quick Connector
Courtesy of GENERAL MOTORS COMPANY

6. Unlock the charge air cooler inlet air hose quick connector (1).
7. Remove the charger air cooler inlet air hose (2).

Installation Procedure

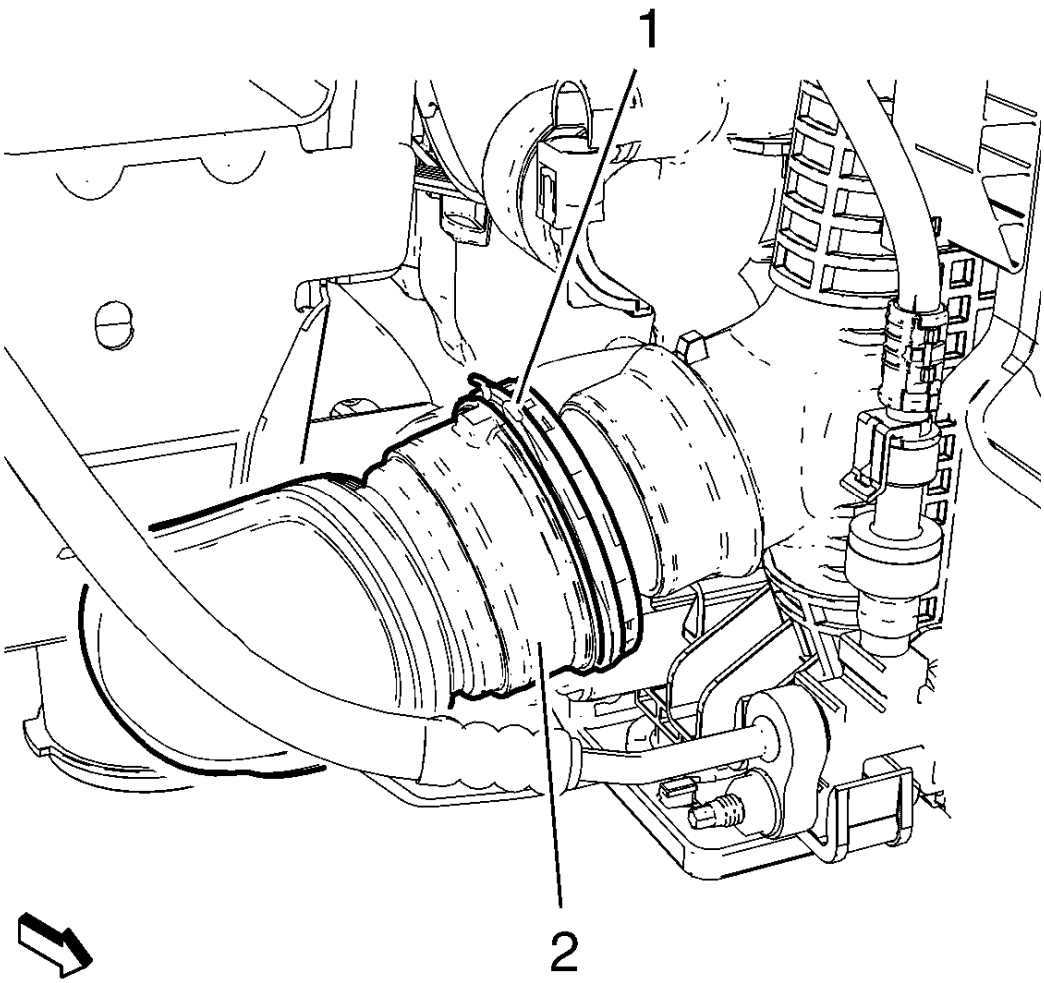

Fig. 180: Charge Air Cooler Inlet Air Hose Quick Connector
Courtesy of GENERAL MOTORS COMPANY

1. Install the charger air cooler inlet air hose (2) to the charge air cooler until it engages audible.

CAUTION: Refer to Fastener Caution .

2. Install the front bumper fascia. Refer to **Front Bumper Fascia Replacement** .

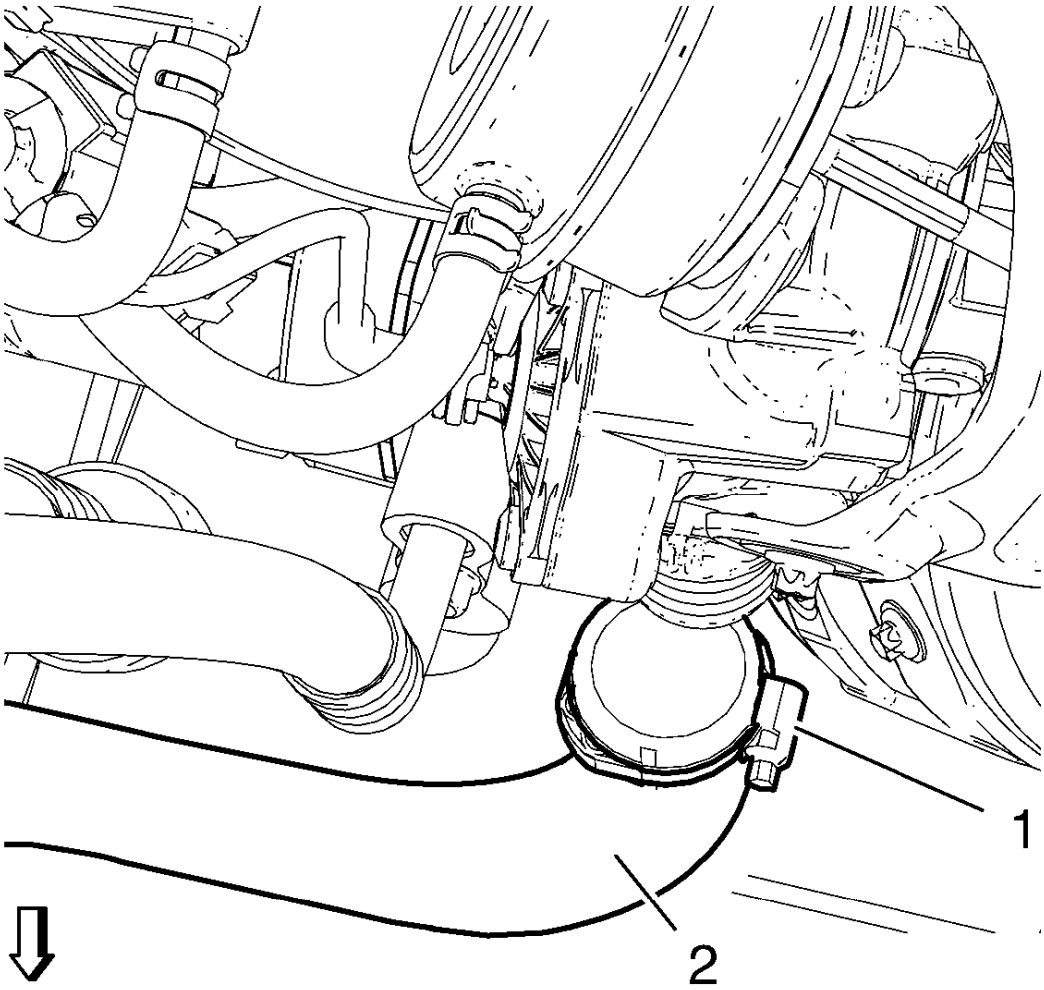

Fig. 181: Charge Air Cooler Inlet Air Hose
Courtesy of GENERAL MOTORS COMPANY

3. Install the charger air cooler inlet air hose (2) to the turbocharger.
4. Install and tighten the charger air cooler inlet air hose clamp (1).
5. Connect the battery. Refer to **Battery Negative Cable Disconnection and Connection** .
6. Close the hood.

CHARGE AIR COOLER OUTLET AIR HOSE REPLACEMENT (AUTOMATIC TRANSMISSION)

Removal Procedure

1. Open the hood.
2. Disconnect the battery. Refer to **Battery Negative Cable Disconnection and Connection** .

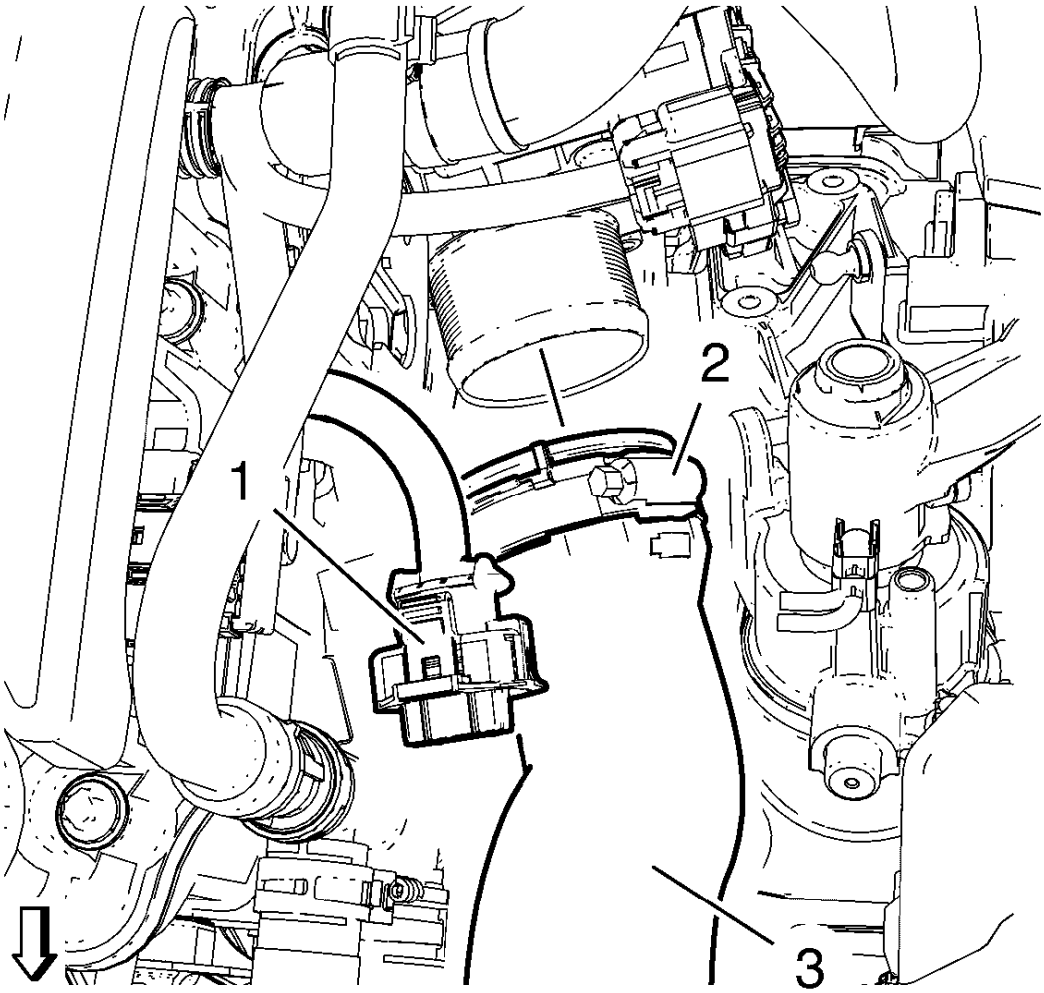

Fig. 182: Charge Air Cooler Outlet Air Hose
Courtesy of GENERAL MOTORS COMPANY

3. Disconnect the turbocharger pressure sensor wiring harness plug (1).
4. Loosen the charge air cooler outlet air hose clamp (2).
5. Remove the charge air cooler outlet air hose (3) from the throttle body.
6. Remove the front bumper fascia. Refer to **Front Bumper Fascia Replacement** .

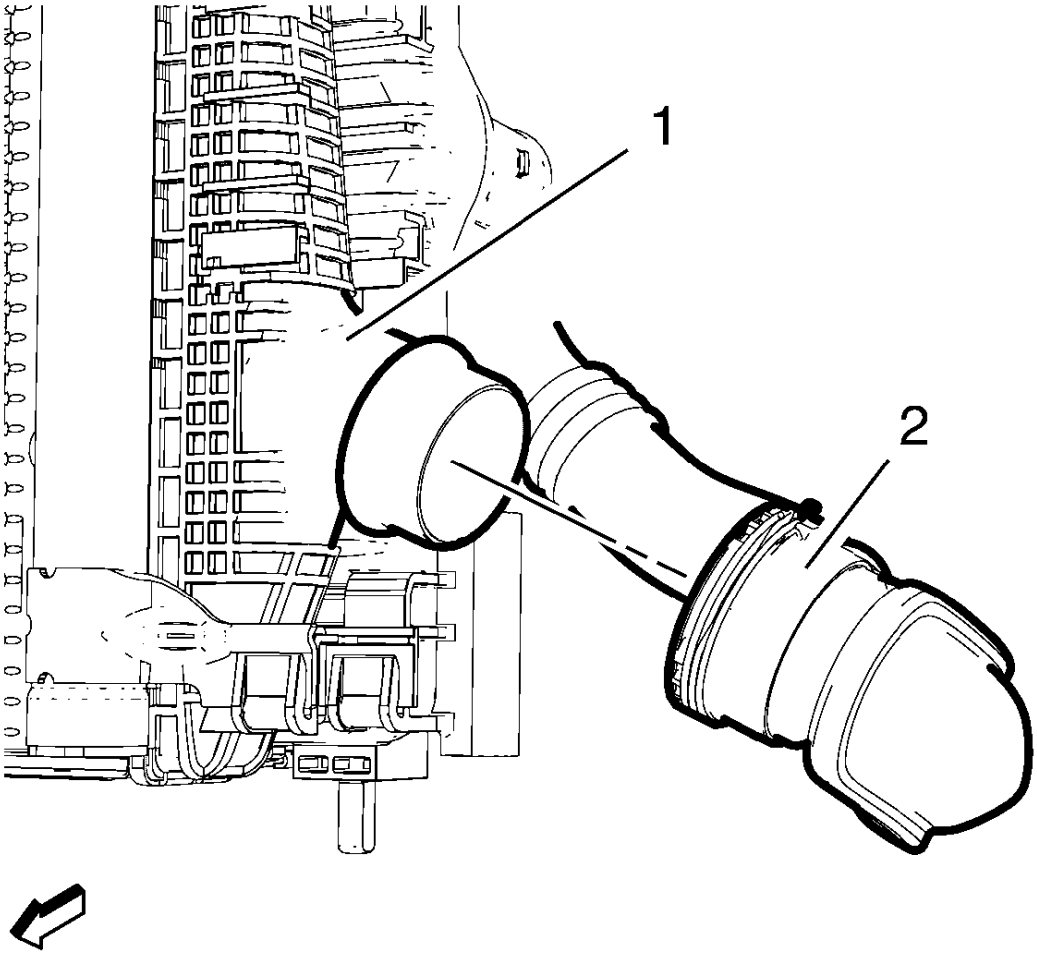

Fig. 183: Charge Air Cooler Outlet Air Hose
Courtesy of GENERAL MOTORS COMPANY

7. Unlcip the radiator inlet hose from the charge air cooler outlet air hose (2).
8. Remove the charge air cooler outlet air hose (2) from the charge air cooler (1).

Installation Procedure

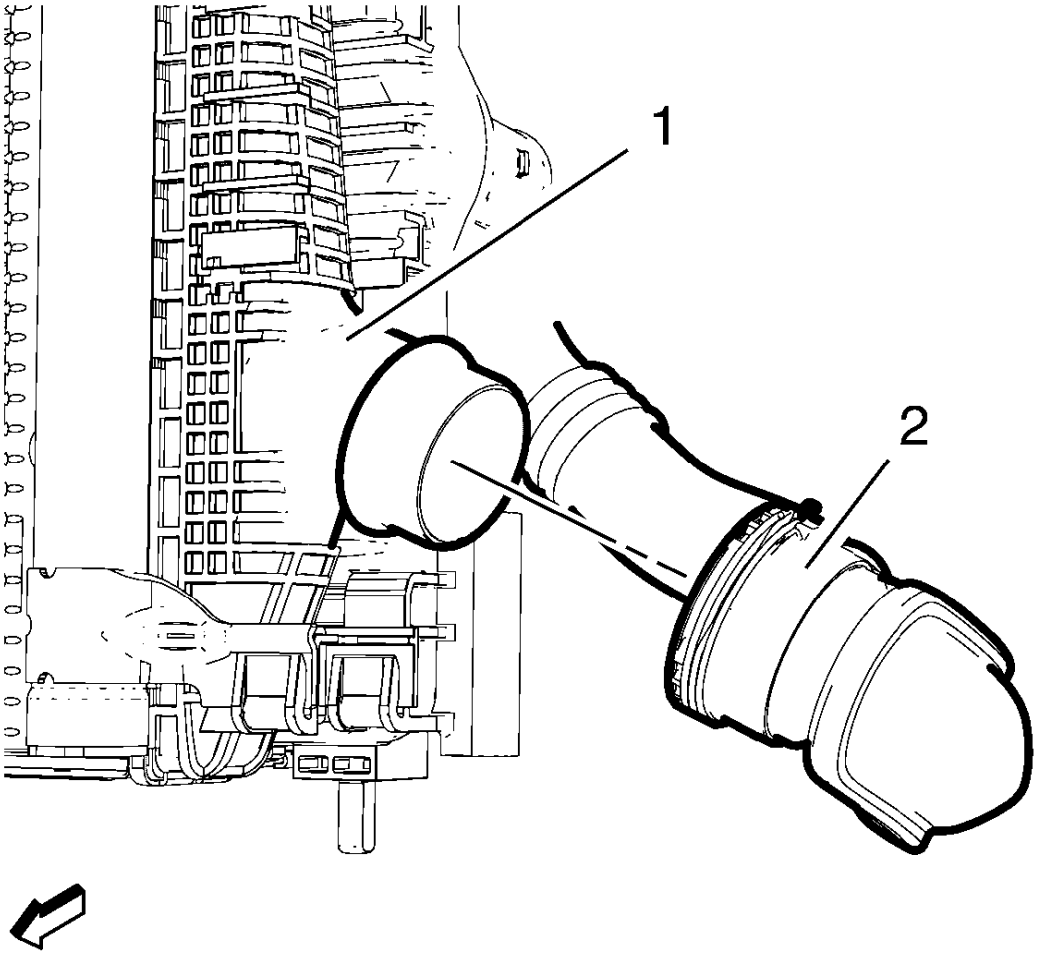

Fig. 184: Charge Air Cooler Outlet Air Hose
Courtesy of GENERAL MOTORS COMPANY

1. Clip in the radiator inlet hose to the charge air cooler outlet air hose (2).
2. Install the charge air cooler outlet air hose (2) to the charge air cooler (1).
3. Install the front bumper fascia. Refer to **Front Bumper Fascia Replacement** .

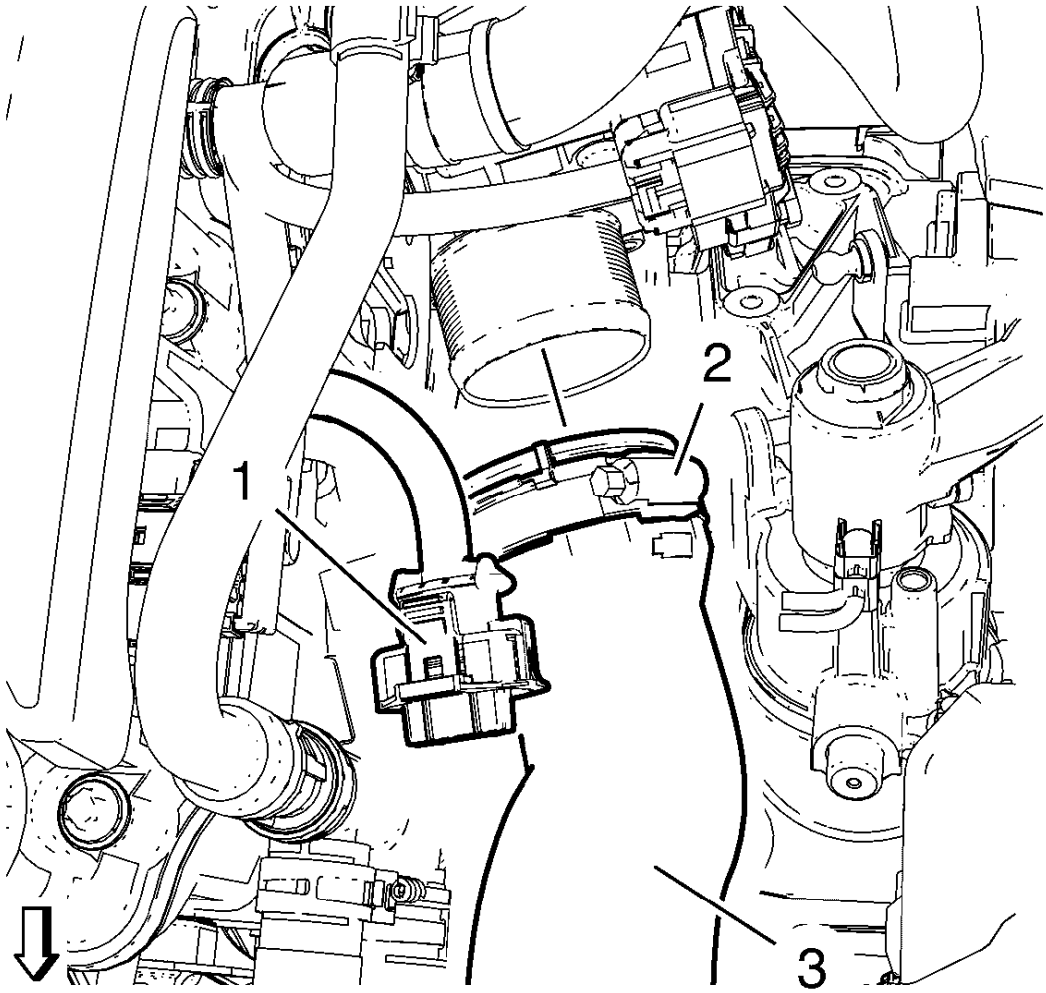

Fig. 185: Charge Air Cooler Outlet Air Hose
Courtesy of GENERAL MOTORS COMPANY

4. Install the charger air cooler outlet air hose (3) to the throttle body.
5. Install and tighten the charger air cooler outlet air hose clamp (2).
6. Connect the turbocharger pressure sensor wiring harness plug (1).
7. Connect the battery. Refer to **Battery Negative Cable Disconnection and Connection** .
8. Close the hood.

CHARGE AIR COOLER OUTLET AIR HOSE REPLACEMENT (MANUAL TRANSMISSION)

Removal Procedure

1. Open the hood.
2. Disconnect the battery. Refer to **Battery Negative Cable Disconnection and Connection** .

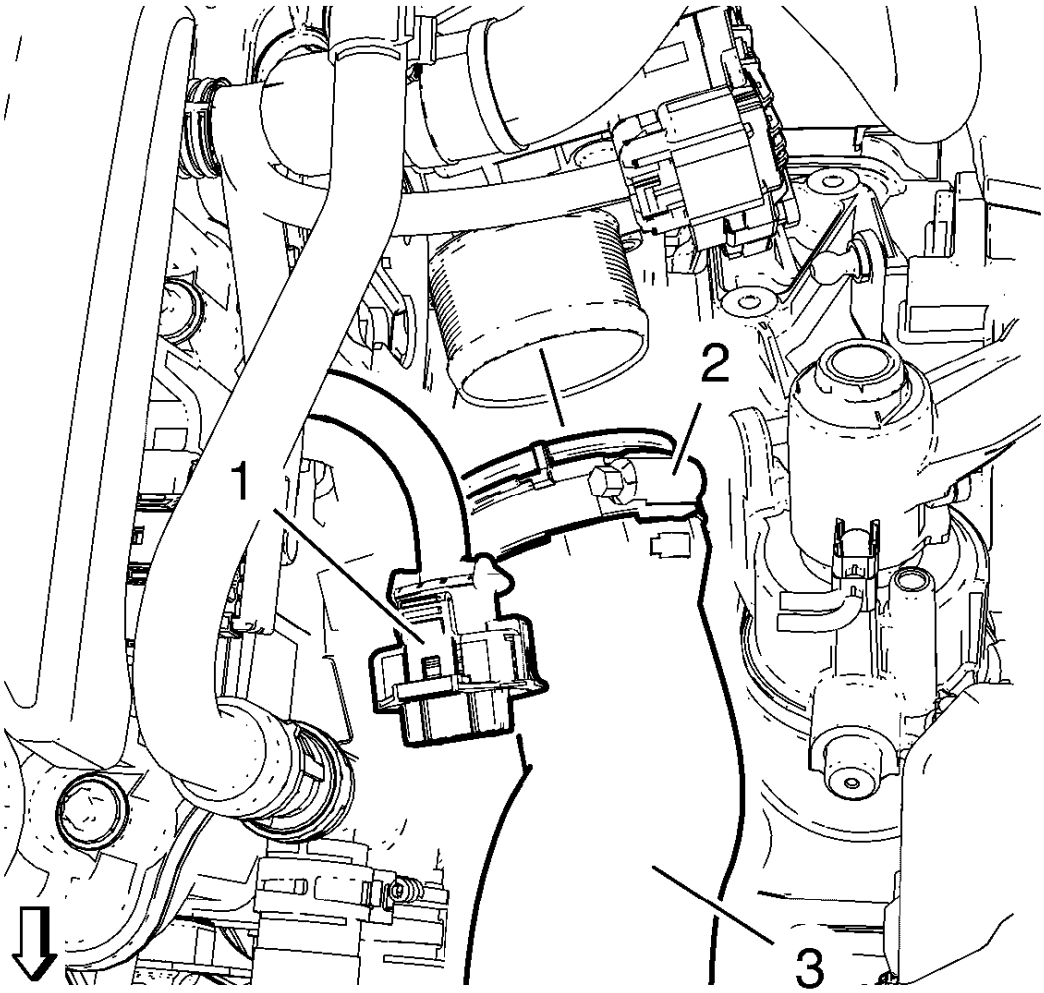

Fig. 186: Charge Air Cooler Outlet Air Hose
Courtesy of GENERAL MOTORS COMPANY

3. Disconnect the turbocharger pressure sensor wiring harness plug (1).
4. Loosen the charge air cooler outlet air hose clamp (2).
5. Remove the charge air cooler outlet air hose (3) from the throttle body.
6. Remove the front bumper fascia. Refer to **Front Bumper Fascia Replacement** .

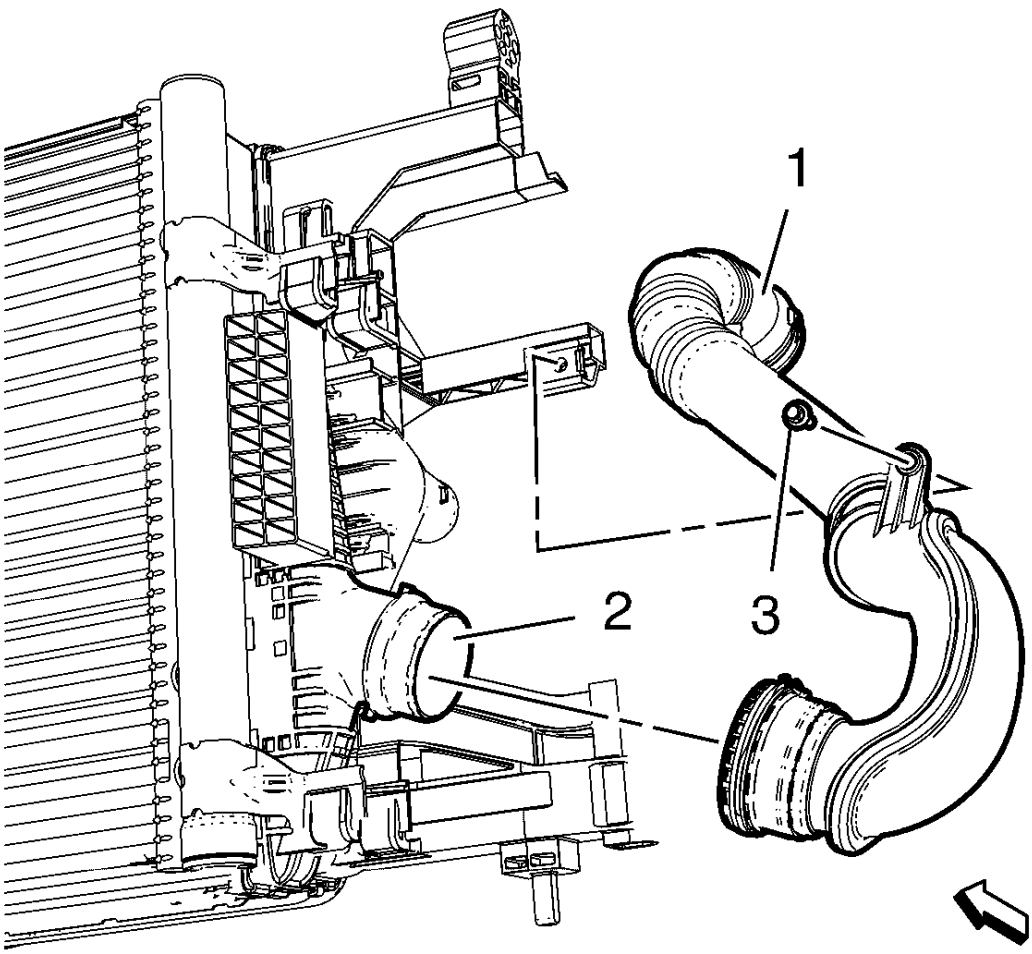

Fig. 187: Charger Air Cooler Outlet Air Hose And Charge Air Cooler
Courtesy of GENERAL MOTORS COMPANY

7. Remove the charger air cooler outlet air hose bolt (3).
8. Loosen the clamp.
9. Remove the charger air cooler outlet air hose (1) from the charge air cooler (2).

Installation Procedure

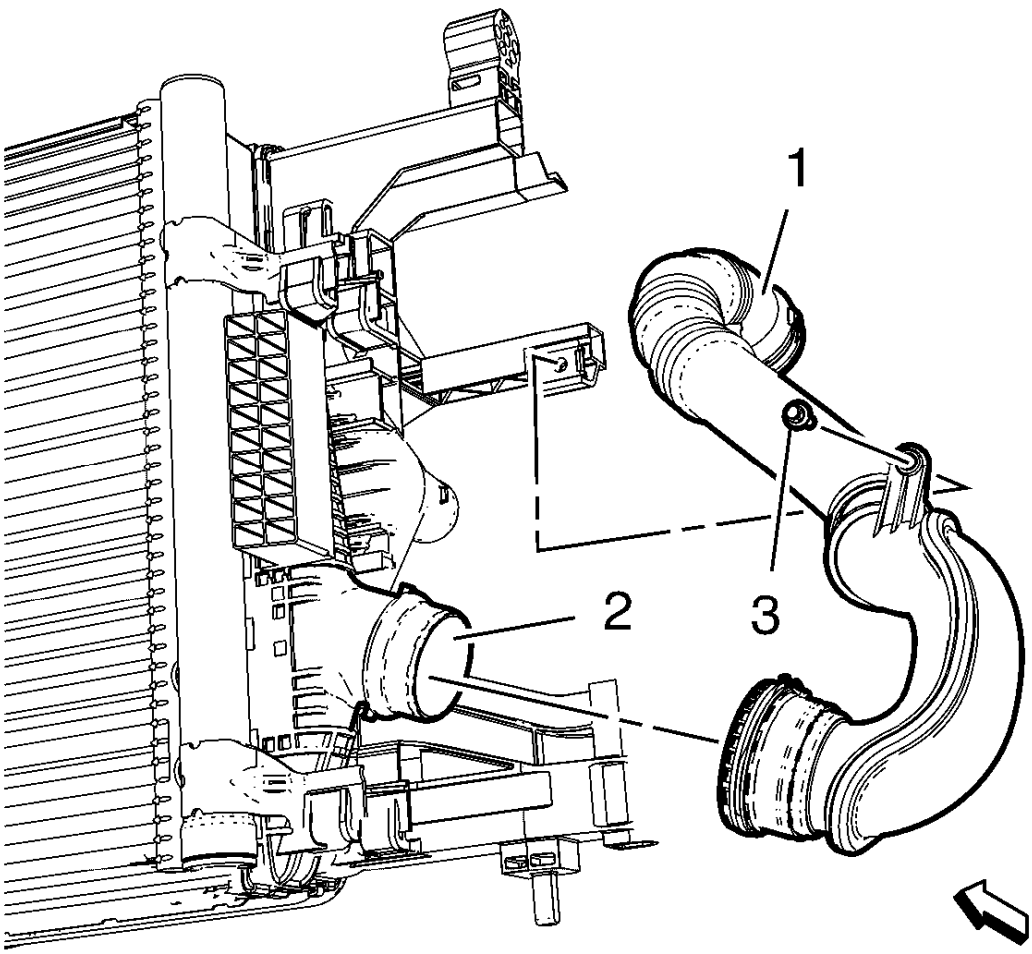

Fig. 188: Charger Air Cooler Outlet Air Hose And Charge Air Cooler
Courtesy of GENERAL MOTORS COMPANY

1. Install the charger air cooler outlet air hose (1) to the charge air cooler (2).
2. Install the clamp.

CAUTION: Refer to Fastener Caution .

3. Install the charger air cooler outlet air hose bolt (3) and tighten to 8 N.m (71 lb in).
4. Install the front bumper fascia. Refer to **Front Bumper Fascia Replacement** .

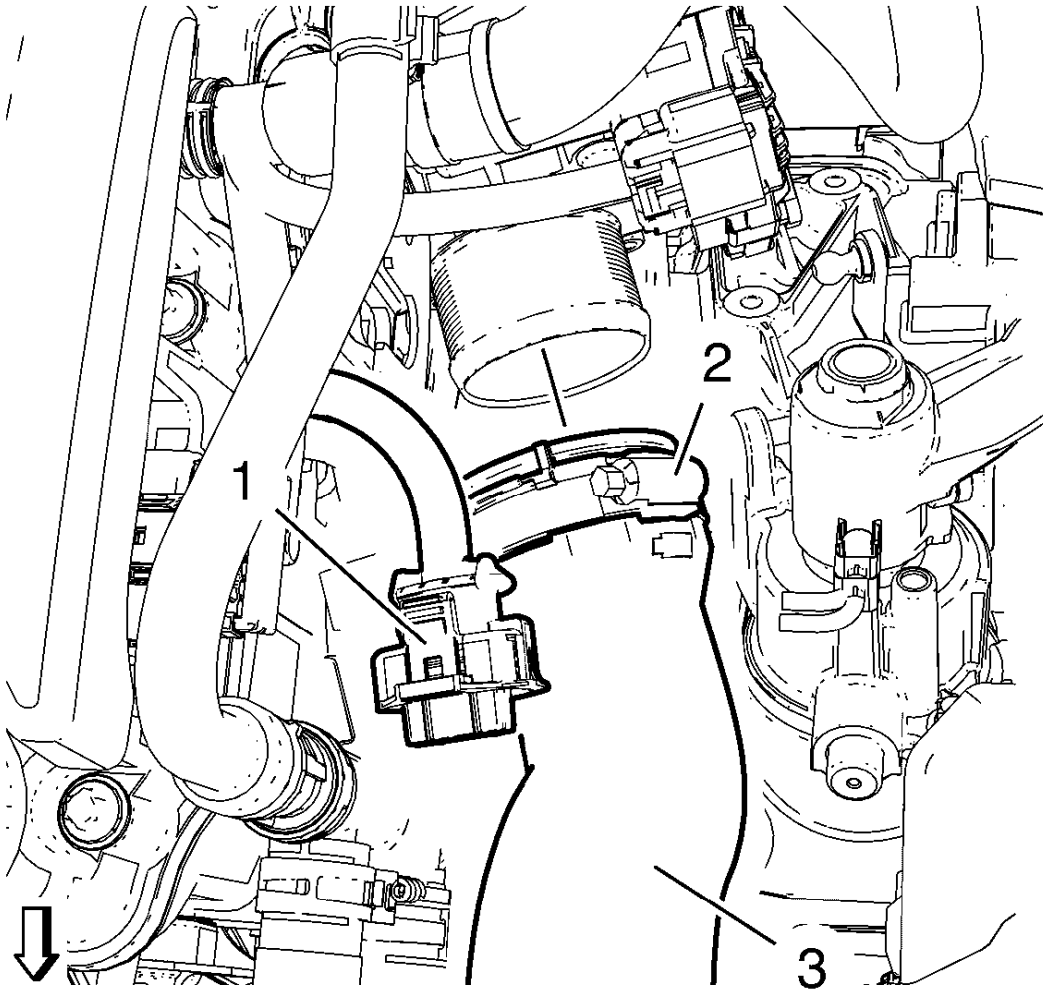

Fig. 189: Charge Air Cooler Outlet Air Hose
Courtesy of GENERAL MOTORS COMPANY

5. Install the charger air cooler outlet air hose (3) to the throttle body.
6. Install and tighten the charger air cooler outlet air hose clamp (2).
7. Connect the turbocharger pressure sensor wiring harness plug (1).
8. Connect the battery. Refer to **Battery Negative Cable Disconnection and Connection** .
9. Close the hood.

CHARGE AIR BYPASS REGULATOR SOLENOID VALVE REPLACEMENT

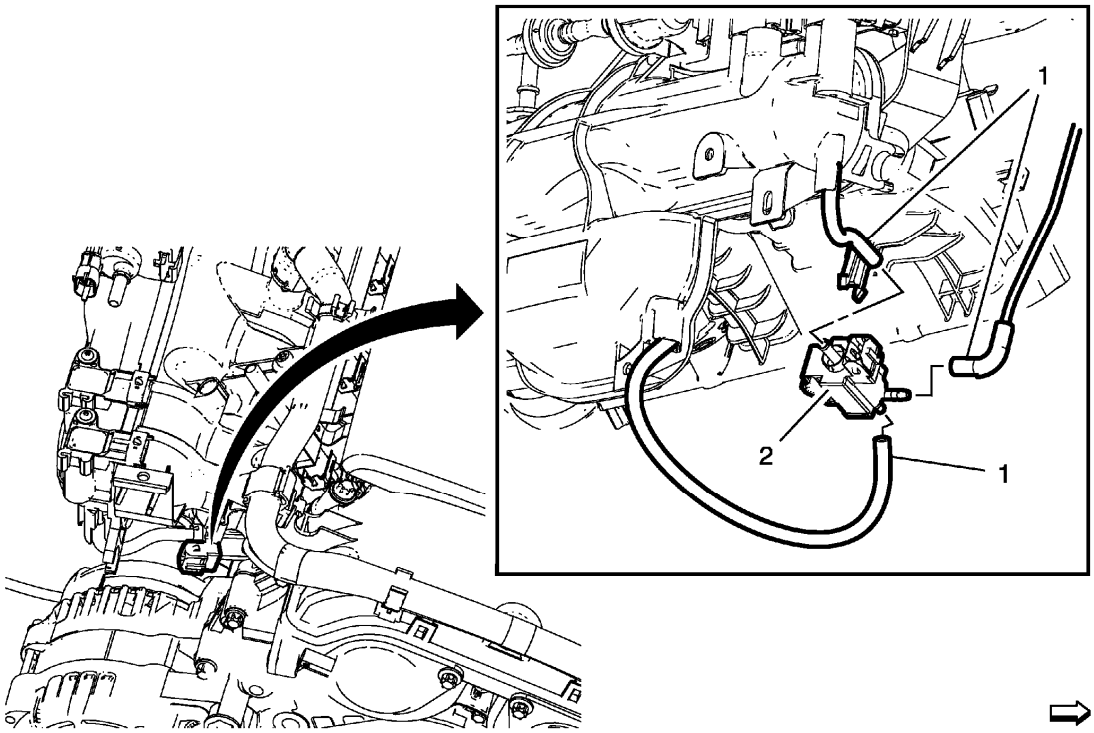

Fig. 190: Charge Air Bypass Regulator Solenoid Valve
Courtesy of GENERAL MOTORS COMPANY

Charge Air Bypass Regulator Solenoid Valve Replacement

Callout	Component Name
1	Charge Air Bypass Regulator Solenoid Valve Hose (Qty: 3) **Procedure** Disconnect the electrical connector.
2	Charge Air Bypass Regulator Solenoid Valve

2013 ENGINE PERFORMANCE

Engine Controls and Fuel - 1.4L LUV - Schematic and Routing Diagrams - Engine Controls Schematics - Cruze

SCHEMATIC WIRING DIAGRAMS

ENGINE CONTROLS WIRING SCHEMATICS

Power, Ground, Serial Data, and MIL Wiring Schematics

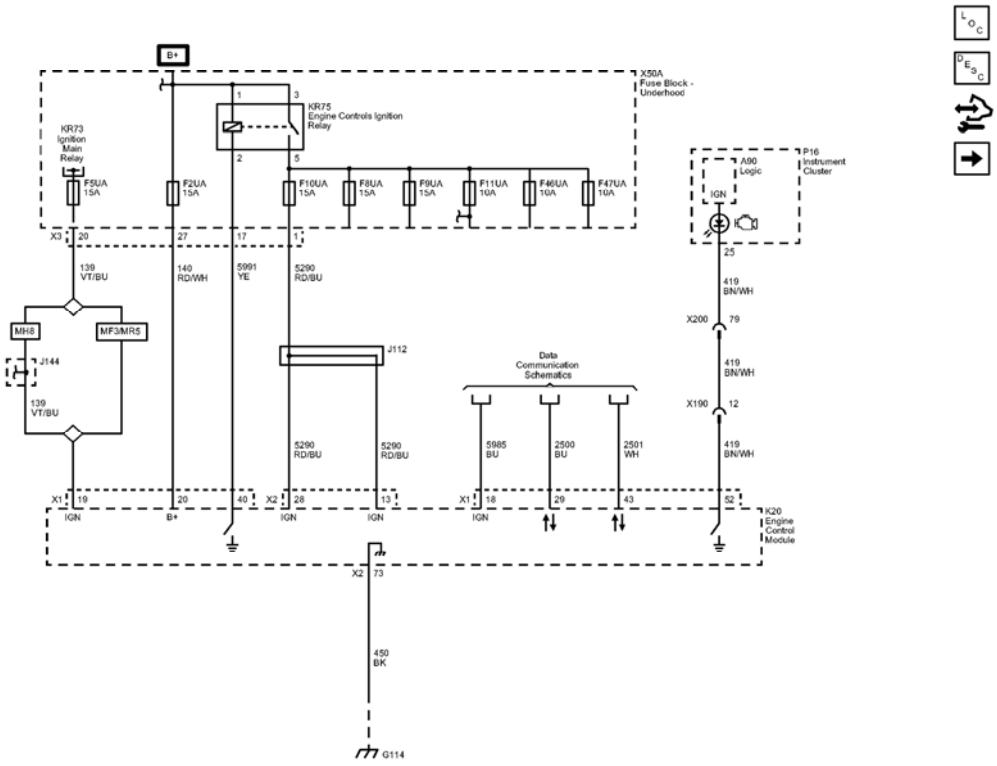

Fig. 1: Power, Ground, Serial Data, and MIL Wiring Schematics
Courtesy of GENERAL MOTORS COMPANY

Callout	Component Name
CAV_19	19
CONN_X1	X1
CAV_20	20
CONN_X3	X3
139	Run/Crank Ignition 1 Voltage
140	Battery Positive Voltage
140_RD/WH	140 RD/WH

CAV_20	20
CAV_27	27
5290	Powertrain Main Relay Fused Supply (1)
CAV_28	28
CONN_X2	X2
CAV_1	1
5290_RD/BU	5290 RD/BU
CAV_13	13
139_VT/BU	139 VT/BU
139_VT/BU	139 VT/BU
5290_RD/BU	5290 RD/BU
5290_RD/BU	5290 RD/BU
5991	Powertrain Relay Coil Control
5991_YE	5991 YE
CAV_40	40
CAV_17	17
MH8	TRANSMISSION-AUTO 6 SPD, HMD, X23F
MF3	TRANSMISSION-MAN 6 SPD, OPEL, 76.5 MM, 4.273 1ST, 2.158 2ND, 1.302 3RD, 0.959 4TH, 0.744 5TH, 0.614 6TH, M32-6 WR
MR5	TRANSMISSION-MAN 6 SPD, OPEL, 76.5 MM, 4.273 1ST, 2.353 2ND, 1.475 3RD, 1.067 4TH, 0.875 5TH, 0.744 6TH, M32-6 WR
450	Ground
450_BK	450 BK
CAV_73	73
CONN_X2	X2
5985	Accessory Wakeup Serial Data
5985_BU	5985 BU
CAV_18	18
CONN_X1	X1
2500	High Speed GMLAN Serial Data (+) (1)
2500_BU	2500 BU
CAV_29	29
2501	High Speed GMLAN Serial Data (-) (1)

2501_WH	2501 WH
CAV_43	43
419	Check Engine Indicator Control
419_BN/WH	419 BN/WH
CAV_52	52
CAV_25	25
419_BN/WH	419 BN/WH
419_BN/WH	419 BN/WH
CAV_79	79
CAV_12	12
CAV_1	1
CAV_3	3
CAV 5	5
CAV_2	2
F5UA	F5UA 15A
F2UA	F2UA 15A
F10UA	F10UA 15A
F8UA	F8UA 15A
F9UA	F9UA 15A
F11UA	F11UA 10A
F46UA	F46UA 10A
F47UA	F47UA 10A
J112	J112
G114	G114
X200	X200
X190	X190
KR73	
K20	
A90	Logic
P16	
Data_Communication_Schematics_REF	Data Communication Schematics
X50A	
KR75	

5V and Low Reference Bus (1 of 2) Wiring Schematics

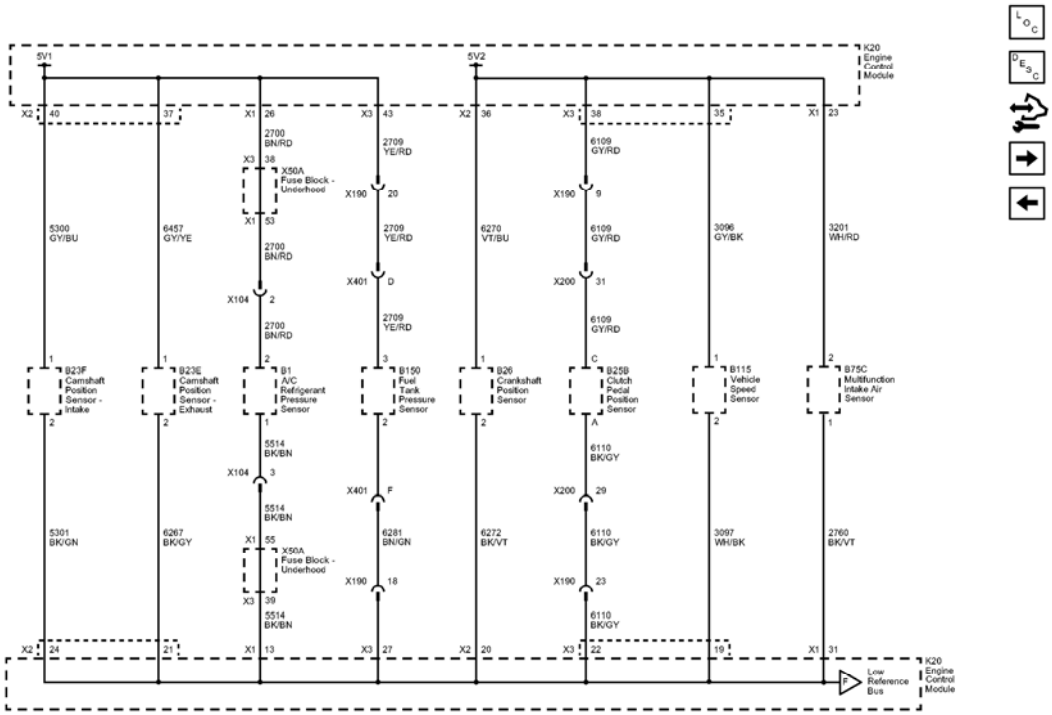

Fig. 2: 5V and Low Reference Bus (1 of 2) Wiring Schematics
Courtesy of GENERAL MOTORS COMPANY

Callout	Component Name
5300	Camshaft Position Intake Sensor Supply Voltage (1)
5300 GY/BU	5300 GY/BU
CAV_1	1
CAV_40	40
CONN_X2	X2
6457	Camshaft CAM X Supply Voltage
6457_GY/YE	6457 GY/YE
CAV_1	1
CAV_37	37
2700	A/C Pressure Sensor 5 Volt Reference
2700_BN/RD	2700 BN/RD
CAV_38	38
CONN_X3	X3
CAV_26	26
CONN_X1	X1
2700_BN/RD	2700 BN/RD
CAV_2	2

CAV_53	53
CONN_X1	X1
2700_BN/RD	2700 BN/RD
6270	Crankshaft 60X Sensor Voltage
6270_VT/BU	6270 VT/BU
CAV_1	1
CAV_36	36
CONN_X2	X2
6109	Clutch Apply Sensor Voltage Reference
6109_GY/RD	6109 GY/RD
CAV_C	C
CAV_38	38
CONN_X3	X3
3096	Output Speed (Digital) 5V Sensor Reference
3096_GY/BK	3096 GY/BK
CAV_1	1
CAV_35	35
3201	Throttle Inlet Absolute Pressure Sensor 5V Reference
3201_WH/RD	3201 WH/RD
CAV_2	2
CAV_23	23
CONN_X1	X1
6109_GY/RD	6109 GY/RD
5301	Camshaft Position Intake Sensor Low Reference (1)
5301_BK/GN	5301 BK/GN
CAV_24	24
CONN_X2	X2
CAV_2	2
6267	Camshaft CAM X Ground
6267_BK/GY	6267 BK/GY
CAV_21	21
CAV_2	2
5514	A/C Refrigerant Pressure Sensor Low Reference
5514_BK/BN	5514 BK/BN
CAV_55	55
CAV_1	1
5514_BK/BN	5514 BK/BN
CAV_13	13
CONN_X1	X1
CAV_39	39
6272	Crankshaft 60X Sensor Low Reference

	6272 BK/VT
CAV_20	20
CONN_X2	X2
CAV_2	2
6110	Clutch Apply Sensor Low Reference
6110_BK/GY	6110 BK/GY
CAV_22	22
CONN_X3	X3
CAV_A	A
3097	Output Speed (Digital) 5V Sensor Return
3097_WH/BK	3097 WH/BK
CAV_19	19
CAV 2	2
2760	Intake Air Temperature Sensor Low Reference
2760_BK/VT	2760 BK/VT
CAV_31	31
CONN_X1	X1
CAV_1	1
6110_BK/GY	6110 BK/GY
6110_BK/GY	6110 BK/GY
5514_BK/BN	5514 BK/BN
CAV_3	3
CAV_29	29
CAV_23	23
CAV_2	2
CAV_31	31
CAV_9	9
6109 GY/RD	6109 GY/RD
CONN_X1	X1
CONN X3	X3
2709	Fuel Tank Pressure Sensor 5 Volt Reference
2709_YE/RD	2709 YE/RD
CAV_3	3
CAV_43	43
CONN_X3	X3
6281	Fuel Level Sensor Low Reference
6281_BN/GN	6281 BN/GN
CAV_27	27
CONN_X3	X3
CAV_2	2
CAV_20	20

	D
2709_YE/RD	2709 YE/RD
2709_YE/RD	2709 YE/RD
2709_YE/RD	2709 YE/RD
CAV_F	F
CAV_18	18
X104	X104
X200	X200
X190	X190
X104	X104
X200	X200
X190	X190
X190	X190
X401	X401
X401	X401
X190	X190
B23F	
B23E	
B26	
B1	
B25B	(MF3 or MZ0)
B115	(MF3 or MZ0)
B75C	
X50A	
X50A	
B150	
K20	
K20	

5V and Low Reference Bus (2 of 2) Wiring Schematics

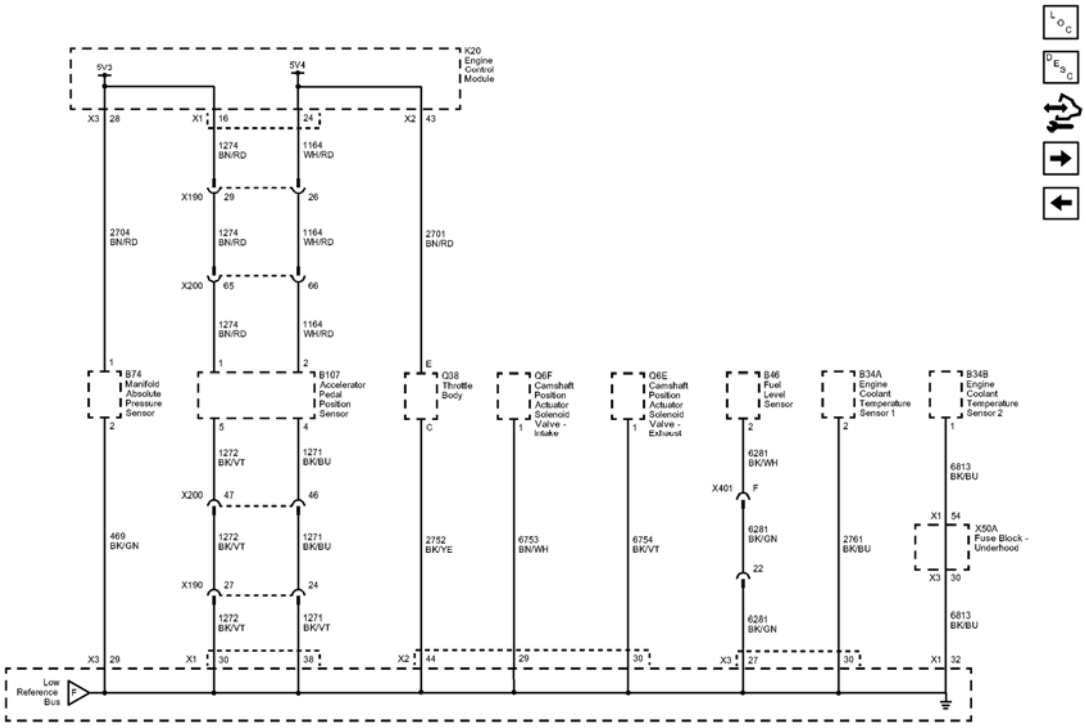

Fig. 3: 5V and Low Reference Bus (2 of 2) Wiring Schematics
Courtesy of GENERAL MOTORS COMPANY

Callout	Component Name
2704	Manifold Absolute Pressure Sensor 5 Volt Reference
2704 BN/RD	2704 BN/RD
CAV_1	1
CAV_28	28
CONN_X3	X3
1274	Accelerator Pedal Position 5 Volt Reference (2)
CAV_1	1
CAV_16	16
CONN_X1	X1
1164	Accelerator Pedal Position 5 Volt Reference (1)
CAV_2	2
CAV_24	24
2701	Throttle Position Sensor 5 Volt Reference
2701_BN/RD	2701 BN/RD
CAV_E	E
CAV_43	43
CONN_X2	X2

1274_BN/RD	1274 BN/RD
1164_WH/RD	1164 WH/RD
1274_BN/RD	1274 BN/RD
1164_WH/RD	1164 WH/RD
1274_BN/RD	1274 BN/RD
1164_WH/RD	1164 WH/RD
469	Manifold Absolute Pressure Sensor Low Reference
469_BK/GN	469 BK/GN
CAV_29	29
CONN_X3	X3
CAV_2	2
1272	Accelerator Pedal Position Low Reference (2)
1272_BK/VT	1272 BK/VT
CAV_30	30
CONN_X1	X1
CAV_5	5
1271	Accelerator Pedal Position Low Reference (1)
1271_BK/BU	1271 BK/BU
CAV_38	38
CAV_4	4
1272_BK/VT	1272 BK/VT
1272_BK/VT	1272 BK/VT
1271_BK/BU	1271 BK/BU
1271_BK/VT	1271 BK/VT
2752	Throttle Position Sensor Low Reference
2752_BK/YE	2752 BK/YE
CAV_44	44
CONN_X2	X2
CAV_C	C
6753	Cam Phaser W Return Low Reference
6753_BN/WH	6753 BN/WH
CAV_29	29
CAV_1	1
6754	Cam Phaser X Return Low Reference
6754_BK/VT	6754 BK/VT
CAV_30	30
CAV_1	1
6281	Fuel Level Sensor Low Reference
6281_BK/GN	6281 BK/GN
CAV_27	27
CONN_X3	X3

	2
6281_BK/GN	6281 BK/GN
6281_BK/WH	6281 BK/WH
CAV_F	F
CAV_22	22
2761	Coolant Temperature Sensor Low Reference
2761_BK/BU	2761 BK/BU
CAV_30	30
CAV_2	2
6813	Coolant Temperature Sensor #2 Low Reference
6813_BK/BU	6813 BK/BU
CAV_54	54
CONN_X1	X1
CAV_1	1
6813_BK/BU	6813 BK/BU
CAV_32	32
CONN_X1	X1
CAV_30	30
CONN_X3	X3
X190	X190
CAV_29	29
CAV_26	26
X200	X200
CAV_65	65
CAV_66	66
X200	X200
CAV_47	47
CAV_46	46
X190	X190
CAV_27	27
CAV_24	24
X401	X401
X190	X190
X200	X200
X200	X200
X190	X190
B74	
B34B	
B34A	
B107	
Q38	

Q6E	
X50A	
K20	
B46	

Engine Data Sensors - Pressure and Temperature Wiring Schematics

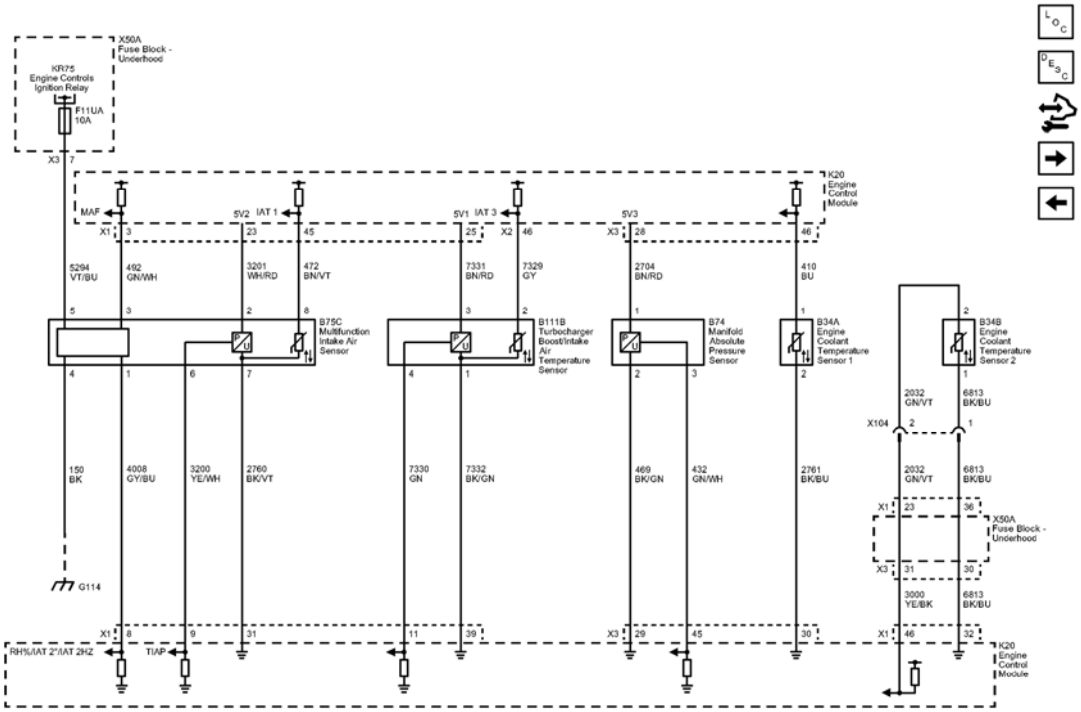

Fig. 4: Engine Data Sensors - Pressure and Temperature Wiring Schematics
Courtesy of GENERAL MOTORS COMPANY

Callout	Component Name
5294	Powertrain Main Relay Fused Supply (5)
5294_VT/BU	5294 VT/BU
CAV_5	5
CAV_7	7
CONN_X3	X3
492	Mass Air Flow Sensor Signal
492_GN/WH	492 GN/WH
CAV_3	3
CAV_3	3

CONN_X1	X1
3201	Throttle Inlet Absolute Pressure Sensor 5V Reference
3201_WH/RD	3201 WH/RD
CAV_2	2
CAV_23	23
472	Intake Air Temperature Sensor Signal
472_BN/VT	472 BN/VT
CAV_8	8
CAV_45	45
7331	Pre Throttle Air Temp and Press (TMAP) 5 Volt Reference
7331_BN/RD	7331 BN/RD
CAV_3	3
CAV_25	25
7329	Pre-Throttle Air Temp and Press (TMAP) Temperature Signal
7329_GY	7329 GY
CAV_2	2
CAV_46	46
CONN_X2	X2
2704	Manifold Absolute Pressure Sensor 5 Volt Reference
2704_BN/RD	2704 BN/RD
CAV_1	1
CAV_28	28
CONN_X3	X3
410	Engine Coolant Temperature Sensor Signal
410_BU	410 BU
CAV_1	1
CAV 46	46
150	Ground
150_BK	150 BK
CAV_4	4
4008	Humidity Sensor Signal
4008_GY/BU	4008 GY/BU
CAV_8	8
CONN_X1	X1
CAV_1	1
3200	Throttle Inlet Absolute Pressure Sensor Signal
3200_YE/WH	3200 YE/WH
CAV_9	9
CAV_6	6

2760	Intake Air Temperature Sensor Low Reference
2760_BK/VT	2760 BK/VT
CAV_31	31
CAV_7	7
7330	Pre Throttle Air Temp and Press (TMAP) Air Pressure Signal
7330_GN	7330 GN
CAV_11	11
CAV_4	4
7332	Pre Throttle Air Temp and Press (TMAP) Low Reference
7332 BK/GN	7332 BK/GN
CAV_39	39
CAV 1	1
469	Manifold Absolute Pressure Sensor Low Reference
469_BK/GN	469 BK/GN
CAV_29	29
CONN_X3	X3
CAV_2	2
432	Manifold Absolute Pressure Sensor Signal
432_GN/WH	432 GN/WH
CAV_45	45
CAV_3	3
2761	Coolant Temperature Sensor Low Reference
2761_BK/BU	2761 BK/BU
CAV_30	30
CAV_2	2
2032	Coolant Temperature Sensor Signal
2032 GN/VT	2032 GN/VT
CAV_23	23
CONN_X1	X1
CAV_2	2
6813	Coolant Temperature Sensor #2 Low Reference
6813_BK/BU	6813 BK/BU
CAV_36	36
CAV_1	1
2032_GN/VT	2032 GN/VT
6813_BK/BU	6813 BK/BU
3000	Coolant Temperature Sensor #2 Signal
3000_YE/BK	3000 YE/BK
CAV_46	46

CONN_X1	X1
CAV_31	31
CONN_X3	X3
6813_BK/BU	6813 BK/BU
CAV_32	32
CAV_30	30
X104	X104
CAV_2	2
CAV_1	1
G114	G114
F11UA	F11UA 10A
X104	X104
K20	
B74	
B34B	
X50A	
K20	
X50A	
B34A	
B75C	
B111B	(LUV)
KR75	

Engine Data Sensors - Oxygen Sensors Wiring Schematics

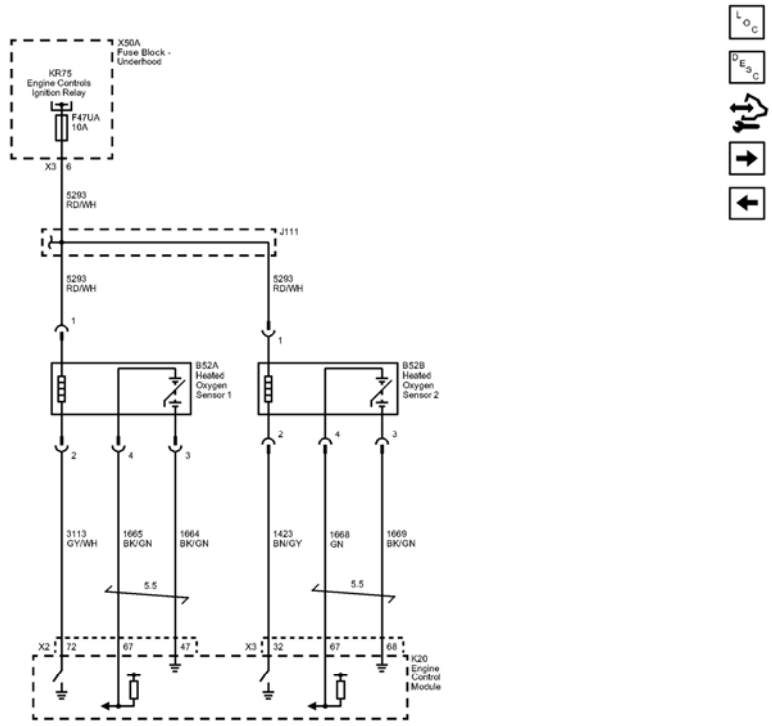

Fig. 5: Engine Data Sensors - Oxygen Sensors Wiring Schematics
Courtesy of GENERAL MOTORS COMPANY

Callout	Component Name
5293	Powertrain Main Relay Fused Supply (4)
5293 RD/WH	5293 RD/WH
CAV_6	6
CONN_X3	X3
5293_RD/WH	5293 RD/WH
5293_RD/WH	5293 RD/WH
CAV_1	1
CAV_1	1
3113	Heated Oxygen Sensor Heater Low Control Bank 1 Sensor (1)
3113_GY/WH	3113 GY/WH
CAV 72	72
CONN_X2	X2
1665	Heated Oxygen Sensor High Signal Bank 1 Sensor (1)
1665_BK/GN	1665 BK/GN
CAV_67	67

1664	Heated Oxygen Sensor Low Signal Bank 1 Sensor (1)
1664_BK/GN	1664 BK/GN
CAV_47	47
1423	Heated Oxygen Sensor Heater Low Control Bank 1 Sensor (2)
1423_BN/GY	1423 BN/GY
CAV_32	32
CONN_X3	X3
1668	Heated Oxygen Sensor High Signal Bank 1 Sensor (2)
1668_GN	1668 GN
CAV 67	67
1669	Heated Oxygen Sensor Low Signal Bank 1 Sensor (2)
1669 BK/GN	1669 BK/GN
CAV_68	68
CAV_2	2
CAV_4	4
CAV_3	3
CAV_2	2
CAV_4	4
CAV_3	3
F47UA	F47UA 10A
TWIST_5.5	5.5
TWIST_5.5	5.5
B52A	
B52B	
K20	
KR75	
X50A	

Engine Data Sensors - Throttle Controls Wiring Schematics

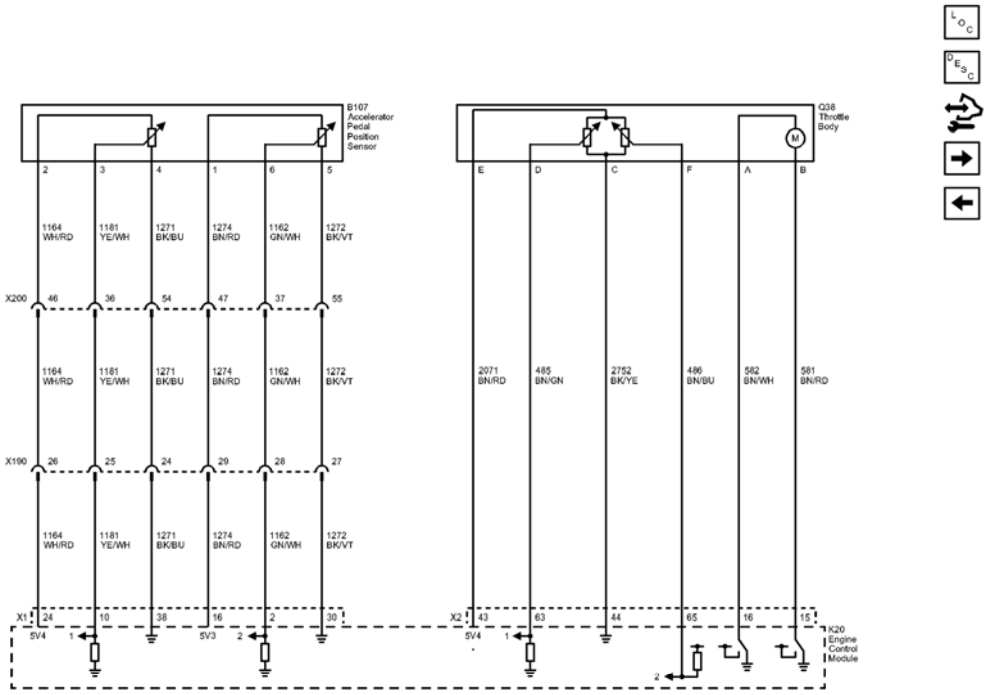

Fig. 6: Engine Data Sensors - Throttle Controls Wiring Schematics
Courtesy of GENERAL MOTORS COMPANY

Callout	Component Name
1164	Accelerator Pedal Position 5 Volt Reference (1)
1164 WH/RD	1164 WH/RD
CAV_24	24
CONN_X1	X1
CAV_2	2
1181	Right Rear Door Open Switch Signal
1181_YE/WH	1181 YE/WH
CAV_10	10
CAV_3	3
1271	Accelerator Pedal Position Low Reference (1)
1271_BK/BU	1271 BK/BU
CAV_38	38
CAV_4	4
1274	Accelerator Pedal Position 5 Volt Reference (2)
1274_BN/RD	1274 BN/RD
CAV_16	16
CAV_1	1

1162	Accelerator Pedal Position Signal (2)
1162_GN/WH	1162 GN/WH
CAV_2	2
CAV_6	6
1272	Accelerator Pedal Position Low Reference (2)
1272_BK/VT	1272 BK/VT
CAV_30	30
CAV_5	5
2071	Right Front Door Window Intrusion Sensor Signal
2071_BN/RD	2071 BN/RD
CAV_43	43
CONN_X2	X2
CAV_E	E
485	Throttle Position Sensor Signal (1)
485_BN/GN	485 BN/GN
CAV_63	63
CAV_D	D
2752	Throttle Position Sensor Low Reference
2752_BK/YE	2752 BK/YE
CAV_44	44
CAV_C	C
486	Throttle Position Sensor Signal (2)
486_BN/BU	486 BN/BU
CAV_65	65
CAV_F	F
582	Throttle Actuator Control Close
582_BN/WH	582 BN/WH
CAV_16	16
CAV_A	A
581	Throttle Actuator Control Open
581_BN/RD	581 BN/RD
CAV_15	15
CAV_B	B
1164_WH/RD	1164 WH/RD
1181_YE/WH	1181 YE/WH
1271_BK/BU	1271 BK/BU
1274_BN/RD	1274 BN/RD
1162_GN/WH	1162 GN/WH
1272_BK/VT	1272 BK/VT
1164_WH/RD	1164 WH/RD
1181_YE/WH	1181 YE/WH
1271_BK/BU	

	1271 BK/BU
1274_BN/RD	1274 BN/RD
1162_GN/WH	1162 GN/WH
1272_BK/VT	1272 BK/VT
X200	X200
CAV_46	46
CAV_36	36
CAV_54	54
CAV_47	47
CAV_37	37
CAV_55	55
X190	X190
CAV 26	26
CAV_25	25
CAV_24	24
CAV_28	28
CAV_29	29
CAV_27	27
X200	X200
X190	X190
B107	
Q38	
K20	

Camshaft, Crankshaft, and Knock Sensors, Camshaft Actuators Wiring Schematics

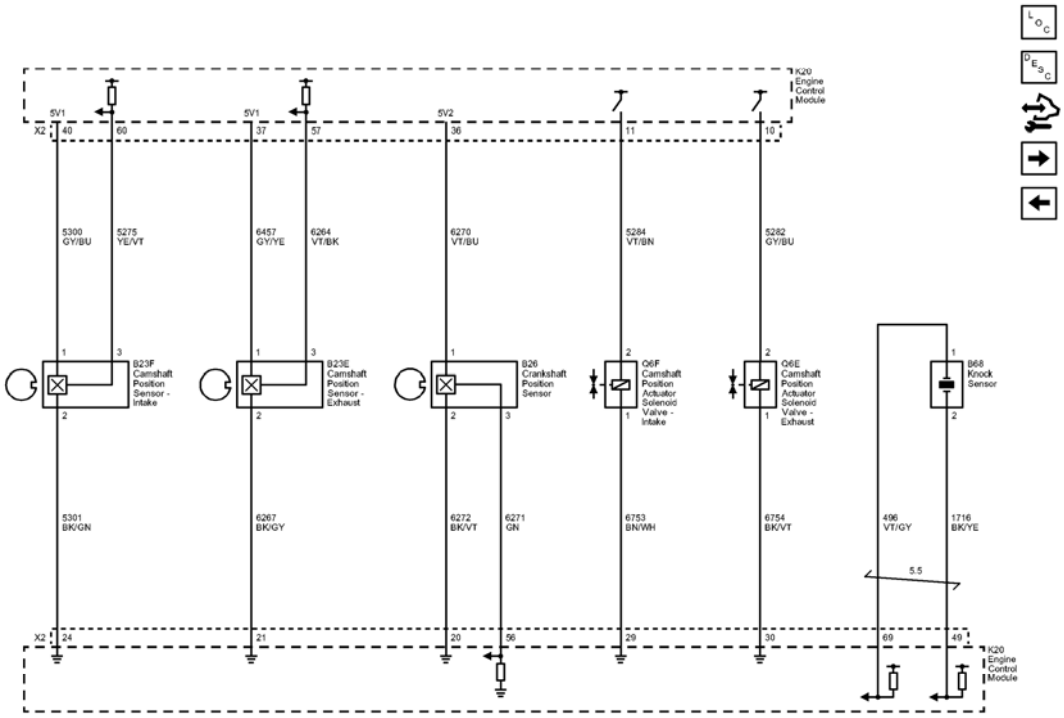

Fig. 7: Camshaft, Crankshaft, and Knock Sensors, Camshaft Actuators Wiring Schematics
Courtesy of GENERAL MOTORS COMPANY

Callout	Component Name
5300	Camshaft Position Intake Sensor Supply Voltage (1)
5300 GY/BU	5300 GY/BU
CAV_1	1
CAV_40	40
CONN_X2	X2
5275	Camshaft Position Intake Sensor (1)
5275_YE/VT	5275 YE/VT
CAV_3	3
CAV_60	60
6457	Camshaft CAM X Supply Voltage
6457_GY/YE	6457 GY/YE
CAV_1	1
CAV_37	37
6264	Camshaft CAM X Signal
6264_VT/BK	6264 VT/BK
CAV_3	3
CAV_57	57

6270	Crankshaft 60X Sensor Voltage
6270_VT/BU	6270 VT/BU
CAV_1	1
CAV_36	36
5284	Camshaft Phaser Intake Solenoid (1)
5284_VT/BN	5284 VT/BN
CAV_2	2
CAV_11	11
5282	Camshaft Phaser Exhaust Solenoid (1)
5282_GY/BU	5282 GY/BU
CAV_2	2
CAV_10	10
5301	Camshaft Position Intake Sensor Low Reference (1)
5301_BK/GN	5301 BK/GN
CAV_24	24
CONN_X2	X2
CAV_2	2
6267	Camshaft CAM X Ground
6267_BK/GY	6267 BK/GY
CAV_21	21
CAV_2	2
6272	Crankshaft 60X Sensor Low Reference
6272_BK/VT	6272 BK/VT
CAV_20	20
CAV_2	2
6271	Crankshaft 60X Sensor Signal
6271_GN	6271 GN
CAV 56	56
CAV_3	3
6753	Cam Phaser W Return Low Reference
6753_BN/WH	6753 BN/WH
CAV_29	29
CAV_1	1
6754	Cam Phaser X Return Low Reference
6754_BK/VT	6754 BK/VT
CAV_30	30
CAV_1	1
1716	Knock Sensor Low Reference (1)
1716_BK/YE	1716 BK/YE
CAV_49	49
CAV_2	2

	Knock Sensor Signal (1)
496_VT/GY	496 VT/GY
CAV_69	69
CAV_1	1
TWIST_5.5	5.5
K20	
B23F	
B23E	
B26	
Q6F	
Q6E	
B68	
K20	

Fuel Controls - Fuel Injectors and Ignition Controls Wiring Schematics

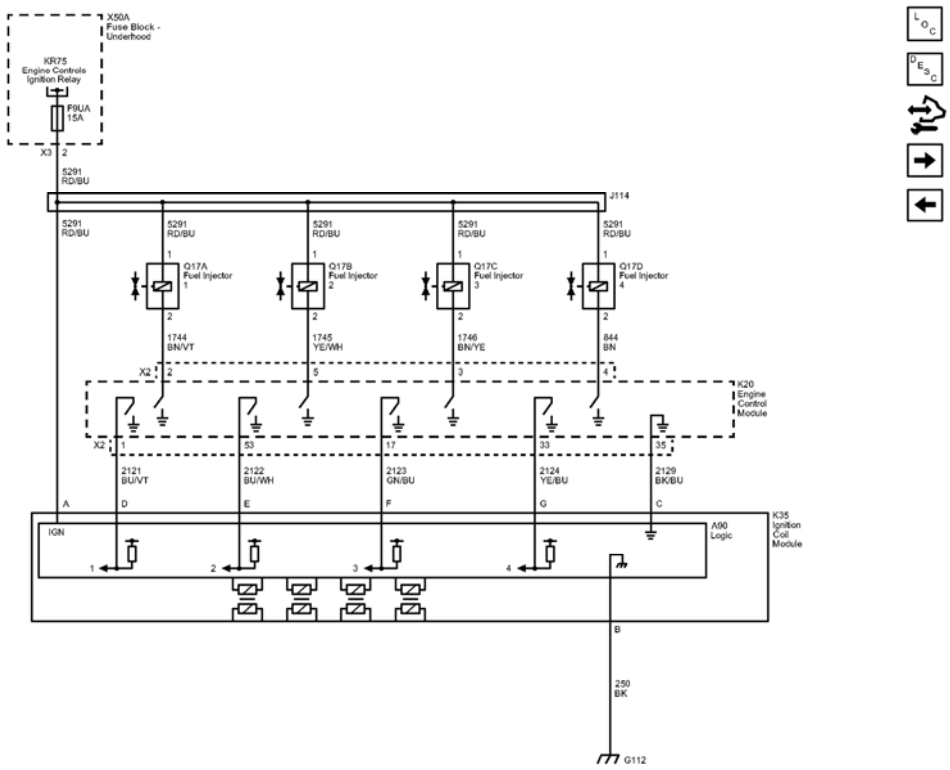

Fig. 8: Fuel Controls - Fuel Injectors and Ignition Controls Wiring Schematics
Courtesy of GENERAL MOTORS COMPANY

Callout	Component Name
5291	Powertrain Main Relay Fused Supply (2)

CAV_A	A
CAV_2	2
CONN_X3	X3
5291_RD/BU	5291 RD/BU
5291_RD/BU	5291 RD/BU
5291_RD/BU	5291 RD/BU
CAV_1	1
1744	Fuel Injector Control (1)
1744_BN/VT	1744 BN/VT
CAV_2	2
CONN_X2	X2
CAV_2	2
5291 RD/BU	5291 RD/BU
CAV_1	1
1745	Fuel Injector Control (2)
1745_YE/WH	1745 YE/WH
CAV_5	5
CAV_2	2
5291_RD/BU	5291 RD/BU
CAV_1	1
1746	Fuel Injector Control (3)
1746_BN/YE	1746 BN/YE
CAV_3	3
CAV_2	2
5291_RD/BU	5291 RD/BU
CAV_1	1
844	Fuel Injector Control (4)
844 BN	844 BN
CAV_4	4
CAV 2	2
2121	Ignition Control (1)
2121_BU/VT	2121 BU/VT
CAV_D	D
CAV_1	1
CONN_X2	X2
2122	Ignition Control (2)
2122_BU/WH	2122 BU/WH
CAV_E	E
CAV_53	53
2123	Ignition Control (3)
2123_GN/BU	2123 GN/BU

	F
CAV_17	17
2124	Ignition Control (4)
2124_YE/BU	2124 YE/BU
CAV_G	G
CAV_33	33
2129	Ignition Control Low Reference Bank 1
2129_BK/BU	2129 BK/BU
CAV_C	C
CAV_35	35
250	Ground
250_BK	250 BK
CAV_B	B
G112	G112
F9UA	F9UA 15A
J114	J114
Q17B	
Q17C	
Q17D	
K20	
Q17A	
X50A	
A90	Logic
KR75	
K35	

Fuel Controls - Fuel Pump Controls Wiring Schematics

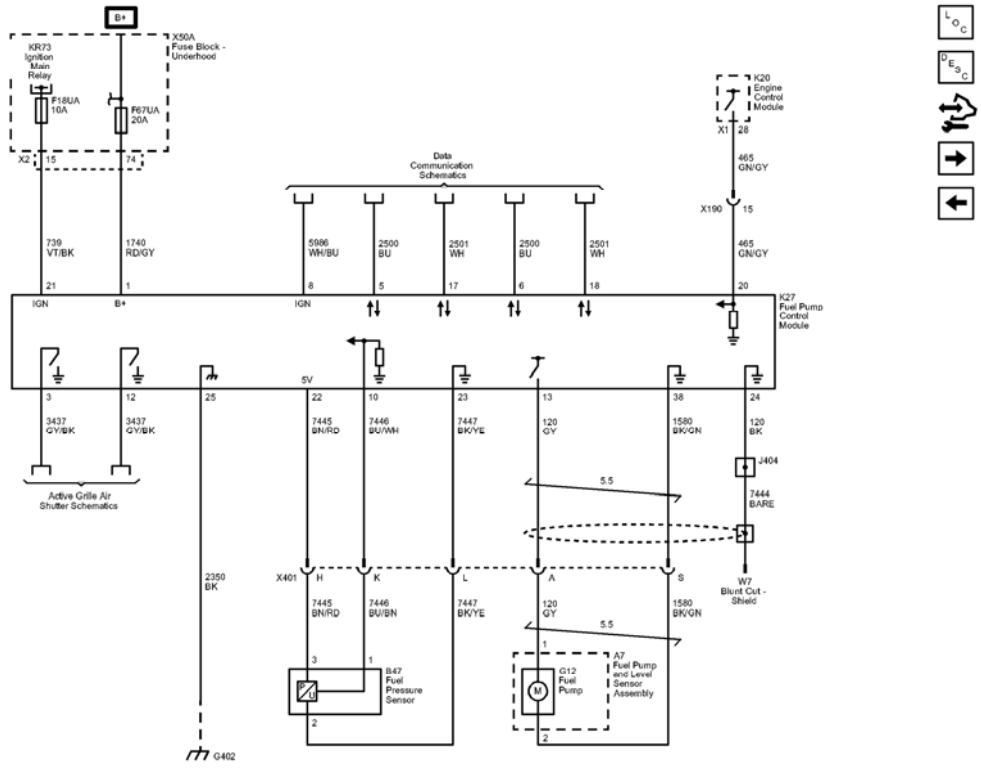

Fig. 9: Fuel Controls - Fuel Pump Controls Wiring Schematics
Courtesy of GENERAL MOTORS COMPANY

Callout	Component Name
739	Run/Crank Ignition 1 Voltage
739 VT/BK	739 VT/BK
CAV_21	21
CAV_15	15
CONN_X2	X2
1740	Battery Positive Voltage
1740_RD/GY	1740 RD/GY
CAV_1	1
CAV_74	74
5986	Serial Data Communication Enable
5986 WH/BU	5986 WH/BU
CAV_8	8
2500	High Speed GMLAN Serial Data (+) (1)
2500_BU	2500 BU
CAV_5	5

2501	High Speed GMLAN Serial Data (-) (1)
2501_WH	2501 WH
CAV 17	17
2500_BU	2500 BU
CAV_6	6
2501_WH	2501 WH
CAV_18	18
465	Fuel Pump Primary Relay Control
465_GN/GY	465 GN/GY
CAV 20	20
CAV_28	28
CONN X1	X1
3437	Shutter Valve Solenoid Control
3437_GY/BK	3437 GY/BK
CAV_3	3
3437_GY/BK	3437 GY/BK
CAV 12	12
2350	Ground
2350 BK	2350 BK
CAV_25	25
7445	Fuel Line Pressure Sensor 5V Reference
7445 BN/RD	7445 BN/RD
CAV_3	3
CAV 22	22
7446	Fuel Line Pressure Sensor Signal
7446_BU/WH	7446 BU/WH
CAV_1	1
CAV_10	10
7445_BN/RD	7445 BN/RD
7446_BU/BN	7446 BU/BN
7447	Fuel Line Pressure Sensor Low Reference
7447_BK/YE	7447 BK/YE
CAV_2	2
CAV_23	23
7447_BK/YE	7447 BK/YE
120	Fuel Pump Supply Voltage

120_GY	120 GY
CAV_1	1
CAV_13	13
120_GY	120 GY
1580	Fuel Pump Low Reference
1580_BK/GN	1580 BK/GN
CAV_2	2
CAV_38	38
1580_BK/GN	1580 BK/GN
120_BK	120 BK
CAV_24	24
7444	Fuel System Control Module Shield
7444_BARE	7444 BARE
465_GN/GY	465 GN/GY
CAV_15	15
X401	X401
CAV_H	H
CAV_K	K
CAV_L	L
CAV_A	A
CAV_S	S
G402	G402
F18UA	F18UA 10A
F67UA	F67UA 20A
J404	J404
X190	X190
TWIST_5.5	5.5
TWIST_5.5	5.5
X401	X401
K20	
B47	
W7	
K27	
Data_Communication_Schematics_REF	Data Communication Schematics
G12	
A7	
X50A	
KR73	

Fuel Controls - Evaporative Emission and Device Controls Wiring Schematics

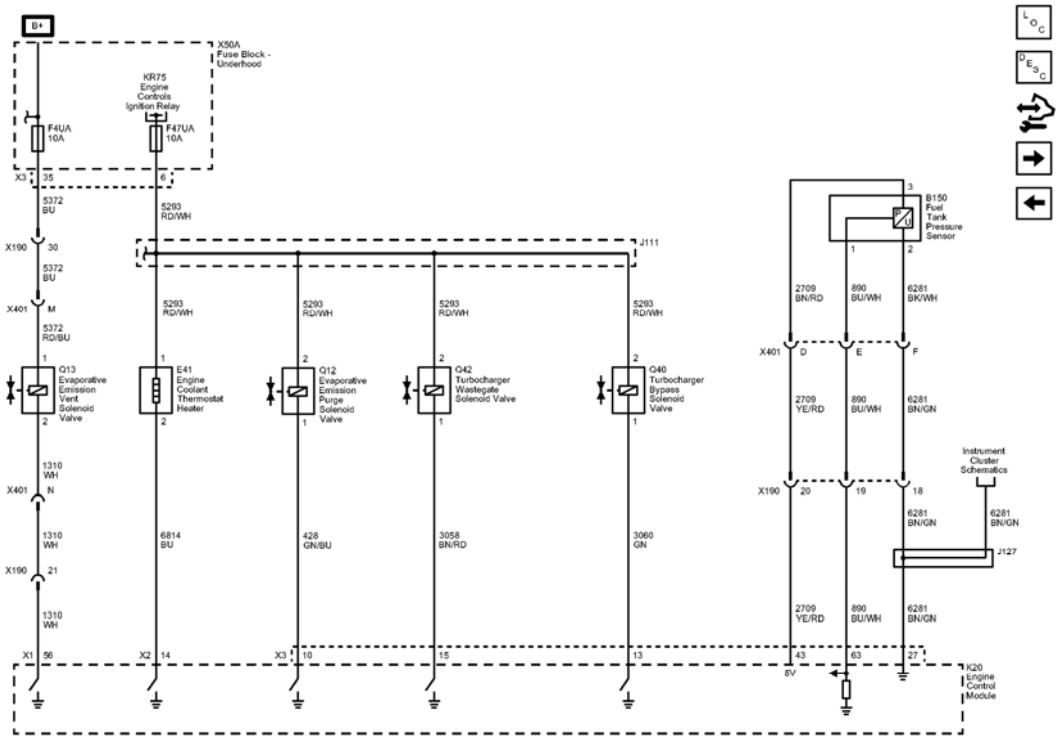

Fig. 10: Fuel Controls - Evaporative Emission and Device Controls Wiring Schematics
Courtesy of GENERAL MOTORS COMPANY

Callout	Component Name
5372	Canister Valve Solenoid
5372 BU	5372 BU
CAV_35	35
CONN_X3	X3
5372_RD/BU	5372 RD/BU
CAV_1	1
CAV_M	M
CAV_30	30
5293	Powertrain Main Relay Fused Supply (4)
5293_RD/WH	5293 RD/WH
CAV 1	1
CAV_6	6
5293_RD/WH	5293 RD/WH
5372_BU	5372 BU
1310	EVAP Canister Vent Solenoid Control

1310_WH	1310 WH
CAV_56	56
CONN_X1	X1
CAV_2	2
1310_WH	1310 WH
1310_WH	1310 WH
CAV_N	N
CAV_21	21
2709	Fuel Tank Pressure Sensor 5 Volt Reference
2709_YE/RD	2709 YE/RD
CAV_43	43
CAV_3	3
890	Fuel Tank Pressure Sensor Signal
890_BU/WH	890 BU/WH
CAV_63	63
CAV_1	1
6281	Fuel Level Sensor Low Reference
6281_BN/GN	6281 BN/GN
CAV 27	27
CAV_2	2
6281_BN/GN	6281 BN/GN
2709_YE/RD	2709 YE/RD
890_BU/WH	890 BU/WH
6281_BN/GN	6281 BN/GN
6281_BN/GN	6281 BN/GN
CAV_18	18
2709_BN/RD	2709 BN/RD
890_BU/WH	890 BU/WH
6281_BK/WH	6281 BK/WH
5293_RD/WH	5293 RD/WH
CAV_2	2
5293_RD/WH	5293 RD/WH
CAV_2	2
5293 RD/WH	5293 RD/WH
CAV_2	2
6814	Thermostat Engine Cool Control
6814_BU	6814 BU
CAV_14	14

CONN_X2	X2
CAV_2	2
428	EVAP Canister Purge Solenoid Control
428_GN/BU	428 GN/BU
CAV_10	10
CONN_X3	X3
CAV_1	1
3058	Turbo Waste Gate Solenoid Control Bank (1)
3058_BN/RD	3058 BN/RD
CAV 15	15
CAV_1	1
3060	Turbo Bypass Solenoid Control Bank (1)
3060_GN	3060 GN
CAV_13	13
CAV_1	1
X401	X401
CAV D	D
CAV_E	E
CAV F	F
X190	X190
CAV_20	20
CAV_19	19
F47UA	F47UA 10A
F4UA	F4UA 10A
X401	X401
X190	X190
X401	X401
X190	X190
J127	J127
J111	J111
X401	X401
X190	X190
Q12	
K20	
Q40	(LUV)
Q13	
B150	
Instrument_Cluster_Schematics_REF	Instrument Cluster Schematics
Q42	(LUV)

E41	
X50A	
KR75	

Controlled/Monitored Subsystem References Wiring Schematics

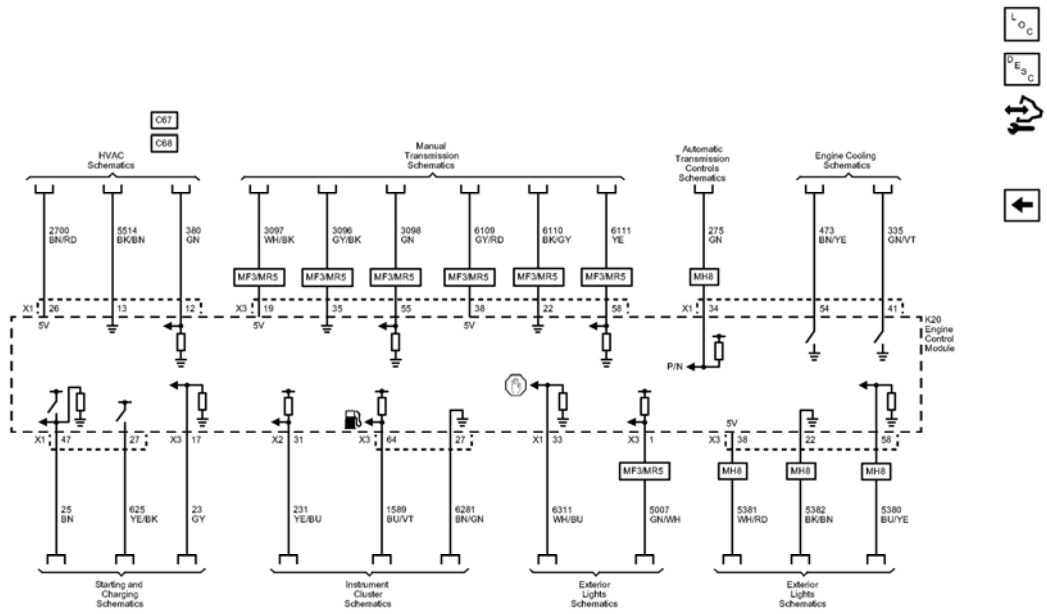

Fig. 11: Controlled/Monitored Subsystem References Wiring Schematics
Courtesy of GENERAL MOTORS COMPANY

Callout	Component Name
2700	A/C Pressure Sensor 5 Volt Reference
2700_BN/RD	2700 BN/RD
CAV_26	26
CONN_X1	X1
5514	A/C Refrigerant Pressure Sensor Low Reference
5514_BK/BN	5514 BK/BN
CAV_13	13
380	A/C Refrigerant Pressure Sensor Signal
380 GN	380 GN

CAV_12	12
3097	Output Speed (Digital) 5V Sensor Return
3097 WH/BK	3097 WH/BK
CAV_19	19
CONN_X3	X3
3096	Output Speed (Digital) 5V Sensor Reference
3096_GY/BK	3096 GY/BK
CAV_35	35
3098	Output Speed (Digital) Signal
3098_GN	3098 GN
CAV_55	55
6109	Clutch Apply Sensor Voltage Reference
6109_GY/RD	6109 GY/RD
CAV_38	38
6110	Clutch Apply Sensor Low Reference
6110_BK/GY	6110 BK/GY
CAV_22	22
6111	Clutch Apply Sensor Signal
6111_YE	6111 YE
CAV_58	58
275	Park Neutral Position Switch Park Signal
275_GN	275 GN
CAV 34	34
CONN_X1	X1
473	High Speed Cooling Fan Relay Control
473_BN/YE	473 BN/YE
CAV_54	54
335	Low Speed Cooling Fan Relay Control
335_GN/VT	335 GN/VT
CAV_41	41
C67	HVAC SYSTEM-AIR CONDITIONER FRT, ELECTRONIC CONTROLS
	HVAC SYSTEM-AIR

C68	CONDITIONER FRT, AUTO, ELECTRONIC CONTROLS
MF3	TRANSMISSION-MAN 6 SPD, OPEL, 76.5 MM, 4.273 1ST, 2.158 2ND, 1.302 3RD, 0.959 4TH, 0.744 5TH, 0.614 6TH, M32-6 WR
MR5	TRANSMISSION-MAN 6 SPD, OPEL, 76.5 MM, 4.273 1ST, 2.353 2ND, 1.475 3RD, 1.067 4TH, 0.875 5TH, 0.744 6TH, M32-6 WR
MF3	TRANSMISSION-MAN 6 SPD, OPEL, 76.5 MM, 4.273 1ST, 2.158 2ND, 1.302 3RD, 0.959 4TH, 0.744 5TH, 0.614 6TH, M32-6 WR
MR5	TRANSMISSION-MAN 6 SPD, OPEL, 76.5 MM, 4.273 1ST, 2.353 2ND, 1.475 3RD, 1.067 4TH, 0.875 5TH, 0.744 6TH, M32-6 WR
MF3	TRANSMISSION-MAN 6 SPD, OPEL, 76.5 MM, 4.273 1ST, 2.158 2ND, 1.302 3RD, 0.959 4TH, 0.744 5TH, 0.614 6TH, M32-6 WR
MR5	TRANSMISSION-MAN 6 SPD, OPEL, 76.5 MM, 4.273 1ST, 2.353 2ND, 1.475 3RD, 1.067 4TH, 0.875 5TH, 0.744 6TH, M32-6 WR
MF3	TRANSMISSION-MAN 6 SPD, OPEL, 76.5 MM, 4.273 1ST, 2.158 2ND, 1.302 3RD, 0.959 4TH, 0.744 5TH, 0.614 6TH, M32-6 WR
	TRANSMISSION-MAN 6 SPD, OPEL, 76.5 MM,

MR5	4.273 1ST, 2.353 2ND, 1.475 3RD, 1.067 4TH, 0.875 5TH, 0.744 6TH, M32-6 WR
MF3	TRANSMISSION-MAN 6 SPD, OPEL, 76.5 MM, 4.273 1ST, 2.158 2ND, 1.302 3RD, 0.959 4TH, 0.744 5TH, 0.614 6TH, M32-6 WR
MR5	TRANSMISSION-MAN 6 SPD, OPEL, 76.5 MM, 4.273 1ST, 2.353 2ND, 1.475 3RD, 1.067 4TH, 0.875 5TH, 0.744 6TH, M32-6 WR
MF3	TRANSMISSION-MAN 6 SPD, OPEL, 76.5 MM, 4.273 1ST, 2.158 2ND, 1.302 3RD, 0.959 4TH, 0.744 5TH, 0.614 6TH, M32-6 WR
MR5	TRANSMISSION-MAN 6 SPD, OPEL, 76.5 MM, 4.273 1ST, 2.353 2ND, 1.475 3RD, 1.067 4TH, 0.875 5TH, 0.744 6TH, M32-6 WR
MH8	TRANSMISSION-AUTO 6 SPD, HMD, X23F
25	Charge Indicator Control
25_BN	25 BN
CAV_47	47
CONN_X1	X1
625	Starter Enable Relay Control
625_YE/BK	625 YE/BK
CAV_27	27
23	Generator Field Duty Cycle Signal
23_GY	23 GY
CAV_17	17
CONN_X3	X3
231	Oil Pressure Switch Signal
231_YE/BU	231 YE/BU

CAV_31	31
CONN_X2	X2
1589	Primary Fuel Level Sensor Signal
1589_BU/VT	1589 BU/VT
CAV_64	64
CONN_X3	X3
6281	Fuel Level Sensor Low Reference
6281_BN/GN	6281 BN/GN
CAV_27	27
6311	Cruise/ETC/TCC Brake Signal
6311_WH/BU	6311 WH/BU
CAV_33	33
CONN_X1	X1
5007	Reverse Switch Signal
5007_GN/WH	5007 GN/WH
CAV_1	1
CONN X3	X3
5381	Brake Position Sensor 5 Volt Reference
5381_WH/RD	5381 WH/RD
CAV_38	38
CONN_X3	X3
5382	Brake Position Sensor Low Reference
5382_BK/BN	5382 BK/BN
CAV_22	22
5380	Brake Position Sensor Signal
5380_BU/YE	5380 BU/YE
CAV_58	58
MF3	TRANSMISSION-MAN 6 SPD, OPEL, 76.5 MM, 4.273 1ST, 2.158 2ND, 1.302 3RD, 0.959 4TH, 0.744 5TH, 0.614 6TH, M32-6 WR
MR5	TRANSMISSION-MAN 6 SPD, OPEL, 76.5 MM, 4.273 1ST, 2.353 2ND, 1.475 3RD, 1.067 4TH,

	0.875 5TH, 0.744 6TH, M32-6 WR
MH8	TRANSMISSION-AUTO 6 SPD, HMD, X23F
MH8	TRANSMISSION-AUTO 6 SPD, HMD, X23F
MH8	TRANSMISSION-AUTO 6 SPD, HMD, X23F
K20	
HVAC_Schematics_REF	HVAC Schematics
Automatic_Transmission_Controls_Schematics_REF	Automatic Transmission Controls Schematics
Engine_Cooling_Schematics_REF	Engine Cooling Schematics
Exterior_Lights_Schematics_REF	Exterior Lights Schematics
Manual_Transmission_Schematics_REF	Manual Transmission Schematics
Instrument_Cluster_Schematics_REF	Instrument Cluster Schematics
Exterior_Lights_Schematics_REF	Exterior Lights Schematics
Starting_and_Charging_Schematics_REF	Starting and Charging Schematics

2013 ENGINE

Engine Controls and Fuel - 1.4L LUV - Special Tools and Equipment - Special Tools - Cruze

SPECIAL TOOLS AND EQUIPMENT

SPECIAL TOOLS

Illustration	Tool Number/Description
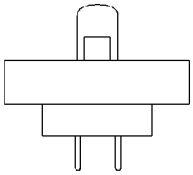	CH-34730-2C J-34730-2C Injector Test Lamp
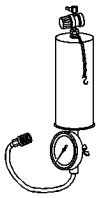	CH-35800-A J-35800-A Fuel Injector Cleaner
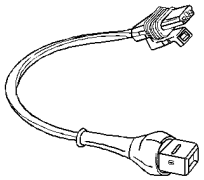	CH-39021-380 J-39021-380 Fuel Injector Harness Adapter
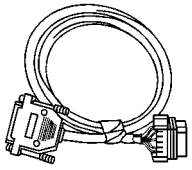	CH-39021-450 J-39021-450 Fuel Injector Harness Adapter
	CH-41415-30 J-41415-30 Fuel Tank Cap Adapter South America - Use Local Equivalent
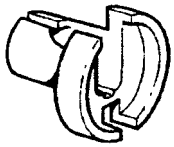	CH-41769-1 Fuel Line Quick Connect Separator 3/8
	CH-41769-2

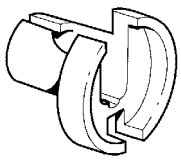	Fuel Line Quick Connect Separator 5/16
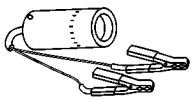	CH-42220 J-42220 Universal 12 Volt Leak Detection Lamp
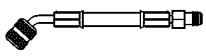	CH-42242 J-42242 Fuel Pressure Gauge Adapter
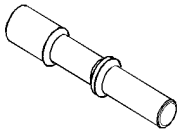	CH-42960-2 J-42960-2 Fuel Flapper Door Holder
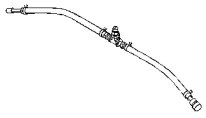	CH-42982 J-42982 Fuel Pressure Gauge Adapter
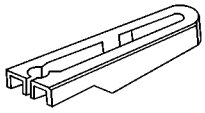	CH-43178 J-43178 Fuel Line Disconnect Tool
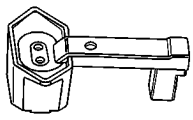	CH-44175 J-44175 Fuel Composition Testers South America - Use Local Equivalent
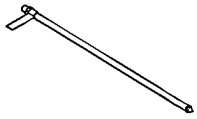	CH-45004 J-45004 Fuel Tank Drain Hose South America- Use Local Equivalent

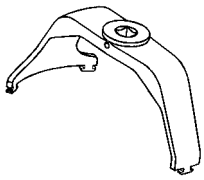	CH-45722 J-45722 Fuel Sender Lock Ring Wrench
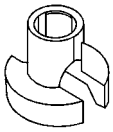	CH-47831 Fuel Line Disconnect Tool
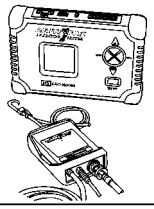	CH-47976 Active Fuel Injector Tester (AFIT)
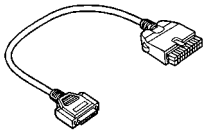	CH-47976-60 AFIT Harness Adapter
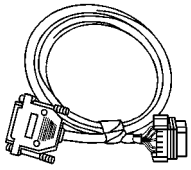	CH-47976-75 Fuel Injector Harness Adapter
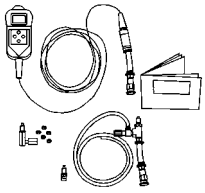	CH-48027 Digital Pressure gauge South America - Use Local Equivalent
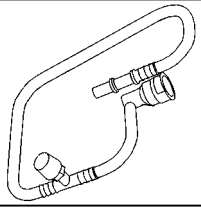	CH-48096 EVAP Service Access Port Tool
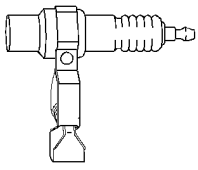	EL-26792 J-26792 HEI Spark Tester South America - Use Local Equivalent

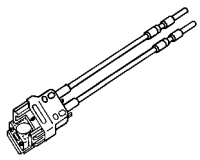	EL 36169-HD J 36169-HD Heavy Duty Fused Jumper
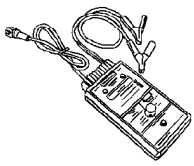	EL-39021 J-39021 Fuel Injector Coil and Balancer Tester
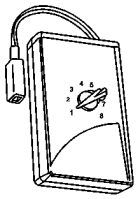	EL-39021-210 J-39021-210 Injector Tester Adapter Box
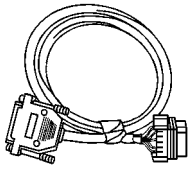	EL-39021-460 J-39021-460 Fuel Injector Test Adapter
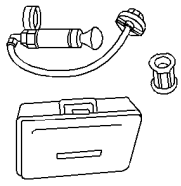	EN-24460-A J-24460-A Cooling System Pressure Tester
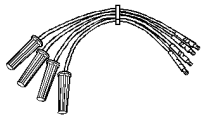	EN-36012-A J-36012-A Ignition System Diagnosis Harness
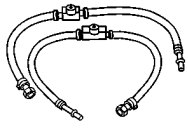	EN-37287 J-37287 Fuel Line Shut-Off Adapters (Flex Fuel)
	EN-38522 J-38522 Variable Signal Generator

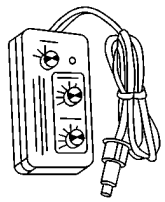	
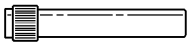	EN-41413-VLV J-41413-VLV EVAP Service Port Vent Fitting South America - Use Local Equivalent
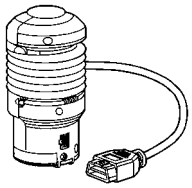	EN-42598-B J-42598-B Vehicle Data Recorder
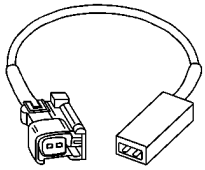	EN-44602 J-44602 Injector Test Adapter
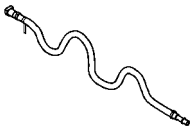	EN-47969 Fuel Supply Diagnostic Hose
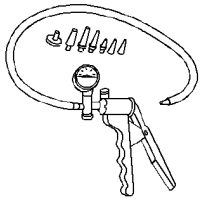	GE-23738-A J-23738-A Vacuum Pump
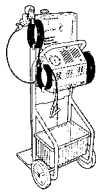	GE-41413-A J-41413-A Evaporative Emissions System Tester (EEST) South America - Use Local Equivalent
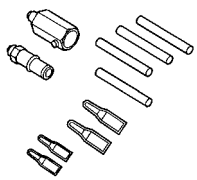	GE-41413-300 J-41413-300 EVAP Cap and Plug Kit South America - Use Local Equivalent

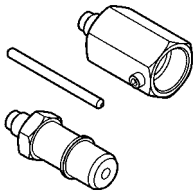	GE-41413-320 J-41413-320 EVAP Cap and Plug Kit South America - Use Local Equivalent
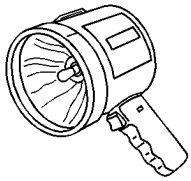	GE-41413-SPT J-41413-SPT High Intensity White Light South America - Use Local Equivalent

2013 ENGINE PERFORMANCE

Engine Controls and Fuel - 1.4L LUV - Specifications - Cruze

SPECIFICATIONS

TEMPERATURE VERSUS RESISTANCE (ECT)

Temperature Versus Resistance (ECT)

°C	°F	Sensor Resistance
Temperature vs Resistance Values (Approximate)		
100	212	155
90	194	208
80	176	283
70	158	392
60	140	552
50	122	793
45	113	958
40	104	1165
35	95	1425
30	86	1755
25	77	2176
20	68	2717
15	59	3428
10	50	4356
5	41	5578
0	32	7198
-5	23	9362
-10	14	12278
-15	5	16229
-20	-4	21653
-30	-22	39631
-40	-40	75529

TEMPERATURE VERSUS RESISTANCE - INTAKE AIR TEMPERATURE SENSOR (BOSCH SENSOR)

Temperature Versus Resistance - Intake Air Temperature Sensor (Bosch Sensor)

Temperature C°/F°	Resistance Minimum Ohms	Resistance Maximum Ohms
Bosch Intake Air Temperature (IAT) Sensor		
-40/-40	36, 595	42, 717
-20/-4	12, 947	14, 744

-10/14	8, 082	9, 105
0/32	5, 191	5, 789
20/68	2, 309	2, 530
25/77	1, 913	2, 088
40/104	1, 122	1, 210
60/140	587	625
80/176	328	345
100/212	193	201
120/248	119	125
140/284	76	81

TEMPERATURE VERSUS RESISTANCE - INTAKE AIR TEMPERATURE SENSOR (DELCO SENSOR)

Temperature Versus Resistance - Intake Air Temperature Sensor (Delco Sensor)

Temperature C°/F°	Resistance Minimum Ohms	Resistance Maximum Ohms
Delco Intake Air Temperature (IAT) Sensor		
-40/-40	42, 661	54, 224
-20/-4	14, 039	17, 333
-10/14	8, 529	10, 399
0/32	5, 358	6, 458
20/68	2, 308	2, 727
25/77	1, 904	2, 236
40/104	1, 113	1, 292
60/140	571	655
80/176	309	351
100/212	175	197
120/248	103	116
140/284	67	73
150/302	54	59

ALTITUDE VERSUS BAROMETRIC PRESSURE

Altitude Versus Barometric Pressure

Altitude Measured in Meters (m)	Altitude Measured in Feet (ft)	Barometric Pressure Measured in Kilopascals (kPa)	Barometric Pressure Measured in Pounds Per Square Inch (PSI)
Determine your altitude by contacting a local weather station or by using another reference source.			
4, 267	14, 000	56-64	8.1-9.3
3, 962	13, 000	58-66	8.4-9.6
3, 658	12, 000	61-69	8.8-10.0

3, 353	11, 000	64-72	9.3-10.4
3, 048	10, 000	66-74	9.6-10.7
2, 743	9, 000	69-77	10.0-11.2
2, 438	8, 000	71-79	10.3-11.5
2, 134	7, 000	74-82	10.7-11.9
1, 829	6, 000	77-85	11.2-12.3
1, 524	5, 000	80-88	11.6-12.8
1, 219	4, 000	83-91	12.0-13.2
914	3, 000	87-95	12.6-13.8
610	2, 000	90-98	13.1-14.2
305	1, 000	94-102	13.6-14.8
0	0 Sea Level	96-104	13.9-15.1
-305	-1, 000	101-105	14.6-15.2

IGNITION SYSTEM SPECIFICATIONS

Ignition System Specifications

Application	Specification
Ignition Type	Ignition Coil Module
Firing Order	1-3-4-2
Spark Plug Torque	Refer to **Fastener Tightening Specifications**
Spark Plug Gap	0.70 mm (0.028 in)
Spark Plug Type	Refer to Electronic Parts Catalogue

FASTENER TIGHTENING SPECIFICATIONS

Fastener Tightening Specifications

Application	Specification	
	Metric	English
Accelerator Pedal Position Sensor Bolt	10 N.m	89 lb in
Camshaft Position Actuator Solenoid Valve Bolts	8 N.m	71 lb in
Camshaft Position Sensor Bolts	8 N.m	71 lb in
Charge Air Cooler Outlet Air Hose Bolt	8 N.m	71 lb in
Crankshaft Position Sensor Bolt	8 N.m	71 lb in
Engine Control Module Bracket Nuts	9 N.m	80 lb in
Engine Oil Pressure Indicator Switch	20 N.m	15 lb ft
Fuel Injection Fuel Rail Bolt	7 N.m	62 lb in
Fuel Pressure Sensor	19 N.m	14 lb ft
Fuel Tank Filler Pipe Bracket Bolt	9 N.m	80 lb in
Fuel Tank Filler Pipe Ground Bolt	9 N.m	80 lb in
Fuel Tank Strap Bolts	23 N.m	17 lb ft
Heated Oxygen Sensor 1 and 2	40 N.m	30 lb ft

Ignition Coil Bolts	8 N.m	71 lb in
Knock Sensor	20 N.m	15 lb ft
Spark Plugs	25 N.m	18 lb ft
Throttle Body Bolts	9 N.m	80 lb in

2013 ENGINE PERFORMANCE

Engine Controls and Fuel - 1.4L LUV - Cruze

DIAGNOSTIC CODE INDEX

DIAGNOSTIC CODE INDEX

DTC	Description
DTC P0010, P0013, or P2088-P2091	DTC P0010 Intake Camshaft Position Actuator Solenoid Valve Control Circuit DTC P0013 Exhaust Camshaft Position Actuator Solenoid Valve Control Circuit DTC P2088 Intake Camshaft Position Actuator Solenoid Control Circuit Low Voltage DTC P2089 Intake Camshaft Position Actuator Solenoid Control Circuit High Voltage DTC P2090 Exhaust Camshaft Position Actuator Solenoid Control Circuit Low Voltage DTC P2091 Exhaust Camshaft Position Actuator Solenoid Control Circuit High Voltage
DTC P0011 or P0014	DTC P0011 Intake Camshaft Position System Performance DTC P0014 Exhaust Camshaft Position System Performance
DTC P0016 or P0017	DTC P0016 Crankshaft Position - Intake Camshaft Position Not Plausible DTC P0017 Crankshaft Position - Exhaust Camshaft Position Not Plausible
DTC P0030-P0032, P0036-P0038, P0053, P0054, P0135, or P0141	DTC P0030 HO2S Heater Control Circuit Sensor 1 DTC P0031 HO2S Heater Control Circuit Low Voltage Sensor 1 DTC P0032 HO2S Heater Control Circuit High Voltage Sensor 1 DTC P0036 HO2S Heater Control Circuit Sensor 2 DTC P0037 HO2S Heater Control Circuit Low Voltage Sensor 2 DTC P0038 HO2S Heater Control Circuit High Voltage Sensor 2 DTC P0053 HO2S Heater Resistance Sensor 1 DTC P0054 HO2S Heater Resistance Sensor 2 DTC P0135 HO2S Heater Performance Sensor 1 DTC P0141 HO2S Heater Performance Sensor 2
DTC P0033-P0035	DTC P0033 Turbocharger Bypass Solenoid Valve Control Circuit DTC P0034 Turbocharger Bypass Solenoid Valve Control Circuit Low Voltage DTC P0035 Turbocharger Bypass Solenoid Valve

	Control Circuit High Voltage
DTC P0068 or P1101	DTC P0068 Throttle Body Air Flow Performance DTC P1101 Intake Air Flow System Performance
DTC P0096 or P0111	DTC P0096 Intake Air Temperature (IAT) Sensor 2 Performance DTC P0111 Intake Air Temperature (IAT) Sensor 1 Performance
DTC P0097 or P0098	DTC P0097 Intake Air Temperature (IAT) Sensor 2 Circuit Low Voltage DTC P0098 Intake Air Temperature (IAT) Sensor 2 Circuit High Voltage
DTC P00C7	DTC P00C7 Intake Air Pressure Measurement System - Multiple Sensors Not Plausible
DTC P00EA or P00EB	DTC P00EA Intake Air Temperature (IAT) Sensor 3 Circuit Low Voltage DTC P00EB Intake Air Temperature (IAT) Sensor 3 Circuit High Voltage
DTC P00E9	DTC P00E9 Intake Air Temperature (IAT) Sensor 3 Circuit Performance
DTC P0101	DTC P0101 Mass Air Flow (MAF) Sensor Performance
DTC P0102 or P0103	DTC P0102 Mass Air Flow (MAF) Sensor Circuit Low Frequency DTC P0103 Mass Air Flow (MAF) Sensor Circuit High Frequency
DTC P0106	DTC P0106 Manifold Absolute Pressure (MAP) Sensor Performance
DTC P0107 or P0108	DTC P0107 Manifold Absolute Pressure (MAP) Sensor Circuit Low Voltage DTC P0108 Manifold Absolute Pressure (MAP) Sensor Circuit High Voltage
DTC P0112, P0113, or P0114	DTC P0112 Intake Air Temperature (IAT) Sensor Circuit Low Voltage DTC P0113 Intake Air Temperature (IAT) Sensor Circuit High Voltage DTC P0114 Intake Air Temperature (IAT) Sensor Circuit Intermittent
DTC P0116	DTC P0116 Engine Coolant Temperature (ECT) Sensor Performance
DTC P0117, P0118, or P0119	DTC P0117 Engine Coolant Temperature (ECT) Sensor Circuit Low Voltage DTC P0118 Engine Coolant Temperature (ECT) Sensor Circuit High Voltage DTC P0119 Engine Coolant Temperature (ECT) Sensor Circuit Intermittent
	DTC P0121 Throttle Position Sensor 1 Performance

DTC P0121-P0123, P0222, P0223, or P2135 (LUV)	DTC P0122 Throttle Position Sensor 1 Circuit Low Voltage DTC P0123 Throttle Position Sensor 1 Circuit High Voltage DTC P0222 Throttle Position Sensor 2 Circuit Low Voltage DTC P0223 Throttle Position Sensor 2 Circuit High Voltage DTC P2135 Throttle Position Sensors 1-2 Not Plausible
DTC P0128	DTC P0128 Engine Coolant Temperature (ECT) Below Thermostat Regulating Temperature
DTC P0131, P0132, P0134, P0137, P0138, or P0140	DTC P0131 HO2S Circuit Low Voltage Sensor 1 DTC P0132 HO2S Circuit High Voltage Sensor 1 DTC P0134 HO2S Circuit Insufficient Activity Sensor 1 DTC P0137 HO2S Circuit Low Voltage Sensor 2 DTC P0138 HO2S Circuit High Voltage Sensor 2 DTC P0140 HO2S Circuit Insufficient Activity Sensor 2
DTC P0133, P013A, P013B, P013E, P013F, P015A, P015B, P2270, or P2271	DTC P0133 HO2S Slow Response Sensor 1 DTC P013A HO2S Slow Response Rich to Lean Sensor 2 DTC P013B HO2S Slow Response Lean to Rich Sensor 2 DTC P013E HO2S Delayed Response Rich to Lean Sensor 2 DTC P013F HO2S Delayed Response Lean to Rich Sensor 2 DTC P015A HO2S Delayed Response Rich to Lean Sensor 1 DTC P015B HO2S Delayed Response Lean to Rich Sensor 1 DTC P2270 HO2S Signal Stuck Lean Sensor 2 DTC P2271 HO2S Signal Stuck Rich Sensor 2
DTC P0171 or P0172	DTC P0171 Fuel Trim System Lean DTC P0172 Fuel Trim System Rich
DTC P018B-P018D	DTC P018B Fuel Pressure Sensor Performance DTC P018C Fuel Pressure Sensor Circuit Low Voltage DTC P018D Fuel Pressure Sensor Circuit High Voltage
	DTC P0201 Cylinder 1 Injector Control Circuit DTC P0202 Cylinder 2 Injector Control Circuit DTC P0203 Cylinder 3 Injector Control Circuit DTC P0204 Cylinder 4 Injector Control Circuit DTC P0261 Cylinder 1 Injector Control Circuit Low

DTC P0201, P0202, P0203, P0204, P0261, P0262, P0264, P0265, P0267, P0268, P0270, or P0271	Voltage DTC P0262 Cylinder 1 Injector Control Circuit High Voltage DTC P0264 Cylinder 2 Injector Control Circuit Low Voltage DTC P0265 Cylinder 2 Injector Control Circuit High Voltage DTC P0267 Cylinder 3 Injector Control Circuit Low Voltage DTC P0268 Cylinder 3 Injector Control Circuit High Voltage DTC P0270 Cylinder 4 Injector Control Circuit Low Voltage DTC P0271 Cylinder 4 Injector Control Circuit High Voltage
DTC P0231, P0232, or P023F	DTC P0231 Fuel Pump Control Circuit Low Voltage DTC P0232 Fuel Pump Control Circuit High Voltage DTC P023F Fuel Pump Control Circuit
DTC P0234 or P0299	DTC P0234 Engine Overboost DTC P0299 Engine Underboost
DTC P0236	DTC P0236 Turbocharger Boost Sensor Performance
DTC P0237 or P0238	DTC P0237 Turbocharger Boost Sensor Circuit Low Voltage DTC P0238 Turbocharger Boost Sensor Circuit High Voltage
DTC P0243, P0245, or P0246	DTC P0243 Turbocharger Wastegate Solenoid Valve Control Circuit DTC P0245 Turbocharger Wastegate Solenoid Valve Control Circuit Low Voltage DTC P0246 Turbocharger Wastegate Solenoid Valve Control Circuit High Voltage
DTC P025A	DTC P025A Fuel Pump Control Module Enable Circuit
DTC P0300-P0304	DTC P0300 Engine Misfire Detected DTC P0301 Cylinder 1 Misfire Detected DTC P0302 Cylinder 2 Misfire Detected DTC P0303 Cylinder 3 Misfire Detected DTC P0304 Cylinder 4 Misfire Detected
DTC P0315	DTC P0315 Crankshaft Position System Variation Not Learned
DTC P0324, P0326, or P06B6	DTC P0324 Knock Sensor Module Performance DTC P0326 Knock Sensor Performance DTC P06B6 Control Module Knock Sensor

	Processor Performance
DTC P0325, P0327, or P0328	DTC P0325 Knock Sensor Circuit DTC P0327 Knock Sensor Circuit Low Voltage DTC P0328 Knock Sensor Circuit High Voltage
DTC P0335 or P0336	DTC P0335 Crankshaft Position Sensor Circuit DTC P0336 Crankshaft Position Sensor Performance
DTC P0340, P0341, P0365, or P0366	DTC P0340 Intake Camshaft Position Sensor Circuit DTC P0341 Intake Camshaft Position Sensor Performance DTC P0365 Exhaust Camshaft Position Sensor Circuit DTC P0366 Exhaust Camshaft Position Sensor Performance
DTC P0351-P0354	DTC P0351 Ignition Coil 1 Control Circuit DTC P0352 Ignition Coil 2 Control Circuit DTC P0353 Ignition Coil 3 Control Circuit DTC P0354 Ignition Coil 4 Control Circuit
DTC P0420	DTC P0420 Catalyst System Low Efficiency
DTC P0442	DTC P0442 Evaporative Emission (EVAP) System Small Leak Detected
DTC P0443	DTC P0443 Evaporative Emission (EVAP) Purge Solenoid Valve Control Circuit
DTC P0446	DTC P0446 Evaporative Emission (EVAP) Vent System Performance
DTC P0449	DTC P0449 Evaporative Emission (EVAP) Vent Solenoid Valve Control Circuit
DTC P0451-P0454	DTC P0451 Fuel Tank Pressure Sensor Performance DTC P0452 Fuel Tank Pressure Sensor Circuit Low Voltage DTC P0453 Fuel Tank Pressure Sensor Circuit High Voltage DTC P0454 Fuel Tank Pressure Sensor Circuit Intermittent
DTC P0455	DTC P0455 Evaporative Emission (EVAP) System Large Leak Detected
DTC P0496	DTC P0496 Evaporative Emission (EVAP) System Flow During Non-Purge
DTC P0506 or P0507	DTC P0506 Idle Speed Low DTC P0507 Idle Speed High
	DTC P0601 Control Module Read Only Memory Performance DTC P0602 Control Module Not Programmed DTC P0603 Control Module Long Term Memory

DTC P0601-P0604, P0606, or P062F (Fuel Pump Control Module)	Reset DTC P0604 Control Module Random Access Memory Performance DTC P0606 Control Module Processor Performance DTC P062F Control Module Long Term Memory Performance
DTC P0601-P0604, P0606, P062B, P062F, P0630, P16F3, or P262B (ECM)	DTC P0601 Control Module Read Only Memory Performance DTC P0602 Control Module Not Programmed DTC P0603 Control Module Long Term Memory Reset DTC P0604 Control Module Random Access Memory Performance DTC P0606 Control Module Processor Performance DTC P062F Control Module Long Term Memory Performance DTC P0630 VIN Not Programmed or Mismatched - Engine Control Module (ECM) DTC P16F3 Control Module Redundant Memory Performance DTC P262B Control Module Power Off Timer Performance
DTC P0627-P0629	DTC P0627 Fuel Pump Enable Circuit DTC P0628 Fuel Pump Enable Circuit Low Voltage DTC P0629 Fuel Pump Enable Circuit High Voltage
DTC P0641 or P06A6 (Fuel Pump Control Module)	DTC P0641 5 V Reference Circuit DTC P06A6 5 V Reference 1 Performance
DTC P0641, P0651, P0697, or P06A3 (ECM)	DTC P0641 5V Reference 1 Circuit DTC P0651 5V Reference 2 Circuit DTC P0697 5V Reference 3 Circuit DTC P06A3 5V Reference 4 Circuit
DTC P0650	DTC P0650 Malfunction Indicator Lamp (MIL) Control Circuit
DTC P0685, P0686, P0687, P0689, P0690, or P1682	DTC P0685 Engine Controls Ignition Relay Control Circuit DTC P0686 Engine Controls Ignition Relay Control Circuit Low Voltage DTC P0687 Engine Controls Ignition Relay Control Circuit High Voltage DTCP0689 Engine Controls Ignition Relay Feedback Circuit Low Voltage DTC P0690 Engine Controls Ignition Relay Feedback Circuit High Voltage DTC P1682 Ignition 1 Switch Circuit 2
DTC P069E	DTC P069E Fuel Pump Control Module Requested MIL Illumination

DTC P0700	DTC P0700 Transmission Control Module Requested MIL Illumination
DTC P11C2 or P11C3	DTC P11C2 Intake Air Humidity Sensor Circuit Low Voltage DTC P11C3 Intake Air Humidity Sensor Circuit High Voltage
DTC P1255 or P064A	DTC P064A Fuel Pump Control Module Performance DTC P1255 Fuel Pump Control Module Driver High Temperature
DTC P1400	DTC P1400 Cold Start Emission Reduction Control System
DTC P150C	DTC P150C Transmission Control Module Engine Speed Request Signal Message Counter Incorrect
DTC P1516, P2101, P2119, or P2176	DTC P1516 Throttle Actuator Control (TAC) Module Throttle Actuator Position Performance DTC P2101 Throttle Actuator Position Performance DTC P2119 Throttle Closed Position Performance DTC P2176 Minimum Throttle Position Not Learned
DTC P2096	DTC P2096 Post Catalyst Fuel Trim System Low Limit
DTC P2097	DTC P2097 Post Catalyst Fuel Trim System High Limit
DTC P2122, P2123, P2127, P2128, or P2138	DTC P2122 Accelerator Pedal Position (APP) Sensor 1 Circuit Low Voltage DTC P2123 Accelerator Pedal Position (APP) Sensor 1 Circuit High Voltage DTC P2127 Accelerator Pedal Position (APP) Sensor 2 Circuit Low Voltage DTC P2128 Accelerator Pedal Position (APP) Sensor 2 Circuit High Voltage DTC P2138 Accelerator Pedal Position (APP) Sensors 1-2 Not Plausible
DTC P2199	DTC P2199 Intake Air Temperature (IAT) Sensors 1-2 Not Plausible
DTC P219A	DTC P219A Fuel Trim Cylinder Balance
DTC P2227-P2230	DTC P2227 Barometric Pressure (BARO) Sensor Performance DTC P2228 Barometric Pressure (BARO) Sensor Circuit Low Voltage DTC P2229 Barometric Pressure (BARO) Sensor Circuit High Voltage DTC P2230 Barometric Pressure (BARO) Sensor Circuit Erratic - (If used)
DTC P2261	DTC P2261 Turbocharger Bypass Valve Stuck

DTC P2534 (Fuel Pump Control Module)	DTC P2534 Ignition On/Start Switch Circuit Low Voltage
DTC P2544	DTC P2544 Transmission Torque Request Signal Message Counter Incorrect
DTC P2635 (Fuel Pump Control Module)	DTC P2635 Fuel Pump Flow Performance

2013 ENGINE PERFORMANCE

Engine Controls and Fuel - 1.8L LUW and LWE - Description and Operation - Cruze

DESCRIPTION AND OPERATION

ENGINE CONTROL MODULE DESCRIPTION

The Engine Control Module (ECM) interacts with many emission related components and systems, and monitors emission related components and systems for deterioration. OBD II diagnostics monitor the system performance and a diagnostic trouble code (DTC) sets if the system performance degrades. The ECM is part of a network and communicates with various other vehicle control modules.

Malfunction indicator lamp (MIL) operation and DTC storage are dictated by the DTC type. A DTC is ranked as a Type A or Type B if the DTC is emissions related. Type C is a non-emissions related DTC.

The ECM is the control center of the engine controls system. Review the components and wiring diagrams in order to determine which systems are controlled by the ECM.

The ECM constantly monitors the information from various sensors and other inputs, and controls the systems that affect engine performance and emissions. The ECM also performs diagnostic tests on various parts of the system and can turn on the MIL when it recognizes an operational problem that affects emissions. When the ECM detects a malfunction, the ECM stores a DTC. The condition area is identified by the particular DTC that is set. This aids the technician in making repairs.

ECM Function

The ECM can supply 5 V or 12 V to various sensors or switches. This is done through pull-up resistors to regulated power supplies within the ECM. In some cases, even an ordinary shop voltmeter will not give an accurate reading due to low input resistance. Therefore, a digital multimeter (DMM) with at least 10 megaohms input impedance is required in order to ensure accurate voltage readings.

The ECM controls the output circuits by controlling the ground or the power feed circuit through transistors or a device called an output driver module.

EEPROM

The electronically erasable programmable read only memory (EEPROM) is an integral part of the ECM. The EEPROM contains program and calibration information that the ECM needs in order to control engine operation.

Special equipment, as well as the correct program and calibration for the vehicle, are required in order to reprogram the ECM.

Data Link Connector (DLC)

The data link connector (DLC) provides serial data communication for ECM diagnosis. This connector allows the technician to use a scan tool in order to monitor various serial data parameters, and display DTC

information. The DLC is located inside the driver's compartment, underneath the instrument panel.

Malfunction Indicator Lamp (MIL)

The malfunction indicator lamp (MIL) is inside the instrument panel cluster (IPC). The MIL is controlled by the ECM and illuminates when the ECM detects a condition that affects vehicle emissions.

ECM Service Precautions

The ECM, by design, can withstand normal current draws that are associated with vehicle operations. However, care must be used in order to avoid overloading any of these circuits. When testing for opens or shorts, do not ground or apply voltage to any of the ECM circuits unless the diagnostic procedure instructs you to do so. These circuits should only be tested with a DMM unless the diagnostic procedure instructs otherwise.

Emissions Diagnosis For State I/M Programs

This OBD II equipped vehicle is designed to diagnose any conditions that could lead to excessive levels of the following emissions:

- Hydrocarbons (HC)
- Carbon monoxide (CO)
- Oxides of nitrogen (NOx)
- Evaporative emission (EVAP) system losses

Should this vehicle's on-board diagnostic system (ECM) detect a condition that could result in excessive emissions, the ECM turns ON the MIL and stores a DTC that is associated with the condition.

Aftermarket (Add-On) Electrical And Vacuum Equipment

CAUTION: Do not attach add-on vacuum operated equipment to this vehicle. The use of add-on vacuum equipment may result in damage to vehicle components or systems.

CAUTION: Connect any add-on electrically operated equipment to the vehicle's electrical system at the 12 V battery (power and ground) in order to prevent damage to the vehicle.

Aftermarket, add-on, electrical and vacuum equipment is defined as any equipment installed on a vehicle after leaving the factory that connects to the vehicle's electrical or vacuum systems. No allowances have been made in the vehicle design for this type of equipment.

Add-on electrical equipment, even when installed to these strict guidelines, may still cause the powertrain system to malfunction. This may also include equipment not connected to the vehicle electrical system, such as portable telephones and radios. Therefore, the first step in diagnosing any powertrain condition is to eliminate all of the aftermarket electrical equipment from the vehicle. After this is done, if the problem still exists, the problem may be diagnosed in the normal manner.

Electrostatic Discharge (ESD) Damage

NOTE: In order to prevent possible electrostatic discharge damage to the ECM, DO NOT touch the connector pins on the ECM.

The electronic components that are used in the control systems are often designed to carry very low voltage. These electronic components are susceptible to damage caused by electrostatic discharge. Less than 100 V of static electricity can cause damage to some electronic components. By comparison, it takes as much as 4, 000 V for a person to even feel a static discharge.

There are several ways for a person to become statically charged. The most common methods of charging are by friction and by induction. An example of charging by friction is a person sliding across a car seat.

Charging by induction occurs when a person with well insulated shoes stands near a highly charged object and momentarily touches ground. Charges of the same polarity are drained off leaving the person highly charged with the opposite polarity. Static charges can cause damage, therefore, it is important to use care when handling and testing electronic components.

Emissions Control Information Label

The underhood Vehicle Emissions Control Information Label contains important emission specifications. This identifies the year, the displacement of the engine in liters, and the class of the vehicle.

This label is located in the engine compartment of every General Motors vehicle. If the label has been removed, it can be ordered from GM service parts operations (GMSPO).

FUEL SYSTEM DESCRIPTION

Fuel System Overview

The fuel system is an electronic returnless on-demand design. A returnless fuel system reduces the internal temperature of the fuel tank by not returning hot fuel from the engine to the fuel tank. Reducing the internal temperature of the fuel tank results in lower evaporative emissions.

The fuel tank stores the fuel supply. An electric turbine style fuel pump attaches to the fuel tank fuel pump module inside the fuel tank. The fuel pump supplies fuel through the fuel feed pipe to the fuel injection system. The fuel tank fuel pump module contains a reverse flow check valve. The check valve maintains fuel pressure in the fuel feed pipe and the fuel rail in order to prevent long cranking times.

Electronic Returnless Fuel System

The electronic returnless fuel system is a microprocessor controlled fuel delivery system which transports fuel from the tank to the fuel rail. It functions as an electronic replacement for a traditional, mechanical fuel pressure regulator. A pressure relief regulator valve within the fuel tank provides an added measure of over pressure protection. Desired fuel pressure is commanded by the engine control module (ECM), and transmitted to the fuel pump flow control module via a GMLAN serial data message. A liquid fuel pressure sensor provides the feedback the fuel pump flow control module requires for Closed Loop fuel pressure control.

Fuel Pump Flow Control Module

The fuel pump flow control module is a serviceable GMLAN module. The fuel pump flow control module receives the desired fuel pressure message from the engine control module (ECM) and controls the fuel pump located within the fuel tank to achieve the desired fuel pressure. The fuel pump flow control module sends a 25 kHz PWM signal to the fuel pump, and pump speed is changed by varying the duty cycle of this signal. Maximum current supplied to the fuel pump is 15 A. A liquid fuel pressure sensor provides fuel pressure feedback to the fuel pump flow control module.

Fuel Pressure Sensor

The fuel pressure sensor is a serviceable 5 V, 3-pin device. It is located on the fuel feed line forward of the fuel tank, and receives power and ground from the fuel pump flow control module through a vehicle wiring harness. The sensor provides a fuel pressure signal to the fuel pump flow control module, which is used to provide Closed Loop fuel pressure control.

Flex Fuel Sensor (If Equipped)

The flex fuel sensor measures the ethanol-gasoline ratio of the fuel being used in a flexible fuel vehicle. Flexible fuel vehicles can be operated with a blend of ethanol and gasoline, up to 85 percent ethanol. In order to adjust the ignition timing and the fuel quantity to be injected, the engine management system requires information about the percentage of ethanol in the fuel.

The flex fuel sensor uses quick-connect style fuel connections, an incoming fuel connection, and an outgoing fuel connection. All fuel passes through the flex fuel sensor before continuing on to the fuel rail. The flex fuel sensor measures the fuel alcohol content, and sends an electrical signal to the engine control module (ECM) to indicate ethanol percentage.

The flex fuel sensor has a three-wire electrical harness connector. The three wires provide a ground circuit, a power source, and a signal output to the ECM. The power source is battery positive voltage and the ground circuit connects to an engine ground. The signal circuit carries the ethanol percentage via a frequency signal.

The flex fuel sensor uses a microprocessor inside the sensor to measure the ethanol percentage and changes the output signal accordingly. The ECM provides an internal pull-up to 5 V on the signal circuit, and the flex fuel sensor pulls the 5 V to ground in pulses. The normal range of operating frequency is between 50 and 150 Hz, with 50 Hz representing 0 percent ethanol, and 150 Hz representing 100 percent ethanol.

The microprocessor inside the sensor is capable of a certain amount of self-diagnosis. An output frequency between 180 Hz and 190 Hz indicates that the fuel is contaminated. Certain substances dissolved in the fuel can cause the fuel to be contaminated, raising the output frequency higher than the actual ethanol percentage should indicate. Examples of these substances include water, sodium chloride (salt), and methanol.

It should be noted that it is likely that the flex fuel sensor will indicate a slightly lower ethanol percentage than what is advertised at the fueling station. This is not a fault of the sensor. The reason has to do with government requirements for alcohol-based motor fuels. Government regulations require that alcohol intended for use as motor fuel be denatured. This means that 100 percent pure ethanol is first denatured with approximately 4 1/2 percent gasoline, before being mixed with anything else. When an ethanol gasoline mixture is advertised as E85, the 85 percent ethanol was denatured before being blended with gasoline, meaning an advertised E85 fuel

contains only about 81 percent ethanol. The flex fuel sensor measures the actual percentage of ethanol in the fuel.

Fuel Tank

The fuel tank stores the fuel supply. The fuel tank is located in the rear of the vehicle. The fuel tank is held in place by 2 metal straps that are attached to the underbody. The fuel tank is molded from high-density polyethylene.

Fuel Filler Cap

The fuel fill pipe has a tethered fuel filler cap. A torque-limiting device prevents the cap from being overtightened. To install the cap, turn the cap clockwise until the cap clicks audibly. This indicates that the cap is correctly torqued and fully seated.

Fuel Tank Fuel Pump Module

The fuel tank fuel pump module consists of the following components:

- The fuel level sensor
- The fuel pump
- The fuel strainer
- The fuel filter
- The pressure relief regulator valve
- The jet pump

Fuel Level Sensor

The fuel level sensor consists of a float, a wire float arm, and a ceramic resistor card. The position of the float arm indicates the fuel level. The fuel level sensor contains a variable resistor which changes resistance in correspondence with the position of the float arm. The ECM sends the fuel level signal via a High Speed CAN-Bus signal to the body control module (BCM). The BCM then sends the information via a Low Speed CAN-Bus signal to the instrument cluster to display the fuel level. When the fuel level falls below 11% the instrument cluster illuminates the low fuel level indicator. The ECM also monitors the fuel level input for various diagnostics.

Fuel Pump

The fuel pump is mounted in the fuel tank fuel pump module reservoir. The fuel pump is an electric pump. Fuel is pumped to the fuel injection system at a pressure that is based on feedback from the fuel pressure sensor. The fuel pump delivers a constant flow of fuel even during low fuel conditions and aggressive vehicle maneuvers. The fuel pump flex pipe acts to dampen the fuel pulses and noise generated by the fuel pump.

Fuel Strainer

The fuel strainer is attached to the lower end of the fuel tank fuel pump module. The fuel strainer is made of woven plastic. The functions of the fuel strainer are to filter contaminants and to wick away fuel. Normally, the

fuel strainer does not require maintenance. Fuel stoppage at this point indicates that the fuel tank contains an abnormal amount of sediment or contamination.

Jet Pump

The jet pump is located in the fuel tank fuel pump module. Fuel pump flow loss, caused by vapor expulsion in the pump inlet chamber, is diverted to the jet pump through a restrictive orifice located on the pump cover. The jet pump fills the reservoir of the fuel tank fuel pump module.

Pressure Relief Regulator Valve

The pressure relief regulator valve replaces the typical fuel pressure regulator used on a mechanical returnless fuel system. The pressure relief regulator valve is closed during normal vehicle operation. The pressure relief regulator valve is used to vent pressure during hot soaks and also functions as a fuel pressure regulator in the event of the fuel pump flow control module defaulting to 100% pulse width modulation (PWM) of the fuel pump. Due to variation in the fuel system pressures, the opening pressure for the pressure relief regulator valve is set higher than the pressure that is used on a mechanical returnless fuel system pressure regulator.

Nylon Fuel Pipes

WARNING: Refer to Fuel and Evaporative Emission Pipe Warning .

Nylon pipes are constructed to withstand maximum fuel system pressure, exposure to fuel additives, and changes in temperature.

Heat resistant rubber hose or corrugated plastic conduit protect the sections of the pipes that are exposed to chafing, high temperature, or vibration.

Nylon fuel pipes are somewhat flexible and can be shaped around gradual turns under the vehicle. However, if nylon fuel pipes are forced into sharp bends, the pipes may kink and restrict the flow of fuel. Also, once exposed to fuel, nylon pipes may become stiffer and are more likely to kink if bent too far. Exercise special care when working on a vehicle with nylon fuel pipes.

Quick-Connect Fittings

Nylon fuel pipes are somewhat flexible and can be shaped around gradual turns under the vehicle. However, if nylon fuel pipes are forced into sharp bends, the pipes may kink and restrict the flow of fuel. Also, once exposed to fuel, nylon pipes may become stiffer and are more likely to kink if bent too far. Exercise special care when working on a vehicle with nylon fuel pipes.

Fuel Pulse Dampener

The fuel pulse dampener is a part of the front fuel feed pipe. The fuel pulse dampener is diaphragm-operated with fuel pump pressure on one side and with spring pressure on the other side. The function of the dampener is to dampen the fuel pump pressure pulsations.

Fuel Rail Assembly

The fuel rail assembly is attached to the engine intake manifold. The fuel rail assembly performs the following functions:

- Positions the injectors in the intake manifold
- Distributes fuel evenly to the injectors

Fuel Injectors

The fuel injector assembly is a solenoid device controlled by the ECM that meters pressurized fuel to a single engine cylinder. The ECM energizes the high-impedance, 12 ohms, injector solenoid to open a ball valve, normally closed. This allows fuel to flow into the top of the injector, past the ball valve, and through a director plate at the injector outlet. The director plate has machined holes that control the flow of fuel, generating a spray of finely atomized fuel at the injector tip. Fuel from the injector tip is directed at the intake valve, causing the fuel to become further atomized and vaporized before entering the combustion chamber. This fine atomization improves fuel economy and emissions.

Fuel Metering Modes of Operation

The ECM monitors voltages from several sensors in order to determine how much fuel to feed to the engine. The ECM controls the amount of fuel delivered to the engine by changing the fuel injector pulse width. The fuel is delivered under one of several modes.

Starting Mode

The ECM supplies voltage to the fuel pump control module when the ECM detects that the ignition is ON. The voltage from the ECM to the fuel pump control module remains active for 2 s, unless the engine is in Crank or Run. While this voltage is being received, the fuel pump control module closes the ground switch of the fuel tank fuel pump module and also supplies a varying voltage to the fuel tank fuel pump module in order to maintain the desired fuel line pressure. The ECM calculates the air/fuel ratio based on inputs from the engine coolant temperature (ECT), manifold absolute pressure (MAP), mass air flow (MAF), and throttle position sensors. The system stays in starting mode until the engine speed reaches a predetermined RPM.

Clear Flood Mode

If the engine is flooded with fuel during starting and will not start, the clear flood mode can be manually enabled. To enable Clear Flood Mode, press the accelerator to wide open throttle (WOT). The ECM will completely turn OFF the fuel injectors and will maintain this mode as long as the ECM detects a WOT condition with engine speed below a predetermined value.

Run Mode

The run mode has 2 conditions called Open Loop and Closed Loop. When the engine is first started and the engine speed is above a predetermined RPM, the system begins Open Loop operation. The ECM ignores the signal from the heated oxygen sensor (HO2S). The ECM calculates the air/fuel ratio based on inputs from the engine coolant temperature (ECT), manifold absolute pressure (MAP), mass air flow (MAF), and throttle position sensors. The system stays in Open Loop until meeting the following conditions:

- The HO2S has varying voltage output, showing that the HO2S is hot enough to operate properly.

- The ECT sensor is above a specified temperature.
- A specific amount of time has elapsed after starting the engine.

Specific values for the above conditions exist for each different engine, and are stored in the electrically erasable programmable read-only memory (EEPROM). The system begins Closed Loop operation after reaching these values. In Closed Loop, the ECM calculates the air/fuel ratio, injector ON time, based upon the signal from various sensors, but mainly from the HO2S. This allows the air/fuel ratio to stay very close to 14.7:1.

Acceleration Mode

When the driver pushes on the accelerator pedal, air flow into the cylinders increases rapidly. To prevent possible hesitation, the ECM increases the pulse width to the injectors to provide extra fuel during acceleration. This is also known as power enrichment. The ECM determines the amount of fuel required based upon throttle position, engine coolant temperature (ECT), manifold absolute pressure (MAP), mass air flow (MAF), and engine speed.

Deceleration Mode

When the driver releases the accelerator pedal, air flow into the engine is reduced. The ECM monitors the corresponding changes in throttle position, mass air flow (MAF), and manifold absolute pressure (MAP). The ECM shuts OFF fuel completely if the deceleration is very rapid, or for long periods, such as long, closed-throttle coast-down. The fuel shuts OFF in order to prevent damage to the catalytic converters.

Battery Voltage Correction Mode

When the battery voltage is low, the ECM compensates for the weak spark delivered by the ignition system in the following ways:

- Increasing the amount of fuel delivered
- Increasing the idle RPM
- Increasing the ignition dwell time

Fuel Cutoff Mode

The ECM cuts OFF fuel from the fuel injectors when the following conditions are met in order to protect the powertrain from damage and improve driveability:

- The ignition is OFF. This prevents engine run-on.
- The ignition is ON but there is no ignition reference signal. This prevents flooding or backfiring.
- The engine speed is too high, above red line.
- The vehicle speed is too high, above rated tire speed.
- During an extended, high speed, closed throttle coast down-This reduces emissions and increases engine braking.
- During extended deceleration, in order to prevent damage to the catalytic converters

Fuel Trim

The ECM controls the air/fuel metering system in order to provide the best possible combination of driveability, fuel economy, and emission control. The ECM monitors the heated oxygen sensor (HO2S) signal voltage while in Closed Loop and regulates the fuel delivery by adjusting the pulse width of the injectors based on this signal. The ideal fuel trim values are around 0 percent for both short and long term fuel trim. A positive fuel trim value indicates the ECM is adding fuel in order to compensate for a lean condition by increasing the pulse width. A negative fuel trim value indicates that the ECM is reducing the amount of fuel in order to compensate for a rich condition by decreasing the pulse width. A change made to the fuel delivery changes the long and short term fuel trim values. The short term fuel trim values change rapidly in response to the HO2S signal voltage. These changes fine tune the engine fueling. The long term fuel trim makes coarse adjustments to fueling in order to re-center and restore control to short term fuel trim. A scan tool can be used to monitor the short and long term fuel trim values. The long term fuel trim diagnostic is based on an average of several of the long term speed load learn cells. The ECM selects the cells based on the engine speed and engine load. If the ECM detects an excessively lean or rich condition, the ECM will set a fuel trim diagnostic trouble code (DTC).

THROTTLE ACTUATOR CONTROL (TAC) SYSTEM DESCRIPTION

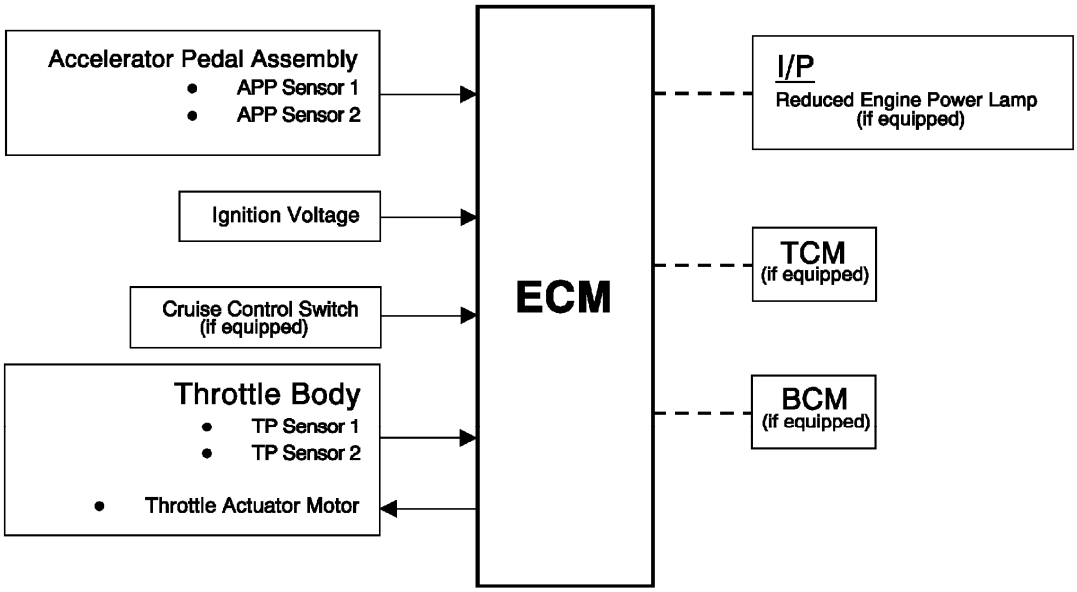

Fig. 1: Throttle Actuator Control (TAC) System Diagram
Courtesy of GENERAL MOTORS COMPANY

The engine control module (ECM) is the control center for the throttle actuator control (TAC) system. The ECM determines the driver's intent based on input from the accelerator pedal position sensors, then calculates the appropriate throttle response based on the throttle position sensors. The ECM achieves throttle positioning by providing a pulse width modulated voltage to the throttle actuator motor. The throttle blade is spring loaded in both directions, and the default position is slightly open.

Modes Of Operation

Normal Mode

During the operation of the TAC system, several modes, or functions, are considered normal. The following modes may be entered during normal operations:

- Minimum pedal value-At key-up, the ECM updates the learned minimum pedal value.
- Minimum throttle position values-At key-up, the ECM updates the learned minimum throttle position value. In order to learn the minimum throttle position value, the throttle blade is moved to the Closed position.
- Ice break mode-If the throttle blade is not able to reach a predetermined minimum throttle position, the ice break mode is entered. During the ice break mode, the ECM commands the maximum pulse width several times to the throttle actuator motor in the closing direction.
- Minimum pedal value-At key-up, the ECM updates the learned minimum pedal value.
- Battery saver mode-After a predetermined time without engine RPM, the ECM commands the Battery Saver mode. During the Battery Saver mode, the TAC module removes the voltage from the motor control circuits, which removes the current draw used to maintain the idle position and allows the throttle to return to the spring loaded default position.

Reduced Engine Power Mode

When the ECM detects a condition with the TAC system, the ECM may enter a reduced engine power mode. Reduced engine power may cause one or more of the following conditions:

- Acceleration limiting-The ECM will continue to use the accelerator pedal for throttle control, however, the vehicle acceleration is limited.
- Limited throttle mode-The ECM will continue to use the accelerator pedal for throttle control, however, the maximum throttle opening is limited.
- Throttle default mode-The ECM will turn OFF the throttle actuator motor, and the throttle will return to the spring loaded default position.
- Forced idle mode-The ECM will perform the following actions:
    - Limit engine speed to idle positioning the throttle position, or by controlling the fuel and spark if the throttle is turned OFF.
    - Ignore the accelerator pedal input.
- Engine shutdown mode-The ECM will disable fuel and de-energize the throttle actuator.

CAMSHAFT ACTUATOR SYSTEM DESCRIPTION

Camshaft Actuator System Overview

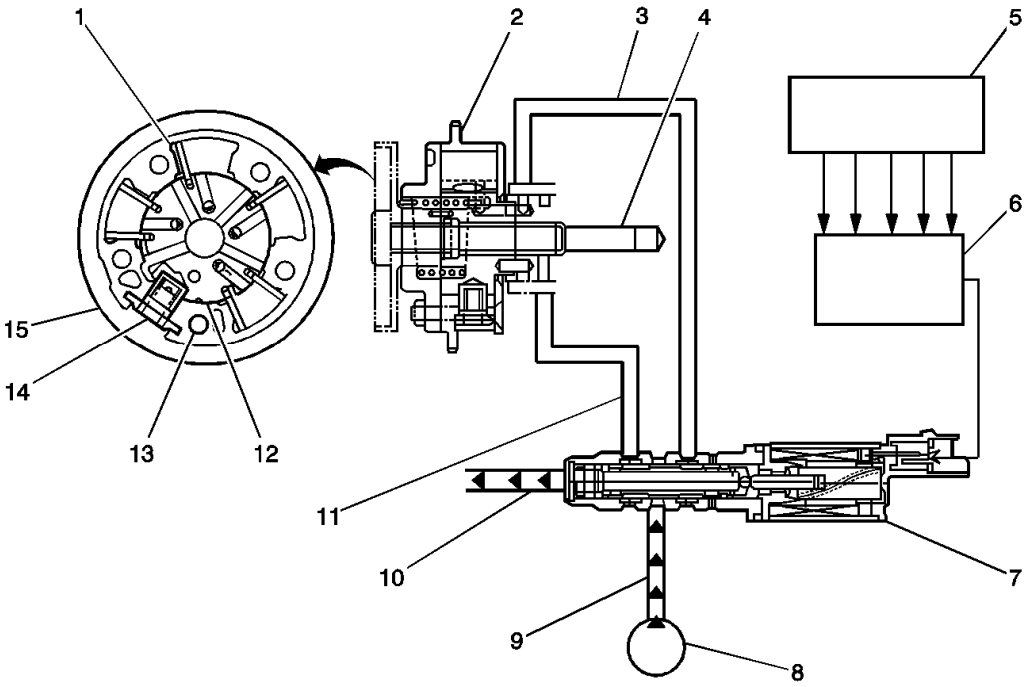

Fig. 2: Camshaft Actuator Component Views
Courtesy of GENERAL MOTORS COMPANY

Callout	Component Name
1	Camshaft Actuator Vane
2	Timing Chain Sprocket
3	Engine Oil Pressure-For retarding the camshaft
4	Camshaft
5	Input Signals from Engine Sensors
6	Engine Control Module (ECM)
7	Camshaft Actuator Solenoid
8	Engine Oil Pump
9	Engine Oil Pressure Supply
10	Engine Oil Drain
11	Engine Oil Pressure-For advancing the camshaft
12	Camshaft Actuator Rotor
13	Camshaft Position Sensor Reluctor
14	Camshaft Actuator Lock Pin
15	Camshaft Actuator Housing

The camshaft actuator system enables the engine control module (ECM) to change camshaft timing of all 4 camshafts while the engine is operating. The camshaft position (CMP) actuator assembly (15) varies the camshaft position in response to directional changes in oil pressure. The CMP actuator solenoid valve controls the oil pressure that is applied to advance or retard a camshaft. Modifying camshaft timing under changing

engine demand provides better balance between the following performance concerns:

- Engine power output
- Fuel economy
- Tailpipe emissions

The CMP actuator solenoid valve (7) is controlled by the ECM. The crankshaft position (CKP) sensor and the CMP sensors are used to monitor changes in camshaft positions. The ECM uses the following information in order to calculate the desired camshaft positions:

- Engine coolant temperature
- Calculated engine oil temperature (EOT)
- Mass air flow (MAF)
- Throttle position (TP)
- Vehicle speed
- Volumetric efficiency

Operation

The CMP actuator assembly has an outer housing that is driven by an engine timing chain. Inside the assembly is a rotor with fixed vanes that is attached to the camshaft. Oil pressure that is applied to the fixed vanes will rotate a specific camshaft in relationship to the crankshaft. The movement of the intake camshafts will advance the intake valve timing. The movement of the exhaust camshafts will retard the exhaust valve timing. When oil pressure is applied to the return side of the vanes, the camshafts will return to 0 crankshaft degrees, or top dead center (TDC). The CMP actuator solenoid valve directs the oil flow that controls the camshaft movement. The ECM commands the CMP solenoid to move the solenoid plunger and spool valve until oil flows from the advance passage (11). Oil flowing thru the CMP actuator assembly from the CMP solenoid advance passage applies pressure to the advance side of the vanes in the CMP actuator assembly. When the camshaft position is retarded, the CMP actuator solenoid valve directs oil to flow into the CMP actuator assembly from the retard passage (3). The ECM can also command the CMP actuator solenoid valve to stop oil flow from both passages in order to hold the current camshaft position.

The ECM operates the CMP actuator solenoid valve by pulse width modulation (PWM) of the solenoid coil. The higher the PWM duty cycle, the larger the change in camshaft timing. The CMP actuator assembly also contains a lock pin (14) that prevents movement between the outer housing and the rotor vane assembly. The lock pin is released by oil pressure before any movement in the CMP actuator assembly takes place. The ECM is continuously comparing CMP sensor inputs with CKP sensor input in order to monitor camshaft position and detect any system malfunctions. If a condition exists in either the intake or exhaust camshaft actuator system, the opposite bank, intake or exhaust, camshaft actuator will default to 0 crankshaft degrees.

CMP Actuator System Operation

Driving Condition	Change in Camshaft Position	Objective	Result
Idle	No Change	Minimize Valve Overlap	Stabilized Idle Speed
Light Engine Load	Retarded Valve Timing	Decrease Valve Overlap	Stabled Engine Output

Medium Engine Load	Advanced Valve Timing	Increase Valve Overlap	Better Fuel Economy with Lower Emissions
Low to Medium RPM with Heavy Load	Advanced Valve Timing	Advance Intake Valve Closing	Improved Low to Mid-range Torque
High RPM with Heavy Load	Retarded Valve Timing	Retard Intake Valve Closing	Improved Engine Output

EVAPORATIVE EMISSION CONTROL SYSTEM DESCRIPTION

Typical Evaporative Emission (EVAP) System Hose Routing Diagram

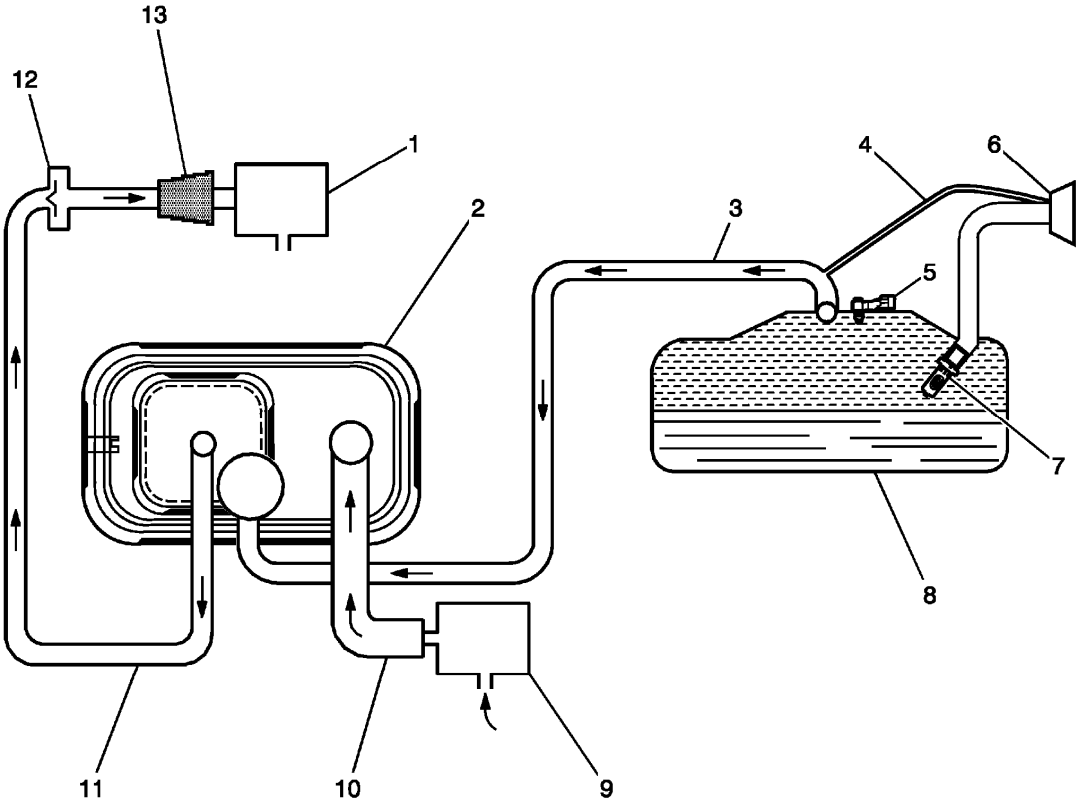

Fig. 3: View Of Evaporative Emission (EVAP) System Hose Routing Diagram
Courtesy of GENERAL MOTORS COMPANY

Callout	Component Name
1	Evaporative Emissions (EVAP) Purge Solenoid Valve
2	EVAP Canister
3	EVAP Vapor Tube

4	Vapor Recirculation Tube
5	Fuel Tank Pressure Sensor
6	Fuel Filler Cap (Some Vehicles May Have A Capless Design)
7	Fuel Fill Pipe Inlet Check Valve
8	Fuel Tank
9	EVAP Canister Vent Solenoid Valve
10	Vent hose
11	EVAP Purge Tube
12	Purge Tube Check Valve, Turbo-Charged Applications Only
13	EVAP Canister Purge Tube Connector

EVAP System Operation

The evaporative emission (EVAP) control system limits fuel vapors from escaping into the atmosphere. Fuel tank vapors are allowed to move from the fuel tank, due to pressure in the tank, through the EVAP vapor tube, into the EVAP canister. Carbon in the canister absorbs and stores the fuel vapors. Excess pressure is vented through the vent hose and EVAP vent solenoid valve to the atmosphere. The EVAP canister stores the fuel vapors until the engine is able to use them. At an appropriate time, the engine control module (ECM) will command the EVAP purge solenoid valve ON, allowing engine vacuum to be applied to the EVAP canister. With the normally open EVAP vent solenoid valve OFF, fresh air is drawn through the vent solenoid valve and the vent hose to the EVAP canister. Fresh air is drawn through the canister, pulling fuel vapors from the carbon. The air/fuel vapor mixture continues through the EVAP purge tube and EVAP purge solenoid valve into the intake manifold to be consumed during normal combustion. The ECM uses several tests to determine if the EVAP system is leaking or restricted.

Purge Solenoid Valve Leak Test

If the EVAP purge solenoid valve does not seal properly fuel vapors could enter the engine at an undesired time, causing driveability concerns. The ECM tests for this by commanding the EVAP purge solenoid valve OFF and the vent solenoid valve ON which seals the system. With the engine running, the ECM then monitors the fuel tank pressure (FTP) sensor for an increase in vacuum. The ECM will log a fault if a vacuum develops in the tank under these test conditions.

Large Leak Test

This diagnostic creates a vacuum condition in the EVAP system. When the enabling criteria has been met, the ECM commands the normally open EVAP vent solenoid valve closed and the EVAP purge solenoid valve open, creating a vacuum in the EVAP system. The ECM then monitors the FTP sensor voltage to verify that the system is able to reach a predetermined level of vacuum within a set amount of time. Failure to achieve the expected level of vacuum indicates the presence of a large leak in the EVAP system or a restriction in the purge path. The ECM will log a fault if it detects a weaker than expected vacuum level under these test conditions.

Canister Vent Restriction Test

If the EVAP vent system is restricted, fuel vapors will not be properly purged from the EVAP canister. The ECM tests this by commanding the EVAP purge solenoid valve ON while commanding the EVAP vent

solenoid valve OFF, and then monitoring the FTP sensor for an increase in vacuum. If the vacuum increases more than the expected amount, in a set amount of time, a fault will be logged by the ECM.

Small Leak Test

The engine off natural vacuum diagnostic is the small-leak detection diagnostic for the EVAP system. The engine off natural vacuum diagnostic monitors the EVAP system pressure with the ignition OFF. Because of this, it may be normal for the ECM to remain active for up to 40 min after the ignition is turned OFF. This is important to remember when performing a parasitic draw test on vehicles equipped with engine off natural vacuum.

When the vehicle is driven, the temperature rises in the tank due to heat transfer from the exhaust system. After the vehicle is parked, the temperature in the tank continues to rise for a period of time, then starts to drop. The engine off natural vacuum diagnostic relies on this temperature change, and the corresponding pressure change in a sealed system, to determine if an EVAP system leak is present.

The engine off natural vacuum diagnostic is designed to detect leaks as small as 0.51 mm (0.020 in).

EVAP System Components

The EVAP system consists of the following components:

EVAP Purge Solenoid Valve

The EVAP purge solenoid valve controls the flow of vapors from the EVAP system to the intake manifold. The purge solenoid valve opens when commanded ON by the ECM. This normally closed valve is pulse width modulated (PWM) by the ECM to precisely control the flow of fuel vapor to the engine. The valve will also be opened during some portions of the EVAP testing when the engine is running, allowing engine vacuum to enter the EVAP system.

Purge Tube Check Valve

Turbocharged vehicles have a check valve in the purge tube between the EVAP purge solenoid valve and the EVAP canister to prevent pressurization of the EVAP system under boost conditions. Note that the presence of this one-way check valve prevents pressure testing the EVAP system for leaks at the EVAP canister purge tube connector.

EVAP Canister

The canister is filled with carbon pellets used to absorb and store fuel vapors. Fuel vapor is stored in the canister until the ECM determines that the vapor can be consumed in the normal combustion process.

Vapor Recirculation Tube

A vapor path between the fuel fill pipe and the vapor tube to the carbon canister is necessary for Vehicle Onboard Diagnostics to fully diagnose the EVAP system. It also accommodates service diagnostic procedures by allowing the entire EVAP system to be diagnosed from either end of the system.

Fuel Tank Pressure Sensor

The FTP sensor measures the difference between the pressure or vacuum in the fuel tank and outside air pressure. The ECM provides a 5 V reference and a ground to the FTP sensor. Depending on the vehicle, the sensor can be located in the vapor space on top of the fuel tank, in the vapor tube between the canister and the tank, or on the EVAP canister. The FTP sensor provides a signal voltage back to the ECM that can vary between 0.1-4.9 V. A high FTP sensor voltage indicates a low fuel tank pressure or vacuum. A low FTP sensor voltage indicates a high fuel tank pressure.

Fuel Fill Pipe Check Valve

The check valve on the fuel fill pipe is there to prevent spit-back during refueling.

EVAP Vent Solenoid Valve

The EVAP vent solenoid valve controls fresh airflow into the EVAP canister. The valve is normally open. The canister vent solenoid valve is closed only during EVAP system tests performed by the ECM.

Fuel Fill Cap

The fuel fill cap is equipped with a seal and a vacuum relief valve.

Capless Fuel Fill

Some vehicles may have a capless fuel fill design behind a locking fuel door. There is no fuel fill cap to remove. One just fully inserts the fuel nozzle into the fill neck, making sure it latches before refueling. Flapper valves close to seal this interface once the fill nozzle is removed.

ELECTRONIC IGNITION SYSTEM DESCRIPTION

Electronic Ignition System Operation

The electronic ignition system produces and controls the high energy secondary spark. This spark ignites the compressed air/fuel mixture at precisely the correct time, providing optimal performance, fuel economy, and control of exhaust emissions. The engine control module (ECM) collects information from the crankshaft position sensor and the intake/exhaust camshaft position sensors to determine the sequence, dwell, and timing of the spark for each cylinder. The ECM transmits a frequency signal to the ignition coil module on the individual ignition control circuits to fire the spark plugs.

Crankshaft Position Sensor

The crankshaft position sensor is an externally magnetically biased digital output integrated circuit sensing device. The sensor provides a pulse for each magnetic pole of the encoder wheel on the crankshaft. The sensor produces an ON/OFF DC voltage of varying frequency, with 58 output pulses per crankshaft revolution. The frequency of the sensor output depends on the velocity of the crankshaft. The ECM uses sensor signal pulse to determine crankshaft speed and position to calculate the best timing for ignition and fuel injection. The ECM also uses the crankshaft position sensor information to control camshaft phasing and to detect cylinder misfire.

The ECM also has a dedicated replicated crankshaft position sensor signal output circuit that may be used as an input signal to other modules for monitoring engine RPM.

The crankshaft position sensor is connected to the engine control module by the circuits listed below:

- A 5 V reference circuit
- A low reference circuit
- A signal circuit

Crankshaft Encoder Wheel

The crankshaft encoder wheel is part of the crankshaft. The encoder wheel consists of 58 tooth and a reference gap. Each tooth on the encoder wheel is spaced 6° apart with a 12° space for the reference gap. The pulse from the reference gap is known as the sync pulse. The sync pulse is used to synchronize the ignition coil module firing sequence with the crankshaft position while the other tooth provides cylinder location during a revolution.

Camshaft Position Sensors

The intake and exhaust camshaft position sensors are each triggered by a notched reluctor wheel built onto the camshaft sprockets. The four signal pulses occur every camshaft revolution. Each notch is a different size which is used to identify the compression stroke of each cylinder and to enable sequential fuel injection. The camshaft position sensors are connected to the ECM by the circuits listed below:

- A 5 V reference circuit
- A low reference circuit
- A signal circuit

Ignition Coil Module

The ignition coil module integrates the 4 coils and the ignition control module within a single sealed component.

The ignition coil module has the following circuits:

- An ignition voltage circuit
- A ground
- A low reference circuit
- 4 ignition coil control circuits

The ECM controls the individual coils by transmitting timing pulses on the ignition coil control circuit to each ignition coil to enable a spark event.

The spark plugs are connected to each coil by a short boot. The boot contains a spring that conducts the spark energy from the coil to the spark plug. The spark plug electrode is coated with platinum for long wear and higher efficiency.

Engine Control Module (ECM)

The ECM controls all ignition system functions and constantly adjusts the spark timing. The ECM monitors information from various sensor inputs that include the following:

- The crankshaft position sensor
- The accelerator pedal position (APP)
- The manifold absolute pressure (MAP) sensor
- The intake air temperature (IAT) sensor
- The vehicle speed sensor (VSS)
- The engine knock sensor
- The engine coolant temperature (ECT) sensor
- The mass airflow (MAF) sensor
- The camshaft position sensors

KNOCK SENSOR SYSTEM DESCRIPTION

Circuit/System Description

The knock sensor system enables the engine control module (ECM) to control the ignition timing for the best possible performance while protecting the engine from potentially damaging levels of detonation. The ECM uses the knock sensor system to test for abnormal engine noise that may indicate detonation, also known as spark knock.

Sensor Description

This knock sensor system uses one or two flat response two-wire sensors. The sensor uses piezo-electric crystal technology that produces an alternating current voltage signal of varying amplitude and frequency based on the engine vibration or noise level. The amplitude and frequency are dependant upon the level of knock that the knock sensor detects. The ECM receives the knock sensor signal through 2 isolated signal circuits.

If the ECM has determined that knock is present, it will retard the ignition timing to attempt to reduce the knock. The ECM is capable of controlling spark retard on an individual cylinder basis. The ECM will always try to work back to a zero compensation level, or no spark retard. Knock sensor diagnostics are calibrated to detect faults with the knock sensor circuitry inside the ECM, the knock sensor wiring, or the knock sensor voltage output. Some diagnostics are also calibrated to detect constant noise from an outside influence such as a loose/damaged component or excessive mechanical engine noise.

CRANKCASE VENTILATION SYSTEM DESCRIPTION

Results of Incorrect Operation

A plugged positive crankcase ventilation (PCV) orifice or hose may cause the following conditions:

- Rough idle
- Stalling or slow idle speed

- Oil leaks
- Oil in the throttle body
- Sludge in the engine

Functional Check

With these systems, any blow-by in excess of the system capacity, from a badly worn engine, sustained heavy load, etc., is exhausted into the air cleaner and is drawn into the engine.

Proper operation of the crankcase ventilation system depends upon a sealed engine. If oil slugging or dilution is noted and the crankcase ventilation system is functioning properly, check the engine for a possible cause. Correct any problems.

If an engine is idling rough, inspect for a clogged PCV orifice, a dirty vent filter, air cleaner element, or plugged hose. Replace as required. Use the following procedure:

- Remove the PCV hose from the cylinder head cover.
- Operate the engine at idle.
- Place your thumb over the end of the hose in order to check for a vacuum. If there is no vacuum at the hose, inspect for the following items:
  - Plugged hoses
  - The manifold port
- Turn OFF the engine.
- Inspect the PCV orifice in the cylinder head cover for debris or blockage.

AIR INTAKE SYSTEM DESCRIPTION

Circuit/System Description

The primary function of the air intake system is to provide filtered air to the engine. The system uses a filter element mounted in a housing. The filter housing is remotely mounted and uses intake ducts to route the incoming air into the throttle body. The secondary function of the air intake system is to muffle air induction noise. This is achieved by the use of resonators attached to the air intake ducts. The resonators are tuned to the specific powertrain. The intake air temperature (IAT) sensor is used to measure the temperature of the air entering the engine.

Intake Manifold Tuning Solenoid Valve

The intake manifold tuning solenoid valve system uses variable air induction tuning in order to achieve maximum performance and efficiency over the entire operating range of the engine. The characteristic torque curve of a normally aspirated engine depends mainly on how the engines average pressure changes over the engine speed range. The average pressure is proportional to the volume of the air mass present in the cylinder when the inlet valve is closed. The design of the inlet system determines how large an air mass can be drawn into a cylinder at a given engine speed. An intake manifold tuning solenoid valve is used to change the intake manifold plenum configuration. When the intake manifold tuning solenoid valve is open, the intake manifold is configured to one large plenum. When the intake manifold tuning solenoid valve is closed, the intake manifold

is configured to two smaller plenums. The two intake manifold plenum sizes result in different torque curves which improves performance at low and high engine speeds.

During low speed, high load conditions the intake manifold tuning solenoid valve is closed creating a longer runner path inside the plenum which increases torque. During higher engine speeds and loads, the intake manifold tuning solenoid valve opens creating a shorter runner path inside the plenum which increases horsepower. Ignition voltage is supplied to the intake manifold tuning solenoid valve solenoid through a fuse when the ignition key is turned ON. The intake manifold tuning solenoid valve solenoid is normally closed which will not allow vacuum to pass through it. When the engine speed and load are increased above a calibrated threshold, the ECM provides a ground to the intake manifold tuning solenoid valve, energizing the intake manifold tuning solenoid valve and allowing a vacuum from the intake manifold tuning valve vacuum tank to be applied to the intake manifold tuning actuator valve. The intake manifold tuning actuator valve then opens the intake manifold tuning valve in the intake manifold for desired performance. The variable intake manifold system consists of the following components:

- The intake manifold tuning solenoid valve
- The intake manifold tuning valve vacuum reservoir
- The intake manifold tuning vacuum actuator
- The intake manifold tuning valve
- An intake manifold

Ignition voltage is supplied directly to the intake manifold tuning solenoid valve. The engine control module (ECM) controls the intake manifold tuning solenoid valve by grounding the control circuit via an internal driver switch. The primary function of the driver is to supply ground for the intake manifold tuning solenoid valve. The ECM can determine if the control circuit is open, shorted to ground, or shorted to a voltage by monitoring the voltage on the control circuit.

SECONDARY AIR INJECTION SYSTEM DESCRIPTION

The Secondary Air Injection System aids in the reduction of hydrocarbon exhaust emissions during a cold start. This occurs when the start-up engine coolant temperature (ECT) is between -10 to +56°C (14-133°F), the intake air temperature (IAT) is greater than -10°C (14°F) and it has been more than 60 minutes since the last engine start. The secondary air injection pump operates 5-60 s after start-up.

The engine control module (ECM) activates the secondary air injection system by simultaneously completing the ground paths for the secondary air injection pump relay and the secondary air injection solenoid (shutoff and check) valve relay. This action closes the relays' internal contacts. The pump and valve are in turn energized. The pump turns ON and the valve opens.

The secondary air injection pump sends pressurized filtered fresh air into the pipe/hose, through the open valve and into the exhaust manifold. The extra air accelerates the catalyst operation, helping it to reach operating temperature faster. The secondary air injection pump remains ON for a short period of time after the valve is commanded OFF. When the pump is commanded OFF it will not run or be activated until the next vehicle cold start. When the secondary air injection system is inactive, the valve is closed to prevent air/exhaust flow in either direction.

The ECM monitors the secondary air injection system pressure by tracking voltage signal from the pressure

sensor, which is integral to the solenoid (shutoff and check) valve assembly.

The ECM utilizes a 3 phase diagnostic routine to test the secondary air injection system:

During phase 1, DTCs P0411 and P2430 run and both the secondary air injection pump and the solenoid (shutoff and check) valve are activated. Normal secondary air function occurs. Expected system pressure is 5-13 kPa (0.7-1.9 psi) above BARO.

During phase 2, DTCs P2430 and P2440 run and only the secondary air injection pump is activated. The valve is closed. Pressure sensor performance and valve deactivation are tested. Expected system pressure is 14-25 kPa (2.0-3.6 psi) above BARO.

During phase 3, DTC P2444 runs and neither the secondary air injection pump nor the valve are activated. Secondary air injection pump deactivation is tested. Expected system pressure equals BARO.

The secondary air injection system includes the following components:

- The secondary air injection pump-The electric secondary air injection pump supplies pressurized, filtered air to the secondary air injection solenoid (shutoff and check) valve. The secondary air injection pump is a turbine type pump that is permanently lubricated and requires no periodic maintenance.

NOTE: The secondary air injection solenoid valve and the pressure sensor are serviced as an assembly.

- The secondary air injection solenoid (shutoff and check) valve assembly-The valve assembly has a direct current (DC) motor operated valve. When the valve motor is energized by the secondary air injection solenoid valve relay, the valve opens, pressurized air from the secondary air injection pump flows through the valve and is directed into the exhaust manifold.
- The secondary air injection pressure sensor-The pressure sensor is integral to the secondary air injection solenoid valve assembly. The sensor is a 3-wire sensor that measures the secondary air injection system pressure at the inlet of the valve assembly.
- The secondary air injection pump relay-The relay supplies high current and battery voltage to the secondary air injection pump. The ECM commands the relay ON by supplying a ground to the relay control circuit.
- The secondary air injection solenoid valve relay-The relay supplies high current and battery voltage to the secondary air injection solenoid valve. The ECM commands the relay ON by supplying a ground to the relay control circuit.
- The pipes and hoses-The secondary air injection pump inlet hose carries filtered air from the engine intake air cleaner to the secondary air injection pump inlet. The secondary air injection pump pipe carries the air from the pump outlet to the solenoid valve which in turn feeds the exhaust manifold.

System Fault Detection

The ECM monitors the secondary air injection system for faults during cold start operation. When the system's pressure or relay circuits operations vary too far from the expected values, a DTC will set. Diagnostics detect the following conditions:

- A partially or fully blocked or leaking secondary air injection system
- A malfunctioning secondary air injection pump
- A malfunctioning secondary air injection solenoid (shutoff and check) valve assembly
- A malfunctioning secondary air injection pressure sensor
- A restricted exhaust system
- A malfunctioning secondary air injection pump and secondary air injection valve relay

The following DTCs set when a secondary air injection system fault is detected:

- DTC P0411 - A secondary air injection system insufficient airflow fault condition has been detected.
- DTC P0412 - A secondary air injection valve relay coil circuit fault condition has been detected.
- DTC P0418 - A secondary air injection pump relay coil circuit fault condition has been detected.
- DTC P2430 - A secondary air injection pressure sensor signal stuck in range fault condition has been detected.
- DTC P2431 - A skewed air injection pressure sensor signal has been detected.
- DTC P2432 - A secondary air injection pressure sensor signal voltage below the minimum range of the sensor fault condition has been detected.
- DTC P2433 - A secondary air injection pressure sensor signal voltage is above the maximum range of the sensor fault condition has been detected.
- DTC P2440 - The solenoid (shutoff and check) valve is stuck open or a system leak between the pump and the valve has been detected.
- DTC P2444 - A secondary air injection pump stuck ON fault condition has been detected.

2013 ENGINE PERFORMANCE

Engine Controls and Fuel - 1.8L LUW and LWE - Diagnostic Information and Procedures - Cruze

DIAGNOSTIC INFORMATION AND PROCEDURES

DTC P0010, P0013, OR P2088-P2091

Diagnostic Instructions

- Perform the **Diagnostic System Check - Vehicle** prior to using this diagnostic procedure.
- Review **Strategy Based Diagnosis** for an overview of the diagnostic approach.
- **Diagnostic Procedure Instructions** provides an overview of each diagnostic category.

DTC Descriptors

DTC P0010

Intake Camshaft Position Actuator Solenoid Valve Control Circuit

DTC P0013

Exhaust Camshaft Position Actuator Solenoid Valve Control Circuit

DTC P2088

Intake Camshaft Position Actuator Solenoid Control Circuit Low Voltage

DTC P2089

Intake Camshaft Position Actuator Solenoid Control Circuit High Voltage

DTC P2090

Exhaust Camshaft Position Actuator Solenoid Control Circuit Low Voltage

DTC P2091

Exhaust Camshaft Position Actuator Solenoid Control Circuit High Voltage

Diagnostic Fault Information

Circuit	Short to Ground	High Resistance	Open	Short to Voltage	Signal Performance
Camshaft Position	P0010,			P0010,	

Actuator Solenoid Valve High Control	P0013, P2088, P2090	P0010, P0013	P0010, P0013	P0013, P2089, P2091	P0011, P0014
Camshaft Position Actuator Solenoid Valve Low Reference	-	P0010, P0013	P0010, P0013	-	-

Circuit/System Description

The camshaft position actuator system enables the Engine Control Module (ECM) to change the timing of the camshafts while the engine is operating. The Camshaft Position Actuator Solenoid Valve signal from the ECM is pulse width modulated (PWM). The ECM controls the Camshaft Position Actuator Solenoid Valve duty cycle by controlling the amount of solenoid valve ON time. The Camshaft Position Actuator Solenoid Valve controls the advance or the retard of each camshaft. The Camshaft Position Actuator Solenoid Valve controls the oil flow that applies the pressure to advance or retard the camshafts.

The ECM controls the Camshaft Position Actuator Solenoid Valve by suppling a 12 V pulse width modulated (PWM) signal. The ECM supplies a ground to the low reference circuit.

Conditions for Running the DTC

- The ignition voltage is greater than 11 V.
- The ignition switch is in the crank or run position.
- The ECM has commanded the Camshaft Position Actuator Solenoid Valve ON.
- The DTCs run continuously once the above conditions are met.

Conditions for Setting the DTC

The ECM detects that the commanded state of the driver and the actual state of the control circuit do not match for greater than 5 seconds.

Action Taken When the DTC Sets

DTCs P0010, P0013, P2088, P2089, P2090 and P2091 are type B DTCs.

Conditions for Clearing the DTC

DTCs P0010, P0013, P2088, P2089, P2090 and P2091 are type B DTCs.

Diagnostic Aids

If the condition is intermittent, move the related harnesses and connectors, with the engine operating, while monitoring the scan tool Circuit Test Status parameters for the component. The Circuit Test Status parameters change from OK or Not Run to Malfunction if there is a condition with the circuit or a connection.

Reference Information

Schematic Reference

Engine Controls Schematics

Connector End View Reference

COMPONENT CONNECTOR END VIEWS - INDEX

Description and Operation

Camshaft Actuator System Description

Electrical Information Reference

- **Circuit Testing**
- **Connector Repairs**
- **Testing for Intermittent Conditions and Poor Connections**
- **Wiring Repairs**

DTC Type Reference

Powertrain Diagnostic Trouble Code (DTC) Type Definitions

Scan Tool Reference

Control Module References for scan tool information

Circuit/System Verification

NOTE: If a crankshaft or camshaft position sensor DTC is set, the Camshaft Position Actuator output control will not function.

1. Ignition ON.
2. Verify DTC P0335, P0336, P0340, and P0341 is not set.
   - **If any of the DTCs are set**

     Refer to **Diagnostic Trouble Code (DTC) List - Vehicle** for further diagnosis.

   - **If none of the DTCs are set**
3. Verify the scan tool parameters listed below do not display Malfunction:
   - Camshaft Position Actuator Solenoid Valve Control Circuit Open test status
   - Camshaft Position Actuator Solenoid Valve Control Circuit High Voltage test status
   - Camshaft Position Actuator Solenoid Valve Control Circuit Low Voltage test status
   - **If Malfunction is displayed**

Refer to Circuit/System Testing below.

- **If Malfunction is not displayed**

4. Engine idling at normal operating temperature.
5. Verify the scan tool parameters listed below do not display Malfunction when commanding the appropriate scan tool Camshaft Position Actuator from 0-10° and back to 0° with a scan tool:
   - Camshaft Position Actuator Solenoid Valve Control Circuit Open test status
   - Camshaft Position Actuator Solenoid Valve Control Circuit High Voltage test status
   - Camshaft Position Actuator Solenoid Valve Control Circuit Low Voltage test status
   - **If Malfunction is displayed**

     Refer to Circuit/System Testing below.

   - **If Malfunction is not displayed**
6. Operate the vehicle within the Conditions for Running the DTC. You may also operate the vehicle within the conditions that you observed from the Freeze Frame/Failure Records data.
7. Verify the DTC does not set.
   - **If the DTC sets**

     Refer to Circuit/System Testing below.

   - **If the DTC does not set**
8. All OK.

Circuit/System Testing

1. Ignition OFF and all vehicle systems OFF, disconnect the harness connector at the appropriate Q6 Camshaft Position Actuator Solenoid Valve. It may take up to 2 minutes for all vehicle systems to power down.
2. Test for less than 5 ohms between the low reference circuit terminal 1 and ground.
   - **If 5 ohms or greater**
   1. Ignition OFF.
   2. Disconnect the harness connector at the K20 Engine Control Module.
   3. Test for less than 2 ohms in the low reference circuit end to end.
      - If 2 ohms or greater, repair the open/high resistance in the circuit.
      - If less than 2 ohms, replace the K20 Engine Control Module.
   - **If less than 5 ohms**
3. Ignition ON.

NOTE: A test lamp must be used for this test. The control circuit is pulled-up to a low current voltage, 1.5-3.5 V on the control circuit is normal.

4. Verify that a test lamp does not illuminate between the control circuit terminal 2 and ground.
    - **If the test lamp illuminates**
    1. Ignition OFF.
    2. Disconnect the harness connector at the K20 Engine Control Module.
    3. Ignition ON.
    4. Test for less than 1 V between the control circuit and ground.
        - If 1 V or greater, repair the short to voltage on the circuit
        - If less than 1 V, replace the K20 Engine Control Module
    - **If the test lamp does not illuminate**
5. Remove the test lamp.
6. Connect the DMM black lead to the control circuit terminal 2. Connect the DMM red lead to B+. Set the DMM on the diode setting. Command the CMP actuator solenoid ON and OFF with a scan tool. The DMM should transition from OL when commanded OFF to less than 1 V when commanded ON.
    - **If the circuit voltage does not correspond to the specified values**
    1. Ignition OFF.
    2. Disconnect the harness connector at the K20 Engine Control Module.
    3. Test for less than 2 ohms in the control circuit end to end.
        - If 2 ohms or greater, repair the open/high resistance or short to ground in the circuit
        - If less than 2 ohms, replace the K20 Engine Control Module
    - **If the circuit voltage corresponds to the specified values**
7. Test or replace the appropriate Q6 Camshaft Position Actuator Solenoid Valve.

Component Testing

1. Ignition OFF.
2. Disconnect the harness connector at the appropriate Q6 Camshaft Position Actuator Solenoid Valve.
3. Test for 7-12 ohms between the control terminal 2 and the low reference circuit terminal 1.
    - **If not between 7-12 ohms**

      Replace the Q6 Camshaft Position Actuator Solenoid Valve.

    - **If between 7-12 ohms**
4. Test for infinite resistance between each terminal and theQ6 Camshaft Position Actuator Solenoid Valve housing.
    - **If not infinite resistance**

      Replace the Q6 Camshaft Position Actuator Solenoid Valve.

    - **If infinite resistance**
5. All OK

Repair Instructions

Perform the **Diagnostic Repair Verification** after completing the repair.

- **Camshaft Position Actuator Solenoid Valve Replacement**
- **Control Module References** for Engine Control Module replacement, setup, and programming

DTC P0011 OR P0014

Diagnostic Instructions

- Perform the **Diagnostic System Check - Vehicle** prior to using this diagnostic procedure.
- Review **Strategy Based Diagnosis** for an overview of the diagnostic approach.
- **Diagnostic Procedure Instructions** provides an overview of each diagnostic category.

DTC Descriptors

DTC P0011

Intake Camshaft Position System Performance

DTC P0014

Exhaust Camshaft Position System Performance

Diagnostic Fault Information

Circuit	Short to Ground	High Resistance	Open	Short to Voltage	Signal Performance
Camshaft Position Actuator Solenoid Valve High Control	P0010, P0013, P2088, P2090	P0010, P0013	P0010, P0013	P0010, P0013, P2089, P2091	P0011, P0014
Camshaft Position Actuator Solenoid Valve Low Reference	-	P0010, P0013	P0010, P0013	-	-

Circuit/System Description

The camshaft position (CMP) actuator system enables the engine control module (ECM) to change the timing of the camshafts while the engine is operating. The camshaft position actuator solenoid valves are operated hydraulically in order to change the angle of the camshaft relative to crankshaft position. The camshaft position actuator solenoid valves are controlled by the engine control module (ECM). The ECM sends a pulse width modulated signal to the camshaft position actuator solenoid valves. The camshaft position actuator solenoid valves control the amount of engine oil flow that applies the pressure to advance or retard the camshafts.

Conditions for Running the DTC

- DTC P0010, P0013, P0016, P0017, P0335, P0340, P0341, P0365, or P0366 is not set.
- The engine is running.
- The ignition voltage is between 11-32 V.
- The camshaft position actuator is enabled.
- The rate of change in the camshaft position is less than 3° for 4 s.
- DTCs P0011 and P0014 runs continuously once the above conditions are met for greater than 0.1 s.

Conditions for Setting the DTC

The ECM detects a difference between the camshaft position angle and the desired camshaft position angle is greater than 6 to 10° based on engine coolant temperature and engine speed.

Action Taken When the DTC Sets

DTCs P0011 and P0014 are Type B DTCs.

Conditions for Clearing the DTC

DTCs P0011 and P0014 are Type B DTCs.

Diagnostic Aids

- The engine oil condition has a major impact on the camshaft actuator system.
- A low oil level condition may set this DTC. The engine may require an oil change. Inquire with the customer when the last oil change was performed. You may also monitor the scan tool Engine Oil Life Remaining parameter. Advise the customer an oil change may be required.
- Inspect the engine for any recent engine mechanical repairs. An incorrectly installed camshaft, camshaft actuator, or timing belt can cause this DTC to set.
- A resistance greater than 8 ohms on the camshaft position actuator solenoid valve control circuit may set this DTC. If you suspect high resistance, ground the control circuit while the engine is idling. The scan tool Intake or Exhaust Camshaft Position Actuator Solenoid Valve Control Circuit Low Voltage Test Status should display Malfunction. If the parameter displays OK, test the control circuit for high resistance.

Reference Information

Schematic Reference

Engine Controls Schematics

Connector End View Reference

COMPONENT CONNECTOR END VIEWS - INDEX

Description and Operation

Camshaft Actuator System Description

Electrical Information Reference

- **Circuit Testing**
- **Connector Repairs**
- **Testing for Intermittent Conditions and Poor Connections**
- **Wiring Repairs**

DTC Type Reference

Powertrain Diagnostic Trouble Code (DTC) Type Definitions

Scan Tool Reference

Control Module References for scan tool information

Circuit/System Verification

NOTE:

- **The engine oil level and the oil pressure are critical to the correct operation of the camshaft position actuator system. Verify that the engine has the correct oil level and the correct oil pressure before continuing with this diagnostic.**
- **The engine oil condition has a major impact on the camshaft actuator system. Debris in the oil can interfere with the camshaft position actuator solenoid and the mechanical camshaft actuator operation. Inspect for dirty or degraded crankcase oil. The engine may require an oil change. Inquire with the customer when the last oil change was performed. You may also monitor the scan tool Engine Oil Life Remaining parameter. Advise the customer an oil change may be required.**

1. Ignition ON.
2. Verify the correct engine oil pressure. Refer to **Oil Pressure Diagnosis and Testing**
   - **If the oil level and the oil pressure are not correct**

     Repair as necessary

   - **If the oil level and the oil pressure are correct**

NOTE: **If a crankshaft or camshaft position sensor DTC is set, the scan tool Camshaft Position Actuator output control will not function.**

3. Verify DTC P0010, P0013, P0016, P0017, P0335, P0336, P0340, P0341, P0365, P0366, P2088, P2089, P2090 or P2091 is not set.

- **If any of the DTCs are set**

  Refer to **Diagnostic Trouble Code (DTC) List - Vehicle** for further diagnosis.

- **If none of the DTCs are set**

4. Engine idling.
5. Verify the scan tool parameters are less than 2° in each of the commanded states when commanding the Camshaft Position Actuator from 0-20° and back to 0° with the scan tool.
   - Intake Camshaft Position Variance
   - Exhaust Camshaft Position Variance
   - **If 2° or greater**

     Refer to Circuit/System Testing below.

   - **If less than 2°**
6. Verify that DTC P0011 or P0014 is not set.
   - **If any of the DTCs are set**

     Refer to Circuit/System Testing below.

   - **If none of the DTCs set**
7. Operate the vehicle within the Conditions for Running the DTC. You may also operate the vehicle within the conditions that you observed from the Freeze Frame/Failure Records data.
8. Verify the DTC does not set.
   - **If the DTC sets**

     Refer to Circuit/System Testing below.

   - **If the DTC does not set**
9. All OK.

Circuit/System Testing

1. Ignition OFF, disconnect the harness connector at the appropriate Q6 Camshaft Position Actuator Solenoid Valve. It may take up to 2 minutes for all vehicle systems to power down.
2. Test for less than 5 ohms between the low reference circuit terminal 1 and ground.
   - **If 5 ohms or greater**
   1. Ignition OFF, disconnect the harness connector at the K20 Engine Control Module.
   2. Test for less than 2 ohms in the low reference circuit end to end.
      - If 2 ohms or greater, repair the open/high resistance in the circuit.
      - If less than 2 ohms, replace the K20 Engine Control Module.
   - **If less than 5 ohms**

3. Ignition ON.

NOTE: A test lamp must be used for this test. The control circuit is pulled-up to a low current voltage, 1.5-4.5 V on the control circuit is normal.

4. Verify that a test lamp does not illuminate between the control circuit terminal 2 and ground.
   - **If the test lamp illuminates**
   1. Ignition OFF, disconnect the harness connector at the K20 Engine Control Module, ignition ON.
   2. Test for less than 1 V between the control circuit and ground.
      - If 1 V or greater, repair the short to voltage on the circuit.
      - If less than 1 V, replace the K20 Engine Control Module.
   - **If the test lamp does not illuminate**
5. Remove the test lamp.
6. Verify the scan tool parameters listed below do not display Malfunction when commanding the appropriate Camshaft Position Actuator Solenoid Valve ON with a scan tool.
   - Intake Camshaft Position Actuator Solenoid Valve Control Circuit Low Voltage Test Status
   - Exhaust Camshaft Position Actuator Solenoid Valve Control Circuit Low Voltage Test Status
   - Intake Camshaft Position Actuator Solenoid Valve Control Circuit High Voltage Test Status
   - Exhaust Camshaft Position Actuator Solenoid Valve Control Circuit High Voltage Test Status
   - **If Malfunction is displayed**
   1. Ignition OFF, disconnect the harness connector at the K20 Engine Control Module.
   2. Test for less than 2 ohms in the control circuit end to end.
      - If 2 ohms or greater, repair the open/high resistance or short to ground in the circuit.
      - If less than 2 ohms, replace the K20 Engine Control Module.
   - **If Malfunction is not displayed**
7. Ignition OFF, remove the Q6 Camshaft Position Actuator Solenoid Valve.
8. Verify the conditions listed below do not exist with the Q6 Camshaft Position Actuator Solenoid Valve:
   1. Torn, restricted, mis-positioned, or missing screens.
   2. Engine oil leak between the oil sealing lands of the solenoid. Inspect the lands of the solenoid for nicks.
   3. Oil seepage at the solenoid connector.
   - **If a condition is found**

     Replace the Q6 Camshaft Position Actuator Solenoid Valve.

   - **If a condition is not found**

NOTE: After swapping toe solenoids, install jumper wires to the appropriate terminals of the harness connectors and the solenoids.

9. Ignition OFF, swap the Q6 Camshaft Position Actuator Solenoid Valve with the Q6 Camshaft Position Actuator Solenoid Valve that is operating correctly.
10. Engine idling.
11. Verify the scan tool Camshaft Position Variance parameter is less than 2° in each of the commanded states when commanding the Camshaft Position Actuator from 0-20° and back to 0° with a scan tool.
    - **If 2° or greater**

      Replace the mechanical camshaft position actuator.

    - **If less than 2°**
12. Test or replace the Q6 Camshaft Position Actuator Solenoid Valve.

Component Testing

1. Vehicle OFF
2. Disconnect the harness connector at the Q6 Camshaft Position Actuator Solenoid Valve.
3. Test for 7-12 ohms between the control terminal 2 and the low reference circuit terminal 1.
    - **If not between 7-12 ohms**

      Replace the Q6 Camshaft Position Actuator Solenoid Valve.

    - **If between 7-12 ohms**
4. Test for infinite resistance between each terminal and the Q6 Camshaft Position Actuator Solenoid Valve housing.
    - **If not infinite resistance**

      Replace the Q6 Camshaft Position Actuator Solenoid Valve.

    - **If infinite resistance**
5. All OK

Repair Instructions

Perform the **Diagnostic Repair Verification** after completing the repair.

- **Camshaft Position Actuator Solenoid Valve Replacement**
- **Control Module References** for ECM replacement, programming and setup.

DTC P0016 OR P0017

Diagnostic Instructions

- Perform the **Diagnostic System Check - Vehicle** prior to using this diagnostic procedure.
- Review **Strategy Based Diagnosis** for an overview of the diagnostic approach.

- **Diagnostic Procedure Instructions** provides an overview of each diagnostic category.

DTC Descriptors

DTC P0016

Crankshaft Position - Intake Camshaft Position Not Plausible

DTC P0017

Crankshaft Position - Exhaust Camshaft Position Not Plausible

Circuit/System Description

The engine control module (ECM) uses the crankshaft position sensor, camshaft position sensor - intake, and the camshaft position sensor - exhaust information to monitor the correlation between the crankshaft, intake camshaft, and exhaust camshaft position.

Conditions for Running the DTC

- Crankshaft and camshaft position sensor signals are synchronized.
- The engine is cranking or running.
- The camshaft position actuator solenoid valves are in the parked position.
- DTCs P0335, P0336, P0340, P0341, P0365, P0366, P0641, or P0651 is not set.
- Time since last execution of the diagnostic is less than 1 s.

Conditions for Setting the DTC

The ECM detects a camshaft to crankshaft misalignment. The DTC sets if the crankshaft position sensor detects 3 sensor pulses that are greater than 12 degrees before or after the normal position during 1 camshaft revolution.

Action Taken When the DTC Sets

DTCs P0016 and P0017 are Type B DTCs.

Conditions for Clearing the DTC

DTCs P0016 and P0017 are Type B DTCs.

Diagnostic Aids

The following conditions can also set the DTCs:

- A short to ground in a camshaft position actuator solenoid valve control circuit.
- Crankshaft end play out of specification.
- A crankshaft reluctor wheel that has moved in relationship to top dead center (TDC).

Reference Information

Description and Operation

Camshaft Actuator System Description

DTC Type Reference

Powertrain Diagnostic Trouble Code (DTC) Type Definitions

Scan Tool Reference

Control Module References for scan tool information

Circuit/System Verification

1. Ignition ON.
2. Verify DTC P0335, P0336, P0340, P0341, P0365, P0366, P0641 or P0651 is not set.
   - **If any of the DTCs are set**

     Refer to **Diagnostic Trouble Code (DTC) List - Vehicle** .

   - **If none of the DTCs are set**
3. Engine Running at normal operating temperature.
4. Verify DTC P0016 or P0017 is not set.
   - **If the DTC is set**

     Inspect for the following and repair as necessary:

     - A Q6 Camshaft Position Actuator Solenoid Valve that is stuck in the full advance or retard position.
     - The correct installation of the Q6 Camshaft Position Actuator Solenoid Valves.
     - The correct installation of the B23 Camshaft Position Sensors.
     - The correct installation of the B26 Crankshaft Position Sensor.
     - A timing belt tensioner condition.
     - An incorrectly installed timing belt.
     - Excessive play in the timing belt.
     - A timing belt with damaged teeth.
     - A crankshaft reluctor wheel that has moved in relationship to top dead center (TDC) on the crankshaft.
   - **If the DTC is not set**
5. Operate the vehicle within the Conditions for Running the DTC. You may also operate the vehicle within the conditions that you observed from the Freeze Frame/Failure Records data.

6. Verify the DTC does not set.
   - **If the DTC sets**

     A mechanical condition listed above still exists.

   - **If the DTC does not set**
7. All OK.

Repair Instructions

Perform the **Diagnostic Repair Verification** after completing the repair.

- **Camshaft Position Actuator Solenoid Valve Replacement**
- **Camshaft Position Sensor Replacement**
- **Crankshaft Position Sensor Replacement**
- **Timing Belt Replacement**

DTC P0030-P0032, P0036-P0038, P0053, P0054, P0135, OR P0141

Diagnostic Instructions

- Perform the **Diagnostic System Check - Vehicle** prior to using this diagnostic procedure.
- Review **Strategy Based Diagnosis** for an overview of the diagnostic approach.
- **Diagnostic Procedure Instructions** provide an overview of each diagnostic category.

DTC Descriptors

DTC P0030

HO2S Heater Control Circuit Sensor 1

DTC P0031

HO2S Heater Control Circuit Low Voltage Sensor 1

DTC P0032

HO2S Heater Control Circuit High Voltage Sensor 1

DTC P0036

HO2S Heater Control Circuit Sensor 2

DTC P0037

HO2S Heater Control Circuit Low Voltage Sensor 2

DTC P0038

HO2S Heater Control Circuit High Voltage Sensor 2

DTC P0053

HO2S Heater Resistance Sensor 1

DTC P0054

HO2S Heater Resistance Sensor 2

DTC P0135

HO2S Heater Performance Sensor 1

DTC P0141

HO2S Heater Performance Sensor 2

Diagnostic Fault Information

Circuit	Short to Ground	Open/High Resistance	Short to Voltage	Signal Performance
HO2S Heater Voltage Supply	P0030, P0036, P0037, P0132, P0134, P0135, P0138, P0141, *	P0030, P0036, P0132, P0134, P0135, P0138, P0140, P0141	P0690	P0135, P0141
HO2S Heater Control	P0030, P0031, P0036, P0037, P0053, P0054, P0135, P0141	P0030, P0036, P0132, P0134, P0135, P0138, P0140, P0141	P0030, P0032, P0036, P0038, P0132, P0134, P0135, P0138, P0140, P0141, P0690	P0135, P0141
* Opens Fuse				

Circuit/System Description

Heated oxygen sensors (HO2S) are used for fuel control and post-catalyst monitoring. Each HO2S compares the oxygen content of the surrounding air with the oxygen content in the exhaust stream. Each HO2S must reach operating temperature to provide an accurate voltage signal. A heating element inside each of the HO2S minimizes the time required for the sensor to reach operating temperature. Voltage is provided to the heater by an ignition voltage circuit through a fuse. With the engine running, ground is provided to the heater by the HO2S heater low control circuit, through a low side driver within the ECM. The ECM uses pulse-width

modulation (PWM) to control the HO2S heater operation to maintain a specific HO2S operating temperature range.

Conditions for Running the DTC

P0030, P0031, P0032, P0036, P0037 and P0038

- The engine speed is greater than 400 RPM.
- The Ignition voltage is between 11-32 V.
- The DTCs run continuously when the above conditions are met for greater than 5 s.

P0053 and P0054

- DTCs P0111, P0112, P0113, P0114, P0116, P0117, P0118, P0119 or P2610 are not set.
- The ignition is OFF for greater than 8 h.
- The engine is running.
- The engine coolant temperature (ECT) and the intake air temperature (IAT) are within 8°C (14°F).
- The ECT is between -30 to +45°C (-22 to +113°F).
- The Ignition voltage is less than 32 V.
- The DTCs run once per valid cold start-up when the above conditions are met.

P0135 and P0141

- DTCs P0116, P0117, P0118, P0119 or P0128 are not set.
- The system voltage is between 10-32 V.
- The HO2S heaters are at operating temperature.
- The scan tool HO2S Heater device control is not active.
- The commanded HO2S heater duty cycle is greater than 0%.
- The DTCs run twice per drive cycle when the above conditions are met for greater than 30 s.

Conditions for Setting the DTC

P0030, P0031, P0032, P0036, P0037 and P0038

The ECM detects that the commanded state of the driver and the actual state of the control circuit do not match for greater than 5 s.

P0053 and P0054

The ECM detects the HO2S heater resistance is not within a specified range at engine start-up.

P0135 and P0141

The ECM detects the HO2S heater current is less than 0.30 A or greater than 2.5 A for greater than 8 s.

Action Taken When the DTC Sets

DTC P0030, P0031, P0032, P0036, P0037, P0038, P0053, P0054, P0135, and P0141 are Type B DTCs.

Conditions for Clearing the DTC

DTC P0030, P0031, P0032, P0036, P0037, P0038, P0053, P0054, P0135, and P0141 are Type B DTCs.

Diagnostic Aids

- If the condition is intermittent, move the related harnesses and connectors, with the engine operating, while monitoring the scan tool circuit status parameters for the component. The circuit status parameters will change from OK or Not Run to Malfunction if there is a condition with the circuit or a connection.
- An open fuse in the heated oxygen sensor heater circuit may be caused by the heater element in one of the sensors. The condition may not be present until the sensor operates for a period of time. If no fault is present in the heater circuit, monitor the amperage of each heater with a scan tool to determine if one of the heater elements is the cause of the open fuse. Inspect the sensor pigtail or the harness for contacting the exhaust system.

Reference Information

Schematic Reference

Engine Controls Schematics

Connector End View Reference

COMPONENT CONNECTOR END VIEWS - INDEX

Electrical Information Reference

- **Circuit Testing**
- **Connector Repairs**
- **Testing for Intermittent Conditions and Poor Connections**
- **Wiring Repairs**

DTC Type Reference

Powertrain Diagnostic Trouble Code (DTC) Type Definitions

Scan Tool Reference

Control Module References for scan tool information

Circuit/System Verification

1. Engine running.

2. Verify the parameters listed below do not display Malfunction.
   - HO2S 1 or 2 Heater Control Circuit High Voltage Test Status
   - HO2S 1 or 2 Heater Control Circuit Open Voltage Test Status
   - HO2S 1 or 2 Heater Control Circuit Low Voltage Test Status
   - **If Malfunction is displayed**

     Refer to Circuit/System Testing below.

   - **If Malfunction is not displayed**
3. Observe the scan tool HO2S 1 Heater or HO2S 2 Heater parameter. The amperage should be between 0.3-2.4 A.
   - **If not between 0.3-2.4 A**

     Refer to Circuit/System Testing below.

   - **If between 0.3-2.4 A**
4. Operate the vehicle within the Conditions for Running the DTC. You may also operate the vehicle within the conditions that you observed in the Freeze Frame/Failure Records data.
5. Verify the DTC does not set.
   - **If the DTC sets**

     Refer to Circuit/System Testing below.

   - **If the DTC does not set**
6. All OK.

Circuit/System Testing

1. Ignition OFF, disconnect the harness connector at the appropriate B52 Heated Oxygen Sensor, ignition ON.
2. Verify that a test lamp illuminates between the ignition voltage circuit terminal 1 and ground.
   - **If the test lamp does not illuminate and the circuit fuse is good**
   1. Ignition OFF, remove the test lamp.
   2. Test for less than 2 ohms in the ignition circuit end to end.
      - If 2 ohms or greater, repair the open/high resistance in the circuit.
      - If less than 2 ohms, verify the fuse is not open and there is voltage at the fuse.
   - **If the test lamp does not illuminate and the circuit fuse is open**
   1. Ignition OFF, remove the test lamp.
   2. Test for infinite resistance between the ignition circuit and ground.
      - If less than infinite resistance, repair the short to ground on the circuit.
      - If infinite resistance, test all components connected to the fuse and replace as necessary.

- **If the test lamp illuminates**

3. Verify that a test lamp does not illuminate between the ignition voltage circuit terminal 1 and the control circuit terminal 2.
   - **If the test lamp illuminates**
   1. Ignition OFF, disconnect the harness connector at the K20 Engine Control Module.
   2. Test for infinite resistance between the control circuit and ground.
      - If less than infinite resistance, repair the short to ground on the circuit.
      - If infinite resistance, replace the K20 Engine Control Module.
   - **If the test lamp does not illuminate**
4. Remove the test lamp.
5. Engine running, verify the scan tool HO2S 1 or 2 Heater Control Circuit Open Test Status parameter displays Malfunction.
   - **If Malfunction is not displayed**
   1. Ignition OFF, disconnect the harness connector at the K20 Engine Control Module. Ignition ON.
   2. Test for less than 1 V between the control circuit and ground.
      - If 1 V or greater, repair the short to voltage on the circuit.
      - If less than 1 V, replace the K20 Engine Control Module.
   - **If Malfunction is displayed**

NOTE:

- **Less than 10 ohms of additional resistance on the ignition voltage circuit, or control circuit may set a DTC. If there is a resistance on a circuit, the driver will remain ON and the scan tool HO2S High Voltage Test Status parameter will display OK.**
- **Performing this test may set additional DTCs.**

6. Ignition OFF, install a 3A fused jumper wire between the control circuit terminal 2 and ground. Engine running.
7. Verify the scan tool HO2S 1 or 2 Heater Control Circuit Low Voltage Test Status parameter is Malfunction.
   - **If Malfunction is not displayed**
   1. Ignition OFF, disconnect the harness connector at the K20 Engine Control Module.
   2. Test for less than 2 ohms in the control circuit end to end.
      - If 2 ohms or greater, repair the open/high resistance in the circuit.
      - If less than 2 ohms, replace the K20 Engine Control Module.
   - **If Malfunction is displayed**
8. Test or replace the B52 Heated Oxygen Sensor.

Repair Instructions

Perform the **Diagnostic Repair Verification** after completing the repair.

- **Heated Oxygen Sensor Replacement - Sensor 1**
- **Heated Oxygen Sensor Replacement - Sensor 2**
- Perform the scan tool Heated Oxygen Sensor Resistance Learn Reset after replacing a HO2S.
- **Control Module References** for ECM replacement, programming and setup

DTC P0068 OR P1101

Diagnostic Instructions

- Perform the **Diagnostic System Check - Vehicle** prior to using this diagnostic procedure.
- Review **Strategy Based Diagnosis** for an overview of the diagnostic approach.
- **Diagnostic Procedure Instructions** provides an overview of each diagnostic category.

DTC Descriptor

DTC P0068

Throttle Body Air Flow Performance

DTC P1101

Intake Air Flow System Performance

Circuit/System Description

The engine control module (ECM) compares actual airflow based on throttle position to a calculated airflow based on manifold absolute pressure (MAP) sensor, and mass air flow (MAF).

Conditions for Running the DTC

DTC P0068

- DTC P0102, P0103, P0107, P0108, or P0651 is not set
- The engine speed is at least 800 RPM.
- The Ignition signal is at least 6.0 V.
- The throttle actuator control system is not in reduced power mode, without LUW
- The DTC runs continuously when the above conditions are met.

DTC P1101

- DTC P0102, P0103, P0107, P0108, P0117, P0118, P0128, P0335, or P0336 is not set
- The engine speed is between 400-7 000 RPM; 400-6 000 RPM with LUW
- The engine coolant temperature (ECT) is between -7 to +125°C (+19 to +257°F).
- The intake air temperature (IAT) is between -20 to +125°C (-4 to +257°F).

- The DTC runs continuously when the above conditions are met.

Conditions for Setting the DTC

The ECM detects that the airflow rate is more than the calculated airflow for greater than 0.2 s.

Action Taken When the DTC Sets

- DTC P0068 is a Type A DTC
- DTC P1101 is a Type B DTC.

Conditions for Clearing the DTC

- DTC P0068 is a Type A DTC
- DTC P1101 is a Type B DTC.

Diagnostic Aids

Use a solution of dish soap and water in a spray bottle to pinpoint any suspected air leaks in the induction system. This includes vacuum lines, positive crankcase ventilation system, intake manifold, throttle body.

Reference Information

Schematic Reference

Engine Controls Schematics

Connector End View Reference

COMPONENT CONNECTOR END VIEWS - INDEX

Electrical Information Reference

- **Circuit Testing**
- **Connector Repairs**
- **Testing for Intermittent Conditions and Poor Connections**
- **Wiring Repairs**

DTC Type Reference

Powertrain Diagnostic Trouble Code (DTC) Type Definitions

Scan Tool Reference

Control Module References for scan tool information

Circuit/System Verification

1. Ignition ON, verify that DTC P0641, P0651, P0697, or P06A3 is not set.
   - **If any of the DTCs are set**

     Refer to **DTC P0641, P0651, P0697, or P06A3 (ECM)** for further diagnosis.

   - **If none of the DTCs are set**
2. Ignition ON, verify the scan tool Throttle Body Idle Airflow Compensation parameter is less than 90 %.
   - **If 90 % or greater**

     Refer to **Throttle Body Inspection and Cleaning** .

   - **If less than 90 %**
3. Verify the scan tool Throttle Position Sensors 1 and 2 Agree/Disagree parameter displays Agree while performing the Throttle Sweep Test with a scan tool.
   - **If Disagree**

     Refer to **DTC P0121-P0123, P0222, P0223, or P2135** for further diagnosis.

   - **If Agree**
4. Determine the current vehicle testing altitude.
5. Verify the scan tool MAP Sensor pressure parameter is within the range specified in the **Altitude Versus Barometric Pressure** table.
   - **If the MAP Sensor parameter is not in range**

     Refer to **DTC P0106** for further diagnosis.

   - **If the MAP Sensor parameter is within range**
6. Engine idling, verify the scan tool MAP Sensor pressure parameter is between 26-52 kPa (3.8-7.5 PSI) and changes with accelerator pedal input.
   - **If not between 26-52 kPa (3.8-7.5 PSI) or does not change**

     Refer to **DTC P0106** for further diagnosis.

   - **If between 26-52 kPa (3.8-7.5 PSI) and changes**
7. Verify the scan tool MAF Sensor g/s parameter changes smoothly and gradually as the engine speed is increased and decreased while performing the actions listed below.
   1. Engine idling
   2. Perform the scan tool snapshot function.
   3. Increase the engine speed slowly to 3 000 RPM and then back to idle.
   4. Exit from the scan tool snapshot and review the data.
   5. Observe the MAF Sensor parameter frame by frame with a scan tool.

- **If the MAF Sensor parameter does not change smoothly and gradually**

  Refer to **DTC P0101** for further diagnosis.

- **If the MAF Sensor parameter changes smoothly and gradually**

8. Operate the vehicle within the Conditions for Running the DTC. You may also operate the vehicle within the conditions that you observed from the Freeze Frame/Failure Records data.
9. Verify the DTC does not set.
   - **If the DTC sets**

     Refer to Circuit/System Testing below.

   - **If the DTC does not set**
10. All OK

Circuit/System Testing

NOTE: You must perform the Circuit/System Verification before proceeding with Circuit/System Testing.

1. Verify the integrity of the entire air induction system by verifying that none of the following conditions exist:
   - Any damaged components
   - Improperly installed components
   - Collapsed, restricted, or damaged components
   - Loose clamps, cracks, or other damage
   - An air flow restriction
   - Restricted air filter
   - Splits, kinks, leaks, or improper connections at the vacuum hoses
   - Vacuum leaks at the intake manifold, MAP sensor, and throttle body
   - Water intrusion
   - Any snow or ice buildup, in cold climates
   - Contamination of the MAF sensor element
   - Missing, restricted, or leaking exhaust components-Refer to **Symptoms - Engine Exhaust** for further diagnosis.
   - **If a condition is found**

     Repair or replace component as appropriate.

   - **If no condition is found**
2. Test the engine for a mechanical condition. Refer to **Symptoms - Engine Mechanical** for diagnosis.
   - **If a condition is found**

Repair or replace component as appropriate.

- **If no condition is found**

3. All OK

Repair Instructions

Perform the **Diagnostic Repair Verification** after completing the repair.

Control Module References for ECM replacement, programming, and setup

DTC P0096 OR P0111

Diagnostic Instructions

- Perform the **Diagnostic System Check - Vehicle** prior to using this diagnostic procedure.
- Review **Strategy Based Diagnosis** for an overview of the diagnostic approach.
- **Diagnostic Procedure Instructions** provides an overview of each diagnostic category.

DTC Descriptors

DTC P0096

Intake Air Temperature (IAT) Sensor 2 Performance

DTC P0111

Intake Air Temperature (IAT) Sensor 1 Performance

Diagnostic Fault Information

IAT Sensor 1

Circuit	Short to Ground	Open/High Resistance	Short to Voltage	Signal Performance
Sensor	P0112, P0114, P2199**	P0113, P0114, P2199**	P0113*, P0114, P2199**	P0111, P0114
Low Reference	-	P0097, P0113, P11C2, P2227, P2229	*	-
*Internal ECM or sensor damage may occur if the circuit is shorted to B+. ** Where used.				

IAT Sensor 2

Circuit	Short to Ground	Open/High Resistance	Short to Voltage	Signal Performance

5 V Reference	P0097, P0651, P11C2, P2199**, P2227, P2228	P0096, P0097, P11C2, P2199**, P2227, P2228	P0097, P0651, P11C2, P2199**, P2227, P2228	-
Sensor	P0097, P11C3, P2199**	P0097, P11C2, P2199**	P0097*, P11C2, P2199**	-
Low Reference	-	P0097, P0113, P11C2, P2227, P2229	*	-
*Internal ECM or sensor damage may occur if the circuit is shorted to B+. ** Where used.				

Typical Scan Tool Data

IAT Sensor 1

Circuit	Short to Ground	Open or High Resistance	Short to Voltage
Operating Conditions: Engine Running **Parameter Normal Range:** Varies with ambient temperature			
Sensor	150°C (302°F)	-40°C (-40°F)	-40°C (-40°F)*
Low Reference	-	-40°C (-40°F)	-40°C (-40°F)*
*Internal ECM or sensor damage may occur if the circuit is shorted to B+			

IAT Sensor 2

Circuit	Short to Ground	Open or High Resistance	Short to Voltage
Operating Conditions: Engine Running **Parameter Normal Range:** Varies with ambient temperature			
5 V Reference	-40°C (-40°F) 10 Hz	-40°C (-40°F) 10 Hz	-
Signal	-40°C (-40°F)	-40°C (-40°F)	-40°C (-40°F)* 10 Hz*
Ground	-	-40°C (-40°F) 10 Hz	-
*Internal ECM or sensor damage may occur if the circuit is shorted to B+			

Circuit/System Description

The sensors listed below are integrated within the multifunction intake air sensor:

- Intake Air Temperature (IAT) sensor 1
- IAT sensor 2
- Humidity sensor
- Mass Air Flow (MAF) sensor
- Barometric (BARO) pressure sensor

The intake air temperature (IAT) sensor 1 is a variable resistor that measures the temperature of the air in the sensor bore. The engine control module (ECM) supplies 5 V to the IAT sensor 1 signal circuit and a ground for the IAT sensor 1 low reference circuit. The signal varies with inlet air temperature and is displayed by the scan tool as °C (°F).

The IAT sensor 2 produces a frequency signal based on the inlet air temperature very close to the humidity sensor within the sensor bore. The signal varies with inlet air temperature and is displayed by the scan tool as ° C (°F) and Hertz (Hz). The signal circuit is shared by the IAT sensor 2 and the humidity sensor.

The sensors listed below share an ECM supplied 5 V reference circuit:

- IAT sensor 2
- Humidity sensor
- Barometric pressure (BARO) sensor

The sensors listed below share an ECM supplied low reference circuit:

- IAT sensor 1
- IAT sensor 2
- Humidity sensor
- Barometric pressure (BARO) sensor

Ignition voltage and ground circuits are also supplied to the multifunction intake air sensor's internal circuits for the mass air flow (MAF) sensor.

IAT Sensor 1 - Temperature, Resistance, Voltage Table

IAT Sensor 1	IAT Sensor 1 Resistance	IAT Sensor 1 Signal Voltage
Cold	High	High
Warm	Low	Low

IAT Sensor 2 - Temperature, Frequency Table

IAT Sensor 2	IAT Sensor 2 Frequency	IAT Sensor 2 Temperature
Cold	45 Hz	-40°C (-40°F)
Warm	302 Hz	104°C (219°F)

Conditions for Running the DTCs

P0096 and P0111

- DTCs P0097, P0098, P0112, P0113, P0117, P0118, P0119, or P1682 are not set.
- The vehicle has been OFF at least 8 hours.
- Ignition 1 voltage is at least 11 V for longer than 0.9 s.
- These DTCs run once per ignition cycle when the enabling conditions are met.

Conditions for Setting the DTCs

P0096

- The ECM determines the absolute difference between IAT sensor 1 start-up temperature and the IAT sensor 2 start-up temperature is greater than 25°C (45°F).

  AND

- The absolute difference between ECT start-up temperature and the IAT sensor 2 start-up temperature is greater or equal to the absolute difference between ECT start-up temperature and the IAT sensor 1 start-up temperature.
- This DTC runs once per ignition cycle when the enabling conditions are met.

P0111

- The ECM determines the absolute difference between IAT sensor 1 start-up temperature and the IAT sensor 2 start-up temperature is greater than 25°C (45°F).

  AND

- The absolute difference between ECT start-up temperature and the IAT sensor 1 start-up temperature is greater or equal to the absolute difference between ECT start-up temperature and the IAT 2 start-up temperature.
- This DTC runs once per ignition cycle when the enabling conditions are met.

Action Taken When the DTCs Set

DTCs P0096 and P0111 are Type B DTCs.

Conditions for Clearing the DTCs

DTCs P0096 and P0111 are Type B DTCs.

Diagnostic Aids

- With the ignition ON, when the engine is OFF and is cold; properly functioning IAT sensors 1 and 2 will gradually increase the scan tool IAT Sensor 1 and 2 parameters. This is due to the heat that is generated by the Multifunction Intake Air sensor internal heating elements.
- The humidity sensor and the IAT sensor 2 signals are sent to the ECM on the same circuit. If the IAT Sensor 2 parameter displays the values: 10 Hz; -40°C (-40°F), and there are also Humidity Sensor DTCs, check for a circuit problem.

Reference Information

Schematic Reference

Engine Controls Schematics

Connector End View Reference

COMPONENT CONNECTOR END VIEWS - INDEX

Electrical Information Reference

- **Circuit Testing**
- **Connector Repairs**
- **Testing for Intermittent Conditions and Poor Connections**
- **Wiring Repairs**

DTC Type Reference

Powertrain Diagnostic Trouble Code (DTC) Type Definitions

Scan Tool Reference

Control Module References for scan tool information

Special Tools

EL-38522-A Variable Signal Generator

For equivalent regional tools, refer to **Special Tools** .

Circuit/System Verification

1. Ignition ON.
2. Verify that DTC DTC P0641, P0651, P0697, or P06A3 is not set.
   - **If any of the DTCs are set**

     Refer to **DTC P0641, P0651, P0697, or P06A3 (ECM)** for further diagnosis.

   - **If none of the DTCs are set**

NOTE: To minimize the effects of residual engine heat and sensor internal heating elements, perform Steps 3 and 4 of this verification procedure only if the ignition has been OFF for 8 hours or more.

3. Ignition ON.
4. Verify the following scan tool parameters are within 25°C (45°F) of each other.
   - Start-Up IAT Sensor 1
   - IAT Sensor 2

- IAT Sensor 3; where equipped
- **If not within 25°C (45°F)**

  Refer to Circuit/System Testing below.

- **If within 25°C (45°F)**

5. Engine idling, verify the following scan tool parameters are between: -38 and +149°C (-36 and +300°F).
   - IAT Sensor 1
   - IAT Sensor 2
   - IAT Sensor 3; where equipped
   - **If not between: -38 and +149°C (-36 and +300°F)**

     Refer to Circuit/System Testing below.

   - **If between: -38 and +149°C (-36 and +300°F)**
6. Operate the vehicle within the conditions for running the DTC. You may also operate the vehicle within the conditions that you observed from the freeze frame/failure records data.
7. Verify the DTCs do not set.
   - **If the DTCs set**

     Refer to Circuit/System Testing below.

   - **If the DTCs do not set**
8. All OK

Circuit/System Testing

NOTE: You must perform the Circuit/System Verification before proceeding with Circuit/System Testing.

1. Check the integrity of the entire air induction system and verify that none of the following conditions exist:
   - A loose or disconnected charge air cooler hose or pipe; where equipped
   - A blocked or obstructed charge air cooler, including: after-market grill covers; where equipped
   - Any snow or ice build-up at the charge air cooler in cold climates; where equipped
   - Any mud or dirt build-up at the charge air cooler; where equipped
   - A restricted or collapsed air intake duct
   - An intake manifold leak
   - A MAP sensor seal that is leaking, missing, or damaged
   - A misaligned or damaged air intake duct
   - Any water intrusion in the induction system
   - An Intake Manifold Resonator with a leaking seal, or a cracked or broken housing

- **If a condition exists**

  Repair or replace component as appropriate.

- **If no condition exists**

2. Ignition OFF, and all vehicle systems OFF, it may take up to 2 min. for all vehicle systems to power down. Disconnect the harness connector at the B75C Multifunction Intake Air sensor.
3. Test for less than 2 ohms between the low reference circuit terminal 7 and ground.
   - **If 2 ohms or greater**
   1. Ignition OFF, disconnect the harness connector at the K20 Engine Control Module.
   2. Test for less than 2 ohms in the low reference circuit end to end.
      - If 2 ohms or greater, repair the open or high resistance in the circuit.
      - If less than 2 ohms replace the K20 Engine Control Module.
   - **If less than 2 ohms**
4. Ignition ON, test for 4.8-5.2 V between the 5 V reference circuit terminal 2 and ground.
   - **If less than 4.8 V**
   1. Ignition OFF, disconnect the harness connector at the K20 Engine Control Module.
   2. Test for infinite resistance between the signal circuit and ground.
      - If less than infinite resistance, repair the short to ground on the circuit.
      - If infinite resistance
   3. Test for less than 2 ohms in the signal circuit end to end.
      - If 2 ohms or greater, repair the open/high resistance in the circuit.
      - If less than 2 ohms, replace the K20 Engine Control Module.
   - **If greater than 5.2 V**

     NOTE: If the 5 V reference circuit is shorted to a voltage the engine control module or the sensor may be damaged.

   1. Ignition OFF, disconnect the harness connector at the K20 Engine Control Module.
   2. Ignition ON, test for less than 1 V between the 5 V reference circuit and ground.
      - If 1 V or greater, repair the short to voltage on the circuit.
      - If less than 1 V, replace the K20 Engine Control Module.
   - **If between 4.8-5.2 V**
5. Ignition ON, test for 4.8-5.2 V between the signal circuit terminal 8 and ground.
   - **If less than 4.8 V**
   1. Ignition OFF, disconnect the harness connector at the K20 Engine Control Module.
   2. Test for infinite resistance between the signal circuit and ground.
      - If less than infinite resistance, repair the short to ground on the circuit.
      - If infinite resistance

3. Test for less than 2 ohms in the signal circuit end to end.
    - If 2 ohms or greater, repair the open/high resistance in the circuit.
    - If less than 2 ohms, replace the K20 Engine Control Module.

- **If greater than 5.2 V**

NOTE: If the signal circuit is shorted to a voltage the engine control module or the sensor may be damaged.

1. Ignition OFF, disconnect the harness connector at the K20 Engine Control Module.
2. Ignition ON, test for less than 1 V between the signal circuit and ground.
    - If 1 V or greater, repair the short to voltage on the circuit.
    - If less than 1 V, replace the K20 Engine Control Module.

- **If between 4.8-5.2 V**

6. Ignition ON, verify the scan tool IAT Sensor 1 parameter is colder than -39°C (-38°F).
    - **If warmer than -39°C (-38°F).**
    1. Ignition OFF, disconnect the harness connector at the K20 Engine Control Module.
    2. Test for infinite resistance between the signal circuit terminal 8 and ground.
        - If less than infinite resistance, repair the short to ground on the circuit.
        - If infinite resistance
    3. Test for less than 2 ohms in the signal circuit end to end.
        - If 2 ohms or greater, repair the open/high resistance in the circuit.
        - If less than 2 ohms, replace the K20 Engine Control Module.
    - **If colder than -39°C (-38°F).**
7. Ignition OFF, install a 3 A fused jumper wire between the signal circuit terminal 8 and the low reference circuit terminal 7.
8. Verify the scan tool IAT Sensor 1 parameter is warmer than 148°C (298°F).
    - **If colder than 148°C (298°F).**
    1. Ignition OFF, remove the jumper wire, disconnect the harness connector at the K20 Engine Control Module, ignition ON.
    2. Test for less than 1 V between the signal circuit and ground.
        - If 1 V or greater, repair the short to voltage on the circuit.
        - If less than 1 V
    3. Ignition OFF.
    4. Test for less than 2 ohms in the signal circuit end to end.
        - If 2 ohms or greater, repair the open/high resistance in the circuit.
        - If less than 2 ohms, replace the K20 Engine Control Module.
    - **If warmer than 148°C (298°F).**
9. Ignition ON, test for 4.8-5.2 V between the signal terminal 1 and ground.
    - **If less than 4.8 V**

1. Ignition OFF, disconnect the harness connector at the K20 Engine Control Module.
2. Test for infinite resistance between the signal circuit and ground.
    - If less than infinite resistance, repair the short to ground on the circuit.
    - If infinite resistance
3. Test for less than 2 ohms in the signal circuit end to end.
    - If 2 ohms or greater, repair the open/high resistance in the circuit.
    - If less than 2 ohms, replace the K20 Engine Control Module.

- **If greater than 5.2 V**

NOTE: If the signal circuit is shorted to a voltage the engine control module or the sensor may be damaged.

1. Ignition OFF, disconnect the harness connector at the K20 Engine Control Module.
2. Ignition ON, test for less than 1 V between the signal circuit and ground.
    - If 1 V or greater, repair the short to voltage on the circuit.
    - If less than 1 V, replace the K20 Engine Control Module.

- **If between 4.8-5.2 V**

10. Determine if **EL-38522-A** Variable Signal Generator or equivalent is available.
    - **EL-38522-A, Variable Signal Generator; or equivalent is not available**
    1. Replace the K20 Engine Control Module.
    2. Operate the vehicle within the Conditions for Running the DTC. You may also operate the vehicle within the conditions that you observed from the freeze frame/failure records data.
    3. Verify the DTC does not set.
        - **If the DTC sets**

          Refer to step 14.

        - **If no DTCs set**
    4. All OK.
    - **EL-38522-A, Variable Signal Generator; or equivalent is available**
11. Ignition OFF, connect the leads of the **EL-38522-A** Variable Signal Generator as follows:
    - Red lead to the signal circuit terminal 1 at the harness connector
    - Black leads to ground
    - Battery voltage supply lead to B+
12. Set the **EL-38522-A** Variable Signal Generator to the following specifications.
    - Signal switch to 5 V
    - Duty Cycle switch to 50 % (Normal)
    - Frequency switch to 30 Hz
13. Ignition ON, verify the scan tool IAT Sensor 2 parameter is between 28-32 Hz.

- **If not between 28-32 Hz**

  Replace the K20 Engine Control Module.

- **If between 28-32 Hz**

14. Circuits and ECM test OK. Test or replace the appropriate temperature sensor.

Component Testing

Multifunction Intake Air Sensor

1. Ignition OFF, disconnect the harness connector at the B75C Multifunction Intake Air sensor.

   NOTE: A thermometer can be used to test the sensor off the vehicle.

2. Test the IAT sensor 1 by varying the sensor temperature while monitoring the sensor resistance. Compare the readings with the **Temperature Versus Resistance - Intake Air Temperature Sensor (Bosch Sensor)** table for Bosch Sensors. The resistance values should be in range of the table values.
   - **If not within the specified range.**

     Replace the B75C Multifunction Intake Air sensor.

   - **If within the specified range.**
3. All OK

Multifunction Intake Air Sensor

1. Test the IAT Sensor 2 by varying the sensor temperature while monitoring the air temperature with a thermometer. Compare the readings with the scan tool IAT Sensor 2 parameter. The values should be within 5%.
   - **If not within 5%.**

     Replace the B75C Multifunction Intake Air sensor.

   - **If within 5%.**
2. All OK

Repair Instructions

Perform the **Diagnostic Repair Verification** after completing the repair.

- **Mass Airflow Sensor Replacement** for multifunction intake air sensor replacement.
- **Control Module References** for ECM replacement, programming, and setup

DTC P0097, P0098, OR P0099

Diagnostic Instructions

- Perform the **Diagnostic System Check - Vehicle** prior to using this diagnostic procedure.
- Review **Strategy Based Diagnosis** for an overview of the diagnostic approach.
- **Diagnostic Procedure Instructions** provides an overview of each diagnostic category.

DTC Descriptors

DTC P0097

Intake Air Temperature (IAT) Sensor 2 Circuit Low Voltage

DTC P0098

Intake Air Temperature (IAT) Sensor 2 Circuit High Voltage

DTC P0099

Intake Air Temperature (IAT) Sensor 2 Circuit Intermittent

Diagnostic Fault Information

IAT Sensor 2

Circuit	Short to Ground	Open/High Resistance	Short to Voltage	Signal Performance
5 V Reference	P0097, P0651, P11C2, P2199**, P2227, P2228	P0096, P0097, P11C2, P2199**, P2227, P2228	P0097, P0651, P11C2, P2199**, P2227, P2228	-
Sensor	P0097, P11C3, P2199**	P0097, P11C2, P2199**	P0097*, P11C2, P2199**	-
Low Reference	-	P0097, P0113, P11C2, P2227, P2229	*	-
*Internal ECM or sensor damage may occur if the circuit is shorted to B+. ** Where used.				

Typical Scan Tool Data

IAT Sensor 2

Circuit	Short to Ground	Open or High Resistance	Short to Voltage
Operating Conditions: Engine Running **Parameter Normal Range:** Varies with ambient temperature			
5 V Reference	-40°C (-40°F) 10 Hz	-40°C (-40°F) 10 Hz	-
			-40°C (-40°F)*

Signal	-40°C (-40°F)	-40°C (-40°F)	10 Hz*
Ground	-	-40°C (-40°F) 10 Hz	-
*Internal ECM or sensor damage may occur if the circuit is shorted to B+			

Circuit/System Description

The sensors listed below are integrated within the multifunction intake air sensor:

- Intake Air Temperature (IAT) sensor 1
- IAT sensor 2
- Humidity sensor
- Mass Air Flow (MAF) sensor
- Barometric (BARO) pressure sensor

The intake air temperature (IAT) sensor 1 is a variable resistor that measures the temperature of the air in the sensor bore. The engine control module (ECM) supplies 5 V to the IAT sensor 1 signal circuit and a ground for the IAT sensor 1 low reference circuit. The signal varies with inlet air temperature and is displayed by the scan tool as °C (°F).

The IAT sensor 2 produces a frequency signal based on the inlet air temperature very close to the humidity sensor within the sensor bore. The signal varies with inlet air temperature and is displayed by the scan tool as ° C (°F) and Hertz (Hz). The signal circuit is shared by the IAT sensor 2 and the humidity sensor.

The sensors listed below share an ECM supplied 5 V reference circuit:

- IAT sensor 2
- Humidity sensor
- Barometric pressure (BARO) sensor

The sensors listed below share an ECM supplied low reference circuit:

- IAT sensor 1
- IAT sensor 2
- Humidity sensor
- Barometric pressure (BARO) sensor

Ignition voltage and ground circuits are also supplied to the multifunction intake air sensor's internal circuits for the mass air flow (MAF) sensor.

IAT Sensor 2 - Temperature, Frequency Table

IAT Sensor 2	IAT Sensor 2 Frequency	IAT Sensor 2 Temperature
Cold	45 Hz	-40°C (-40°F)
Warm	302 Hz	104°C (219°F)

Conditions for Running the DTCs

P0097, P0098, and P0099

- The ignition is ON, or the engine is running.
- The Ignition 1 voltage is at least 11 V for longer than 0.9 s.
- The DTCs run continuously within the enabling conditions.

Conditions for Setting the DTCs

P0097

NOTE: The scan tool display range is between -40 and +150°C (-40 and +302°F).

The ECM detects that the IAT sensor 2 signal is less than 13 Hz, colder than -60°C (-76°F), for greater than 5 s.

P0098

The ECM detects that the IAT sensor 2 signal is greater than 390 Hz, warmer than 150°C (302°F), for greater than 5 s.

P0099

The ECM monitors the IAT sensor 2 signal every 0.1 s, to determine if the signal has changed more than 100°C (212°F). The DTC fails when the condition exists for longer than 4 s.

Action Taken When the DTC Sets

- DTCs P0097, P0098, and P0099 are Type B DTCs.
- The ECM commands the cooling fans ON.

Conditions for Clearing the MIL/DTCs

DTCs P0097, P0098, and P0099 are Type B DTCs.

Diagnostic Aids

- With the ignition ON, the engine OFF, if the engine is cold, a properly functioning IAT sensor 2 will gradually increase the scan tool IAT Sensor 2 parameter. This is due to the heat that is generated by the MAF sensor heating elements.
- The humidity sensor and the IAT sensor 2 signals are sent to the ECM on the same circuit. If the IAT Sensor 2 parameter displays the values: 10 Hz; -40°C (-40°F), and there are also Humidity Sensor DTCs, check for a circuit problem.

Reference Information

Schematic Reference

Engine Controls Schematics

Connector End View Reference

COMPONENT CONNECTOR END VIEWS - INDEX

Electrical Information Reference

- **Circuit Testing**
- **Connector Repairs**
- **Testing for Intermittent Conditions and Poor Connections**
- **Wiring Repairs**

DTC Type Reference

Powertrain Diagnostic Trouble Code (DTC) Type Definitions

Scan Tool Reference

Control Module References for scan tool information

Special Tools

EL-38522-A Variable Signal Generator

For equivalent regional tools, refer to **Special Tools** .

Circuit/System Verification

1. Ignition ON.
2. Verify that DTC DTC P0641, P0651, P0697, or P06A3 is not set.
   - **If any of the DTCs are set**

     Refer to **DTC P0641, P0651, P0697, or P06A3 (ECM)** for further diagnosis.

   - **If none of the DTCs are set**

NOTE: To minimize the effects of residual engine heat and sensor internal heating elements, perform Steps 3 and 4 of this verification procedure only if the ignition has been OFF for 8 hours or more.

3. Ignition ON.
4. Verify the following scan tool parameters are within 25°C (45°F) of each other.
   - Start-Up IAT Sensor 1
   - IAT Sensor 2

- Start-Up ECT
- **If not within 25°C (45°F)**

  Refer to Circuit/System Testing below.

- **If within 25°C (45°F)**

5. Engine idling, verify the following scan tool parameters are between: -38 and +149°C (-36 and +300°F).
   - IAT Sensor 1
   - IAT Sensor 2
   - ECT Sensor
   - **If not between: -38 and +149°C (-36 and +300°F)**

     Refer to Circuit/System Testing below.

   - **If between: -38 and +149°C (-36 and +300°F)**
6. Operate the vehicle within the conditions for running the DTC. You may also operate the vehicle within the conditions that you observed from the freeze frame/failure records data.
7. Verify the DTC does not set.
   - **If the DTC does set**

     Refer to Circuit/System Testing below.

   - **If the DTC does not set**
8. All OK

Circuit/System Testing

NOTE: You must perform the Circuit/System Verification before proceeding with Circuit/System Testing.

1. Ignition OFF, and all vehicle systems OFF, it may take up to 2 min. for all vehicle systems to power down. Disconnect the harness connector at the B75C Multifunction Intake Air sensor.
2. Test for less than 2 ohms between the low reference circuit terminal 7 and ground.
   - **If 2 ohms or greater**
   1. Ignition OFF, disconnect the harness connector at the K20 Engine Control Module.
   2. Test for less than 2 ohms in the low reference circuit end to end.
      - If 2 ohms or greater, repair the open or high resistance in the circuit.
      - If less than 2 ohms replace the K20 Engine Control Module.
   - **If less than 2 ohms**
3. Ignition ON, test for 4.8-5.2 V between the 5 V reference circuit terminal 2 and ground.
   - **If less than 4.8 V**
   1. Ignition OFF, disconnect the harness connector at the K20 Engine Control Module.

2. Test for infinite resistance between the signal circuit and ground.
    - If less than infinite resistance, repair the short to ground on the circuit.
    - If infinite resistance
3. Test for less than 2 ohms in the signal circuit end to end.
    - If 2 ohms or greater, repair the open/high resistance in the circuit.
    - If less than 2 ohms, replace the K20 Engine Control Module.

- **If greater than 5.2 V**

NOTE: If the 5 V reference circuit is shorted to a voltage the engine control module or the sensor may be damaged.

1. Ignition OFF, disconnect the harness connector at the K20 Engine Control Module.
2. Ignition ON, test for less than 1 V between the 5 V reference circuit and ground.
    - If 1 V or greater, repair the short to voltage on the circuit.
    - If less than 1 V, replace the K20 Engine Control Module.

- **If between 4.8-5.2 V**

4. Ignition ON, test for 4.8-5.2 V between the intake air temperature signal 2 circuit terminal 1 and ground.
    - **If less than 4.8 V**
    1. Ignition OFF, disconnect the harness connector at the K20 Engine Control Module.
    2. Test for infinite resistance between the signal circuit and ground.
        - If less than infinite resistance, repair the short to ground on the circuit.
        - If infinite resistance
    3. Test for less than 2 ohms in the signal circuit end to end.
        - If 2 ohms or greater, repair the open/high resistance in the circuit.
        - If less than 2 ohms, replace the K20 Engine Control Module.
    - **If greater than 5.2 V**

    NOTE: If the signal circuit is shorted to a voltage the engine control module or the sensor may be damaged.

    1. Ignition OFF, disconnect the harness connector at the K20 Engine Control Module.
    2. Ignition ON, test for less than 1 V between the signal circuit and ground.
        - If 1 V or greater, repair the short to voltage on the circuit.
        - If less than 1 V, replace the K20 Engine Control Module.
    - **If between 4.8-5.2 V**
5. Determine if **EL-38522-A** Variable Signal Generator or equivalent is available.
    - **EL-38522-A, Variable Signal Generator; or equivalent is not available**
    1. Replace the K20 Engine Control Module.
    2. Operate the vehicle within the Conditions for Running the DTC. You may also operate the vehicle

within the conditions that you observed from the freeze frame/failure records data.

3. Verify the DTC does not set.
   - **If the DTC sets**

     Refer to step 9.

   - **If the DTC does not set**
4. All OK.
   - **EL-38522-A, Variable Signal Generator; or equivalent is available**

6. Ignition OFF, connect the leads of the **EL-38522-A** Variable Signal Generator as follows:
   - Red lead to the signal circuit terminal 1 at the harness connector
   - Black leads to ground
   - Battery voltage supply lead to B+
7. Set the **EL-38522-A** Variable Signal Generator to the following specifications.
   - Signal switch to 5 V
   - Duty Cycle switch to 50 % (Normal)
   - Frequency switch to 30 Hz
8. Ignition ON, verify the scan tool IAT Sensor 2 parameter is between 28-32 Hz.
   - **If not between 28-32 Hz**

     Replace the K20 Engine Control Module.

   - **If between 28-32 Hz**
9. Test or replace the B75C Multifunction Intake Air sensor.

Component Testing

Multifunction Intake Air Sensor

1. Ignition OFF, disconnect the harness connector at the B75C Multifunction Intake Air sensor.

   NOTE: A thermometer can be used to test the sensor off the vehicle.

2. Test the IAT sensor 1 by varying the sensor temperature while monitoring the sensor resistance. Compare the readings with the **Temperature Versus Resistance - Intake Air Temperature Sensor (Bosch Sensor)** table for Bosch Sensors. The resistance values should be in range of the table values.
   - **If not within the specified range.**

     Replace the B75C Multifunction Intake Air sensor.

   - **If within the specified range.**
3. All OK

Multifunction Intake Air Sensor

1. Test the IAT Sensor 2 by varying the sensor temperature while monitoring the air temperature with a thermometer. Compare the readings with the scan tool IAT Sensor 2 parameter. The values should be within 5%.
   - **If not within 5%.**

     Replace the B75C Multifunction Intake Air sensor.

   - **If within 5%.**
2. All OK

Repair Instructions

Perform the **Diagnostic Repair Verification** after completing the repair.

- **Mass Airflow Sensor Replacement** for multifunction intake air sensor replacement.
- **Control Module References** for ECM replacement, programming, and setup

DTC P0101

Diagnostic Instructions

- Perform the **Diagnostic System Check - Vehicle** prior to using this diagnostic procedure.
- Review **Strategy Based Diagnosis** for an overview of the diagnostic approach.
- **Diagnostic Procedure Instructions** provides an overview of each diagnostic category.

DTC Descriptor

DTC P0101

Mass Air Flow (MAF) Sensor Performance

Diagnostic Fault Information

MAF Sensor

Circuit	Short to Ground	Open/High Resistance	Short to Voltage	Signal Performance
Ignition Voltage	P0102	P0102, P01101	P0690	P0101
Sensor	P0102, P1101	P0102, P1101	P0102*	P0101, P1101
Ground	-	P0102	-	-
*Internal ECM or sensor damage may occur if the circuit is shorted to B+.				

Typical Scan Tool Data

MAF Sensor

Circuit	Short to Ground	Open	Short to Voltage
Operating Conditions: Engine running at various operating conditions **Parameter Normal Range:** 2, 000-10, 000 Hz			
Ignition Voltage	0 Hz	0 Hz	-
Sensor	0 Hz	0 Hz	0 Hz*
Ground	-	0 Hz	-
*Internal ECM or sensor damage may occur if the circuit is shorted to B+			

Circuit Description

The sensors listed below are integrated within the multifunction intake air sensor:

- Intake Air Temperature (IAT) sensor 1
- IAT sensor 2
- Humidity sensor
- Mass Air Flow (MAF) sensor
- Barometric (BARO) pressure sensor

The MAF sensor is an air flow meter that measures the amount of air flowing in the sensor bore. The engine control module (ECM) uses the MAF sensor signal to provide the correct fuel delivery for all engine speeds and loads. A small quantity of air entering the engine indicates a deceleration or idle condition. A large quantity of air entering the engine indicates an acceleration or high load condition.

The ECM applies 5 V to the MAF sensor signal circuit. The sensor produces a variable frequency signal based on the inlet air flow through the sensor bore. The signal varies with engine load and is displayed by the scan tool as Hertz (Hz) and grams per second (g/s). Vehicle ignition voltage and ground circuits are also supplied to the MAF sensor.

The intake flow rationality diagnostic provides the within-range rationality check for the mass air flow (MAF), manifold absolute pressure (MAP), and the throttle position sensors. This is an explicit model-based diagnostic containing 4 separate models for the intake system.

The estimates of MAF and MAP obtained from this system of models and calculations are then compared to the actual measured values from the MAF, MAP, and the throttle position sensors and to each other to determine the appropriate DTC to fail.

Vehicle ignition voltage and ground circuits are supplied to the MAF sensor.

The sensors listed below share an ECM supplied 5 V reference circuit:

- IAT sensor 2
- Humidity sensor
- Barometric pressure (BARO) sensor

The sensors listed below share an ECM supplied low reference circuit:

- IAT sensor 1
- IAT sensor 2
- Humidity sensor
- Barometric pressure (BARO) sensor

Conditions for Running the DTCs

- DTC P0102, P0103, P0107, P0108, P0111, P0112, P0113, P0114, P0117, P0118, P0128, P0335, or P0336 is not set.
- The engine speed is between 400-6, 000 RPM.
- The engine coolant temperature (ECT) is between -7 and +125°C (+19 and +257°F).
- The intake air temperature (IAT) is between -20 and +100°C (-4 and +212°F).
- The DTC runs continuously when the above conditions are met.

Conditions for Setting the DTC

The engine control module (ECM) detects that the actual measured airflow from the MAF, MAP, and throttle position sensors is not within range of the calculated airflow that is derived from the system of models for greater than 2 s.

Action Taken When the DTC Sets

DTC P0101 is a Type B DTC.

Conditions for Clearing the DTC

DTC P0101 is a Type B DTC.

Diagnostic Aids

- Certain aftermarket air filters may cause this DTC to set.
- Certain aftermarket air induction systems may cause this DTC to set.
- Modifications to the air induction system may cause this DTC to set.

Reference Information

Schematic Reference

Engine Controls Schematics

Connector End View Reference

COMPONENT CONNECTOR END VIEWS - INDEX

Electrical Information Reference

- **Circuit Testing**
- **Connector Repairs**
- **Testing for Intermittent Conditions and Poor Connections**
- **Wiring Repairs**

DTC Type Reference

Powertrain Diagnostic Trouble Code (DTC) Type Definitions

Scan Tool Reference

Control Module References for scan tool information

Special Tools

EL-38522-A Variable Signal Generator

For equivalent regional tools, refer to **Special Tools** .

Circuit/System Verification

1. Ignition ON, verify that DTC P0641, P0651, P0697, or P06A3 is not set.
   - **If any of the DTCs are set**

     Refer to **DTC P0641, P0651, P0697, or P06A3 (ECM)** for further diagnosis.

   - **If none of the DTCs are set**
2. Ignition ON, verify the scan tool Throttle Body Idle Airflow Compensation parameter is less than 90 %.
   - **If 90 % or greater**

     Refer to **Throttle Body Inspection and Cleaning** .

   - **If less than 90 %**
3. Verify the scan tool Throttle Position Sensors 1 and 2 Agree/Disagree parameter displays Agree while performing the Throttle Sweep Test with a scan tool.
   - **If Disagree**

     Refer to **DTC P0121-P0123, P0222, P0223, or P2135** for further diagnosis.

   - **If Agree**
4. Determine the current vehicle testing altitude.
5. Verify the scan tool MAP Sensor pressure parameter is within the range specified in the **Altitude Versus Barometric Pressure** table.
   - **If the MAP Sensor parameter is not in range**

Refer to **DTC P0106** for further diagnosis.

- **If the MAP Sensor parameter is within range**

6. Engine idling, verify the scan tool MAP Sensor pressure parameter is between 26-52 kPa (3.8-7.5 PSI) and changes with accelerator pedal input.
   - **If not between 26-52 kPa (3.8-7.5 PSI) or does not change**

     Refer to **DTC P0106** for further diagnosis.

   - **If between 26-52 kPa (3.8-7.5 PSI) and changes**
7. Verify the scan tool MAF Sensor g/s parameter changes smoothly and gradually as the engine speed is increased and decreased while performing the actions listed below.
   1. Engine idling
   2. Perform the scan tool snapshot function.
   3. Increase the engine speed slowly to 3, 000 RPM and then back to idle.
   4. Exit from the scan tool snapshot and review the data.
   5. Observe the MAF Sensor parameter frame by frame with a scan tool.
   - **If the MAF Sensor parameter does not change smoothly and gradually**

     Refer to Circuit/System Testing for further diagnosis.

   - **If the MAF Sensor parameter changes smoothly and gradually**
8. Operate the vehicle within the Conditions for Running the DTC. You may also operate the vehicle within the conditions that you observed from the Freeze Frame/Failure Records data.
9. Verify the DTC does not set.
   - **If the DTC does set**

     Refer to Circuit/System Testing for further diagnosis.

   - **If the DTC does not set**
10. All OK

Circuit/System Testing

NOTE: You must perform the Circuit/System Verification before proceeding with Circuit/System Testing.

1. Check the integrity of the entire air induction system by verifying that none of the following conditions exist:
   - Any damaged components
   - Improperly installed components
   - Collapsed, restricted, or damaged components
   - Loose clamps, cracks, or other damage

- An air flow restriction
- Restricted air filter
- Splits, kinks, leaks, or improper connections at the vacuum hoses
- Vacuum leaks at the intake manifold, MAP sensor, and throttle body
- Water intrusion
- Any snow or ice buildup, in cold climates
- Contamination of the Multifunction Intake Air sensor element
- Improper operation of the positive crankcase ventilation system

- **If a condition is found**

  Repair or replace component as appropriate.

- **If no condition is found**

2. Ignition OFF, disconnect the harness connector at the B75C Multifunction Intake Air sensor.
3. Test for less than 2 ohms between the ground circuit terminal 4 and ground.
   - **If 2 ohms or greater**
   1. Ignition OFF.
   2. Test for less than 2 ohms in the ground circuit end to end.
      - If 2 ohms or greater, repair the open/high resistance in the circuit.
      - If less than 2 ohms, repair the open/high resistance in the ground connection.
   - **If less than 2 ohms**
4. Ignition ON.
5. Verify that a test lamp illuminates between the ignition circuit terminal 5 and ground.
   - **If the test lamp does not illuminate and the circuit fuse is good**
   1. Ignition OFF, remove the test lamp and remove the fuse for the ignition circuit.
   2. Test for less than 2 ohms in the ignition circuit end to end.
      - If 2 ohms or greater, repair the open/high resistance in the circuit.
      - If less than 2 ohms, verify the fuse is not open and there is voltage at the fuse.
   - **If the test lamp does not illuminate and the circuit fuse is open**
   1. Ignition OFF, remove the test lamp and remove the fuse for the ignition circuit.
   2. Test for infinite resistance between the ignition circuit and ground.
      - If less than infinite resistance, repair the short to ground on the circuit.
      - If infinite resistance
   3. Test for greater than 2 ohms between the ignition circuit terminal 5 and ground.
      - If less than 2 ohms, repair the short to ground on the circuit.
      - If greater than 2 ohms, test all the components connected to the circuit and repair or replace as necessary.
   - **If a test lamp illuminates**
6. Ignition ON, test for 4.8-5.2 V between the signal circuit terminal 3 and ground.

- **If less than 4.8 V**

1. Ignition OFF, disconnect the harness connector at the K20 Engine Control Module.
2. Test for infinite resistance between the signal circuit and ground.
   - If less than infinite resistance, repair the short to ground on the circuit.
   - If infinite resistance
3. Test for less than 2 ohms in the signal circuit end to end.
   - If 2 ohms or greater, repair the open/high resistance in the circuit.
   - If less than 2 ohms, replace the K20 Engine Control Module.

- **If greater than 5.2 V**

1. Ignition OFF, disconnect the harness connector at the K20 Engine Control Module.
2. Ignition ON, test for less than 1 V between the signal circuit and ground.
   - If 1 V or greater, repair the short to voltage on the circuit.
   - If less than 1 V, replace the K20 Engine Control Module.

- **If between 4.8-5.2 V**

7. Determine if **EL-38522-A** Variable Signal Generator or equivalent is available.
   - **EL-38522-A, Variable Signal Generator; or equivalent is not available**

   1. Replace the K20 Engine Control Module.
   2. Operate the vehicle within the Conditions for Running the DTC. You may also operate the vehicle within the conditions that you observed from the freeze frame/failure records data.
   3. Verify the DTC does not set.
      - **If the DTC sets**

        Refer to step 11.

      - **If no DTCs set**
   4. All OK.

   - **EL-38522-A, Variable Signal Generator; or equivalent is available**

8. Ignition OFF, connect the leads of the **EL-38522-A** Variable Signal Generator as follows:
   - Red lead to the signal circuit terminal 3 at the harness connector
   - Black leads to ground
   - Battery voltage supply lead to B+
9. Set the **EL-38522-A** Variable Signal Generator to the following specifications.
   - Signal switch to 5 V
   - Frequency switch to 5 kHz
   - Duty Cycle switch to 50 % (Normal)
10. Engine idling, verify the scan tool MAF Sensor parameter is between 4, 950-5, 050 Hz.
    - **If not between 4, 950-5, 050 Hz.**

      Replace the K20 Engine Control Module.

- **If between 4, 950-5, 050 Hz.**

11. Test or replace the B75C Multifunction Intake Air sensor.

Repair Instructions

Perform the **Diagnostic Repair Verification** after completing the repair.

- **Mass Airflow Sensor Replacement** for multifunction intake air sensor replacement.
- **Control Module References** for ECM replacement, programming and setup

DTC P0102 OR P0103

Diagnostic Instructions

- Perform the **Diagnostic System Check - Vehicle** prior to using this diagnostic procedure.
- Review **Strategy Based Diagnosis** for an overview of the diagnostic approach.
- **Diagnostic Procedure Instructions** provides an overview of each diagnostic category.

DTC Descriptors

DTC P0102

Mass Air Flow (MAF) Sensor Circuit Low Frequency

DTC P0103

Mass Air Flow (MAF) Sensor Circuit High Frequency

Diagnostic Fault Information

MAF Sensor

Circuit	Short to Ground	Open/High Resistance	Short to Voltage	Signal Performance
Ignition Voltage	P0102	P0102, P01101	P0690	P0101
Sensor	P0102, P1101	P0102, P1101	P0102*	P0101, P1101
Ground	-	P0102	-	-
*Internal ECM or sensor damage may occur if the circuit is shorted to B+.				

Typical Scan Tool Data

MAF Sensor

Circuit	Short to Ground	Open	Short to Voltage
Operating Conditions: Engine running at various operating conditions **Parameter Normal Range:** 1, 500-10, 000 Hz			
Ignition Voltage	0 Hz	0 Hz	-

Signal	0 Hz	0 Hz	0 Hz
Ground	-	0 Hz	-

Circuit Description

The sensors listed below are integrated within the multifunction intake air sensor:

- Intake Air Temperature (IAT) sensor 1
- IAT sensor 2
- Humidity sensor
- Mass Air Flow (MAF) sensor
- Barometric (BARO) pressure sensor

The MAF sensor is an air flow meter that measures the amount of air flowing in the sensor bore. The engine control module (ECM) uses the MAF sensor signal to provide the correct fuel delivery for all engine speeds and loads. A small quantity of air entering the engine indicates a deceleration or idle condition. A large quantity of air entering the engine indicates an acceleration or high load condition.

The ECM applies 5 V to the MAF sensor signal circuit. The sensor produces a variable frequency signal based on the inlet air flow through the sensor bore. The signal varies with engine load and is displayed by the scan tool as Hertz (Hz) and grams per second (g/s). Vehicle ignition voltage and ground circuits are also supplied to the MAF sensor.

The sensors listed below share an ECM supplied 5 V reference circuit:

- IAT sensor 2
- Humidity sensor
- Barometric pressure (BARO) sensor

The sensors listed below share an ECM supplied low reference circuit:

- IAT sensor 1
- IAT sensor 2
- Humidity sensor
- Barometric pressure (BARO) sensor

Conditions for Running the DTC

- The engine is running for at least 1 s.
- The engine speed is at least 300 RPM.
- The ignition signal is at least 8 V.
- The above conditions are met for at least 1 s.
- The DTC runs continuously when the above conditions are met.

Conditions for Setting the DTC

P0102

The ECM detects that the MAF Sensor signal parameter is less than 100 Hz (about 0.15 g/s) for at least 500 cylinder firing events.

P0103

The ECM detects that the MAF Sensor signal parameter is at least 14, 500 Hz (about 270.2 g/s) for at least 500 cylinder firing events.

Action Taken When the DTCs Set

DTCs P0102 and P0103 are Type B DTCs.

Conditions for Clearing the MIL/DTCs

DTCs P0102 and P0103 are Type B DTCs.

Reference Information

Schematic Reference

Engine Controls Schematics

Connector End View Reference

COMPONENT CONNECTOR END VIEWS - INDEX

Electrical Information Reference

- **Circuit Testing**
- **Connector Repairs**
- **Testing for Intermittent Conditions and Poor Connections**
- **Wiring Repairs**

DTC Type Reference

Powertrain Diagnostic Trouble Code (DTC) Type Definitions

Scan Tool Reference

Control Module References for scan tool information

Special Tools

EL-38522-A Variable Signal Generator

For equivalent regional tools, refer to **Special Tools** .

Circuit/System Verification

1. Engine idling, verify the scan tool MAF Sensor parameter is between 2.5-5.5 g/s.
   - **If not between 2.5-5.5 g/s**

     Refer to Circuit/System Testing below.

   - **If between 2.5-5.5 g/s**
2. Verify the scan tool MAF Sensor g/s parameter changes smoothly and gradually as the engine speed is increased and decreased while performing the actions listed below.
   1. Engine idling
   2. Perform the scan tool snapshot function.
   3. Increase the engine speed slowly to 3, 000 RPM and then back to idle.
   4. Exit from the scan tool snapshot and review the data.
   5. Observe the MAF Sensor parameter frame by frame with a scan tool.
   - **The MAF Sensor parameter does not change smoothly and gradually**

     Refer to Circuit/System Testing below.

   - **The MAF Sensor parameter changes smoothly and gradually**
3. Operate the vehicle within the Conditions for Running the DTC. You may also operate the vehicle within the conditions that you observed from the Freeze Frame/Failure Records data.
4. Verify the DTC does not set.
   - **If the DTC does set**

     Refer to Circuit/System Testing for further diagnosis.

   - **If the DTC does not set**
5. All OK

Circuit/System Testing

NOTE: You must perform the Circuit/System Verification before proceeding with Circuit/System Testing.

1. Ignition OFF, disconnect the harness connector at the B75C Multifunction Intake Air sensor.
2. Test for less than 2 ohms between the ground circuit terminal 4 and ground.
   - **If 2 ohms or greater**
   1. Ignition OFF. Disconnect the sensor chassis ground.

2. Test for less than 2 ohms in the ground circuit end to end.
    - If 2 ohms or greater, repair the open/high resistance in the circuit.
    - If less than 2 ohms, repair the open/high resistance in the chassis ground connection.
- **If less than 2 ohms**

3. Ignition ON.
4. Verify that a test lamp illuminates between the ignition circuit terminal 5 and ground.
    - **If the test lamp does not illuminate and the circuit fuse is good**
    1. Ignition OFF, remove the test lamp and remove the fuse for the ignition circuit.
    2. Test for less than 2 ohms in the ignition circuit end to end.
        - If 2 ohms or greater, repair the open/high resistance in the circuit.
        - If less than 2 ohms, verify the fuse is not open and there is voltage at the fuse.
    - **If the test lamp does not illuminate and the circuit fuse is open**
    1. Ignition OFF, remove the test lamp and remove the fuse for the ignition circuit.
    2. Test for infinite resistance between the ignition circuit and ground.
        - If less than infinite resistance, repair the short to ground on the circuit.
        - If infinite resistance
    3. Test for greater than 2 ohms between the ignition circuit terminal 5 and ground.
        - If less than 2 ohms, repair the short to ground on the circuit.
        - If greater than 2 ohms, test all the components connected to the circuit and repair or replace as necessary.
    - **If a test lamp illuminates**
5. Ignition ON, test for 4.8-5.2 V between the signal circuit terminal 3 and ground.
    - **If less than 4.8 V**
    1. Ignition OFF, disconnect the harness connector at the K20 Engine Control Module.
    2. Test for infinite resistance between the signal circuit and ground.
        - If less than infinite resistance, repair the short to ground on the circuit.
        - If infinite resistance
    3. Test for less than 2 ohms in the signal circuit end to end.
        - If 2 ohms or greater, repair the open/high resistance in the circuit.
        - If less than 2 ohms, replace the K20 Engine Control Module.
    - **If greater than 5.2 V**
    1. Ignition OFF, disconnect the harness connector at the K20 Engine Control Module.
    2. Ignition ON, test for less than 1 V between the signal circuit and ground.
        - If 1 V or greater, repair the short to voltage on the circuit.
        - If less than 1 V, replace the K20 Engine Control Module.
    - **If between 4.8-5.2 V**
6. Determine if **EL-38522-A** Variable Signal Generator or equivalent is available.
    - **EL-38522-A, Variable Signal Generator; or equivalent is not available**

1. Replace the K20 Engine Control Module.
2. Operate the vehicle within the Conditions for Running the DTC. You may also operate the vehicle within the conditions that you observed from the Freeze Frame/Failure Records data.
3. Verify the DTC does not set.
    - **If the DTC sets**

      Refer to step 10.

    - **If no DTCs set**
4. All OK.

- **EL-38522-A, Variable Signal Generator; or equivalent is available**

7. Ignition OFF, connect the leads of the **EL-38522-A** Variable Signal Generator as follows:
    - Red lead to the signal circuit terminal 3 at the harness connector
    - Black leads to ground
    - Battery voltage supply lead to B+
8. Set the **EL-38522-A** Variable Signal Generator to the following specifications.
    - Signal switch to 5 V
    - Frequency switch to 5 kHz
    - Duty Cycle switch to 50 % (Normal)
9. Engine idling, verify the scan tool MAF Sensor parameter is between 4, 950-5, 050 Hz.
    - **If not between 4, 950-5, 050 Hz.**

      Replace the K20 Engine Control Module.

    - **If between 4, 950-5, 050 Hz.**
10. Replace the B75C Multifunction Intake Air sensor.

Repair Instructions

Perform the **Diagnostic Repair Verification** after completing the repair.

- **Mass Airflow Sensor Replacement** for multifunction intake air sensor replacement.
- **Control Module References** for ECM replacement, programming, and setup

DTC P0106

Diagnostic Instructions

- Perform the **Diagnostic System Check - Vehicle** prior to using this diagnostic procedure.
- Review **Strategy Based Diagnosis** for an overview of the diagnostic approach.
- **Diagnostic Procedure Instructions** provides an overview of each diagnostic category.

DTC Descriptor

DTC P0106

Manifold Absolute Pressure (MAP) Sensor Performance

Diagnostic Fault Information

Circuit	Short to Ground	High Resistance	Open	Short to Voltage	Signal Performance
5 V Reference	P0106, P0107, P0697	P0106, P0107	P0107	P0106, P0108, P0697	P0106
Signal	P0106, P0107	P0106, P0107	P0106, P0107	P0106, P0108*	P0106, P1101
Low Reference	-	P0106, P0108	P0106, P0108	-	P0106
* Internal ECM or sensor damage may occur if the circuit is shorted to B+.					

Typical Scan Tool Data

MAP Sensor

Circuit	Short to Ground	Open	Short to Voltage
Operating Conditions: Engine running at various operating conditions **Parameter Normal Range:** 12-103 kPa (1.7-14.9 PSI) (varies with altitude)			
5 V Reference	0 kPa (0 PSI)	0 kPa (0 PSI)	128 kPa (18.6 PSI)
Signal	0 kPa (0 PSI)	0 kPa (0 PSI)	128 kPa (18.6 PSI)*
Low Reference	-	80-128 kPa (11.6-18.6 PSI)	-
* Internal ECM or Sensor damage may occur if the circuit is shorted to B+.			

MAP Sensor, if equipped with Turbocharger

Circuits	Short to Ground	Open	Short to Voltage
Operating Conditions: Engine running at various operating conditions **Parameter Normal Range:** 12-225 kPa (1.7-32.6 PSI) (varies with altitude)			
5 V Reference	0 kPa (0 PSI)	0 kPa (0 PSI)	255 kPa (36.9 PSI)
Signal	0 kPa (0 PSI)	0 kPa (0 PSI)	255 kPa (36.9 PSI)*
Low Reference	-	255 kPa (36.9 PSI)	-
* Internal ECM or sensor damage may occur if the circuit is shorted to B+.			

Circuit Description

The manifold absolute pressure (MAP) sensor measures the pressure inside the intake manifold. Pressure in the intake manifold is affected by engine speed, throttle opening, air temperature, barometric pressure (BARO) and

if equipped, turbocharger output. A diaphragm within the MAP sensor is displaced by the pressure changes that occur from the varying load and operating conditions of the engine. The sensor translates this action into electrical resistance.

The MAP sensor wiring includes 3 circuits. The engine control module (ECM) supplies a regulated 5 volts to the sensor on a 5 V reference circuit. The ECM supplies a ground on a low reference circuit. The MAP sensor provides a signal voltage to the ECM, relative to the pressure changes, on the MAP sensor signal circuit. The ECM converts the signal voltage input to a pressure value.

Under normal operation the greatest pressure that can exist in the intake manifold is at ignition ON, engine OFF, which is equal to the BARO. If equipped, a turbocharger can increase the pressure above BARO, when the vehicle is operated at wide-open throttle (WOT). The lowest manifold pressure occurs when the vehicle is idling or decelerating. The ECM monitors the MAP sensor signal for pressure outside of the normal range.

Conditions for Running the DTC

- DTCs P0106, P0107, P0108, P0111, P0112, P0113, P0114, P0116, P0117, P0118, P0119, P0125, P0128, P222C, P222D, P0335, P0336, P0401, P042E or P2610 are not set
- The engine speed is between 400-6500 RPM.
- The engine coolant temperature (ECT) Sensor is between -7 to +125°C (19.4-257°F).
- The intake air temperature (IAT) sensor is between -20 to +100°C (-4 to +212°F).
- This DTC runs continuously when the above conditions are met.

Conditions for Setting the DTC

The ECM determines if the MAP Sensor is not within the normal operating range. It accomplishes this by running 3 different models within the software to determine the values, for greater than 0.5 S.

Action Taken When the DTC Sets

DTC P0106 is a Type B DTC.

Conditions for Clearing the DTC

DTC P0106 is a Type B DTC.

Reference Information

Schematic Reference

Engine Controls Schematics

Connector End View Reference

COMPONENT CONNECTOR END VIEWS - INDEX

Electrical Information Reference

- **Circuit Testing**
- **Connector Repairs**
- **Testing for Intermittent Conditions and Poor Connections**
- **Wiring Repairs**

DTC Type Reference

Powertrain Diagnostic Trouble Code (DTC) Type Definitions

Scan Tool Reference

Control Module References for scan tool information

Special Tools

GE-23738-A Vacuum Pump

For equivalent regional tools, refer to **Special Tools** .

Circuit/System Verification

1. Ignition ON, verify that DTC P0641, P0651, P0697, or P06A3 is not set.
   - **If any of the DTCs are set**

     Refer to **DTC P0641, P0651, P0697, or P06A3 (ECM)** for further diagnosis.

   - **If none of the DTCs are set**
2. If you were sent here from DTC P0068, P0101, P0121, or P1101; refer to Circuit/System Testing below.
3. Ignition ON, verify the scan tool Throttle Body Idle Air Flow Compensation parameter is less than 90%.
   - **If 90% or greater**

     Refer to **Throttle Body Inspection and Cleaning** for this publication.

   - **If less than 90%**
4. Verify the scan tool Throttle Position Sensors 1 and 2 Agree/Disagree parameter displays Agree while performing the Throttle Sweep Test with a scan tool.
   - **If Disagree**

     Refer to **DTC P0121-P0123, P0222, P0223, or P2135** for further diagnosis.

   - **If Agree**
5. Determine the current vehicle testing altitude.
6. Verify the scan tool MAP Sensor pressure parameter is within the range specified in the **Altitude Versus Barometric Pressure** table.

- **If the MAP Sensor parameter is not in range**

  Refer to Circuit/System Testing below.

- **If the MAP Sensor parameter is within range**

7. Engine idling, verify the scan tool MAP Sensor pressure parameter is between 26-52 kPa (3.8-7.5 PSI) and changes with accelerator pedal input.
   - **If not between 26-52 kPa (3.8-7.5 PSI) or does not change**

     Refer to Circuit/System Testing below.

   - **If between 26-52 kPa (3.8-7.5 PSI) and changes**
8. Verify the scan tool MAF Sensor g/s parameter changes smoothly and gradually as the engine speed is increased and decreased while performing the actions listed below.
   1. Engine idling
   2. Perform the scan tool snapshot function.
   3. Increase the engine speed slowly to 3000 RPM and then back to idle.
   4. Exit from the scan tool snapshot and review the data.
   5. Observe the MAF Sensor parameter frame by frame with a scan tool.
   - **If the MAF Sensor parameter does not change smoothly and gradually**

     Refer to **DTC P0101** for further diagnosis.

   - **If the MAF Sensor parameter changes smoothly and gradually**
9. Operate the vehicle within the Conditions for Running the DTC. You may also operate the vehicle within the conditions that you observed from the Freeze Frame/Failure Records data.
10. Verify the DTC does not set.
    - **If the DTC sets**

      Refer to Circuit/System Testing below.

    - **If the DTC does not set**
11. All OK

Circuit/System Testing

1. Verify the integrity of the entire air induction system and verify that none of the following conditions exist:
   - Any damaged components
   - Improper operation of turbocharger wastegate actuator or bypass valve, if equipped
   - Loose or improper installation of the turbocharger and the charge air cooler, including the flexible ductwork, if equipped
   - An air flow restriction

- Any vacuum leak
- Improperly routed vacuum hoses
- In cold climates, inspect for any snow or ice buildup at the BARO port on the ECM, if equipped
- A restriction in the MAP Sensor port or the BARO port, if equipped
- Proper operation of the Positive Crankcase Ventilation (PCV) system
- Missing, restricted or leaking exhaust components. Refer to **Symptoms - Engine Exhaust**
- Engine mechanical condition; for example: low compression or incorrect timing chain or belt installation. Refer to **Symptoms - Engine Mechanical** .

- **If a condition is found**

  Repair or replace the component as appropriate.

- **If no condition is found**

2. Ignition OFF and all vehicle systems OFF. It may take up to 2 min for all vehicle systems to power down. Disconnect the B74 Manifold Absolute Pressure Sensor.
3. Test for less than 2 ohms between the low reference circuit terminal 2 and ground.
   - **If 2 ohms or greater**
   1. Ignition OFF, disconnect the harness connector at the K20 Engine Control Module.
   2. Test for less than 2 ohms in the low reference circuit end to end.
      - If 2 ohms or greater, repair the open/high resistance in the circuit.
      - If less than 2 ohms, replace the K20 Engine Control Module.
   - **If less than 2 ohms**
4. Ignition ON, test for 4.8-5.2 V between the 5 V reference circuit terminal 1 and ground.
   - **If less than 4.8 V**
   1. Ignition OFF, disconnect the harness connector at the K20 Engine Control Module.
   2. Test for infinite resistance between the 5 V reference circuit and ground.
      - If less than infinite resistance, repair the short to ground on the circuit.
      - If infinite resistance
   3. Test for less than 2 ohms in the 5 V reference circuit end to end.
      - If 2 ohms or greater, repair the open/high resistance in the circuit.
      - If less than 2 ohms, replace the K20 Engine Control Module.

NOTE: If the signal circuit is shorted to a voltage the ECM or the MAP Sensor may be damaged.

   - **If greater than 5.2 V**
   1. Ignition OFF, disconnect the harness connector at the K20 Engine Control Module.
   2. Ignition ON, test for less than 1 V between the 5 V reference circuit and ground.
      - If 1 V or greater, repair the short to voltage on the circuit.

- If less than 1 V, replace the K20 Engine Control Module.
- **If between 4.8-5.2 V**

5. Ignition ON, verify the scan tool MAP Sensor parameter is less than 0.5 V.
   - **If 0.5 V or greater**
   1. Ignition OFF, disconnect the harness connector at the K20 Engine Control Module.
   2. Ignition ON, test for less than 1 V between the signal circuit terminal 3 and ground.
      - If 1 V or greater, repair the short to voltage on the circuit.
      - If less than 1 V, replace the K20 Engine Control Module.
   - **If less than 0.5 V**
6. Ignition OFF, install a 3 A fused jumper wire between the signal circuit terminal 3 and the 5 V reference circuit terminal 1.
7. Ignition ON, verify the scan tool MAP Sensor voltage parameter is greater than 4.5 V.
   - **If 4.5 V or less**
   1. Ignition OFF, disconnect the K20 Engine Control Module.
   2. Remove the jumper wire, test for infinite resistance between the signal circuit terminal 3 and ground.
      - If less than infinite resistance, repair the short to ground on the circuit.
      - If infinite resistance
   3. Test for less than 2 ohms in the signal circuit end to end.
      - If 2 ohms or greater, repair the open or high resistance in the circuit.
      - If less than 2 ohms, replace the K20 Engine Control Module.
   - **If greater than 4.5 V**
8. Test or replace the B74 Manifold Absolute Pressure Sensor.

Component Testing

NOTE: You must perform the Circuit/System Testing in order to verify the integrity of the MAP Sensor circuits before proceeding with the Component Testing.

Skewed Sensor Test

1. Ignition OFF, remove the B74 Manifold Absolute Pressure Sensor from the engine. Connect the harness to the sensor, if disconnected.
2. Ignition ON, apply 17 kPa (5.0 in Hg) of vacuum to the B74 Manifold Absolute Pressure Sensor, with the **GE-23738-A** . Verify the scan tool MAP Sensor pressure parameter decreases between 13-21 kPa (1.8-3.0 PSI).
   - **If the parameter does not decrease between 13-21 kPa (1.8-3.0 PSI).**

     Replace the B74 Manifold Absolute Pressure Sensor.

   - **If the parameter does decrease between 13-21 kPa (1.8-3.0 PSI).**

3. Apply 34 kPa (10.0 in Hg) of vacuum to the B74 Manifold Absolute Pressure Sensor, with the **GE-23738-A** . Verify the scan tool MAP Sensor pressure parameter decreases between 30-38 kPa (4.4-5.5 PSI).
    - **If the parameter does not decrease between 30-38 kPa (4.4-5.5 PSI).**

      Replace the B74 Manifold Absolute Pressure Sensor.

    - **If the parameter does decrease between 30-38 kPa (4.4-5.5 PSI).**
4. All OK.

Erratic Signal Test

1. Ignition OFF, remove the B74 Manifold Absolute Pressure Sensor and disconnect the harness.
2. Install a 3 A fused jumper wire between the 5 V reference circuit terminal 1 of the sensor and the sensor harness.
3. Install a jumper wire between the low reference circuit terminal 2 of the sensor and ground.
4. Install a jumper wire to the signal circuit terminal 3 of the sensor.
5. Connect a DMM between the jumper wire and ground.
6. Ignition ON, observe the DC voltage on the DMM. Slowly apply between 0-15 kPa (0-4.4 in Hg) of vacuum to the sensor with the **GE-23738-A** . Verify the voltage changes, without any spikes or dropouts and is between 0.2-4.9 V.
    - **If not between 0.2-4.9 V or has spikes or dropouts**

      Replace the B74 Manifold Absolute Pressure Sensor.

    - **If between 0.2-4.9 V and there are no spikes or dropouts**
7. All OK.

Repair Instructions

Perform the **Diagnostic Repair Verification** after completing the repair.

- **Manifold Absolute Pressure Sensor Replacement** .
- **Control Module References** for ECM replacement, programming and setup

DTC P0107 OR P0108

Diagnostic Instructions

- Perform the **Diagnostic System Check - Vehicle** prior to using this diagnostic procedure.
- Review **Strategy Based Diagnosis** for an overview of the diagnostic approach.
- **Diagnostic Procedure Instructions** provides an overview of each diagnostic category.

DTC Descriptors

DTC P0107

Manifold Absolute Pressure (MAP) Sensor Circuit Low Voltage

DTC P0108

Manifold Absolute Pressure (MAP) Sensor Circuit High Voltage

Diagnostic Fault Information

Circuit	Short to Ground	High Resistance	Open	Short to Voltage	Signal Performance
5 V Reference	P0106, P0107, P0697	P0106, P0107	P0107	P0106, P0108, P0697	P0106
Signal	P0106, P0107	P0106, P0107	P0106, P0107	P0106, P0108*	P0106, P1101
Low Reference	-	P0106, P0108	P0106, P0108	-	P0106
* Internal ECM or sensor damage may occur if the circuit is shorted to B+.					

Typical Scan Tool Data

MAP Sensor

Circuit	Short to Ground	Open	Short to Voltage
Operating Conditions: Engine running at various operating conditions **Parameter Normal Range:** 12-103 kPa (1.7-14.9 PSI)			
5 V Reference	0 kPa (0 PSI)	0 kPa (0 PSI)	128 kPa (18.6 PSI)
Signal	0 kPa (0 PSI)	0 kPa (0 PSI)	128 kPa (18.6 PSI)*
Low Reference	-	80-128 kPa (11.6-18.6 PSI)	-
* Internal ECM or sensor damage may occur if the circuit is shorted to B+.			

MAP Sensor, if equipped with Turbocharger

Circuits	Short to Ground	Open	Short to Voltage
Operating Conditions: Engine running at various operating conditions **Parameter Normal Range:** 12-225 kPa (1.7 to 32.6 PSI) (Varies with altitude)			
5 V Reference	0 kPa (0 PSI)	0 kPa (0 PSI)	255 kPa (36.9 PSI)
Signal	0 kPa (0 PSI)	0 kPa (0 PSI)	255 kPa (36.9 PSI)*
Low Reference	-	255 kPa (36.9 PSI)	-
* Internal ECM or sensor damage may occur if the circuit is shorted to B+.			

Circuit Description

The manifold absolute pressure (MAP) sensor measures the pressure inside the intake manifold. Pressure in the

intake manifold is affected by engine speed, throttle opening, air temperature, barometric pressure (BARO) and if equipped turbocharger output. A diaphragm within the MAP sensor is displaced by the pressure changes that occur from the varying load and operating conditions of the engine. The sensor translates this action into electrical resistance.

The MAP sensor wiring includes 3 circuits. The engine control module (ECM) supplies a regulated 5 volts to the sensor on a 5 V reference circuit. The ECM supplies a ground on a low reference circuit. The MAP sensor provides a signal voltage to the ECM, relative to the pressure changes, on the MAP sensor signal circuit. The ECM converts the signal voltage input to a pressure value.

Under normal operation the greatest pressure that can exist in the intake manifold is at ignition ON, engine OFF, which is equal to the BARO. If equipped, a turbocharger can increase the pressure above BARO, when the vehicle is operated at wide-open throttle (WOT). The lowest manifold pressure occurs when the vehicle is idling or decelerating. The ECM monitors the MAP sensor signal for pressure outside of the normal range.

Conditions for Running the DTC

P0107

This DTC runs continuously.

P0108

This DTC runs continuously.

Conditions for Setting the DTC

P0107

The ECM detects that the MAP Sensor voltage is less than 0.15 V for greater than 13 ms.

P0108

The ECM detects that the MAP Sensor voltage is more than 4.50 V for greater than 13 ms.

Action Taken When the DTC Sets

DTCs P0107 and P0108 are Type B DTCs.

Conditions for Clearing the DTC

DTCs P0107 and P0108 are Type B DTCs.

Reference Information

Schematic Reference

Engine Controls Schematics

Connector End View Reference

COMPONENT CONNECTOR END VIEWS - INDEX

Electrical Information Reference

- **Circuit Testing**
- **Connector Repairs**
- **Testing for Intermittent Conditions and Poor Connections**
- **Wiring Repairs**

DTC Type Reference

Powertrain Diagnostic Trouble Code (DTC) Type Definitions

Scan Tool Reference

Control Module References for scan tool information

Special Tools

GE-23738-A Vacuum Pump

For equivalent regional tools, refer to **Special Tools** .

Circuit/System Verification

1. Ignition ON, verify that DTC DTC P0641, P0651, P0697, or P06A3 is not set.
   - **If any of the DTCs are set**

     Refer to **DTC P0641, P0651, P0697, or P06A3 (ECM)** for further diagnosis.

   - **If none of the DTCs are set**
2. Determine the current vehicle testing altitude.
3. Verify the scan tool MAP Sensor pressure parameter is within the range specified in the **Altitude Versus Barometric Pressure** table.
   - **If the MAP Sensor parameter is not in range**

     Refer to Circuit/System Testing for further diagnosis.

   - **If the MAP Sensor parameter is within range**
4. Verify the engine is equipped with a turbocharger.
   - **If not equipped with a turbocharger**

     Refer to Step 6.

- **If equipped with a turbocharger**

5. Engine idling, verify the scan tool MAP Sensor voltage parameter is between 0.3-4.8 V and changes with accelerator pedal input.
   - **If not between 0.3-4.8 V or does not change**

     Refer to Circuit/System Testing below.

   - **If between 0.3-4.8 V and changes**

     Refer to Step 7.

6. Engine idling, verify the scan tool MAP Sensor voltage parameter is between 0.2-4.5 V and changes with accelerator pedal input.
   - **If not between 0.2-4.5 V or does not change**

     Refer to Circuit/System Testing below.

   - **If between 0.2-4.5 V and changes**
7. Operate the vehicle within the Conditions for Running the DTC. You may also operate the vehicle within the conditions that you observed in the Freeze Frame/Failure Records data.
8. Verify a DTC does not set.
   - **If any DTC sets**

     Refer to Circuit/System Testing below.

   - **If no DTC sets**
9. All OK.

Circuit/System Testing

1. Ignition OFF, disconnect the harness connector at the B74 Manifold Absolute Pressure Sensor.
2. Ignition OFF and all vehicle systems OFF. It may take up to 2 min for all vehicle systems to power down. Test for less than 2 ohms between the low reference circuit terminal 2 and ground.
   - **If 2 ohms or greater**
   1. Ignition OFF, disconnect the harness connector at the K20 Engine Control Module.
   2. Test for less than 2 ohms in the low reference circuit end to end.
      - If 2 ohms or greater, repair the open/high resistance in the circuit.
      - If less than 2 ohms, replace the K20 Engine Control Module.
   - **If less than 2 ohms**
3. Ignition ON, test for 4.8-5.2 V between the 5 V reference circuit terminal 1 and ground.
   - **If less than 4.8 V**
   1. Ignition OFF, disconnect the harness connector at the K20 Engine Control Module.

2. Test for infinite resistance between the 5 V reference circuit and ground.
    - If less than infinite resistance, repair the short to ground on the circuit.
    - If infinite resistance
3. Test for less than 2 ohms in the 5 V reference circuit end to end.
    - If 2 ohms or greater, repair the open/high resistance in the circuit.
    - If less than 2 ohms, replace the K20 Engine Control Module.

NOTE: If the signal circuit is shorted to a voltage the ECM or the MAP Sensor may be damaged.

-
- **If greater than 5.2 V**

1. Ignition OFF, disconnect the harness connector at the K20 Engine Control Module.
2. Ignition ON, test for less than 1 V between the 5 V reference circuit and ground.
    - If 1 V or greater, repair the short to voltage on the circuit.
    - If less than 1 V, replace the K20 Engine Control Module.

- **If between 4.8-5.2 V**

4. Ignition ON, verify the scan tool MAP Sensor parameter is less than 0.5 V.
    - **If 0.5 V or greater**

    1. Ignition OFF, disconnect the harness connector at the K20 Engine Control Module.
    2. Ignition ON, test for less than 1 V between the signal circuit terminal 3 and ground.
        - If 1 V or greater, repair the short to voltage on the circuit.
        - If less than 1 V, replace the K20 Engine Control Module.

    - **If less than 0.5 V**

5. Ignition OFF, install a 3 A fused jumper wire between the signal circuit terminal 3 and the 5 V reference circuit terminal 1.
6. Ignition ON, verify the scan tool MAP Sensor voltage parameter is greater than 4.5 V.
    - **If 4.5 V or less**

    1. Ignition OFF, disconnect the harness connector at the K20 Engine Control Module.
    2. Remove the jumper wire, test for infinite resistance between the signal circuit terminal 3 and ground.
        - If less than infinite resistance, repair the short to ground on the circuit.
        - If infinite resistance
    3. Test for less than 2 ohms in the signal circuit end to end.
        - If 2 ohms or greater, repair the open or high resistance in the circuit.
        - If less than 2 ohms, replace the K20 Engine Control Module.

    - **If greater than 4.5 V**

7. Test or replace the B74 Manifold Absolute Pressure Sensor.

Component Testing

NOTE: You must perform the Circuit/System Testing in order to verify the integrity of the MAP Sensor circuits before proceeding with the Component Testing.

Skewed Sensor Test

1. Ignition OFF, remove the B74 Manifold Absolute Pressure Sensor from the engine. Connect the harness to the sensor, if disconnected.
2. Ignition ON, apply 17 kPa (5.0 in Hg) of vacuum to the B74 Manifold Absolute Pressure Sensor, with the **GE-23738-A** . Verify the scan tool MAP Sensor pressure parameter decreases between 13-21 kPa (1.8-3.0 PSI).
   - **If the parameter does not decrease between 13-21 kPa (1.8-3.0 PSI).**

     Replace the B74 Manifold Absolute Pressure Sensor.

   - **If the parameter does decrease between 13-21 kPa (1.8-3.0 PSI).**
3. Apply 34 kPa (10.0 in Hg) of vacuum to the B74 Manifold Absolute Pressure Sensor, with the **GE-23738-A** . Verify the scan tool MAP Sensor pressure parameter decreases between 30-38 kPa (4.4-5.5 PSI).
   - **If the parameter does not decrease between 30-38 kPa (4.4-5.5 PSI).**

     Replace the B74 Manifold Absolute Pressure Sensor.

   - **If the parameter does decrease between 30-38 kPa (4.4-5.5 PSI).**
4. All OK.

Erratic Signal Test

1. Ignition OFF, remove the B74 Manifold Absolute Pressure Sensor and disconnect the harness.
2. Install a 3 A fused jumper wire between the 5 V reference circuit terminal 1 of the sensor and the sensor harness.
3. Install a jumper wire between the low reference circuit terminal 2 of the sensor and ground.
4. Install a jumper wire to the signal circuit terminal 3 of the sensor.
5. Connect a DMM between the jumper wire and ground.
6. Ignition ON, observe the DC voltage on the DMM. Slowly apply between 0-15 kPa (0-4.4 in Hg) of vacuum to the sensor with the **GE-23738-A** . Verify the voltage changes, without any spikes or dropouts and is between 0.2-4.9 V.
   - **If not between 0.2-4.9 V or has spikes or dropouts**

     Replace the B74 Manifold Absolute Pressure Sensor.

   - **If between 0.2-4.9 V and there are no spikes or dropouts**
7. All OK.

Repair Instructions

Perform the **Diagnostic Repair Verification** after completing the repair.

- **Manifold Absolute Pressure Sensor Replacement**
- **Control Module References** for ECM replacement, programming and setup

DTC P0112, P0113, OR P0114

Diagnostic Instructions

- Perform the **Diagnostic System Check - Vehicle** prior to using this diagnostic procedure.
- Review **Strategy Based Diagnosis** for an overview of the diagnostic approach.
- **Diagnostic Procedure Instructions** provides an overview of each diagnostic category.

DTC Descriptors

DTC P0112

Intake Air Temperature (IAT) Sensor 1 Circuit Low Voltage

DTC P0113

Intake Air Temperature (IAT) Sensor 1 Circuit High Voltage

DTC P0114

Intake Air Temperature (IAT) Sensor 1 Circuit Intermittent

Diagnostic Fault Information

IAT Sensor 1

Circuit	Short to Ground	Open/High Resistance	Short to Voltage	Signal Performance
Sensor	P0112, P0114, P2199**	P0113, P0114, P2199**	P0113*, P0114, P2199**	P0111, P0114
Low Reference	-	P0097, P0113, P11C2, P2227, P2229	*	-
*Internal ECM or sensor damage may occur if the circuit is shorted to B+. ** Where used.				

Typical Scan Tool Data

IAT Sensor 1

Circuit	Short to Ground	Open or High Resistance	Short to Voltage
Operating Conditions: Engine Running **Parameter Normal Range:** Varies with ambient temperature			
Sensor	150°C (302°F)	-40°C (-40°F)	-40°C (-40°F)*
Low Reference	-	-40°C (-40°F)	-40°C (-40°F)*
*Internal ECM or sensor damage may occur if the circuit is shorted to B+			

Circuit/System Description

The sensors listed below are integrated within the multifunction intake air sensor:

- Intake Air Temperature (IAT) sensor 1
- IAT sensor 2
- Humidity sensor
- Mass Air Flow (MAF) sensor
- Barometric (BARO) pressure sensor

The intake air temperature (IAT) sensor 1 is a variable resistor that measures the temperature of the air in the sensor bore. The engine control module (ECM) supplies 5 V to the IAT sensor 1 signal circuit and a ground for the IAT sensor 1 low reference circuit. The signal varies with inlet air temperature and is displayed by the scan tool as °C (°F).

The IAT sensor 2 produces a frequency signal based on the inlet air temperature very close to the humidity sensor within the sensor bore. The signal varies with inlet air temperature and is displayed by the scan tool as ° C (°F) and Hertz (Hz). The signal circuit is shared by the IAT sensor 2 and the humidity sensor.

The sensors listed below share an ECM supplied 5 V reference circuit:

- IAT sensor 2
- Humidity sensor
- Barometric pressure (BARO) sensor

The sensors listed below share an ECM supplied low reference circuit:

- IAT sensor 1
- IAT sensor 2
- Humidity sensor
- Barometric pressure (BARO) sensor

Ignition voltage and ground circuits are also supplied to the multifunction intake air sensor's internal circuits for the mass air flow (MAF) sensor.

IAT Sensor 1 - Temperature, Resistance, Voltage Table

IAT Sensor 1	IAT Sensor 1 Resistance	IAT Sensor 1 Signal Voltage

Cold	High	High
Warm	Low	Low

Conditions for Running the DTCs

P0112, P0113, and P0114

- The ignition is ON, or the engine is running.
- The DTCs run continuously when the above conditions are met.

Conditions for Setting the DTC

P0112

NOTE: The scan tool display range is between -40 and +150°C (-40 and +302°F).

The ECM detects that the IAT sensor signal is warmer than 150°C (302°F) for at least 5 s.

P0113

NOTE: The scan tool display range is between -40 and +150°C (-40 and +302°F).

The ECM detects that the IAT sensor signal is colder than -60°C (-76°F) for at least 5 s.

P0114

The ECM monitors the IAT sensor signal every 0.1 s, to determine if the signal has changed more than 80°C (176°F). The DTC fails when the condition exists for longer than 4 s.

Action Taken When the DTCs Set

- DTCs P0112, P0113, and P0114 are Type B DTCs.
- The ECM commands the cooling fans ON.

Conditions for Clearing the DTCs

DTCs P0112, P0113, and P0114 are Type B DTCs.

Diagnostic Aids

- With the ignition ON, the engine OFF, if the engine is cold, a properly functioning IAT sensor 1 will gradually increase the scan tool IAT Sensor 1 parameter. This is due to the heat that is generated by the MAF sensor heating elements.
- Depending on the ambient temperature, an IAT sensor 1 signal circuit or low reference circuit that is shorted to the MAF sensor signal circuit can cause a DTC P0113 and/or P0114 to set. This condition causes a rapid fluctuation in the IAT Sensor 1 parameter.

Reference Information

Schematic Reference

Engine Controls Schematics

Connector End View Reference

COMPONENT CONNECTOR END VIEWS - INDEX

Electrical Information Reference

- **Circuit Testing**
- **Connector Repairs**
- **Testing for Intermittent Conditions and Poor Connections**
- **Wiring Repairs**

DTC Type Reference

Powertrain Diagnostic Trouble Code (DTC) Type Definitions

Scan Tool Reference

Control Module References for scan tool information

Circuit/System Verification

1. Ignition ON.
2. Verify that DTC DTC P0641, P0651, P0697, or P06A3 is not set.
   - **If any of the DTCs are set**

     Refer to **DTC P0641, P0651, P0697, or P06A3 (ECM)** for further diagnosis.

   - **If none of the DTCs are set**

NOTE: To minimize the effects of residual engine heat and sensor internal heating elements, perform Steps 3 and 4 of this verification procedure only if the ignition has been OFF for 8 hours or more.

3. Ignition ON.
4. Verify the following scan tool parameters are within 55°C (99°F) of each other.
   - Start-Up IAT Sensor 1
   - IAT Sensor 2
   - Start-Up ECT

- **If not within 55°C (99°F)**

  Refer to Circuit/System Testing below.

- **If within 55°C (99°F)**

5. Engine idling, verify the following scan tool parameters are between: -38 and +149°C (-36 and +300°F).
   - IAT Sensor 1
   - IAT Sensor 2
   - ECT Sensor
   - **If not between: -38 and +149°C (-36 and +300°F)**

     Refer to Circuit/System Testing below.

   - **If between: -38 and +149°C (-36 and +300°F)**
6. Operate the vehicle within the conditions for running the DTC. You may also operate the vehicle within the conditions that you observed from the freeze frame/failure records data.
7. Verify the DTC does not set.
   - **If the DTC does set**

     Refer to Circuit/System Testing below.

   - **If the DTC does not set**
8. All OK

Circuit/System Testing

NOTE: You must perform the Circuit/System Verification before proceeding with Circuit/System Testing.

1. Ignition OFF, and all vehicle systems OFF, it may take up to 2 min. for all vehicle systems to power down. Disconnect the harness connector at the B75C Multifunction Intake Air sensor.
2. Test for less than 2 ohms between the low reference circuit terminal 7 and ground.
   - **If 2 ohms or greater**
     1. Ignition OFF, disconnect the harness connector at the K20 Engine Control Module.
     2. Test for less than 2 ohms in the low reference circuit end to end.
        - If 2 ohms or greater, repair the open or high resistance in the circuit.
        - If less than 2 ohms replace the K20 Engine Control Module.
   - **If less than 2 ohms**
3. Ignition ON, test for 4.8-5.2 V between the signal circuit terminal 8 and ground.
   - **If less than 4.8 V**
     1. Ignition OFF, disconnect the harness connector at the K20 Engine Control Module.
     2. Test for infinite resistance between the signal circuit and ground.

- If less than infinite resistance, repair the short to ground on the circuit.
- If infinite resistance

3. Test for less than 2 ohms in the signal circuit end to end.
   - If 2 ohms or greater, repair the open/high resistance in the circuit.
   - If less than 2 ohms, replace the K20 Engine Control Module.

- **If greater than 5.2 V**

NOTE: If the signal circuit is shorted to a voltage the engine control module or the sensor may be damaged.

1. Ignition OFF, disconnect the harness connector at the K20 Engine Control Module.
2. Ignition ON, test for less than 1 V between the signal circuit and ground.
   - If 1 V or greater, repair the short to voltage on the circuit.
   - If less than 1 V, replace the K20 Engine Control Module.

- **If between 4.8-5.2 V**

4. Ignition ON, verify the scan tool IAT Sensor 1 parameter is colder than -39°C (-38°F).
   - **If warmer than -39°C (-38°F).**

1. Ignition OFF, disconnect the harness connector at the K20 Engine Control Module.
2. Test for infinite resistance between the signal circuit terminal 8 and ground.
   - If less than infinite resistance, repair the short to ground on the circuit.
   - If infinite resistance
3. Test for less than 2 ohms in the signal circuit end to end.
   - If 2 ohms or greater, repair the open/high resistance in the circuit.
   - If less than 2 ohms, replace the K20 Engine Control Module.

- **If colder than -39°C (-38°F).**

5. Ignition OFF, install a 3 A fused jumper wire between the signal circuit terminal 8 and the low reference circuit terminal 7.
6. Verify the scan tool IAT Sensor 1 parameter is warmer than 148°C (298°F).
   - **If colder than 148°C (298°F).**

1. Ignition OFF, remove the jumper wire, disconnect the harness connector at the K20 Engine Control Module, ignition ON.
2. Test for less than 1 V between the signal circuit and ground.
   - If 1 V or greater, repair the short to voltage on the circuit.
   - If less than 1 V
3. Ignition OFF.
4. Test for less than 2 ohms in the signal circuit end to end.
   - If 2 ohms or greater, repair the open/high resistance in the circuit.
   - If less than 2 ohms, replace the K20 Engine Control Module.

- **If warmer than 148°C (298°F).**

7. Test or replace the B75C Multifunction Intake Air sensor.

Component Testing

Multifunction Intake Air Sensor

1. Ignition OFF, disconnect the harness connector at the B75C Multifunction Intake Air sensor.

   NOTE: A thermometer can be used to test the sensor off the vehicle.

2. Test the IAT sensor 1 by varying the sensor temperature while monitoring the sensor resistance. Compare the readings with the **Temperature Versus Resistance - Intake Air Temperature Sensor (Bosch Sensor)** table for Bosch Sensors. The resistance values should be in range of the table values.
   - **If not within the specified range.**

     Replace the B75C Multifunction Intake Air sensor.

   - **If within the specified range.**
3. All OK

Repair Instructions

Perform the **Diagnostic Repair Verification** after completing the repair.

- **Mass Airflow Sensor Replacement** for B75C Multifunction Intake Air sensor replacement.
- **Control Module References** for ECM replacement, programming, and setup.

DTC P0116 (LUW)

Diagnostic Instructions

- Perform the **Diagnostic System Check - Vehicle** prior to using this diagnostic procedure.
- Review **Strategy Based Diagnosis** for an overview of the diagnostic approach.
- **Diagnostic Procedure Instructions** provides an overview of each diagnostic category.

DTC Descriptors

DTC P0116

Engine Coolant Temperature (ECT) Sensor Performance

Diagnostic Fault Information

Circuit	Short to Ground	Open/High Resistance	Short to Voltage	Signal Performance

ECT Sensor Signal	P0117	P0118	P0118	P0116, P0119, P0128
Low Reference	-	P0118	-	P0116, P0119, P0128

Typical Scan Tool Data

ECT Sensor 1

Circuit	Short to Ground	Open	Short to Voltage
Operating Conditions: The ignition is ON, or the engine is running **Parameter Normal Range:** Varies with ambient air temperature, within a range of -40 to +140°C (-40 to +284°F)			
ECT Sensor Signal	140°C (284°F)	-40°C (-40°F)	-40°C (-40°F)
Low Reference	-	-40°C (-40°F)	-40°C (-40°F)

Circuit/System Description

The engine coolant temperature (ECT) sensor is a variable resistor that measures the temperature of the engine coolant. The engine control module (ECM) supplies 5 V to the ECT 1 sensor signal circuit and a ground for the low reference circuit.

The purpose of the P0116 diagnostic is to analyze the performance of the ECT sensor by comparing the response and the range of the sensor signal to two distinct models under various operating conditions.

- The first model verifies that the sensor is not stuck in range.
- The second model verifies that the sensor is within an acceptable operating range of the calculated ECT. Both models use various parts of the information derived from the following inputs:
  - Ambient air temperature
  - ECT
  - Engine OFF time
  - Intake air temperature (IAT)
  - Engine OFF time

Conditions for Running the DTC

- The ignition is ON, or the engine is running.
- DTCs P0111, P0112, P0113, P0117, P0118, P0722, P0723 or P2610 are not set.
- The ignition has been off for greater than 8 h before the engine is started.
- This DTC runs continuously within the enabling conditions.

Conditions for Setting the DTC

P0116 Engine Running, Sensor Signal Stuck Test

- The ECM detects that the ECT sensor signal has abruptly changed a minimum of 20°C (68°F) warmer than intake air temperature (IAT) at engine start.

- The measured ECT is greater than measured IAT at engine start, is not within range of the calibrated model.

P0116 Engine Running, Sensor Within Range Test

- The ECT at engine start is not within range of the calibrated model.
- The ECT is greater than measured IAT at engine start, is not within range of the calibrated model.

Action Taken When the DTC Sets

- DTC P0116 is a Type B DTC.
- The cooling fans will be commanded ON.
- The A/C compressor will be commanded OFF.

Conditions for Clearing the DTC

DTC P0116 is a Type B DTC.

Diagnostic Aids

- Inspect the ECT sensor terminals for corrosion and for engine coolant leaking through the sensor. Engine coolant that is leaking through the sensor will create a high resistance short to ground. This condition results in less voltage on the ECT sensor signal circuit, which is interpreted by the ECM as a warmer ECT.
- An intake air temperature (IAT) sensor that is biased colder at various ambient temperatures due to greater resistance than is normal will increase the range between these 2 sensors. Measure and record the resistance of the IAT sensor at various ambient temperatures, then compare those measurements to the Temperature vs. Resistance table. Refer to **Temperature Versus Resistance (ECT)** .
- Test the ECT sensor at various temperature levels in order to evaluate the possibility of a biased sensor. A sensor that is biased warmer can result in a driveability condition. Refer to **Temperature Versus Resistance (ECT)** .
- A slight to moderate resistance in the IAT sensor signal circuit or low reference circuit will increase the range between these two sensors. This condition results in a greater voltage on the IAT sensor signal circuit, which is interpreted by the ECM as a colder IAT.
- If the condition is intermittent, allow the vehicle to sit for greater than 8 h with the ignition OFF, may help isolate the condition. Compare the scan tool and ECT Sensor temperature sensor values at ignition on. The Radiator Coolant Temperature Sensor and the ECT Sensor values should display within 3°C (5° F).

Reference Information

Schematic Reference

Engine Controls Schematics

Connector End View Reference

COMPONENT CONNECTOR END VIEWS - INDEX

Description and Operation

Cooling System Description and Operation (1.4L LUV) , **Cooling System Description and Operation (1.8L LUW and LWE)**

Electrical Information Reference

- **Circuit Testing**
- **Connector Repairs**
- **Testing for Intermittent Conditions and Poor Connections**
- **Wiring Repairs**

DTC Type Reference

Powertrain Diagnostic Trouble Code (DTC) Type Definitions

Scan Tool Reference

Control Module References for scan tool information

Circuit/System Verification

1. Ignition ON, observe the DTC information with a scan tool. Verify that DTC P0112, P0113, P0117, or P0118 are not set.
    - If any of the DTCs are set, refer to **Diagnostic Trouble Code (DTC) List - Vehicle** .
2. Ignition off, inspect the cooling system surge tank for the proper coolant level. Refer to **Loss of Coolant** , and **Cooling System Draining and Filling (Static Fill)** , **Cooling System Draining and Filling (GE-47716 Fill)** .
3. If the ignition has been OFF for 8 h or greater, observe the scan tool parameters list below. The temperatures should be within 20°C (68°F).
    - ECT Sensor
    - IAT Sensor
4. Engine running, observe the ECT Sensor parameter. The reading should be between -40 to +140°C (-40 to +284°F) depending on the current ambient temperature and the vehicle operating conditions.
5. Operate the vehicle within the conditions for running the DTC. You may also operate the vehicle within the conditions that you observed from the freeze frame/failure records data.

Circuit/System Testing

1. Ignition OFF, disconnect the harness connector at the B34A Engine Coolant Temperature Sensor 1.
2. Ignition OFF, test for less than 5 ohms between the low reference circuit terminal 2 and ground.
    - If greater than the specified range, test the low reference circuit for an open/high resistance. If the

circuit tests normal, replace the K20 Engine Control Module.

3. Ignition ON, verify the scan tool ECT Sensor 1 is at -40°C (-40°F).
   - If warmer than the specified range, test the signal circuit terminal 1 for a short to ground. If the circuit tests normal, replace the K20 Engine Control Module.

CAUTION: If the fuse in the jumper wire opens, the signal circuit may have a short to a voltage or a short to ground and the sensor might be damaged.

4. Install a 3 A fused jumper wire between the signal circuit terminal 1 and the low reference circuit terminal 2. Verify the scan tool ECT Sensor 1 is at 140°C (284°F).
   - If colder than the specified range, test the signal circuit for a short to voltage or an open/high resistance. If the circuit tests normal, replace the K20 Engine Control Module.
5. If all circuits test normal, test or replace the B34A Engine Coolant Temperature Sensor 1.

Component Testing

Static Test

1. Ignition OFF, disconnect the harness connector at the B34A Engine Coolant Temperature Sensor 1.

NOTE: A thermometer can be used to test the sensor off vehicle.

2. Test the B34A Engine Coolant Temperature Sensor 1 by varying the sensor temperature while monitoring the sensor resistance. Compare the readings with the **Temperature Versus Resistance (ECT)** table and verify that the resistance is within 5% of the specification.
   - If not within the specified range, replace the B34A Engine Coolant Temperature Sensor 1.

Repair Instructions

Perform the **Diagnostic Repair Verification** after completing the diagnostic procedure.

- **Engine Coolant Temperature Sensor Replacement - Thermostat Side**
- **Control Module References** for ECM replacement, programming, and setup

DTC P0117, P0118, OR P0119

Diagnostic Instructions

- Perform the **Diagnostic System Check - Vehicle** prior to using this diagnostic procedure.
- Review **Strategy Based Diagnosis** for an overview of the diagnostic approach.
- **Diagnostic Procedure Instructions** provides an overview of each diagnostic category.

DTC Descriptors

DTC P0117

Engine Coolant Temperature (ECT) Sensor Circuit Low Voltage

DTC P0118

Engine Coolant Temperature (ECT) Sensor Circuit High Voltage

DTC P0119

Engine Coolant Temperature (ECT) Sensor Circuit Intermittent

Diagnostic Fault Information

Circuit	Short to Ground	Open/High Resistance	Short to Voltage	Signal Performance
Signal	P0117	P0118, P0119	P0118*, P0119	P0116, P0128
Low Reference	-	P0118, P0119	-	P0128
*ECM or sensor damage may occur if the circuit is shorted to B+.				

Typical Scan Tool Data

ECT Sensor

Circuit	Short to Ground	Open	Short to Voltage
Operating Conditions: Engine running at various operating conditions **Parameter Normal Range:** Varies with coolant temperature			
Signal	140°C (284°F)	-40°C (-40°F)	-40°C (-40°F)
Low Reference	-	-40°C (-40°F)	-

Circuit/System Description

The engine coolant temperature (ECT) sensor is a variable resistor that measures the temperature of the engine coolant. The engine control module (ECM) supplies 5 V to the ECT sensor signal circuit and a ground for the low reference circuit. This diagnostic checks for an open, short to ground or an intermittent circuit condition between the ECM and ECT sensor.

Conditions for Running the DTC

P0117

- The ignition is ON.

  OR

- The engine is running for greater than 10 s.

OR

- The engine run time is less than 10 s when the intake air temperature (IAT) is colder than 50°C (122°F).
- This DTC runs continuously within the enabling conditions.

P0118

- The ignition is ON.

OR

- The engine is running for greater than 10 s.

OR

- The engine run time is less than 10 s when the IAT is warmer than 0°C (32°F).
- This DTC runs continuously within the enabling conditions.

P0119

- This DTC runs continuously within the enabling conditions.

Conditions for Setting the DTC

P0117

The ECM detects that the ECT is warmer than 149°C (300°F) for greater than 5 s.

P0118

The ECM detects that the ECT is colder than -39°C (-38°F) for greater than 5 s.

P0119

The ECM detects that the ECT is intermittent or has abruptly changed for greater than 4 seconds.

Action Taken When the DTC Sets

- DTC P0117, P0118 or P0119 are a Type B DTC.
- The cooling fans will be commanded ON.
- The Engine Coolant Temperature Gauge is inoperative.
- The AC compressor will be commanded OFF.

Conditions for Clearing the DTC

DTC P0117, P0118 or P0119 are a Type B DTC.

Reference Information

Schematic Reference

Engine Controls Schematics

Connector End View Reference

COMPONENT CONNECTOR END VIEWS - INDEX

Electrical Information Reference

- **Circuit Testing**
- **Connector Repairs**
- **Testing for Intermittent Conditions and Poor Connections**
- **Wiring Repairs**

DTC Type Reference

Powertrain Diagnostic Trouble Code (DTC) Type Definitions

Scan Tool Reference

Control Module References for scan tool information

Circuit/System Verification

1. Ignition ON.
2. Verify the scan tool ECT Sensor parameter is between -39 to + 120°C (-38 to +248°F) and changes with engine run time.
    - **If not between -39 to + 120°C (-38 to +248°F) or does not change**

      Refer to Circuit/System Testing below.

    - **If between -39 to + 120°C (-38 to +248°F) and changes**
3. Operate the vehicle within the Conditions for Running the DTC. You may also operate the vehicle within the conditions that you observed from the Freeze Frame/Failure Records data.
4. Verify the DTC does not set.
    - **If the DTC sets**

      Refer to Circuit/System Testing below.

    - **If the DTC does not set**
5. All OK.

Circuit/System Testing

1. Ignition OFF and all vehicle systems OFF, disconnect the B34 Engine Coolant Temperature Sensor harness connector at the sensor. It may take up to 2 minutes for all vehicle systems to power down.
2. Test for less than 5 ohms between the low reference circuit terminal 2 and ground.
    - **If 5 ohms or greater**
    1. Ignition OFF, disconnect the harness connector at the K20 Engine Control Module.
    2. Test for less than 2 ohms in the low reference circuit end to end.
        - If 2 ohms or greater, repair the open/high resistance in the circuit.
        - If less than 2 ohms, replace the K20 Engine Control Module.
    - **If less than 5 ohms**
3. Ignition ON.
4. Verify the scan tool ECT Sensor parameter is colder than -39°C (-38°F).
    - **If warmer than -39°C (-38°F)**
    1. Ignition OFF, disconnect the harness connector at the K20 Engine Control Module.
    2. Test for infinite resistance between the signal circuit terminal 1 and ground.
        - If less than infinite resistance, repair the short to ground on the circuit.
        - If infinite resistance, replace the K20 Engine Control Module.
    - **If colder than -39°C (-38°F)**
5. Install a 3 A fused jumper wire between the signal circuit terminal 1 and the low reference circuit terminal 2.
6. Verify the scan tool ECT sensor parameter is warmer than 149°C (300°F).
    - **If colder than 149°C (300°F)**
    1. Ignition OFF, remove the jumper wire, disconnect the harness connector at the K20 Engine Control Module, ignition ON.
    2. Test for less than 1 V between the signal circuit and ground.
        - If 1 V or greater, repair the short to voltage on the circuit.
        - If less than 1 V
    3. Ignition OFF.
    4. Test for less than 2 ohms in the signal circuit end to end.
        - If 2 ohms or greater, repair the open/high resistance in the circuit.
        - If less than 2 ohms, replace the K20 Engine Control Module.
    - **If warmer than 149°C (300°F)**
7. Test or replace the B34 Engine Coolant Temperature Sensor.

Component Testing

1. Ignition OFF, disconnect the harness connector at the B34 Engine Coolant Temperature Sensor.
2. Test the ECT sensor by varying the sensor temperature while monitoring the sensor resistance. Compare the readings with the **Temperature Versus Resistance** table. The resistance values should be in range of

the table values.
    - **If not within the specified range**
    - Replace the B34 Engine Coolant Temperature Sensor.
    - **If within the specified range**
3. Test for infinite resistance between each terminal and the sensor housing.
    - **If less than infinite resistance**

      Replace the B34 Engine Coolant Temperature Sensor.

    - **If infinite resistance**
4. All OK.

Repair Instructions

Perform the **Diagnostic Repair Verification** after completing the repair.

- **Engine Coolant Temperature Sensor Replacement - Thermostat Side**
- **Engine Control Module Replacement** engine control module replacement, programming, and setup

DTC P0121-P0123, P0222, P0223, OR P2135

Diagnostic Instructions

- Perform the **Diagnostic System Check - Vehicle** prior to using this diagnostic procedure.
- Review **Strategy Based Diagnosis** for an overview of the diagnostic approach.
- **Diagnostic Procedure Instructions** provides an overview of each diagnostic category.

DTC Descriptors

DTC P0121

Throttle Position Sensor 1 Performance

DTC P0122

Throttle Position Sensor 1 Circuit Low Voltage

DTC P0123

Throttle Position Sensor 1 Circuit High Voltage

DTC P0222

Throttle Position Sensor 2 Circuit Low Voltage

DTC P0223

Throttle Position Sensor 2 Circuit High Voltage

DTC P2135

Throttle Position Sensors 1-2 Not Plausible

Diagnostic Fault Information

Circuit	Short to Ground	High Resistance	Open	Short to Voltage	Signal Performance
5 V Reference	P06A3, P2135	P2135	P0122, P0222	P06A3, P2135	P0068, P0121
Throttle Position Sensor 1 Signal	P0122	P2135	P0122	P0123	P0068, P0121
Throttle Position Sensor 2 Signal	P0222	P2135	P0223	P0223	P0068, P0121
Low Reference	-	P2135	P0123, P0223	-	P0068, P0121

Typical Scan Tool Data

Throttle Position Sensor 1

Circuit	Short to Ground	Open	Short to Voltage
Operating Conditions: Engine running at various operating conditions **Normal Range:** 4.75-0.35 V			
5 V Reference	0 V	0 V	5 V
Throttle Position Sensor 1 Signal	0 V	0 V	5 V
Low Reference	-	4-5 V	-

Throttle Position Sensor 2

Circuit	Short to Ground	Open	Short to Voltage
Operating Conditions: Engine running at various operating conditions **Parameter Normal Range:** 0.35-4.65 V			
5 V Reference	0 V	0 V	5 V
Throttle Position Sensor 2 Signal	0 V	5 V	5 V
Low Reference	-	4-5 V	-

Circuit/System Description

The throttle body assembly contains 2 throttle position sensors. The throttle position sensors are mounted to the throttle body assembly and are not serviceable. The throttle position sensors provide a signal voltage that changes relative to throttle blade angle. The engine control module (ECM) supplies the throttle position sensors with a common 5 V reference circuit, a common low reference circuit, and two independent signal circuits.

The throttle position sensors have opposite functionality. throttle position sensor 1 signal voltage decreases and throttle position sensor 2 signal voltage increases as the accelerator pedal increases to wide open throttle (WOT).

Conditions for Running the DTC

P0122, P0123, P0222, and P0223

- DTC P06A3 is not set.
- The run/crank or powertrain relay voltage is greater than 6.41 V and reduced power is not active.
- The ignition is ON or the engine is operating.
- DTC P0122, P0123, P0222, P0223 run continuously when the above conditions are met.

P0121

- DTCs P0102, P0103, P0107, P0108, P0112, P0113, P0114, P0116, P0117, P0118, P0128, P0315, P0335, P0336, or is not set.
- The engine speed is between 400 and 6, 000 RPM.
- The engine coolant temperature (ECT) is between -7 to +125°C (19-257°F).
- The intake air temperature (IAT) is between -20 to +100°C (-4 to +212°F).
- DTC P0121 runs continuously when the above conditions are met.

P2135

- DTC P0122, P0123, P0222, P0223, or P06A3 is not set.
- The run/crank or powertrain relay voltage is greater than 6.41 V and reduced power is not active.
- The ignition is ON or the engine is operating.
- DTC P2135 runs continuously when the above conditions are met.

Conditions for Setting the DTC

P0121

The ECM detects the throttle position sensor is stuck within range for greater than 1 s.

P0122

The ECM detects the throttle position sensor 1 voltage is less than 0.325 V for greater than 1 s.

P0123

The ECM detects the throttle position sensor 1 voltage is greater than 4.75 V for greater than 1 s.

P0222

The ECM detects that the throttle position sensor 2 voltage is less than 0.25 V for greater than 1 s.

P0223

The ECM detects the throttle position sensor 2 voltage is greater than 4.59 V for greater than 1 s.

P2135

The ECM detects the difference between the throttle position sensor 1 and throttle position sensor 2 exceeds a predetermined value for greater than 1 s.

Action Taken When the DTC Sets

- DTC P0122, P0123, P0222, P0223, and P2135 are Type A DTCs.
- DTC P0121 is a Type B DTC.
- The ECM commands the TAC system to operate in the Reduced Engine Power mode.
- A message center or an indicator displays Reduced Engine Power.
- Under certain conditions the control module commands the engine OFF.

Conditions for Clearing the MIL/DTC

- DTCs P0122, P0123, P0222, P0223, and P2135 are Type A DTCs.
- DTC P0121 is a Type B DTC.

Diagnostic Aids

- A high resistance condition on the throttle position and throttle actuator control circuits could cause a DTC to set.
- If the accelerator pedal is pressed to the wide open throttle position, the throttle blade angle or Throttle Position angle is limited to less than 40 percent.

Reference Information

Schematic Reference

Engine Controls Schematics

Connector End View Reference

COMPONENT CONNECTOR END VIEWS - INDEX

Description and Operation

Throttle Actuator Control (TAC) System Description

Electrical Information Reference

- **Circuit Testing**
- **Connector Repairs**
- **Testing for Intermittent Conditions and Poor Connections**
- **Wiring Repairs**

DTC Type Reference

Powertrain Diagnostic Trouble Code (DTC) Type Definitions

Scan Tool Reference

Control Module References for scan tool information

Circuit/System Verification

1. Ignition ON.
2. If you were sent here from DTC P0068, P0101, P0106, or P1101 refer to Circuit/System Testing below.
3. Verify that DTC P0641, P0651, P0697, or P06A3 is not set.
   - **If any of the DTCs are set**

     Refer to **DTC P0641, P0651, P0697, or P06A3 (ECM)** for further diagnosis.

   - **If none of the DTCs are set**
4. Verify the scan tool Throttle Body Idle Airflow Compensation parameter is less than 90 %.
   - **90 % or greater**

     Refer to **Throttle Body Inspection and Cleaning** .

   - **If less than 90 %**
5. Verify the scan tool Throttle Position Sensor 1 and Throttle Position Sensor 2 voltage parameters are between 1.0-4.0 V and change with accelerator pedal input.
   - **If not between 1.0-4.0 V or does not change**

     Refer to Circuit/System Testing below

   - **If between 1.0-4.0 V and changes**
6. Verify the scan tool Throttle Position Sensor 1 and 2 Agree/Disagree parameter displays Agree while performing the Throttle Sweep Test with a scan tool.
   - **If Disagree**

     Refer to Circuit/System Testing below

   - **If Agree**
7. Determine the current vehicle testing altitude.

8. Verify the scan tool MAP Sensor pressure parameter is within range specified in the **Altitude Versus Barometric Pressure** table.
   - **The MAP Sensor pressure is not in range**

     Refer to **DTC P0106**.

   - **The MAP Sensor pressure is within range**
9. Engine idling.
10. Verify the scan tool MAP Sensor pressure parameter is between 26-52 kPa (3.8-7.5 psi) and changes with accelerator pedal input.
    - **If not between 26-52 kPa (3.8-7.5 psi) or does not change**

      Refer to **DTC P0106**.

    - **If between 26-52 kPa (3.8-7.5 psi) and changes**
11. Verify the scan tool MAF Sensor g/s parameter changes smoothly and gradually as the engine speed is increased and decreased while performing the actions listed below.
    1. Engine idling
    2. Perform the scan tool snapshot function.
    3. Increase the engine speed slowly to 3, 000 RPM and then back to idle.
    4. Exit from the scan tool snapshot and review the data.
    5. Observe the MAF Sensor parameter frame by frame with a scan tool.
    - **The MAF Sensor parameter does not change smoothly and gradually**

      Refer to **DTC P0101**.

    - **The MAF Sensor parameter changes smoothly and gradually**
12. Operate the vehicle within the Conditions for Running the DTC. You may also operate the vehicle within the conditions that you observed from the Freeze Frame/Failure Records data.
13. Verify the DTC does not set.
    - **If the DTC sets**

      Refer to Circuit/System Testing below

    - **If the DTC does not set**
14. All OK

Circuit/System Testing

NOTE: Disconnecting the throttle body harness connector causes additional DTCs to set.

1. Ignition OFF, and all vehicle systems OFF, disconnect the harness connector at Q38 Throttle Body. It

may take up to 2 minutes for all vehicle systems to power down.

2. Test for less than 5 ohms between the low reference circuit terminal C or 6 and ground.
    - **If 5 ohms or greater**
    1. Ignition OFF, disconnect the harness connector at the K20 Engine Control Module.
    2. Test for less than 2 ohms in the low reference circuit end to end.
        - If 2 ohms or greater, repair the open/high resistance in the circuit.
        - If less than 2 ohms, replace the K20 Engine Control Module.
    - **If less than 5 ohms**
3. Ignition ON.
4. Test for 4.8-5.2 V between the 5 V reference circuit terminal E or 2 and ground.
    - **If less than 4.8 V**
    1. Ignition OFF, disconnect the harness connector at the K20 Engine Control Module.
    2. Test for infinite resistance between the 5 V reference circuit and ground.
        - If less than infinite resistance, repair the short to ground on the circuit.
        - If infinite resistance
    3. Test for less than 2 ohms in the 5 V reference circuit end to end.
        - If 2 ohms or greater, repair the open/high resistance in the circuit.
        - If less than 2 ohms, replace the K20 Engine Control Module.
    - **If greater than 5.2 V**
    1. Ignition OFF, disconnect the harness connector at the K20 Engine Control Module, ignition ON.
    2. Test for less than 1 V between the 5 V reference circuit and ground.
        - If 1 V or greater, repair the short to voltage on the circuit.
        - If less than 1 V, replace the K20 Engine Control Module.
    - **If between 4.8-5.2 V**
5. Ignition ON.
6. Test for less than 1 V between the throttle position sensor 1 signal circuit terminal D or 1 and ground.
    - **If 1.0 V or greater**
    1. Ignition OFF, disconnect the harness connector at the K20 Engine Control Module, ignition ON.
    2. Test for less than 1 V between the signal circuit and ground.
        - If 1 V or greater, repair the short to voltage on the circuit.
        - If less than 1 V, replace the K20 Engine Control Module.
    - **If 1.0 V or less**
7. Install a 3 A fused jumper wire between throttle position sensor 1 signal circuit terminal D or 1 and the 5 V reference circuit terminal E or 2.
8. Verify the scan tool Throttle Position Sensor 1 voltage parameter is greater than 4.8 V.
    - **If 4.8 V or less**
    1. Ignition OFF, disconnect the harness connector at the K20 Engine Control Module.
    2. Test for infinite resistance between the signal circuit and ground.

- If less than infinite resistance, repair the short to ground on the circuit.
- If infinite resistance

3. Test for less than 2 ohms in the signal circuit end to end.
    - If 2 ohms or greater, repair the open/high resistance in the circuit.
    - If less than 2 ohms, replace the K20 Engine Control Module.

- **If 4.8 or greater**

9. Test for 4.8-5.2 V between the throttle position sensor 2 signal circuit terminal F or 4 and ground.
    - **If less than 4.8 V**
    1. Ignition OFF, disconnect the harness connector at the K20 Engine Control Module.
    2. Test for infinite resistance between the signal circuit and ground.
        - If less than infinite resistance, repair the short to ground on the circuit.
        - If infinite resistance
    3. Test for less than 2 ohms in the signal circuit end to end.
        - If 2 ohms or greater, repair the open/high resistance in the circuit.
        - If less than 2 ohms, replace the K20 Engine Control Module.
    - **If greater than 5.2 V**
    1. Ignition OFF, disconnect the harness connector at the K20 Engine Control Module, ignition ON.
    2. Test for less than 1 V between the signal circuit and ground.
        - If 1 V or greater, repair the short to voltage on the circuit.
        - If less than 1 V, replace the K20 Engine Control Module.
    - **If between 4.8-5.2 V**
10. Test or replace the Q38 Throttle Body.

Repair Instructions

- **Throttle Body Assembly Replacement**
- **Control Module References** for engine control module replacement, programming, and setup

Repair Verification

1. Install any components that have been removed or replaced during diagnosis.
2. Perform any adjustments, programming or setup procedures that are required when a component is removed or replaced.
3. Clear the DTCs with a scan tool.
4. Ignition OFF and all vehicle systems OFF. It may take up to 2 minutes for all vehicle systems to power down.
5. Ignition ON.
6. Verify the Throttle Position Sensors 1 and 2 Agree/Disagree parameter displays Agree while performing the Throttle Sweep Test with a scan tool.
    - **If Disagree**

Test or replace the Q38 Throttle Body assembly.

- **If Agree**

7. If the repair was related to a DTC, duplicate the Conditions for Running the DTC and use the Freeze Frame/Failure Records, if applicable, in order to verify the DTC does not set.
   - **If DTC sets**

     Refer to **Diagnostic Trouble Code (DTC) List - Vehicle** for further diagnosis.

   - **If DTC does not set**
8. All OK

DTC P0128

Diagnostic Instructions

- Perform the **Diagnostic System Check - Vehicle** prior to using this diagnostic procedure.
- Review **Strategy Based Diagnosis** for an overview of the diagnostic approach.
- **Diagnostic Procedure Instructions** provides an overview of each diagnostic category.

DTC Descriptor

DTC P0128

Engine Coolant Temperature (ECT) Below Thermostat Regulating Temperature

Diagnostic Fault Information

Circuit	Short to Ground	Open/High Resistance	Short to Voltage	Signal Performance
Signal	P0117, P0119	P0118	P0118	P0116, P0119, P0128
Low Reference	-	P0118, P0119	P0118	P0119, P0128

Typical Scan Tool Data

ECT Sensor

Circuit	Short to Ground	Open	Short to Voltage
Operating Conditions: The ignition is ON, or the engine is running **Parameter Normal Range:** Varies with engine coolant temperature, within a range of -39 to +120°C (-38 to +248°F)			
Signal	140°C (284°F)	-40°C (-40°F)	-40°C (-40°F)
Low Reference	-	-40°C (-40°F)	-40°C (-40°F)

Circuit/System Description

The engine coolant temperature (ECT) sensor is a variable resistor that measures the temperature of the engine coolant. The engine control module (ECM) supplies 5 V to the ECT sensor signal circuit and a ground for the low reference circuit.

The purpose of this diagnostic is to analyze the performance of the thermostat by comparing the measured ECT to a modeled ECT using information from the following inputs:

- ECT
- Engine load
- Intake air temperature (IAT)
- Mass air flow (MAF)
- Vehicle speed (VS)

The ECM uses the start-up ECT and ambient air temperature to begin the diagnostic calculation. This diagnostic monitors the amount of energy going into and out of the engine cooling system during the warm up process to determine if the ECT does increase normally and then maintains that temperature within a calibrated range of the modeled ECT.

Conditions for Running the DTC

- DTC P0102, P0103, P0111, P0112, P0113, P0114, P0116, P0117, P0118, P0119, P0121, P0122, P0123, P0221, P0222, P0223, P0335, P0336, or P0501 is not set.
- The decrease in ECT after engine start is within a calibrated range.
- The engine not run time is greater than 30 m.
- The start-up ECT is between -10 and +75°C (14-167°F).
- The start-up IAT is warmer than -10°C (14°F).
- The DTC runs once per ignition cycle when the above conditions are met.

Conditions for Setting the DTC

The ECM determines that the modeled ECT has met the calibrated target temperature of 92°C (198°F) and the measured ECT is less than 79°C (174°F) for greater than 2 s.

Action Taken When the DTC Sets

- DTC P0128 is a Type B DTC.
- The Engine Coolant Temperature Gauge is inoperative.
- The cooling fans will be commanded ON.
- The AC compressor will be commanded OFF.

Conditions for Clearing the MIL/DTC

DTC P0128 is a Type B DTC.

Diagnostic Aids

- DTC P0128 occurring with insufficient vehicle interior heating is an indication of improper thermostat operation.
- Corrosion on the ECT sensor terminals or the ECT harness connector results in a greater voltage on the ECT sensor signal circuit, which is interpreted by the ECM as a colder ECT.
- A slight to moderate resistance in the ECT sensor signal circuit or low reference circuit will affect this diagnostic. This condition results in a greater voltage on the ECT sensor signal circuit, which is interpreted by the ECM as a colder ECT.
- DTC P0128 and DTC 2181 both currently failed could indicate a stuck open thermostat.

Reference Information

Schematic Reference

Engine Controls Schematics

Connector End View Reference

COMPONENT CONNECTOR END VIEWS - INDEX

Electrical Information Reference

- **Circuit Testing**
- **Connector Repairs**
- **Testing for Intermittent Conditions and Poor Connections**
- **Wiring Repairs**

DTC Type Reference

Powertrain Diagnostic Trouble Code (DTC) Type Definitions

Scan Tool Reference

Control Module References for scan tool information.

Circuit/System Verification

1. Verify the cooling system is filled to the correct coolant level. Refer to **Cooling System Leak Testing** , and **Cooling System Draining and Filling (Static Fill)** , **Cooling System Draining and Filling (GE-47716 Fill)** .
    - **If the coolant level is not correct**

      Repair as necessary

    - **If the coolant level is correct**
2. Verify the DTC P00B7, P0116, P0117, P0118, P0597, P0598, or P0599 is not set.

- **If a DTC is set**

  Refer to **Diagnostic Trouble Code (DTC) List - Vehicle**

- **If a DTC is not set**

3. Engine running for 15 min with the A/C OFF, increase the engine speed to 3, 000 RPM.
4. Verify the scan tool ECT Sensor parameter is greater than 79°C (174°F) when commanding the Engine Coolant Thermostat Heater to 0%.
   - **If less than 79°C (174°F)**

     Replace the E41 Engine Coolant Thermostat Heater.

   - **If greater than 79°C (174°F)**
5. Operate the vehicle within the Conditions for Running the DTC to verify the DTC does not reset. You may also operate the vehicle within the conditions that you observed from the Freeze Frame/Failure Records data.
6. Verify the DTC does not set.
   - **If the DTC sets**

     Refer to Step 1.

   - **If the DTC does not set**
7. All OK

Component Testing

1. Ignition OFF, disconnect the B34 Engine Coolant Temperature Sensor harness connector at the sensor.
2. Test for refer to **Temperature Versus Resistance (ECT)** Temperature Versus Resistance between the signal circuit terminal 1 and the low reference terminal 2.
   - **If the temperature versus resistance are not within the specified ranges**

     Replace the B34 Engine Coolant Temperature Sensor.

   - **If the temperature versus resistance are within the specified ranges**
3. Test for infinite resistance between each terminal and the sensor housing.
   - **If less than infinite resistance**

     Replace the B34 Engine Coolant Temperature Sensor.

   - **If infinite resistance**
4. All OK.

Repair Instructions

Perform the **Diagnostic Repair Verification** after completing the repair.

- **Engine Coolant Temperature Sensor Replacement - Thermostat Side**
- **Engine Coolant Thermostat Replacement**
- **Control Module References** for ECM replacement, programming, and setup.

DTC P0131, P0132, P0134, P0137, P0138, OR P0140

Diagnostic Instructions

- Perform the **Diagnostic System Check - Vehicle** prior to using this diagnostic procedure.
- Review **Strategy Based Diagnosis** for an overview of the diagnostic approach.
- **Diagnostic Procedure Instructions** provide an overview of each diagnostic category.

DTC Descriptors

DTC P0131

HO2S Circuit Low Voltage Sensor 1

DTC P0132

HO2S Circuit High Voltage Sensor 1

DTC P0134

HO2S Circuit Insufficient Activity Sensor 1

DTC P0137

HO2S Circuit Low Voltage Sensor 2

DTC P0138

HO2S Circuit High Voltage Sensor 2

DTC P0140

HO2S Circuit Insufficient Activity Sensor 2

Diagnostic Fault Information

Circuit	Short to Ground	Open/High Resistance	Short to Voltage	Signal Performance
HO2S High Signal	P0131, P0137	P0132, P0134, P0138, P0140	P0132, P0134, P0138, P0140	P0133, P1133*, P015A*, P015B*

HO2S Low Signal	P0131, P0137	P0132, P0134, P0138, P0140	P0132, P0134, P0138, P0140	P0133, P1133*, P015A*, P015B*
*If equipped				

Typical Scan Tool Data

HO2S 1 or 2

Circuit	Short to Ground	Open/High Resistance	Short to Voltage
Operating Conditions: Engine operating in Closed Loop **Parameter Normal Range:** 200-800 mV			
HO2S 1 or 2 High Signal	0 mV	1700-2 100 mV	1700-2 100 mV
HO2S 1 or 2 Low Signal	-	1700-2 100 mV	1700-2 100 mV

Circuit/System Description

The heated oxygen sensors (HO2S) are used for fuel control and catalyst monitoring. Each HO2S compares the oxygen content of the surrounding air with the oxygen content of the exhaust stream. When the engine is started, the control module operates in an open loop mode, ignoring the HO2S signal voltage while calculating the air to fuel ratio. While the engine runs, the HO2S heats up and begins to generate a voltage within a range of 0-1 000 mV. Once sufficient HO2S voltage fluctuation is observed by the control module, closed loop is entered. The control module uses the HO2S voltage to determine the air to fuel ratio. An HO2S voltage that increases toward 1 000 mV indicates a rich fuel mixture. An HO2S voltage that decreases toward 0 mV indicates a lean fuel mixture.

The heating elements inside each HO2S heat the sensor to bring the sensor up to operating conditions faster. This allows the system to enter closed loop earlier and the control module to calculate the air to fuel ratio sooner.

Conditions for Running the DTC

DTC P0131 or P0137

- DTCs P0068, P0106, P0108, P0122, P0123, P0201, P0202, P0203, P0204, P0222, P0223, P0442, P0443, P0449, P0452, P0455, P0496, P0606, P16F3 and P2101 are not set.
- The Ignition voltage is between 10-32 V.
- The fuel level is greater than 10%.
- The fuel composition is less than 87% ethanol.
- The fuel system is in Closed Loop.
- The engine is not decelerating.
- DTC P0131 runs continuously when the above conditions are met for greater than 3 s.
- DTC P0137 runs continuously when the above conditions are met for greater than 5 s.

DTC P0132 or P0138

- DTCs P0106, P0108, P0201, P0202, P0203, P0204, P0442, P0443, P0449, P0452, P0453, P0455 and

P0496 are not set.
- The Ignition voltage is between 10-32 V.
- The fuel level is greater than 10%.
- The fuel composition is less than 87% ethanol.
- The fuel system is in Closed Loop.
- The engine runtime is greater than 60 s.
- The engine is not decelerating.
- DTC P0132 and P0138 run continuously when the above conditions are met for greater than 3 s.

DTC P0134 or P0140

- DTCs P0068, P0101, P0102, P0103, P0122, P0123, P0222, P0223, P0606 and P16F3 are not set.
- The Ignition voltage is between 10-32 V.
- The heated oxygen sensor heater warm up is completed.
- The engine runtime is greater than 50 s.
- The fuel composition is less than 87% ethanol.
- DTC P0134 and P0140 run continuously when the above conditions are met.

Conditions for Setting the DTC

P0131 or P0137

The engine control module detects that the heated oxygen sensor voltage is less than 20 mV for greater than 38 s.

P0132 or P0138

The engine control module detects that the heated oxygen sensor voltage is greater than 1 050 mV for greater than 10 s.

P0134 or P0140

The engine control module detects that the heated oxygen sensor voltage is greater than 1 700 mV for greater than 10 s.

Action Taken When the DTC Sets

DTCs P0131, P0132, P0134, P0137, P0138 and P0140 are Type B DTCs.

Conditions for Clearing the DTC

DTCs P0131, P0132, P0134, P0137, P0138 and P0140 are Type B DTCs.

Reference Information

Schematic Reference

Engine Controls Schematics

Connector End View Reference

COMPONENT CONNECTOR END VIEWS - INDEX

Electrical Information Reference

- **Circuit Testing**
- **Connector Repairs**
- **Testing for Intermittent Conditions and Poor Connections**
- **Wiring Repairs**

DTC Type Reference

Powertrain Diagnostic Trouble Code (DTC) Type Definitions

Scan Tool Reference

Control Module References for scan tool information

Circuit/System Verification

1. Ignition ON.
2. Verify no HO2S heater DTCs are set.
    - **If a HO2S heater DTC is set.**

      Refer to **DTC P0030-P0032, P0036-P0038, P0053, P0054, P0135, or P0141**.

    - **If no HO2S heater DTC is set.**
3. Allow the engine to reach operating temperature, engine running.
4. Verify the scan tool HO2S Sensor 1 or 2 voltage parameters are between 50-1 050 mV.
    - **If not between 50-1 050 mV.**

      Refer to Circuit/System Testing below.

    - **If between 50-1 050 mV.**
5. Operate the vehicle within the Conditions for Running the DTC. You may also operate the vehicle within the conditions that you observed from the Freeze Frame/Failure Records data.
6. Verify the DTC does not set.
    - **If the DTC sets.**

Refer to Circuit/System Testing below.

- **If the DTC does not set.**

7. All OK.

Circuit/System Testing

1. Ignition OFF, and all vehicle systems OFF, disconnect the harness connector at the appropriate B52 Heated Oxygen Sensor. It may take up to 2 min for all vehicle systems to power down. Ignition ON.
2. Test for 1.7-3.0 V between the high signal circuit terminal 4 and ground.
   - **If less than 1.7 V**
   1. Ignition OFF, disconnect the harness connector at the K20 Engine Control Module.
   2. Test for infinite resistance between the high signal circuit and ground.
      - If less than infinite resistance, repair the short to ground on the circuit.
      - If infinite resistance
   3. Test for less than 2 ohms in the high signal circuit end to end.
      - If 2 ohms or greater, repair the open/high resistance in the circuit.
      - If less than 2 ohms, replace the K20 Engine Control Module.
   - **If greater than 3.0 V**
   1. Ignition OFF, disconnect the harness connector at the K20 Engine Control Module, ignition ON.
   2. Test for less than 1 V between the high signal circuit and ground.
      - If 1 V or greater, repair the short to voltage on the circuit.
      - If less than 1 V, replace the K20 Engine Control Module.
   - **If between 1.7-3.0 V**
3. Verify the scan tool heated oxygen sensor Bank 1 or 2 Sensor 1 or 2 parameter is between 1.7-2.1 V.
   - **If less than 1.7 V**
   1. Ignition OFF, disconnect the harness connector at the K20 Engine Control Module.
   2. Test for infinite resistance between the low signal circuit terminal 3 and ground.
      - If less than infinite resistance, repair the short to ground on the circuit.
      - If infinite resistance, replace the K20 Engine Control Module.
   - **If between 1.7-2.1 V**
4. Connect a 3 A fused jumper wire between the high signal circuit terminal 4 and the low signal circuit terminal A.

NOTE: The low signal circuit is tied to a pull-up circuit within the engine control module. A voltage of 0.0-1.10 V on the low signal circuit is normal.

5. Verify the scan tool heated oxygen sensor Bank 1 or 2 Sensor 1 or 2 parameter displays 0.0 V.
   - **If greater than 0.0 V**
   1. Ignition OFF, disconnect the harness connector at the K20 Engine Control Module, ignition ON.

2. Test for less than 2 ohms in the low signal circuit end to end.
    - If 2 ohms or greater, repair the open/high resistance in the circuit.
    - If less than 2 ohms.
3. Test for less than 1 V between the low signal circuit terminal 3 and ground.
    - If 1 V or greater, repair the short to voltage on the circuit.
    - If less than 1 V, replace the K20 Engine Control Module.
    - **If 0.0 V**

6. Verify none of the following conditions exist:
    - Lean or rich fuel injectors. Refer to **Fuel Injector Diagnosis** .
    - Water intrusion in the HO2S harness connector
    - Low or high fuel system pressure. Refer to **Fuel System Description** .
    - Fuel that is contaminated. Refer to **Alcohol/Contaminants-in-Fuel Diagnosis** .
    - Fuel saturation of the evaporative emission (EVAP) canister
    - Exhaust leaks near the HO2S
    - Engine vacuum leaks
    - **If any of the conditions exist**

      Repair as necessary.

    - **If none of the conditions exist**
7. Test or replace the B52 Heated Oxygen Sensor.

Repair Instructions

Perform the **Diagnostic Repair Verification** after completing the repair.

- **Heated Oxygen Sensor Replacement - Sensor 1**
- **Heated Oxygen Sensor Replacement - Sensor 2**
- Perform the scan tool Heated Oxygen Sensor Resistance Learn Reset after replacing a HO2S.
- **Control Module References** for ECM replacement, programming, and setup

DTC P0133, P013A, P013B, P013E, P013F, P015A, P015B, P2270, OR P2271

Diagnostic Instructions

- Perform the **Diagnostic System Check - Vehicle** prior to using this diagnostic procedure.
- Review **Strategy Based Diagnosis** for an overview of the diagnostic approach.
- **Diagnostic Procedure Instructions** provide an overview of each diagnostic category.

DTC Descriptors

DTC P0133

HO2S Slow Response Sensor 1

DTC P013A

HO2S Slow Response Rich to Lean Sensor 2

DTC P013B

HO2S Slow Response Lean to Rich Sensor 2

DTC P013E

HO2S Delayed Response Rich to Lean Sensor 2

DTC P013F

HO2S Delayed Response Lean to Rich Sensor 2

DTC P015A

HO2S Delayed Response Rich to Lean Sensor 1

DTC P015B

HO2S Delayed Response Lean to Rich Sensor 1

DTC P2270

HO2S Signal Stuck Lean Sensor 2

DTC P2271

HO2S Signal Stuck Rich Sensor 2

Circuit/System Description

The heated oxygen sensors (HO2S) are used for fuel control and catalyst monitoring. Each HO2S compares the oxygen content of the surrounding air with the oxygen content of the exhaust stream. When the engine is started, the control module operates in an open loop mode, ignoring the HO2S signal voltage while calculating the air to fuel ratio. While the engine runs, the HO2S heats up and begins to generate a voltage within a range of 0-1 275 mV. Once sufficient HO2S voltage fluctuation is observed by the control module, closed loop is entered. The control module uses the HO2S voltage to determine the air to fuel ratio. An HO2S voltage that increases toward 1 000 mV indicates a rich fuel mixture. An HO2S voltage that decreases toward 0 mV indicates a lean fuel mixture.

The heating elements inside each HO2S heat the sensor to bring the sensor up to operating conditions faster. This allows the system to enter closed loop earlier and the control module to calculate the air to fuel ratio

sooner.

Conditions for Running the DTC

DTC P0133

- DTCs P0068, P0101, P0102, P0103, P0106, P0107, P0108, P0111, P0112, P0113, P0116, P0117, P0118, P0119, P0122, P0123, P0128, P0131, P0132, P0134, P0201, P0202, P0203, P0204, P0222, P0223, P0300, P0442, P0443, P0449, P0452, P0455, P0496, P16F3, P2101 or P2135 is not set.
- The ignition voltage is between 10-32 V.
- The device controls are not active.
- The engine speed is between 1 200-3 500 RPM.
- The engine coolant temperature (ECT) is hotter than 60°C (140°F).
- The intake air temperature (IAT) is hotter than -40°C (-40°F).
- The barometric pressure (BARO) is greater than 70 kPa (10 PSI).
- The engine has been operating for greater than 150 s.
- The mass air flow (MAF) is between 12-30 g/s.
- The HO2S heater is commanded ON for greater than 40 s.
- The fuel system is in Closed Loop.
- The vehicle is not decelerating.
- The learned heater resistance is valid.
- The fuel composition is less than 87% ethanol.
- The DTCs run continuously when the above conditions are met for greater than 1 s.

P013A

- DTCs P0068, P0101, P0102, P0103, P0106, P0107, P0108, P0111, P0112, P0113, P0116, P0117, P0118, P0119, P0122, P0123, P0128, P0171, P0172, P0201, P0202, P0203, P0204, P0222, P0223, P0300, P16F3, P2101 or P2135 is not set.
- The ignition voltage is between 10-32 V.
- The learned heater resistance is valid.
- The fuel level is greater than 10%.
- DTC P013B, P013E, P013F, P2270 or P2271 have failed this key cycle.
- DTC P013E and P2270 have passed.
- The DTC runs once per trip, during deceleration fuel cut-off (DFCO) mode, when the above conditions are met.

P013B

- DTCs P0068, P0101, P0102, P0103, P0106, P0107, P0108, P0111, P0112, P0113, P0116, P0117, P0118, P0119, P0122, P0123, P0128, P0171, P0172, P0201, P0202, P0203, P0204, P0222, P0223, P0300, P16F3, P2101 or P2135 is not set.

- The ignition voltage is between 10-32 V.
- The learned heater resistance is valid.
- The fuel level is greater than 10%.
- DTC P013A, P013E, P013F, P2270 or P2271 have failed this key cycle.
- DTC P013A, P013E, P013F, P2270 and P2271 have passed.
- The DTC runs once per trip, during the fuel enrich mode, when the above conditions are met.

P013E

- DTCs P0068, P0101, P0102, P0103, P0106, P0107, P0108, P0111, P0112, P0113, P0116, P0117, P0118, P0119, P0122, P0123, P0128, P0171, P0172, P0201, P0202, P0203, P0204, P0222, P0223, P0300, P16F3, P2101 or P2135 is not set.
- The ignition voltage is between 10-32 V.
- The learned heater resistance is valid.
- The fuel level is greater than 10%.
- DTC P013A, P013B, P013F, P2270 and P2271 have failed this key cycle.
- DTC P2270 have passed.
- The DTC runs once per trip, during deceleration fuel cut-off (DFCO) mode, when the above conditions are met.

P013F

- DTCs P0068, P0101, P0102, P0103, P0106, P0107, P0108, P0111, P0112, P0113, P0116, P0117, P0118, P0119, P0122, P0123, P0128, P0171, P0172, P0201, P0202, P0203, P0204, P0222, P0223, P0300, P16F3, P2101 or P2135 is not set.
- The ignition voltage is between 10-32 V.
- The learned heater resistance is valid.
- The fuel level is greater than 10%.
- DTC P013A, P013B, P013E, P2270 and P2271 have failed this key cycle.
- DTC P013A, P013E, P2270 and P2271 have passed.
- The DTC runs once per trip, during the fuel enrich mode, when the above conditions are met.

P015A and P015B

- DTCs P0068, P0101, P0102, P0103, P0106, P0107, P0108, P0111, P0112, P0113, P0114, P0116, P0117, P0118, P0119, P0121, P0122, P0123, P0128, P0131, P0132, P0134, P0171, P0172, P0201, P0202, P0204, P0222, P0223, P0300, P0442, P0443, P0446, P0449, P0452, P0453, P0455, P0496, P16F3, P2101 or P2135 is not set.
- The ignition voltage is between 10-32 V.
- The device controls are not active.
- The fuel level is greater than 10%.
- The HO2S heater is commanded ON for greater than 40 s.

- The learned heater resistance is valid.
- The engine coolant temperature (ECT) is hotter than 60°C (140°F).
- The intake air temperature (IAT) is hotter than -40°C (-40°F).
- The engine has been operating for greater than 150 s.
- The engine speed is between 1 550-3 500 RPM to initially enable the test.
- The vehicle speed is between 70-125 km/h (44-78 mph) to initially enable the test.
- The engine speed is between 1 350-3 650 RPM to keep the test enabled.
- The vehicle speed is between 65-130 km/h (41-81 mph) to keep the test enabled.
- The mass air flow (MAF) is between 2-20 g/s.
- The fuel system is in Closed Loop.
- The evaporative emission (EVAP) diagnostics are not in control of purge.
- The predicted catalytic converter temperature is between 550-900°C (1 022-1 652°F).
- DTC P015A runs once per trip, during the deceleration fuel cut-off (DFCO) mode, when the above conditions are met.
- DTC P015B runs once per trip, during the fuel enrich mode, when the above conditions are met.

P2270

- DTCs P0068, P0101, P0102, P0103, P0106, P0107, P0108, P0111, P0112, P0113, P0116, P0117, P0118, P0119, P0122, P0123, P0128, P0171, P0172, P0201, P0202, P0203, P0204, P0222, P0223, P0300, P16F3, P2101 or P2135 is not set.
- The ignition voltage is between 10-32 V.
- The fuel level is greater than 10%.
- The engine speed is between 1 400-3 500 RPM to initially enable the test.
- The vehicle speed is between 45-125 km/h (28-78 mph) to initially enable the test.
- The engine speed is between 1 350-3 650 RPM to keep the test enabled.
- The vehicle speed is between 40-130 km/h (25-81 mph) to keep the test enabled.
- The mass air flow (MAF) is between 2-20 g/s.
- The fuel system is in Closed Loop.
- The evaporative emission (EVAP) diagnostics are not in control of purge.
- The HO2S heater is commanded ON for greater than 40 s.
- The predicted catalytic converter temperature is between 550-900°C (1 022-1 652°F).
- DTC P013A, P013B, P013E, P013F, P2270 or P2271 have failed this key cycle.
- The DTC runs once per trip, during the fuel enrich mode, when the above conditions are met for 1.5 s.

P2271

- DTCs P0068, P0101, P0102, P0103, P0106, P0107, P0108, P0111, P0112, P0113, P0116, P0117, P0118, P0119, P0122, P0123, P0128, P0171, P0172, P0201, P0202, P0203, P0204, P0222, P0223, P0300, P16F3, P2101 or P2135 is not set.

- The ignition voltage is between 10-32 V.
- The fuel level is greater than 10%.
- The engine speed is between 1 400-3 500 RPM.
- The vehicle speed is between 45-125 km/h (28-78 mph).
- The mass air flow (MAF) is between 2-20 g/s.
- The fuel system is in Closed Loop.
- The evaporative emission (EVAP) diagnostics are not in control of purge.
- The HO2S heater is commanded ON for greater than 40 s.
- The predicted catalytic converter temperature is between 550-900°C (1 022-1 652°F).
- DTC P013A, P013B, P013E, P013F or P2270 have failed this key cycle.
- DTC P013A, P013E and P2270 have passed.
- The DTC runs once per trip, during deceleration fuel cut-off (DFCO) mode, when the above conditions are met.

Conditions for Setting the DTC

P0133

- The ECM detects that the HO2S 1 average response time is more than a calculated value.
- DTC P0133 sets within 60 s when the above condition is met.

P013A

The ECM detects that the accumulated mass air flow monitored during rich to lean transitions between 150-450 mV is greater than 10 g.

P013B

The ECM detects that the accumulated mass air flow monitored during rich to lean transitions between 335-650 mV is greater than 140 g.

P013E

The ECM detects that the Post O2 sensor voltage is greater than 450 mV and the accumulated mass air flow monitored during the delayed Response Test is greater than 20 g.

P013F

The ECM detects that the Post O2 sensor voltage is less than 350 mV and the accumulated mass air flow monitored during the delayed Response Test is greater than 260 g.

P2270

- The ECM detects that the heated oxygen sensor (HO2S) 2 sensor cannot achieve voltage less than 775

mV.

and

- The ECM detects that the accumulated mass air flow monitored during the Stuck Lean Voltage Test is greater than 60 g.

P2271

- The ECM detects that the heated oxygen sensor (HO2S) 2 sensor cannot achieve voltage greater than 100 mV.

and

- The ECM detects that the accumulated mass air flow monitored during the stuck rich voltage test is greater than 30 g.

Action Taken When the DTC Sets

- DTCs P0133, P013E, P013F, P2270 are P2271 Type B DTCs.
- DTCs P013A, P013B, P015A and P015B are Type A DTCs.

Conditions for Clearing the DTC

- DTCs P0133, P013E, P013F, P2270 are P2271 Type B DTCs.
- DTCs P013A, P013B, P015A and P015B are Type A DTCs.

Reference Information

Schematic Reference

Engine Controls Schematics

Connector End View Reference

COMPONENT CONNECTOR END VIEWS - INDEX

Electrical Information Reference

- **Circuit Testing**
- **Connector Repairs**
- **Testing for Intermittent Conditions and Poor Connections**
- **Heated Oxygen Sensor Wiring Repairs**

DTC Type Reference

Powertrain Diagnostic Trouble Code (DTC) Type Definitions

Scan Tool Reference

Control Module References for scan tool information

Circuit/System Verification

1. Ignition ON.
2. Verify no HO2S heater DTCs are set.
   - **If a HO2S heater DTC is set**

     Refer to **DTC P0030-P0032, P0036-P0038, P0053, P0054, P0135, or P0141**.

   - **If no HO2S heater DTC is set**
3. Allow the engine to reach operating temperature, engine running.
4. Verify the scan tool HO2S Sensor 1 or 2 voltage parameters are between 50-1 050 mV.
   - **If not between 50-1 050 mV**

     Refer to **DTC P0133, P013A, P013B, P013E, P013F, P015A, P015B, P2270, or P2271**.

   - **If between 50-1 050 mV**
5. Verify none of the following conditions exist:
   - Lean or rich fuel injectors
   - Water intrusion in the HO2S harness connector
   - Low or high fuel system pressure-Refer to **Fuel System Diagnosis** .
   - Fuel that is contaminated-Refer to **Alcohol/Contaminants-in-Fuel Diagnosis** .
   - Fuel saturation of the evaporative emission (EVAP) canister
   - Exhaust leaks
   - Engine vacuum leaks
   - Engine oil consumptions-Refer to **Oil Consumption Diagnosis** .
   - Engine coolant consumption-Refer to **Symptoms - Engine Cooling** .
   - **If any of the above conditions exist**

     Repair as necessary.

   - **If none of the above conditions exist**
6. Operate the vehicle within the conditions for running the DTC. Or operate the vehicle within the conditions that you observed from the freeze frame/failure records data.
7. Verify the DTC does not set.
   - **If the DTC sets**

Replace the B52 Heated Oxygen Sensor.

- **If the DTC does not set**

8. All OK.

Repair Instructions

Perform the **Diagnostic Repair Verification** after completing the repair.

- **Heated Oxygen Sensor Replacement - Sensor 1**
- **Heated Oxygen Sensor Replacement - Sensor 2**
- Perform the scan tool Heated Oxygen Sensor Resistance Learn Reset after replacing an HO2S.
- **Control Module References** for ECM replacement, programming and setup

DTC P0171 OR P0172

Diagnostic Instructions

- Perform the **Diagnostic System Check - Vehicle** prior to using this diagnostic procedure.
- Review **Strategy Based Diagnosis** for an overview of the diagnostic approach.
- **Diagnostic Procedure Instructions** provides an overview of each diagnostic category.

DTC Descriptors

DTC P0171

Fuel Trim System Lean

DTC P0172

Fuel Trim System Rich

Circuit/System Description

The engine control module (ECM) controls a Closed Loop air/fuel metering system in order to provide the best possible combination of driveability, fuel economy, and emission control. The ECM monitors the heated oxygen sensor (HO2S) signal voltage, and adjusts the fuel delivery based on the signal voltage while in Closed Loop. A change made to the fuel delivery changes the long and short term fuel trim values. The short term fuel trim values change rapidly in response to the HO2S signal voltages. These changes fine tune the engine fueling. The long term fuel trim values change in response to trends in the short term fuel trim The long term fuel trim makes coarse adjustments to fueling in order to re-center and restore control to short term fuel trim. The ideal fuel trim values are around 0 %. A positive fuel trim value indicates that the ECM is adding fuel in order to compensate for a lean condition. A negative fuel trim value indicates that the ECM is reducing the amount of fuel in order to compensate for a rich condition.

Conditions for Running the DTC

- DTCs P0030, P0053, P0101, P0102, P0103, P0106, P0107, P0108, P0131-P0135, P0201-P0204, P0300-P0304, P0411, P0442, P0455, P0458, P0496, P0506, P0507, P1248, P1249, P124A, P124B, P2147, P2148, P2150, P2151, P2153, P2154, P2156, P2157, P2227, P2228, P2229, P2230, P2440, or P2444 are not set.
- The engine is in Closed Loop status.
- The catalyst monitor diagnostic intrusive test, post 02 diagnostic intrusive test, and EVAP diagnostic test are not active.
- The engine coolant temperature (ECT) is between -20°C and +150°C (-4°F and +302°F).
- The intake air temperature (IAT) is between -20°C and +150°C (-4°F and +302°F).
- The manifold absolute pressure (MAP) is between 10-255 kPa (1.5-37 psi).
- The engine speed is between 400-7, 000 RPM.
- The mass air flow (MAF) is between 1-512 g/s.
- The barometric pressure (BARO) is greater than 70 kPa (10.2 psi).
- The fuel level is greater than 10 % and no fuel sensor fault is present.
- This diagnostic runs continuously when the above conditions have been met.

Conditions for Setting the DTC

- The average long term fuel trim weighted average value is greater or less than a calibrated value.
- The above condition is present for approximately 3 min after the Conditions for Running the DTC have been met.

Action Taken When the DTC Sets

DTCs P0171 and P0172 are Type B DTCs.

Conditions for Clearing the MIL/DTC

DTCs P0171 and P0172 are Type B DTCs.

Diagnostic Aids

- Allow the engine to reach operating temperature. With the engine running, observe the HO2S parameter with a scan tool. The HO2S value should vary from approximately 40 mV to approximately 900 mV, and respond to fueling changes.
- The normal Short Term Fuel Trim and Long Term Fuel Trim parameters should be between +10 and -10 % with 0 % the optimum, with the engine running at operating temperature.
- It is very unlikely that an HO2S will cause this DTC to set without the occurrence of the circuit related HO2S DTCs. Do not replace an HO2S to address this DTC without first performing all the steps in Circuit/System Verification.
- Any un-metered air into the engine causes this DTC to set. Thoroughly inspect all areas of the engine for vacuum leaks.
- A MAF sensor condition can cause this DTC without setting a MAF DTC. If there is a MAF sensor condition, the MAF sensor parameters will appear to be within range.

- Inspect the air filter for being the correct one for this application. Make sure that the engine oil fill cap is in place and that it is tight. Verify that the engine oil dip stick is fully seated.
- Certain aftermarket air filters may cause a DTC to set.
- Certain aftermarket air induction systems or modifications to the air induction system may cause a DTC to set.
- Certain aftermarket exhaust system components may cause a DTC to set.

Reference Information

Electrical Information Reference

- **Circuit Testing**
- **Connector Repairs**
- **Testing for Intermittent Conditions and Poor Connections**
- **Wiring Repairs**

DTC Type Reference

Powertrain Diagnostic Trouble Code (DTC) Type Definitions

Scan Tool Reference

Control Module References for scan tool information

Circuit/System Verification

1. Ignition ON.
2. Verify no other DTCs are set.
    - **If any other DTCs are set**

      Refer to **Diagnostic Trouble Code (DTC) List - Vehicle** for further diagnosis.

    - **If no other DTCs are set**
3. Verify DTC P0171 or P0172 is not set.
    - **If a DTC is set**

      Refer to Circuit/System Testing below

    - **If no DTC is set**
4. Operate the vehicle within the Conditions for Running the DTC. You may also operate the vehicle within the conditions that you observed in the Freeze Frame/Failure Records data.
5. Verify DTC P0171 or P0172 is not set.
    - **If any of the DTCs set**

Refer to Circuit/System Testing below

- **If none of the DTCs set**

6. All OK.

Circuit/System Testing

1. Ignition ON.
2. Verify the manifold absolute pressure sensor is within the range specified for your altitude. Refer to **Altitude Versus Barometric Pressure**
   - **If not within the specified range**

     Refer to **DTC P0106**

   - **If within the specified range**
3. Engine running, allow the engine to reach operating temperature.
4. Verify the Long Term Fuel Trim parameter is between -25 % and +25 % (LWE) or -30 % and +30 % (LUW).
   - **If not within the specified range, verify that none of the conditions listed below exist:**

P0171

- Mass air flow (MAF) sensor signal skewed. If the Short Term Fuel Trim parameter changes greater than 20 % when the MAF sensor is disconnected, refer to **DTC P0101**.
- Fuel contamination. Refer to **Alcohol/Contaminants-in-Fuel Diagnosis** .
- Missing, restricted, or leaking exhaust components. Refer to **Symptoms - Engine Exhaust** .
- Malfunctioning fuel injectors. Refer to **Fuel Injector Diagnosis** .
- Split, kinked, or improperly connected vacuum hoses
- Insufficient fuel in the tank
- Low fuel pressure. Refer to **Fuel System Diagnosis** .
- Vacuum leaks at the intake manifold, the throttle body, and the injector O-rings.
- Leaks in the air induction system and the air intake ducts
- Missing air filter element
- Cracked EVAP canister
- Evaporative pipes obstructed or leaking
- Leaks in the crankcase ventilation system. Refer to **Crankcase Ventilation System Inspection/Diagnosis** .

P0172

- Mass air flow (MAF) sensor signal skewed. If the Short Term Fuel Trim parameters for both banks changes greater than 20 % when the MAF sensor is disconnected, refer to **DTC P0101**.
- Fuel contamination. Refer to **Alcohol/Contaminants-in-Fuel Diagnosis** .

- Missing, restricted, or leaking exhaust components. Refer to **Symptoms - Engine Exhaust** .
- Malfunctioning fuel injectors. Refer to **Fuel Injector Diagnosis**
- Collapsed or restricted air intake duct
- Excessive fuel pressure. Refer to **Fuel System Diagnosis**
- Dirty or restricted air filter
- Objects blocking the throttle body
- Improper operation of the evaporative emissions control system
- Excessive fuel in the crankcase. Change the engine oil as necessary.
- **If a condition is found**

  Repair as necessary.

- **If no condition is found**

5. Test the engine for a mechanical condition. Refer to **Symptoms - Engine Mechanical** .

Repair Instructions

Perform the **Diagnostic Repair Verification** after completing the diagnostic procedure.

DTC P018B-P018D

Diagnostic Instructions

- Perform the **Diagnostic System Check - Vehicle** prior to using this diagnostic procedure.
- Review **Strategy Based Diagnosis** for an overview of the diagnostic approach.
- **Diagnostic Procedure Instructions** provides an overview of each diagnostic category.

DTC Descriptors

DTC P018B

Fuel Pressure Sensor Performance

DTC P018C

Fuel Pressure Sensor Circuit Low Voltage

DTC P018D

Fuel Pressure Sensor Circuit High Voltage

Diagnostic Fault Information

	Short to	Open/High	Short to	

Circuit	Ground	Resistance	Voltage	Signal Performance
5 V Reference	P018C, P0641, P06A6	P018C	P018D	P06A6
Signal	P018C	P018C	P018D	P018B
Low Reference	-	P018D	-	P06A6

Circuit/System Description

The fuel pressure sensor is located on the fuel line. The fuel pressure sensor monitors the fuel pressure in the fuel line. The fuel pump control module monitors the voltage signal from the fuel pressure sensor.

Conditions for Running the DTC

- The engine is running.
- DTC P018C, P018D, P0231, P0232, P023F, P064A, P1255 or P06A6 are not active.
- DTC P0641 has not failed this ignition cycle.
- Fuel pump control is enabled and the fuel pump control state is normal.
- The engine has been running for at least 5 seconds.

Conditions for Setting the DTC

The fuel pump control module does not detect a change in the fuel pressure of at least 30 kPa (4.4 psi) when the fuel pump is operating. The fuel pressure sensor performance diagnostic provides a means to detect fuel pressure sensor output that is stuck within the normal operating range of the sensor.

Action Taken When the DTC Sets

DTC P018B, P018C and P018D are Type A DTCs.

Conditions for Clearing the DTC

DTC P018B, P018C and P018D are Type A DTCs.

Diagnostic Aids

Using the Failure Records data may help locate an intermittent condition. If you cannot duplicate the DTC, the information in the Failure Records can help determine how many miles since the DTC set. The Fail Counter and Pass Counter can help determine how many ignition cycles that the diagnostic test reported a pass and/or a fail.

Reference Information

Schematic Reference

Engine Controls Schematics

Connector End View Reference

COMPONENT CONNECTOR END VIEWS - INDEX

Description and Operation

Fuel System Description

Electrical Information Reference

- **Circuit Testing**
- **Testing for Intermittent Conditions and Poor Connections**
- **Connector Repairs**
- **Wiring Repairs**

DTC Type Reference

Powertrain Diagnostic Trouble Code (DTC) Type Definitions

Scan Tool Reference

Control Module References for scan tool information

Circuit/System Verification

1. Engine running.
2. Verify the scan tool Fuel Pressure Sensor Voltage parameter is between 0.2-4.8 V.
   - **If not between 0.2-4.8 V**

     Refer to Circuit/System Testing below.

   - **If between 0.2-4.8 V**
3. All OK.

Circuit/System Testing

NOTE: Verify that the fuel tank is not empty. Only perform this diagnostic if there is at least 2 gallons of fuel in the fuel tank. Clear the DTC, and start and run the engine. Verify that the DTC resets before proceeding with the circuit system testing. If the DTC does not reset, refer to diagnostic aids.

1. Ignition OFF and all vehicle systems OFF, disconnect the harness connector at the B47 Fuel Pressure Sensor. It may take up to 2 minutes for all vehicle systems to power down.
2. Test for less than 10 ohms between the low reference circuit terminal 2 and ground.
   - **If 10 ohms or greater**
     1. Ignition OFF, disconnect the harness connector at the K27 Fuel Pump Control Module.
     2. Test for less than 2 ohms in the low reference circuit end to end.

- If 2 ohms or greater, repair the open/high resistance in the circuit.
- If less than 2 ohms, replace the K27 Fuel Pump Control Module.

- **If less than 10 ohms**

3. Ignition ON.
4. Test for 4.8-5.2 V between the 5 V reference circuit terminal 3 and ground.
   - **If less than 4.8 V**
   1. Ignition OFF, disconnect the harness connector at the K27 Fuel Pump Control Module.
   2. Test for infinite resistance between the 5 V reference circuit and ground.
      - If less than infinite resistance, repair the short to ground on the circuit.
      - If infinite resistance
   3. Test for less than 2 ohms in the 5 V reference circuit end to end.
      - If 2 ohms or greater, repair the open/high resistance in the circuit.
      - If less than 2 ohms, replace the K27 Fuel Pump Control Module.
   - **If greater than 5.2 V**
   1. Ignition OFF, disconnect the harness connector at the K27 Fuel Pump Control Module, ignition ON.
   2. Test for less than 1 V between the 5 V reference circuit and ground.
      - If 1 V or greater, repair the short to voltage on the circuit.
      - If less than 1 V, replace the K27 Fuel Pump Control Module.
   - **If between 4.8-5.2 V**
5. Verify the scan tool Fuel Pressure Sensor Voltage parameter is less than 1 V.
   - **If 1 V or greater**
   1. Ignition OFF, disconnect the harness connector at the K27 Fuel Pump Control Module, ignition ON.
   2. Test for less than 1 V between the signal circuit terminal 1 and ground.
      - If 1 V or greater, repair the short to voltage on the circuit.
      - If less than 1 V, replace the K27 Fuel Pump Control Module.
   - **If less than 1 V**
6. Install a 3 A fused jumper wire between the signal circuit terminal 1 and the 5 V reference circuit terminal 3, wait 15 seconds.
7. Verify the scan tool Fuel Pressure Sensor Voltage parameter is greater than 4.8 V.
   - **If 4.8 V or less**
   1. Ignition OFF, disconnect the harness connector at the K27 Fuel Pump Control Module.
   2. Test for infinite resistance between the signal circuit terminal 1 and ground.
      - If less than infinite resistance, repair the short to ground on the circuit.
      - If infinite resistance
   3. Test for less than 2 ohms in the signal circuit end to end.
      - If 2 ohms or greater, repair the open/high resistance in the circuit.

- If less than 2 ohms, replace the K27 Fuel Pump Control Module.
- **If greater than 4.8 V**

8. Test or replace the B47 Fuel Pressure Sensor.

Repair Instructions

Perform the **Diagnostic Repair Verification** after completing the repair.

Control Module References for fuel pump control module replacement, programming and setup

DTC P0201, P0202, P0203, P0204, P0261, P0262, P0264, P0265, P0267, P0268, P0270, OR P0271

Diagnostic Instructions

- Perform the **Diagnostic System Check - Vehicle** prior to using this diagnostic procedure.
- Review **Strategy Based Diagnosis** for an overview of the diagnostic approach.
- **Diagnostic Procedure Instructions** provides an overview of each diagnostic category.

DTC Descriptors

DTC P0201

Cylinder 1 Injector Control Circuit

DTC P0202

Cylinder 2 Injector Control Circuit

DTC P0203

Cylinder 3 Injector Control Circuit

DTC P0204

Cylinder 4 Injector Control Circuit

DTC P0261

Cylinder 1 Injector Control Circuit Low Voltage

DTC P0262

Cylinder 1 Injector Control Circuit High Voltage

DTC P0264

Cylinder 2 Injector Control Circuit Low Voltage

DTC P0265

Cylinder 2 Injector Control Circuit High Voltage

DTC P0267

Cylinder 3 Injector Control Circuit Low Voltage

DTC P0268

Cylinder 3 Injector Control Circuit High Voltage

DTC P0270

Cylinder 4 Injector Control Circuit Low Voltage

DTC P0271

Cylinder 4 Injector Control Circuit High Voltage

Diagnostic Fault Information

Circuit	Short to Ground	Open/High Resistance	Short to Voltage	Signal Performance
Ignition Voltage	P0201*, P0202*, P0203*, P0204*, P0261*, P0264*, P0267*, P0270*	P0201**, P0202**, P0203**, P0204**, P0261**, P0264**, P0267**, P0270**	-	-
Injector 1 Control	P0201, P0261	P0201, P0300	P0262, P0300	-
Injector 2 Control	P0202, P0264	P0202, P0300	P0265, P0300	-
Injector 3 Control	P0203, P0267	P0203, P0300	P0268, P0300	-
Injector 4 Control	P0204, P0270	P0204, P0300	P0271, P0300	-
* Open fuse, cranks no start. ** Cranks no start if the condition is between the fuse and the splice.				

Circuit/System Description

The engine control module (ECM) enables the appropriate fuel injector pulse for each cylinder. Ignition voltage is supplied to the fuel injectors. The ECM controls each fuel injector by grounding the control circuit via a solid state device called a driver. The ECM monitors the status of each driver. If the ECM detects an incorrect

voltage for the commanded state of the driver, a fuel injector control circuit DTC sets.

Conditions for Running the DTC

- The engine is running for greater than 1 s.
- The ignition voltage is greater than 11 V.
- The DTCs run continuously when the above conditions are met.

Conditions for Setting the DTC

The control module detects an incorrect voltage on the fuel injector control circuit for more than 5 s.

Action Taken When the DTC Sets

DTCs P0201, P0202, P0203, P0204, P0261, P0262, P0264, P0265, P0267, P0268, P0270, and P0271 are Type B DTCs.

Conditions for Clearing the DTC

DTCs P0201, P0202, P0203, P0204, P0261, P0262, P0264, P0265, P0267, P0268, P0270, and P0271 are Type B DTCs.

Diagnostic Aids

Performing the Fuel Injector Diagnosis may help isolate an intermittent condition. Refer to **Fuel Injector Diagnosis** .

Reference Information

Schematic Reference

Engine Controls Schematics

Connector End View Reference

COMPONENT CONNECTOR END VIEWS - INDEX

Electrical Information Reference

- **Circuit Testing**
- **Connector Repairs**
- **Testing for Intermittent Conditions and Poor Connections**
- **Wiring Repairs**

DTC Type Reference

Powertrain Diagnostic Trouble Code (DTC) Type Definitions

Scan Tool Reference

Control Module References for scan tool information

Special Tool

CH 34730-2C Noid Light, if available

Circuit/System Verification

1. Engine cranking or running.
2. Verify the scan tool parameters listed below do not display Malfunction.
   - Cylinder 1-4 Injector Control Circuit Low Voltage Test Status
   - Cylinder 1-4 Injector Control Circuit Open Test Status
   - Cylinder 1-4 Injector Control Circuit High Voltage Test Status
   - **If Malfunction is displayed**

     Refer to Circuit/System Testing below.

   - **If Malfunction is not displayed**
3. Operate the vehicle within the Conditions for Running the DTC. You may also operate the vehicle within the conditions that you observed from the Freeze Frame/Failure Records data.
4. Verify the DTC does not set.
   - **If the DTC sets**

     Refer to Circuit/System Testing below.

   - **If the DTC does not set**
5. All OK.

Circuit/System Testing

1. Ignition OFF, disconnect the harness connector at the appropriate Q17 Fuel Injector, ignition ON.
2. Verify a test lamp illuminates between the ignition circuit terminal 1 and ground.
   - **If the test lamp does not illuminate and the circuit fuse is good**
   1. Ignition OFF, remove the test lamp.
   2. Test for less than 2 ohms in the ignition circuit end to end.
      - If 2 ohms or greater, repair the open/high resistance in the circuit.
      - If less than 2 ohms, verify the fuse is not open and there is voltage at the fuse.
   - **If the test lamp does not illuminate and the circuit fuse is open**
   1. Ignition OFF, remove the test lamp, and disconnect all components on the circuit.
   2. Test for infinite resistance between the ignition circuit and ground.
      - If less than infinite resistance, repair the short to ground on the circuit.

- If infinite resistance

3. Replace the fuse, ignition ON.
4. Verify the fuse is good after connecting each of the components one at a time.
   - If the fuse opens, replace the component that opens the fuse when connected.
   - If the fuse is good, all OK.

- **If the test lamp illuminates**

3. Ignition OFF, connect the test lamp to the affected fuel injector connector.
4. Engine cranking.
5. Verify the test lamp turns ON and OFF.
   - **If the test lamp is always OFF**

   1. Ignition OFF, remove the test lamp, disconnect the X2 harness connector at the K20 Engine Control Module, ignition ON.
   2. Test for less than 1 V between the control circuit and ground.
      - If 1 V or greater, repair the short to voltage on the circuit.
      - If less than 1 V
   3. Ignition OFF.
   4. Test for less than 2 ohms in the control circuit end to end.
      - If 2 ohms or greater, repair the open/high resistance in the circuit.
      - If less than 2 ohms, replace the K20 Engine Control Module.

   - **If the test lamp is always ON**

   1. Ignition OFF, remove the test lamp, disconnect the X2 harness connector at the K20 Engine Control Module.
   2. Test for infinite resistance between the control circuit and ground.
      - If less than infinite resistance, repair the short to ground on the circuit.
      - If infinite resistance, replace the K20 Engine Control Module.

   - **If the test lamp turns ON and OFF**
6. Test or replace the appropriate Q17 Fuel Injector.

Component Testing

Fuel Injector Diagnosis

Repair Instructions

Perform the **Diagnostic Repair Verification** after completing the repair.

- **Fuel Injector Replacement**
- **Control Module References** for Engine Control Module replacement, programming, and setup

DTC P0231, P0232, OR P023F

Diagnostic Instructions

- Perform the **Diagnostic System Check - Vehicle** prior to using this diagnostic procedure.
- Review **Strategy Based Diagnosis** for an overview of the diagnostic approach.
- **Diagnostic Procedure Instructions** provides an overview of each diagnostic category.

DTC Descriptors

DTC P0231

Fuel Pump Control Circuit Low Voltage

DTC P0232

Fuel Pump Control Circuit High Voltage

DTC P023F

Fuel Pump Control Circuit

Diagnostic Fault Information

Circuit	Short to Ground	Open/High Resistance	Short to Voltage	Signal Performance
Control	P0231	P023F	P0232	P023F, P2635
Low Reference	-	P023F	-	P023F, P2635

Circuit/System Description

The engine control module (ECM) supplies voltage to the fuel pump control module when the ECM detects that the ignition is on. The voltage from the ECM to the fuel pump control module remains active for 2 seconds, unless the engine is in crank or run. While this voltage is being received, the fuel pump control module supplies a varying voltage to the fuel tank pump module in order to maintain the desired fuel line pressure.

Conditions for Running the DTC

P0231, P023F

The ignition voltage is between 9-18 V.

P0232

The control enable voltage signal supplied for the ECM to fuel pump control module is inactive for 4 seconds after engine has been shut off.

Conditions for Setting the DTC

The fuel pump control module detects a fault on the fuel pump voltage circuit that is less than 11 V or greater than 18 V.

Action Taken When the DTC Sets

DTCs P0231, P0232, and P023F are Type A DTCs.

Conditions for Clearing the DTC

DTCs P0231, P0232, and P023F are Type A DTCs.

Diagnostic Aids

Using the Failure Records data may help locate an intermittent condition. If you cannot duplicate the DTC, the information in the Failure Records can help determine how many miles since the DTC set. The Fail Counter and Pass Counter can help determine how many ignition cycles that the diagnostic test reported a pass and/or a fail.

On vehicles equipped with a high pressure mechanical pump on Direct Fuel Injection engines, the vehicle may continue to run even though the pump in the fuel tank is not operating.

Reference Information

Schematic Reference

Engine Controls Schematics

Connector End View Reference

COMPONENT CONNECTOR END VIEWS - INDEX

Description and Operation

Fuel System Description

Electrical Information Reference

- **Circuit Testing**
- **Connector Repairs**
- **Testing for Intermittent Conditions and Poor Connections**
- **Wiring Repairs**

DTC Type Reference

Powertrain Diagnostic Trouble Code (DTC) Type Definitions

Scan Tool Reference

Control Module References for scan tool information

Circuit/System Testing

1. Ignition OFF and all vehicle systems OFF, disconnect the harness connector at the G12 fuel pump. It may take up to 2 minutes for all vehicle systems to power down.
2. Test for less than 10 ohms between the low reference circuit terminal 2 and ground.
    - **If 10 ohms or greater**
    1. Ignition OFF, disconnect the harness connector at the K27 fuel pump control module.
    2. Test for less than 2 ohms in the low reference circuit end to end.
        - If 2 ohms or greater, repair the open/high resistance in the circuit.
        - If less than 2 ohms, replace the K27 fuel pump control module.
    - **If less than 10 ohms**
3. Connect a test lamp between the control circuit terminal 1 and the low reference circuit terminal 2.
4. Ignition ON.
5. Verify the test lamp turns ON and OFF when commanding the fuel pump ON and OFF using the scan tool ECM fuel pump enable control function.
    - **If the test lamp is always OFF**
    1. Ignition OFF, disconnect the harness connector at the K27 fuel pump control module.
    2. Test for infinite resistance between the control circuit and ground.
        - If less than infinite resistance, repair the short to ground on the circuit.
        - If infinite resistance
    3. Test for less than 2 ohms in the control circuit end to end.
        - If 2 ohms or greater, repair the open/high resistance in the circuit.
        - If less than 2 ohms, replace the K27 fuel pump control module.
    - **If the test lamp is always ON**
    1. Ignition OFF, disconnect the harness connector at the K27 fuel pump control module, ignition ON.
    2. Test for less than 1 V between the control circuit and ground.
        - If 1 V or greater, repair the short to voltage on the circuit.
        - If less than 1 V, replace the K27 fuel pump control module.
    - **If the test lamp turns ON and OFF**
6. Replace the G12 fuel pump.

Repair Instructions

Perform the **Diagnostic Repair Verification** after completing the repair.

- **Fuel Tank Fuel Pump Module Replacement**
- **Control Module References** for fuel pump control module replacement, programming and setup

DTC P025A

Diagnostic Instructions

- Perform the **Diagnostic System Check - Vehicle** prior to using this diagnostic procedure.
- Review **Strategy Based Diagnosis** for an overview of the diagnostic approach.
- **Diagnostic Procedure Instructions** provides an overview of each diagnostic category.

DTC Descriptor

DTC P025A

Fuel Pump Control Module Enable Circuit

Diagnostic Fault Information

Circuit	Short to Ground	Open/High Resistance	Short to Voltage	Signal Performance
Control	P025A	P025A	-	P025A

Circuit/System Description

The engine control module (ECM) supplies voltage to the fuel pump control module when the ECM detects that the ignition is on. The voltage from the ECM to the fuel pump control module remains active for 2 seconds, unless the engine is in crank or run. While this voltage is being received, the fuel pump control module supplies a varying voltage to the fuel tank pump module in order to maintain the desired fuel line pressure.

Conditions for Running the DTC

The ignition is ON.

Conditions for Setting the DTC

The serial data message from the ECM to the fuel pump control module does not agree with the state of the control enable voltage signal supplied from the ECM to the fuel pump control module for more than 2 seconds.

Action Taken When the DTC Sets

DTC P025A is a Type A DTC.

Conditions for Clearing the DTC

DTC P025A is a Type A DTC.

Reference Information

Schematic Reference

Engine Controls Schematics

Connector End View Reference

COMPONENT CONNECTOR END VIEWS - INDEX

Description and Operation

Fuel System Description

Electrical Information Reference

- **Circuit Testing**
- **Connector Repairs**
- **Testing for Intermittent Conditions and Poor Connections**
- **Wiring Repairs**

DTC Type Reference

Powertrain Diagnostic Trouble Code (DTC) Type Definitions

Scan Tool Reference

Control Module References for scan tool information

Circuit/System Testing

NOTE: Verify that the fuel tank is not empty. Only perform this diagnostic if there is at least 2 gallons of fuel in the fuel tank. Clear the DTC, and start and run the engine. Verify that the DTC resets before proceeding with the circuit system testing. If the DTC does not reset, refer to diagnostic aids.

1. Ignition OFF and all vehicle systems OFF, disconnect the harness connector at the K27 fuel pump control module, ignition ON.
2. Connect a test lamp between the control circuit terminal 20 and ground.
3. Verify the test lamp turns ON and OFF when commanding the fuel pump ON and OFF using the scan tool ECM fuel pump enable control function.
    - **If the test lamp is always OFF**
    1. Ignition OFF, disconnect the harness connector at the K20 engine control module.
    2. Test for infinite resistance between the control circuit and ground.
        - If less than infinite resistance, repair the short to ground on the circuit.
        - If infinite resistance
    3. Test for less than 2 ohms in the control circuit end to end.
        - If 2 ohms or greater, repair the open/high resistance in the circuit.
        - If less than 2 ohms, replace the K20 engine control module.

- **If the test lamp is always ON**

1. Ignition OFF, disconnect the harness connector at the K20 engine control module, ignition ON.
2. Test for less than 1 V between the control circuit and ground.
   - If 1 V or greater, repair the short to voltage on the circuit.
   - If less than 1 V, replace the K20 engine control module.

- **If the test lamp turns ON and OFF**

4. Test or replace the K27 fuel pump control module.

Repair Instructions

Perform the **Diagnostic Repair Verification** after completing the repair.

Control Module References for ECM or fuel pump control module replacement, programming and setup

DTC P0300-P0304 OR P0313

Diagnostic Instructions

- Perform the **Diagnostic System Check - Vehicle** prior to using this diagnostic procedure.
- Review **Strategy Based Diagnosis** for an overview of the diagnostic approach.
- **Diagnostic Procedure Instructions** provides an overview of each diagnostic category.

DTC Descriptors

DTC P0300

Engine Misfire Detected

DTC P0301

Cylinder 1 Misfire Detected

DTC P0302

Cylinder 2 Misfire Detected

DTC P0303

Cylinder 3 Misfire Detected

DTC P0304

Cylinder 4 Misfire Detected

Circuit/System Description

The engine control module (ECM) uses information from the crankshaft position sensor in order to determine when an engine misfire is occurring and uses information from the camshaft position sensor - intake and camshaft position sensor - exhaust sensors in order to determine which cylinder is misfiring. By monitoring variations in the crankshaft rotation speed for each cylinder, the ECM is able to detect individual misfire events. If the ECM detects a misfire rate sufficient to cause emission levels to exceed mandated standards, DTC P0300 sets. Under certain driving conditions, a misfire rate can be high enough to cause the 3-way catalyst to overheat, possibly damaging the converter. The malfunction indicator lamp (MIL) will flash ON and OFF when converter overheating, damaging conditions are present and DTC P0300 is set. DTCs P0301- P0304 correspond to cylinders 1-4. If the ECM is able to determine that a specific cylinder that is misfiring, the DTC for that cylinder will set.

Conditions for Running the DTC

- DTCs P0010, P0011, P0013, P0014, P0016, P0017, P0101, P0102, P0103, P0112, P0113, P0117, P0118, P0121, P0122, P0123, P0222, P0223, P0315, P0335, P0336, P0502, P0651, and P2135 are not set.
- The engine speed is between 600-6 528 RPM.
- The ignition voltage is between 11-18 V.
- The engine coolant temperature (ECT) sensor is between -7 to +125°C (+19 to +257°F).
- The A/C compressor clutch is not changing states.
- The fuel tank level is greater than 15%.
- The ECM is not in fuel cut-off or deceleration fuel cut-off mode.
- The ECM is not receiving a rough road signal.
- The throttle angle is steady within 5%.
- The throttle angle is greater than 3% when the vehicle speed is greater than 5 km/h (3 MPH).
- The transmission is not changing gears.
- The antilock brake system (ABS) and the traction control system, if equipped, is not active.
- DTCs P0300, P0301, P0302, P0303, and P0304 run continuously when the above conditions are met.

Conditions for Setting the DTC

The ECM is detecting a crankshaft rotation speed variation indicating a misfire sufficient to cause emission or catalyst damaging levels to exceed mandated standards.

Action Taken When the DTC Sets

DTCs P0300, P0301, P0302, P0303 and P0304 are Type A (MIL flashing) or Type B DTCs.

Conditions for Clearing the DTC

DTCs P0300, P0301, P0302, P0303 and P0304 are Type A (MIL flashing) or Type B DTCs.

Diagnostic Aids

- A misfire may only occur when the engine is under a load or when the engine is cold.
- A misfire DTC may be caused by an excessive vibration from sources other than the engine. Inspect for

the following possible sources:

- A tire or wheel that is out of round or out of balance
- Variable thickness brake rotors
- Certain rough road conditions
- A damaged accessory drive component or belt
- A damaged reluctor wheel

- High resistance in the circuits of the injectors may set a misfire DTC without setting an injector DTC. Test the injector circuits of the affected cylinder(s) for a high resistance if you suspect a condition.
- The MIL indicator flashes when there is an engine misfire.

Reference Information

Schematic Reference

Engine Controls Schematics

Connector End View Reference

COMPONENT CONNECTOR END VIEWS - INDEX

Description and Operation

Fuel System Description

Electrical Information Reference

- **Circuit Testing**
- **Connector Repairs**
- **Testing for Intermittent Conditions and Poor Connections**
- **Wiring Repairs**

DTC Type Reference

Powertrain Diagnostic Trouble Code (DTC) Type Definitions

Scan Tool Reference

Control Module References for scan tool information

Special Tools

- **EL 26792** HEI Spark Tester
- **EN 36012-A** Ignition System Diagnostic Harness

For equivalent regional tools, refer to **Special Tools** .

Circuit/System Verification

NOTE: Before starting vehicle, review freeze frame data to determine if misfire sets during cold start or warmed up operation. If the vehicle has a cold start problem and the vehicle is started, the vehicle will require to be not started for many hours before next attempt to operate the vehicle within the fail conditions.

1. Engine idling at the normal operating temperature.
2. Verify there is no abnormal engine noise.
   - **If there is an engine noise**

     Refer to **Symptoms - Engine Mechanical** .

   - **If there is no abnormal engine noise**
3. Verify no DTCs other than P0300-P0304 are set.
   - **If any DTCs other than P0300-P0304 are set**

     Refer to **Diagnostic Trouble Code (DTC) List - Vehicle** .

   - **If only DTCs P0300-P0304 are set**

     Refer to Circuit/System Testing below.

   - **If no DTCs are set**
4. Verify the scan tool Cylinder 1-4 Current Misfire Counter Misfire parameters are not incrementing.
   - **If Misfire Current Counters are incrementing**

     Refer to Circuit/System Testing below.

   - **If Misfire Current Counters are not incrementing**
5. Engine idling.
6. Verify the engine speed changes when performing the Cylinder Power Balance Test with a scan tool.
   - **If engine speed does not change**

     Refer to Circuit/System Testing below.

   - **If the engine speed changes**
7. Operate the vehicle within the Conditions for Running the DTC. You may also operate the vehicle within the conditions that you observed from the Freeze Frame/Failure Records data.
8. Verify the DTCs are not set.
   - **If any of the DTCs set**

Refer to Circuit/System Testing below.

- **If none of the DTCs set**

9. All OK.

Circuit/System Testing

1. Perform the **Crankshaft Position System Variation Learn** procedure. Verify the scan tool displays Learned Successful.
   - **If the scan tool did not display Learned Successful**

     Inspect for the following conditions and repair as necessary:

     - Worn crankshaft main bearings
     - A damaged or misaligned reluctor wheel
     - Excessive crankshaft runout
     - Interference in the signal circuit of the crankshaft position sensor
     - The ignition switch is in the ON position until there is insufficient system voltage.
     - An ECM power disconnect with the ignition ON that may have erased the crankshaft position system variation values and set DTC P0315
     - Debris between the crankshaft position sensor and the reluctor wheel
   - If the engine control module is still unable to complete the learn procedure, replace the K20 Engine Control Module..
   - **If the scan tool displays Learned Successful**
2. Verify that the following conditions do not exist:
   - Vacuum hose splits, kinks, and incorrect connections
   - Engine vacuum leaks
   - Crankcase ventilation system for vacuum leaks
   - Fuel pressure that is too low or too high-Refer to **Fuel System Diagnosis** .
   - Contaminated fuel-Refer to **Alcohol/Contaminants-in-Fuel Diagnosis** .
   - Exhaust system restrictions
     - **If a condition is found**

       Repair or replace as necessary.

     - **If no condition is found**
3. Ignition OFF, remove the K35 Ignition Coil Module and connect the **(EL 26792)** HEI Spark Tester to the coil of the misfiring cylinder.
4. Verify that the following conditions do not exist with the boot of the K35 Ignition Coil Module:
   - Holes
   - Tears
   - Carbon tracking

- Oil contamination
- Water intrusion
- **If a condition exists**

  Repair or replace as necessary.

- **If no conditions exist**

NOTE: An erratic or weak spark is considered a no spark condition.

5. Verify the **(EL 26792)** HEI Spark Tester sparks while cranking or starting the engine.
   - **If there is no spark**

     Refer to **Electronic Ignition System Diagnosis** for diagnosis of the ignition coil.

   - **If there is spark**
6. Ignition OFF, remove the spark plug from the misfiring cylinder.
7. Exchange the suspected spark plug with another cylinder that is operating correctly.
8. Engine idling.
9. Verify the scan tool Cylinder 1-4 Current Misfire Counter parameter does not increment on the spark plug coil it was removed from.
   - **If the misfire does follow the spark plug exchange**

     Replace the spark plug.

   - **If the misfire does not follow the spark plug exchange**
10. Test or inspect for the following:
    - A lean or rich Q17 fuel injector-Refer to **Fuel System Diagnosis** .
    - An engine mechanical condition-Refer to **Symptoms - Engine Mechanical** .

Repair Instructions

- **Ignition Coil Replacement**
- **Spark Plug Replacement**

Repair Verification

1. If the customer concern was a flashing MIL, operate the vehicle within the conditions for running DTC P0420. Refer to **DTC P0420** .
2. Clear the DTCs with a scan tool.
3. Turn OFF the ignition for 60 s.
4. Start the engine.
5. Operate the vehicle within the conditions for running the DTC. You may also operate the vehicle within

the conditions that you observed from the freeze frame/failure records.

6. If the DTC fails this ignition, a misfire still exists.

DTC P0315 (LUW)

Diagnostic Instructions

- Perform the **Diagnostic System Check - Vehicle** prior to using this diagnostic procedure.
- Review **Strategy Based Diagnosis** for an overview of the diagnostic approach.
- **Diagnostic Procedure Instructions** provides an overview of each diagnostic category.

DTC Descriptor

DTC P0315

Crankshaft Position System Variation Not Learned

Circuit/System Description

The crankshaft position sensor system variation learn feature is used to calculate reference period errors caused by slight build tolerance variations in the crankshaft position sensor, crankshaft, and crankshaft position sensor position. The calculated error allows the engine control module (ECM) to accurately compensate for reference period variations. This enhances the ability of the ECM to detect misfire events over a wide range of engine speeds and load conditions. The ECM stores the crankshaft position system variation values after a learn procedure has been performed. If the actual crankshaft position variation is not stored within the crankshaft position sensor compensating value look up table, then DTC P0300 may set. If the crankshaft position sensor system variation values are not stored in the ECM memory, or a proper ECM power down does not occur after completing the crankshaft position sensor Learn Procedure, then DTC P0315 sets.

Conditions for Running the DTC

- The engine is running.
- The DTC runs continuously.

Conditions for Setting the DTC

The crankshaft position sensor system variation values are not stored in the ECM memory.

Action Taken When the DTC Sets

DTC P0315 is a Type A DTC.

Conditions for Clearing the DTC

DTC P0315 is a Type A DTC.

Diagnostic Aids

This test procedure requires that the vehicle battery has passed a load test and is completely charged. Refer to **Battery Inspection/Test** .

Reference Information

Schematic Reference

Engine Controls Schematics

Connector End View Reference

COMPONENT CONNECTOR END VIEWS - INDEX

Electrical Information Reference

- **Circuit Testing**
- **Connector Repairs**
- **Testing for Intermittent Conditions and Poor Connections**
- **Wiring Repairs**

DTC Type Reference

Powertrain Diagnostic Trouble Code (DTC) Type Definitions

Scan Tool Reference

Control Module References for scan tool information.

Circuit/System Testing

NOTE: The crankshaft position sensor system variation learn procedure may have to be repeated up to 5 times before the procedure is learned.

1. Perform the crankshaft position variation learn procedure.
2. If the crankshaft position variation learn procedure cannot be performed successfully, inspect for the following conditions:
   - Any worn crankshaft main bearings
   - A damaged or misaligned reluctor wheel
   - Excessive crankshaft runout
   - A damaged crankshaft. Refer to **Crankshaft and Bearing Cleaning and Inspection** .
   - Interference in the signal circuit of the B26 Crankshaft Position Sensor
   - The ignition switch is left in the ON position, until the battery is discharged
   - An ECM power disconnect, with the ignition ON, that may have erased the crankshaft position sensor system variation values and set DTC P0315

- Any debris between the crankshaft position sensor and the reluctor wheel
  - If there is a condition, repair as necessary.

3. If the ECM is still unable to complete the learn procedure, replace the K20 Engine Control Module.

Repair Instructions

Perform the **Diagnostic Repair Verification** after completing the repair.

Control Module References **Control Module References** for engine control module replacement, programming, and setup.

DTC P0324, P0326, OR P06B6

Diagnostic Instructions

- Perform the **Diagnostic System Check - Vehicle** prior to using this diagnostic procedure.
- Review **Strategy Based Diagnosis** for an overview of the diagnostic approach.
- **Diagnostic Procedure Instructions** provides an overview of each diagnostic category.

DTC Descriptors

DTC P0324

Knock Sensor (KS) System Performance

DTC P0326

Knock Sensor (KS) Performance

DTC P06B6

Control Module Knock Sensor Processor 1 Performance

Diagnostic Fault Information

Circuit	Short to Ground	Open/High Resistance	Short to Voltage	Signal Performance
Signal	P0327	P0325	P0328	P0326
Low Reference	P0327	P0325, P06B6	P0328	P0326

Circuit/System Description

The knock sensors enable the engine control module (ECM) to control the ignition timing for the best possible performance while protecting the engine from potentially damaging levels of detonation. The knock sensors produce an alternating current (AC) voltage signal that varies depending on the vibration level during engine operation. The ECM adjusts the spark timing based on the amplitude and the frequency of the two knock sensor

signals. The ECM receives the two knock sensor signals through 2 isolated circuits. The ECM learns a minimum knock sensor noise level for all of the engine speed ranges. The ECM monitors for a normal knock sensor signal. The ECM monitors the two internal knock sensor processors by verifying a 20 KHz signal generated on the signal circuits is detected on the sensors' low reference circuits.

Conditions for Running the DTCs

P0324 or P0326-Condition 1; Excessive Knock Diagnostic

- Engine speed is between 400 and 8, 500 RPM.
- Engine is running for greater than 2 s.
- The number of engine revolutions above the minimum engine speed is least 200 revolutions.
- The engine coolant temperature (ECT) is warmer than -40°C (-40°F).
- The intake air temperature (IAT) sensor 1 is warmer than -40°C (-40°F).
- The DTCs run continuously when the above conditions are met.

P0324 or P0326-Condition 2; Abnormal Noise Diagnostic and Condition 3; Flat Signal Diagnostic

- Engine speed is at least 8, 500 RPM.
- The number of engine revolutions above the minimum engine speed is least 200 revolutions.
- The ECT is warmer than -40°C (-40°F).
- The IAT sensor 1 is warmer than -40°C (-40°F).
- The DTCs run continuously when the above conditions are met.

P06B6

- Engine speed is between 500 and 5, 500 RPM.
- The number of engine revolutions within the engine speed window is least 100 revolutions.
- Engine is running greater than 2 s.
- The DTCs run continuously when the above conditions are met.

Conditions for Setting the DTCs

P0324

The ECM detects that the knock sensor signal's performance is out of the normal expected range due to an excessive engine knock, or abnormal noise, or a flat signal; in at least a single cylinder.

P0326

- The ECM detects that the knock sensor signal indicates the sensor harness is connected, but the sensor is not properly bolted to the engine.

  OR

- The ECM detects that the knock sensor signal indicates an excessive engine knock is present.

P06B6

The ECM has detected an internal knock sensor processor fault.

Action Taken When the DTCs Set

- DTCs P0324, P0326, and P06B6, are Type B DTCs.
- The ignition timing is retarded to reduce the potential of engine damaging spark knock.

Conditions for Clearing the DTCs

DTCs P0324, P0326, and P06B6 are Type B DTCs.

Reference Information

Schematic Reference

Engine Controls Schematics

Connector End View Reference

COMPONENT CONNECTOR END VIEWS - INDEX

Electrical Information Reference

- **Circuit Testing**
- **Connector Repairs**
- **Testing for Intermittent Conditions and Poor Connections**
- **Wiring Repairs**

DTC Type Reference

Powertrain Diagnostic Trouble Code (DTC) Type Definitions

Scan Tool Reference

Control Module References for scan tool information

Circuit/System Verification

1. Ignition ON.
2. Engine running, observe the DTC information with a scan tool.
3. Verify DTC P0325, P0327, P0328 and P06B6 is not set.

- **IF DTC P0325, P0327, or P0328 is set with P06B6**

  Refer to **DTC P0325, P0327, or P0328** for further diagnosis.

- **If only DTC P06B6 is set**

  Verify that no external knock sensor circuit issues exist, then; replace the K20 Engine Control Module.

- **If none of the DTCs is set**

4. Vehicle OFF, inspect for the following:
   - The affected B68 Knock Sensor for physical damage. A sensor that is dropped or damaged may cause a DTC to set
   - The sensor for proper installation. A sensor that is loose or not at the correct torque may cause a DTC to set. Refer to **Fastener Tightening Specifications** .
   - The sensor mounting surface for burrs, casting flash, and foreign material
   - The sensor must be clear of hoses, brackets, and engine electrical wiring
   - Loose brackets
   - Loose or broken accessory drive belts, brackets, components
   - An engine mechanical condition-Refer to **Symptoms - Engine Mechanical**
   - **If a condition is found**

     Repair or replace component as appropriate.

   - **If no condition is found**
5. Operate the vehicle within the conditions for running the DTC. You may also operate the vehicle within the conditions that you observed from the freeze frame/failure Records data.
   - **If any of the DTCs set**

     Test or replace the B68 Knock Sensor.

   - **If none of the DTCs set**
6. All OK

Repair Instructions

Perform the **Diagnostic Repair Verification** after completing the repair.

- **Knock Sensor Replacement**
- **Control Module References** for engine control module replacement, programming, and setup.

DTC P0325, P0327, OR P0328

Diagnostic Instructions

- Perform the **Diagnostic System Check - Vehicle** prior to using this diagnostic procedure.
- Review **Strategy Based Diagnosis** for an overview of the diagnostic approach.
- **Diagnostic Procedure Instructions** provides an overview of each diagnostic category.

DTC Descriptors

DTC P0325

Knock Sensor Circuit

DTC P0327

Knock Sensor Circuit Low Voltage

DTC P0328

Knock Sensor Circuit High Voltage

Diagnostic Fault Information

Circuit	Short to Ground	Open/High Resistance	Short to Voltage	Signal Performance
Signal	P0327	P0325	P0328	P0324, P0326, P06B6
Low Reference	P0327	P0325	P0328	P0324, P0326, P06B6

Circuit/System Description

The knock sensor system enables the engine control module (ECM) to control the ignition timing for the best possible performance while protecting the engine from potentially damaging levels of detonation. The knock sensor produces an alternating current (AC) voltage signal that varies depending on the vibration level during engine operation. The ECM adjusts the spark timing based on the amplitude and the frequency of the knock sensor signal. The ECM receives the knock sensor signal through a signal circuit and a low reference circuit. The ECM learns a minimum knock sensor noise level at idle and uses calibrated values for the rest of the RPM range. The ECM should monitor a normal knock sensor signal within the noise channel.

Conditions for Running the DTC

P0325

- Engine speed is between 600-8 500 RPM.
- The ECT is greater than -40°C (-40°F).
- The IAT is greater than -40°C (-40°F).
- The engine runtime is greater than 5 s.
- The DTC runs continuously when the above conditions are met.

P0327 or P0328

- Engine speed is between 0-8 500 RPM.
- DTCs P0327 and P0328 run continuously when the above condition is met.

Conditions for Setting the DTC

P0325

The ECM detects the knock sensor signal circuit is open for greater than 5 s.

P0327

The ECM detects that the sensor input signal is less than 0.57 V or the sensor return signal is less than 0.40 V for greater than 5 s.

P0328

The ECM detects that the sensor input signal is greater than 2.76 V or the sensor return signal is greater than 1.95 V for greater than 5 s.

Action Taken When the DTC Sets

- DTCs P0325, P0327, and P0328 are Type B DTCs.
- The ignition timing is retarded to reduce the potential of engine damaging spark knock.

Conditions for Clearing the DTC

DTCs P0325, P0327, and P0328 are Type B DTCs.

Diagnostic Aids

- Inspect the knock sensor for physical damage. A knock sensor that is dropped or damaged may cause a DTC to set.
- Inspect the knock sensor for proper installation. A knock sensor that is loose or over torqued may cause a DTC to set. The knock sensor should be free of thread sealant.
- The knock sensor mounting surface should be free of burrs, casting flash, and foreign material.

Reference Information

Schematic Reference

Engine Controls Schematics

Connector End View Reference

COMPONENT CONNECTOR END VIEWS - INDEX

Description and Operation

Electronic Ignition System Description

Electrical Information Reference

- **Circuit Testing**
- **Connector Repairs**
- **Testing for Intermittent Conditions and Poor Connections**
- **Wiring Repairs**

DTC Type Reference

Powertrain Diagnostic Trouble Code (DTC) Type Definitions

Scan Tool Reference

Control Module References for scan tool information

Circuit/System Verification

1. Engine running
2. Verify DTC P0325, P0327, P0328 or P06B6 is not set.
    - **If DTC P0325, P0327 or P0328 is set with P06B6**

      Refer to Circuit/System Testing below.

    - **If only DTC P06B6 is set**

      Replace the K20 Engine Control Module.

    - **If none of the DTCs are set**
3. Verify the affected B68 Knock Sensor is properly tightened. Refer to **Fastener Tightening Specifications** .
4. Verify the scan tool parameters below display NO while moving the related harnesses and connectors for the affected B68 Knock Sensor.
    - Cylinder 1 Knock Detected
    - Cylinder 2 Knock Detected
    - Cylinder 3 Knock Detected
    - Cylinder 4 Knock Detected
        - **If NO is not displayed**

          Refer to Circuit/System Testing below.

- **If NO is displayed**

5. Operate the vehicle within the conditions for running the DTC. You may also operate the vehicle within the conditions that you observed from the freeze frame/failure Records data.
   - **If any of the DTCs set**

     Refer to Circuit/System Testing below.

   - **If none of the DTCs set**
6. All OK

Circuit/System Testing

1. Ignition OFF, disconnect the harness connector at the B68 Knock Sensor, ignition ON.
2. Test for 1-4 V between each of the following circuits and ground:
   - Signal terminal 1
   - Low reference terminal 2
   - **If less than 1 V**
   1. Ignition OFF, disconnect the X2 harness connector at the K20 Engine Control Module.
   2. Test for infinite resistance between the affected circuit and ground.
      - If less than infinite resistance, repair the short to ground on the circuit.
      - If infinite resistance
   3. Test for less than 2 ohms in the affected circuit end to end.
      - If 2 ohms or greater, repair the open/high resistance in the circuit.
      - If less than 2 ohms, replace the K20 Engine Control Module.
   - **If greater than 4 V**
   1. Ignition OFF, disconnect the X2 harness connector at the K20 Engine Control Module, ignition ON.
   2. Test for less than 1 V between the affected circuit and ground.
      - If 1 V or greater, repair the short to voltage on the circuit.
      - If less than 1 V, replace the K20 Engine Control Module.
   - **If between 1-4 V**
3. Replace the B68 Knock Sensor.

Repair Instructions

Perform the **Diagnostic Repair Verification** after completing the repair.

- **Knock Sensor Replacement**
- **Control Module References** for ECM replacement, programming, and setup.

DTC P0335 OR P0336

Diagnostic Instructions

- Perform the **Diagnostic System Check - Vehicle** prior to using this diagnostic procedure.
- Review **Strategy Based Diagnosis** for an overview of the diagnostic approach.
- **Diagnostic Procedure Instructions** provides an overview of each diagnostic category.

DTC Descriptors

DTC P0335

Crankshaft Position Sensor Circuit

DTC P0336

Crankshaft Position Sensor Performance

Diagnostic Fault Information

Circuit	Short to Ground	Open/High Resistance	Short to Voltage	Signal Performance
5 V Reference	P057C, P0335, P0651	P0335	P0651	P0336
Signal	P0335, P0506	P0335	P0335	P0336
Low Reference	-	P0335	-	P0336

Circuit/System Description

The crankshaft position sensor circuits consist of an engine control module (ECM) supplied 5 V reference circuit, low reference circuit, and an output signal circuit. The crankshaft position sensor is an internally magnetic biased digital output integrated circuit sensing device. The sensor detects magnetic flux changes of the teeth and slots of a 58-tooth reluctor wheel on the crankshaft. Each tooth on the reluctor wheel is spaced at 60-tooth spacing, with 2 missing teeth for the reference gap. The crankshaft position sensor produces an ON/OFF DC voltage of varying frequency, with 58 output pulses per crankshaft revolution. The frequency of the crankshaft position sensor output depends on the velocity of the crankshaft. The crankshaft position sensor sends a digital signal, which represents an image of the crankshaft reluctor wheel, to the ECM as each tooth on the wheel rotates past the crankshaft position sensor. The ECM uses each crankshaft position signal pulse to determine crankshaft speed and decodes the crankshaft reluctor wheel reference gap to identify crankshaft position. This information is then used to determine the optimum ignition and injection points of the engine. The ECM also uses crankshaft position sensor output information to determine the camshaft relative position to the crankshaft, to control camshaft phasing, and to detect cylinder misfire.

Conditions for Running the DTC

P0335 Condition 1

- The starter is engaged and the engine control module detects camshaft position sensor pulses.

OR

- DTCs P0101, P0102 and P0103 are not set.

AND

- The airflow into the engine is greater than 2 g/s.

Condition 2

- The engine is running and the starter is not engaged.
- DTC P0651 is not set.

Condition 3

- The engine is running or the starter is engaged.
- DTCs P0365, P0366, P0641, or P0651 are not set.

P0336 Condition 1

- The airflow into the engine is greater than 2 g/s.
- Engine speed is greater than 450 RPM.
- DTCs P0335 or P0651 are not set.

Condition 2

- The engine is running and the starter is not engaged.
- DTC P0651 is not set.

Condition 3

- The starter is engaged and the engine control module detects camshaft position sensor pulses.

OR

- DTCs P0101, P0102, and P0103 are not set.
- The airflow into the engine is greater than 2 g/s.

Condition 4

- The engine is running or the starter is engaged.
- DTCs P0365, P0366, P0641, or P0651 are not set.

The DTCs run continuously once the above conditions are met.

Conditions for Setting the DTC

P0335 Condition 1

The ECM does not detect a crankshaft position sensor pulse for greater than 4 s.

Condition 2

The ECM does not detect a crankshaft position sensor pulse for greater than 0.1 s.

Condition 3

The ECM does not detect a crankshaft position sensor pulse for 2 out of 10 engine revolutions.

P0336 Condition 1

The ECM detects that 10 or more crankshaft resynchronization have occurred within 10 s.

Condition 2

The ECM does not detect the synchronization gap on the reluctor wheel for greater than 0.4 s.

Condition 3

The ECM does not detect the synchronization gap on the reluctor wheel for greater than 1.5 s after the starter was engaged.

Condition 4

The ECM detects less than 51 or greater than 65 crankshaft position sensor pulses during 1 engine revolution for 8 out of 10 engine revolutions.

Action Taken When the DTC Sets

- DTCs P0335 and P0336 are Type B DTCs.
- The camshaft position sensor is used to determine engine position.
- The camshaft actuators are commanded to the parked position.

Conditions for Clearing the DTC

DTCs P0335 and P0336 are Type B DTCs.

Reference Information

Schematic Reference

Engine Controls Schematics

Connector End View Reference

COMPONENT CONNECTOR END VIEWS - INDEX

Description and Operation

Electronic Ignition System Description

Electrical Information Reference

- **Circuit Testing**
- **Connector Repairs**
- **Testing for Intermittent Conditions and Poor Connections**
- **Wiring Repairs**

DTC Type Reference

Powertrain Diagnostic Trouble Code (DTC) Type Definitions

Scan Tool Reference

Control Module References for scan tool information

Circuit/System Verification

1. Ignition ON.
2. Verify DTC P0651 is not set.
   - **If the DTC is set**

     Refer to **DTC P0641, P0651, P0697, or P06A3 (ECM)** .

   - **If the DTC is not set**
3. Engine Running.
4. Verify the scan tool Crankshaft Position Active Counter parameter increments.
   - **If the counter does not increment**

     Refer to Circuit/System Testing below.

   - **If the counter increments**
5. Verify the scan tool Crankshaft Position Resync Counter parameter displays 0 counts and the engine does not stumble or stall while moving the related harness/connectors of the B26 Crankshaft Position Sensor.
   - **If greater than 0 counts and the engine stumbles or stalls**

     Refer to Circuit/System Testing below.

- **If 0 counts and the engine does not stumble or stall**

6. Operate the vehicle within the Conditions for Running the DTC. You may also operate the vehicle within the conditions that you observed from the Freeze Frame/Failure Records data.
7. Verify the DTC does not set.
   - **If the DTC sets**

     Refer to Circuit/System Testing below.

   - **If the DTC does not set**
8. All OK.

Circuit/System Testing

1. Ignition OFF and all vehicle systems OFF, disconnect the harness connector at the B26 Crankshaft Position Sensor. It may take up to 2 minutes for all vehicle systems to power down.
2. Test for less than 5 ohms between the low reference circuit terminal 2 and ground.
   - **If 5 ohms or greater**
   1. Ignition OFF, disconnect the X2 harness connector at the K20 Engine Control Module.
   2. Test for less than 2 ohms in the low reference circuit end to end.
      - If 2 ohms or greater, repair the open/high resistance in the circuit.
      - If 2 ohms or less, replace the K20 Engine Control Module.
   - **If less than 5 ohms**
3. Ignition ON.
4. Test for 4.8-5.2 V between the 5 V reference circuit terminal 3 and ground.
   - **If less than 4.8 V**
   1. Ignition OFF, disconnect the X2 harness connector at the K20 Engine Control Module.
   2. Test for infinite resistance between the 5 V reference circuit and ground.
      - If less than infinite resistance, repair the short to ground on the circuit.
      - If infinite resistance
   3. Test for less than 2 ohms in the 5 V reference circuit end to end.
      - If 2 ohms or greater, repair the open/high resistance in the circuit.
      - If less than 2 ohms, replace the K20 Engine Control Module.
   - **If greater than 5.2 V**
   1. Ignition OFF, disconnect the X2 harness connector at the K20 Engine Control Module, ignition ON.
   2. Test for less than 1 V between the 5 V reference and ground.
      - If 1 V or greater, repair the short to voltage on the circuit.
      - If less than 1 V, replace the K20 Engine Control Module.
   - **If between 4.8-5.2 V**
5. Test for 4.8-5.2 V between the signal circuit terminal 1 and ground.

- **If less than 4.8 V**

1. Ignition OFF, disconnect the X2 harness connector at the K20 Engine Control Module.
2. Test for infinite resistance between the signal circuit and ground.
   - If less than infinite resistance, repair the short to ground on the circuit.
   - If infinite resistance.
3. Test for less than 2 ohms in the signal circuit end to end.
   - If 2 ohms or greater, repair the open/high resistance in the circuit.
   - If less than 2 ohms, replace the K20 Engine Control Module.

- **If greater than 5.2 V**

1. Ignition OFF, disconnect the X2 harness connector at the K20 Engine Control Module, ignition ON.
2. Test for less than 1 V between the signal circuit and ground.
   - If 1 V or greater, repair the short to voltage on the circuit.
   - If less than 1 V, replace the K20 Engine Control Module.

- **If between 4.8-5.2 V**

6. Ignition OFF, connect a 3 A fused jumper wire to the signal circuit terminal 1, ignition ON.

NOTE: Additional DTCs may set when performing this test.

7. Verify the scan tool Crankshaft Position Sensor Active Counter parameter increments while rapidly tapping the fused jumper wire end to ground.
   - **If the counter does not increment**

     Replace the K20 Engine Control Module.

   - **If the counter increments**
8. Verify DTC P0336 is not set.
   - **If the DTC is set**

     Inspect for the conditions listed below:

     - Excessive play or looseness of the B26 Crankshaft Position Sensor or the reluctor wheel
     - Improper installation of the B26 Crankshaft Position Sensor
     - Foreign material passing between the B26 Crankshaft Position Sensor and the reluctor wheel
     - Damaged reluctor wheel
     - Excessive air gap between the B26 Crankshaft Position Sensor and the reluctor wheel
     - Engine oil for debris
     - Timing chain, tensioner, and sprockets for wear or damage
   - If any of the conditions above are found, repair as necessary.
   - If all components test normal, test or replace the B26 Crankshaft Position Sensor.

- **If the DTC is not set**

9. Test or replace the B26 Crankshaft Position Sensor.

Repair Instructions

Perform the **Diagnostic Repair Verification** after completing the repair.

- **Crankshaft Position Sensor Replacement**
- **Control Module References** for engine control module replacement, programming, and setup

DTC P0340, P0341, P0365, OR P0366

Diagnostic Instructions

- Perform the **Diagnostic System Check - Vehicle** prior to using this diagnostic procedure.
- Review **Strategy Based Diagnosis** for an overview of the diagnostic approach.
- **Diagnostic Procedure Instructions** provides an overview of each diagnostic category.

DTC Descriptors

DTC P0340

Intake Camshaft Position Sensor Circuit

DTC P0341

Intake Camshaft Position Sensor Performance

DTC P0365

Exhaust Camshaft Position Sensor Circuit

DTC P0366

Exhaust Camshaft Position Sensor Performance

Diagnostic Fault Information

Circuit	Short to Ground	Open/High Resistance	Short to Voltage	Signal Performance
5 V Reference	P0340, P0365, P0532, P0641	P0340	P0641	-
Signal	P0340	P0340	P0340	P0341, P0366
Low Reference	-	P0340	-	-

Circuit/System Description

The camshaft position sensors each have 3 circuits consisting of an engine control module (ECM) supplied 5 V reference circuit, low reference circuit, and an output signal circuit. The camshaft position sensor is an internally magnetic biased digital output integrated circuit sensing device. The sensor detects magnetic flux changes of the teeth and slots of a 4-tooth reluctor wheel attached to the camshaft. As each reluctor wheel tooth rotates past the camshaft position sensor, the resulting change in the magnetic field is used by the sensor electronics to produce a digital output pulse. The sensor returns a digital ON/OFF DC voltage pulse of varying frequency with 4 varying width output pulses per camshaft revolution that represent an image of the camshaft reluctor wheel. The frequency of the camshaft position sensor output depends on the velocity of the camshaft. The ECM decodes the narrow and wide tooth pattern to identify camshaft position. This information is then used to determine the optimum ignition and injection points of the engine. The ECM uses the exhaust camshaft position sensor to determine injector and ignition system synchronization. The intake and exhaust camshaft position sensors are also used to determine camshaft to crankshaft relationship. The ECM also uses camshaft position sensor output information to determine the camshaft relative position to the crankshaft to control camshaft phasing and limp-home operation.

Conditions for Running the DTC

P0340 or P0365 Condition 1

- The starter is engaged and the engine control module detects camshaft position sensor pulses.

  OR

- DTCs P0101, P0102, and P0103 are not set.
- The airflow into the engine is greater than 2 g/s.

Condition 2

- The engine is running and the starter is not engaged.
- DTC P0651 is not set.

Condition 3

- The crankshaft is synchronized.
- The starter is engaged.
- DTC P0335, P0336, P0641, or P0651 are not set.

Condition 4

- The crankshaft is synchronized.
- DTC P0335, P0336, P0641, or P0651 are not set.

P0341 or P0366 Condition 1

- The crankshaft is synchronized.
- The starter is engaged.

- DTC P0335, P0336, P0641, or P0651 are not set.

Condition 2

- The crankshaft is synchronized.
- DTC P0335, P0336, P0641, or P0651 are not set.

The DTCs run continuously once the above conditions are met.

Conditions for Setting the DTC

P0340 or P0365 Condition 1

The ECM does not detect a camshaft position sensor pulse for greater than 5.5 s or greater than 4.0 s since the time the starter has been engaged.

Condition 2

The ECM detects less than 4 camshaft position sensor pulses for greater than 3.0 s.

Condition 3

The ECM does not detect a camshaft position sensor pulse during the first 2 engine revolutions.

Condition 4

The ECM does not detect a camshaft position sensor pulse during 200 engine revolutions.

P0341 or P0366 Condition 1

The ECM detects less than 4 or greater than 6 camshaft position sensor pulses during the first 2 engine revolutions.

Condition 2

The ECM detects less than 398 or greater than 402 camshaft position sensor pulses during 200 engine revolutions.

Action Taken When the DTC Sets

- DTCs P0340, P0341, P0365, and P0366 are Type B DTCs.
- The camshaft position actuator is commanded to the Home or Parked position.
- The ignition system defaults to a failed camshaft position sensor limp home mode.

Conditions for Clearing the MIL/DTC

DTCs P0340, P0341, P0365, and P0366 are Type B DTCs.

Diagnostic Aids

- With a DTC set, the engine may crank for an extended period of time at start-up
- The exhaust camshaft position sensor is used for injector and ignition system synchronization. A stalling condition will occur if the camshaft position sensor signal is intermittent and a DTC may not set. Inspect the intake and exhaust camshaft position sensor circuits for poor connections.

Reference Information

Schematic Reference

Engine Controls Schematics

Connector End View Reference

COMPONENT CONNECTOR END VIEWS - INDEX

Description and Operation

Electronic Ignition System Description

Electrical Information Reference

- **Circuit Testing**
- **Connector Repairs**
- **Testing for Intermittent Conditions and Poor Connections**
- **Wiring Repairs**

DTC Type Reference

Powertrain Diagnostic Trouble Code (DTC) Type Definitions

Scan Tool Reference

Control Module References for scan tool information

Circuit/System Verification

1. Ignition ON.
2. Verify DTC P0641 or P0651 is not set.
    - **If any of the DTCs are set**

      Refer to **DTC P0641, P0651, P0697, or P06A3 (ECM)** .

- **If none of the DTCs are set**

3. Engine Running.
4. Verify the scan tool parameters listed below increment:
   - Exhaust Camshaft Position Active Counter
   - Intake Camshaft Position Active Counter
   - **If any counter does not increment**

     Refer to Circuit/System Testing below.

   - **If all counters increment**
5. Operate the vehicle within the Conditions for Running the DTC. You may also operate the vehicle within the conditions that you observed from the Freeze Frame/Failure Records data.
6. Verify the DTC does not set.
   - **If the DTC sets**

     Refer to Circuit/System Testing below.

   - **If the DTC does not set**
7. All OK.

Circuit/System Testing

1. Ignition OFF and all vehicle systems OFF, disconnect the harness connector at the appropriate B23 Camshaft Position Sensor. It may take up to 2 minutes for all vehicle systems to power down.
2. Test for less than 5 ohms between the low reference circuit terminal 2 and ground.
   - **If 5 ohms or greater**
   1. Ignition OFF, disconnect the X2 harness connector at the K20 Engine Control Module.
   2. Test for less than 2 ohms in the low reference circuit end to end.
      - If 2 ohms or greater, repair the open/high resistance in the circuit.
      - If 2 ohms or less, replace the K20 Engine Control Module.
   - **If less than 5 ohms**
3. Ignition ON.
4. Test for 4.8-5.2 V between the 5 V reference circuit terminal 1 and ground.
   - **If less than 4.8 V**
   1. Ignition OFF, disconnect the X2 harness connector at the K20 Engine Control Module.
   2. Test for infinite resistance between the 5 V reference circuit and ground.
      - If less than infinite resistance, repair the short to ground on the circuit.
      - If infinite resistance.
   3. Test for less than 2 ohms in the 5 V reference circuit end to end.
      - If 2 ohms or greater, repair the open/high resistance in the circuit.

- If less than 2 ohms, replace the K20 Engine Control Module.

- **If greater than 5.2 V**

1. Ignition OFF, disconnect the X2 harness connector at the K20 Engine Control Module, ignition ON.
2. Test for less than 1 V between the 5 V reference circuit and ground.
   - If 1 V or greater, repair the short to voltage on the circuit.
   - If less than 1 V, replace the K20 Engine Control Module.

- **If between 4.8-5.2 V**

5. Test for 4.8-5.2 V between the signal circuit terminal 3 and ground.
   - **If less than 4.8 V**

1. Ignition OFF, disconnect the X2 harness connector at the K20 Engine Control Module.
2. Test for infinite resistance between the signal circuit and ground.
   - If less than infinite resistance, repair the short to ground on the circuit.
   - If infinite resistance.
3. Test for less than 2 ohms in the signal circuit end to end.
   - If 2 ohms or greater, repair the open/high resistance in the circuit.
   - If less than 2 ohms, replace the K20 Engine Control Module.

   - **If greater than 5.2 V**

1. Ignition OFF, disconnect the X2 harness connector at the K20 Engine Control Module, ignition ON.
2. Test for less than 1 V between the signal circuit and ground.
   - If 1 V or greater, repair the short to voltage on the circuit.
   - If less than 1 V, replace the K20 Engine Control Module.

   - **If between 4.8-5.2 V**

6. Verify DTC P0341 or P0366 is not set.
   - **If any of the DTCs are set**

     Inspect for the conditions listed below:

     - Excessive play or looseness of the B23 Camshaft Position Sensor or the reluctor wheel
     - Improper installation of the B23 Camshaft Position Sensor
     - Foreign material passing between the B23 Camshaft Position Sensor and the reluctor wheel
     - Damaged reluctor wheel
     - Excessive air gap between the B23 Camshaft Position Sensor and the reluctor wheel
     - Engine oil for debris
     - Timing chain, tensioner, and sprockets for wear or damage

   - If any of the conditions above are found, repair as necessary.
   - If all components test normal, test or replace the B23 Camshaft Position Sensor.
   - **If none of the DTCs are set**

7. Replace the B23 Camshaft Position Sensor.

Repair Instructions

Perform the **Diagnostic Repair Verification** after completing the repair.

- **Camshaft Position Sensor Replacement**
- **Control Module References** for engine control module replacement, programming, and setup

DTC P0351-P0354

Diagnostic Instructions

- Perform the **Diagnostic System Check - Vehicle** prior to using this diagnostic procedure.
- Review **Strategy Based Diagnosis** for an overview of the diagnostic approach.
- **Diagnostic Procedure Instructions** provides an overview of each diagnostic category.

DTC Descriptors

DTC P0351

Ignition Coil 1 Control Circuit

DTC P0352

Ignition Coil 2 Control Circuit

DTC P0353

Ignition Coil 3 Control Circuit

DTC P0354

Ignition Coil 4 Control Circuit

Diagnostic Fault Information

Circuit	Short to Ground	Open/High Resistance	Short to Voltage	Signal Performance
Ignition Voltage	1	2	-	-
Ignition Coil 1 Control	P0300, P0351	P0300, P0351	P0300, P0351	P0300, P0351
Ignition Coil 2 Control	P0300, P0352	P0300, P0352	P0300, P0352	P0300, P0352
Ignition Coil 3 Control	P0300, P0353	P0300, P0353	P0300, P0353	P0300, P0353
Ignition Coil 4 Control	P0300, P0354	P0300, P0354	P0300, P0354	P0300, P0354
Low Reference	-	-	-	-

Ground	-	3	-	-

1. The engine cranks but does not run and opens the fuse that supplies voltage to the ignition coils.
2. The engine cranks but does not run
3. The engine may still run

Circuit/System Description

The ignition system on this engine uses an ignition coil module. The engine control module (ECM) controls the spark event for each cylinder through the individual ignition coil control circuits. When the ECM commands the ignition control circuit ON, electrical current will flow through the primary winding of the ignition coil, creating a magnetic field. When a spark event is requested, the ECM will command the ignition control circuit OFF, interrupting current flow through the primary winding. The magnetic field created by the primary winding will collapse across the secondary coil windings, producing a high voltage across the spark plug electrodes. The ECM uses information from the crankshaft position sensor, and the camshaft position sensor for sequencing and timing of the spark events. The ECM monitors each ignition control circuit for improper voltage levels.

Conditions for Running the DTC

- The engine is running.
- Ignition voltage is greater than 5 V.

The DTCs run continuously when the above conditions are met.

Conditions for Setting the DTC

The engine control module detects that the voltage command state of the driver and the actual state of the control circuit do not match.

Action Taken When the DTC Sets

DTCs P0351, P0352, P0353, and P0354 are Type B DTCs.

Conditions for Clearing the MIL/DTC

DTCs P0351, P0352, P0353, and P0354 are Type B DTCs.

Reference Information

Schematic Reference

Engine Controls Schematics

Connector End View Reference

COMPONENT CONNECTOR END VIEWS - INDEX

Description and Operation

Electronic Ignition System Description

Electrical Information Reference

- **Circuit Testing**
- **Connector Repairs**
- **Testing for Intermittent Conditions and Poor Connections**
- **Wiring Repairs**

DTC Type Reference

Powertrain Diagnostic Trouble Code (DTC) Type Definitions

Scan Tool Reference

Control Module References for scan tool information

Circuit/System Verification

1. Engine Running.
2. Verify the scan tool parameters listed below do not display Malfunction:
   - Ignition Coil 1-4 Control Circuit High Voltage Test Status
   - Ignition Coil 1-4 Control Circuit Low Voltage Test Status
   - Ignition Coil 1-4 Control Circuit Open Test Status
   - **If Malfunction is displayed**

     Refer to Circuit/System Testing below.

   - **If Malfunction is not displayed**
3. Operate the vehicle within the Conditions for Running the DTC. You may also operate the vehicle within the conditions that you observed from the Freeze Frame/Failure Records data.
4. Verify the DTC does not set.
   - **If the DTC sets**

     Refer to Circuit/System Testing below.

   - **If the DTC does not set**
5. All OK.

Circuit/System Testing

1. Ignition OFF and all vehicle systems OFF, disconnect the harness connector at the K35 Ignition Coil Module.
2. Remove the fuel injector fuse.

3. Connect a DMM between the appropriate K35 Ignition Coil Module control circuit listed below and ground. Set the DMM to the DC Hz scale and utilize the Min-Max function:
    - Ignition Coil 1 terminal D
    - Ignition Coil 2 terminal E
    - Ignition Coil 3 terminal F
    - Ignition Coil 4 terminal G
4. Engine Cranking, test for greater than 1.5 Hz.
    - **If less than 1.5 Hz**
    1. Ignition OFF, disconnect the X2 harness connector at the K20 Engine Control Module.
    2. Test for infinite resistance between the control circuit and ground.
        - If less than infinite resistance, repair the short to ground on the circuit.
        - If infinite resistance
    3. Test for less than 2 ohms in the control circuit end to end.
        - If 2 ohms or greater, repair the open/high resistance in the circuit.
        - If less than 2 ohms
    4. Ignition ON.
    5. Test for less than 1 V between the control circuit and ground.
        - If 1 V or greater, repair the short to voltage on the circuit.
        - If less than 1 V, replace the K20 Engine Control Module.
    - **If greater than 1.5 Hz**
5. Replace the K35 Ignition Coil Module.

Repair Instructions

Perform the **Diagnostic Repair Verification** after completing the repair.

- **Ignition Coil Replacement**
- **Control Module References** for engine control module replacement, programming, and setup

DTC P0411

Diagnostic Instructions

- Perform the **Diagnostic System Check - Vehicle** prior to using this diagnostic procedure.
- Review **Strategy Based Diagnosis** for an overview of the diagnostic approach.
- **Diagnostic Procedure Instructions** provide an overview of each diagnostic category

DTC Descriptor

DTC P0411

Secondary Air Injection System Incorrect Air Flow Detected

Circuit/System Description

The secondary air injection system aids in the reduction of hydrocarbon emissions during a cold start. The electric air pump forces fresh air into the exhaust stream in order to accelerate the catalyst operation. A pressure sensor in the shutoff/check valve is used to monitor the air flow from the secondary air injection pump. The engine control module (ECM) supplies voltage to the 5-volt reference circuit and supplies a ground to the low reference circuit. The sensor provides a signal voltage to the ECM relative to the pressure changes within the secondary air injection system.

Ignition voltage is supplied to the secondary air injection pump and air injection shutoff/check valve relays. The ECM controls the relays by grounding the control circuits, which activates the relays. When the relay contacts close, voltage is supplied to the pump and the valve, which turns the pump on and opens the valve.

The diagnostic uses 3 phases to test the secondary air injection system:

- DTCs P0411 and P2430 run during Phase 1
- DTCs P2430 and P2440 run during Phase 2
- DTC P2444 runs during Phase 3

During phase 1, the secondary air injection pump and the secondary air injection shutoff and check valve are activated. Normal secondary air function occurs. Expected system pressure is 5-13 kPa (0.7-1.9 psi) above BARO.

During phase 2, only the secondary air injection pump is activated. The shutoff and check valve is closed. Pressure sensor performance and shutoff and check valve deactivation are tested. Expected system pressure is 14-25 kPa (2.0-3.6 psi) above BARO.

During phase 3, neither the secondary air injection pump nor the secondary air injection shutoff and check valve are activated. Secondary air injection pump deactivation is tested. Expected system pressure equals BARO.

Conditions for Running the DTC

- DTC P0101, P0102, P0103, P0111, P0112, P0113, P0114, P0116, P0117, P0118, P0128, P0201, P0202, P0203, P0204, P0261, P0262, P0264, P0265, P0267, P0268, P0270, P0271, P0300, P0301, P0302, P0303, P0304, P0351, P0352, P0353, P0354, P0412, P0418, P0420, P124A, P124B, P2147, P2148, P2150, P2151, P2153, P2154, P2156, P2157, P2227, P2228, P2229, P2230, P2430, P2431, P2432, or P2433 is not set.
- Greater than 60 min has elapsed since the last cold start.
- The ignition voltage is between 10-32 V.
- The engine speed is less than 5, 000 RPM.
- The intake air temperature (IAT) is greater than -10°C (14°F).
- The engine coolant temperature (ECT) is between -10 and +80°C (12.2-176°F).
- The barometric pressure (BARO) is greater than 60 kPa (8.7 psi).
- The manifold absolute pressure (MAP) sensor is greater than 20 kPa (2.9 psi).
- The mass air flow (MAF) is less than 50 g/s.

- The secondary air injection pump is commanded ON.
- DTC P0411 runs once per ignition cycle when the above conditions are met for greater than 7 s.

Conditions for Setting the DTC

- The actual system pressure at the shutoff/check valve is at least 4.5 kPa (0.7 psi) greater or 7.5 kPa (1.1 psi) less than the predicted system pressure for greater than 7 s.

  OR

- The difference between the predicted magnitude of pressure pulsations and the actual magnitude of pressure pulsations, at the shutoff/check valve over a specific length of time, exceeds a calibrated threshold.

Action Taken When the DTC Sets

DTC P0411 is a Type B DTC.

Conditions for Clearing the MIL/DTC

DTC P0411 is a Type B DTC.

Diagnostic Aids

Ice buildup due to condensation/water in the air passages or pump may cause this DTC to set.

Reference Information

Schematic Reference

Engine Controls Schematics

Connector End View Reference

COMPONENT CONNECTOR END VIEWS - INDEX

Description and Operation

Secondary Air Injection System Description

Electrical Information Reference

- **Circuit Testing**
- **Connector Repairs**
- **Testing for Intermittent Conditions and Poor Connections**
- **Wiring Repairs**

DTC Type Reference

Powertrain Diagnostic Trouble Code (DTC) Type Definitions

Scan Tool Reference

Control Module References for scan tool information

Special Tools

EL 36169-HD Fused Jumper

For equivalent regional tools, refer to **Special Tools** .

Circuit/System Verification

NOTE: Verify the battery is fully charged before proceeding with this diagnostic procedure. The secondary air injection pump output will vary with system voltage.

1. Ignition ON
2. Verify that DTC P0412, P0418, P2430, P2431, P2432, P2433, P2440, or P2444 is not set.
   - **If any of the DTCs are set**

     Refer to **Diagnostic Trouble Code (DTC) List - Vehicle** .

   - **If none of the DTCs are set.**
3. Verify the scan tool BARO pressure parameter is within the range specified in the **Altitude Versus Barometric Pressure** table.
   - **If not within the specified range**

     Refer to **DTC P2227-P2230** .

   - **If within the specified range**
4. Verify the scan tool Secondary Air Injection Pressure Sensor and the BARO pressure parameters are within 3 kPa (0.4 psi).
   - **If not within the specified range**

     Replace the Q29 Secondary Air Injection Solenoid Valve

   - **If within the specified range**

NOTE: Engine coolant temperature must be greater than 5°C (41°F) to enable scan tool device control. It may be necessary to use one of the methods listed below to verify valve operation:

- **Use a stethoscope to listen for valve operation.**
- **Disconnect the secondary air injection pipe from the secondary air injection solenoid valve and visually inspect the valve inlet port for valve stem movement.**
- **Disconnect the Q29 Secondary Air Injection Solenoid Valve and verify airflow through the valve when commanding the Secondary Air Injection System Active with a scan tool.**

5. Verify the Q29 Secondary Air Injection Solenoid Valve opens and closes when commanding the Secondary Air Injection Solenoid Valve Open and Closed with a scan tool.
   - **If the valve does not open and close**

     Refer to Circuit/System Testing below-Secondary Air Injection Shutoff and Check Valve Malfunction

   - **If the valve opens and closes**

NOTE: To prevent the secondary air injection pump from overheating, do not operate the pump consecutively for greater than 2 minutes. The pump is provided with a thermal protector that will automatically reset when allowed to cool.

6. Verify the G21 Secondary Air Injection Pump turns ON and OFF when commanding the Secondary Air Injection Pump Relay between ON and OFF with a scan tool.
   - **If the pump does not turn ON and OFF**

     Refer to Circuit/System Testing below-Secondary Air Injection Pump Malfunction

   - **If the pump turns ON and OFF**
7. Engine running
8. Verify the scan tool Secondary Air Injection Pressure Sensor parameter increases between 14-25 kPa (2.0-3.6 psi) when the Secondary Air Injection Pump Relay is commanded ON with a scan tool.
   - **If not within the specified range**

     Refer to Circuit/System Testing below -Secondary Air Injection System Pressure Not In Range.

   - **If within the specified range**
9. Verify the scan tool Secondary Air Injection Pressure Sensor parameter increases between 5-13 kPa (0.7-1.9 psi) when the Secondary Air Injection System is commanded ON with a scan tool.
   - **If not within the specified range**

     Refer to Circuit/System Testing below -Secondary Air Injection System Pressure Not In Range.

   - **If within the specified range**

10. Operate the vehicle within the Conditions for Running the DTC. You may also operate the vehicle within the conditions that you observed from the Freeze Frame/Failure Records data.
11. Verify the DTC does not set.
    - **If the DTC sets**

      Refer to Circuit/System Testing below

    - **If the DTC does not set**
12. All OK

Circuit/System Testing

Secondary Air Injection Shutoff and Check Valve Malfunction

1. Ignition OFF, disconnect the KR26 Secondary Air Injection Solenoid Valve Relay. Ignition ON.
2. Verify a test lamp illuminates between the B+ circuit terminal 30 and ground.
    - **If the test lamp does not illuminate and the circuit fuse is good**
    1. Test for less than 2 ohms in the B+ circuit end to end.
        - If 2 ohms or greater, repair the open/high resistance in the circuit.
        - If less than 2 ohms, verify the fuse is not open and there is voltage at the fuse.
    - **If the test lamp does not illuminate and the circuit fuse is open**
    1. Ignition OFF
    2. Test for infinite resistance between the B+ circuit and ground.
        - If less than infinite resistance, repair the short to ground on the circuit.
        - If infinite resistance
    3. Disconnect the harness connector at the Q29 Secondary Air Injection Solenoid Valve.
    4. Test for infinite resistance between the control circuit terminal 5 and ground.
        - If less than infinite resistance, repair the short to ground on the circuit.
        - If infinite resistance
    5. Test or replace the Q29 Secondary Air Injection Solenoid Valve.
    - **If the test lamp illuminates**
3. Disconnect the harness connector at the Q29 Secondary Air Injection Solenoid Valve.
4. Ignition OFF and all vehicle systems OFF, it may take up to 2 minutes for all vehicle systems to power down. Test for less than 10 ohms between the Q29 Secondary Air Injection Solenoid Valve ground circuit terminal 4 and ground.
    - **If 10 ohms or greater**
    1. Ignition OFF.
    2. Test for less than 2 ohms in the ground circuit end to end.
        - If 2 ohms or greater, repair the open/high resistance in the circuit.
        - If less than 2 ohms, repair the open/high resistance in the ground connection.

- **If less than 10 ohms**

5. Connect the harness connector at the Q29 Secondary Air Injection Solenoid Valve.
6. Connect a 10 A fused jumper wire between the B+ circuit terminal 30 and the control circuit terminal 87.
7. Verify the Q29 Secondary Air Injection Solenoid Valve is activated.
   - **If the valve does not activate**
   1. Ignition OFF, disconnect the harness connector at the Q29 Secondary Air Injection Solenoid Valve.
   2. Test for less than 2 ohms in the control circuit end to end.
      - If 2 ohms or greater, repair the open/high resistance in the circuit.
      - If less than 2 ohms, test or replace the Q29 Secondary Air Injection Solenoid Valve.
   - **If the valve activates**
8. Test or replace the KR26 Secondary Air Injection Solenoid Valve Relay.

Secondary Air Injection Pump Malfunction

1. Ignition OFF, disconnect the KR25 Secondary Air Injection Pump Relay.
2. Verify a test lamp illuminates between the B+ circuit terminal 30 and ground.
   - **If the test lamp does not illuminate and the circuit fuse is good**
   1. Ignition OFF
   2. Test for less than 2 ohms in the B+ circuit end to end.
      - If 2 ohms or greater, repair the open/high resistance in the circuit.
      - If less than 2 ohms, verify the fuse is not open and there is voltage at the fuse.
   - **If the test lamp does not illuminate and the circuit fuse is open**
   1. Ignition OFF
   2. Test for infinite resistance between the B+ circuit and ground.
      - If less than infinite resistance, repair the short to ground on the circuit.
      - If infinite resistance
   3. Disconnect the harness connector at the G21 Secondary Air Injection Pump.
   4. Test for infinite resistance between the control circuit terminal A and ground.
      - If less than infinite resistance, repair the short to ground on the circuit.
      - If infinite resistance
   5. Test or replace the G21 Secondary Air Injection Pump.
   - **If the test lamp illuminates**
3. Disconnect the harness connector at the G21 Secondary Air Injection Pump.
4. Ignition OFF and all vehicle systems OFF, it may take up to 2 minutes for all vehicle systems to power down. Test for less than 10 ohms between the G21 Secondary Air Injection Pump ground circuit terminal B and ground.
   - **If 10 ohms or greater**
   1. Ignition OFF.
   2. Test for less than 2 ohms in the ground circuit end to end.

- If 2 ohms or greater, repair the open/high resistance in the circuit.
- If less than 2 ohms, repair the open/high resistance in the ground connection.

- **If less than 10 ohms**

5. Connect the harness connector at the G21 Secondary Air Injection Pump.
6. Connect a 40 A **EL 36169-HD** between the B+ circuit terminal 30 and the control circuit terminal 87.

NOTE: To prevent the secondary air injection pump from overheating, do not operate the pump consecutively for greater than 2 minutes. The pump is provided with a thermal protector that will automatically reset when allowed to cool.

7. Verify the G21 Secondary Air Injection Pump is activated.
   - **If the pump does not activate**
   1. Ignition OFF, disconnect the harness connector at the G21 Secondary Air Injection Pump.
   2. Test for less than 2 ohms in the control circuit end to end.
      - If 2 ohms or greater, repair the open/high resistance in the circuit.
      - If less than 2 ohms,
   3. Test or replace the G21 Secondary Air Injection Pump.
   - **If the pump activates**
8. Test or replace the KR25 Secondary Air Injection Pump Relay.

Secondary Air Injection System Pressure Not In Range

1. Verify the following conditions do not exist with the secondary air injection shutoff and check valve:
   - Hoses/pipes restricted or blocked
   - Hoses/pipes leaking or disconnected
   - Damaged secondary air injection shutoff and check valve
   - Restricted or blocked cylinder head secondary air injection inlet ports and passages
   - **If a condition is located**

     Repair or replace the affected component as necessary.

   - **If all components test normal**
2. Disconnect the secondary air injection hoses/pipe from the Q29 Secondary Air Injection Solenoid Valve.
3. Ignition ON, command the Secondary Air Injection Pump Relay ON with a scan tool.
4. Verify airflow to the Q29 Secondary Air Injection Solenoid Valve.
   - **If no airflow**

     Replace the G21 Secondary Air Injection Pump.

   - **If airflow**

5. Disconnect the appropriate Q29 Secondary Air Injection Solenoid Valve from the engine.
6. Connect the harness connector at the Q29 Secondary Air Injection Solenoid Valve.
7. Connect the secondary air injection pipe between the Q29 Secondary Air Injection Solenoid Valve and the G21 Secondary Air Injection Pump.
8. Ignition ON, command the Secondary Air Injection System Active with a scan tool. Verify there is airflow through the valve.
    - **If no airflow**

      Replace the Q29 Secondary Air Injection Solenoid Valve

    - **If airflow**
9. Replace the G21 Secondary Air Injection Pump.

Component Testing

Relay Test

1. Ignition OFF, disconnect the appropriate relay.
2. Test for 70-110 ohms between terminals 85-86.
    - **If less than 70 ohms or greater than 110 ohms**

      Replace the relay.

    - **If between 70-110 ohms**
3. Test for infinite resistance between the terminals listed below:
    - 30 and 86
    - 30 and 87
    - 30 and 85
    - 85 and 87
    - **If less than infinite resistance**

      Replace the relay.

    - **If infinite resistance**
4. Install a 15 A fused jumper wire between relay terminal 85 and 12 V. Install a jumper wire between relay terminal 86 and ground.
5. Test for less than 2 ohms between terminals 30 and 87.
    - **If 2 ohms or greater**

      Replace the relay.

    - **If less than 2 ohms**
6. All OK.

Repair Instructions

Perform the **Diagnostic Repair Verification** after completing the repair.

- **Relay Replacement (Within an Electrical Center)** , **Relay Replacement (Attached to Wire Harness)**
- **Secondary Air Injection Pump Replacement**
- **Secondary Air Injection Check Valve Replacement** for secondary air injection solenoid valve replacement
- **Secondary Air Injection Pump Pipe Replacement**

DTC P0412 OR P0418

Diagnostic Instructions

- Perform the **Diagnostic System Check - Vehicle** prior to using this diagnostic procedure.
- Review **Strategy Based Diagnosis** for an overview of the diagnostic approach.
- **Diagnostic Procedure Instructions** provide an overview of each diagnostic category

DTC Descriptor

DTC P0412

Secondary Air Injection Valve Control Circuit

DTC P0418

Secondary Air Injection Pump Control Circuit

Diagnostic Fault Information

Circuit	Short to Ground	Open/High Resistance	Short to Voltage	Signal Performance
Secondary Air Injection Pump Relay Coil Voltage Supply	-	P0418	P0690	-
Secondary Air Injection Pump Relay Coil Control	P0418	P0418	P0690, P2413	-
Solenoid Relay Coil Voltage Supply	P0412	P0412	P0690	-
Solenoid Relay Coil Control	P0412	P0412	P0412, P0690	-

Circuit/System Description

The secondary air injection system aids in the reduction of hydrocarbon emissions during a cold start. The electric air pump forces fresh air into the exhaust stream in order to accelerate the catalyst operation. Ignition

voltage is supplied directly to the secondary air injection pump relay and secondary air solenoid valve relay. The engine control module (ECM) controls the relays by grounding the control circuit with a solid state device called a driver. The ECM monitors the control circuits for open, short to ground, or short to voltage conditions.

Conditions for Running the DTC

- The ignition voltage is between 10-32 V.
- The DTCs run continuously once the above conditions are met.

Conditions for Setting the DTC

DTC P0412 or P0418

The ECM detects that the commanded state of the driver and the actual state of the control circuit do not match for greater than 5 s.

Action Taken When the DTC Sets

DTC P0412 and P0418 are Type B DTCs.

Conditions for Clearing the DTC

DTC P0412 and P0418 are Type B DTCs.

Diagnostic Aids

If the condition is intermittent, move the related harnesses and connectors, with the engine operating, while monitoring the scan tool Secondary Air Injection Solenoid Valve Control Circuit and Secondary Air Injection Pump Relay Control Circuit status parameters. The circuit status parameter changes from OK or Not Run to Malfunction if there is a condition with the circuit or a connection.

Reference Information

Schematic Reference

Engine Controls Schematics

Connector End View Reference

COMPONENT CONNECTOR END VIEWS - INDEX

Description and Operation

Secondary Air Injection System Description

Electrical Information Reference

- **Circuit Testing**

- **Connector Repairs**
- **Testing for Intermittent Conditions and Poor Connections**
- **Wiring Repairs**

DTC Type Reference

Powertrain Diagnostic Trouble Code (DTC) Type Definitions

Scan Tool Reference

Control Module References for scan tool information

Circuit/System Verification

P0412

1. Ignition ON
2. Verify a click is heard or felt from the KR25 Secondary Air Injection Pump Relay and the KR26 Secondary Air Injection Solenoid Valve Relay when commanding the Secondary Air Injection System between Inactive and Active with a scan tool.
    - **If a click is not heard or felt at one or more of the relays**

      Refer to Circuit/System Testing below

    - **If a click is heard or felt at each of the relays**
3. Verify the circuit status parameters listed below do not display Malfunction when commanding the Secondary Air Injection System between Inactive and Active with a scan tool:
    - Secondary Air Injection Pump Relay Control Circuit Low Voltage Test Status
    - Secondary Air Injection Pump Relay Control Circuit Open Test Status
    - Secondary Air Injection Pump Relay Control Circuit High Voltage Test Status
    - Secondary Air Injection Solenoid Valve Control Circuit Low Voltage Test Status
    - Secondary Air Injection Solenoid Valve Control Circuit Open Test Status
    - Secondary Air Injection Solenoid Valve Control Circuit High Voltage Test Status
    - **If Malfunction is displayed**

      Refer to Circuit/System Testing below

    - **If Malfunction is not displayed**
4. Operate the vehicle within the Conditions for Running the DTC to verify the DTC does not reset. You may also operate the vehicle within the conditions that you observed from the Freeze Frame/Failure Records data.
5. Verify a DTC does not set.
    - **If a DTC sets**

Refer to Circuit/System Testing below

- **If a DTC does not set**

6. All OK

Circuit/System Testing

P0412

1. Ignition OFF, disconnect the KR26 Secondary Air Injection Solenoid Valve Relay. Ignition ON.
2. Verify a test lamp illuminates between the relay coil ignition circuit terminal 85 and ground.
   - **If the test lamp does not illuminate and the circuit fuse is good**
   1. Ignition OFF.
   2. Test for less than 2 ohms in the ignition circuit end to end.
      - If 2 ohms or greater, repair the open/high resistance in the circuit.
      - If less than 2 ohms, verify the fuse is not open and there is voltage at the fuse.
   - **If the test lamp does not illuminate and the circuit fuse is open**
   1. Ignition OFF.
   2. Test for infinite resistance between the ignition circuit and ground.
      - If less than infinite resistance, repair the short to ground on the circuit.
      - If infinite resistance, test or replace the KR26 Secondary Air Injection Solenoid Valve Relay
      - **If the test lamp illuminates**
3. Connect a DMM, set on the diode setting, between the control circuit terminal 86 and ground.
4. Verify the DMM reading is greater than 2.5 V or displays O.L. when commanding the Secondary Air Injection Solenoid Valve Closed with a scan tool.
   - **If 2.5 V or less**
   1. Ignition OFF, disconnect the harness connector at the K20 Engine Control Module
   2. Test for less than 1 V between the control circuit and ground.
      - If 1 V or greater, repair the short to voltage on the circuit.
      - If less than 1 V
   3. Ignition OFF.
   4. Test for infinite resistance between the control circuit and ground.
      - If less than infinite resistance, repair the short to ground on the circuit.
      - If infinite resistance, test or replace the K20 Engine Control Module
   - **If greater than 2.5 V or displays O.L.**
5. Verify the DMM reading is less than 1 V when commanding the Secondary Air Injection Solenoid Valve Open with a scan tool.
   - **If 1 V or greater**
   1. Ignition OFF, disconnect the harness connector at the K20 Engine Control Module.
   2. Test for less than 2 ohms in the control circuit end to end.

- If 2 ohms or greater, repair the open/high resistance in the circuit.
- If less than 2 ohms, replace the K20 Engine Control Module.
- **If less than 1 V**

6. Test or replace the KR26 Secondary Air Injection Solenoid Valve Relay.

P0418

1. Ignition OFF, disconnect the KR25 Secondary Air Injection Pump Relay. Ignition ON.
2. Verify a test lamp illuminates between the relay coil ignition circuit terminal 85 and ground.
   - **If the test lamp does not illuminate**
   1. Ignition OFF.
   2. Test for less than 2 ohms in the ignition circuit end to end.
      - If 2 ohms or greater, repair the open/high resistance in the circuit.
      - **If the test lamp illuminates**
3. Connect a DMM, set on the diode setting, between the control circuit terminal 86 and ground.
4. Verify the DMM reading is greater than 2.5 V or displays O.L. when commanding the Secondary Air Injection Pump Relay OFF with a scan tool.
   - **If 2.5 V or less**
   1. Ignition OFF, disconnect the harness connector at the K20 Engine Control Module
   2. Test for less than 1 V between the control circuit and ground.
      - If 1 V or greater, repair the short to voltage on the circuit.
      - If less than 1 V
   3. Ignition OFF.
   4. Test for infinite resistance between the control circuit and ground.
      - If less than infinite resistance, repair the short to ground on the circuit.
      - If infinite resistance, test or replace the K20 Engine Control Module
   - **If greater than 2.5 V or displays O.L.**
5. Verify the DMM reading is less than 1 V when commanding the Secondary Air Injection Pump Relay ON with a scan tool.
   - **If 1 V or greater**
   1. Ignition OFF, disconnect the harness connector at the K20 Engine Control Module.
   2. Test for less than 2 ohms in the control circuit end to end.
      - If 2 ohms or greater, repair the open/high resistance in the circuit.
      - If less than 2 ohms, replace the K20 Engine Control Module.
      - **If less than 1 V**
6. Test or replace the KR25 Secondary Air Injection Pump Relay.

Component Testing

Relay Test

1. Ignition OFF, disconnect the appropriate relay.
2. Test for 70-110 ohms between terminals 85-86.
   - **If less than 70 ohms or greater than 110 ohms**

     Replace the relay.

   - **If between 70-110 ohms**
3. Test for infinite resistance between the terminals listed below:
   - 30 and 86
   - 30 and 87
   - 30 and 85
   - 85 and 87
   - **If less than infinite resistance**

     Replace the relay.

   - **If infinite resistance**
4. Install a 15 A fused jumper wire between relay terminal 85 and 12 V. Install a jumper wire between relay terminal 86 and ground.
5. Test for less than 2 ohms between terminals 30 and 87.
   - **If 2 ohms or greater**

     Replace the relay.

   - **If less than 2 ohms**
6. All OK.

Repair Instructions

Perform the **Diagnostic Repair Verification** after completing the repair.

- **Relay Replacement (Within an Electrical Center)** , **Relay Replacement (Attached to Wire Harness)**
- **Control Module References** for Engine Control Module replacement, programming, and setup

DTC P0420

Diagnostic Instructions

- Perform the **Diagnostic System Check - Vehicle** prior to using this diagnostic procedure.
- Review **Strategy Based Diagnosis** for an overview of the diagnostic approach.
- **Diagnostic Procedure Instructions** provides an overview of each diagnostic category.

DTC Descriptor

DTC P0420

Catalyst System Low Efficiency

Circuit/System Description

A 3-way catalytic converter controls emissions of hydrocarbons, Carbon Monoxide (CO) and Nitrogen Oxide (NOx). The catalyst within the converter promotes a chemical reaction, which oxidizes the hydrocarbons and the CO that are present in the exhaust gas. This process converts the hydrocarbons and the CO into water vapor and Carbon Dioxide (CO2), and reduces the NOx, converting the NOx into nitrogen. The catalytic converter also stores oxygen. The ECM monitors this process by using a heated oxygen sensor (HO2S) that is in the exhaust stream after the 3-way catalytic converter. The HO2S 2 produces an output signal that the ECM uses to calculate the oxygen storage capacity of the catalyst. This indicates the ability of the catalyst to convert the exhaust emissions efficiently. The ECM monitors the efficiency of the catalyst by allowing the catalyst to heat, then wait for a stabilization period while the engine is idling. The ECM then adds and removes fuel while monitoring the HO2S 2. When the catalyst is functioning properly, the HO2S 2 response to the extra fuel is slow compared to the response of the HO2S 1, which is located before the 3-way catalytic converter. When the HO2S 2 response is near that of the HO2S 1, the oxygen storage capability and efficiency of the catalyst may be degraded below an acceptable threshold.

Conditions for Running the DTC

- DTC P0016, P0017, P0030, P0036, P0053, P0054, P0068, P0101, P0102, P0103, P0106, P0107, P0108, P0111, P0112, P0113, P0114, P0116, P0117, P0118, P0119, P0121, P0122, P0123, P0128, P0131, P0132, P0133, P0134, P0135, P0137, P0138, P013A, P013B, P013E, P013F, P0140, P0141, P015A, P015B, P0171, P0172, P0222, P0223, P0300, P0301, P0302, P0303, P0304, P0335, P0336, P0340, P0341, P0365, P0366, P0443, P0506, P0507, P0606, P0697, P06A3, P16F3, P2101, P2122, P2123, P2127, P2128, P2135, P2138, P2270 or P2271 is not set.
- Before the ECM performs the idle test, the vehicle must be driven under the conditions listed below:
  - The engine speed is greater than 1, 100 RPM.
  - The engine run time is greater than a calibrated value
  - Both conditions exist for at least 5 s
- The vehicle speed is less than 2 km/h (1.24 mph).
- Divers foot is off accelerator pedal
- The throttle is in the rest position.
- The run/crank voltage is greater than 11 V.
- The intake air temperature (IAT) is between -20 to +250°C (-4 to +482°F).
- The engine coolant temperature (ECT) is between 40-140°C (104-284°F).
- The engine has been idling less than 50 s.
- The short term fuel trim is between 0.8-1.3 %.
- The barometric pressure (BARO) is greater than 70 kPa.
- The intake mass air flow (MAF) is between 1.5-7.0 g/s.
- The engine is operating in closed loop.
- The calculated catalyst temperature is between 550-950°C (1, 022-1, 742°F).

- The Evaporative Emission (EVAP), Fueltrim, Post O2, or other intrusive tests are not active
- The transmission is not in P/N (automatic transmission only).
- This diagnostic attempts one test during each valid idle period once the above conditions have been met. This diagnostic attempts up to 8 tests during each drive cycle.

Conditions for Setting the DTC

The ECM determines that the efficiency of the catalyst has degraded below a calibrated threshold.

Action Taken When the DTC Sets

DTC P0420 is a Type A DTC.

Conditions for Clearing the DTC

DTC P0420 is a Type A DTC.

Diagnostic Aids

Inspect for the conditions listed below, which may cause a catalytic converter to degrade:

- An engine misfire
- High engine oil or high coolant consumption
- Retarded spark timing
- A weak or poor spark
- A lean fuel mixture
- A rich fuel mixture
- A damaged oxygen sensor or wiring harness

Reference Information

Electrical Information Reference

- **Circuit Testing**
- **Connector Repairs**
- **Testing for Intermittent Conditions and Poor Connections**
- **Wiring Repairs**

DTC Type Reference

Powertrain Diagnostic Trouble Code (DTC) Type Definitions

Scan Tool Reference

Control Module References for scan tool information

Circuit/System Verification

1. Ignition ON.
2. Verify there are no other DTCs set.
   - **If a DTC is set**

     Refer to **Diagnostic Trouble Code (DTC) List - Vehicle** .

   - **If a DTC is not set**
3. Operate the vehicle within the Conditions for Running the DTC.
4. Verify the scan tool Catalyst Monitor Not At Idle Test Conditions Met parameter changes to Yes.
   - **If Yes is not displayed**

     Refer to step 3.

   - **If Yes is displayed**
5. When the conditions are safe, stop and idle the vehicle in gear (If equipped with automatic transmission) or neutral (If equipped with manual transmission).
6. Verify the Catalyst Monitor Test Result parameter displays Pass when performing the steps listed below:
   1. Apply the service brake.
   2. Monitor the scan tool Catalyst Monitor Test State parameter. When the parameter indicates Active, the Catalyst Monitor Test is running.

      NOTE: When the test has completed, the Catalyst Monitor Test Counter parameter will increment by one and the Catalyst Monitor Test Result parameter will indicate Passed, Failed or No Result.

   3. Continue to monitor the parameter. When the parameter indicates Inactive, the Catalyst Monitor Test has completed.
      - **If the Catalyst Monitor Test Result parameter indicates No Result**

        Repeat steps 3-6 until the Test Result parameter indicates Passed or Failed

      - **If the Catalyst Monitor Test Result parameter indicates Failed**

        Refer to Circuit /System Testing below

      - **If the Catalyst Monitor Test Result parameter indicates Pass**
7. All OK.

Circuit/System Testing

1. Verify the conditions listed below do not exist with the catalytic converter(s):
   - Dents

- Severe discoloration caused by excessive temperatures
- Road damage
- Internal rattles caused by damaged catalyst substrate
- Restrictions
  - **If a condition is found**

    Replace the catalytic converter(s).

  - **If no condition is found**

2. Verify the conditions listed below do not exist with the exhaust system:
   - Leaks
   - Physical damage
   - Loose or missing hardware
     - **If a condition is found**

       Repair or replace the component as necessary.

     - **If no condition is found**
3. Verify the conditions listed below do not exist with the B52B heated oxygen sensor 2:
   - Incorrect torque
   - Damage
   - **If a condition is found**

     Replace the B52B heated oxygen sensor 2 or repair the condition as necessary.

   - **If no condition is found**
4. Test or replace the catalytic converter and the exhaust front pipe.

Repair Instructions

NOTE: A new converter with less than 160 km (100 mi) on it may set DTC P0420 due to outgassing of the internal matting. Operating the vehicle at highway speeds for approximately 1 h may correct the condition.

- **Catalytic Converter Replacement (1.4L LUV)** , **Catalytic Converter Replacement (1.8L LUW and LWE)**
- **Exhaust Front Pipe Replacement**
- **Heated Oxygen Sensor Replacement - Sensor 2**

Repair Verification

1. Install any components that have been removed or replaced during diagnosis.

2. Perform any adjustments, programming or setup procedures that are required when a component is removed or replaced.
3. Clear the DTCs with a scan tool.
4. Turn OFF the ignition for 60 s
5. Operate the vehicle within the Conditions for Running the DTC.
6. Verify the scan tool Catalyst Monitor Not At Idle Test Conditions Met parameter changes to Yes.
   - **If Yes is not displayed**

     Refer to step 5.

   - **If Yes is displayed**
7. When the conditions are safe, stop and idle the vehicle in gear (If equipped with automatic transmission) or neutral (If equipped with manual transmission).
8. Verify the Catalyst Monitor Test Result parameter displays Pass when performing the steps listed below:
   1. Apply the service brake.
   2. Monitor the scan tool Catalyst Monitor Test State parameter. When the parameter indicates Active, the Catalyst Monitor Test is running.

      NOTE: When the test has completed, the Catalyst Monitor Test Counter parameter will increment by one and the Catalyst Monitor Test Result parameter will indicate Passed, Failed or No Result.

   3. Continue to monitor the parameter. When the parameter indicates Inactive, the Catalyst Monitor Test has completed.
      - **If the Catalyst Monitor Test Result parameter indicates No Result**

        Repeat steps 5-8 until the Test Result parameter indicates Passed or Failed

      - **If the Catalyst Monitor Test Result parameter indicates Failed**

        Refer to Circuit /System Testing below

      - **If the Catalyst Monitor Test Result parameter indicates Pass**
9. All OK.

DTC P0442

Diagnostic Instructions

- Perform the **Diagnostic System Check - Vehicle** prior to using this diagnostic procedure.
- Review **Strategy Based Diagnosis** for an overview of the diagnostic approach.
- **Diagnostic Procedure Instructions** provides an overview of each diagnostic category.

DTC Descriptor

DTC P0442

Evaporative Emission (EVAP) System Small Leak Detected

Circuit/System Description

The engine off natural vacuum (EONV) test is the small leak detection diagnostic for the evaporative emission (EVAP) system. This diagnostic tests the EVAP system for a small leak when the key is turned OFF and the correct conditions are met. Heat from the exhaust system is transferred into the fuel tank while the vehicle is operating. When the vehicle is turned OFF and the EVAP system is sealed a change in the fuel tank vapor temperature occurs which results in a corresponding pressure change in the fuel tank vapor space. This change is monitored by the ECM using the fuel tank pressure (FTP) sensor input. With a leak in the system, the amount of pressure change will be less than that of a sealed system.

Conditions for Running the DTC

- DTCs P010C, P010D, P0101, P0102, P0103, P0106, P0107, P0108, P0111, P0112, P0113, P0114, P0116, P0117, P0118, P0125, P0128, P0443, P0446, P0449, P0452, P0453, P0455, P0496, P0461, P0462, P0463, P0464, P0496, P0502, P0503, P0722, P0723, P2227, P2228, P2229, P2230, P2610. are not set.
- The barometric pressure (BARO) is greater than 70 kPa.
- The engine coolant sensor (ECT) is greater than 63°C (145°F)
- No fuel filling during the EONV test period.
- The fuel level is between 10-90%.
- The start-up engine coolant temperature (ECT) and the start-up intake air temperature (IAT) are within 8° C (46°F).
- The engine run time before shut-off was greater than 10 min.
- The drive distance before engine shut-off was more than 5 km (3 mi).
- The ambient air temperature at the end of the drive cycle is between 0-34°C (32-93°F).
- DTC P0442 runs once per drive cycle during the hot soak period after the ignition is turned OFF and may require up to 40 min to complete. The controller will not make more than 2 test attempts per day. The time since the last completed EONV test must be at least 17 h if passed or 10 h if failed.

Conditions for Setting the DTC

- The ECM detects a leak in the EVAP system that is greater than a calibrated amount.
- The ECM must complete several EONV tests before the diagnostic can turn the MIL on or off.

Action Taken When the DTC Sets

DTC P0442 is a Type A DTC.

Conditions for Clearing the DTC

DTC P0442 is a Type A DTC.

Diagnostic Aids

- The EVAP system can be filled with smoke more quickly and completely by opening the system opposite the end where the smoke is injected. When injecting smoke at the service port tool temporarily leave the EVAP vent solenoid valve open until smoke is observed then close the system and continue testing.
- To help locate intermittent leaks using the **GE 41413-A** , move all EVAP components while observing smoke with the **GE 41413-SPT** .
- Individual components can be isolated and tested using adapters in the **GE 41413-300** .
- When servicing the EVAP system, test pressure must not exceed 13 in H20 (0.5 PSI) as pressure in excess of this could cause system components to perform inaccurately.
- A condition may exist where a leak in the EVAP system only exists under a vacuum condition. This type of leak may be detected by using the scan tool Purge/Seal function to create a vacuum in the EVAP system and then observe the FTP parameter for vacuum decay.

Reference Information

Schematic Reference

Engine Controls Schematics

Connector End View Reference

COMPONENT CONNECTOR END VIEWS - INDEX

Description and Operation

Evaporative Emission Control System Description

Electrical Information Reference

- **Circuit Testing**
- **Connector Repairs**
- **Testing for Intermittent Conditions and Poor Connections**
- **Wiring Repairs**

DTC Type Reference

Powertrain Diagnostic Trouble Code (DTC) Type Definitions

Scan Tool Reference

Control Module References for scan tool information

Special Tools

- **CH 48096** EVAP Service Port Access Tool
- **GE 41413-A** Evaporative Emissions System Tester (EEST)

- **GE 41413-300** EVAP Cap and Plug Kit
- **GE 41413-SPT** High Intensity White Light

For equivalent regional tools, refer to **Special Tools** .

Circuit/System Testing

NOTE:

- **Refer to the GE 41413-A operation manual for detailed instructions in Evaporative Emission Control System Diagnosis**
- **Larger volume fuel tanks and/or those with lower fuel levels may require several minutes for the floating indicator to stabilize or produce smoke from a leak.**
- **Ensure that the underbody temperature of the vehicle and the tester are similar.**

1. Disconnect the purge tube at the quick connector on the EVAP canister side of the Q12 Evaporative Emission Canister Purge Solenoid Valve and install the **CH 48096** .
2. Connect the **GE 41413-A** to the **CH 48096** .
3. Command the EVAP Purge/Seal function to System Seal with a scan tool to seal the EVAP system.
4. Use the flow meter on the **GE 41413-A** , calibrated to 0.51 mm (0.020 in) to determine if there is a leak.
    - **If a leak is detected**
    1. Use the **GE 41413-A** to apply smoke to the EVAP system at the purge tube until the leak is located using the **GE 41413-SPT**
    - **No leak in the EVAP system**
5. All OK.

Repair Instructions

Perform the **Diagnostic Repair Verification** after completing the repair.

DTC P0443

Diagnostic Instructions

- Perform the **Diagnostic System Check - Vehicle** prior to using this diagnostic procedure.
- Review **Strategy Based Diagnosis** for an overview of the diagnostic approach.
- **Diagnostic Procedure Instructions** provides an overview of each diagnostic category.

DTC Descriptor

DTC P0443

Evaporative Emission (EVAP) Purge Solenoid Valve Control Circuit

Diagnostic Fault Information

Circuit	Short to Ground	Open / High Resistance	Short to Voltage
Ignition - Purge Supply	P0031, P0033, P0034, P0037, P0132, P0134, P0135, P0138, P0140, P0245, P0443, P0597, P0507, P0598	P0443	P0690
EVAP Purge Solenoid Valve Control	P0443	P0443	P0443, P0690

Circuit/System Description

An ignition voltage is supplied directly to the evaporative emission (EVAP) purge solenoid valve. The engine control module (ECM) grounds the EVAP purge solenoid valve control circuit through an internal switch called a driver. The ECM monitors the status of the driver. The EVAP purge solenoid valve is pulse width modulated (PWM). A scan tool will display the amount of ON time as a percentage. If the ECM detects an incorrect voltage for the commanded state of the driver this DTC sets.

Conditions for Running the DTC

- The system voltage is greater than 11 V.
- DTC P0443 runs continuously when the above conditions are met.

Conditions for Setting the DTC

The ECM detects that the commanded state of the driver and the actual state of the control circuit do not match for a minimum of 0.25 s.

Action Taken When the DTC Sets

DTC P0443 is a Type B DTC.

Conditions for Clearing the MIL/DTC

DTC P0443 is a Type B DTC.

Reference Information

Schematic Reference

Engine Controls Schematics

Connector End View Reference

COMPONENT CONNECTOR END VIEWS - INDEX

Description and Operation

Evaporative Emission Control System Description

Electrical Information Reference

- **Circuit Testing**
- **Connector Repairs**
- **Testing for Intermittent Conditions and Poor Connections**
- **Wiring Repairs**

DTC Type Reference

Powertrain Diagnostic Trouble Code (DTC) Type Definitions

Scan Tool Reference

Control Module References for scan tool information

Circuit/System Verification

1. Ignition ON.
2. Verify the parameters listed below do not display malfunction when commanding the EVAP purge solenoid valve from 0 to 50 % and back to 0 % with a scan tool.
    - EVAP Purge Solenoid Valve Control Circuit Low Voltage Test Status
    - EVAP Purge Solenoid Valve Control Circuit Open Test Status
    - EVAP Purge Solenoid Valve Control Circuit High Voltage Test Status
    - **If Malfunction is displayed**

      Refer to Circuit/System Testing below

    - **If Malfunction is not display**
3. All OK.

Circuit/System Testing

1. Ignition OFF, disconnect the harness connector at the Q12 Evaporative Emission Purge Solenoid Valve, ignition ON.
2. Verify that a test lamp illuminates between the ignition circuit terminal 2 and ground.
    - **If the test lamp does not illuminate and the circuit fuse is good**
    1. Ignition OFF, remove the test lamp.
    2. Test for less than 2 ohms in the ignition circuit end to end.

- If 2 ohms or greater, repair the open/high resistance in the circuit.
- If less than 2 ohms verify the fuse is not open and there is voltage at the fuse.

- **If the test lamp does not illuminate and the circuit fuse is open**

1. Ignition OFF, remove the test lamp.
2. Test for infinite resistance between the ignition circuit and ground.
   - If less than infinite resistance, repair the short to ground in the circuit.
   - If infinite resistance, test the Q12 Evaporative Emission Purge Solenoid Valve and replace as necessary.

- **If the test lamp illuminates**

3. Verify that a test lamp does not illuminate between the ignition circuit terminal 2 and the control circuit terminal 1.
   - **If the test lamp illuminates**

   1. Ignition OFF, disconnect the harness connector at the K20 Engine Control Module.
   2. Test for infinite resistance between the control circuit and ground.
      - If less than infinite resistance, repair the short to ground on the circuit.
      - If infinite resistance, replace the K20 Engine Control Module.

   - **If the test lamp does not illuminate**

4. Remove the test lamp.
5. Verify the scan tool EVAP Purge Solenoid Valve Control Circuit High Voltage Test Status parameter is OK when commanding the EVAP purge solenoid valve ON with a scan tool.
   - **If the Parameter is not OK**

   1. Ignition OFF, disconnect the harness connector at the K20 Engine Control Module, ignition ON.
   2. Test for less than 1 V between the control circuit and ground.
      - If 1 V or greater, repair the short to voltage on the circuit.
      - If less than 1 V, replace the K20 Engine Control Module.

   - **If the Parameter is OK**

6. Install a 3 A fused jumper wire between the control circuit terminal 1 and the ignition circuit terminal 2.
7. Verify the scan tool EVAP Purge Solenoid Valve Control Circuit High Voltage Test Status parameter is Malfunction when commanding the EVAP Purge Solenoid Valve ON with a scan tool.
   - **If the Parameter is not Malfunction.**

   1. Ignition OFF, disconnect the harness connector at the K20 Engine Control Module.
   2. Test for less than 2 ohms in the control circuit end to end.
      - If 2 ohms or greater, repair the open/high resistance in the circuit.
      - If less than 2 ohms replace the K20 Engine Control Module.

   - **If the parameter is Malfunction**

8. Test or replace the Q12 Evaporative Emission Purge Solenoid Valve.

Component Testing

Static Test

1. Ignition OFF, disconnect the harness connector at the Q12 Evaporative Emission Purge Solenoid Valve.
2. Test for 10.0-30.0 ohms between the control circuit terminal 1 and the ignition circuit terminal 2 of the Q12 Evaporative Emission Purge Solenoid Valve.
    - **If not between 10.0-30.0 ohms**

      Replace the Q12 Evaporative Emission Purge Solenoid Valve

    - **If between 10.0-30.0 ohms**
3. All OK.

Repair Instructions

Perform the **Diagnostic Repair Verification** after completing the repair.

- **Evaporative Emission Canister Purge Solenoid Valve Replacement**
- **Control Module References** for ECM replacement, setup, and programming

2013 ENGINE PERFORMANCE

Engine Controls and Fuel - 1.8L LUW and LWE - Diagnostic Information and Procedures - Cruze

DIAGNOSTIC INFORMATION AND PROCEDURES

DTC P0446

Diagnostic Instructions

- Perform the **Diagnostic System Check - Vehicle** prior to using this diagnostic procedure.
- Review **Strategy Based Diagnosis** for an overview of the diagnostic approach.
- **Diagnostic Procedure Instructions** provides an overview of each diagnostic category.

DTC Descriptor

DTC P0446

Evaporative Emission (EVAP) Vent System Performance

Typical Scan Tool Data

Fuel Tank Pressure Sensor Signal Voltage	Fuel Tank Pressure
1.5 V	Atmospheric Pressure / BARO
Less than 1.5 V	Positive Pressure
More than 1.5 V	Negative Pressure / Vacuum

Circuit/System Description

This DTC tests the evaporative emission (EVAP) system for a restricted or blocked EVAP vent path that would cause excess amounts of vacuum to be developed in the EVAP system. The engine control module (ECM) uses the fuel tank pressure (FTP) sensor to monitor EVAP system vacuum. With the purge valve and vent valve open, if the EVAP system vacuum goes above a calibrated threshold, P0446 will set.

The following table illustrates the relationship between the ON and OFF states, and the OPEN or CLOSED states of the EVAP purge and vent solenoid valves.

ECM Command	EVAP Purge Solenoid Valve	EVAP Vent Solenoid Valve
ON	Open	Closed
OFF	Closed	Open

Conditions for Running the DTC

- DTCs P00C8, P00C9, P010C, P010D, P0068, P16F3, P0102, P0103, P0111, P0112, P0113, P0114, P0116, P0117, P0118, P0122, P0123, P0125, P0128, P160E, P160D, P0191, P0192, P0193, P0222,

P0223, P0443, P0449, P0452, P0453, P0454, P0502, P0503, P0606, P0722, P0723, P1104, P2100, P2101, P2102, P2103, P2135, P2227, P2228, P2229, or P2230 is not set

- The ignition voltage is between 11-32 V.
- The barometric pressure (BARO) is more than 70 kPa.
- The fuel level is between 10-90 %.
- The startup engine coolant temperature (ECT) is less than 35°C (95°F).
- The startup intake air temperature (IAT) is between 4-30°C (39-86°F).
- DTC P0446 runs once per cold start, for up to 17 min, when the above conditions are met.

Conditions for Setting the DTC

NOTE: There are two stages to setting this DTC. Stage one, prep test, then stage two test.

- If fuel tank pressure sensor reading is greater than 2.5 in H2O of pressure or less than -5 in H2O of vacuum for 60 s.

  OR

- If fuel tank pressure sensor reading is less than -12 in H2O of vacuum for 5 s before 10 L (2.6 gal) of purge volume.
- After setting the DTC for the first time, 2 liters (0.5 gallons) of fuel must be consumed before setting the DTC for the second time.

Action Taken When the DTC Sets

DTC P0446 is a Type B DTC.

Conditions for Clearing the MIL/DTC

DTC P0446 is a Type B DTC.

Diagnostic Aids

- An intermittent condition could be caused by a damaged EVAP vent housing, a temporary blockage at the EVAP vent solenoid valve inlet, or a pinched vent hose. A blockage in the vent system may also cause a poor fuel fill condition.
- An EVAP canister filter that is restricted can cause this DTC to set.

Reference Information

Schematic Reference

Engine Controls Schematics

Connector End View Reference

COMPONENT CONNECTOR END VIEWS - INDEX

Description and Operation

Evaporative Emission Control System Description

Electrical Information Reference

- **Circuit Testing**
- **Connector Repairs**
- **Testing for Intermittent Conditions and Poor Connections**
- **Wiring Repairs**

DTC Type Reference

Powertrain Diagnostic Trouble Code (DTC) Type Definitions

Scan Tool Reference

Control Module References for scan tool information

Special Tools

- CH 41415-30 Fuel Tank Cap Adapter
- GE 41413-A Evaporative Emissions System Tester (EEST)

For equivalent regional tools, refer to **Special Tools**

Circuit/System Verification

1. Ignition ON.
2. Verify DTC P0443 is not set.
    - **If the DTC is set**

      Refer to **Diagnostic Trouble Code (DTC) List - Vehicle**

    - **If the DTC is not set**
3. Ignition OFF, remove the fuel tank filler cap. Ignition ON.
4. Verify the scan tool Fuel Tank Pressure Sensor parameter is between 1.3-1.7 V.
    - **If not between the 1.3-1.7 V**

      Refer to P0452, P0453 within **DTC P0451-P0454**

- **If between the 1.3-1.7 V**

5. Install the fuel tank filler cap. Engine idling at operating temperature for 5 min.
6. Verify the scan tool Fuel Tank Pressure Sensor parameter does not increase to greater than 2.5 V when commanding the EVAP Purge Solenoid Valve to 50 %.
   - **If greater than 2.5 V**

     Refer to Circuit/System Testing below.

   - **If 2.5 V or less**
7. Operate the vehicle within the conditions for running the DTC. You may also operate the vehicle within the conditions that you observed from the freeze frame/failure records data.
   - **If the DTC sets**

     Refer to Circuit/System Testing below.

   - **If the DTC does not set**
8. All OK.

Circuit/System Testing

NOTE: Perform the Circuit/System Verification before proceeding with the Circuit/System Testing.

1. Test for a blockage or restrictions in the EVAP system components listed below and repair as necessary.
   - Evaporative Emission Vent System Hoses
   - Evaporative Emission Canister
   - Q13 Evaporative Emission Vent Solenoid Valve
   - Evaporative Emission Vent Filter
2. Reconnect all previously disconnected EVAP hardware.

NOTE: Refer to the GE 41413-A operation manual for detailed instructions in Evaporative Emission Control System Diagnosis.

3. Remove the fuel fill cap and connect the CH 41415-30 to the fuel tank filler neck. Connect the GE 41413-A to the CH 41415-30.
4. Command the EVAP Purge/Seal function to System Seal with a scan tool to seal the EVAP system.
5. Turn the nitrogen/smoke valve on the GE 41413-A to nitrogen.

NOTE: DO NOT exceed the specified value in this step. Exceeding the specified value may produce incorrect test results.

6. Use the remote switch to activate the GE 41413-A and pressurize the fuel tank to 5.0 in H2O.
7. Verify the scan tool Fuel Tank Pressure Sensor parameter is 0 in H2O when commanding the EVAP Vent

Solenoid Valve to OFF.

- **If not 0 in H20**

  Test for a blockage or a restriction in the EVAP vent hose or inlet. If the inlet or hose test normal, replace the Q13 Evaporative Emission Vent Solenoid Valve.

- **If 0 in H2O**

8. Operate the vehicle within the conditions for running the DTC. You may also operate the vehicle within the conditions that you observed from the freeze frame/failure records data.
   - **If the DTC sets**

     Refer to step 1 above.

   - **If the DTC does not set**
9. All OK.

Repair Instructions

Perform the **Diagnostic Repair Verification** after completing the repair.

- **Evaporative Emission Canister Vent Solenoid Valve Replacement**
- **Evaporative Emission Canister Replacement**
- **Fuel Tank Pressure Sensor Replacement**

DTC P0449

Diagnostic Instructions

- Perform the **Diagnostic System Check - Vehicle** prior to using this diagnostic procedure.
- Review **Strategy Based Diagnosis** for an overview of the diagnostic approach.
- **Diagnostic Procedure Instructions** provides an overview of each diagnostic category.

DTC Descriptors

DTC P0449

Evaporative Emission (EVAP) Vent Solenoid Valve Control Circuit

Diagnostic Fault Information

Circuit	Short to Ground	Open / High Resistance	Short to Voltage
Battery - Vent Supply	P0449	P0449	-
EVAP Vent Solenoid Valve Control	P0449	P0449	P0449

Circuit/System Description

Battery voltage is supplied to the evaporative emissions (EVAP) vent solenoid valve. The engine control module (ECM) grounds the EVAP vent solenoid valve control circuit through an internal switch called a driver. The ECM monitors the status of the driver for the control circuit. A scan tool will display the commanded state of the EVAP vent solenoid valve as OFF - Venting or ON - Not Venting.

Conditions for Running the DTC

DTC P0449 runs continuously when the above conditions are met.

Conditions for Setting the DTC

The ECM detects that the commanded state of the driver and the actual state of the control circuit do not match for a minimum of 0.25 s.

Action Taken When the DTC Sets

DTC P0449 is a Type B DTC.

Conditions for Clearing the MIL/DTC

DTC P0449 is a Type B DTC.

Reference Information

Schematic Reference

Engine Controls Schematics

Connector End View Reference

COMPONENT CONNECTOR END VIEWS - INDEX

Description and Operation

Evaporative Emission Control System Description

Electrical Information Reference

- **Circuit Testing**
- **Connector Repairs**
- **Testing for Intermittent Conditions and Poor Connections**
- **Wiring Repairs**

DTC Type Reference

Powertrain Diagnostic Trouble Code (DTC) Type Definitions

Scan Tool Reference

Control Module References for scan tool information

Circuit/System Verification

1. Ignition ON, engine OFF,
2. Command the EVAP Vent Solenoid Valve ON - Not Venting and OFF - Venting with a scan tool.
3. You should hear the solenoid click when commanded ON and OFF.
   - **No clicking heard**

     Refer to Circuit/System Testing below

   - **Clicking is heard**
4. Engine idling, command the EVAP Vent Solenoid Valve ON - Not Venting and OFF - Venting with a scan tool while observing the following control circuit status parameters:
   - EVAP Vent Solenoid Valve Control Circuit Low Voltage Test Status
   - EVAP Vent Solenoid Valve Control Circuit Open Test Status
   - EVAP Vent Solenoid Valve Control Circuit High Voltage Test Status
   - **If the Parameters display Malfunction**

     Refer to Circuit/System Testing below

   - **If the Parameters display OK or Not Run**
5. Operate the vehicle within the conditions for running the DTC. You may also operate the vehicle within the conditions that you observed from the freeze frame/failure records data.
6. Verify the DTC does not set.
   - **If the DTC sets**

     Refer to Circuit/System Testing below.

   - **If the DTC does not set**
7. All OK.

Circuit/System Testing

1. Ignition OFF, disconnect the harness connector at the Q13 Evaporative Emissions Vent Solenoid Valve, ignition ON.
2. Verify that a test lamp illuminates between the B+ circuit terminal 2 and ground.
   - **If the test lamp does not illuminate and the circuit fuse is good**
   1. Ignition OFF, remove the test lamp.
   2. Test for less than 2 ohms in the B+ circuit end to end.
      - If 2 ohms or greater, repair the open/high resistance in the circuit.

- If less than 2 ohms verify the fuse is not open and there is voltage at the fuse.

- **If the test lamp does not illuminate and the circuit fuse is open**

1. Ignition OFF, remove the test lamp.
2. Test for infinite resistance between the B+ circuit and ground.
   - If less than infinite resistance, repair the short to ground in the circuit.
   - If infinite resistance, test the Q13 Evaporative Emissions Vent Solenoid Valve for a short and replace as necessary.

- **If the test lamp illuminates**

3. Verify that a test lamp does not illuminate between the B+ circuit terminal 2 and the control circuit terminal 1.
   - **If the test lamp illuminates**
   1. Ignition OFF, disconnect the harness connector at the Q13 Evaporative Emissions Vent Solenoid Valve.
   2. Test for infinite resistance between the control circuit and ground.
      - If less than infinite resistance, repair the short to ground on the circuit.
      - If infinite resistance, replace the K20 Engine Control Module.
   - **If the test lamp does not illuminate**
4. Remove the test lamp.
5. Verify the scan tool EVAP Vent Solenoid Valve Control Circuit High Voltage Test Status parameter is OK when commanding the EVAP Vent Solenoid Valve ON with a scan tool.
   - **If the Parameter is not OK**
   1. Ignition OFF, disconnect the harness connector at the K20 Engine Control Module, ignition ON.
   2. Test for less than 1 V between the control circuit terminal 1 and ground.
      - If 1 V or greater, repair the short to voltage on the circuit.
      - If less than 1 V, replace the K20 Engine Control Module.
   - **If the Parameter is OK**
6. Install a 3 A fused jumper wire between the control circuit terminal 1 and the B+ circuit terminal 2.
7. Verify the scan tool EVAP Vent Solenoid Valve Control Circuit High Voltage Test Status parameter is Malfunction when commanding the EVAP Vent Solenoid Valve ON with a scan tool.
   - **If the Parameter is not Malfunction**
   1. Ignition OFF, disconnect the harness connector at the K20 Engine Control Module.
   2. Test for less than 2 ohms in the control circuit end to end.
      - If 2 ohms or greater, repair the open/high resistance in the circuit.
      - If less than 2 ohms replace the K20 Engine Control Module.
   - **If the Parameter is Malfunction**
8. Test or replace the Q13 Evaporative Emission Vent Solenoid Valve.

Component Testing

Static Test

1. Ignition OFF, disconnect the harness connector at the Q13 Evaporative Emission Vent Solenoid Valve.
2. Test for 10-30 ohms between the control terminal 1 and the B+ voltage terminal 2.
   - **If not between 10.0-30.0 ohms**

     Replace the Q13 Evaporative Emission Vent Solenoid Valve.

   - **If between 10.0-30.0 ohms**
3. All OK.

Repair Instructions

Perform the **Diagnostic Repair Verification** after completing the repair.

- **Evaporative Emission Canister Vent Solenoid Valve Replacement**
- **Control Module References** for ECM replacement, setup, and programming.

DTC P0451-P0454

Diagnostic Instructions

- Perform the **Diagnostic System Check - Vehicle** prior to using this diagnostic procedure.
- Review **Strategy Based Diagnosis** for an overview of the diagnostic approach.
- **Diagnostic Procedure Instructions** provides an overview of each diagnostic category.

DTC Descriptors

DTC P0451

Fuel Tank Pressure Sensor Performance

DTC P0452

Fuel Tank Pressure Sensor Circuit Low Voltage

DTC P0453

Fuel Tank Pressure Sensor Circuit High Voltage

DTC P0454

Fuel Tank Pressure Sensor Circuit Intermittent

Diagnostic Fault Information

	Short to			**Short to**	

Circuit	Ground	High Resistance	Open	Voltage	Signal Performance
5 V Reference	P0236, P0237, P0452, P0532, P0641	P0451	P0452	P0236, P0238, P0453, P0641, P1101, P2227	-
Signal	P0452	P0451	P0452	P0453	P0451, P0454
Low Reference	-	P0446, P0451	P0453, P0463	-	P0451

Typical Scan Tool Data

FTP Sensor Voltage

Circuit	Short to Ground	Open	Short to Voltage
Operating Conditions: Ignition ON, Engine OFF **Parameter Normal Range:** 1.3-1.7 V			
FTP Sensor 5 V Reference	0 V	0 V	4.2-5 V
FTP Sensor Signal	0 V	0 V	5 V
FTP Sensor Low Reference	-	4.5 V	-

Circuit/System Description

The Fuel Tank Pressure (FTP) sensor measures pressure or vacuum in the evaporative emission (EVAP) system. The engine control module (ECM) supplies a 5 V reference and a low reference circuit to the FTP sensor. The FTP sensor signal voltage varies depending on EVAP system pressure or vacuum. The controller also uses this FTP signal to determine atmospheric pressure for use in the engine-off small leak test, DTC P0442. Before using this signal as an atmospheric reference it must first be re-zeroed.

Conditions for Running the DTC

P0451

- DTC P0451 runs only when the engine-off natural vacuum small leak test, P0442, executes.
- The number of times this test runs can range from 0-2 per engine-off period. The length of the test can be up to 10 min.

P0452 and P0453

DTC P0452 and P0453 run continuously when the ignition is ON.

P0454

- DTC P0454 runs only when the engine-off natural vacuum small leak test, P0442, executes and the EVAP Vent Solenoid Valve is closed.
- This test can run once per engine-off period. The length of the test can be up to 10 min.

- A refueling event is not detected. A refueling event is confirmed if the fuel level has a persistent change of 10 % for 30 s.

Conditions for Setting the DTC

P0451

This DTC will set if the controller is unable to re-zero the FTP sensor voltage within a calibrated range during the engine-off small leak test, P0442.

P0452

The FTP sensor voltage is less than 0.15 V for more than 10 s.

P0453

The FTP sensor voltage is more than 4.9 V for more than 10 s.

P0454

If, during the engine-off natural vacuum small leak test, P0442, the ECM detects an abrupt FTP signal change, other than a refueling event, this DTC will set. An abrupt change is defined as a change of 0.45 in H2O in the span of 1 s but less than 1 in H2O in 12.5 ms.

Action Taken When the DTC Sets

- DTCs P0451 and P0454 are Type A DTCs.
- DTCs P0452 and P0453 are Type B DTCs.

Conditions for Clearing the MIL/DTC

- DTCs P0451 and P0454 are Type A DTCs.
- DTCs P0452 and P0453 are Type B DTCs.

Diagnostic Aids

P0451 and P0454

- A restriction in the EVAP canister or vent lines could prevent fuel vapor pressure from bleeding off fast enough. If the vent system cannot bleed off pressure fast enough, the re-zero procedure may not complete successfully, which could cause this code to set.
- Ensure that the reference port on the FTP sensor is unobstructed.
- An FTP sensor that is skewed or does not have a linear transition from low to high may cause this code to set. Scan tool output controls, snapshot, and plot functions can help detect erratic sensor response. To test the sensor signal under vacuum conditions, use the Quick Snapshot and the Purge/Seal functions to capture data while commanding purge to 20 %, then plot the data to look for erratic sensor operation. A

similar test can be done for the pressure side of the sensor operation by applying pressure with the **GE 41413-A** while taking a snapshot.

Reference Information

Schematic Reference

Engine Controls Schematics

Connector End View Reference

COMPONENT CONNECTOR END VIEWS - INDEX

Description and Operation

Evaporative Emission Control System Description

Electrical Information Reference

- **Circuit Testing**
- **Connector Repairs**
- **Testing for Intermittent Conditions and Poor Connections**
- **Wiring Repairs**

DTC Type Reference

Powertrain Diagnostic Trouble Code (DTC) Type Definitions

Scan Tool Reference

Control Module References for scan tool information

Special Tools

GE 41413-A Evaporative Emission System Tester (EEST)

For equivalent regional tools, refer to **Special Tools**

Circuit/System Verification

1. Remove the fuel cap.
2. Ignition ON, engine OFF.
3. Verify the scan tool FTP sensor parameter is between 1.3 and 1.7 V.
    - **If not between 1.3-1.7 V**

      Refer to Circuit/System Testing below

- **If between 1.3-1.7 V**

4. All OK.

Circuit/System Testing

1. Ignition OFF, all vehicle systems OFF, this may take up to 2 min, for all vehicle systems to power down. Disconnect the harness connector at the B150 Fuel Tank Pressure Sensor.
2. Test for less than 5 ohms of resistance between the low reference circuit terminal 2 and ground.
   - **If 5 ohms or greater**
   1. Ignition OFF, disconnect the harness connector at the K20 Engine Control Module.
   2. Test for less than 2 ohms in the low reference circuit end to end.
      - If 2 ohms or greater, repair the open/high resistance in the circuit.
      - If less than 2 ohms, replace the K20 Engine Control Module.
   - **If less than 5 ohms**
3. Ignition ON.
4. Test for 4.8-5.2 V between the 5 V reference circuit terminal 3 and ground.
   - **If less than 4.8 V**
   1. Ignition OFF, disconnect the harness connector at the K20 Engine Control Module.
   2. Test for infinite resistance between the 5 V reference circuit and ground.
      - If less than infinite resistance, repair the short to ground on the circuit.
      - If infinite resistance
   3. Test for less than 2 ohms in the 5 V reference circuit end to end.
      - If 2 ohms or greater, repair the open/high resistance in the circuit.
      - If less than 2 ohms, replace the K20 Engine Control Module.
   - **If greater than 5.2 V**
   1. Ignition OFF, disconnect the harness connector at the K20 Engine Control Module, ignition ON.
   2. Test for less than 1 V between the 5 V reference circuit and ground.
   - If 1 V or greater, repair the short to voltage on the circuit.
   - If less than 1 V, replace the K20 Engine Control Module.
   - **If between 4.8-5.2 V**
5. Verify the scan tool FTP parameter is less than 0.2 V.
   - **If 0.2 V or greater**
   1. Ignition OFF, disconnect the harness connector at the K20 Engine Control Module, ignition ON
   2. Test for less than 1 V between the signal circuit terminal 1 and ground.
   - If 1 V or greater, repair the short to voltage on the circuit.
   - If less than 1 V, replace the K20 Engine Control Module.
   - **If less than 0.2 V**
6. Install a 3 A fused jumper wire between the signal circuit terminal 1 and the 5 V reference circuit terminal 3.

7. Verify the scan tool FTP sensor parameter is greater than 4.7 V.
    - **If 4.7 V or less**
    1. Ignition OFF, disconnect the harness connector at the K20 Engine Control Module.
    2. Test for infinite resistance between the signal circuit terminal 1 and ground.
        - If less than infinite resistance, repair the short to ground on the circuit.
        - If infinite resistance
    3. Test for less than 2 ohms in the signal circuit end to end.
    - If 2 ohms or greater, repair the open/high resistance in the circuit.
    - If less than 2 ohms, replace the K20 Engine Control Module.
    - **If greater than 4.7 V**
8. Test or replace the B150 Fuel Tank Pressure Sensor.

Repair Instructions

Perform the **Diagnostic Repair Verification** after completing the repair.

- **Fuel Tank Pressure Sensor Replacement**
- **Control Module References** for ECM replacement, setup, and programming.

DTC P0455

Diagnostic Instructions

- Perform the **Diagnostic System Check - Vehicle** prior to using this diagnostic procedure.
- Review **Strategy Based Diagnosis** for an overview of the diagnostic approach.
- **Diagnostic Procedure Instructions** provides an overview of each diagnostic category.

DTC Descriptor

DTC P0455

Evaporative Emission (EVAP) System Large Leak Detected

Circuit/System Description

The engine control module (ECM) tests the evaporative emission (EVAP) system for a large leak or restrictions to the purge path in the EVAP system. When the enabling criteria has been met, the ECM commands the EVAP vent solenoid valve and purge solenoid valve ON, allowing vacuum into the EVAP system. The ECM monitors the fuel tank pressure (FTP) sensor voltage to verify that the system is able to reach a predetermined level of vacuum within a set amount of time.

Conditions for Running the DTC

- DTCs P00C8, P00C9, P010C, P010D, P16A0, P16A1, P16A2, P160E, P160D, P16F3, P0068, P0101,

P0102, P0103, P0111, P0112, P0113, P0114 P0116, P0117, P0118, P0122, P0123, P0125, P0128, P0191, P0192, P0193, P0222, P0223, P0443, P0449, P0452, P0453, P0454, P0502, P0503, P0601, P0604, P0606, P0722, P0723, P1104, P1682, P2100, P2101, P2102, P2103, P2135, P2176, P2227, P2228, P2229, P2230 are not set.

- The ignition voltage is between 11-32 V.
- The barometric pressure (BARO) is greater than 70 kPa.
- The fuel level is between 10-90%.
- The EVAP purge flow is greater than 4.50%
- The cold startup engine coolant temperature (ECT) and the startup intake air temperature (IAT) are within 8°C (46°F).
- The startup engine coolant temperature (ECT) is less than 35°C (95°F).
- The startup intake air temperature (IAT) is between 4-30°C (39-86°F).
- DTC P0455 runs once per cold start, for up to 17 min, when the above conditions are met.

Conditions for Setting the DTC

- The EVAP system is not able to achieve or maintain a calibrated level of vacuum within a set amount of time.
- After setting the DTC for the first time, 2 L (0.5 gal) of fuel must be consumed before setting the DTC for the second time.
- With a DTC P0455 detected a weak vacuum follow-up test (fuel cap replacement test) will run and passes if tank vacuum is greater than 2.74 kPa (11 in H20). This test will run for a maximum of 21 min. This test runs until it passes.

Action Taken When the DTC Sets

DTC P0455 is a Type B DTC.

Conditions for Clearing the MIL/DTC

DTC P0455 is a Type B DTC.

Diagnostic Aids

- Inspect for a loose, missing, damaged, or incorrect fuel fill cap.
- Inspect for a damaged fuel filler neck seal surface.
- A blockage or restriction in the EVAP purge solenoid valve, purge pipe, EVAP canister, or vapor pipe, can cause this DTC to set.
- The EVAP system can be filled with smoke more quickly and completely by opening the system opposite the end where the smoke is injected. For example, when injecting smoke at the service port remove the fuel fill cap, or temporarily leave the vent open, until smoke is observed, then close the system and continue testing. If using a fuel cap adapter at the filler neck, use the **J 41413-VLV** at the service port to allow the system to fill faster.
- To help locate intermittent leaks using the **GE 41413-A** , move all EVAP components while observing

smoke with the **GE 41413-SPT** .

- Individual components can be isolated and tested using adapters in the **J 41413-300** .
- When servicing the EVAP system, test pressure must not exceed 13 in H20 (0.5 PSI) as pressure in excess of this could cause system components to perform inaccurately.
- A condition may exist where a leak in the EVAP system only exists under a vacuum condition. This type of leak may be detected by using the scan tool Purge/Seal function to create a vacuum in the EVAP system and then observe the FTP Sensor parameter for vacuum decay.

Reference Information

Schematic Reference

Engine Controls Schematics

Connector End View Reference

COMPONENT CONNECTOR END VIEWS - INDEX

Description and Operation

Evaporative Emission Control System Description

Electrical Information Reference

- **Circuit Testing**
- **Connector Repairs**
- **Testing for Intermittent Conditions and Poor Connections**
- **Wiring Repairs**

DTC Type Reference

Powertrain Diagnostic Trouble Code (DTC) Type Definitions

Scan Tool Reference

Control Module References for scan tool information

Special Tools

- **CH 48096** EVAP Service Access Port Tool
- **GE 41415-30** Fuel Tank Cap Adapter
- **GE 41413-A** Evaporative Emissions System Tester (EEST)
- **J 41413-300** EVAP Cap and Plug Kit
- **GE 41413-SPT** High Intensity White Light

- **J 41413-311** EVAP Plug (Brass Nozzle)
- **J 41413-VLV** EVAP Service Port Vent Fitting

For equivalent regional tools, refer to **Special Tools**

Circuit/System Testing

IMPORTANT:

- **Larger volume fuel tanks and/or those with lower fuel levels may require several minutes for the floating indicator to stabilize or produce smoke from a leak.**
- **Refer to the GE 41413-A operation manual for detailed instructions in Evaporative Emission Control System Diagnosis .**

1. Disconnect the purge tube at the quick connector on the EVAP canister side of the purge solenoid valve and install the **CH 48096** .
2. Connect the **GE 41413-A** to the vehicle EVAP service port adapter.
3. Command the EVAP Purge/Seal function to System Seal with a scan tool to seal the EVAP system.
4. Verify that there is no leak in the EVAP system using the flow meter on the **GE 41413-A** , calibrated to 0.51 mm (0.020 in)..
   - **If a leak is detected**
   1. Apply smoke to the EVAP system at the service access port adapter with the **GE 41413-A** .
   2. Locate the leak using the **GE 41413-SPT**
   - When the leak is located, repair or replace the affected component as necessary.
   - **If no leak detected**

NOTE: The steps below test for a restriction in the purge path.

5. Connect the **GE 41413-A** nitrogen/smoke hose to the **J 41413-311** .
6. Disconnect the hose at the fuel cap end of the **GE 41415-30** and connect to the **J 41413-311** .
7. Install the **GE 41415-30** , filler neck end only, to the vehicle.
8. Engine idling, command the Purge/Seal function to System Seal with a scan tool to seal the system.
9. Command the EVAP Purge Solenoid Valve to 30% with a scan tool.
10. Verify the vacuum/pressure gauge on the **GE 41413-A** and the scan tool Fuel Tank Pressure Sensor parameter both show vacuum.
    - **If the vacuum/pressure gauge shows vacuum, but the FTP parameter does not show vacuum**

      Replace the B150 Fuel Tank Pressure Sensor.

    - **If neither the FTP parameter nor the vacuum/pressure gauge shows vacuum**

      Repair the restriction in the purge path.

11. Verify that the Fuel Tank Pressure Sensor parameter increases to greater than 3.2 V, and the pressure values are similar between the scan tool Fuel Tank Pressure Sensor and the vacuum/pressure gauge on the **GE 41413-A** .
    - **If not within the specified range**

      Replace the B150 Fuel Tank Pressure Sensor.

    - **If within the specified range**
12. All OK

Repair Instructions

Perform the **Diagnostic Repair Verification** after completing the repair.

- **Fuel Tank Pressure Sensor Replacement**
- **Control Module References** for ECM replacement, programming and setup

DTC P0496

Diagnostic Instructions

- Perform the **Diagnostic System Check - Vehicle** prior to using this diagnostic procedure.
- Review **Strategy Based Diagnosis** for an overview of the diagnostic approach.
- **Diagnostic Procedure Instructions** provides an overview of each diagnostic category.

DTC Descriptor

DTC P0496

Evaporative Emission (EVAP) System Flow During Non-Purge

Circuit/System Description

This DTC tests for undesired intake manifold vacuum flow to the evaporative emission (EVAP) system. The engine control module (ECM) seals the EVAP system by commanding the EVAP purge solenoid valve OFF and the vent solenoid valve ON. The ECM monitors the fuel tank pressure (FTP) sensor to determine if a vacuum is being drawn on the EVAP system. If vacuum in the EVAP system is more than a predetermined value within a predetermined time, this DTC sets.

The following table illustrates the relationship between the ON and OFF states, and the Open or Closed states of the EVAP purge and vent solenoid valves.

ECM Command	EVAP Purge Solenoid Valve	EVAP Vent Solenoid Valve
ON	Open	Closed
OFF	Closed	Open

Conditions for Running the DTC

- DTCs P0068, P00C8, P00C9, P00CA, P0090, P0091, P0092, P0106, P0107, P0108, P0111, P0112, P0113, P0114, P0116, P0117, P0118, P0122, P0123, P0125, P0128, P0191, P0192, P0193, P0222, P0223, P0601, P0604, P0606, P0697, P06A3, P06DB, P06DE, P0A1D, P1104, P127A, P127C, P127D, P15F2, P160D, P160E, P1682, P16A0, P16A1, P16A2, P16F3, P0443, P0449, P0452, P0453, P0454, P0502, P0503, P0722, P0723, P2100, P2101, P2102, P2103, P2122, P2123, P2127, P2128, P2135, P2138, P215B, P2176, P228C, P228D, U0073, U0074, U0293, U1817, are not set.
- The ignition voltage is between 11-32 V.
- The engine OFF time is greater than 48 min,
- The barometric pressure (BARO) is greater than 70 kPa.
- The fuel level is between 10-90 %.
- The startup engine coolant temperature (ECT) is less than 35°C (95°F).
- The startup intake air temperature (IAT) is between 4-34°C (39-93°F).
- DTC P0496 runs once per cold start, for up to 17 min, when the above conditions are met.

Conditions for Setting the DTC

- The ECM detects more than 10 in H2O vacuum for 5 s during a non-purge condition.
- This test will run with the purge valve closed and the vent valve closed.

Action Taken When the DTC Sets

DTC P0496 is a Type B DTC.

Conditions for Clearing the MIL/DTC

DTC P0496 is a Type B DTC.

Diagnostic Aids

An intermittent condition could be caused by an improperly installed or damaged EVAP Purge Solenoid Valve or by a temporary blockage or restriction in the EVAP Purge Solenoid Valve or system tubing.

Reference Information

Schematic Reference

Engine Controls Schematics

Connector End View Reference

COMPONENT CONNECTOR END VIEWS - INDEX

Description and Operation

Evaporative Emission Control System Description

Electrical Information Reference

- **Circuit Testing**
- **Connector Repairs**
- **Testing for Intermittent Conditions and Poor Connections**
- **Wiring Repairs**

DTC Type Reference

Powertrain Diagnostic Trouble Code (DTC) Type Definitions

Scan Tool Reference

Control Module References for scan tool information

Circuit/System Verification

1. Operate the vehicle within the Conditions for Running the DTC. You may also operate the vehicle within the conditions that you observed from the Freeze Frame/Failure Records data.
2. Verify the DTC does not set.
   - **If the DTC sets**

     Refer to Circuit/System Testing below

   - **If the DTC does not set**
3. All OK

Circuit/System Testing

1. Ignition ON, engine OFF.
2. Command the EVAP Purge/Seal function to System Seal with a scan tool to seal the EVAP system.
3. Start the engine.
4. Observe the Fuel Tank Pressure Sensor with a scan tool. The Fuel Tank Pressure Sensor parameter should be less than 1.7 V after 90 s.
   - **If not within specifications**

     Replace the Q12 Evaporative Emission Purge Solenoid Valve

   - **Within Specifications**
5. All OK

Repair Instructions

Perform the **Diagnostic Repair Verification** after completing the repair.

Evaporative Emission Canister Purge Solenoid Valve Replacement

DTC P0506 OR P0507

Diagnostic Instructions

- Perform the **Diagnostic System Check - Vehicle** prior to using this diagnostic procedure.
- Review **Strategy Based Diagnosis** for an overview of the diagnostic approach.
- **Diagnostic Procedure Instructions** provides an overview of each diagnostic category.

DTC Descriptors

DTC P0506

Idle Speed Low

DTC P0507

Idle Speed High

Circuit/System Description

The throttle actuator control (TAC) motor is controlled by the engine control module (ECM). The DC motor located in the throttle body drives the throttle blade. In order to decrease idle speed, along with spark and fuel delivery changes the ECM commands the throttle closed reducing air flow into the engine and the idle speed decreases. In order to increase idle speed, the ECM commands the throttle plate open allowing more air to pass the throttle plate.

Conditions for Running the DTC

- DTCs P0068, P0101, P0102, P0103, P0106, P0107, P0108, P0111, P0112, P0113, P0114, P0116, P0117, P0118, P0119, P0121, P0122, P0123, P0128, P0171, P0172, P0201, P0202, P0203, P0204, P0222, P0223, P0300, P0351, P0352, P0353, P0354, P0461, P0462, P0463, P0496, P0502, P0503, P0606, P0697, P06A3, P0806, P0807, P0808, P16F3, P2101, P2122, P2123, P2127, P2128, P2135, P2138 or P2771 are not set.
- The barometric pressure (BARO) is greater than 70 kPa.
- The engine runtime is greater than 60 s.
- The engine is idling for greater than 10 s.
- The torque converter clutch (TCC) is not changing states.
- The transmission is not changing gears.
- The intake air temperature (IAT) is greater than -20°C (-4°F).
- The engine coolant temperature (ECT) is between 60-120°C (140-248°F).
- The ignition voltage is between 11-32 V.

- The vehicle speed is less than 3.2 km/h (2 mph).
- The commanded engine speed is steady within 25 RPM.
- The DTCs run continuously when the above conditions are met for greater than 10 s.

Conditions for Setting the DTC

P0506

The ECM detects that the actual idle speed is approximately 91 RPM lower than the desired idle speed.

P0507

The ECM detects that the actual idle speed is approximately 182 RPM higher than desired idle speed.

Action Taken When the DTC Sets

DTC P0506 and P0507 are Type B DTCs.

Conditions for Clearing the DTC

DTC P0506 and P0507 are Type B DTCs.

Diagnostic Aids

- A stalling condition can cause DTC P0506 to set.
- An intermittent vehicle speed sensor (VSS) signal can cause DTC P0507 to set.
- An intermittent clutch pedal position sensor signal, if equipped, can cause DTC P0506 to set.

Reference Information

Schematic Reference

Engine Controls Schematics

Connector End View Reference

COMPONENT CONNECTOR END VIEWS - INDEX

Description and Operation

Throttle Actuator Control (TAC) System Description

Electrical Information Reference

- **Circuit Testing**
- **Connector Repairs**

- **Testing for Intermittent Conditions and Poor Connections**
- **Wiring Repairs**

DTC Type Reference

Powertrain Diagnostic Trouble Code (DTC) Type Definitions

Scan Tool Reference

Control Module References for scan tool information

Circuit/System Verification

1. Ignition ON.
2. Verify there are no other DTCs set.
   - **If any other DTCs are set**

     Refer to **Diagnostic Trouble Code (DTC) List - Vehicle** for further diagnosis.

   - **If no other DTCs are set**
3. Verify the scan tool Throttle Body Idle Airflow Compensation parameter is less than 90 %.
   - **90 % or greater**

     Refer to **Throttle Body Inspection and Cleaning** .

   - **If less than 90 %**
4. Engine Idling at the normal operating temperature.

   NOTE: The engine must run for greater than 60 s, then idle at a steady state for an additional 10 s before comparing the actual and desired engine speed parameters.

5. Verify the actual Engine Speed is not 100 RPM less than the Desired Idle Speed.
   - **If 100 RPM less than the Desired Idle Speed**

     Refer to Circuit/System Testing below.

   - **If 100 RPM greater than the Desired Idle Speed**
6. Verify the actual Engine Speed is not 200 RPM greater than the Desired Idle Speed.
   - **If 200 RPM greater than the Desired Idle Speed**

     Refer to Circuit/System Testing below.

   - **If 200 RPM less than the Desired Idle Speed**

7. Operate the vehicle within the Conditions for Running the DTC. You may also operate the vehicle within the conditions that you observed from the Freeze Frame/Failure Records data.
8. Verify the DTC does not set.
    - **If the DTC sets**

      Refer to Circuit/System Testing below.

    - **If the DTC does not set**
9. All OK.

Circuit/System Testing

P0506

1. Verify the conditions listed below do not exist.
    - Restricted exhaust
    - Mechanical conditions that limits engine speed
    - Parasitic load on the engine-For example, a transmission condition, a belt driven accessory condition.
    - **If a condition is found**

      Repair as necessary.

    - **If a condition is not found**
2. All OK.

P0507

1. Verify the conditions listed below do not exist.
    - Vacuum leaks
    - A throttle valve that does not close correctly
    - Verify the correct operation of the crankcase ventilation system. Inspect for the conditions listed below:
        - Improper routing of the positive crankcase ventilation (PCV) system
        - Vacuum leaks in the PCV system-Refer to **Crankcase Ventilation System Inspection/Diagnosis** .
    - **If a condition is found**

      Repair as necessary.

    - **If a condition is not found**
2. All OK.

Repair Verification

Perform the **Diagnostic Repair Verification** after completing the repair.

- **Throttle Body Inspection and Cleaning**
- **Throttle Body Assembly Replacement**

DTC P0601-P0604, P0606, OR P062F (FUEL PUMP CONTROL MODULE)

Diagnostic Instructions

- Perform the **Diagnostic System Check - Vehicle** prior to using this diagnostic procedure.
- Review **Strategy Based Diagnosis** for an overview of the diagnostic approach.
- **Diagnostic Procedure Instructions** provides an overview of each diagnostic category.

DTC Descriptors

DTC P0601

Control Module Read Only Memory Performance

DTC P0602

Control Module Not Programmed

DTC P0603

Control Module Long Term Memory Reset

DTC P0604

Control Module Random Access Memory Performance

DTC P0606

Control Module Processor Performance

DTC P062F

Control Module Long Term Memory Performance

Circuit/System Description

The internal fault detection is handled inside the fuel pump control module. No external circuits are involved.

Conditions for Running the DTC

The fuel pump control module runs the program to detect an internal fault when power up is commanded. The only requirements are voltage and ground. This program runs even if the voltage is out of the valid operating range.

Conditions for Setting the DTC

The fuel pump control module has detected an internal malfunction.

Action Taken When the DTC Sets

DTC P0601, P0602, P0603, P0604, P0606 and P062F are type A DTCs.

Conditions for Clearing the DTC

DTC P0601, P0602, P0603, P0604, P0606 and P062F are type A DTCs.

Reference Information

Description and Operation

Engine Controls Schematics

Electrical Information Reference

- **Circuit Testing**
- **Connector Repairs**
- **Testing for Intermittent Conditions and Poor Connections**
- **Wiring Repairs**

DTC Type Reference

Powertrain Diagnostic Trouble Code (DTC) Type Definitions

Circuit/System Verification

NOTE: This DTC may be stored as a history DTC without affecting the operation of the module. If stored only as a history DTC and not retrieved as a current DTC, do not replace the module.

1. Ignition ON.
2. Verify DTC P0602 is not set.
    - **If DTC P0602 is set**
    1. Program the K27 fuel pump control module.
    2. Verify the DTC does not set.
        - If the DTC sets, replace the K27 fuel pump control module.

- If the DTC does not set.

3. All OK.
   - **If DTC P0602 is not set**

3. Verify DTCs P0601, P0603, P0604, P0606, and P062F are not set.
   - **If any of the DTCs are set**
   1. Program the K27 fuel pump control module.
   2. Verify the DTC does not set.
      - If the DTC sets, replace the K27 fuel pump control module.
      - If the DTC does not set.
   3. All OK.
   - **If none of the DTCs are set**
4. All OK

Repair Instructions

Perform the **Diagnostic Repair Verification** after completing the repair.

Control Module References for fuel pump control module replacement, programming and setup

DTC P0601-P0604, P0606, P062B, P062F, P0630, P16F3, OR P262B (ECM)

Diagnostic Instructions

- Perform the **Diagnostic System Check - Vehicle** prior to using this diagnostic procedure.
- Review **Strategy Based Diagnosis** for an overview of the diagnostic approach.
- **Diagnostic Procedure Instructions** provides an overview of each of the diagnostic category.

DTC Descriptors

DTC P0601

Control Module Read Only Memory Performance

DTC P0602

Control Module Not Programmed

DTC P0603

Control Module Long Term Memory Reset

DTC P0604

Control Module Random Access Memory Performance

DTC P0606

Control Module Processor Performance

DTC P062F

Control Module Long Term Memory Performance

DTC P0630

VIN Not Programmed or Mismatched - Engine Control Module (ECM)

DTC P16F3

Control Module Redundant Memory Performance

DTC P262B

Control Module Power Off Timer Performance

Circuit/System Description

This diagnostic applies to internal microprocessor integrity conditions within the engine control module (ECM). This diagnostic also addresses if the ECM is not programmed.

Conditions for Running the DTCs

P0601, P0602, P0630

These DTCs run continuously when the ignition is in ON.

P0603, P062F

These DTCs run once per ignition cycle.

P0604

DTC P0604 runs continuously when the ignition is ON for greater than 30 s.

P0606

DTC P0606 runs continuously when Ignition 1 Signal voltage is greater than 11 V.

P16F3

- The engine speed is greater than 500 RPM.
- DTCs P0101, P0102, P0103, P0106, P0107, P0108, P2227, P2228, P2229, or P2230 are not set.

- DTC P16F3 runs continuously when the above conditions are met.

P262B

DTC P262B runs on ECM power down.

Conditions for Setting the DTCs

The ECM detects an internal failure or incomplete programming for more than 10 s.

Actions Taken When the DTC Sets

- DTCs P0601, P0602, P0603, P0604, P0606, P062F, P0630, and P16F3 are Type A DTCs.
- DTC P262B is a Type B DTC.

Conditions for Clearing the MIL/DTC

- DTCs P0601, P0602, P0603, P0604, P0606, P062F, P0630, and P16F3 are Type A DTCs.
- DTC P262B is a Type B DTC.

Diagnostic Aids

Low voltage or a momentary loss of power or ground to the ECM may cause a DTC to set. Verify the following:

- The battery cables are clean and tight, and the battery is fully charged. Refer to **Battery Inspection/Test** .
- The ECM ground circuits do not have an open or high resistance.
- The ECM power circuits do not have an open, short to ground, or high resistance.

Reference Information

Schematic Reference

Engine Controls Schematics

Connector End View Reference

COMPONENT CONNECTOR END VIEWS - INDEX

Electrical Information Reference

- **Circuit Testing**
- **Connector Repairs**
- **Testing for Intermittent Conditions and Poor Connections**
- **Wiring Repairs**

DTC Type Reference

Powertrain Diagnostic Trouble Code (DTC) Type Definitions

Scan Tool Reference

Control Module References for scan tool information

Circuit/System Verification

1. Ignition ON, clear the DTC information with a scan tool. Observe the DTC information with a scan tool.
2. Verify that DTC P0641, P0651, P0697, or P06A3 does not set.
   - **If a DTC is set**

     Refer to **DTC P0641, P0651, P0697, or P06A3 (ECM)** for further diagnosis.

   - **If DTC P0641, P0651, P0697, or P06A3 does not set**
3. Observe the DTC information with a scan tool. Verify DTC P0602 or P0630 is not set.
   - **If DTC P0602 or P0630 is set**
   1. Program the K20 Engine Control Module. Refer to **Control Module References** .
   2. Verify DTC P0602 or P0630 is not set.
      - If DTC P0602 or P0630 sets, replace the K20 Engine Control Module.
      - If DTC P0602 or P0630 does not set
   3. All OK.
   - **If DTC P0602 or P0630 is not set**
4. Verify DTC P0601, P0603, P0604, P0606, P062F, P16F3, or P262B is not set.
   - **If DTC P0601, P0603, P0604, P0606, P062F, P16F3, or P262B is set**

     Replace the K20 Engine Control Module.

   - **If DTC P0601, P0603, P0604, P0606, P062F, P16F3, or P262B is not set**
5. All OK.

Repair Instructions

Perform the **Diagnostic Repair Verification** after completing the diagnostic procedure.

Control Module References for Engine Control Module replacement, programming and setup

DTC P0627-P0629

Diagnostic Instructions

- Perform the **Diagnostic System Check - Vehicle** prior to using this diagnostic procedure.

- Review **Strategy Based Diagnosis** for an overview of the diagnostic approach.
- **Diagnostic Procedure Instructions** provides an overview of each diagnostic category.

DTC Descriptors

DTC P0627

Fuel Pump Enable Circuit

DTC P0628

Fuel Pump Enable Circuit Low Voltage

DTC P0629

Fuel Pump Enable Circuit High Voltage

Diagnostic Fault Information

Circuit	Short to Ground	Open/High Resistance	Short to Voltage	Signal Performance
Control	P0628	P0627, P0629	P0629	-

Circuit/System Description

The engine control module (ECM) provides ignition voltage to the fuel pump flow control module whenever the engine is cranking or running. The control module enables the fuel pump flow control module as long as the engine is cranking or running, and ignition system reference pulses are received. While this enable voltage is being received, the fuel pump flow control module supplies a varying voltage to the in-tank fuel pump module in order to maintain the desired fuel line pressure.

Conditions for Running the DTC

P0627 and P0629

- The ignition voltage is 11 V or greater.
- The ECM has commanded the fuel pump OFF.
- The DTCs run continuously when the above conditions are met for greater than 1 s.

P0628

- The ignition voltage is 11 V or greater.
- The ECM has commanded the fuel pump ON.
- The DTC runs continuously when the above conditions are met for greater than 1 s.

Conditions for Setting the DTC

The ECM detects that the commanded state of the driver and the actual state of the control circuit do not match for greater than 2 s.

Action Taken When the DTC Sets

DTCs P0627, P0628, and P0629 are Type B DTCs.

Conditions for Clearing the DTC

DTCs P0627, P0628, and P0629 are Type B DTCs.

Reference Information

Schematic Reference

Engine Controls Schematics

Connector End View Reference

COMPONENT CONNECTOR END VIEWS - INDEX

Electrical Information Reference

- **Circuit Testing**
- **Connector Repairs**
- **Testing for Intermittent Conditions and Poor Connections**
- **Wiring Repairs**

DTC Type Reference

Powertrain Diagnostic Trouble Code (DTC) Type Definitions

Scan Tool Reference

Control Module References for scan tool information

Circuit/System Verification

1. Ignition ON.
2. Verify that DTC P0627, P0628, or P0629 is not set.
    - **If a DTC is set**

      Refer to Circuit/System Testing below.

    - **If a DTC is not set**
3. Verify the parameters listed below do not display Malfunction when commanding the Fuel Pump Enable

On and Off with a scan tool.

- Fuel Pump Enable Circuit Low Voltage Test Status
- Fuel Pump Enable Circuit Open Test Status
- Fuel Pump Enable Circuit High Voltage Test Status

- **If Malfunction is displayed**

  Refer to Circuit/System Testing below

- **If Malfunction is not displayed**

4. Operate the vehicle within the Conditions for Running the DTC. You may also operate the vehicle within the conditions that you observed from the Freeze Frame/Failure Records data.
5. Verify the DTC does not set.
   - **If the DTC sets**

     Refer to Circuit/System Testing below.

   - **If the DTC does not set**
6. All OK.

Circuit/System Testing

1. Ignition OFF, disconnect the harness connector at the K27 Fuel Pump Control Module.
2. Ignition ON for 10 s.
3. Verify that a test lamp does not illuminate between the control circuit terminal 20 and ground.
   - **If the test lamp illuminates**
   1. Ignition OFF, remove the test lamp, disconnect the harness connector at the K20 Engine Control Module, ignition ON.
   2. Test for less than 1 V between the control circuit and ground.
      - If 1 V or greater, repair the short to voltage on the circuit.
      - If less than 1 V, replace the K20 Engine Control Module.
   - **If the test lamp does not illuminate**
4. Remove the test lamp.
5. Verify the scan tool Fuel Pump Enable Circuit Low Voltage Test Status parameter is OK when commanding the Fuel Pump Enable On with a scan tool.
   - **If OK is not displayed**
   1. Ignition OFF, disconnect the harness connector at the K20 Engine Control Module.
   2. Test for infinite resistance between the control circuit and ground.
      - If less than infinite resistance, repair the short to ground on the circuit.
      - If infinite resistance, replace the K20 Engine Control Module.
   - **If OK is displayed**
6. Install a 3 A fused jumper wire between the control circuit terminal 20 and ground.

7. Verify the scan tool Fuel Pump Enable Circuit Low Voltage Test Status parameter is Malfunction when commanding the Fuel Pump Enable On with a scan tool.
    - **If Malfunction is not displayed**
    1. Ignition OFF, remove the jumper wire, disconnect the harness connector at the K20 Engine Control Module.
    2. Test for less than 2 ohms in the control circuit end to end.
        - If 2 ohms or greater, repair the open/high resistance in the circuit.
        - If less than 2 ohms, replace the K20 Engine Control Module.
    - **If Malfunction is displayed**
8. Replace the K27 Fuel Pump Control Module.

Repair Instructions

Perform the **Diagnostic Repair Verification** after completing the diagnostic procedure.

Control Module References for Engine Control Module or Fuel Pump Flow Control Module replacement, programming, and setup

DTC P0641 OR P06A6 (FUEL PUMP CONTROL MODULE)

Diagnostic Instructions

- Perform the **Diagnostic System Check - Vehicle** prior to using this diagnostic procedure.
- Review **Strategy Based Diagnosis** for an overview of the diagnostic approach.
- **Diagnostic Procedure Instructions** provides an overview of each diagnostic category.

DTC Descriptors

DTC P0641

5 V Reference Circuit

DTC P06A6

5 V Reference 1 Performance

Diagnostic Fault Information

Circuit	Short to Ground	Open/High Resistance	Short to Voltage	Signal Performance
5 V Reference	P018C, P0641, P06A6	P018C	P018D, P0641, P06A6	P06A6
Signal	P018C	P018B, P018C	P018D	P018B
Low Reference	-	P0641, P06A6	-	P06A6

Circuit/System Description

The fuel pressure sensor is located on the fuel line. The fuel pressure sensor monitors the fuel pressure in the fuel line. The fuel pump control module monitors the voltage signal from the fuel pressure sensor.

Conditions for Running the DTC

The ignition is ON.

Conditions for Setting the DTC

The fuel pump control module detects that the fuel pressure 5 V reference is above or below a predetermined voltage threshold.

Action Taken When the DTC Sets

DTCs P0641 and P06A6 are Type A DTCs.

Conditions for Clearing the DTC

DTCs P0641 and P06A6 are Type A DTCs.

Diagnostic Aids

Using the Failure Records data may help locate an intermittent condition. If you cannot duplicate the DTC, the information in the Failure Records can help determine how many miles since the DTC set. The Fail Counter and Pass Counter can help determine how many ignition cycles that the diagnostic test reported a pass and/or a fail.

Reference Information

Schematic Reference

Engine Controls Schematics

Connector End View Reference

COMPONENT CONNECTOR END VIEWS - INDEX

Description and Operation

Fuel System Description

Electrical Information Reference

- **Circuit Testing**
- **Connector Repairs**
- **Testing for Intermittent Conditions and Poor Connections**

- **Wiring Repairs**

DTC Type Reference

Powertrain Diagnostic Trouble Code (DTC) Type Definitions

Scan Tool Reference

Control Module References for scan tool information

Circuit/System Testing

1. Ignition OFF and all vehicle systems OFF, disconnect the harness connector at the B47 Fuel Pressure Sensor. It may take up to 2 minutes for all vehicle systems to power down.
2. Test for less than 10 ohms between the low reference circuit terminal 2 and ground.
    - **If 10 ohms or greater**
    1. Ignition OFF, disconnect the harness connector at the K27 Fuel Pump Control Module.
    2. Test for less than 2 ohms in the low reference circuit end to end.
        - If 2 ohms or greater, repair the open/high resistance in the circuit.
        - If less than 2 ohms, replace the K27 Fuel Pump Control Module.
    - **If less than 10 ohms**
3. Ignition ON.
4. Test for 4.8-5.2 V between the 5 V reference circuit terminal 3 and ground.
    - **If less than 4.8 V**
    1. Ignition OFF, disconnect the harness connector at the K27 Fuel Pump Control Module.
    2. Test for infinite resistance between the 5 V reference circuit and ground.
        - If less than infinite resistance, repair the short to ground on the circuit.
        - If infinite resistance
    3. Test for less than 2 ohms in the 5 V reference circuit end to end.
        - If 2 ohms or greater, repair the open/high resistance in the circuit.
        - If less than 2 ohms, replace the K27 Fuel Pump Control Module.
    - **If greater than 5.2 V**
    1. Ignition OFF, disconnect the harness connector at the K27 Fuel Pump Control Module, ignition ON.
    2. Test for less than 1 V between the 5 V reference circuit and ground.
        - If 1 V or greater, repair the short to voltage on the circuit.
        - If less than 1 V, replace the K27 Fuel Pump Control Module.
    - **If between 4.8-5.2 V**
5. Verify the scan tool Fuel Pressure Sensor Voltage parameter is less than 1 V.
    - **If 1 V or greater**

1. Ignition OFF, disconnect the harness connector at the K27 Fuel Pump Control Module, ignition ON.
2. Test for less than 1 V between the signal circuit terminal 1 and ground.
    - If 1 V or greater, repair the short to voltage on the circuit.
    - If less than 1 V, replace the K27 Fuel Pump Control Module.

- **If less than 1 V**

6. Install a 3 A fused jumper wire between the signal circuit terminal 1 and the 5 V reference circuit terminal 3, wait 15 seconds.
7. Verify the scan tool Fuel Pressure Sensor Voltage parameter is greater than 4.8 V.

- **If 4.8 V or less**

1. Ignition OFF, disconnect the harness connector at the K27 Fuel Pump Control Module.
2. Test for infinite resistance between the signal circuit terminal 1 and ground.
    - If less than infinite resistance, repair the short to ground on the circuit.
    - If infinite resistance
3. Test for less than 2 ohms in the signal circuit end to end.
    - If 2 ohms or greater, repair the open/high resistance in the circuit.
    - If less than 2 ohms, replace the K27 Fuel Pump Control Module.

- **If greater than 4.8 V**

8. Test or replace the B47 Fuel Pressure Sensor.

Repair Instructions

Perform the **Diagnostic Repair Verification** after completing the repair.

Control Module References for fuel pump control module replacement, programming and setup

DTC P0641, P0651, P0697, OR P06A3 (ECM)

Diagnostic Instructions

- Perform the **Diagnostic System Check - Vehicle** prior to using this diagnostic procedure.
- Review **Strategy Based Diagnosis** for an overview of the diagnostic approach.
- **Diagnostic Procedure Instructions** provides an overview of each diagnostic category.

DTC Descriptors

DTC P0641

5V Reference 1 Circuit

DTC P0651

5V Reference 2 Circuit

DTC P0697

5V Reference 3 Circuit

DTC P06A3

5V Reference 4 Circuit

Circuit/System Description

The engine control module (ECM) has 4 internal 5V reference circuits. Each internal reference circuit provides external 5V reference circuits for more than one sensor. A short to ground or short to voltage on one external 5V reference circuit can affect all the components connected to the same internal 5V reference circuit.

Conditions for Running the DTC

These DTCs run continuously when the ignition voltage is greater than 6.4 V.

Conditions for Setting the DTC

The ECM detects a short to ground or voltage on any of the 5V reference circuits for greater than 0.5 s.

Action Taken When the DTC Sets

DTCs P0641, P0651, P0697, and P06A3 are Type A DTCs.

Conditions for Clearing the DTC

DTCs P0641, P0651, P0697, and P06A3 are Type A DTCs.

Diagnostic Aids

P0641

The 5V reference 1 circuit provides 5 V circuits to the following sensors:

- Air conditioning (A/C) refrigerant pressure sensor
- Exhaust and intake camshaft position sensors
- Fuel tank pressure sensor
- Multifunction intake air sensor

P0651

The 5V reference 2 circuit provides 5 V circuits to the following sensors:

- Brake pedal position sensor (automatic transmission)
- Clutch pedal position sensor (manual transmission)

- Crankshaft position sensor
- Secondary air injection pressure sensor, if equipped
- Vehicle speed sensor (manual transmission)

P0697

The 5V reference 3 circuit provides 5 V circuits to the following sensors:

- Accelerator pedal position sensor 2
- Manifold absolute pressure sensor

P06A3

The 5V reference 4 circuit provides 5 V circuits to the following sensors:

- Accelerator pedal position sensor 1
- Throttle position sensor 1 and 2

Disconnecting one component at a time from the affected 5V reference circuit while observing the scan tool 5V Reference Circuit Status parameter may help locate the fault. The scan tool parameter will change from Malfunction to OK when the source of the fault is disconnected. If all 5V reference components have been disconnected and a fault is still indicated, the fault may exist in the wiring harness.

Reference Information

Schematic Reference

Engine Controls Schematics

Connector End View Reference

COMPONENT CONNECTOR END VIEWS - INDEX

Component View Reference

Powertrain Component Views

Electrical Information Reference

- **Circuit Testing**
- **Connector Repairs**
- **Testing for Intermittent Conditions and Poor Connections**
- **Wiring Repairs**

DTC Type Reference

Powertrain Diagnostic Trouble Code (DTC) Type Definitions

Scan Tool Reference

Control Module References for scan tool information

Circuit/System Verification

1. Ignition ON.
2. Verify all scan tool 5V Reference Circuit Status parameters do not display Malfunction.
   - **If Malfunction is displayed**

     Refer to Circuit/System Testing below.

   - **If Malfunction is not displayed**
3. Operate the vehicle within the Conditions for Running the DTC. You may also operate the vehicle within the conditions that you observed from the Freeze Frame/Failure Records data.
4. Verify the DTC does not set.
   - **If the DTC sets**

     Refer to Circuit/System Testing below.

   - **If the DTC does not set**
5. All OK.

Circuit/System Testing

NOTE: Additional DTCs will set when disconnecting the components.

1. Ignition OFF, disconnect the harness connector at all appropriate sensors for the applicable DTC. Refer to Diagnostic Aids.
2. Ignition ON.
3. Test for 4.8-5.2 V between one of the 5V reference circuits and ground.
   - **If less than 4.8 V**
     1. Ignition OFF, disconnect the harness connectors at the K20 Engine Control Module.
     2. Test for infinite resistance between the 5V reference circuit for each applicable component and ground.
        - If less than infinite resistance, repair the short to ground on the circuit.
        - If infinite resistance, replace the K20 Engine Control Module.
   - **If greater than 5.2 V**
     1. Ignition OFF, disconnect the harness connectors at the K20 Engine Control Module.
     2. Test for less than 1 V between the 5V reference circuit for each applicable component and ground.
        - If 1 V or greater, repair the short to voltage on the circuit.

- If less than 1 V, replace the K20 Engine Control Module.
- **If between 4.8-5.2 V**

NOTE: A short to voltage or ground on the signal circuit of certain components may cause this DTC to set.

4. Verify the appropriate scan tool 5V Reference 1, 2, 3, or 4 Circuit Status parameter displays OK while connecting each component associated with the 5V reference circuit one at a time.
   - **If OK is not displayed when a component is connected**

     Replace the component.

   - **If OK is displayed after all components have been connected**
5. All OK.

Repair Instructions

Perform the **Diagnostic Repair Verification** after completing the repair.

- **Accelerator Pedal Position Sensor Replacement**
- **Air Conditioning (A/C) Refrigerant Pressure Sensor Replacement**
- **Brake Pedal Position Sensor Replacement**
- **Camshaft Position Sensor Replacement**
- **Clutch Pedal Position Sensor Replacement**
- **Crankshaft Position Sensor Replacement**
- **Fuel Tank Pressure Sensor Replacement**
- **Manifold Absolute Pressure Sensor Replacement**
- **Mass Airflow Sensor Replacement**
- **Secondary Air Injection Check Valve Replacement**
- **Throttle Body Assembly Replacement**
- **Vehicle Speed Sensor Replacement**
- **Control Module References** for engine control module replacement, programming, and setup.

DTC P0650, P263A, OR P263B

Diagnostic Instructions

- Perform the **Diagnostic System Check - Vehicle** prior to using this diagnostic procedure.
- Review **Strategy Based Diagnosis** for an overview of the diagnostic approach.
- **Diagnostic Procedure Instructions** provides an overview of each diagnostic category.

DTC Descriptor

DTC P0650

Malfunction Indicator Lamp (MIL) Control Circuit Open

DTC P263A

Malfunction Indicator Lamp (MIL) Control Circuit Low Voltage

DTC P263B

Malfunction Indicator Lamp (MIL) Control Circuit High Voltage

Diagnostic Fault Information

Circuit	Short to Ground	Open/High Resistance	Short to Voltage	Signal Performance
Ignition Voltage	P0650	P0650	-	-
MIL Control	P0650, P263A*	P0650, P263A	P0650, P263B	-
* The MIL remains ON				

Circuit/System Description

The malfunction indicator lamp (MIL) illuminates to inform the driver that an emission system fault has occurred and the engine control system requires service. Ignition voltage is supplied directly to the MIL. The engine control module (ECM) turns the MIL ON by grounding the MIL control circuit when the emission system fault occurs. Under normal operating conditions, the MIL should be ON only when the ignition is ON and the engine is OFF.

Conditions for Running the DTC

- The engine speed is greater than 80 RPM.
- The ignition voltage is between 11-32 V.
- The DTCs run continuously when the above conditions are met.

Conditions for Setting the DTC

DTC P0650

The ECM detects low voltage during the MIL control circuit driver OFF state.

DTC P263A

The ECM detects low voltage during the MIL control circuit driver OFF state.

DTC P263B

The ECM detects high voltage on the MIL control circuit during the driver ON state.

Action Taken When the DTC Sets

DTC P0650, P263A, and P263B are Type B DTCs.

Conditions for Clearing the DTC

DTC P0650, P263A, and P263B are Type B DTCs.

Diagnostic Aids

- If the condition is intermittent, move the related harnesses and connectors while monitoring the scan tool MIL control circuit status parameters. Perform this test with the ignition ON and the engine OFF, and with the engine running. The MIL control circuit status parameters change from OK or Not Run to Fault if there is a condition with a circuit or a connection.
- If the ECM detects low voltage on the MIL control circuit during the MIL control circuit driver OFF state, DTCs P0650 and DTC P263A may set simultaneously.

Reference Information

Schematic Reference

- **Engine Controls Schematics**
- **Instrument Cluster Schematics**

Connector End View Reference

COMPONENT CONNECTOR END VIEWS - INDEX

Electrical Information Reference

- **Circuit Testing**
- **Connector Repairs**
- **Testing for Intermittent Conditions and Poor Connections**
- **Wiring Repairs**

DTC Type Reference

Powertrain Diagnostic Trouble Code (DTC) Type Definitions

Scan Tool Reference

Control Module References for scan tool information

Circuit/System Verification

1. Ignition ON.
2. Command the malfunction indicator lamp ON and OFF with a scan tool.
3. Verify that the malfunction indicator lamp turns ON and OFF as commanded.
    - **If the malfunction indicator lamp does not turn ON and OFF as commanded**

      Refer to Circuit/System Testing below

    - **If the malfunction indicator lamp turns ON and OFF as commanded**
4. Ignition ON.
5. Command the malfunction indicator lamp ON and OFF with a scan tool and verify that the control circuit status parameters listed below display OK or Not Run.
    - The MIL Control Circuit Low Voltage Test Status
    - The MIL Control Circuit Open Test Status
    - The MIL Control Circuit High Voltage Test Status
    - **If Malfunction is displayed**

      Refer to Circuit/System Testing below

    - **If OK or Not Run is displayed**
6. Engine running.
7. Command the malfunction indicator lamp ON and OFF with a scan tool and verify that the control circuit status parameters listed below display OK or Not Run.
    - The MIL Control Circuit Low Voltage Test Status
    - The MIL Control Circuit Open Test Status
    - The MIL Control Circuit High Voltage Test Status
    - **If Malfunction is displayed**

      Refer to Circuit/System Testing below

    - **If OK or Not Run is displayed**
8. Operate the vehicle within the Conditions for Running the DTC. You may also operate the vehicle within the conditions that you observed from the Freeze Frame/Failure Records data.
    - **If the DTC sets**

      Refer to Circuit/System Testing below

    - **If the DTC does not set**
9. All OK.

Circuit/System Testing

1. Ignition OFF.

2. Disconnect the X1 harness connector at the K20 Engine Control Module.
3. Ignition ON.
4. Verify the malfunction indicator lamp does not illuminate.
    - **If the malfunction indicator lamp illuminates**
    1. Test for infinite resistance between the malfunction indicator lamp control circuit terminal X1 1 and ground.
        - If less than infinite resistance, repair the short to ground in the circuit.
        - If infinite resistance, replace the P16 instrument cluster.
    - **If the malfunction indicator lamp does not illuminate**
5. Connect a 3 A fused jumper wire between the malfunction indicator lamp control circuit terminal X1 1 and ground.
6. Verify the malfunction indicator lamp illuminates.
    - **If the malfunction indicator lamp does not illuminate**
    1. Test the malfunction indicator lamp control circuit terminal X1 1 for a short to voltage or an open/high resistance.
        - If the malfunction indicator lamp control circuit terminal X1 1 is shorted to voltage or has an open/high resistance, repair as necessary.
        - If the malfunction indicator lamp control circuit terminal X1 1 tests normal
    2. Test the instrument cluster ignition voltage circuit for a short to ground or open/high resistance.
        - If the instrument cluster ignition voltage circuit is shorted to ground or has an open/high resistance, repair as necessary.
        - If the instrument cluster ignition voltage circuit tests normal, replace the P16 instrument panel cluster/bulb.
    - **If the malfunction indicator lamp illuminates**
7. Replace the K20 Engine Control Module.

Repair Instructions

Perform the **Diagnostic Repair Verification** after completing the repair.

- **Instrument Cluster Replacement**
- **Control Module References** for engine control module replacement, programming, and setup.

DTC P0660, P0661, OR P0662

Diagnostic Instructions

- Perform the **Diagnostic System Check - Vehicle** prior to using this diagnostic procedure.
- Review **Strategy Based Diagnosis** for an overview of the diagnostic approach.
- **Diagnostic Procedure Instructions** provides an overview of each diagnostic category.

DTC Descriptors

DTC P0660

Intake Manifold Tuning Control Valve Control Circuit

DTC P0661

Intake Manifold Tuning Control Valve Control Circuit Low Voltage

DTC P0662

Intake Manifold Tuning Control Valve Control Circuit High Voltage

Diagnostic Fault Information

Circuit	Short to Ground	High Resistance	Open	Short to Voltage	Signal Performance
Ignition 1 Voltage	P0661	-	P0660, P0661	-	-
Intake Manifold Tuning Valve Solenoid Control	P0661	-	P0660, P0661	P0662	-

Circuit/System Description

The intake manifold tuning valve controls the length of the intake runners in the intake manifold. The intake manifold contains both long and short runners. The tuning valve controls only the short runners. When the valve is closed, the short runners are blocked, which forces the air through the long runners. This results in tuning effects in the manifold that increases the torque produced by the engine at lower engine speeds. When the valve is open, both the long runners and short runners are open, but the majority of the air travels through the short runners, since the air will naturally follow the shortest path into the cylinder. This allows the air to flow through the short runners, which results in increased torque at higher engine speeds.

Ignition voltage is supplied directly to the intake manifold tuning valve actuator. The engine control module (ECM) controls the valve actuator motor by grounding the control circuit with a solid state device called a driver. The driver is equipped with a feedback circuit that is pulled up to a voltage. The ECM can determine if the control circuit is open, shorted to ground, or shorted to a voltage by monitoring the feedback voltage signal.

The tuning valve actuator contains a position sensor, which outputs a pulse width modulated (PWM) signal, to detect the actual position of the tuning valve in relation to its commanded position. Variations in the duty cycle of the PWM signal enables the ECM to detect a physically broken, restricted or stuck tuning valve.

Conditions for Running the DTC

- Engine speed is at least 400 rpm.
- The battery voltage is at least 11 V.
- DTCs P0660, P0661 and P0662 run continuously when the above conditions are met.

Conditions for Setting the DTC

P0660

The ECM detects an open circuit on the intake manifold tuning valve control circuit for greater than 0.5 s.

P0661

The ECM detects a short to ground or an open circuit on the intake manifold tuning valve control circuit for greater than 0.5 s.

P0662

The ECM detects a short to voltage on the intake manifold tuning valve control circuit for greater than 0.5 s.

Action Taken When the DTC Sets

DTCs P0660, P0661 and P0662 are Type B DTCs.

Conditions for Clearing the DTC

DTCs P0660, P0661 and P0662 are Type B DTCs.

Reference Information

Schematic Reference

Engine Controls Schematics

Connector End View Reference

COMPONENT CONNECTOR END VIEWS - INDEX

Electrical Information Reference

- **Circuit Testing**
- **Connector Repairs**
- **Testing for Intermittent Conditions and Poor Connections**
- **Wiring Repairs**

DTC Type Reference

Powertrain Diagnostic Trouble Code (DTC) Type Definitions

Scan Tool Reference

Control Module References for scan tool information

Circuit/System Verification

1. Engine running.
2. Verify a click is heard or felt from the Q22 Intake Manifold Tuning Solenoid Valve when commanding the Intake Manifold Tuning Control Valve Open and Closed with a scan tool.
   - **If a click is not heard or felt**

     Refer to Circuit/System Testing below

   - **If a click is heard or felt**
3. Verify the circuit status parameters listed below do not display Malfunction when commanding the Intake Manifold Tuning Control Valve Open and Closed with a scan tool:
   - Intake Manifold Tuning Control Valve Control Circuit High Voltage Test Status
   - Intake Manifold Tuning Control Valve Control Circuit Open Test Status
   - Intake Manifold Tuning Control Valve Control Circuit Low Voltage Test Status
   - **If Malfunction is displayed**

     Refer to Circuit/System Testing below

   - **If Malfunction is not displayed**
4. Operate the vehicle within the Conditions for Running the DTC. You may also operate the vehicle within the conditions that you observed from the Freeze Frame/Failure Records data.
   - **If a DTC sets**

     Refer to Circuit/System Testing below

   - **If a DTC does not set**
5. All OK.

Circuit/System Testing

1. Ignition OFF, disconnect the harness connector at the Q22 Intake Manifold Tuning Solenoid Valve. Ignition ON.
2. Verify that a test lamp illuminates between the ignition circuit terminal 1 and ground.
   - **If the test lamp does not illuminate and the circuit fuse is good**
   1. Ignition OFF, remove the test lamp.
   2. Test for less than 2 ohms in the ignition circuit end to end.
      - If 2 ohms or greater, repair the open/high resistance in the circuit.
      - If less than 2 ohms, verify the fuse is not open and there is voltage at the fuse.
   - **If the test lamp does not illuminate and the circuit fuse is open**
   1. Ignition OFF, remove the test lamp.

NOTE: An internal short in any component supplied by the fuse may cause the fuse to open and set a DTC when the component is activated.

2. Test for infinite resistance between the ignition circuit and ground.
    - If less than infinite resistance, repair the short to ground on the circuit.
    - If infinite resistance, test all components connected to the ignition voltage circuit for a short and replace as necessary.
- **If the test lamp illuminates**

3. Verify that a test lamp does not illuminate between the control circuit terminal 2 and the ignition circuit terminal 1.
    - **If the test lamp illuminates**
    1. Ignition OFF, disconnect the harness connector at the K20 Engine Control Module.
    2. Test for infinite resistance between the control circuit and ground.
        - If less than infinite resistance, repair the short to ground on the circuit.
        - If infinite resistance, replace the K20 Engine Control Module.
    - **If the test lamp does not illuminate**
4. Remove the test lamp.
5. Verify the scan tool Intake Manifold Tuning Control Valve Control Circuit High Voltage Test Status parameter is OK when commanding the Intake Manifold Tuning Control Valve Open with a scan tool.
    - **If OK is not displayed**
    1. Ignition OFF, disconnect the harness connector at the K20 Engine Control Module, ignition ON.
    2. Test for less than 1 V between the control circuit and ground.
        - If 1 V or greater, repair the short to voltage on the circuit.
        - If less than 1 V, replace the K20 Engine Control Module.
    - **If OK is displayed**
6. Install a 3 A fused jumper wire between the control circuit terminal 3 and the ignition circuit terminal 1.
7. Verify the scan tool Intake Manifold Tuning Control Valve Control Circuit High Voltage Test Status parameter is Malfunction when commanding the Intake Manifold Tuning Control Valve Open with a scan tool.
    - **If Malfunction is not displayed**
    1. Ignition OFF, disconnect the harness connector at the K20 Engine Control Module.
    2. Test for less than 2 ohms in the control circuit end to end.
        - If 2 ohms or greater, repair the open/high resistance in the circuit.
        - If less than 2 ohms, replace the K20 Engine Control Module.
    - **If Malfunction is displayed**
8. Replace the Intake Manifold.

Repair Instructions

Perform the **Diagnostic Repair Verification** after completing the repair.

- **Intake Manifold Replacement**
- **Control Module References** for replacement, programming, and setup.

DTC P0685-P0687, P0689, P0690, OR P1682

Diagnostic Instructions

- Perform the **Diagnostic System Check - Vehicle** prior to using this diagnostic procedure.
- Review **Strategy Based Diagnosis** for an overview of the diagnostic approach.
- **Diagnostic Procedure Instructions** provides an overview of each diagnostic category.

DTC Descriptors

DTC P0685

Engine Controls Ignition Relay Control Circuit

DTC P0686

Engine Controls Ignition Relay Control Circuit Low Voltage

DTC P0687

Engine Controls Ignition Relay Control Circuit High Voltage

DTC P0689

Engine Controls Ignition Relay Feedback Circuit Low Voltage

DTC P0690

Engine Controls Ignition Relay Feedback Circuit High Voltage

DTC P1682

Ignition 1 Switch Circuit 2

Diagnostic Fault Information

Powertrain Relay

Circuit	Short to Ground	Open/High Resistance	Short to Voltage
Relay Coil Supply Voltage	P0689, P1682	P0685, P0689, P1682	-
Relay Control Circuit	P0686, P0690	P0685, P0689, P1682	P0685, P0687, P0689, P1682
Relay Feedback Circuit	P0689, P1682	P0689, P1682	P0690

Ignition Main Relay

Circuit	Short to Ground	Open/High Resistance	Short to Voltage
Ignition 1 Signal	1	1	2

1. No Crank condition.
2. Engine continues to operate with ignition OFF.

Typical Scan Tool Data

Engine Controls Ignition Relay Control Circuit Low Voltage, Open, and High Voltage Test Status-Component Commanded OFF

Circuit	Short to Ground	Open	Short to Voltage
Operating Conditions: Component commanded OFF **Parameter Normal Range:** The following illustrates the normal parameter state with no circuit conditions: • Component OFF - OK for Open/Low Voltage Test Status and Not Run for High Voltage Test Status • Component ON - Not Run for Open/Low Voltage Test Status and OK for High Voltage Test Status			
Battery Voltage	Malfunction	Malfunction	-
Engine Controls Ignition Relay Control Circuit	Malfunction	Malfunction	Not Run

Engine Controls Ignition Relay Control Circuit Low Voltage, Open, and High Voltage Test Status-Component Commanded ON

Circuit	Short to Ground	Open	Short to Voltage
Operating Conditions: Component commanded ON **Parameter Normal Range:** The following illustrates the normal parameter state with no circuit conditions: • Component OFF - OK for Open/Low Voltage Test Status and Not Run for High Voltage Test Status • Component ON - Not Run for Open/Low Voltage Test Status and OK for High Voltage Test Status			
Battery Voltage	Not Run	Not Run	-
Engine Controls Ignition Relay Control Circuit	Not Run	Not Run	Malfunction

Circuit/System Description

There are 2 ignition voltage circuits supplied to the engine control module (ECM). One is supplied by the powertrain relay, and the other is supplied by the ignition main relay. The ECM monitors and compares the ignition voltage supplied by the 2 relays.

Conditions for Running the DTC

P0685, P0686, P0687

The DTC runs when Ignition 1 signal voltage is greater than 11 V.

P0689

- DTC P0685 is not set.
- The powertrain relay is commanded ON.
- Ignition 1 signal voltage is greater than 11 V.
- The DTC runs continuously when the above conditions are met.

P0690

- P0685 is not set.
- The powertrain relay is commanded OFF.
- The DTC runs continuously when the above conditions are met.

P1682

- The powertrain relay is commanded ON.
- Ignition voltage is greater than 5.5 V.
- The DTC runs continuously when the above conditions are met.

Conditions for Setting the DTC

P0685

The ECM detects that the commanded state of the driver and the actual state of the control circuit do not match for greater than 2 s.

P0686

The ECM detects a short to ground on the control circuit for greater than 2 s.

P0687

The ECM detects a short to voltage on the control circuit for greater than 2 s.

P0689

The ECM detects the engine controls ignition relay feedback circuit is less than 5 V when the powertrain relay is commanded ON.

P0690

- The ECM detects the engine controls ignition relay feedback circuit is greater than 4 V when the powertrain relay is commanded OFF.
- The condition is present for greater than 5 s.

P1682

The ECM detects that the voltage level difference is greater than 3 V between the 2 ignition voltage circuits for less than 1 s.

Action Taken When the DTC Sets

- DTCs P0685, P0686, P0687, P0689, and P0690 are Type B DTCs.
- DTC P1682 is a Type A DTC.

Conditions for Clearing the DTC

- DTCs P0685, P0686, P0687, P0689, and P0690 are Type B DTCs.
- DTC P1682 is a Type A DTC.

Diagnostic Aids

The powertrain relay may also be labeled the engine controls ignition relay, the engine control module relay, or the main relay. The ignition main relay may also be labeled the run/crank relay, the ignition run relay, the ignition 1 relay, or the ignition relay.

Reference Information

Schematic Reference

- **Engine Controls Schematics**
- **Power Distribution Schematics**

Connector End View Reference

COMPONENT CONNECTOR END VIEWS - INDEX

Electrical Information Reference

- **Circuit Testing**
- **Connector Repairs**
- **Electrical Center Identification Views**
- **Testing for Intermittent Conditions and Poor Connections**
- **Wiring Repairs**

DTC Type Reference

Powertrain Diagnostic Trouble Code (DTC) Type Definitions

Scan Tool Reference

Control Module References for scan tool information

Circuit/System Verification

NOTE:

- **A short to voltage on other components may cause DTC P0690 to set. If any other DTC is set, diagnose that DTC first.**
- **If you were sent here from Engine Cranks But Does Not Run, proceed to Circuit/System Testing.**

1. Verify DTC P0685, P0686, P0687, P0689, P0690, or P1682 is not set.
   - **If any of the DTCs are set**

     Refer to Circuit/System Testing below

   - **If none of the DTCs are set**
2. Operate the vehicle within the Conditions for Running the DTC. You may also operate the vehicle within the conditions that you observed from the Freeze Frame/Failure Records data.
   - **If any of the DTCs are set**

     Refer to Circuit/System Testing below

   - **If none of the DTCs are set**
3. All OK.

Circuit/System Testing

NOTE: **You must perform the Circuit/System Verification before proceeding with Circuit/System Testing unless sent here from Engine Cranks But Does Not Run.**

1. Ignition OFF, disconnect the KR75 Powertrain Relay.
2. Verify a test lamp illuminates between ground and the relay circuit terminals listed below:
   - Terminal 1
   - Terminal 3
   - **If the test lamp does not illuminate**

     Replace the front compartment fuse block. Refer to **Front Compartment Fuse Block Replacement** .

   - **If the test lamp illuminates**

NOTE:

- **High resistance in the circuit/underhood fuse block for either the powertrain relay or the ignition main relay can cause DTC P1682 to set.**

- **A short to voltage on any of the circuits supplied by the powertrain relay can cause DTC P0690 to set.**

3. Ignition ON.
4. Verify that a test lamp does not illuminate between the ignition voltage circuit terminal 5 and ground.
   - **If the test lamp illuminates**
   1. Ignition OFF, disconnect the X2 harness connector at the K20 Engine Control Module.
   2. Ignition ON.
   3. Test for less than 1 V between ground and connector terminals 28.
      - If 1 V or greater, repair the short to voltage in the circuit.
      - If less than 1 V, replace the K20 Engine Control Module.
   - **If the test lamp does not illuminate**
5. Ignition OFF, connect a 20 A fused jumper wire between the relay switch B+ circuit terminal 3 and the relay switch ignition voltage circuit terminal 5.
6. Ignition ON.
7. Observe the scan tool Engine Controls Ignition Relay Feedback Signal parameter. The K20 Engine Control Module should communicate, and the parameter should display B+.
   - **If the parameter does not display B+ or the K20 Engine Control Module does not communicate**
   1. Ignition OFF, disconnect the X2 harness connector at the K20 Engine Control Module
   2. Test for less than 2 ohms in the relay switch ignition voltage circuit end to end.
      - If 2 ohms or greater, repair the open/high resistance in the circuit.
      - If less than 2 ohms
   3. Test for infinite resistance between the relay switch ignition voltage circuit and ground.
      - If less than infinite resistance, repair the short to ground on the circuit.
      - If infinite resistance, replace the K20 Engine Control Module.
   - **If the parameter displays B+**
8. Ignition OFF, connect a DMM, set to the diode setting, between control circuit terminal 2 and ground.
9. Verify the DMM displays OL.
   - **If the DMM does not display OL**
   1. Disconnect the X1 harness connector at the K20 Engine Control Module.
   2. Test for infinite resistance between ground and the relay control circuit.
      - If less than infinite resistance, repair the short to ground in the circuit.
      - If infinite resistance, replace the K20 Engine Control Module.
   - **If the DMM displays OL**
10. Ignition ON.
11. Verify the DMM displays less than 1 V.
   - **If the DMM does not display less than 1 V**
   1. Ignition OFF, disconnect the X1 connector at the K20 Engine Control Module.

2. Ignition ON.
3. Test for less than 1 V on the relay control circuit.
    - If 1 V or greater, repair the short to voltage on the circuit.
    - If less than 1 V
4. Test for less than 2 ohms in the control circuit end to end.
    - If 2 ohms or greater, repair the open/high resistance in the circuit.
    - if less than 2 ohms, replace the K20 Engine Control Module.

- **If the DMM displays less than 1 V**

12. Test or replace the KR75 Powertrain Relay.

Component Testing

Relay Test

1. Ignition OFF, disconnect the KR75 Powertrain Relay.
2. Test for 70-110 ohms between terminals 1 and 2:
    - **If less than 70 ohms or greater than 110 ohms**

      Replace the relay.

    - **If between 70-110 ohms**
3. Test for infinite resistance between the terminals listed below:
    - 3 and 2
    - 3 and 5
    - 3 and 1
    - 1 and 5
    - **If less than infinite resistance**

      Replace the relay.

    - **If infinite resistance**
4. Install a 20 A fused jumper wire between relay terminal 1 and 12 V. Install a jumper wire between relay terminal 2 and ground.
5. Test for less than 2 ohms between terminals 3 and 5.
    - **If 2 ohms or greater**

      Replace the relay.

    - **If less than 2 ohms**
6. All OK.

Repair Instructions

Perform the **Diagnostic Repair Verification** after completing the diagnostic procedure.

- **Relay Replacement (Within an Electrical Center)** , **Relay Replacement (Attached to Wire Harness)**
- **Control Module References** for Engine Control Module replacement, programming, and setup

DTC P069E

Diagnostic Instructions

- Perform the **Diagnostic System Check - Vehicle** Prior to using this diagnostic procedure.
- Review **Strategy Based Diagnosis** for an overview of the diagnostic approach.
- **Diagnostic Procedure Instructions** provides an overview of each diagnostic category.

DTC Descriptor

DTC P069E

Fuel Pump Control Module Requested MIL Illumination

Circuit/System Description

The fuel pump control module monitors the fuel pump control system for any conditions which may adversely affect vehicle emissions. If an adverse condition is detected, the fuel pump control module sets a fuel pump control system DTC. The fuel pump control module then sends a serial data message to the engine control module (ECM) requesting malfunction indicator lamp (MIL) illumination. When the ECM receives the message from the fuel pump control module, DTC P069E will set in the ECM.

Conditions for Running the DTC

The ignition is ON, or the engine is running for greater than 3 s.

Conditions for Setting the DTC

The fuel pump control module requests the ECM to illuminate the MIL.

Action Taken When the DTC Sets

- DTC P069E is a Type A DTC.
- DTC P069E will continue to be current or active as long as the fuel pump control module is requesting MIL illumination.

Conditions for Clearing the DTC

DTC P069E is a Type A DTC.

Diagnostic Aids

Communication codes, U-codes, as well as powertrain codes, P-codes, set in the fuel pump control module will cause the fuel pump control module to request DTC P069E to be set in the ECM.

Reference Information

DTC Type Reference

Powertrain Diagnostic Trouble Code (DTC) Type Definitions

Scan Tool Reference

Control Module References for scan tool information

Circuit/System Verification

NOTE:

- **Do not replace the engine control module for this DTC. DTC P069E is an informational DTC.**
- **Correct any engine control and communication DTCs before diagnosing fuel pump control module DTCs.**

1. Verify there are no engine control or communication DTCs set.
   - **If a DTC is set**

     Refer to **Diagnostic Trouble Code (DTC) List - Vehicle** .

   - **If a DTC is not set**
2. Verify there are no fuel pump control module DTCs set.
   - **If a DTC is set**

     Refer to **Diagnostic Trouble Code (DTC) List - Vehicle** .

   - **If a DTC is not set**
3. Operate the vehicle within the Conditions for Running the DTC. You may also operate the vehicle within the conditions that you observed from the Freeze Frame/Failure Records data.
4. Verify the DTC does not set.
   - **If the DTC sets**

     Refer to **Diagnostic Trouble Code (DTC) List - Vehicle** .

   - **If the DTC does not set**
5. All OK.

Repair Instructions

Perform the **Diagnostic Repair Verification** after completing the repair.

DTC P0700

Diagnostic Instructions

- Perform the **Diagnostic System Check - Vehicle** prior to using this diagnostic procedure.
- Review **Strategy Based Diagnosis** for an overview of the diagnostic approach.
- **Diagnostic Procedure Instructions** provides an overview of each of the diagnostic category.

DTC Descriptor

DTC P0700

Transmission Control Module Requested MIL Illumination

Circuit/System Description

Diagnostic trouble code (DTC) P0700 is an informational DTC that indicates that an emission related transmission DTC has set in the transmission control module (TCM). The engine control module (ECM) turns ON the malfunction indicator lamp (MIL) when the TCM sends a message over the serial data circuit requesting MIL illumination. The DTC information for the ECM will only display DTC P0700, and the ECM Freeze Frame/Failure Records data will display the engine operating conditions that were present when the transmission DTC was set. The TCM Freeze Frame/Failure records data is available from the DTC that was set in the TCM.

Conditions for Running the DTC

- The ignition is ON or the engine is operating.
- DTC P0700 runs continuously.

Conditions for Setting the DTC

The ECM receives a serial data message from the TCM requesting the ECM to turn ON the MIL.

Action Taken When the DTC Sets

DTC P0700 is a Type A DTC.

Conditions for Clearing the MIL/DTC

DTC P0700 is a Type A DTC.

Diagnostic Aids

Communication codes, U-codes, as well as powertrain codes, P-codes, set in the TCM can cause the TCM to request DTC P0700 to be set in the ECM.

Reference Information

DTC Type Reference

Powertrain Diagnostic Trouble Code (DTC) Type Definitions

Scan Tool Reference

Control Module References for scan tool information

Circuit/System Verification

NOTE:

- **Do not replace the engine control module for this DTC. DTC P0700 is an informational DTC.**
- **Correct any engine control and communication DTCs before diagnosing transmission control module DTCs.**

1. Verify there are no engine control or communication DTCs set.
   - **If a DTC is set**

     Refer to **Diagnostic Trouble Code (DTC) List - Vehicle** .

   - **If a DTC is not set**
2. Verify there are no transmission control module DTCs set.
   - **If a DTC is set**

     Refer to **Diagnostic Trouble Code (DTC) List - Vehicle** .

   - **If a DTC is not set**
3. Operate the vehicle within the Conditions for Running the DTC. You may also operate the vehicle within the conditions that you observed from the Freeze Frame/Failure Records data.
4. Verify the DTC does not set.
   - **If the DTC sets**

     Refer to **Diagnostic Trouble Code (DTC) List - Vehicle** .

   - **If the DTC does not set**
5. All OK.

Repair Instructions

Perform the **Diagnostic Repair Verification** after completing the repair.

DTC P11C2-P11C4

Diagnostic Instructions

- Perform the **Diagnostic System Check - Vehicle** prior to using this diagnostic procedure.
- Review **Strategy Based Diagnosis** for an overview of the diagnostic approach.
- **Diagnostic Procedure Instructions** provides an overview of each diagnostic category.

DTC Descriptors

DTC P11C2

Intake Air Humidity Sensor Circuit Low Voltage

DTC P11C3

Intake Air Humidity Sensor Circuit High Voltage

DTC P11C4

Intake Air Humidity Sensor Circuit Erratic

Diagnostic Fault Information

Intake Air Humidity Sensor

Circuit	Short to Ground	Open/High Resistance	Short to Voltage	Signal Performance
5 V Reference	P0097, P0651, P11C2, P2199**, P2227, P2228	P0096, P0097, P11C2, P2199**, P2227, P2228	P0097, P0651, P11C2, P2199**, P2227, P2228	-
Signal	P0097, P11C3, P2199**	P0097, P11C2, P2199**	P0097*, P11C2, P2199**	-
Low Reference	-	P0097, P0113, P11C2, P2227, P2229	*	-
*Internal ECM or sensor damage may occur if the circuit is shorted to B+. ** Where used.				

Typical Scan Tool Data

Intake Air Humidity

Circuit	Short to Ground	Open or High Resistance	Short to Voltage
Operating Conditions: Engine Running **Parameter Normal Range:** Varies with ambient humidity and temperature; and engine bay conditions			
5 V Reference	0 %	0 %	-
Signal	100 %	0 %	0 %*
Low Reference	-	0 %	*
*Internal ECM or sensor damage may occur if the circuit is shorted to B+			

Circuit/System Description

The sensors listed below are integrated within the multifunction intake air sensor:

- IAT sensor 1
- IAT sensor 2
- Humidity sensor
- MAF sensor
- BARO pressure sensor

The intake air humidity sensor measures the ambient humidity of the air in the sensor bore. The signal varies with intake air humidity and is displayed by the scan tool as duty cycle %. The engine control module (ECM) applies 5 V to the signal circuit. The humidity sensor and the IAT sensor 2 share the same circuit.

The sensors listed below share an ECM supplied 5 V reference circuit:

- IAT sensor 2
- Humidity sensor
- Barometric pressure (BARO) sensor

The sensors listed below share an ECM supplied low reference circuit:

- IAT sensor 1
- IAT sensor 2
- Humidity sensor
- Barometric pressure (BARO) sensor

Conditions for Running the DTCs

P11C2, P11C3, and P11C4

- The ignition is ON.
- The Ignition 1 voltage is at least 11 V for longer than 0.9 s.
- These DTCs run continuously within the enabling conditions.

Conditions for Setting the DTCs

P11C2

The ECM detects that the humidity sensor signal is less than or equal to 5 % for greater than 5 s.

P11C3

The ECM detects that the humidity sensor signal is greater than or equal to 95 % for greater than 5 s.

P11C4

The ECM monitors the humidity sensor signal every 0.1 s, to determine if the signal has changed more than 80 %. The DTC fails when the condition exists for longer than 4 s.

Action Taken When the DTC Sets

- DTCs P11C2, P11C3, P11C4 are Type B DTCs.
- DTCs P11C2, P11C3, P11C4 are Type C DTCs; with RPO LUW.

Conditions for Clearing the MIL/DTC

- DTCs P11C2, P11C3, P11C4 are Type B DTCs.
- DTCs P11C2, P11C3, P11C4 are Type C DTCs; with RPO LUW.

Diagnostic Aids

- The Intake Air Humidity Signal parameter displays the measured humidity within the air intake system and may differ from atmospheric humidity measured outside the air intake system.
- The humidity sensor and the IAT sensor 2 signals are sent to the ECM on the same circuit. If the Intake Air Humidity parameter displays the value: 0 % or 100 %, and there are also IAT Sensor 2 DTCs, check for a circuit problem.

Reference Information

Schematic Reference

Engine Controls Schematics

Connector End View Reference

COMPONENT CONNECTOR END VIEWS - INDEX

Electrical Information Reference

- **Circuit Testing**
- **Connector Repairs**
- **Testing for Intermittent Conditions and Poor Connections**
- **Wiring Repairs**

DTC Type Reference

Powertrain Diagnostic Trouble Code (DTC) Type Definitions

Scan Tool Reference

Control Module References for scan tool information

Special Tools

EL-38522-A Variable Signal Generator

For equivalent regional tools, refer to **Special Tools** .

Circuit/System Verification

1. Ignition ON.
2. Verify that DTC DTC P0641, P0651, P0697, or P06A3 is not set.
   - **If any of the DTCs are set**

     Refer to **DTC P0641, P0651, P0697, or P06A3 (ECM)** for further diagnosis.

   - **If none of the DTCs are set**

NOTE: To minimize the effects of residual engine heat and sensor internal heating elements, perform Steps 3 and 4 of this verification procedure only if the ignition has been OFF for 8 hours or more.

3. Ignition ON.
4. Verify the following scan tool parameters are within 25°C (45°F) of each other.
   - Start-Up IAT Sensor 1
   - IAT Sensor 2
   - Start-Up ECT
   - **If not within 25°C (45°F)**

     Refer to Circuit/System Testing below.

   - **If within 25°C (45°F)**
5. Engine idling, verify the scan tool Intake Air Humidity parameter is between 5 and 90 %.
   - **If not between 5 and 90 %**

     Refer to Circuit/System Testing below.

   - **If between 5 and 90 %**
6. Operate the vehicle within the conditions for running the DTC. You may also operate the vehicle within the conditions that you observed from the freeze frame/failure records data.
7. Verify the DTC does not set.
   - **If the DTC does set**

     Refer to Circuit/System Testing below.

- **If the DTC does not set**

8. All OK

Circuit/System Testing

NOTE: You must perform the Circuit/System Verification before proceeding with Circuit/System Testing.

1. Ignition OFF, and all vehicle systems OFF, it may take up to 2 min. for all vehicle systems to power down. Disconnect the harness connector at the B75C Multifunction Intake Air sensor.
2. Test for less than 2 ohms between the low reference circuit terminal 7 and ground.
   - **If 2 ohms or greater**
     1. Ignition OFF, disconnect the harness connector at the K20 Engine Control Module.
     2. Test for less than 2 ohms in the low reference circuit end to end.
        - If 2 ohms or greater, repair the open or high resistance in the circuit.
        - If less than 2 ohms replace the K20 Engine Control Module.
   - **If less than 2 ohms**
3. Ignition ON, test for 4.8-5.2 V between the 5 V reference circuit terminal 2 and ground.
   - **If less than 4.8 V**
     1. Ignition OFF, disconnect the harness connector at the K20 Engine Control Module.
     2. Test for infinite resistance between the signal circuit and ground.
        - If less than infinite resistance, repair the short to ground on the circuit.
        - If infinite resistance
     3. Test for less than 2 ohms in the signal circuit end to end.
        - If 2 ohms or greater, repair the open/high resistance in the circuit.
        - If less than 2 ohms, replace the K20 Engine Control Module.
   - **If greater than 5.2 V**

     NOTE: If the 5 V reference circuit is shorted to a voltage the engine control module or the sensor may be damaged.

     1. Ignition OFF, disconnect the harness connector at the K20 Engine Control Module.
     2. Ignition ON, test for less than 1 V between the 5 V reference circuit and ground.
        - If 1 V or greater, repair the short to voltage on the circuit.
        - If less than 1 V, replace the K20 Engine Control Module.
   - **If between 4.8-5.2 V**
4. Ignition ON, test for 4.8-5.2 V between the humidity signal circuit terminal 1 and ground.
   - **If less than 4.8 V**
     1. Ignition OFF, disconnect the harness connector at the K20 Engine Control Module.
     2. Test for infinite resistance between the signal circuit and ground.

- If less than infinite resistance, repair the short to ground on the circuit.
- If infinite resistance

3. Test for less than 2 ohms in the signal circuit end to end.
   - If 2 ohms or greater, repair the open/high resistance in the circuit.
   - If less than 2 ohms, replace the K20 Engine Control Module.

- **If greater than 5.2 V**

NOTE: If the signal circuit is shorted to a voltage the engine control module or the sensor may be damaged.

1. Ignition OFF, disconnect the harness connector at the K20 Engine Control Module.
2. Ignition ON, test for less than 1 V between the signal circuit and ground.
   - If 1 V or greater, repair the short to voltage on the circuit.
   - If less than 1 V, replace the K20 Engine Control Module.

- **If between 4.8-5.2 V**

5. Determine if **EL-38522-A** Variable Signal Generator or equivalent is available.
   - **If EL-38522-A, Variable Signal Generator; or equivalent is not available**

   1. Replace the K20 Engine Control Module.
   2. Operate the vehicle within the Conditions for Running the DTC. You may also operate the vehicle within the conditions that you observed from the Freeze Frame/Failure Records data.
   3. Verify the DTC does not set.
      - **If the DTC sets**

        Refer to step 9.

      - **If no DTCs set**
   4. All OK.

   - **If EL-38522-A, Variable Signal Generator; or equivalent is available**

6. Ignition OFF, connect the leads of the **EL-38522-A** Variable Signal Generator as follows:
   - Red lead to the signal circuit terminal 1 at the harness connector
   - Black leads to ground
   - Battery voltage supply lead to B+
7. Set the **EL-38522-A** Variable Signal Generator to the following specifications.
   - Signal switch to 5 V
   - Frequency switch to 250 Hz
   - Duty Cycle switch to 50 % (Normal)
8. Ignition ON, verify the scan tool Intake Air Humidity parameter is between 45-55 %.
   - **If not between 45-55 %**

     Replace the K20 Engine Control Module.

- **If between 45-55 %**

9. Test or replace the B75C Multifunction Intake Air sensor.

Component Testing

Multifunction Intake Air Sensor

1. Ignition OFF, disconnect the harness connector at the B75C Multifunction Intake Air sensor.

   NOTE: A thermometer can be used to test the sensor off the vehicle.

2. Test the IAT sensor 1 by varying the sensor temperature while monitoring the sensor resistance. Compare the readings with the **Temperature Versus Resistance - Intake Air Temperature Sensor (Bosch Sensor)** table for Bosch Sensors. The resistance values should be in range of the table values.
   - **If not within the specified range.**

     Replace the B75C Multifunction Intake Air sensor.

   - **If within the specified range.**
3. All OK

Repair Instructions

Perform the **Diagnostic Repair Verification** after completing the repair.

- **Mass Airflow Sensor Replacement** for B75C Multifunction Intake Air sensor replacement.
- **Control Module References** for ECM replacement, programming, and setup

DTC P1255 OR P064A

Diagnostic Instructions

- Perform the **Diagnostic System Check - Vehicle** prior to using this diagnostic procedure.
- Review **Strategy Based Diagnosis** for an overview of the diagnostic approach.
- **Diagnostic Procedure Instructions** provides an overview of each diagnostic category.

DTC Descriptors

DTC P064A

Fuel Pump Control Module Performance

DTC P1255

Fuel Pump Control Module Driver High Temperature

Circuit/System Description

The engine control module (ECM) supplies voltage to the fuel pump control module when the ECM detects that the ignition is on. The voltage from the ECM to the fuel pump control module remains active for 2 seconds, unless the engine is in crank or run. While this voltage is being received, the fuel pump control module supplies a varying voltage to the fuel tank pump module in order to maintain the desired fuel pressure.

Conditions for Running the DTC

The engine is running.

Conditions for Setting the DTC

The fuel pump control module detects an over-temperature fault.

Action Taken When the DTC Sets

DTCs P064A and P1255 are Type A DTCs.

Conditions for Clearing the DTC

DTCs P064A and P1255 are Type A DTCs.

Diagnostic Aids

Using the Failure Records data may help locate an intermittent condition. If you cannot duplicate the DTC, the information in the Failure Records can help determine how many miles since the DTC set. The Fail Counter and Pass Counter can help determine how many ignition cycles that the diagnostic test reported a pass and/or a fail.

Reference Information

Schematic Reference

Engine Controls Schematics

Connector End View Reference

COMPONENT CONNECTOR END VIEWS - INDEX

Description and Operation

Fuel System Description

Electrical Information Reference

- **Circuit Testing**
- **Connector Repairs**
- **Testing for Intermittent Conditions and Poor Connections**

- **Wiring Repairs**

DTC Type Reference

Powertrain Diagnostic Trouble Code (DTC) Type Definitions

Scan Tool Reference

Control Module References for scan tool information

Circuit/System Verification

1. Ignition ON.
2. Verify DTC P0231, P0232 or P023F is not set.
   - **If any of the DTCs are set**

     Refer to **Diagnostic Trouble Code (DTC) List - Vehicle** .

   - **If none of the DTCs are set**
3. Verify that the area where the K27 fuel pump control module is located is free of debris, clutter, or any insulating material that would cause the K27 fuel pump control module to overheat.
   - **If any debris, clutter, or other material is found**
   1. Clear the area where the K27 fuel pump control module is located.
   2. Clear the DTC and test drive the vehicle.
   3. Verify DTC P1255 or P064A is not set.
      - If DTC P1255 or P064A is set, replace the K27 fuel pump control module.
      - If DTC P1255 or P064A is not set
   4. All OK.
   - **If no debris, clutter, or other material is found**
4. Clear the DTC and test drive the vehicle.
5. Verify DTC P1255 or P064A is not set.
   - **If DTC P1255 or P064A is set**

     Replace the K27 fuel pump control module.

   - **If DTC P1255 or P064A is not set.**
6. All OK.

Repair Instructions

Perform the **Diagnostic Repair Verification** after completing the repair.

Control Module References for fuel pump control module replacement, programming and setup

DTC P1400

Diagnostic Instructions

- Perform the **Diagnostic System Check - Vehicle** prior to using this diagnostic procedure.
- Review **Strategy Based Diagnosis** for an overview of the diagnostic approach.
- **Diagnostic Procedure Instructions** provides an overview of each diagnostic category.

DTC Descriptor

DTC P1400

Cold Start Emission Reduction Control System

Circuit/System Description

The catalyst must be warmed to efficiently reduce the emissions. The cold start strategy is to reduce the amount of time it takes to warm the catalyst. During a cold start, the engine idle speed is elevated and spark timing is retarded to allow the catalyst to warm quickly. This diagnostic monitors the following to build an exhaust energy model:

- Engine speed
- Spark advance
- Throttle position
- Engine airflow
- Engine coolant temperature
- Engine run time
- Park/neutral position
- Vehicle speed

The actual model is then compared to the expected exhaust energy model.

Conditions for Running the DTC

- DTCs P0101, P0102, P0103, P0106, P0107, P0108, P0112, P0113, P0116, P0117, P0118, P0119, P0122, P0123, P0128, P0201, P0202, P0203, P0204, P0222, P0223, P0300, P0301, P0302, P0303, P0304, P0335, P0336, P0351, P0352, P0353, P0354, P0502, P0503, P0506, P0507, P0697, P06A3, P0722, P0723, P0806, P0807, P0808, P182E, P1915, P2122, P2123, P2127, P2128, P2135, and P2138 are not set.
- The catalyst temperature is less than 300°C (572°F).
- The engine coolant temperature (ECT) sensor is greater than -10°C (14°F).
- The vehicle speed is less than 2 km/h (1 MPH).
- The ECM will exit the diagnostic if the calculated three way catalyst temperature is greater than 700°C (1292°F) and the engine run time is greater than 30 s.

- The ECM will exit the diagnostic if the ECT is greater than 40°C (104°F) or the engine run time is greater than 80 s.
- This DTC runs within the first 10 s of start up. This diagnostic runs once per trip when a cold start has been determined.

Conditions for Setting the DTC

The actual exhaust energy model does not match the expected exhaust energy model.

Action Taken When the DTC Sets

DTC P1400 is a Type A DTC.

Conditions for Clearing the DTC

DTC P1400 is a Type A DTC.

Reference Information

Electrical Information Reference

- **Circuit Testing**
- **Connector Repairs**
- **Testing for Intermittent Conditions and Poor Connections**
- **Wiring Repairs**

DTC Type Reference

Powertrain Diagnostic Trouble Code (DTC) Type Definitions

Scan Tool Reference

Control Module References for scan tool information

Circuit/System Verification

1. Allow the engine to cool until the catalyst temperature is less than 300°C (572°F) and the engine coolant is between -10°C (14°F) and 40°C (104°F).
2. Engine idling for at least 2 min, observe the scan tool DTC information. DTC P1400 should not set.
3. Operate the vehicle within the conditions for running the DTC to verify the DTC does not reset. You may also operate the vehicle within the conditions that you observed from the freeze frame/failure records data.

Circuit/System Testing

1. Verify none of the conditions listed below exists with the air intake system:

- Damage, restriction, or modification
- Dirty or deteriorating air filter element
- Crankcase ventilation system for correct operation. Refer to **Crankcase Ventilation System Inspection/Diagnosis**
- Water intrusion
- Vacuum leak and other unmetered air downstream of the mass air flow (MAF) sensor
- Intake manifold leak
    - If there is a condition, repair as necessary.

2. Verify none of the conditions listed below exists with the exhaust system:
    - Water intrusion
    - Exhaust leak
    - Damaged, restricted, or modified exhaust system. Refer to **Symptoms - Engine Exhaust**
        - If there is a condition, repair as necessary.
3. Inspect for an engine mechanical condition that could alter the air flow into the combustion chamber. Refer to **Symptoms - Engine Mechanical**

Repair Instructions

Perform the **Diagnostic Repair Verification** after completing the repair.

DTC P150C

Diagnostic Instructions

- Perform the **Diagnostic System Check - Vehicle** prior to using this diagnostic procedure.
- Review **Strategy Based Diagnosis** for an overview of the diagnostic approach.
- **Diagnostic Procedure Instructions** provides an overview of each diagnostic category.

DTC Descriptor

DTC P150C

Transmission Control Module Engine Speed Request Signal Message Counter Incorrect

Circuit/System Description

This diagnostic applies to communication integrity between the engine control module (ECM) and the transmission control module (TCM). The ECM determines that the engine speed signal counter is incorrect for the current vehicle operation.

Conditions for Running the DTC

- DTCs P0506, P0507, or U0101 are not set.
- The engine is running 0.5 s.

- The DTC runs continuously when the above conditions are met.

Conditions for Setting the DTC

The ECM detects that the TCM engine speed request does not match the expected engine speed request.

Action Taken When the DTC Sets

DTC P150C is a Type B DTC.

Conditions for Clearing the DTC

DTC P150C is a Type B DTC.

Reference Information

DTC Type Reference

Powertrain Diagnostic Trouble Code (DTC) Type Definitions

Scan Tool Reference

Control Module References for scan tool information

Circuit/System Verification

NOTE: Correct any other engine controls and communication DTCs before diagnosing transmission control module DTCs.

1. DTC P150C is an informational DTC. If there are no engine controls or communication DTCs, refer to **Diagnostic Trouble Code (DTC) List - Vehicle** for diagnosis of transmission control module DTCs. Do not replace the ECM for this DTC.
2. Operate the vehicle within the Conditions for Running the DTC to verify the DTC does not reset. You may also operate the vehicle within the conditions that you observed from the Freeze Frame/Failure Records data.

Repair Instructions

Perform the **Diagnostic Repair Verification** after completing the repair.

Control Module References for ECM replacement, programming, and setup.

DTC P1516, P2101, P2119, OR P2176

Diagnostic Instructions

- Perform the **Diagnostic System Check - Vehicle** prior to using this diagnostic procedure.

- Review **Strategy Based Diagnosis** for an overview of the diagnostic approach.
- **Diagnostic Procedure Instructions** provides an overview of each diagnostic category.

DTC Descriptors

DTC P1516

Throttle Actuator Control (TAC) Module Throttle Actuator Position Performance

DTC P2101

Throttle Actuator Position Performance

DTC P2119

Throttle Closed Position Performance

DTC P2176

Minimum Throttle Position Not Learned

Diagnostic Fault Information

Circuit	Short to Ground	Open/High Resistance	Short to Voltage	Signal Performance
TAC Motor Control Closed	P1516, P2101, P2176	P1516, P2101, P2176	P1516, P2101, P2176	P1516, P2101, P2176
TAC Motor Control Open	P1516, P2101, P2176	P1516, P2101, P2176	P1516, P2101, P2176	P1516, P2101, P2176

Circuit/System Description

The Engine Control Module (ECM) controls the throttle valve by applying a varying voltage to the control circuits of the throttle actuator control (TAC) motor. The ECM monitors the duty cycle that is required to actuate the throttle valve. The ECM monitors the throttle position (TP) sensors 1 and 2 to determine the actual throttle valve position.

Conditions for Running the DTC

P1516

- DTC P1682 is not set.
- The run/crank or powertrain relay voltage is greater than 6.41 V and reduced power is not active.
- DTC P1516 runs continuously when the above conditions are met.

P2101

- DTC P1682 is not set.
- The run/crank or powertrain relay voltage is greater than 5.5 V and reduced power is not active.
- The engine is running or the following conditions are met:
  - The engine is not running.
  - The ignition voltage is greater than 11 V.
  - The TAC system is not in the Battery Saver mode.
  - The ECM is commanding the throttle.
  - The ECM has learned the minimum throttle position.
- DTC P2101 runs continuously when the above conditions are met.

P2119

- The ignition is ON.
- DTC P0121, P0122, P0123, P0222, P0223, P0697, P06A3, or P2135 is not set.
- The run/crank or powertrain relay voltage is greater than 5.5 V and reduced power is not active.
- DTC P2119 runs continuously when the above conditions are met.

P2176

- The ignition is ON.
- The run/crank or powertrain relay voltage is greater than 6.41 V and reduced power is not active.
- The ECM enable the minimum throttle learn procedure.
- DTC P2176 runs continuously when the above conditions are met.

Conditions for Setting the DTC

P1516

The ECM detects an unstable throttle position for greater than 1 s.

P2101

The ECM detects the actual throttle position does not match the predicted throttle position for greater than 1 s.

P2119

The ECM detects the throttle blade did not return to the default position when the TAC motor is de-energized for greater than 1 s.

P2176

The ECM detects that both throttle position (TP) sensors were greater than a predetermined voltage during the minimum throttle learn procedure for greater than 2 s.

Action Taken When the DTC Sets

- DTCs P2101 and P2176 are Type A DTCs.
- DTC P1516 is a Type B DTC.
- DTC P2119 is a Type C DTC.
- The control module commands the TAC system to operate in the Reduced Engine Power mode.
- A message center or an indicator displays Reduced Engine Power.
- Under certain conditions, the control module commands the engine OFF.

Conditions for Clearing the MIL/DTC

- DTCs P2101, and P2176 are Type A DTCs.
- DTC P1516 is a Type B DTC
- DTC P2119 is a Type C DTC.

Diagnostic Aids

- Depending on the Start Up ECT, the Desired Throttle Position percentage maybe greater or less than the Throttle Position with the TAC motor at rest. When the ignition is initially turned ON, or when the engine is cranking or running the Desired and Actual Throttle positions should closely match.
- Inspect for a condition in which the throttle valve may have been held open. For example, ice may have formed in the throttle bore causing the throttle valve not to close.
- A high resistance condition on the throttle position and throttle actuator control circuits could cause a DTC to set.
- A low battery condition may cause a DTC to set.

Reference Information

Schematic Reference

Engine Controls Schematics

Connector End View Reference

COMPONENT CONNECTOR END VIEWS - INDEX

Description and Operation

Throttle Actuator Control (TAC) System Description

Electrical Information Reference

- **Circuit Testing**
- **Connector Repairs**
- **Testing for Intermittent Conditions and Poor Connections**

- **Wiring Repairs**

DTC Type Reference

Powertrain Diagnostic Trouble Code (DTC) Type Definitions

Scan Tool Reference

Control Module References for scan tool information

Circuit/System Verification

1. Ignition ON.

   NOTE: A low battery voltage or charging system condition may cause a DTC to set.

2. Verify DTC P0121, P0122, P0123, P0222, P0223, P0562, P0621, P0622, or P2135 is not set.
   - **If any of the DTCs are set**

     Refer to **Diagnostic Trouble Code (DTC) List - Vehicle** for further diagnosis.

   - **If none of the DTCs are set**
3. Verify the scan tool Throttle Body Idle Air flow Compensation parameter is less than 90 %.
   - **If 90 % or greater**

     Refer to **Throttle Body Inspection and Cleaning** .

   - **If less than 90 %**
4. Clear the DTCs with a scan tool.
5. Ignition OFF and all vehicle systems OFF. It may take up to 2 minutes for all vehicle systems to power down.
6. Ignition ON.
7. Verify the scan tool TAC Motor parameter displays Enabled while slowly depressing the accelerator pedal.
   - **If Enabled is not displayed**

     Refer to Circuit/System Testing below.

   - **If Enabled is displayed**
8. Verify DTC P1516, P2101, P2119, or P2176 is not set.
   - **If any of the DTCs are set**

     Refer to Circuit/System Testing below.

- **If none of the DTCs are set**

NOTE: If there is a condition with the throttle body, the TAC Motor Command parameter will go to 99 % for a predetermined amount of time and then a DTC sets. Once a DTC is set, the TAC Motor Command parameter will go to 0 % and the TAC Motor parameter will display Disabled.

9. Verify the scan tool TAC Motor parameter displays Enabled while performing the Throttle Sweep Test with a scan tool.
   - **If Enabled is not displayed**

     Test or replace the Q38 Throttle Body Assembly.

   - **If Enabled is displayed**
10. Operate the vehicle within the Conditions for Running the DTC. You may also operate the vehicle within the conditions that you observed from the Freeze Frame/Failure Records data.
11. Verify the DTC does not set.
    - **If the DTC sets**

      Refer to Circuit/System Testing below.

    - **If the DTC does not set**
12. All OK.

Circuit/System Testing

1. Ignition OFF.

WARNING: Turn OFF the ignition before inserting fingers into the throttle bore. Unexpected movement of the throttle blade could cause personal injury.

2. Verify the conditions listed below do not exist with the Q38 Throttle Body assembly:

NOTE:

- **The rest position is defined as the actual Throttle Position percentage when the ignition is OFF or with the ignition ON for greater than 30 seconds.**
- **When the ignition is OFF, spring tension should hold the throttle plate in the rest position. You should be able to open the throttle plate to wide open throttle (WOT) or push the throttle plate to the fully closed position. In each case, the throttle plate should return to the rest position without assistance.**

- A throttle blade that is not in the rest position
- A throttle blade that is binding open or closed
- A throttle blade that is free to move open or closed without spring pressure
- **If a condition is found**

  Test or replace the Q38 Throttle Body assembly.

- **If a condition is not found**

3. Ignition OFF.

NOTE:

- **Disconnecting the throttle body harness connector may cause additional DTCs to set.**
- **The Test Lamp must be connected to circuit before turning ignition on or incorrect diagnosis may occur.**

4. Disconnect the harness connector at the Q38 Throttle Body assembly.
5. Cycle the Ignition ON and OFF and then ON again.
6. Verify that a test lamp illuminates between each motor control circuit listed below and ground.
   - TAC Motor Control Closed circuit terminal A or 3
   - TAC Motor Control Open circuit terminal B or 5
   - **If the test lamp does not illuminate**

   1. Ignition OFF, disconnect the harness connector at the K20 Engine Control Module.
   2. Test for infinite resistance between the appropriate control circuit and ground.
      - If less than infinite resistance, repair the short to ground on the circuit.
      - If infinite resistance
   3. Test for less than 2 ohms on the control circuit from end to end.
      - If greater than 2 ohms, repair the open or high resistance on the circuit.
      - If less than 2 ohms, replace the K20 Engine Control Module.

   - **If the test lamp illuminates**
7. Disconnect the harness connector at the K20 Engine Control Module.
8. Test for less than 1 V between each motor control circuit listed below and ground.
   - TAC Motor Control Closed circuit terminal A or 3
   - TAC Motor Control Open circuit terminal B or 5
   - **If greater than 1 V**

     Repair the short to voltage on the circuit.

   - **If less than 1 V**
9. Test or replace the Q38 Throttle Body assembly.

Repair Instructions

- **Throttle Body Assembly Replacement**
- **Control Module References** for Engine Control Module replacement, programming, and setup

Repair Verification

1. Ignition OFF.
2. Install any components that have been removed or replaced during diagnosis.
3. Perform any adjustments, programming or setup procedures that are required when a component is removed or replaced.
4. Ignition ON.
5. Clear the DTCs with a scan tool.
6. Turn the ignition OFF for 60 s.
7. Ignition ON.
8. Verify the scan tool TAC Motor parameter displays Enabled while performing the Throttle Sweep Test with a scan tool.
   - **If Enabled is not displayed**

     Test or replace the Q38 Throttle Body assembly.

   - **If Enabled is displayed**
9. If the repair was related to a DTC, duplicate the Conditions for Running the DTC and use the Freeze Frame/Failure Records, if applicable, in order to verify the DTC does not set.
   - **If DTC sets**

     Refer to **Diagnostic Trouble Code (DTC) List - Vehicle** for further diagnosis.

   - **If DTC does not set**
10. All OK.

DTC P2070 OR P2071

Diagnostic Instructions

- Perform the **Diagnostic System Check - Vehicle** prior to using this diagnostic procedure.
- Review **Strategy Based Diagnosis** for an overview of the diagnostic approach.
- **Diagnostic Procedure Instructions** provides an overview of each diagnostic category.

DTC Descriptors

DTC P2070

Intake Manifold Tuning Control Valve Stuck Open

DTC P2071

Intake Manifold Tuning Control Valve Stuck Closed

Circuit/System Description

The intake manifold tuning valve controls the length of the intake runners in the intake manifold. The intake manifold contains both long and short runners. The tuning valve controls only the short runners. When the valve is closed, the short runners are blocked, which forces the air through the long runners. This results in tuning effects in the manifold that increases the torque produced by the engine at lower engine speeds. When the valve is open, both the long runners and short runners are open, but the majority of the air travels through the short runners, since the air will naturally follow the shortest path into the cylinder. This allows the air to flow through the short runners, which results in increased torque at higher engine speeds.

Ignition voltage is supplied directly to the intake manifold tuning valve actuator. The engine control module (ECM) controls the valve actuator motor by grounding the control circuit with a solid state device called a driver. The driver is equipped with a feedback circuit that is pulled up to a voltage. The ECM can determine if the control circuit is open, shorted to ground, or shorted to a voltage by monitoring the feedback voltage signal.

The tuning valve actuator contains a position sensor, which outputs a pulse width modulated (PWM) signal, to detect the actual position of the tuning valve in relation to its commanded position. Variations in the duty cycle of the PWM signal enables the ECM to detect a physically broken, restricted or stuck tuning valve.

Conditions for Running the DTC

- DTCs P0660, P2077 or P2078 are not set.
- The DTCs run continuously when the above condition is met for greater than 4 s.

Conditions for Setting the DTC

P2070

The ECM detects the time after the close command without the intake manifold tuning valve reaching the closed position is greater than 5 s.

P2071

The ECM detects the time after the open command without the intake manifold tuning valve reaching the open position is greater than 5 s.

Action Taken When the DTC Sets

DTC P2070 and P2071 is a Type B DTC.

Conditions for Clearing the DTC

DTC P2070 and P2071 is a Type B DTC.

Diagnostic Aids

- Ignition ON, command the Intake Manifold Tuning Solenoid Valve Open and Closed with a scan tool and observe if anything interferes with the motion.
- If the condition is intermittent, move the related harnesses and connectors, with the engine operating, while monitoring the scan tool circuit test status parameters for the component. A circuit test status parameter will change from OK or Not Run to Malfunction if there is a condition with the circuit or a connection.

Reference Information

Schematic Reference

Engine Controls Schematics

Connector End View Reference

COMPONENT CONNECTOR END VIEWS - INDEX

Description and Operation

Air Intake System Description

Electrical Information Reference

- **Circuit Testing**
- **Connector Repairs**
- **Testing for Intermittent Conditions and Poor Connections**
- **Wiring Repairs**

DTC Type Reference

Powertrain Diagnostic Trouble Code (DTC) Type Definitions

Scan Tool Reference

Control Module References for scan tool information

Circuit/System Verification

1. Ignition ON
2. Verify that DTC P0660, P0661, P0662, P2077, or P2078 is not set.
    - **If any of the DTCs are set**

      Refer to **Diagnostic Trouble Code (DTC) List - Vehicle** .

- **If none of the DTCs are set.**

3. Verify the Q22 Intake Manifold Tuning Solenoid Valve Opens and Closes when commanding the Intake Manifold Tuning Control Valve Open and Closed with a scan tool.
   - **If the valve does not Open and Close**

     Refer to Circuit/System Testing below

   - **If the valve Opens and Closes**
4. Operate the vehicle within the Conditions for Running the DTC. You may also operate the vehicle within the conditions that you observed from the Freeze Frame/Failure Records data.
5. Verify the DTC does not set.
   - **If the DTC sets**

     Refer to Circuit/System Testing below

   - **If the DTC does not set**
6. All OK

Circuit/System Testing

1. Verify the following conditions do not exist with the Q22 Intake Manifold Tuning Solenoid Valve assembly:
   - Disconnected or damaged linkage
   - Linkage binding
   - Interference with hoses, wiring, or any other components
   - **If a condition is located**

     Repair or replace the affected component as necessary.

   - **If all components test normal**
2. Disconnect the linkage from the Q22 Intake Manifold Tuning Solenoid Valve.
3. Verify the Q22 Intake Manifold Tuning Solenoid Valve Opens and Closes when commanding the Intake Manifold Tuning Control Valve Open and Closed with a scan tool.
   - **If the solenoid valve does not Open and Close**

     Replace the intake manifold

   - **If the solenoid valve Opens and Closes**
4. Verify the following conditions do not exist with the intake manifold:
   - Carbon build-up that limits or restricts the movement of the intake manifold tuning valve vanes.
   - Casting flash that limits or restricts the movement of the intake manifold tuning valve vanes.
   - Foreign material that limits or restricts the movement of the intake manifold tuning valve vanes.

- **If a condition is located**

  Repair or replace the intake manifold as necessary.

- **If all components test normal**

5. Replace the intake manifold.

Repair Instructions

Perform the **Diagnostic Repair Verification** after completing the repair.

- **Intake Manifold Replacement**
- **Control Module References** for ECM replacement, programming, and setup.

DTC P2076

Diagnostic Instructions

- Perform the **Diagnostic System Check - Vehicle** prior to using this diagnostic procedure.
- Review **Strategy Based Diagnosis** for an overview of the diagnostic approach.
- **Diagnostic Procedure Instructions** provide an overview of each diagnostic category.

DTC Descriptor

DTC P2076

Intake Manifold Tuning Control Valve Position Sensor Performance

Diagnostic Fault Information

DTC P2076

Circuit	Short to Ground	Open/High Resistance	Short to Voltage	Signal Performance
Ignition Voltage	*	P0443, P0660, P2078	-	P2076
Intake Manifold Tuning Valve Control Circuit	P0660, P2071	P0660, P2070	-	P2076
Intake Manifold Tuning Valve Signal Circuit	P2077	P2078	P2076, P2077, P2078	P2076
Intake Manifold Tuning Valve Ground	-	P2078	-	P2076
*Opens the fuse that supplies voltage to the Intake Manifold Tuning Valve Solenoid.				

Circuit/System Description

The intake manifold tuning valve controls the length of the intake runners in the intake manifold. The intake manifold contains both long and short runners. The tuning valve controls only the short runners. When the valve is closed, the short runners are blocked, which forces the air through the long runners. This results in tuning effects in the manifold that increases the torque produced by the engine at lower engine speeds. When the valve is open, both the long runners and short runners are open, but the majority of the air travels through the short runners, since the air will naturally follow the shortest path into the cylinder. This allows the air to flow through the short runners, which results in increased torque at higher engine speeds.

Ignition voltage is supplied directly to the intake manifold tuning valve actuator. The engine control module (ECM) controls the valve actuator motor by grounding the control circuit with a solid state device called a driver. The driver is equipped with a feedback circuit that is pulled up to a voltage. The ECM can determine if the control circuit is open, shorted to ground, or shorted to a voltage by monitoring the feedback voltage signal.

The tuning valve actuator contains a position sensor, which outputs a pulse width modulated (PWM) signal, to detect the actual position of the tuning valve in relation to its commanded position. Variations in the duty cycle of the PWM signal enables the ECM to detect a physically broken, restricted or stuck tuning valve.

Conditions for Running the DTC

- The powertrain relay voltage is greater than 11 V.
- The engine run time is greater than 1 s.
- The DTC runs continuously when the above conditions are met.

Conditions for Setting the DTC

- The ECM detects the intake manifold tuning valve actuator learn sequence has been initiated for greater than 5 s and the valve position is between 5-35%

  OR

- The ECM detects an intake manifold tuning valve actuator learn sequence has been initiated for greater than 0.2 s and the valve position is between 5-35% for greater than 10 times in one ignition cycle.

Action Taken When the DTC Sets

DTC P2076 is a Type B DTC.

Conditions for Clearing the DTC

DTC P2076 is a Type B DTC.

Diagnostic Aids

If the condition is intermittent, move the related harnesses and connectors, with the engine operating, while monitoring the scan tool circuit test status parameters for the component. A circuit test status parameter will change from OK or Not Run to Malfunction if there is a condition with the circuit or a connection.

Reference Information

Schematic Reference

Engine Controls Schematics

Connector End View Reference

COMPONENT CONNECTOR END VIEWS - INDEX

Description and Operation

Air Intake System Description

Electrical Information Reference

- **Circuit Testing**
- **Connector Repairs**
- **Testing for Intermittent Conditions and Poor Connections**
- **Wiring Repairs**

DTC Type Reference

Powertrain Diagnostic Trouble Code (DTC) Type Definitions

Scan Tool Reference

Control Module References for scan tool information

Circuit/System Verification

1. Ignition ON
2. Verify that DTC P0660, P0661, P0662, P2070, P2071, P2077, or P2078 is not set.
   - **If any of the DTCs are set**

     Refer to **Diagnostic Trouble Code (DTC) List - Vehicle** .

   - **If none of the DTCs are set.**
3. Verify the Q22 Intake Manifold Tuning Solenoid Valve Opens and Closes when commanding the Intake Manifold Tuning Control Valve Open and Closed with a scan tool.
   - **If the valve does not Open and Close**

     Refer to Circuit/System Testing below

   - **If the valve Opens and Closes**
4. Operate the vehicle within the Conditions for Running the DTC. You may also operate the vehicle within the conditions that you observed from the Freeze Frame/Failure Records data.

5. Verify the DTC does not set.
    - **If the DTC sets**

      Refer to Circuit/System Testing below

    - **If the DTC does not set**
6. All OK

Circuit/System Testing

1. Verify the following conditions do not exist with the Q22 Intake Manifold Tuning Solenoid Valve assembly:
    - Disconnected or damaged linkage
    - Linkage binding
    - Interference with hoses, wiring, or any other components
    - **If a condition is located**

      Repair or replace the affected component as necessary.

    - **If all components test normal**
2. Disconnect the linkage from the Q22 Intake Manifold Tuning Solenoid Valve.
3. Verify the Q22 Intake Manifold Tuning Solenoid Valve Opens and Closes when commanding the Intake Manifold Tuning Control Valve Open and Closed with a scan tool.
    - **If the solenoid valve does not Open and Close**

      Replace the intake manifold

    - **If the solenoid valve Opens and Closes**
4. Verify the following conditions do not exist with the intake manifold:
    - Carbon build-up that limits or restricts the movement of the intake manifold tuning valve vanes.
    - Casting flash that limits or restricts the movement of the intake manifold tuning valve vanes.
    - Foreign material that limits or restricts the movement of the intake manifold tuning valve vanes.
    - **If a condition is located**

      Repair or replace the intake manifold as necessary.

    - **If all components test normal**
5. Replace the intake manifold.

Repair Instructions

Perform the **Diagnostic Repair Verification** after completing the repair.

Intake Manifold Replacement

DTC P2077 OR P2078

Diagnostic Instructions

- Perform the **Diagnostic System Check - Vehicle** prior to using this diagnostic procedure.
- Review **Strategy Based Diagnosis** for an overview of the diagnostic approach.
- **Diagnostic Procedure Instructions** provides an overview of each diagnostic category.

DTC Descriptors

DTC P2077

Intake Manifold Tuning Control Valve Position Sensor Circuit Low Voltage

DTC P2078

Intake Manifold Tuning Control Valve Position Sensor Circuit High Voltage

Diagnostic Fault Information

DTC P2077 or P2078

Circuit	Short to Ground	Open/High Resistance	Short to Voltage	Signal Performance
Ignition Voltage	*	P0443, P0660, P2078	-	P2076
Intake Manifold Tuning Valve Control Circuit	P0660, P2071	P0660, P2070	-	P2076
Intake Manifold Tuning Valve Signal Circuit	P2077	P2078	P2076, P2077, P2078	P2076
Intake Manifold Tuning Valve Ground	-	P2078	-	P2076
*Opens the fuse that supplies voltage to the Intake Manifold Tuning Valve Solenoid.				

Circuit/System Description

The intake manifold tuning valve controls the length of the intake runners in the intake manifold. The intake manifold contains both long and short runners. The tuning valve controls only the short runners. When the valve is closed, the short runners are blocked, which forces the air through the long runners. This results in tuning effects in the manifold that increases the torque produced by the engine at lower engine speeds. When the valve is open, both the long runners and short runners are open, but the majority of the air travels through the short runners, since the air will naturally follow the shortest path into the cylinder. This allows the air to flow through the short runners, which results in increased torque at higher engine speeds.

Ignition voltage is supplied directly to the intake manifold tuning valve actuator. The engine control module

(ECM) controls the valve actuator motor by grounding the control circuit with a solid state device called a driver. The driver is equipped with a feedback circuit that is pulled up to a voltage. The ECM can determine if the control circuit is open, shorted to ground, or shorted to a voltage by monitoring the feedback voltage signal.

The tuning valve actuator contains a position sensor, which outputs a pulse width modulated (PWM) signal, to detect the actual position of the tuning valve in relation to its commanded position. Variations in the duty cycle of the PWM signal enables the ECM to detect a physically broken, restricted or stuck tuning valve.

Conditions for Running the DTC

- The ignition is ON or the engine is operating.
- The DTCs run continuously once the above condition is met for greater than 4 s.

Conditions for Setting the DTC

P2077

The ECM detects a continuous open or short to low in the intake manifold tuning valve position sensor circuit.

P2078

The ECM detects a continuous short to high in the intake manifold tuning valve position sensor circuit.

Action Taken When the DTC Sets

DTC P2077 and P2078 are Type B DTCs.

Conditions for Clearing the DTC

DTC P2077 and P2078 are Type B DTCs.

Diagnostic Aids

If the condition is intermittent, move the related harnesses and connectors, with the engine operating, while monitoring the scan tool circuit test status parameters for the component. A circuit test status parameter will change from OK or Not Run to Malfunction if there is a condition with the circuit or a connection.

Reference Information

Schematic Reference

Engine Controls Schematics

Connector End View Reference

COMPONENT CONNECTOR END VIEWS - INDEX

Description and Operation

Air Intake System Description

Electrical Information Reference

- **Circuit Testing**
- **Connector Repairs**
- **Testing for Intermittent Conditions and Poor Connections**
- **Wiring Repairs**

DTC Type Reference

Powertrain Diagnostic Trouble Code (DTC) Type Definitions

Scan Tool Reference

Control Module References for scan tool information

Circuit/System Verification

1. Ignition ON
2. Verify that DTC P2077, or P2078 is not set.
   - **If any of the DTCs are set**

     Refer to Circuit/System Testing below

   - **If none of the DTCs are set.**
3. Operate the vehicle within the Conditions for Running the DTC to verify the DTC does not reset. You may also operate the vehicle within the conditions that you observed from the Freeze Frame/Failure Records data.
4. Verify a DTC does not set.
   - **If a DTC sets**

     Refer to Circuit/System Testing below

   - **If a DTC does not set**
5. All OK

Circuit/System Testing

1. Ignition OFF and all vehicle systems OFF, disconnect the harness connector at the Q22 Intake Manifold Tuning Solenoid Valve. It may take up to 2 minutes for all vehicle systems to power down.
2. Test for less than 5 ohms between the ground circuit terminal 2 and ground.
   - **If 5 ohms or greater**
     1. Ignition OFF.

2. Test for less than 2 ohms in the ground circuit end to end.
    - If 2 ohms or greater, repair the open/high resistance in the circuit.
    - If less than 2 ohms, repair the open/high resistance in the ground connection.
- **If less than 2 ohms**

3. Ignition ON, verify that a test lamp illuminates between the ignition circuit terminal 1 and ground.
- **If the test lamp does not illuminate and the circuit fuse is good**

1. Ignition OFF, remove the test lamp.
2. Test for less than 2 ohms in the ignition voltage circuit end to end.
    - If 2 ohms or greater, repair the open/high resistance in the circuit.
    - If less than 2 ohms, verify the fuse is not open and there is voltage at the fuse.

- **If the test lamp does not illuminate and the circuit fuse is open**

1. Ignition OFF, remove the test lamp.
2. Test for infinite resistance between the ignition voltage circuit and ground.
    - If less than infinite resistance, repair the short to ground on the circuit.
    - If infinite resistance

NOTE: The vehicle may not be equipped with each circuit and component as listed below.

3. Test for greater than 10 ohms between each of the ignition circuits listed below and ground:
    - Ignition circuit terminal 1 - B52A Heated Oxygen Sensor 1
    - Ignition circuit terminal 1 - B52B Heated Oxygen Sensor 2
    - Ignition circuit terminal 2 - E41 Engine Coolant Thermostat Heater
    - Ignition circuit terminal 2 - Q12 Evaporative Emission Purge Solenoid
    - If 10 ohms or less, disconnect the appropriate component and retest to verify if the short is in the circuit or the component.
    - If greater than 10 ohms, replace the intake manifold
- **If the test lamp illuminates**

4. Ignition ON, test for 4.8-5.2 V between the signal circuit terminal 4 and ground.
- **If less than 4.8 V**

1. Ignition OFF, disconnect the X2 harness connector at the K20 Engine Control Module.
2. Test for infinite resistance between the signal circuit and ground.
    - If less than infinite resistance, repair the short to ground on the circuit.
    - If infinite resistance
3. Test for less than 2 ohms in the signal circuit end to end.
    - If 2 ohms or greater, repair the open/high resistance in the circuit.
    - If less than 2 ohms, replace the K20 Engine Control Module.

- **If greater than 5.2 V**

1. Ignition OFF, disconnect the X2 harness connector at the K20 Engine Control Module.
2. Ignition ON, test for less than 1 V between the signal circuit and ground.
    - If 1 V or greater, repair the short to voltage on the circuit.
    - If less than 1 V, replace the K20 Engine Control Module.
- **If between 4.8-5.2 V**

5. Replace the Intake Manifold.

Repair Instructions

Perform the **Diagnostic Repair Verification** after completing the repair.

- **Intake Manifold Replacement**
- **Control Module References** for ECM replacement, programming, and setup.

DTC P2096

Diagnostic Instructions

- Perform the **Diagnostic System Check - Vehicle** prior to using this diagnostic procedure.
- Review **Strategy Based Diagnosis** for an overview of the diagnostic approach.
- **Diagnostic Procedure Instructions** provides an overview of each diagnostic category.

DTC Descriptor

DTC P2096

Post Catalyst Fuel Trim System Low Limit

Circuit Description

Fuel trim bias is used to keep the post catalyst air/fuel ratio within a predetermined range. This allows optimal catalyst efficiency under various operating conditions. The engine control module (ECM) constantly monitors how lean or rich the fuel trim bias is commanded, to determine if the fuel trim bias is greater than a calibrated amount.

Conditions for Running the DTC

- DTC P0016, P0017, P0030, P0036, P0053, P0054, P0101, P0102, P0103, P0106, P0107, P0108, P0111, P0112, P0113, P0114, P0116, P0117, P0118, P0128, P0131, P0132, P0133, P0134, P0135, P0137, P0138, P013A, P013B, P013E, P013F, P0140, P0141, P015A, P015B, P0201, P0202, P0203, P0204, P0261, P0262, P0264, P0265, P0267, P0268, P0270, P0271, P0300, P0301, P0302, P0303, P0304, P0340, P0341, P0365, P0366, P0411, P0442, P0443, P0446, P0449, P0452, P0453, P0455, P0496, P1248, P1249, P124A, P124B, P2147, P2148, P2150, P2151, P2153, P2154, P2156, P2157, P219A, P2227, P2228, P2229, P2230, P2270, P2271, P2440, or P2444 is not set.
- The barometric pressure (BARO) is greater than 70 kPa (10.2 PSI).

- The manifold absolute pressure (MAP) is between 0-200 kPa (0-29 PSI).
- The intake air temperature (IAT) is between -20°C and +200°C (-4 and +392°F).
- The start up engine coolant temperature is warmer than -20°C (-4°F).
- The fuel control intrusive diagnostics are not active.
- The engine is operating under cruise conditions.
- DTC P2096 runs continuously when the conditions above have been met.

Conditions for Setting the DTC

The lean correction limit for a condition causing a rich air/fuel ratio has been exceeded.

Action Taken when the DTC Sets

- DTCs P2096 is a Type B DTC.
- The ECM records the operating conditions at the time the diagnostic fails. The first time the diagnostic fails, the ECM stores this information in the Failure records. If the diagnostic reports a failure on the second ignition cycle, the ECM records the operating conditions at the time of the failure. The ECM writes the operating conditions to the Freeze Frame and updates the Failure records. The ECM illuminates the malfunction indicator lamp (MIL) when one of the following occurs:
    - The ECM detects the same fuel trim failure during 2 consecutive trips.
    - The ECM detects any fuel trim failure during any subsequent trip if the conditions at the time of failure meet the following criteria:
        - The engine load is within 20 percent of the previous test that failed.
        - The engine speed is within 375 RPM of the previous test that failed.
        - The engine coolant temperature is in the same range of the previous test that failed.

Conditions for Clearing the MIL/DTC

- DTCs P2096 is a Type B DTC.
- The ECM turns OFF the malfunction indicator lamp (MIL) at the beginning of the fourth ignition cycle, after 3 ignition cycles that the diagnostic runs and does not fail.
- A current DTC, Last Test Failed, clears when the diagnostic runs and passes.

Diagnostic Aids

- It is very unlikely that an HO2S will cause this DTC to set without the occurrence of circuit related HO2S DTCs. Do not replace an HO2S to address this DTC without first performing all the steps in Circuit/System Verification and Circuit/System Testing.
- The post catalyst fuel trim diagnostic is very sensitive to heated oxygen sensor (HO2S) design. A non-OE sensor or an incorrect part number may cause a DTC to set.
- Certain aftermarket air filters may cause a DTC to set.
- Certain aftermarket air induction systems or modifications to the air induction system may cause a DTC to set.

- Certain aftermarket exhaust system components may cause a DTC to set.

Reference Information

Schematic Reference

Engine Controls Schematics

Connector End View Reference

COMPONENT CONNECTOR END VIEWS - INDEX

Electrical Information Reference

- **Circuit Testing**
- **Connector Repairs**
- **Testing for Intermittent Conditions and Poor Connections**
- **Wiring Repairs**

DTC Type Reference

Powertrain Diagnostic Trouble Code (DTC) Type Definitions

Scan Tool Reference

Control Module References for scan tool information

Circuit/System Verification

1. Ignition ON.
2. Verify no other HO2S or fuel trim DTC is set.
   - **If any other HO2S or fuel trim DTC is set**

     Refer to **Diagnostic Trouble Code (DTC) List - Vehicle** for further diagnosis.

   - **If no other HO2S or fuel trim DTC is set**
3. Verify DTC P2096 is not set.
   - **If a DTC is set**

     Refer to Circuit/System Testing below

   - **If no DTC is set**
4. Operate the vehicle within the Conditions for Running the DTC. You may also operate the vehicle within the conditions that you observed in the Freeze Frame/Failure Records data.
5. Verify DTC P2096 is not set.

- **If a DTC is set**

  Refer to Circuit/System Testing below

- **If no DTC is set**

6. All OK.

Circuit/System Testing

Verify none of the conditions listed below exist:

- Air intake duct collapsed or restricted.
- Air filter dirty or restricted.
- Objects blocking the throttle body.
- Excessive fuel in the crankcase. Change engine oil as necessary.
- Rich fuel injectors. Refer to **Fuel Injector Diagnosis**.
- Excessive fuel system pressure. Refer to **Fuel System Diagnosis**.
- Fuel contamination. Refer to **Alcohol/Contaminants-in-Fuel Diagnosis**.
- Fuel saturation of the evaporative emissions (EVAP) canister
- Stuck open or leaking EVAP purge valve
- Restricted exhaust. Refer to **Symptoms - Engine Exhaust** .
- Improper operation of the crankcase ventilation system. Refer to **Crankcase Ventilation System Inspection/Diagnosis** .

- If a condition is found

  Repair as necessary.

Repair Instructions

Perform the **Diagnostic Repair Verification** after completing the diagnostic procedure.

DTC P2097

Diagnostic Instructions

- Perform the **Diagnostic System Check - Vehicle** prior to using this diagnostic procedure.
- Review **Strategy Based Diagnosis** for an overview of the diagnostic approach.
- **Diagnostic Procedure Instructions** provides an overview of each diagnostic category.

DTC Descriptor

DTC P2097

Post Catalyst Fuel Trim System High Limit

Circuit Description

Fuel trim bias is used to keep the post catalyst air/fuel ratio within a predetermined range. This allows optimal catalyst efficiency under various operating conditions. The engine control module (ECM) constantly monitors how lean or rich the fuel trim bias is commanded, to determine if the fuel trim bias is greater than a calibrated amount.

Conditions for Running the DTC

- DTC P0016, P0017, P0030, P0036, P0053, P0054, P0101, P0102, P0103, P0106, P0107, P0108, P0111, P0112, P0113, P0114, P0116, P0117, P0118, P0128, P0131, P0132, P0133, P0134, P0135, P0137, P0138, P013A, P013B, P013E, P013F, P0140, P0141, P015A, P015B, P0201, P0202, P0203, P0204, P0261, P0262, P0264, P0265, P0267, P0268, P0270, P0271, P0300, P0301, P0302, P0303, P0304, P0340, P0341, P0365, P0366, P0411, P0442, P0443, P0446, P0449, P0452, P0453, P0455, P0496, P1248, P1249, P124A, P124B, P2147, P2148, P2150, P2151, P2153, P2154, P2156, P2157, P219A, P2227, P2228, P2229, P2230, P2270, P2271, P2440, or P2444 is not set.
- The barometric pressure (BARO) is greater than 70 kPa (10.2 PSI).
- The manifold absolute pressure (MAP) is between 0-200 kPa (0-29 PSI).
- The intake air temperature (IAT) is between -20°C and +200°C (-4 and +392°F).
- The start up engine coolant temperature is warmer than -20°C (-4°F).
- The fuel control intrusive diagnostics are not active.
- The engine is operating under cruise conditions.
- DTC P2097 runs continuously when the conditions above have been met.

Conditions for Setting the DTC

The rich correction limit for a condition causing a lean air/fuel ratio has been exceeded.

Action Taken when the DTC Sets

- DTCs P2097 is a Type B DTC.
- The ECM records the operating conditions at the time the diagnostic fails. The first time the diagnostic fails, the ECM stores this information in the Failure records. If the diagnostic reports a failure on the second ignition cycle, the ECM records the operating conditions at the time of the failure. The ECM writes the operating conditions to the Freeze Frame and updates the Failure records. The ECM illuminates the malfunction indicator lamp (MIL) when one of the following occurs:
    - The ECM detects the same fuel trim failure during 2 consecutive trips.
    - The ECM detects any fuel trim failure during any subsequent trip if the conditions at the time of failure meet the following criteria:
        - The engine load is within 20 percent of the previous test that failed.
        - The engine speed is within 375 RPM of the previous test that failed.
        - The engine coolant temperature is in the same range of the previous test that failed.

Conditions for Clearing the MIL/DTC

- DTCs P2097 is a Type B DTC.
- The ECM turns OFF the malfunction indicator lamp (MIL) at the beginning of the fourth ignition cycle, after 3 ignition cycles that the diagnostic runs and does not fail.
- A current DTC, Last Test Failed, clears when the diagnostic runs and passes.

Diagnostic Aids

- It is very unlikely that an HO2S will cause this DTC to set without the occurrence of circuit related HO2S DTCs. Do not replace an HO2S to address this DTC without first performing all the steps in Circuit/System Verification and Circuit/System Testing.
- The post catalyst fuel trim diagnostic is very sensitive to heated oxygen sensor (HO2S) design. A non-OE sensor or an incorrect part number may cause a DTC to set.
- Certain aftermarket air filters may cause a DTC to set.
- Certain aftermarket air induction systems or modifications to the air induction system may cause a DTC to set.
- Certain aftermarket exhaust system components may cause a DTC to set.

Reference Information

Schematic Reference

Engine Controls Schematics

Connector End View Reference

COMPONENT CONNECTOR END VIEWS - INDEX

Electrical Information Reference

- **Circuit Testing**
- **Connector Repairs**
- **Testing for Intermittent Conditions and Poor Connections**
- **Wiring Repairs**

DTC Type Reference

Powertrain Diagnostic Trouble Code (DTC) Type Definitions

Scan Tool Reference

Control Module References for scan tool information

Circuit/System Verification

1. Ignition ON.
2. Verify no other HO2S or fuel trim DTC is set.
   - **If any other HO2S or fuel trim DTC is set**

     Refer to **Diagnostic Trouble Code (DTC) List - Vehicle** for further diagnosis.

   - **If no other HO2S or fuel trim DTC is set**
3. Verify DTC P2097 is not set.
   - **If a DTC is set**

     Refer to Circuit/System Testing below

   - **If no DTC is set**
4. Operate the vehicle within the Conditions for Running the DTC. You may also operate the vehicle within the conditions that you observed in the Freeze Frame/Failure Records data.
5. Verify DTC P2097 is not set.
   - **If a DTC is set**

     Refer to Circuit/System Testing below

   - **If no DTC is set**
6. All OK.

Circuit/System Testing

Verify none of the conditions listed below exist:

- Exhaust system leaks. Refer to **Symptoms - Engine Exhaust** .
- Vacuum hoses for splits, kinks, and proper connections
- Insufficient fuel in the tank
- Air induction system and air intake ducts for leaks
- Missing air filter element
- Cracked evaporative canister
- Evaporative pipes plugged, obstructed, or leaking
- Crankcase ventilation system leaking. Refer to **Crankcase Ventilation System Inspection/Diagnosis** .
- Engine vacuum leaks
- Low fuel system pressure. Refer to **Fuel System Diagnosis**.
- Contaminated fuel. Refer to **Alcohol/Contaminants-in-Fuel Diagnosis**.
- Lean fuel injectors. Refer to **Fuel Injector Diagnosis**.

- If a condition is found

Repair as necessary.

Repair Instructions

Perform the **Diagnostic Repair Verification** after completing the diagnostic procedure.

DTC P2122, P2123, P2127, P2128, OR P2138

Diagnostic Instructions

- Perform the **Diagnostic System Check - Vehicle** prior to using this diagnostic procedure.
- Review **Strategy Based Diagnosis** for an overview of the diagnostic approach.
- **Diagnostic Procedure Instructions** provides an overview of each diagnostic category.

DTC Descriptors

DTC P2122

Accelerator Pedal Position (APP) Sensor 1 Circuit Low Voltage

DTC P2123

Accelerator Pedal Position (APP) Sensor 1 Circuit High Voltage

DTC P2127

Accelerator Pedal Position (APP) Sensor 2 Circuit Low Voltage

DTC P2128

Accelerator Pedal Position (APP) Sensor 2 Circuit High Voltage

DTC P2138

Accelerator Pedal Position (APP) Sensors 1-2 Not Plausible

Diagnostic Fault Information

Circuit	Short to Ground	Open/High Resistance	Short to Voltage	Signal Performance
APP Sensor 1 5V Reference	P2122	P2122	P2123	-
APP Sensor 1 Signal	P2122	P2122	P2123	P2138
APP Sensor 1 Low Reference	-	P2123	-	-
APP Sensor 2 5V	P2127	P2127	P2128	-

Reference				
APP Sensor 2 Signal	P2127	P2127	P2128	P2138
APP Sensor 2 Low Reference	-	P2128	-	-

Typical Scan Tool Data

APP Sensor 1

Circuit	Short to Ground	Open	Short to Voltage
Operating Conditions: The engine is operating at idle **Parameter Normal Range:** 0.13-4.88 V			
APP Sensor 1 5V Reference	0 V	0 V	5 V
APP Sensor 1 Signal	0 V	0 V	5 V
APP Sensor 1 Low Reference	-	4.96 V	-

APP Sensor 2

Circuit	Short to Ground	Open	Short to Voltage
Operating Conditions: The engine is operating at idle **Parameter Normal Range:** 0.12-2.64 V			
APP Sensor 2 5V Reference	0 V	0 V	5 V
APP Sensor 2 Signal	0 V	0 V	5 V
APP Sensor 2 Low Reference	-	4.92 V	-

Circuit/System Description

The throttle actuator control (TAC) system uses two accelerator pedal position (APP) sensors to monitor the accelerator pedal position. The APP sensors 1 and 2 are located within the pedal assembly. Each sensor has a 5 V reference circuit, a low reference circuit, and a signal circuit.

Two processors are also used to monitor the TAC motor system data. Both processors are located within the ECM. Each signal circuit provides both processors with a signal voltage proportional to pedal movement. The processors share and monitor data to verify that the indicated APP sensor calculation is correct.

Conditions for Running the DTC

P2122 and P2123

- DTC P0697, or P06A3 is not set.
- The ignition is ON.
- The DTCs run continuously when the above conditions are met.

P2127 and P2128

- DTC P0697, or P06A3 is not set.
- The ignition is ON.

- The DTCs run continuously when the above conditions are met.

P2138

- DTCs P0641, P0651, P0697, or P06A3 is not set.
- The ignition is ON.
- The DTC runs continuously when the above conditions are met.

Conditions for Setting the DTC

P2122

The ECM detects that APP sensor 1 voltage is less than 0.61 V for greater than 0.5 s.

P2123

The ECM detects that APP sensor 1 voltage is greater than 4.59 V for greater than 0.5 s.

P2127

The ECM detects that APP sensor 2 voltage is less than 0.10 V for greater than 0.5 s.

P2128

The ECM detects that APP sensor 2 voltage is greater than 2.5 V for greater than 0.5 s.

P2138

The ECM detects that the difference between APP sensor 1 and APP sensor 2 exceeds a predetermined value for greater than 2 s.

Action Taken When the DTC Sets

- DTCs P2122, P2123, P2127, P2128 and P2138 are Type A DTCs.
- The ECM commands the TAC motor system to operate in reduced engine power mode.

Conditions for Clearing the DTC

DTCs P2122, P2123, P2127, P2128, and P2138 are Type A DTCs.

Reference Information

Schematic Reference

Engine Controls Schematics

Connector End View Reference

COMPONENT CONNECTOR END VIEWS - INDEX

Description and Operation

Throttle Actuator Control (TAC) System Description

Electrical Information Reference

- **Circuit Testing**
- **Connector Repairs**
- **Testing for Intermittent Conditions and Poor Connections**
- **Wiring Repairs**

DTC Type Reference

Powertrain Diagnostic Trouble Code (DTC) Type Definitions

Scan Tool Reference

Control Module References

Circuit/System Verification

1. Ignition ON.
2. Verify that DTC P0697, or P06A3 is not set.
    - **If any of the DTCs are set**

      Refer to **DTC P0641, P0651, P0697, or P06A3 (ECM)**.

    - **If none of the DTCs are set**
3. Verify the scan tool APP Sensor 1 parameter. The reading should be between 0.32-4.87 V, and change with the accelerator pedal input.
4. Verify the scan tool APP Sensor 2 parameter. The reading should be between 0.16-2.30 V, and change with the accelerator pedal input.
    - **If the reading does not change**

      Refer to Circuit/System Testing below.

    - **If the reading does change**
5. Operate the vehicle within the Conditions for Running the DTC. You may also operate the vehicle within the conditions that you observed from the Freeze Frame/Failure Records data.
6. Verify the DTC does not set.
    - **If the DTC sets**

Refer to Circuit/System Testing below.

- **If the DTC does not set**

7. All OK.

Circuit/System Testing

1. Ignition OFF and all vehicle systems OFF, disconnect the harness connector at the B107 Accelerator Pedal Position Sensor. It may take up to 2 minutes for all vehicle systems to power down.
2. Test for less than 5 ohms between each low reference circuit terminal listed below and ground.
   - Low reference circuit terminal 4
   - Low reference circuit terminal 5
   - **If 5 ohms or greater**
   1. Ignition OFF, disconnect the harness connector at the K20 Engine Control Module.
   2. Test for less than 2 ohms in the low reference circuit end to end.
      - If 2 ohms or greater, repair the open/high resistance in the circuit.
      - If less than 2 ohms, replace the K20 Engine Control Module.
   - **If less than 5 ohms**
3. Ignition ON.
4. Test for 4.8-5.2 V between each 5 V reference circuit terminal listed below and ground.
   - 5 V reference circuit terminal 1
   - 5 V reference circuit terminal 2
   - **If less than 4.8 V**
   1. Ignition OFF, disconnect the harness connector at the K20 Engine Control Module.
   2. Test for infinite resistance between the 5 V reference circuit and ground.
      - If less than infinite resistance, repair the short to ground on the circuit.
      - If infinite resistance
   3. Test for less than 2 ohms in the 5 V reference circuit end to end.
      - If 2 ohms or greater, repair the open/high resistance in the circuit.
      - If less than 2 ohms, replace the K20 Engine Control Module.
   - **If greater than 5.2 V**
   1. Ignition OFF, disconnect the harness connector at the K20 Engine Control Module, ignition ON.
   2. Test for less than 1 V between the 5 V reference circuit and ground.
      - If 1 V or greater, repair the short to voltage on the circuit.
      - If less than 1 V, replace the K20 Engine Control Module.
   - **If between 4.8-5.2 V**
5. Verify the scan tool APP sensor 1 and 2 voltage parameter is less than 0.1 V.
   - **If 0.1 V or greater**
   1. Ignition OFF, disconnect the harness connector at the K20 Engine Control Module, ignition ON.

2. Test for less than 1 V between the signal circuit terminal listed below and ground.
    - APP sensor 1 signal circuit terminal 3
    - APP sensor 2 signal circuit terminal 6
    - If 1 V or greater, repair the short to voltage on the circuit.
    - If less than 1 V, replace the K20 Engine Control Module.
- **If less than 0.1 V**

6. Install a 3 A fused jumper wire between each signal circuit terminal listed below and the 5 V reference circuit terminal 1.
    - APP sensor 1 signal circuit terminal 3
    - APP sensor 2 signal circuit terminal 6
7. Verify the scan tool APP sensor 1 and 2 voltage parameter is greater than 4.8 V.
    - **If 4.8 V or less**
    1. Ignition OFF, disconnect the harness connector at the K20 Engine Control Module.
    2. Test for infinite resistance between the signal circuit terminal and ground.
        - If less than infinite resistance, repair the short to ground on the circuit.
        - If infinite resistance
    3. Test for less than 2 ohms in the signal circuit end to end.
        - If 2 ohms or greater, repair the open/high resistance in the circuit.
        - If less than 2 ohms, replace the K20 Engine Control Module.
    - **If greater than 4.8 V**
8. Test or replace the B107 Accelerator Pedal Position Sensor.

Repair Instructions

Perform the **Diagnostic Repair Verification** after completing the repair.

- **Accelerator Pedal Position Sensor Replacement**
- **Control Module References** for ECM replacement, programming, and setup.

DTC P2199

Diagnostic Instructions

- Perform the **Diagnostic System Check - Vehicle** prior to using this diagnostic procedure.
- Review **Strategy Based Diagnosis** for an overview of the diagnostic approach.
- **Diagnostic Procedure Instructions** provides an overview of each diagnostic category.

DTC Descriptor

DTC P2199

Intake Air Temperature (IAT) Sensor 1-2 Correlation

Diagnostic Fault Information

IAT Sensor 1

Circuit	Short to Ground	Open/High Resistance	Short to Voltage	Signal Performance
Sensor	P0112, P0114, P2199	P0113, P0114, P2199	P0113, P0114, P2199*	P0111, P0114
Low Reference	-	P0097, P0113, P11C2, P2227, P2229	*	-
*Internal ECM or sensor damage may occur if the circuit is shorted to B+.				

IAT Sensor 2

Circuit	Short to Ground	Open/High Resistance	Short to Voltage	Signal Performance
5 V Reference	P0097, P0651, P11C2, P2199, P2227, P2228	P0096, P0097, P11C2, P2199, P2227, P2228	P0097, P0651, P11C2, P2199, P2227, P2228	-
Sensor	P0097, P11C3, P2199	P0097, P11C2, P2199	P0097, P11C2, P2199*	-
Low Reference	-	P0097, P0113, P11C2, P2227, P2229	*	-
*Internal ECM or sensor damage may occur if the circuit is shorted to B+.				

Typical Scan Tool Data

IAT Sensor 1

Circuit	Short to Ground	Open or High Resistance	Short to Voltage
Operating Conditions: Engine Running **Parameter Normal Range:** Varies with ambient temperature			
Sensor	150°C (302°F)	-40°C (-40°F)	-40°C (-40°F)*
Low Reference	-	-40°C (-40°F)	-40°C (-40°F)*
*Internal ECM or sensor damage may occur if the circuit is shorted to B+			

IAT Sensor 2

Circuit	Short to Ground	Open or High Resistance	Short to Voltage
Operating Conditions: Engine Running **Parameter Normal Range:** Varies with ambient temperature			
5 V Reference	-40°C (-40°F) 10 Hz	-40°C (-40°F) 10 Hz	-
Signal	-40°C (-40°F)	-40°C (-40°F)	-40°C (-40°F)* 10 Hz*

Ground	-	-40°C (-40°F) 10 Hz	-
*Internal ECM or sensor damage may occur if the circuit is shorted to B+			

Circuit/System Description

The sensors listed below are integrated within the multifunction intake air sensor:

- Intake Air Temperature (IAT) sensor 1
- IAT sensor 2
- Humidity sensor
- Mass Air Flow (MAF) sensor
- Barometric (BARO) pressure sensor

The intake air temperature (IAT) sensor 1 is a variable resistor that measures the temperature of the air in the sensor bore. The engine control module (ECM) supplies 5 V to the IAT sensor 1 signal circuit and a ground for the IAT sensor 1 low reference circuit. The signal varies with inlet air temperature and is displayed by the scan tool as °C (°F).

The IAT sensor 2 produces a frequency signal based on the inlet air temperature very close to the humidity sensor within the sensor bore. The signal varies with inlet air temperature and is displayed by the scan tool as ° C (°F) and Hertz (Hz). The signal circuit is shared by the IAT sensor 2 and the humidity sensor.

The sensors listed below share an ECM supplied 5 V reference circuit:

- IAT sensor 2
- Humidity sensor
- Barometric pressure (BARO) sensor

The sensors listed below share an ECM supplied low reference circuit:

- IAT sensor 1
- IAT sensor 2
- Humidity sensor
- Barometric pressure (BARO) sensor

Ignition voltage and ground circuits are also supplied to the multifunction intake air sensor's internal circuits for the mass air flow (MAF) sensor.

IAT Sensor 1 - Temperature, Resistance, Voltage Table

IAT Sensor 1	IAT Sensor 1 Resistance	IAT Sensor 1 Signal Voltage
Cold	High	High
Warm	Low	Low

IAT Sensor 2 - Temperature, Frequency Table

IAT Sensor 2	IAT Sensor 2 Frequency	IAT Sensor 2 Temperature
Cold	45 Hz	-40°C (-40°F)
Warm	302 Hz	104°C (219°F)

Conditions for Running the DTC

- The ignition is ON.
- Ignition 1 voltage is at least 11 V for at least 0.9 s.
- This DTC runs continuously within the enabling conditions.

Conditions for Setting the DTC

The ECM detects that the absolute difference between the IAT sensor 1 and the IAT sensor 2 temperatures is greater than 55°C (99°F) for longer than 5 s.

Action Taken When the DTC Sets

DTC P2199 is a Type B DTC.

Conditions for Clearing the MIL/DTC

DTC P2199 is a Type B DTC.

Diagnostic Aids

- With the ignition ON, when the engine is OFF and is cold; properly functioning IAT sensors 1 and 2 will gradually increase the scan tool IAT Sensor 1 and 2 parameters. This is due to the heat that is generated by the Multifunction Intake Air sensor internal heating elements.
- The humidity sensor and the IAT sensor 2 signals are sent to the ECM on the same circuit. If the IAT Sensor 2 parameter displays the values: 10 Hz; -40°C (-40°F), and there are also Humidity Sensor DTCs, check for a circuit problem.

Reference Information

Schematic Reference

Engine Controls Schematics

Connector End View Reference

COMPONENT CONNECTOR END VIEWS - INDEX

Electrical Information Reference

- **Circuit Testing**

- **Connector Repairs**
- **Testing for Intermittent Conditions and Poor Connections**
- **Wiring Repairs**

DTC Type Reference

Powertrain Diagnostic Trouble Code (DTC) Type Definitions

Scan Tool Reference

Control Module References for scan tool information

Special Tools

EL-38522-A Variable Signal Generator

For equivalent regional tools, refer to **Special Tools** .

Circuit/System Verification

1. Ignition ON.
2. Verify that DTC DTC P0641, P0651, P0697, or P06A3 is not set.
   - **If any of the DTCs are set**

     Refer to **DTC P0641, P0651, P0697, or P06A3 (ECM)** for further diagnosis.

   - **If none of the DTCs are set**

NOTE: To minimize the effects of residual engine heat and sensor internal heating elements, perform Steps 3 and 4 of this verification procedure only if the ignition has been OFF for 8 hours or more.

3. Ignition ON.
4. Verify the following scan tool parameters are within 25°C (45°F) of each other.
   - Start-Up IAT Sensor 1
   - IAT Sensor 2
   - Start-Up ECT
   - **If not within 25°C (45°F)**

     Refer to Circuit/System Testing below.

   - **If within 25°C (45°F)**
5. Engine idling, verify the following scan tool parameters are between: -38 and +149°C (-36 and +300°F).
   - IAT Sensor 1

- IAT Sensor 2
- ECT Sensor
- **If not between: -38 and +149°C (-36 and +300°F)**

  Refer to Circuit/System Testing below.

- **If between: -38 and +149°C (-36 and +300°F)**

6. Operate the vehicle within the conditions for running the DTC. You may also operate the vehicle within the conditions that you observed from the freeze frame/failure records data.
7. Verify the DTC does not set.
   - **If the DTC does set**

     Refer to Circuit/System Testing below.

   - **If the DTC does not set**
8. All OK

Circuit/System Testing

NOTE: You must perform the Circuit/System Verification before proceeding with Circuit/System Testing.

1. Ignition OFF, and all vehicle systems OFF, it may take up to 2 min. for all vehicle systems to power down. Disconnect the harness connector at the B75C Mass Air Flow/Multifunction Intake Air sensor.
2. Test for less than 2 ohms between the low reference circuit terminal 7 and ground.
   - **If 2 ohms or greater**
   1. Ignition OFF, disconnect the harness connector at the K20 Engine Control Module.
   2. Test for less than 2 ohms in the low reference circuit end to end.
      - If 2 ohms or greater, repair the open or high resistance in the circuit.
      - If less than 2 ohms replace the K20 Engine Control Module.
   - **If less than 2 ohms**
3. Ignition ON, test for 4.8-5.2 V between the 5 V reference circuit terminal 2 and ground.
   - **If less than 4.8 V**
   1. Ignition OFF, disconnect the harness connector at the K20 Engine Control Module.
   2. Test for infinite resistance between the signal circuit and ground.
      - If less than infinite resistance, repair the short to ground on the circuit.
      - If infinite resistance
   3. Test for less than 2 ohms in the signal circuit end to end.
      - If 2 ohms or greater, repair the open/high resistance in the circuit.
      - If less than 2 ohms, replace the K20 Engine Control Module.
   - **If greater than 5.2 V**

NOTE: If the 5 V reference circuit is shorted to a voltage the engine control module or the sensor may be damaged.

1. Ignition OFF, disconnect the harness connector at the K20 Engine Control Module.
2. Ignition ON, test for less than 1 V between the 5 V reference circuit and ground.
   - If 1 V or greater, repair the short to voltage on the circuit.
   - If less than 1 V, replace the K20 Engine Control Module.

- **If between 4.8-5.2 V**

4. Ignition ON, test for 4.8-5.2 V between the signal terminal 8 and ground.
   - **If less than 4.8 V**
   1. Ignition OFF, disconnect the harness connector at the K20 Engine Control Module.
   2. Test for infinite resistance between the signal circuit and ground.
      - If less than infinite resistance, repair the short to ground on the circuit.
      - If infinite resistance
   3. Test for less than 2 ohms in the signal circuit end to end.
      - If 2 ohms or greater, repair the open/high resistance in the circuit.
      - If less than 2 ohms, replace the K20 Engine Control Module.
   - **If greater than 5.2 V**

NOTE: If the signal circuit is shorted to a voltage the engine control module or the sensor may be damaged.

1. Ignition OFF, disconnect the harness connector at the K20 Engine Control Module.
2. Ignition ON, test for less than 1 V between the signal circuit and ground.
   - If 1 V or greater, repair the short to voltage on the circuit.
   - If less than 1 V, replace the K20 Engine Control Module.

- **If between 4.8-5.2 V**

5. Ignition ON, verify the scan tool IAT Sensor 1 parameter is colder than -39°C (-38°F).
   - **If warmer than -39°C (-38°F).**
   1. Ignition OFF, disconnect the harness connector at the K20 Engine Control Module.
   2. Test for infinite resistance between the signal circuit terminal 8 and ground.
      - If less than infinite resistance, repair the short to ground on the circuit.
      - If infinite resistance
   3. Test for less than 2 ohms in the signal circuit end to end.
      - If 2 ohms or greater, repair the open/high resistance in the circuit.
      - If less than 2 ohms, replace the K20 Engine Control Module.
   - **If colder than -39°C (-38°F).**
6. Ignition OFF, install a 3 A fused jumper wire between the signal circuit terminal 8 and the low reference circuit terminal 7.

7. Verify the scan tool IAT Sensor 1 parameter is warmer than 148°C (298°F).
   - **If colder than 148°C (298°F).**
   1. Ignition OFF, remove the jumper wire, disconnect the harness connector at the K20 Engine Control Module, ignition ON.
   2. Test for less than 1 V between the signal circuit and ground.
      - If 1 V or greater, repair the short to voltage on the circuit.
      - If less than 1 V
   3. Ignition OFF.
   4. Test for less than 2 ohms in the signal circuit end to end.
      - If 2 ohms or greater, repair the open/high resistance in the circuit.
      - If less than 2 ohms, replace the K20 Engine Control Module.
   - **If warmer than 148°C (298°F).**
8. Ignition ON, test for 4.8-5.2 V between the IAT 2 signal terminal 1 and ground.
   - **If less than 4.8 V**
   1. Ignition OFF, disconnect the harness connector at the K20 Engine Control Module.
   2. Test for infinite resistance between the signal circuit and ground.
      - If less than infinite resistance, repair the short to ground on the circuit.
      - If infinite resistance
   3. Test for less than 2 ohms in the signal circuit end to end.
      - If 2 ohms or greater, repair the open/high resistance in the circuit.
      - If less than 2 ohms, replace the K20 Engine Control Module.
   - **If greater than 5.2 V**

     NOTE: If the signal circuit is shorted to a voltage the engine control module or the sensor may be damaged.

   1. Ignition OFF, disconnect the harness connector at the K20 Engine Control Module.
   2. Ignition ON, test for less than 1 V between the signal circuit and ground.
      - If 1 V or greater, repair the short to voltage on the circuit.
      - If less than 1 V, replace the K20 Engine Control Module.
   - **If between 4.8-5.2 V**
9. Determine if **EL-38522-A** Variable Signal Generator or equivalent is available.
   - **EL-38522-A, Variable Signal Generator; or equivalent is not available**
   1. Replace the K20 Engine Control Module.
   2. Operate the vehicle within the Conditions for Running the DTC. You may also operate the vehicle within the conditions that you observed from the freeze frame/failure records data.
   3. Verify the DTC does not set.
      - **If the DTC sets**

Refer to step 13.

- **If the DTC does not set**

4. All OK.

- **EL-38522-A, Variable Signal Generator; or equivalent is available**

10. Ignition OFF, connect the leads of the **EL-38522-A** Variable Signal Generator as follows:
    - Red lead to the signal circuit terminal 1 at the harness connector
    - Black leads to ground
    - Battery voltage supply lead to B+
11. Set the **EL-38522-A** Variable Signal Generator to the following specifications.
    - Signal switch to 5 V
    - Duty Cycle switch to 50 % (Normal)
    - Frequency switch to 30 Hz
12. Ignition ON, verify the scan tool IAT Sensor 2 parameter is between 28-32 Hz.
    - **If not between 28-32 Hz**

      Replace the K20 Engine Control Module.

    - **If between 28-32 Hz**
13. Test or replace the B75C Multifunction Intake Air sensor.

Component Testing

Multifunction Intake Air Sensor

1. Ignition OFF, disconnect the harness connector at the B75C Multifunction Intake Air sensor.

NOTE: A thermometer can be used to test the sensor off the vehicle.

2. Test the IAT sensor 1 by varying the sensor temperature while monitoring the sensor resistance. Compare the readings with the **Temperature Versus Resistance - Intake Air Temperature Sensor (Bosch Sensor)** table for Bosch Sensors. The resistance values should be in range of the table values.
    - **If not within the specified range.**

      Replace the B75C Multifunction Intake Air sensor.

    - **If within the specified range.**
3. All OK

Multifunction Intake Air Sensor

1. Test the IAT Sensor 2 by varying the sensor temperature while monitoring the air temperature with a thermometer. Compare the readings with the scan tool IAT Sensor 2 parameter. The values should be

within 5%.

- **If not within 5%.**

  Replace the B75C Multifunction Intake Air sensor.

- **If within 5%.**

2. All OK

Repair Instructions

Perform the **Diagnostic Repair Verification** after completing the repair.

- **Mass Airflow Sensor Replacement** for multifunction intake air sensor replacement.
- **Control Module References** for ECM replacement, programming, and setup

DTC P219A

Diagnostic Instructions

- Perform the **Diagnostic System Check - Vehicle** prior to using this diagnostic procedure.
- Review **Strategy Based Diagnosis** for an overview of the diagnostic approach.
- **Diagnostic Procedure Instructions** provides an overview of each diagnostic category.

DTC Descriptor

DTC P219A

Fuel Trim Cylinder Balance

Circuit/System Description

The Air Fuel Imbalance diagnostic detects a rich or lean cylinder to cylinder air/fuel ratio imbalance. The diagnostic monitors the pre-catalyst heated oxygen sensor (HO2S) signal's frequency and amplitude characteristics by calculating an accumulated voltage over a predetermined sample period. An imbalance is indicated when multiple samples of the accumulated voltage are consistently higher than the desired value.

Conditions for Running the DTC

- DTCs P0016, P0017, P0068, P0101, P0102, P0103, P0106, P0107, P0108, P0116, P0117, P0118, P0122, P0123, P0128, P0201-P0204, P0222, P0223, P0261, P0262, P0264, P0265, P0267, P0268, P0270, P0271, P0300, P0301-P0304, P0340, P0341, P0365, P0366, P0411, P0442, P0455, P0496, P1248, P1249, P124A, P124B, P2101, P2135, P2147, P2148, P2150. P2151, P2153, P2154, P2156, P2157, P2440, P2444 are not set.
- The EVAP device control and intrusive diagnostics are not active.
- The engine overspeed protection is not active.
- The engine is in closed loop status.

- The system voltage is greater than 11 V.
- The engine coolant temperature (ECT) is warmer than -20°C (-4°F).
- The engine speed is between 1, 200-3, 200 RPM.
- The mass air flow is between 10-100 g/s.
- The AIR pump is not ON.
- Engine run time is greater than 30 s.
- Fuel level is greater than 10% and no fuel level sensor fault is present.
- The DTC runs continuously when the above conditions have been met.

Conditions for Setting the DTC

Multiple samples of the pre-catalyst HO2S accumulated voltage are consistently greater than the desired value.

Action Taken When the DTC Sets

DTC P219A is a Type A DTC.

Conditions for Clearing the MIL/DTC

DTC P219A is a Type A DTC.

Diagnostic Aids

- The air fuel imbalance diagnostic is very sensitive to heated oxygen sensor (HO2S) design. A non-OE sensor or an incorrect part number may cause a DTC to set.
- Monitoring the misfire current counters, or misfire graph, may help to isolate the cylinder that is causing the condition.
- Certain aftermarket air filters may cause a DTC to set.
- Certain aftermarket air induction systems or modifications to the air induction system may cause a DTC to set.
- Certain aftermarket exhaust system components may cause a DTC to set.

Reference Information

Schematic Reference

Engine Controls Schematics

Connector End View Reference

COMPONENT CONNECTOR END VIEWS - INDEX

Electrical Information Reference

- **Circuit Testing**

- **Troubleshooting with a Test Lamp**
- **Testing for Intermittent Conditions and Poor Connections**
- **Wiring Repairs**
- **Connector Repairs**

DTC Type Reference

Powertrain Diagnostic Trouble Code (DTC) Type Definitions

Scan Tool Reference

Control Module References for scan tool information

Circuit/System Verification

1. Ignition ON.
2. Verify no other DTCs are set.
   - **If any other DTCs are set**

     Refer to **Diagnostic Trouble Code (DTC) List - Vehicle** for further diagnosis.

   - **If no other DTCs are set**
3. Verify DTC P219A is not set.
   - **If a DTC is set**

     Refer to Circuit/System Testing below

   - **If no DTC is set**
4. Operate the vehicle within the Conditions for Running the DTC. You may also operate the vehicle within the conditions that you observed in the Freeze Frame/Failure Records data.
5. Verify DTC P219A is not set.
   - **If a DTC is set**

     Refer to Circuit/System Testing below

   - **If no DTC is set**
6. All OK.

Circuit/System Testing

1. Engine idling, verify the manifold absolute pressure (MAP) sensor parameter is between 20-48 kPa.
   - **If not within the specified range** .

     Refer to **DTC P0106** , or **DTC P0107 or P0108**

- **If within the specified range, verify that none of the conditions listed below exist:**
- Modified, damaged, leaking, or restricted air induction system components.
- Improper operation of the crankcase ventilation system. Refer to **Crankcase Ventilation System Inspection/Diagnosis** .
- Split, kinked, or improperly connected vacuum hoses.
- Restricted, damaged, leaking, or modified exhaust system from the catalytic converter forward. Refer to **Symptoms - Engine Exhaust** .
- Improperly operating fuel injectors. Refer to **Fuel Injector Diagnosis**.
- Contaminated fuel. Refer to **Alcohol/Contaminants-in-Fuel Diagnosis**.
- Excessive fuel in the crankcase due to leaking injectors. Change engine oil as necessary.
- Improper ignition system operation. Refer to **Electronic Ignition System Diagnosis**.
- **If a condition is found**

  Repair as necessary.

- **If no condition is found**

2. Test the engine for any mechanical conditions such as sticking valves, lifters, etc., which could alter the flow into the combustion chamber. Refer to **Symptoms - Engine Mechanical** .

Repair Instructions

Perform the **Diagnostic Repair Verification** after completing the diagnostic procedure.

DTC P2227-P2230

Diagnostic Instructions

- Perform the **Diagnostic System Check - Vehicle** prior to using this diagnostic procedure.
- Review **Strategy Based Diagnosis** for an overview of the diagnostic approach.
- **Diagnostic Procedure Instructions** provides an overview of each diagnostic category.

DTC Descriptors

DTC P2227

Barometric Pressure (BARO) Sensor Performance

DTC P2228

Barometric Pressure (BARO) Sensor Circuit Low Voltage

DTC P2229

Barometric Pressure (BARO) Sensor Circuit High Voltage

DTC P2230

Barometric Pressure (BARO) Sensor Circuit Erratic

Diagnostic Fault Information

Circuit	Short to Ground	Open/High Resistance	Short to Voltage	Signal Performance
5 V Reference	P0641, P2227, P2228	P2228	P0641, P2229	P2227
Signal	P2227, P2228	P2227, P2228	P2227, P2229	P2227
Low Reference	-	P2227, P2229	-	P2227

Typical Scan Tool Data

BARO

Circuit	Short to Ground	Open	Short to Voltage
Operating Conditions: Ignition ON, Engine OFF **Parameter Normal Range:** 56-105 kPa (8.1-15.2 psi), varies with altitude			
5 V Reference	0 kPa (0 psi)	0 kPa (0 psi)	127 kPa (18.4 psi)
Signal	0 kPa (0 psi)	0 kPa (0 psi)	127 kPa (18.4 psi)
Low Reference	-	127 kPa (18.4 psi)	-

Circuit/System Description

The barometric pressure (BARO) sensor is integral to the multifunction intake air sensor and responds to changes in altitude and atmospheric conditions. This gives the ECM an indication of barometric pressure. The ECM uses this information to calculate fuel delivery. The BARO sensor provides a voltage signal to the ECM relative to the atmospheric pressure changes. The ECM monitors the BARO sensor signal for a voltage outside of the normal range.

Conditions for Running the DTC

P2227

- DTC P0068, P0101, P0102, P0103, P0106, P0107, P0108, P0111, P0112, P0113, P0114, P0117, P0118, P0119, P0121, P0122, P0123, P0222, P0223, P1516, P2101, P2135, P2228, or P2229 is not set.
- Engine is running for greater than 30 s.

OR

- DTC P0106, P0107, P0108, P2228, P2229, P2230, or P2610 is not active.
- DTC P0107, P0108, P2228, or P2229 is not pending.
- Engine is OFF for at least 7 min.

- Ignition is ON
- DTC P2227 runs continuously when the above conditions are met.

P2228 or P2229

- Engine is running for greater than 30 s.
- The DTCs run continuously when the above condition is met.

P2230

- DTC P0068, P0101, P0102, P0103, P0106, P0107, P0108, P0111, P0112, P0113, P0114, P0117, P0118, P0119, P0121, P0122, P0123, P0222, P0223, P1516, P2101, P2135, P2228, or P2229 is not set.
- Ignition is ON
- DTC P2230 runs continuously when the above conditions are met.

Conditions for Setting the DTC

P2227

- The engine is running.
- The ECM detects that the difference between the actual BARO and the calculated BARO is greater than a calibrated threshold.

  OR

- Ignition ON, engine OFF
- The ECM detects that the BARO pressure is less than 50 kPa (7.3 psi) or greater than 115 kPa (16.7 psi).

P2228

The ECM detects that the BARO sensor voltage is less than 2 V for greater than 5 s.

P2229

The ECM detects that the BARO sensor voltage is greater than 4.5 V for greater than 5 s.

P2230

The ECM detects that the cumulative difference between BARO sensor readings, over a specific length of time, is greater than a calibrated threshold.

Action Taken When the DTC Sets

DTCs P2227, P2228, P2229, and P2230 are Type B DTCs.

Conditions for Clearing the MIL/DTC

DTCs P2227, P2228, P2229, and P2230 are Type B DTCs.

Reference Information

Schematic Reference

Engine Controls Schematics

Connector End View Reference

COMPONENT CONNECTOR END VIEWS - INDEX

Electrical Information Reference

- **Circuit Testing**
- **Connector Repairs**
- **Testing for Intermittent Conditions and Poor Connections**
- **Wiring Repairs**

DTC Type Reference

Powertrain Diagnostic Trouble Code (DTC) Type Definitions

Scan Tool Reference

Control Module References for scan tool information

Circuit/System Verification

1. Ignition ON.
2. Verify the scan tool BARO pressure parameter is within the range specified in the **Altitude Versus Barometric Pressure** table.
    - **If the BARO is not within the specified range**

      Refer to Circuit/System Testing below.

    - **If the BARO is within the specified range**
3. Operate the vehicle within the Conditions for Running the DTC. You may also operate the vehicle within the conditions that you observed in the Freeze Frame/Failure Records data.
4. Verify the DTC does not set.
    - **If the DTC sets**

      Refer to Circuit/System Testing below.

    - **If the DTC does not set**

5. All OK.

Circuit/System Testing

1. Verify the conditions listed below do not exist with the B75C Multifunction Intake Air Sensor:
   - Damage
   - Restrictions in the inlet port
   - **If a condition exists**

     Repair or replace the B75C Multifunction Intake Air Sensor as necessary.

   - **If none of the conditions exist**
2. Ignition OFF, and all vehicle systems OFF, it may take up to 2 minutes for all vehicle systems to power down. Disconnect the harness connector at the B75C Multifunction Intake Air Sensor.
3. Test for less than 5 ohms between the low reference circuit terminal 7 and ground.
   - **If 5 ohms or greater**
   1. Ignition OFF, disconnect the harness connector at the K20 Engine Control Module.
   2. Test for less than 2 ohms in the low reference circuit end to end.
      - If greater than the specified value, repair the open or high resistance in the circuit.
      - If 2 ohms or less replace the K20 Engine Control Module.
   - **If less than 5 ohms**
4. Ignition ON.
5. Test for 4.8-5.2 V between the 5 V reference circuit terminal 2 and ground.
   - **If less than 4.8 V**
   1. Ignition OFF, disconnect the harness connector at the K20 Engine Control Module.
   2. Test for infinite resistance between the 5 V reference circuit and ground.
      - If less than infinite resistance, repair the short to ground on the circuit.
      - If infinite resistance
   3. Test for less than 2 ohms in the 5 V reference circuit end to end.
      - If 2 ohms or greater, repair the open/high resistance in the circuit.
      - If less than 2 ohms, replace the K20 Engine Control Module.
   - **If greater than 5.2 V**
   1. Ignition OFF, disconnect the harness connector at the K20 Engine Control Module, ignition ON.
   2. Test for less than 1 V between the 5 V reference circuit and ground.
      - If 1 V or greater, repair the short to voltage on the circuit.
      - If less than 1 V, replace the K20 Engine Control Module.
   - **If between 4.8-5.2 V**
6. Verify the scan tool BARO Sensor parameter is less than 0.2 V.
   - **If 0.2 V or greater**

1. Ignition OFF, disconnect the harness connector at the K20 Engine Control Module.
2. Test for less than 1 V between the signal circuit terminal 6 and ground.
    - If 1 V or greater, repair the short to voltage on the circuit.
    - If less than 1 V, replace the K20 Engine Control Module.

- **If less than 0.2 V**

7. Install a 3 A fused jumper wire between the signal circuit terminal 6 and the 5 V reference circuit terminal 2.
8. Verify the scan tool BARO Sensor parameter is greater than 4.5 V.

- **If 4.5 V or less**

1. Ignition OFF, remove the jumper wire, disconnect the harness connector at the K20 Engine Control Module.
2. Test for infinite resistance between the signal circuit terminal 6 and ground.
    - If less than infinite resistance, repair the short to ground on the circuit.
    - If infinite resistance
3. Test for less than 2 ohms in the signal circuit end to end.
    - If 2 ohms or greater, repair the open or high resistance in the circuit.
    - If less than 2 ohms, replace the K20 Engine Control Module.

- **If greater than 4.5 V**

9. Test or replace the B75C Multifunction Intake Air Sensor.

Repair Instructions

Perform the **Diagnostic Repair Verification** after completing the repair.

- **Mass Airflow Sensor Replacement** for multifunction intake air sensor replacement
- **Control Module References** for engine control module replacement, programming, and setup

DTC P2430 OR P2431

Diagnostic Instructions

- Perform the **Diagnostic System Check - Vehicle** prior to using this diagnostic procedure.
- Review **Strategy Based Diagnosis** for an overview of the diagnostic approach.
- **Diagnostic Procedure Instructions** provide an overview of each diagnostic category.

DTC Descriptor

DTC P2430

Secondary Air Injection System Pressure Sensor Circuit

DTC P2431

Secondary Air Injection System Pressure Sensor Performance

Circuit/System Description

The secondary air injection system aids in the reduction of hydrocarbon emissions during a cold start. The electric air pump forces fresh air into the exhaust stream in order to accelerate the catalyst operation. A pressure sensor in the shutoff/check valve is used to monitor the air flow from the secondary air injection pump. The engine control module (ECM) supplies voltage to the 5-volt reference circuit and supplies a ground to the low reference circuit. The sensor provides a signal voltage to the ECM relative to the pressure changes within the secondary air injection system.

Ignition voltage is supplied to the secondary air injection pump and air injection shutoff/check valve relays. The ECM controls the relays by grounding the control circuits, which activates the relays. When the relay contacts close, voltage is supplied to the pump and the valve, which turns the pump on and opens the valve.

The diagnostic uses 3 phases to test the secondary air injection system:

- DTCs P0411 and P2430 run during Phase 1
- DTCs P2430 and P2440 run during Phase 2
- DTC P2444 runs during Phase 3

During phase 1, the secondary air injection pump and the secondary air injection shutoff and check valve are activated. Normal secondary air function occurs. Expected system pressure is 5-13 kPa (0.7-1.9 psi) above BARO.

During phase 2, only the secondary air injection pump is activated. The shutoff and check valve is closed. Pressure sensor performance and shutoff and check valve deactivation are tested. Expected system pressure is 14-25 kPa (2.0-3.6 psi) above BARO.

During phase 3, neither the secondary air injection pump nor the secondary air injection shutoff and check valve are activated. Secondary air injection pump deactivation is tested. Expected system pressure equals BARO.

Conditions for Running the DTC

P2430

- DTC P0412, P0418, P0606, P2431, P2432, or P2433 is not set.
- Greater than 30 min has elapsed since the last cold start.
- The ignition voltage is between 10-32 V.
- The engine speed is less than 5, 000 RPM.
- The intake air temperature (IAT) is greater than -11°C (12.2°F).
- The engine coolant temperature (ECT) is between -11 and +56°C (12.2-133°F).
- The barometric pressure (BARO) is greater than 74 kPa (10.7 psi).
- The manifold absolute pressure (MAP) sensor is greater than 20 kPa (2.9 psi).
- The mass air flow (MAF) is less than 50 g/s.

- The secondary air injection pump is commanded ON.
- DTC P2430 runs once per ignition cycle when the above conditions are met for greater than 5 s.

P2431

- DTC P0101, P0102, P0103, P0300, P0301, P0302, P0303, P0304, P2430, P2432, or P2433 is not set.
- Greater than 30 min has elapsed since the last cold start.
- The ignition voltage is between 10-32 V.
- The engine speed is less than 5, 000 RPM.
- The intake air temperature (IAT) is greater than -11°C (12.2°F).
- The engine coolant temperature (ECT) is between -11 and +56°C (12.2-133°F).
- The barometric pressure (BARO) is greater than 74 kPa (10.7 psi).
- The manifold absolute pressure (MAP) sensor is greater than 20 kPa (2.9 psi).
- The mass air flow (MAF) is less than 50 g/s.
- DTC P2431 runs continuously when the above conditions are met for greater than 15 s.

Conditions for Setting the DTC

P2430

The ECM determines that the pressure sensor value change at the shutoff/check valve is less than 0.5 kPa and the signal variation is less than 0.15 kPa for greater than 5 s when the secondary air injection pump is commanded ON.

P2431

- The difference between the actual system pressure at the shutoff/check valve and BARO is greater than 18 kPa (2.6 psi) or less than -10 kPa -1.5 psi) for greater than 5 s when the secondary air injection pump is commanded OFF.

  OR

- The difference between the actual system pressure at the shutoff/check valve and BARO is greater than 50 kPa (7.3 psi) for greater than 5 s when the secondary air injection pump is commanded ON.

Action Taken When the DTC Sets

DTCs P2430 and P2431 are Type B DTCs.

Conditions for Clearing the MIL/DTC

DTCs P2430 and P2431 are Type B DTCs.

Diagnostic Aids

Ice buildup due to condensation/water in the air passages or pump may cause this DTC to set.

Reference Information

Schematic Reference

Engine Controls Schematics

Connector End View Reference

COMPONENT CONNECTOR END VIEWS - INDEX

Description and Operation

Secondary Air Injection System Description

Electrical Information Reference

- **Circuit Testing**
- **Connector Repairs**
- **Testing for Intermittent Conditions and Poor Connections**
- **Wiring Repairs**

DTC Type Reference

Powertrain Diagnostic Trouble Code (DTC) Type Definitions

Scan Tool Reference

Control Module References for scan tool information

Special Tools

EL 36169-HD Fused Jumper

For equivalent regional tools, refer to **Special Tools** .

Circuit/System Verification

NOTE: Verify the battery is fully charged before proceeding with this diagnostic procedure. The secondary air injection pump output will vary with system voltage.

1. Ignition ON
2. Verify that DTC P0412, P0418, P2432, P2433, P2440, or P2444 is not set.
    - **If any of the DTCs are set**

Refer to **Diagnostic Trouble Code (DTC) List - Vehicle** .

- **If none of the DTCs are set.**

3. Verify the scan tool BARO pressure parameter is within the range specified in the **Altitude Versus Barometric Pressure** table.
   - **If not within the specified range**

     Refer to **DTC P2227-P2230**.

   - **If within the specified range**
4. Verify the scan tool Secondary Air Injection Pressure Sensor and the BARO pressure parameters are within 3 kPa (0.4 psi).
   - **If not within the specified range**

     Replace the Q29 Secondary Air Injection Solenoid Valve

   - **If within the specified range**

NOTE: To prevent the secondary air injection pump from overheating, do not operate the pump consecutively for greater than 2 minutes. The pump is provided with a thermal protector that will automatically reset when allowed to cool.

5. Verify the G21 Secondary Air Injection Pump turns ON and OFF when commanding the Secondary Air Injection Pump Relay between ON and OFF with a scan tool.
   - **If the pump does not turn ON and OFF**

     Refer to Circuit/System Testing below -Secondary Air Injection Pump Malfunction

   - **If the pump turns ON and OFF**
6. Engine running
7. Verify the scan tool Secondary Air Injection Pressure Sensor parameter increases between 14-25 kPa (2.0-3.6 psi) when the Secondary Air Injection Pump Relay is commanded ON with a scan tool.
   - **If not within the specified range**

     Refer to Circuit/System Testing below -Secondary Air Injection System Pressure Not In Range.

   - **If within the specified range**
8. Verify the scan tool Secondary Air Injection Pressure Sensor parameter increases between 5-13 kPa (0.7-1.9 psi) when the Secondary Air Injection System is commanded Active with a scan tool.
   - **If not within the specified range**

     Refer to Circuit/System Testing below -Secondary Air Injection System Pressure Not In Range.

- **If within the specified range**

9. Operate the vehicle within the Conditions for Running the DTC. You may also operate the vehicle within the conditions that you observed from the Freeze Frame/Failure Records data.
10. Verify the DTC does not set.
    - **If the DTC sets**

      Refer to Circuit/System Testing below

    - **If the DTC does not set**
11. All OK

Circuit/System Testing

Secondary Air Injection Pump Malfunction

1. Ignition OFF, disconnect the KR25 Secondary Air Injection Pump Relay. Ignition ON.
2. Verify a test lamp illuminates between the B+ circuit terminal 30 and ground.
    - **If the test lamp does not illuminate and the circuit fuse is good**
    1. Ignition OFF
    2. Test for less than 2 ohms in the B+ circuit end to end.
        - If 2 ohms or greater, repair the open/high resistance in the circuit.
        - If less than 2 ohms, verify the fuse is not open and there is voltage at the fuse.
    - **If the test lamp does not illuminate and the circuit fuse is open**
    1. Ignition OFF
    2. Test for infinite resistance between the B+ circuit and ground.
        - If less than infinite resistance, repair the short to ground on the circuit.
        - If infinite resistance
    3. Disconnect the harness connector at the G21 Secondary Air Injection Pump.
    4. Test for infinite resistance between the control circuit terminal A and ground.
        - If less than infinite resistance, repair the short to ground on the circuit.
        - If infinite resistance
    5. Test or replace the G21 Secondary Air Injection Pump.
    - **If the test lamp illuminates**
3. Disconnect the harness connector at the G21 Secondary Air Injection Pump.
4. Ignition OFF and all vehicle systems OFF, it may take up to 2 minutes for all vehicle systems to power down. Test for less than 10 ohms between the G21 Secondary Air Injection Pump ground circuit terminal B and ground.
    - **If 10 ohms or greater**
    1. Ignition OFF.
    2. Test for less than 2 ohms in the ground circuit end to end.

- If 2 ohms or greater, repair the open/high resistance in the circuit.
- If less than 2 ohms, repair the open/high resistance in the ground connection.

- **If less than 10 ohms**

5. Connect the harness connector at the G21 Secondary Air Injection Pump.
6. Connect a 50 A fused jumper wire between the B+ circuit terminal 30 and the control circuit terminal 87.

NOTE: To prevent the secondary air injection pump from overheating, do not operate the pump consecutively for greater than 2 minutes. The pump is provided with a thermal protector that will automatically reset when allowed to cool.

7. Verify the G21 Secondary Air Injection Pump is activated.
   - **If the pump does not activate**
   1. Ignition OFF, disconnect the harness connector at the G21 Secondary Air Injection Pump.
   2. Test for less than 2 ohms in the control circuit end to end.
      - If 2 ohms or greater, repair the open/high resistance in the circuit.
      - If less than 2 ohms,
   3. Test or replace the G21 Secondary Air Injection Pump.
   - **If the pump activates**
8. Test or replace the KR25 Secondary Air Injection Pump Relay.

Secondary Air Injection System Pressure Not In Range

1. Verify the following conditions do not exist with the secondary air injection shutoff and check valve:
   - Hoses/pipes restricted or blocked
   - Hoses/pipes leaking or disconnected
   - Damaged secondary air injection shutoff and check valve
   - Restricted or blocked cylinder head secondary air injection inlet ports and passages
   - **If a condition is located**

     Repair or replace the affected component as necessary.

   - **If all components test normal**
2. Disconnect the secondary air injection hoses/pipe from the Q29 Secondary Air Injection Solenoid Valve.
3. Ignition ON, command the Secondary Air Injection Pump Relay ON with a scan tool.
4. Verify airflow to the Q29 Secondary Air Injection Solenoid Valve.
   - **If no airflow**

     Replace the G21 Secondary Air Injection Pump.

   - **If airflow**

5. Disconnect the appropriate Q29 Secondary Air Injection Solenoid Valve from the engine.
6. Connect the harness connector at the Q29 Secondary Air Injection Solenoid Valve.
7. Connect the secondary air injection pipe between the Q29 Secondary Air Injection Solenoid Valve and the G21 Secondary Air Injection Pump.
8. Ignition ON, command the Secondary Air Injection System Active with a scan tool. Verify there is airflow through the valve.
    - **If no airflow**

      Replace the Q29 Secondary Air Injection Solenoid Valve

    - **If airflow**
9. Replace the G21 Secondary Air Injection Pump.

Component Testing

Relay Test

1. Ignition OFF, disconnect the KR25 Secondary Air Injection Pump Relay.
2. Test for 70-110 ohms between terminals 85-86.
    - **If less than 70 ohms or greater than 110 ohms**

      Replace the KR25 Secondary Air Injection Pump Relay.

    - **If between 70-110 ohms**
3. Test for infinite resistance between the terminals listed below:
    - 30 and 86
    - 30 and 87
    - 30 and 85
    - 85 and 87
    - **If less than infinite resistance**

      Replace the KR25 Secondary Air Injection Pump Relay.

    - **If infinite resistance**
4. Install a 15 A fused jumper wire between relay terminal 85 and 12 V. Install a jumper wire between relay terminal 86 and ground.
5. Test for less than 2 ohms between terminals 30 and 87.
    - **If 2 ohms or greater**

      Replace the KR25 Secondary Air Injection Pump Relay.

    - **If less than 2 ohms**
6. All OK.

Repair Instructions

Perform the **Diagnostic Repair Verification** after completing the repair.

- **Relay Replacement (Within an Electrical Center)** , **Relay Replacement (Attached to Wire Harness)**
- **Secondary Air Injection Pump Replacement**
- **Secondary Air Injection Check Valve Replacement** for secondary air injection solenoid valve replacement
- **Secondary Air Injection Pump Pipe Replacement**

DTC P2432 OR P2433

Diagnostic Instructions

- Perform the **Diagnostic System Check - Vehicle** prior to using this diagnostic procedure.
- Review **Strategy Based Diagnosis** for an overview of the diagnostic approach.
- **Diagnostic Procedure Instructions** provides an overview of each diagnostic category.

DTC Descriptors

DTC P2432

Secondary Air Injection System Pressure Sensor Circuit Low Voltage

DTC P2433

Secondary Air Injection System Pressure Sensor Circuit High Voltage

Diagnostic Fault Information

Circuit	Short to Ground	Open/High Resistance	Short to Voltage	Signal Performance
Secondary Air Injection Pressure Sensor 5 V Reference	P0335, P2432	P2432	P2433*	P2431
Secondary Air Injection Pressure Sensor Signal	P2432	P2432	P2433*	P2431
Secondary Air Injection Pressure Sensor Low Reference	-	P2433	-	P2431
*Internal ECM or sensor damage may occur if the circuit is shorted to B+.				

Typical Scan Tool Data

Secondary Air Injection Pressure Sensor

Circuit	Short to Ground	Open	Short to Voltage
Parameter Normal Range: BARO **Operating Conditions:** Ignition ON, Engine OFF			
5-Volt Reference	41 kPa (6 psi)	41 kPa (6 psi)	149 kPa (21.6 psi)
Secondary Air Pressure Sensor Signal	40 kPa (5.8 psi)	40 kPa (5.8 psi)	149 kPa (21.6 psi)
Low Reference	-	149 kPa (21.6 psi)	-

Circuit/System Description

The secondary air injection system aids in the reduction of hydrocarbon emissions during a cold start. The electric air pump forces fresh air into the exhaust stream in order to accelerate the catalyst operation. The Secondary air injection pressure sensor, which is integral to the shutoff and check valve, is used to monitor the air flow from the secondary air injection pump. The engine control module (ECM) supplies voltage to the 5 V reference circuit and provides a ground for the low reference circuit. The sensor provides a signal voltage to the ECM relative to the pressure changes within the secondary air injection system.

Conditions for Running the DTC

- DTC P0606 is not set.
- The ignition is ON, or the engine is running.
- The DTCs run continuously when the above conditions are met.

Conditions for Setting the DTC

P2432

The ECM detects that the secondary air injection pressure sensor signal is less than 0.3 V for greater than 6 s.

P2433

The ECM detects that the secondary air injection pressure sensor signal is greater than 4.7 V for greater than 6 s.

Action Taken When the DTC Sets

DTCs P2432 and P2433 are Type B DTCs.

Conditions for Clearing the MIL/DTC

DTCs P2432 and P2433 are Type B DTCs.

Reference Information

Schematic Reference

Engine Controls Schematics

Connector End View Reference

COMPONENT CONNECTOR END VIEWS - INDEX

Description and Operation

Secondary Air Injection System Description

Electrical Information Reference

- **Circuit Testing**
- **Connector Repairs**
- **Testing for Intermittent Conditions and Poor Connections**
- **Wiring Repairs**

DTC Type Reference

Powertrain Diagnostic Trouble Code (DTC) Type Definitions

Scan Tool Reference

Control Module References for scan tool information

Circuit/System Verification

1. Ignition ON
2. Verify that DTC P0651 is not set.
   - **If the DTC is set**

     Refer to **Diagnostic Trouble Code (DTC) List - Vehicle** .

   - **If the DTC is not set.**
3. Verify the scan tool BARO pressure parameter is within the range specified in the **Altitude Versus Barometric Pressure** table.
   - **If not within the specified range**

     Refer to **DTC P2227-P2230**.

   - **If within the specified range**
4. Verify the scan tool Secondary Air Injection Pressure Sensor and the BARO pressure parameters are within 3 kPa (0.4 psi).
   - **If not within the specified range**

     Refer to Circuit/System Testing below

- **If within the specified range**

5. Operate the vehicle within the Conditions for Running the DTC. You may also operate the vehicle within the conditions that you observed from the Freeze Frame/Failure Records data.
6. Verify the DTC does not set.
   - **If the DTC sets**

     Refer to Circuit/System Testing below

   - **If the DTC does not set**
7. All OK

Circuit/System Testing

1. Ignition OFF and all vehicle systems OFF. It may take up to 2 min, for all vehicle systems to power down. Disconnect the harness connector at the Q29 Secondary Air Injection Solenoid Valve.
2. Test for less than 5 ohms of resistance between the low reference circuit terminal 3 and ground.
   - **If 5 ohms or greater**
   1. Ignition OFF, disconnect the harness connector at the K20 Engine Control Module.
   2. Test for less than 2 ohms in the low reference circuit end to end.
      - If 2 ohms or greater, repair the open/high resistance in the circuit.
      - If less than 2 ohms, replace the K20 Engine Control Module.
   - **If less than 5 ohms**
3. Ignition ON.
4. Test for 4.8-5.2 V between the 5 V reference circuit terminal 1 and ground.
   - **If less than 4.8 V**
   1. Ignition OFF, disconnect the harness connector at the K20 Engine Control Module.
   2. Test for infinite resistance between the 5 V reference circuit and ground.
      - If less than infinite resistance, repair the short to ground on the circuit.
      - If infinite resistance
   3. Test for less than 2 ohms in the 5 V reference circuit end to end.
      - If 2 ohms or greater, repair the open/high resistance in the circuit.
      - If less than 2 ohms, replace the K20 Engine Control Module.
   - **If greater than 5.2 V**
   1. Ignition OFF, disconnect the harness connector at the K20 Engine Control Module, ignition ON.
   2. Test for less than 1 V between the 5 V reference circuit and ground.
   - If 1 V or greater, repair the short to voltage on the circuit.
   - If less than 1 V, replace the K20 Engine Control Module.
   - **If between 4.8-5.2 V**
5. Verify the scan tool Secondary Air Injection Pressure Sensor parameter is less than 0.5 V.
   - **If 0.5 V or greater**

1. Ignition OFF, disconnect the harness connector at the K20 Engine Control Module, ignition ON
2. Test for less than 1 V between the signal circuit terminal 2 and ground.
   - If 1 V or greater, repair the short to voltage on the circuit.
   - If less than 1 V, replace the K20 Engine Control Module.
   - **If less than 0.5 V**

6. Install a 3 A fused jumper wire between the signal circuit terminal 2 and the 5 V reference circuit terminal 1.
7. Verify the scan tool Secondary Air Injection Pressure Sensor parameter is greater than 4.8 V.
   - **If 4.8 V or less**
   1. Ignition OFF, disconnect the harness connector at the K20 Engine Control Module.
   2. Test for infinite resistance between the signal circuit terminal 1 and ground.
      - If less than infinite resistance, repair the short to ground on the circuit.
      - If infinite resistance
   3. Test for less than 2 ohms in the signal circuit end to end.
   - If 2 ohms or greater, repair the open/high resistance in the circuit.
   - If less than 2 ohms, replace the K20 Engine Control Module.
   - **If greater than 4.8 V**
8. Test or replace the Q29 Secondary Air Injection Solenoid Valve.

Repair Instructions

Perform the **Diagnostic Repair Verification** after completing the repair.

- **Secondary Air Injection Check Valve Replacement** for secondary air injection solenoid valve replacement
- **Control Module References** for ECM replacement, programming, and setup

DTC P2440

Diagnostic Instructions

- Perform the **Diagnostic System Check - Vehicle** prior to using this diagnostic procedure.
- Review **Strategy Based Diagnosis** for an overview of the diagnostic approach.
- **Diagnostic Procedure Instructions** provides an overview of each diagnostic category.

DTC Descriptor

DTC P2440

Secondary Air Injection System Cut-Off Valve Stuck Open

Circuit/System Description

The secondary air injection system aids in the reduction of hydrocarbon emissions during a cold start. The electric air pump forces fresh air into the exhaust stream in order to accelerate the catalyst operation. A pressure sensor in the shutoff/check valve is used to monitor the air flow from the secondary air injection pump. The engine control module (ECM) supplies voltage to the 5-volt reference circuit and supplies a ground to the low reference circuit. The sensor provides a signal voltage to the ECM relative to the pressure changes within the secondary air injection system.

Ignition voltage is supplied to the secondary air injection pump and air injection shutoff/check valve relays. The ECM controls the relays by grounding the control circuits, which activates the relays. When the relay contacts close, voltage is supplied to the pump and the valve, which turns the pump on and opens the valve.

The diagnostic uses 3 phases to test the secondary air injection system:

- DTCs P0411 and P2430 run during Phase 1
- DTCs P2430 and P2440 run during Phase 2
- DTC P2444 runs during Phase 3

During phase 1, the secondary air injection pump and the secondary air injection shutoff and check valve are activated. Normal secondary air function occurs. Expected system pressure is 5-13 kPa (0.7-1.9 psi) above BARO.

During phase 2, only the secondary air injection pump is activated. The shutoff and check valve is closed. Pressure sensor performance and shutoff and check valve deactivation are tested. Expected system pressure is 14-25 kPa (2.0-3.6 psi) above BARO.

During phase 3, neither the secondary air injection pump nor the secondary air injection shutoff and check valve are activated. Secondary air injection pump deactivation is tested. Expected system pressure equals BARO.

Conditions for Running the DTC

- DTC P0101, P0102, P0103, P0111, P0112, P0113, P0114, P0116, P0117, P0118, P0128, P0201, P0202, P0203, P0204, P0261, P0262, P0264, P0265, P0267, P0268, P0270, P0271, P0300, P0301, P0302, P0303, P0304, P0351, P0352, P0353, P0354, P0412, P0418, P0420, P124A, P124B, P2147, P2148, P2150, P2151, P2153, P2154, P2156, P2157, P2227, P2228, P2229, P2230, P2430, P2431, P2432, or P2433 is not set.
- Greater than 30 min has elapsed since the last cold start.
- The ignition voltage is between 10-32 V.
- The engine speed is less than 5, 000 RPM.
- The intake air temperature (IAT) is greater than -11°C (12.2°F).
- The engine coolant temperature (ECT) is between -11 and +56°C (12.2-133°F).
- The barometric pressure (BARO) is greater than 60 kPa (8.7 psi).
- The manifold absolute pressure (MAP) sensor is greater than 20 kPa (2.9 psi).
- The mass air flow (MAF) is less than 50 g/s.
- The secondary air injection pump is commanded ON.
- Secondary air injection diagnostic test Phase 1 has run and passed.

- DTC P2440 runs once per ignition cycle when the above conditions are met for greater than 3 s.

Conditions for Setting the DTC

The ECM detects that the secondary air system pressure is less than a calibrated threshold for greater than 1.5 s.

Action Taken When the DTC Sets

DTC P2440 is a Type B DTC.

Conditions for Clearing the DTC

DTC P2440 is a Type B DTC.

Reference Information

Schematic Reference

Engine Controls Schematics

Connector End View Reference

COMPONENT CONNECTOR END VIEWS - INDEX

Description and Operation

Secondary Air Injection System Description

Electrical Information Reference

- **Circuit Testing**
- **Connector Repairs**
- **Testing for Intermittent Conditions and Poor Connections**
- **Wiring Repairs**

DTC Type Reference

Powertrain Diagnostic Trouble Code (DTC) Type Definitions

Scan Tool Reference

Control Module References for scan tool information

Circuit/System Verification

1. Ignition ON.

2. Verify that DTC P0411, P0412, P0418, P2430, P2431, P2432, or P2433 is not set.
   - **If any of the DTCs are set**

     Refer to **Diagnostic Trouble Code (DTC) List - Vehicle** .

   - **If none of the DTCs are set.**
3. Verify the scan tool BARO pressure parameter is within the range specified in the **Altitude Versus Barometric Pressure** table.
   - **If not within the specified range**

     Refer to **DTC P2227-P2230**.

   - **If within the specified range**
4. Verify the scan tool Secondary Air Injection Pressure Sensor parameter and the BARO pressure parameter are within 3 kPa (0.4 psi).
   - **If not within the specified range**

     Replace the Q29 Secondary Air Injection Solenoid Valve

   - **If within the specified range**
5. Engine running
6. Verify the scan tool Secondary Air Injection Pressure Sensor parameter increases between 14-25 kPa (2.0-3.6 psi) when the Secondary Air Injection Pump Relay is commanded ON with a scan tool.
   - **If not within the specified range**

     Refer to Circuit/System Testing below

   - **If within the specified range**
7. Operate the vehicle within the Conditions for Running the DTC to verify the DTC does not reset. You may also operate the vehicle within the conditions that you observed from the Freeze Frame/Failure Records data.
   - **If the DTC sets**

     Refer to Circuit/System Testing below

   - **If the DTC does not set**
8. All OK

Circuit/System Testing

1. Ignition OFF, disconnect the KR26 Secondary Air Injection Solenoid Valve Relay. Ignition ON.
2. Verify a test lamp does not illuminate between the control circuit terminal 87 and ground.
   - **If the test lamp illuminates**

Repair the short to voltage on the circuit.

- **If the test lamp does not illuminate**

3. Ignition OFF, connect the KR26 Secondary Air Injection Solenoid Valve Relay.
4. Disconnect the harness connector at the Q29 Secondary Air Injection Solenoid Valve. Ignition ON.
5. Verify a test lamp does not illuminate between the control circuit terminal 5 and ground.
   - **If the test lamp illuminates**

     Test or replace the KR26 Secondary Air Injection Solenoid Valve Relay.

   - **If the test lamp does not illuminate**
6. Verify the conditions listed below do not exist:
   - Hoses/pipes restricted or blocked upstream of valve
   - Hoses/pipes leaking or disconnected
   - Damaged or restricted secondary air injection pump
   - Damaged secondary air injection check valve
   - **If a condition exists**

     Repair or replace the affected component as necessary.

   - **If none of the conditions exist**
7. Ignition OFF, remove the Q29 Secondary Air Injection Solenoid Valve.
8. Connect the harness connector at the Q29 Secondary Air Injection Solenoid Valve.
9. Connect the secondary air injection pipe to the Q29 Secondary Air Injection Solenoid Valve.
10. Ignition ON, command the Secondary Air Injection Pump Relay ON with a scan tool. Verify there is NO airflow through the valve.
    - **If airflow**

      Replace the Q29 Secondary Air Injection Solenoid Valve.

    - **If no airflow**
11. Replace the G21 Secondary Air Injection Pump.

Component Testing

Relay Test

1. Ignition OFF, disconnect the KR26 Secondary Air Injection Solenoid Valve Relay.
2. Test for 70-110 ohms between terminals 85-86.
   - **If less than 70 ohms or greater than 110 ohms**

     Replace the KR26 Secondary Air Injection Solenoid Valve Relay.

- **If between 70-110 ohms**

3. Test for infinite resistance between the terminals listed below:
   - 30 and 86
   - 30 and 87
   - 30 and 85
   - 85 and 87
   - **If less than infinite resistance**

     Replace the KR26 Secondary Air Injection Solenoid Valve Relay.

   - **If infinite resistance**
4. Install a 15 A fused jumper wire between relay terminal 85 and 12 V. Install a jumper wire between relay terminal 86 and ground.
5. Test for less than 2 ohms between terminals 30 and 87.
   - **If 2 ohms or greater**

     Replace the KR26 Secondary Air Injection Solenoid Valve Relay.

   - **If less than 2 ohms**
6. All OK

Repair Instructions

Perform the **Diagnostic Repair Verification** after completing the repair.

- **Relay Replacement (Within an Electrical Center)** , **Relay Replacement (Attached to Wire Harness)**
- **Secondary Air Injection Pump Replacement**
- **Secondary Air Injection Check Valve Replacement** for secondary air injection solenoid valve replacement
- **Secondary Air Injection Pump Pipe Replacement**

DTC P2444

Diagnostic Instructions

- Perform the **Diagnostic System Check - Vehicle** prior to using this diagnostic procedure.
- Review **Strategy Based Diagnosis** for an overview of the diagnostic approach.
- **Diagnostic Procedure Instructions** provides an overview of each diagnostic category.

DTC Descriptor

DTC P2444

Secondary Air Injection System Pump Stuck On

Circuit/System Description

The secondary air injection system aids in the reduction of hydrocarbon emissions during a cold start. The electric air pump forces fresh air into the exhaust stream in order to accelerate the catalyst operation. A pressure sensor in the shutoff/check valve is used to monitor the air flow from the secondary air injection pump. The engine control module (ECM) supplies voltage to the 5-volt reference circuit and supplies a ground to the low reference circuit. The sensor provides a signal voltage to the ECM relative to the pressure changes within the secondary air injection system.

Ignition voltage is supplied to the secondary air injection pump and air injection shutoff/check valve relays. The ECM controls the relays by grounding the control circuits, which activates the relays. When the relay contacts close, voltage is supplied to the pump and the valve, which turns the pump on and opens the valve.

The diagnostic uses 3 phases to test the secondary air injection system:

- DTCs P0411 and P2430 run during Phase 1
- DTCs P2430 and P2440 run during Phase 2
- DTC P2444 runs during Phase 3

During phase 1, the secondary air injection pump and the secondary air injection shutoff and check valve are activated. Normal secondary air function occurs. Expected system pressure is 5-13 kPa (0.7-1.9 psi) above BARO.

During phase 2, only the secondary air injection pump is activated. The shutoff and check valve is closed. Pressure sensor performance and shutoff and check valve deactivation are tested. Expected system pressure is 14-25 kPa (2.0-3.6 psi) above BARO.

During phase 3, neither the secondary air injection pump nor the secondary air injection shutoff and check valve are activated. Secondary air injection pump deactivation is tested. Expected system pressure equals BARO.

Conditions for Running the DTC

- DTC P0101, P0102, P0103, P0111, P0112, P0113, P0114, P0116, P0117, P0118, P0128, P0201, P0202, P0203, P0204, P0261, P0262, P0264, P0265, P0267, P0268, P0270, P0271, P0300, P0301, P0302, P0303, P0304, P0351, P0352, P0353, P0354, P0412, P0418, P0420, P124A, P124B, P2147, P2148, P2150, P2151, P2153, P2154, P2156, P2157, P2227, P2228, P2229, P2230, P2430, P2431, P2432, or P2433 is not set.
- Greater than 30 min has elapsed since the last cold start.
- The ignition voltage is between 10-32 V.
- The engine speed is less than 5, 000 RPM.
- The intake air temperature (IAT) is greater than -11°C (12.2°F).
- The engine coolant temperature (ECT) is between -11 and +56°C (12.2-133°F).
- The barometric pressure (BARO) is greater than 60 kPa (8.7 psi).

- The manifold absolute pressure (MAP) sensor is greater than 20 kPa (2.9 psi).
- The mass air flow (MAF) is less than 50 g/s.
- Secondary air injection pump is commanded ON.
- Secondary air injection diagnostic test Phase 1 and Phase 2 have run and passed.
- DTC P2444 runs once per ignition cycle when the above conditions are met for greater than 3 s.

Conditions for Setting the DTC

The ECM detects that average difference between the predicted system pressure and the actual system pressure is greater than or less than calibrated thresholds for greater than 2 s.

Action Taken When the DTC Sets

DTC P2444 is a Type A DTC.

Conditions for Clearing the MIL/DTC

DTC P2444 is a Type A DTC.

Reference Information

Schematic Reference

Engine Controls Schematics

Connector End View Reference

COMPONENT CONNECTOR END VIEWS - INDEX

Description and Operation

Secondary Air Injection System Description

Electrical Information Reference

- **Circuit Testing**
- **Connector Repairs**
- **Testing for Intermittent Conditions and Poor Connections**
- **Wiring Repairs**

DTC Type Reference

Powertrain Diagnostic Trouble Code (DTC) Type Definitions

Scan Tool Reference

Control Module References for scan tool information

Circuit/System Verification

1. Ignition ON
2. Verify that DTC P0412, P0418, P2432 or P2433 is not set.
   - **If any of the DTCs are set**

     Refer to **Diagnostic Trouble Code (DTC) List - Vehicle** .

   - **If none of the DTCs are set.**

NOTE: To prevent the secondary air injection pump from overheating, do not operate the pump consecutively for greater than 2 minutes. The pump is provided with a thermal protector that will automatically reset when allowed to cool.

3. Verify the G21 Secondary Air Injection Pump turns ON and OFF when commanding the Secondary Air Injection Pump Relay ON and OFF with a scan tool.
   - **If the pump does not turn ON and OFF**

     Refer to Circuit/System Testing below

   - **If the pump turns ON and OFF**
4. Operate the vehicle within the Conditions for Running the DTC. You may also operate the vehicle within the conditions that you observed from the Freeze Frame/Failure Records data.
5. Verify the DTC does not set.
   - **If the DTC sets**

     Refer to Circuit/System Testing below

   - **If the DTC does not set**
6. All OK

Circuit/System Testing

1. Ignition OFF, disconnect the KR25 Secondary Air Injection Pump Relay.
2. Ignition ON, verify a test lamp does not illuminate between the control circuit terminal 87 and ground.
   - **If the test lamp illuminates**

     Repair the short to voltage on the circuit.

   - **If the test lamp does not illuminate**
3. Test or replace the KR25 Secondary Air Injection Pump Relay.

Component Testing

Relay Test

1. Ignition OFF, disconnect the KR25 Secondary Air Injection Pump Relay.
2. Test for 70-110 ohms between terminals 85-86.
   - **If less than 70 ohms or greater than 110 ohms**

     Replace the KR25 Secondary Air Injection Pump Relay.

   - **If between 70-110 ohms**
3. Test for infinite resistance between the terminals listed below:
   - 30 and 86
   - 30 and 87
   - 30 and 85
   - 85 and 87
   - **If less than infinite resistance**

     Replace the KR25 Secondary Air Injection Pump Relay.

   - **If infinite resistance**
4. Install a 15 A fused jumper wire between relay terminal 85 and 12 V. Install a jumper wire between relay terminal 86 and ground.
5. Test for less than 2 ohms between terminals 30 and 87.
   - **If 2 ohms or greater**

     Replace the KR25 Secondary Air Injection Pump Relay.

   - **If less than 2 ohms**
6. All OK

Repair Instructions

Perform the **Diagnostic Repair Verification** after completing the repair.

Relay Replacement (Within an Electrical Center) , **Relay Replacement (Attached to Wire Harness)**

DTC P2534 (FUEL PUMP CONTROL MODULE)

Diagnostic Instructions

- Perform the **Diagnostic System Check - Vehicle** prior to using this diagnostic procedure.
- Review **Strategy Based Diagnosis** for an overview of the diagnostic approach.
- **Diagnostic Procedure Instructions** provides an overview of each diagnostic category.

DTC Descriptor

DTC P2534

Ignition On/Start Switch Circuit Low Voltage

Diagnostic Fault Information

Circuit	Short to Ground	Open/High Resistance	Short to Voltage	Signal Performance
Ignition	P2534	P2534	-	-

Circuit/System Description

The fuel pump control module monitors the ignition voltage circuit in order to determine if the voltage is within the normal operating range.

Conditions for Running the DTC

The engine is running.

Conditions for Setting the DTC

The fuel pump control module detects that the ignition voltage is less than 6.0 V.

Action Taken When the DTC Sets

DTC P2534 is a Type A DTC.

Conditions for Clearing the DTC

DTC P2534 is a Type A DTC.

Reference Information

Schematic Reference

Engine Controls Schematics

Connector End View Reference

COMPONENT CONNECTOR END VIEWS - INDEX

Description and Operation

Fuel System Description

Electrical Information Reference

- **Circuit Testing**
- **Connector Repairs**
- **Testing for Intermittent Conditions and Poor Connections**
- **Wiring Repairs**

DTC Type Reference

Powertrain Diagnostic Trouble Code (DTC) Type Definitions

Scan Tool Reference

Control Module References for scan tool information

Circuit/System Testing

1. Ignition ON.
2. Verify DTC P0562 is not set.
   - **If the DTC is set**

     Refer to **Diagnostic Trouble Code (DTC) List - Vehicle** .

   - **If the DTC is not set**
3. Ignition OFF, disconnect the harness connector at the K27 fuel pump control module, ignition ON.
4. Verify a test lamp illuminates between the ignition circuit terminal 21 and ground.
   - **If the test lamp does not illuminate and the circuit fuse is good**
     1. Ignition OFF.
     2. Test for less than 2 ohms in the ignition circuit end to end.
        - If 2 ohms or greater, repair the open/high resistance in the circuit.
        - If less than 2 ohms, verify the fuse is not open and there is voltage at the fuse.
   - **If the test lamp does not illuminate and the circuit fuse is open**
     1. Ignition OFF.
     2. Test for infinite resistance between the ignition circuit and ground.
        - If less than infinite resistance, repair the short to ground on the circuit.
        - If infinite resistance, replace the K27 fuel pump control module.
   - **If the test lamp illuminates**
5. Replace the K27 fuel pump control module.

Repair Instructions

Perform the **Diagnostic Repair Verification** after completing the repair.

Control Module References for fuel pump control module replacement, programming and setup.

DTC P2544

Diagnostic Instructions

- Perform the **Diagnostic System Check - Vehicle** prior to using this diagnostic procedure.
- Review **Strategy Based Diagnosis** for a overview of the diagnostic approach.
- **Diagnostic Procedure Instructions** provides an overview of each diagnostic category.

DTC Descriptors

DTC P2544

Transmission Torque Request Signal Message Counter Incorrect

Circuit/System Description

To improve shift feel, the transmission control module (TCM) is constantly sending the engine control module (ECM) serial data messages with information regarding it's request for modifying engine speed or torque. The serial data messages are sent through two circuits which are part of a communication network called the controller area network (CAN). The ECM sets DTC P2544 when it detects a discrepancy in the structure of the message causing the integrity of the message to be questioned.

Conditions for Running the DTC

- The engine run time is greater than 0.5 s.
- No other CAN errors are present.

Conditions for Setting the DTC

The ECM detects that the engine speed and torque modification messages from the TCM are either corrupted or intermittently missing for greater than 4 s.

Action Taken When the DTC Sets

- DTC P2544 is a Type B DTC.
- The TCM commands maximum line pressure during shifts, which results in harsh shifts.
- The TCM freezes adaptive functions.

Conditions for Clearing the DTC

DTC P2544 is a Type B DTC.

Diagnostic Aids

An intermittent fault in the CAN circuits will cause the ECM to set DTC P2544.

Reference Information

DTC Type Reference

Powertrain Diagnostic Trouble Code (DTC) Type Definitions

Circuit/System Verification

NOTE:

- **DTC 2544 is an informational DTC.**
- **Diagnose all other engine control module DTCs prior to DTC 2544.**

1. Verify that no other DTCs are set except for DTC 2544.
   - **If any other DTCs are set**

     Refer to **Diagnostic Trouble Code (DTC) List - Vehicle**

   - **If only DTC P2544 is set**
2. Replace the K17 Electronic Brake Control Module.
3. Verify the DTC does not set while operating the vehicle within the Conditions for Running the DTC.
   - **If DTC sets**

     Replace the K20 Engine Control Module.

   - **If DTC does not set**
4. All OK.

Repair Instructions

Perform the **Diagnostic Repair Verification** after completing the repair.

Control Module References for ECM or control solenoid valve assembly replacement, programming, and setup.

DTC P2635 (FUEL PUMP CONTROL MODULE)

Diagnostic Instructions

- Perform the **Diagnostic System Check - Vehicle** prior to using this diagnostic procedure.
- Review **Strategy Based Diagnosis** for an overview of the diagnostic approach.
- **Diagnostic Procedure Instructions** provides an overview of each diagnostic category.

DTC Descriptor

DTC P2635

Fuel Pump Flow Performance

Diagnostic Fault Information

Circuit	Short to Ground	Open/High Resistance	Short to Voltage	Signal Performance
Control	P0231	P023F	P0232	P023F, P2635
Low Reference	-	P023F	-	P023F, P2635

Circuit/System Description

The engine control module (ECM) supplies voltage to the fuel pump control module when the ECM detects that the ignition is on. The voltage from the ECM to the fuel pump control module remains active for 2 seconds, unless the engine is in crank or run. While this voltage is being received, the fuel pump control module closes the ground switch of the fuel pump and also supplies a varying voltage to the fuel tank pump module in order to maintain the desired fuel line pressure.

Conditions for Running the DTC

- DTC P018B, P018C, P018D, P0231, P0232, P023F, P064A, P1255 or P06A6 are not active.
- DTC P0641 has not failed this ignition cycle.
- Fuel pump control is enabled and the fuel pump control state is normal.
- The system voltage is greater than 11 V.
- The engine has been running for more than 30 seconds.
- Low fuel level warning not present.

Conditions for Setting the DTC

This DTC sets when the fuel pump control module detects a predetermined fuel pressure performance degradation between the desired fuel pressure and the current fuel pressure.

Action Taken When the DTC Sets

DTC P2635 is a Type B DTC.

Conditions for Clearing the DTC

DTC P2635 is a Type B DTC.

Diagnostic Aids

Using the Failure Records data may help locate an intermittent condition. If you cannot duplicate the DTC, the information in the Failure Records can help determine how many miles since the DTC set. The Fail Counter and Pass Counter can help determine how many ignition cycles that the diagnostic test reported a pass and/or a fail.

On vehicles equipped with a high pressure mechanical pump on Direct Fuel Injection engines, the vehicle may continue to run even though the pump in the fuel tank is not operating.

Reference Information

Schematic Reference

Engine Controls Schematics

Connector End View Reference

COMPONENT CONNECTOR END VIEWS - INDEX

Description and Operation

Fuel System Description

Electrical Information Reference

- **Circuit Testing**
- **Connector Repairs**
- **Testing for Intermittent Conditions and Poor Connections**
- **Wiring Repairs**

DTC Type Reference

Powertrain Diagnostic Trouble Code (DTC) Type Definitions

Scan Tool Reference

Control Module References for scan tool information

Circuit/System Testing

NOTE: Do not replace the fuel pump control module based on a history DTC P2635. The DTC P2635 may be stored but that does not indicate a failure of the fuel pump control module. Refer to Strategy Based Diagnosis for further history DTC diagnostics.

1. Ignition ON.
2. Verify DTCs P018B, P018C, P018D, P0231, P0232 or P023F are not set.
   - **If any of the DTCs are set**

     Refer to **Diagnostic Trouble Code (DTC) List - Vehicle** .

   - **If none of the DTCs are set**
3. Verify the proper fuel system pressure. Perform the fuel system pressure test, refer to **Fuel System Diagnosis**.

- **If the fuel system pressure test is not normal**

  Replace the G12 Fuel Pump.

- **If the fuel system pressure test is normal**

4. Ignition OFF and all vehicle systems OFF, disconnect the harness connector at the G12 Fuel Pump. It may take up to 2 minutes for all vehicle systems to power down.
5. Test for less than 10 ohms between the low reference circuit terminal 2 and ground.
   - **If 10 ohms or greater**
   1. Ignition OFF, disconnect the harness connector at the K27 Fuel Pump Control Module.
   2. Test for less than 2 ohms in the low reference circuit end to end.
      - If 2 ohms or greater, repair the open/high resistance in the circuit.
      - If less than 2 ohms, replace the K27 Fuel Pump Control Module.
   - **If less than 10 ohms**
6. Connect a test lamp between the control circuit terminal 1 and the low reference circuit terminal 2.
7. Ignition ON.
8. Verify the test lamp turns ON and OFF when commanding the fuel pump ON and OFF with a scan tool.
   - **If the test lamp is always OFF**
   1. Ignition OFF, disconnect the harness connector at the K27 fuel pump control module.
   2. Test for infinite resistance between the control circuit and ground.
      - If less than infinite resistance, repair the short to ground on the circuit.
      - If infinite resistance
   3. Test for less than 2 ohms in the control circuit end to end.
      - If 2 ohms or greater, repair the open/high resistance in the circuit.
      - If less than 2 ohms, replace the K27 fuel pump control module.
   - **If the test lamp is always ON**
   1. Ignition OFF, disconnect the harness connector at the K27 fuel pump control module, ignition ON.
   2. Test for less than 1 V between the control circuit and ground.
      - If 1 V or greater, repair the short to voltage on the circuit.
      - If less than 1 V, replace the K27 fuel pump control module.
   - **If the test lamp turns ON and OFF**
9. All OK.

Repair Instructions

Perform the **Diagnostic Repair Verification** after completing the repair.

- **Fuel Tank Fuel Pump Module Replacement**
- **Control Module References** for fuel pump control module replacement, programming and setup

SYMPTOMS - ENGINE CONTROLS

Diagnostic Instructions

- Perform the **Diagnostic System Check - Vehicle** prior to using this diagnostic procedure.
- Review **Strategy Based Diagnosis** for an overview of the diagnostic approach.
- **Diagnostic Procedure Instructions** provides an overview of each diagnostic category.

Symptoms Description

Symptoms cover conditions that are not covered by DTCs. Certain conditions can cause multiple symptoms. These conditions are listed together under Symptoms Testing. Conditions that may only cause specific symptoms are listed separately under additional symptoms testing. Perform the symptoms testing before using the additional symptoms testing.

Symptoms Definition

Backfire

Fuel ignites in the intake manifold or in the exhaust system, making a loud popping noise.

Cuts Out, Misses

A steady pulsation or jerking that follows engine speed, which is usually more pronounced as the engine load increases. This condition is not normally felt above 1 500 RPM or 48 km/h (30 MPH). The exhaust has a steady spitting sound at idle or at low speed.

Detonation/Spark Knock

A mild to severe ping which usually gets worse while under acceleration. The engine makes sharp metallic knocks that change with throttle opening.

Engine Control Module (ECM) Commanded Reduced Engine Power

The ECM illuminates the Reduced Engine Power lamp and will limit engine power under potential engine/vehicle damaging or emissions related conditions. A DTC may not be set.

Dieseling, Run-On

Fuel ignites in the intake manifold or in the exhaust system, making a loud popping noise.

Hard Start

Engine cranks OK, but does not start for a long time. The vehicle does eventually run, or may start but immediately stalls.

Hesitation, Sag, Stumble

Momentary lack of response as the accelerator is pushed down. This condition can occur at any vehicle speed. This condition is usually more pronounced when first trying to make the vehicle move, as from a stop. This condition may cause the engine to stall in severe conditions.

Lack of Power, Sluggishness, or Sponginess

The engine delivers less than expected power. Little or no increase in speed when the accelerator pedal is pushed down part way.

Poor Fuel Economy

Fuel economy, as measured by an actual road test, is noticeably lower than expected. Also, the fuel economy is noticeably lower than it was on this vehicle at one time, as previously shown by an actual road test.

Poor Fuel Fill Quality

Difficulty when refueling the vehicle.

Rough, Unstable, or Incorrect Idle and Stalling

The engine runs unevenly at idle. If severe, the engine or the vehicle may shake. Engine idle may vary in speed. Either condition may be severe enough to stall the engine.

Surges/Chuggles

Engine power variation under steady throttle or cruise. Feels like the vehicle speeds up and slows down with no change in the accelerator pedal position.

Symptoms Verification

Before using the Symptom tables, perform the following inspections:

- Verify that the malfunction indicator lamp (MIL) is operating correctly. Use the scan tool to command the lamp ON and OFF.
- Verify that there are no DTCs that are stored.
- Verify that the scan tool data is within a normal operating range. Refer to **Control Module References** for scan tool information.
- Verify the customer concern.
- Verify there are no Bulletins for the current symptom.
- Verify that the vehicle tires are correctly inflated and meet original equipment specifications.
- Perform the Visual/Physical Inspection in this section. The visual/physical inspection is extremely important, and can lead to correcting a condition without additional testing. It may also help reveal the cause of an intermittent condition.

Identifying Intermittent Conditions

Many intermittent conditions occur with harness or connector movement due to engine torque, rough pavement, vibration or physical movements of a component. Refer to the following for a list of issues that may cause an intermittent condition:

- Moisture and water intrusion in connectors, terminals, and components
- Incomplete connector mating
- Poor terminal contact
- High circuit or component resistance-High resistance can include any resistance, regardless of the amount, which can interrupt the operation of the component.
- Harness that is too short or tight
- Wire insulation that is chaffed or cut
- High or low ambient temperature
- High or low engine coolant temperatures
- High underhood temperatures
- Heat build up in component or circuit due to circuit resistance, poor terminal contact, or high electrical load
- High or low system voltage
- High vehicle load conditions
- Rough road surfaces
- Electro-magnetic interference (EMI)/circuit interference from relays, solenoids or other electrical surge
- Incorrect installation of aftermarket, add on accessories

Visual/Physical Check

- Verify that the control module grounds are clean, tight, and correctly located.
- Verify that the vacuum hoses are not split or kinked, and are properly connected, as shown on the Vehicle Emission Control Information label.
- Verify that the air filter is clean and free from restrictions.
- Verify that there is no water intrusion in connectors terminals and components.
- Inspect the air intake ducts for the following conditions:
    - Collapsed
    - Damaged areas
    - Looseness
    - Incorrect installation
    - Leaking
- Inspect for air leaks at the throttle body mounting area, the mass air flow (MAF) sensor and intake manifold sealing surfaces.
- Inspect the wiring harness for the following conditions:
    - Poor connections
    - Pinches

  - Cuts
- Inspect for loose, damaged, unseated, or missing sensors/components.
- Inspect the terminals for corrosion and correct contact.

Symptoms Testing

Backfire, Cuts Out/Misses, Detonation/Spark Knock, Dieseling/Run-On, Engine Control Module (ECM) Commanded Reduced Engine Power, Hard Start, Hesitation/Sag/Stumble, Lack of Power/Sluggishness/Sponginess, Poor Fuel Economy, Rough, Unstable, or Incorrect Idle and Stalling, or Surges/Chuggles

1. Test for the following conditions:
   - An incorrectly operating fuel system. Test for the following:
     - Correct fuel pressure-Refer to **Fuel System Diagnosis**.
     - Fuel injectors that are leaking or improper operation-Refer to **Fuel Injector Diagnosis**.
     - Contaminated or a poor fuel quality condition-Refer to **Alcohol/Contaminants-in-Fuel Diagnosis**.
   - An incorrectly operating ignition system. Test or inspect for the following:
     - Spark plugs with an incorrect heat range or an abnormal condition-Refer to **Spark Plug Replacement** .
     - Coolant or oil fouled spark plugs-Refer to **Spark Plug Inspection** , and **Ignition System Specifications** .
     - Secondary ignition system susceptible to moisture-Engine running, wet down the secondary ignition system with water from a spray bottle to help locate damaged or deteriorated components. Look/listen for arcing or misfiring as the water is applied.
     - Weak spark using the **EL 26792** HEI Spark Tester -For equivalent regional tools, refer to **Special Tools** . Refer to **Electronic Ignition System Diagnosis**.
   - An incorrectly operating A/C compressor
   - Items that can cause an engine to run lean or rich-Refer to **DTC P0171 or P0172** .
   - Incorrectly installed mass air flow (MAF)/intake air temperature (IAT) sensor.
   - Incorrect crankshaft position sensor resistance-The crankshaft position sensor resistance may be out of range after a hot soak. The resistance should be between 700-1 200 ohms.
   - Split or kinked vacuum hoses-Verify that the routing and connections are as shown on the vehicle emission control information label.
   - Excessive knock sensor system spark retard activity-Refer to **Knock Sensor Replacement** , and **DTC P0324, P0326, or P06B6** , and **DTC P0325, P0327, or P0328** .
   - Electromagnetic interference on the reference circuit can cause a misfire condition. You can usually detect electromagnetic interference with a scan tool by monitoring the engine speed parameter. A sudden increase in the engine speed parameter with little change in actual engine speed indicates that electromagnetic interference is present. Inspect the high voltage components near the ignition control circuit if a condition exists.
   - A leaking or restricted positive crankcase ventilation system

- A stuck open evaporative emission (EVAP) canister purge solenoid valve
- An incorrectly operating engine cooling system-Test or inspect for the following:
  - A thermostat with an incorrect heat range-Refer to **Thermostat Diagnosis (1.8L LUW and LWE)** .
  - Improper engine coolant level-Refer to **Cooling System Draining and Filling (Static Fill)** , **Cooling System Draining and Filling (GE-47716 Fill)** .
- Incorrectly operating or damaged exhaust system components-Test for the following:
  - Physical damage or possible internal failure
  - Restricted three way catalytic converters

  For more information, refer to **Symptoms - Engine Exhaust** .
- An engine mechanical failure-Test for the following:
  - Excessive oil in the combustion chamber or leaking valve seals
  - Incorrect cylinder compression
  - Sticking or leaking valves
  - Worn camshaft lobes
  - Incorrect valve timing
  - Broken valve springs
  - Excessive carbon buildup in the combustion chambers-Clean the chambers with top engine cleaner, if necessary. Follow the instructions on the can.
  - Incorrect engine parts

  For more information, refer to **Symptoms - Engine Mechanical** .

2. If the above conditions do not address the symptom, refer to the additional symptoms tests.

Additional Symptoms Tests

Detonation/Spark Knock

- Test the engine for an overheating condition. Refer to **Symptoms - Engine Cooling** .
- Inspect for excessive carbon buildup in the combustion chambers. Clean the chambers with Top Engine Cleaner, if necessary. Follow the instructions on the can.

Engine Control Module (ECM) Commanded Reduced Engine Power

Under certain conditions the engine control module may limit engine power by reducing engine torque and, for some vehicles, fuel pressure as well. For most, but not all of the conditions, the engine control module will illuminate the reduced engine power lamp on the instrument panel cluster, however a DTC may not be set. Observe the scan tool Reduced Engine Power History parameter, if applicable, or refer to **K20 Engine Control Module: Scan Tool Information** to determine the reason for the reduced engine power event.

Verify or inspect for the following:

- Vehicle being operated at sustained high engine speeds, or, towing heavy loads up an incline for an extended period of time, which may cause the engine oil or coolant to overheat. A repair may not be necessary. Inspect the airflow passageways in front of the engine for obstructions and clear away any debris or foreign material that is found. If no obstructions are found, review approved driving habits with the customer. The customer may need to operate the vehicle at a higher engine speed to improve cooling system performance, or, at a slower engine speed to reduce engine load.
- A cooling fan condition which may cause the engine control module to reduce engine power-Refer to **Cooling Fan Description and Operation** , and **Cooling System Description and Operation (1.8L LUW and LWE)** to verify correct operation of the cooling fan.
- Temporarily reduced engine power. Under extremely cold ambient temperatures some SIDI equipped vehicles may experience engine control module commanded reduced engine power for a few minutes during engine warm-up. This would be a normal condition, noticeable only at wide open throttle, and the reduced engine power lamp would not be illuminated.
- If the vehicle is equipped with the OnStar® feature, reduced engine power may be due to OnStar® remote command. Verify the vehicle is not in the OnStar® initiated Stolen Vehicle Slowdown mode. Refer to **OnStar Stolen Vehicle Slowdown Active** , and **Remote Vehicle Speed Limiting Description and Operation** for additional information.
- High fuel pressure system pressure out of range-Refer to **Fuel System Diagnosis**, and **Fuel System Description** to verify high fuel pressure system operation.
- Maximum recommended engine oil life exceeded-Refer to the Owners Manual for scheduled maintenance recommendations.
- Intake air temperature out of range too high-Engine running, observe the scan tool IAT Sensor parameter. The readings should be between -40°C and +149°C (-40°F and +300°F). Refer to **DTC P0112, P0113, or P0114** for additional information.
- Fuel temperature out of range too high
- An incorrect learned brake pedal position (BPP) sensor-Verify the following actions have not occurred:
  - An engine control module (ECM) has been replaced.
  - A BPP sensor has been replaced.
  - A BPP sensor is misaligned or incorrectly installed.

    If any of the above actions have occurred, the **Brake Pedal Position Sensor Learn** procedure must be performed.

Fuel Odor

- Inspect for a saturated EVAP canister. Refer to **Evaporative Emission Control System Description** .
- Inspect for a condition with the internal components of the fuel tank assembly. Refer to **Fuel System Description** .

Hard Start

- Observe the scan tool Throttle Body Idle Airflow Compensation parameter. A value greater than 90% may indicate an excessive accumulation of deposits in the throttle bore. Inspect the throttle body and bore

and clean, if necessary. Refer to **Throttle Body Inspection and Cleaning** .

- Test the engine coolant temperature (ECT) sensor. Compare the ECT sensor value to the intake air temperature (IAT) sensor value on a cold engine. The ECT and IAT sensor values should be within approximately 3°C (5°F). If the ECT sensor is out of range with the IAT sensor, test the resistance of the ECT sensor. Refer to **Temperature Versus Resistance (ECT)** for resistance specifications. Replace the ECT sensor if the resistance is not within specification. If the sensor is within the specification, test the ECT circuits for a high resistance.
- Test the fuel pump relay operation. The fuel pump should turn ON for 2 s when the ignition is turned ON. Refer to **Fuel Pump Electrical Circuit Diagnosis**.

Hesitation, Sag, Stumble

- Test the fuel pressure. Refer to **Fuel System Diagnosis**.
- Test the manifold absolute pressure (MAP) sensor. Refer to **DTC P0106** .
- Test the generator. Refer to **Symptoms - Engine Electrical** . Repair the charging system if the generator output voltage is less than 9 V or more than 16 V.

NOTE: The following actions may need to be repeated in order to verify an intermittent intake or exhaust camshaft actuator condition.

- Engine warm and idling, verify the correct operation of the camshaft actuator system. Command the intake and exhaust camshaft actuators from 0 degrees to 25 degrees and back to zero while observing the scan tool Intake Camshaft Position Variance and Exhaust Camshaft Position Variance parameters. Each parameter should be less than 2 degrees in each of the commanded states.
  - If any of the parameters is greater than 2 degrees, inspect the suspect camshaft actuator and camshaft actuator solenoid valve and valve bore for contamination, obstruction, and damage. Refer to **Camshaft Actuator System Description** , and **Camshaft Position Actuator Solenoid Valve Replacement** .

Poor Fuel Economy

- Inspect for heavy loads being carried or towed.
- Inspect for acceleration rate too much or too often.
- Observe the scan tool Throttle Body Idle Airflow Compensation parameter. A value greater than 90% may indicate an excessive accumulation of deposits in the throttle bore. Inspect the throttle body and bore and clean, if necessary. Refer to **Throttle Body Inspection and Cleaning** .
- Inspect the brake system for brake drag.

Poor Fuel Fill Quality

- Inspect for restricted vent lines.
- Inspect for high fuel temperature.
- Inspect for a condition with the internal components of the fuel tank assembly

For more information, refer to the following:

- **Evaporative Emission Control System Diagnosis**
- **Engine Controls Schematics**
- **Fuel System Description**
- **Evaporative Emission Control System Description**

Rough, Unstable, or Incorrect Idle and Stalling

- Observe the scan tool Throttle Body Idle Airflow Compensation parameter. A value greater than 90% may indicate an excessive accumulation of deposits in the throttle bore. Inspect the throttle body and bore and clean, if necessary. Refer to **Throttle Body Inspection and Cleaning** .
- Inspect the engine mounts. Refer to **Engine Mount Inspection** .
- Inspect the intake and exhaust manifolds for casting flash.
- An excessively high idle may be due to the floor mat interfering with the accelerator pedal. With this condition present, it may not be possible to shift the transmission into gear. Inspect the accelerator pedal for binding and verify that the floor mat is not interfering with the aceclerator pedal movement.

Surges/Chuggles

- Verify that each injector harness is connected to the correct injector.
- Inspect for slow responding heated oxygen sensors (HO2S). The heated oxygen sensors should respond quickly to a change in throttle position. If the heated oxygen sensors do not respond to different throttle positions, inspect for contamination from fuel, silicon, or the incorrect use of RTV sealant. The sensors may have a white powdery coating and result in a high, but false, signal voltage, which gives a rich exhaust indication. The engine control module reduces the amount of fuel delivered to the engine, causing a drivability condition. Refer to **DTC P0133, P013A, P013B, P013E, P013F, P015A, P015B, P2270, or P2271** for additional information.

MALFUNCTION INDICATOR LAMP (MIL) DIAGNOSIS

Diagnostic Instructions

- Perform the **Diagnostic System Check - Vehicle** prior to using this diagnostic procedure.
- Review **Strategy Based Diagnosis** for an overview of the diagnostic approach.
- **Diagnostic Procedure Instructions** provides an overview of each diagnostic category.

Circuit/System Description

The malfunction indicator lamp (MIL) illuminates to inform the driver that an emission system fault has occurred and the engine control system requires service. Ignition voltage is supplied directly to the MIL. The engine control module (ECM) turns the MIL ON by grounding the MIL control circuit when the emission system fault occurs. Under normal operating conditions, the MIL should be ON only when the ignition is ON and the engine is OFF.

Diagnostic Aids

If the condition is intermittent, move the related harnesses and connectors while monitoring the scan tool MIL control circuit status parameters. Perform this test with the ignition ON and the engine OFF, and with the engine running. The MIL control circuit status parameters change from OK or Not Run to Fault if there is a condition with a circuit or a connection.

Reference Information

Schematic Reference

- **Engine Controls Schematics**
- **Instrument Cluster Schematics**

Connector End View Reference

COMPONENT CONNECTOR END VIEWS - INDEX

Electrical Information Reference

- **Circuit Testing**
- **Connector Repairs**
- **Testing for Intermittent Conditions and Poor Connections**
- **Wiring Repairs**

Scan Tool Reference

Control Module References for scan tool information

Circuit/System Verification

NOTE: Any MIL requesting DTCs that may be set should be diagnosed first.

1. Ignition ON.
2. Command the malfunction indicator lamp ON and OFF with a scan tool.
3. Verify that the malfunction indicator lamp turns ON and OFF as commanded.
    - **If the malfunction indicator lamp does not turn ON and OFF as commanded**

      Refer to Circuit/System Testing below

    - **If the malfunction indicator lamp turns ON and OFF as commanded**
4. Ignition ON.
5. Command the malfunction indicator lamp ON and OFF with a scan tool and verify that the control circuit status parameters listed below display OK or Not Run
    - The MIL Control Circuit Low Voltage Test Status
    - The MIL Control Circuit Open Test Status

- The MIL Control Circuit High Voltage Test Status
- **If Malfunction is displayed**

  Refer to Circuit/System Testing below

- **If OK or Not Run is displayed**

6. Engine running.
7. Command the malfunction indicator lamp ON and OFF with a scan tool and verify that the control circuit status parameters listed below display OK or Not Run.
   - The MIL Control Circuit Low Voltage Test Status
   - The MIL Control Circuit Open Test Status
   - The MIL Control Circuit High Voltage Test Status
   - **If Malfunction is displayed**

     Refer to Circuit/System Testing below

   - **If OK or Not Run is displayed**
8. All OK.

Circuit/System Testing

1. Ignition OFF.
2. Disconnect the X1 harness connector at the K20 Engine Control Module.
3. Ignition ON.
4. Verify the malfunction indicator lamp does not illuminate.
   - **If the malfunction indicator lamp illuminates**
   1. Test for infinite resistance between the malfunction indicator lamp control circuit terminal X1 1 and ground.
      - If less than infinite resistance, repair the short to ground in the circuit.
      - If infinite resistance, replace the P16 instrument cluster.
   - **If the malfunction indicator lamp does not illuminate**
5. Connect a 3 A fused jumper wire between the malfunction indicator lamp control circuit terminal X1 1 and ground.
6. Verify the malfunction indicator lamp illuminates.
   - **If the malfunction indicator lamp does not illuminate**
   1. Test the malfunction indicator lamp control circuit terminal X1 1 for a short to voltage or an open/high resistance.
      - If the malfunction indicator lamp control circuit terminal X1 1 is shorted to voltage or has an open/high resistance, repair as necessary.
      - If the malfunction indicator lamp control circuit terminal X1 1 tests normal
   2. Test the instrument cluster ignition voltage circuit for a short to ground or open/high resistance.

    - If the instrument cluster ignition voltage circuit is shorted to ground or has an open/high resistance, repair as necessary.
    - If the instrument cluster ignition voltage circuit tests normal, replace the P16 instrument panel cluster/bulb.
  - **If the malfunction indicator lamp illuminates**
7. Replace the K20 Engine Control Module.

Repair Instructions

Perform the **Diagnostic Repair Verification** after completing the repair.

- **Instrument Cluster Replacement**
- **Control Module References** for replacement, programming, and setup.

ENGINE CRANKS BUT DOES NOT RUN

Diagnostic Instructions

- Perform the **Diagnostic System Check - Vehicle** prior to using this diagnostic procedure.
- Review **Strategy Based Diagnosis** for an overview of the diagnostic approach.
- **Diagnostic Procedure Instructions** provides an overview of each diagnostic category.

Circuit/System Description

The engine cranks but does not run is an organized approach to identify a condition which causes the engine to crank but not start. This diagnostic directs the technician to the appropriate system diagnosis.

This diagnostic assumes the system voltage levels are adequate for starter motor operation. Fuel level and fuel quality must be determined for correct diagnosis.

Diagnostic Aids

Inspect for any of the following conditions:

- Insufficient fuel can cause a no start condition. Thoroughly inspect the fuel delivery system for sufficient fuel volume to the fuel injectors. Inspect the fuel supply components for partial blockage or restrictions.
- Fuel injectors with partially blocked and restricted nozzles, or a malfunctioning solenoid, can cause a no start condition. Refer to **Fuel Injector Diagnosis**.
- There may be fuel spray at the fuel injectors and the indicated fuel pressure may be correct, yet there may not be enough fuel to start the engine. If the fuel injectors and the injector circuit are OK, and fuel spray is detected, the fuel injector ON time may be inadequate. If the ECM receives incorrect inputs from the various information sensors, the fuel delivered by the fuel injectors may be inadequate to start the engine. Check all the engine data parameters with a scan tool and compare the values indicated with the expected values or the values from a known vehicle in good condition.
- Check the crankshaft position sensor engine reference signal with a scan tool. Observe the engine speed

parameter while cranking the engine. The scan tool should indicate a steady 200-300 RPM while cranking. If erratic values, such as sudden spikes in the engine speed, are displayed, the engine reference signal is not stable enough for the engine to start and run properly.

- Inspect the engine for good secure electrical grounds.
- If the engine almost starts and then stalls, check for an open in the ground circuits of the crankshaft position sensor and the camshaft position sensor - Intake or camshaft position sensor - Exhaust.
- Water or foreign material in the fuel can cause a no start or engine will not stay running condition. During freezing weather water can freeze inside the fuel system. The engine may start after 30 min in a heated repair shop. The malfunction may not recur until parked overnight in freezing temperatures. Extreme weather conditions can cause contaminated fuel to prevent the vehicle from starting.
- A vehicle that starts and runs after being brought to the repair shop for a no start condition, may have an ignition system that is susceptible to moisture. Spray water on the ignition system components and the wiring in order to check for an engine starting or will not stay running concern.

Reference Information

Schematic Reference

Engine Controls Schematics

Connector End View Reference

COMPONENT CONNECTOR END VIEWS - INDEX

Electrical Information Reference

- **Circuit Testing**
- **Connector Repairs**
- **Testing for Intermittent Conditions and Poor Connections**
- **Wiring Repairs**

Scan Tool Reference

Control Module References for scan tool information

Special Tools

- **CH 48027** Digital Pressure Gauge
- **EN 36012-A** Ignition System Diagnostic Harness
- **EL 26792** HEI Spark Tester
- **J 34730-2C** Injector Test Lamp

For equivalent regional tools, refer to **Special Tools** .

Circuit/System Testing

NOTE: This diagnostic assumes the following:

- The battery is completely charged.
- The engine cranking speed is acceptable.
- There is adequate fuel in the fuel tank.

1. Crank the engine for up to 15 s.
2. Verify that DTC P0117, P0118, P0122, P0123, P018C, P018D, P0222, P0223, P0231, P0232, P023F, P025A, P0335, P0336, P0513, P0562, P0563, P0601, P0602, P0603, P0604, P0606, P0628, P0629, P062F, P0633, P0685, P0689, P0690, P1516, P1631, P1682, P16F3, P2101, P2119, or P2610 are not set.
   - **If any of the DTCs are set**

     Refer to **Diagnostic Trouble Code (DTC) List - Vehicle** .

   - **If none of the DTCs are set**
3. Ignition ON
4. Verify the security indicator on the instrument cluster illuminates momentarily.
   - **If the security indicator stays ON or is flashing**

     Review the **Diagnostic Trouble Code (DTC) List - Vehicle** , for Immobilizer system DTCs. For additional information, refer to **Immobilizer Description and Operation** .

   - **If the security indicator does not stay ON and is not flashing**
5. Verify the scan tool Engine Speed parameter displays greater than 0 rpm while cranking the engine.
   - **If 0 rpm**

     Refer to **DTC P0335 or P0336** .

   - **If greater than 0 rpm**

NOTE: It may be necessary to secure the EN 36012-A to the spark plug boots with electrical tape.

6. Install the **EN 36012-A** Ignition System Diagnostic Harness to the spark plug boots.
7. Connect the **EL 26792** Spark Tester between the boot of a spark plug wire and ground.
8. Connect the remaining wires to the appropriate cylinders.

NOTE: An erratic or weak spark is considered a no spark condition.

9. Verify the spark tester sparks while cranking the engine.
   - **If the spark tester does not spark**

     Refer to **Electronic Ignition System Diagnosis** for diagnosis of the ignition coil.

- **If the spark tester sparks**

10. Ignition OFF, all accessories OFF, install the **CH 48027** Digital Pressure Gauge.
11. Ignition ON.

NOTE: Do not start the engine for this test.

12. Command the Fuel Pump Enable ON several times with a scan tool.
13. Verify that the fuel pressure is between 345-650 kPa (50-94 PSI) with the fuel pump running.
    - **If not within the specified range**

      Refer to **Fuel System Diagnosis**.

    - **If within the specified range**
14. Verify that the fuel pressure does not decrease greater than 34 kPa (5 PSI) in 1 minute.
    - **If not within the specified range**

      Refer to **Fuel System Diagnosis**.

    - **If within the specified range**
15. Ignition OFF, disconnect the harness connector at a Q17 Fuel Injector.
16. Connect the **J 34730-2C** Injector Test Lamp between the control circuit and the ignition voltage circuit.
17. Verify the injector test lamp flashes while cranking the engine.
    - **If the injector test lamp does not flash**

      Refer to **Fuel Injector Diagnosis**.

    - **If the injector test lamp flashes**
18. Verify the following conditions do not exist:
    - Air intake duct to the throttle body collapsed
    - Air filter or air intake system restricted
    - Gas or coolant fouled spark plugs. Refer to **Spark Plug Inspection** .
    - A skewed manifold absolute pressure (MAP) sensor.
    - A skewed engine coolant temperature (ECT) sensor.
    - Exhaust system restricted. Refer to **Restricted Exhaust** .
    - Contaminated fuel. Refer to **Alcohol/Contaminants-in-Fuel Diagnosis**.
    - An engine mechanical condition, for example, worn timing belt or low compression. Refer to **Symptoms - Engine Mechanical** .
    - **If a condition exists**

      Repair as necessary.

- **If no condition exists**

19. All OK.

Repair Verification

Perform the **Diagnostic Repair Verification** after completing the repair.

Spark Plug Replacement

FUEL SYSTEM DIAGNOSIS

Diagnostic Instructions

- Perform the **Diagnostic System Check - Vehicle** prior to using this diagnostic procedure.
- Review **Strategy Based Diagnosis** for an overview of the diagnostic approach.
- **Diagnostic Procedure Instructions** provides an overview of each diagnostic category.

Circuit/System Description

The engine control module (ECM) supplies voltage to the fuel pump control module when the ECM detects that the ignition is ON. The voltage from the ECM to the fuel pump control module remains active for 2 s, unless the engine is in Crank or Run. While this voltage is being received, the fuel pump control module closes the ground switch of the fuel pump and also supplies a varying voltage to the fuel tank fuel pump module in order to maintain the desired fuel line pressure.

The fuel system is an electronic returnless on-demand design. A returnless fuel system reduces the internal temperature of the fuel tank by not returning hot fuel from the engine to the fuel tank. Reducing the internal temperature of the fuel tank results in lower evaporative emissions.

The fuel tank stores the fuel supply. An electric turbine style fuel pump attaches to the fuel tank fuel pump module inside the fuel tank. The fuel pump supplies high pressure fuel through the fuel feed pipe to the fuel injection system. The fuel pump also supplies fuel to a venturi pump located on the bottom of the fuel tank fuel pump module. The function of the venturi pump is to fill the fuel tank fuel pump module reservoir. The fuel tank fuel pump module contains a reverse flow check valve. The check valve maintains fuel pressure in the fuel feed pipe and the fuel rail in order to prevent long cranking times.

Reference Information

Description and Operation

Fuel System Description

Electrical Information Reference

- **Circuit Testing**
- **Connector Repairs**

- **Testing for Intermittent Conditions and Poor Connections**
- **Wiring Repairs**

Scan Tool Reference

Control Module References for scan tool information

Special Tools

- **CH 48027** Digital Pressure Gauge
- **EN 37287** Fuel Line Shut-off Adapter

For equivalent regional tools, refer to **Special Tools** .

Circuit/System Verification

NOTE:

- **Repair all fuel system related DTCs before performing this diagnostic.**
- **Inspect the fuel system for damage or external leaks before proceeding.**
- **Verify that adequate fuel is in the fuel tank before proceeding.**
- **The Fuel Pump Enable may need to be commanded On a few times in order to obtain the highest possible fuel pressure.**
- **Before proceeding with this test review the User Manual CH 48027-5 for Safety Information and Instructions.**

1. Ignition OFF, all accessories OFF, install a **CH 48027** Gauge.

   NOTE: DO NOT perform the Fuel System Diagnosis if the engine coolant temperature is above 60°C (150°F). High fuel pressure readings may result due to hot soak fuel boiling. With the engine OFF, the fuel pressure may increase beyond the pressure relief regulator valve's setting point of 690 kPa (100 psi) ± 5 percent.

2. Ignition ON, engine OFF, command the Fuel Pump Enable On several times with a scan tool.
3. Verify the fuel pressure is between 345-650 kPa (50-94 psi) with the fuel pump running.
   - **If less than 345 kPa (50 psi)**

     Refer to Circuit/System Testing below - Fuel Pressure Low.

   - **If greater than 650 kPa (94 psi)**

     Replace the G12 Fuel Pump.

   - **If between 345-650 kPa (50-94 psi)**
4. Verify that the fuel pressure decreases to less than 600 kPa (87 psi) after the fuel pump is turned off.

- **If greater than 600 kPa (87 psi)**

  Replace the G12 Fuel Pump.

- **If less than 600 kPa (87 psi)**

5. Verify that the fuel pressure does not decrease more than 34 kPa (5 psi) in 1 minute.
   - **If greater than 34 kPa (5 psi)**

     Refer to Circuit/System Testing below- Fuel Pressure Leaks Down.

   - **If less than 34 kPa (5 psi)**
6. Relieve the fuel pressure to 69 kPa (10 psi).
7. Verify that the fuel pressure does not decrease more than 14 kPa (2 psi) in 5 min.
   - **If greater than 14 kPa (2 psi)**

     Replace the G12 Fuel Pump.

   - **If less than 14 kPa (2 psi)**
8. Engine idling at normal operating temperature.
9. Verify the Fuel Pump Control Module Fuel Pressure Sensor parameter is between 300-400 kPa (43-58 psi).
   - **If less than 300 kPa (43 psi)**

     Refer to Circuit/System Testing below - Fuel Pressure Low.

   - **If greater than 400 kPa (58 psi)**

     Replace the G12 Fuel Pump.

   - **If between 300-400 kPa (43-58 psi)**
10. Operate the vehicle within the conditions of the customer's concern while monitoring the fuel pressure with the **CH 48027** Gauge.
11. Verify the fuel pressure does not drop off during acceleration, cruise or hard cornering.
    - **If the fuel pressure drops off**

      Refer to Circuit/System Testing below - Fuel Pressure Drops Off.

    - **If the fuel pressure does not drop off**
12. If the fuel system components test normal, refer to **Symptoms - Engine Controls**, and **Fuel Injector Diagnosis**.

Circuit/System Testing

Fuel Pressure Low

1. Verify none of the conditions listed below exist:
   - Restricted fuel feed pipe
   - Inspect the harness connectors and the ground circuits of the fuel pump for poor connections.
   - **If a condition exists**

     Repair as necessary.

   - **If none of the conditions exist**

     Replace the G12 Fuel Pump.

Fuel Pressure Leaks Down

1. Ignition OFF, relieve the fuel pressure. Refer to **Fuel Pressure Relief** .
2. Install the **EN 37287** Adapter between the chassis fuel feed hose and the engine compartment fuel feed pipe.
3. Open the valve on the **EN 37287** Adapter.
4. Ignition ON, command the Fuel Pump Enable On with a scan tool and bleed the air from the **CH 48027** Gauge.
5. Command the Fuel Pump Enable On and then Off with a scan tool.
6. Close the valve on the **EN 37287** Adapter.
7. Verify that the fuel pressure does not decrease more than 34 kPa (5 psi) in 1 min.
   - **If greater than 34 kPa (5 psi)**

     Locate and replace the leaking Q17 Fuel Injector.

   - **If less than 34 kPa (5 psi)**

     Replace the G12 Fuel Pump.

Fuel Pressure Drops Off

1. Verify none of the conditions listed below exist:
   - Restricted fuel feed pipe
   - Inspect the harness connectors and the ground circuits of the fuel pump for poor connections.
   - **If a condition exists**

     Repair as necessary.

   - **If none of the conditions exist**

     Replace the G12 Fuel Pump.

Repair Instructions

Perform the **Diagnostic Repair Verification** after completing the diagnostic procedure.

- **Fuel Feed Pipe Replacement**
- **Fuel Injector Replacement**
- **Fuel Tank Fuel Pump Module Replacement**

FUEL PUMP ELECTRICAL CIRCUIT DIAGNOSIS

Diagnostic Instructions

- Perform the **Diagnostic System Check - Vehicle** prior to using this diagnostic procedure.
- Review **Strategy Based Diagnosis** for an overview of the diagnostic approach.
- **Diagnostic Procedure Instructions** provide an overview of each diagnostic category.

Diagnostic Fault Information

Circuit	Short to Ground	Open/High Resistance	Short to Voltage	Signal Performance
Fuel Pump High Signal	P0231	P023F	P0232	P023F, P2635
Fuel Pump Low Signal	-	P023F	-	P023F, P2635

Circuit/System Description

The engine control module (ECM) supplies voltage to the fuel pump control module when the ECM detects that the ignition is on. The voltage from the ECM to the fuel pump control module remains active for two seconds, unless the engine is in crank or run. While this voltage is being received, the fuel pump control module closes the ground switch of the fuel pump and also supplies a varying voltage to the fuel tank pump module in order to maintain the desired fuel pressure.

Reference Information

Schematic Reference

Engine Controls Schematics

Connector End View Reference

COMPONENT CONNECTOR END VIEWS - INDEX

Description and Operation

Fuel System Description

Electrical Information Reference

- **Circuit Testing**

- **Connector Repairs**
- **Testing for Intermittent Conditions and Poor Connections**
- **Wiring Repairs**

DTC Type Reference

Powertrain Diagnostic Trouble Code (DTC) Type Definitions

Scan Tool Reference

Control Module References for scan tool information

Circuit/System Verification

Ignition ON, command the fuel pump ON and OFF using the scan tool ECM output control. The fuel pump should turn on and off.

Circuit/System Testing

1. Ignition OFF, disconnect the harness connector at the G12 fuel pump.
2. Connect a test lamp between the control circuit terminal 1 and ground.
3. Ignition ON, command the G12 fuel pump ON and OFF using a scan tool ECM fuel pump output control. The test lamp should turn ON and OFF, as commanded.
    - If the test lamp is always ON, test the control circuit for a short to voltage. If the circuit tests normal, replace the K27 fuel pump control module.
    - If the test lamp is always OFF, test the control circuit for a short to ground or an open/high resistance. If the circuit tests normal, replace the K27 fuel pump control module.
4. Ignition OFF, connect a test lamp between the control circuit terminal 1 and the low reference circuit terminal 2.
5. Ignition ON, command the G12 fuel pump ON using a scan tool. The test lamp should illuminate.
    - If the test lamp does not illuminate, test the low reference circuit terminal 1 for a short to voltage or an open/high resistance. If the circuit tests normal, replace the K27 fuel pump control module.
6. If all circuits test normal, replace the G12 fuel pump.

Repair Instructions

Perform the **Diagnostic Repair Verification** after completing the repair.

Control Module References for fuel pump control module replacement, programming and setup

FUEL INJECTOR DIAGNOSIS

Diagnostic Instructions

- Perform the **Diagnostic System Check - Vehicle** prior to using this diagnostic procedure.

- Review **Strategy Based Diagnosis** for an overview of the diagnostic approach.
- **Diagnostic Procedure Instructions** provides an overview of each diagnostic category.

Circuit/System Description

The engine control module (ECM) enables the appropriate fuel injector pulse for each cylinder. The ignition voltage is supplied directly to the fuel injectors. The ECM controls each fuel injector by grounding the control circuit via a solid state device called a driver. A fuel injector coil winding resistance that is too high or too low will affect the engine driveability. A fuel injector control circuit DTC may not set, but a misfire may be apparent. The fuel injector coil windings are affected by temperature. The resistance of the fuel injector coil windings will increase as the temperature of the fuel injector increases.

When performing the fuel injector balance test with the fuel injector tester or the scan tool, the scan tool is first used to enable the fuel pump. The fuel injector tester or the scan tool is then used to pulse each injector for a precise amount of time, allowing a measured amount of fuel to be injected. This causes a drop in the system fuel pressure that can be recorded and used to compare each injector.

Diagnostic Aids

- Operating the vehicle over a wide temperature range may help isolate the fuel injector that is causing the condition.
- Perform the fuel injector coil test within the conditions of the concern from the customer. A fuel injector condition may only be apparent at a certain temperature, or under certain conditions.
- Monitoring the Current Misfire Counters, or misfire graph, may help to isolate the fuel injector that is causing the condition.

Reference Information

Schematic Reference

Engine Controls Schematics

Connector End View Reference

COMPONENT CONNECTOR END VIEWS - INDEX

Description and Operation

Fuel System Description

Electrical Information Reference

- **Circuit Testing**
- **Connector Repairs**
- **Testing for Intermittent Conditions and Poor Connections**
- **Wiring Repairs**

Special Tools

- **CH 48027** Digital Pressure Gauge
- **EL 39021** Fuel Injector Coil and Balance Tester

For equivalent regional tools, refer to **Special Tools** .

Fuel Injector Coil Test

Verify the resistance of each Q17 Fuel Injector with one of the following methods:

- If the engine coolant temperature (ECT) sensor is between 10-32°C (50-90°F), the resistance of each fuel injector should be 11-14 ohms. If the injectors measure OK, perform the Fuel Injector Balance Test.
  - If not within the specified range, replace the Q17 Fuel Injector.
- If the ECT sensor is not between 10-32°C (50-90°F), measure and record the resistance of each fuel injector. Subtract the lowest resistance value from the highest resistance value. The difference between the lowest value and the highest value should be equal to or less than 3 ohms. If the injectors measure OK, perform the Fuel Injector Balance Test.
  - If not within the specified range, add all of the fuel injector resistance values to obtain a total resistance value. Divide the total resistance value by the number of fuel injectors to obtain an average resistance value. Subtract the lowest individual fuel injector resistance value from the average resistance value. Compute the difference between the highest individual fuel injector resistance value and the average resistance value. Replace the Q17 Fuel Injector that displays the greatest difference above or below the average.

Fuel Injector Balance Test with Special Tool

NOTE:

- **DO NOT perform this test if the engine coolant temperature (ECT) is above 94°C (201°F). Irregular fuel pressure readings may result due to hot soak fuel boiling.**
- **Verify that adequate fuel is in the fuel tank before proceeding with this diagnostic.**
- **Before proceeding with this test review the User Manual CH 48027-5 for Safety Information and Instructions.**

1. Verify the correct fuel system pressure. Refer to **Fuel System Diagnosis**.
2. Set the amperage supply selector switch on the fuel injector tester to the Balance Test 0.5-2.5 A position.
3. Connect the **EL 39021** fuel injector coil and balance tester to a Q17 Fuel Injector.
4. Command the Fuel Pump Relay On and then Off three times with a scan tool. On the last command, as the fuel pressure begins to slowly degrade and stabilize, select a fuel pressure within 34 kPa (5 psi) of the maximum pump pressure. Record this fuel pressure. This is the starting pressure at which you will pulse each injector.
5. Command the Fuel Pump Relay On one more time and energize the fuel injector by depressing the Push to Start Test button on the **EL 39021** fuel injector coil and balance tester at the previously selected pressure.

6. After the injector stops pulsing, select Min from the Display Mode on the **CH 48027** gauge and record the Min pressure.

NOTE: New test results will not be recorded if the Min/Max results are not cleared after each injector is tested.

7. Clear the Min/Max results on the **CH 48027** gauge.
8. Select Normal from the Display Mode on the **CH 48027** gauge.
9. Repeat steps 3 and 5 through 8 for each fuel injector.
10. Subtract the minimum pressure from the starting pressure for one fuel injector. The result is the pressure drop value.
11. Obtain a pressure drop value for each fuel injector.
12. Add all of the individual pressure drop values except for the injector suspected of being faulty. This is the total pressure drop.
13. Divide the total pressure drop by the number of fuel injectors that were added together. This is the average pressure drop. The difference between any individual pressure drop and the average pressure drop should not be more than 20 kPa (3 psi).
    - If the difference between any individual pressure drop and the average pressure drop is more than 20 kPa (3 psi), replace the Q17 Fuel Injector.

Fuel Injector Balance Test with Scan Tool

1. Verify the correct fuel system pressure. Refer to **Fuel System Diagnosis**.
2. Command the Fuel Pump Relay On and then Off three times with a scan tool. On the last command, as the fuel pressure begins to slowly degrade and stabilize, select a fuel pressure within 34 kPa (5 psi) of the maximum pump pressure. Record this fuel pressure. This is the starting pressure at which you will pulse each injector.
3. With a scan tool, select the Fuel Injector Balance Test function within the Special Functions menu.
4. Select an injector to be tested.
5. Press Enter to prime the fuel system.
6. Energize the fuel injector by depressing the Pulse Injector button on the scan tool at the previously selected pressure.
7. After the injector stops pulsing, select Min from the Display Mode on the **CH 48027** gauge and record the Min pressure.

NOTE: New test results will not be recorded if the Min/Max results are not cleared after each injector is tested.

8. Clear the Min/Max results on the **CH 48027** gauge.
9. Select Normal from the Display Mode on the **CH 48027** gauge.
10. Press Enter on the scan tool to bring you back to the Select Injector screen.
11. Repeat steps 4 through 10 for each fuel injector.

12. Subtract the minimum pressure from the starting pressure for one fuel injector. The result is the pressure drop value.
13. Obtain a pressure drop value for each fuel injector.
14. Add all of the individual pressure drop values except for the injector suspected of being faulty. This is the total pressure drop.
15. Divide the total pressure drop by the number of fuel injectors that were added together. This is the average pressure drop. The difference between any individual pressure drop and the average pressure drop should not be more than 20 kPa (3 psi).
    - If the difference between any individual pressure drop and the average pressure drop is more than 20 kPa (3 psi), replace the Q17 Fuel Injector.

Repair Instructions

Perform the **Diagnostic Repair Verification** after completing the diagnostic procedure.

Fuel Injector Replacement

ALCOHOL/CONTAMINANTS-IN-FUEL DIAGNOSIS

Diagnostic Instructions

- Perform the **Diagnostic System Check - Vehicle** prior to using this diagnostic procedure.
- Review **Strategy Based Diagnosis** for an overview of the diagnostic approach.
- **Diagnostic Procedure Instructions** provides an overview of each diagnostic category.

Test Description

Water contamination in the fuel system may cause driveability conditions such as hesitation, stalling, no start, or misfires in one or more cylinders. Water may collect near a single fuel injector at the lowest point in the fuel injection system and cause a misfire in that cylinder. If the fuel system is contaminated with water, inspect the fuel system components for rust or deterioration.

Ethanol concentrations of greater than 10 percent can cause driveability conditions and fuel system deterioration. Fuel with more than 10 percent ethanol could result in driveability conditions such as hesitation, lack of power, stalling, or no start. Excessive concentrations of ethanol used in vehicles not designed for it may cause fuel system corrosion, deterioration of rubber components, and fuel filter restriction.

Reference Information

Special Tool

CH 44175-A Fuel Composition Tester, if available

For equivalent regional tools, refer to **Special Tools** .

System Verification

The fuel sample should be drawn from the bottom of the tank so that any water present in the tank will be detected. The sample should be bright and clear.

- If the sample appears cloudy, or contaminated with water, as indicated by a water layer at the bottom of the sample, perform the Particulate Contaminants in Fuel Testing Procedure.
- If alcohol contamination is suspected, perform the Alcohol in Fuel Testing procedure.

Alcohol in Fuel Testing with Special Tool, If Available

1. Test the fuel composition using the **CH 44175-A** Fuel Composition Tester and the Instruction Manual.
2. If water appears in the fuel sample, clean the fuel system.
3. Subtract 50 from the reading on the DMM in order to obtain the percentage of alcohol in the fuel sample.
4. If the fuel sample contains more than 15 percent ethanol, add fresh, regular gasoline to the vehicle's fuel tank.
5. Test the fuel composition.
6. If testing shows the ethanol percentage is still more than 15 percent, replace the fuel in the vehicle.

Alcohol in Fuel Testing without Special Tool

1. Using a 100 ml (3.38 oz) specified cylinder with 1 ml (0.034 oz) graduation marks, fill the cylinder with fuel to the 90 ml (3.04 oz) mark.
2. Add 10 ml (0.34 oz) of water in order to bring the total fluid volume to 100 ml (3.38 oz) and install a stopper.
3. Shake the cylinder vigorously for 10-15 seconds.
4. Carefully loosen the stopper in order to release the pressure.
5. Re-install the stopper and shake the cylinder vigorously again for 10-15 seconds.
6. Put the cylinder on a level surface for approximately 5 min in order to allow adequate liquid separation. If alcohol is present in the fuel, the volume of the lower layer, which would now contain both alcohol and water, will be more than 10 ml (0.34 oz). For example, if the volume of the lower layer is increased to 15 ml (0.51 oz), this indicates at least 5 percent alcohol in the fuel. The actual amount of alcohol may be somewhat more because this procedure does not extract all of the alcohol from the fuel.

Particulate Contaminants in Fuel Testing Procedure

1. Using an approved fuel container, draw approximately 0.5 liter (0.53 qt) of fuel.
2. Place the container on a level surface for approximately 5 min in order to allow settling of the particulate contamination. Particulate contamination will show up in various shapes and colors. Sand will typically be identified by a white or light brown crystals. Rubber will appear as black and irregular particles.
3. Observe the fuel sample. If any physical contaminants or water are present, clean the fuel system.

Repair Instructions

Perform the **Diagnostic Repair Verification** after completing the diagnostic procedure.

- **Fuel System Cleaning**

- **Fuel Tank Draining**

EVAPORATIVE EMISSION CONTROL SYSTEM DIAGNOSIS

Special Tools

EN 41413-VLV EVAP Service Port Vent Fitting

Operating Instructions for the Evaporative Emission System Tester (EEST)

Vehicle Setup

WARNING: Refer to Fuel and Evaporative Emission Pipe Warning .

CAUTION: Refer to Clean, Dry, Low Pressure Gas Source Caution .

NOTE: When servicing the EVAP system, test pressure must not exceed 13 in H20 (0.5 PSI) as pressure in excess of this could cause system components to perform inaccurately.

NOTE: A large difference between the vehicle temperature and shop temperature will seriously affect the accuracy of the tests. Always allow at least 15 min for the vehicle temperature to adjust to the shop temperature. Refer to Temperature Variation Instructions for more information about vehicle versus shop temperatures.

1. Engine OFF, open the hood. Position a large fan to blow air under the vehicle onto the fuel tank area.
2. Connect the red battery clip from the tester to the positive battery terminal.

NOTE: The vehicle battery must be fully charged for optimum tester performance.

3. Connect the black battery clip from the tester to chassis ground.

Flow Meter Test - Leak Detection

CAUTION: Refer to Fuel and Evaporative Emission Hose/Pipe Connection Cleaning Caution .

1. Open the Nitrogen tank valve and turn the NITROGEN/SMOKE valve on the front control panel to NITROGEN.
2. Connect the hose to the correct test orifice on the bottom front of the tester. For orifice size, refer to the vehicle specific information found in service procedures for DTCs that relate to evaporative emission

(EVAP) system leaks.

3. Press and release the remote switch to activate the tester.

NOTE: **The tester will time out after about 15 min. You may press the remote switch to reactivate the tester as desired.**

4. Position the sliding red flag on the flow meter to align with the floating indicator. When the red flag is set, press and release the remote switch to deactivate the tester.
5. Remove the hose from the test orifice and install the hose onto the vehicle. For proper connection location, and the special tool numbers for any adapters that may be required, refer to the service procedures for DTCs that relate to EVAP system leaks.
6. Ignition ON, seal the EVAP system per instructions in the service procedures for DTCs that relate to EVAP system leaks. Most systems can be sealed using a scan tool output control for the EVAP vent solenoid valve, other systems require that the vent system be plugged.

NOTE:

- **Larger volume fuel tanks, and/or those with lower fuel levels, may require several minutes to fill with nitrogen.**
- **Static buildup may cause the float indicator to stick. It may be necessary to tap on the flow meter to free up the float.**
- **If fuel level is 90 % or greater it will take longer to fill the system with smoke because the fuel fill tube check valve will be closed and force any smoke to pass through the ORVR pipe and orifice.**

7. Press and release the remote switch to activate the nitrogen flow and fill the system.
8. Compare the stable floating indicator position to the red flag.
   - Below the red flag, the result is acceptable, Pass. Test complete
   - Above the red flag, the result is unacceptable, Fail. Go to the Smoke Procedure
9. Press and release the remote switch to deactivate the tester.

Smoke Procedure - Locate the Leak

NOTE: **It is not recommended to use the tester in an outside repair bay area because wind and sunlight may affect temperature and your ability to see the smoke.**

1. Turn OFF any fans that may cause air movement around or near the vehicle.

NOTE: **Completely unwind the nitrogen/smoke hose from the bracket to optimize the tester's performance.**

2. Connect the nitrogen/smoke hose to the vehicle as directed in the service procedures. Some vehicles require that the nitrogen/smoke hose be connected at the front of the EVAP system at the EVAP service port. An adapter may be necessary. Other vehicles require the connection be made at the rear of the system using an adapter at the fuel fill cap. Consult the service procedures for DTCs that relate to

evaporative emission (EVAP) system leaks for vehicle specific instructions regarding connection location and adapters.

3. Open the nitrogen tank valve and turn the nitrogen/smoke valve on the control panel to smoke.

NOTE: The remote switch operates on a push ON, push OFF fashion.

4. Press and release the remote switch to activate the tester and inject smoke into the EVAP system.
5. Verify smoke has filled the EVAP system by opening the system opposite the end where smoke is injected. When injecting smoke at the service port, remove the fuel fill cap until smoke is observed. Then close the system and continue testing. If using a special tool fuel fill cap adapter at the filler neck, vent the system at the service port, with special tool EN 41413-VLV EVAP Service Port Vent Fitting, until smoke is observed then remove the vent fitting tool and close the system to continue with the test.

NOTE: Inject smoke in less than 2 min cycles for optimum tester performance.

6. Press and release the remote switch to deactivate the tester.

NOTE: For optimum visual smoke performance, deactivate the smoke flow and allow the system pressure to drop. Allowing the smoke to exit small holes at a low flow rate greatly enhances visibility.

7. Introduce smoke into the system for an additional 60 s. Continue introducing smoke at 15 s intervals, as necessary.
8. Using a high-intensity white light, inspect the entire EVAP system path, and look for the source of the leak indicated by the exiting smoke. Introduce smoke at 15 s intervals, as needed, until leak source is identified.

Temperature Variation Instructions

The Concern

Ideal circumstances for conducting the EVAP flow meter test require equal temperatures between the nitrogen gas and the vehicle EVAP system. Significant differences in temperature between them can result in a flow or pressure change during testing, causing misleading results. Typically, the EEST is stored indoors, approximately 21°C (70°F). Vehicles brought in for diagnosis may have an EVAP system at significantly different temperatures.

For Example

NOTE: With no temperature difference between the nitrogen gas and EVAP system, the resulting vehicle EVAP system pressure will remain stable at 3.2 kPa, 13 in. H2O (0.5 PSI) once pressurized, providing no leaks are present.

When the EVAP flow meter tests are performed with significant differences in temperature between the nitrogen gas and the vehicle EVAP system, the following results can occur:

- An increase in flow during the flow meter test can be caused by a vehicle's warm EVAP system cooling down.
- A decrease in flow during the flow meter test can be caused by a vehicle's cool EVAP system warming up.

The Solution

When working on a vehicle with significant temperature differences between the vehicle EVAP system and the nitrogen gas, allow the vehicle EVAP system temperature to stabilize as close as possible to the temperature of the nitrogen gas before conducting the Flow Meter Test.

INTAKE MANIFOLD RUNNER CONTROL SYSTEM DIAGNOSIS

Diagnostic Instructions

- Perform the **Diagnostic System Check - Vehicle** prior to using this diagnostic procedure.
- Review **Strategy Based Diagnosis** for an overview of the diagnostic approach.
- **Diagnostic Procedure Instructions** provide an overview of each diagnostic category.

Circuit/System Description

An intake manifold tuning solenoid valve is used to change the intake manifold plenum configuration. When the intake manifold tuning solenoid valve is open, the intake manifold is configured to one large plenum. When the intake manifold tuning solenoid valve is closed, the intake manifold is configured to 2 smaller plenums. The intake manifold tuning solenoid valve improves engine performance at low and high engine speeds.

Ignition voltage is supplied directly to the intake manifold tuning solenoid valve. The engine control module (ECM) controls the solenoid by grounding the control circuit with a solid state device called a driver. The driver is equipped with a feedback circuit that is pulled up to a voltage. The ECM can determine if the control circuit is open, shorted to ground, or shorted to a voltage by monitoring the feedback voltage.

The intake manifold tuning solenoid valve also contains a position sensor which is used to detect the actual position of the intake manifold tuning solenoid valve in relation to its commanded position. The ECM supplies the intake manifold tuning solenoid valve position sensor with a 5 V signal circuit and the position sensor uses a common ground circuit. The position sensor enables the ECM to detect a physically broken or stuck intake manifold tuning solenoid valve.

Diagnostic Aids

If the condition is intermittent, move the related harnesses and connectors, with the engine operating, while monitoring the scan tool circuit test status parameters for the component. A circuit test status parameter will change from OK or Not Run to Malfunction if there is a condition with the circuit or a connection.

Reference Information

Schematic Reference

Engine Controls Schematics

Connector End View Reference

COMPONENT CONNECTOR END VIEWS - INDEX

Electrical Information Reference

- **Circuit Testing**
- **Connector Repairs**
- **Testing for Intermittent Conditions and Poor Connections**
- **Wiring Repairs**

DTC Type Reference

Powertrain Diagnostic Trouble Code (DTC) Type Definitions

Scan Tool Reference

Control Module References for scan tool information

Circuit/System Verification

1. Ignition ON, observe the scan tool DTC information. Verify that DTCs P0660, P2070, P2071, P2076, P2077, or P2078 are not set.
    - If any of the DTCs are set, refer to **Diagnostic Trouble Code (DTC) List - Vehicle** .
2. Command the Intake Manifold Tuning Valve ON with a scan tool. The intake manifold tuning valve actuator should move to the closed position.

Circuit/System Testing

1. Inspect the linkage between the Q22 Intake Manifold Tuning Solenoid Valve and the valve at the intake manifold for the conditions listed below:
    - Linkage for being connected
    - Linkage binding
    - Interference with hoses, wiring, or any other components
    - If a condition is found, repair as necessary.
2. Remove the linkage from the Q22 Intake Manifold Tuning Solenoid Valve.
3. Ignition ON, disconnect the harness connector at the Q22 Intake Manifold Tuning Solenoid Valve and then reconnect. The Q22 Intake Manifold Tuning Solenoid Valve should move. Repeat procedure several times.
    - If the solenoid did not move, replace the intake manifold.
4. Inspect the inside of the intake manifold for the following conditions:
    - Carbon build-up that limits the movement of the Q22 Intake Manifold Tuning Solenoid Valve.

- Casting flash that limits the movement of the Q22 Intake Manifold Tuning Solenoid Valve.
- Foreign material that limits the movement of the Q22 Intake Manifold Tuning Solenoid Valve.
  - If a condition is found, repair as necessary.

5. If all components test normal, clean or replace the intake manifold.

Repair Instructions

Perform the **Diagnostic Repair Verification** after completing the repair.

Intake Manifold Replacement

ELECTRONIC IGNITION SYSTEM DIAGNOSIS

Diagnostic Instructions

- Perform the **Diagnostic System Check - Vehicle** prior to using this diagnostic procedure.
- Review **Strategy Based Diagnosis** for an overview of the diagnostic approach.
- **Diagnostic Procedure Instructions** provides an overview of each diagnostic category.

Circuit/System Description

This ignition system uses an ignition coil module. The engine control module (ECM) controls the spark events by transmitting the timing pulses on the ignition control (IC) circuits to the cylinder ignition coils in firing order sequence.

Diagnostic Aids

- An open/high resistance on the low reference circuit to the ignition coil may cause a misfire.
- An erratic or weak spark is considered a no spark condition.

Reference Information

Schematic Reference

Engine Controls Schematics

Connector End View Reference

COMPONENT CONNECTOR END VIEWS - INDEX

Description and Operation

Electronic Ignition System Description

Electrical Information Reference

- **Circuit Testing**
- **Connector Repairs**
- **Testing for Intermittent Conditions and Poor Connections**
- **Wiring Repairs**

Scan Tool Reference

Control Module References

Circuit/System Testing

NOTE: Do not perform this diagnostic procedure unless you were sent here from a misfire DTC or the Engine Cranks But Does Not Run diagnostic.

1. Ignition OFF and all vehicle systems OFF, disconnect the harness connector at the K35 Ignition Coil Module. It may take up to 2 min for all vehicle systems to power down.
2. Test for less than 5 ohms between the ground circuit terminal B and ground.
   - **If 5 ohms or greater**
   1. Ignition OFF.
   2. Test for less than 2 ohms in the ground circuit end to end.
      - If 2 ohms or greater, repair the open/high resistance in the circuit.
      - If less than 2 ohms, repair the open/high resistance in the ground connection.
   - **If less than 5 ohms**
3. Test for less than 5 ohms between the low reference circuit terminal C and ground.
   - **If 5 ohms or greater**
   1. Ignition OFF, disconnect the X2 harness connector at the K20 Engine Control Module.
   2. Test for less than 2 ohms in the low reference circuit end to end.
      - If 2 ohms or greater, repair the open/high resistance in the circuit.
      - If less than 2 ohms, replace the K20 Engine Control Module.
   - **If less than 5 ohms**
4. Ignition ON.
5. Verify a test lamp illuminates between the ignition circuit terminal A and ground.
   - **If the test lamp does not illuminate and the circuit fuse is good**
   1. Ignition OFF, remove the test lamp.
   2. Test for less than 2 ohms in the ignition circuit end to end.
      - If 2 ohms or greater, repair the open/high resistance in the circuit.
      - If less than 2 ohms, verify the fuse is not open and there is voltage at the fuse.
   - **If the test lamp does not illuminate and the circuit fuse is open**

NOTE: The ignition circuit may supply voltage to other components. Make

sure to test all circuits and components for a short to ground that share the ignition circuit.

1. Ignition OFF, remove the test lamp, and disconnect all components on the circuit.
2. Test for infinite resistance between the ignition circuit and ground.
    - If less than infinite resistance, repair the short to ground on the circuit.
    - If infinite resistance
3. Replace the fuse, ignition ON.
4. Verify the fuse is good after connecting each of the components one at a time.
    - If the fuse opens, replace the component that opens the fuse when connected.
    - If the fuse is good, all OK.

- **If the test lamp illuminates**

6. Replace the K35 Ignition Coil Module.

Repair Instructions

Perform the **Diagnostic Repair Verification** after completing the repair.

- **Ignition Coil Replacement**
- **Control Module References** for engine control module replacement, programming, and setup.

INSPECTION/MAINTENANCE SYSTEM CHECK

Diagnostic Instructions

- Perform the **Diagnostic System Check - Vehicle** prior to using this diagnostic procedure.
- Review **Diagnostic System Check - Vehicle** for an overview of the diagnostic approach.
- **Diagnostic Procedure Instructions** provides an overview of each diagnostic category.

Circuit/System Description

Several states require that a vehicle pass on-board diagnostic (OBD) system tests and the inspection/maintenance (I/M) emission inspection in order to renew license plates. This is accomplished by viewing the I/M System Status display on a scan tool. Using a scan tool, the technician can observe the I/M System Status in order to verify that the vehicle meets the criteria that complies with the local area requirements. While testing in the I/M System Status mode, some DTCs may occur that are called I/M Test DTCs. An I/M Test DTC is defined as a fault code that is currently commanding the MIL ON, and is stored in non-volatile memory. The intended use of this data is to prevent vehicles from passing I/M inspection without proper repair to the vehicle. These fault codes are not erasable from any scan tool command or erasable by disconnecting power to the controller. The I/M Test DTCs will be supported by all emissions related ECUs such as ECMs, TCMs, FPCMs, etc. An I/M Test DTC will not be stored or erased from the ECU except at the end of trip processing which occurs 5 s after ignition OFF.

Conditions for Updating the I/M System Status

Each system monitor requires at least one, and sometimes several, diagnostic tests. The result of each test is reported by a diagnostic trouble code (DTC). A system monitor is complete when either all of the DTCs composing the monitor have Run and Passed, or when any one of the DTCs comprising the monitor has illuminated the malfunction indicator lamp (MIL). Once the system monitor is complete, the inspection/maintenance system status display will indicate YES in the Completed column.

For example, when the HO2S Heater Monitor indicates YES, either all of the oxygen sensor heater tests have passed or one of the tests has illuminated the MIL. If the vehicle has two heated oxygen sensors, either both heater circuit tests have passed or one of the heater circuit tests has illuminated the MIL. The inspection/maintenance system status will indicate NO under the completed column when any of the required tests for that system have not run. The following is a list of conditions that may set the inspection/maintenance system status indicator to NO:

- The vehicle is new from the factory and has not yet been driven through the necessary drive conditions to complete the tests.
- The battery has been disconnected or discharged below operating voltage.
- The engine control module (ECM) power or ground has been interrupted.
- The ECM has been reprogrammed.
- The ECM DTCs have been cleared.

Conditions for Clearing I/M Test DTCs

1. Only the OBD II System can erase the I/M Test DTC. The OBD II system must determine that the malfunction that caused the I/M Test DTC to be stored is no longer present and is not commanding the MIL. Each of the following represents ways to clear an I/M Test DTC:
    - If the MIL goes out due to 3 passing drive cycles, scan tool code clear is not used, the I/M Test DTC is erased at power down of the last drive cycle.
    - If a scan tool code clear is used to turn OFF the MIL, the I/M Test DTC is not erased, the DTC must PASS and not FAIL. The I/M Test DTC is erased at power down of the drive cycle.
    - If the controller is reflashed/reprogrammed, all I/M Test DTCs are erased.
2. For the OBD II System to run a single drive cycle for clearing an I/M Test DTC, all of the following conditions must occur:
    - Cumulative time of engine run time is greater than 600 s.
    - Cumulative vehicle operation above 40 km/h (25 mph) for over 300 s.
    - Continuous vehicle idle for greater than 30 s.
    - Turn ignition OFF for 5 s and allow the code to clear.

Monitored Emission Control Systems

The OBD II system monitors all emission control systems that are on-board. Not all vehicles need every possible emission control system. For example, a vehicle may not be equipped with secondary air injection (AIR) or exhaust gas recirculation (EGR). The OBD II regulations require monitoring of the following; if equipped:

- The air conditioning system

- The catalyst efficiency
- Comprehensive component monitoring - emission related inputs and outputs
- The evaporative emission (EVAP) system
- The fuel delivery system
- Heated catalyst monitoring
- Misfire monitoring
- The oxygen sensor system (HO2S)
- The oxygen sensor heater system (HO2S heater)

For the specific DTCs required for each system, refer to **Inspection/Maintenance (I/M) System DTC Table (LUW)**, **Inspection/Maintenance (I/M) System DTC Table (LWE)**. Systems such as fuel delivery, misfire, and comprehensive components may not be listed in a system status list. These tests run continuously and do not require an inspection/maintenance system status indicator.

Diagnostic Aids

The I/M System Status display provides an indication of when the control module has completed the required tests. This does not necessarily mean that the test has passed, only that a decision was made. If the diagnostic fails, a DTC will indicate the failure. If a failure indication is present for a DTC associated with one of the I/M regulated systems, it may prevent other required tests from running. For example, a DTC for the control circuit of the EVAP purge solenoid may not be listed in the Inspection/Maintenance System DTC Table because it is a continuous test. If this DTC is set, the Active Tests for the EVAP system may not run.

The I/M System Status information may be useful for a technician to determine if diagnostics have run when verifying repairs.

Circuit/System Verification

Review the I/M System Status indicators. All I/M System Status indicators should report YES, and no I/M Test DTCs should be present.

Circuit/System Testing

NOTE: Many DTC related repairs will instruct the technician to clear the DTC information. Clearing the DTC will reset the I/M System Status indicators to NO. Performing the I/M Complete System Set Procedure will set each of the I/M System Status indicators to YES.

1. Observe the Engine DTC information with a scan tool. Verify no DTCs are present.
    - If a DTC is set that would prevent the I/M System Status tests from completing, diagnose that DTC before continuing. Refer to **Diagnostic Trouble Code (DTC) List - Vehicle** .
2. Review applicable service bulletins for software updates that would prevent the I/M System Status tests from completing.
    - If a control module re-program or other repair is required, perform the **Inspection/Maintenance Complete System Set Procedure**.

3. Observe the I/M System Status indicators.
    - If any I/M System Status indicators report NO, perform the **Inspection/Maintenance Complete System Set Procedure**.
4. Observe the I/M Test DTC information with a scan tool. Verify there are no I/M Test DTCs present.
    - If an I/M Test DTC is set and all of the I/M System Status indicators are Yes, there is no need to perform the Complete System Set Procedure. Diagnose the DTC using the **Diagnostic Trouble Code (DTC) List - Vehicle** and refer to Conditions for Clearing the I/M Test DTCs.
    - If an I/M Test DTC is set and the I/M System Status indicators are NO, diagnosis the DTC and perform the **Inspection/Maintenance Complete System Set Procedure**.

INSPECTION/MAINTENANCE COMPLETE SYSTEM SET PROCEDURE

Diagnostic Instructions

- Perform the **Diagnostic System Check - Vehicle** prior to using this diagnostic procedure.
- Review **Strategy Based Diagnosis** for an overview of the diagnostic approach.
- **Diagnostic Procedure Instructions** provides an overview of each diagnostic category.

Circuit/System Description

The purpose of the inspection/maintenance complete system set procedure is to satisfy the enable criteria necessary to execute all of the inspection/maintenance readiness diagnostics and complete the trips for those particular diagnostics. When all inspection/maintenance monitored diagnostic tests are completed, the inspection/maintenance system status indicators are set to yes. Perform the inspection/maintenance complete system set procedure if any inspection/maintenance system status indicators are set to NO.

Condition for Meeting a Cold Start

- The ignition voltage between 10-18 V.
- The barometric pressure (BARO) is more than 75 kPa (10.15 PSI).
- The engine coolant temperature (ECT) at start-up is greater than -5°C (23°F).
- The intake air temperature (IAT) at start-up is less than 40°C (104°F).
- The difference between the start-up IAT and ECT are within 3°C (5°F)
- The engine is OFF for greater than 6 h or the following conditions must be met:
    - The start-up IAT minus start-up ECT 1 are within 12°C (22°F).
    - The start-up ECT minus start-up IAT are within 50°C (90°F).
- Fuel level is between 25-75%.

Circuit/System Verification

Review the inspection/maintenance system status indicators. All inspection/maintenance system status indicators should report yes.

Inspection/Maintenance System Set Procedure

NOTE: Whenever the ignition is turned ON, ignition positive voltage is supplied to the heated oxygen sensor (HO2S) heaters. After verifying the enable criteria, turn OFF the ignition for approximately 5 minutes to allow the sensors to cool before continuing with the test. Once the engine is started, do NOT turn the engine OFF for the remaining portion of the set procedure.

1. Ensure that the vehicle meets the conditions for a cold start listed above.
    - If the Evaporative Emission (EVAP) inspection/maintenance system status indicator displays NO, perform the EVAP Service Bay test if applicable.
2. Turn OFF all accessories; HVAC system, other electrical loads, including aftermarket/add-on equipment, etc., and open the hood.
3. Set the vehicle parking brake and ensure the vehicle is in park for automatic transmission or neutral for manual transmission.
4. Turn the ignition ON for 1 min.
5. Start and idle the engine for 5 m.
6. Run the engine for 6 min within the following conditions:
    - Calculated air flow is between 9-30 g/s.
    - Engine speed is steady between 1 300-3 000 RPM.
7. Apply and hold brake pedal, and shift to Drive for automatic, or apply clutch pedal for manual and operate the vehicle within the following conditions for 2 minutes:
    - Manifold Absolute Pressure (MAP) signal is greater than 12 g/s.
    - Engine speed is greater than 1 000 RPM.

NOTE: Do NOT touch the accelerator pedal until told to do so. A change in throttle position sensor angle or an increase in engine speed may invalidate this portion of the test.

8. Release the accelerator pedal and shift the vehicle to Park for automatic, or Neutral and release clutch pedal for manual, and allow the engine to idle for 2 min.
9. Close the hood, release the parking brake and drive vehicle at 90 km/h (55 MPH) for 2 min.
10. Release the accelerator pedal for at least 10 s. This will allow the vehicle to enter the deceleration fuel cut off.
11. Safely stop the vehicle, with the engine in drive for automatic or neutral with the clutch pedal depressed and parking brake applied for manual. Allow the vehicle to idle for 2 min.

NOTE: Do NOT disturb the vehicle or turn ON the ignition until told to do so. Disturbing the vehicle may invalidate this portion of the test.

12. Shift the vehicle to park for automatic and neutral for manual. Turn OFF the ignition and exit the vehicle. Do NOT disturb the vehicle for 45 min.
13. Observe the Inspection/Maintenance System Status with a scan tool. All of the inspection/maintenance System Status indicators should display YES.

- If the EVAP inspection/maintenance system status indicator displays NO, turn OFF the ignition, ensure that the vehicle meets the conditions for a cold start, and repeat steps 6 through 11 three more times, or until the EVAP inspection/maintenance system status indicator transitions to yes. If the indicator continues to display NO, refer to the **Inspection/Maintenance (I/M) System DTC Table (LUW)**, **Inspection/Maintenance (I/M) System DTC Table (LWE)** to identify the DTCs that did not run.
- If any of the inspection/maintenance system status indicators display NO, refer to the **Inspection/Maintenance (I/M) System DTC Table (LUW)**, **Inspection/Maintenance (I/M) System DTC Table (LWE)** for the indicator which did not display yes. The inspection/maintenance system DTC table identifies the DTCs associated with each inspection/maintenance system status Indicator.

INSPECTION/MAINTENANCE (I/M) SYSTEM DTC TABLE (LUW)

Inspection/Maintenance (I/M) System DTC Table (LUW)

System	DTCs Required to Set System Status to YES
If an inspection/maintenance system status indicator did NOT update to YES during the **Inspection/Maintenance System Check**, review each indicator and reference this table to determine each DTC associated with the inspection/maintenance system status indicator. Each DTC listed below has specific conditions that must be met for the diagnostic to run. Included within the conditions are additional DTCs which, if set, may inhibit the DTCs listed below from running. Reviewing and operating the vehicle within the conditions for running for each DTC listed below will allow the inspection/maintenance system status indicators to transition to YES.	
Catalyst Monitor	**DTC P0420** .
Evaporative Emission (EVAP)	• **DTC P0442** . • **DTC P0446**. • **DTC P0455**.
Fuel System	**DTC P219A**
Oxygen Sensor	• **DTC P0131, P0132, P0134, P0137, P0138, or P0140** • **DTC P0133, P013A, P013B, P013E, P013F, P015A, P015B, P2270, or P2271** .
Oxygen Sensor Heater	**DTC P0030-P0032, P0036-P0038, P0053, P0054, P0135, or P0141**
Camshaft System	**DTC P0011 or P0014**

INSPECTION/MAINTENANCE (I/M) SYSTEM DTC TABLE (LWE)

Inspection/Maintenance (I/M) System DTC Table (LWE)

System	DTCs Required to Set System Status to YES
If an inspection/maintenance system status indicator did NOT update to YES during the **Inspection/Maintenance System Check**, review each indicator and reference this table to determine each DTC associated with the inspection/maintenance system status indicator. Each DTC listed below has specific conditions that must be met for the diagnostic to run. Included within the conditions are	

additional DTCs which, if set, may inhibit the DTCs listed below from running. Reviewing and operating the vehicle within the conditions for running for each DTC listed below will allow the inspection/maintenance system status indicators to transition to YES.	
AIR	• **DTC P0411** • **DTC P2430 or P2431**. • **DTC P2440**. • **DTC P2444**.
Catalyst Monitor	**DTC P0420** .
Evaporative Emission (EVAP)	• **DTC P0442** . • **DTC P0446**. • **DTC P0455**.
Fuel System	**DTC P219A**
Oxygen Sensor	• **DTC P0131, P0132, P0134, P0137, P0138, or P0140** • **DTC P0133, P013A, P013B, P013E, P013F, P015A, P015B, P2270, or P2271** .
Oxygen Sensor Heater	**DTC P0030-P0032, P0036-P0038, P0053, P0054, P0135, or P0141**
Camshaft System	**DTC P0011 or P0014**

FUEL PRESSURE MEASUREMENT

Special Tools

EN-34730-91 Pressure Tester

For equivalent regional tools, refer to **Special Tools** .

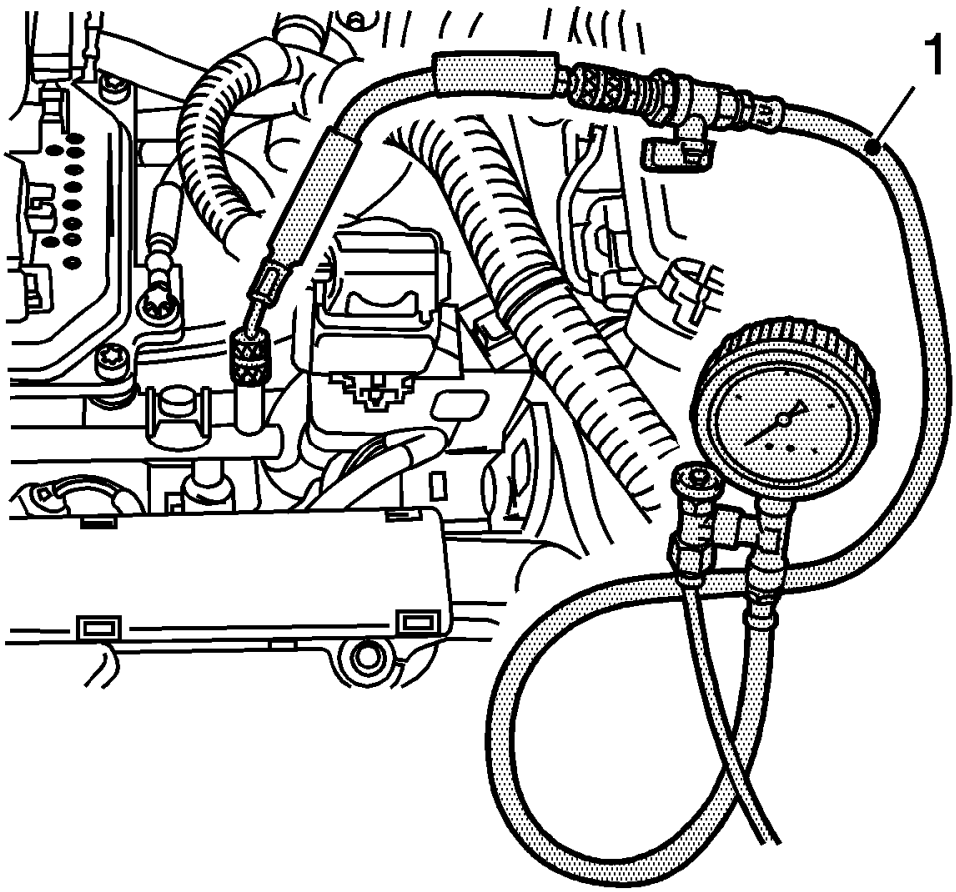

Fig. 1: View Of Fuel Pressure Tester
Courtesy of GENERAL MOTORS COMPANY

WARNING: Gasoline or gasoline vapors are highly flammable. A fire could occur if an ignition source is present. Never drain or store gasoline or diesel fuel in an open container, due to the possibility of fire or explosion. Have a dry chemical (Class B) fire extinguisher nearby.

WARNING: Remove the fuel tank cap and relieve the fuel system pressure before servicing the fuel system in order to reduce the risk of personal injury. After you relieve the fuel system pressure, a small amount of fuel may be released when servicing the fuel lines, the fuel injection pump, or the connections. In order to reduce the risk of personal injury, cover the fuel system components with a shop towel before disconnection. This will catch any fuel that may leak out. Place the towel in an approved container when the disconnection is complete.

1. Remove the protective cap from the test connection.
2. Attach the **EN-34730-91** tester (1) to the test connection.
3. Start the engine.
   - Bleed the pressure tester at idling speed.
   - Collect the exiting fuel in a suitable container.
   - Read the fuel pressure from the pressure gauge.

     Nominal value 380 kPa (3.8 bar)

     CAUTION: Clean all of the following areas before performing any disconnections in order to avoid possible contamination in the system:

     - **The fuel pipe connections**
     - **The hose connections**
     - **The areas surrounding the connections**

4. Detach the pressure gauge **EN-34730-91** tester from the test connection.

2013 ENGINE PERFORMANCE

Engine Controls and Fuel - 1.8L LUW and LWE - Repair Instructions - Cruze

REPAIR INSTRUCTIONS

ENGINE CONTROL MODULE REPLACEMENT

Service of the engine control module (ECM) should consist of either replacement of the ECM or of programming of the electrically erasable programmable read only memory (EEPROM). If the diagnostic procedures call for the ECM to be replaced, the replacement ECM should be checked to ensure that the correct part is being used. If the correct part is being used, remove the faulty ECM and install the new service ECM.

CAUTION:

- **Turn the ignition OFF when installing or removing the control module connectors and disconnecting or reconnecting the power to the control module (battery cable, powertrain control module (PCM)/engine control module (ECM)/transaxle control module (TCM) pigtail, control module fuse, jumper cables, etc.) in order to prevent internal control module damage.**
- **Control module damage may result when the metal case contacts battery voltage. DO NOT contact the control module metal case with battery voltage when servicing a control module, using battery booster cables, or when charging the vehicle battery.**
- **In order to prevent any possible electrostatic discharge damage to the control module, do no touch the connector pins or the soldered components on the circuit board.**
- **Remove any debris from around the control module connector surfaces before servicing the control module. Inspect the control module connector gaskets when diagnosing or replacing the control module. Ensure that the gaskets are installed correctly. The gaskets prevent contaminant intrusion into the control module.**
- **The replacement control module must be programmed.**

NOTE: **It is necessary to record the engine oil life percentage remaining. Use the scan tool to reset the engine oil life remaining back to the original percentage recorded.**

NOTE: **It is necessary to record the remaining automatic transmission fluid life. If the replacement module is not programed with the remaining automatic transmission fluid life, the automatic transmission fluid life will default to 100 percent. If the replacement module is not programmed with the remaining automatic transmission fluid life, the automatic transmission fluid will need to be changed at 83000 km (50.000 mi) from the last automatic transmission fluid change.**

Removal Procedure

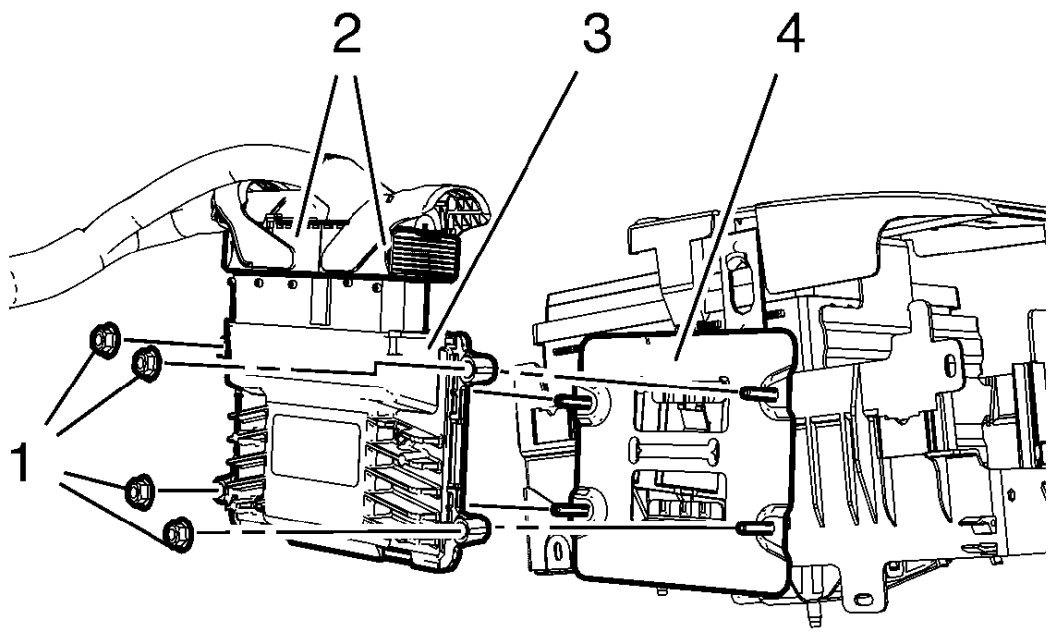

Fig. 1: Engine Control Module Components
Courtesy of GENERAL MOTORS COMPANY

1. Prepare the ECM for replacement. Refer to **Control Module References** .
2. Using a scan tool, retrieve the percentage of remaining engine oil. Record the remaining engine oil life.
3. Disconnect the battery negative cable. Refer to **Battery Negative Cable Disconnection and Connection** .
4. Disconnect the 2 wiring harness plug (2) from the engine control module (3).
5. Unclip the engine control module bracket (4) from the battery tray.
6. Remove the 4 nuts (1).
7. Remove the engine control module (3) from the engine control module bracket (4).

Installation Procedure

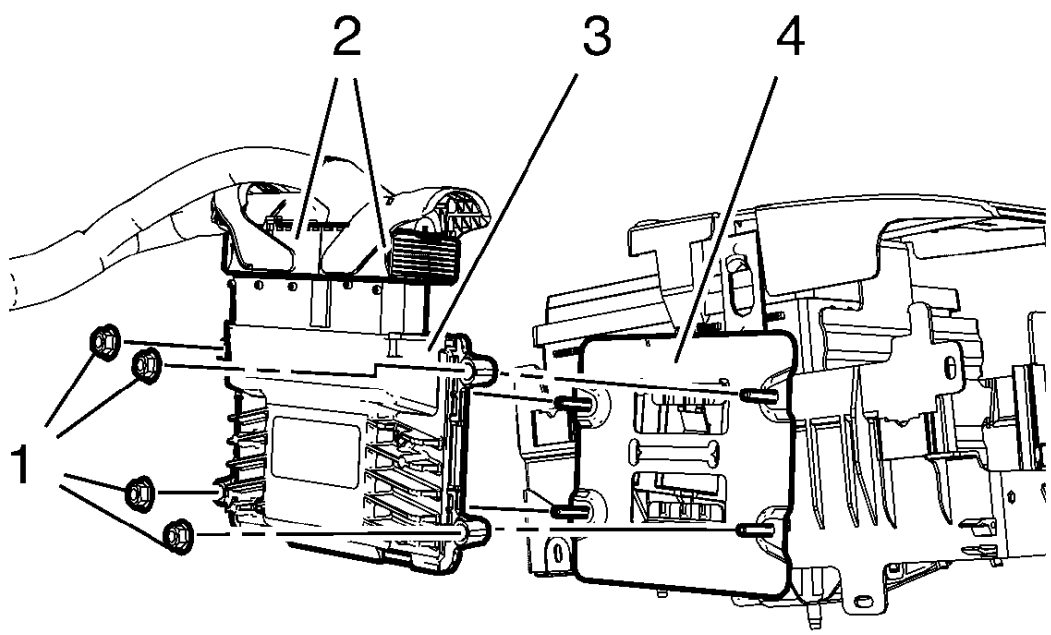

Fig. 2: Engine Control Module Components
Courtesy of GENERAL MOTORS COMPANY

1. Install the engine control module (3) to the engine control module bracket (4).

CAUTION: Refer to Fastener Caution .

2. Install the 4 nuts (1) and tighten to 9 N.m (80 lb in).
3. Clip the engine control module bracket (4) to the battery tray.
4. Connect the 2 wiring harness plug (2) to the engine control module (3).
5. Connect the battery negative cable. Refer to **Battery Negative Cable Disconnection and Connection** .
6. Program the ECM. Refer to **Control Module References** .

CRANKSHAFT POSITION SYSTEM VARIATION LEARN

NOTE: **The crankshaft position sensor system variation learn procedure is required when the following service procedures have been performed, regardless of whether DTC P0315 is set:**

- **Engine replacement**
- **Engine control module (ECM) replacement**
- **Crankshaft damper replacement**
- **Crankshaft replacement**
- **Crankshaft Position Sensor Replacement**
- **Any engine repairs which disturb the crankshaft to crankshaft position sensor relationship**

NOTE: **The scan tool monitors certain component signals to determine if all the conditions are met to continue with the crankshaft position sensor system variation learn procedure. The scan tool only displays the condition that inhibits the procedure. The scan tool monitors the following components:**

- **Crankshaft Position Sensor activity - If there is a crankshaft position sensor condition, refer to the applicable DTC that set.**
- **Camshaft position signal activity - If there is a camshaft position sensor signal condition, refer to the applicable DTC that set.**
- **Engine coolant temperature (ECT) - If the engine coolant temperature is not warm enough, idle the engine until the engine coolant temperature reaches the correct temperature.**

1. Install a scan tool.
2. Monitor the ECM for DTCs with a scan tool. If other DTCs are set, except DTC P0315, refer to **Diagnostic Trouble Code (DTC) List - Vehicle** for the applicable DTC that set.
3. With a scan tool, select the Crankshaft Position System Variation Learn procedure and perform the following:
    1. Observe the fuel cut-off for the applicable engine.
    2. Block the drive wheels.
    3. Set the parking brake.
    4. Place the vehicles transmission in Park or Neutral.
    5. Turn the air conditioning (A/C) OFF.
    6. Cycle the ignition from OFF to ON.
    7. Apply and hold the brake pedal for the duration of the procedure.
    8. Start and idle the engine.
    9. Accelerate to wide open throttle (WOT). The engine should not accelerate beyond the calibrated fuel cut-off RPM value noted in step 3.1. Release the throttle immediately if the value is exceeded.

        NOTE: **While the learn procedure is in progress, release the throttle**

immediately when the engine starts to decelerate. The engine control is returned to the operator and the engine responds to throttle position after the learn procedure is complete.

10. Release the throttle when fuel cut-off occurs.

NOTE: While the learn procedure is in progress, release the throttle immediately when the engine starts to decelerate. The engine control is returned to the operator and the engine responds to throttle position after the learn procedure is complete.

11. Accelerate to wide open throttle (WOT). The engine should not accelerate beyond the calibrated fuel cut-off RPM value noted in step 3.1. Release the throttle immediately if the value is exceeded.

4. The scan tool displays Learn Status: Learned this Ignition. If the scan tool indicates that DTC P0315 ran and passed, the crankshaft position sensor variation learn procedure is complete. If the scan tool indicates DTC P0315 failed or did not run, refer to **DTC P0315** . If any other DTCs set, refer to **Diagnostic Trouble Code (DTC) List - Vehicle** for the applicable DTC that set.
5. Turn OFF the ignition for 30 s after the learn procedure is completed successfully.

THROTTLE/IDLE LEARN

Description

The engine control module (ECM) learns the airflow through the throttle body to ensure the correct idle. The learned airflow values are stored within the ECM. These values are learned to adjust for production variation and will continuously learn during the life of the vehicle to compensate for reduced airflow due to throttle body coking. Anytime the throttle body airflow rate changes, for example due to cleaning or replacing, the values must be relearned.

An engine that had a heavily coked throttle body that has been cleaned or replaced may take several drive cycles to learn out the coking. To accelerate the process, the scan tool has the ability to reset all learned values back to zero. A new ECM will also have values set to zero.

The idle may be unstable or a DTC may set if the learned values do not match the actual airflow.

Conditions for Running the Throttle Learn Procedure

Scan tool Idle Learn or Idle Learn Reset Procedure

- DTCs P0068, P0101, P0102, P0103, P0106, P0107, P0108, P0116, P0117, P0118, P0120, P0122, P0123, P0128, P0171, P0172, P0174, P0175, P0201-P0208, P0220, P0222, P0223, P0261, P0262, P0264, P0265, P0267, P0268, P0270, P0271, P0273, P0274, P0276, P0277, P0279, P0280, P0282, P0283, P0300-P0308, P0351-P0358, P0496, P0601, P0604, P0606, P060D, P0641, P0651, P1516, P2101, P2119, P2120, P2122, P2123, P2125, P2127, P2128, P2135, P2138, or P2176 are not set.
- Ignition ON, engine OFF.
- The vehicle speed sensor (VSS) is 0 km/h (0 mph).

Service Bay/On Road Learn Procedure

- DTCs P0068, P0101, P0102, P0103, P0106, P0107, P0108, P0116, P0117, P0118, P0120, P0122, P0123, P0128, P0171, P0172, P0174, P0175, P0201-P0208, P0220, P0222, P0223, P0261, P0262, P0264, P0265, P0267, P0268, P0270, P0271, P0273, P0274, P0276, P0277, P0279, P0280, P0282, P0283, P0300-P0308, P0351-P0358, P0496, P0601, P0604, P0606, P060D, P0641, P0651, P1516, P2101, P2119, P2120, P2122, P2123, P2125, P2127, P2128, P2135, P2138, or P2176 are not set.
- The engine speed is between 450-4, 000 RPM.
- The manifold absolute pressure (MAP) is greater than 5 kPa.
- The mass air flow (MAF) is greater than 2 g/s.
- The ignition voltage is greater than 10 volts.

Throttle Learn

Scan Tool Idle Learn or Idle Learn Reset Procedure - Performed after the throttle body is cleaned or replaced

1. Ignition ON, engine OFF, perform the Idle Learn or Idle Learn Reset in Configuration/Reset or Module Setup.
2. Engine idling, observe the scan tool Throttle Body Idle Airflow Compensation parameter. The Throttle Body Idle Airflow Compensation value should equal 0 % and the engine should be idling at a normal idle speed.
3. Clear the DTCs and return to the diagnostic that referred you here.

Service Bay/On Road Idle Learn Procedure - Performed after the ECM is programmed or replaced

NOTE: Do NOT perform this procedure if DTCs are set. Refer to Diagnostic Trouble Code (DTC) List - Vehicle .

1. Engine idling for 3 minutes.
2. Observe the scan tool Desired Idle Speed and the actual Engine Speed parameters.
3. The ECM will start to learn the new idle cells and the Desired Idle Speed should start to decrease.
4. Ignition OFF for 60 seconds.
5. Start and idle the engine for 3 minutes.
6. After the 3 minute run time the engine should be idling normal.

NOTE: During the drive cycle the check engine light may come on with idle speed DTCs. If idle speed codes are set, clear codes so the ECM can continue to learn.

   - If the engine idle speed has not been learned the vehicle will need to be driven at speeds above 70 km/h (44 mph) with several decelerations and extended idles.

7. After the drive cycle, the engine should be idling normally.
   - If the engine idle speed has not been learned, turn OFF the ignition for 60 seconds and repeat step

6.

8. Once the engine speed has returned to normal, clear DTCs and return to the diagnostic that referred you here.

INTAKE AIR TEMPERATURE SENSOR REPLACEMENT

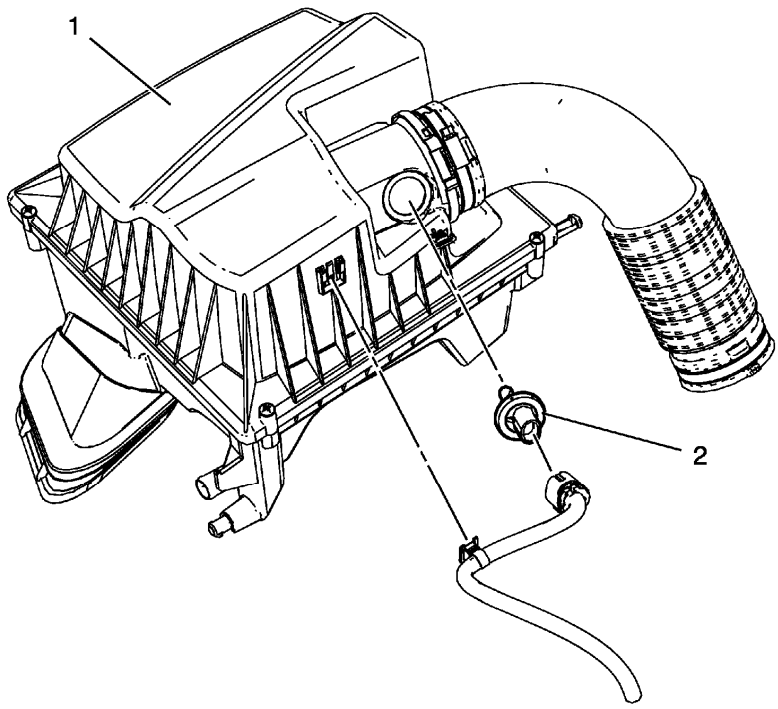

Fig. 3: Intake Air Temperature Sensor
Courtesy of GENERAL MOTORS COMPANY

Intake Air Temperature Sensor Replacement

Callout	Component Name
1	Intake Air Temperature Sensor Assembly **CAUTION:** **Any time service is being performed which requires removal of the air cleaner assembly, always cover the throttle body opening. This will prevent any foreign material from entering the engine.**
2	Intake Air Temperature Sensor Cable Clip

MASS AIRFLOW SENSOR REPLACEMENT

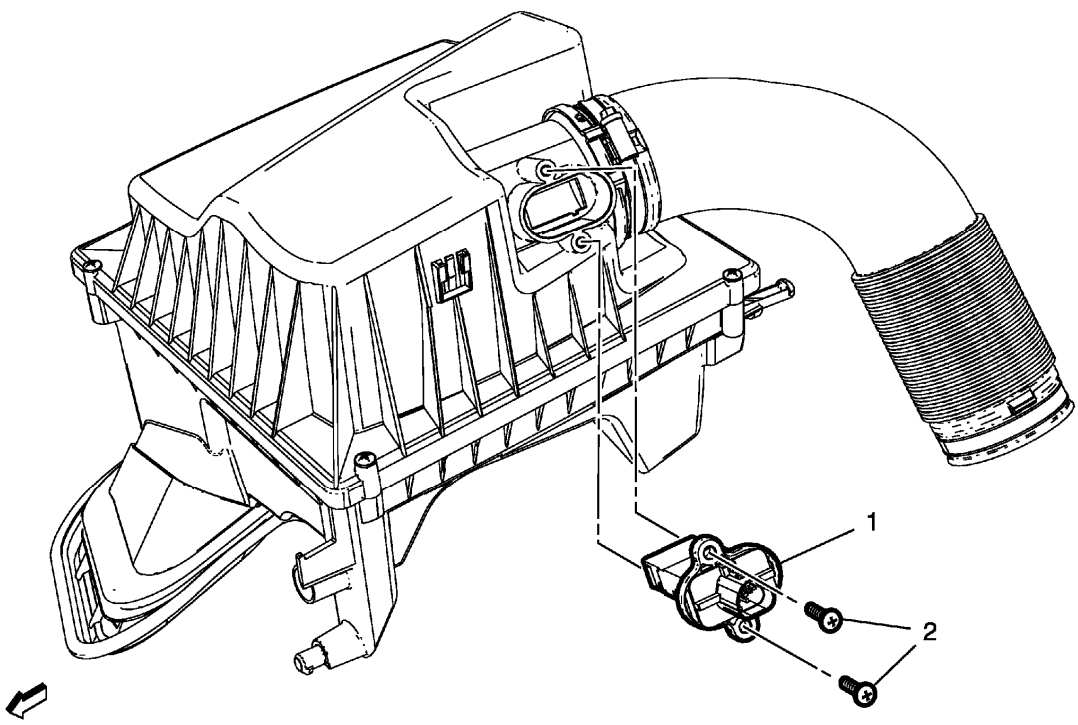

Fig. 4: Mass Airflow Sensor
Courtesy of GENERAL MOTORS COMPANY

Mass Airflow Sensor Replacement

Callout	Component Name
1	Mass Airflow Sensor Bolts (Qty 2) **CAUTION:** **Refer to Fastener Caution .**
2	Mass Airflow Sensor **Procedure** 1. Disconnect the electrical connector. 2. After replacement of mass air flow sensor, use a scan tool to run the learn functions. Refer to **K20 Engine Control Module: Programming and Setup** .

MANIFOLD ABSOLUTE PRESSURE SENSOR REPLACEMENT

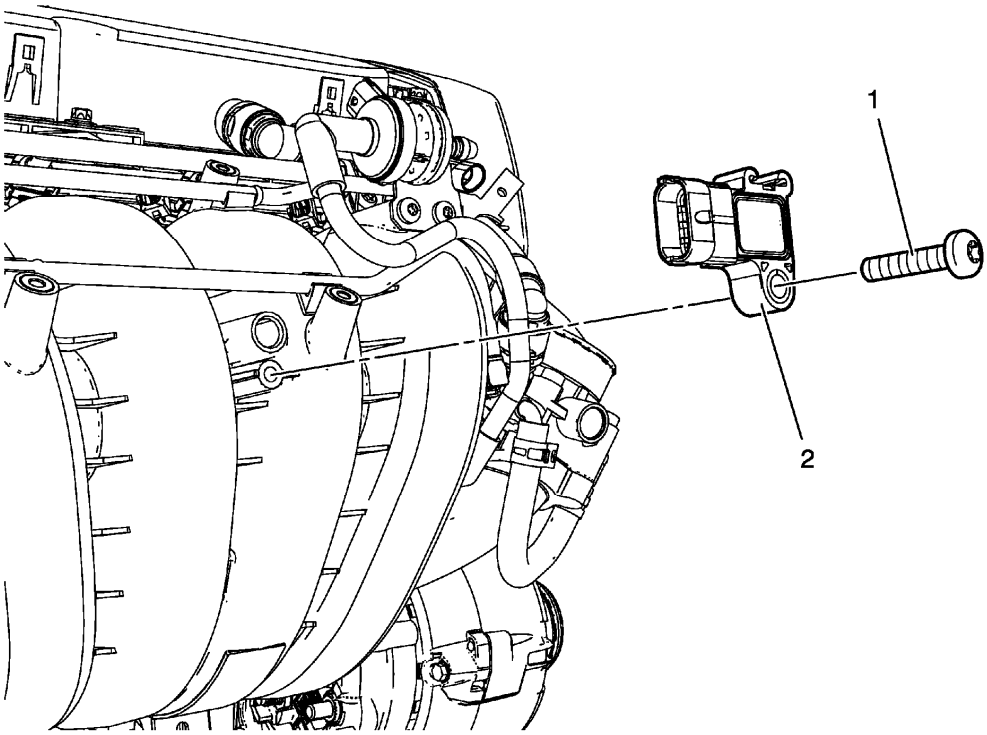

Fig. 5: Manifold Absolute Pressure Sensor (1.8L LUW)
Courtesy of GENERAL MOTORS COMPANY

Manifold Absolute Pressure Sensor Replacement

Callout	Component Name
1	Manifold Absolute Pressure Sensor Bolt **CAUTION:** **Refer to Fastener Caution .** **Tighten** 1.6 (53 lb in)
2	Manifold Absolute Pressure Sensor **Procedure** Disconnect the electrical connector.

ENGINE COOLANT TEMPERATURE SENSOR REPLACEMENT - RADIATOR SIDE

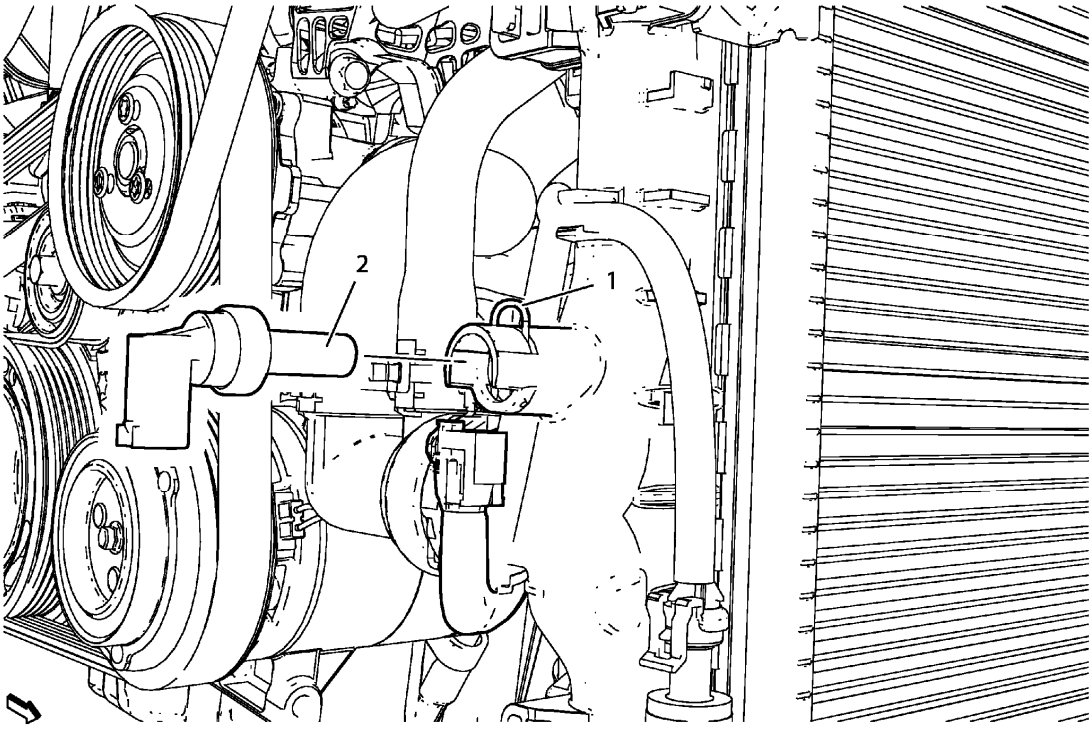

Fig. 6: Engine Coolant Temperature Sensor (Radiator) Side
Courtesy of GENERAL MOTORS COMPANY

Engine Coolant Temperature Sensor Replacement - Radiator Side

Callout	Component Name
Preliminary Procedure 1. Drain the cooling system. Refer to **Cooling System Draining and Filling (Static Fill)** , **Cooling System Draining and Filling (GE-47716 Fill)** . 2. Disconnect the electrical connection.	
1	Retaining Clamp
2	Engine Coolant Temperature Sensor

ENGINE COOLANT TEMPERATURE SENSOR REPLACEMENT - THERMOSTAT SIDE

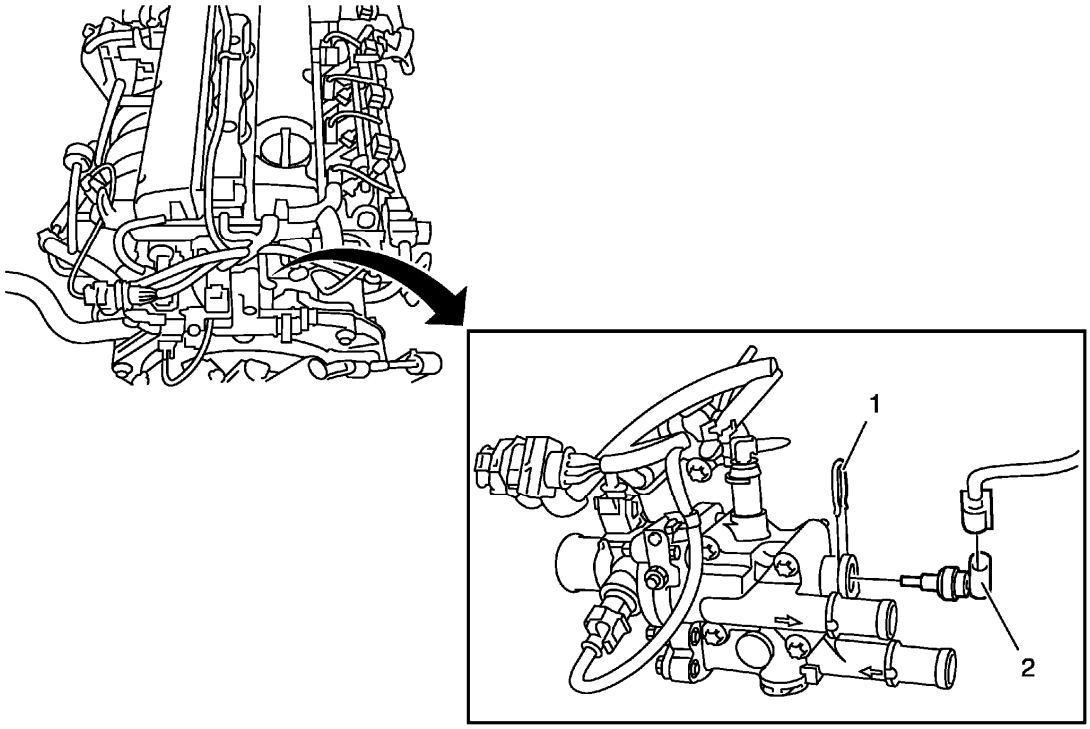

Fig. 7: Engine Coolant Temperature Sensor - Thermostat Side
Courtesy of GENERAL MOTORS COMPANY

Engine Coolant Temperature Sensor Replacement - Thermostat Side

Callout	Component Name
Preliminary Procedure 1. Drain the cooling system. Refer to **Cooling System Draining and Filling (Static Fill)** , **Cooling System Draining and Filling (GE-47716 Fill)** . 2. Disconnect the electrical connection.	
1	Engine Coolant Temperature Sensor Fastener
2	Engine Coolant Temperature Sensor

HEATED OXYGEN SENSOR REPLACEMENT - SENSOR 1

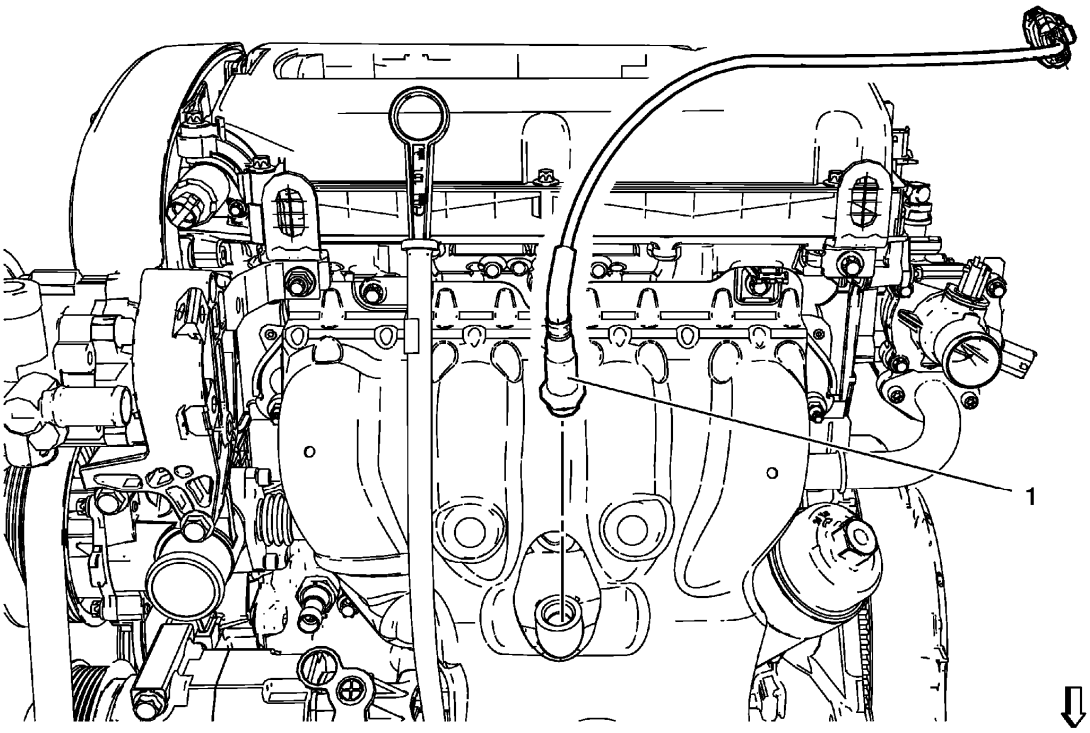

Fig. 8: Heated Oxygen Sensor - Sensor 1 (1.6L LDE, LXV And 1.8L 2H0)
Courtesy of GENERAL MOTORS COMPANY

Heated Oxygen Sensor Replacement - Sensor 1

Callout	Component Name
WARNING: **In order to avoid being burned, do not service the exhaust system while it is still hot. Service the system when it is cool.** **Preliminary Procedures** Disconnect the battery negative cable. Refer to **Battery Negative Cable Disconnection and Connection** .	
1	Heated Oxygen Sensor **CAUTION:** **Refer to Fastener Caution .** **Procedure** 1. Disconnect the heated oxygen sensor wiring harness connector. 2. Remove the heated oxygen sensor. 3. When re-using the heated oxygen sensor, coat the thread with assembly paste.

	Tighten 42 N.m (31 lb ft) **Special Tools** **EN-6179** Heated Oxygen Sensor Remover / Installer For equivalent regional tools, refer to **Special Tools** .

HEATED OXYGEN SENSOR REPLACEMENT - SENSOR 2

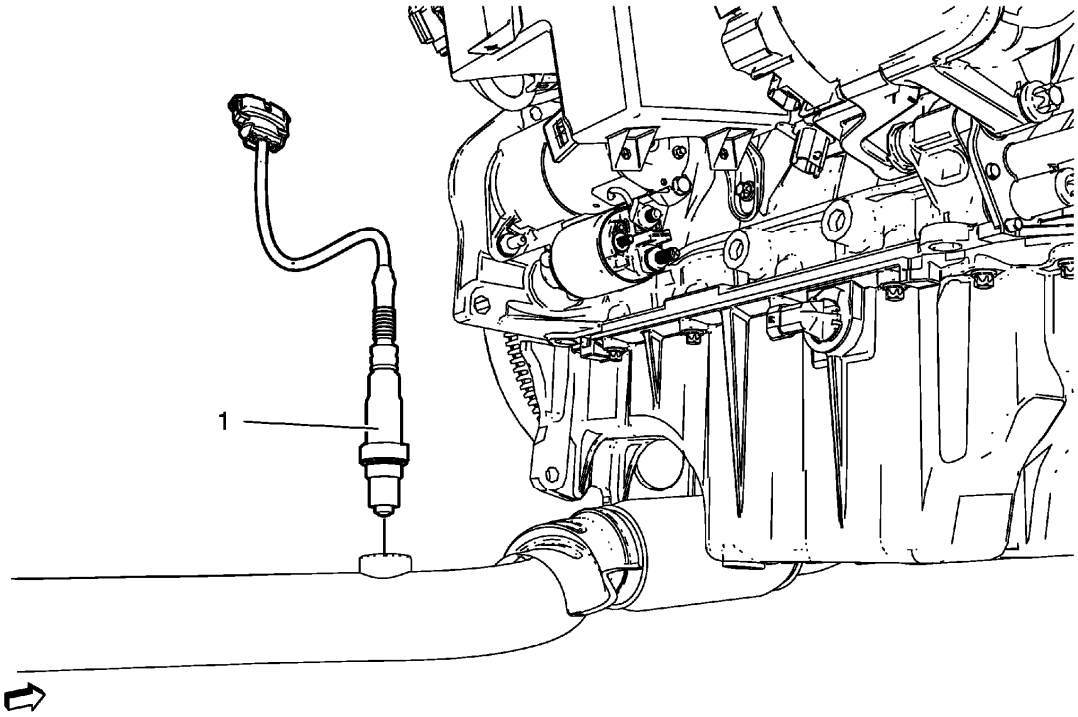

Fig. 9: Heated Oxygen Sensor - Sensor 2
Courtesy of GENERAL MOTORS COMPANY

Heated Oxygen Sensor Replacement - Sensor 2

Callout	Component Name
1	Heated Oxygen Sensor 2 **WARNING:** **In order to avoid being burned, do not service the exhaust system while it is still hot. Service the system when it is cool.** **CAUTION:** **Refer to Fastener Caution .** **Procedure** 1. Disconnect the heated oxygen sensor 2 wiring harness plug.

	2. Remove the heated oxygen sensor 2. 3. When re-using the heated oxygen sensor, coat the thread with assembly paste. **Tighten** 42 N.m (31 lb ft) **Special Tools** **EN-6179** Heated Oxygen Sensor Remover / Installer For equivalent regional tools, refer to **Special Tools** .

ENGINE OIL PRESSURE INDICATOR SWITCH REPLACEMENT

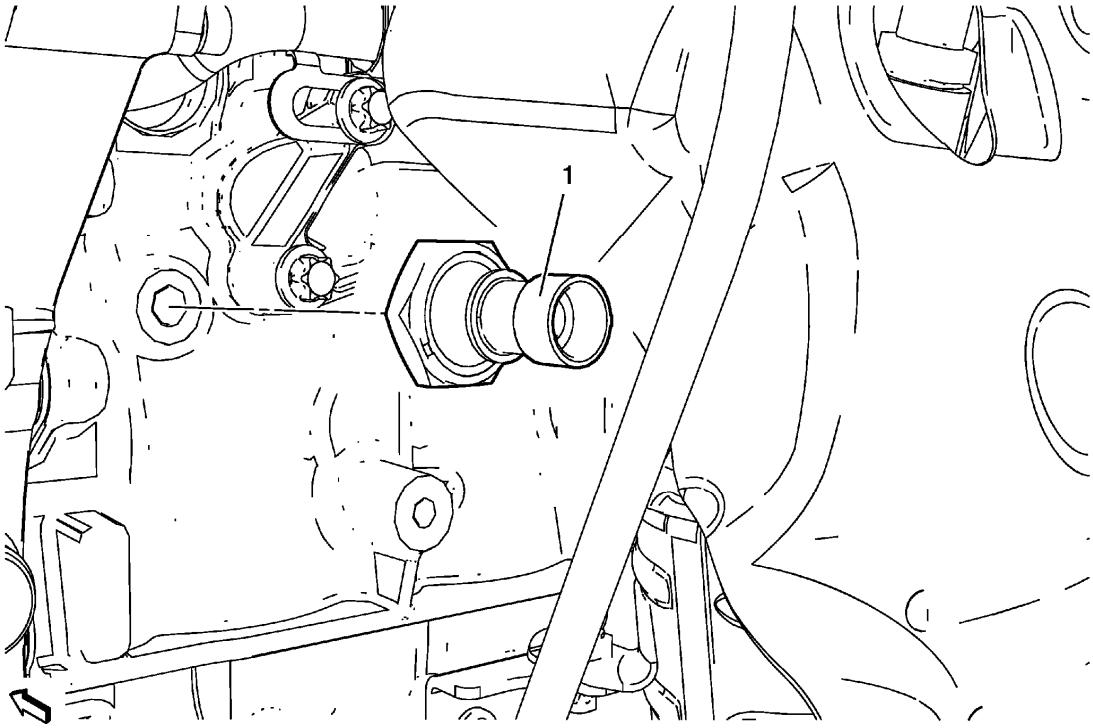

Fig. 10: Engine Oil Pressure Indicator Switch
Courtesy of GENERAL MOTORS COMPANY

Engine Oil Pressure Indicator Switch Replacement

Callout	Component Name
Preliminary Procedure Remove the air conditioning compressor. Refer to **Air Conditioning Compressor Replacement (1.8L LUW and LWE)** , **Air Conditioning Compressor Replacement (1.4L LUV)** .	
	Oil Pressure Switch **CAUTION:**

1	**Refer to Fastener Caution .** **Procedure** Disconnect the oil pressure switch wiring harness plug and remove the switch. **Tighten** 30 (22 lb ft)

ACCELERATOR PEDAL POSITION SENSOR REPLACEMENT

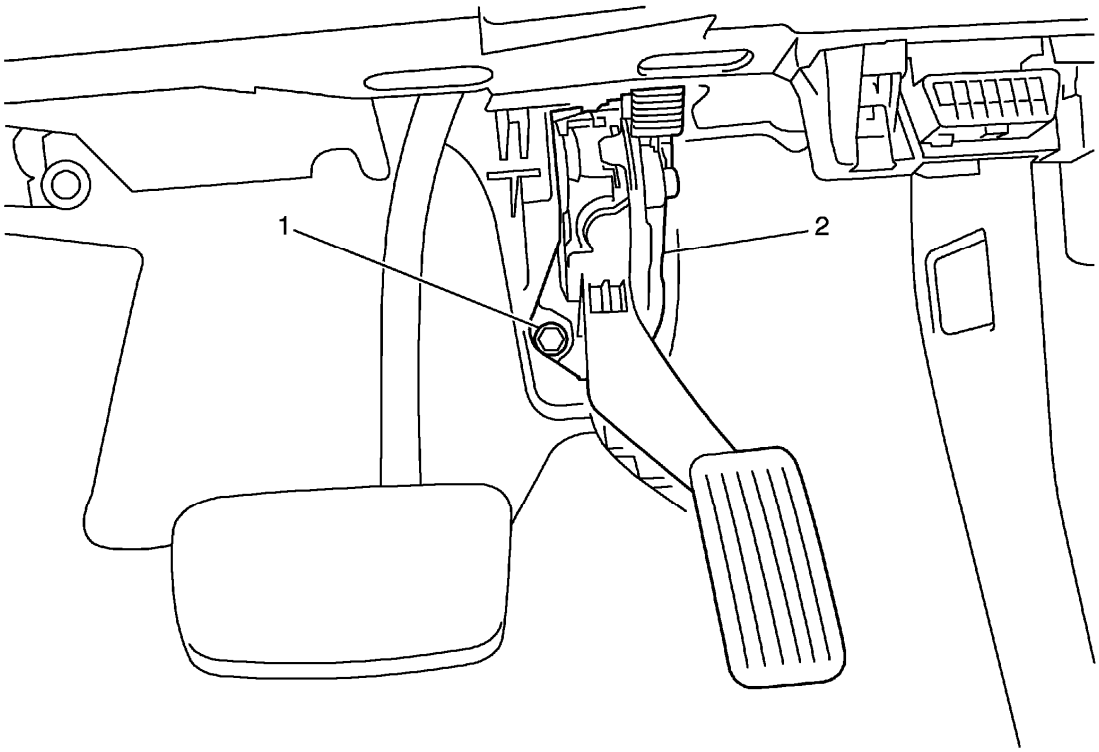

Fig. 11: Accelerator Pedal Position Sensor & Fastener
Courtesy of GENERAL MOTORS COMPANY

Accelerator Pedal Position Sensor Replacement

Callout	Component Name
1	Accelerator Pedal Position Sensor Fastener **CAUTION:** **Refer to Fastener Caution .** **Tighten** 10 N.m (89 lb in)
	Accelerator Pedal Position Sensor

2	**Procedure** Disconnect electrical connector.

THROTTLE BODY ASSEMBLY REPLACEMENT

Removal Procedure

1. Remove the air cleaner outlet duct. Refer to **Air Cleaner Outlet Duct Replacement**.

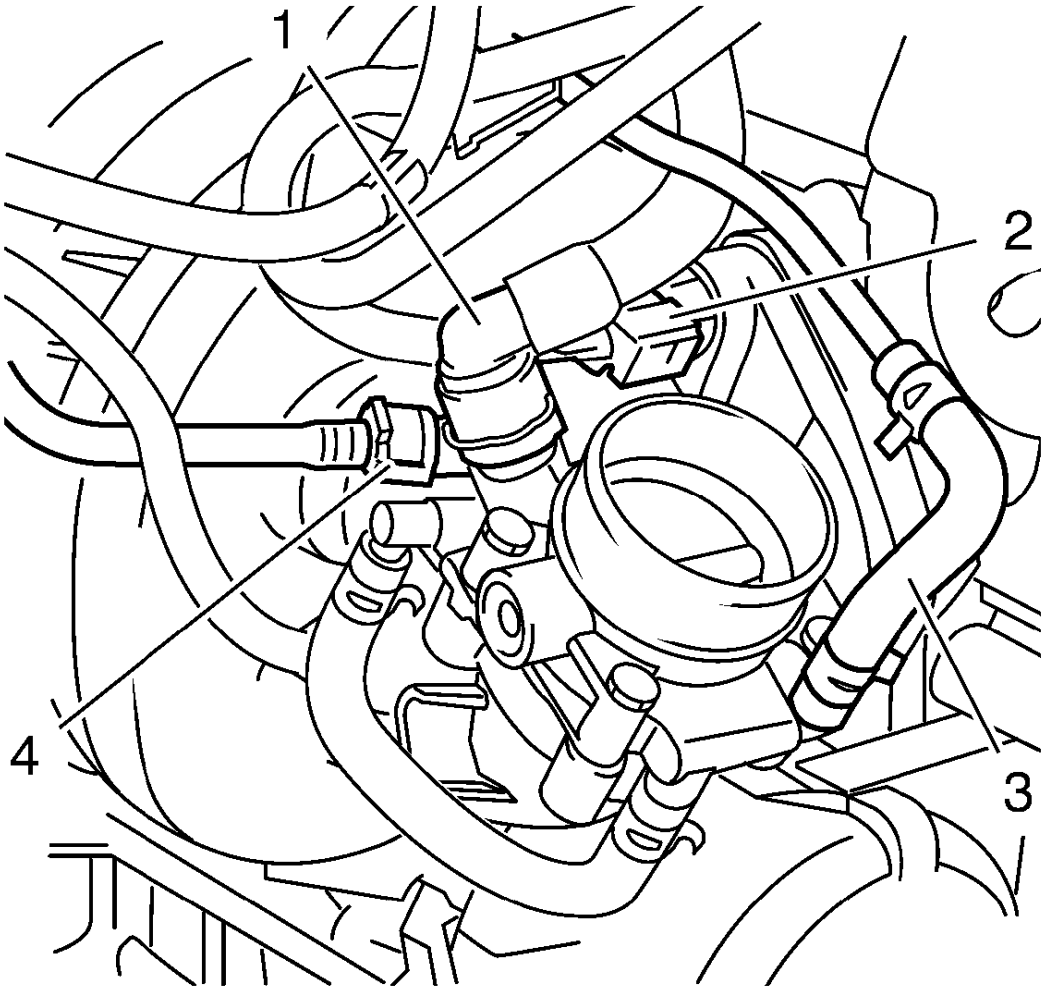

Fig. 12: Throttle Body Heater Outlet Pipe, Throttle Body Heater Inlet Pipe And Positive Crankcase Ventilation Pipe
Courtesy of GENERAL MOTORS COMPANY

2. Disconnect the wiring harness plug (2).
3. Disconnect the positive crankcase ventilation pipe (1).
4. Place collecting basin underneath.

5. Disconnect the throttle body heater outlet pipe (4).
6. Disconnect the throttle body heater inlet pipe (3).

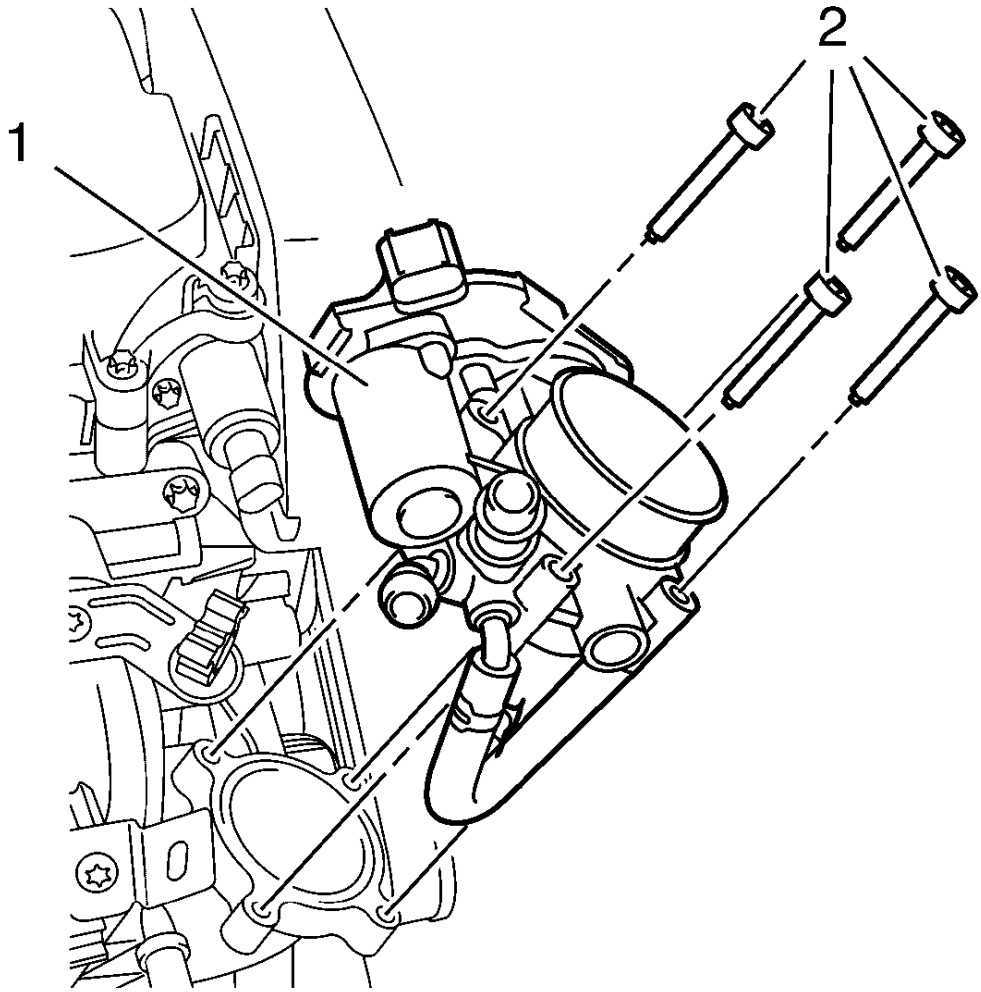

Fig. 13: Throttle Body
Courtesy of GENERAL MOTORS COMPANY

7. Remove the 4 throttle body bolts (2).
8. Remove the throttle body (1).
9. Remove and DISCARD the throttle body gasket.

Installation Procedure

1. Install a NEW throttle body gasket.

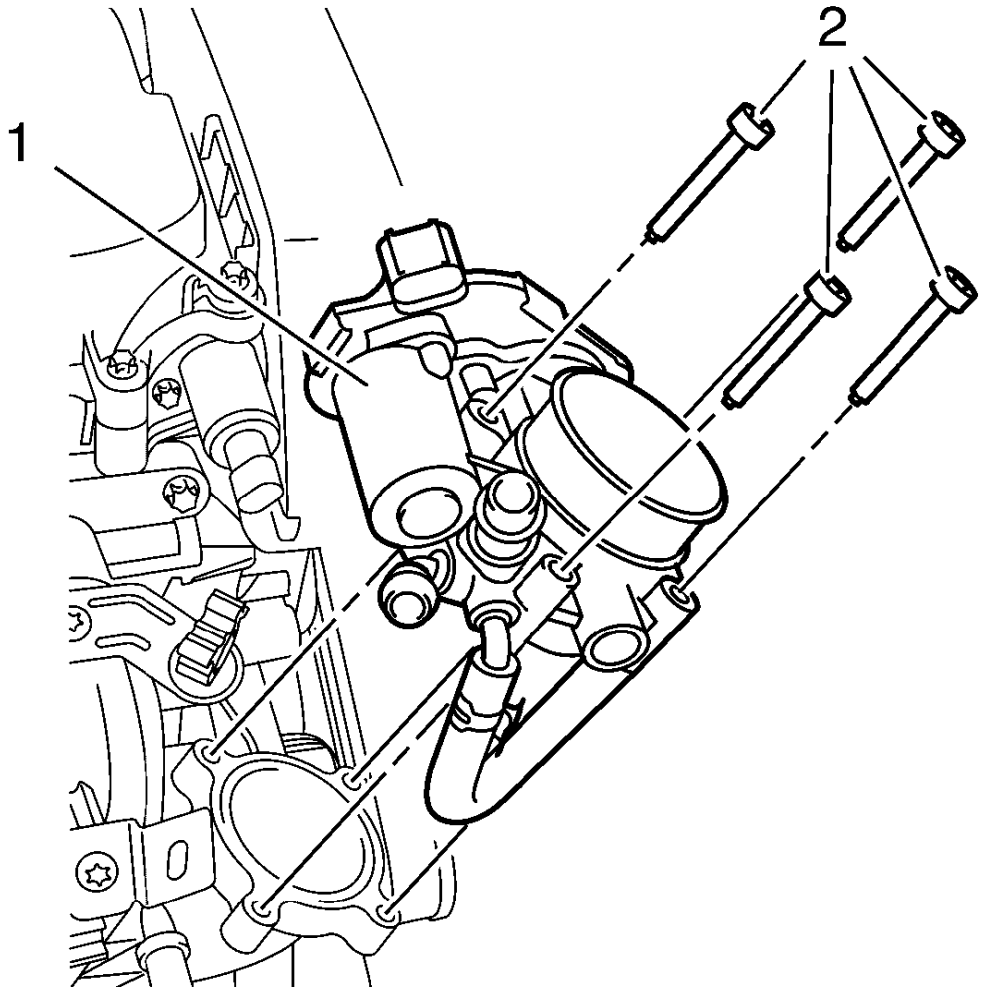

Fig. 14: Throttle Body
Courtesy of GENERAL MOTORS COMPANY

2. Install the throttle body (1).

CAUTION: Refer to Fastener Caution .

3. Install the 4 throttle body bolts (2) and tighten to 8 N.m (71 lb in).

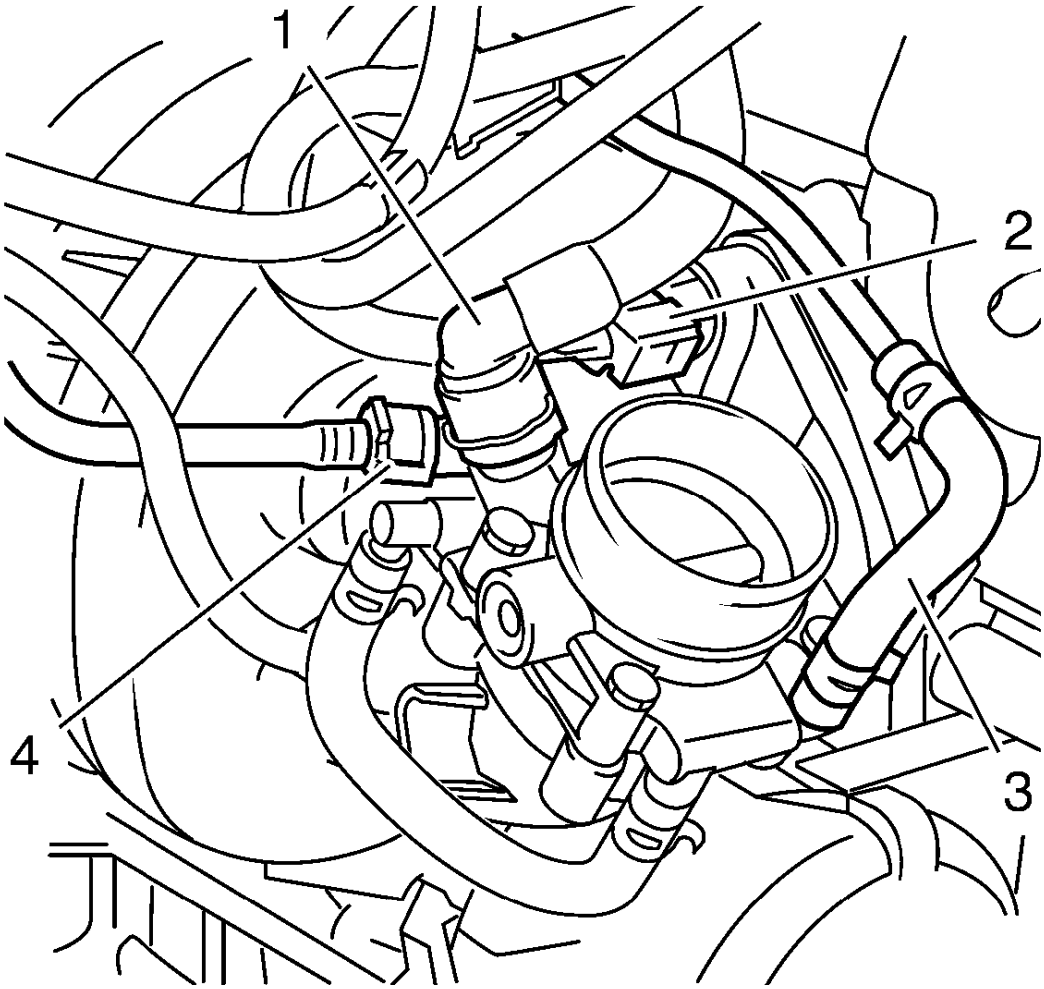

Fig. 15: Throttle Body Heater Outlet Pipe, Throttle Body Heater Inlet Pipe And Positive Crankcase Ventilation Pipe
Courtesy of GENERAL MOTORS COMPANY

4. Connect the throttle body heater inlet pipe (3).
5. Connect the throttle body heater outlet pipe (4).
6. Connect the positive crankcase ventilation pipe (1).
7. Connect the wiring harness plug (2).
8. Install the air cleaner outlet duct. Refer to **Air Cleaner Outlet Duct Replacement**.
9. Perform the throttle/idle learn procedure. Refer to **Throttle/Idle Learn**.

SECONDARY AIR INJECTION PUMP INLET HOSE REPLACEMENT

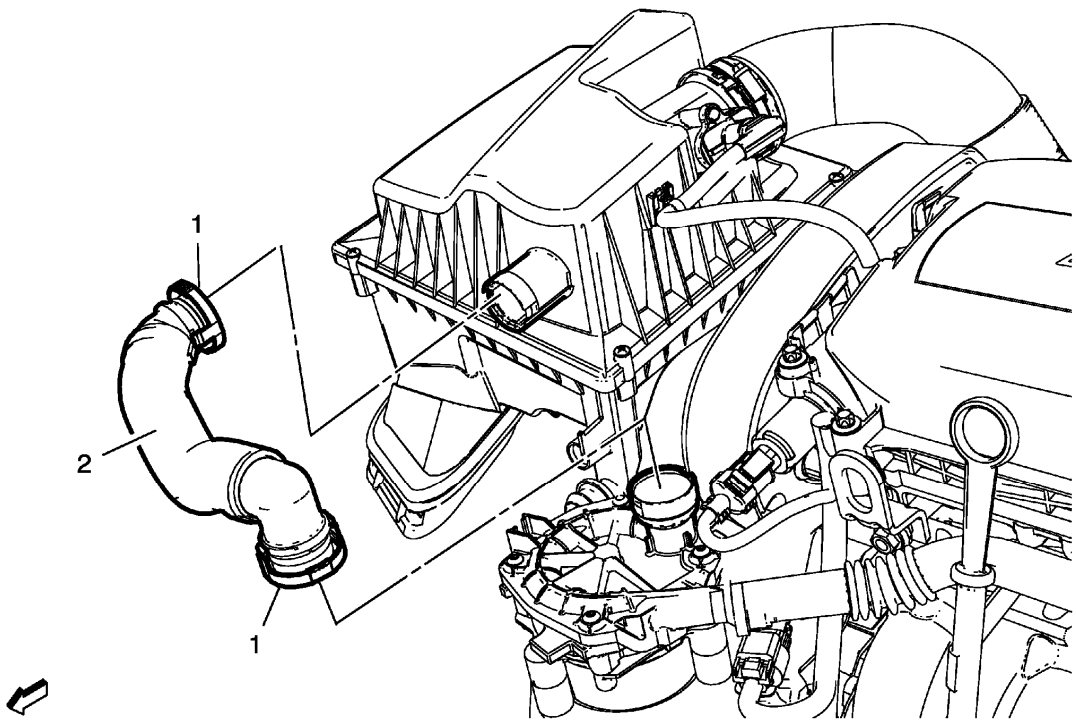

Fig. 16: Secondary Air Injection Pump Inlet Hose
Courtesy of GENERAL MOTORS COMPANY

Secondary Air Injection Pump Inlet Hose Replacement

Callout	Component Name
1	Hose Retainer (Qty: 2) Refer to **Plastic Collar Quick Connect Fitting Service**.
2	Secondary Air Injection Pump Inlet Hose **Procedure** Disconnect the hose from the secondary air injection pump and the air cleaner assembly.

SECONDARY AIR INJECTION CHECK VALVE REPLACEMENT

Removal Procedure

1. Disconnect the battery negative cable. Refer to **Battery Negative Cable Disconnection and Connection** .

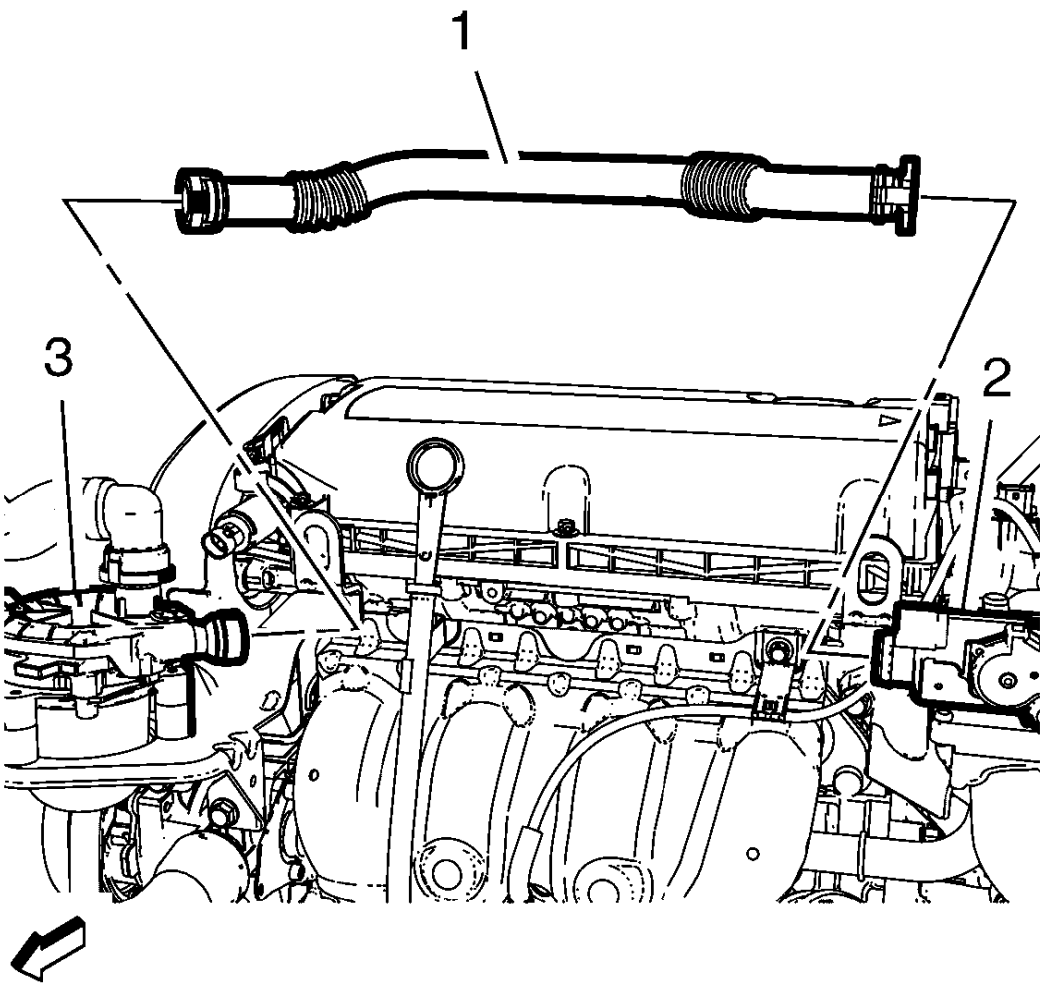

Fig. 17: Secondary Air Injection Pump Pipe
Courtesy of GENERAL MOTORS COMPANY

2. Disconnect the secondary air injection pump pipe (1) from the secondary air injection check valve (2). Refer to **Plastic Collar Quick Connect Fitting Service**.

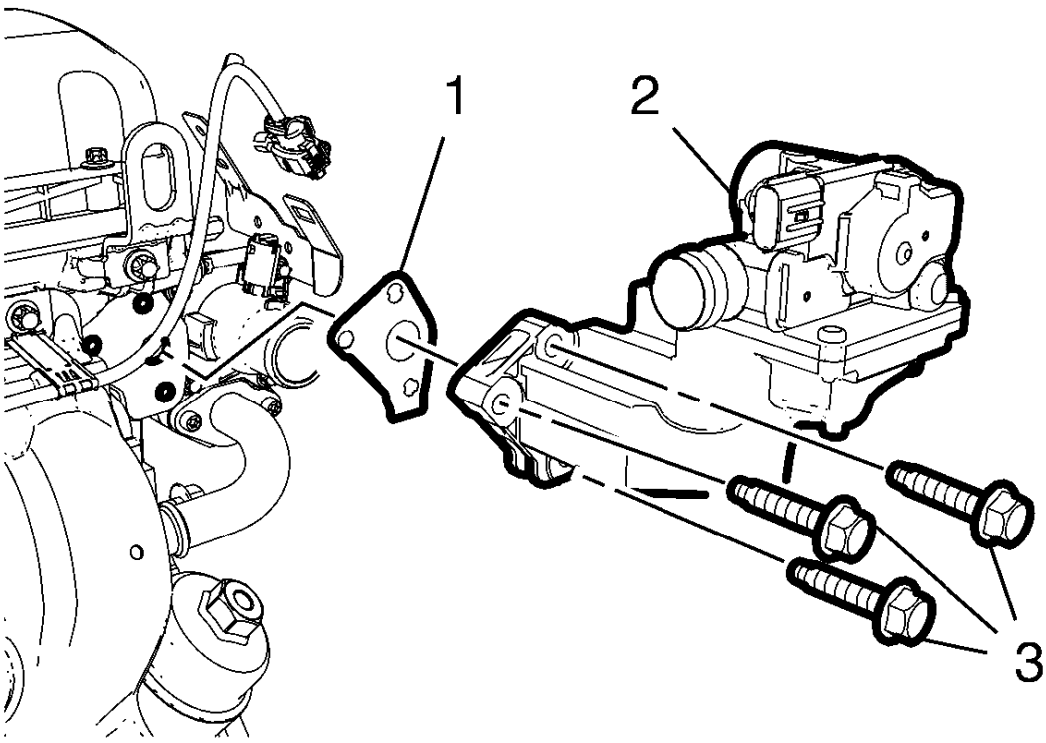

Fig. 18: Secondary Air Injection Check Valve Bolts
Courtesy of GENERAL MOTORS COMPANY

3. Remove the 3 secondary air injection check valve bolts (3).
4. Remove and DISCARD the secondary air injection check valve gasket (1).
5. Remove the secondary air injection check valve (2).

Installation Procedure

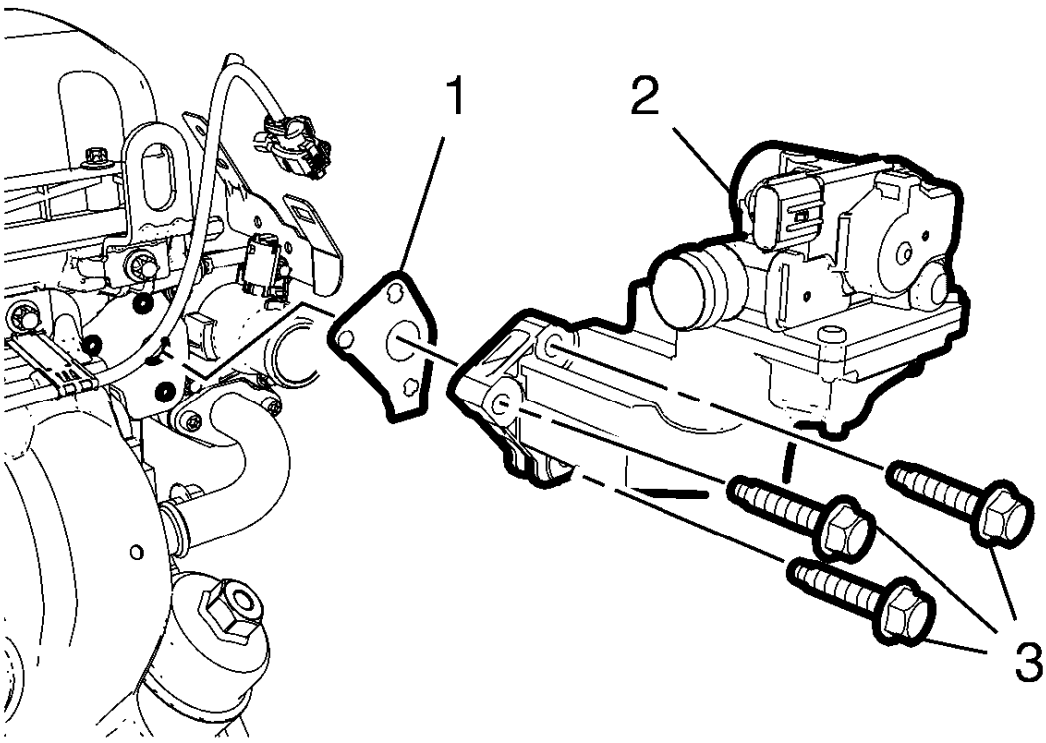

Fig. 19: Secondary Air Injection Check Valve Bolts
Courtesy of GENERAL MOTORS COMPANY

1. Install a NEW secondary air injection check valve gasket (1).
2. Install the secondary air injection check valve (2).

CAUTION: Refer to Fastener Caution .

3. Install the 3 secondary air injection check valve bolts (3) and tighten to 22 N.m (16 lb ft).

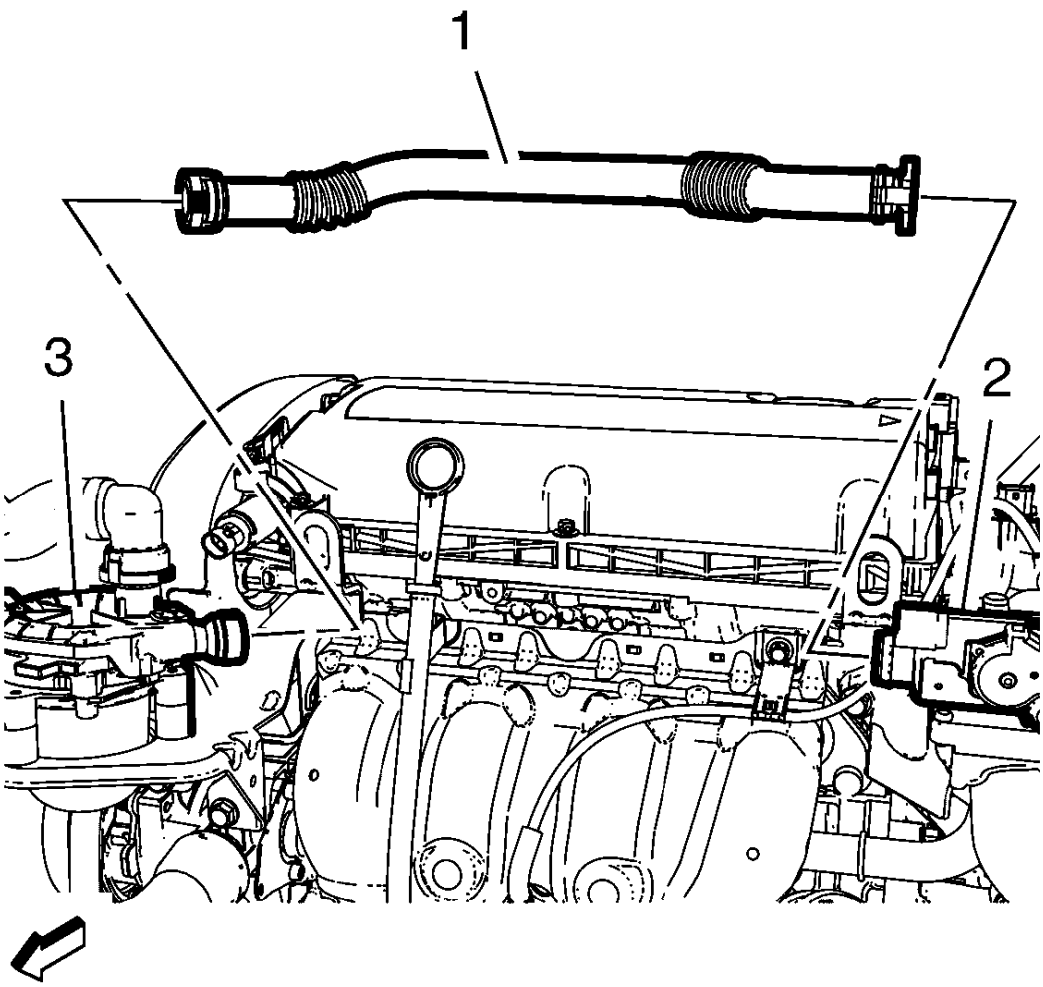

Fig. 20: Secondary Air Injection Pump Pipe
Courtesy of GENERAL MOTORS COMPANY

4. Connect the secondary air injection pump pipe (1) to the secondary air injection check valve (2). Refer to **Plastic Collar Quick Connect Fitting Service**.
5. Connect the battery negative cable. Refer to **Battery Negative Cable Disconnection and Connection** .

SECONDARY AIR INJECTION PUMP PIPE REPLACEMENT

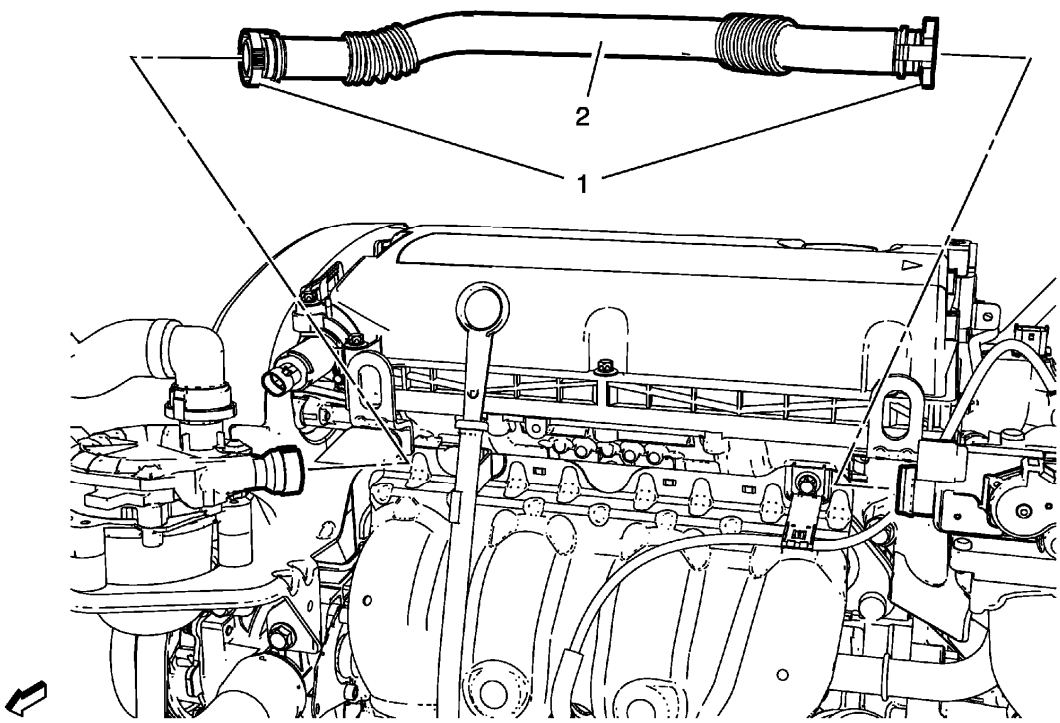

Fig. 21: Secondary Air Injection Pump Pipe
Courtesy of GENERAL MOTORS COMPANY

Secondary Air Injection Pump Pipe Replacement

Callout	Component Name
1	Pipe Retainer (Qty: 2) Refer to **Plastic Collar Quick Connect Fitting Service**.
2	Secondary Air Injection Pump Pipe. **Procedure** Disconnect the pipe from the secondary air injection pump and the secondary air injection check valve.

SECONDARY AIR INJECTION PUMP REPLACEMENT

Removal Procedure

1. Disconnect the battery negative cable. Refer to **Battery Negative Cable Disconnection and Connection** .

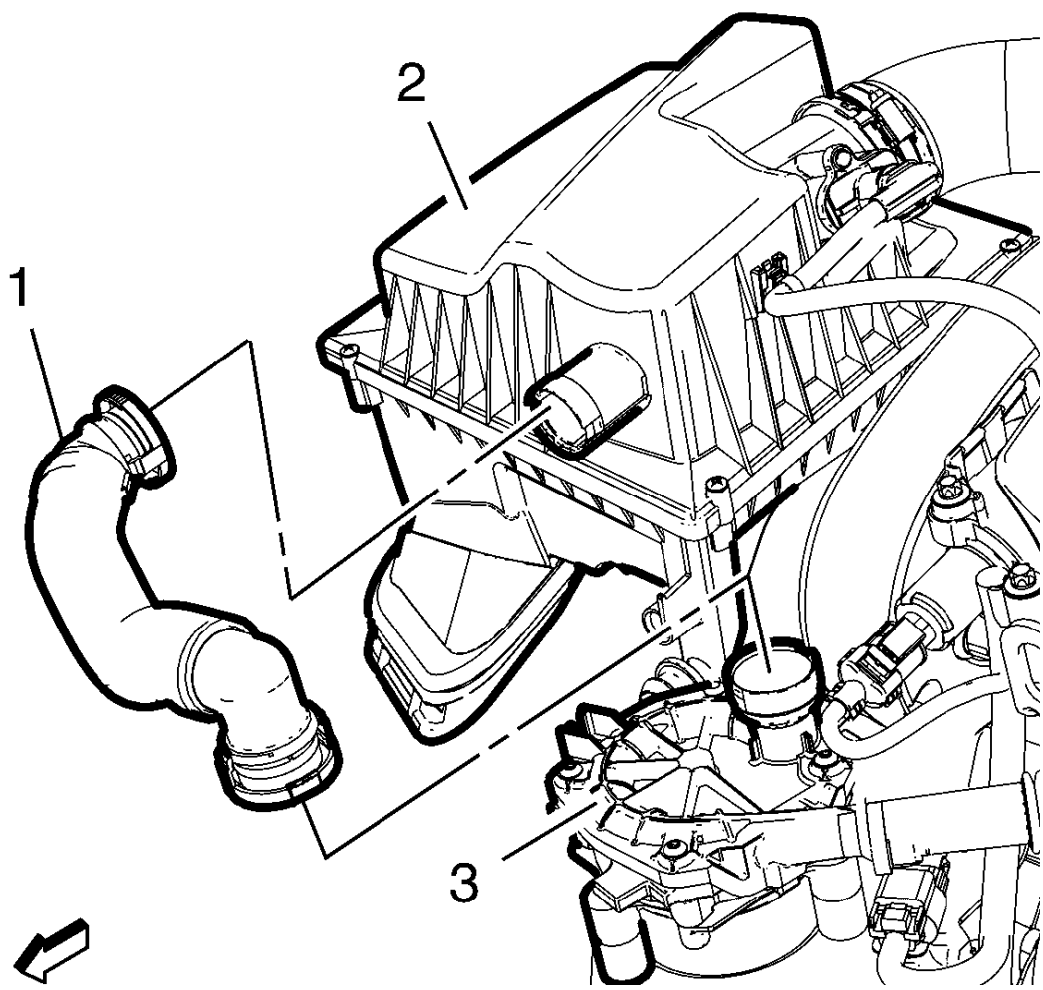

Fig. 22: Secondary Air Injection Pump Inlet Hose
Courtesy of GENERAL MOTORS COMPANY

2. Disconnect the secondary air injection pump inlet hose (1) from the secondary air injection pump (3) and the air cleaner assembly (2). Refer to **Plastic Collar Quick Connect Fitting Service**.

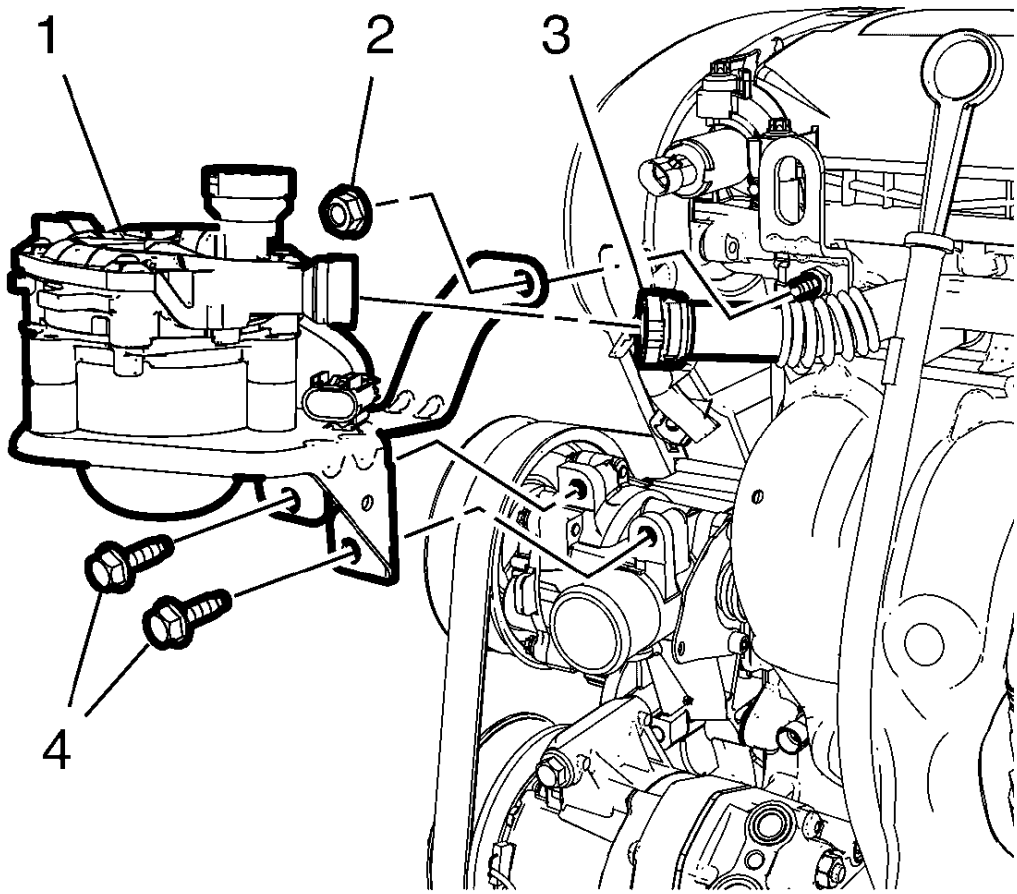

Fig. 23: Secondary Air Injection Pump Pipe
Courtesy of GENERAL MOTORS COMPANY

3. Disconnect the secondary air injection pump pipe (3). Refer to **Plastic Collar Quick Connect Fitting Service**.
4. Remove the secondary air injection pump nut (2) and the 2 secondary air injection pump bolts (4).
5. Remove the secondary air injection pump (1).

Installation Procedure

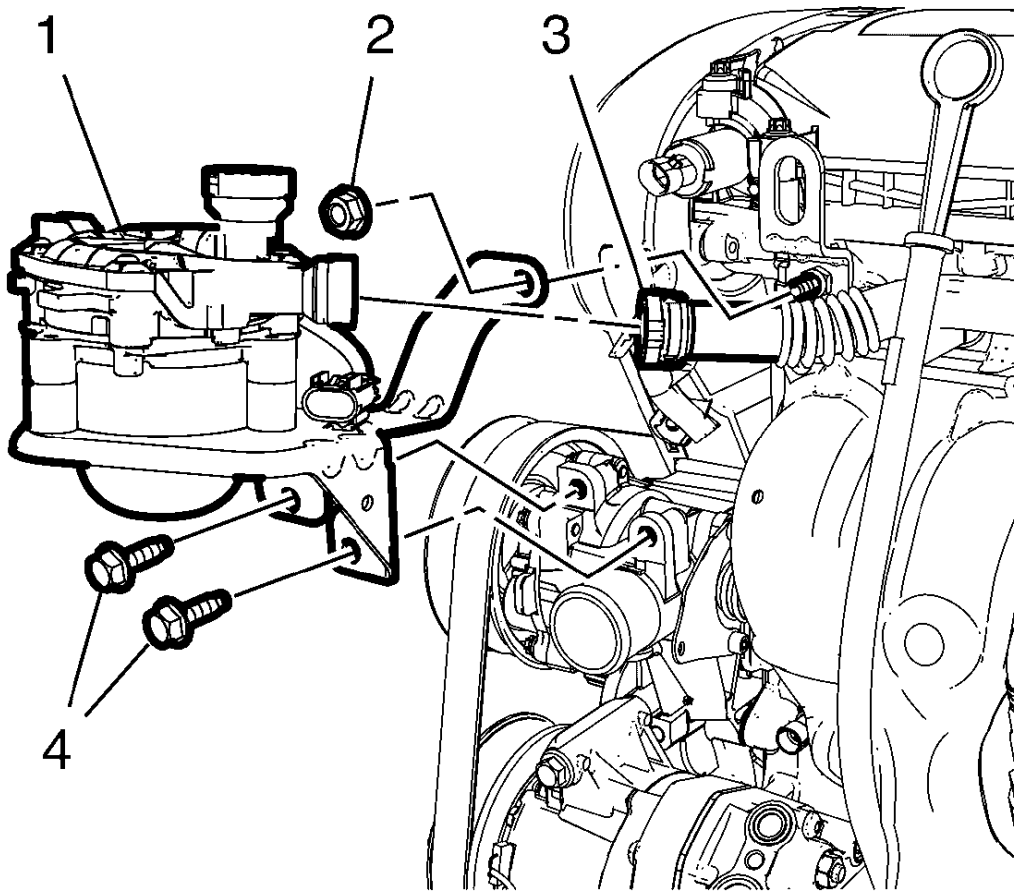

Fig. 24: Secondary Air Injection Pump Pipe
Courtesy of GENERAL MOTORS COMPANY

1. Install the secondary air injection pump (1).
2. Loosely install the secondary air injection pump nut (2) and the 2 secondary air injection pump bolts (4).

CAUTION: Refer to Fastener Caution .

3. Tighten the secondary air injection pump nut (2) and the 2 secondary air injection pump bolts (4) to 22 N.m (16 lb ft).
4. Connect the secondary air injection pump pipe (3). Refer to **Plastic Collar Quick Connect Fitting Service**.

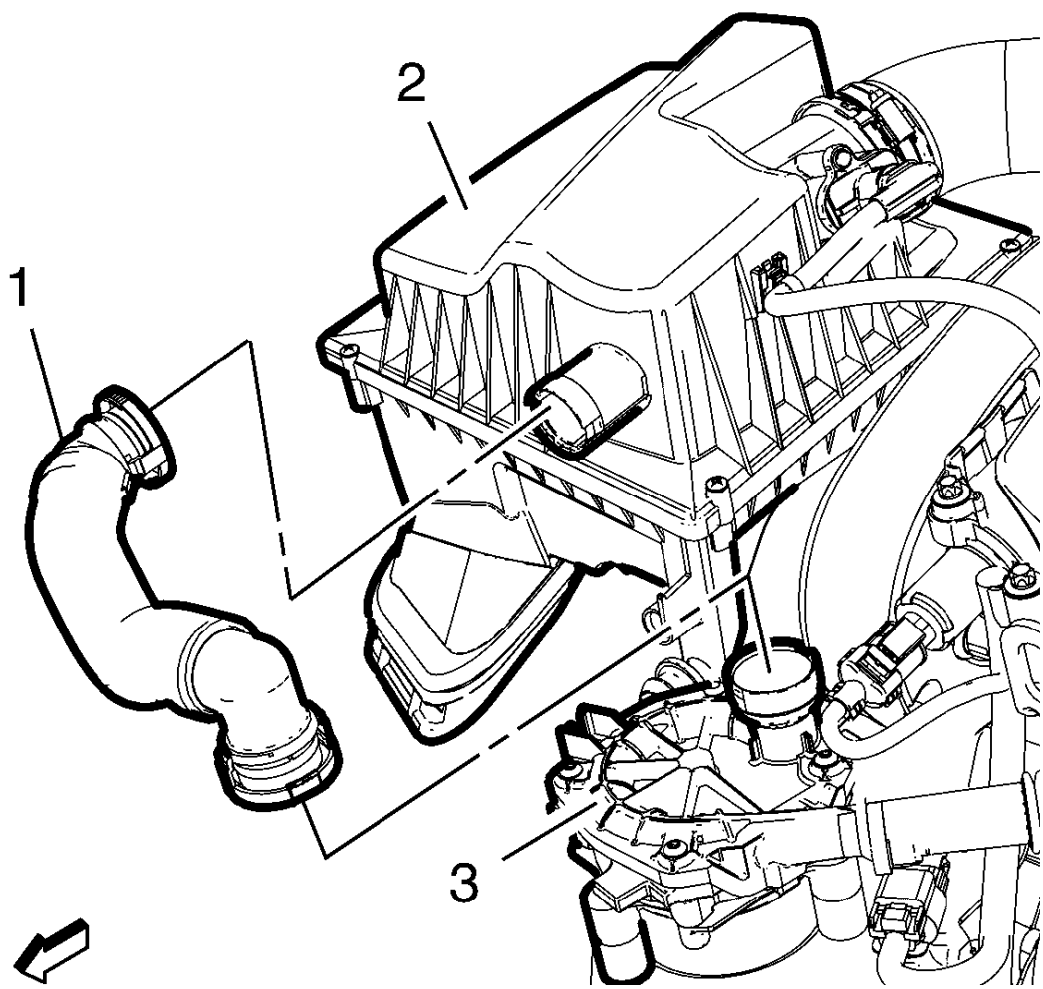

Fig. 25: Secondary Air Injection Pump Inlet Hose
Courtesy of GENERAL MOTORS COMPANY

5. Connect the secondary air injection pump inlet hose (1) to the secondary air injection pump (3) and the air cleaner assembly (2). Refer to **Plastic Collar Quick Connect Fitting Service**.
6. Connect the battery negative cable. Refer to **Battery Negative Cable Disconnection and Connection** .

THROTTLE BODY INSPECTION AND CLEANING

NOTE: Over extended time and mileage, deposits may accumulate on the back of the throttle valve plate. The source of the deposit is exhaust gas. Typically these deposits pose no problem. Occasionally the deposit may accumulate to a point where perceived pedal effort or throttle valve movement is effected. This procedure should not be performed on vehicles with mileage under 80, 450 km (50, 000 mi).

1. Remove the air cleaner outlet duct. Refer to **Air Cleaner Outlet Duct Replacement**.

WARNING: Turn OFF the ignition before inserting fingers into the throttle bore. Unexpected movement of the throttle blade could cause personal injury.

CAUTION: Do not insert any tools into the throttle body bore in order to avoid damage to the throttle valve plate.

2. Inspect the throttle body bore and the throttle valve plate for deposits. You will need to open the throttle valve in order to inspect all surfaces.

CAUTION: Do not use any solvent that contains Methyl Ethyl Ketone (MEK). This solvent may damage fuel system components.

3. Clean the throttle body bore and the throttle valve plate using a clean shop towel with an appropriate cleaner.
4. Install the air cleaner outlet duct. Refer to **Air Cleaner Outlet Duct Replacement**.
5. Perform the throttle/idle learn procedure. Refer to **Throttle/Idle Learn**.

FUEL PRESSURE RELIEF

WARNING: Refer to Gasoline/Gasoline Vapors Warning .

WARNING: Remove the fuel tank cap and relieve the fuel system pressure before servicing the fuel system in order to reduce the risk of personal injury. After you relieve the fuel system pressure, a small amount of fuel may be released when servicing the fuel lines, the fuel injection pump, or the connections. In order to reduce the risk of personal injury, cover the fuel system components with a shop towel before disconnection. This will catch any fuel that may leak out. Place the towel in an approved container when the disconnection is complete.

1. Disconnect the battery. Refer to **Battery Negative Cable Disconnection and Connection** .

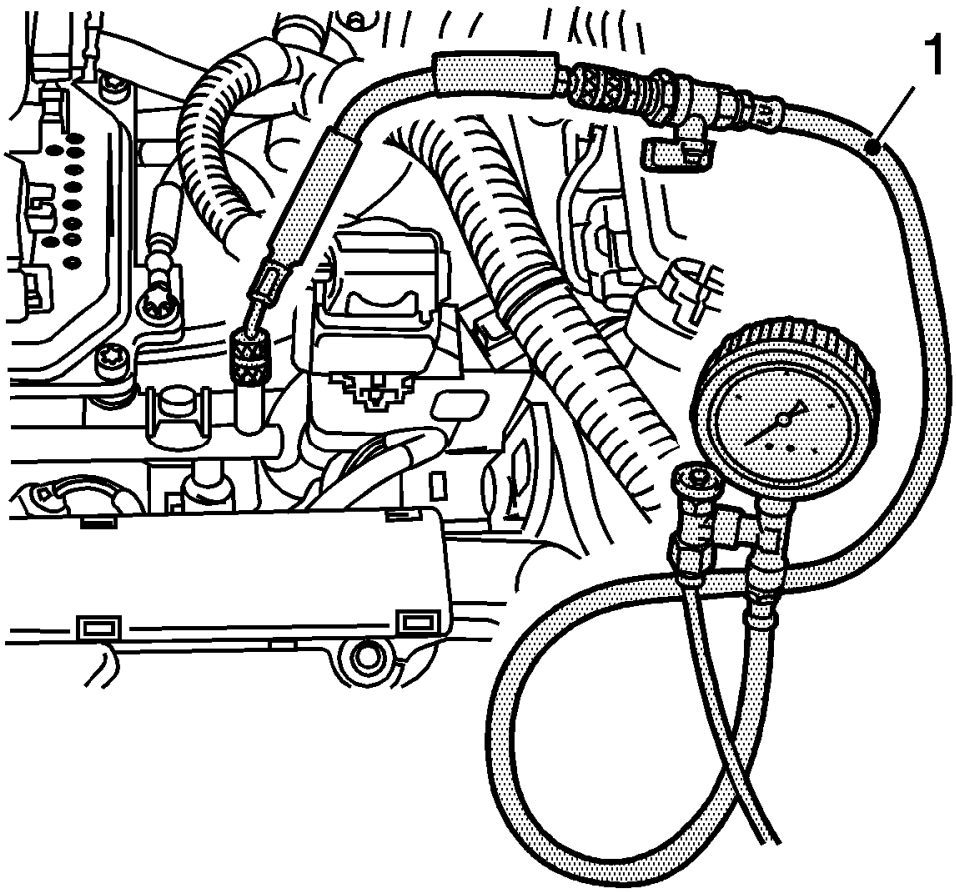

Fig. 26: View Of Fuel Pressure Tester
Courtesy of GENERAL MOTORS COMPANY

2. Remove the protective cap from the test connection.
3. Relieve the fuel pressure, using the **EN-34730-91** Pressure Tester (1).

PLASTIC COLLAR QUICK CONNECT FITTING SERVICE

Plastic Quick Connect Fitting Type Identification

Plastic Quick Connect Fitting Type A

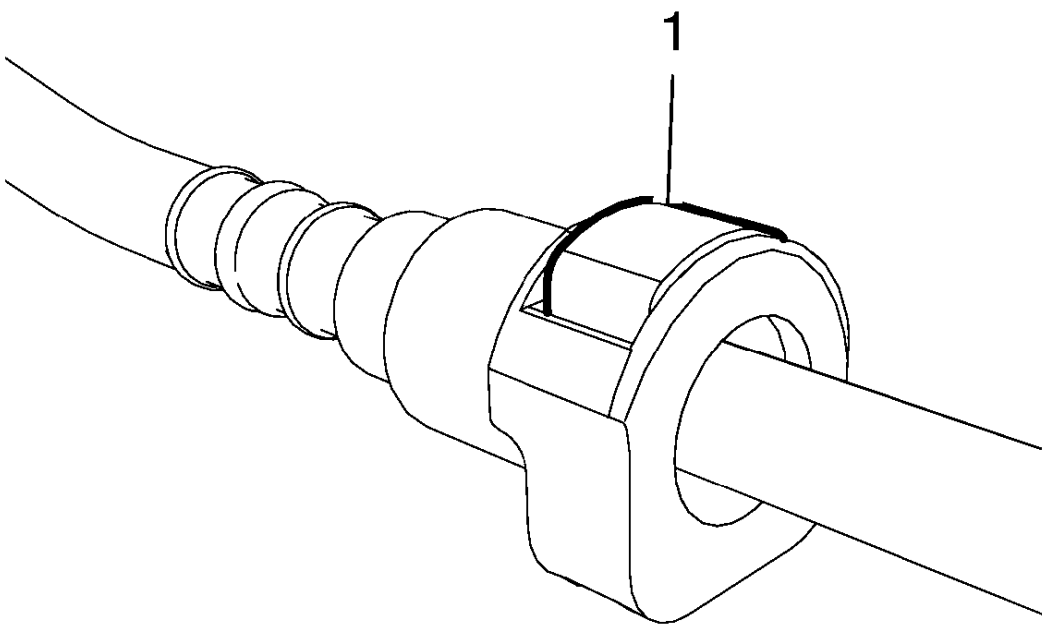

Fig. 27: Quick Connect Fitting Type A
Courtesy of GENERAL MOTORS COMPANY

Quick connect fitting type A - TI loc with one latch (1).

Plastic Quick Connect Fitting Type B

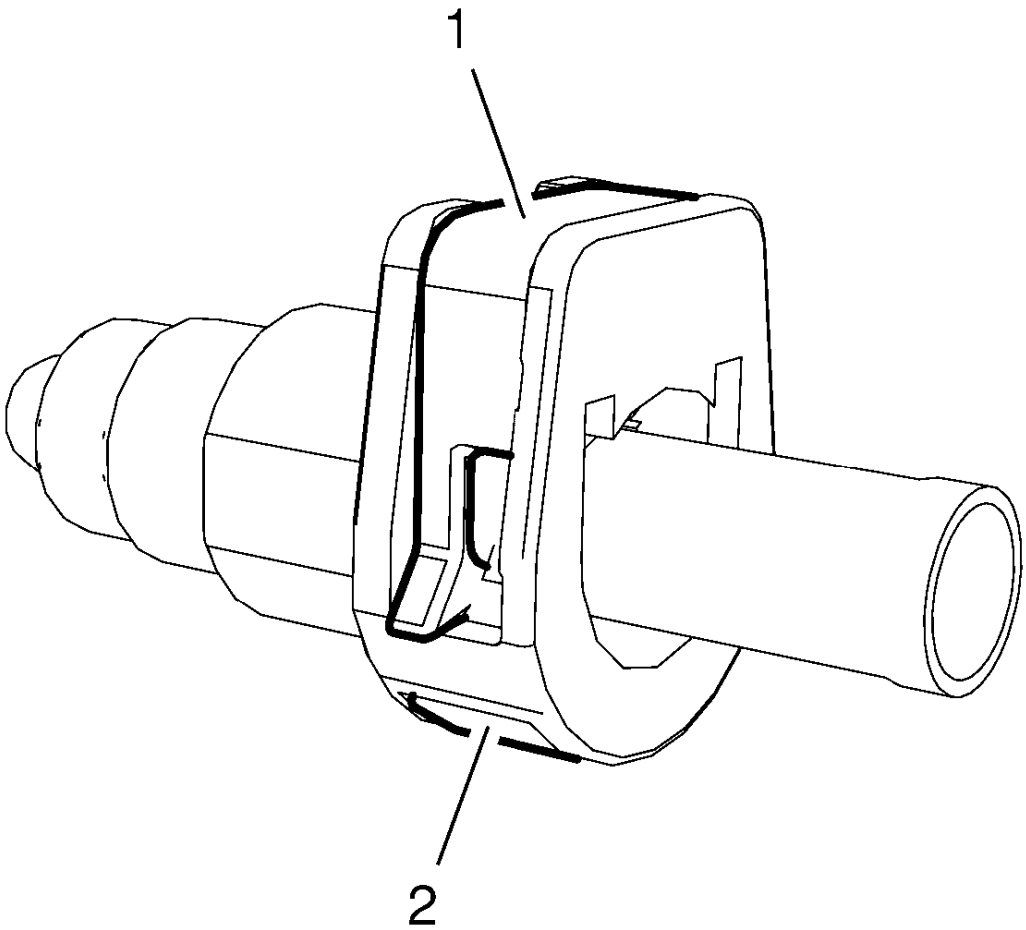

Fig. 28: Quick Connect Fitting Type B
Courtesy of GENERAL MOTORS COMPANY

- Quick connect fitting type B - TI loc upper latch (1).
- Quick connect fitting type B - TI loc lower latch (2).

Plastic Quick Connect Fitting Type C

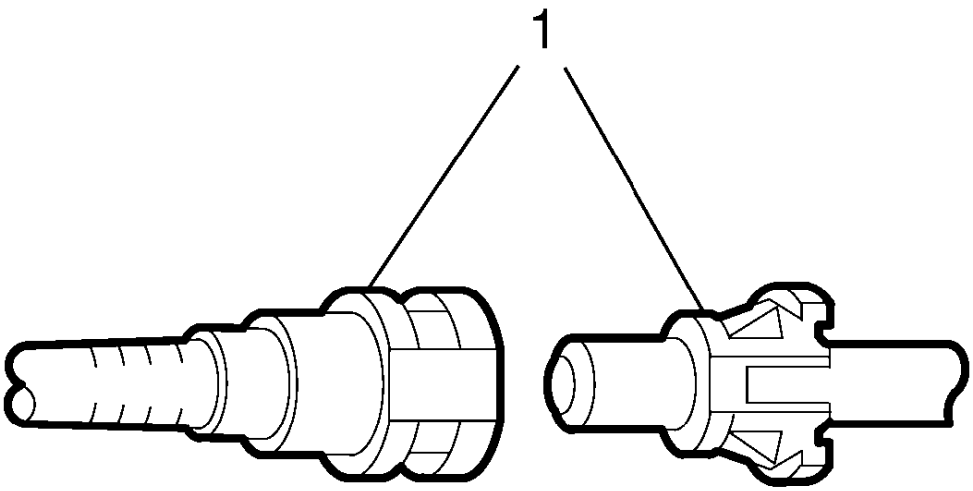

Fig. 29: Quick Connect Fitting Type C
Courtesy of GENERAL MOTORS COMPANY

Quick connect fitting type C (1).

Plastic Quick Connect Fitting Type D

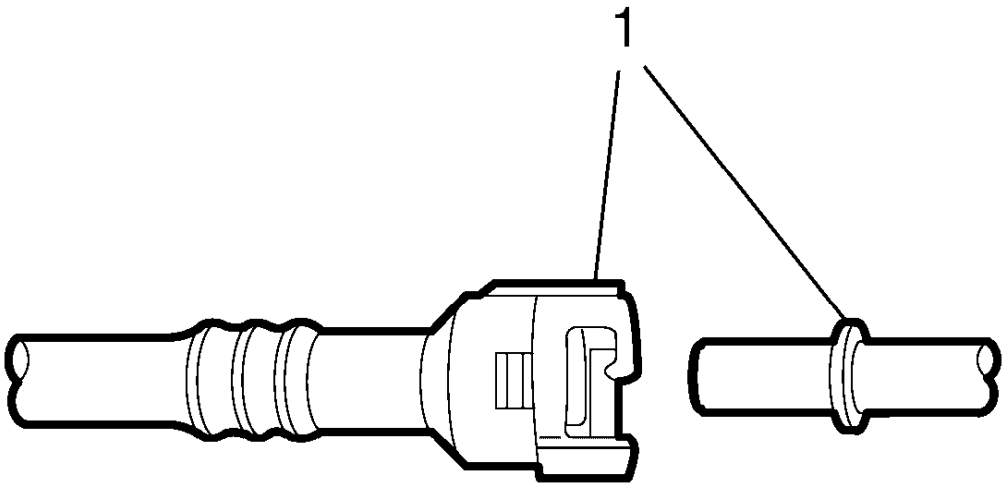

Fig. 30: Quick Connect Fitting Type D
Courtesy of GENERAL MOTORS COMPANY

Quick connect fitting type D (1).

Plastic Quick Connect Fitting Type E

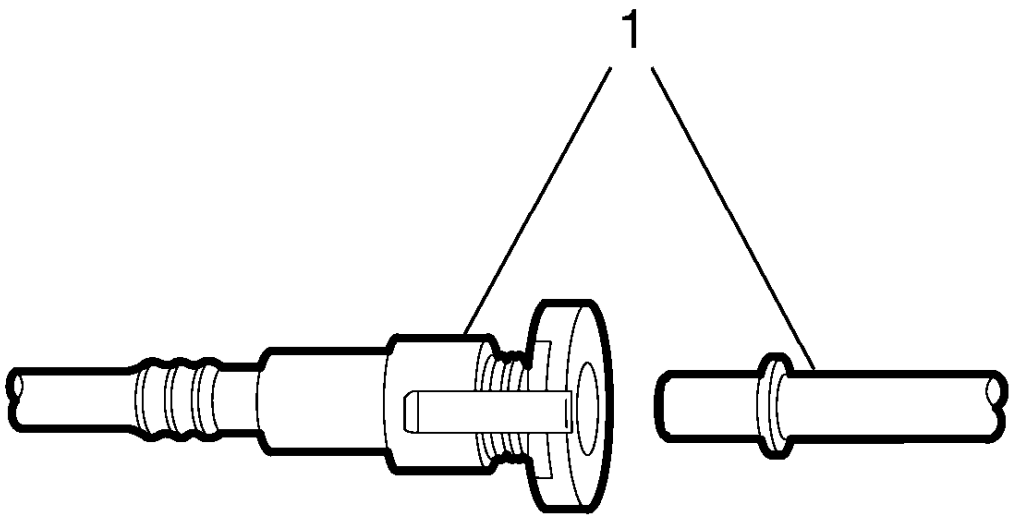

Fig. 31: Quick Connect Fitting Type E
Courtesy of GENERAL MOTORS COMPANY

Quick connect fitting type E (1).

Plastic Quick Connect Fitting Type F

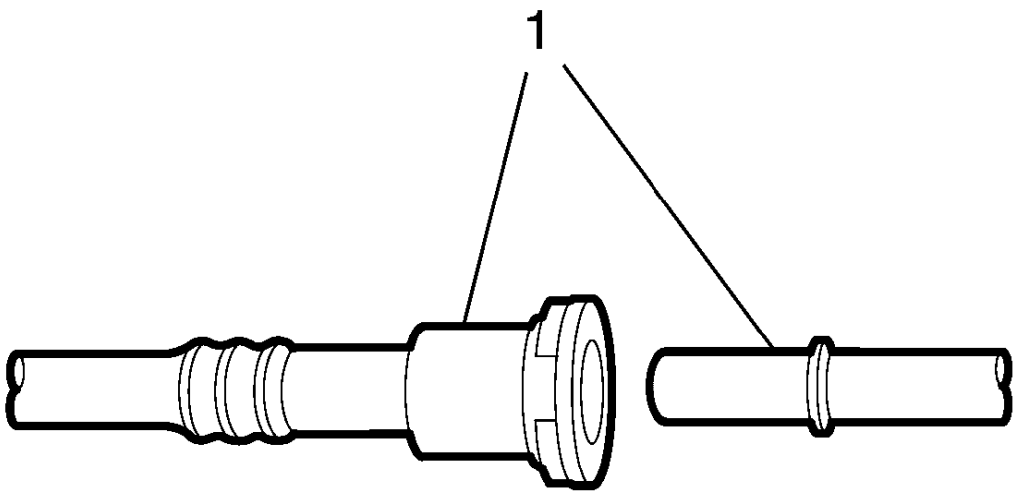

Fig. 32: Quick Connect Fitting Type F
Courtesy of GENERAL MOTORS COMPANY

Quick connect fitting type F (1).

Plastic Quick Connect Fitting Type G

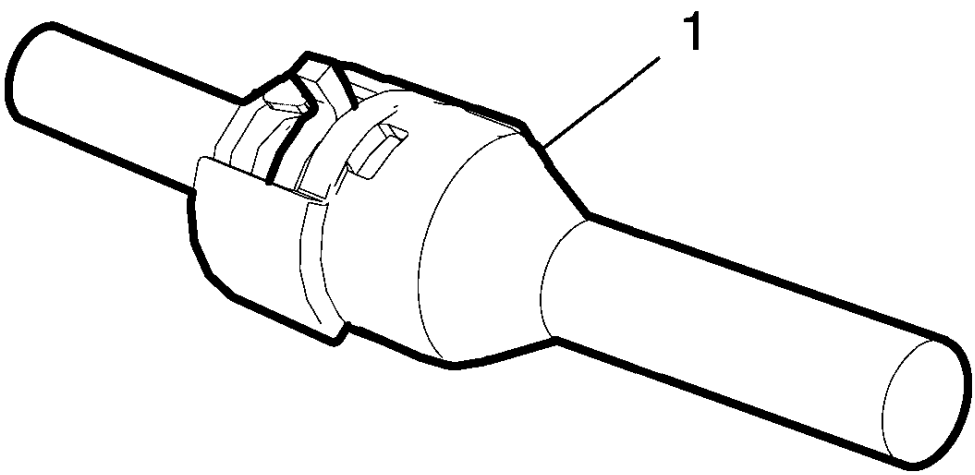

Fig. 33: Quick Connect Fitting Type G
Courtesy of GENERAL MOTORS COMPANY

Quick connect fitting type G (1).

Plastic Quick Connect Fitting Type H

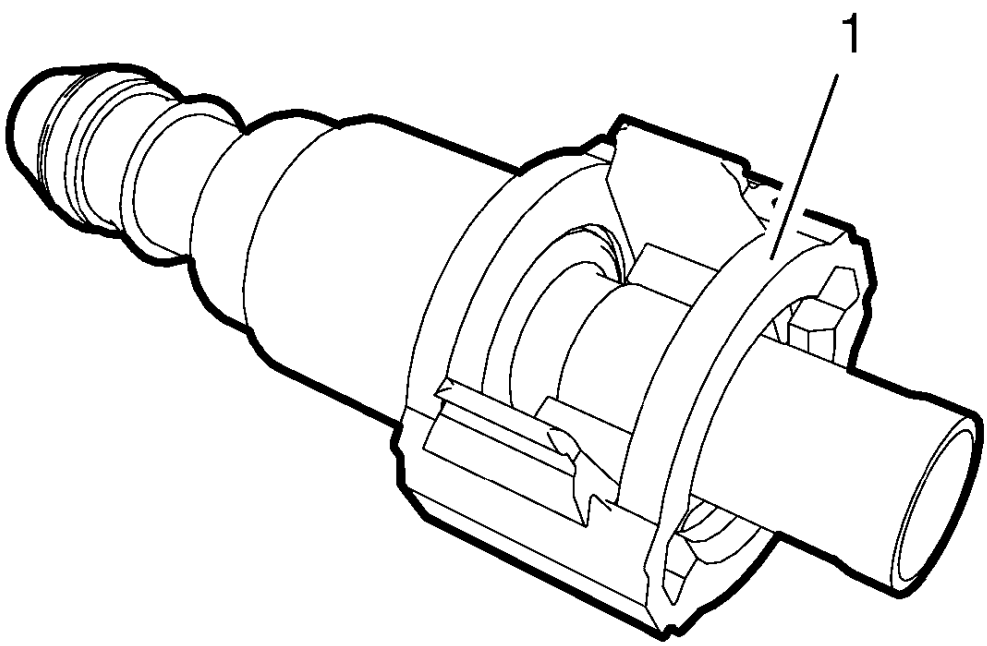

Fig. 34: Quick Connect Fitting Type H
Courtesy of GENERAL MOTORS COMPANY

Quick connect fitting type H (1).

General Instructions for Handling the Connectors

Before Disconnection

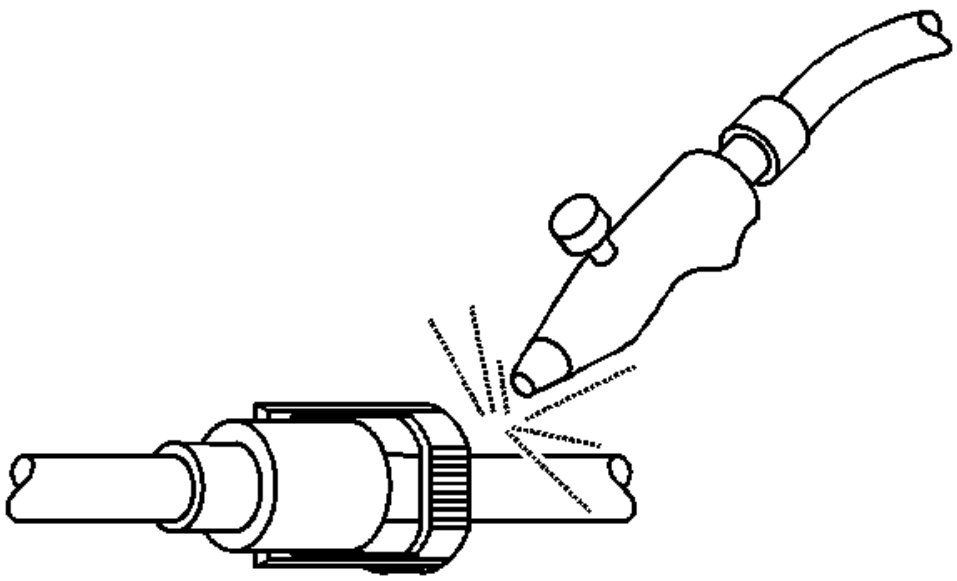

Fig. 35: Blowing Dirt Out Of Fitting (Plastic Collar)
Courtesy of GENERAL MOTORS COMPANY

WARNING: Wear safety glasses when using compressed air, as flying dirt particles may cause eye injury.

NOTE: The following instructions apply to all of these types of fittings.

Using compressed air, to blow any dirt out of the quick connect fitting.

After Disconnection

- Wipe off the male pipe end using a clean shop towel.
- Inspect both ends of the fitting for dirt and burrs.
- Clean components as required.
- Replace damaged components.

Type A - Disconnect/Connect

Disconnect

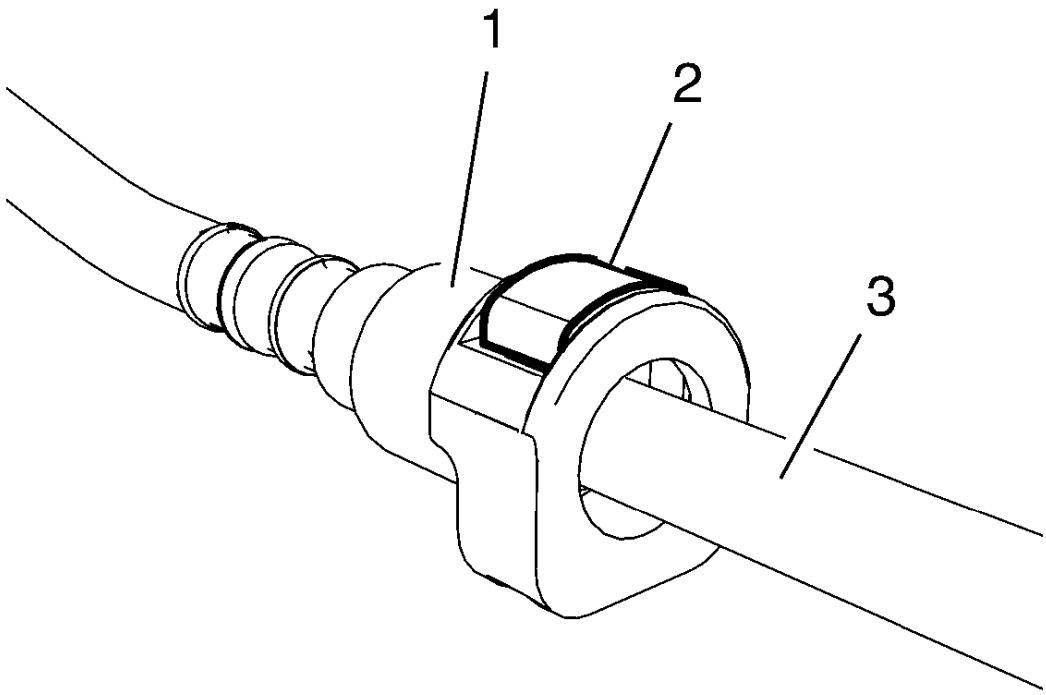

Fig. 36: Pushing Latch Down
Courtesy of GENERAL MOTORS COMPANY

NOTE: Mechanical violence is not necessary for a successful disconnection/connection.

1. Push the tube (3) into the connector (1) and push down the latch (2).

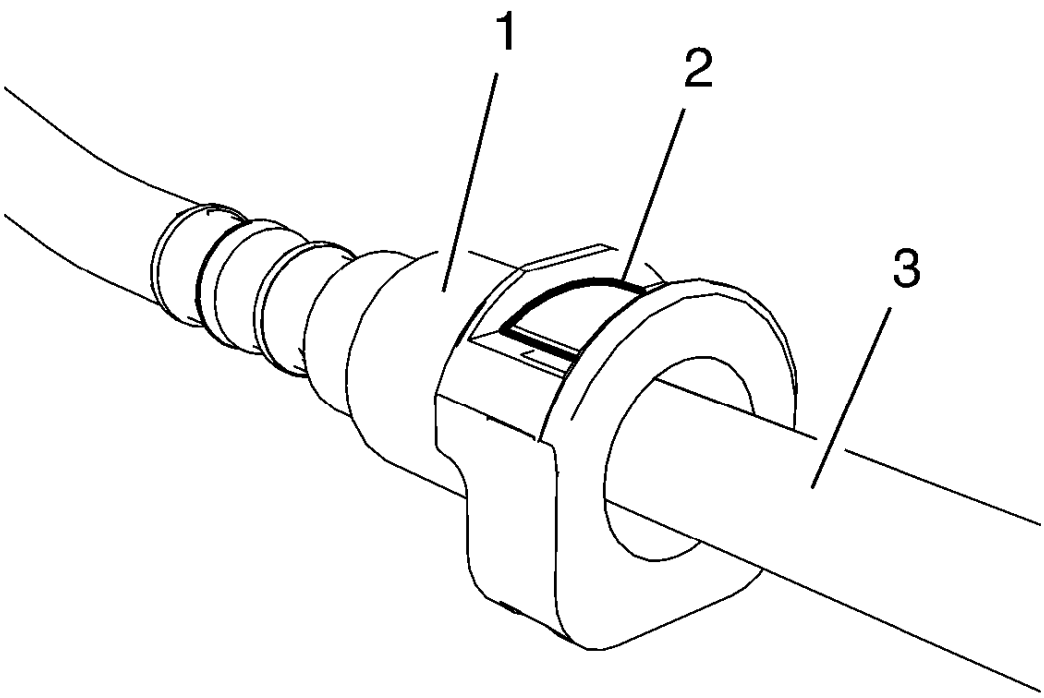

Fig. 37: Pushing Latch Into Connector
Courtesy of GENERAL MOTORS COMPANY

2. Push the latch (2) into the connector (1).

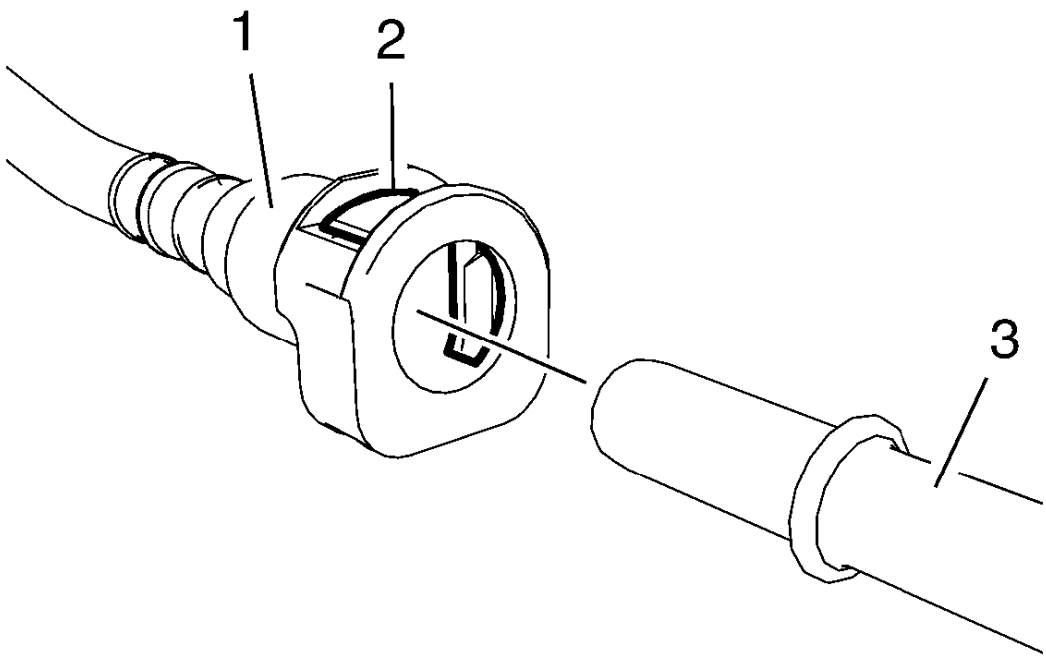

Fig. 38: Pulling Pipe Out Of Connector
Courtesy of GENERAL MOTORS COMPANY

3. Pull the pipe (3) out of the connector (1).
4. Release the latch (2).

Connect

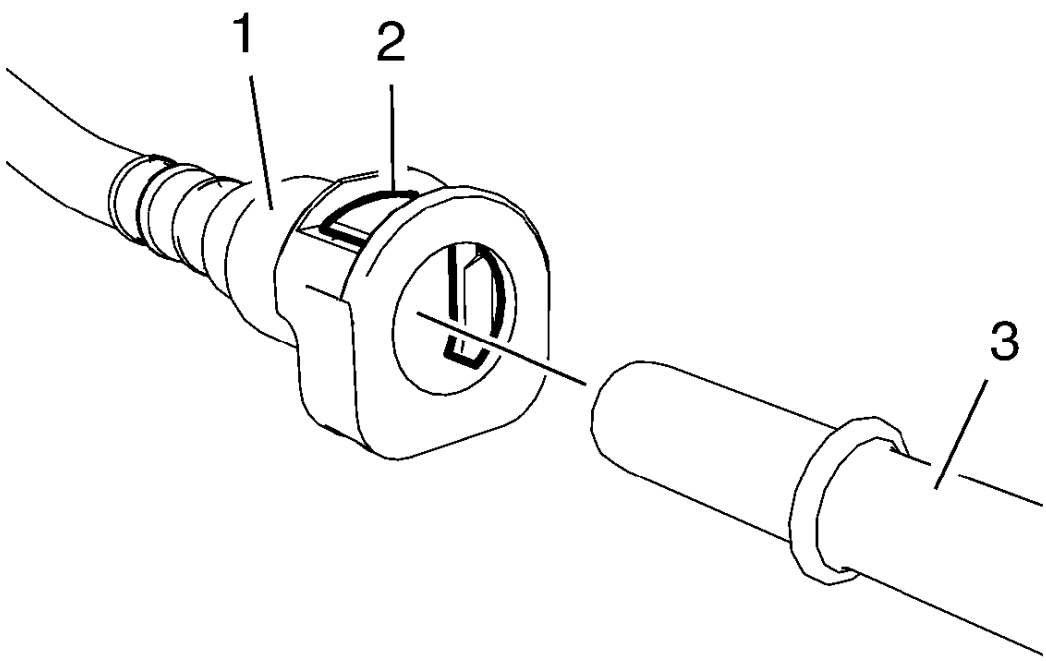

Fig. 39: Pulling Pipe Out Of Connector
Courtesy of GENERAL MOTORS COMPANY

1. Push the pipe (3) into the connector (1).

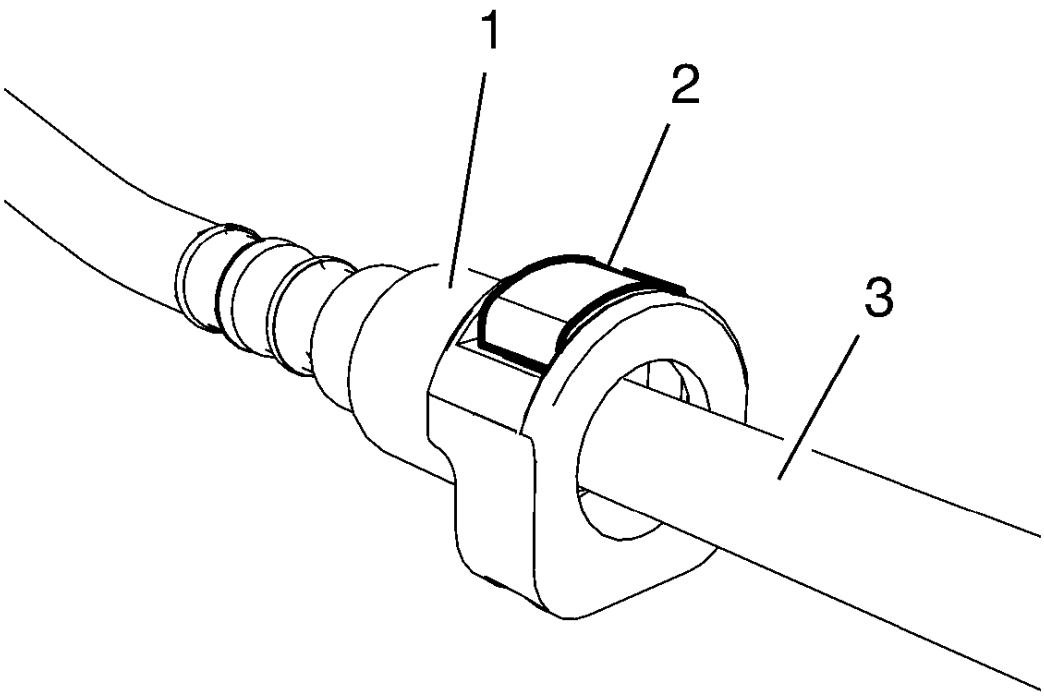

Fig. 40: Pushing Latch Down
Courtesy of GENERAL MOTORS COMPANY

2. When the connector is locked correctly, the latch (2) must align to the connector (1).
3. Do not rely only on the audible click to confirm a secure connection has been made.

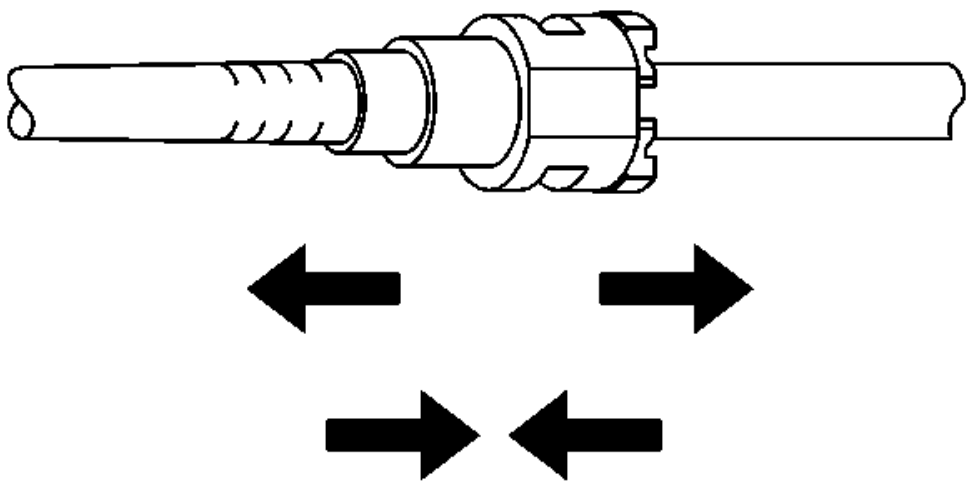

Fig. 41: View Of Quick-Connect Fitting
Courtesy of GENERAL MOTORS COMPANY

4. Pull on both sides of the quick connect fitting in order to make sure the connection is secure.

Type B - Disconnect/Connect

Disconnect

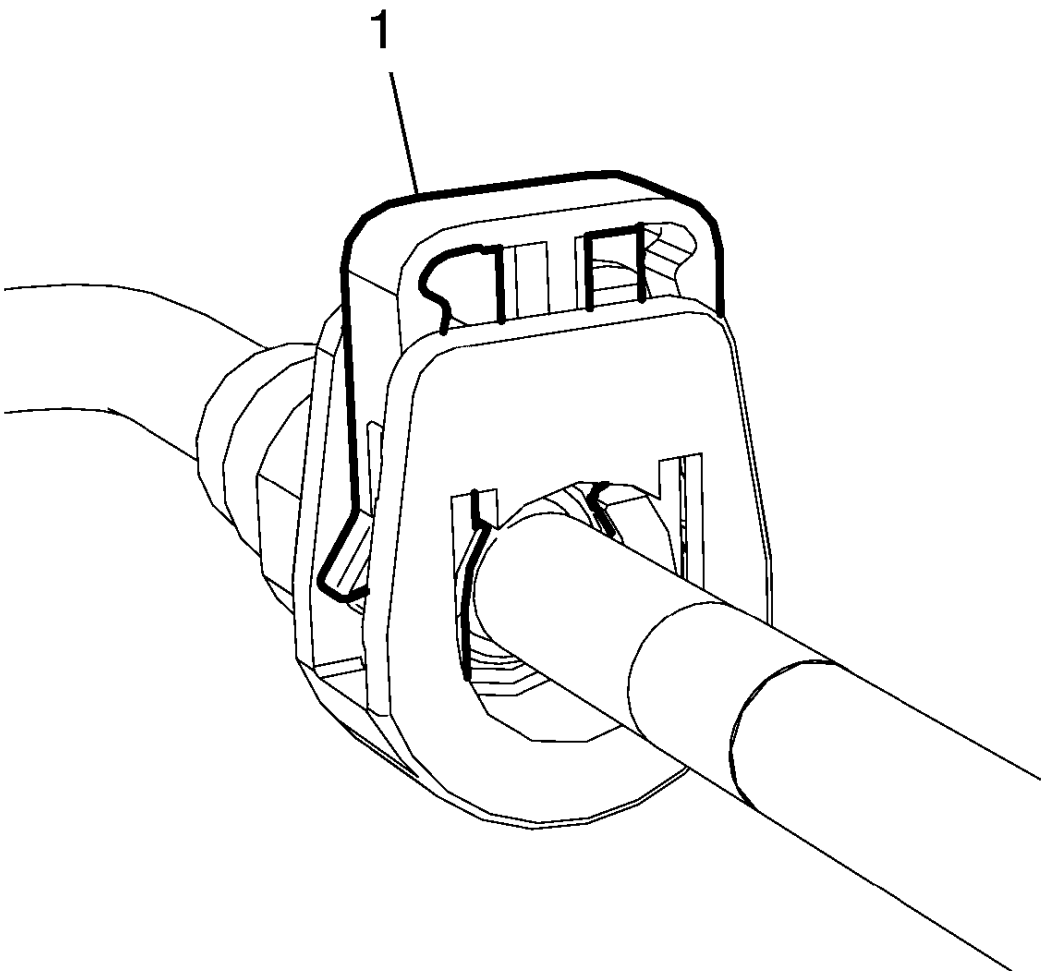

Fig. 42: Pulling Latch Out Of Connector
Courtesy of GENERAL MOTORS COMPANY

NOTE: Mechanical violence is not necessary for a successful disconnection/connection.

1. Unlock the connector by pulling the latch (1) out of the connector. Use a suitable tool if necessary.

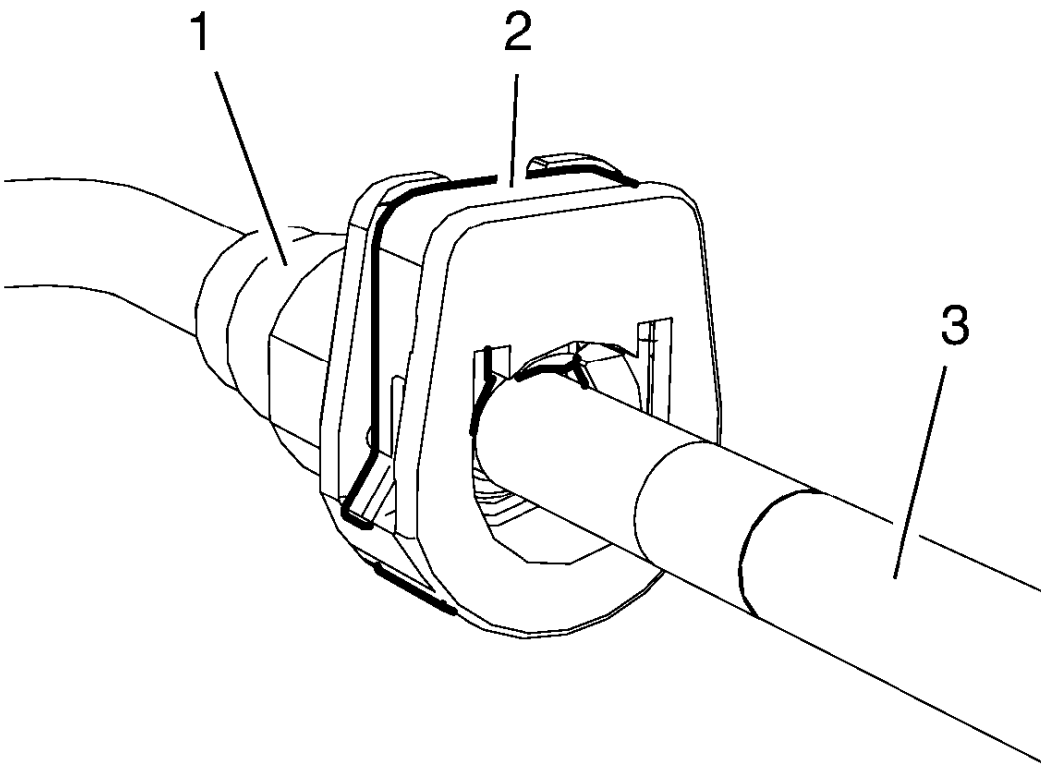

Fig. 43: Pushing Pipe Into Connector
Courtesy of GENERAL MOTORS COMPANY

2. Push the pipe (3) into the connector (1).

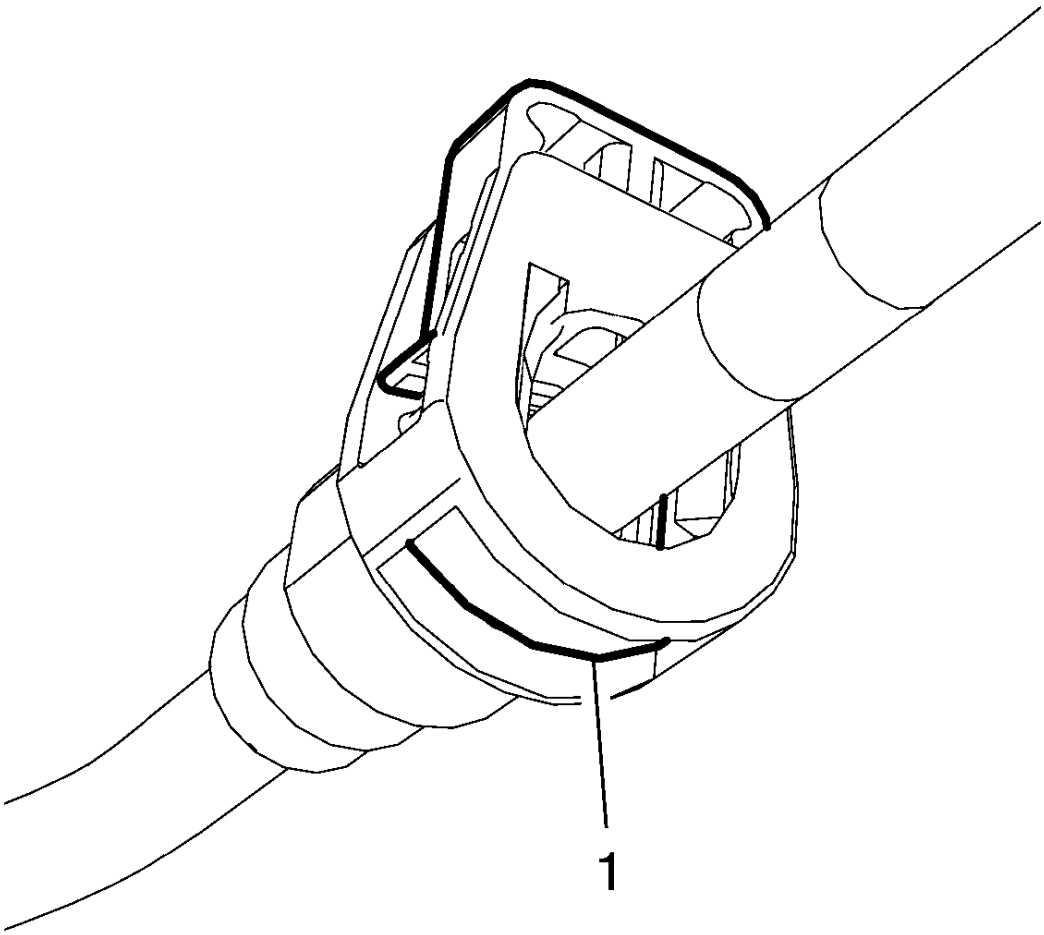

Fig. 44: Pushing Latch Into Connector
Courtesy of GENERAL MOTORS COMPANY

3. Push the latch (1) into the connector.

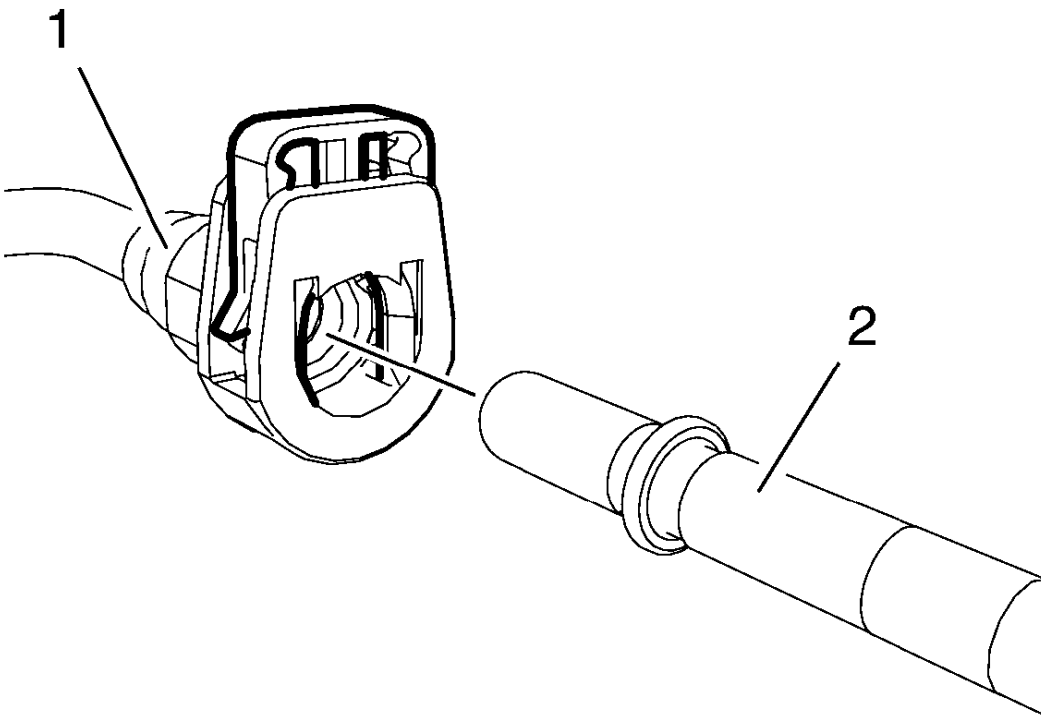

Fig. 45: Pulling Pipe Out Of Connector
Courtesy of GENERAL MOTORS COMPANY

4. Pull the pipe (2) out of the connector (1).
5. Release the latch.

Connect

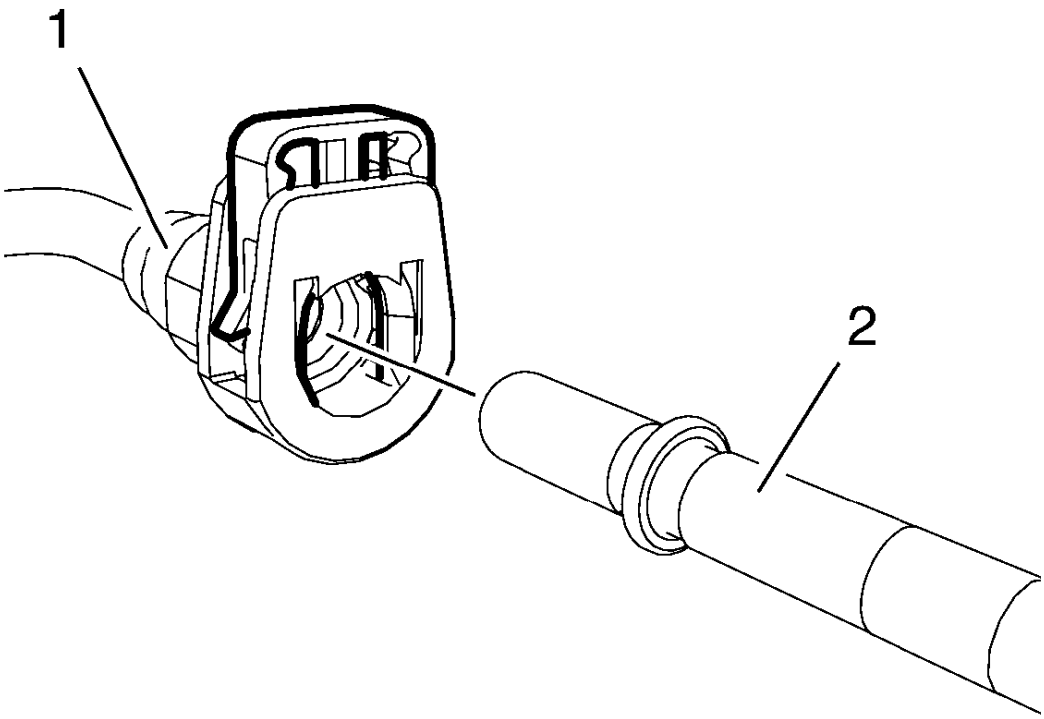

Fig. 46: Pulling Pipe Out Of Connector
Courtesy of GENERAL MOTORS COMPANY

1. Push the pipe (2) into the connector (1).

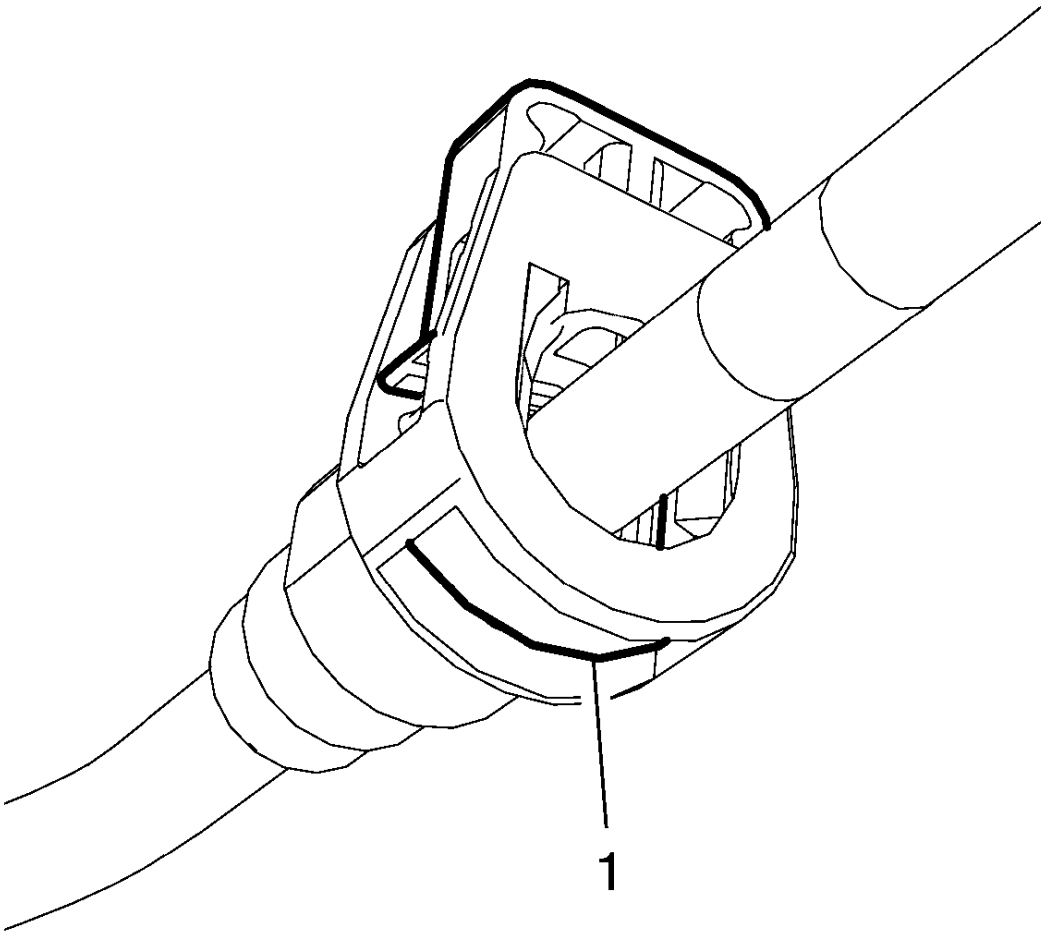

Fig. 47: Pushing Latch Into Connector
Courtesy of GENERAL MOTORS COMPANY

2. When the connector is locked correctly, the latch (1) must align to the connector.

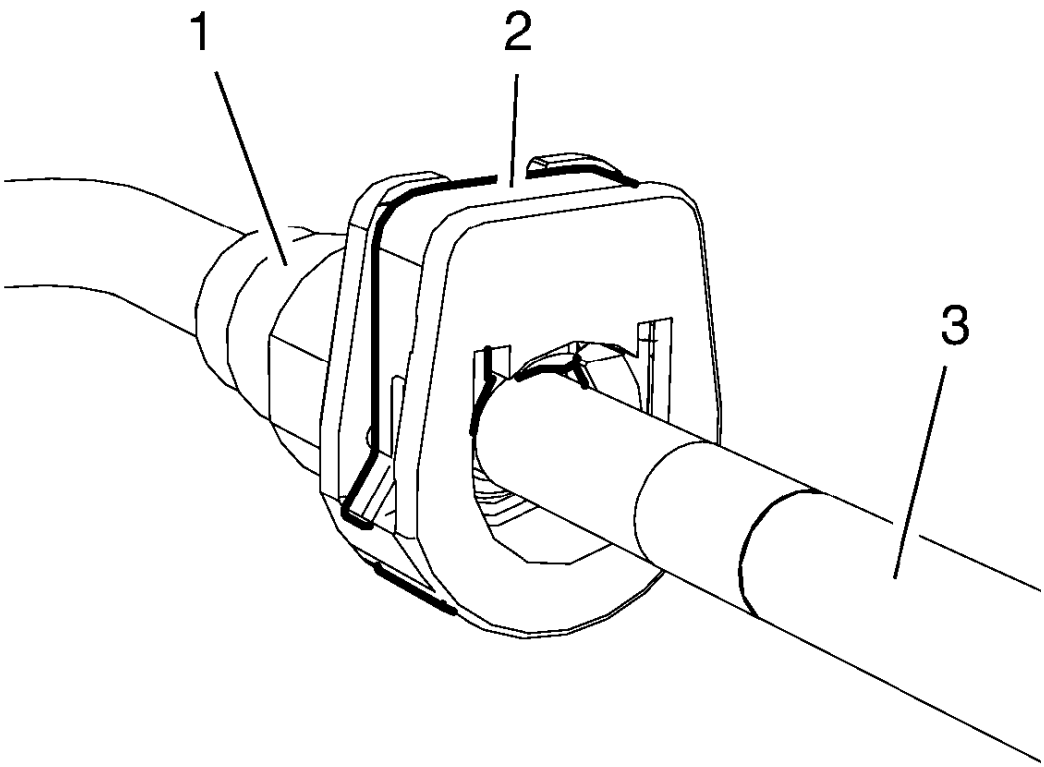

Fig. 48: Pushing Pipe Into Connector
Courtesy of GENERAL MOTORS COMPANY

NOTE: The latch (2) can only pushed into the connector (1) when the pipe (3) is connected correctly.

3. Push the latch (2) into the connector (1) to secure the connection.
4. Do not rely only on the audible click to confirm a secure connection has been made.

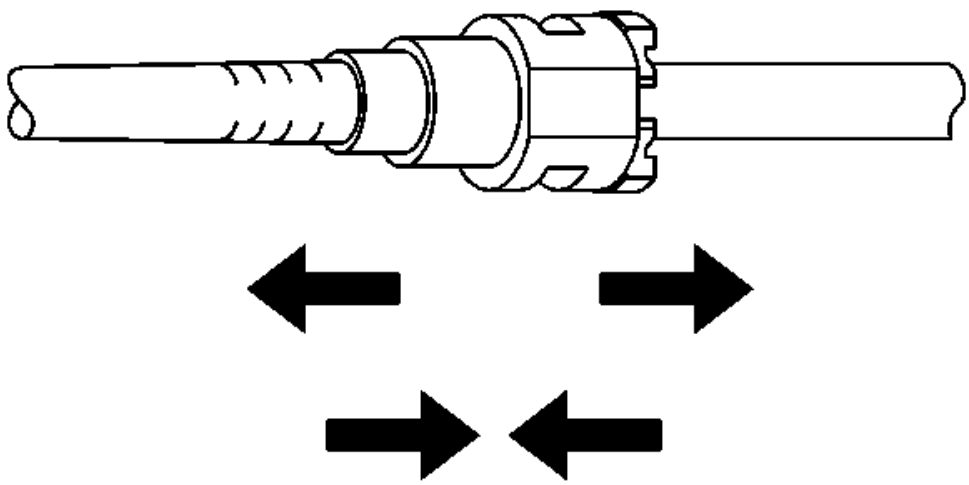

Fig. 49: View Of Quick-Connect Fitting
Courtesy of GENERAL MOTORS COMPANY

5. Pull on both sides of the quick connect fitting in order to make sure the connection is secure.

Type C - Disconnect/Connect

Disconnect

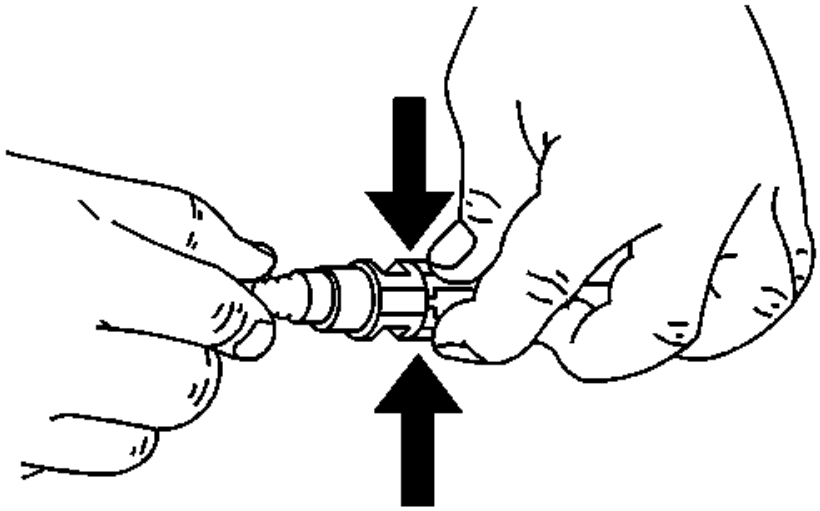

Fig. 50: View Of Quick Connect Fitting Release Tabs (Plastic Collar)
Courtesy of GENERAL MOTORS COMPANY

NOTE: Mechanical violence is not necessary for a successful disconnection/connection.

1. Squeeze the plastic quick connect fitting release tabs with the **EN-796-A** release tool.

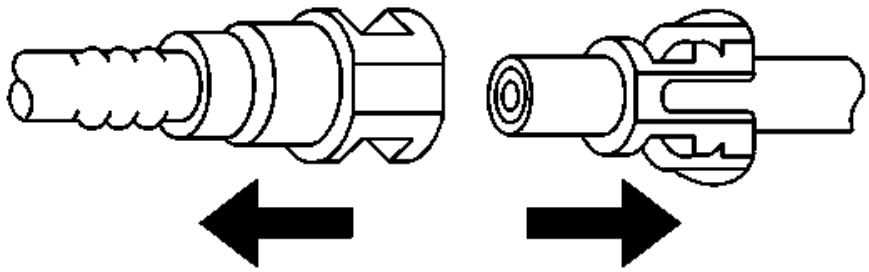

Fig. 51: View Of Pulling Connection Apart (Plastic Collar)
Courtesy of GENERAL MOTORS COMPANY

2. Pull the connection apart.

Connect

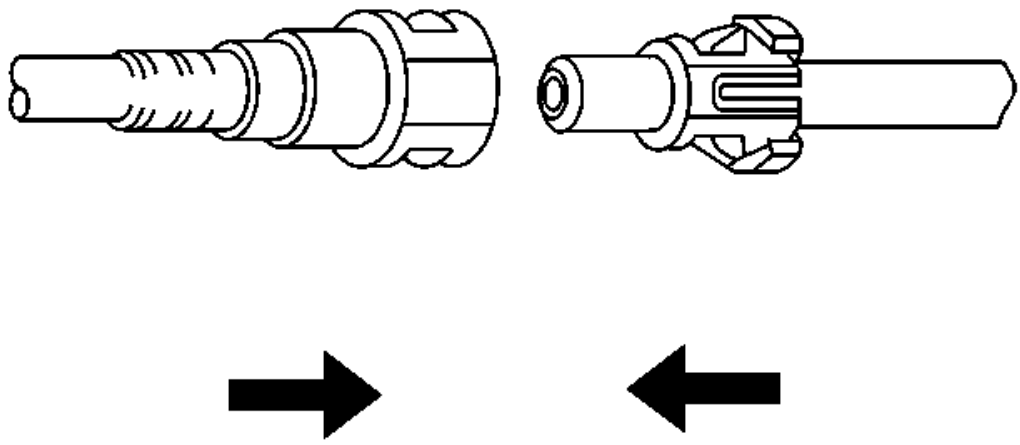

Fig. 52: Connecting Fittings (Plastic Collar)
Courtesy of GENERAL MOTORS COMPANY

1. Push both sides of the quick connect fitting together in order to cause the retaining feature to snap into place.
2. Do not rely only on the audible click to confirm a secure connection has been made.

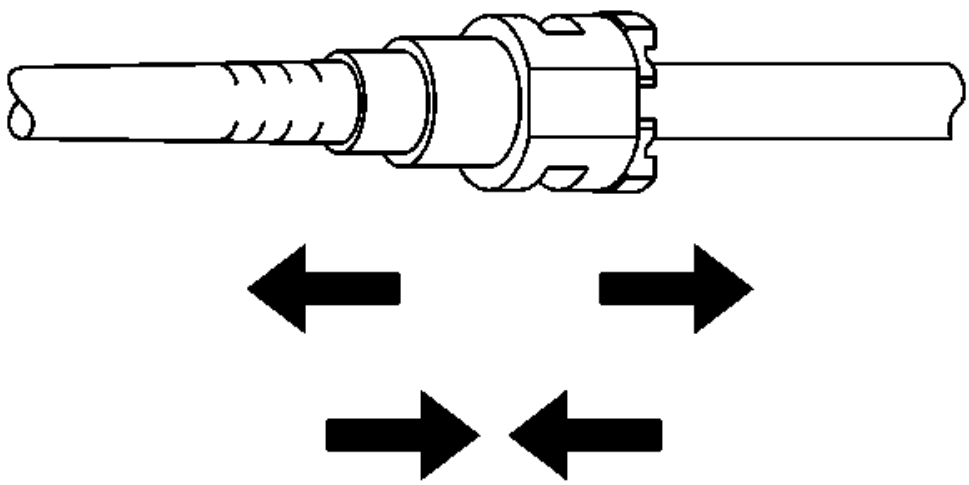

Fig. 53: View Of Quick-Connect Fitting
Courtesy of GENERAL MOTORS COMPANY

3. Once installed, pull on both sides of the quick connect fitting in order to make sure the connection is secure.

Type D - Disconnect/Connect

Disconnect

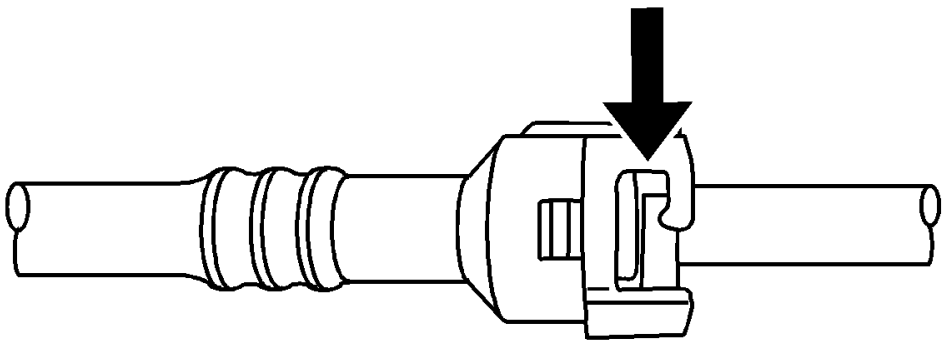

Fig. 54: Releasing Q Release Style Connectors (Plastic Collar)
Courtesy of GENERAL MOTORS COMPANY

NOTE: Mechanical violence is not necessary for a successful disconnection/connection.

1. Release the fitting by pushing the tab toward the other side of the slot in the fitting.

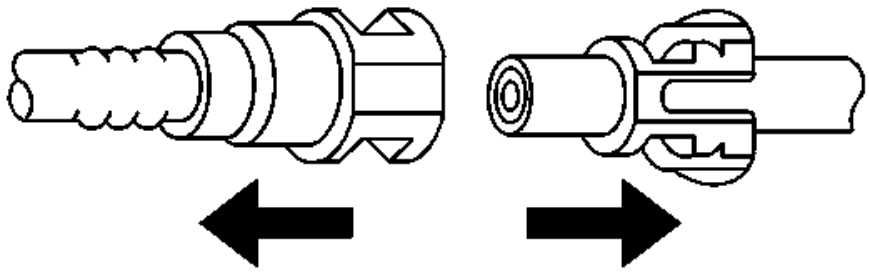

Fig. 55: View Of Pulling Connection Apart (Plastic Collar)
Courtesy of GENERAL MOTORS COMPANY

2. Pull the connection apart.

Connect

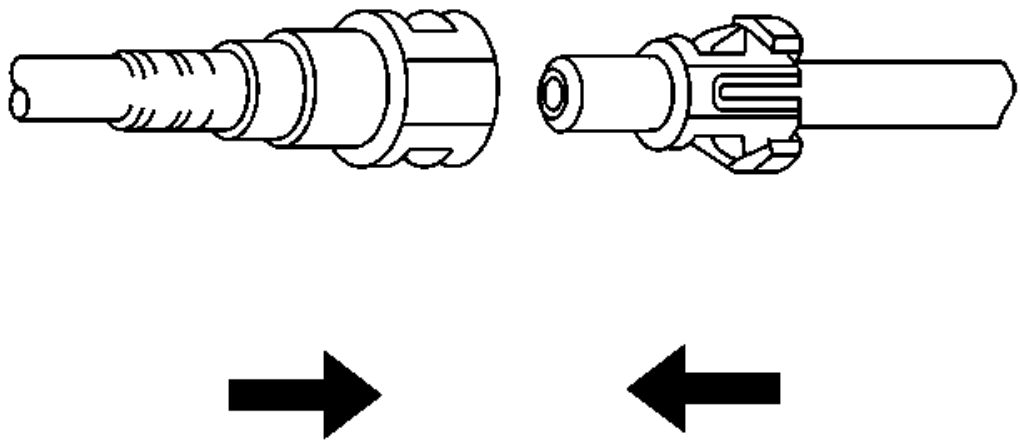

Fig. 56: Connecting Fittings (Plastic Collar)
Courtesy of GENERAL MOTORS COMPANY

1. Push both sides of the quick connect fitting together in order to cause the retaining feature to snap into place.
2. Do not rely only on the audible click to confirm a secure connection has been made.

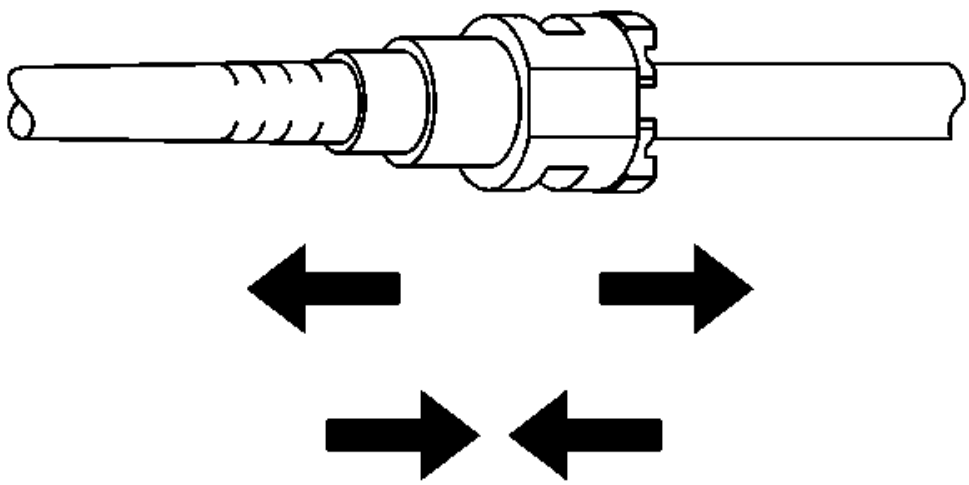

Fig. 57: View Of Quick-Connect Fitting
Courtesy of GENERAL MOTORS COMPANY

3. Once installed, pull on both sides of the quick connect fitting in order to make sure the connection is secure.

Type E - Disconnect/Connect

Disconnect

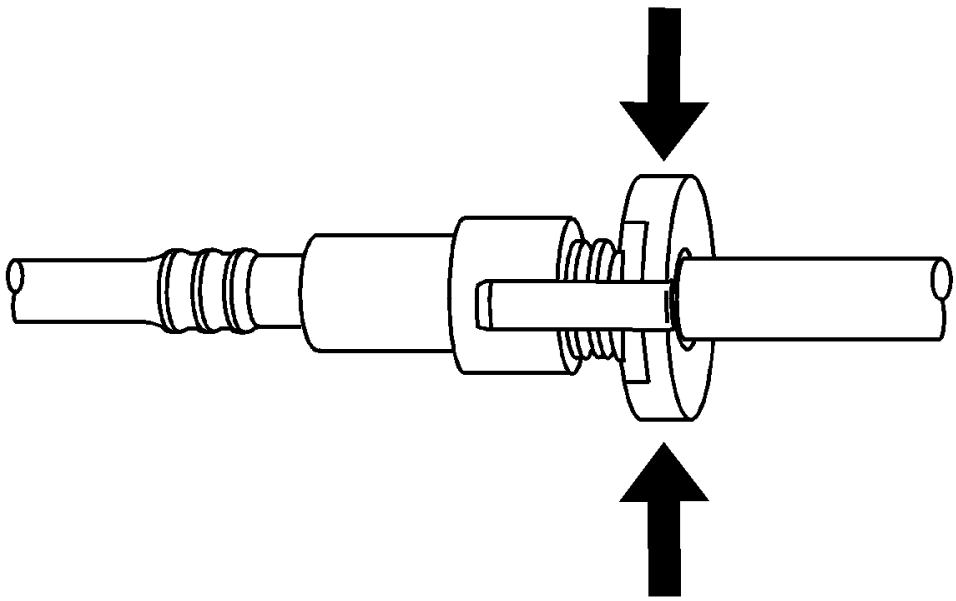

Fig. 58: Disengaging Quick Connect Fitting (Plastic Collar)
Courtesy of GENERAL MOTORS COMPANY

NOTE: Mechanical violence is not necessary for a successful disconnection/connection.

1. Squeeze where indicated by arrows on both sides of the plastic ring surrounding the quick connect fitting.

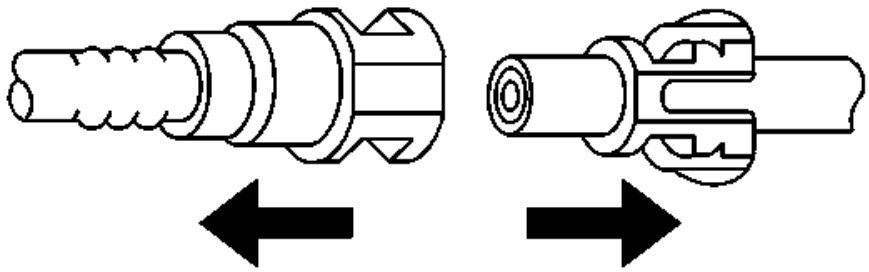

Fig. 59: View Of Pulling Connection Apart (Plastic Collar)
Courtesy of GENERAL MOTORS COMPANY

2. Pull the connection apart.

Connect

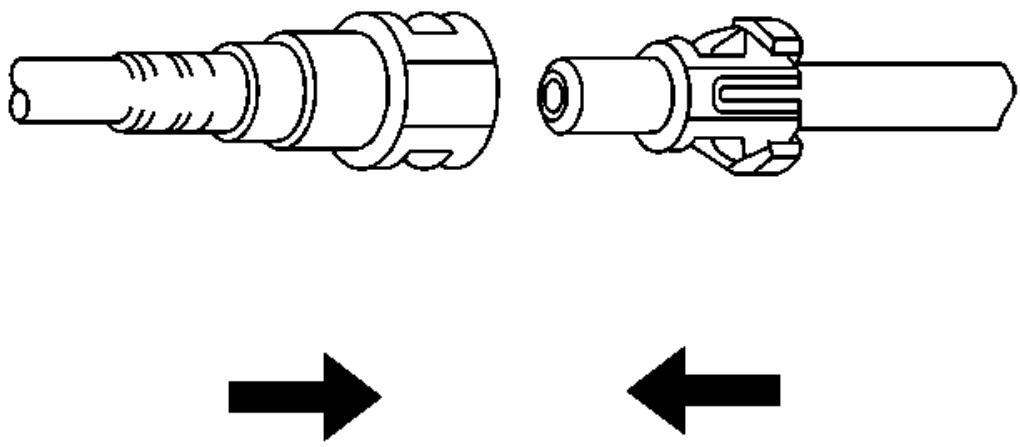

Fig. 60: Connecting Fittings (Plastic Collar)
Courtesy of GENERAL MOTORS COMPANY

1. Push both sides of the quick connect fitting together in order to cause the retaining feature to snap into place.
2. Do not rely only on the audible click to confirm a secure connection has been made.

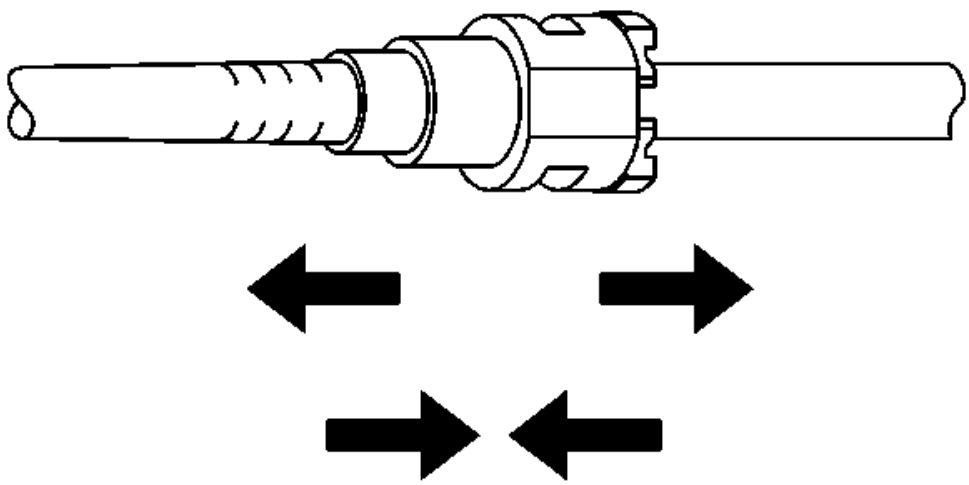

Fig. 61: View Of Quick-Connect Fitting
Courtesy of GENERAL MOTORS COMPANY

3. Once installed, pull on both sides of the quick connect fitting in order to make sure the connection is secure.

Type F - Disconnect/Connect

Disconnect

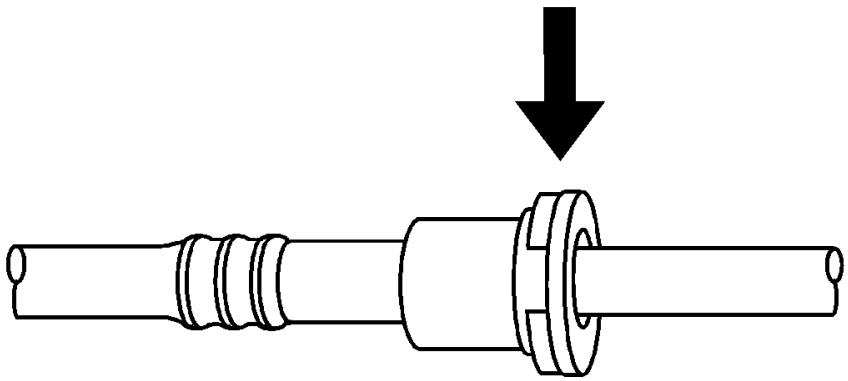

Fig. 62: View Of Sliding Retainer Style Connector
Courtesy of GENERAL MOTORS COMPANY

NOTE: Mechanical violence is not necessary for a successful disconnection/connection.

1. Release the fitting by pressing on one side of the release tab causing it to push in slightly. If the tab does not move, try pressing the tab in from the opposite side. The tab will only move in one direction.

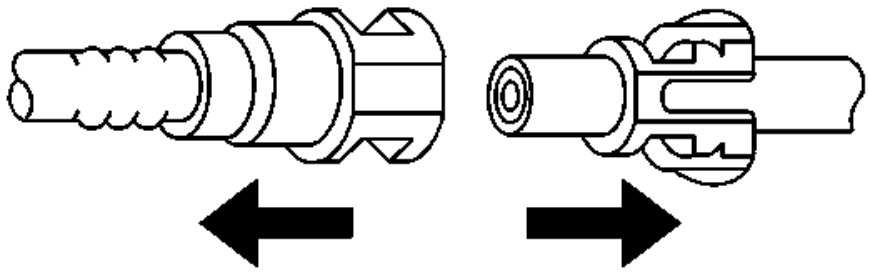

Fig. 63: View Of Pulling Connection Apart (Plastic Collar)
Courtesy of GENERAL MOTORS COMPANY

2. Pull the connection apart.

Connect

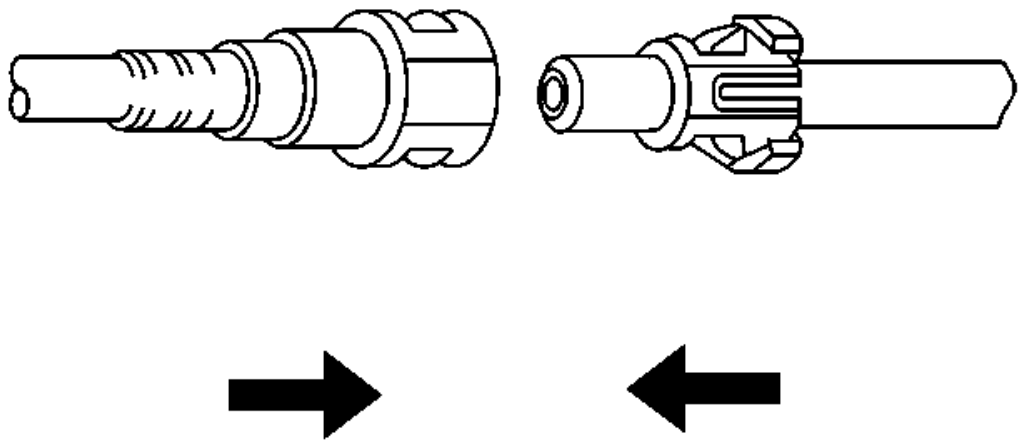

Fig. 64: Connecting Fittings (Plastic Collar)
Courtesy of GENERAL MOTORS COMPANY

1. Push both sides of the quick connect fitting together in order to cause the retaining feature to snap into place.
2. Do not rely only on the audible click to confirm a secure connection has been made.

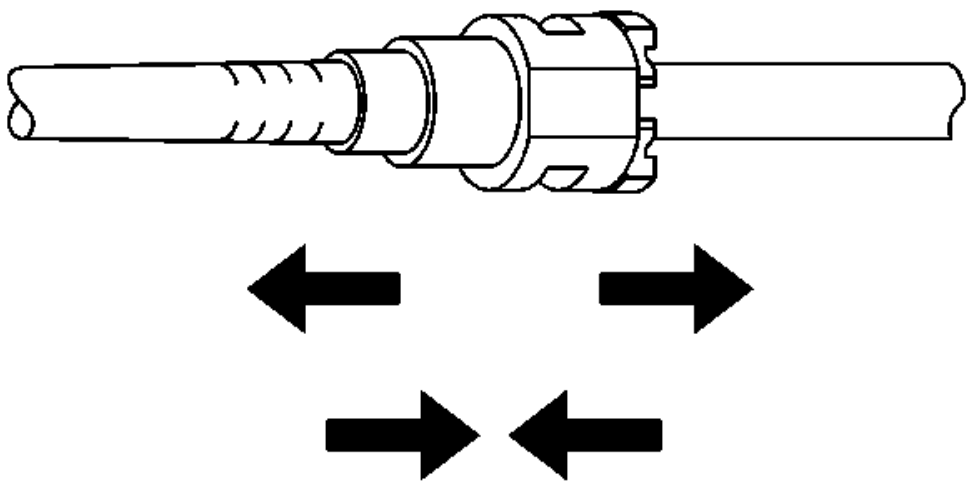

Fig. 65: View Of Quick-Connect Fitting
Courtesy of GENERAL MOTORS COMPANY

3. Once installed, pull on both sides of the quick connect fitting in order to make sure the connection is secure.

Type G - Disconnect/Connect

Disconnect

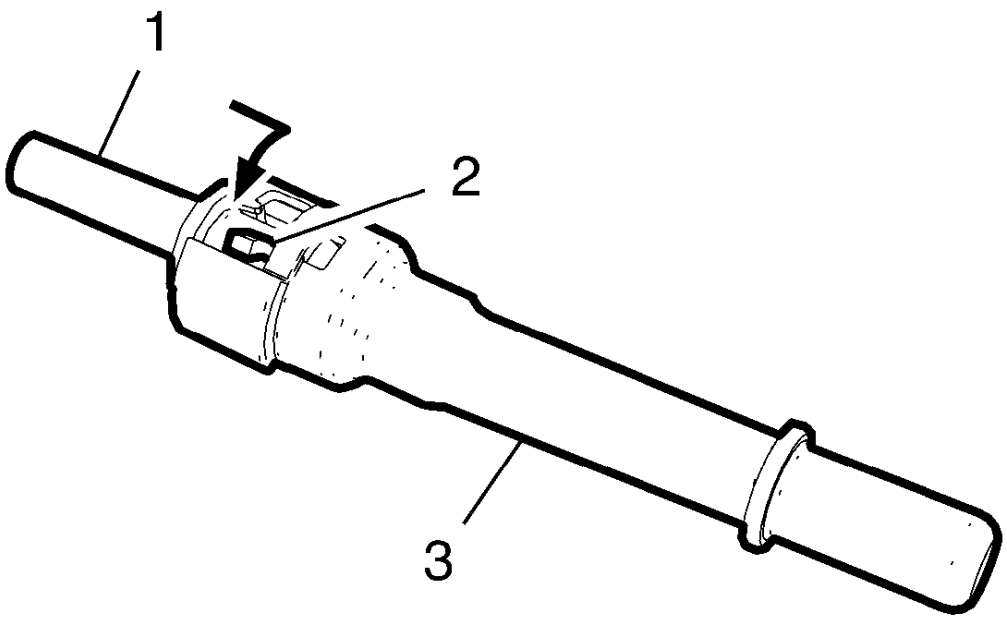

Fig. 66: View Of Connector Latch
Courtesy of GENERAL MOTORS COMPANY

NOTE: Mechanical violence is not necessary for a successful disconnection/connection.

1. Push the tube (3) into the connector (1) and push down the latch (2) as the arrow shows.
2. Hold the latch (2) in this position.

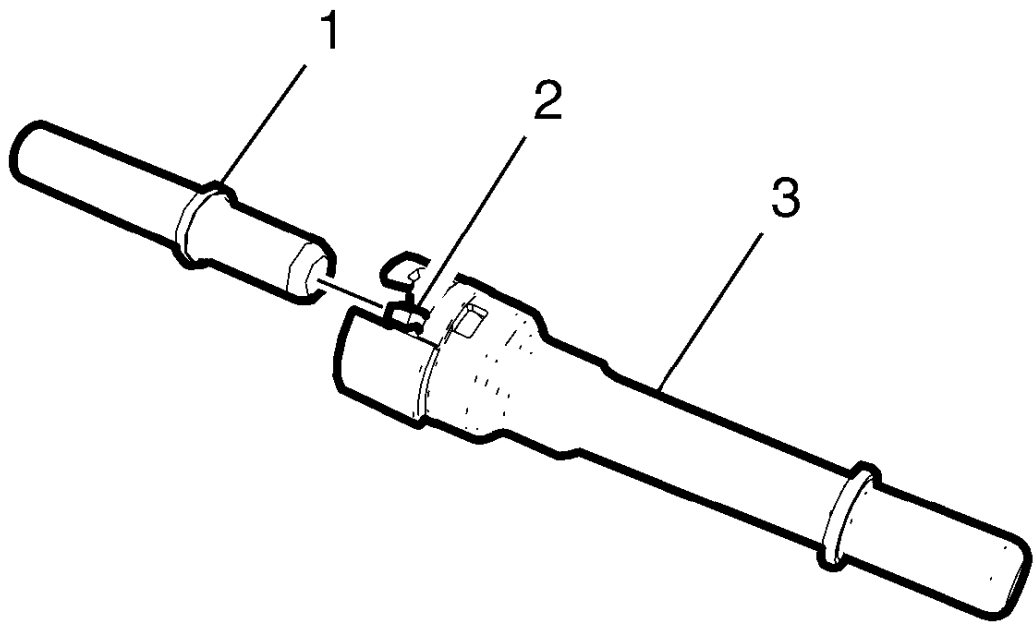

Fig. 67: Pulling Pipe Out Of Connector
Courtesy of GENERAL MOTORS COMPANY

3. Pull the pipe (3) out of the connector (1).
4. Release the latch (2).

Connect

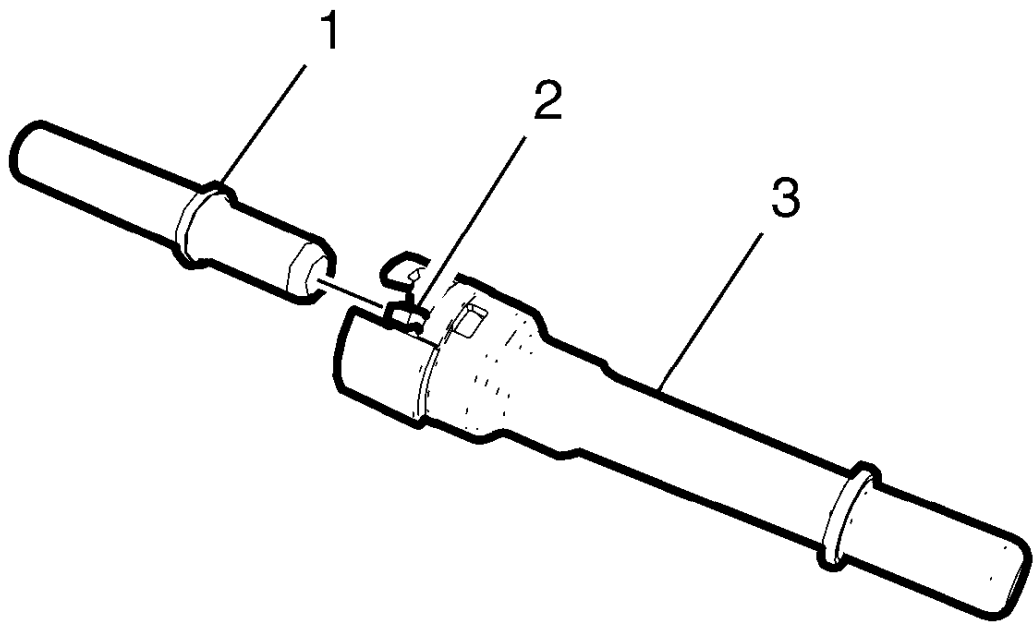

Fig. 68: Pulling Pipe Out Of Connector
Courtesy of GENERAL MOTORS COMPANY

1. Push the pipe (3) into the connector (1).

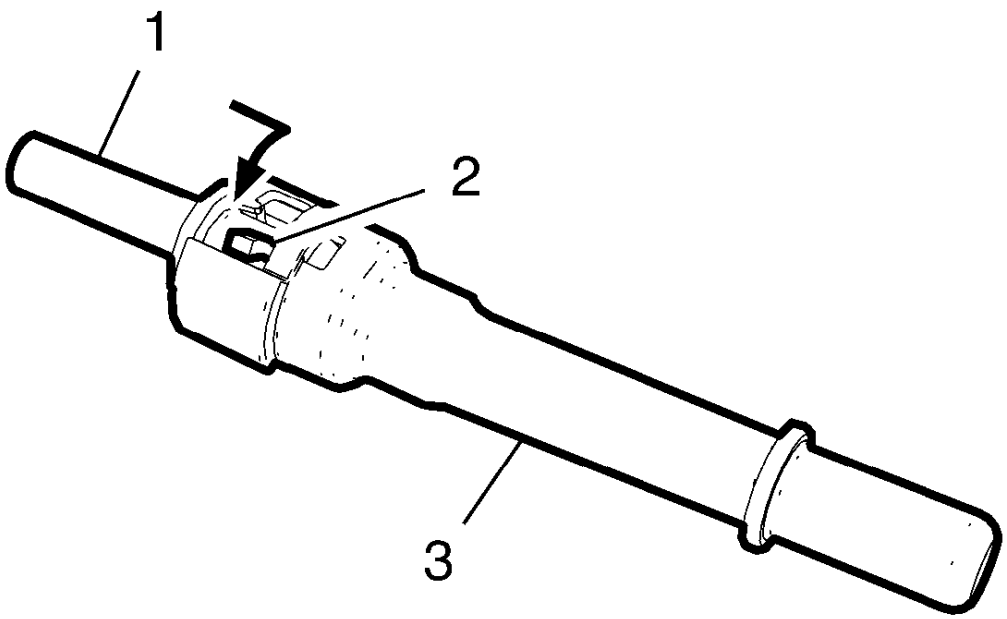

Fig. 69: View Of Connector Latch
Courtesy of GENERAL MOTORS COMPANY

2. When the connector is locked correctly, the latch (2) must go back in opposite arrow direction.
3. Do not rely only on the audible click to confirm a secure connection has been made.

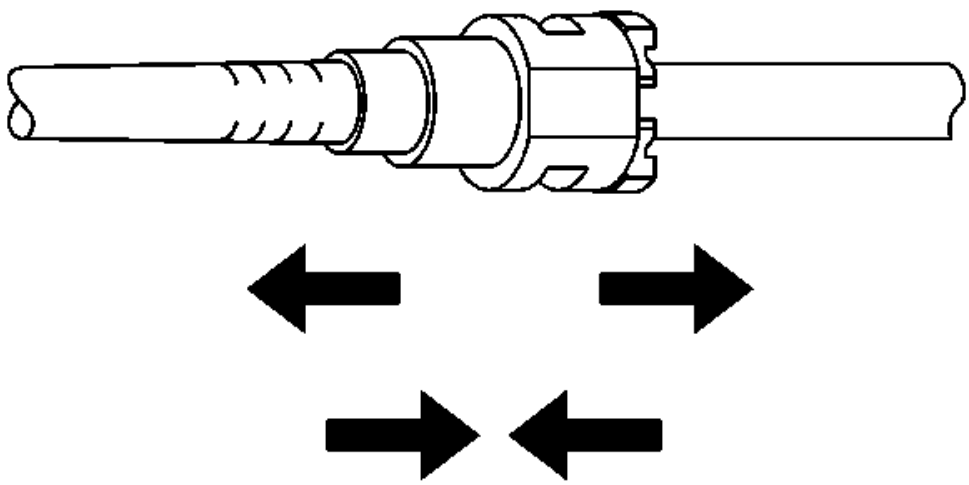

Fig. 70: View Of Quick-Connect Fitting
Courtesy of GENERAL MOTORS COMPANY

4. Pull on both sides of the quick connect fitting in order to make sure the connection is secure.

Type H - Disconnect/Connect

Disconnect

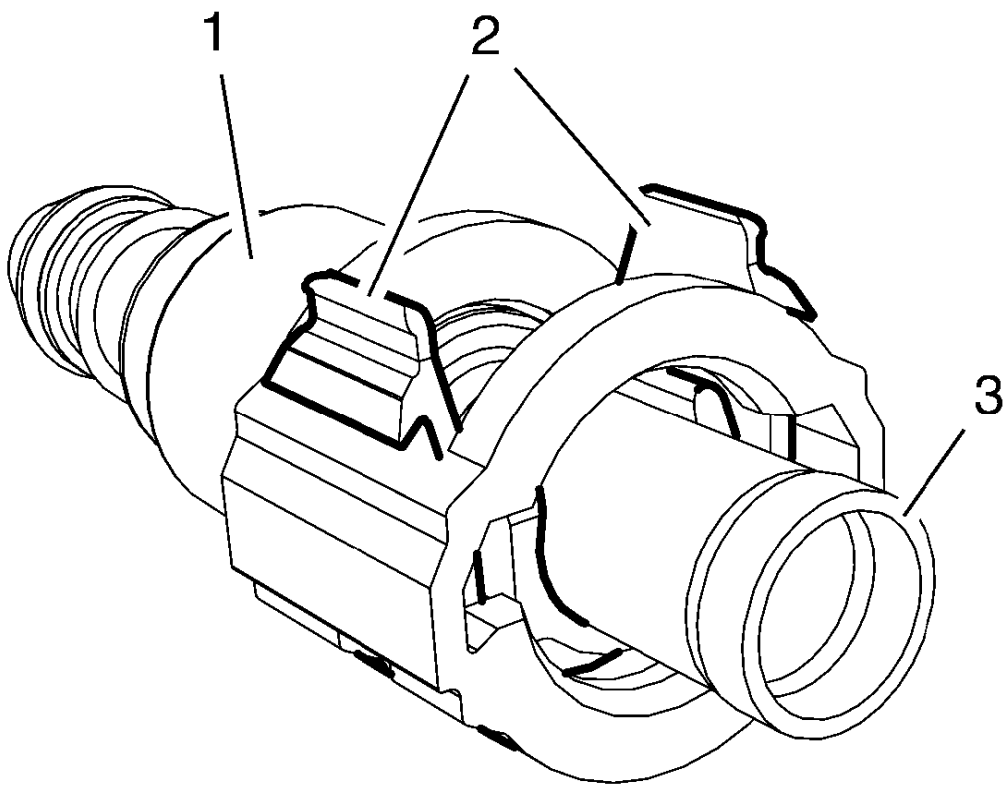

Fig. 71: Connector And Latches
Courtesy of GENERAL MOTORS COMPANY

NOTE: Mechanical violence is not necessary for a successful disconnection/connection.

1. Push the tube (3) into the connector (1) and press the latches (2) together.
2. Hold the latch (2) in this position.

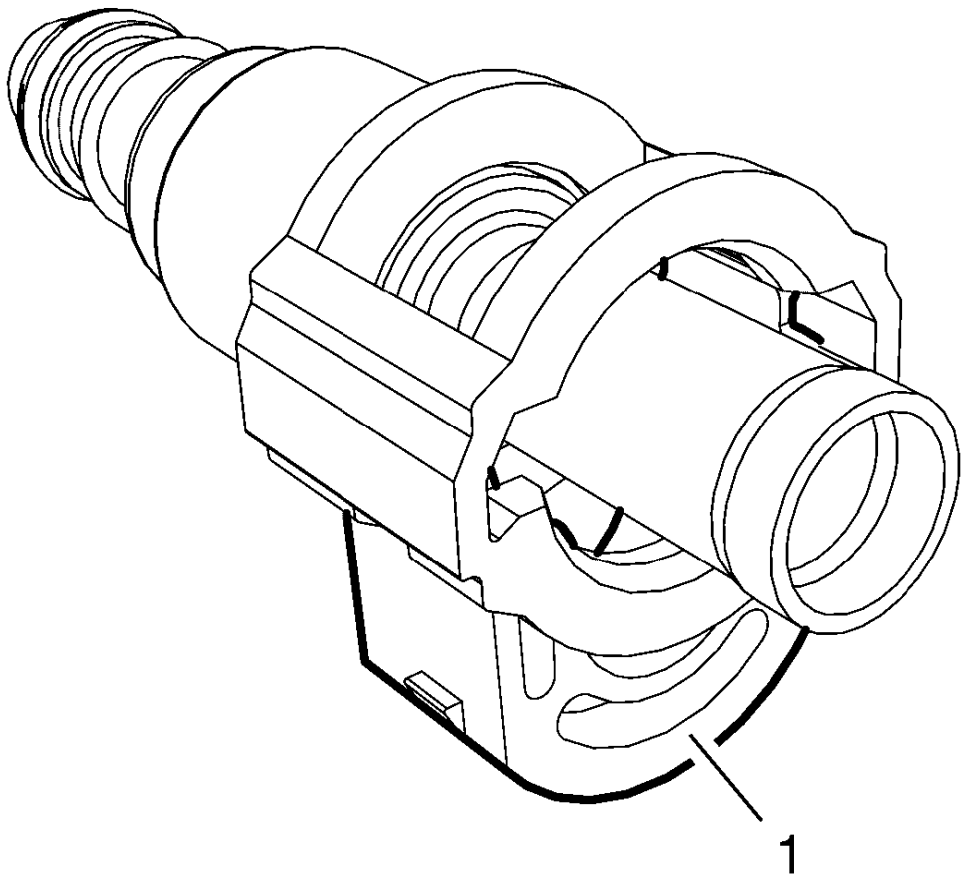

Fig. 72: Connector Latch
Courtesy of GENERAL MOTORS COMPANY

3. Push the latch (1) completely down into the connector.

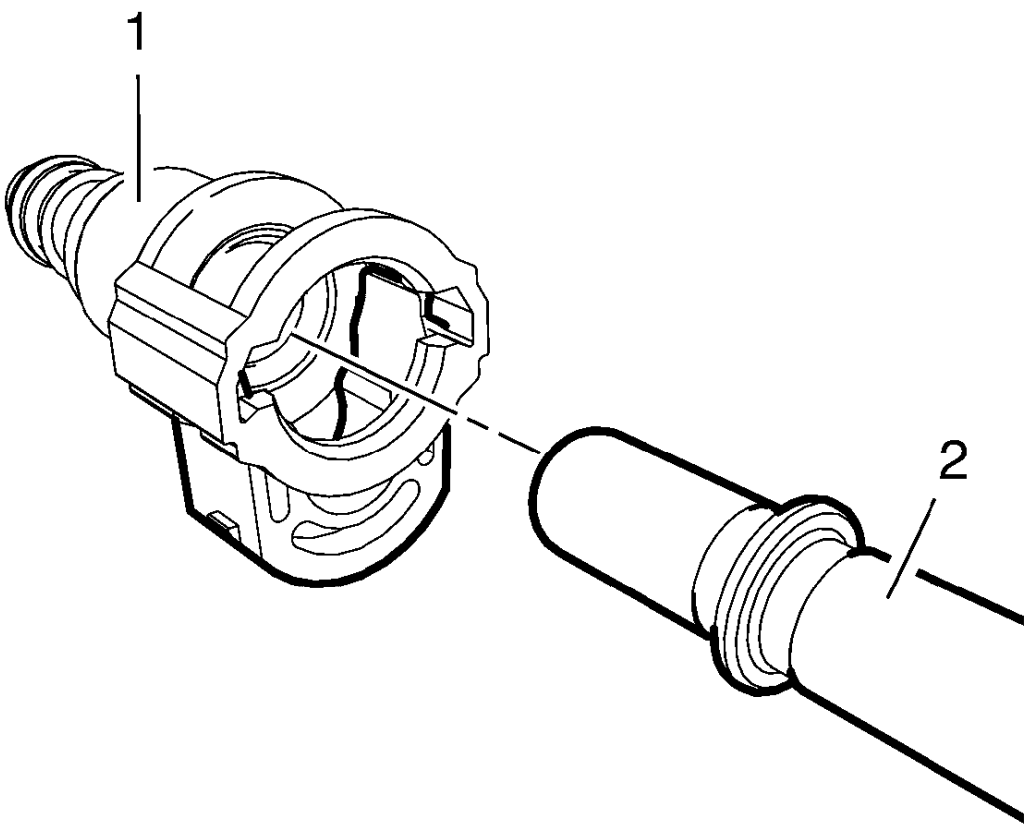

Fig. 73: Pipe And Connector
Courtesy of GENERAL MOTORS COMPANY

4. Pull the pipe (2) out of the connector (1).

Connect

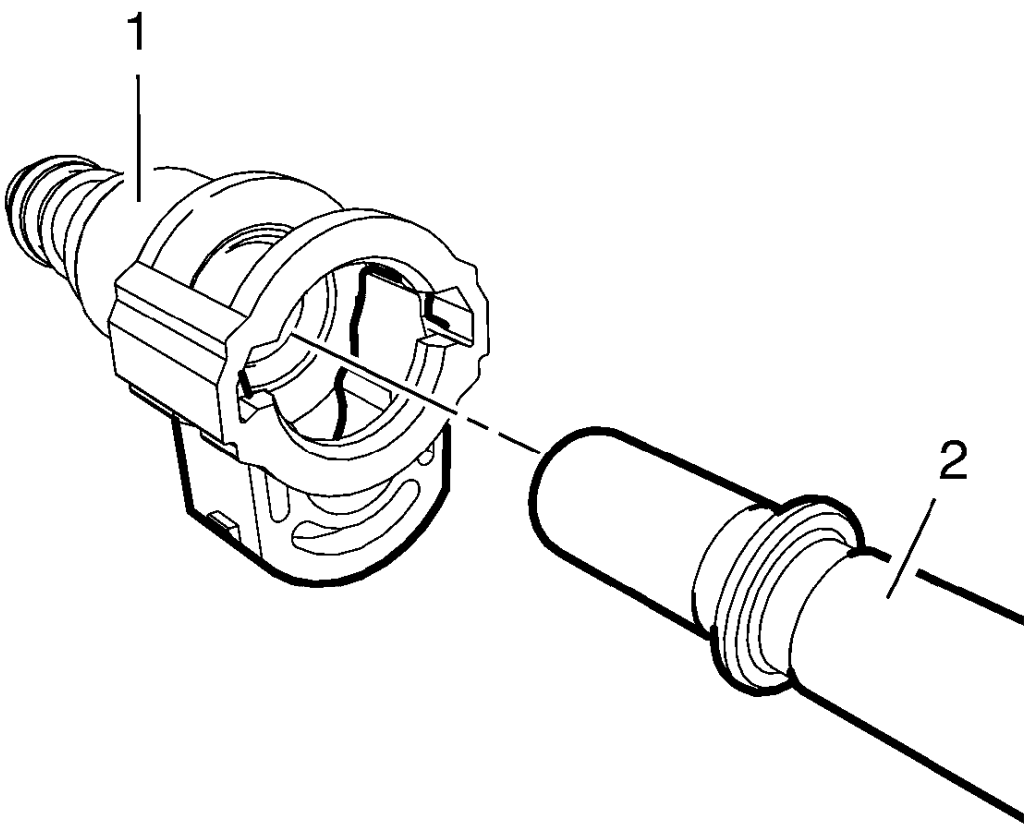

Fig. 74: Pipe And Connector
Courtesy of GENERAL MOTORS COMPANY

1. Push the pipe (2) into the connector (1).

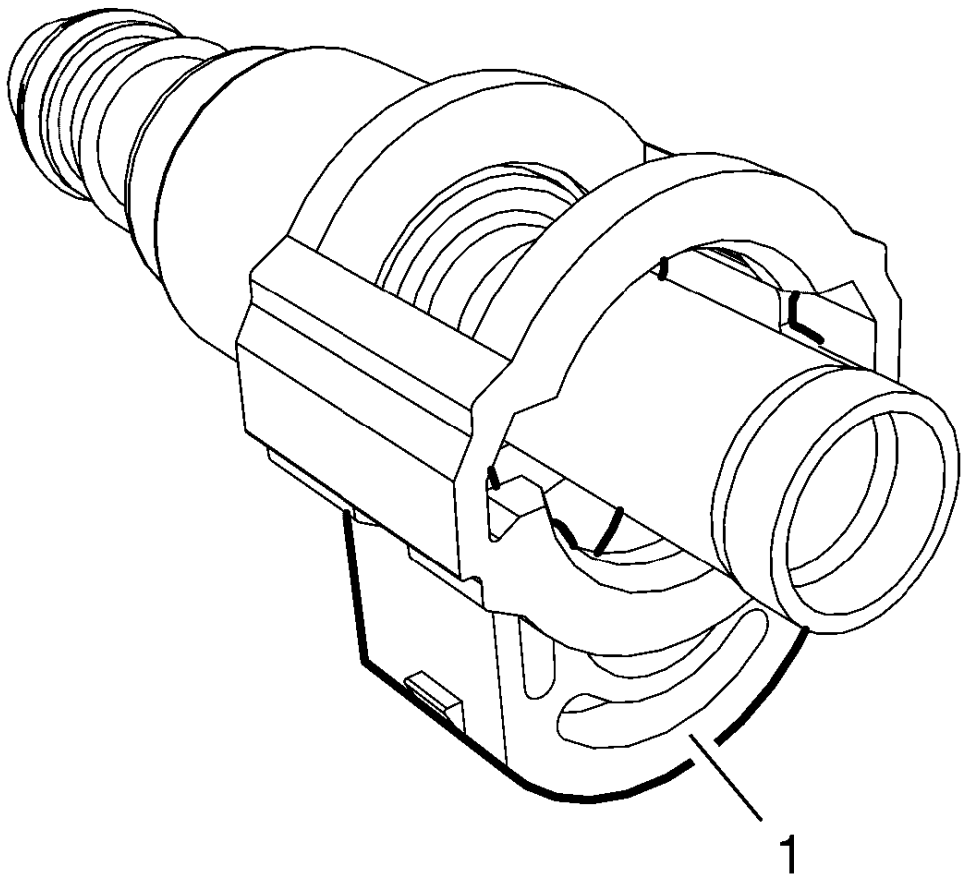

Fig. 75: Connector Latch
Courtesy of GENERAL MOTORS COMPANY

NOTE: The latch (1) can only pushed into the connector when the pipe is connected correctly.

2. When the connector is connected completely, push the latch (1) back into the connector.

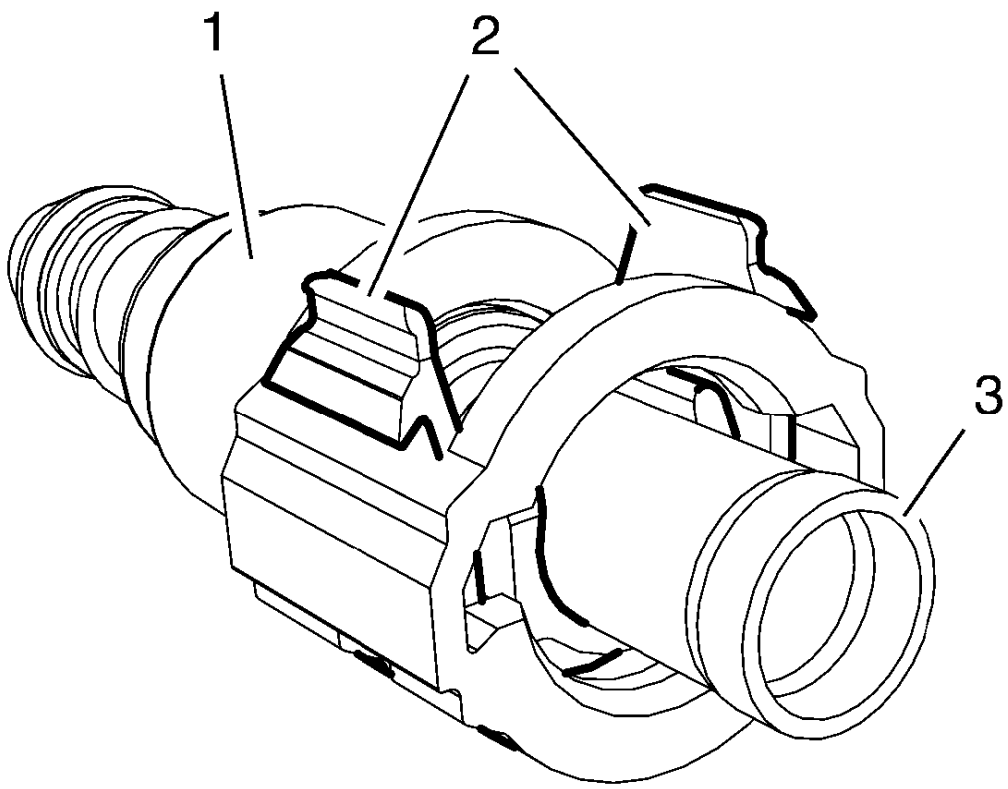

Fig. 76: Connector And Latches
Courtesy of GENERAL MOTORS COMPANY

3. The latch (2) must completely lock at the outside at the connector (1).
4. Do not rely only on the audible click to confirm a secure connection has been made.

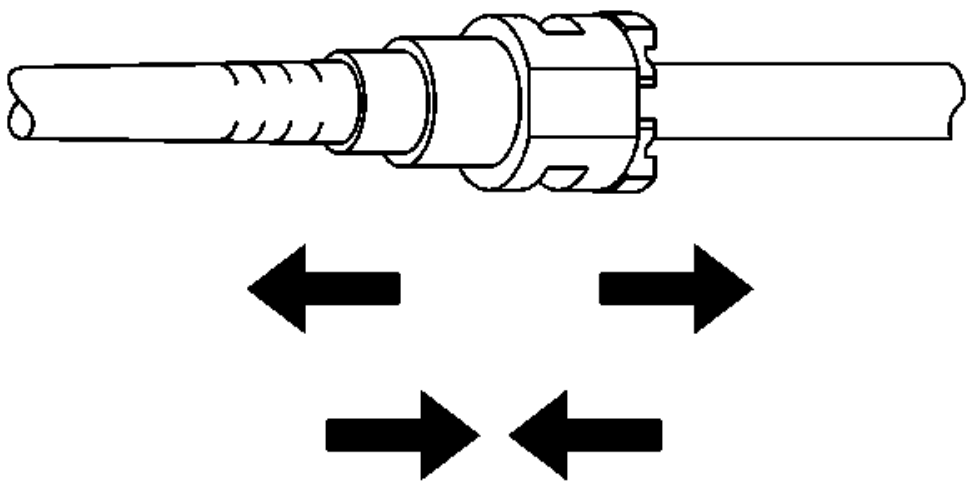

Fig. 77: View Of Quick-Connect Fitting
Courtesy of GENERAL MOTORS COMPANY

5. Pull on both sides of the quick connect fitting in order to make sure the connection is secure.

FUEL TANK DRAINING

Special Tools

CH-45004 Fuel Tank Drain Hose

For equivalent regional tools, refer to **Special Tools** .

WARNING: Never drain or store fuel in an open container. Always use an approved fuel storage container in order to reduce the chance of fire or explosion.

WARNING: Place a dry chemical (Class B) fire extinguisher nearby before performing

any on-vehicle service procedures. Failure to follow these precautions may result in personal injury.

WARNING: Always wear safety goggles when working with fuel in order to protect the eyes from fuel splash.

1. Open the hood.
2. Disconnect the battery negative cable. Refer to **Battery Negative Cable Disconnection and Connection** .
3. Remove the fuel fill cap.
4. Raise and suitably support the vehicle. Refer to **Lifting and Jacking the Vehicle** .
5. Remove the fuel tank filler pipe from the fuel tank. Refer to **Fuel Tank Filler Pipe Replacement**.
6. Insert the **CH-45004** drain hose into the fuel tank until the hose reaches the bottom of the fuel tank.
7. Use an hand or air operated pump device in order to drain as much fuel as possible.

FUEL TANK REPLACEMENT

Removal Procedure

1. Open the hood.
2. Disconnect the battery negative cable. Refer to **Battery Negative Cable Disconnection and Connection** .
3. Raise and support the vehicle. Refer to **Lifting and Jacking the Vehicle** .
4. Remove the right rear tire and wheel assembly. Refer to **Tire and Wheel Removal and Installation** .
5. Remove the rear wheelhouse panel liner. Refer to **Rear Wheelhouse Liner Replacement** .
6. Drain the fuel tank. Refer to **Fuel Tank Draining**.
7. Raise the vehicle.

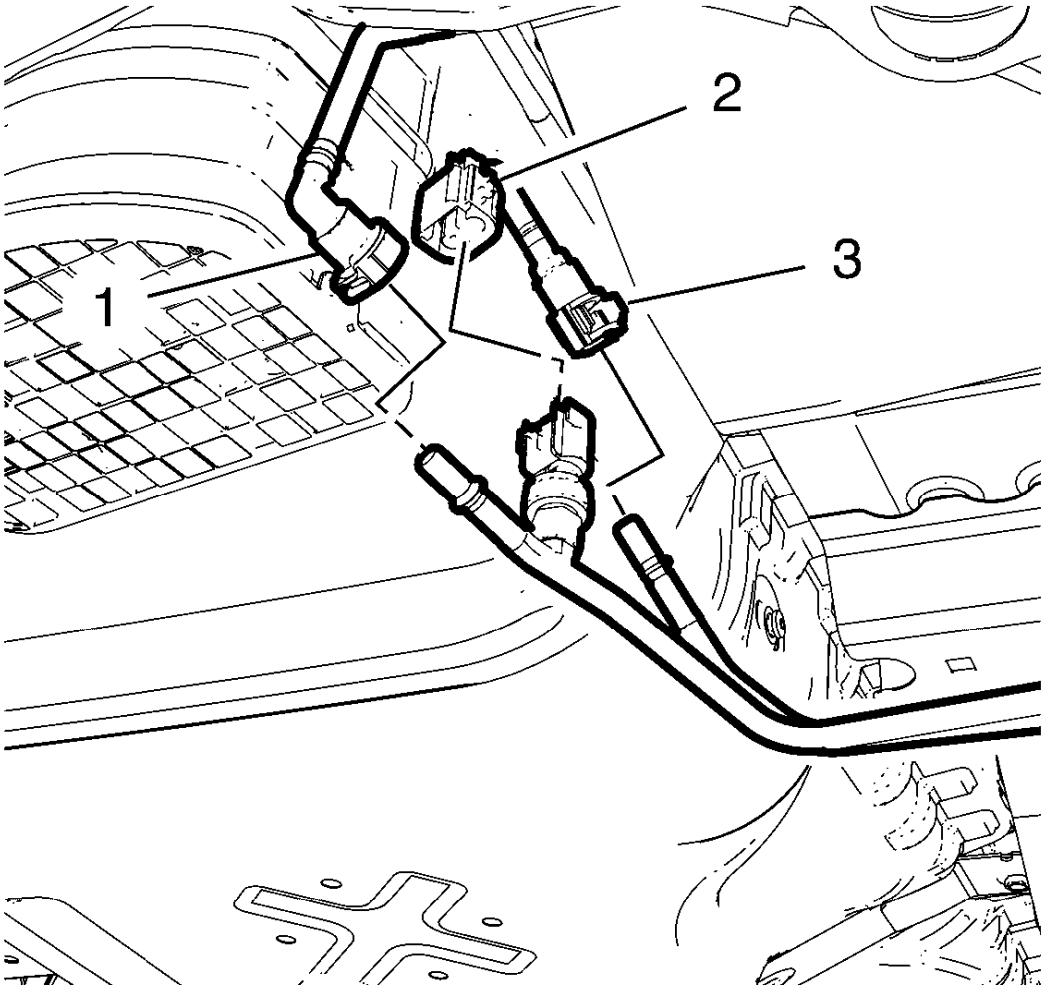

Fig. 78: Fuel Pressure Sensor Wiring Harness Plug, Fuel Tank Vent Pipe, Fuel Feed Pipe Connector And Fuel Tank Vent Pipe Connector
Courtesy of GENERAL MOTORS COMPANY

8. Disconnect the fuel pressure sensor wiring harness plug (2).
9. Disconnect the fuel feed pipe connector (1) from the fuel feed pipe. Refer to **Plastic Collar Quick Connect Fitting Service**.
10. Disconnect the fuel tank vent pipe connector (3) from the fuel tank vent pipe (3). Refer to **Plastic Collar Quick Connect Fitting Service**.
11. Install suitable caps on the fuel pipes.

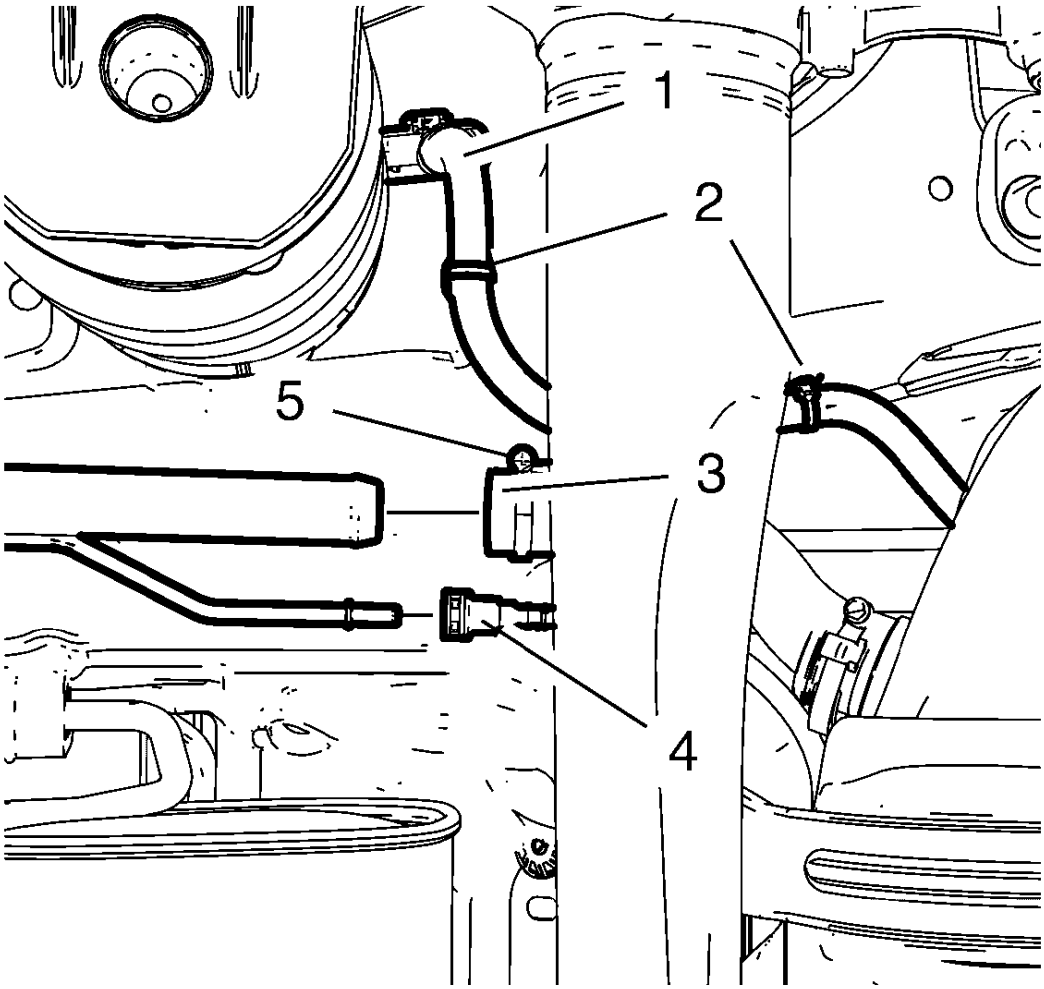

Fig. 79: Fuel Tank Wiring Harness Inline Connector
Courtesy of GENERAL MOTORS COMPANY

WARNING: Do not breathe the air through the EVAP component tubes or hoses. The fuel vapors inside the EVAP components may cause personal injury.

12. Loosen the fuel tank filler hose clamp (5).
13. Remove the fuel tank filler hose (3) from the fuel tank filler pipe.
14. Disconnect the fuel tank filler vent pipe connector (4) from the fuel tank filler vent pipe. Refer to **Plastic Collar Quick Connect Fitting Service**.
15. Plug the fuel tank filler vent pipe with a suitable cap.
16. Disconnect the fuel tank wiring harness inline connector (1) and unclip the wiring harness from 2 retainer clips (2).

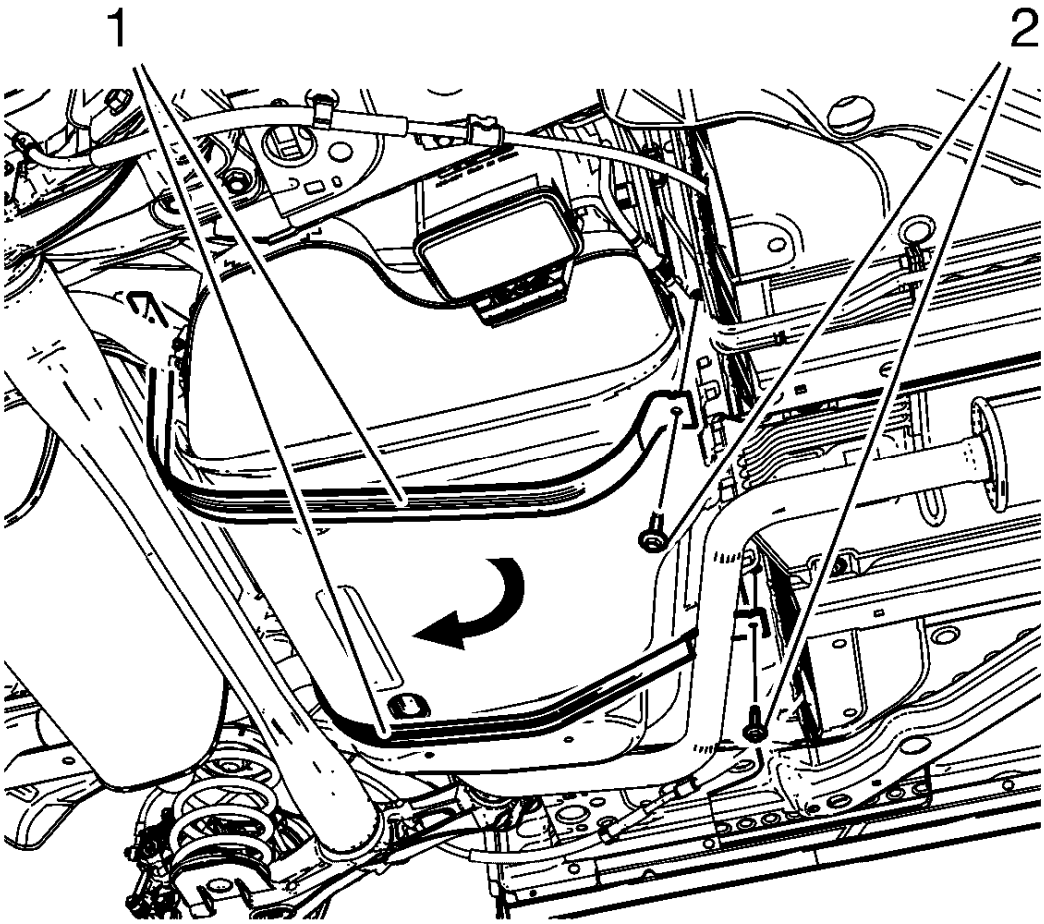

Fig. 80: Fuel Tank Straps
Courtesy of GENERAL MOTORS COMPANY

WARNING: To help avoid personal injury, always use jack stands when you are working on or under any vehicle that is supported only by a jack.

CAUTION: When you are jacking or lifting a vehicle at the frame side rails or other prescribed lift points, be certain that the lift pads do not contact the catalytic converter, the brake pipes or the fuel lines. If such contact occurs, vehicle damage or unsatisfactory vehicle performance may result.

17. Place a suitable adjustable jack under the fuel tank.
18. Remove the 2 fuel tank strap bolts (2).
19. Remove the 2 fuel tank straps (1).

NOTE: A second technician is required.

NOTE: Retract the jack.

20. Remove the fuel tank.

Disassemble Procedure

1. Remove the fuel tank fuel pump module. Refer to **Fuel Tank Fuel Pump Module Replacement**.

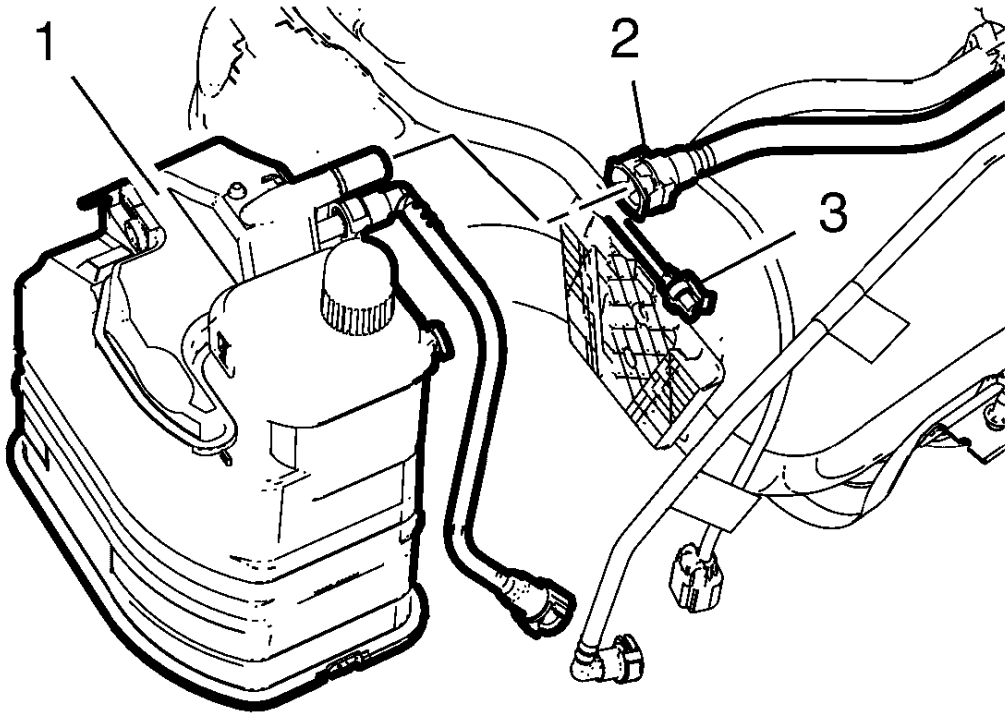

Fig. 81: Evaporative Emission Canister
Courtesy of GENERAL MOTORS COMPANY

WARNING: Always wear safety goggles when working with fuel in order to protect the eyes from fuel splash.

2. Disconnect the fuel tank vent pipe (2).
3. Disconnect the evaporative emission canister wiring harness plug (3).
4. Remove the evaporative emission canister (1) from the evaporative emission canister bracket by releasing tab and lifting it upwards.
5. Remove the fuel tank baffles. Refer to **Fuel Tank Baffle Replacement**.

Assemble Procedure

1. Install the fuel tank baffles. Refer to **Fuel Tank Baffle Replacement**.

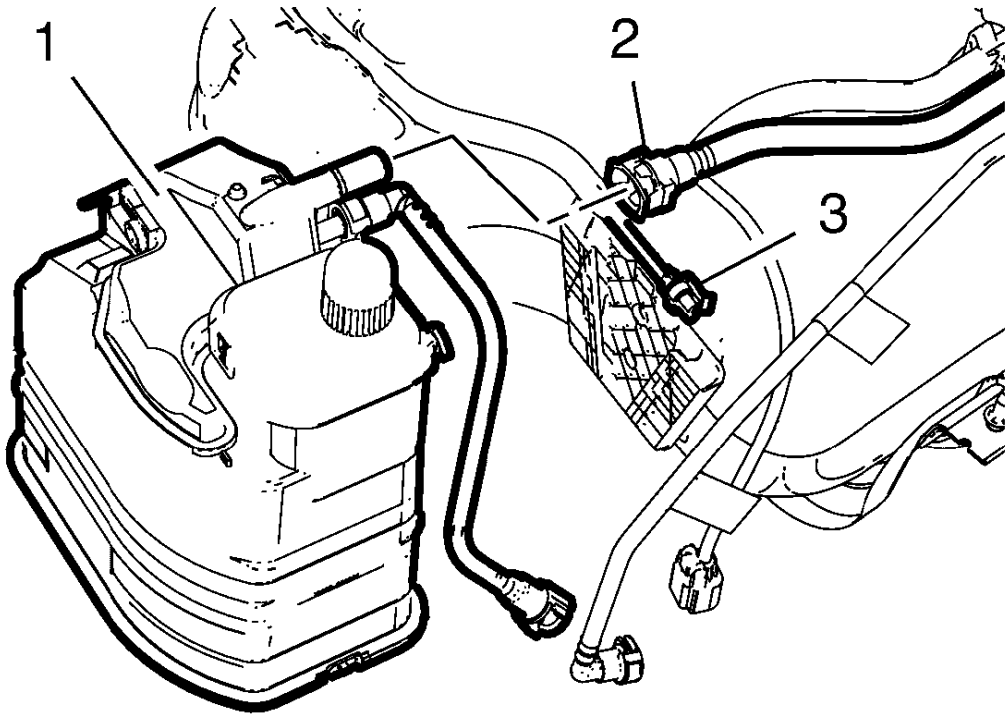

Fig. 82: Evaporative Emission Canister
Courtesy of GENERAL MOTORS COMPANY

2. Install the evaporative emission canister (1) to the evaporative emission canister bracket.
3. Connect the evaporative emission canister wiring harness plug (3).
4. Connect the fuel tank vent pipe (2).

5. Install the fuel tank fuel pump module. Refer to **Fuel Tank Fuel Pump Module Replacement**.

Installation Procedure

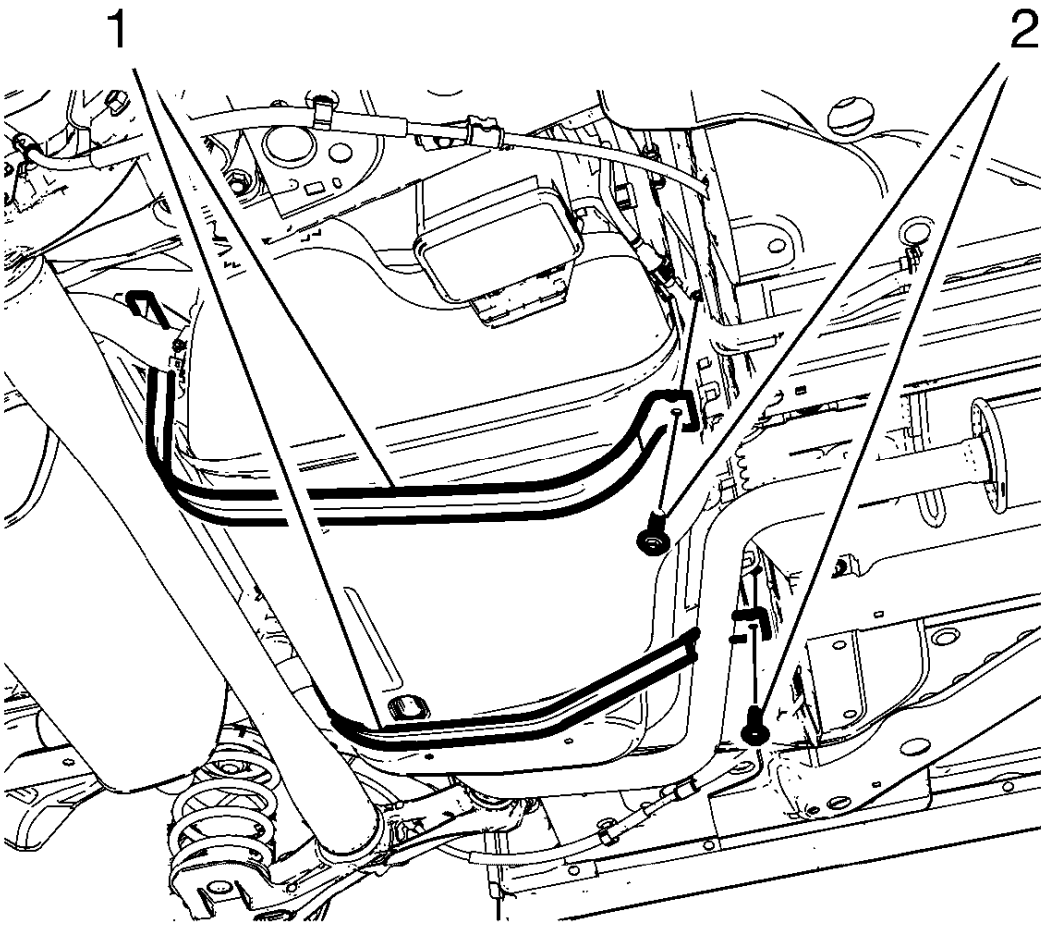

Fig. 83: Fuel Tank Straps
Courtesy of GENERAL MOTORS COMPANY

NOTE: A second technician is required.

NOTE: Extend the jack.

1. Install the fuel tank.
2. Install the 2 fuel tank straps (1).

CAUTION: Refer to Fastener Caution .

3. Install the 2 fuel tank strap bolts (2) and tighten to 22 N.m (16 lb ft).

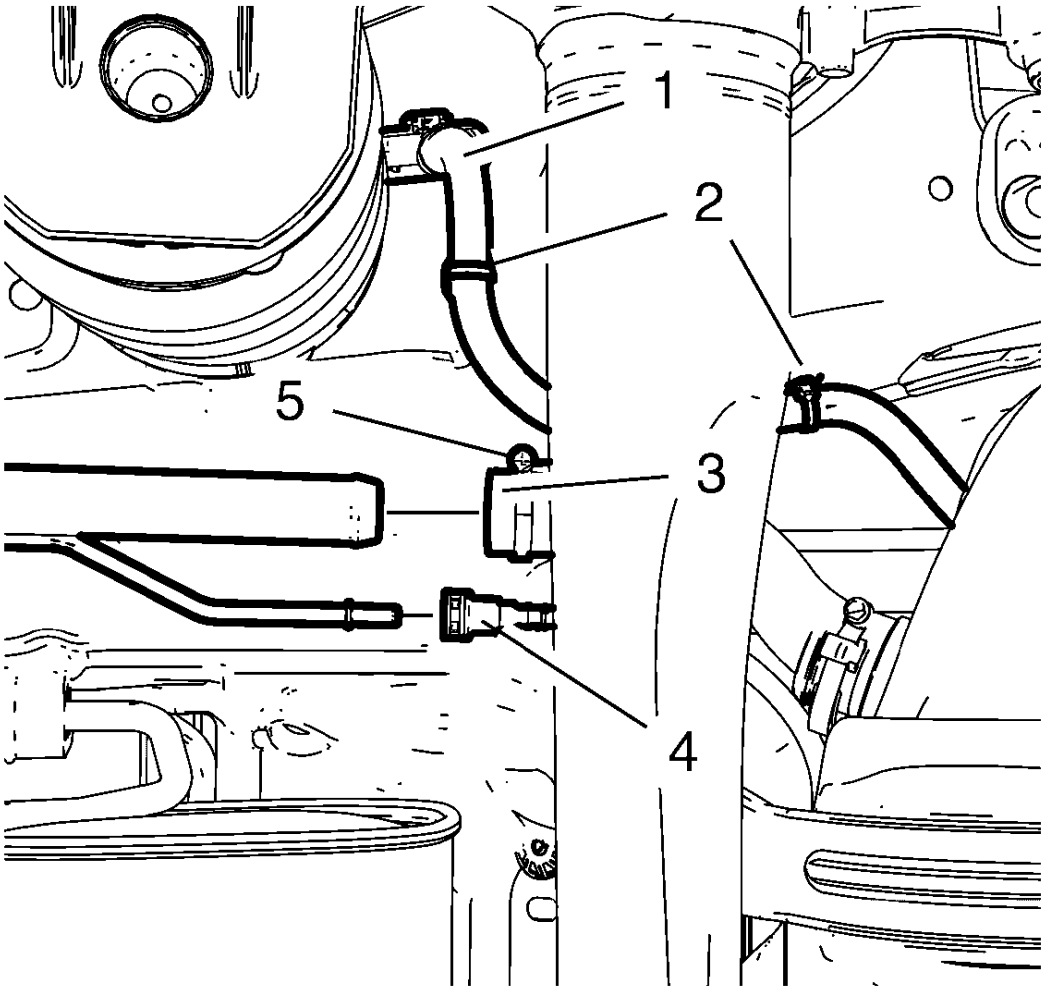

Fig. 84: Fuel Tank Wiring Harness Inline Connector
Courtesy of GENERAL MOTORS COMPANY

4. Install the fuel tank filler hose (3) to the fuel tank filler pipe.
5. Tighten the fuel tank filler hose clamp (5).
6. Remove the cap from the fuel tank filler vent pipe.
7. Connect the fuel tank filler vent pipe connector (4) to the fuel tank filler vent pipe. Refer to **Plastic Collar Quick Connect Fitting Service**.
8. Connect the fuel tank wiring harness inline connector (1) and clip in the wiring harness to 2 retainer clips (2).

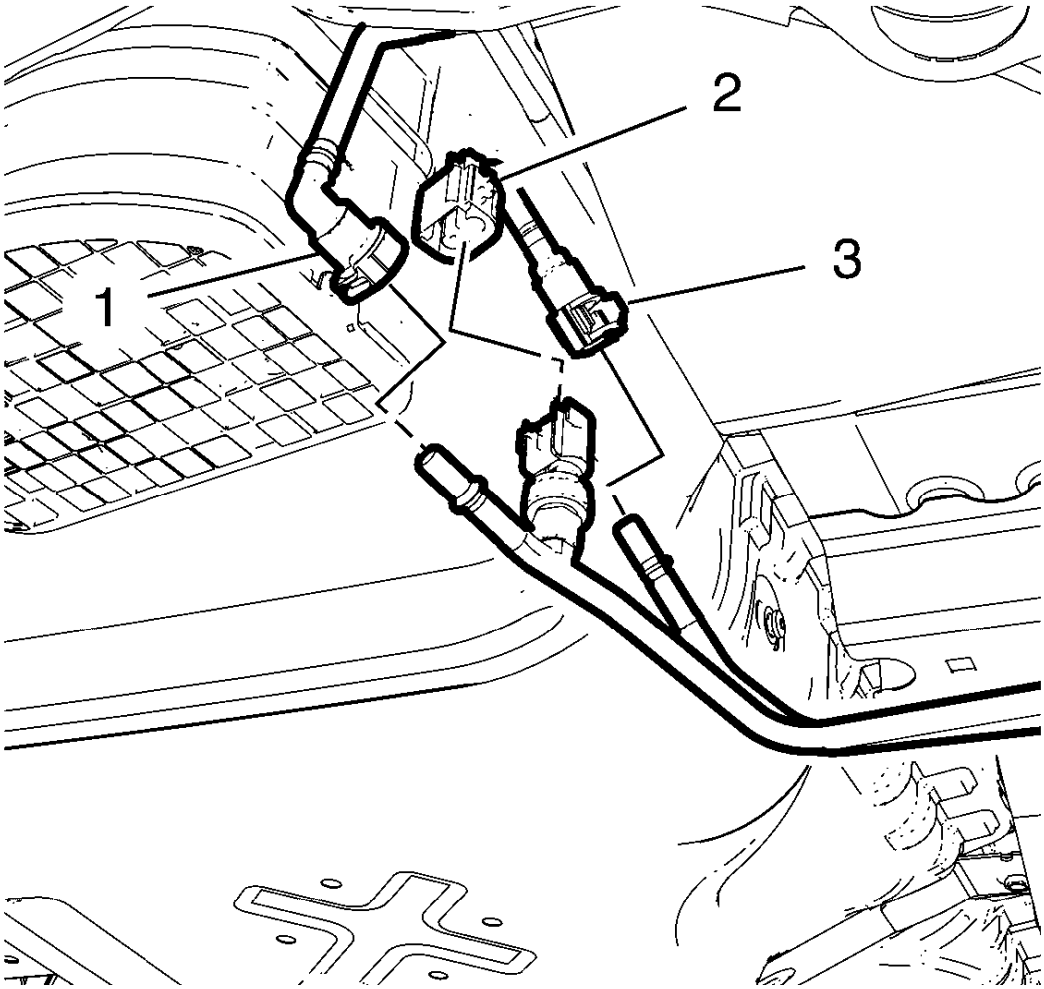

Fig. 85: Fuel Pressure Sensor Wiring Harness Plug, Fuel Tank Vent Pipe, Fuel Feed Pipe Connector And Fuel Tank Vent Pipe Connector
Courtesy of GENERAL MOTORS COMPANY

9. Remove the caps from the fuel pipes.
10. Connect the fuel tank vent pipe connector (3) to the fuel tank vent pipe (3). Refer to **Plastic Collar Quick Connect Fitting Service**.
11. Connect the fuel feed pipe connector (1) to the fuel feed pipe. Refer to **Plastic Collar Quick Connect Fitting Service**.
12. Connect the fuel pressure sensor wiring harness plug (2).
13. Lower the vehicle.
14. Install the rear wheelhouse panel liner. Refer to **Rear Wheelhouse Liner Replacement** .
15. Install the right rear tire and wheel assembly. Refer to **Tire and Wheel Removal and Installation** .
16. Lower the vehicle.
17. Connect the battery negative cable. Refer to **Battery Negative Cable Disconnection and Connection** .

18. Close the hood.

FUEL TANK BAFFLE REPLACEMENT

Removal Procedure

WARNING: Refer to Fuel Vapors in Evaporative Emission Components Warning .

WARNING: Refer to Gasoline/Gasoline Vapors Warning .

WARNING: Refer to Safety Goggles and Fuel Warning .

1. Remove the fuel tank. Refer to **Fuel Tank Replacement**.
2. Place the fuel tank onto a workbench.
3. Remove the fuel tank fuel pump module. Refer to **Fuel Tank Fuel Pump Module Replacement**.

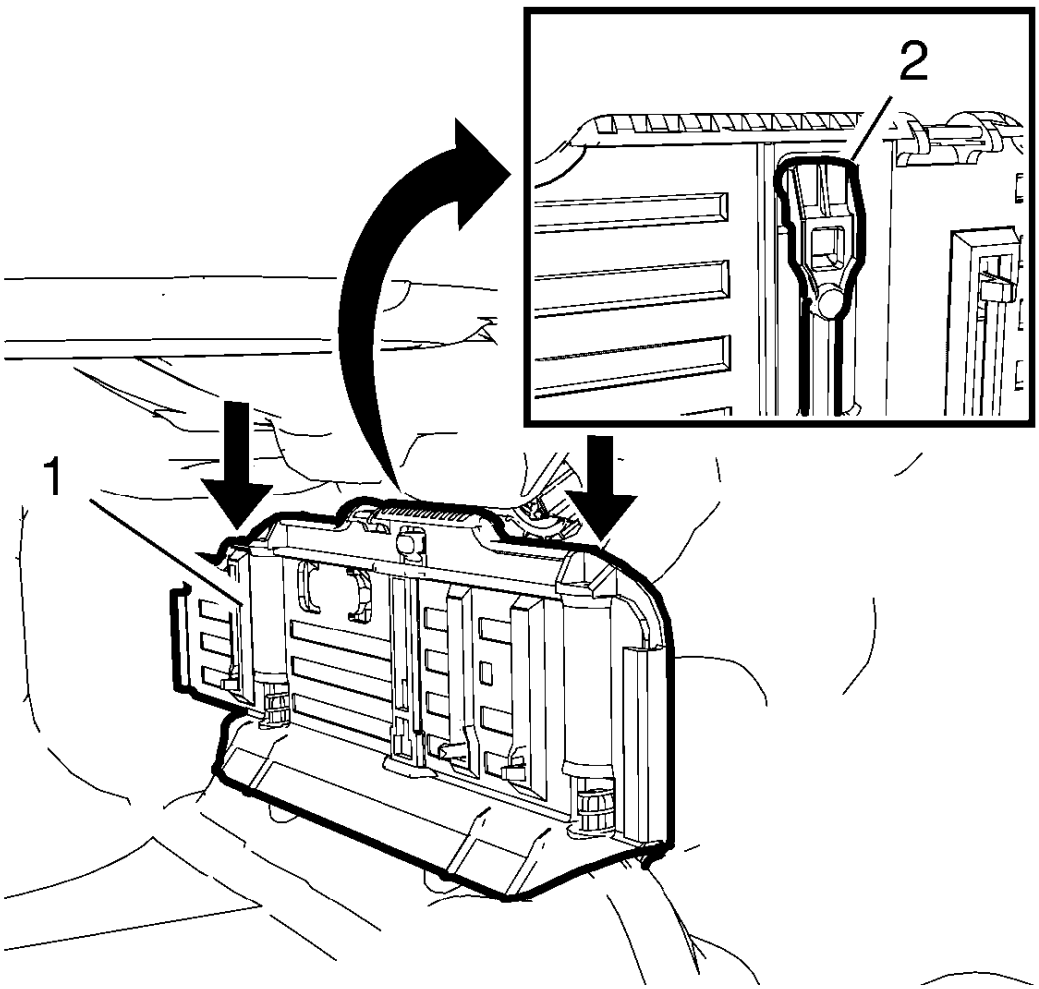

Fig. 86: Fuel Tank Baffle And Lug
Courtesy of GENERAL MOTORS COMPANY

4. Press the fuel tank baffle (1) completely down as shown in the picture.
5. Push the lug (2) toward the baffle and hold it.
6. Release tension from the fuel tank baffle (1) until the lug (2) engages safely.

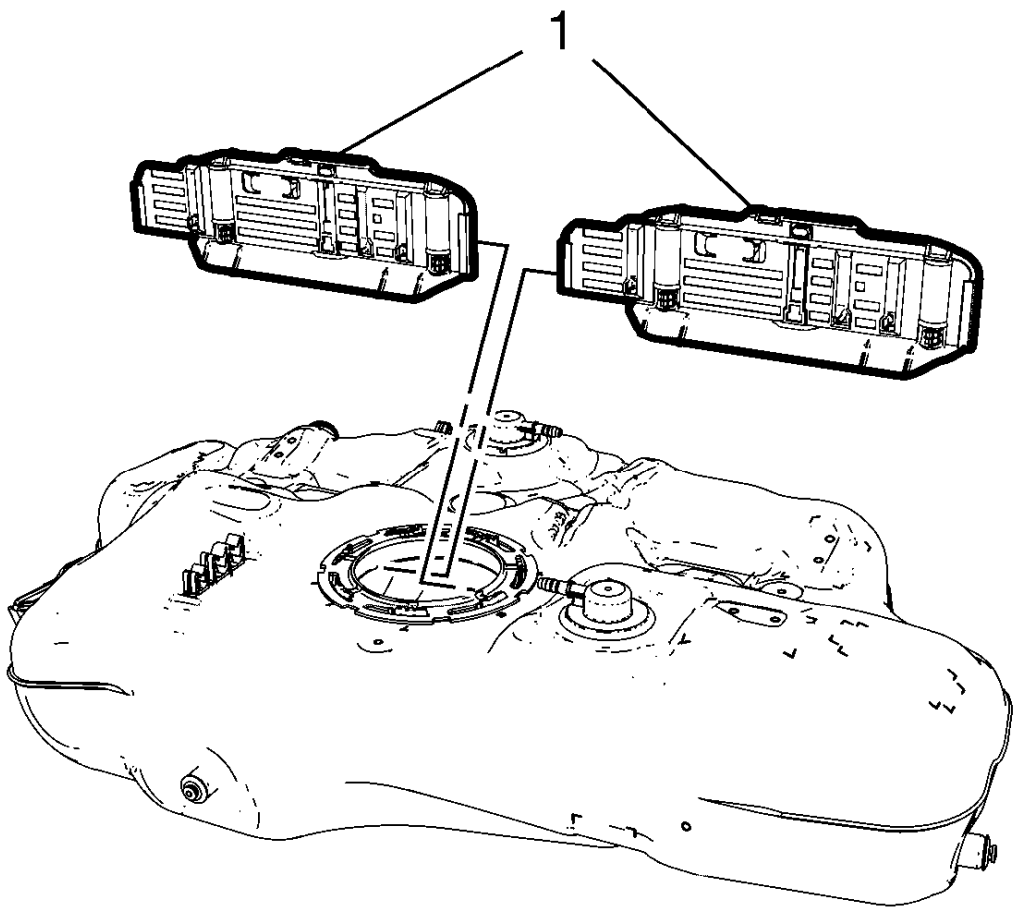

Fig. 87: Fuel Tank Baffles
Courtesy of GENERAL MOTORS COMPANY

7. Remove the baffles (1) one by one.
8. Repeat steps 5 to 8 to remove the other baffle.

Installation Procedure

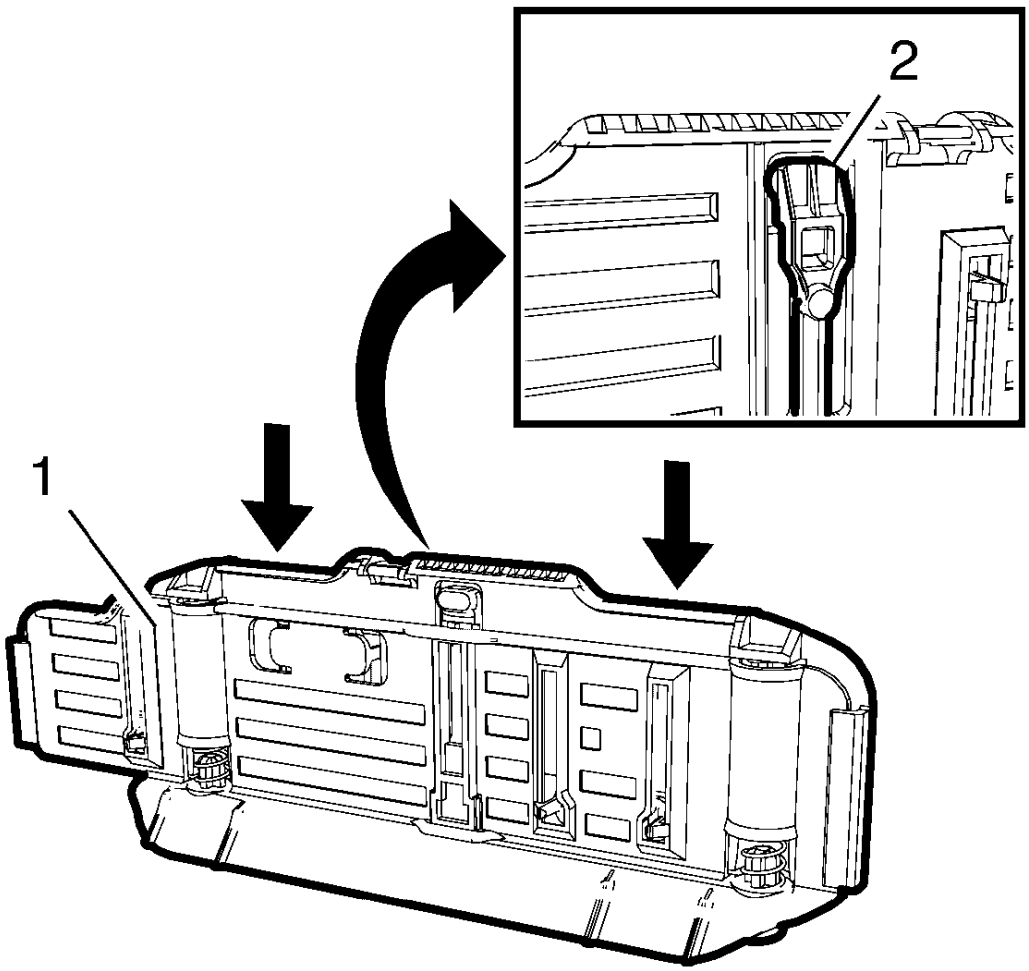

Fig. 88: Fuel Tank Baffle And Lugs
Courtesy of GENERAL MOTORS COMPANY

NOTE: Perform the steps 1-3 only when the fuel tank baffles are not transferred from the OLD to the NEW tank.

1. Tension the fuel tank baffle (1) completely by pressing it down.
2. Push the lug (2) toward the baffle and hold it.
3. Release tension from the fuel tank baffle (1) until the lug (2) engages safely.

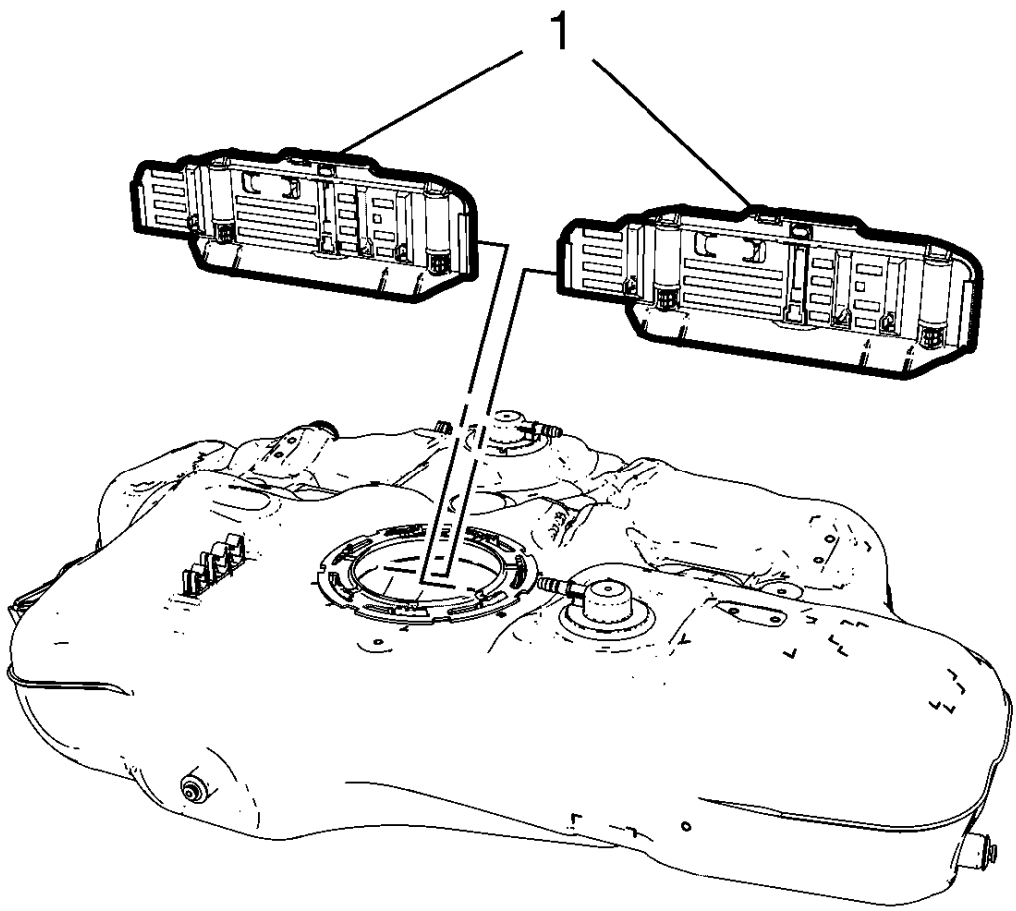

Fig. 89: Fuel Tank Baffles
Courtesy of GENERAL MOTORS COMPANY

4. Install the baffles (1) one by one.

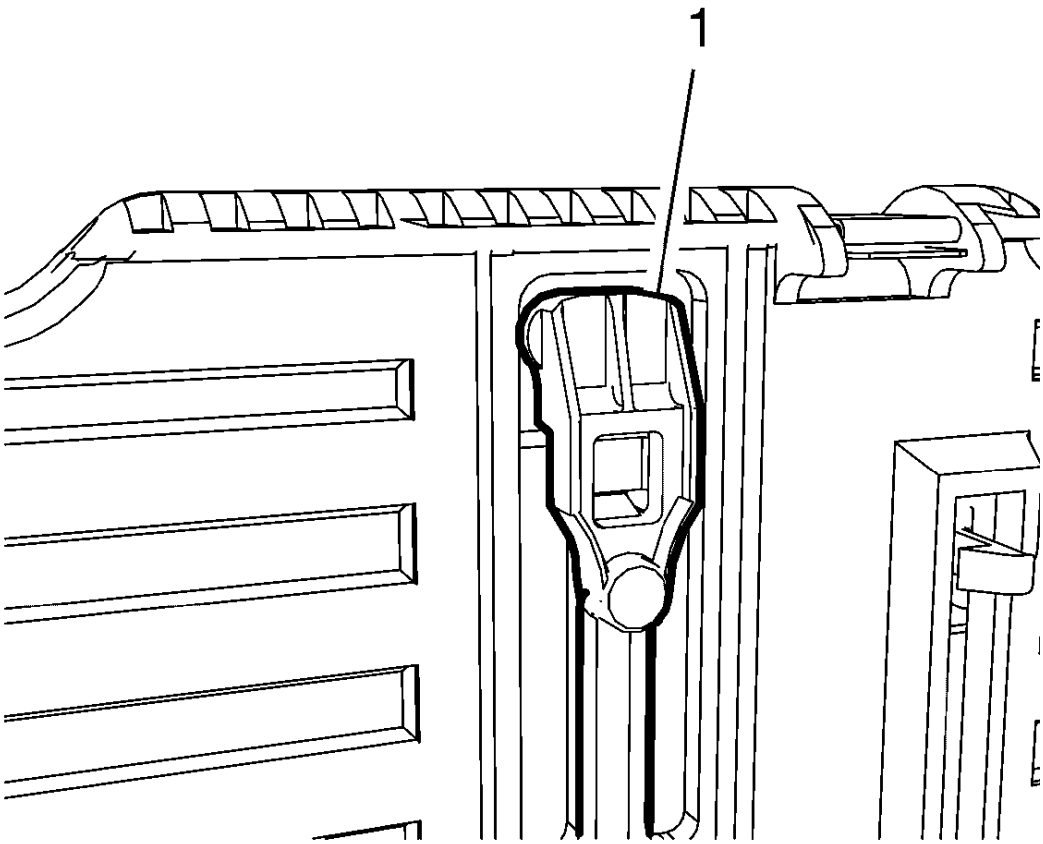

Fig. 90: Fuel Tank Baffle Lug
Courtesy of GENERAL MOTORS COMPANY

5. Press the fuel tank baffle together until the lug (1) becomes unlocked.
6. Release tension slowly from the fuel tank baffle and let the baffle engage safely in the installation site.

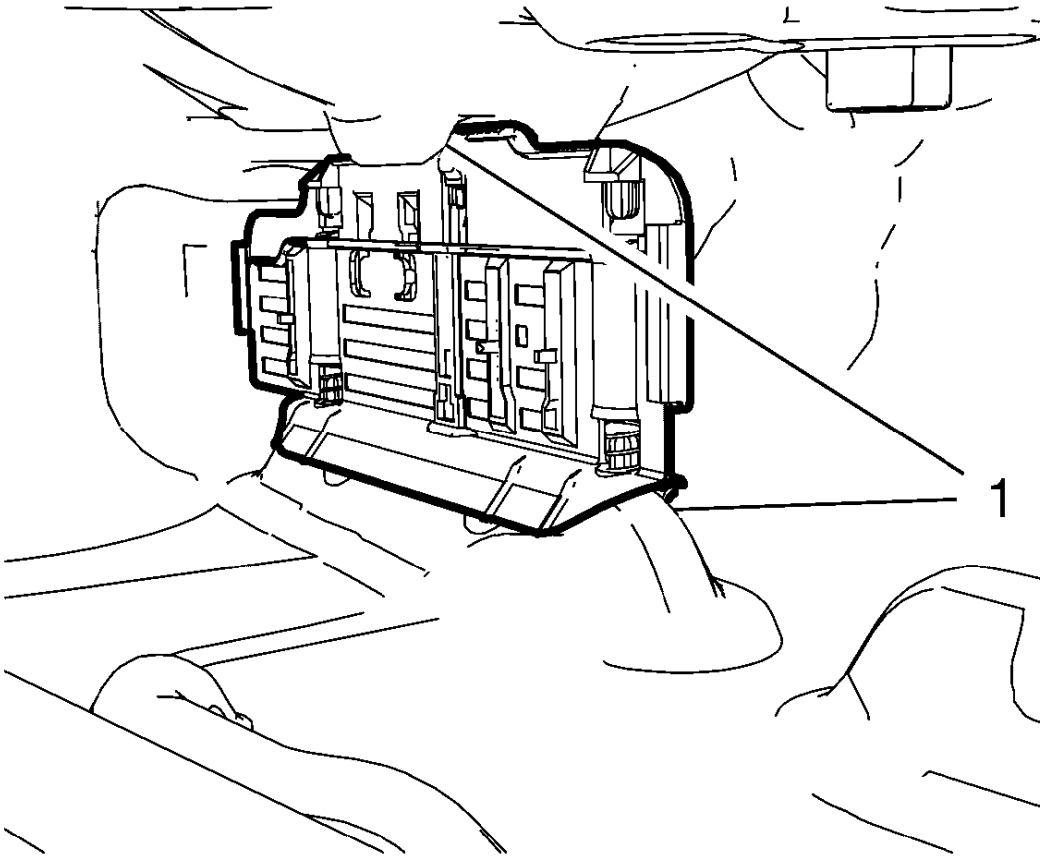

Fig. 91: Fuel Tank Installation Sites
Courtesy of GENERAL MOTORS COMPANY

7. Check the proper seat of the fuel tank baffle at the fuel tank installation sites (1). Use a mirror if necessary.
8. Repeat steps 1-7 to install the other baffle.
9. Install the fuel tank fuel pump module. Refer to **Fuel Tank Fuel Pump Module Replacement**.
10. Install the fuel tank. Refer to **Fuel Tank Replacement**.

FUEL TANK VENT PIPE REPLACEMENT

Removal Procedure

WARNING: Refer to Gasoline/Gasoline Vapors Warning

WARNING: Refer to Safety Goggles and Fuel Warning

WARNING: In order to reduce the risk of fire and personal injury observe the following items:

- **Replace all nylon fuel pipes that are nicked, scratched or damaged during installation, do not attempt to repair the sections of the nylon fuel pipes**
- **Do not hammer directly on the fuel harness body clips when installing new fuel pipes. Damage to the nylon pipes may result in a fuel leak.**
- **Always cover nylon vapor pipes with a wet towel before using a torch near them. Also, never expose the vehicle to temperatures higher than 115°C (239°F) for more than one hour, or more than 90°C (194°F) for any extended period.**
- **Apply a few drops of clean engine oil to the male pipe ends before connecting fuel pipe fittings. This will ensure proper reconnection and prevent a possible fuel leak. (During normal operation, the O-rings located in the female connector will swell and may prevent proper reconnection if not lubricated.)**

1. Open the hood.
2. Disconnect the battery negative cable **Battery Negative Cable Disconnection and Connection** .

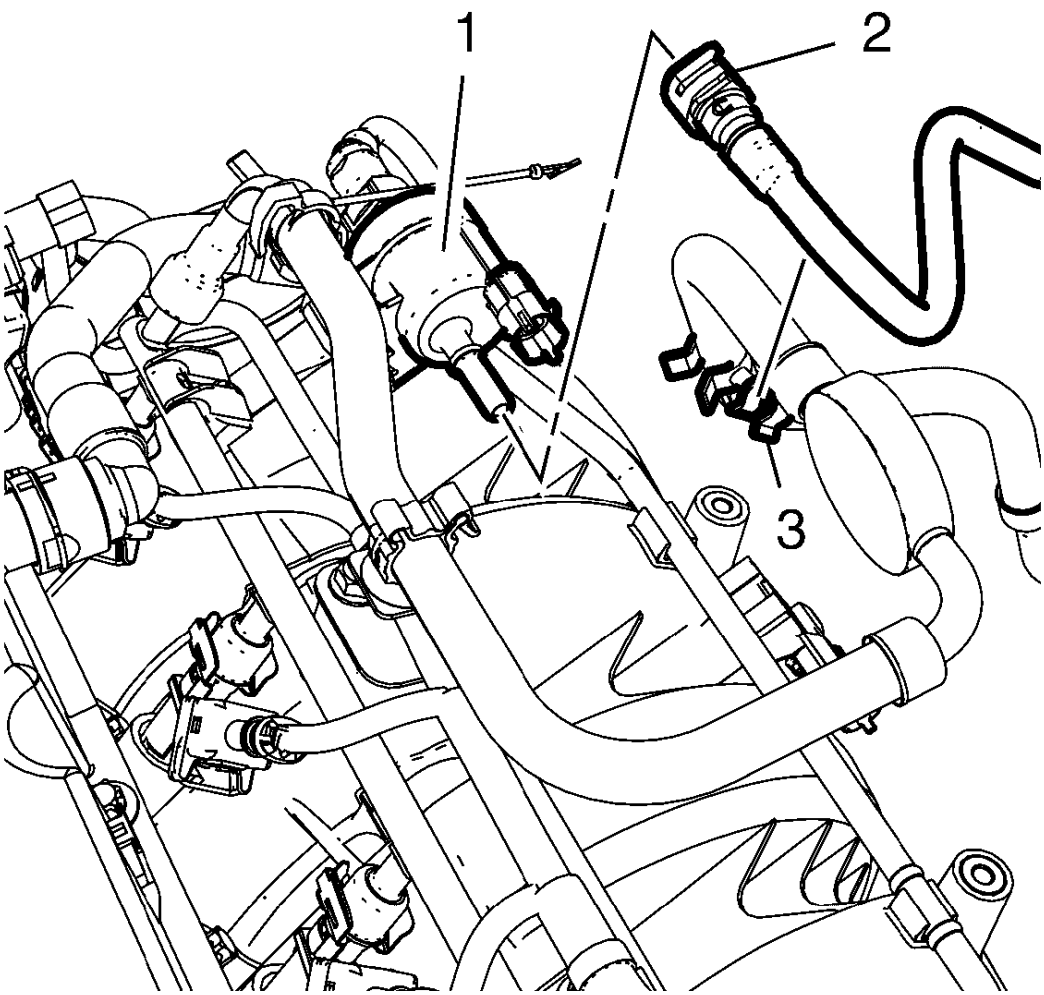

Fig. 92: Fuel Tank Vent Pipe And Evaporative Emission Canister Purge Solenoid Valve
Courtesy of GENERAL MOTORS COMPANY

3. Remove the fuel tank vent pipe (2) from the evaporative emission canister purge solenoid valve (1) and from the clip (3).

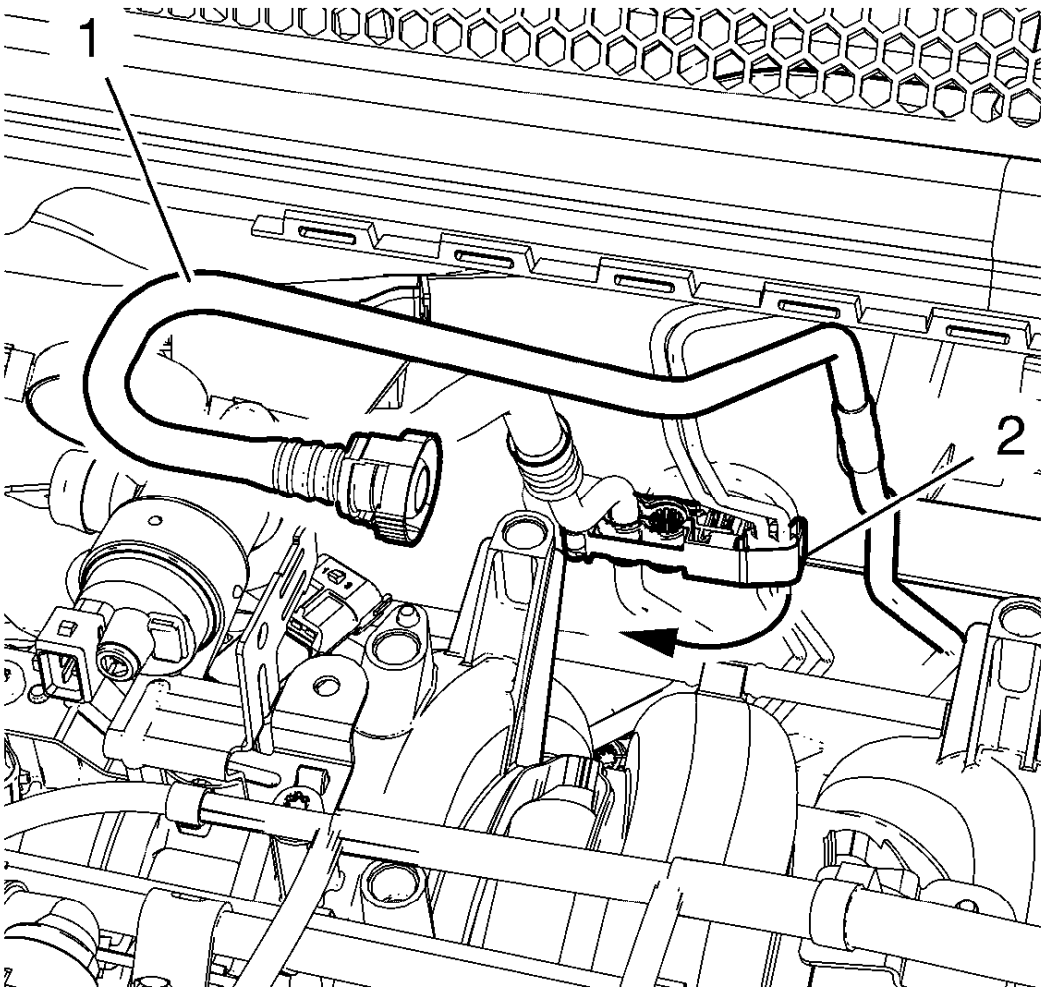

Fig. 93: Fuel Tank Vent Pipe
Courtesy of GENERAL MOTORS COMPANY

4. Open the upper bulk head clip (2).
5. Remove the fuel tank vent pipe (1) from the upper bulkhead clip.
6. Raise and support the vehicle. Refer to **Lifting and Jacking the Vehicle** .

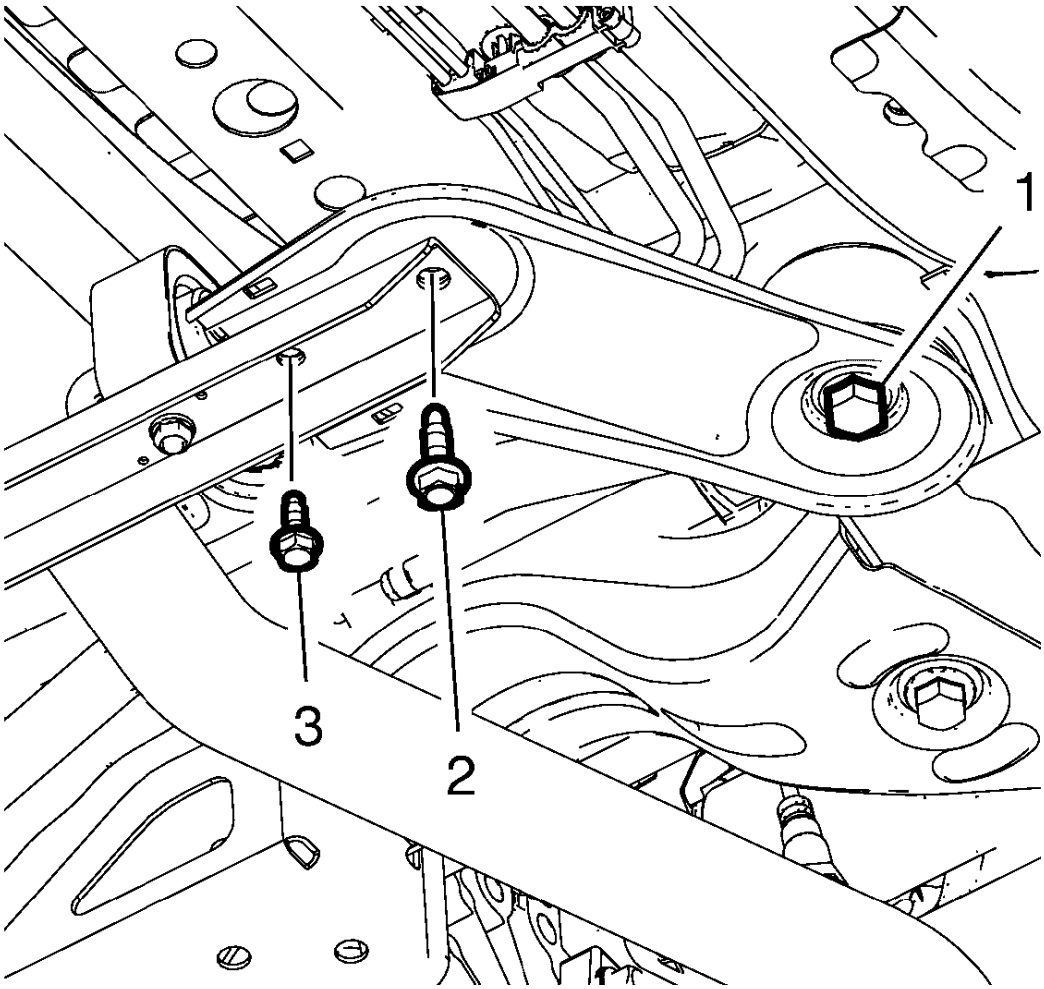

Fig. 94: Front Exhaust Hanger Bracket And Bolt
Courtesy of GENERAL MOTORS COMPANY

7. Remove and DISCARD the exhaust front hanger bracket bolt (3).
8. Remove and DISCARD the frame reinforcement bolt (2).
9. Loosen the drive train and front suspension frame bolt (1).

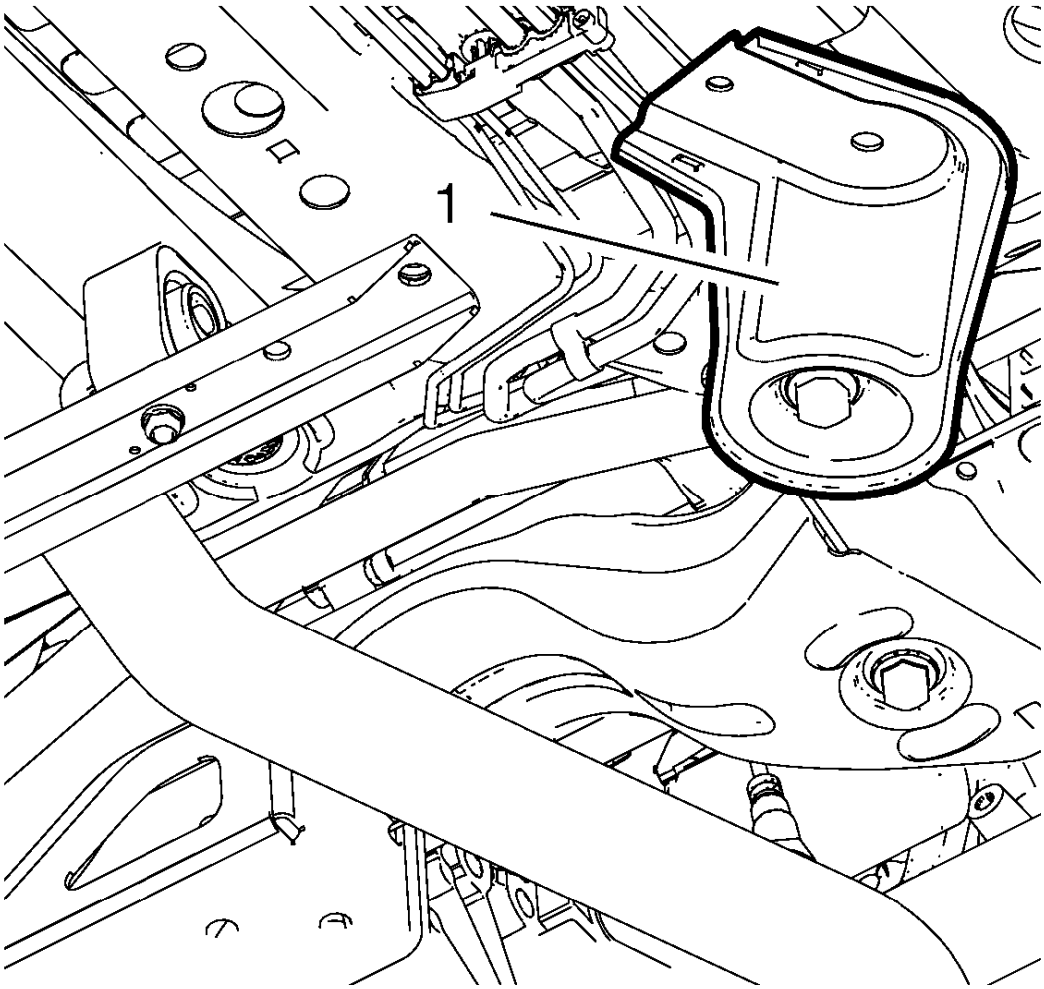

Fig. 95: Right Frame Reinforcement
Courtesy of GENERAL MOTORS COMPANY

10. Rotate the right frame reinforcement (1) to a position shown to get access to the fuel pipes.

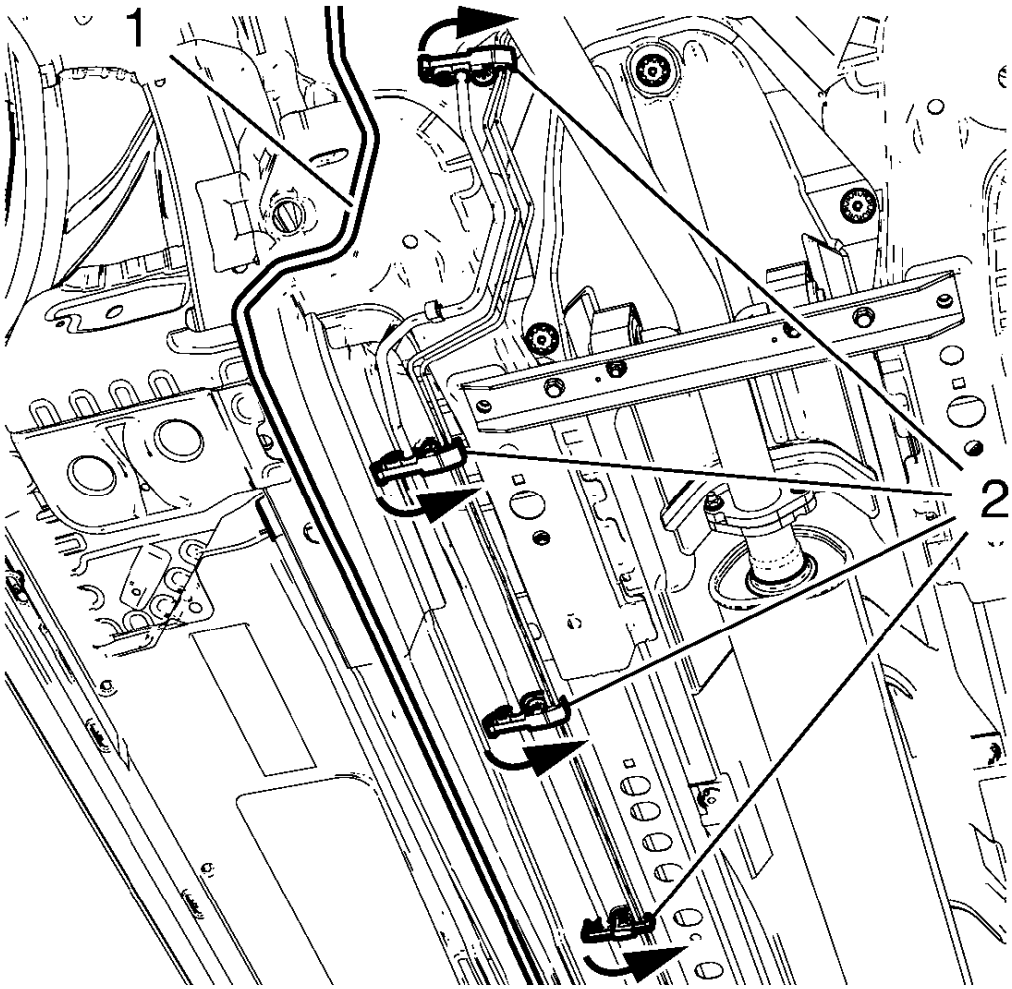

Fig. 96: Fuel Feed Pipe And Clips
Courtesy of GENERAL MOTORS COMPANY

11. Open the 4 fuel pipe clips (2).
12. Remove the lower bulk head clip.

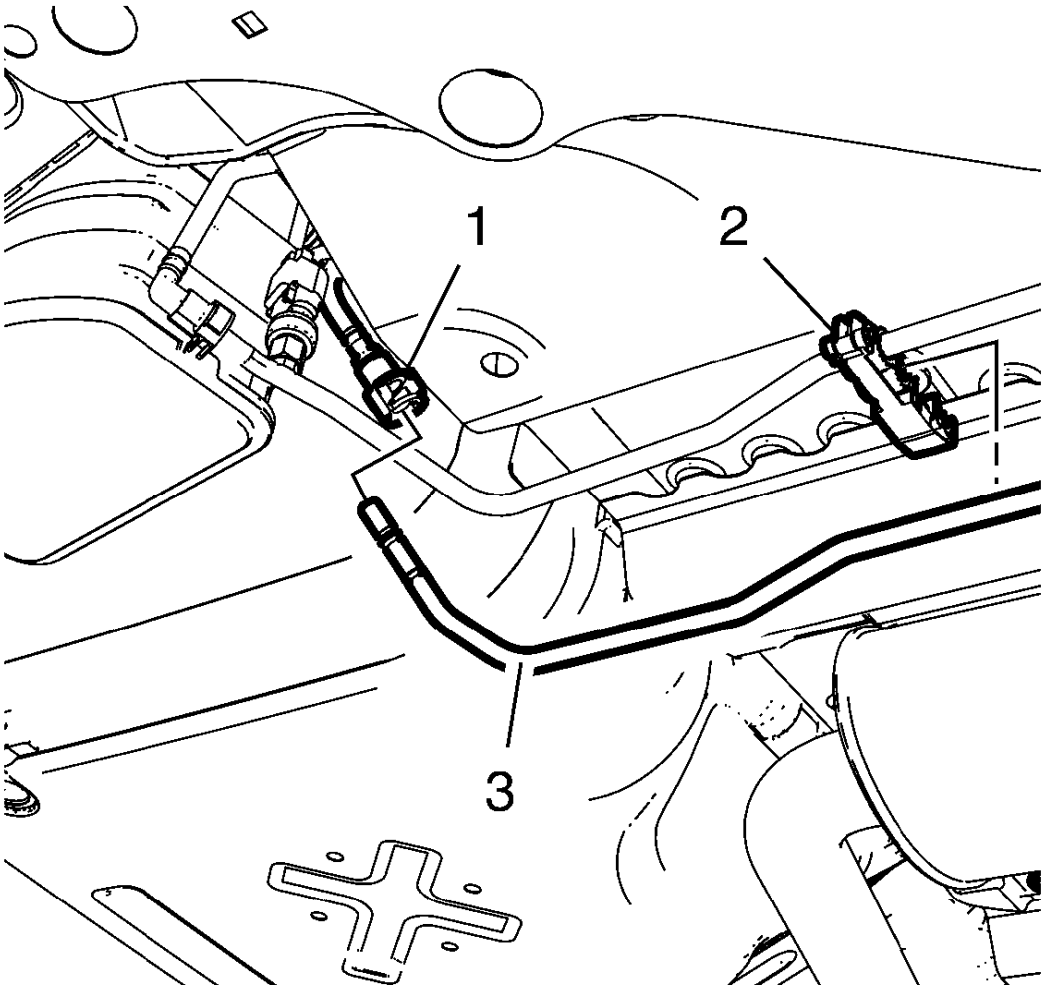

Fig. 97: Evaporative Emission Canister Fuel Vent Pipe Connector
Courtesy of GENERAL MOTORS COMPANY

13. Disconnect the evaporative emission canister fuel vent pipe connector (1) from the fuel tank vent pipe (3). Refer to **Plastic Collar Quick Connect Fitting Service**.
14. Close the fuel tank vent pipe and emission canister fuel vent pipe with suitable caps.
15. Open the fuel pipe clip (2) and remove the fuel tank vent pipe (3).

Installation Procedure

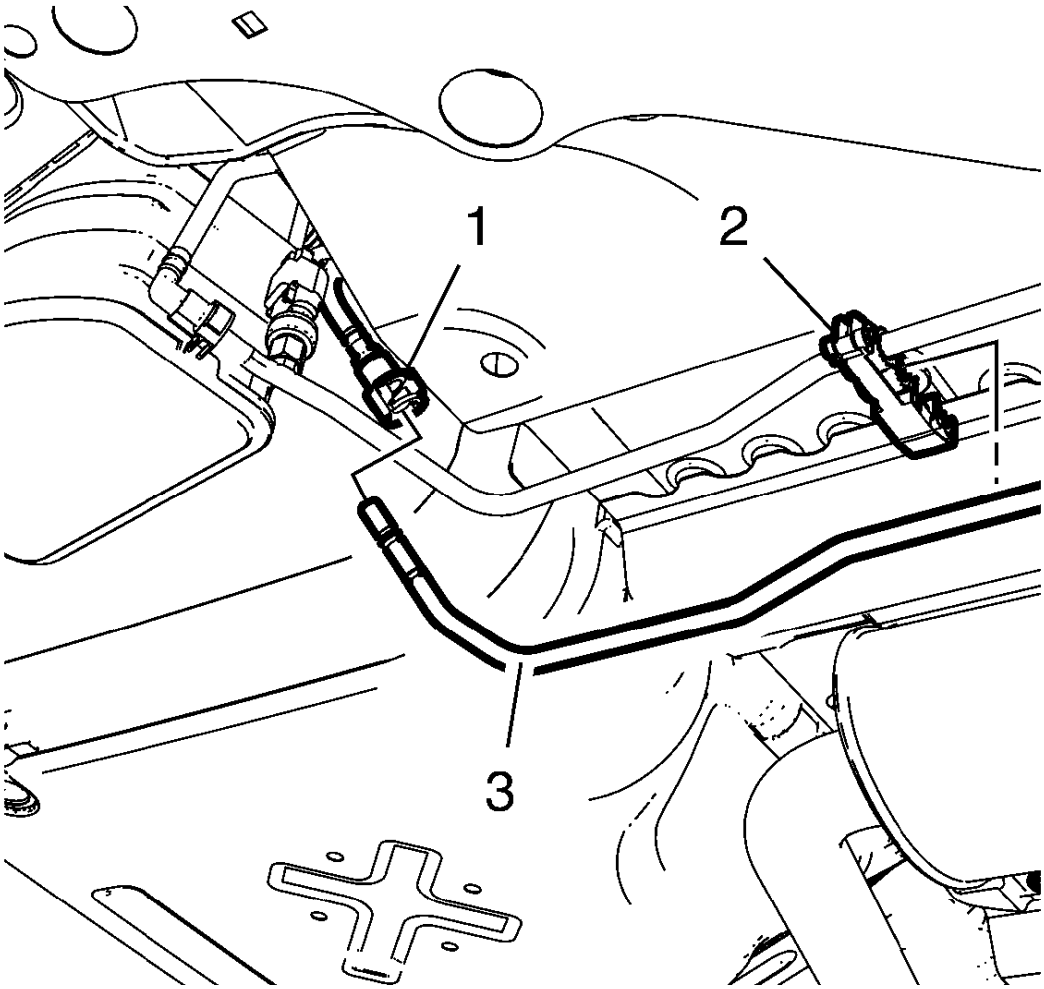

Fig. 98: Evaporative Emission Canister Fuel Vent Pipe Connector
Courtesy of GENERAL MOTORS COMPANY

1. Install the fuel tank vent pipe (3) and close the fuel pipe clip (2).
2. Remove the caps from emission canister fuel vent pipe and fuel tank vent pipe.
3. Connect the emission canister fuel vent pipe to fuel tank vent pipe. Refer to **Plastic Collar Quick Connect Fitting Service**.

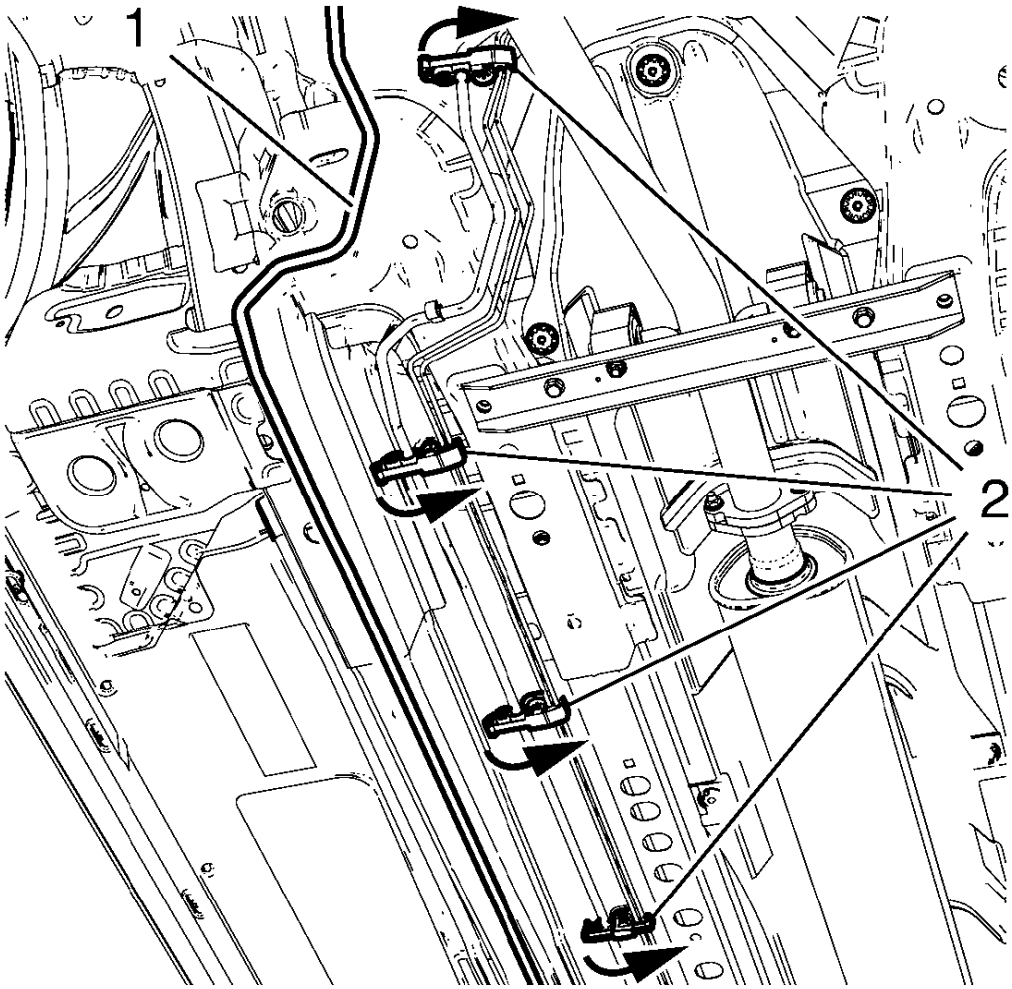

Fig. 99: Fuel Feed Pipe And Clips
Courtesy of GENERAL MOTORS COMPANY

4. Install the lower bulk head clip.
5. Close the 4 fuel pipe clips (2).

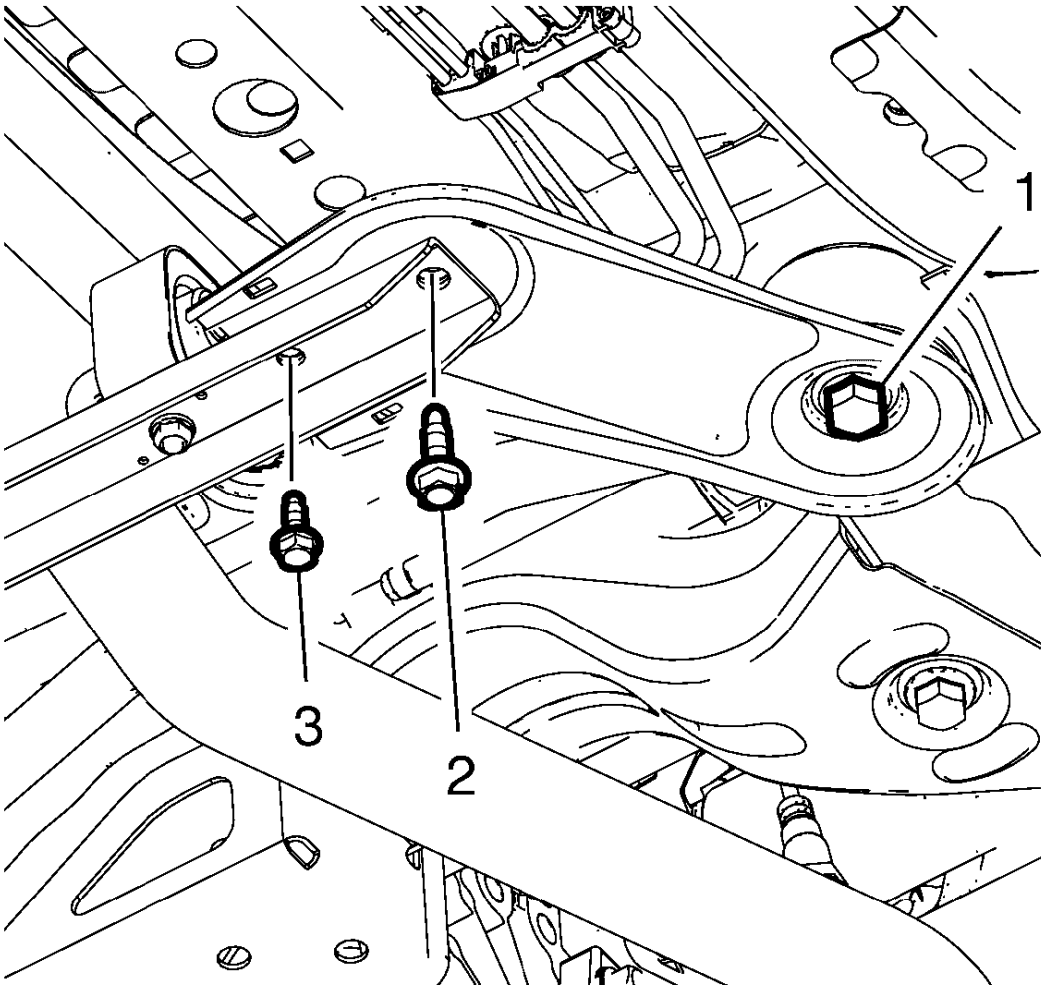

Fig. 100: Front Exhaust Hanger Bracket And Bolt
Courtesy of GENERAL MOTORS COMPANY

6. Rotate the right frame reinforcement to its original position.
7. Install the exhaust front hanger bracket bolt (3).
8. Install the frame reinforcement bolt (2).

CAUTION: Refer to Fastener Caution .

CAUTION: Refer to Torque-to-Yield Fastener Caution .

9. Tighten the NEW exhaust front hanger bracket bolt (3) to 22 (16 lb ft).
10. Tighten the NEW frame reinforcement bolt (2) to 60 (44 lb ft).

11. Tighten the drivetrain and front suspension frame bolt (1) to 160 (118 lb ft).
12. Lower the vehicle.

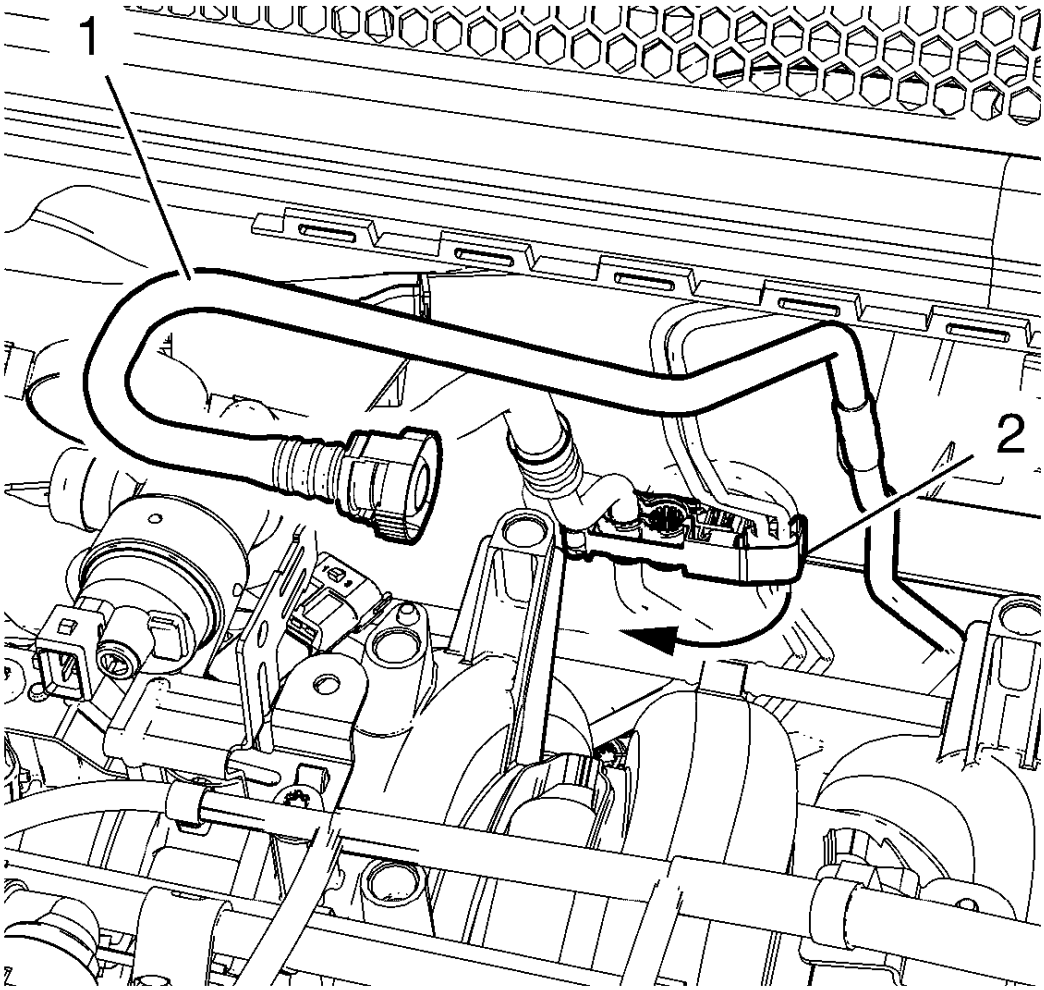

Fig. 101: Fuel Tank Vent Pipe
Courtesy of GENERAL MOTORS COMPANY

13. Install the fuel tank vent pipe (1) to the upper bulkhead clip.
14. Close the upper bulk head clip (2).

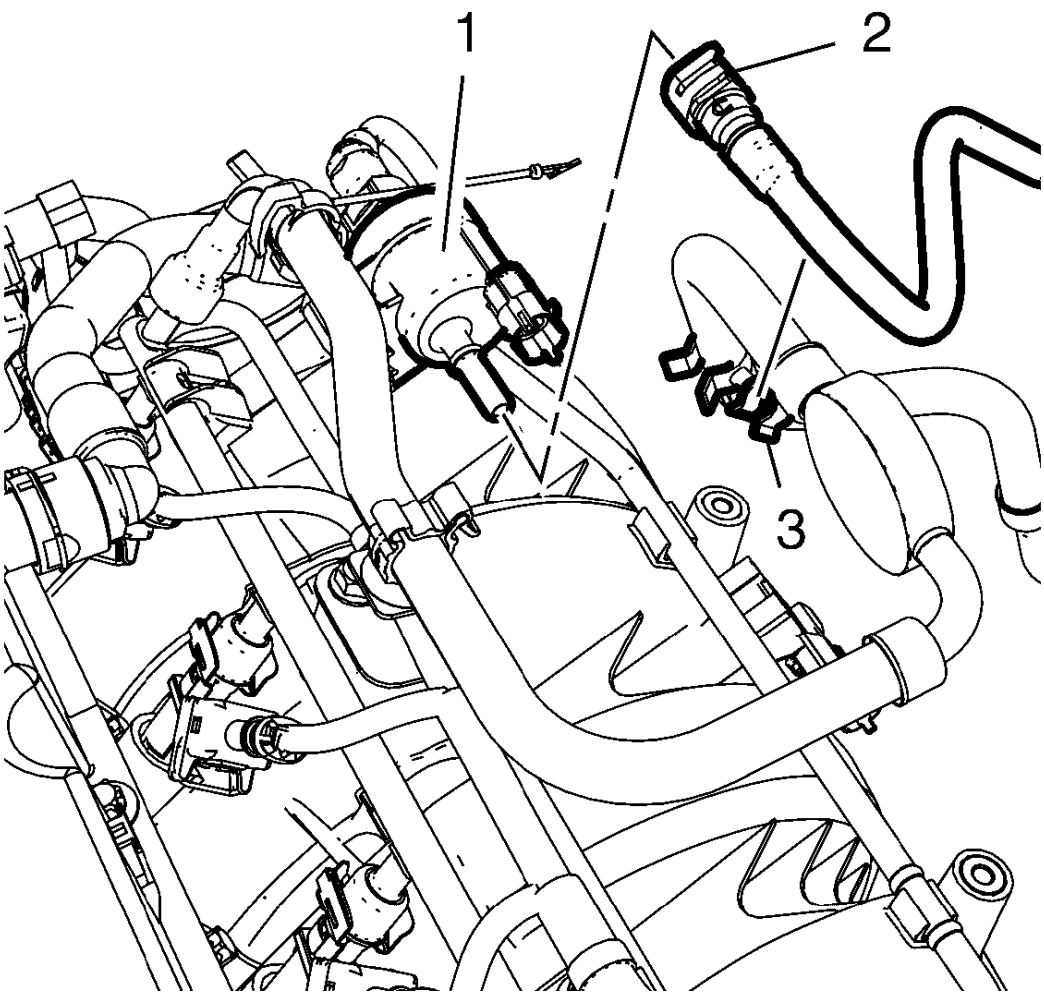

Fig. 102: Fuel Tank Vent Pipe And Evaporative Emission Canister Purge Solenoid Valve
Courtesy of GENERAL MOTORS COMPANY

15. Install the fuel tank vent pipe (2) to the evaporative emission canister purge solenoid valve (1) and to the clip (3).
16. Connect the battery negative cable. Refer to **Battery Negative Cable Disconnection and Connection** .

FUEL TANK FILLER PIPE REPLACEMENT

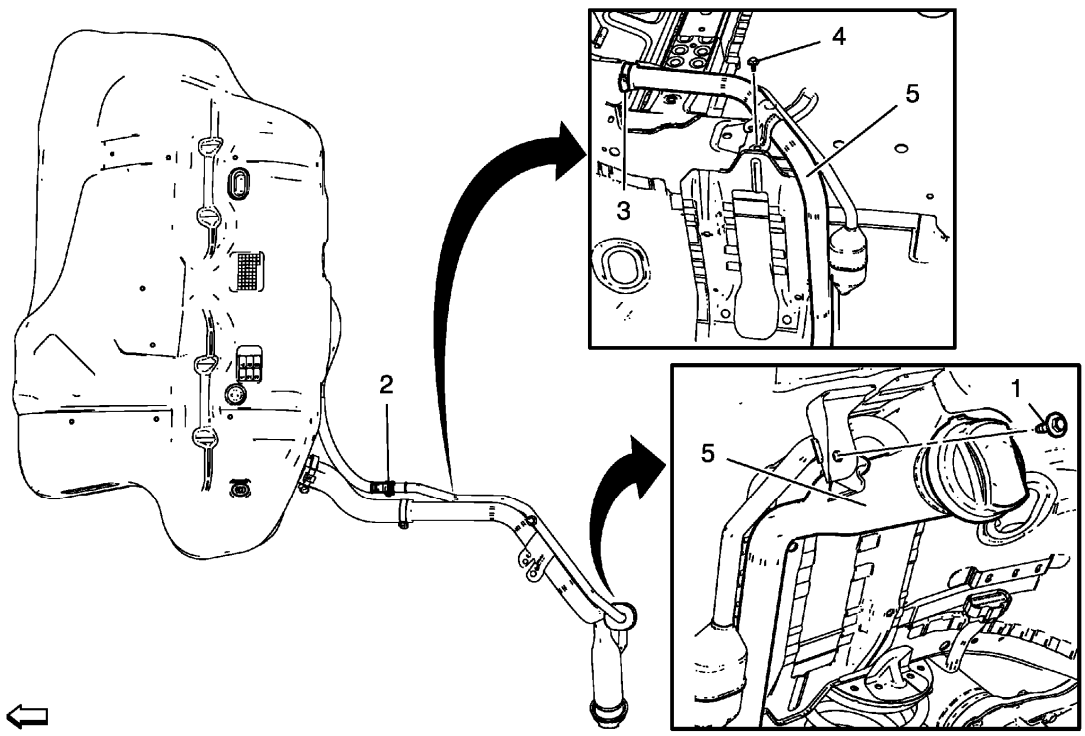

Fig. 103: Fuel Tank Filler Pipe
Courtesy of GENERAL MOTORS COMPANY

Fuel Tank Filler Pipe Replacement

Callout	Component Name
WARNING: **Gasoline or gasoline vapors are highly flammable. A fire could occur if an ignition source is present. Never drain or store gasoline or diesel fuel in an open container, due to the possibility of fire or explosion. Have a dry chemical (Class B) fire extinguisher nearby.** **Preliminary Procedures** 1. Disconnect battery negative cable. Refer to **Battery Negative Cable Disconnection and Connection** . 2. Remove the fuel tank filler pipe housing. Refer to **Fuel Tank Filler Pipe Housing Replacement** . 3. Drain the fuel tank. Refer to **Fuel Tank Draining**.	
1	Fuel Tank Filler Pipe Bracket Bolt **CAUTION:** **Refer to Fastener Caution .** **Tighten** 9 N.m (80 lb in)

2	Lower Recirculation Tube Quick Release Fitting
3	Fuel Tank Filler Pipe Clamp
4	Fuel Tank Filler Pipe Ground Bolt **Tighten** 9 N.m (80 lb in)
5	Fuel Tank Filler Pipe

FUEL FEED PIPE REPLACEMENT

Removal Procedure

WARNING: Refer to Gasoline/Gasoline Vapors Warning

WARNING: Refer to Safety Goggles and Fuel Warning

WARNING: In order to reduce the risk of fire and personal injury observe the following items:

- **Replace all nylon fuel pipes that are nicked, scratched or damaged during installation, do not attempt to repair the sections of the nylon fuel pipes**
- **Do not hammer directly on the fuel harness body clips when installing new fuel pipes. Damage to the nylon pipes may result in a fuel leak.**
- **Always cover nylon vapor pipes with a wet towel before using a torch near them. Also, never expose the vehicle to temperatures higher than 115°C (239°F) for more than one hour, or more than 90°C (194°F) for any extended period.**
- **Apply a few drops of clean engine oil to the male pipe ends before connecting fuel pipe fittings. This will ensure proper reconnection and prevent a possible fuel leak. (During normal operation, the O-rings located in the female connector will swell and may prevent proper reconnection if not lubricated.)**

1. Disconnect the battery negative cable. Refer to **Battery Negative Cable Disconnection and Connection**

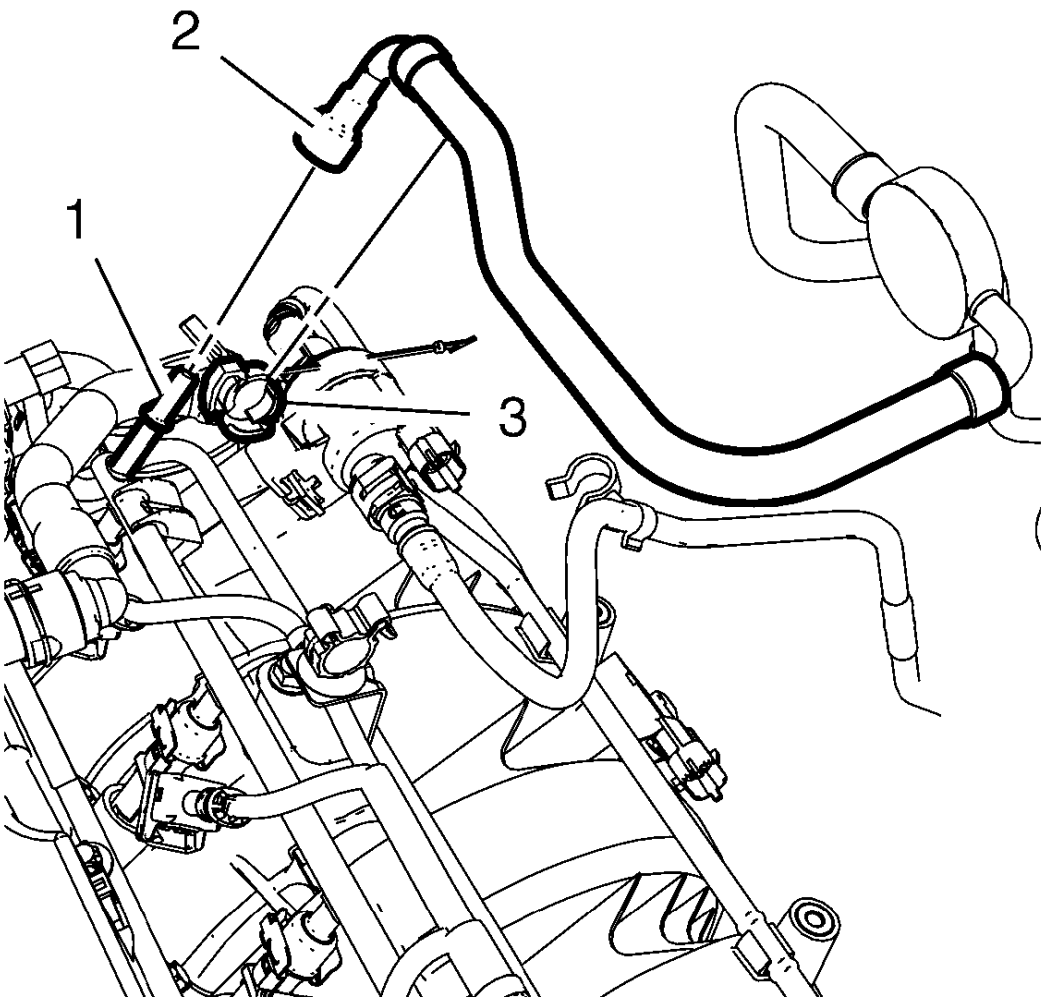

Fig. 104: Fuel Feed Pipe
Courtesy of GENERAL MOTORS COMPANY

2. Unclip the fuel feed pipe (2) from the fuel feed pipe clip (3).
3. Release the fuel feed pipe (2) from the multiport fuel injection fuel rail (1) and remove the fuel feed pipe.
4. Close the fuel feed pipe and the fuel rail with a suitable cap.

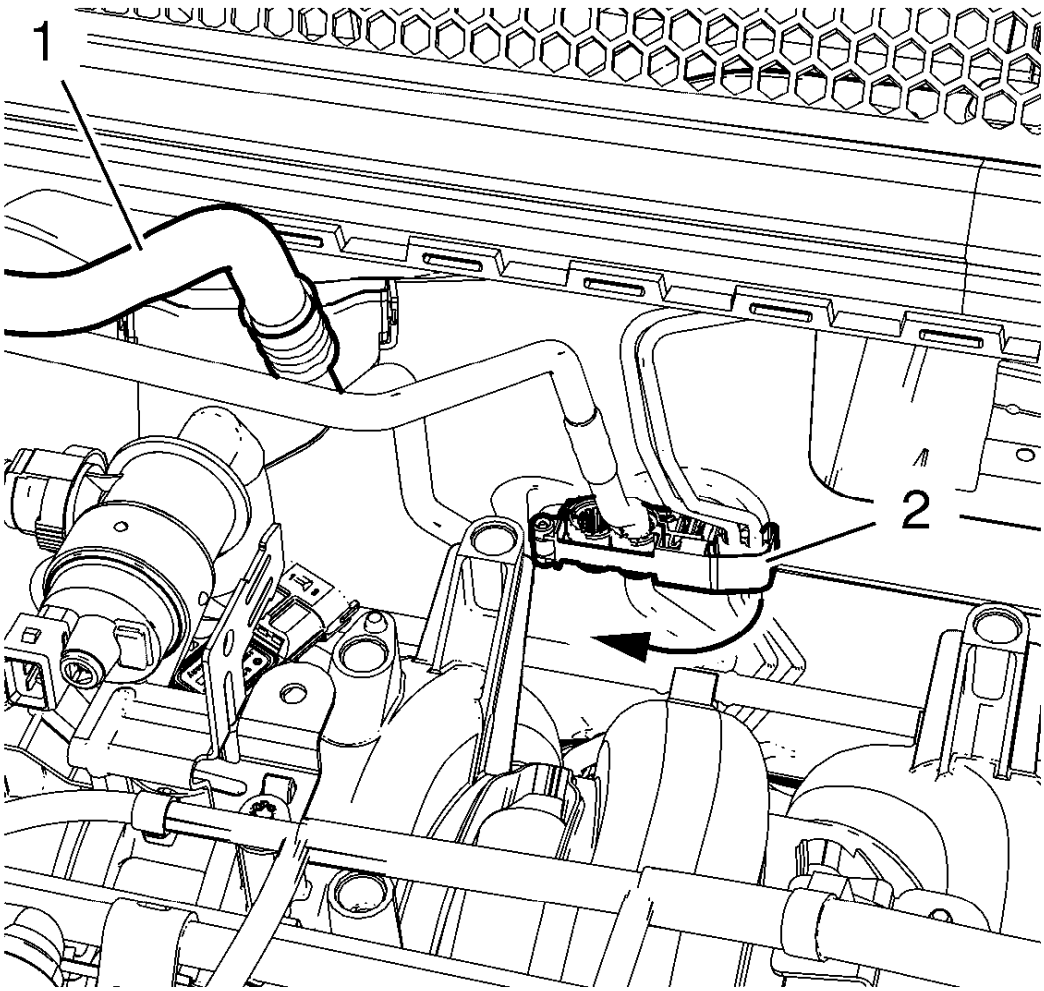

Fig. 105: Fuel Feed Pipe And Fuel Pipe Clip
Courtesy of GENERAL MOTORS COMPANY

5. Open the upper bulk head clip (2).
6. Remove the fuel feed pipe (1) from the upper bulkhead clip.
7. Raise and support the vehicle. Refer to **Lifting and Jacking the Vehicle**

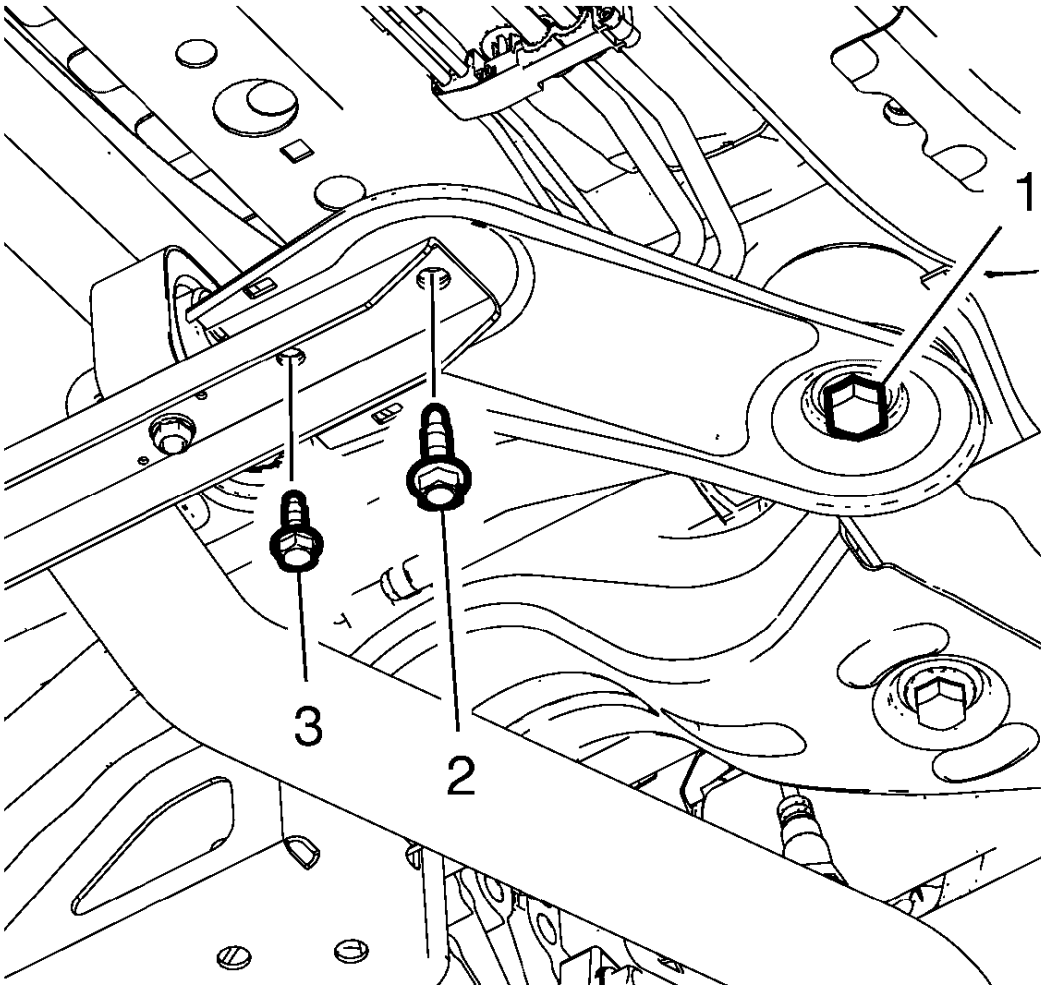

Fig. 106: Front Exhaust Hanger Bracket And Bolt
Courtesy of GENERAL MOTORS COMPANY

8. Remove and DISCARD the exhaust front hanger bracket bolt (3).
9. Remove and DISCARD the frame reinforcement bolt (2).
10. Loosen the drive train and front suspension frame bolt (1).

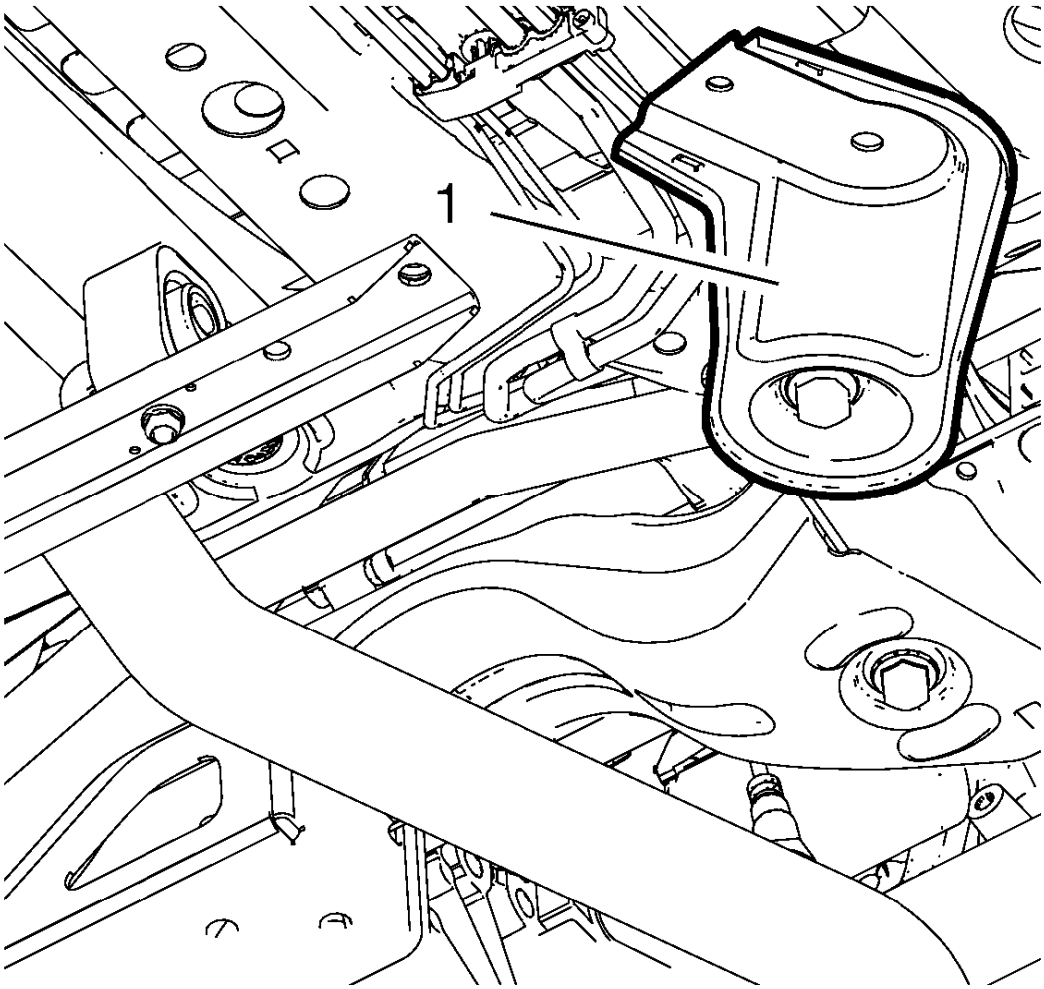

Fig. 107: Right Frame Reinforcement
Courtesy of GENERAL MOTORS COMPANY

11. Rotate the right frame reinforcement (1) to a position shown to get access to the fuel pipes.

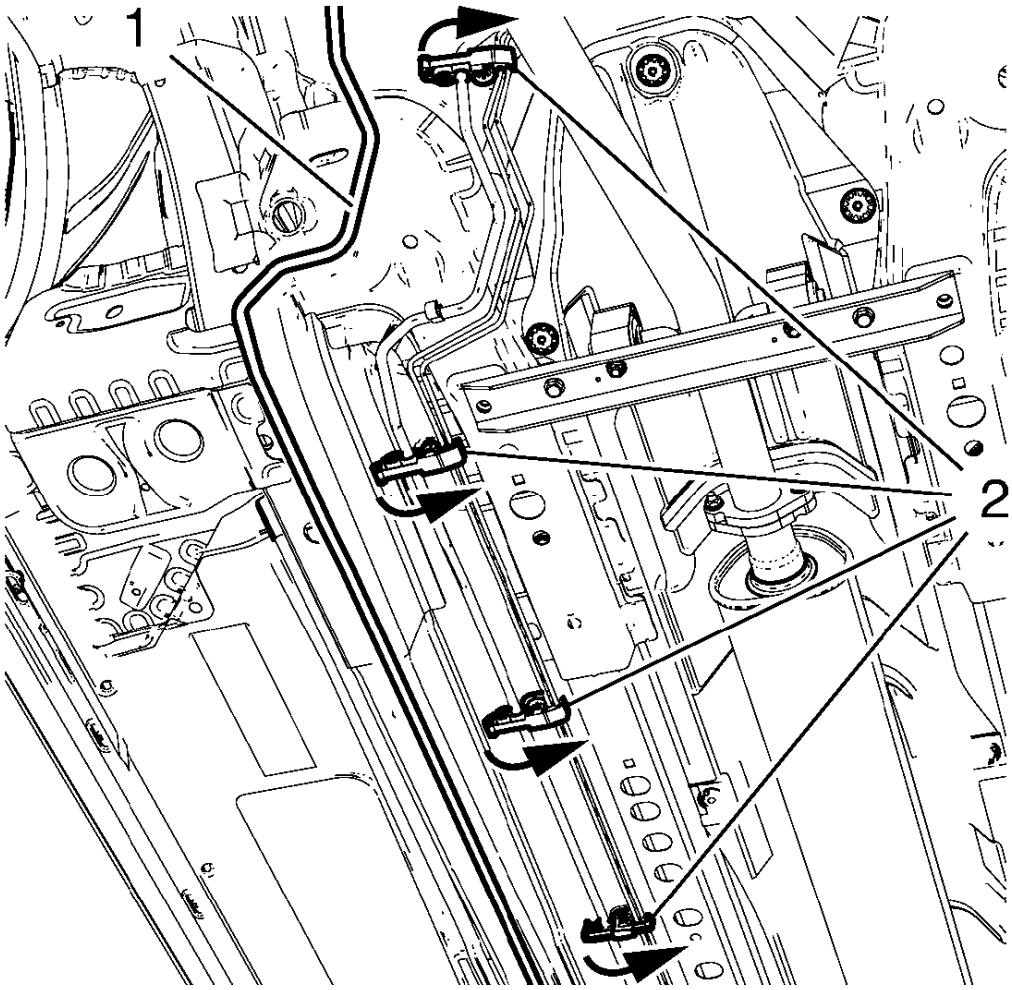

Fig. 108: Fuel Feed Pipe And Clips
Courtesy of GENERAL MOTORS COMPANY

12. Open the 4 fuel pipe clips (2).
13. Remove the lower bulk head clip.

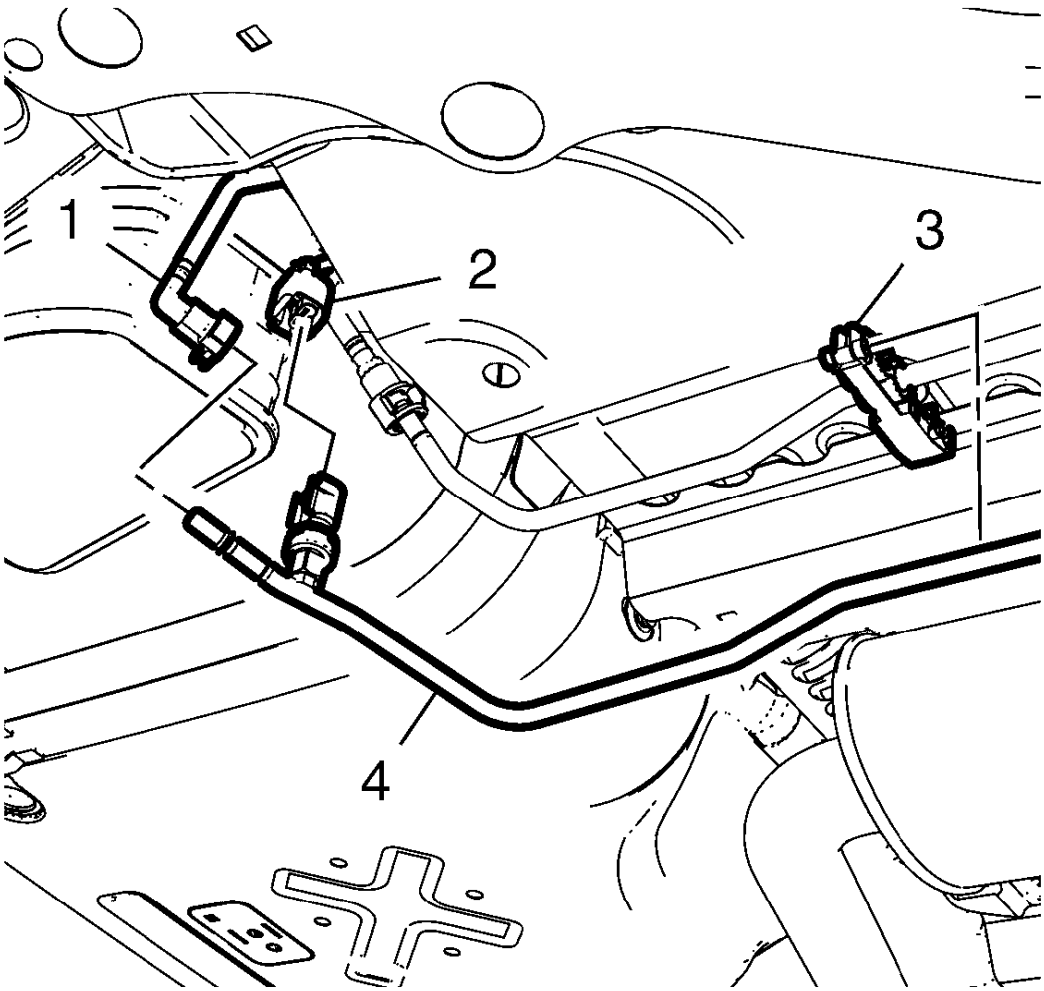

Fig. 109: Fuel Tank Feed Pipe Connector
Courtesy of GENERAL MOTORS COMPANY

14. Disconnect the fuel tank feed pipe connector (1) from fuel feed pipe (4). Refer to **Plastic Collar Quick Connect Fitting Service**
15. Close the fuel feed pipe and fuel tank feed pipe with suitable caps.
16. Disconnect the wiring harness plug (2).
17. Open the fuel pipe clip (3) and remove the fuel feed pipe (4).
18. Close the fuel pipes with suitable caps.

Installation Procedure

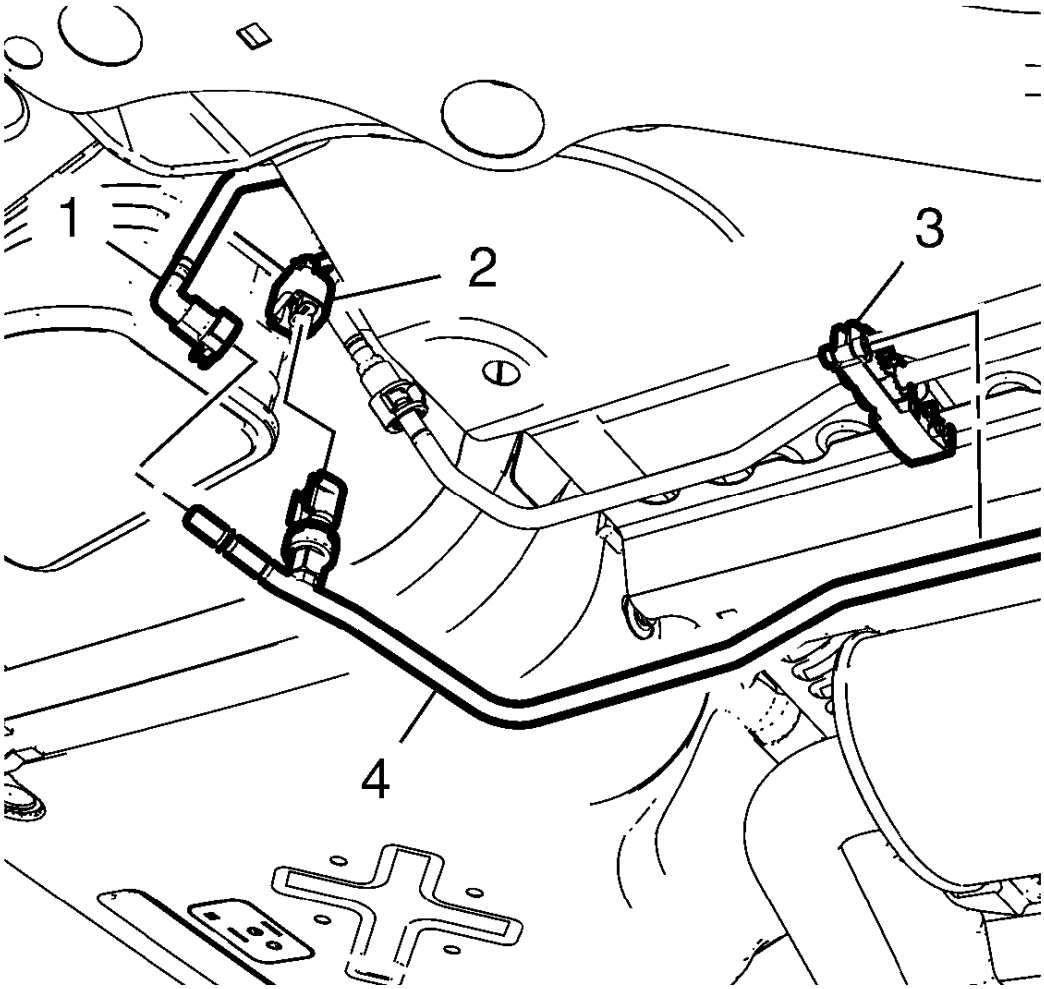

Fig. 110: Fuel Tank Feed Pipe Connector
Courtesy of GENERAL MOTORS COMPANY

1. Remove the caps from the fuel feed tank pipe and from the fuel feed pipe.
2. Install the fuel feed pipe (4) and close the fuel pipe clip (3).
3. Connect the fuel tank feed pipe connector (1) to fuel feed pipe (4). Refer to **Plastic Collar Quick Connect Fitting Service**
4. Connect the wiring harness plug (2).

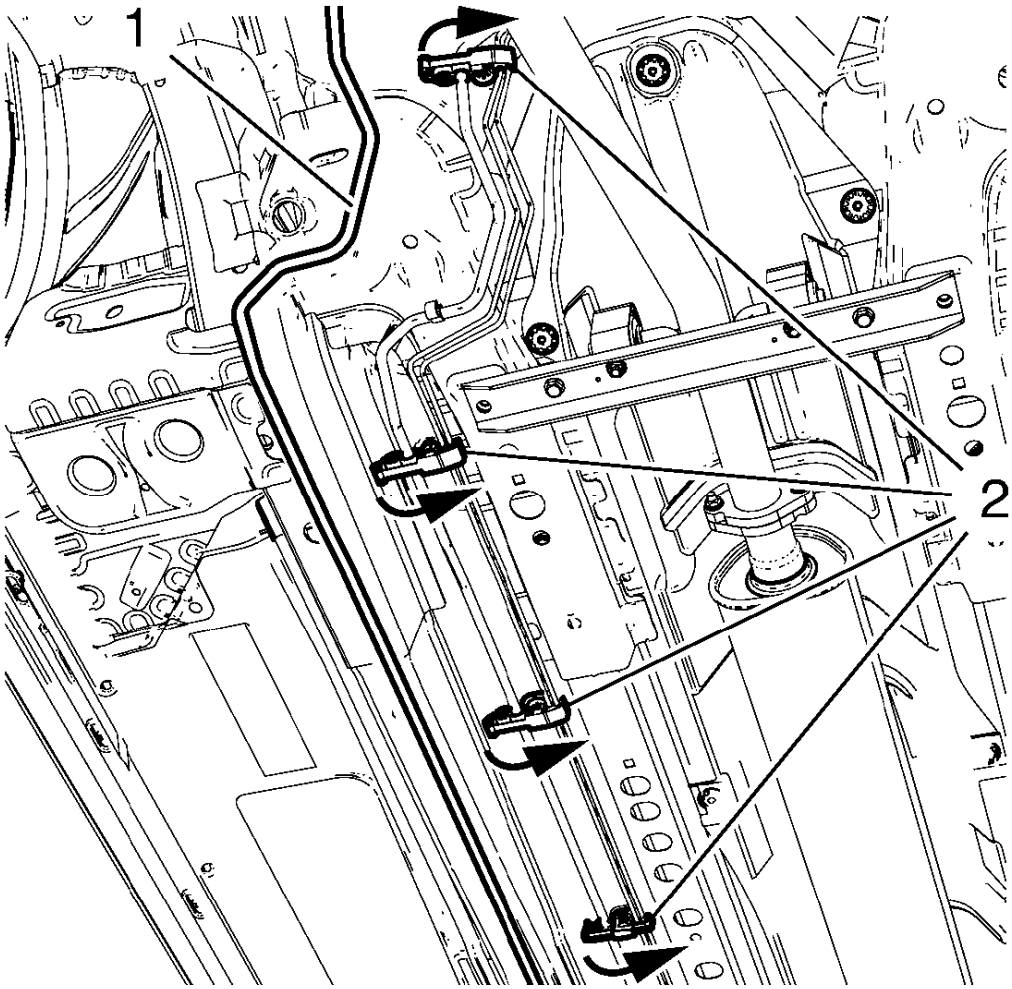

Fig. 111: Fuel Feed Pipe And Clips
Courtesy of GENERAL MOTORS COMPANY

5. Install the lower bulk head clip.
6. Close the 4 fuel pipe clips (2).

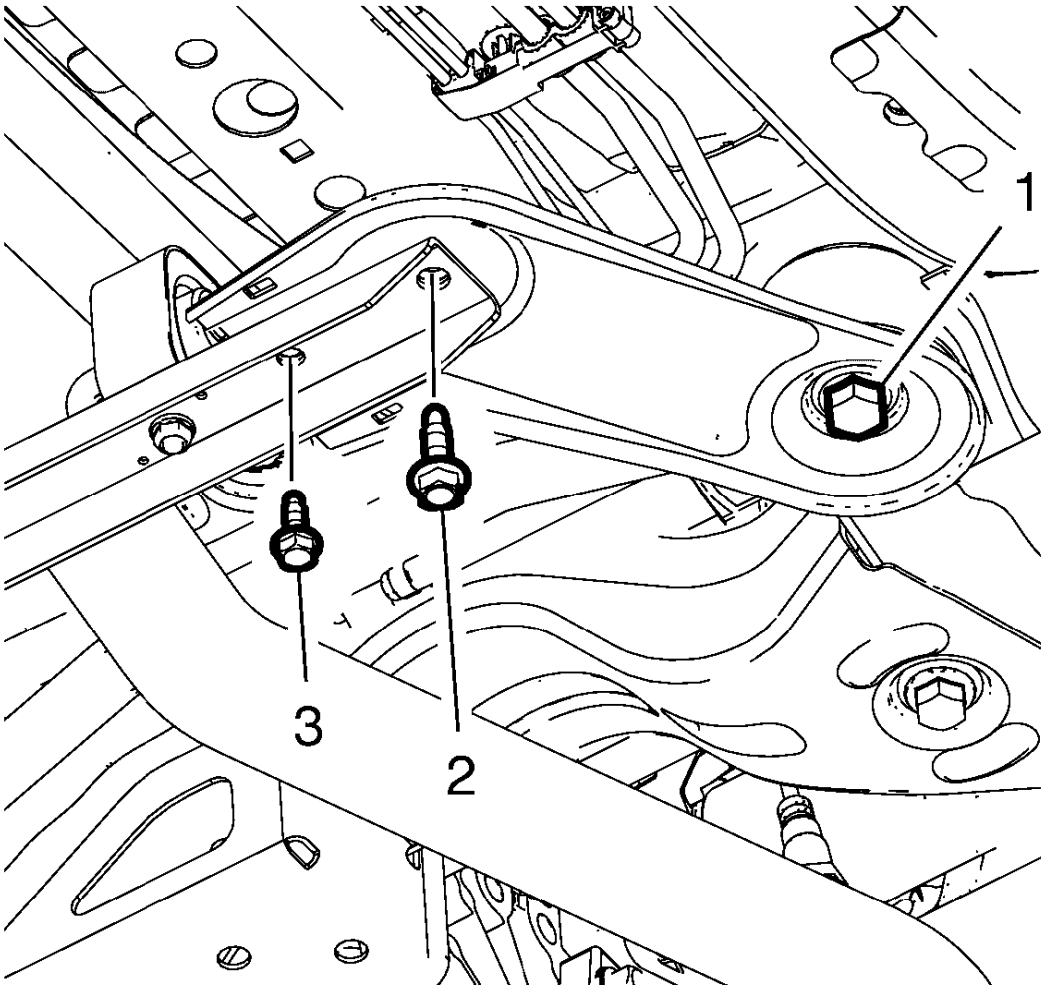

Fig. 112: Front Exhaust Hanger Bracket And Bolt
Courtesy of GENERAL MOTORS COMPANY

7. Rotate the right frame reinforcement to its original position.
8. Install the exhaust front hanger bracket bolt (3).
9. Install the frame reinforcement bolt (2).

CAUTION: Refer to Fastener Caution

CAUTION: Refer to Torque-to-Yield Fastener Caution

10. Tighten the NEW exhaust front hanger bracket bolt (3) to 22 N.m (16 lb ft).
11. Tighten the NEW frame reinforcement bolt (2) to 60 N.m (44 lb ft).

12. Tighten the drivetrain and front suspension frame bolt (1) to 160 N.m (118 lb ft).
13. Lower the vehicle.

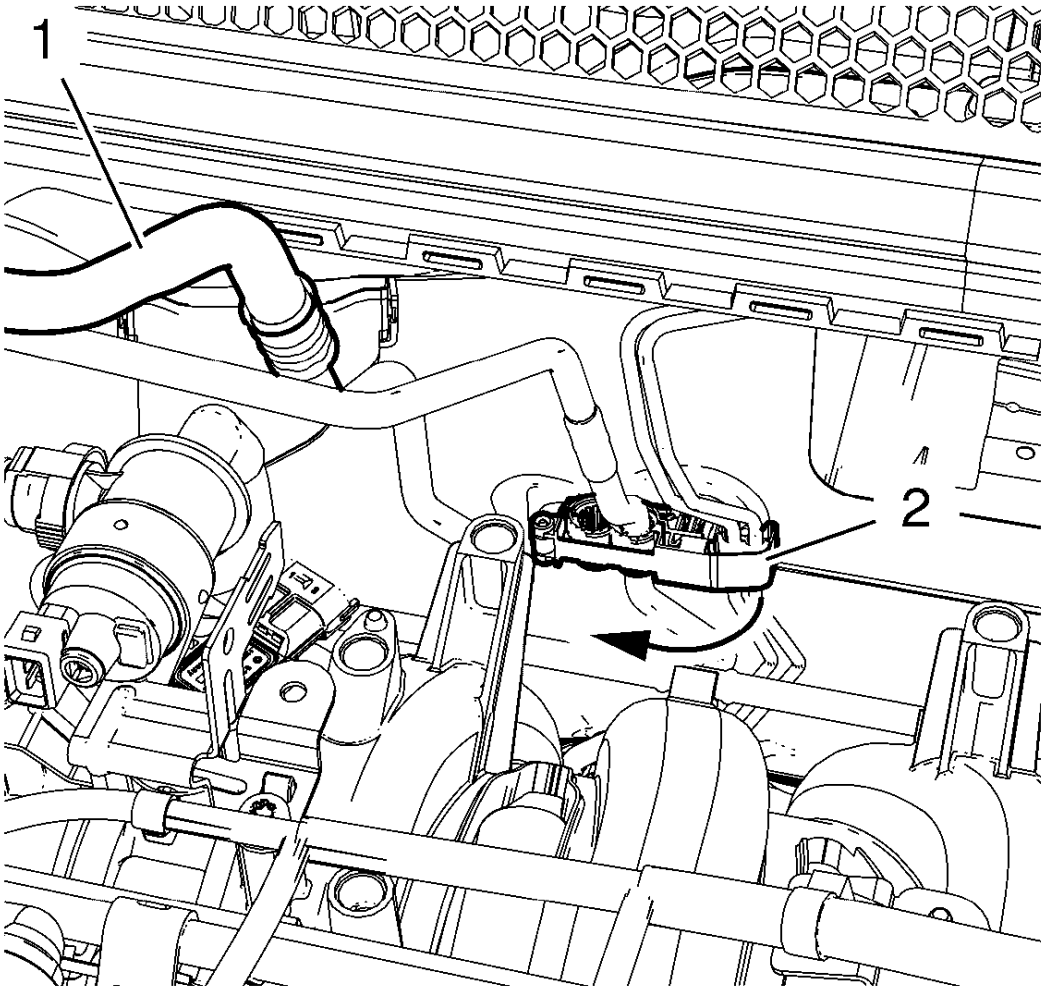

Fig. 113: Fuel Feed Pipe And Fuel Pipe Clip
Courtesy of GENERAL MOTORS COMPANY

14. Install the fuel feed pipe (1) to the upper bulkhead clip.
15. Close the upper bulk head clip (2).

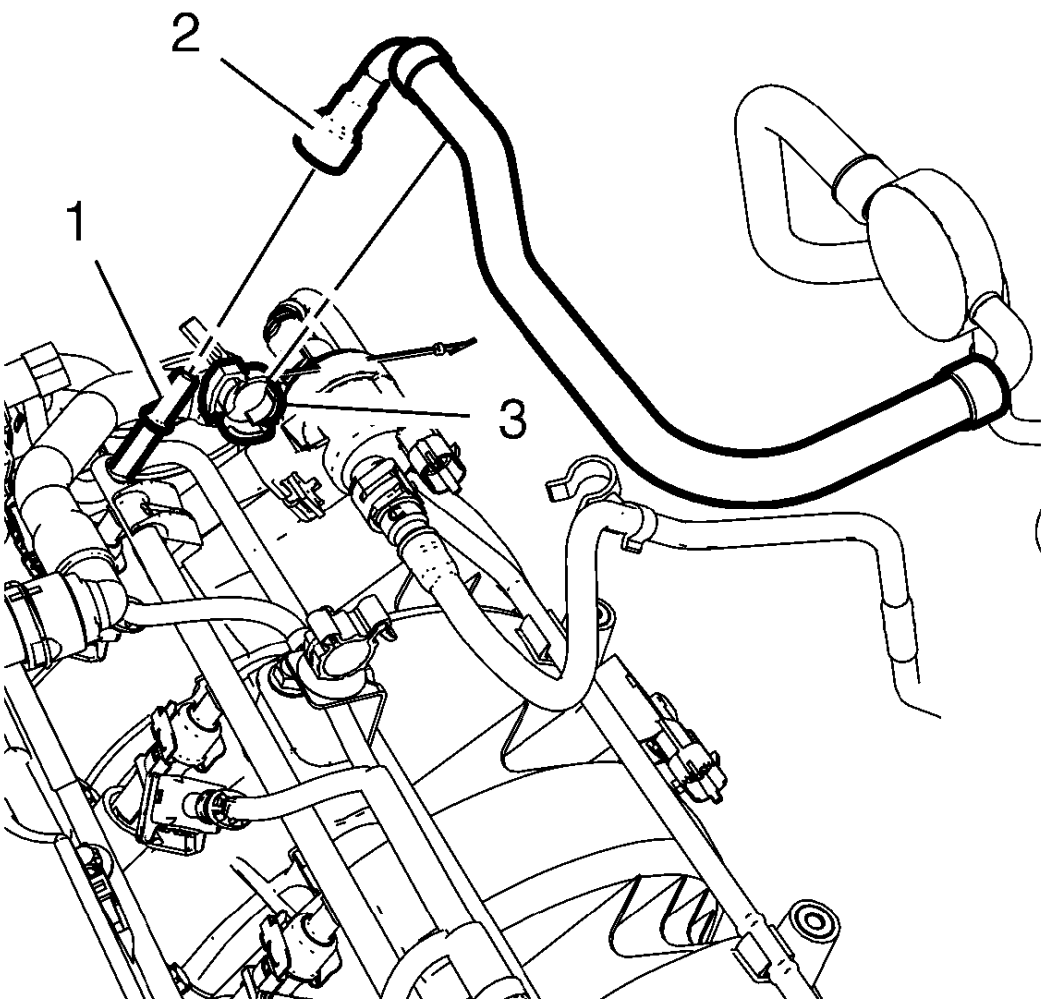

Fig. 114: Fuel Feed Pipe
Courtesy of GENERAL MOTORS COMPANY

16. Remove the caps from the fuel feed pipe (2) and from the multiport fuel injection fuel rail (1).
17. Install the fuel feed pipe (2) to the multiport fuel injection fuel rail (1).
18. Clip in the fuel feed pipe (2) to the fuel feed pipe clip (3).
19. Connect the battery negative cable. Refer to **Battery Negative Cable Disconnection and Connection**

FUEL TANK FUEL PUMP MODULE REPLACEMENT

Special Tools

CH-45722 Fuel Sender Lock Ring Wrench

For equivalent regional tools, refer to **Special Tools** .

Removal Procedure

1. Remove the fuel tank. Refer to **Fuel Tank Replacement**.

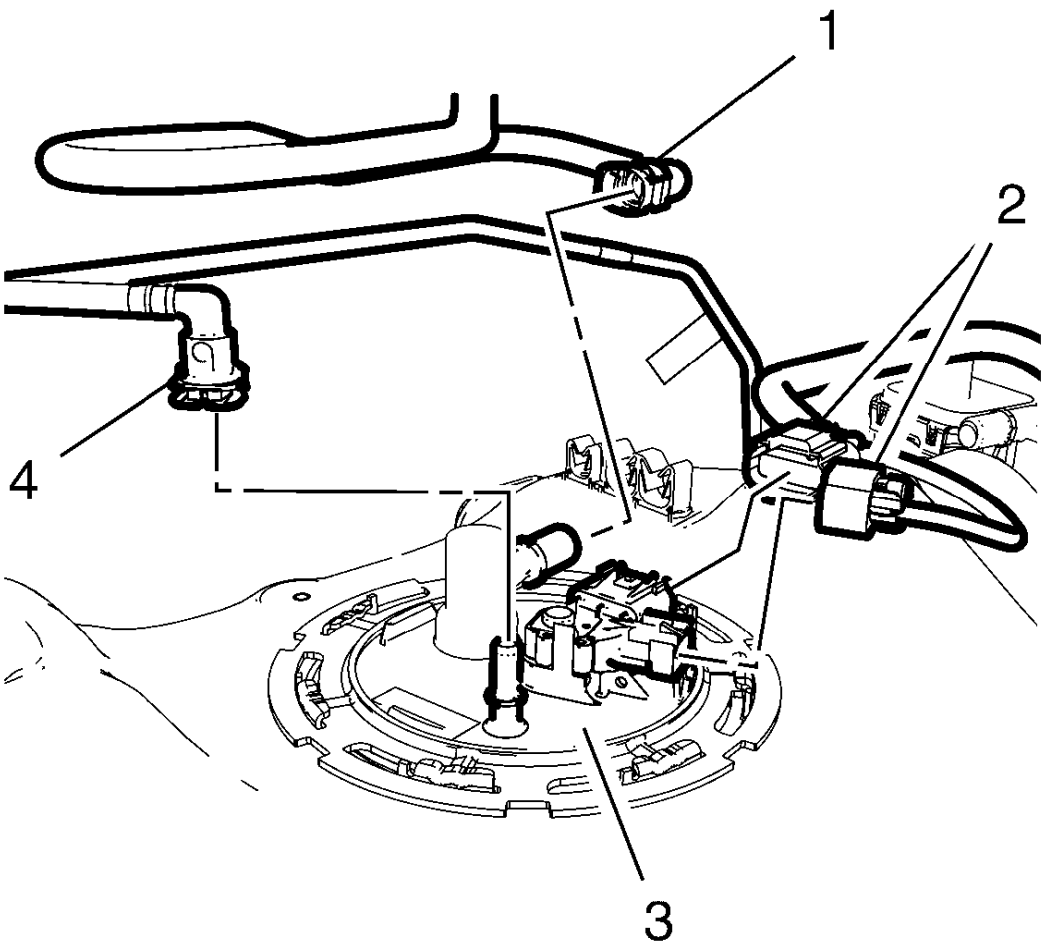

Fig. 115: Fuel Tank Fuel Pump Module, Fuel Tank Vent Pipe And Fuel Feed Pipe
Courtesy of GENERAL MOTORS COMPANY

2. Disconnect the fuel tank vent pipe (1) and the fuel feed pipe (4) from the fuel tank fuel pump module (3).
3. Disconnect the fuel tank fuel pump module wiring harness (2) from the fuel tank fuel pump module (3).
4. Close the fuel feed pipe and the fuel tank vent feed pipe with suitable caps.

NOTE: **Do NOT use impact tools. Significant force will be required to release the lock ring. The use of a hammer and screwdriver is not recommended. Secure the fuel tank in order to prevent fuel tank rotation.**

5. Using the **CH-45722** wrench and a long breaker-bar, rotate the fuel pump module lock ring in a counterclockwise direction in order to unlock the lock ring.

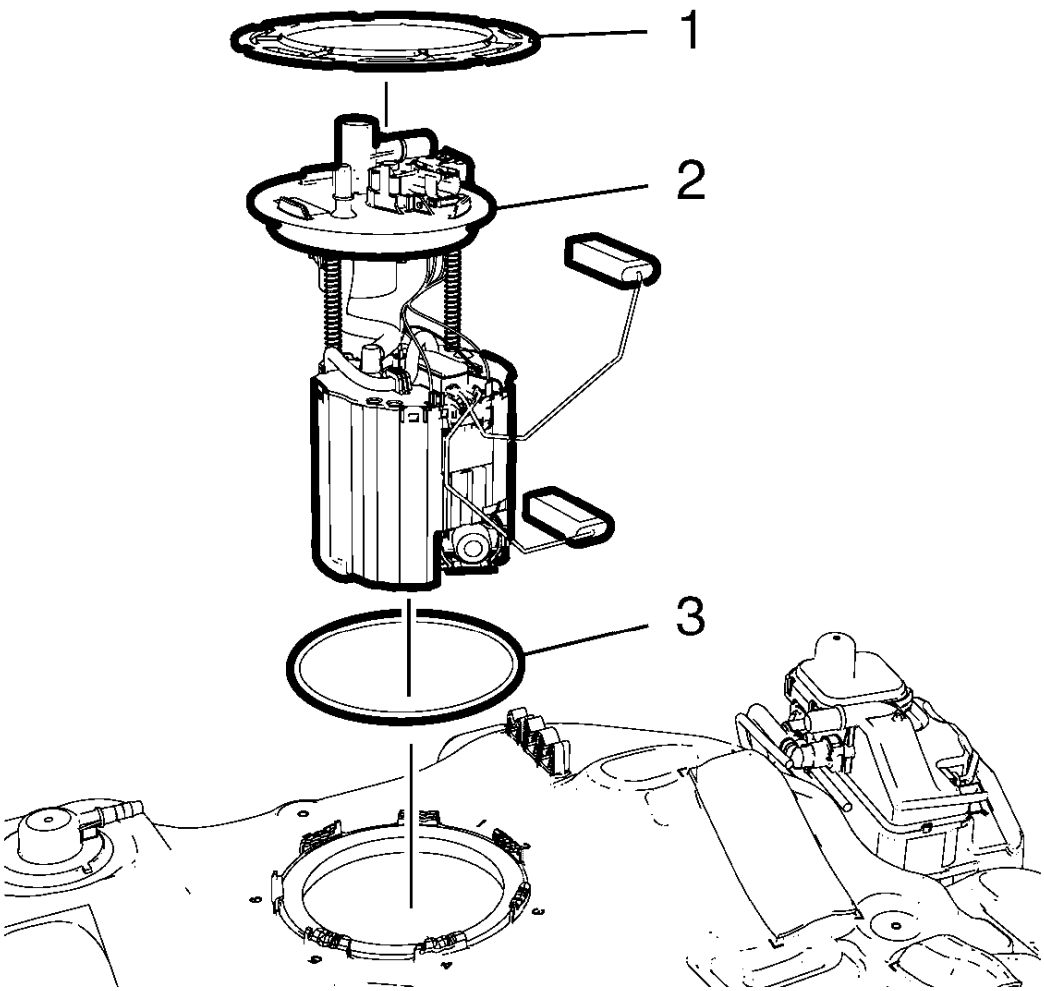

Fig. 116: Fuel Tank Fuel Pump Module
Courtesy of GENERAL MOTORS COMPANY

6. Remove fuel tank fuel pump module lock ring (1).

NOTE: Lift the fuel tank fuel pump module up slightly.

7. Remove the fuel tank fuel pump module (2).
8. Remove and DISCARD the fuel pump module seal (3).
9. Remove the fuel level sensor from the fuel tank fuel pump module. Refer to **Fuel Level Sensor Replacement**.

Installation Procedure

1. Install the fuel level sensor to the fuel tank fuel pump module. Refer to **Fuel Level Sensor Replacement**.

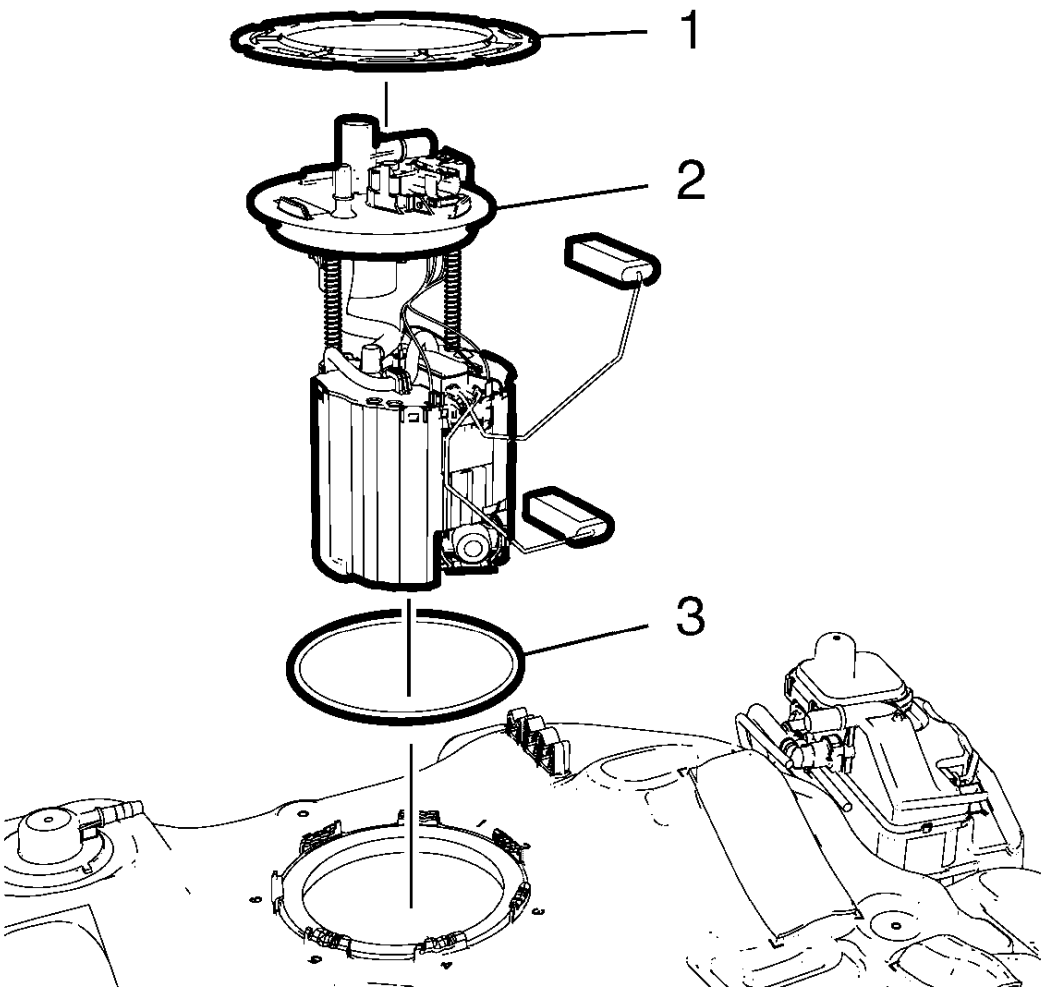

Fig. 117: Fuel Tank Fuel Pump Module
Courtesy of GENERAL MOTORS COMPANY

2. Install a NEW fuel tank module seal (3).
3. Install the fuel tank fuel pump module (2).
4. Install the fuel pump module lock ring (1).

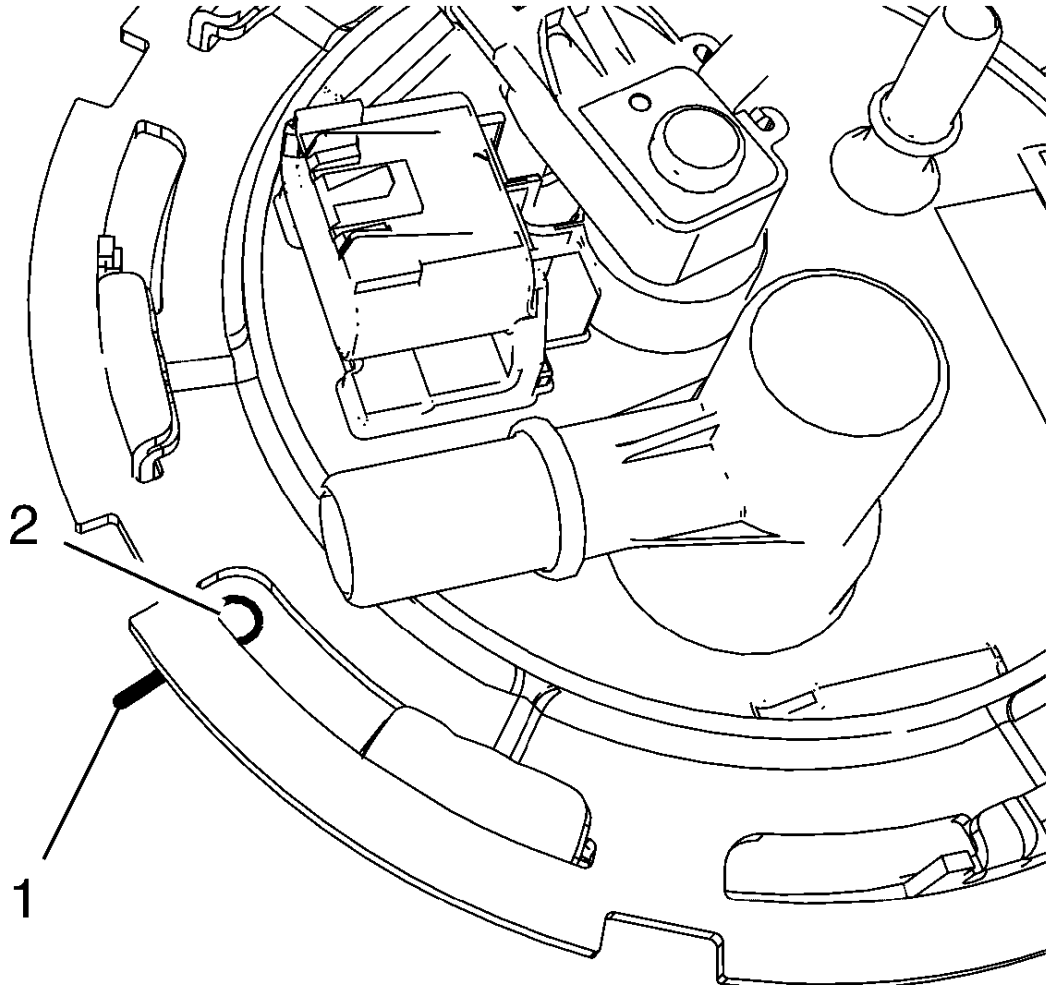

Fig. 118: Fuel Tank Fuel Pump Module Alignment Mark
Courtesy of GENERAL MOTORS COMPANY

5. Make sure that the fuel tank fuel pump module (2) align with the fuel tank line (1).

NOTE: **Do NOT use impact tools. Significant force will be required to release the lock ring. The use of a hammer and screwdriver is not recommended. Secure the fuel tank in order to prevent fuel tank rotation.**

6. Using the **CH-45722** wrench and a long breaker-bar, rotate the lock ring in a clockwise direction in order to lock the lock ring.

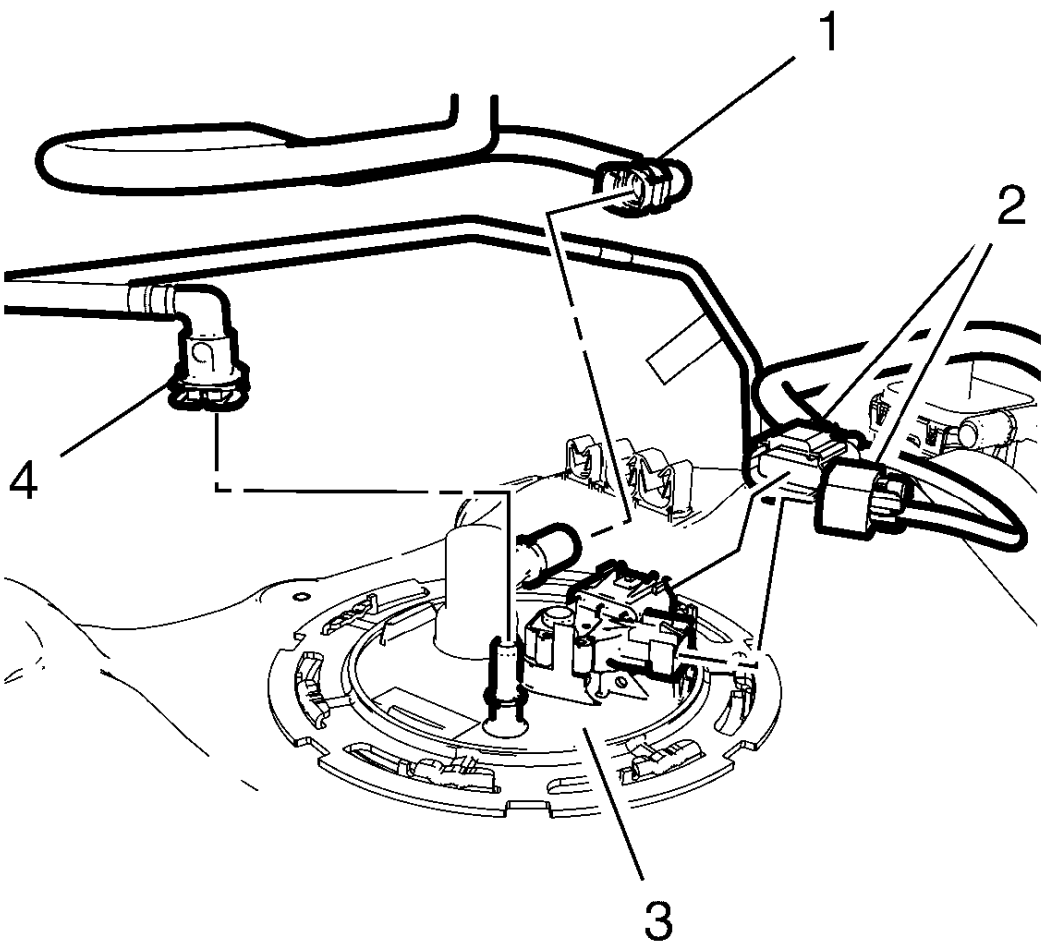

Fig. 119: Fuel Tank Fuel Pump Module, Fuel Tank Vent Pipe And Fuel Feed Pipe
Courtesy of GENERAL MOTORS COMPANY

7. Connect the fuel tank fuel pump module wiring harness (2) to the fuel tank fuel pump module (3).
8. Remove the caps from the fuel feed pipe and the fuel tank vent feed pipe.
9. Connect the fuel tank vent pipe (1) and the fuel feed pipe (4) to the fuel tank fuel pump module (3).
10. Install the fuel tank. Refer to **Fuel Tank Replacement**.

FUEL TANK PRESSURE SENSOR REPLACEMENT

Removal Procedure

1. Disconnect the battery negative cable. Refer to **Battery Negative Cable Disconnection and Connection** .
2. Remove the fuel tank. Refer to **Fuel Tank Replacement**.

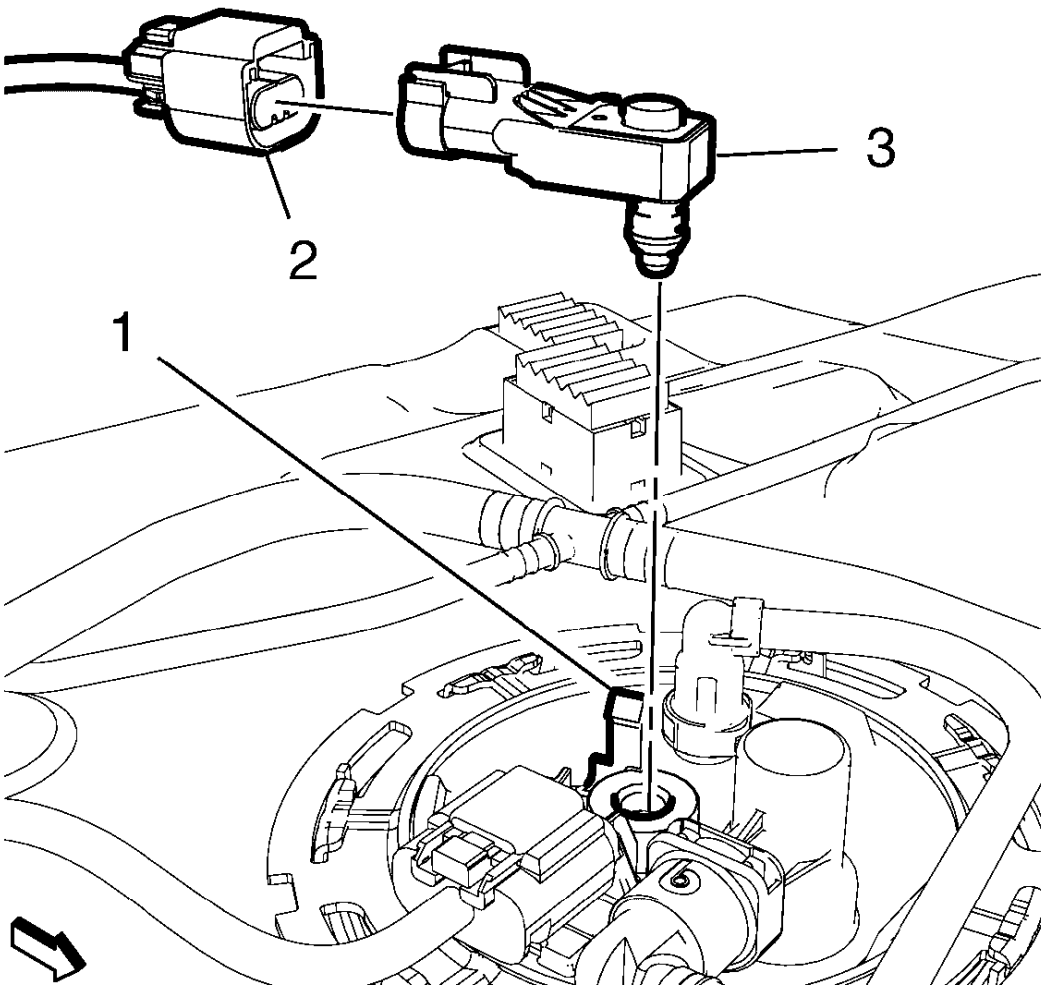

Fig. 120: Fuel Tank Pressure Sensor, Wiring Harness Plug And Pump Module Clip
Courtesy of GENERAL MOTORS COMPANY

3. Disconnect the fuel tank pressure sensor wiring harness plug (2).
4. Unclip the fuel tank pressure sensor (3) from the fuel tank pump module clip (1).

Installation Procedure

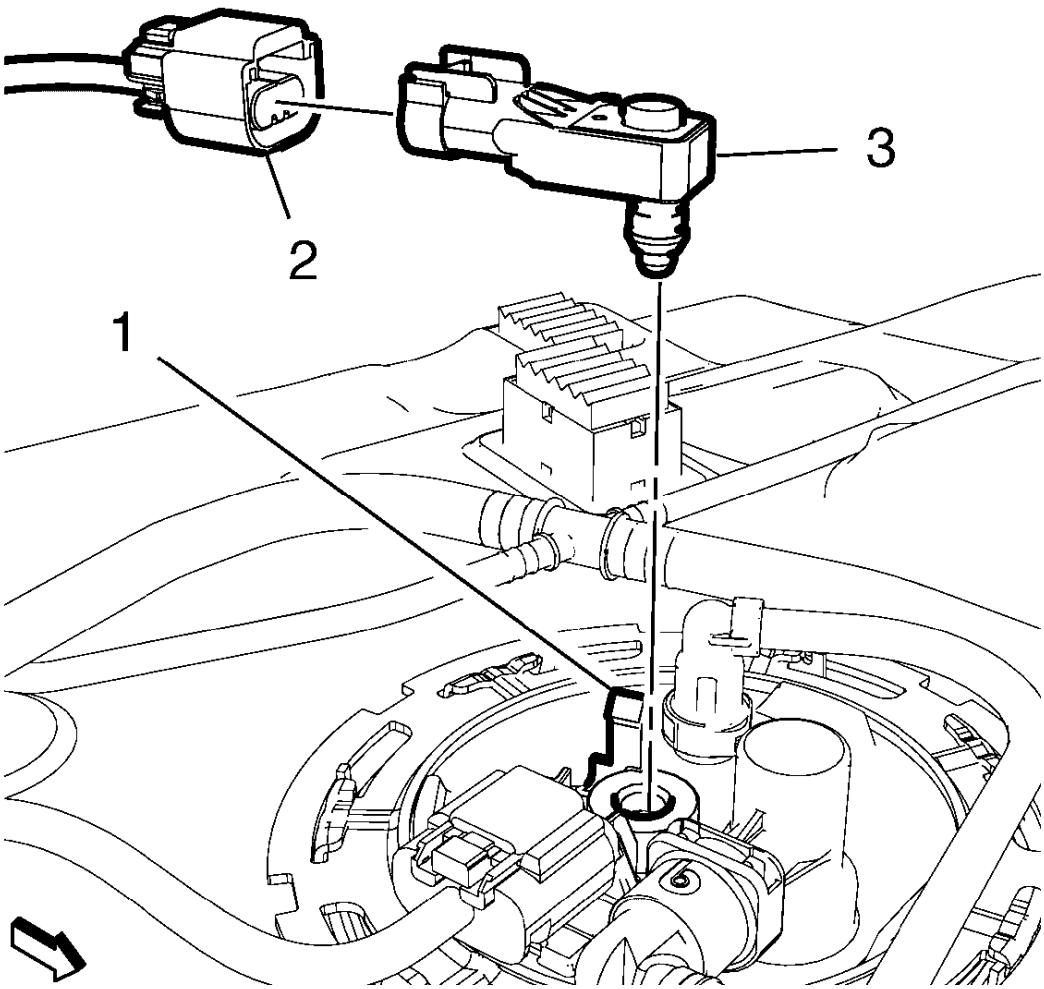

Fig. 121: Fuel Tank Pressure Sensor, Wiring Harness Plug And Pump Module Clip
Courtesy of GENERAL MOTORS COMPANY

1. Clip the fuel tank pressure sensor (3) to the fuel tank pump module clip (1).
2. Connect the fuel tank pressure sensor wiring harness plug (2).
3. Install the fuel tank. Refer to **Fuel Tank Replacement**.
4. Connect the battery negative cable. Refer to **Battery Negative Cable Disconnection and Connection** .

FUEL PUMP FLOW CONTROL MODULE REPLACEMENT

Removal Procedure

1. Open the rear lid.
2. Remove the rear compartment side trim - right side. Refer to **Rear Compartment Side Trim Replacement - Right Side** .

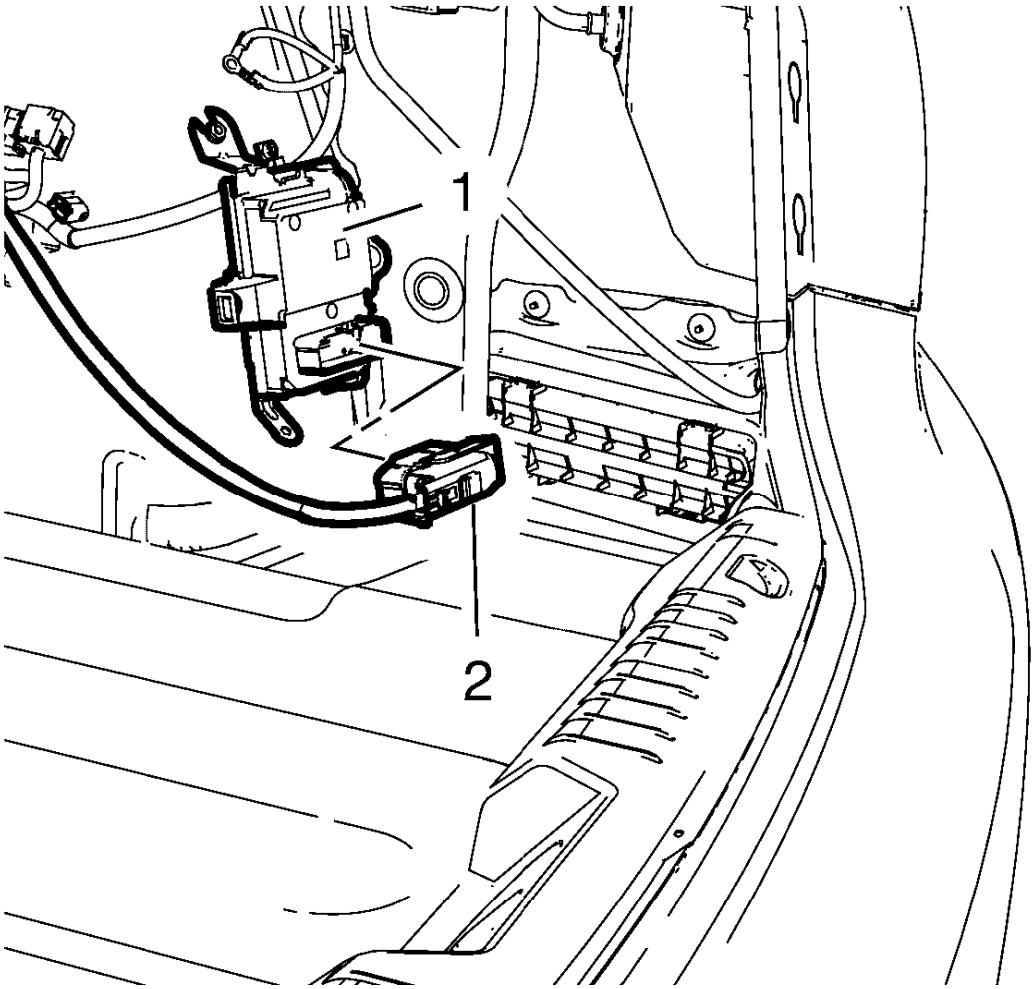

Fig. 122: Fuel Pump Flow Control Module
Courtesy of GENERAL MOTORS COMPANY

3. Remove the fuel pump flow control module wiring harness plug (2) from the fuel pump flow control module (1).

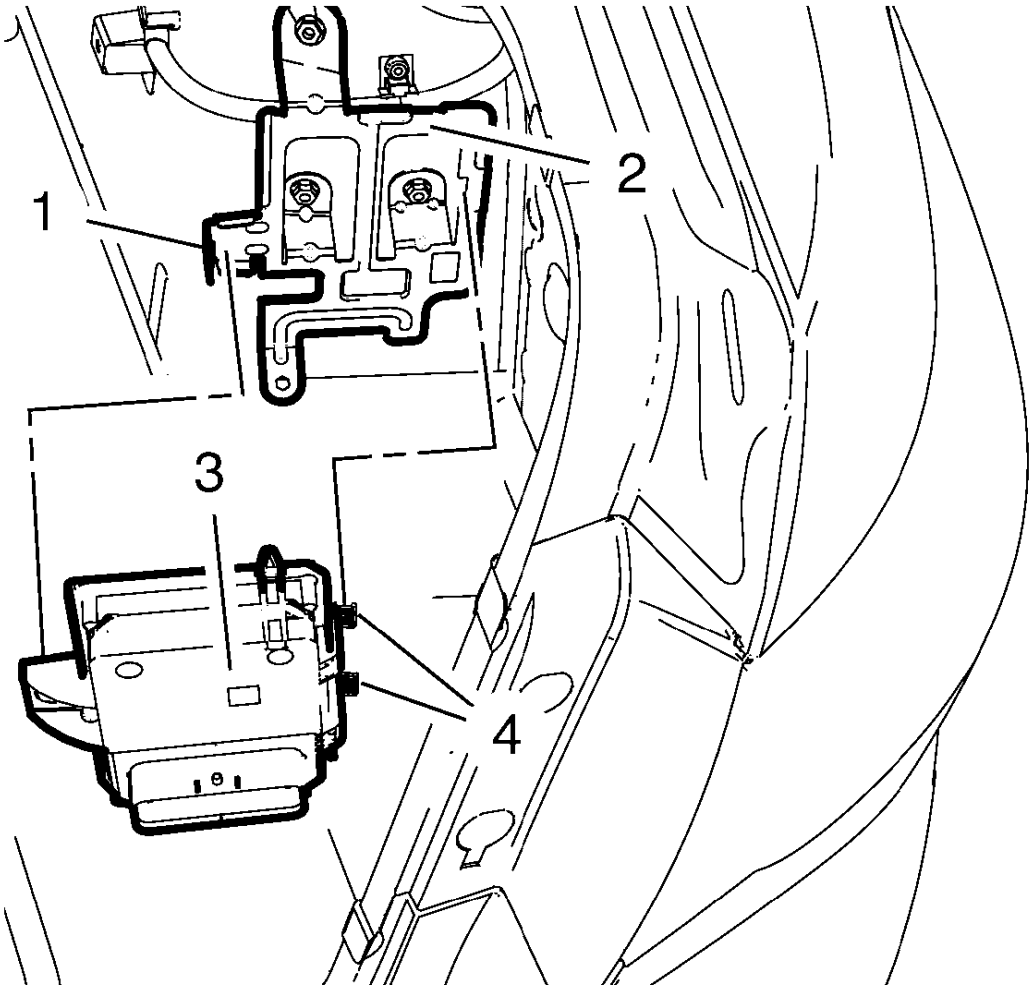

Fig. 123: Fuel Pump Flow Control Module
Courtesy of GENERAL MOTORS COMPANY

4. Unclip the fuel pump flow control module bracket clip (1) from the fuel pump flow control module (3).
5. Unclip the 2 fuel pump flow control module clips (4) from the fuel pump flow control module bracket (2).

Installation Procedure

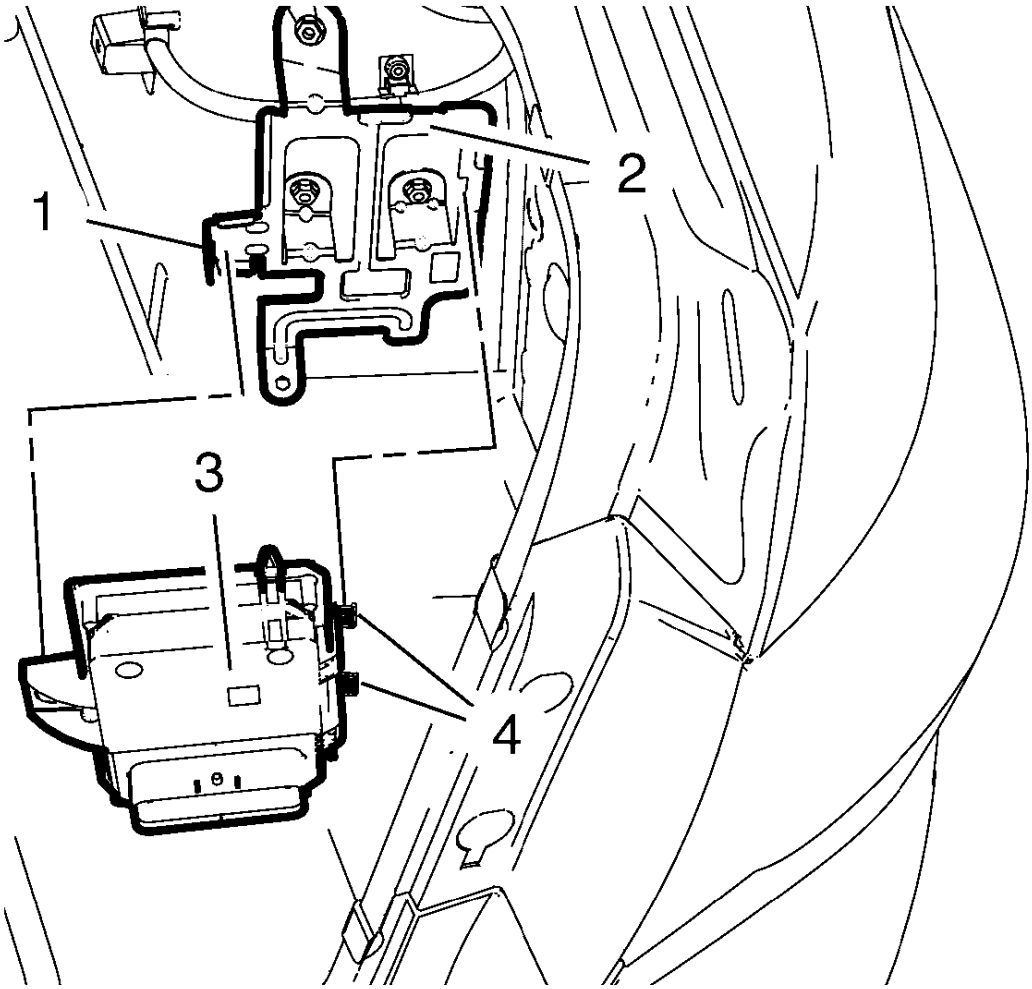

Fig. 124: Fuel Pump Flow Control Module
Courtesy of GENERAL MOTORS COMPANY

1. Clip the 2 fuel pump flow control module clips (4) to the fuel pump flow control module bracket (2).
2. Clip the fuel pump flow control module (3) to the fuel pump flow control module bracket clip (1).

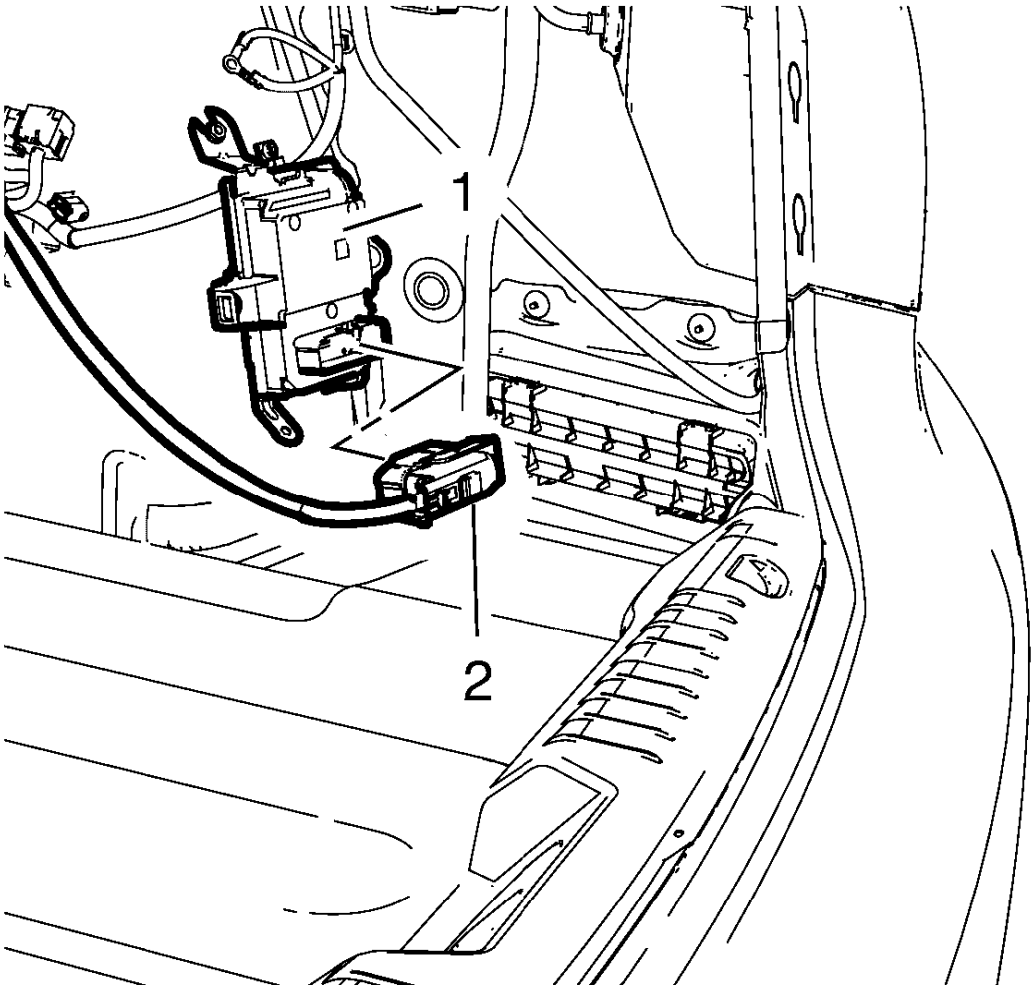

Fig. 125: Fuel Pump Flow Control Module
Courtesy of GENERAL MOTORS COMPANY

3. Plug the fuel pump flow control module wiring harness plug (2) to the fuel pump flow control module (1).
4. Install the rear compartment side trim - right side. Refer to **Rear Compartment Side Trim Replacement - Right Side** .
5. Close the rear lid.
6. Program the control module. Refer to **Fuel Pump Control Module Programming and Setup**

FUEL LEVEL SENSOR REPLACEMENT

Removal Procedure

WARNING: Refer to Gasoline/Gasoline Vapors Warning .

WARNING: Refer to Safety Goggles and Fuel Warning .

CAUTION: Use care while handling the fuel sender to prevent damage and incorrect fuel level readings.

1. Remove the fuel tank fuel pump module. Refer to **Fuel Tank Fuel Pump Module Replacement**.

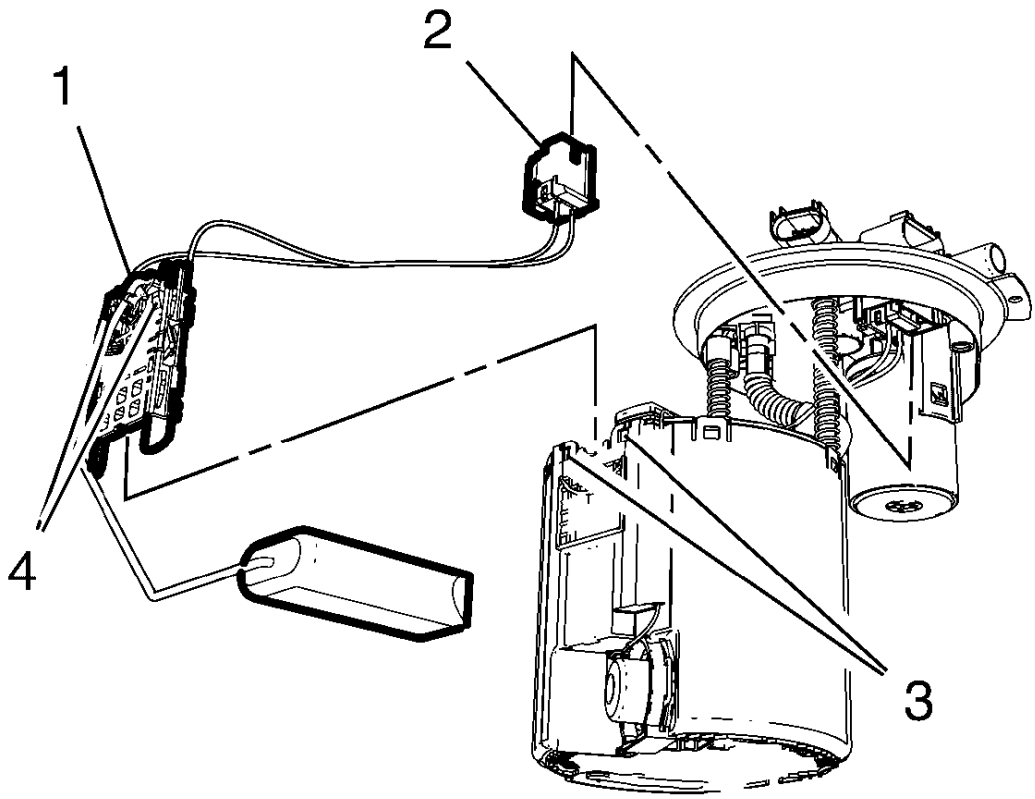

Fig. 126: Fuel Level Sensor And Components
Courtesy of GENERAL MOTORS COMPANY

2. Disconnect the fuel level sensor wiring harness plug (2) from the fuel tank fuel pump module.
3. Unclip the 2 fuel level sensor retainer pins (4) from the fuel level sensor retainer pin holes (3).
4. Remove the fuel level sensor (1) from the fuel tank fuel pump module.

Installation Procedure

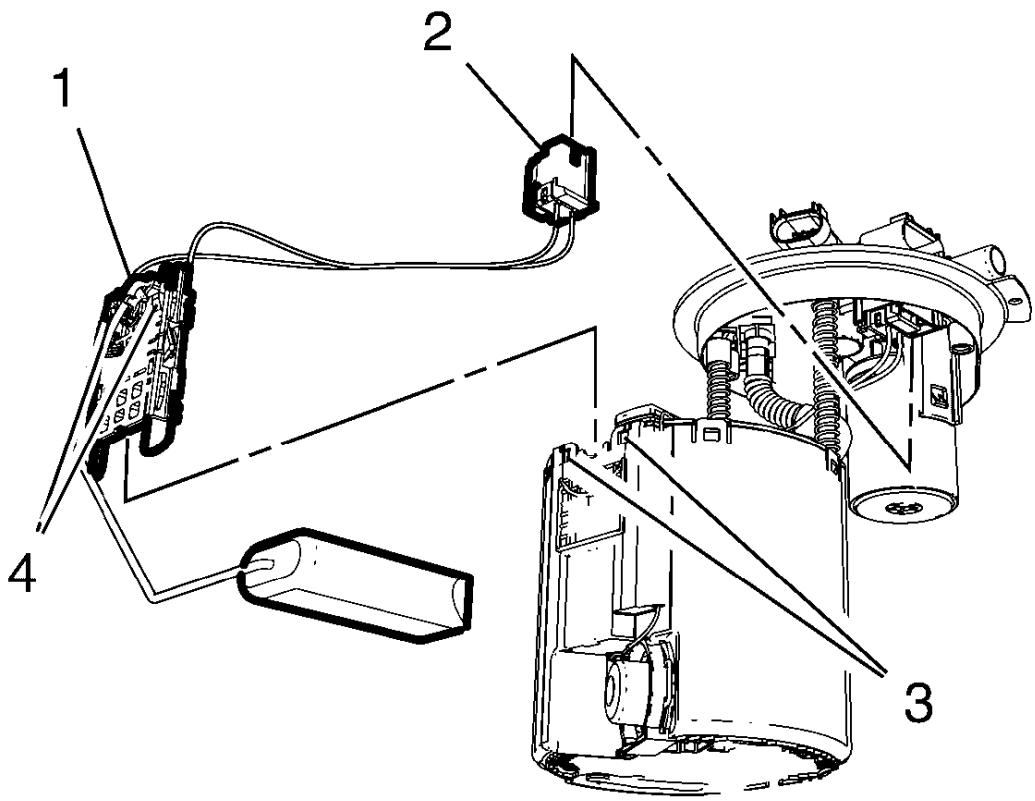

Fig. 127: Fuel Level Sensor And Components
Courtesy of GENERAL MOTORS COMPANY

1. Install the fuel level sensor (1) to the fuel tank fuel pump module.
2. The fuel level sensor retainer pins (4) must engage audibly in the fuel level sensor retainer pin holes (3).
3. Connect the fuel level sensor wiring harness plug (2) to the fuel tank fuel pump module.
4. Install the fuel tank fuel pump module. Refer to **Fuel Tank Fuel Pump Module Replacement**.

FUEL PRESSURE SENSOR REPLACEMENT

Removal Procedure

WARNING: Refer to Gasoline/Gasoline Vapors Warning .

WARNING: Refer to Safety Goggles and Fuel Warning .

1. Relieve the fuel system pressure. Refer to **Fuel Pressure Relief**.
2. Disconnect the battery negative cable. Refer to **Battery Negative Cable Disconnection and Connection** .
3. Raise and support the vehicle. Refer to **Lifting and Jacking the Vehicle** .

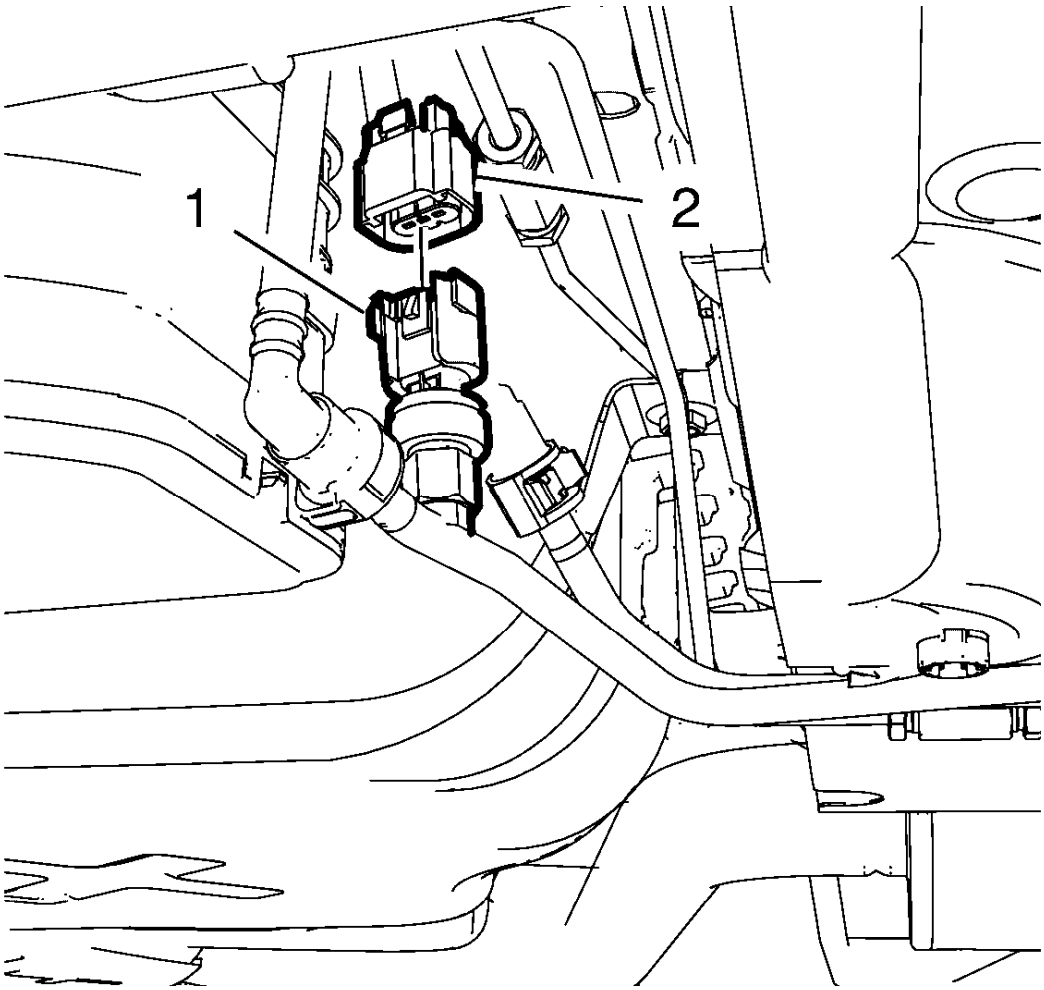

Fig. 128: Fuel Pressure Sensor
Courtesy of GENERAL MOTORS COMPANY

4. Remove the fuel pressure sensor wiring harness plug (2) from the fuel pressure sensor (1).

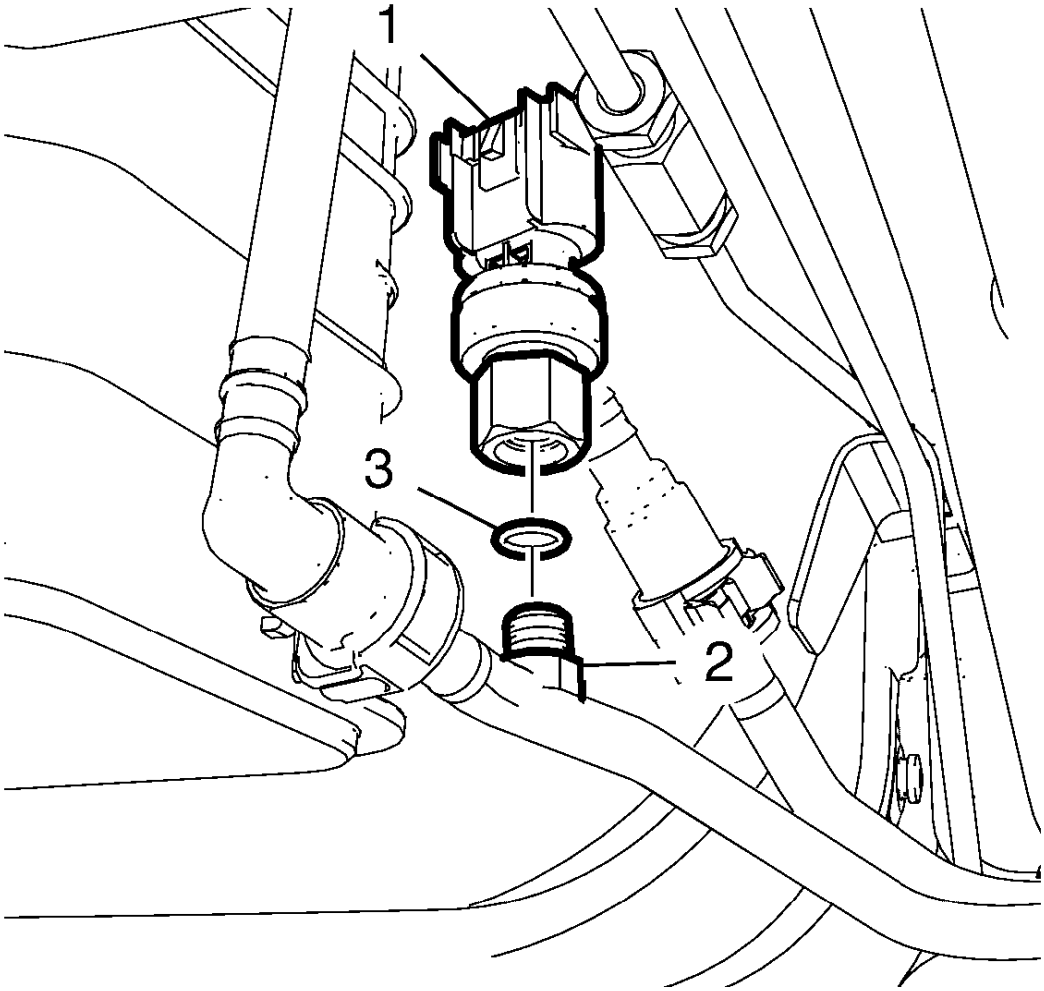

Fig. 129: Fuel Pressure Sensor And Fuel Pressure Relief Valve
Courtesy of GENERAL MOTORS COMPANY

5. Place a appropriate container/drain pan to catch excess fuel.
6. Remove the fuel pressure sensor (1) from the fuel pressure line (2).
7. Remove the fuel pressure sensor seal ring (3).

Installation Procedure

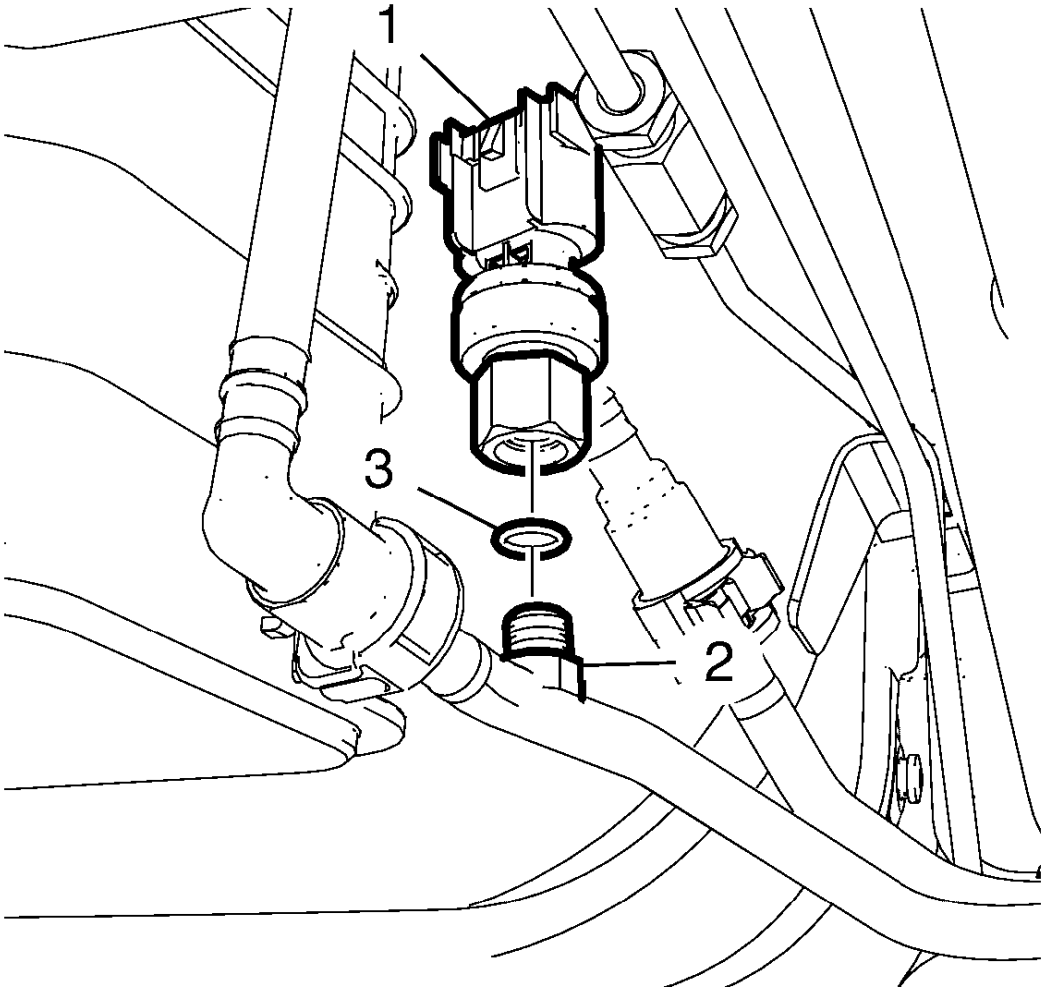

Fig. 130: Fuel Pressure Sensor And Fuel Pressure Relief Valve
Courtesy of GENERAL MOTORS COMPANY

1. Install a NEW fuel pressure sensor seal ring (3).

CAUTION: Refer to Fastener Caution .

2. Install the fuel pressure sensor (1) to the fuel pressure line (2) and tighten to 19 N.m (14 lb ft).

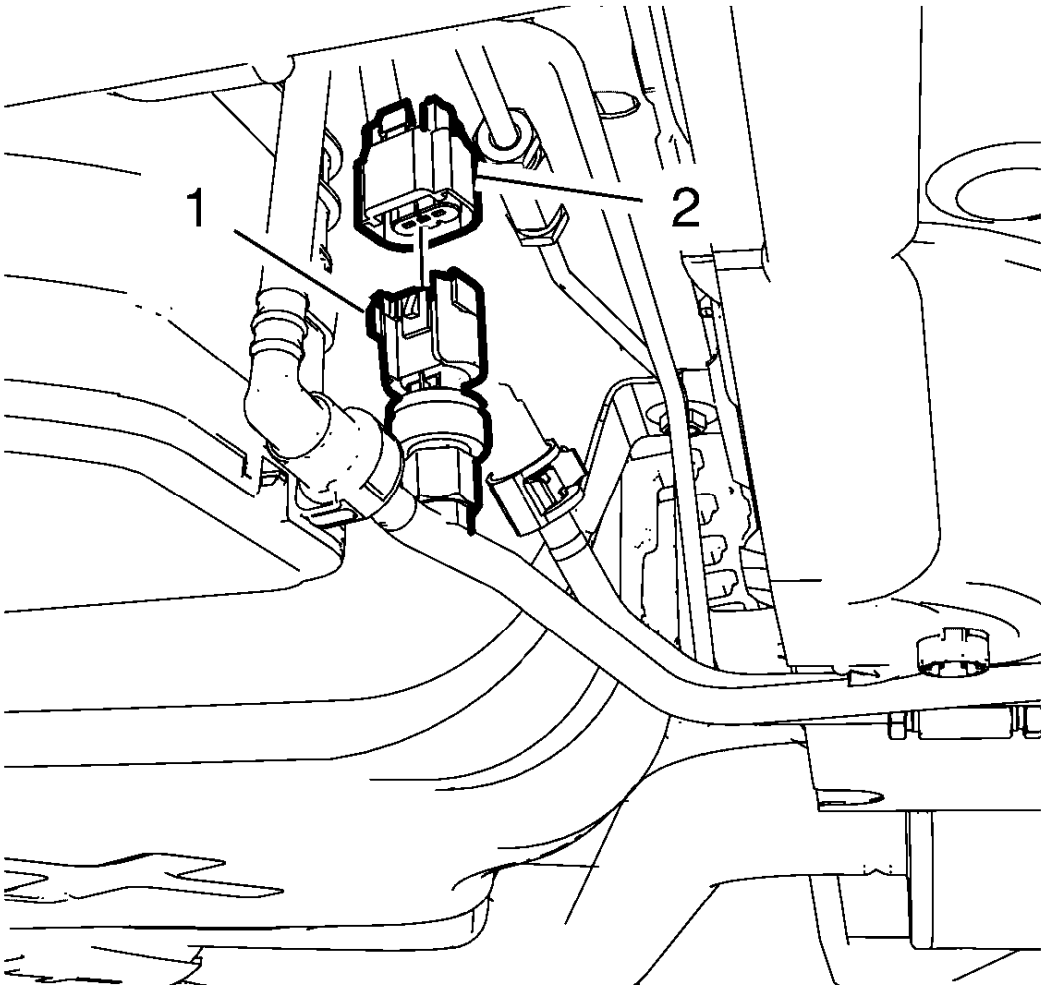

Fig. 131: Fuel Pressure Sensor
Courtesy of GENERAL MOTORS COMPANY

3. Plug the fuel pressure sensor wiring harness plug (2) to the fuel pressure sensor (1).
4. Lower the vehicle.
5. Connect the battery negative cable. Refer to **Battery Negative Cable Disconnection and Connection** .

FUEL SYSTEM CLEANING

NOTE: If the fuel filter is plugged, the fuel tank should be inspected internally and cleaned if necessary.

1. Drain the fuel tank. Refer to **Fuel Tank Draining**.
2. Remove the fuel pump module assembly. Refer to **Fuel Tank Fuel Pump Module Replacement**.
3. Inspect the fuel pump module strainer. Replace the pump module assembly if the fuel strainer is contaminated.

NOTE: When flushing the fuel tank, handle the fuel and water mixture as a hazardous material. Handle the fuel and water in accordance with all applicable local, state, and federal laws and regulations.

4. Flush the fuel tank with hot water.
5. Pour the water out of the fuel sender assembly opening in the fuel tank. Rock the fuel tank in order to be sure that the removal of the water from the fuel tank is complete.
6. Allow the tank to dry completely before reassembly.
7. Disconnect the fuel feed pipe at the engine fuel rail. Refer to **Fuel Feed Pipe Replacement**.

NOTE: Only use oil-free compressed air to blow out the fuel pipes.

8. Clean the fuel pipes by applying air pressure in the opposite direction of the fuel flow.
9. Connect the fuel feed pipe to the engine fuel rail. Refer to **Fuel Feed Pipe Replacement**.
10. Install the fuel pump module assembly. Refer to **Fuel Tank Fuel Pump Module Replacement**.

FUEL INJECTOR REPLACEMENT

Special Tools

- **CH-48027** Fuel Pressure Gauge
- **CH-41769** Fuel Line Disconnect Tool Set

For equivalent regional tools, refer to **Special Tools** .

Removal Procedure

1. Open the hood.
2. Disconnect the negative cable from the battery. Refer to **Battery Negative Cable Disconnection and Connection** .
3. Remove the positive crankcase ventilation tube. Refer to **Positive Crankcase Ventilation Hose/Pipe/Tube Replacement** .
4. Disconnect the wiring harness from the:
    1. Evaporative emission purge valve
    2. Fuel injectors
    3. Manifold absolute pressure sensor
5. Place a drain pan underneath the vehicle.

WARNING: Gasoline or gasoline vapors are highly flammable. A fire could occur if an ignition source is present. Never drain or store gasoline or diesel fuel in an open container, due to the possibility of fire or explosion. Have a dry chemical (Class B) fire extinguisher nearby.

6. Release the fuel pressure using the test connection with **CH-48027** gauge.

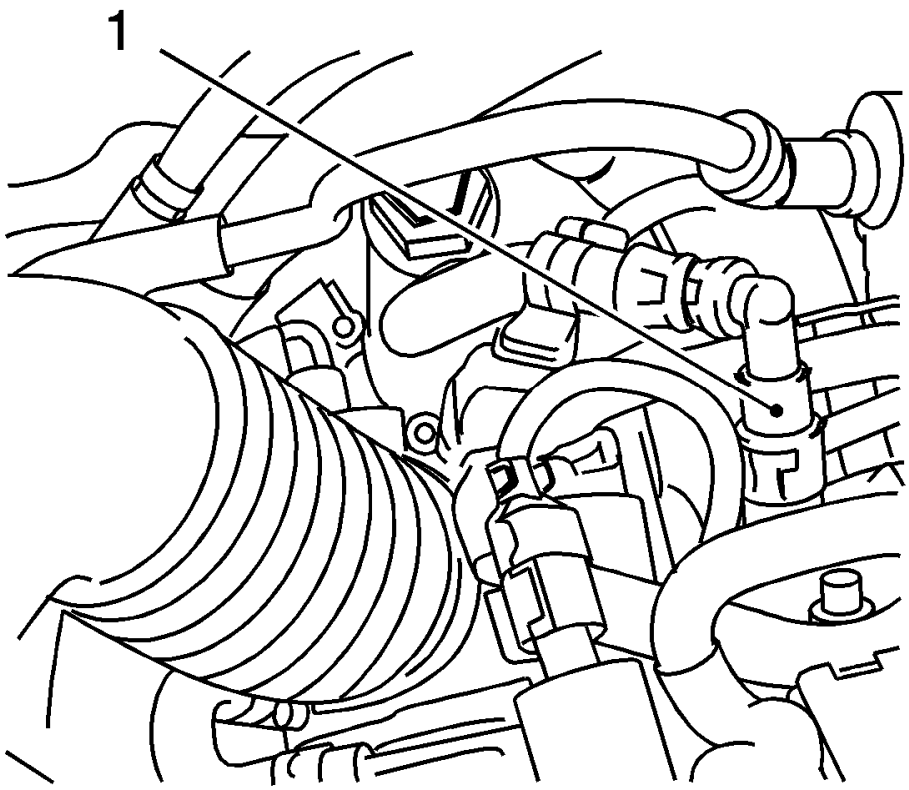

Fig. 132: View Of Fuel Return Line
Courtesy of GENERAL MOTORS COMPANY

7. Disconnect the quick-release fitting of the fuel feed pipe (1) with **CH-41769** tool set.
8. Install a suitable cap to the fuel feed pipe.

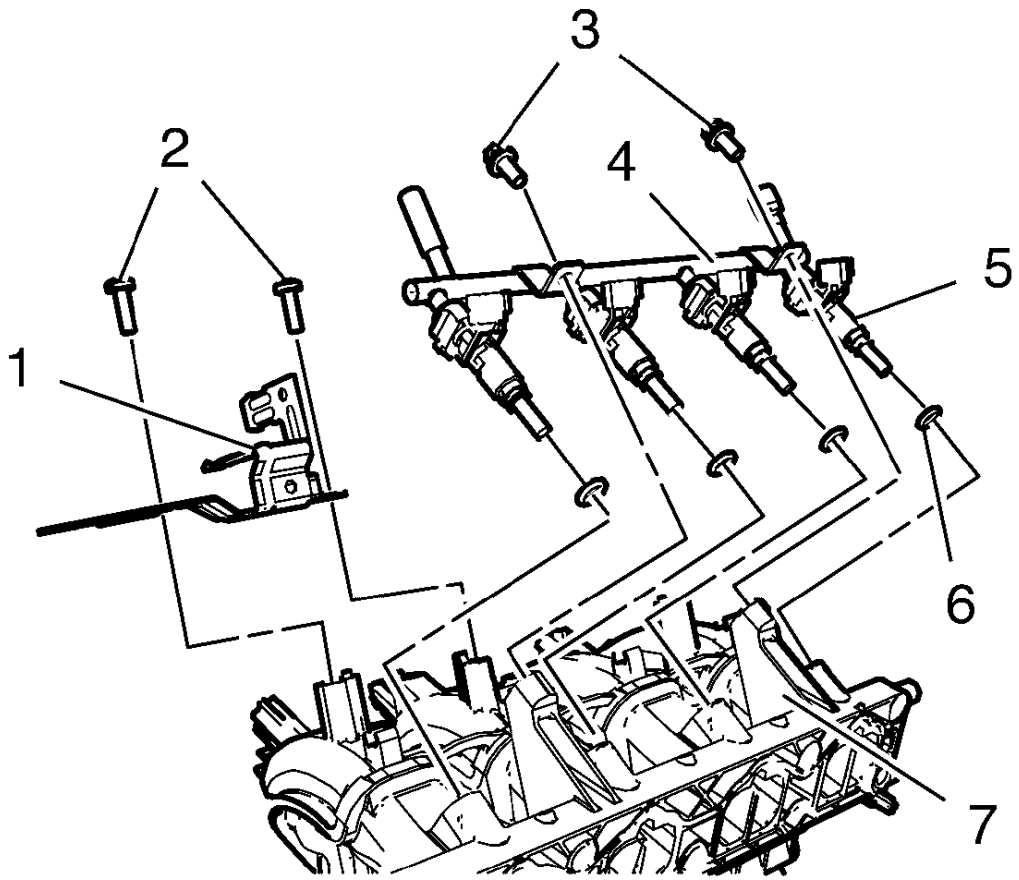

Fig. 133: Multiport Fuel Injection Fuel Rail And Bolts
Courtesy of GENERAL MOTORS COMPANY

9. Remove the 2 evaporative emission canister purge solenoid valve bracket bolts (2).
10. Remove the evaporative emission canister purge solenoid valve bracket (1) from the intake manifold (7).
11. Remove the 2 multiport fuel injection fuel rail bolts (3).
12. Remove the multiport fuel injection fuel rail (4) with the fuel injectors (5) from the intake manifold (7).
13. Remove the 4 fuel injector seals (6).

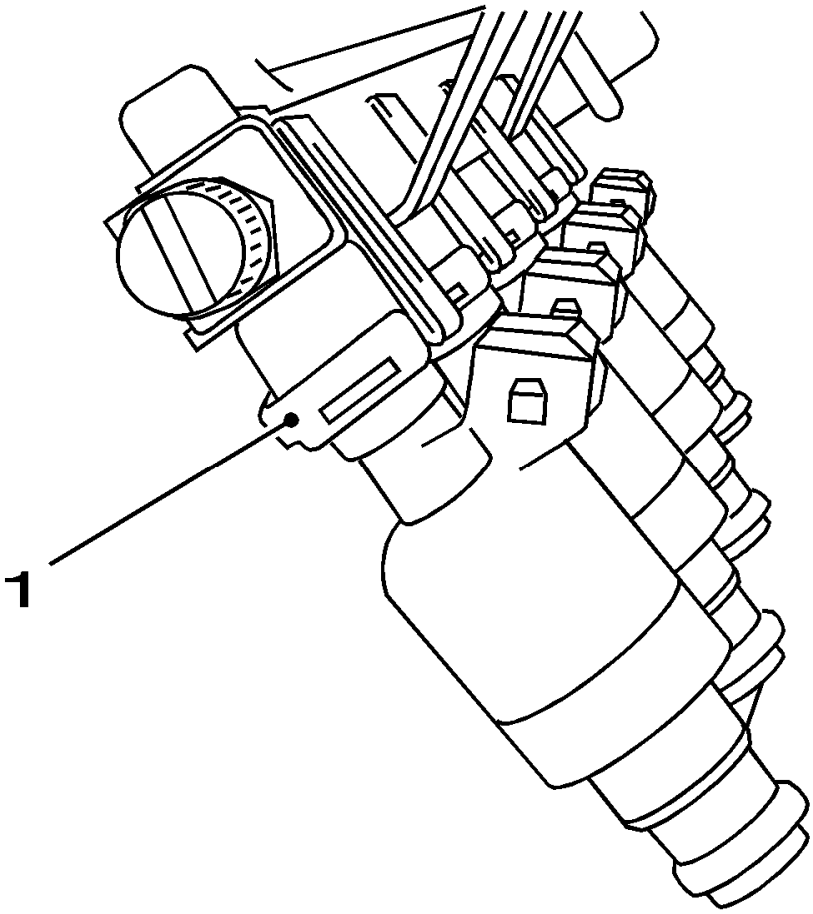

Fig. 134: View Of Injectors Retaining Clamps
Courtesy of GENERAL MOTORS COMPANY

14. Remove the fuel injector retainer (1).
15. Remove the fuel injectors.

Installation Procedure

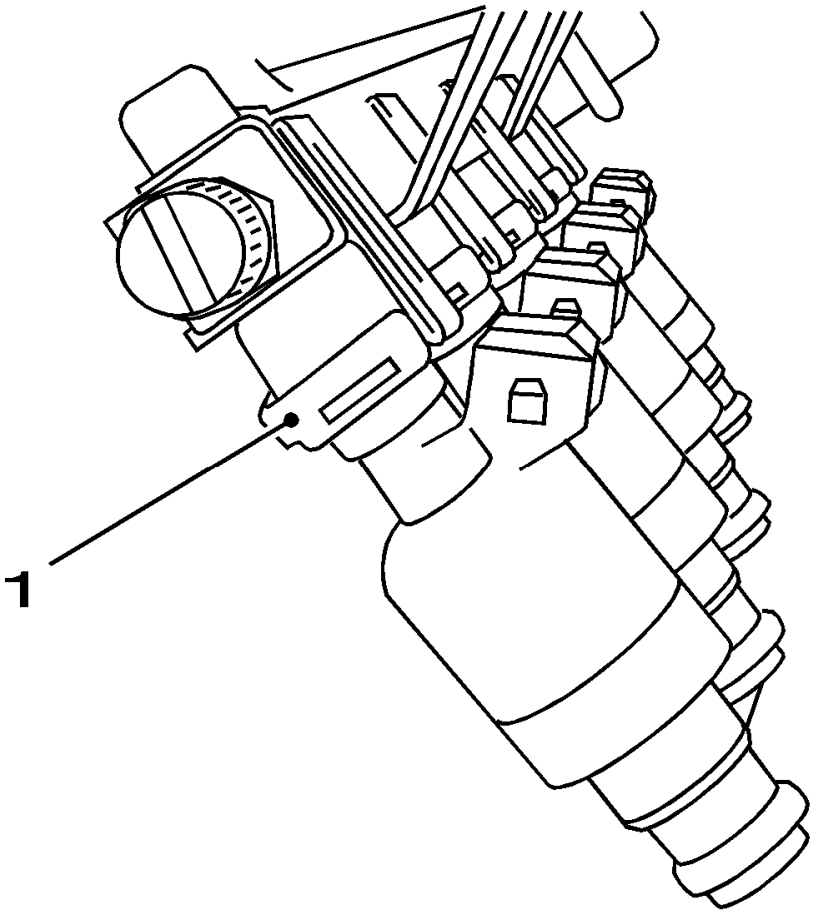

Fig. 135: View Of Injectors Retaining Clamps
Courtesy of GENERAL MOTORS COMPANY

1. Install the fuel injectors.

NOTE: Install NEW fuel injector seals, coat the multiport fuel injector seals with silicone grease.

2. Install the fuel injector retainer (1).

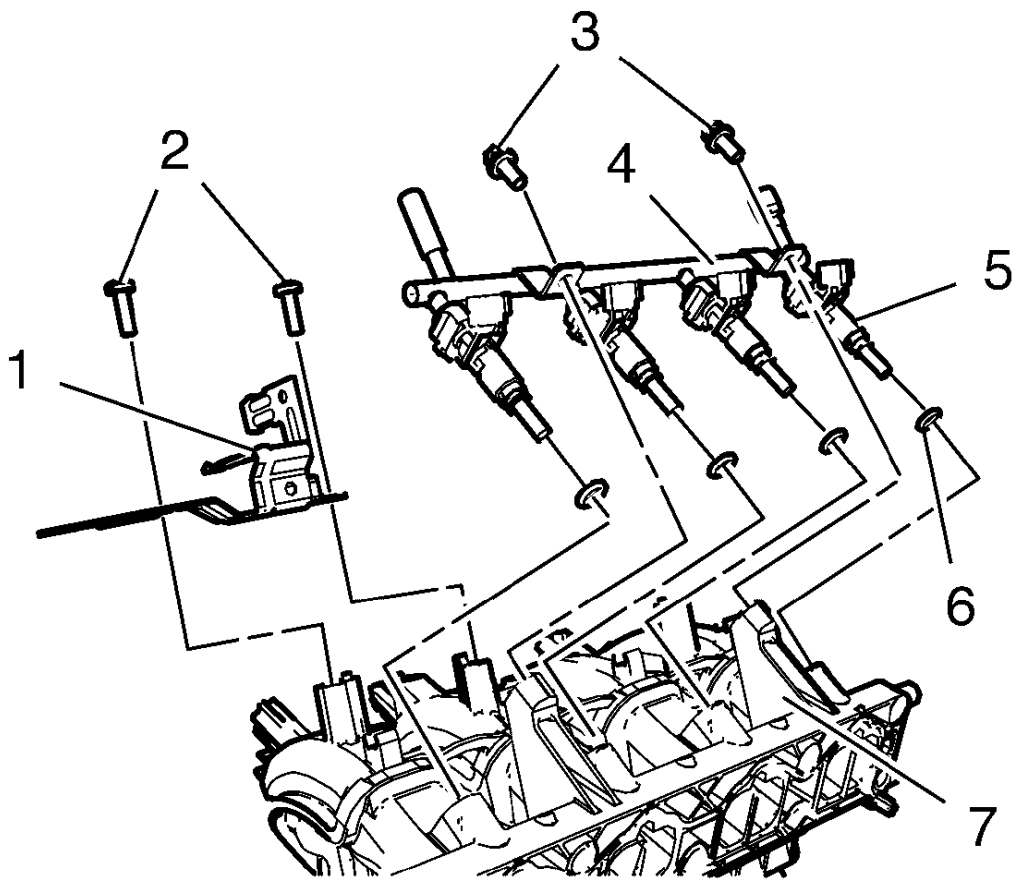

Fig. 136: Multiport Fuel Injection Fuel Rail And Bolts
Courtesy of GENERAL MOTORS COMPANY

NOTE: Coat the fuel injector seals with silicone grease.

3. Install the 4 NEW fuel injector seals (6).
4. Install the multiport fuel injection fuel rail (4) and the fuel injectors (5) to the intake manifold (7).

CAUTION: Refer to Fastener Caution .

5. Install the 2 multiport fuel injection fuel rail bolts (3) and tighten to 8 N.m (71 lb in).
6. Install the evaporative emission canister purge solenoid valve bracket (1) to the intake manifold (7).
7. Install the 2 evaporative emission canister purge solenoid valve bracket bolts (2) and tighten to 8 N.m (71 lb in).

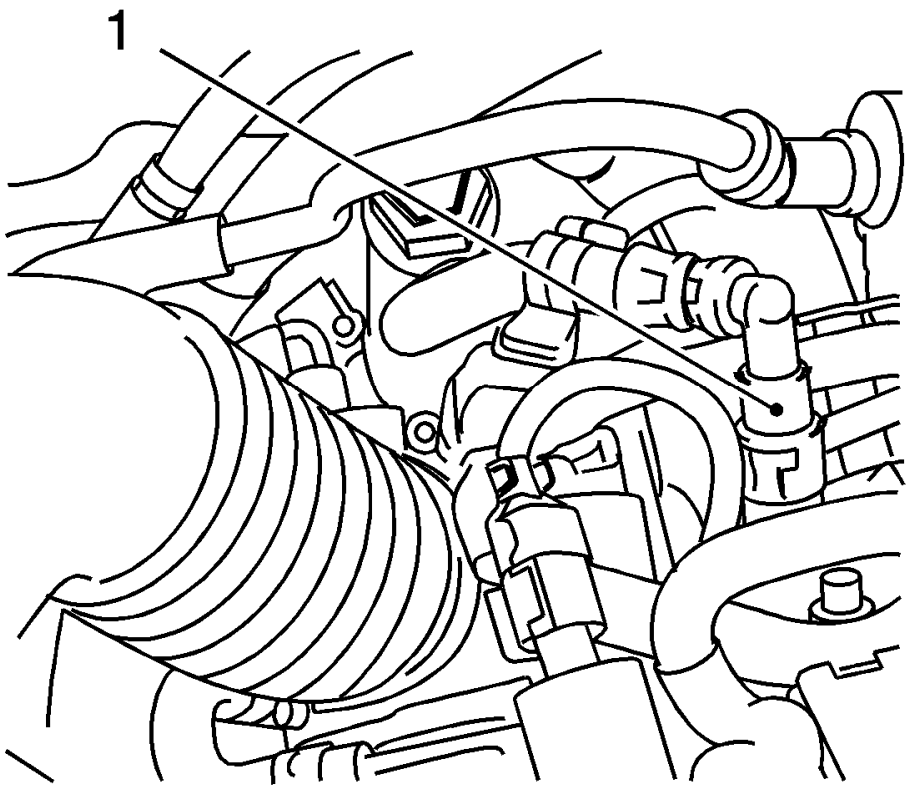

Fig. 137: View Of Fuel Return Line
Courtesy of GENERAL MOTORS COMPANY

8. Remove the cap from the fuel feed pipe (1).
9. Connect the quick-release fitting of fuel feed pipe (1).
10. Connect the wiring harness to the:
    1. Evaporative emission purge valve
    2. Fuel injectors
    3. Manifold absolute pressure sensor
11. Install the positive crankcase ventilation tube. Refer to **Positive Crankcase Ventilation Hose/Pipe/Tube Replacement** .
12. Connect the negative cable from the battery. Refer to **Battery Negative Cable Disconnection and Connection** .
13. Close the hood.

EVAPORATIVE EMISSION CANISTER VENT SOLENOID VALVE REPLACEMENT

Removal Procedure

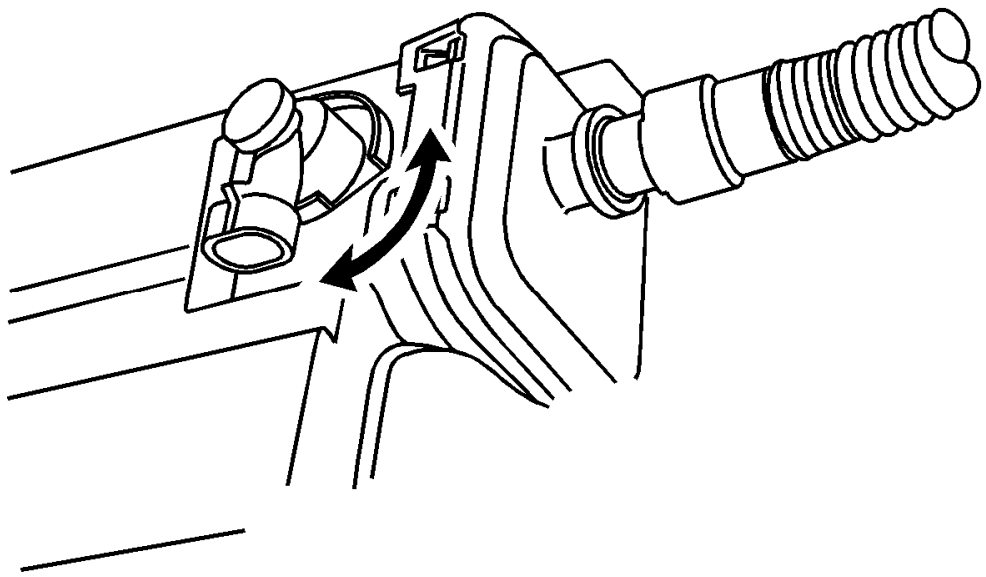

Fig. 138: Rotating EVAP Canister Vent Valve
Courtesy of GENERAL MOTORS COMPANY

1. Remove the evaporative emission (EVAP) canister. Refer to **Evaporative Emission Canister Replacement**.
2. Rotate the EVAP canister vent valve counterclockwise to release from the locked position.

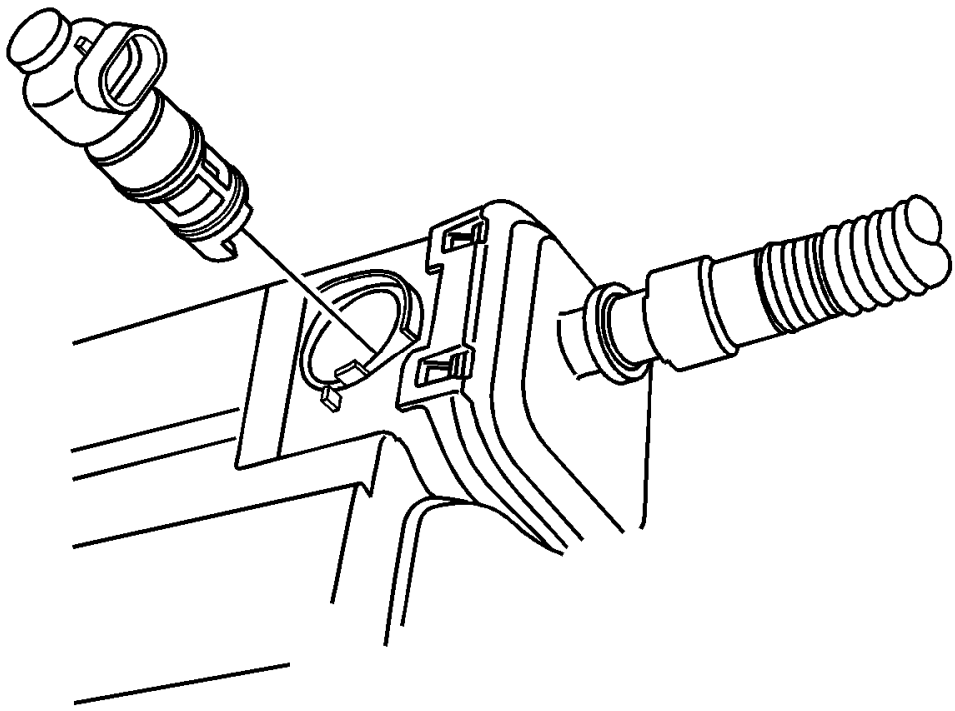

Fig. 139: View Of EVAP Canister Vent Valve
Courtesy of GENERAL MOTORS COMPANY

3. Remove the vent valve from the EVAP canister.

Installation Procedure

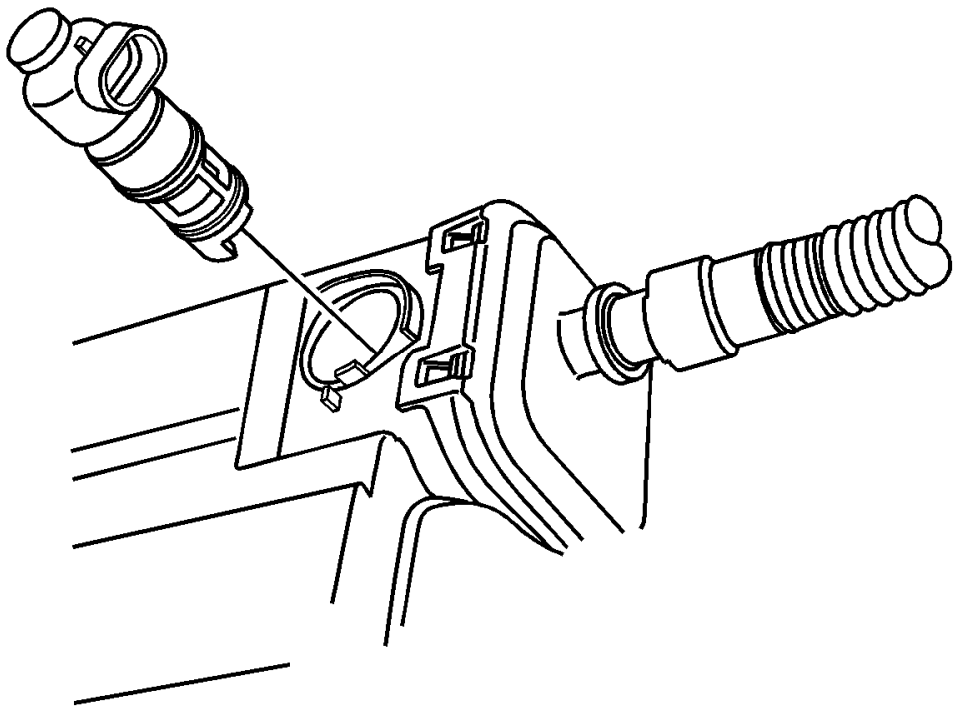

Fig. 140: View Of EVAP Canister Vent Valve
Courtesy of GENERAL MOTORS COMPANY

1. Insert the EVAP canister vent solenoid valve into the EVAP canister, with the valve aligned to the released position.

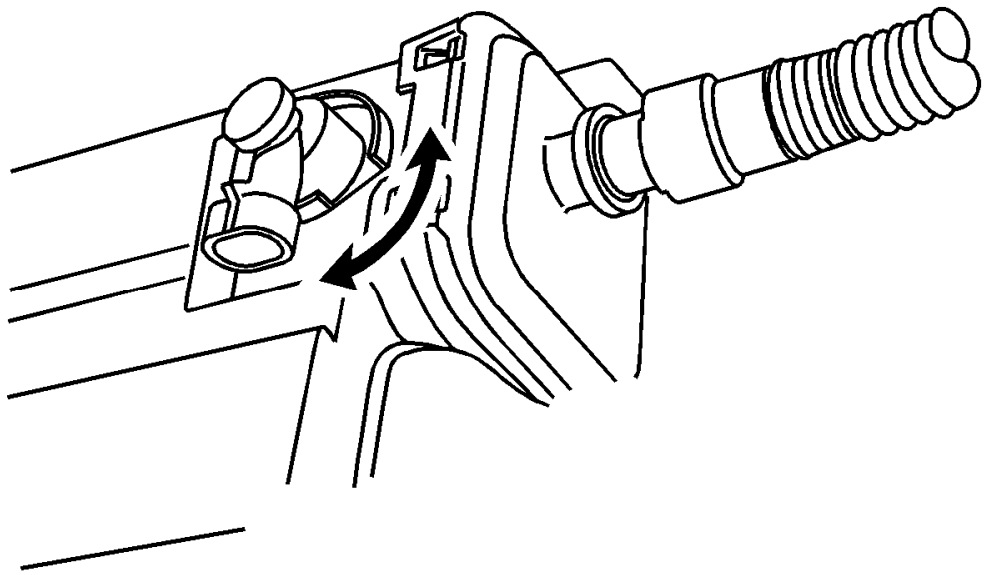

Fig. 141: Rotating EVAP Canister Vent Valve
Courtesy of GENERAL MOTORS COMPANY

2. Rotate vent valve clockwise to secure into the locked position.
3. Install the EVAP canister. Refer to **Evaporative Emission Canister Replacement**.

EVAPORATIVE EMISSION CANISTER REPLACEMENT

Removal Procedure

WARNING: Refer to Gasoline/Gasoline Vapors Warning .

WARNING: Refer to Safety Goggles and Fuel Warning .

1. Open the hood.

2. Disconnect the battery negative cable. Refer to **Battery Negative Cable Disconnection and Connection** .
3. Raise and support the vehicle. Refer to **Lifting and Jacking the Vehicle** .

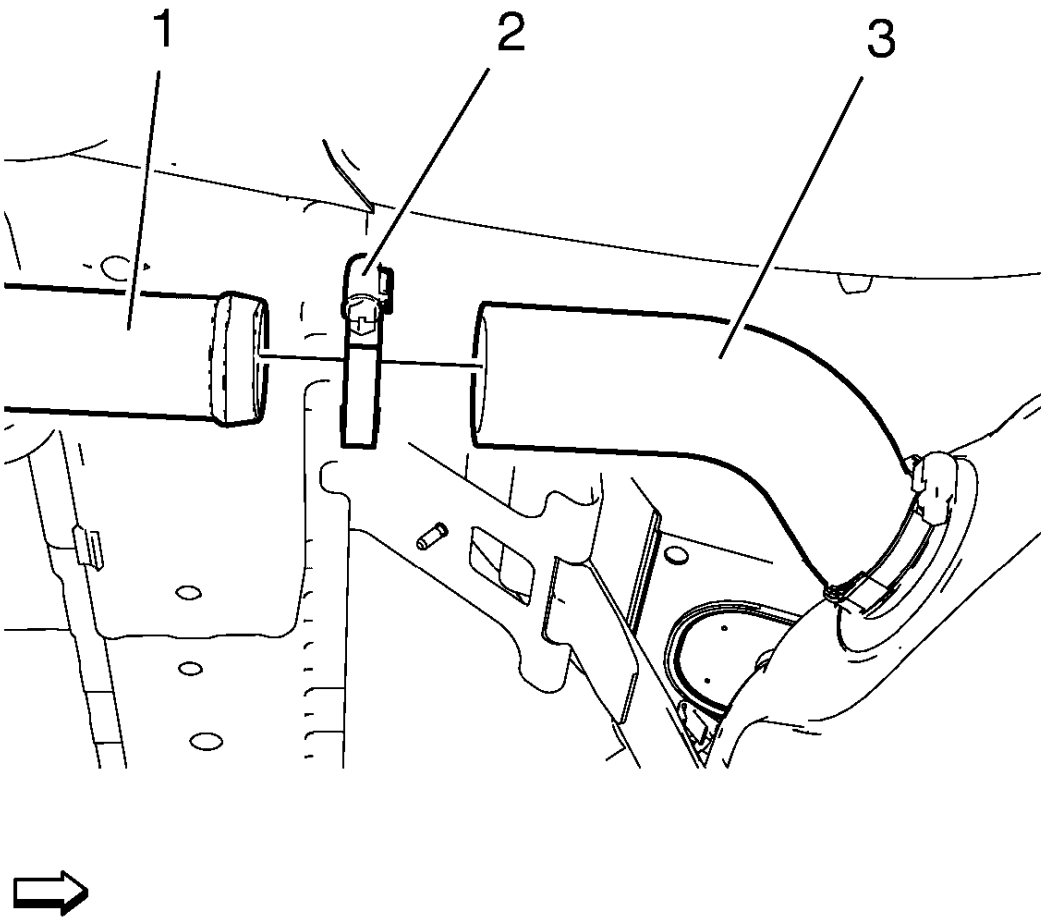

Fig. 142: Fuel Tank Filler Pipe
Courtesy of GENERAL MOTORS COMPANY

WARNING: Do not breathe the air through the EVAP component tubes or hoses. The fuel vapors inside the EVAP components may cause personal injury.

NOTE: Do not remove the fuel tank filler hose when the fuel tank is over half filled with fuel.

4. Remove the clamp (2).

If the fuel level is over half filled. Refer to **Fuel Tank Draining**.

5. Remove the fuel tank filler hose (3) from the fuel tank filler pipe (1).

WARNING: To help avoid personal injury, always use jack stands when you are working on or under any vehicle that is supported only by a jack.

CAUTION: When you are jacking or lifting a vehicle at the frame side rails or other prescribed lift points, be certain that the lift pads do not contact the catalytic converter, the brake pipes or the fuel lines. If such contact occurs, vehicle damage or unsatisfactory vehicle performance may result.

6. Place a suitable adjustable jack under the fuel tank.

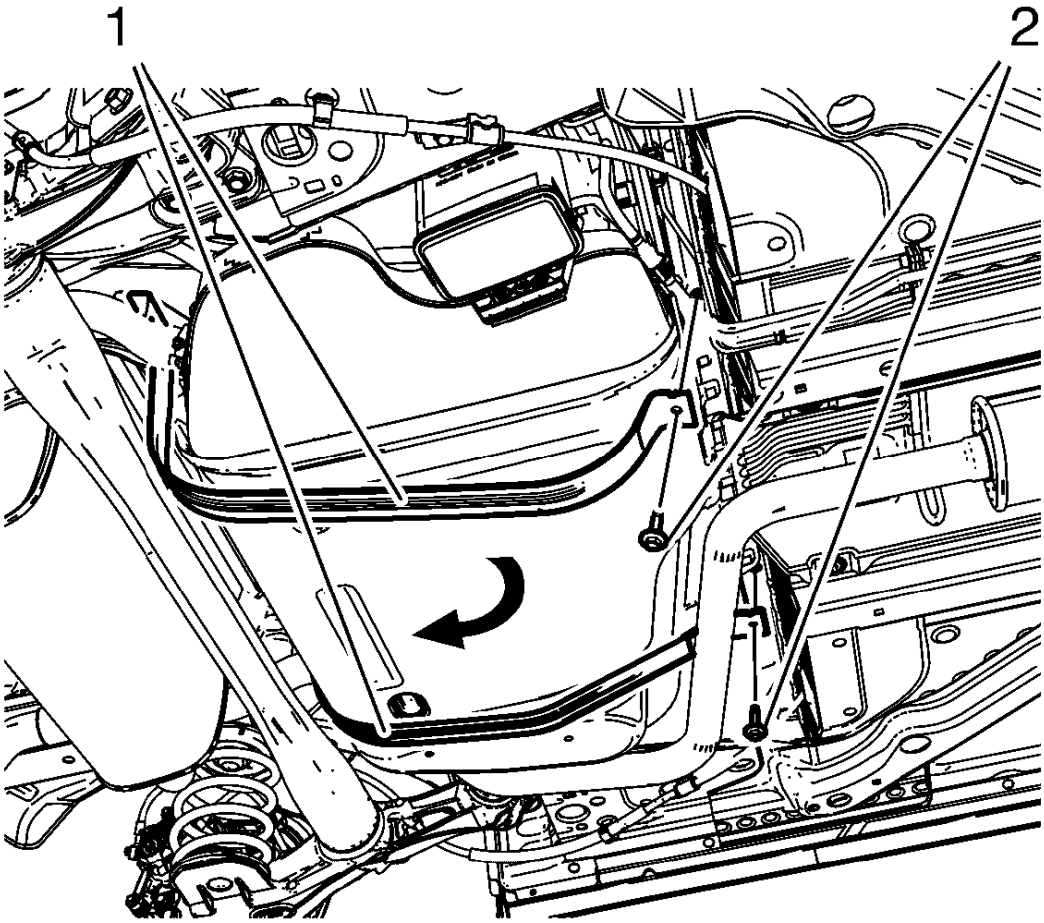

Fig. 143: Fuel Tank Straps

Courtesy of GENERAL MOTORS COMPANY

7. Remove the 2 fuel tank strap bolts (2).
8. Remove the 2 fuel tank straps (1).

NOTE: Closely watch parts like pipes or hoses that are still installed to the fuel tank. If lowering the fuel tank slightly does not provide enough access to remove the fuel tank, refer to Fuel Tank Replacement.

9. Lower the fuel tank to a height where the evaporative emission canister is easily accessible.

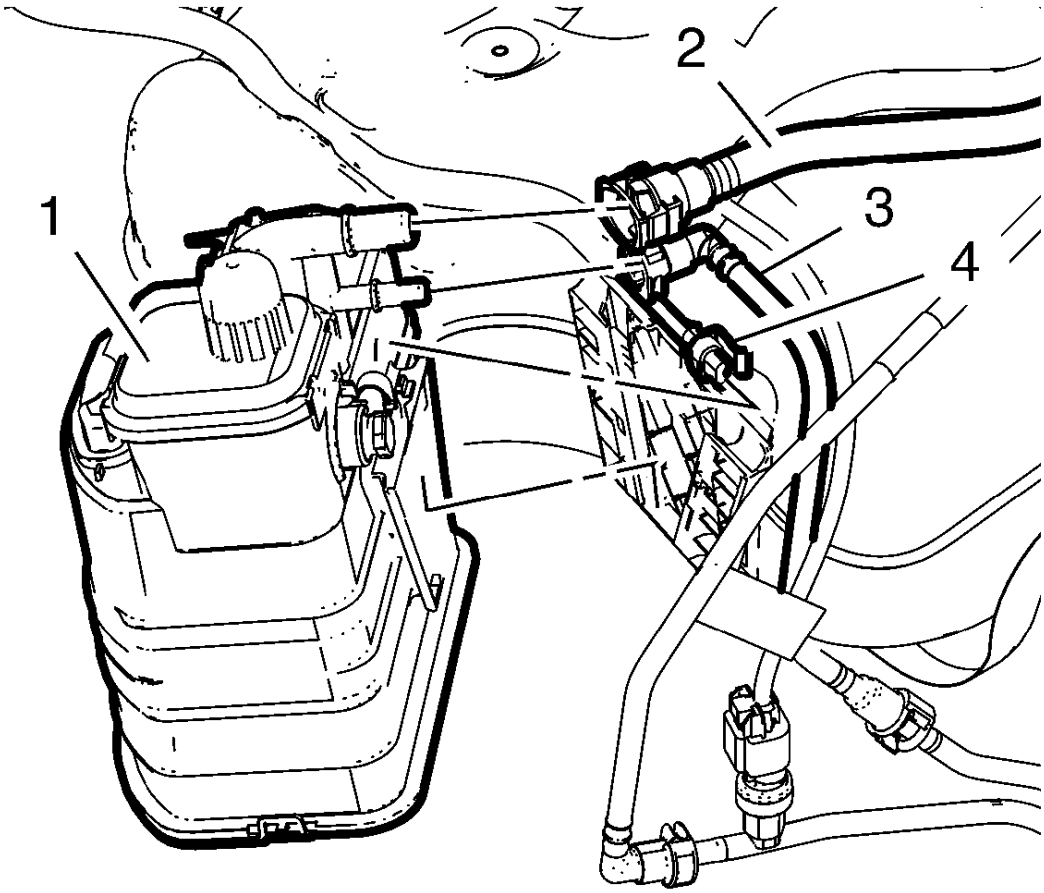

Fig. 144: Evaporative Emission Canister
Courtesy of GENERAL MOTORS COMPANY

WARNING: Always wear safety goggles when working with fuel in order to protect the eyes from fuel splash.

10. Disconnect the evaporative emission vent pipe (2).
11. Disconnect the evaporative emission canister wiring harness plug (4).
12. Disconnect the evaporative emission canister purge pipe (3).
13. Remove the evaporative emission canister (1) from the evaporative emission canister bracket.

Installation Procedure

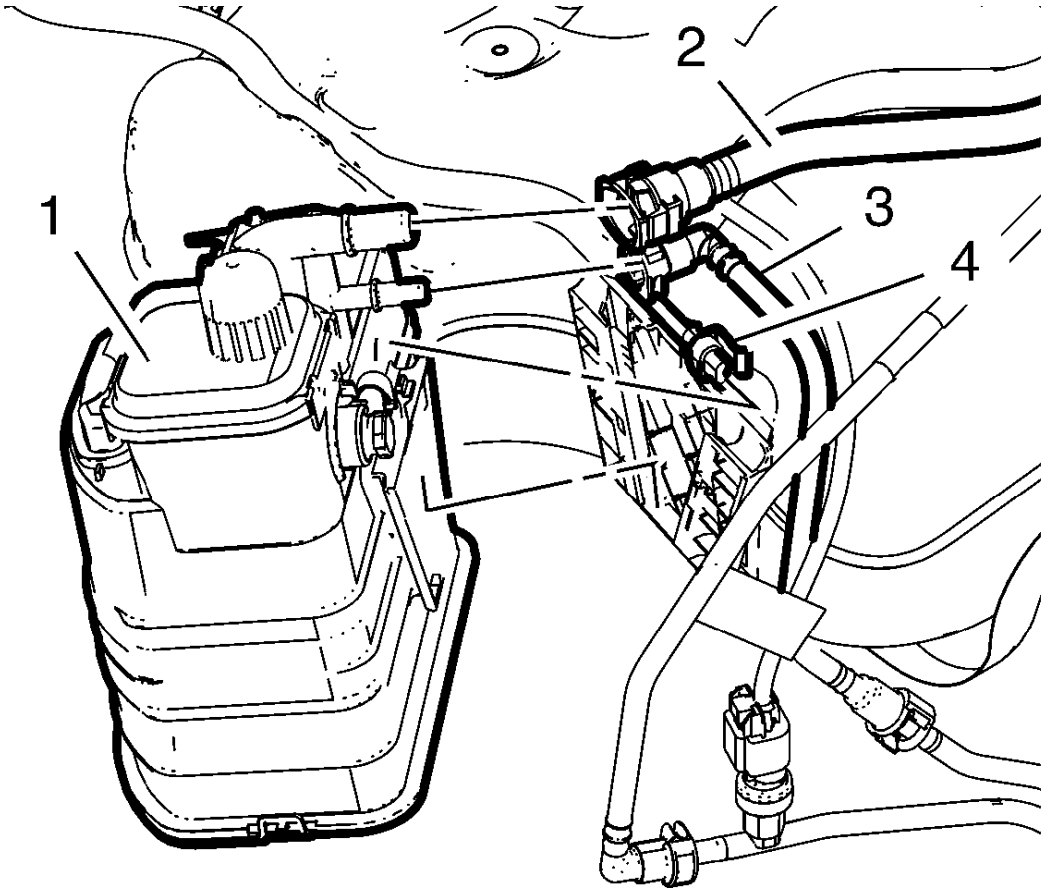

Fig. 145: Evaporative Emission Canister
Courtesy of GENERAL MOTORS COMPANY

1. Install the evaporative emission canister (1) to the evaporative emission canister bracket.
2. Connect the evaporative emission canister purge pipe (3).
3. Connect the evaporative emission canister wiring harness plug (4).
4. Connect the evaporative emission vent pipe (2).
5. Raise the fuel tank to its original position.

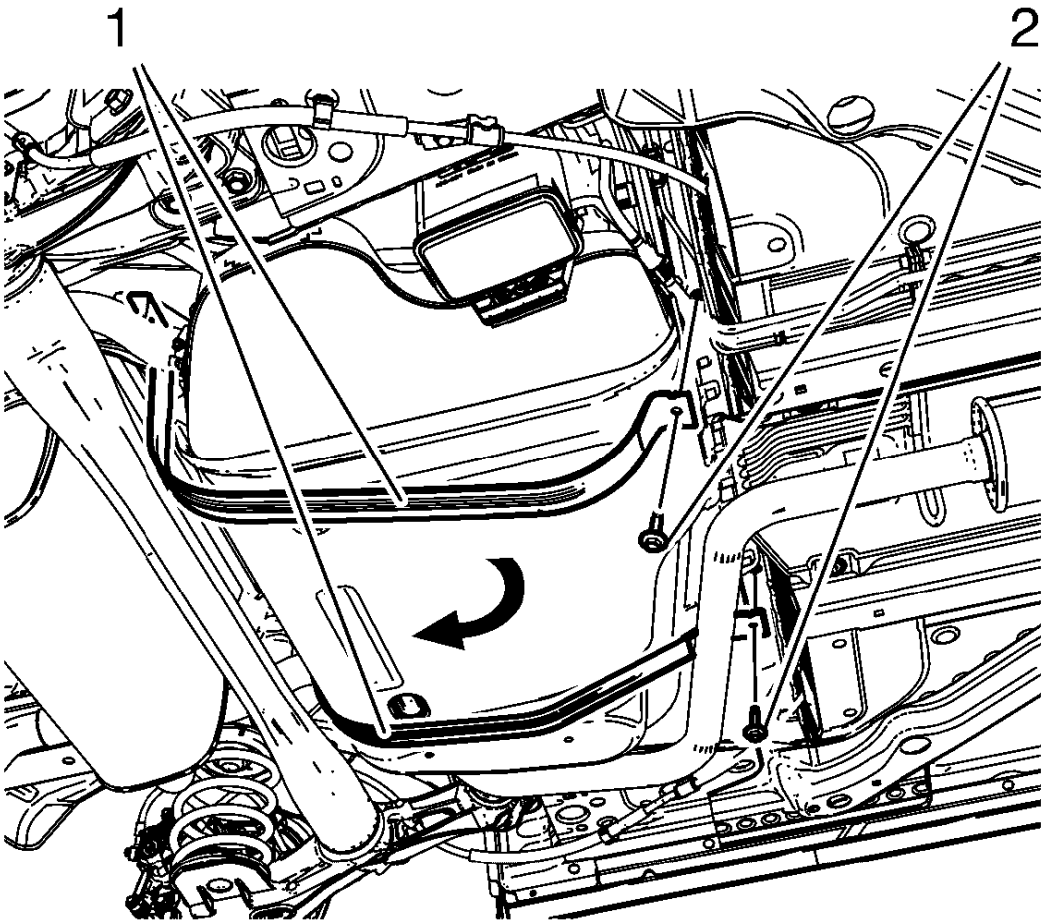

Fig. 146: Fuel Tank Straps
Courtesy of GENERAL MOTORS COMPANY

6. Install the 2 fuel tank straps (1).

CAUTION: Refer to Fastener Caution .

7. Install the 2 fuel tank strap bolts (2) and tighten to 22 N.m (16 lb ft).
8. Remove the suitable adjustable jack.

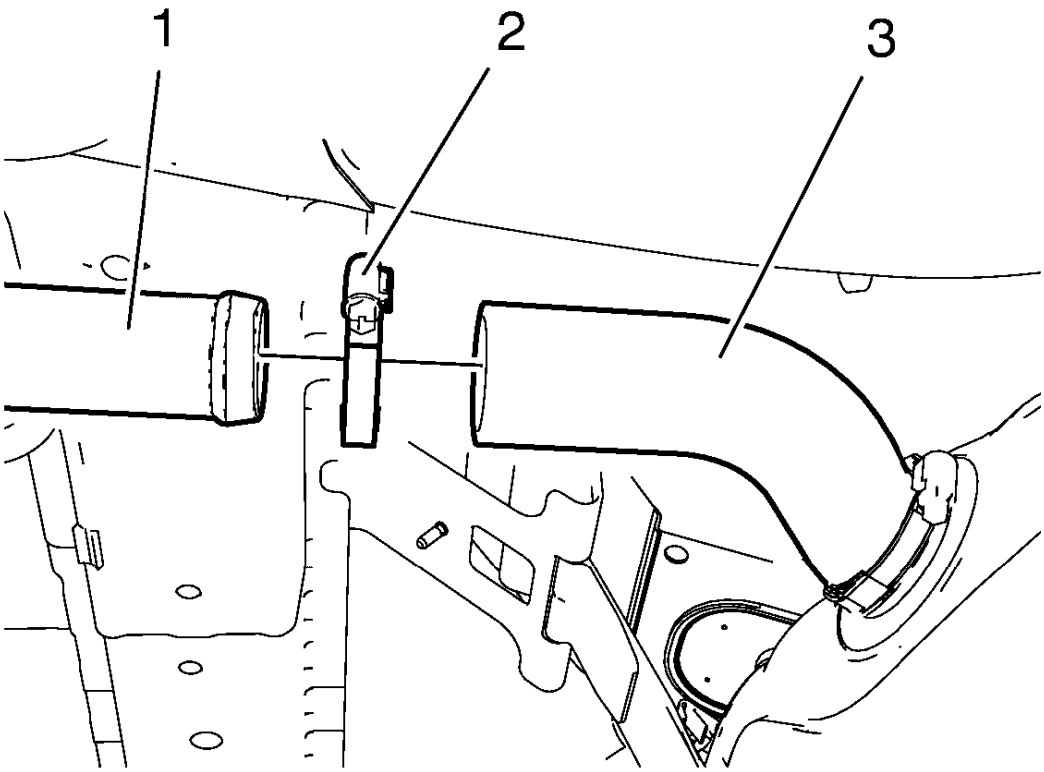

Fig. 147: Fuel Tank Filler Pipe
Courtesy of GENERAL MOTORS COMPANY

9. Install the fuel tank filler hose (3) to the fuel tank filler pipe (1).
10. Install the clamp (2).
11. Lower the vehicle.
12. Connect the battery negative cable. Refer to **Battery Negative Cable Disconnection and Connection** .
13. Close the hood.

EVAPORATIVE EMISSION CANISTER PURGE SOLENOID VALVE REPLACEMENT

Removal Procedure

WARNING: Refer to Gasoline/Gasoline Vapors Warning .

WARNING: Refer to Safety Goggles and Fuel Warning .

WARNING: In order to reduce the risk of fire and personal injury observe the following items:

- **Replace all nylon fuel pipes that are nicked, scratched or damaged during installation, do not attempt to repair the sections of the nylon fuel pipes**
- **Do not hammer directly on the fuel harness body clips when installing new fuel pipes. Damage to the nylon pipes may result in a fuel leak.**
- **Always cover nylon vapor pipes with a wet towel before using a torch near them. Also, never expose the vehicle to temperatures higher than 115°C (239°F) for more than one hour, or more than 90°C (194°F) for any extended period.**
- **Apply a few drops of clean engine oil to the male pipe ends before connecting fuel pipe fittings. This will ensure proper reconnection and prevent a possible fuel leak. (During normal operation, the O-rings located in the female connector will swell and may prevent proper reconnection if not lubricated.)**

1. Open the hood.
2. Disconnect the battery negative cable **Battery Negative Cable Disconnection and Connection** .

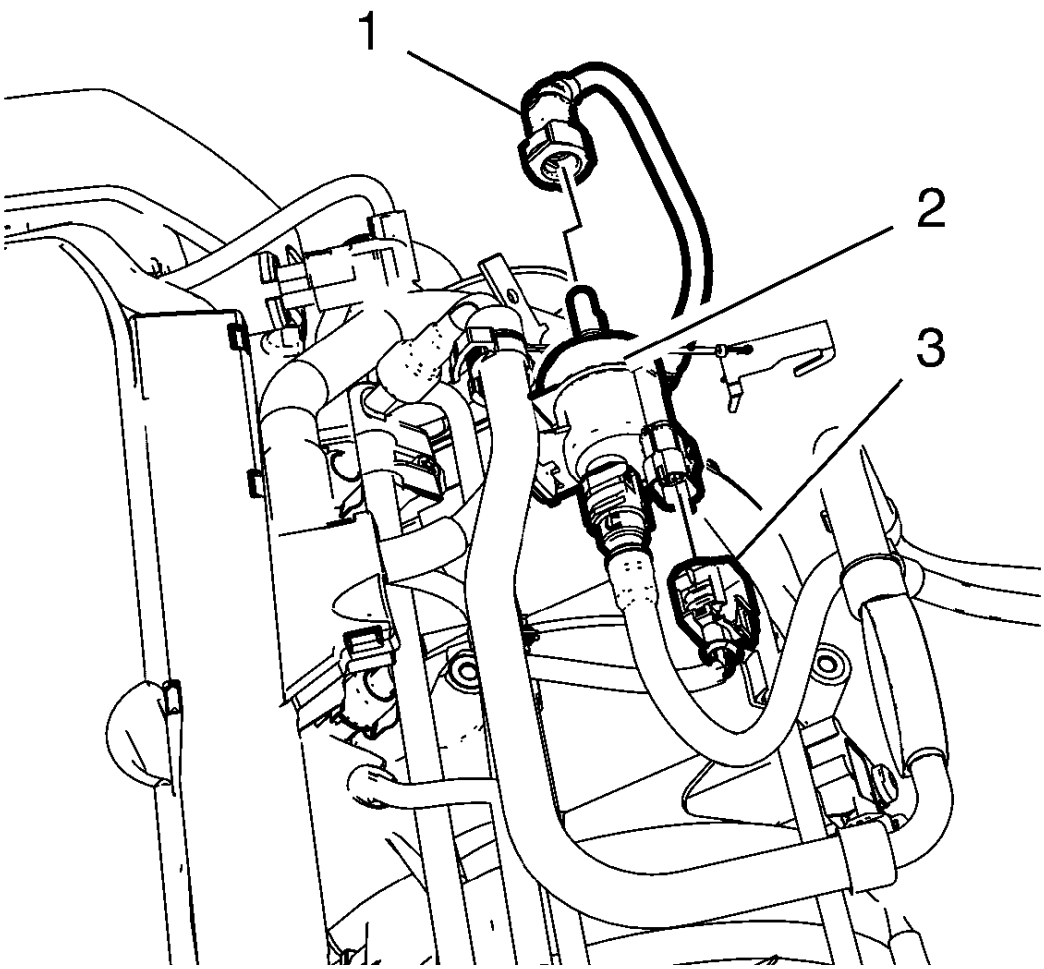

Fig. 148: Evaporative Emission Pipe And Evaporative Emission Canister Purge Solenoid Valve
Courtesy of GENERAL MOTORS COMPANY

3. Remove the evaporative emission pipe (1) from the evaporative emission canister purge solenoid valve (2).
4. Install a suitable cap on the evaporative emission pipe.
5. Disconnect the wiring harness plug (3) from the evaporative emission canister purge solenoid valve (2).

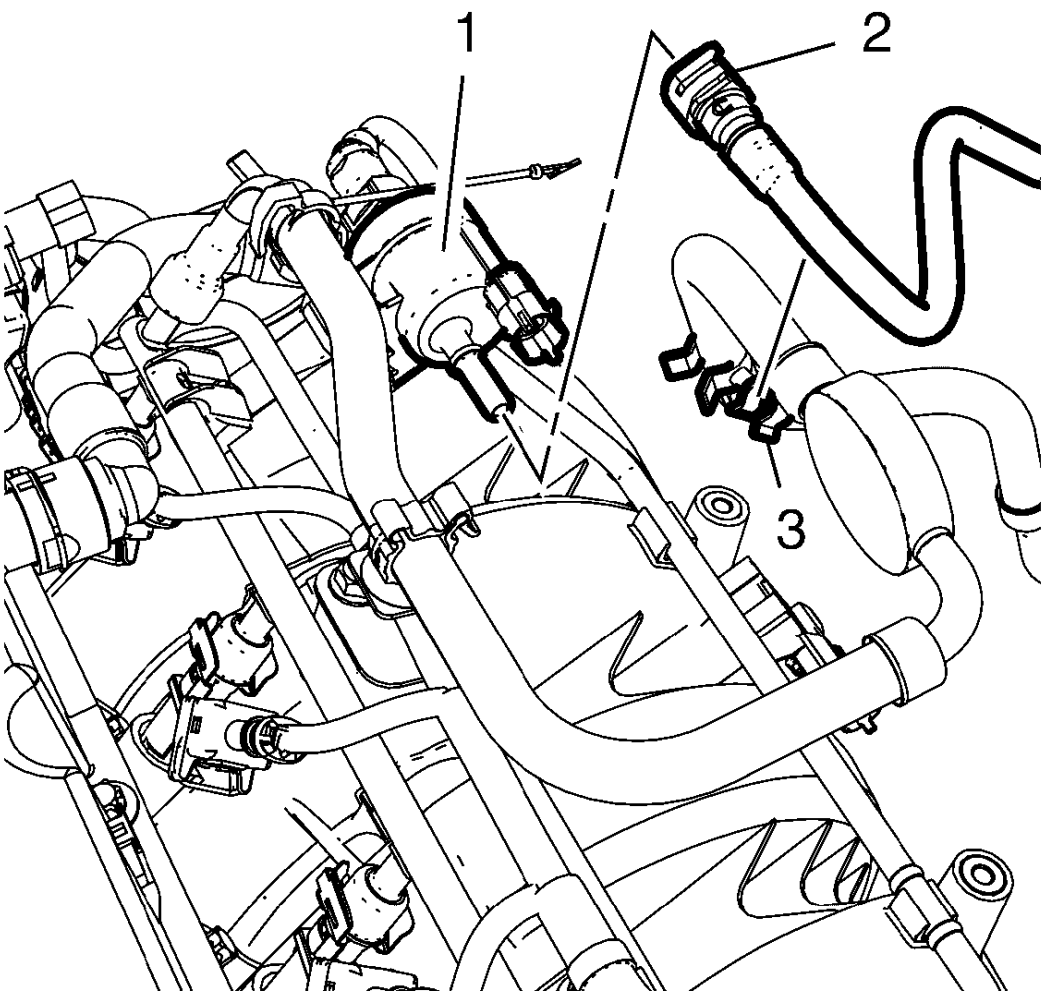

Fig. 149: Fuel Tank Vent Pipe And Evaporative Emission Canister Purge Solenoid Valve
Courtesy of GENERAL MOTORS COMPANY

6. Remove the fuel tank vent pipe (2) from the evaporative emission canister purge solenoid valve (1) and from the clip (3).
7. Install a suitable cap on the fuel tank vent pipe.

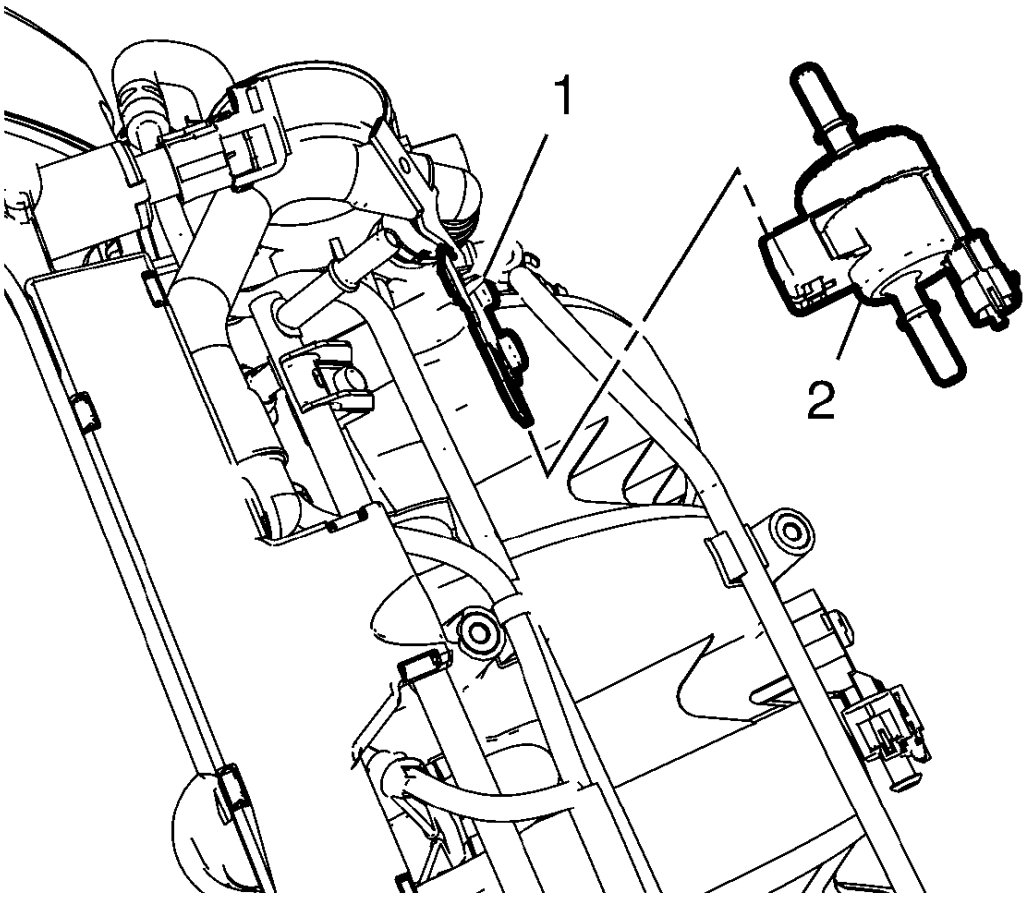

Fig. 150: Evaporative Emission Canister Purge Solenoid Valve
Courtesy of GENERAL MOTORS COMPANY

8. Remove the evaporative emission canister purge solenoid valve (2) from the bracket (1).

Installation Procedure

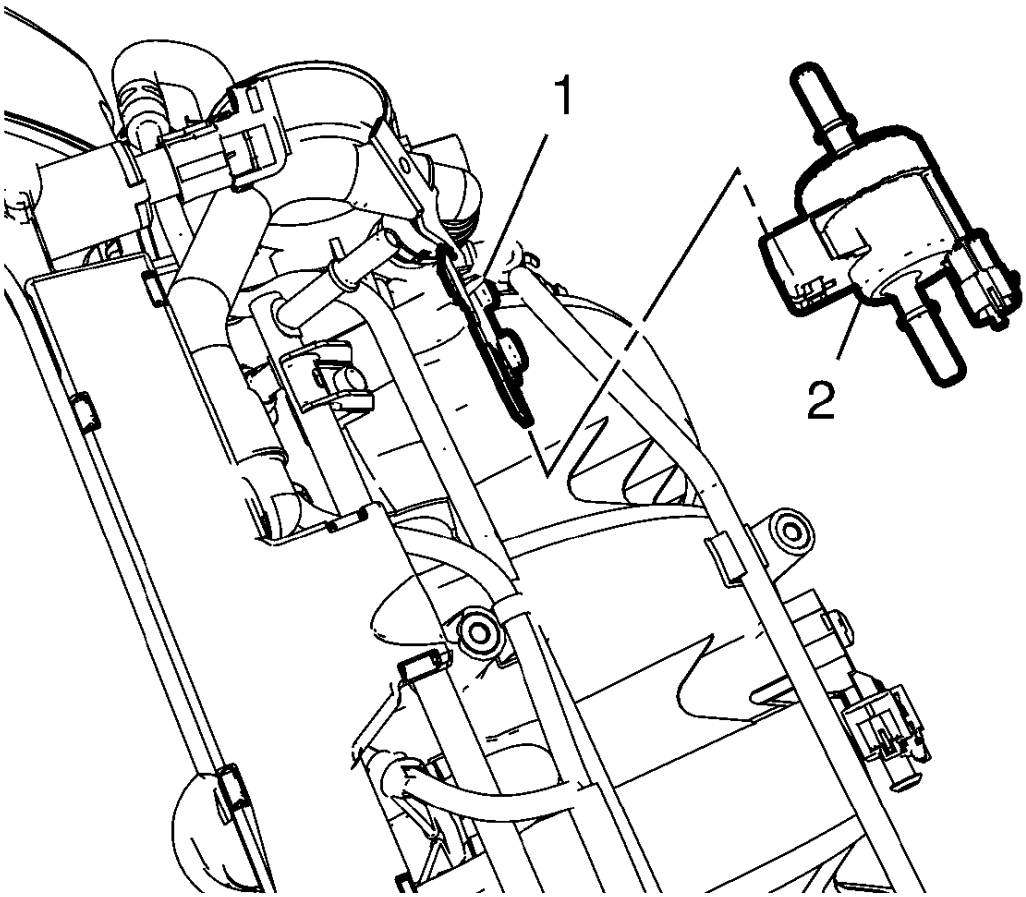

Fig. 151: Evaporative Emission Canister Purge Solenoid Valve
Courtesy of GENERAL MOTORS COMPANY

1. Install the evaporative emission canister purge solenoid valve (2) to the bracket (1).
2. Remove the cap from the fuel tank vent pipe.

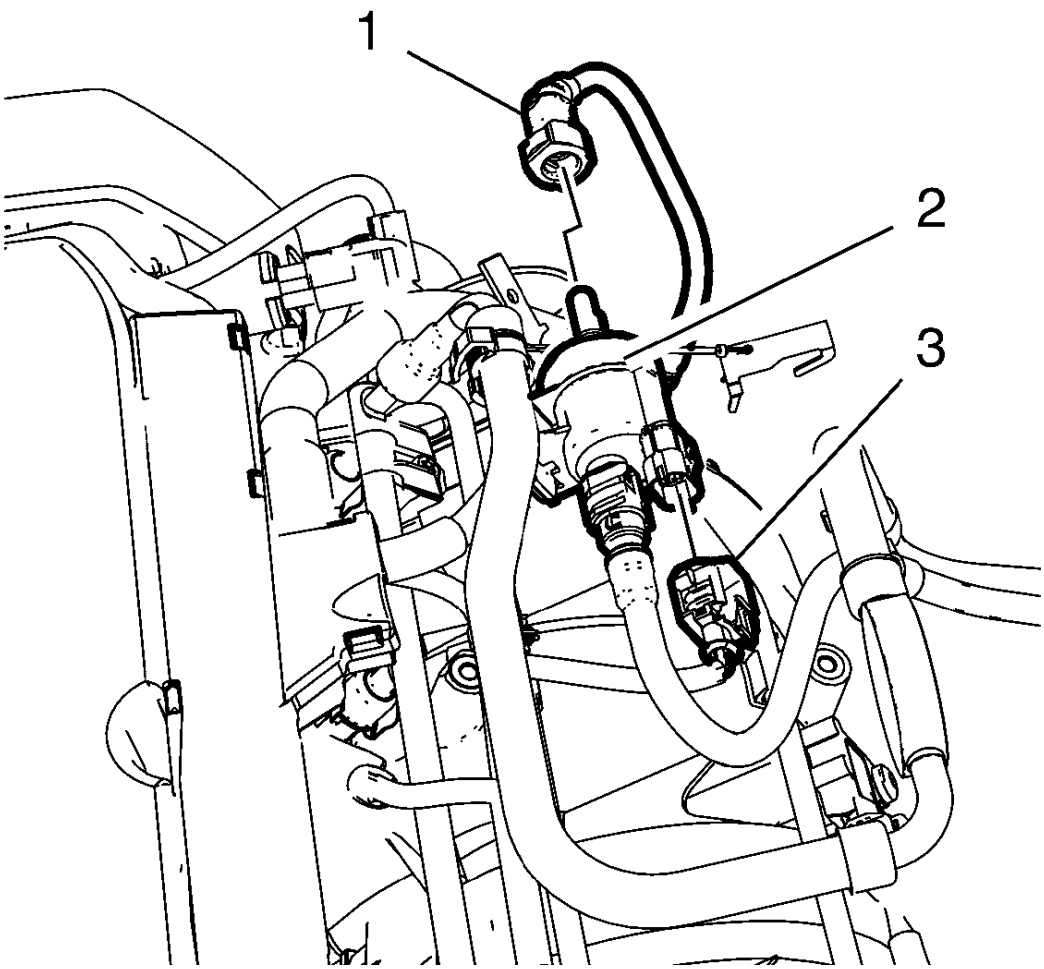

Fig. 152: Evaporative Emission Pipe And Evaporative Emission Canister Purge Solenoid Valve
Courtesy of GENERAL MOTORS COMPANY

3. Connect the wiring harness plug (3) to the evaporative emission canister purge solenoid valve (2).
4. Install the evaporative emission pipe (1) to the evaporative emission canister purge solenoid valve (2).
5. Remove the cap from the evaporative emission pipe.

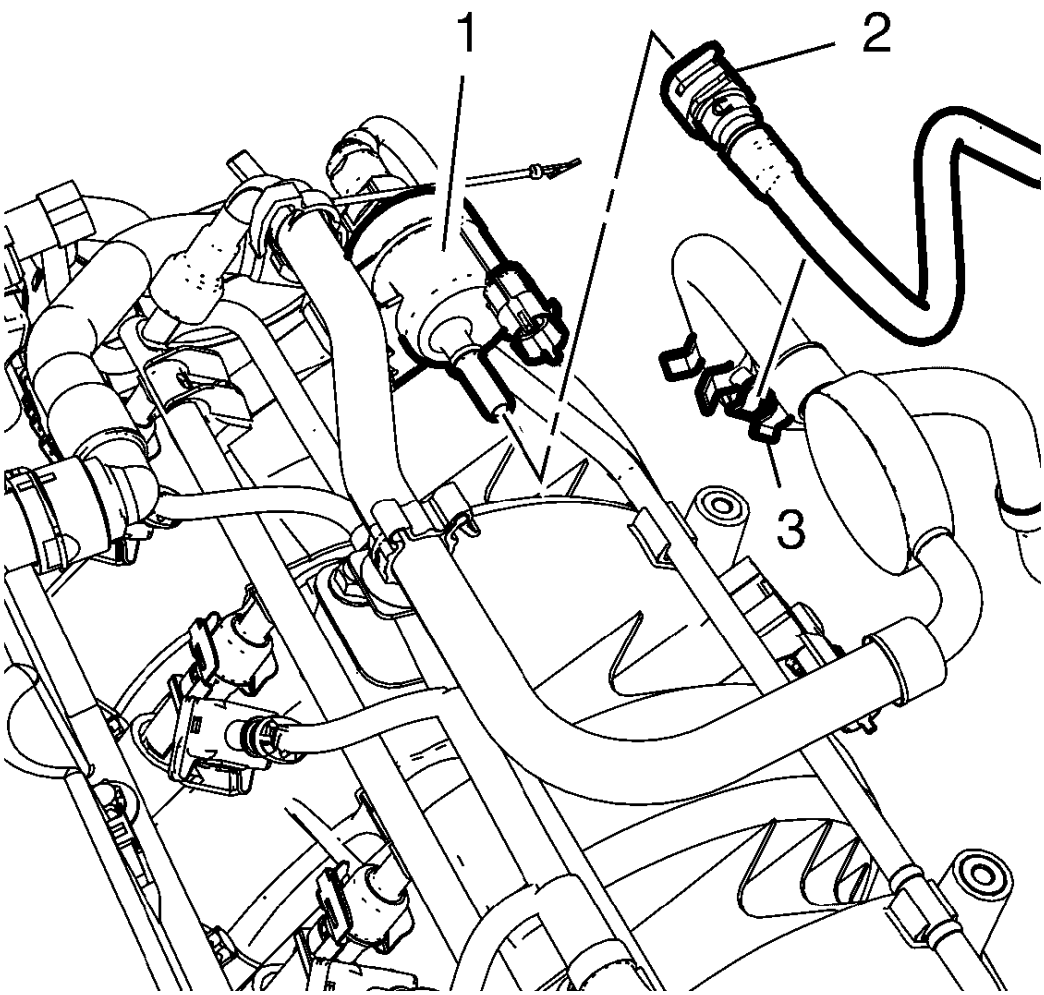

Fig. 153: Fuel Tank Vent Pipe And Evaporative Emission Canister Purge Solenoid Valve
Courtesy of GENERAL MOTORS COMPANY

6. Install the fuel tank vent pipe (2) to the evaporative emission canister purge solenoid valve (1) and to the clip (3).
7. Connect the battery negative cable **Battery Negative Cable Disconnection and Connection** .
8. Close the hood.

IGNITION COIL REPLACEMENT

Special Tools

EN-6009 Remover and Installer Ignition Coil

For equivalent regional tools, refer to **Special Tools** .

Removal Procedure

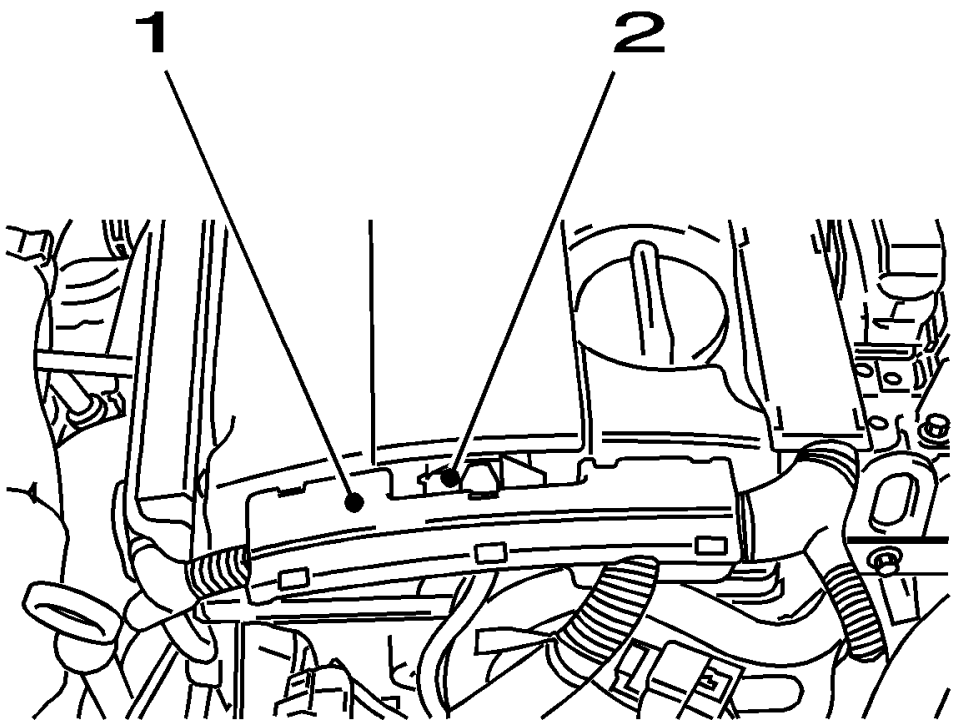

Fig. 154: View Of Engine Wiring Trough And DIS-ignition Module Wiring Harness Plug
Courtesy of GENERAL MOTORS COMPANY

1. Remove the engine wiring harness guide (1) from the cylinder head.
2. Disconnect the ignition coil plug (2).

NOTE: Note the arrow on the cover.

3. Remove the cover of the ignition coil in the direction of the arrow.
4. Remove the 2 ignition coil bolts.

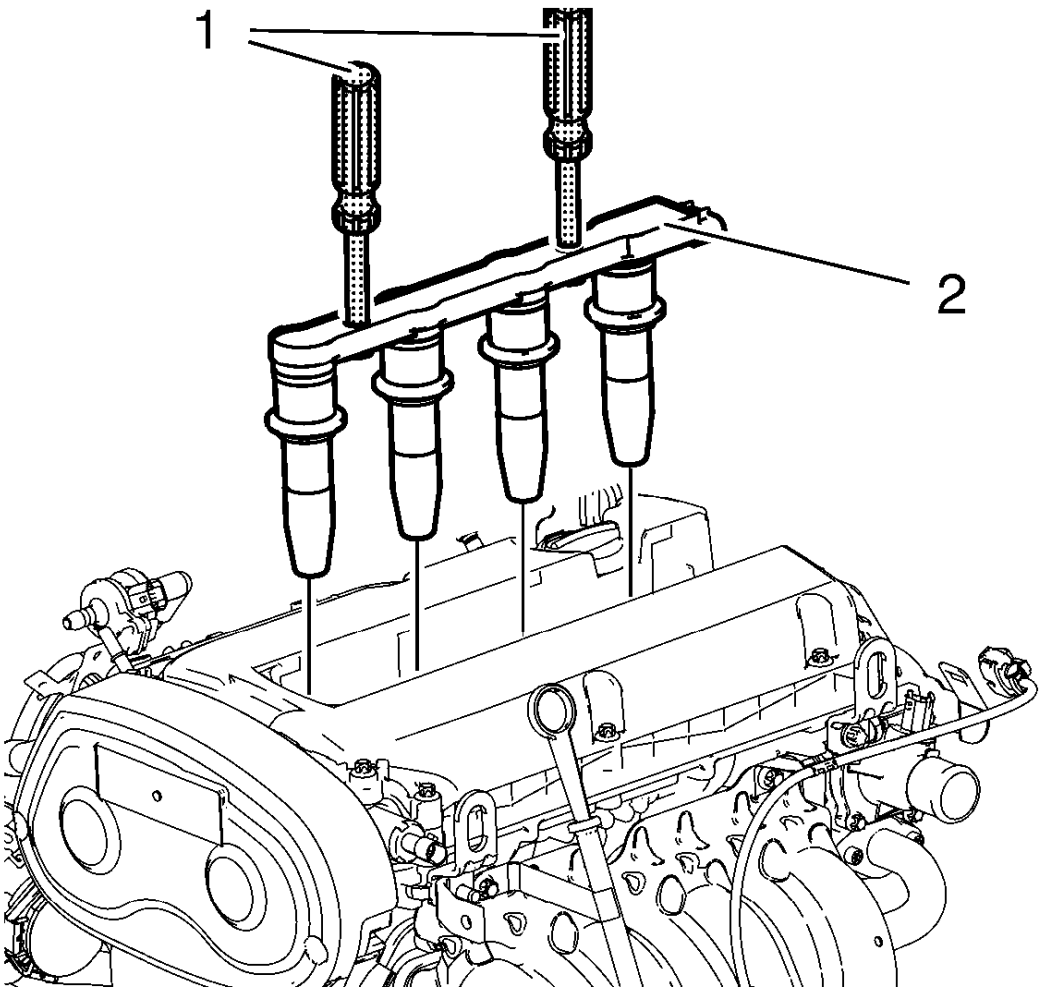

Fig. 155: Ignition Coil Module And Special Tool
Courtesy of GENERAL MOTORS COMPANY

5. Install the **EN-6009** remover/installer (1).
6. Remove the ignition coil (2).
7. Remove the **EN-6009** remover/installer (1).

Installation Procedure

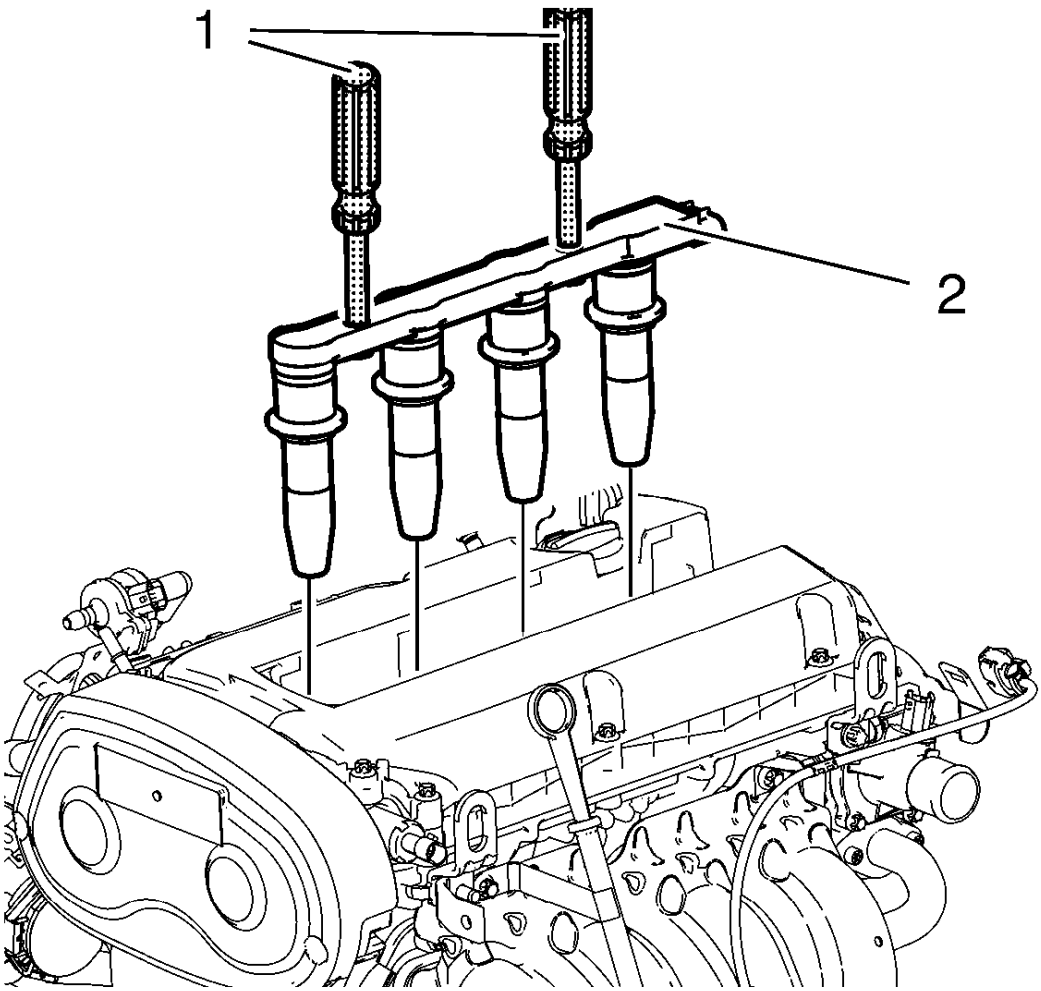

Fig. 156: Ignition Coil Module And Special Tool
Courtesy of GENERAL MOTORS COMPANY

1. Install the **EN-6009** remover/installer (1).
2. Remove the ignition coil (2).
3. Remove the **EN-6009** remover/installer (1).
4. Install the 2 ignition coil bolts an tighten to 8 N.m (71 lb in).

NOTE: Note the arrow on the cover.

5. Install the ignition coil cover in the direction of the arrow.

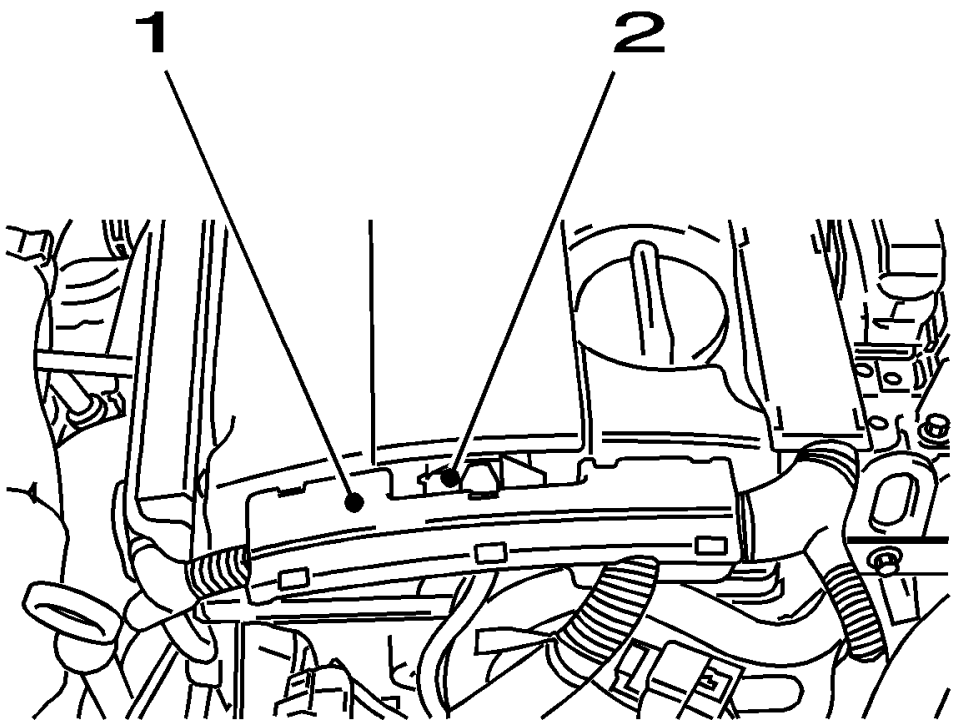

Fig. 157: View Of Engine Wiring Trough And DIS-ignition Module Wiring Harness Plug
Courtesy of GENERAL MOTORS COMPANY

6. Connect the ignition coil plug (2).
7. Install the engine wiring harness guide (1) at the cylinder head.

SPARK PLUG INSPECTION

Spark Plug Usage

1. Ensure that the correct spark plug is installed. An incorrect spark plug causes driveability conditions. Refer to the electronic parts catalog for the correct spark plug.
2. Ensure that the spark plug has the correct heat range. An incorrect heat range causes the following conditions:
    - Spark plug fouling-Colder plug
    - Pre-ignition causing spark plug and/or engine damage-Hotter plug

Spark Plug Inspection

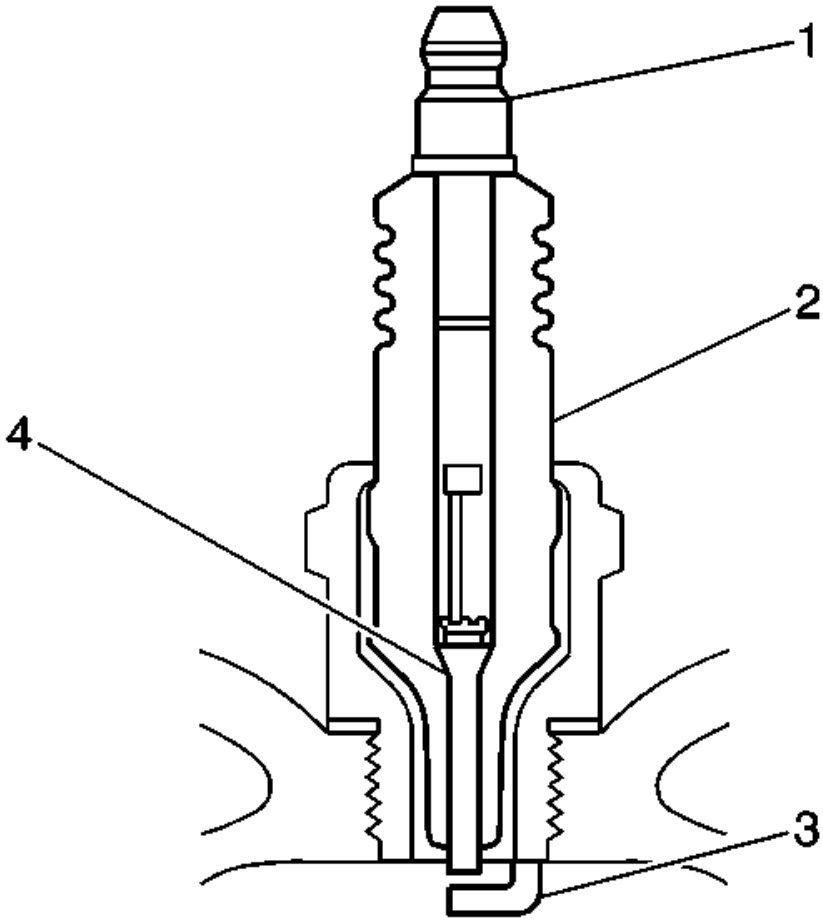

Fig. 158: Cross Sectional View Of Spark Plug
Courtesy of GENERAL MOTORS COMPANY

1. Inspect the terminal post (1) for damage.
   - Inspect for a bent or broken terminal post (1).
   - Test for a loose terminal post (1) by twisting and pulling the post. The terminal post (1) should NOT move.

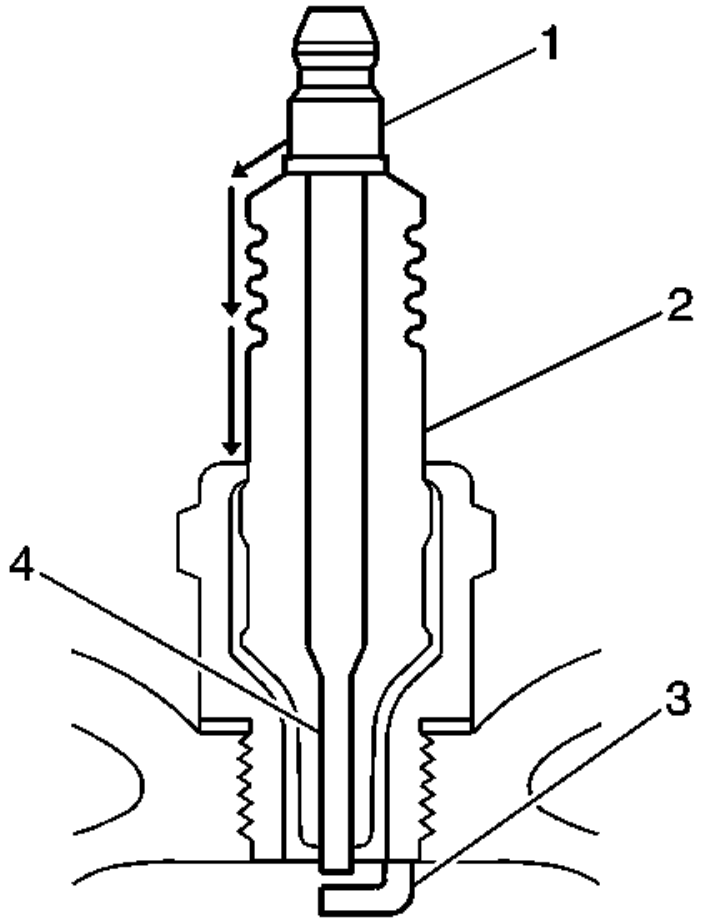

Fig. 159: Identifying Points For Inspecting Spark Plug For Flashover Or Carbon Tracking Soot
Courtesy of GENERAL MOTORS COMPANY

2. Inspect the insulator (2) for flashover or carbon tracking, soot. This is caused by the electrical charge traveling across the insulator (2) between the terminal post (1) and ground. Inspect for the following conditions:
   - Inspect the spark plug boot for damage.
   - Inspect the spark plug recess area of the cylinder head for moisture, such as oil, coolant, or water. A spark plug boot that is saturated causes arcing to ground.

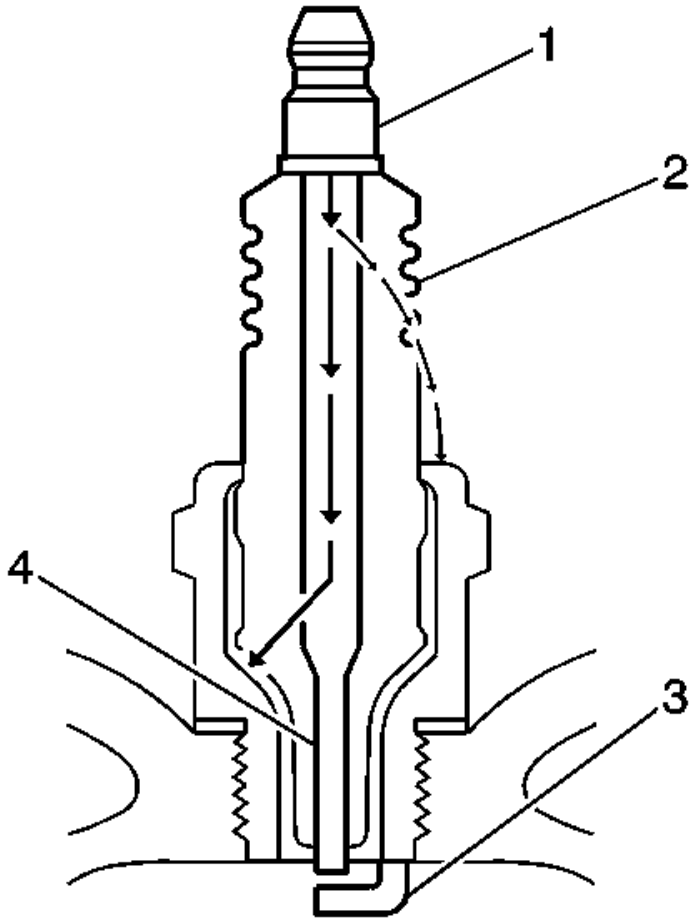

Fig. 160: Inspecting Spark Plug Insulator
Courtesy of GENERAL MOTORS COMPANY

3. Inspect the insulator (2) for cracks. All or part of the electrical charge may arc through the crack instead of the electrodes (3, 4).

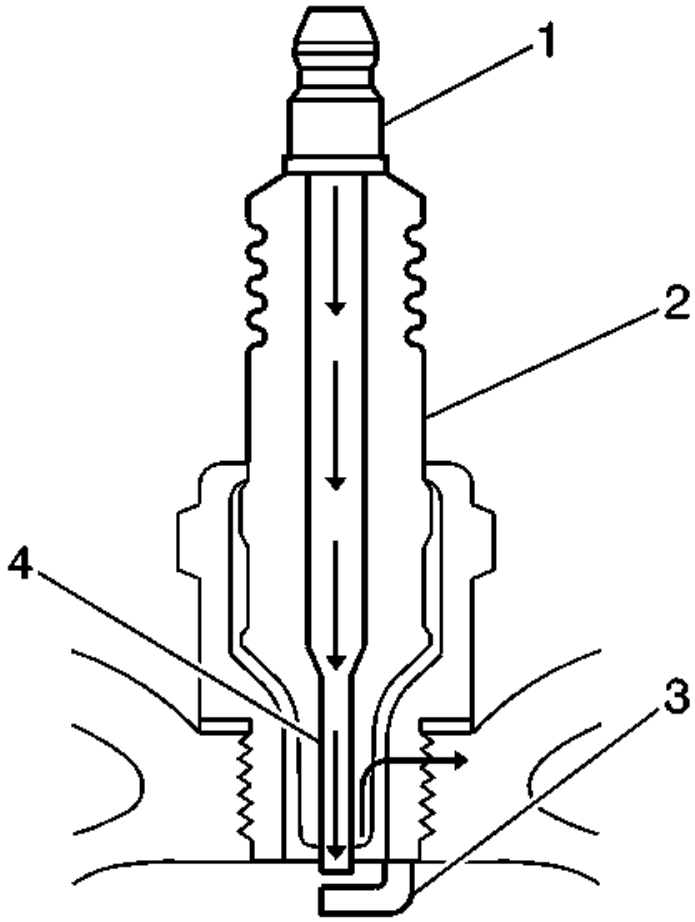

Fig. 161: Cutaway/Description View Of Spark Plug
Courtesy of GENERAL MOTORS COMPANY

4. Inspect for evidence of improper arcing.
    - Measure the gap between the center electrode (4) and the side electrode (3) terminals. Refer to **Ignition System Specifications** . An excessively wide electrode gap can prevent correct spark plug operation.
    - Inspect for the correct spark plug torque. Refer to **Ignition System Specifications** . Insufficient torque can prevent correct spark plug operation. An over torqued spark plug, causes the insulator (2) to crack.
    - Inspect for signs of tracking that occurred near the insulator tip instead of the center electrode (4).
    - Inspect for a broken or worn side electrode (3).
    - Inspect for a broken, worn, or loose center electrode (4) by shaking the spark plug.
5. A rattling sound indicates internal damage.
6. A loose center electrode (4) reduces the spark intensity.
    - Inspect for bridged electrodes (3, 4). Deposits on the electrodes (3, 4) reduce or eliminates the gap.

- Inspect for worn or missing platinum pads on the electrodes (3, 4) If equipped.
- Inspect for excessive fouling.
- Inspect the spark plug recess area of the cylinder head for debris. Dirty or damaged threads can cause the spark plug not to seat correctly during installation.

Spark Plug Visual Inspection

1. Normal operation-Brown to grayish-tan with small amounts of white powdery deposits are normal combustion by-products from fuels with additives.
2. Carbon Fouled-Dry, fluffy black carbon, or soot caused by the following conditions:
   - Rich fuel mixtures
   - Leaking fuel injectors
   - Excessive fuel pressure
   - Restricted air filter element
   - Incorrect combustion
   - Reduced ignition system voltage output
   - Weak coils
   - Worn ignition wires
   - Incorrect spark plug gap
   - Excessive idling or slow speeds under light loads can keep spark plug temperatures so low that normal combustion deposits may not burn off.
   - Deposit Fouling-Oil, coolant, or additives that include substances such as silicone, very white coating, reduces the spark intensity. Most powdery deposits will not effect spark intensity unless they form into a glazing over the electrode.

SPARK PLUG REPLACEMENT

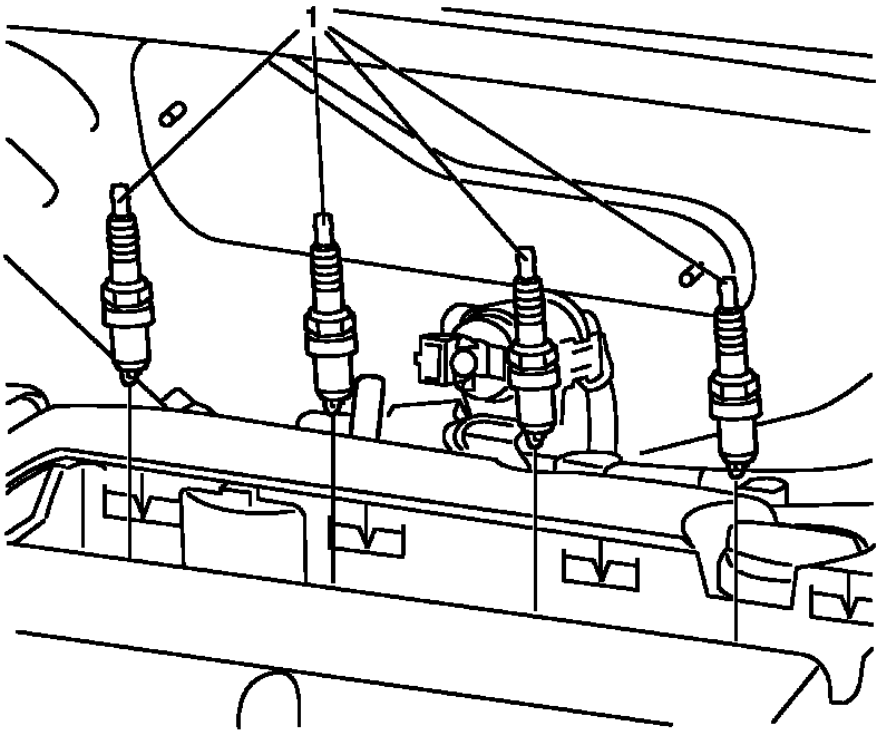

Fig. 162: Spark Plugs
Courtesy of GENERAL MOTORS COMPANY

Spark Plug Replacement

Callout	Component Name
Preliminary Procedure Remove the ignition coil. Refer to **Ignition Coil Replacement**.	
1	Spark Plug Fastener **CAUTION:** **Refer to Fastener Caution .** **Tighten** 25 N.m (18 lb ft)

CRANKSHAFT POSITION SENSOR REPLACEMENT

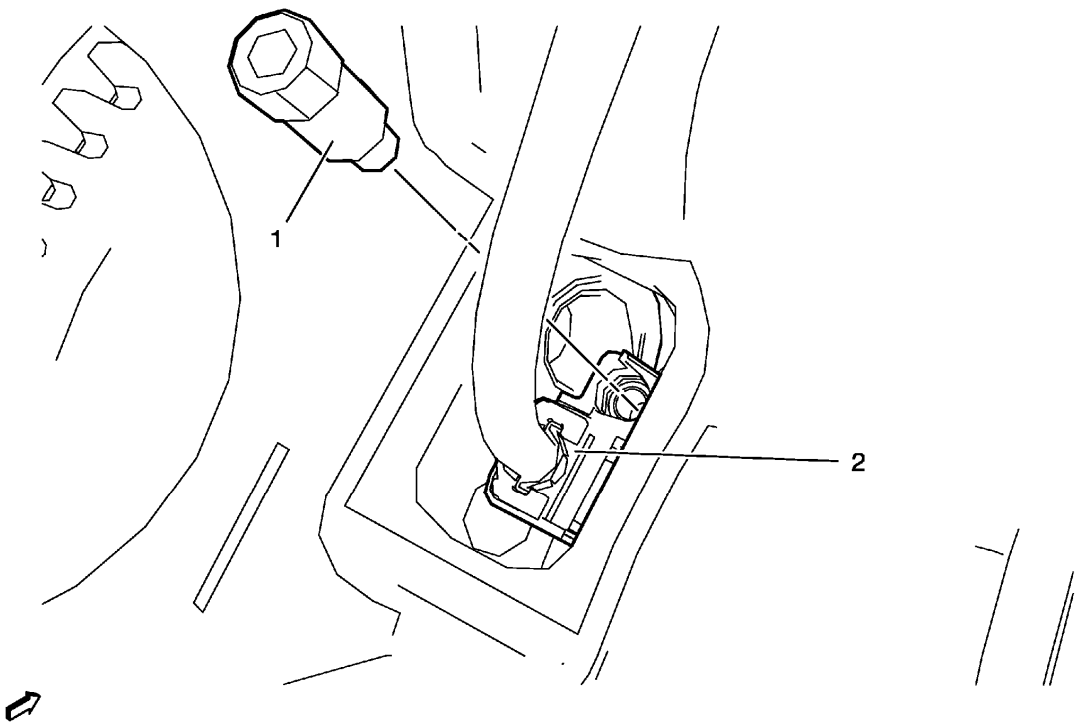

Fig. 163: Crankshaft Position Sensor
Courtesy of GENERAL MOTORS COMPANY

Crankshaft Position Sensor Replacement

Callout	Component Name
Preliminary Procedure Remove the starter motor. Refer to **Starter Replacement (1.4L LUV)** , **Starter Replacement (1.8L LUW and LWE)** .	
1	Crankshaft Position Sensor Fastener **CAUTION:** **Refer to Fastener Caution .** **Procedure** Remove the crankshaft position sensor bolt **Tighten** 4.5 N.m (40 lb in)
2	Crankshaft Position Sensor **Procedure** Disconnect all electrical connectors as needed.

CAMSHAFT POSITION SENSOR REPLACEMENT

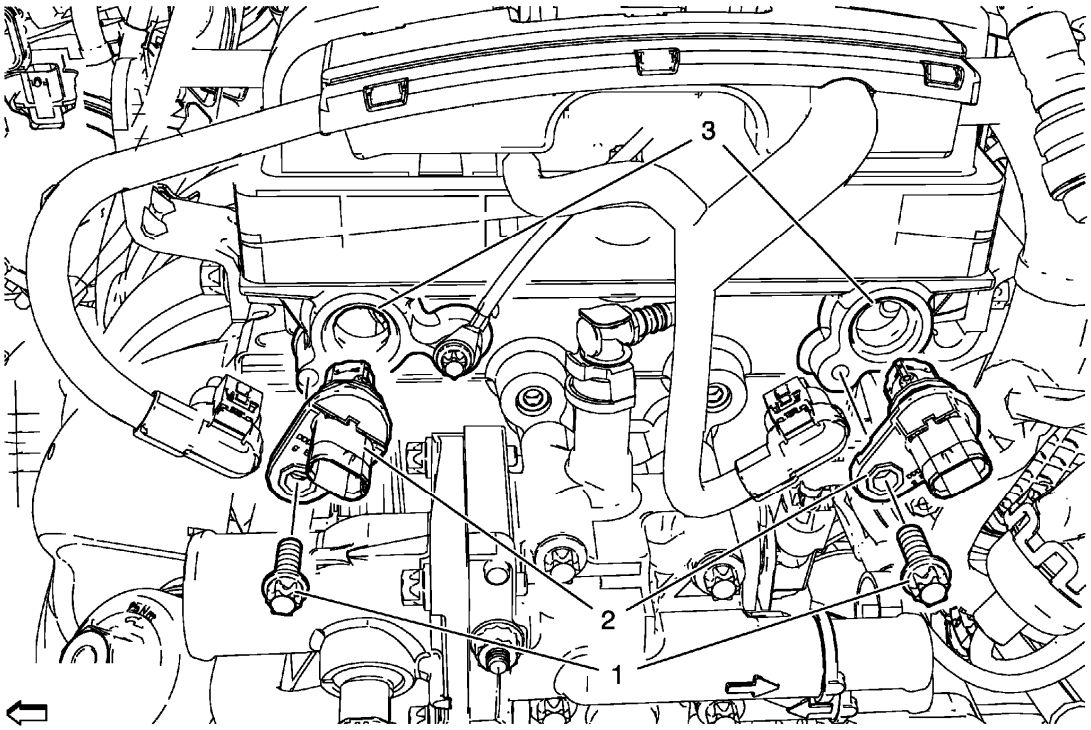

Fig. 164: Camshaft Position Sensor (1.8L)
Courtesy of GENERAL MOTORS COMPANY

Camshaft Position Sensor Replacement

Callout	Component Name
1	Camshaft Position Sensor Fastener **CAUTION:** **Refer to Fastener Caution .** **Tighten** 6 N.m (53 lb in)
2	Camshaft Position Sensor **Procedure** Disconnect electrical connectors as needed.
3	Camshaft Position Sensor Seal Ring

KNOCK SENSOR REPLACEMENT

Removal Procedure

1. Open the hood.
2. Disconnect the negative cable from the battery. Refer to **Battery Negative Cable Disconnection and Connection** .

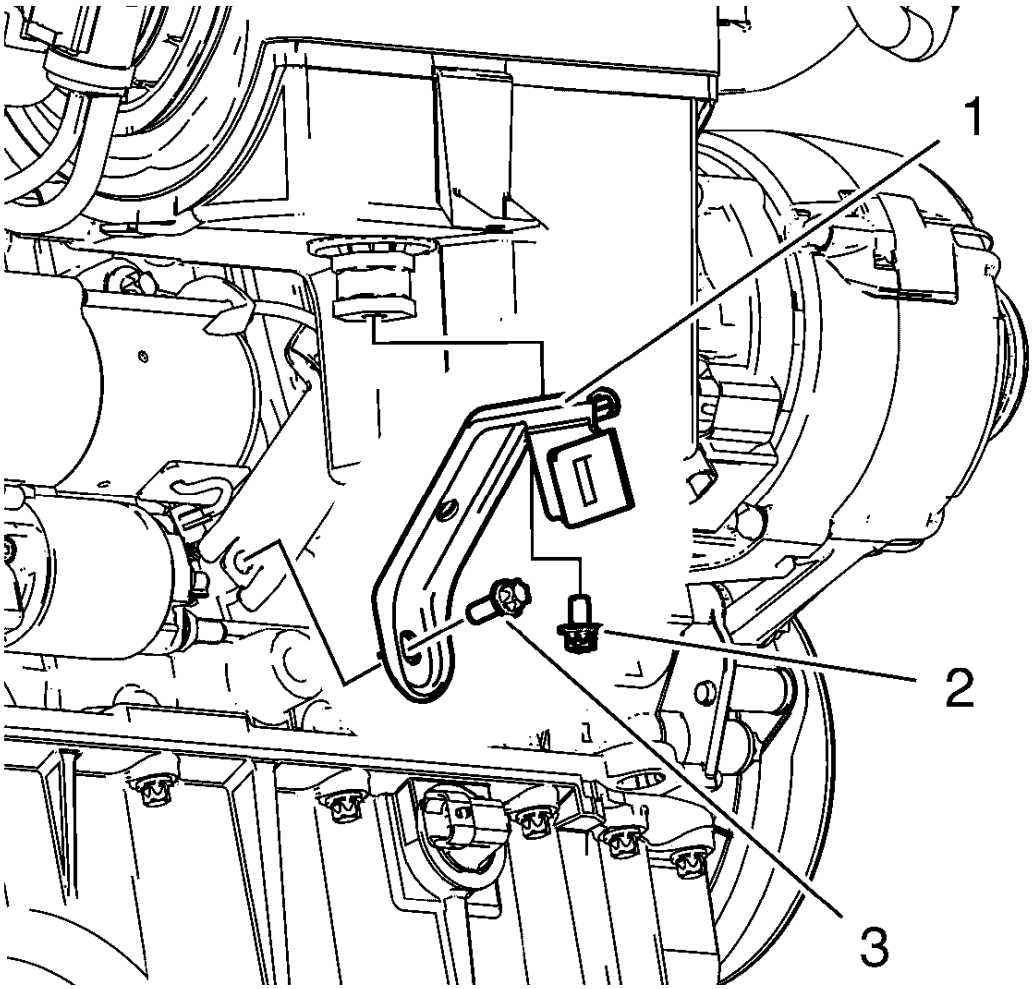

Fig. 165: Intake Manifold Bracket
Courtesy of GENERAL MOTORS COMPANY

3. Remove the 2 intake manifold bracket bolts (2, 3).
4. Unclip the wiring harness.
5. Remove the intake manifold bracket (1).

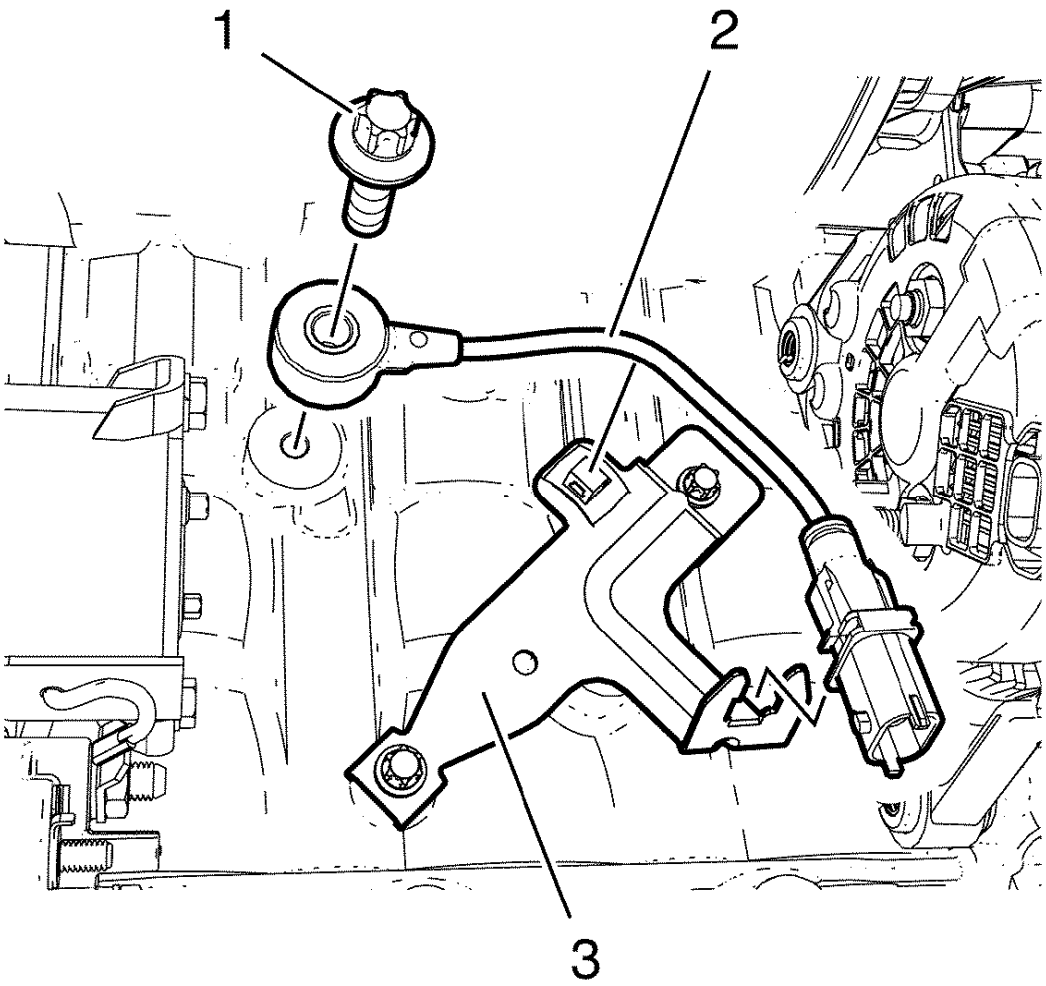

Fig. 166: Knock Sensor And Bracket
Courtesy of GENERAL MOTORS COMPANY

6. Remove the sensor bolt (1).
7. Disconnect the wiring harness plug.
8. Remove the knock sensor (2) from the bracket (3).

Installation Procedure

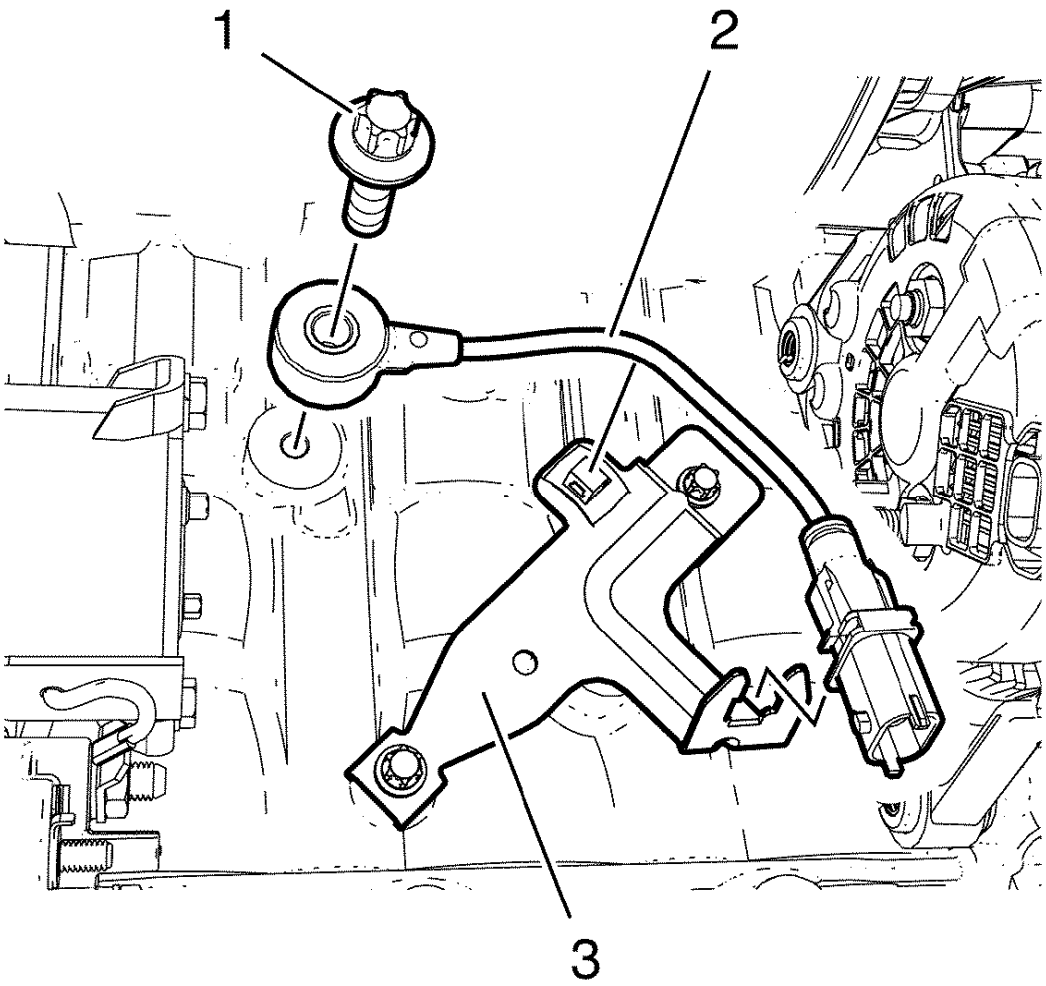

Fig. 167: Knock Sensor And Bracket
Courtesy of GENERAL MOTORS COMPANY

1. Install the knock sensor (2) to the bracket (3).

CAUTION: Refer to Fastener Caution

2. Install the sensor bolt (1) and tighten to 20 N.m (15 lb ft).
3. Connect the wiring harness plug.

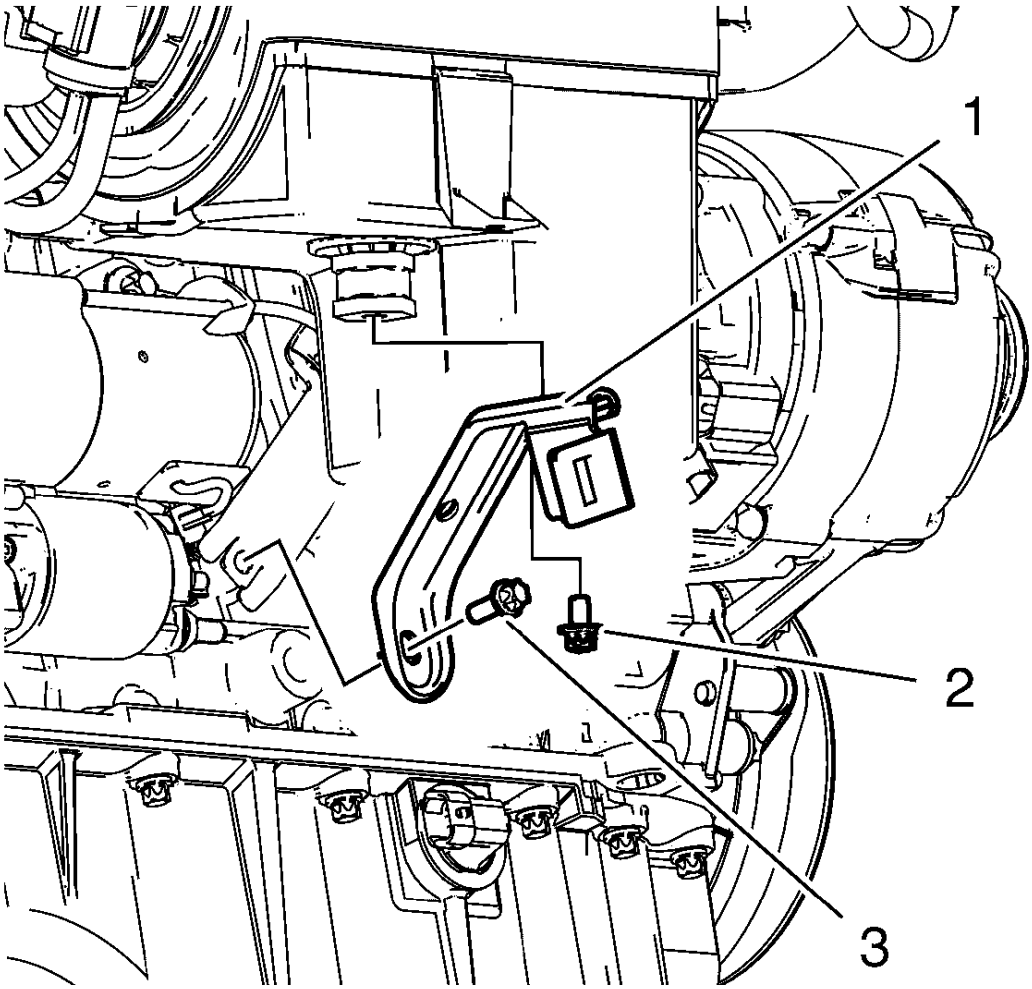

Fig. 168: Intake Manifold Bracket
Courtesy of GENERAL MOTORS COMPANY

4. Install the intake manifold bracket (1).
5. Clip in the wiring harness.
6. Install the 2 intake manifold bracket bolts (2, 3) and tighten to 8 N.m (71 lb in).
7. Connect the negative cable to the battery. Refer to **Battery Negative Cable Disconnection and Connection** .
8. Close the hood.

AIR CLEANER INLET DUCT REPLACEMENT

Removal Procedure

1. Remove the front bumper fascia. Refer to **Front Bumper Fascia Replacement** .

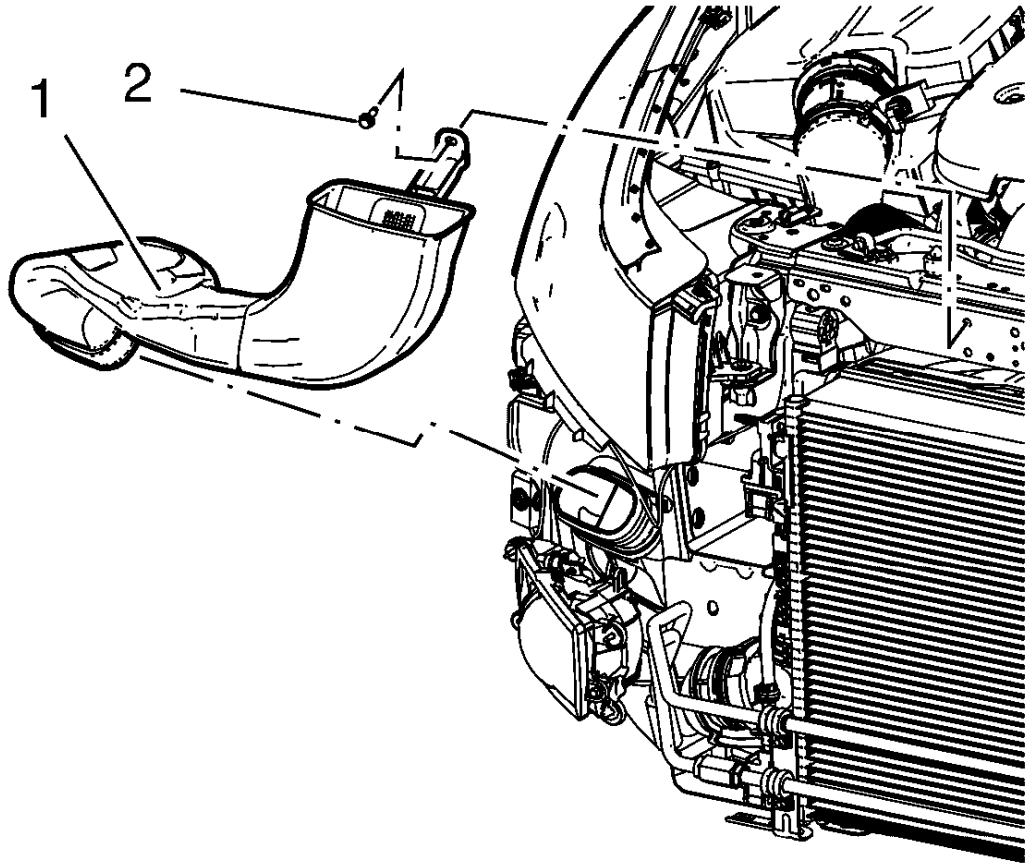

Fig. 169: Intake Air Duct And Bolt
Courtesy of GENERAL MOTORS COMPANY

2. Remove the intake air duct bolt (2).
3. Remove the intake air duct (1).

Installation Procedure

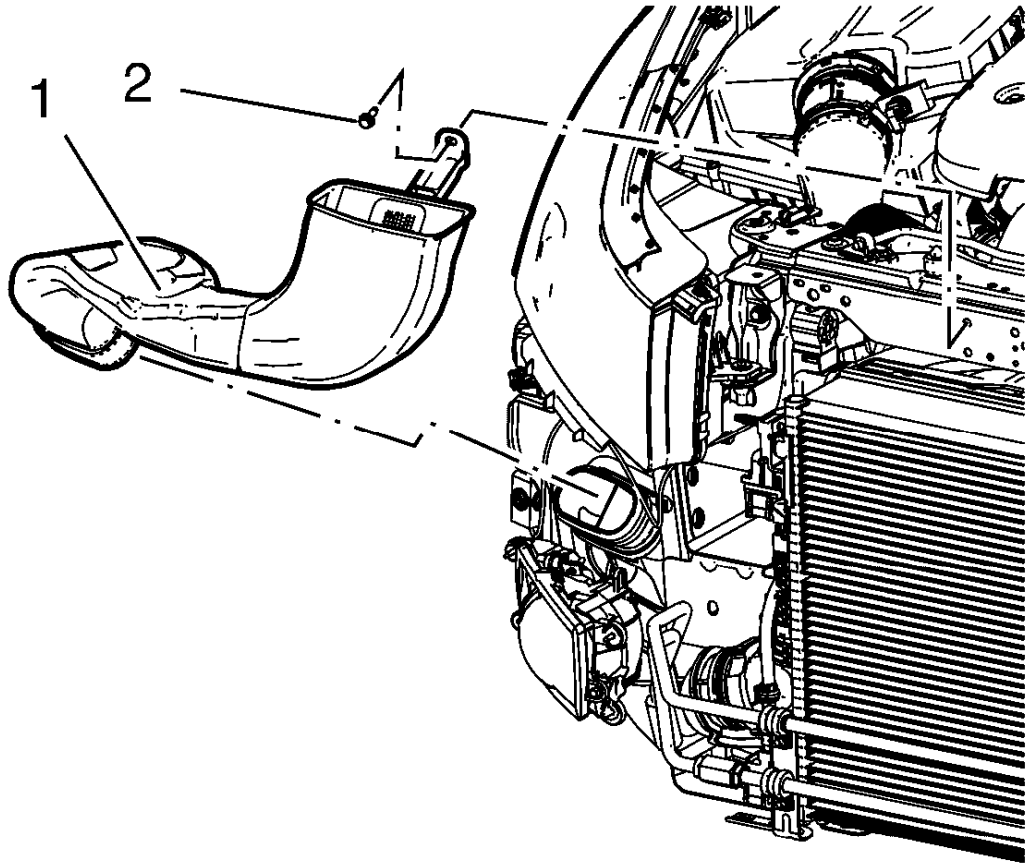

Fig. 170: Intake Air Duct And Bolt
Courtesy of GENERAL MOTORS COMPANY

1. Install the intake air duct (1).

CAUTION: Refer to Fastener Caution .

2. Install the intake air duct bolt (2) and tighten the to 5 N.m (44 lb in).
3. Install the front bumper fascia. Refer to **Front Bumper Fascia Replacement** .

AIR CLEANER OUTLET DUCT REPLACEMENT

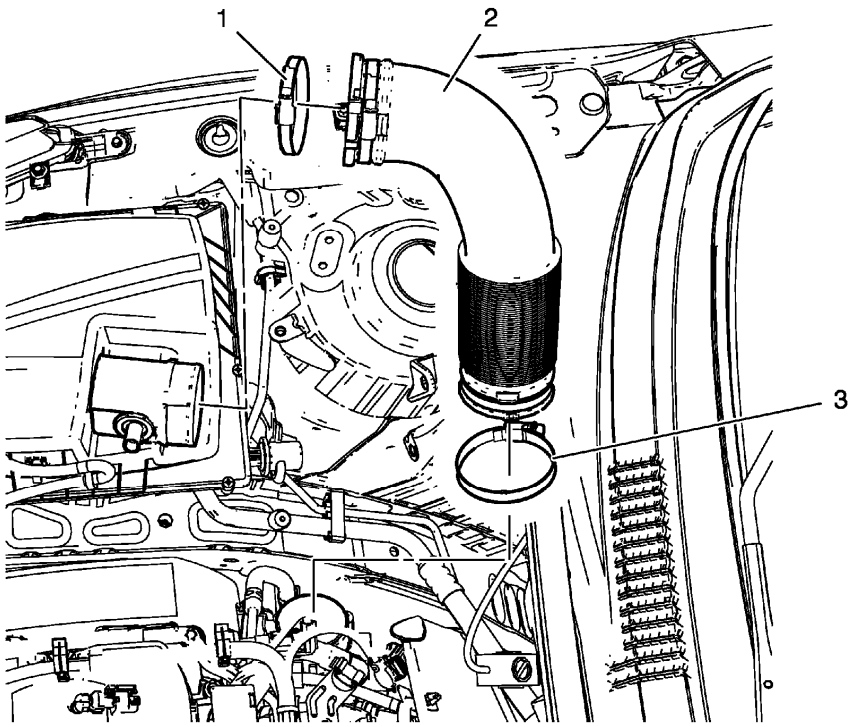

Fig. 171: Air Cleaner Outlet Duct (1.8L LUW)
Courtesy of GENERAL MOTORS COMPANY

Air Cleaner Outlet Duct Replacement

Callout	Component Name
1	Air Cleaner Outlet Duct to Air Cleaner Housing Cover Clamp **CAUTION:** **Any time service is being performed which requires removal of the air cleaner assembly, always cover the throttle body opening. This will prevent any foreign material from entering the engine.** **CAUTION:** **Refer to Fastener Caution .** **Tighten** 3.5 N.m (31 lb in)
2	Air Cleaner Outlet Duct
3	Air Cleaner Outlet Duct to Intake Manifold Clamp **Tighten** 3.5 N.m (31 lb in)

AIR CLEANER ELEMENT REPLACEMENT

Removal Procedure

1. Open the hood.

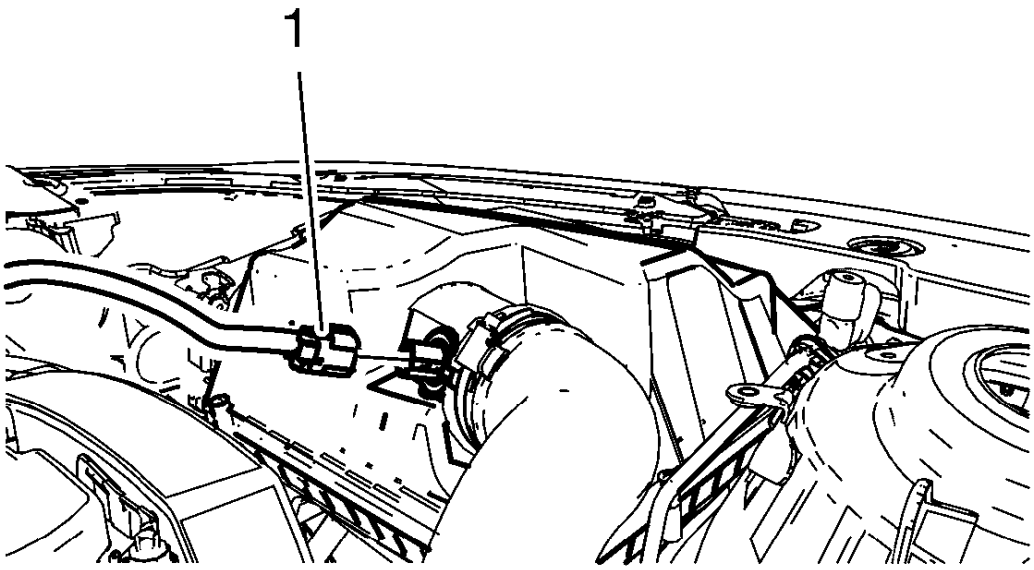

Fig. 172: Intake Air Sensor Wiring Harness Plug
Courtesy of GENERAL MOTORS COMPANY

2. Disconnect the intake air sensor wiring harness plug (1).
3. Remove the air cleaner outlet duct. Refer to **Air Cleaner Outlet Duct Replacement**.

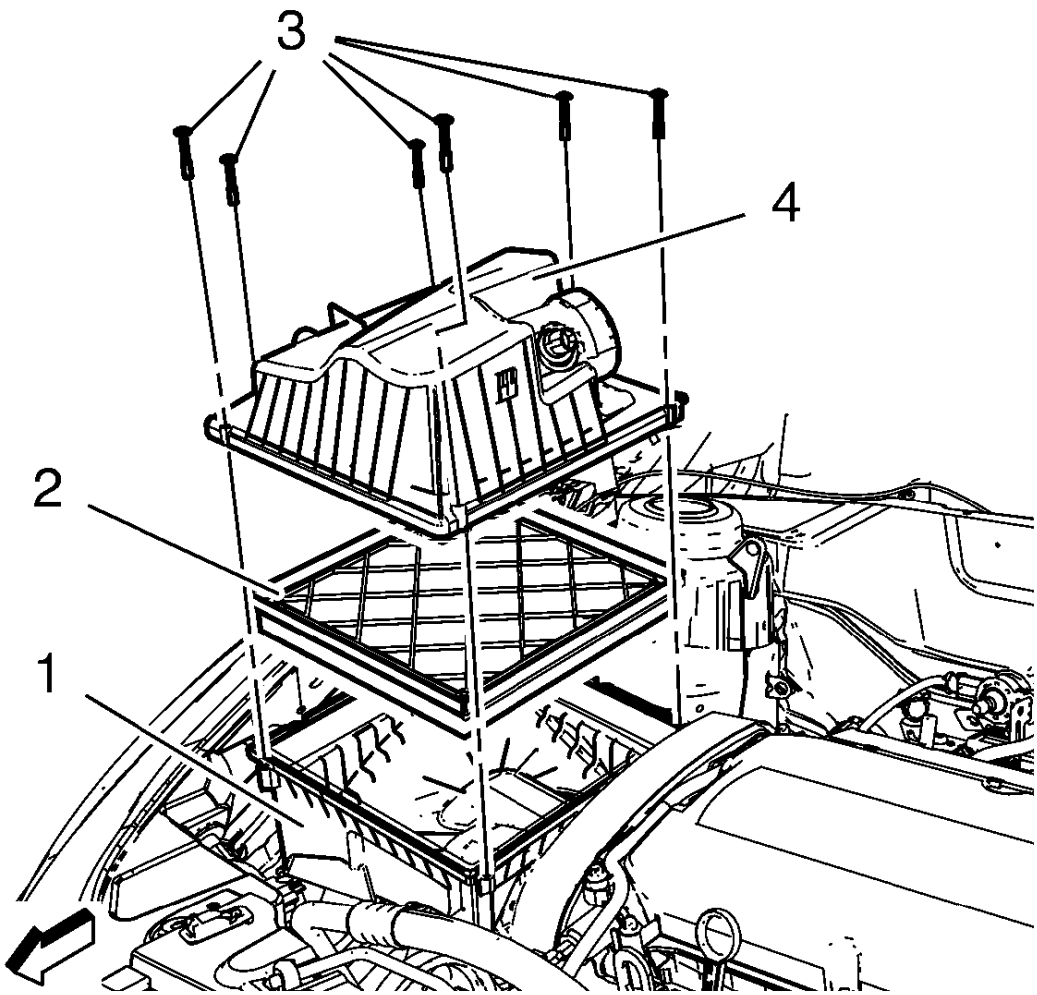

Fig. 173: Air Cleaner Element, Air Cleaner Housing, Air Cleaner Housing Cover And Bolts
Courtesy of GENERAL MOTORS COMPANY

4. Remove the 6 air cleaner housing cover bolts (3)
5. Remove the air cleaner housing cover (4).
6. Remove the air cleaner element (2) from the air cleaner housing (1).

Installation Procedure

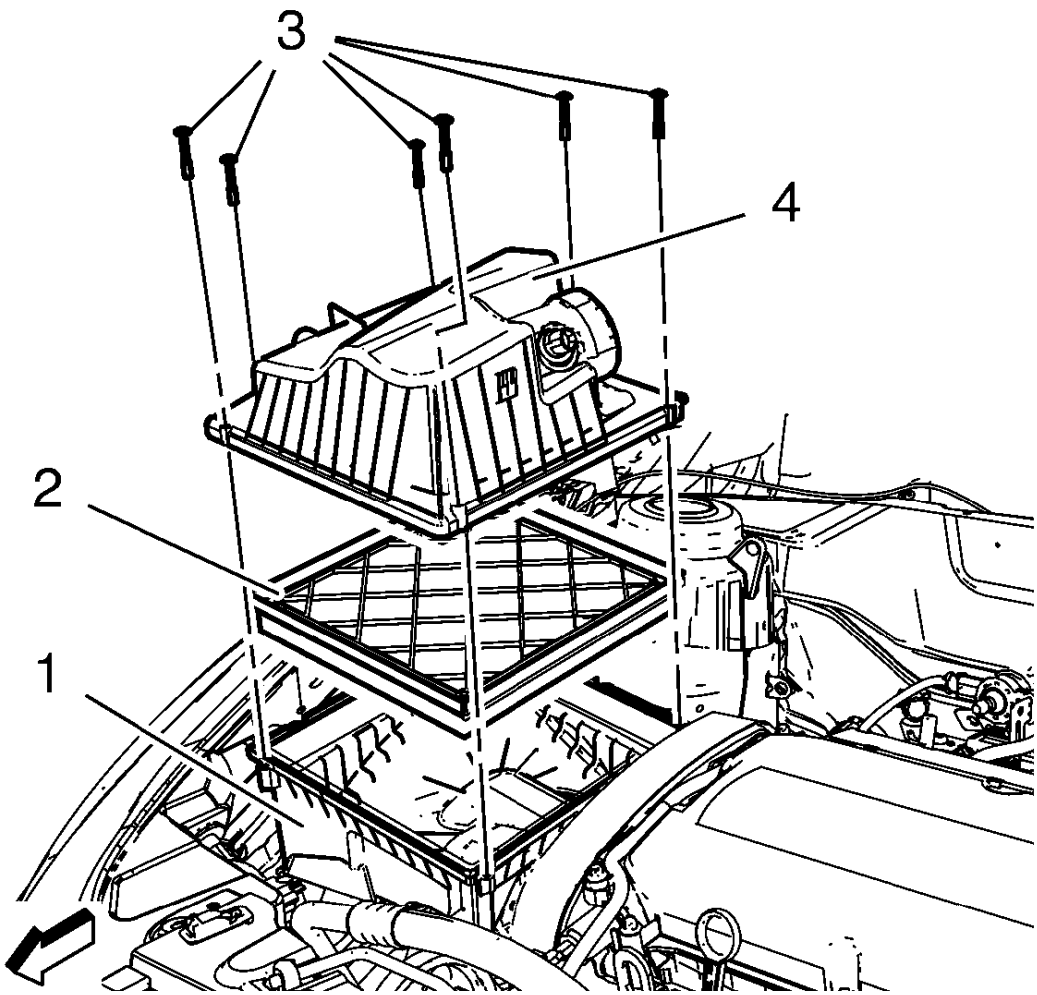

Fig. 174: Air Cleaner Element, Air Cleaner Housing, Air Cleaner Housing Cover And Bolts
Courtesy of GENERAL MOTORS COMPANY

1. Install the air cleaner element (2) into the air cleaner housing (1).
2. Install the air cleaner housing cover (4).

CAUTION: Refer to Fastener Caution .

3. Install the 6 air cleaner housing cover bolts (3) and tighten to 5 N.m (44 lb in).
4. Install the air cleaner outlet duct. Refer to **Air Cleaner Outlet Duct Replacement**.

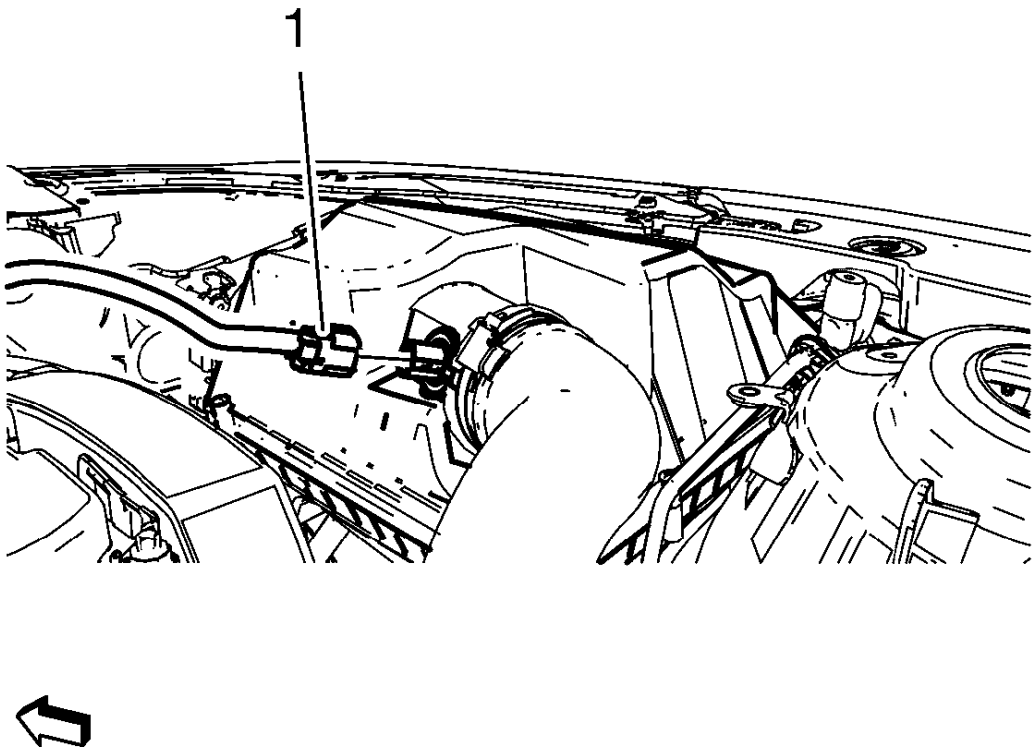

Fig. 175: Intake Air Sensor Wiring Harness Plug
Courtesy of GENERAL MOTORS COMPANY

5. Connect the intake air sensor wiring harness plug (1).
6. Close the hood.

AIR CLEANER ASSEMBLY REPLACEMENT (1.8L LUW)

Removal Procedure

1. Open the hood.

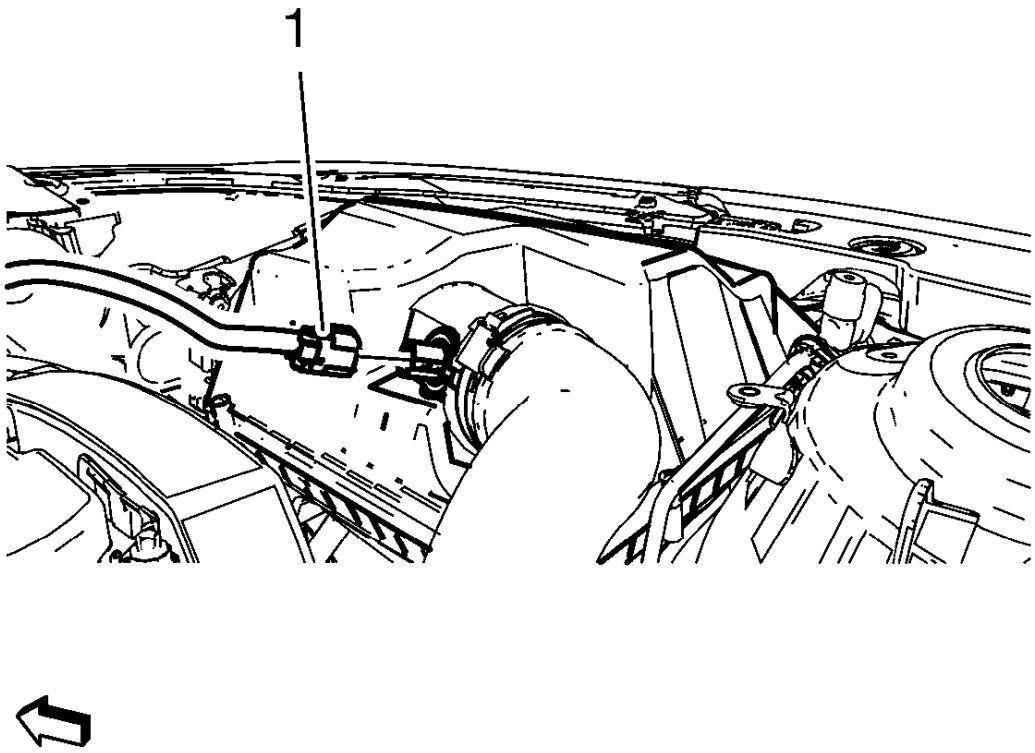

Fig. 176: Intake Air Sensor Wiring Harness Plug
Courtesy of GENERAL MOTORS COMPANY

2. Disconnect the intake air temperature sensor wiring harness plug (1).
3. Remove the air cleaner outlet duct. Refer to **Air Cleaner Outlet Duct Replacement**.

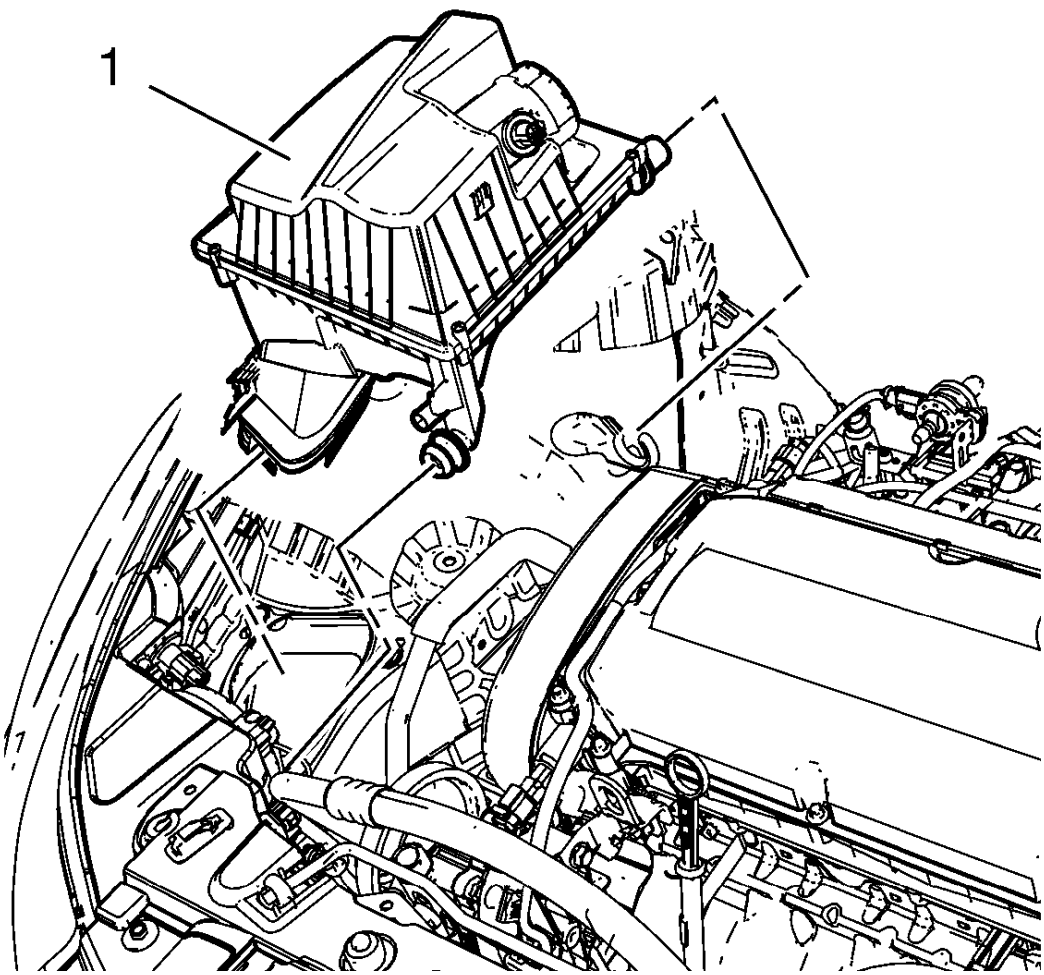

Fig. 177: Air Cleaner Assembly
Courtesy of GENERAL MOTORS COMPANY

4. Remove the air cleaner assembly (1).
    - Unclip the air cleaner inlet duct
    - Unclip the drain hose, if equipped

Installation Procedure

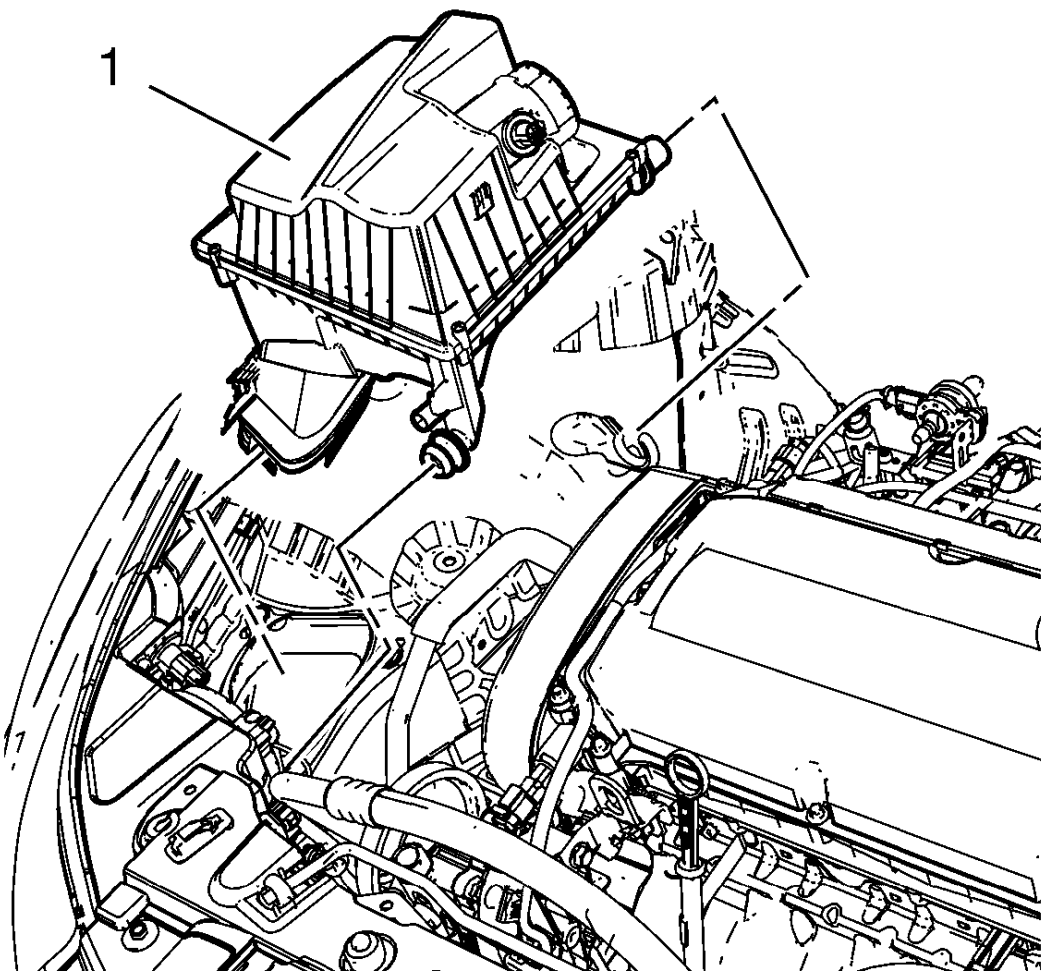

Fig. 178: Air Cleaner Assembly
Courtesy of GENERAL MOTORS COMPANY

1. Install the air cleaner assembly (1).
    - Clip in the drain hose, if equipped
    - Clip in the air cleaner inlet duct
2. Install the air cleaner outlet duct. Refer to **Air Cleaner Outlet Duct Replacement**.

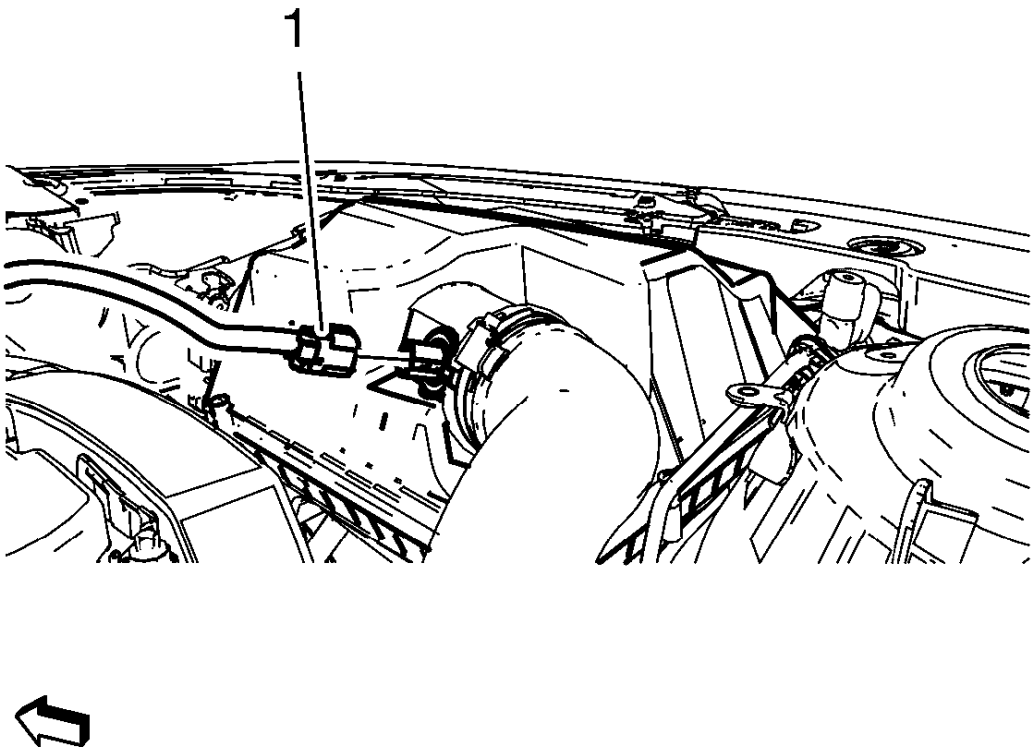

Fig. 179: Intake Air Sensor Wiring Harness Plug
Courtesy of GENERAL MOTORS COMPANY

3. Connect the intake air temperature sensor wiring harness plug (1).
4. Close the hood.

AIR CLEANER ASSEMBLY REPLACEMENT (1.8L LWE)

Removal Procedure

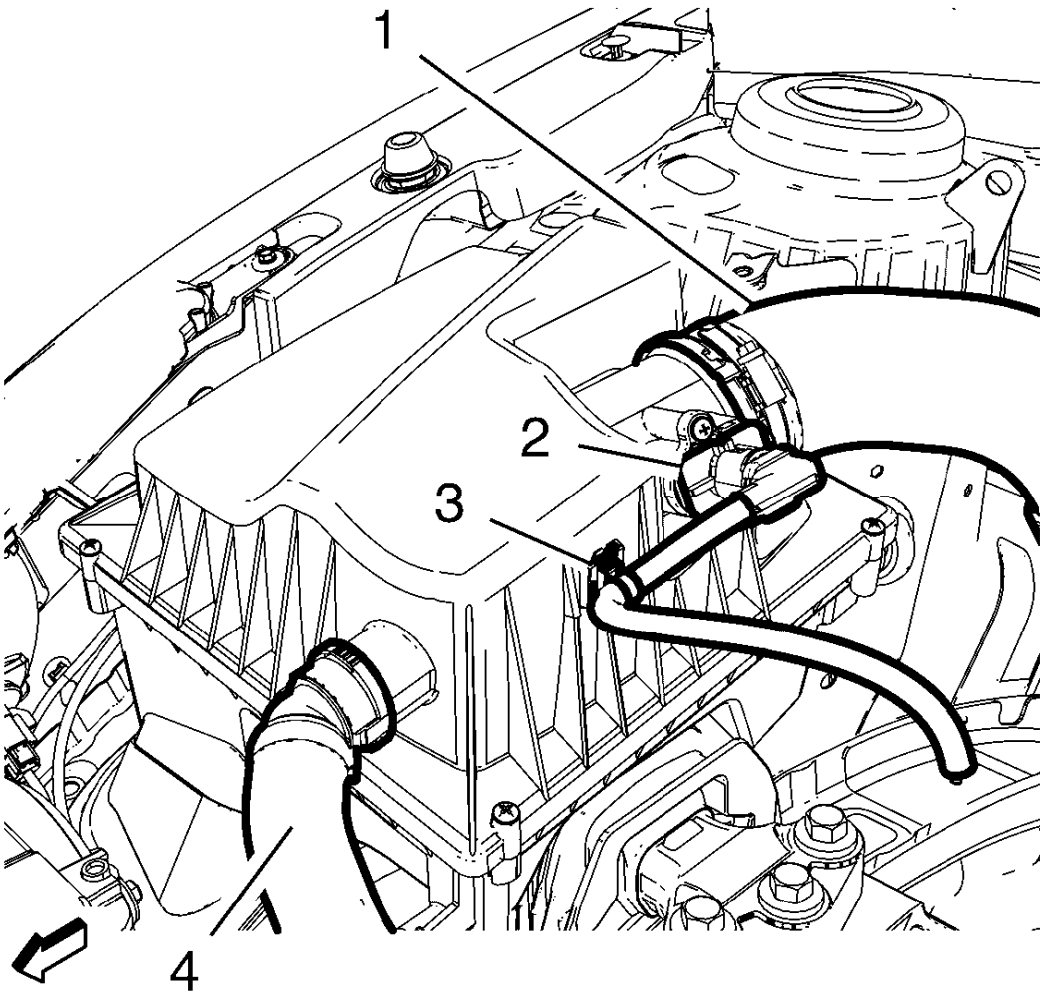

Fig. 180: Air Cleaner Outlet Duct
Courtesy of GENERAL MOTORS COMPANY

1. Disconnect the mass airflow sensor / intake air temperature sensor wiring harness plug (2).
2. Unclip the engine control module (ECM) wiring harness (3) from the air cleaner housing.
3. Remove the air cleaner outlet duct. Refer to **Air Cleaner Outlet Duct Replacement**.
4. Remove the secondary air injection pump inlet hose (4) from the air cleaner upper housing. Refer to **Secondary Air Injection Pump Inlet Hose Replacement**.

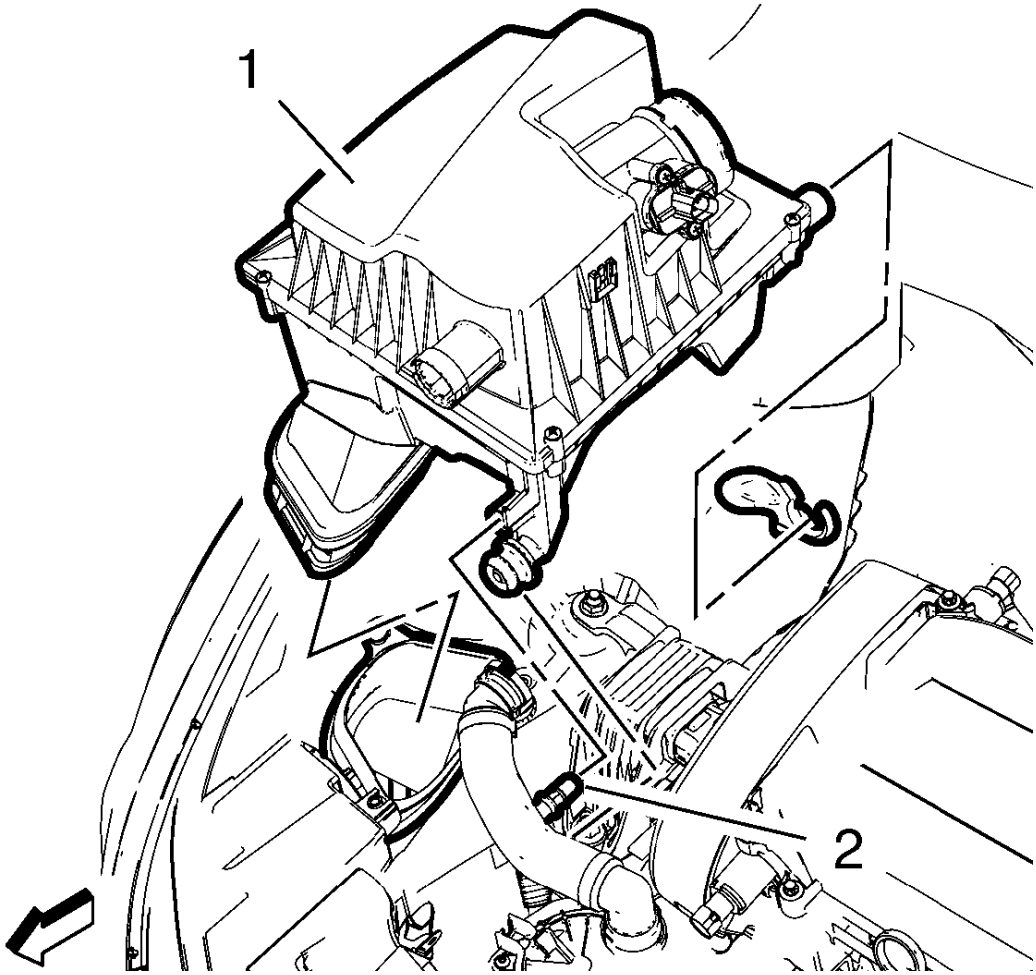

Fig. 181: Water Drain Hose
Courtesy of GENERAL MOTORS COMPANY

5. Unclip the water drain hose (2) from the air cleaner lower housing (1).
6. Remove the air cleaner assembly (1).

Installation Procedure

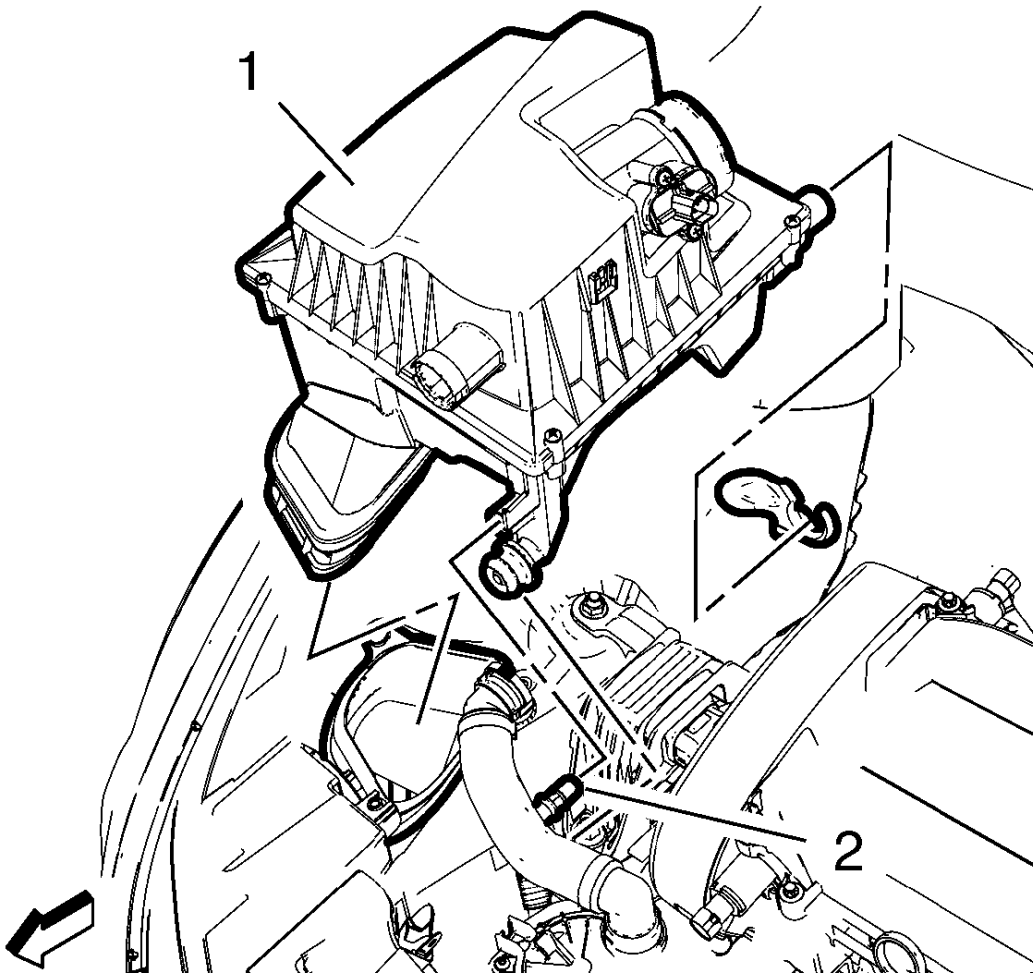

Fig. 182: Water Drain Hose
Courtesy of GENERAL MOTORS COMPANY

1. Install the air cleaner assembly (1).
2. Clip in the water drain hose (2) to the air cleaner lower housing (1).

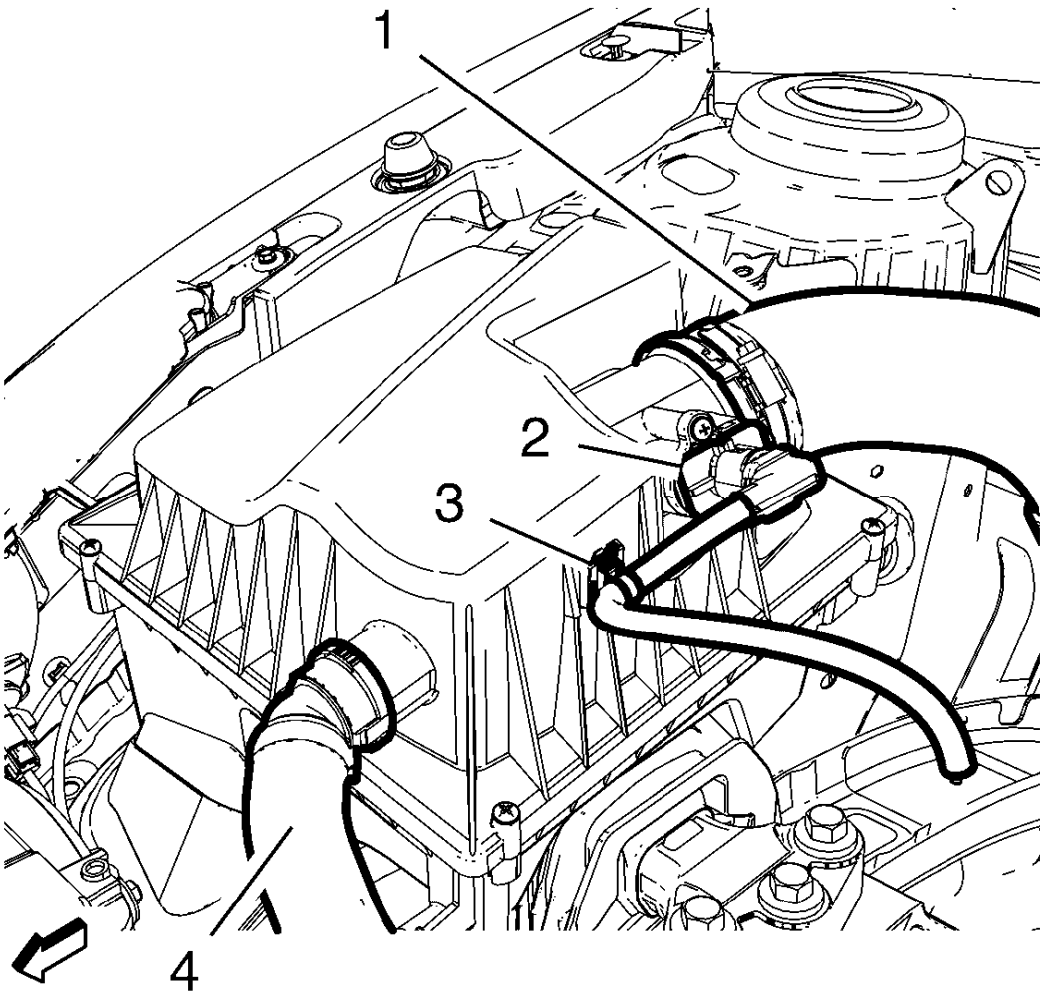

Fig. 183: Air Cleaner Outlet Duct
Courtesy of GENERAL MOTORS COMPANY

3. Install the air cleaner outlet duct (1). Refer to **Air Cleaner Outlet Duct Replacement**.
4. Install the secondary air injection pump inlet hose (4) to the air cleaner upper housing. Refer to **Secondary Air Injection Pump Inlet Hose Replacement**.
5. Connect the mass airflow sensor / intake air temperature sensor wiring harness plug (2).
6. Clip in the ECM wiring harness (3) the air cleaner housing.

AIR CLEANER UPPER HOUSING REPLACEMENT (1.8L LUW)

Removal Procedure

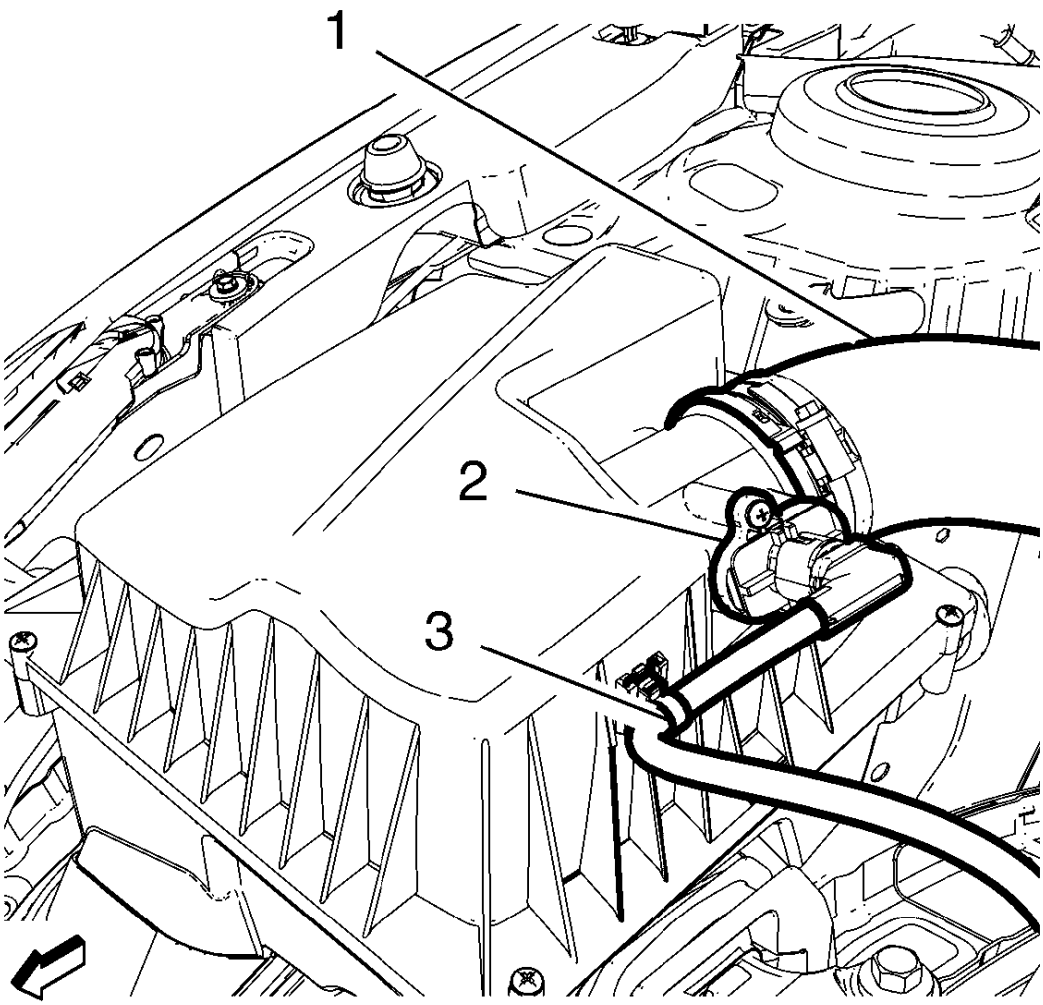

Fig. 184: ECM Wiring Harness
Courtesy of GENERAL MOTORS COMPANY

1. Disconnect the mass airflow sensor / intake air temperature sensor wiring harness plug (2).
2. Unclip the ECM wiring harness (3) from the air cleaner housing.
3. Remove the air cleaner outlet duct (1). Refer to **Air Cleaner Outlet Duct Replacement**.

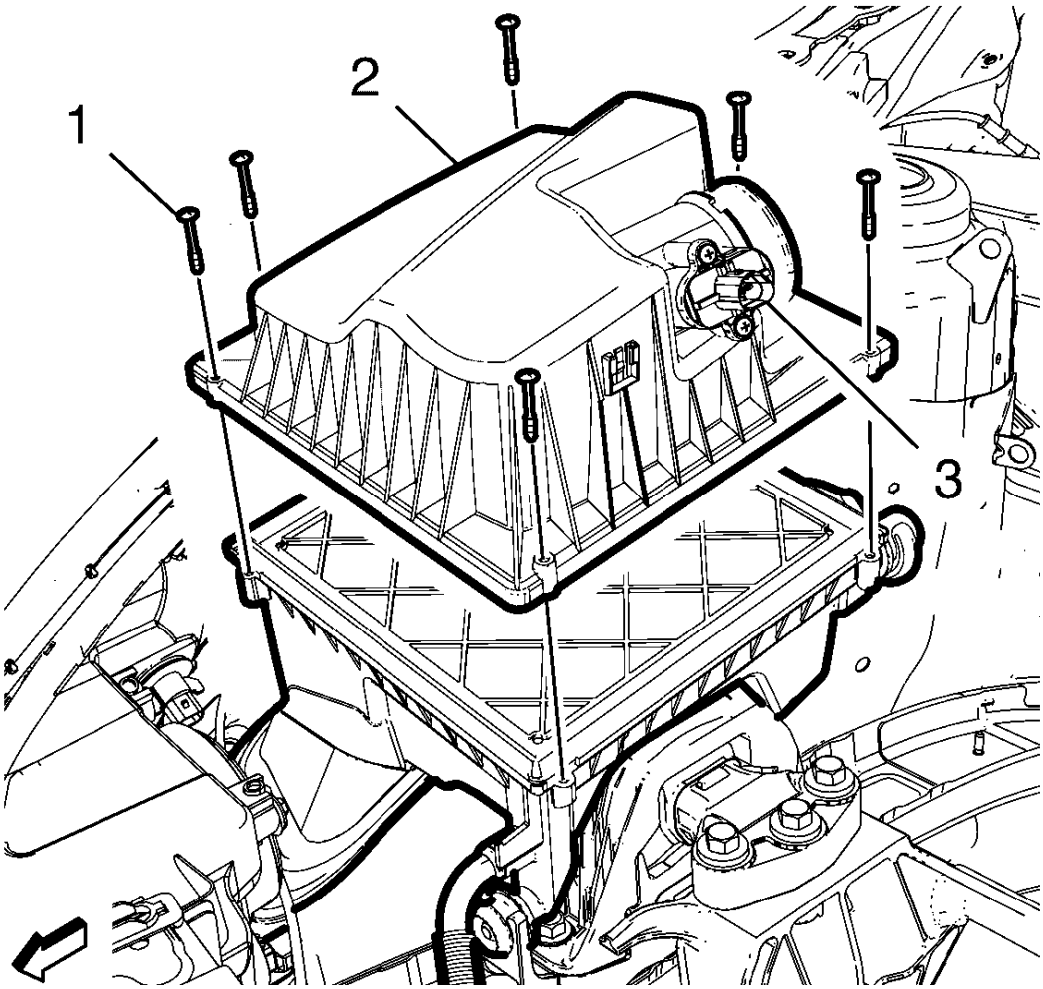

Fig. 185: Intake Air Temperature Sensor
Courtesy of GENERAL MOTORS COMPANY

4. Remove the mass airflow sensor / intake air temperature sensor (3) from the air cleaner upper housing (2).
   - For the mass airflow sensor, refer to **Mass Airflow Sensor Replacement**.
   - For the intake air temperature sensor, refer to **Intake Air Temperature Sensor Replacement**.
5. Remove the 6 air cleaner housing cover bolts (1).
6. Remove the air cleaner upper housing (2).

Installation Procedure

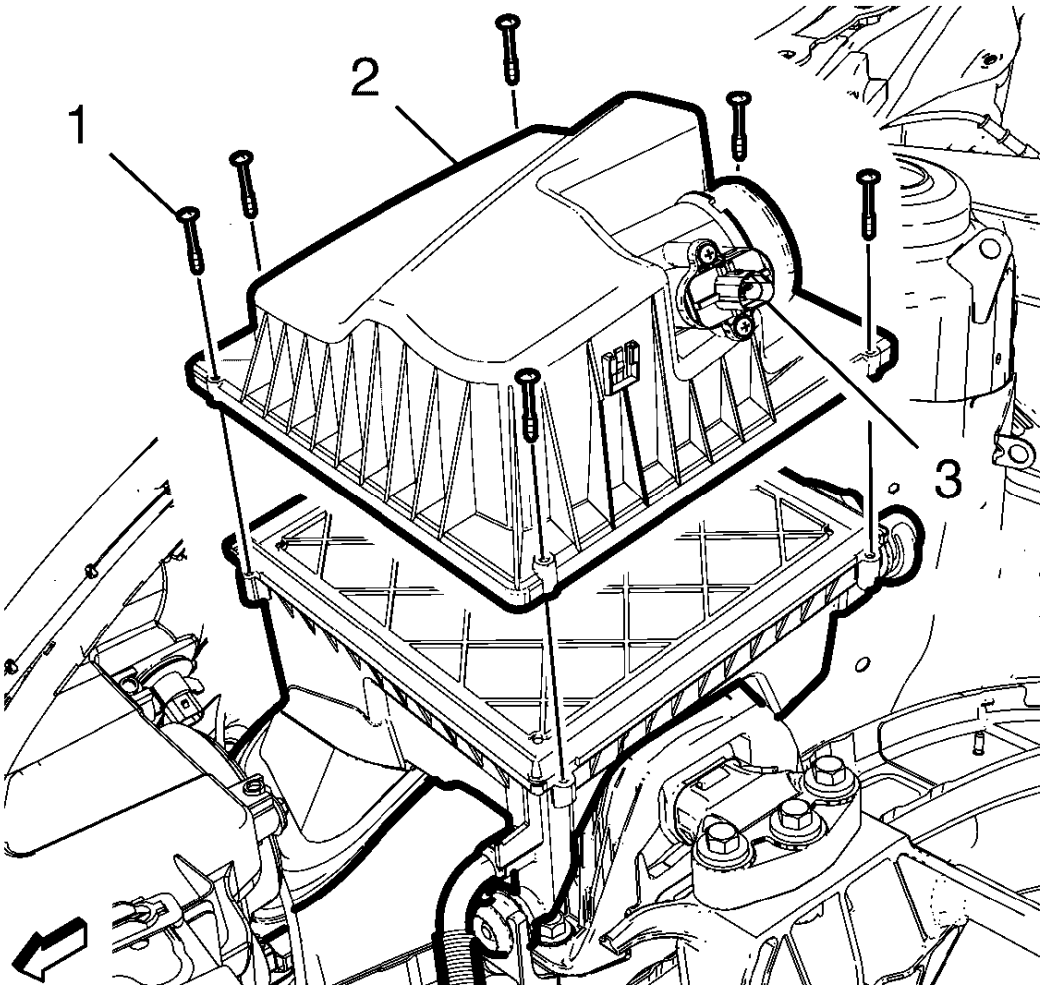

Fig. 186: Intake Air Temperature Sensor
Courtesy of GENERAL MOTORS COMPANY

1. Install the air cleaner upper housing (2).

CAUTION: Refer to Fastener Caution .

2. Install the 6 air cleaner housing cover bolts (1) and tighten to 5 N.m (44 lb in).
3. Install the mass airflow sensor / intake air temperature sensor (3) to the air cleaner upper housing (2).
   - For the mass airflow sensor, refer to **Mass Airflow Sensor Replacement**.
   - For the intake air temperature sensor, refer to **Intake Air Temperature Sensor Replacement**.

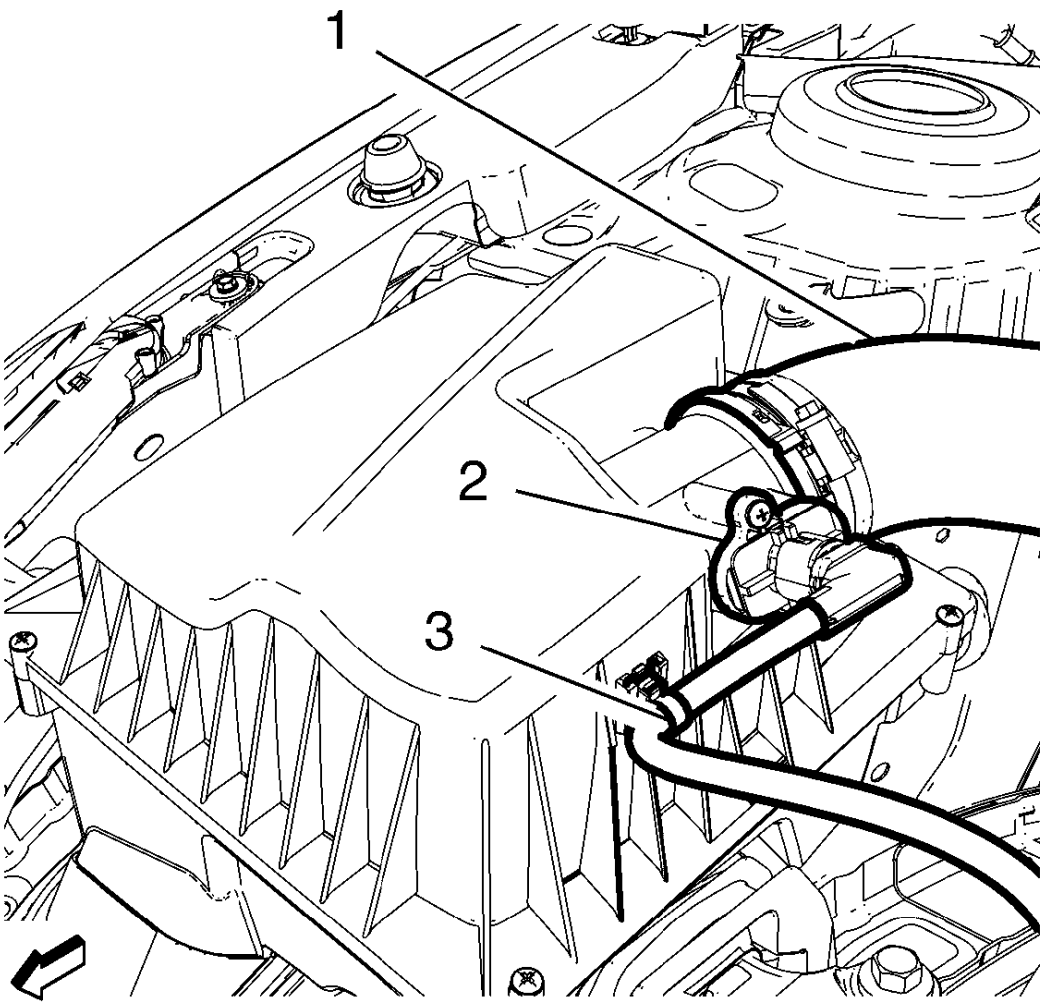

Fig. 187: ECM Wiring Harness
Courtesy of GENERAL MOTORS COMPANY

4. Install the air cleaner outlet duct (1). Refer to **Air Cleaner Outlet Duct Replacement**.
5. Connect the mass airflow sensor / intake air temperature sensor wiring harness plug (2).
6. Clip in the ECM wiring harness (3) the air cleaner housing.

AIR CLEANER UPPER HOUSING REPLACEMENT (1.8L LWE)

Removal Procedure

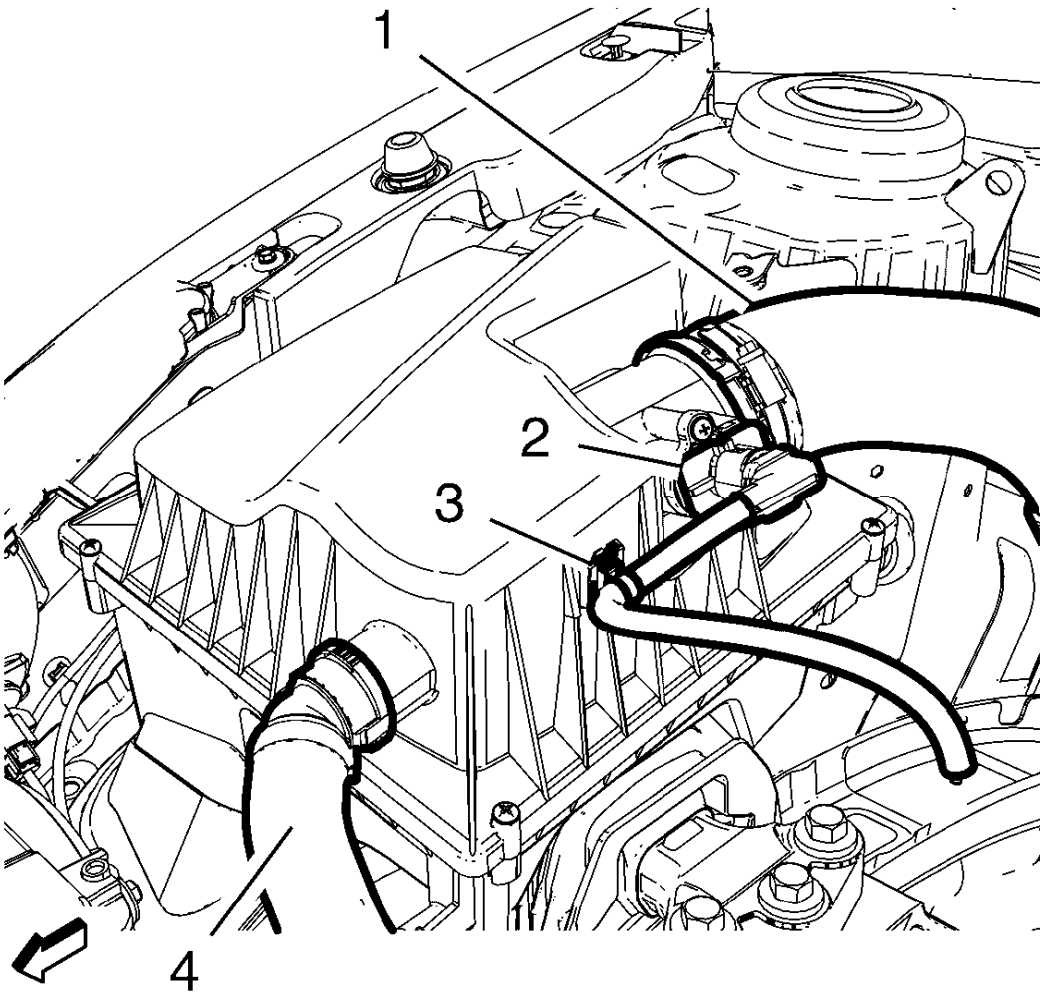

Fig. 188: Air Cleaner Outlet Duct
Courtesy of GENERAL MOTORS COMPANY

1. Disconnect the mass airflow sensor / intake air temperature sensor wiring harness plug (2).
2. Unclip the engine control module (ECM) wiring harness (3) from the air cleaner housing.
3. Remove the air cleaner outlet duct (1). Refer to **Air Cleaner Outlet Duct Replacement**.
4. Remove the secondary air injection pump inlet hose (4) from the air cleaner upper housing.

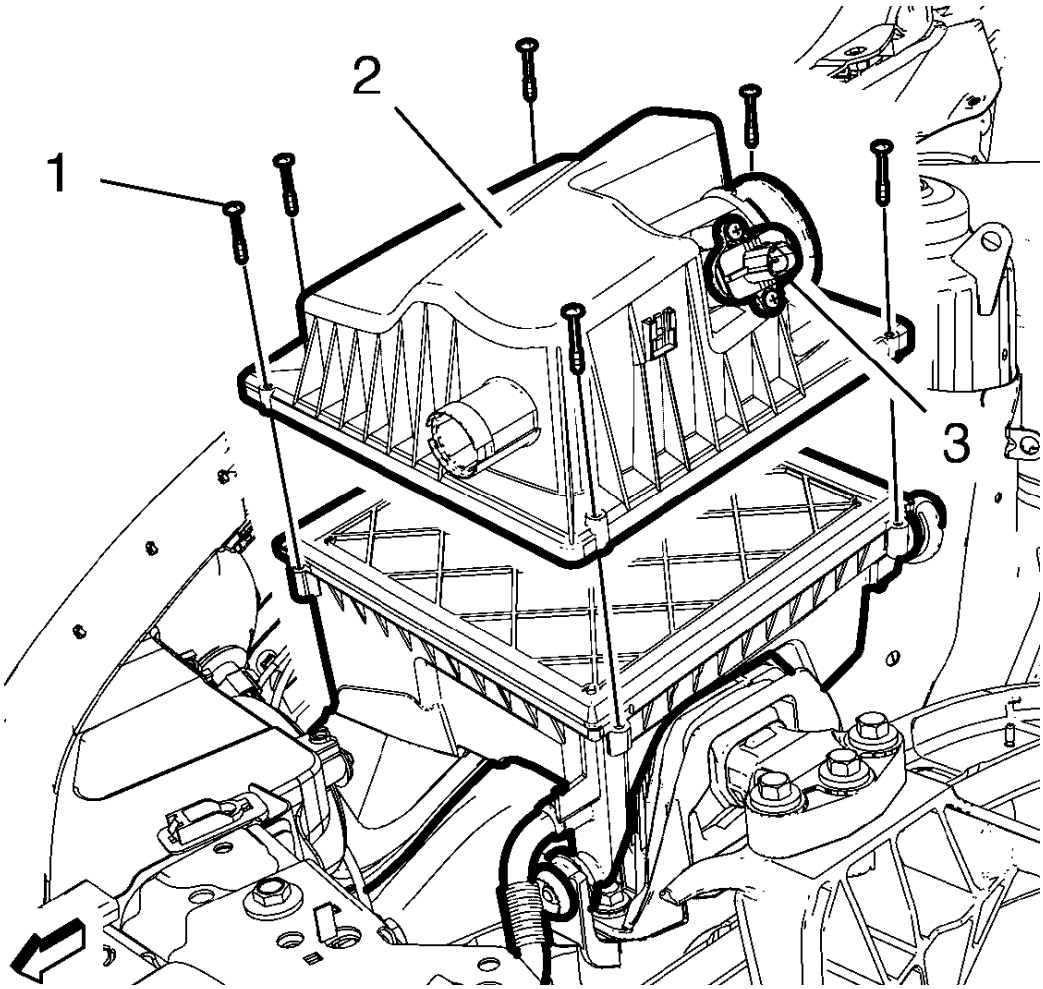

Fig. 189: Mass Airflow Sensor
Courtesy of GENERAL MOTORS COMPANY

5. Remove the mass airflow sensor (3) from the air cleaner upper housing (2). Refer to **Mass Airflow Sensor Replacement**.
6. Remove the 6 air cleaner housing cover bolts (1).
7. Remove the air cleaner upper housing (2).

Installation Procedure

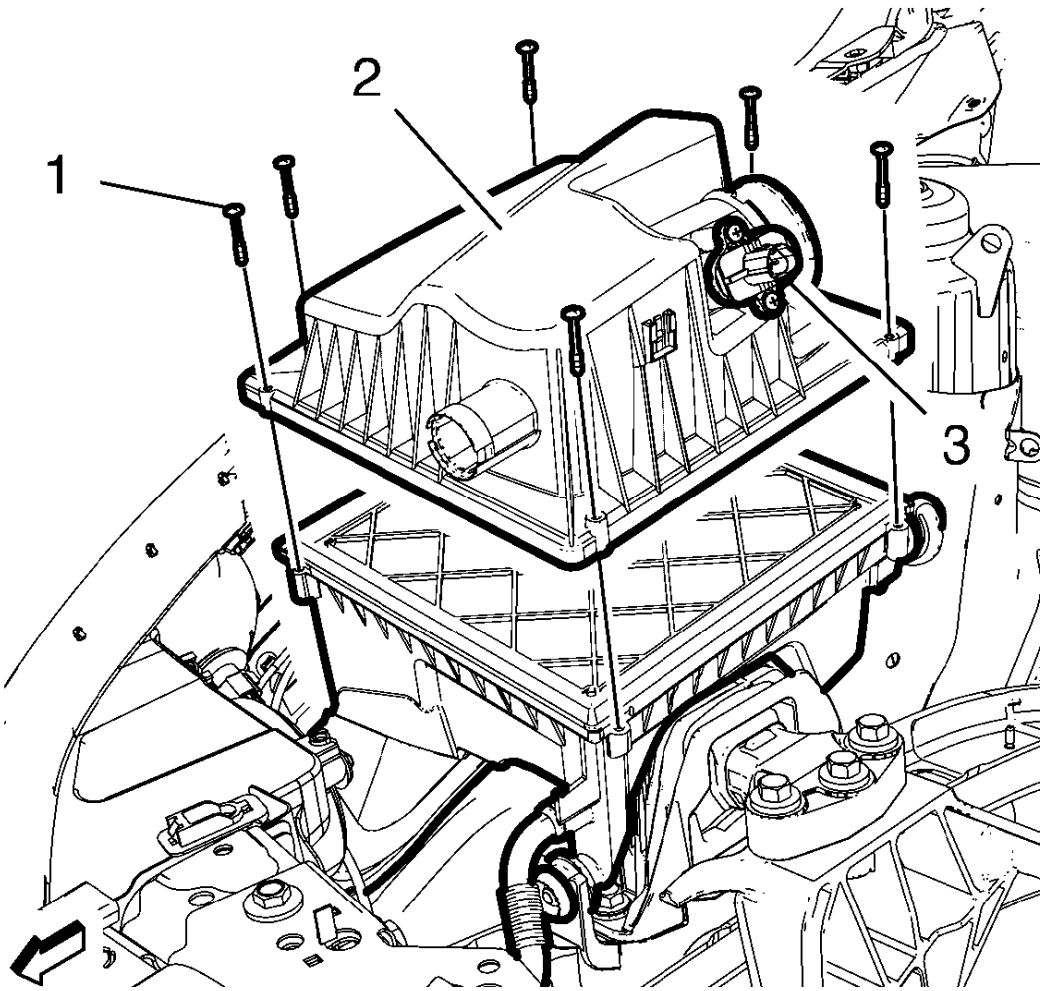

Fig. 190: Mass Airflow Sensor
Courtesy of GENERAL MOTORS COMPANY

1. Install the air cleaner upper housing (2).

CAUTION: Refer to Fastener Caution .

2. Install the 6 air cleaner housing cover bolts (1) and tighten to 5 N.m (44 lb in).
3. Install the mass airflow sensor (3) to the air cleaner upper housing (2). Refer to **Mass Airflow Sensor Replacement**.

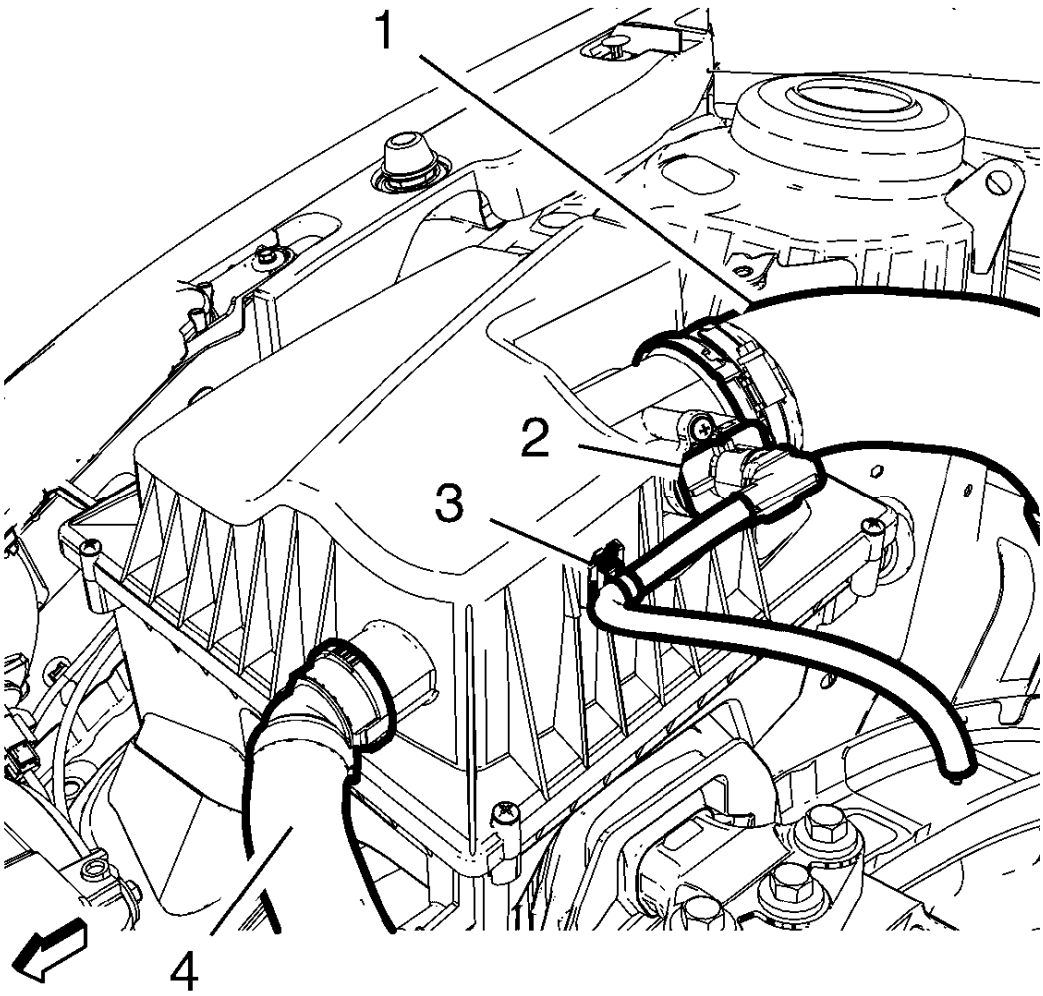

Fig. 191: Air Cleaner Outlet Duct
Courtesy of GENERAL MOTORS COMPANY

4. Install the air cleaner outlet duct (1). Refer to **Air Cleaner Outlet Duct Replacement**.
5. Install the secondary air injection pump inlet hose (4) to the air cleaner upper housing.
6. Connect the mass airflow sensor / intake air temperature sensor wiring harness plug (2).
7. Clip in the ECM wiring harness (3) the air cleaner housing.

AIR CLEANER LOWER HOUSING REPLACEMENT

Removal Procedure

1. Remove the air cleaner upper housing. Refer to **Air Cleaner Upper Housing Replacement (1.8L LUW)**, **Air Cleaner Upper Housing Replacement (1.8L LWE)**.
2. Remove the air cleaner element. Refer to **Air Cleaner Element Replacement**.

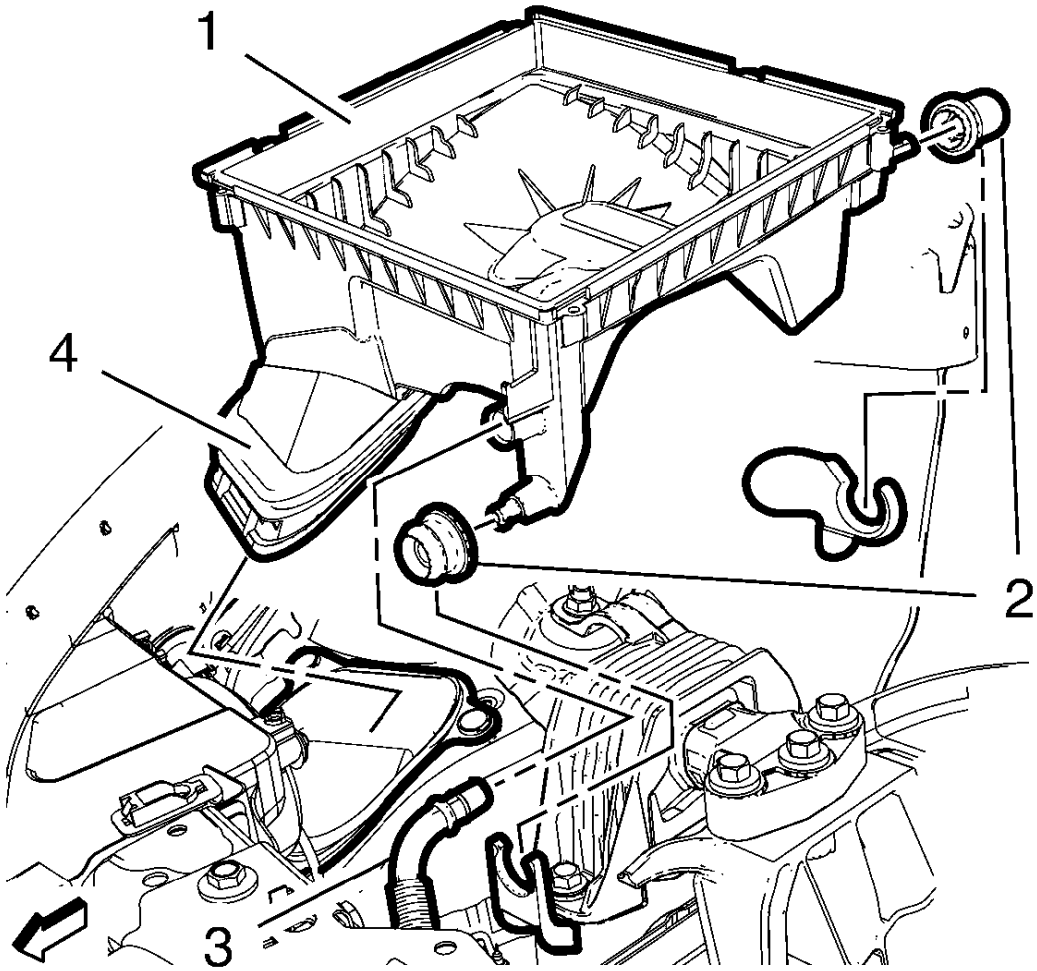

Fig. 192: Air Cleaner Insulator And Air Cleaner Lower Housing
Courtesy of GENERAL MOTORS COMPANY

3. Unclip the water drain hose (3) from the air cleaner lower housing (1) if equipped.
4. Remove the air cleaner lower housing (1) from the air cleaner brackets.
5. Remove the air cleaner bracket insulators (2) from the air cleaner lower housing (1).
6. Remove the air cleaner insulator (4) from the air cleaner lower housing (1).

Installation Procedure

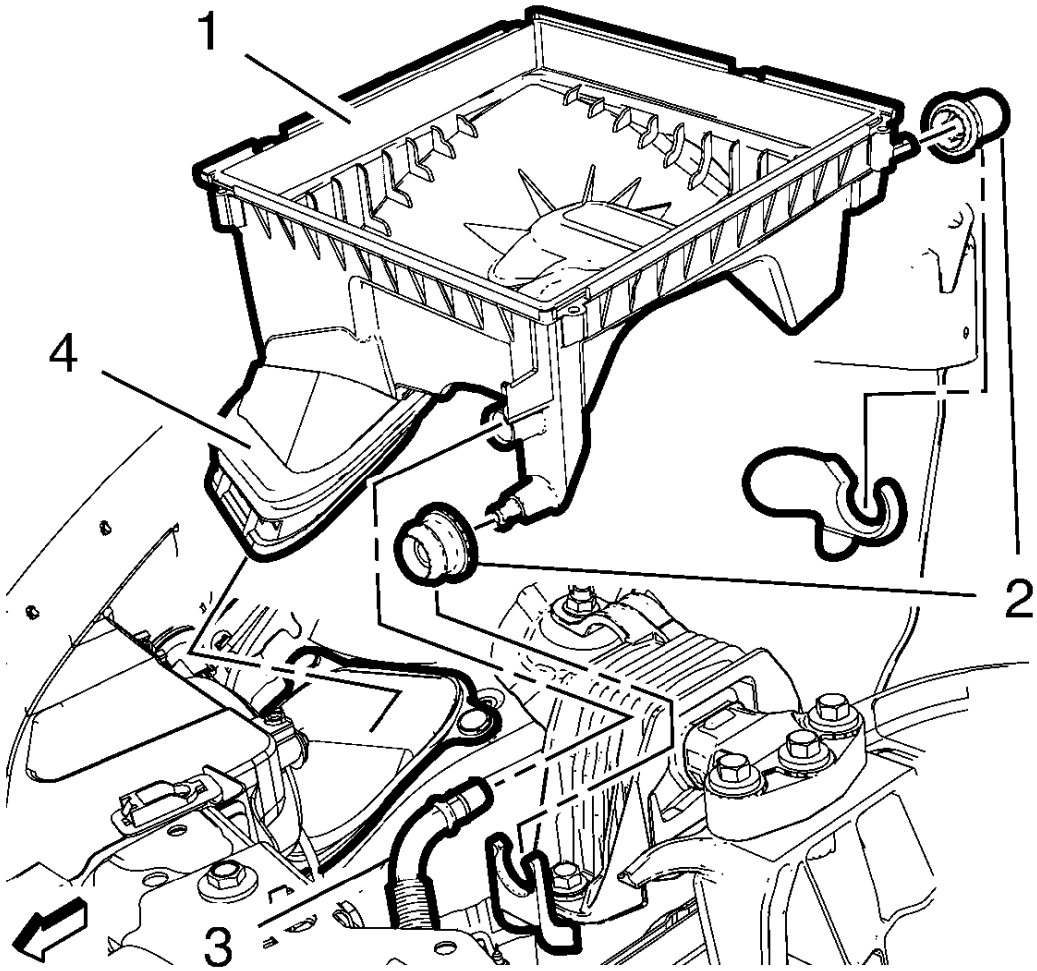

Fig. 193: Air Cleaner Insulator And Air Cleaner Lower Housing
Courtesy of GENERAL MOTORS COMPANY

1. Install the air cleaner insulator (4) to the air cleaner lower housing (1).
2. Install the air cleaner bracket insulators (2) to the air cleaner lower housing (1).
3. Install the air cleaner lower housing (1) to the air cleaner brackets.
4. Install the water drain hose (3) to the air cleaner lower housing (1) if equipped.
5. Install the air cleaner element. Refer to **Air Cleaner Element Replacement**.
6. Install the air cleaner upper housing. Refer to **Air Cleaner Upper Housing Replacement (1.8L LUW)**, **Air Cleaner Upper Housing Replacement (1.8L LWE)**.

2013 ENGINE PERFORMANCE

Engine Controls and Fuel - 1.8L LUW and LWE - Schematic and Routing Diagrams - Engine Controls Schematics - Cruze

WIRING SCHEMATIC DIAGRAMS

ENGINE CONTROLS WIRING SCHEMATICS

Power, Ground, Serial Data, and MIL Wiring Schematics

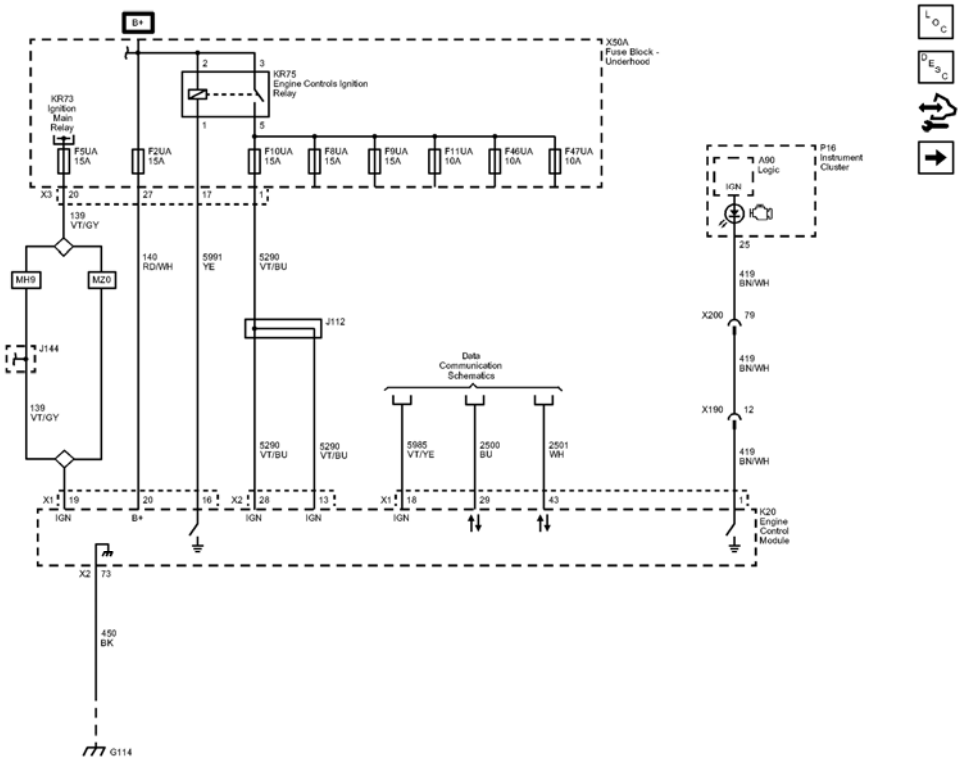

Fig. 1: Power, Ground, Serial Data, and MIL Wiring Schematics
Courtesy of GENERAL MOTORS COMPANY

Callout	Component Name
139	Run/Crank Ignition 1 Voltage
139_VT/GY	139 VT/GY
CAV_19	19
CONN_X1	X1
CAV_20	20
CONN X3	X3
139_VT/GY	139 VT/GY

MH9	TRANSMISSION-AUTO 6 SPD, HMD, X24F
MZ0	TRANSMISSION-MAN 6 SPD, OPEL, 76.5 MM, 3.82 1ST, 0.74 6TH, (M32 WR)
140	Battery Positive Voltage
140_RD/WH	140 RD/WH
CAV_20	20
CAV_27	27
5991	Powertrain Relay Coil Control
5991_YE	5991 YE
CAV_16	16
CAV_17	17
5290	Powertrain Main Relay Fused Supply (1)
5290_VT/BU	5290 VT/BU
CAV_28	28
CONN_X2	X2
CAV_1	1
5290_VT/BU	5290 VT/BU
CAV_13	13
5290_VT/BU	5290 VT/BU
5985	Accessory Wakeup Serial Data
5985_VT/YE	5985 VT/YE
CAV_18	18
CONN X1	X1
2500	High Speed GMLAN Serial Data (+) (1)
2500_BU	2500 BU
CAV_29	29
2501	High Speed GMLAN Serial Data (-) (1)
2501_WH	2501 WH
CAV_43	43
419	Check Engine Indicator Control
419_BN/WH	419 BN/WH
CAV_1	1
CAV_25	25
419_BN/WH	419 BN/WH
419_BN/WH	419 BN/WH
CAV_79	79
CAV_12	12

450	Ground
450_BK	450 BK
CAV_73	73
CONN_X2	X2
CAV_1	1
CAV_2	2
CAV_3	3
CAV_5	5
G114	G114
F5UA	F5UA 15A
F2UA	F2UA 15A
F10UA	F10UA 15A
F8UA	F8UA 15A
F9UA	F9UA 15A
F11UA	F11UA 10A
F46UA	F46UA 10A
F47UA	F47UA 10A
J112	J112
X200	X200
X190	X190
KR73	
X50A	
K20	
A90	Logic
P16	
Data_Communication_Schematics_REF	Data Communication Schematics
KR75	

5V and Low Reference Bus (1 of 2) Wiring Schematics

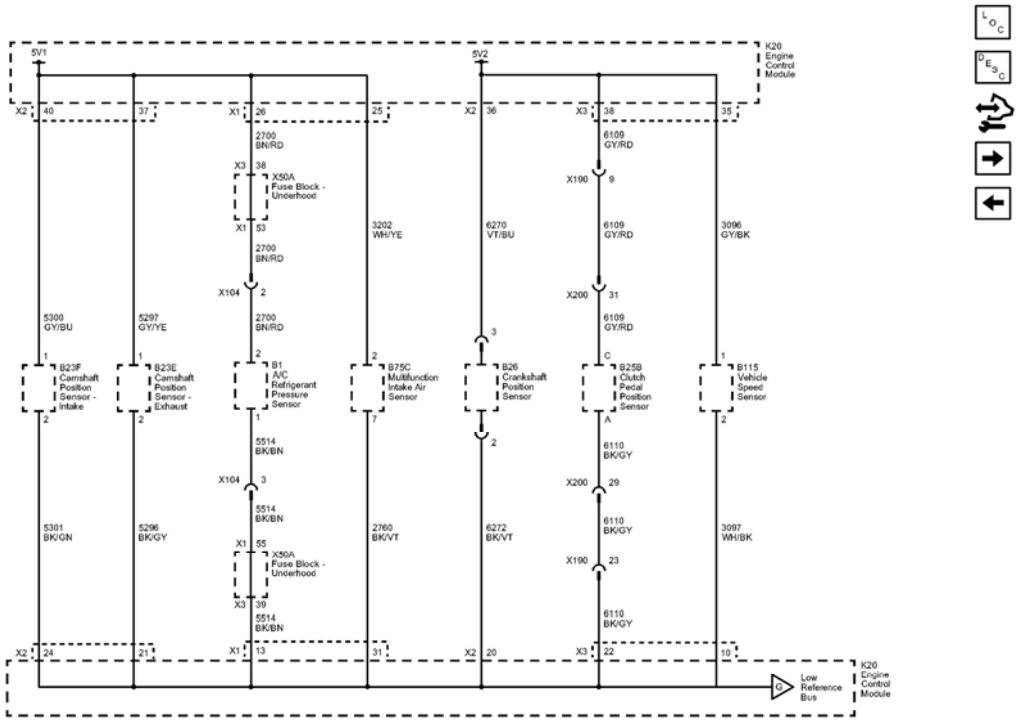

Fig. 2: 5V and Low Reference Bus (1 of 2) Wiring Schematics
Courtesy of GENERAL MOTORS COMPANY

Callout	Component Name
5300	Camshaft Position Intake Sensor Supply Voltage (1)
5300_GY/BU	5300 GY/BU
CAV_1	1
CAV_40	40
CONN_X2	X2
5297	Camshaft Position Exhaust Sensor Supply Voltage (1)
5297_GY/YE	5297 GY/YE
CAV_1	1
CAV_37	37
2700	A/C Pressure Sensor 5 Volt Reference
2700_BN/RD	2700 BN/RD
CAV_38	38
CONN_X3	X3
CAV_26	26
CONN_X1	X1
3202	Throttle Inlet Absolute Pressure Sensor 5V Return
3202_WH/YE	3202 WH/YE

CAV_2	2
CAV_25	25
2700_BN/RD	2700 BN/RD
CAV_2	2
CAV_53	53
CONN_X1	X1
6270	Crankshaft 60X Sensor Voltage
6270_VT/BU	6270 VT/BU
CAV_36	36
CONN_X2	X2
6109	Clutch Apply Sensor Voltage Reference
6109_GY/RD	6109 GY/RD
CAV_C	C
CAV_38	38
CONN_X3	X3
3096	Output Speed (Digital) 5V Sensor Reference
3096_GY/BK	3096 GY/BK
CAV_1	1
CAV_35	35
5301	Camshaft Position Intake Sensor Low Reference (1)
5301_BK/GN	5301 BK/GN
CAV_24	24
CONN_X2	X2
CAV_2	2
5296	Camshaft Position Exhaust Sensor Low Reference (1)
5296_BK/GY	5296 BK/GY
CAV_21	21
CAV_2	2
5514	A/C Refrigerant Pressure Sensor Low Reference
5514_BK/BN	5514 BK/BN
CAV_55	55
CONN_X1	X1
CAV_1	1
5514_BK/BN	5514 BK/BN
CAV_13	13
CONN_X1	X1
CAV_39	39
CONN_X3	X3
2760	Intake Air Temperature Sensor Low Reference
2760_BK/VT	2760 BK/VT
CAV_31	31

	7
6272	Crankshaft 60X Sensor Low Reference
6272_BK/VT	6272 BK/VT
CAV_20	20
CONN_X2	X2
6110	Clutch Apply Sensor Low Reference
6110_BK/GY	6110 BK/GY
CAV_22	22
CONN_X3	X3
CAV_A	A
3097	Output Speed (Digital) 5V Sensor Return
3097_WH/BK	3097 WH/BK
CAV_10	10
CAV_2	2
5514_BK/BN	5514 BK/BN
6110_BK/GY	6110 BK/GY
6110_BK/GY	6110 BK/GY
CAV_3	3
CAV_2	2
CAV_29	29
CAV_23	23
CAV_3	3
CAV_31	31
CAV_9	9
6109_GY/RD	6109 GY/RD
6109_GY/RD	6109 GY/RD
CAV_2	2
2700_BN/RD	2700 BN/RD
X104	X104
X200	X200
X190	X190
X200	X200
X190	X190
X104	X104
B23F	
B23E	
B26	
B75C	
B1	
X50A	
X50A	

	(MF3 or MZ0)
B115	(MF3 or MZ0)
K20	
K20	

5V and Low Reference Bus (2 of 2) Wiring Schematics

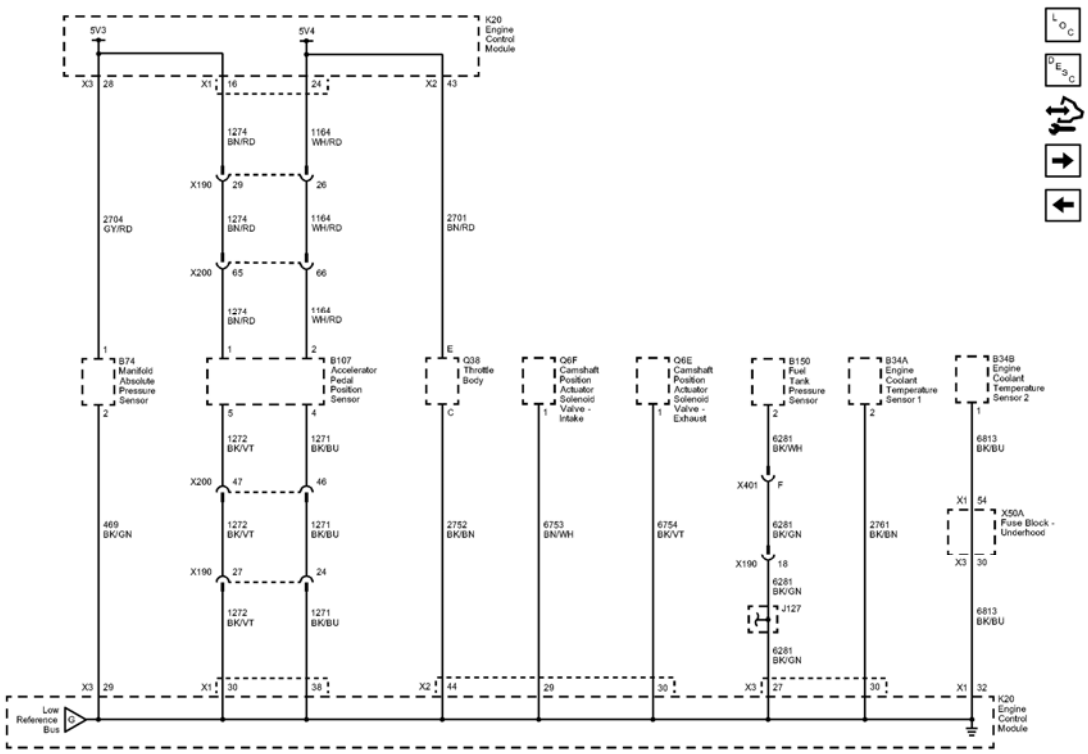

Fig. 3: 5V and Low Reference Bus (2 of 2) Wiring Schematics
Courtesy of GENERAL MOTORS COMPANY

Callout	Component Name
2704	Manifold Absolute Pressure Sensor 5 Volt Reference
2704 GY/RD	2704 GY/RD
CAV_1	1
CAV 28	28
CONN_X3	X3
1274	Accelerator Pedal Position 5 Volt Reference (2)
1274_BN/RD	1274 BN/RD
CAV_1	1
CAV_16	16
CONN_X1	X1

1164	Accelerator Pedal Position 5 Volt Reference (1)
1164_WH/RD	1164 WH/RD
CAV_2	2
CAV_24	24
2701	Throttle Position Sensor 5 Volt Reference
2701_BN/RD	2701 BN/RD
CAV_E	E
CAV_43	43
CONN_X2	X2
469	Manifold Absolute Pressure Sensor Low Reference
469_BK/GN	469 BK/GN
CAV_29	29
CONN_X3	X3
CAV_2	2
1272	Accelerator Pedal Position Low Reference (2)
1272_BK/VT	1272 BK/VT
CAV_30	30
CONN_X1	X1
CAV_5	5
1271	Accelerator Pedal Position Low Reference (1)
1271_BK/BU	1271 BK/BU
CAV_38	38
CAV_4	4
2752	Throttle Position Sensor Low Reference
2752_BK/BN	2752 BK/BN
CAV_44	44
CONN_X2	X2
CAV_C	C
6753	Cam Phaser W Return Low Reference
6753_BN/WH	6753 BN/WH
CAV_29	29
CAV_1	1
6754	Cam Phaser X Return Low Reference
6754_BK/VT	6754 BK/VT
CAV_30	30
CAV_1	1
6281	Fuel Level Sensor Low Reference
6281_BK/WH	6281 BK/WH
CAV_2	2
6281_BK/GN	6281 BK/GN
CAV_27	27
CONN_X2	

	X3
2761	Coolant Temperature Sensor Low Reference
2761_BK/BN	2761 BK/BN
CAV_30	30
CAV_2	2
6813	Coolant Temperature Sensor #2 Low Reference
6813_BK/BU	6813 BK/BU
CAV_54	54
CONN_X1	X1
CAV_1	1
6813_BK/BU	6813 BK/BU
CAV_32	32
CONN_X1	X1
CAV_30	30
CONN_X3	X3
1274_BN/RD	1274 BN/RD
1274_BN/RD	1274 BN/RD
1164_WH/RD	1164 WH/RD
1164_WH/RD	1164 WH/RD
1272_BK/VT	1272 BK/VT
1271_BK/BU	1271 BK/BU
1272_BK/VT	1272 BK/VT
1271_BK/BU	1271 BK/BU
6281_BK/GN	6281 BK/GN
6281_BK/GN	6281 BK/GN
CAV_F	F
CAV_18	18
X190	X190
CAV_27	27
CAV_24	24
X200	X200
CAV_47	47
CAV_46	46
X200	X200
CAV_65	65
CAV_66	66
X190	X190
CAV_29	29
CAV_26	26
X401	X401
X190	X190

	X190
X200	X200
X200	X200
X190	X190
K20	
Q38	
B74	
B107	
B34A	
B34B	
Q6F	
Q6E	
X50A	
K20	
B150	

Engine Data Sensors - Pressure and Temperature Wiring Schematics

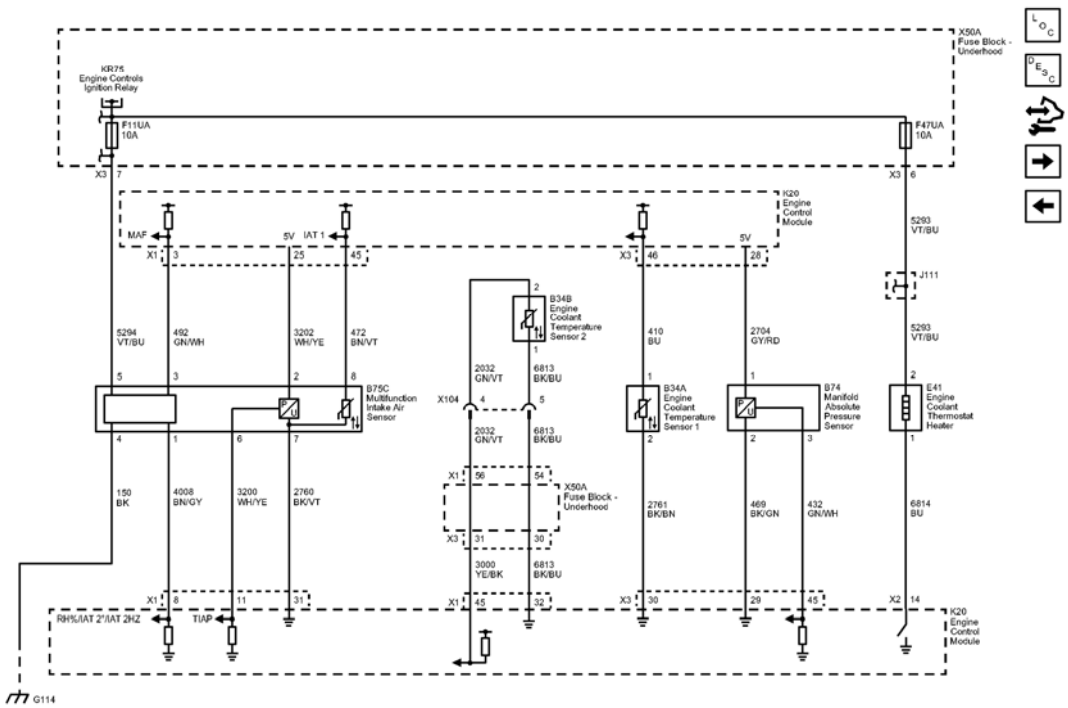

Fig. 4: Engine Data Sensors - Pressure and Temperature Wiring Schematics
Courtesy of GENERAL MOTORS COMPANY

Callout	Component Name
5294	Powertrain Main Relay Fused Supply (5)
5294_VT/BU	5294 VT/BU
CAV_5	5
CAV_7	7
CONN_X3	X3
492	Mass Air Flow Sensor Signal
492_GN/WH	492 GN/WH
CAV_3	3
CAV_3	3
CONN_X1	X1
3202	Throttle Inlet Absolute Pressure Sensor 5V Return
3202 WH/YE	3202 WH/YE
CAV_2	2
CAV_25	25
472	Intake Air Temperature Sensor Signal
472_BN/VT	472 BN/VT
CAV_8	8
CAV_45	45
2032	Coolant Temperature Sensor Signal
2032_GN/VT	2032 GN/VT
CAV_56	56
CONN_X1	X1
CAV_2	2
6813	Coolant Temperature Sensor #2 Low Reference
6813_BK/BU	6813 BK/BU
CAV_54	54
CAV 1	1
410	Engine Coolant Temperature Sensor Signal
410 BU	410 BU
CAV_1	1
CAV_46	46
CONN_X3	X3
2704	Manifold Absolute Pressure Sensor 5 Volt Reference
2704_GY/RD	2704 GY/RD
CAV_1	1
CAV_28	28
5293	Powertrain Main Relay Fused Supply (4)
5293_VT/BU	5293 VT/BU
CAV_2	2
CAV_6	6
CONN_X3	

	X3
6814	Thermostat Engine Cool Control
6814_BU	6814 BU
CAV_14	14
CONN_X2	X2
CAV_1	1
432	Manifold Absolute Pressure Sensor Signal
432_GN/WH	432 GN/WH
CAV_45	45
CAV_3	3
469	Manifold Absolute Pressure Sensor Low Reference
469_BK/GN	469 BK/GN
CAV_29	29
CAV_2	2
2761	Coolant Temperature Sensor Low Reference
2761_BK/BN	2761 BK/BN
CAV_30	30
CONN_X3	X3
CAV_2	2
6813_BK/BU	6813 BK/BU
CAV_32	32
CAV_30	30
3000	Coolant Temperature Sensor #2 Signal
3000_YE/BK	3000 YE/BK
CAV_45	45
CONN_X1	X1
CAV_31	31
CONN_X3	X3
2760	Intake Air Temperature Sensor Low Reference
2760_BK/VT	2760 BK/VT
CAV_31	31
CAV_7	7
3200	Throttle Inlet Absolute Pressure Sensor Signal
3200_WH/YE	3200 WH/YE
CAV_11	11
CAV_6	6
4008	Humidity Sensor Signal
4008_BN/GY	4008 BN/GY
CAV_8	8
CONN_X1	X1
CAV_1	1

	Ground
150_BK	150 BK
CAV_4	4
2032_GN/VT	2032 GN/VT
6813_BK/BU	6813 BK/BU
5293_VT/BU	5293 VT/BU
X104	X104
CAV_5	5
CAV_4	4
G114	G114
F11UA	F11UA 10A
F47UA	F47UA 10A
X104	X104
B74	
K20	
B34A	
B75C	
X50A	
X50A	
B34B	
E41	
K20	
KR75	

Engine Data Sensors - Throttle Controls Wiring Schematics

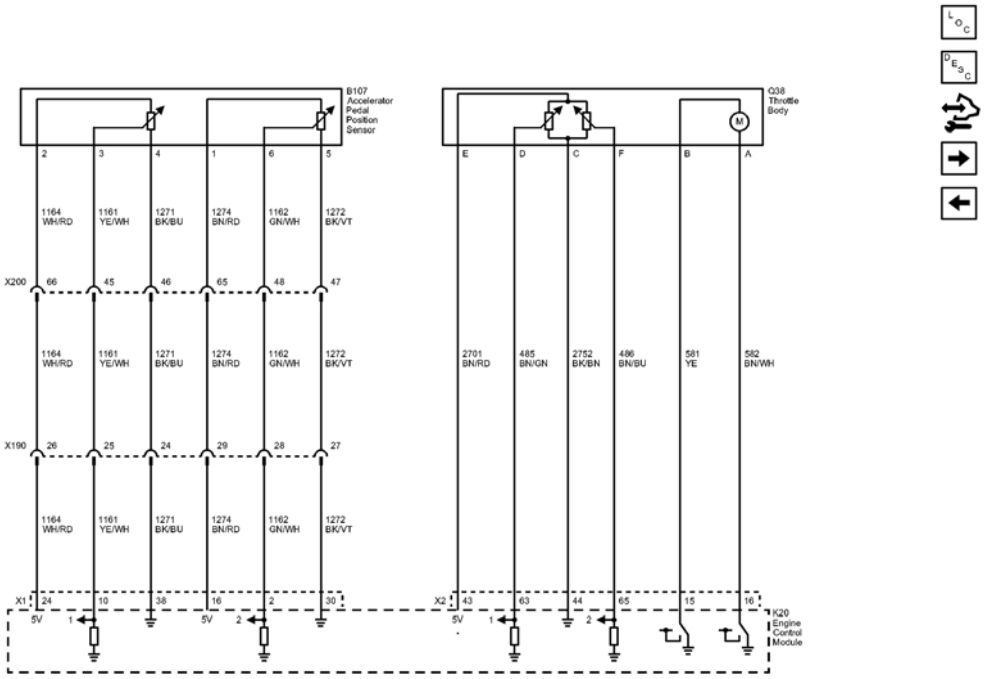

Fig. 5: Engine Data Sensors - Throttle Controls Wiring Schematics
Courtesy of GENERAL MOTORS COMPANY

Callout	Component Name
1164	Accelerator Pedal Position 5 Volt Reference (1)
1164 WH/RD	1164 WH/RD
CAV_24	24
CONN_X1	X1
CAV_2	2
1161	Accelerator Pedal Position Signal (1)
1161_YE/WH	1161 YE/WH
CAV_10	10
CAV_3	3
1271	Accelerator Pedal Position Low Reference (1)
1271_BK/BU	1271 BK/BU
CAV_38	38
CAV_4	4
1274	Accelerator Pedal Position 5 Volt Reference (2)
1274_BN/RD	1274 BN/RD
CAV_16	16
CAV_1	1

1162	Accelerator Pedal Position Signal (2)
1162_GN/WH	1162 GN/WH
CAV_2	2
CAV_6	6
1272	Accelerator Pedal Position Low Reference (2)
1272_BK/VT	1272 BK/VT
CAV_30	30
CAV_5	5
2701	Throttle Position Sensor 5 Volt Reference
2701_BN/RD	2701 BN/RD
CAV_43	43
CONN_X2	X2
CAV_E	E
485	Throttle Position Sensor Signal (1)
485_BN/GN	485 BN/GN
CAV_63	63
CAV_D	D
2752	Throttle Position Sensor Low Reference
2752_BK/BN	2752 BK/BN
CAV_44	44
CAV_C	C
486	Throttle Position Sensor Signal (2)
486_BN/BU	486 BN/BU
CAV_65	65
CAV_F	F
581	Throttle Actuator Control Open
581_YE	581 YE
CAV_15	15
CAV_B	B
582	Throttle Actuator Control Close
582_BN/WH	582 BN/WH
CAV_16	16
CAV_A	A
1164_WH/RD	1164 WH/RD
1161_YE/WH	1161 YE/WH
1271_BK/BU	1271 BK/BU
1274_BN/RD	1274 BN/RD
1162_GN/WH	1162 GN/WH
1272_BK/VT	1272 BK/VT
1164_WH/RD	1164 WH/RD
1161_YE/WH	1161 YE/WH
1271_BK/BU	

	1271 BK/BU
1274_BN/RD	1274 BN/RD
1162_GN/WH	1162 GN/WH
1272_BK/VT	1272 BK/VT
X200	X200
CAV_66	66
CAV_45	45
CAV_46	46
CAV_65	65
CAV_48	48
CAV_47	47
X190	X190
CAV 26	26
CAV_25	25
CAV_24	24
CAV_29	29
CAV_28	28
CAV_27	27
X200	X200
X190	X190
B107	
Q38	
K20	

Oxygen Sensors and Ignition System Wiring Schematics

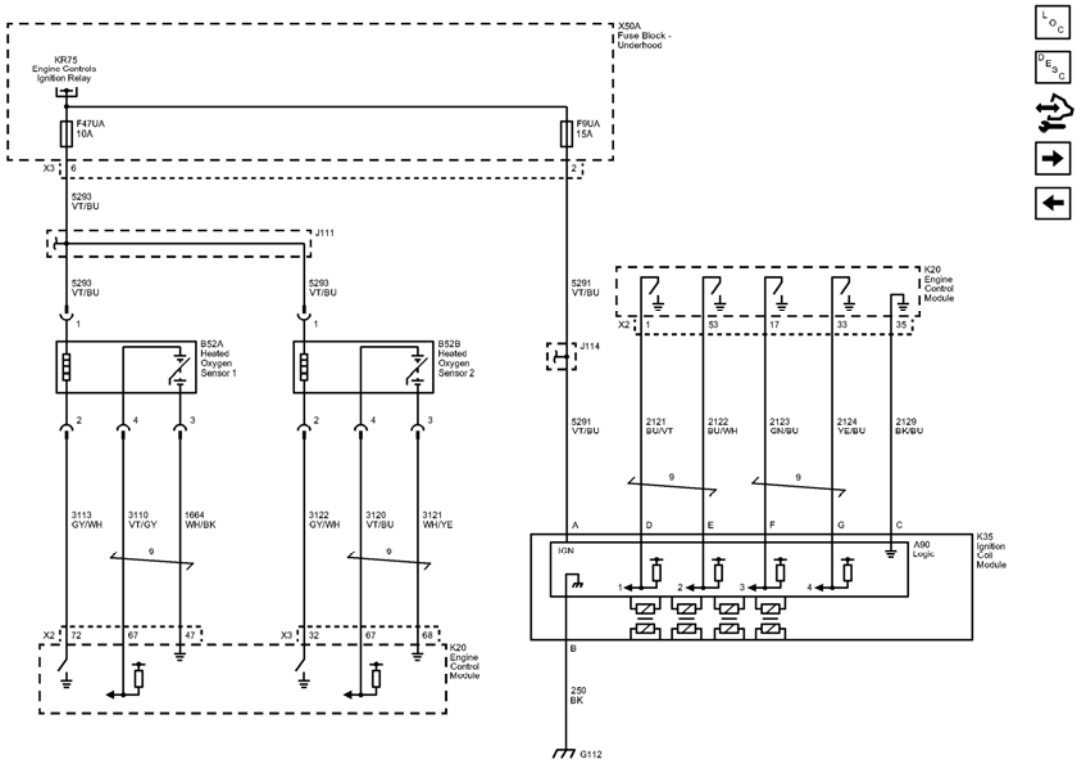

Fig. 6: Oxygen Sensors and Ignition System Wiring Schematics
Courtesy of GENERAL MOTORS COMPANY

Callout	Component Name
5293	Powertrain Main Relay Fused Supply (4)
5293 VT/BU	5293 VT/BU
CAV_6	6
CONN_X3	X3
5293_VT/BU	5293 VT/BU
CAV_1	1
5293_VT/BU	5293 VT/BU
CAV_1	1
3113	Heated Oxygen Sensor Heater Low Control Bank 1 Sensor (1)
3113_GY/WH	3113 GY/WH
CAV 72	72
CONN_X2	X2
3110	Heated Oxygen Sensor High Signal Bank 1 Sensor (1)
3110_VT/GY	3110 VT/GY
CAV_67	67

1664	Heated Oxygen Sensor Low Signal Bank 1 Sensor (1)
1664_WH/BK	1664 WH/BK
CAV_47	47
CAV_2	2
CAV_4	4
CAV_3	3
3122	Heated Oxygen Sensor Heater Low Control Bank 1 Sensor (2)
3122_GY/WH	3122 GY/WH
CAV_32	32
CONN_X3	X3
3120	Heated Oxygen Sensor High Signal Bank 1 Sensor (2)
3120 VT/BU	3120 VT/BU
CAV_67	67
3121	Heated Oxygen Sensor Low Signal Bank 1 Sensor (2)
3121_WH/YE	3121 WH/YE
CAV_47	47
CAV_2	2
CAV_4	4
CAV_3	3
5291	Powertrain Main Relay Fused Supply (2)
5291_VT/BU	5291 VT/BU
CAV_A	A
CAV_2	2
5291_VT/BU	5291 VT/BU
2121	Ignition Control (1)
2121_BU/VT	2121 BU/VT
CAV D	D
CAV_1	1
CONN_X2	X2
2122	Ignition Control (2)
2122_BU/WH	2122 BU/WH
CAV_E	E
CAV_53	53
2123	Ignition Control (3)
2123_GN/BU	2123 GN/BU
CAV_F	F
CAV_17	17
2124	Ignition Control (4)
2124_YE/BU	2124 YE/BU

CAV_G	G
CAV_33	33
2129	Ignition Control Low Reference Bank 1
2129_BK/BU	2129 BK/BU
CAV_C	C
CAV_35	35
250	Ground
250_BK	250 BK
CAV_B	B
G112	G112
F47UA	F47UA 10A
F9UA	F9UA 15A
TWIST 9	9
TWIST_9	9
TWIST_9	9
TWIST_9	9
B52A	
B52B	
K20	
K20	
X50A	
A90	Logic
K35	
KR75	

Camshaft, Crankshaft, and Knock Sensors, Camshaft Actuators Wiring Schematics

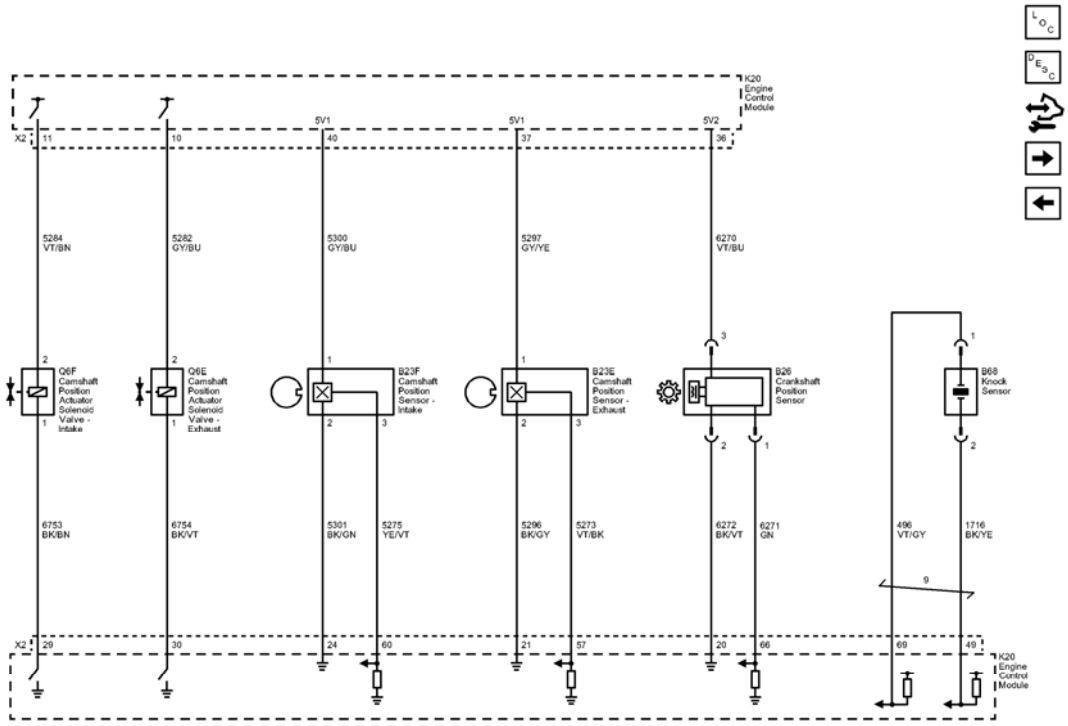

Fig. 7: Camshaft, Crankshaft, and Knock Sensors, Camshaft Actuators Wiring Schematics
Courtesy of GENERAL MOTORS COMPANY

Callout	Component Name
5284	Camshaft Phaser Intake Solenoid (1)
5284 VT/BN	5284 VT/BN
CAV_2	2
CAV_11	11
CONN_X2	X2
5282	Camshaft Phaser Exhaust Solenoid (1)
5282_GY/BU	5282 GY/BU
CAV_2	2
CAV_10	10
5300	Camshaft Position Intake Sensor Supply Voltage (1)
5300_GY/BU	5300 GY/BU
CAV_1	1
CAV_40	40
5297	Camshaft Position Exhaust Sensor Supply Voltage (1)
5297_GY/YE	5297 GY/YE
CAV_1	1
CAV_37	37

6270	Crankshaft 60X Sensor Voltage
6270_VT/BU	6270 VT/BU
CAV_36	36
6753	Cam Phaser W Return Low Reference
6753_BK/BN	6753 BK/BN
CAV_29	29
CONN_X2	X2
CAV_1	1
6754	Cam Phaser X Return Low Reference
6754_BK/VT	6754 BK/VT
CAV_30	30
CAV_1	1
5301	Camshaft Position Intake Sensor Low Reference (1)
5301_BK/GN	5301 BK/GN
CAV_24	24
CAV_2	2
5275	Camshaft Position Intake Sensor (1)
5275_YE/VT	5275 YE/VT
CAV_60	60
CAV_3	3
5296	Camshaft Position Exhaust Sensor Low Reference (1)
5296_BK/GY	5296 BK/GY
CAV_21	21
CAV_2	2
5273	Camshaft Position Exhaust Sensor (1)
5273_VT/BK	5273 VT/BK
CAV_57	57
CAV 3	3
6272	Crankshaft 60X Sensor Low Reference
6272 BK/VT	6272 BK/VT
CAV_20	20
6271	Crankshaft 60X Sensor Signal
6271_GN	6271 GN
CAV_66	66
496	Knock Sensor Signal (1)
496_VT/GY	496 VT/GY
CAV_69	69
1716	Knock Sensor Low Reference (1)
1716_BK/YE	1716 BK/YE
CAV_49	49
CAV_2	2

	1
CAV_1	1
CAV_2	2
CAV_3	3
TWIST_9	9
K20	
B23F	
B23E	
B26	
Q6F	
Q6E	
B68	
K20	

Fuel Controls - Fuel Injectors and Evaporative Controls Wiring Schematics

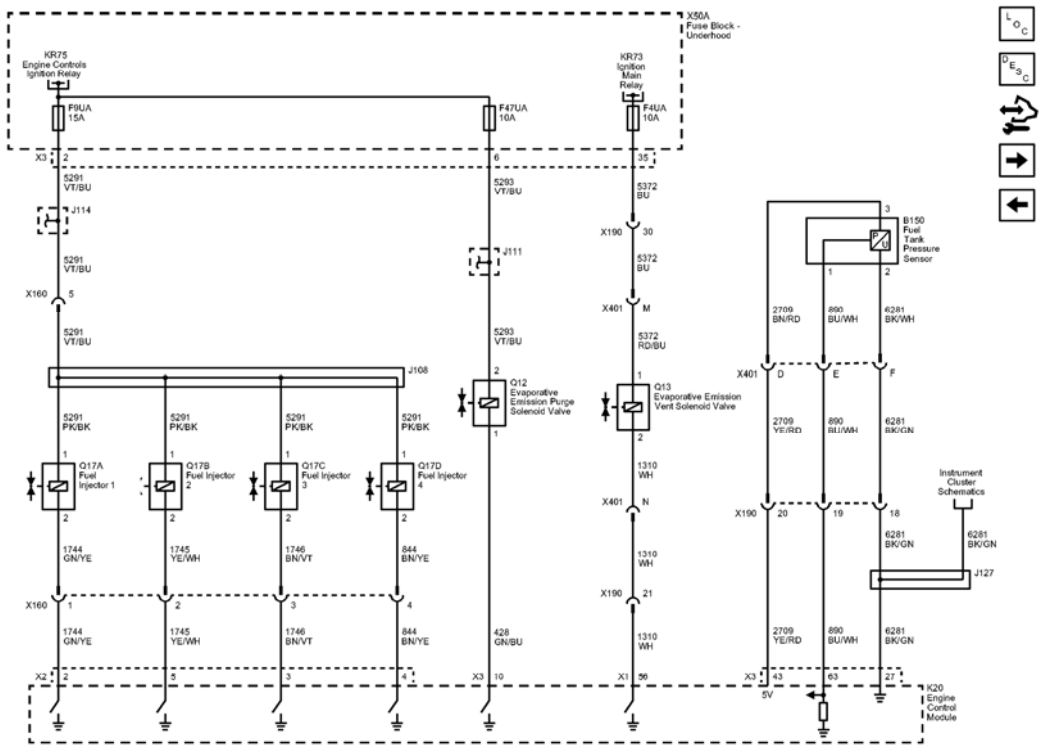

Fig. 8: Fuel Controls - Fuel Injectors and Evaporative Controls Wiring Schematics
Courtesy of GENERAL MOTORS COMPANY

Callout	Component Name
5291	Powertrain Main Relay Fused

	Supply (2)
5291_VT/BU	5291 VT/BU
CAV_2	2
CONN_X3	X3
5291_PK/BK	5291 PK/BK
CAV_1	1
5291_PK/BK	5291 PK/BK
CAV_1	1
5291_PK/BK	5291 PK/BK
CAV_1	1
5291_PK/BK	5291 PK/BK
CAV_1	1
5293	Powertrain Main Relay Fused Supply (4)
5293_VT/BU	5293 VT/BU
CAV_2	2
CAV_6	6
5372	Canister Valve Solenoid
5372 BU	5372 BU
CAV_35	35
5372 RD/BU	5372 RD/BU
CAV_1	1
1310	EVAP Canister Vent Solenoid Control
1310_WH	1310 WH
CAV_56	56
CONN_X1	X1
CAV_2	2
428	EVAP Canister Purge Solenoid Control
428_GN/BU	428 GN/BU
CAV_10	10
CONN_X3	X3
CAV_1	1
844	Fuel Injector Control (4)
844_BN/YE	844 BN/YE
CAV 4	4
CAV_2	2
1746	Fuel Injector Control (3)
1746_BN/VT	1746 BN/VT
CAV_3	3
CAV_2	2

1745	Fuel Injector Control (2)
1745_YE/WH	1745 YE/WH
CAV_5	5
CAV_2	2
1744	Fuel Injector Control (1)
1744_GN/YE	1744 GN/YE
CAV_2	2
CONN_X2	X2
CAV_2	2
2709	Fuel Tank Pressure Sensor 5 Volt Reference
2709_BN/RD	2709 BN/RD
CAV_3	3
2709_YE/RD	2709 YE/RD
CAV_43	43
CONN_X3	X3
890	Fuel Tank Pressure Sensor Signal
890_BU/WH	890 BU/WH
CAV_63	63
CAV_1	1
6281	Fuel Level Sensor Low Reference
6281_BK/WH	6281 BK/WH
CAV_2	2
6281_BK/GN	6281 BK/GN
CAV_27	27
6281_BK/GN	6281 BK/GN
890_BU/WH	890 BU/WH
890_BU/WH	890 BU/WH
2709_YE/RD	2709 YE/RD
6281_BK/GN	6281 BK/GN
6281_BK/GN	6281 BK/GN
CAV_21	21
CAV_N	N
1310_WH	1310 WH
1310 WH	1310 WH
844_BN/YE	844 BN/YE
1746_BN/VT	1746 BN/VT
1745_YE/WH	1745 YE/WH
1744_GN/YE	1744 GN/YE
5291_VT/BU	5291 VT/BU

5291_VT/BU	5291 VT/BU
CAV_5	5
5372_BU	5372 BU
5293_VT/BU	5293 VT/BU
CAV_30	30
CAV_M	M
X401	X401
CAV_D	D
CAV_E	E
CAV_F	F
X190	X190
CAV_20	20
CAV_19	19
CAV_18	18
X160	X160
CAV_1	1
CAV_2	2
CAV_3	3
CAV_4	4
F9UA	F9UA 15A
F47UA	F47UA 10A
F4UA	F4UA 10A
X190	X190
X401	X401
X160	X160
X190	X190
X401	X401
J108	J108
J127	J127
X401	X401
X190	X190
X160	X160
Q17A	
Q17B	
Q17C	
Q17D	
Q12	
KR73	
B150	
Instrument_Cluster_Schematics_REF	Instrument Cluster Schematics
K20	

KR75	
Q13	

Fuel Controls - Fuel Pump Controls Wiring Schematics

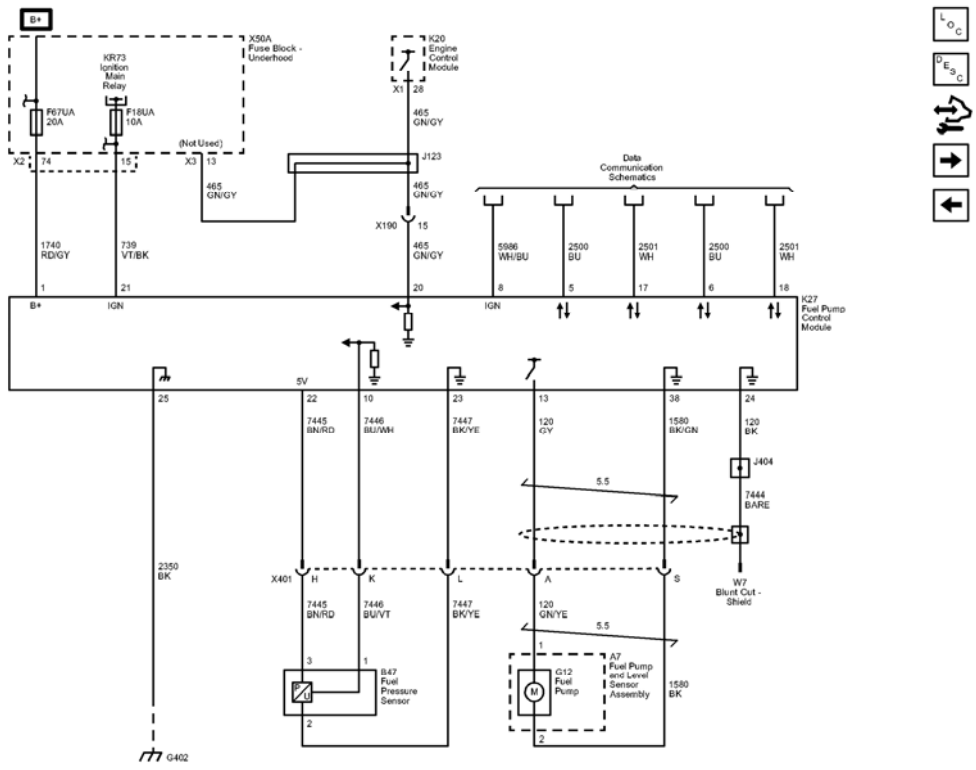

Fig. 9: Fuel Controls - Fuel Pump Controls Wiring Schematics
Courtesy of GENERAL MOTORS COMPANY

Callout	Component Name
1740	Battery Positive Voltage
1740_RD/GY	1740 RD/GY
CAV 1	1
CAV_74	74
CONN X2	X2
739	Run/Crank Ignition 1 Voltage
739_VT/BK	739 VT/BK
CAV_21	21
CAV_15	15
465	Fuel Pump Primary Relay Control

465_GN/GY	465 GN/GY
CAV_13	13
CONN_X3	X3
465_GN/GY	465 GN/GY
CAV_20	20
CAV_28	28
CONN_X1	X1
5986	Serial Data Communication Enable
5986_WH/BU	5986 WH/BU
CAV_8	8
2500	High Speed GMLAN Serial Data (+) (1)
2500 BU	2500 BU
CAV_5	5
2501	High Speed GMLAN Serial Data (-) (1)
2501_WH	2501 WH
CAV_17	17
2500 BU	2500 BU
CAV_6	6
2501 WH	2501 WH
CAV_18	18
2350	Ground
2350_BK	2350 BK
CAV_25	25
7445	Fuel Line Pressure Sensor 5V Reference
7445_BN/RD	7445 BN/RD
CAV_3	3
CAV_22	22
7446	Fuel Line Pressure Sensor Signal
7446_BU/WH	7446 BU/WH
CAV_10	10
7446 BU/VT	7446 BU/VT
CAV_1	1
7447	Fuel Line Pressure Sensor Low Reference
7447_BK/YE	7447 BK/YE
CAV_2	2
CAV_23	23

120	Fuel Pump Supply Voltage
120_GY	120 GY
CAV_13	13
120_GN/YE	120 GN/YE
CAV_1	1
1580	Fuel Pump Low Reference
1580_BK/GN	1580 BK/GN
CAV_38	38
1580_BK	1580 BK
CAV_2	2
120_BK	120 BK
CAV_24	24
7444	Fuel System Control Module Shield
7444_BARE	7444 BARE
7447_BK/YE	7447 BK/YE
7445_BN/RD	7445 BN/RD
465_GN/GY	465 GN/GY
CAV 15	15
465_GN/GY	465 GN/GY
X401	X401
CAV_H	H
CAV_K	K
CAV_L	L
CAV_A	A
CAV_S	S
G402	G402
F67UA	F67UA 20A
F18UA	F18UA 10A
J404	J404
X190	X190
TWIST_5.5	5.5
TWIST_5.5	5.5
J123	J123
X401	X401
KR73	
K20	
B47	
W7	
K27	
Data_Communication_Schematics_REF	Data Communication

	Schematics
G12	
A7	
X50A	

Intake Tuning Valve, Secondary Air Injection (NU6) Wiring Schematics

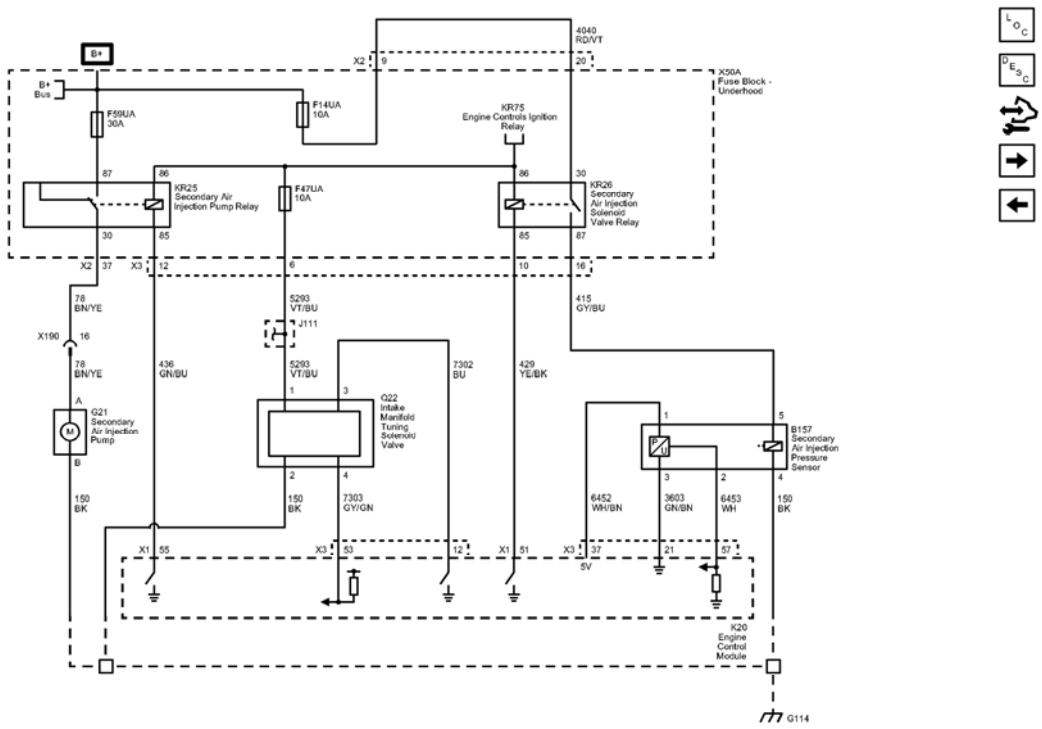

Fig. 10: Intake Tuning Valve, Secondary Air Injection (NU6) Wiring Schematics
Courtesy of GENERAL MOTORS COMPANY

Callout	Component Name
4040	Battery Positive Voltage
4040 RD/VT	4040 RD/VT
CAV_9	9
CONN X2	X2
CAV_20	20
CAV_87	87
CAV_86	86
CAV_30	30
CAV_85	85
CAV_86	86

CAV_30	30
CAV_85	85
CAV_87	87
78	Air Injection Reaction Pump Supply Voltage
CAV_A	A
CAV_37	37
CONN_X2	X2
78_BN/YE	78 BN/YE
78_BN/YE	78 BN/YE
CAV_16	16
5293	Powertrain Main Relay Fused Supply (4)
5293_VT/BU	5293 VT/BU
CAV 1	1
CAV_6	6
5293_VT/BU	5293 VT/BU
436	Air Injection Reaction Pump Relay Coil Control
436_GN/BU	436 GN/BU
CAV_55	55
CONN_X1	X1
CAV_12	12
CONN_X3	X3
7302	Intake Manifold Tuning Valve (IMTV) Control - Signal
7302_BU	7302 BU
CAV_12	12
CAV_3	3
429	Air Injection Reaction Solenoid Control
429_YE/BK	429 YE/BK
CAV_51	51
CONN_X1	X1
CAV_10	10
415	Air Injection Reaction Solenoid Supply Voltage
415_GY/BU	415 GY/BU
CAV_5	5
CAV_16	16
150	Ground
150_BK	150 BK
CAV_B	B
150_BK	150 BK
CAV_2	2
7303	Intake Manifold Tuning Valve (IMTV) Position -

	Signal
7303_GY/GN	7303 GY/GN
CAV_53	53
CONN_X3	X3
CAV_4	4
6452	Air Injection Reaction Pump Sensor Supply Voltage
6452_WH/BN	6452 WH/BN
CAV_37	37
CONN_X3	X3
CAV_1	1
3603	Intake Manifold Control (3)
3603_GN/BN	3603 GN/BN
CAV 21	21
CAV_3	3
6453	Air Injection Reaction Pump Sensor Signal
6453_WH	6453 WH
CAV_57	57
CAV_2	2
150_BK	150 BK
CAV_4	4
G114	G114
F14UA	F14UA 10A
F59UA	F59UA 30A
F47UA	F47UA 10A
X190	X190
KR25	
K20	
X50A	
G21	
B157	
Q22	(LUW/LWE)
KR26	
KR75	

Controlled/Monitored Subsystem References Wiring Schematics

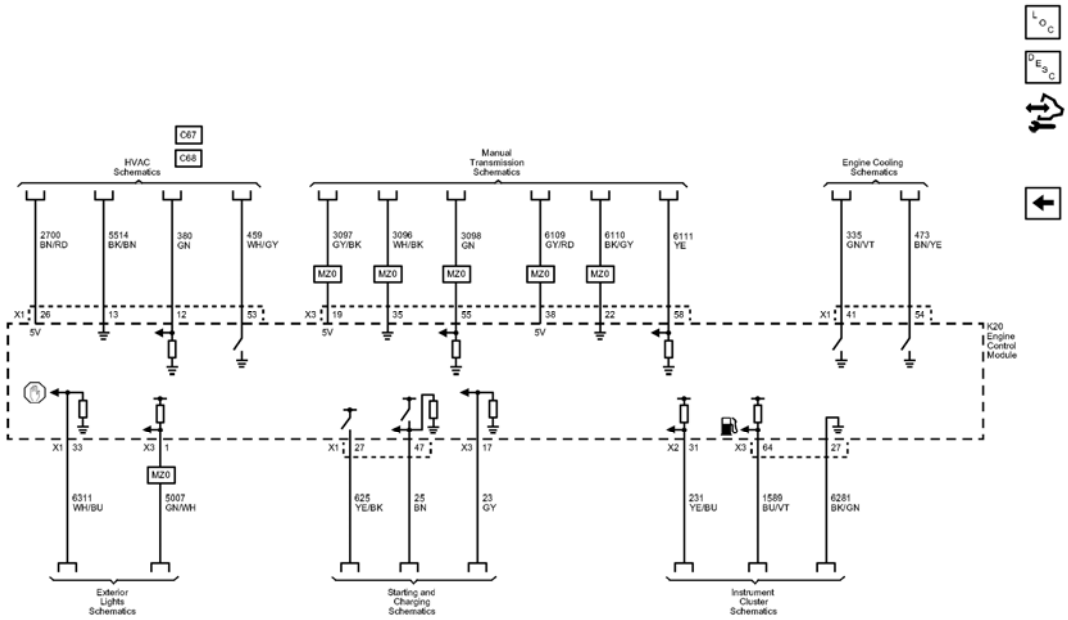

Fig. 11: Controlled/Monitored Subsystem References Wiring Schematics
Courtesy of GENERAL MOTORS COMPANY

Callout	Component Name
2700	A/C Pressure Sensor 5 Volt Reference
2700_BN/RD	2700 BN/RD
CAV_26	26
CONN_X1	X1
5514	A/C Refrigerant Pressure Sensor Low Reference
5514_BK/BN	5514 BK/BN
CAV_13	13
380	A/C Refrigerant Pressure Sensor Signal
380_GN	380 GN
CAV_12	12
459	A/C Compressor Clutch Relay Control
459_WH/GY	459 WH/GY
CAV_53	53

3097	Output Speed (Digital) 5V Sensor Return
3097_GY/BK	3097 GY/BK
CAV_19	19
CONN_X3	X3
3096	Output Speed (Digital) 5V Sensor Reference
3096_WH/BK	3096 WH/BK
CAV_35	35
3098	Output Speed (Digital) Signal
3098_GN	3098 GN
CAV_55	55
6109	Clutch Apply Sensor Voltage Reference
6109_GY/RD	6109 GY/RD
CAV_38	38
6110	Clutch Apply Sensor Low Reference
6110_BK/GY	6110 BK/GY
CAV_22	22
6111	Clutch Apply Sensor Signal
6111_YE	6111 YE
CAV_58	58
335	Low Speed Cooling Fan Relay Control
335_GN/VT	335 GN/VT
CAV_41	41
CONN_X1	X1
473	High Speed Cooling Fan Relay Control
473_BN/YE	473 BN/YE
CAV_54	54
6311	Cruise/ETC/TCC Brake Signal
6311_WH/BU	6311 WH/BU
CAV_33	33
CONN_X1	X1
5007	Reverse Switch Signal
5007_GN/WH	5007 GN/WH
CAV_1	1
CONN_X3	X3
625	Starter Enable Relay Control
625_YE/BK	625 YE/BK

CAV_27	27
CONN_X1	X1
25	Charge Indicator Control
25_BN	25 BN
CAV_47	47
23	Generator Field Duty Cycle Signal
23_GY	23 GY
CAV_17	17
CONN_X3	X3
231	Oil Pressure Switch Signal
231_YE/BU	231 YE/BU
CAV_31	31
CONN_X2	X2
1589	Primary Fuel Level Sensor Signal
1589_BU/VT	1589 BU/VT
CAV_64	64
CONN_X3	X3
6281	Fuel Level Sensor Low Reference
6281 BK/GN	6281 BK/GN
CAV_27	27
MZ0	TRANSMISSION-MAN 6 SPD, OPEL, 76.5 MM, 3.82 1ST, 0.74 6TH, (M32 WR)
MZ0	TRANSMISSION-MAN 6 SPD, OPEL, 76.5 MM, 3.82 1ST, 0.74 6TH, (M32 WR)
MZ0	TRANSMISSION-MAN 6 SPD, OPEL, 76.5 MM, 3.82 1ST, 0.74 6TH, (M32 WR)
MZ0	TRANSMISSION-MAN 6 SPD, OPEL, 76.5 MM, 3.82 1ST, 0.74 6TH, (M32 WR)
MZ0	TRANSMISSION-MAN 6 SPD, OPEL, 76.5 MM, 3.82 1ST, 0.74 6TH, (M32 WR)
MZ0	TRANSMISSION-MAN 6 SPD, OPEL, 76.5 MM, 3.82 1ST, 0.74 6TH, (M32 WR)
C67	HVAC SYSTEM-AIR CONDITIONER FRT, ELECTRONIC CONTROLS

C68	HVAC SYSTEM-AIR CONDITIONER FRT, AUTO, ELECTRONIC CONTROLS
K20	
Engine_Cooling_Schematics_REF	Engine Cooling Schematics
HVAC_Schematics_REF	HVAC Schematics
Instrument_Cluster_Schematics_REF	Instrument Cluster Schematics
Starting_and_Charging_Schematics_REF	Starting and Charging Schematics
Exterior_Lights_Schematics_REF	Exterior Lights Schematics
Manual_Transmission_Schematics_REF	Manual Transmission Schematics

2013 ENGINE

Engine Controls and Fuel - 1.8L LUW and LWE - Special Tools and Equipment - Special Tools - Cruze

SPECIAL TOOLS AND EQUIPMENT

SPECIAL TOOLS

Illustration	Tool Number/Description
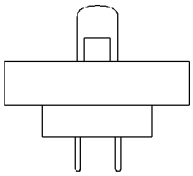	CH-34730-2C J-34730-2C Injector Test Lamp
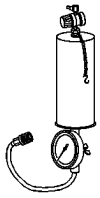	CH-35800-A J-35800-A Fuel Injector Cleaner
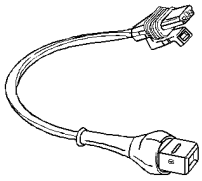	CH-39021-380 J-39021-380 Fuel Injector Harness Adapter
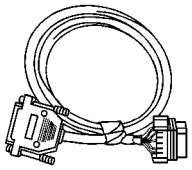	CH-39021-450 J-39021-450 Fuel Injector Harness Adapter
	CH-41415-30 J-41415-30 Fuel Tank Cap Adapter South America - Use Local Equivalent
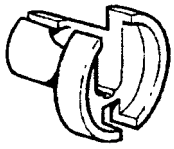	CH-41769-1 Fuel Line Quick Connect Separator 3/8

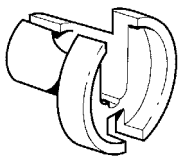	CH-41769-2 Fuel Line Quick Connect Separator 5/16
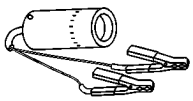	CH-42220 J-42220 Universal 12 Volt Leak Detection Lamp
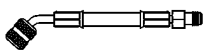	CH-42242 J-42242 Fuel Pressure Gauge Adapter
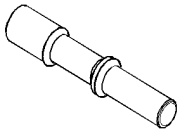	CH-42960-2 J-42960-2 Fuel Flapper Door Holder
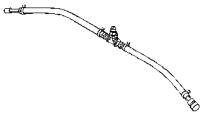	CH-42982 J-42982 Fuel Pressure Gauge Adapter
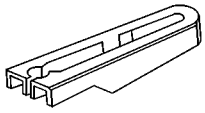	CH-43178 J-43178 Fuel Line Disconnect Tool
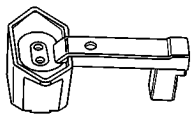	CH-44175 J-44175 Fuel Composition Testers South America - Use Local Equivalent
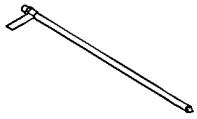	CH-45004 J-45004 Fuel Tank Drain Hose South America- Use Local Equivalent

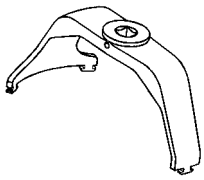	CH-45722 J-45722 Fuel Sender Lock Ring Wrench
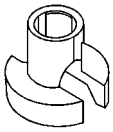	CH-47831 Fuel Line Disconnect Tool
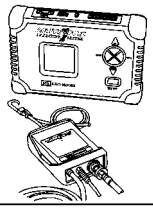	CH-47976 Active Fuel Injector Tester (AFIT)
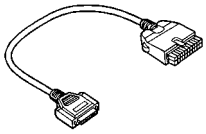	CH-47976-60 AFIT Harness Adapter
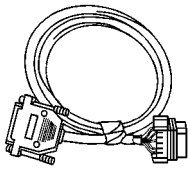	CH-47976-75 Fuel Injector Harness Adapter
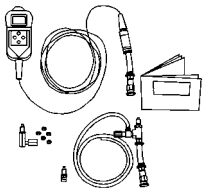	CH-48027 Digital Pressure gauge South America - Use Local Equivalent
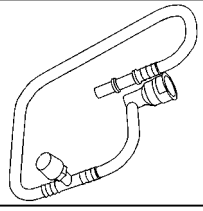	CH-48096 EVAP Service Access Port Tool
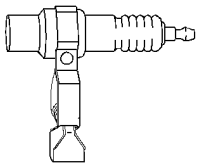	EL-26792 J-26792 HEI Spark Tester South America - Use Local Equivalent

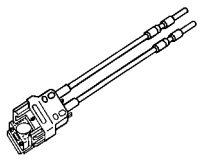	EL 36169-HD J 36169-HD Heavy Duty Fused Jumper
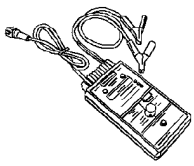	EL-39021 J-39021 Fuel Injector Coil and Balancer Tester
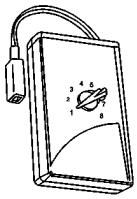	EL-39021-210 J-39021-210 Injector Tester Adapter Box
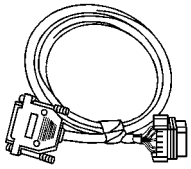	EL-39021-460 J-39021-460 Fuel Injector Test Adapter
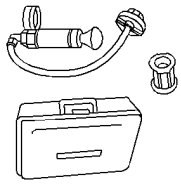	EN-24460-A J-24460-A Cooling System Pressure Tester
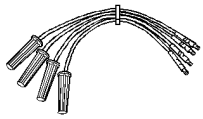	EN-36012-A J-36012-A Ignition System Diagnosis Harness
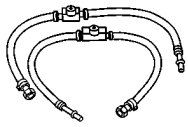	EN-37287 J-37287 Fuel Line Shut-Off Adapters (Flex Fuel)
	EN-38522 J-38522 Variable Signal Generator

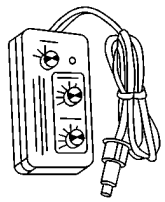	
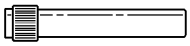	EN-41413-VLV J-41413-VLV EVAP Service Port Vent Fitting South America - Use Local Equivalent
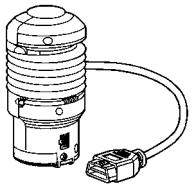	EN-42598-B J-42598-B Vehicle Data Recorder
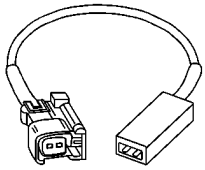	EN-44602 J-44602 Injector Test Adapter
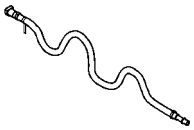	EN-47969 Fuel Supply Diagnostic Hose
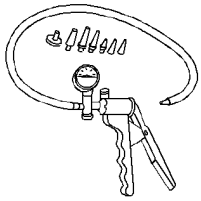	GE-23738-A J-23738-A Vacuum Pump
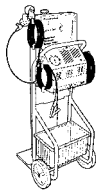	GE-41413-A J-41413-A Evaporative Emissions System Tester (EEST) South America - Use Local Equivalent
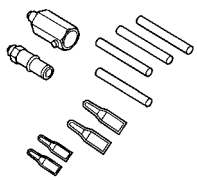	GE-41413-300 J-41413-300 EVAP Cap and Plug Kit South America - Use Local Equivalent

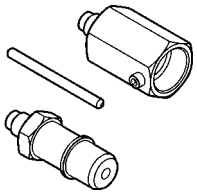	GE-41413-320 J-41413-320 EVAP Cap and Plug Kit South America - Use Local Equivalent
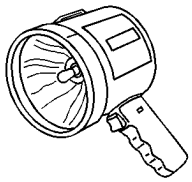	GE-41413-SPT J-41413-SPT High Intensity White Light South America - Use Local Equivalent

2013 ENGINE PERFORMANCE

Engine Controls and Fuel - 1.8L LUW and LWE - Specifications - Cruze

SPECIFICATIONS

TEMPERATURE VERSUS RESISTANCE (ECT)

Temperature Versus Resistance (ECT)

°C	°F	OHMS
Temperature vs Resistance Values (Approximate)		
140	284	50
126	258	75
116	240	100
108	226	120
99	210	160
92	197	200
84	183	250
78	172	300
69	156	400
63	145	500
58	136	600
51	123	750
47	116	900
39	102	1200
33	91	1500
29	84	1800
24	75	2250
19	66	2800
15	59	3500
9	48	4500
5	41	5500
1	33	7000
-6	+22	9500
-9	+16	12000
-14	+7	16000
-19	-2	21500
-24	-11	28500
-24	-11	31000
-27	-16	33000
-27	-16	35000
-28	-18	39000

-30	-22	49000
-33	-27	60000
-37	-34	70000
-40	-40	93000

TEMPERATURE VERSUS RESISTANCE - INTAKE AIR TEMPERATURE SENSOR (BOSCH SENSOR)

Temperature Versus Resistance - Intake Air Temperature Sensor (Bosch Sensor)

Temperature C°/F°	Resistance Minimum Ohms	Resistance Maximum Ohms
Bosch Intake Air Temperature (IAT) Sensor		
-40/-40	36, 595	42, 717
-20/-4	12, 947	14, 744
-10/14	8, 082	9, 105
0/32	5, 191	5, 789
20/68	2, 309	2, 530
25/77	1, 913	2, 088
40/104	1, 122	1, 210
60/140	587	625
80/176	328	345
100/212	193	201
120/248	119	125
140/284	76	81

ALTITUDE VERSUS BAROMETRIC PRESSURE

Altitude Versus Barometric Pressure

Altitude Measured in Meters (m)	Altitude Measured in Feet (ft)	Barometric Pressure Measured in Kilopascals (kPa)	Barometric Pressure Measured in Pounds Per Square Inch (PSI)
Determine your altitude by contacting a local weather station or by using another reference source.			
4, 267	14, 000	56-64	8.1-9.3
3, 962	13, 000	58-66	8.4-9.6
3, 658	12, 000	61-69	8.8-10.0
3, 353	11, 000	64-72	9.3-10.4
3, 048	10, 000	66-74	9.6-10.7
2, 743	9, 000	69-77	10.0-11.2
2, 438	8, 000	71-79	10.3-11.5
2, 134	7, 000	74-82	10.7-11.9
1, 829	6, 000	77-85	11.2-12.3
1, 524	5, 000	80-88	11.6-12.8

1, 219	4, 000	83-91	12.0-13.2
914	3, 000	87-95	12.6-13.8
610	2, 000	90-98	13.1-14.2
305	1, 000	94-102	13.6-14.8
0	0 Sea Level	96-104	13.9-15.1
-305	-1, 000	101-105	14.6-15.2

IGNITION SYSTEM SPECIFICATIONS

Ignition System Specifications

Application	Specification
Ignition Type	Ignition Coil Module
Firing Order	1-3-4-2
Spark Plug Torque	Refer to **Fastener Tightening Specifications**
Spark Plug Gap - All (Except LFH, LUW, and LWE)	0.8-0.9 mm (0.031-0.035 in)
Spark Plug Gap - LFH, LUW, and LWE	0.6-0.7 mm (0.024-0.028 in)
Spark Plug Type	Refer to Electronic Parts Catalogue

FASTENER TIGHTENING SPECIFICATIONS

Fastener Tightening Specifications

Application	Specification	
	Metric	English
Accelerator Pedal Position Sensor Fastener	10 N.m	89 lb in
Air Cleaner Housing Cover Bolt	5 N.m	44 lb in
Air Cleaner Inlet Duct Bolt	5 N.m	44 lb in
Air Cleaner Outlet Front Duct Clamp	3.5 N.m	31 lb in
Air Cleaner Outlet Rear Duct Clamp	3.5 N.m	31 lb in
Camshaft Position Sensor Bolt	6 N.m	53 lb in
Crankshaft Position Sensor Fastener	4.5 N.m	40 lb in
Engine Control Module Nut	9 N.m	80 lb in
Engine Coolant Fan Bolt	4 N.m	35 lb in
Engine Coolant Temperature Sensor Fastener	35 N.m	26 lb ft
Engine Oil Pressure Indicator Switch	20 N.m	15 lb ft
Evaporative Emission Canister Purge Solenoid Valve Bracket Bolt	8 N.m	71 lb in
Fuel Injection Fuel Rail Bolt	8 N.m	71 lb in
Fuel Pressure Sensor	20 N.m	14 lb ft
Fuel Tank Filler Hose Clamp	19 N.m	27 lb in
Fuel Tank Filler Pipe Bracket Bolt	9 N.m	80 lb in
Fuel Tank Filler Pipe Ground Bolt	9 N.m	80 lb in
Fuel Tank Strap Bolts	22 N.m	16 lb ft

Heated Oxygen Sensor 1	42 N.m	31 lb ft
Heated Oxygen Sensor 2	42 N.m	31 lb ft
Ignition Coil Bolts	8 N.m	71 lb in
Intake Air Duct Bolt	5 N.m	44 lb in
Knock Sensor Bolt	20 N.m	15 lb ft
Manifold Absolute Pressure Sensor Bolt	6 N.m	53 lb in
Secondary Air Injection Check Valve Bolt	22 N.m	16 lb ft
Secondary Air Injection Pump Bolt	22 N.m	16 lb ft
Spark Plug	25 N.m	18 lb ft
Throttle Body Bolt	8 N.m	71 lb in

2013 ENGINE PERFORMANCE

Engine Controls and Fuel - 1.8L LUW and LWE - Cruze

DIAGNOSTIC CODE INDEX

DIAGNOSTIC CODE INDEX

DTC	Description
DTC P0010, P0013, or P2088-P2091	DTC P0010 Intake Camshaft Position Actuator Solenoid Valve Control Circuit DTC P0013 Exhaust Camshaft Position Actuator Solenoid Valve Control Circuit DTC P2088 Intake Camshaft Position Actuator Solenoid Control Circuit Low Voltage DTC P2089 Intake Camshaft Position Actuator Solenoid Control Circuit High Voltage DTC P2090 Exhaust Camshaft Position Actuator Solenoid Control Circuit Low Voltage DTC P2091 Exhaust Camshaft Position Actuator Solenoid Control Circuit High Voltage
DTC P0011 or P0014	DTC P0011 Intake Camshaft Position System Performance DTC P0014 Exhaust Camshaft Position System Performance
DTC P0016 or P0017	DTC P0016 Crankshaft Position - Intake Camshaft Position Not Plausible DTC P0017 Crankshaft Position - Exhaust Camshaft Position Not Plausible
DTC P0030-P0032, P0036-P0038, P0053, P0054, P0135, or P0141	DTC P0030 HO2S Heater Control Circuit Sensor 1 DTC P0031 HO2S Heater Control Circuit Low Voltage Sensor 1 DTC P0032 HO2S Heater Control Circuit High Voltage Sensor 1 DTC P0036 HO2S Heater Control Circuit Sensor 2 DTC P0037 HO2S Heater Control Circuit Low Voltage Sensor 2 DTC P0038 HO2S Heater Control Circuit High Voltage Sensor 2 DTC P0053 HO2S Heater Resistance Sensor 1 DTC P0054 HO2S Heater Resistance Sensor 2 DTC P0135 HO2S Heater Performance Sensor 1 DTC P0141 HO2S Heater Performance Sensor 2
DTC P0068 or P1101	DTC P0068 Throttle Body Air Flow Performance DTC P1101 Intake Air Flow System Performance
DTC P0096 or P0111	DTC P0096 Intake Air Temperature (IAT) Sensor 2 Performance

	DTC P0111 Intake Air Temperature (IAT) Sensor 1 Performance
DTC P0097, P0098, or P0099	DTC P0097 Intake Air Temperature (IAT) Sensor 2 Circuit Low Voltage DTC P0098 Intake Air Temperature (IAT) Sensor 2 Circuit High Voltage DTC P0099 Intake Air Temperature (IAT) Sensor 2 Circuit Intermittent
DTC P0101	DTC P0101 Mass Air Flow (MAF) Sensor Performance
DTC P0102 or P0103	DTC P0102 Mass Air Flow (MAF) Sensor Circuit Low Frequency DTC P0103 Mass Air Flow (MAF) Sensor Circuit High Frequency
DTC P0106	DTC P0106 Manifold Absolute Pressure (MAP) Sensor Performance
DTC P0107 or P0108	DTC P0107 Manifold Absolute Pressure (MAP) Sensor Circuit Low Voltage DTC P0108 Manifold Absolute Pressure (MAP) Sensor Circuit High Voltage
DTC P0112, P0113, or P0114	DTC P0112 Intake Air Temperature (IAT) Sensor 1 Circuit Low Voltage DTC P0113 Intake Air Temperature (IAT) Sensor 1 Circuit High Voltage DTC P0114 Intake Air Temperature (IAT) Sensor 1 Circuit Intermittent
DTC P0116 (LUW)	DTC P0116 Engine Coolant Temperature (ECT) Sensor Performance
DTC P0117, P0118, or P0119	DTC P0117 Engine Coolant Temperature (ECT) Sensor Circuit Low Voltage DTC P0118 Engine Coolant Temperature (ECT) Sensor Circuit High Voltage DTC P0119 Engine Coolant Temperature (ECT) Sensor Circuit Intermittent
DTC P0121-P0123, P0222, P0223, or P2135	DTC P0121 Throttle Position Sensor 1 Performance DTC P0122 Throttle Position Sensor 1 Circuit Low Voltage DTC P0123 Throttle Position Sensor 1 Circuit High Voltage DTC P0222 Throttle Position Sensor 2 Circuit Low Voltage DTC P0223 Throttle Position Sensor 2 Circuit High Voltage DTC P2135 Throttle Position Sensors 1-2 Not Plausible
DTC P0128	DTC P0128 Engine Coolant Temperature (ECT)

	Below Thermostat Regulating Temperature
DTC P0131, P0132, P0134, P0137, P0138, or P0140	DTC P0131 HO2S Circuit Low Voltage Sensor 1 DTC P0132 HO2S Circuit High Voltage Sensor 1 DTC P0134 HO2S Circuit Insufficient Activity Sensor 1 DTC P0137 HO2S Circuit Low Voltage Sensor 2 DTC P0138 HO2S Circuit High Voltage Sensor 2 DTC P0140 HO2S Circuit Insufficient Activity Sensor 2
DTC P0133, P013A, P013B, P013E, P013F, P015A, P015B, P2270, or P2271	DTC P0133 HO2S Slow Response Sensor 1 DTC P013A HO2S Slow Response Rich to Lean Sensor 2 DTC P013B HO2S Slow Response Lean to Rich Sensor 2 DTC P013E HO2S Delayed Response Rich to Lean Sensor 2 DTC P013F HO2S Delayed Response Lean to Rich Sensor 2 DTC P015A HO2S Delayed Response Rich to Lean Sensor 1 DTC P015B HO2S Delayed Response Lean to Rich Sensor 1 DTC P2270 HO2S Signal Stuck Lean Sensor 2 DTC P2271 HO2S Signal Stuck Rich Sensor 2
DTC P0171 or P0172	DTC P0171 Fuel Trim System Lean DTC P0172 Fuel Trim System Rich
DTC P018B-P018D	DTC P018B Fuel Pressure Sensor Performance DTC P018C Fuel Pressure Sensor Circuit Low Voltage DTC P018D Fuel Pressure Sensor Circuit High Voltage
DTC P0201, P0202, P0203, P0204, P0261, P0262, P0264, P0265, P0267, P0268, P0270, or P0271	DTC P0201 Cylinder 1 Injector Control Circuit DTC P0202 Cylinder 2 Injector Control Circuit DTC P0203 Cylinder 3 Injector Control Circuit DTC P0204 Cylinder 4 Injector Control Circuit DTC P0261 Cylinder 1 Injector Control Circuit Low Voltage DTC P0262 Cylinder 1 Injector Control Circuit High Voltage DTC P0264 Cylinder 2 Injector Control Circuit Low Voltage DTC P0265 Cylinder 2 Injector Control Circuit High Voltage DTC P0267 Cylinder 3 Injector Control Circuit Low Voltage DTC P0268 Cylinder 3 Injector Control Circuit High Voltage

	DTC P0270 Cylinder 4 Injector Control Circuit Low Voltage DTC P0271 Cylinder 4 Injector Control Circuit High Voltage
DTC P0231, P0232, or P023F	DTC P0231 Fuel Pump Control Circuit Low Voltage DTC P0232 Fuel Pump Control Circuit High Voltage DTC P023F Fuel Pump Control Circuit
DTC P025A	DTC P025A Fuel Pump Control Module Enable Circuit
DTC P0300-P0304 or P0313	DTC P0300 Engine Misfire Detected DTC P0301 Cylinder 1 Misfire Detected DTC P0302 Cylinder 2 Misfire Detected DTC P0303 Cylinder 3 Misfire Detected DTC P0304 Cylinder 4 Misfire Detected
DTC P0315 (LUW)	DTC P0315 Crankshaft Position System Variation Not Learned
DTC P0324, P0326, or P06B6	DTC P0324 Knock Sensor (KS) System Performance DTC P0326 Knock Sensor (KS) Performance DTC P06B6 Control Module Knock Sensor Processor 1 Performance
DTC P0325, P0327, or P0328	DTC P0325 Knock Sensor Circuit DTC P0327 Knock Sensor Circuit Low Voltage DTC P0328 Knock Sensor Circuit High Voltage
DTC P0335 or P0336	DTC P0335 Crankshaft Position Sensor Circuit DTC P0336 Crankshaft Position Sensor Performance
DTC P0340, P0341, P0365, or P0366	DTC P0340 Intake Camshaft Position Sensor Circuit DTC P0341 Intake Camshaft Position Sensor Performance DTC P0365 Exhaust Camshaft Position Sensor Circuit DTC P0366 Exhaust Camshaft Position Sensor Performance
DTC P0351-P0354	DTC P0351 Ignition Coil 1 Control Circuit DTC P0352 Ignition Coil 2 Control Circuit DTC P0353 Ignition Coil 3 Control Circuit DTC P0354 Ignition Coil 4 Control Circuit
DTC P0411	DTC P0411 Secondary Air Injection System Incorrect Air Flow Detected
DTC P0412 or P0418	DTC P0412 Secondary Air Injection Valve Control Circuit DTC P0418 Secondary Air Injection Pump Control

	Circuit
DTC P0420	DTC P0420 Catalyst System Low Efficiency
DTC P0442	DTC P0442 Evaporative Emission (EVAP) System Small Leak Detected
DTC P0443	DTC P0443 Evaporative Emission (EVAP) Purge Solenoid Valve Control Circuit
DTC P0446	DTC P0446 Evaporative Emission (EVAP) Vent System Performance
DTC P0449	DTC P0449 Evaporative Emission (EVAP) Vent Solenoid Valve Control Circuit
DTC P0451-P0454	DTC P0451 Fuel Tank Pressure Sensor Performance DTC P0452 Fuel Tank Pressure Sensor Circuit Low Voltage DTC P0453 Fuel Tank Pressure Sensor Circuit High Voltage DTC P0454 Fuel Tank Pressure Sensor Circuit Intermittent
DTC P0455	DTC P0455 Evaporative Emission (EVAP) System Large Leak Detected
DTC P0496	DTC P0496 Evaporative Emission (EVAP) System Flow During Non-Purge
DTC P0506 or P0507	DTC P0506 Idle Speed Low DTC P0507 Idle Speed High
DTC P0601-P0604, P0606, or P062F (Fuel Pump Control Module)	DTC P0601 Control Module Read Only Memory Performance DTC P0602 Control Module Not Programmed DTC P0603 Control Module Long Term Memory Reset DTC P0604 Control Module Random Access Memory Performance DTC P0606 Control Module Processor Performance DTC P062F Control Module Long Term Memory Performance
DTC P0601-P0604, P0606, P062B, P062F, P0630, P16F3, or P262B (ECM)	DTC P0601 Control Module Read Only Memory Performance DTC P0602 Control Module Not Programmed DTC P0603 Control Module Long Term Memory Reset DTC P0604 Control Module Random Access Memory Performance DTC P0606 Control Module Processor Performance DTC P062F Control Module Long Term Memory Performance DTC P0630 VIN Not Programmed or Mismatched - Engine Control Module (ECM)

	DTC P16F3 Control Module Redundant Memory Performance DTC P262B Control Module Power Off Timer Performance
DTC P0627-P0629	DTC P0627 Fuel Pump Enable Circuit DTC P0628 Fuel Pump Enable Circuit Low Voltage DTC P0629 Fuel Pump Enable Circuit High Voltage
DTC P0641 or P06A6 (Fuel Pump Control Module)	DTC P0641 5 V Reference Circuit DTC P06A6 5 V Reference 1 Performance
DTC P0641, P0651, P0697, or P06A3 (ECM)	DTC P0641 5V Reference 1 Circuit DTC P0651 5V Reference 2 Circuit DTC P0697 5V Reference 3 Circuit DTC P06A3 5V Reference 4 Circuit
DTC P0650, P263A, or P263B	DTC P0650 Malfunction Indicator Lamp (MIL) Control Circuit Open DTC P263A Malfunction Indicator Lamp (MIL) Control Circuit Low Voltage DTC P263B Malfunction Indicator Lamp (MIL) Control Circuit High Voltage
DTC P0660, P0661, or P0662	DTC P0660 Intake Manifold Tuning Control Valve Control Circuit DTC P0661 Intake Manifold Tuning Control Valve Control Circuit Low Voltage DTC P0662 Intake Manifold Tuning Control Valve Control Circuit High Voltage
DTC P0685-P0687, P0689, P0690, or P1682	DTC P0685 Engine Controls Ignition Relay Control Circuit DTC P0686 Engine Controls Ignition Relay Control Circuit Low Voltage DTC P0687 Engine Controls Ignition Relay Control Circuit High Voltage DTC P0689 Engine Controls Ignition Relay Feedback Circuit Low Voltage DTC P0690 Engine Controls Ignition Relay Feedback Circuit High Voltage DTC P1682 Ignition 1 Switch Circuit 2
DTC P069E	DTC P069E Fuel Pump Control Module Requested MIL Illumination
DTC P0700	DTC P0700 Transmission Control Module Requested MIL Illumination
DTC P11C2-P11C4	DTC P11C2 Intake Air Humidity Sensor Circuit Low Voltage DTC P11C3 Intake Air Humidity Sensor Circuit High Voltage DTC P11C4 Intake Air Humidity Sensor Circuit

	Erratic
DTC P1255 or P064A	DTC P064A Fuel Pump Control Module Performance DTC P1255 Fuel Pump Control Module Driver High Temperature
DTC P1400	DTC P1400 Cold Start Emission Reduction Control System
DTC P150C	DTC P150C Transmission Control Module Engine Speed Request Signal Message Counter Incorrect
DTC P1516, P2101, P2119, or P2176	DTC P1516 Throttle Actuator Control (TAC) Module Throttle Actuator Position Performance DTC P2101 Throttle Actuator Position Performance DTC P2119 Throttle Closed Position Performance DTC P2176 Minimum Throttle Position Not Learned
DTC P2070 or P2071	DTC P2070 Intake Manifold Tuning Control Valve Stuck Open DTC P2071 Intake Manifold Tuning Control Valve Stuck Closed
DTC P2076	DTC P2076 Intake Manifold Tuning Control Valve Position Sensor Performance
DTC P2077 or P2078	DTC P2077 Intake Manifold Tuning Control Valve Position Sensor Circuit Low Voltage DTC P2078 Intake Manifold Tuning Control Valve Position Sensor Circuit High Voltage
DTC P2096	DTC P2096 Post Catalyst Fuel Trim System Low Limit
DTC P2097	DTC P2097 Post Catalyst Fuel Trim System High Limit
DTC P2122, P2123, P2127, P2128, or P2138	DTC P2122 Accelerator Pedal Position (APP) Sensor 1 Circuit Low Voltage DTC P2123 Accelerator Pedal Position (APP) Sensor 1 Circuit High Voltage DTC P2127 Accelerator Pedal Position (APP) Sensor 2 Circuit Low Voltage DTC P2128 Accelerator Pedal Position (APP) Sensor 2 Circuit High Voltage DTC P2138 Accelerator Pedal Position (APP) Sensors 1-2 Not Plausible
DTC P2199	DTC P2199 Intake Air Temperature (IAT) Sensor 1-2 Correlation
DTC P219A	DTC P219A Fuel Trim Cylinder Balance
	DTC P2227 Barometric Pressure (BARO) Sensor Performance DTC P2228 Barometric Pressure (BARO) Sensor Circuit Low Voltage

DTC P2227-P2230	DTC P2229 Barometric Pressure (BARO) Sensor Circuit High Voltage DTC P2230 Barometric Pressure (BARO) Sensor Circuit Erratic
DTC P2430 or P2431	DTC P2430 Secondary Air Injection System Pressure Sensor Circuit DTC P2431 Secondary Air Injection System Pressure Sensor Performance
DTC P2432 or P2433	DTC P2432 Secondary Air Injection System Pressure Sensor Circuit Low Voltage DTC P2433 Secondary Air Injection System Pressure Sensor Circuit High Voltage
DTC P2440	DTC P2440 Secondary Air Injection System Cut-Off Valve Stuck Open
DTC P2444	DTC P2444 Secondary Air Injection System Pump Stuck On
DTC P2534 (Fuel Pump Control Module)	DTC P2534 Ignition On/Start Switch Circuit Low Voltage
DTC P2544	DTC P2544 Transmission Torque Request Signal Message Counter Incorrect
DTC P2635 (Fuel Pump Control Module)	DTC P2635 Fuel Pump Flow Performance

2013 ENGINE PERFORMANCE

Firing Order & Cylinder Identification - GM, & Saturn - All Models

FIRING ORDER & CYLINDER IDENTIFICATION

NOTE: This information is intended as a quick reference for firing order and cylinder identification only. The information provided covers many vehicles and may include some information that does not apply to the vehicle you have currently selected.

3 CYLINDER ENGINE

Engine Configuration	Firing Order	Cylinder Identification
In-Line 3	1-3-2	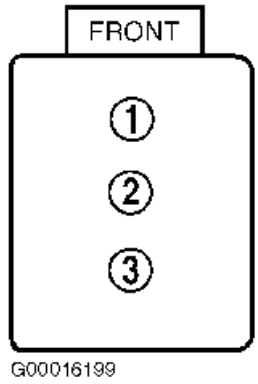 G00016199

4 CYLINDER ENGINE

Engine Configuration	Firing Order	Cylinder Identification
In-Line 4	1-3-4-2	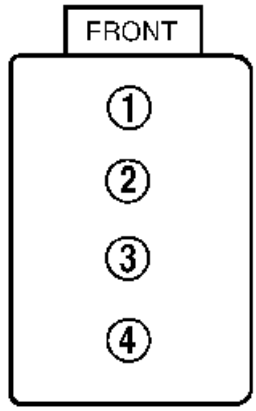 G00016200

5 CYLINDER ENGINE

Engine Configuration	Firing Order	Cylinder Identification
In-Line 5	1-3-5-4-2	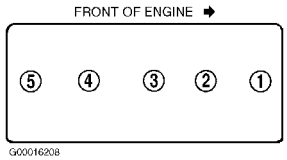

IN-LINE 6 ENGINE

Engine Configuration	Firing Order	Cylinder Identification
In-Line 6	1-5-3-6-2-4	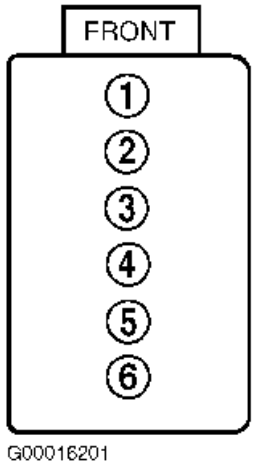

V6 ENGINE

3.5L VIN 4 V6 Engine

Engine Configuration	Firing Order	Cylinder Identification
3.5L VIN 4	1-4-2-5-3-6	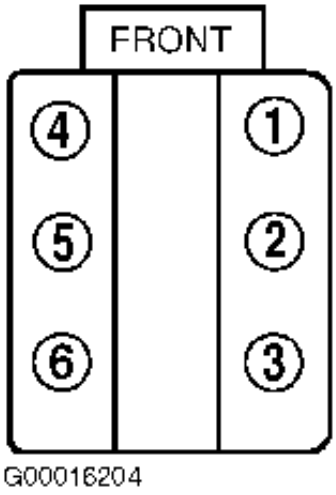

3.8L & 4.3L V6 Engines

Engine Configuration	Firing Order	Cylinder Identification
3.8L & 4.3L	1-6-5-4-3-2	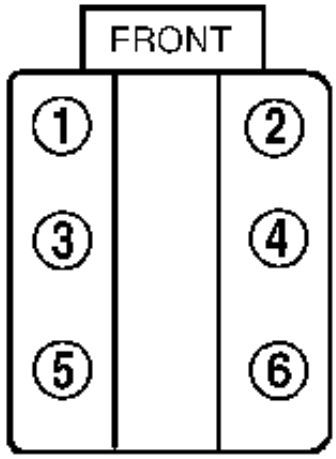 G00016202

All Other V6 Engines

Engine Configuration	Firing Order	Cylinder Identification
All Others	1-2-3-4-5-6	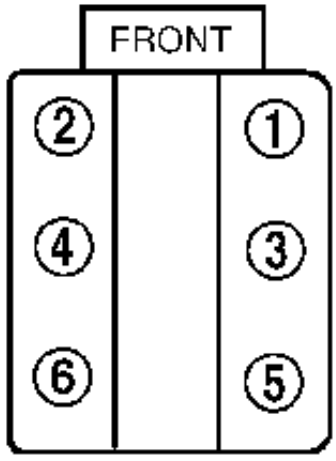 G00016203

8 CYLINDER ENGINE

4.0L, 4.4L & 4.6L V8 Engines

Engine Configuration	Firing Order	Cylinder Identification

4.0L, 4.4L, 4.6L	1-2-7-3-4-5-6-8	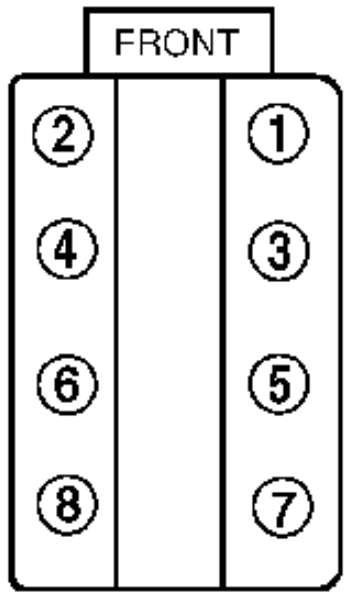 G00016206

5.0L, 5.7L (VIN R & VIN K) & 7.4L V8 Engines

Engine Configuration	Firing Order	Cylinder Identification
5.0L, 5.7L (VIN R & K), 7.4L	1-8-4-3-6-5-7-2	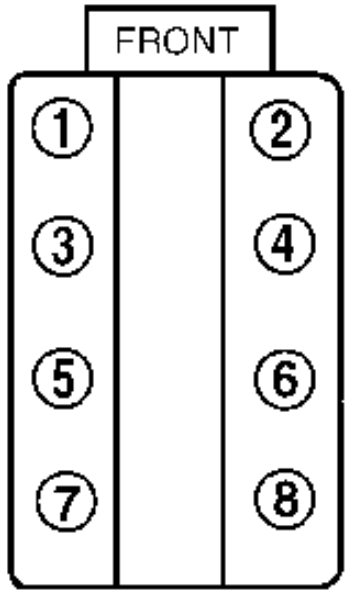 G00016205

6.6L Diesel V8 Engine

Engine Configuration	Firing Order	Cylinder Identification

6.6L Diesel	1-2-7-8-4-5-6-3	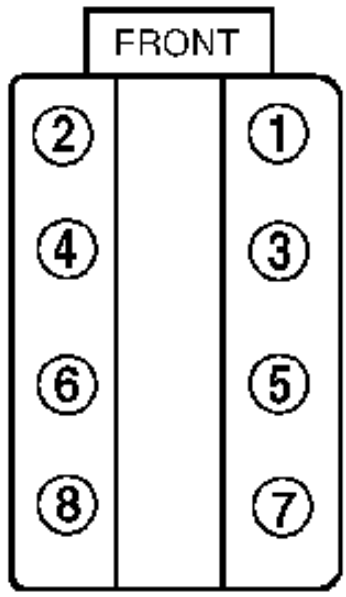 G00016206

All Other V8 Engines

Engine Configuration	Firing Order	Cylinder Identification
All Others	1-8-7-2-6-5-4-3	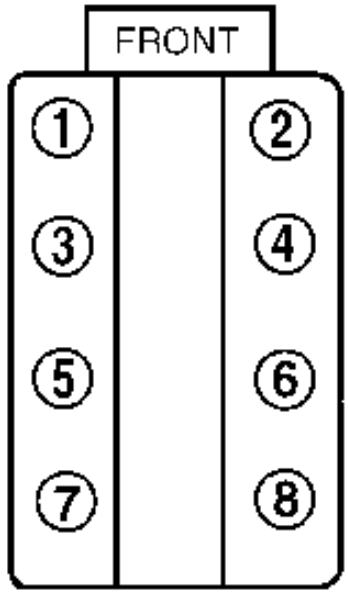 G00016205

2013 HVAC

Heating, Ventilation, and Air Conditioning - Cruze

SPECIFICATIONS

FASTENER TIGHTENING SPECIFICATIONS

Fastener Tightening Specifications

Application	Specification	
	Metric	English
Air Conditioning Compressor Bolt	22 N.m	16 lb ft
Air Conditioning Compressor Oil Drain Plug	15 N.m	11 lb ft
Air Conditioning Control Module Bolt	2.5 N.m	22 lb in
Air Conditioning Evaporator Case Bolt	2.5 N.m	22 lb in
Air Conditioning Evaporator Hose Assembly Nut to Air Conditioning Condenser	19 N.m	14 lb ft
Air Conditioning Evaporator Hose Assembly Nut to Air Conditioning Compressor and Condenser Hose	19 N.m	14 lb ft
Air Conditioning Evaporator Hose Assembly Nut to Air Conditioning Evaporator Thermal Expansion Valve	19 N.m	14 lb ft
Air Conditioning Evaporator Thermal Expansion Valve Bolt	15 N.m	11 lb ft
Air Conditioning Refrigerant Pressure Sensor	6 N.m	53 lb in
Air Inlet Housing Bolt	2.5 N.m	22 lb in
Air Outlet Duct Bolt	2.5 N.m	22 lb in
Blower Motor Bolt	4.5 N.m	40 lb in
Blower Motor Cup Bolt	2.5 N.m	22 lb in
Bracket Heater Core Outlet Tube Bolt	2.5 N.m	22 lb in
Condenser Hose And Condenser Hose Bolt	19 N.m	14 lb ft
Floor Air Outlet Duct Bolt	2.5 N.m	22 lb in
Heater and Air Conditioning Evaporator Case Bolt	2.5 N.m	22 lb in
Heater and Blower and Air Conditioning Control Module Bolt	2.5 N.m	22 lb in
Instrument Panel Bracket Bolt	9 N.m	80 lb in
Instrument Panel Tie Bar Bolt	22 N.m	16 lb ft
Instrument Panel Tie Bar Nuts	9 N.m	80 lb in
Mode Control Cam Actuator Screws	2.5 N.m	22 lb in
Refrigerant Pressure Sensor	6 N.m	53 lb in
Service Valve Core	3 N.m	27 lb in
TXV Block Fitting Nut	19 N.m	14 lb ft
TXV Mounting Bolts	19 N.m	11 lb ft

COMPRESSOR SUCTION SCREEN AND TOOL SELECTION SPECIFICATIONS

Compressor Suction Screen and Tool Selection Specifications

Part Number	Screen Size	Fitting ID Application Range
J-44551-40	10.03 mm (0.395 in)	9.75-9.96 mm (0.384-0.392 in)
J-44551-60	11.96 mm (0.471 in)	11.68-11.89 mm (0.460-0.468 in)
J-44551-70	12.50 mm (0.492 in)	12.22-12.42 mm (0.481-0.489 in)
J-44551-80	12.70 mm (0.500 in)	12.42-12.62 mm (0.489-0.497 in)
J-44551-10	12.95 mm (0.510 in)	12.67-12.88 mm (0.499-0.507 in)
J-44551-20	14.02 mm (0.552 in)	13.74-13.94 mm (0.541-0.549 in)
J-44551-30	15.11 mm (0.595 in)	14.83-15.04 mm (0.584-0.592 in)
J-44551-90	0.600 in (15.24 mm)	14.96-15.16 mm (0.589-0.597 in)

REFRIGERANT SYSTEM SPECIFICATIONS

Refrigerant System Specifications

Application	Specification	
	Metric	English
PAG Oil GM P/N 12378526 for United States PAG Oil GM P/N 88900060 for Canada		
Total System Refrigerant R134-a	0.6 kg	1.4 lb
Total System PAG Oil	125 ml	4.23 oz
Compressor Oil, see **Air Conditioning Compressor Oil Balancing**		
Condenser	30 ml	1.0 oz
Evaporator	30 ml	1.0 oz
Desiccant Cartridge	15 ml	0.5 oz
Abrupt Refrigerant Loss	60 ml	2.0 oz
Abrupt refrigerant loss due to large leak, hose rupture, collision, or pressure relief valve opening. Conditions that allow the refrigerant to seep or bleed off over time do not cause this oil loss. Upon replacement of a component that caused a large refrigerant loss, also add the required amount of oil for the particular component.		

DIAGNOSTIC INFORMATION AND PROCEDURES

LEAK TESTING

Refrigerant Leak Testing

NOTE: General Motors vehicles are now manufactured with fluorescent dye installed directly into the air conditioning (A/C) system.

The fluorescent dye mixes and flows with the polyalkylene glycol (PAG) oil throughout the refrigerant system.

Verifying some passive leaks may require using a halogen leak detector, even though the A/C system contains

fluorescent dye.

The only time adding additional fluorescent dye is required is after flushing the A/C system.

Fluorescent Leak Detector

Fluorescent dye will assist in locating any leaks in the A/C system.

NOTE: PAG oil is water soluble.

- Condensation on the evaporator core or the refrigerant lines may wash the PAG oil and fluorescent dye away from the actual leak. Condensation may also carry dye through the HVAC module drain.
- Leaks in the A/C system will be indicated in a light green or yellow color when using the leak detection lamp.

  Use the leak detection lamp in the following areas:

  - All fittings or connections that use seal washers or O-rings
  - All of the A/C components
  - The A/C compressor shaft seal
  - The A/C hoses and pressure switches
  - The HVAC module drain tube, if the evaporator core is suspected of leaking
  - The service port sealing caps
  - The sealing cap is the primary seal for the service ports.

- Follow the instructions supplied with the detection lamp.
- To prevent false diagnosis in the future, thoroughly clean the residual dye from any area where leaks were found. Use a rag and an approved fluorescent dye cleaner.

Fluorescent Dye Injection

NOTE: Use only fluorescent dye approved by General Motors.

- Not all of the fluorescent dyes are compatible with PAG oil. Some types of dye decrease the oil viscosity or may chemically react with the oil.

NOTE: Do NOT overcharge the A/C system with dye.

- R-134A leak detection dye requires time to work. Depending upon the leak rate, a leak may not become visible for between 15 minutes and 7 days.
- To prevent false diagnosis, thoroughly clean any residual dye from the service port with a rag and an approved fluorescent dye cleaner.

Halogen Leak Detector

WARNING: Do not operate the detector in a combustible atmosphere since its sensor operates at high temperatures or personal injury and/or damage to the equipment may result.

Ensure that the vehicle has at least 0.45 kg (1 lb) of refrigerant in the A/C refrigeration system in order to perform a leak test. Refer to **Refrigerant Recovery and Recharging**.

NOTE: Halogen leak detectors are sensitive to the following items:

- **Some adhesives used in the vehicle**
- **Many solvents and cleaners**
- **Windshield washing solutions**

Clean and dry all surfaces in order to prevent a false warning. Liquids will damage the detector.

NOTE: Follow a continuous path in order to ensure that you will not miss any possible leaks. Test all areas of the system for leaks.

Follow the instructions supplied with the halogen leak tester.

AIR CONDITIONING (A/C) SYSTEM PERFORMANCE TEST

This test measures the operating efficiency of the A/C system under the following conditions:

- The current ambient air temperature
- The current relative humidity
- The high side pressure of the A/C system
- The low side pressure of the A/C system
- The temperature of the air being discharged into the passenger compartment

Test Description

The numbers below refer to the step numbers on the diagnostic table.

1

This step determines if the A/C system has at least the minimum refrigerant charge required to operate the system without damage.

2

This step measures the performance of the A/C system.

3

This step is to allow for vehicle variations as well as high ambient temperatures.

Air Conditioning (A/C) System Performance Test

Step	Action	Values	Yes	No
NOTE: • **The ambient air temperature must be at least 16°C (60°F).** • **Do not induce additional air flow across the front of the vehicle during the test.** • **If you were sent here from a DTC diagnostic table, clear the DTC upon completion of this test.**				
1	1. Park the vehicle inside or in the shade. 2. Open the windows in order to ventilate the interior of the vehicle. 3. If the A/C system was operating, allow the A/C system to equalize for about 2 minutes. 4. Turn OFF the ignition. 5. Install the **J-43600** ACR 2000 Air Conditioning Service Center or **GE-48800** CoolTech A/C Recharge Machine. 6. Record the ambient air temperature and humidity. 7. Record the low and high side STATIC pressure readings. Are both the low side and high side pressures within the specified value?	More than 16°C (60°F) - 345 kPa (50 psi) More than 24°C (75°F) - 483 kPa (70 psi) More than 33°C (90°F) - 690 kPa (100 psi)	Go to **Step 2**	Go to **Leak Testing**
	NOTE: **Record the relative humidity and the ambient air temperature at the time of the test.** 1. Close the vehicle doors and windows. 2. Open the drivers door window 12.7-15.2 cm (5-6 in). 3. Select the following HVAC control settings: • The A/C is ON. • The coldest temperature setting • The maximum blower speed • Recirculation mode • The instrument panel (I/P) outlet mode • All I/P outlets are OPEN.			

2	4. Install thermometers in the left and right center panel air outlets. 5. Apply the parking brake. 6. Place the transaxle/transmission in one of the following positions: • PARK (Automatic) • NEUTRAL (Manual) 7. Start the engine and warm to operating temperature. 8. Operate the A/C system for 5 minutes. 9. Inspect A/C components for the following conditions: • Abnormal frost areas • Unusual noises 10. Record the following information: • The panel outlet air temperatures • The low-side pressure • The high-side pressure 11. Compare the low and high side pressures and the panel output temperatures to the A/C Performance Table below. Does all the data recorded fall within the specified ranges of the A/C Performance Table below?	-	Go to **Step 5**	Go to **Step 3**
3	If the pressures and temperatures recorded do not fall within the specified ranges: 1. Continue to operate the A/C system for an additional 5 minutes. 2. Record the pressures and temperatures again. 3. Compare the low and high side pressures and the panel output temperature to the A/C Performance Table below. Does all the data recorded fall within the specified ranges of the A/C Performance Table below?	-	Go to **Step 5**	Go to **Step 4**
4	Perform the necessary repairs. Refer to **A/C Diagnostics Chart**. Is the action complete?	-	Go to **Step 5**	-

5	Operate the system in order to verify the test results. Did you find the same results?	-	System OK	Go to **Symptoms - HVAC Systems - Automatic**

A/C Performance Table

Ambient Temperature	Relative Humidity	Low Side Service Port Pressure	High Side Service Port Pressure	Maximum Left Center Discharge Air Temperature
13-18°C (55-65°F)	0-100%	151-213 kPa (22-31 psi)	840-1026 kPa (122-149 psi)	7°C (43°F)
19-24°C (66-75°F)	Less than 40%	151-241 kPa (22-35 psi)	1123-1378 kPa (163-200)	9°C (48)
	Greater than 40%	158-268 kPa (23-39 psi)	1047-1336 kPa (152-194 psi)	12°C (52°F)
25-29°C (76-85°F)	Less than 35%	186-275 kPa (27-40 psi)	1322-1591 kPa (192-231 psi)	13°C (55°F)
	35-50%	199-289 kPa (29-42 psi)	1302-1591 kPa (189-231 psi)	13°C (55°F)
	Greater than 50%	206-310 kPa (30-45 psi)	1288-1598 kPa (187-232 psi)	15°C (59°F)
30-35°C (86-95°F)	Less than 30%	220-316 kPa (32-46 psi)	1502-1818 kPa (218-264 psi)	15°C (59°F)
	30-50%	227-330 kPa (33-48 psi)	1502-1853 kPa (218-269 psi)	18°C (63°F)
	Greater than 50%	248-358 kPa (36-52 psi)	1508-1901 kPa (219-276 psi)	19°C (66°F)
36-41°C (96-105°F)	Less than 20%	254-351 kPa (37-51 psi)	1708-2018 kPa (248-293 psi)	18°C (64°F)
	20-40%	261-365 kPa (38-53 psi)	1722-2087 kPa (250-303 psi)	20°C (68°F)
	Greater than 40%	282-385 kPa (41-56 psi)	1756-2149 kPa (255-312 psi)	23°C (72°F)
42-46°C (106-115° F)	Less than 20%	296-385 kPa (43-56 psi)	1908-2211 kPa (277-321 psi)	20°C (68°F)
	Greater than 20%	310-406 kPa (45-59 psi)	1942-2287 kPa (282-332 psi)	23°C (73°F)
47-49°C (116-120° F)	Below 30%	344-434 kPa (50-63 psi)	2129-2452 kPa (309-356 psi)	25°C (77°F)

A/C DIAGNOSTICS CHART

A/C Diagnostics Chart

Low Side Gauge Reading	High Side Gauge Reading	Potential Causes
		Low Refrigerant Charge

Low	Low	Restriction between Compressor and High Side port
	Low/Normal	Evaporator Freezing
	High	Restriction between the Low Side and High Side ports or Restricted TXV/Orifice Tube
		Compressor Stuck at Maximum Displacement
High	Low	Compressor has Low Displacement or Internal Malfunction
	High	Malfunctioning Cooling Fans
		Refrigerant Overcharge
		Restriction between the Low Side Port and Compressor Inlet
		Restricted Condenser Air Flow
		Expansion Device Stuck Open
		Air in A/C System
Normal/High	Normal/High	Refrigerant Contamination
		PAG or POE Oil Overcharge

HEATING PERFORMANCE DIAGNOSTIC

Heating Performance Diagnostic

Step	Action	Yes	No
DEFINITION: Heating system performance.			
1	Were you sent here from Symptoms or another diagnostic table?	Go to **Step 2**	Go to **Symptoms - HVAC Systems - Manual** or Go to **Symptoms - HVAC Systems - Automatic**
2	1. Start the engine. 2. Allow the engine to idle. Does the engine reach a normal operating temperature?	Go to **Step 3**	Go to **Step 9**
3	**WARNING:** **Refer to Moving Parts and Hot Surfaces Warning .** 1. Allow the engine to idle. 2. Select the FLOOR mode. 3. Select the minimum blower speed.		

	4. Select the warmest temperature setting. 5. Feel the temperature of the inlet and outlet heater hoses at the heater core. Does the inlet heater hose feel warmer than the outlet heater hose?	Go to **Step 7**	Go to **Step 4**
4	1. Install a thermometer into the center I/P PANEL air outlet. 2. Secure a thermometer to the heater core outlet hose. 3. Select the PANEL mode. 4. Select the maximum blower speed. 5. Select the warmest temperature setting. 6. Record the temperature at the following locations: • The center I/P PANEL air outlet • The heater core outlet hose 7. Compare the recorded temperatures. Are the 2 temperature readings about equal?	Go to **Step 5**	Go to **Step 6**
5	1. Inspect and repair the following areas of the vehicle for air leaks: • Floor air outlet duct-Refer to **Floor Air Outlet Replacement**. • LH floor air outlet duct-Refer to **Floor Air Outlet Duct Replacement - Left Side**. • RH floor air outlet duct-Refer to **Floor Air Outlet Duct Replacement - Right Side**. • LH rear floor air outlet duct-Refer to **Floor Rear Air Outlet Duct Replacement - Left Side**. • RH rear floor air outlet duct-Refer to **Floor Rear Air Outlet Duct Replacement - Right Side**. 2. Perform the necessary repairs. Are the repairs complete?	Go to **Step 10**	-
6	1. Inspect the temperature door operation. Refer to **Diagnostic System Check - Vehicle** . 2. Perform any necessary repairs.		

	Are the repairs complete?	Go to **Step 10**	-
7	1. Turn OFF the engine. 2. Backflush the heater core. 3. Start the engine. 4. Select the FLOOR mode. 5. Select the minimum blower speed. 6. Select the warmest temperature setting. 7. Feel the temperature of the inlet and outlet heater hoses at the heater core. Does the inlet heater hose feel warmer than the outlet heater hose?	Go to **Step 8**	Go to **Step 10**
8	Replace the heater core. Refer to **Heater Core Replacement**. Is the repair complete?	Go to **Step 10**	-
9	Repair the low engine temperature concern. Refer to **Engine Fails To Reach Normal Operating Temperature** . Is the repair complete?	Go to **Step 10**	-
10	Operate the system in order to verify the repair. Did you find and correct the condition?	System OK	Go to **Step 2**

DEFROSTING INSUFFICIENT (WITH Y8X)

Defrosting Insufficient (with Y8X)

Step	Action	Yes	No
DEFINITION: Time required to defrost the windshield is longer than normal.			
1	Were you sent here from Symptoms or another diagnostic table?	Go to **Step 2**	Go to **Symptoms - HVAC Systems - Manual** , or **Symptoms - HVAC Systems - Automatic**
2	1. Start the engine. 2. Select the DEFROST mode. 3. Select the maximum blower speed. Does sufficient air flow from the defroster outlets?	Go to **Step 3**	Go to **Step 10**
3	Measure the engine operating temperature. Does engine reach a normal operating temperature?	Go to **Step 4**	Go to **Step 8**
	1. Select the minimum blower speed. 2. Select the maximum temperature		

4	setting. **WARNING:** **Refer to Moving Parts and Hot Surfaces Warning .** 3. Feel the temperature of the inlet and outlet hoses at the heater core. Does the inlet hose feel warmer than the outlet hose?	Go to **Step 11**	Go to **Step 5**
5	Test the operation of the A/C compressor clutch. Does the A/C compressor clutch engage?	Go to **Step 7**	Go to **Step 6**
6	Repair the A/C compressor clutch. Refer to **Symptoms - HVAC Systems - Manual** . Is the repair complete?	Go to **Step 14**	-
7	Perform the A/C system performance test. Refer to **Air Conditioning (A/C) System Performance Test**. Is the A/C system operating within the specifications?	Go to **Step 9**	Go to **Step 12**
8	Repair the low engine temperature concern. Refer to **Engine Fails To Reach Normal Operating Temperature** . Is the repair complete?	Go to **Step 14**	-
9	Inspect for correct operation of the air inlet valve. Is the air inlet valve operating correctly?	Go to **Step 14**	Go to **Step 13**
10	Repair the air delivery concern. Refer to **Symptoms - HVAC Systems - Manual** . Is the repair complete?	Go to **Step 14**	-
11	Repair the heating concern. Refer to **Heating Performance Diagnostic**. Is the repair complete?	Go to **Step 14**	-
12	Repair the A/C performance concern. Refer to **Symptoms - HVAC Systems - Manual** , or **Symptoms - HVAC Systems - Automatic** . Is the repair complete?	Go to **Step 14**	-
13	Repair the air inlet valve concern. Refer to **Symptoms - HVAC Systems - Manual** . Is the repair complete?	Go to **Step 14**	-
14	Operate the system in order to verify the repair. Did you find and correct the problem?	System OK	Go to **Step 2**

DEFROSTING INSUFFICIENT (WITHOUT Y8X)

Defrosting Insufficient (without Y8X)

Step	Action	Yes	No
DEFINITION: Time required to defrost the windshield is longer than normal.			
1	Were you sent here from Symptoms or another diagnostic table?	Go to **Step 2**	Go to **Symptoms - HVAC Systems - Manual** , or **Symptoms - HVAC Systems - Automatic**
2	1. Start the engine. 2. Select the DEFROST mode. 3. Select the maximum blower speed. Does sufficient air flow from the defroster outlets?	Go to **Step 3**	Go to **Step 8**
3	Measure the engine operating temperature. Does engine reach a normal operating temperature?	Go to **Step 4**	Go to **Step 6**
4	1. Select the minimum blower speed. 2. Select the maximum temperature setting. **WARNING:** **Refer to Moving Parts and Hot Surfaces Warning .** 3. Feel the temperature of the inlet and outlet hoses at the heater core. Does the inlet hose feel warmer than the outlet hose?	Go to **Step 9**	Go to **Step 5**
5	Perform the A/C system performance test. Refer to **Air Conditioning (A/C) System Performance Test**. Is the A/C system operating within the specifications?	Go to **Step 7**	Go to **Step 10**
6	Repair the low engine temperature concern. Refer to **Engine Fails To Reach Normal Operating Temperature** . Is the repair complete?	Go to **Step 12**	-
7	Inspect for correct operation of the air inlet valve. Is the air inlet valve operating correctly?	Go to **Step 12**	Go to **Step 11**
8	Repair the air delivery concern. Refer to **Symptoms - HVAC Systems - Manual** .		

	Is the repair complete?	Go to **Step 12**	-
9	Repair the heating concern. Refer to **Heating Performance Diagnostic**. Is the repair complete?	Go to **Step 12**	-
10	Repair the A/C performance concern. Refer to **Symptoms - HVAC Systems - Manual** , or **Symptoms - HVAC Systems - Automatic** . Is the repair complete?	Go to **Step 12**	-
11	Repair the air inlet valve concern. Refer to **Symptoms - HVAC Systems - Manual** . Is the repair complete?	Go to **Step 12**	-
12	Operate the system in order to verify the repair. Did you find and correct the problem?	System OK	Go to **Step 2**

NOISE DIAGNOSIS - BLOWER MOTOR

Noise Diagnosis - Blower Motor

Step	Action	Yes	No
DEFINITION: Noise originating from the blower motor.			
1	Were you sent here from Symptoms or another diagnostic table?	Go to **Step 2**	Go to **Symptoms - HVAC Systems - Manual** , or **Symptoms - HVAC Systems - Automatic**
2	Inspect the air inlet grille for debris. Is debris present?	Go to **Step 8**	Go to **Step 3**
3	1. Sit inside the vehicle. 2. Close the vehicle doors and windows. 3. Turn ON the ignition, with the engine OFF. 4. Cycle the blower motor through all of the speeds and modes in order to determine where and when the noise occurs. Is a noise evident during the blower operation?	Go to **Step 4**	Go to **Step 11**
4	Inspect for excessive vibration at each blower motor speed by feeling the blower case. Is excess vibration present?	Go to **Step 6**	Go to **Step 5**
5	Listen to the blower motor at each speed. Is the blower motor making a squeaking or chirping noise?	Go to **Step 9**	Go to **Step 11**
	1. Remove the blower motor. Refer to **Blower Motor Replacement**.		

6	2. Inspect the blower motor impeller for deposits of foreign material. 3. Inspect the blower motor for deposits of foreign material. Did you find any foreign material on the blower motor or blower motor impeller?	Go to **Step 8**	Go to **Step 7**
7	Inspect the blower motor for the following conditions: • Cracked blades • A loose impeller retainer • Improper impeller alignment Did you find any of these conditions?	Go to **Step 9**	Go to **Step 10**
8	Remove the foreign material. Is the action complete?	Go to **Step 10**	-
9	Replace the blower motor. Refer to **Blower Motor Replacement**. Is the repair complete?	Go to **Step 11**	-
10	Install the blower motor. Refer to **Blower Motor Replacement**. Is the action complete?	Go to **Step 11**	-
11	Operate the system in order to verify the repair. Did you find and correct the condition?	System OK	Go to **Step 2**

AIR CONDITIONING COMPRESSOR OIL DIAGNOSIS

Air Conditioning Compressor Oil Diagnosis

Condition	Corrective Action
NOTE: **To avoid repeat compressor failure, always inspect the condition of the refrigerant oil and take the appropriate corrective action before installing the replacement compressor.**	
Clean oil no debris present	No corrective action necessary.
Clean oil with debris present	• Inspect the suction port of the replacement compressor for presence of a suction screen. If the replacement compressor does NOT contain a suction screen, install a suction screen in the line. • Replace the desiccant or component containing the desiccant. • Replace the desiccant filter if applicable. • Remove and inspect the high pressure side filter

	(if applicable). • Remove, inspect, clean, or replace the orifice tube. • If the system has a front orifice tube and is equipped with a filter in the rear auxiliary line, remove, inspect, clean, or replace the filter.
Dark brown/black and/or pungent/unusual odor with no debris present	• Replace the desiccant or component containing the desiccant. • Replace the desiccant filter if applicable. • Flush the refrigerant system.
Dark brown/black and/or pungent/unusual odor with debris present	• Replace the desiccant or component containing the desiccant. • Replace the desiccant filter if applicable. • Flush the refrigerant system. • Inspect the suction port of the replacement compressor for presence of a suction screen. If the replacement compressor does NOT contain a suction screen, install a suction screen. • Remove and inspect the high pressure side filter if applicable. • Remove, inspect, clean, or replace the orifice tube. • If the system has a front orifice tube and is equipped with a filter in the rear auxiliary line, remove, inspect, clean, or replace the filter.
Oil overcharge	Flush the refrigerant system.
Refrigerant contamination	Flush the refrigerant system.
Hybrid polyolester refrigerant oil (POE) contamination	• Flush the refrigerant system. • Replace the desiccant or component containing the desiccant. • Replace the desiccant filter if applicable.

NOISE DIAGNOSIS - AIR CONDITIONING (A/C) SYSTEM (WITH Y8X)

Noise Diagnosis - Air Conditioning (A/C) System (with Y8X)

Step	Action	Yes	No
DEFINITION: Noise originating from the A/C compressor, drive belt, or the A/C lines.			
1	Were you sent here from Symptoms or another diagnostic table?		Go to **Symptoms - HVAC Systems - Manual** or Go to **Symptoms -**

		Go to **Step 2**	**HVAC Systems - Automatic**
2	1. A/C system noises can be generally categorized into 3 areas: • Screeching, squealing, chirping noises • Moaning noises • Vibration/rattle noises 2. Start the engine. 3. Ensure that the A/C is ON. Is a screeching, squealing noise heard when the A/C is ON?	Go to **Step 3**	Go to **Step 9**
3	With the engine OFF, inspect the drive belt for excessive wear. Refer to the appropriate procedure: • **Drive Belt Falls Off and Excessive Wear Diagnosis** for the 1.4L engine • **Drive Belt Falls Off and Excessive Wear Diagnosis** for the 1.8L engine Is the drive belt excessively worn?	Go to **Step 18**	Go to **Step 4**
4	Inspect the drive belt tension. Refer to the appropriate procedure: • **Drive Belt Tensioner Diagnosis** for the 1.4L engine • **Drive Belt Tensioner Diagnosis** for the 1.8L engine Is the drive belt tension correct?	Go to **Step 5**	Go to **Step 19**
5	Inspect the drive belt for excessive oil coverage. Is the drive belt covered with oil?	Go to **Step 17**	Go to **Step 6**
6	1. Start the engine. 2. Ensure that the A/C is ON. 3. Inspect the compressor and the clutch. Is the A/C compressor locked up?	Go to **Step 24**	Go to **Step 7**
7	Is the A/C compressor clutch slipping?	Go to **Step 23**	Go to **Step 8**
8	**WARNING:** **Refer to Moving Parts and Hot Surfaces Warning .**		

	Using a stethoscope, listen to the A/C compressor for any abnormal noises.Is the compressor causing an abnormal noise?	Go to **Step 15**	Go to **Step 10**
9	Does a moaning noise exist when the A/C clutch is engaged?	Go to **Step 10**	Go to **Step 12**
10	Listen to the A/C compressor components and mounting for noise concerns using a stethoscope. Are any of these components loose, damaged, or excessively worn?	Go to **Step 20**	Go to **Step 11**
11	1. Idle the engine in PARK. 2. Engage the A/C compressor clutch. 3. Using a stethoscope, move around the entire refrigerant plumbing system. Listening for any abnormal noises caused by a component of the A/C system touching another component. Are any of the A/C components grounding out and causing a vibration noise?	Go to **Step 22**	Go to **Step 13**
12	Does a vibration or rattle noise exist when the A/C clutch is engaged?	Go to **Step 13**	Go to **Step 14**
13	Does the noise stop when the A/C clutch is disengaged?	Go to **Step 15**	Go to **Step 25**
14	1. Idle the engine in PARK with the A/C compressor clutch engaged. 2. Using a stethoscope, move around the entire A/C system testing for any abnormal noises caused by a component. Do any of the A/C components cause an abnormal noise?	Go to **Step 21**	Go to **Step 25**
15	Verify that the A/C system is properly charged. Refer to **Refrigerant System Specifications**. Is the A/C system properly charged?	Go to **Step 26**	Go to **Step 16**
16	Recharge the A/C system to specification. Refer to **Refrigerant Recovery and Recharging**. Is the abnormal compressor noise still present?	Go to **Step 24**	Go to **Step 26**
17	Repair the oil leak. Refer to the appropriate procedure: • **Oil Leak Diagnosis** for the 1.4L engine • **Oil Leak Diagnosis** for the 1.8L engine Is the repair complete?	Go to **Step 18**	-
	Replace the drive belt. Refer to the appropriate procedure:		

18	• **Drive Belt Replacement** for the 1.4L engine • **Drive Belt Replacement** for the 1.8L engine Is the replacement complete?	Go to **Step 26**	-
19	Replace the drive belt tensioner. Refer to the appropriate procedure: • **Drive Belt Tensioner Replacement** for the 1.4L engine • **Drive Belt Tensioner Replacement** for the 1.8L engine Is the replacement complete?	Go to **Step 26**	-
20	Repair or replace the A/C compressor mounting component. Is the repair complete?	Go to **Step 26**	-
21	Repair or replace the component which is causing the moaning concern as needed. Is the repair complete?	Go to **Step 26**	-
22	Correctly route or insulate the A/C component. Is the repair complete?	Go to **Step 26**	-
23	Replace the A/C compressor clutch. Refer to **Air Conditioning Clutch Assembly Replacement**. Is the repair complete?	Go to **Step 26**	-
24	Replace the A/C compressor. Refer to **Air Conditioning Compressor Replacement (1.8L LUW and LWE)**, **Air Conditioning Compressor Replacement (1.4L LUV)**. Is the repair complete?	Go to **Step 26**	-
25	The concern may be caused by an engine related component. Refer to **Vibration Analysis - Engine** . Did you find and correct the condition?	Go to **Step 26**	-
26	Operate the system in order to verify the repair. Did you find and correct the condition?	System OK	Go to **Step 2**

NOISE DIAGNOSIS - AIR CONDITIONING (A/C) SYSTEM (WITHOUT Y8X)

Noise Diagnosis - Air Conditioning (A/C) System (without Y8X)

Step	Action	Yes	No
DEFINITION: Noise originating from the A/C compressor, drive belt, or the A/C lines.			
	Were you sent here from Symptoms or another diagnostic table?		Go to **Symptoms - HVAC Systems - Manual**

1		Go to **Step 2**	or Go to **Symptoms - HVAC Systems - Automatic**
2	1. A/C system noises can be generally categorized into 3 areas: • Screeching, squealing, chirping noises • Moaning noises • Vibration/rattle noises 2. Start the engine. 3. Ensure that the A/C is ON. Is a screeching, squealing noise heard when the A/C is ON?	Go to **Step 3**	Go to **Step 8**
3	With the engine OFF, inspect the drive belt for excessive wear. Refer to the appropriate procedure: • **Drive Belt Falls Off and Excessive Wear Diagnosis** for the 1.4L engine • **Drive Belt Falls Off and Excessive Wear Diagnosis** for the 1.8L engine Is the drive belt excessively worn?	Go to **Step 14**	Go to **Step 4**
4	Inspect the drive belt tension. Refer to the appropriate procedure: • **Drive Belt Tensioner Diagnosis** for the 1.4L engine • **Drive Belt Tensioner Diagnosis** for the 1.8L engine Is the drive belt tension correct?	Go to **Step 5**	Go to **Step 15**
5	Inspect the drive belt for excessive oil coverage. Is the drive belt covered with oil?	Go to **Step 13**	Go to **Step 6**
6	1. Start the engine. 2. Ensure that the A/C is ON. 3. Inspect the compressor. Is the A/C compressor locked up?	Go to **Step 19**	Go to **Step 7**
	WARNING: **Refer to Moving Parts and Hot Surfaces Warning .**		

7	Using a stethoscope, listen to the A/C compressor for any abnormal noises.Is the compressor causing an abnormal noise?	Go to **Step 11**	Go to **Step 8**
8	Listen to the A/C compressor components and mounting for noise concerns using a stethoscope. Are any of these components loose, damaged, or excessively worn?	Go to **Step 16**	Go to **Step 9**
9	1. Idle the engine in PARK. 2. Using a stethoscope, move around the entire refrigerant plumbing system. Listening for any abnormal noises caused by a component of the A/C system touching another component. Are any of the A/C components grounding out and causing a vibration noise?	Go to **Step 18**	Go to **Step 10**
10	1. Idle the engine in PARK with the A/C ON. 2. Using a stethoscope, move around the entire A/C system testing for any abnormal noises caused by a component. Do any of the A/C components cause an abnormal noise?	Go to **Step 17**	Go to **Step 20**
11	Verify that the A/C system is properly charged. Refer to **Refrigerant System Specifications**. Is the A/C system properly charged?	Go to **Step 21**	Go to **Step 12**
12	Recharge the A/C system to specification. Refer to **Refrigerant Recovery and Recharging**. Is the abnormal compressor noise still present?	Go to **Step 19**	Go to **Step 21**
13	Repair the oil leak. Refer to the appropriate procedure: • **Oil Leak Diagnosis** for the 1.4L engine • **Oil Leak Diagnosis** for the 1.8L engine Is the repair complete?	Go to **Step 14**	-
14	Replace the drive belt. Refer to the appropriate procedure: • **Drive Belt Replacement** for the 1.4L engine • **Drive Belt Replacement** for the 1.8L engine Is the replacement complete?	Go to **Step 21**	-
	Replace the drive belt tensioner. Refer to the		

15	appropriate procedure: • **Drive Belt Tensioner Replacement** for the 1.4L engine • **Drive Belt Tensioner Replacement** for the 1.8L engine Is the replacement complete?	Go to **Step 21**	-
16	Repair or replace the A/C compressor mounting component. Is the repair complete?	Go to **Step 21**	-
17	Repair or replace the component which is causing the moaning concern as needed. Is the repair complete?	Go to **Step 21**	-
18	Correctly route or insulate the A/C component. Is the repair complete?	Go to **Step 21**	-
19	Replace the A/C compressor. Refer to **Air Conditioning Compressor Replacement (1.8L LUW and LWE)**, **Air Conditioning Compressor Replacement (1.4L LUV)**. Is the repair complete?	Go to **Step 21**	-
20	The concern may be caused by an engine related component. Refer to **Vibration Analysis - Engine** . Did you find and correct the condition?	Go to **Step 21**	-
21	Operate the system in order to verify the repair. Did you find and correct the condition?	System OK	Go to **Step 2**

NOISE DIAGNOSIS - HVAC MODULE

Noise Diagnosis - HVAC Module

Step	Action	Yes	No
DEFINITION: Noise originating from the HVAC module.			
1	Were you sent here from Symptoms or another diagnostic table?	Go to **Step 2**	Go to **Symptoms - HVAC Systems - Automatic** , or **Symptoms - HVAC Systems - Manual**
2	1. Start the engine. 2. Cycle through all of the following: • Blower motor speeds • HVAC modes • Temperature control settings 3. Determine the type of noise:		

	• Scrape, pop • Tick/click, chirp or groaning • Air rush/whistle Is a scrape or pop noise evident when selecting modes or temperature settings?	Go to **Step 6**	Go to **Step 3**
3	Is a tick/click, chirping, groaning or scraping noise present, but decreases as blower motor speed is decreased?	Go to **Step 6**	Go to **Step 4**
4	Is an air rush/whistle noise evident in all modes but not all temperature settings?	Go to **Step 6**	Go to **Step 5**
5	Is an air rush/whistle noise evident only in defrost or floor mode?	Go to **Step 6**	Go to **Step 6**
6	Remove the HVAC module. Refer to **Heater and Air Conditioning Evaporator Case Replacement** Is the action complete?	Go to **Step 7**	-
7	• Inspect the air flow doors for proper operation. • Inspect the ducts for obstructions or foreign materials. Were any of these conditions found?	Go to **Step 10**	Go to **Step 8**
8	Inspect the mode and temperature doors and seals for warping or cracking. Are the doors in normal condition?	Go to **Step 11**	Go to **Step 9**
9	Replace the appropriate door and/or seals. Is the repair complete?	Go to **Step 11**	-
10	Remove any obstructions or foreign material found. Is the action complete?	Go to **Step 11**	-
11	Install the HVAC module. Refer to **Heater and Air Conditioning Evaporator Case Replacement** Is the action complete?	Go to **Step 12**	-
12	Operate the system to verify the repair. Did you find and correct the condition?	System OK	Go to **Step 2**

ODOR DIAGNOSIS

Odor Diagnosis

Step	Action	Yes	No
DEFINITION: Odor originating or noticed through the HVAC system.			
1	Were you sent here from Symptoms or another diagnostic table?		Go to **Symptoms - HVAC Systems - Manual** or

		Go to **Step 2**	Go to **Symptoms - HVAC Systems - Automatic**
2	1. Sit inside the vehicle. 2. Close all of the doors and windows. 3. Start the engine. 4. Allow the engine idle at normal operating temperature. 5. Select the maximum blower speed. 6. Select the PANEL air outlet mode. 7. Select the coldest temperature setting. 8. Cycle through all of the blower speeds, modes and temperatures to define what type of odor is present. • Musty smell • Coolant smell • Oil smell Does the odor have a musty smell?	Go to **Step 3**	Go to **Step 8**
3	Inspect the HVAC filter and the air inlet grille for debris. Is debris present?	Go to **Step 4**	Go to **Step 5**
4	Remove any debris. Is the action complete?	Go to **Step 15**	-
5	Inspect for wet carpeting. Is the carpet wet?	Go to **Step 6**	Go to **Step 14**
6	Inspect for the following conditions: • Water leaks around the windshield • Blockage of the HVAC module drain • Leaks around the door seals Is a leak present?	Go to **Step 7**	Go to **Step 14**
7	Repair the leak as necessary. Is the repair complete?	Go to **Step 15**	-
8	Does the odor have a coolant smell?	Go to **Step 9**	Go to **Step 12**
9	Inspect the cooling system for leaks. Refer to **Loss of Coolant** . Is a leak present?	Go to **Step 10**	Go to **Step 12**
10	Inspect for coolant leaking inside the vehicle or for a film build-up on the windshield. Is the condition present?	Go to **Step 11**	Go to **Step 15**

11	Replace the heater core. Refer to **Heater Core Replacement**. Is the repair complete?	Go to **Step 15**	-
12	Does the odor have an oily smell?	Go to **Step 13**	Go to **Step 15**
13	1. Inspect the engine compartment for any leaks. Refer to the following procedures: • **Oil Leak Diagnosis** for the 1.4L engine • **Oil Leak Diagnosis** for the 1.8L engine • **Fluid Leak Diagnosis (Non Hybrid)** for the 6T40/4T45 transmission 2. Repair any oil leaks. Is the repair complete?	Go to **Step 15**	-
14	A musty odor can be caused by mold or mildew build-up on the evaporator or the heater core or inside of the HVAC module. Refer to **Odor Correction**. Is the action complete?	Go to **Step 15**	-
15	Operate the system in order to verify the repair. Did you find and correct the condition?	System OK	Go to **Step 2**

REPAIR INSTRUCTIONS

HVAC ASSEMBLY PLANT REPAIR EXCEPTIONS (DO NOT RELEASE)

Introduction:

NOTE: ***This document must never be released to the Service Community. This document must remain in WIP status for Assembly Plant usage only.***

NOTE: **Heating, Ventilation, and Air Conditioning (HVAC) systems are pressurized refrigeration, high voltage (Hybrid) and impact environmental issues with recycling. Prior to repairing these systems, operators should receive appropriate service and safety training in mobile HVAC.**

For various reasons, vehicles assembled in Assembly Plants may require Heating, Ventilation, and Air Conditioning System (HVAC) repairs. These repairs require diagnostics, special tools, non-production parts, and a specific repair procedure. The Repair procedures for given model vehicles is published for GM dealerships under SI (Service Information) The information is updated daily and has been reviewed by appropriate service engineering support. To provide Assembly Plant HVAC repair person with specific written procedures for diagnostics and repair procedures, the repair personnel shall follow these procedures except under the following circumstances:

Diagnostics:

1. Follow diagnostic methods described in the SI but include information from ALD test write-ups as well as the inspection reports. Confirm this information with the MDI (when possible) prior to repair. Clear all DTC's after work
2. Employ and record refrigerant information from recovery equipment when confirming charge. Do not employ Vacuum only recovery equipment. This equipment does not have the ability to measure vehicle refrigerant charge, nor the amount of lubricant removed.
3. Refrigerant Leak Detection may be hampered since dye circulation may not have sufficiently occurred. Therefore, use of the electronic leak detector is mandatory. If leak dye is required, injection of additional service dye (as per SI) is authorized (up to 1/4oz service dye)

Remove and Replace Components/Sub-Assemblies - Exception to SI for Assembly Plant

HVAC Module Components - Exceptions for Part R&R

1. Evaporator Core is replaced in the SI documentation. However, for assembly plant repair, the entire module with the evaporator core should be replaced as a unit. Install new seal washers on the evaporator.
2. Heater Core is generally replaced as a separate unit. Unless SI details how to remove the heater core w/o disassembly of the HVAC module, the entire module is required to be replaced.
3. Broken/Cracked HVAC Module Case - these defects are not to be repaired per SI directions. The plastic assembly or module requires replacement

Condensors - Exceptions for Part R&R

1. Condensers are serviced in SI documentation as individual units. However, majority of units employed arrive as CRA's (Condenser Radiator Assembly) If the condenser or radiator require replacement, the replacement should be a replacement CRA.
2. RD desiccant bag replacement. Internal desiccant bag replacement although authorized in SI, is not to be done at assembly plant. If material contamination - from failed compressor or desiccant bag is noted, entire assembly to be replaced and not flushed.

A/C Hoses/Lines- Exceptions for Part R&R

1. Line Splice - line rub through or damage are to be replaced with new assemblies and not line spliced.
2. In-Line filters - Assembly plant is not authorized to employ install these filters
3. Compressor Suction line screens - Assembly plant is not authorized to install suction screens or screen blocks unless specifically authorized by platform engineering.

Control Heads and Sensors - Exceptions for Part R&R

1. Replace and reprogram control head.
2. R&R sensors - do not splice into wire harness.
3. Replace electrical terminals per spec. Do not splice connectors.

ODOR CORRECTION

Eliminating Air Conditioning Odor

Odors may be emitted from the air conditioning system primarily at start up in hot, humid climates. The following conditions may cause the odor:

- Debris is present in the HVAC module.
- Microbial growth on the evaporator core

When the blower motor fan is activated, the microbial growth may release an unpleasant musty odor into the passenger compartment. To remove odors of this type, the microbial growth must be eliminated. Perform the following procedure:

Deodorize the evaporator core using a deodorizing aerosol kit.

Perform the following steps in order to deodorize the A/C system:

1. Ensure that the plenum which draws outside air into the HVAC module is clear of debris.
2. Disable the A/C compressor clutch operation by disconnecting the clutch coil electrical connector.
3. Dry the evaporator core by performing the following steps:
    1. Start the engine.
    2. Select the warmest temperature setting.
    3. Select the recirculation mode.
    4. Run the blower motor on high for 10 minutes.
4. Remove the passenger compartment air filter. Refer to **Passenger Compartment Air Filter Replacement**.

    NOTE: Do not mix with other chemicals.

5. Fill the pressure cup gun with a special probe be closed gently, then connect the pressure cup gun air side.
6. Pour the cleaner away immediately after use up.
7. The contaminated cleaning agent will be drained through the air conditioning evaporator and blower module drain hose, therefore place a collecting basin underneath.
8. To get access to the evaporator core remove parts as necessary:
    1. Blower motor control module.
    2. Blower motor.
    3. Refrigerant temperature sensor.
    4. HVAC actuators.
9. Insert the probe through suitable opening.
10. By activating the pressure cup gun and a back- and forward moving of the probe the evaporator and housing, will be cleaned, rinsed thoroughly and disinfected by the cleaning agent.
11. After half of the spraying operation check a possible blocking of the air conditioning evaporator and blower module drain hose and repair, then spray the remaining content.

12. Let the cleaning agent react on for 30 min in order to assure a bacteria-mortification.
13. Vent the conditioning evaporator for 2 minutes using pressurized air gun and the special probe.
14. Start the engine.
15. Open the air ducts.
16. Operate the blower motor on high for 15-20 minutes to dry.
17. Replace the passenger compartment air filter. Refer to **Passenger Compartment Air Filter Replacement**
18. Reconnect the A/C compressor clutch coil electrical connector.
19. Verify proper clutch operation.
20. Vent the vehicle interior for about 3h with fresh air.

REFRIGERANT RECOVERY AND RECHARGING

Special Tools

GE-45037-A A/C Oil Injector

For equivalent regional tools, refer to **Special Tools**.

Refrigerant Recovery and Recharging

WARNING: To prevent personal injury, avoid breathing A/C Refrigerant and lubricant vapor or mist. Work in a well ventilated area. To remove refrigerant from the A/C System, use service equipment designed for recovery that is certified to meet the requirements of the appropriate SAE Standards. If an accidental system discharge occurs, ventilate the work area before continuing service. Additional health and safety information may be obtained from the refrigerant, refrigerant recovery, and lubricant manufacturers.

WARNING: For personal protection, goggles and lint-free gloves should be worn and a clean cloth wrapped around fittings, valves, and connections when doing work that includes opening the refrigerant system. If refrigerant comes in contact with any part of the body severe frostbite and personal injury can result. The exposed area should be flushed immediately with cold water and prompt medical help should be obtained.

CAUTION: R-134a is the only approved refrigerant for use in this vehicle. The use of any other refrigerant may result in poor system performance or component failure.

CAUTION: To avoid system damage use only R-134a dedicated tools when servicing the A/C system.

CAUTION: Do not mix refrigerant oils. Use of incorrect refrigerant oil will cause compressor failure.

CAUTION: R-12 refrigerant and R-134a refrigerant must never be mixed, even in the smallest of amounts, as they are incompatible with each other. If the refrigerants are mixed, compressor failure is likely to occur. Refer to the manufacturer instructions included with the service equipment before servicing.

The AC filling device is a complete air conditioning service center for R-134a. The AC filling device recovers, recycles, evacuates and recharges A/C refrigerant quickly, accurately and automatically. The unit has a display screen that contains the function controls and displays prompts that will lead the technician through the recover, recycle, evacuate and recharge operations. R-134a is recovered into and charged out of an internal storage vessel. The AC filling device automatically replenishes this vessel from an external source tank in order to maintain a constant volume of A/C refrigerant.

The AC filling device has a built in A/C refrigerant identifier that will test for contamination, prior to recovery and will notify the technician if there are foreign gases present in the A/C system. If foreign gases are present, the AC filling device will not recover the refrigerant from the A/C system.

The AC filling device also features automatic air purge, single pass recycling and an automatic oil drain.

Refer to the AC filling device manual for operation and setup instruction. Always recharge the A/C System with the proper amount of R-134a. Refer to **Refrigerant System Specifications**.

A/C Refrigerant System Oil Charge Replenishing

If oil was removed from the A/C system during the recovery process or due to component replacement, the oil must be replenished. Oil can be injected into a charged system using **GE-45037-A** injector. For the proper quantities of oil to add to the A/C refrigerant system, refer to **Refrigerant System Specifications**.

FLUSHING

Special Tools

- **BO-42220** Universal 12V Leak Detection Lamp
- **GE-41447** R-134A A/C Tracer Dye Box of 24
- **GE-45268** A/C Flush Adapter Kit

For equivalent regional tools, refer to **Special Tools**.

NOTE: Flushing with the ACR 2000 is not intended to remove metal from the A/C system.

Flushing is intended to remove the following:

- Contaminated polyalkylene glycol (PAG) oil
- Desiccant, following a desiccant bag failure
- Overcharge of PAG oil
- Refrigerant contamination

Forward Flushing Setup

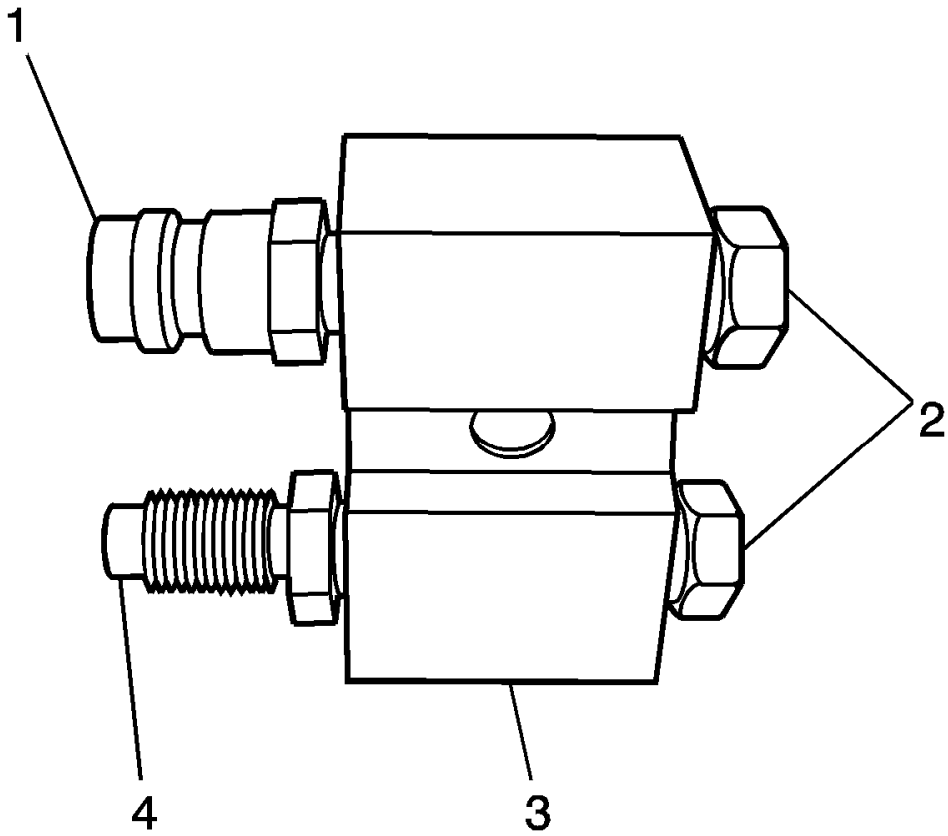

Fig. 1: Identifying J 45268-2 (3), J 45268-7 (1), J 45268-8 (4), & J 45268-9 (2)
Courtesy of GENERAL MOTORS COMPANY

NOTE: **Forward flow refrigerant flushing is recommended for contaminated refrigerant or PAG oil.**

NOTE: **Inspect and lubricate GE-45268 adapter kit fitting O-rings. Refer to Air Conditioning O-Ring Seal Replacement.**

1. Install both **GE 45268-9** fitting O-ring onto **GE 45268-10** adapter.

2. Install **GE 45268-8** fitting O-ring onto suction side of **GE 45268-10** adapter.
3. Install **GE 45268-7** fitting O-ring onto discharge side of **GE 45268-10** adapter.

Reverse Flushing Setup

NOTE:

- **Reverse flow refrigerant flush is recommended for desiccant bag failure. Replace condenser/receiver dehydrator assembly when A/C flush is complete and perform the following procedure:**
- **Inspect and lubricate GE-45268 adapter kit fitting O-rings. Refer to Air Conditioning O-Ring Seal Replacement.**

1. Install both **GE-45268-9** fitting O-ring onto **GE-45268-10** adapter.
2. Install **GE-45268-8** fitting O-ring onto suction side of **GE-45268-10** adapter.
3. Install **GE-45268-7** fitting O-ring onto discharge side of **GE-45268-10** adapter.

Flush Procedure

NOTE: **Warmer engine or ambient temperatures decreases refrigerant recovery time during the A/C flush procedure.**

1. Recover the refrigerant. Refer to **Refrigerant Recovery and Recharging**.
2. Remove the thermal expansion valve (TXV). Refer to **Air Conditioning Evaporator Thermal Expansion Valve Replacement**.
3. Install the TXV stud onto **GE 45268-115** adapter.
4. Install new sealing washers onto evaporator core. Refer to **Air Conditioning O-Ring Seal Replacement**.
5. Install **GE-45268-115** adapter in place of the TXV, using an oversized seal washer.

CAUTION: Refer to Fastener Caution .

6. Install the TXV mounting bolts and tighten to 15 N.m (11 lb in).
7. Install new washers onto liquid line and suction hose. Refer to **Air Conditioning O-Ring Seal Replacement**.
8. Connect liquid line and suction hose to **GE-45268-115** adapter using an oversized seal washer.
9. Install the TXV block fitting nut and tighten to 19 N.m (14 lb in).
10. Remove the A/C compressor. Refer to **Air Conditioning Compressor Replacement (1.8L LUW and LWE)**, **Air Conditioning Compressor Replacement (1.4L LUV)**.

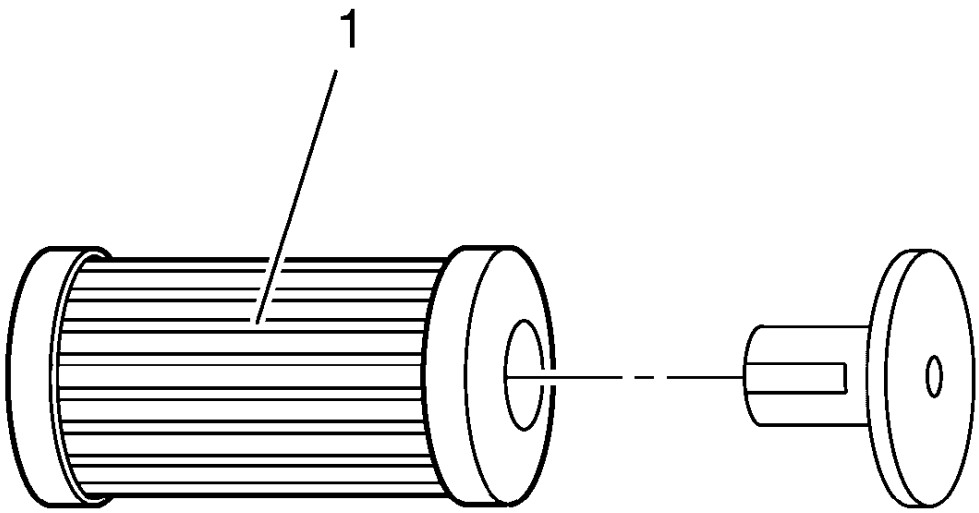

Fig. 2: A/C Refrigerant Filter
Courtesy of GENERAL MOTORS COMPANY

11. Remove the A/C refrigerant filter (1). Refer to **Air Conditioning Refrigerant Desiccant Replacement**.

NOTE: The filter inside GE-45628-1 adapter is serviceable. Remove and discard check valve from the filter.

12. Service the filter before each flush.

NOTE: Assure that suction and discharge ports on J-45268-10 correspond to suction and discharge ports on compressor hose assembly.

13. Install new sealing washers onto A/C compressor and condenser hose. Refer to **Air Conditioning O-Ring Seal Replacement**. Assure that suction and discharge ports on **GE 45268-10** adapter correspond to suction and discharge ports on A/C compressor to condenser hose.

14. Install **GE-45268-10** filter adapter to the A/C compressor to condenser hose.
15. Connect **GE-45268-1** filter to **J-45268-7** adapter.
16. Connect blue hose from A/C filling device to **GE-45268** adapter.
17. Connect red hose from A/C filling device to **GE-45268** adapter.
18. Disconnect blue hose from A/C filling device to **GE-45268-1** adapter.
19. Disconnect **GE-45268-1** adapter from **GE-45268-10** adapter.
20. Remove **GE-45268-10** adapter from the A/C compressor to condenser hose.

NOTE: Flushing will remove all PAG oil from the A/C system. The A/C system must be replenished with the correct amount of PAG oil.

21. If you will reinstall the removed A/C compressor, perform the following procedure:
    - Remove the A/C compressor drain plug. Refer to **Air Conditioning Compressor Oil Drain Plug Replacement (1.8L LUW and LWE)**, **Air Conditioning Compressor Oil Drain Plug Replacement (1.4L LUV)**.
    - Drain PAG oil from the A/C compressor. Rotate compressor input shaft to assist in draining the PAG oil from compressor.
    - Add the total system capacity of PAG oil to A/C compressor. Refer to **Refrigerant System Specifications**.
    - Add one bottle of **GE-41447** tracer dye.
    - Install the A/C compressor drain plug. Refer to **Air Conditioning Compressor Oil Drain Plug Replacement (1.8L LUW and LWE)**, **Air Conditioning Compressor Oil Drain Plug Replacement (1.4L LUV)**.

NOTE: Flushing will remove fluorescent leak detection dye from A/C system.

22. Install the A/C compressor. Refer to **Air Conditioning Compressor Replacement (1.8L LUW and LWE)**, **Air Conditioning Compressor Replacement (1.4L LUV)**.
23. Install new A/C refrigerant filter. Refer to **Air Conditioning Refrigerant Desiccant Replacement**.
24. Remove the TXV block fitting nut.
25. Disconnect liquid line and suction line from **GE-45268-115** adapter.
26. Remove the TXV bolts retaining **GE-45268-115** adapter.
27. Remove **GE-45268-115** adapter.
28. Inspect the TXV for debris. Clean or replace as needed.
29. Install the TXV. Refer to **Air Conditioning Evaporator Thermal Expansion Valve Replacement**.
30. Evacuate and recharge the A/C system. Refer to **Refrigerant Recovery and Recharging**.
31. Leak test fittings using **BO-42220** lamp.

AIR CONDITIONING COMPRESSOR OIL BALANCING

Draining Procedure

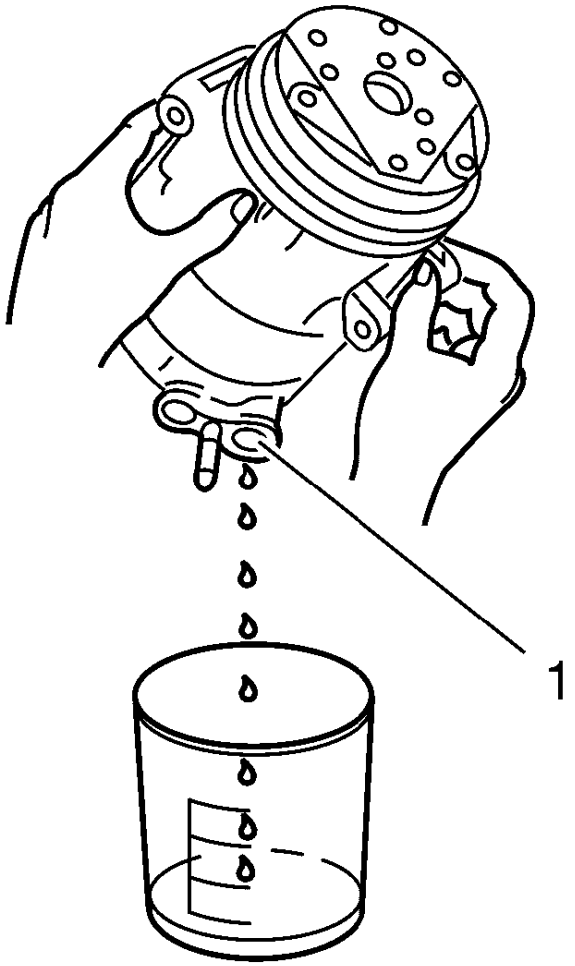

Fig. 3: Draining And Measuring Refrigerant Oil
Courtesy of GENERAL MOTORS COMPANY

NOTE: Drain and measure as much of the refrigerant oil as possible from the removed compressor.

1. Remove the compressor crankcase oil drain plug and drain the crankcase (1) into a clean, graduated container.
2. Drain the oil from both the suction and discharge ports of the removed compressor into the same container. Rotate the compressor shaft to assist in draining the compressor.
3. Measure and record the amount of oil drained from the removed compressor. This measurement will be used during installation of the replacement compressor.
4. Inspect oil drained from removed compressor. Refer to **Air Conditioning Compressor Oil Diagnosis**
5. Properly discard the used refrigerant oil.

Balancing Procedure

1. The service compressor contains 40 ml (1.4 oz) of compressor manufacturers OE PAG Oil. Service only with GM PAG oil. Refer to **Refrigerant System Specifications** for the vehicle specific oil requirements.
2. If the sum of the amount of oil drained from the removed compressor and the amount of oil removed during refrigerant recovery is:
   - Less than 40 ml (1.4 oz), no balancing is required. Install the replacement compressor as it is. It contains 40 ml (1.4 oz) oil. Refer to **Air Conditioning Compressor Replacement (1.8L LUW and LWE)**, **Air Conditioning Compressor Replacement (1.4L LUV)**.
   - More than 40 ml (1.4 oz), additional oil is required. Subtract 40 ml (1.4 oz) from the sum of removed oil (oil drained and oil recovered). Add this amount of service oil to the replacement compressor.

AIR CONDITIONING COMPRESSOR OIL DRAIN PLUG REPLACEMENT (1.4L LUV)

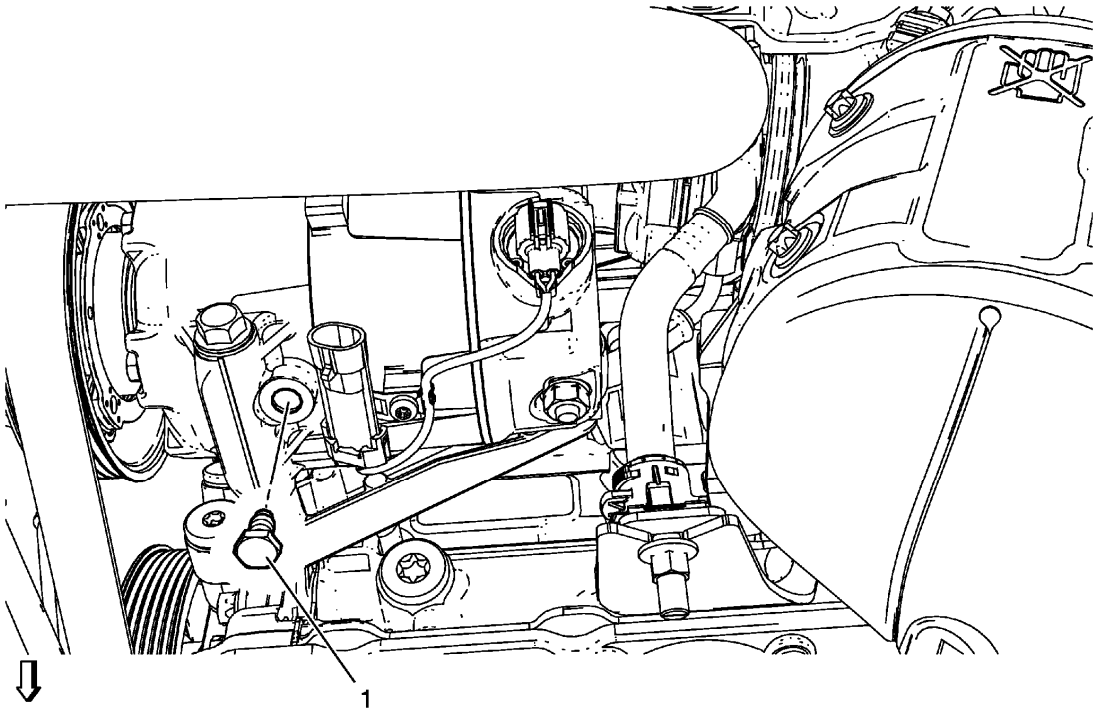

Fig. 4: Air Conditioning Compressor Oil Drain Plug - (1.4L LUV)
Courtesy of GENERAL MOTORS COMPANY

Air Conditioning Compressor Oil Drain Plug Replacement (1.4L LUV)

Callout	Component Name
Preliminary Procedures Recover the refrigerant. Refer to **Refrigerant Recovery and Recharging**.	
1	Air Conditioning Compressor Oil Drain Plug **CAUTION:** **Refer to Fastener Caution .**

	Tighten 15 N.m (11 lb ft)

AIR CONDITIONING COMPRESSOR OIL DRAIN PLUG REPLACEMENT (1.8L LUW AND LWE)

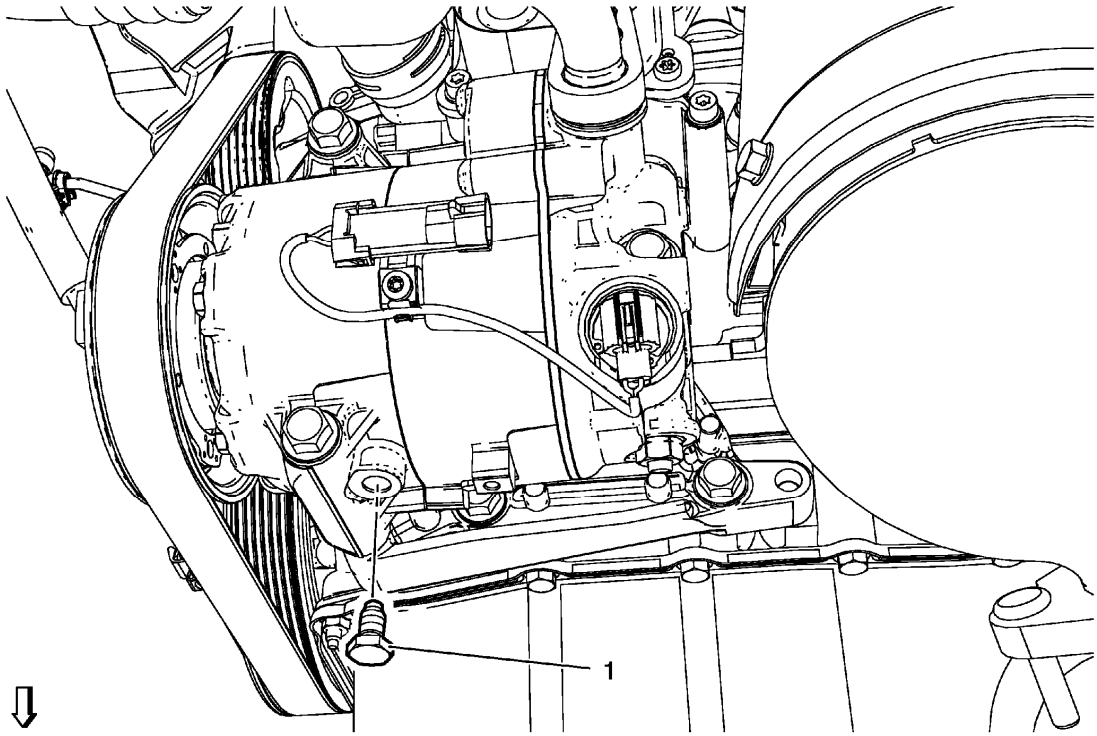

Fig. 5: Air Conditioning Compressor Oil Drain Plug - (1.8L LUW and LWE)
Courtesy of GENERAL MOTORS COMPANY

Air Conditioning Compressor Oil Drain Plug Replacement (1.8L LUW and LWE)

Callout	Component Name
Preliminary Procedures Recover the refrigerant. Refer to **Refrigerant Recovery and Recharging**.	
1	Air Conditioning Compressor Oil Drain Plug **CAUTION:** **Refer to Fastener Caution .** **Tighten** 15 N.m (11 lb ft)

AIR CONDITIONING COMPRESSOR REPLACEMENT (1.4L LUV)

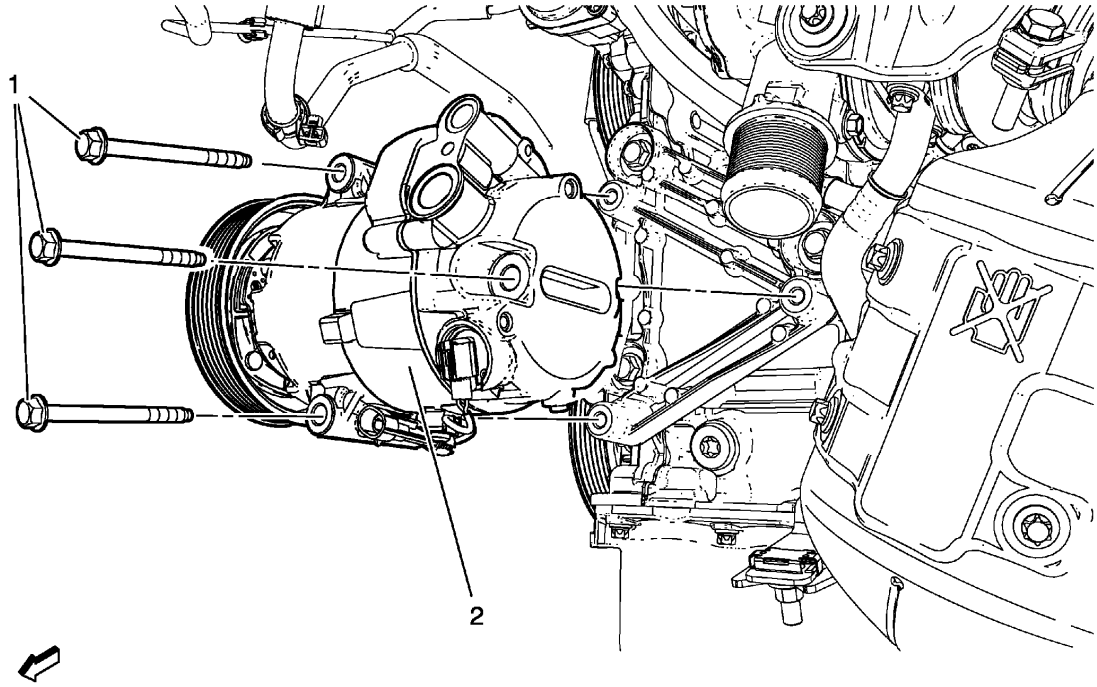

Fig. 6: Air Conditioning Compressor And Bolts
Courtesy of GENERAL MOTORS COMPANY

Air Conditioning Compressor Replacement (1.4L LUV)

Callout	Component Name
Preliminary Procedures 1. Recover the refrigerant. Refer to **Refrigerant Recovery and Recharging**. 2. Remove drive belt. Refer to **Drive Belt Replacement** . 3. Raise and support the vehicle. Refer to **Lifting and Jacking the Vehicle** . 4. Disconnect the air conditioning compressor electrical connector. 5. Remove air conditioning compressor and condenser hose from air conditioning compressor. Refer to **Air Conditioning Compressor and Condenser Hose Replacement (1.8L LUW and LWE)**, **Air Conditioning Compressor and Condenser Hose Replacement (1.4L LUV)**. 6. Remove charge air cooler inlet air hose. Refer to **Charge Air Cooler Inlet Air Hose Replacement** .	
1	Air Conditioning Compressor Bolt (Qty: 3) **CAUTION:** **Refer to Fastener Caution .** **Tighten** 22 N.m (17 lb ft)

2	Air Conditioning Compressor **Procedure** 1. Use a low viscosity, poly-alkylene glycol (PAG) oil. Use of the incorrect oil can result in compressor failure. 2. When replacing the A/C compressor, balance the compressor oil. Refer to **Air Conditioning Compressor Oil Balancing**. 3. Using **GE 39400-A** detector leak test A/C compressor fittings. **Special Tools** **GE 39400-A** Electronic Halogen Leak Detector For equivalent regional tools, refer to **Special Tools**.

AIR CONDITIONING COMPRESSOR REPLACEMENT (1.8L LUW AND LWE)

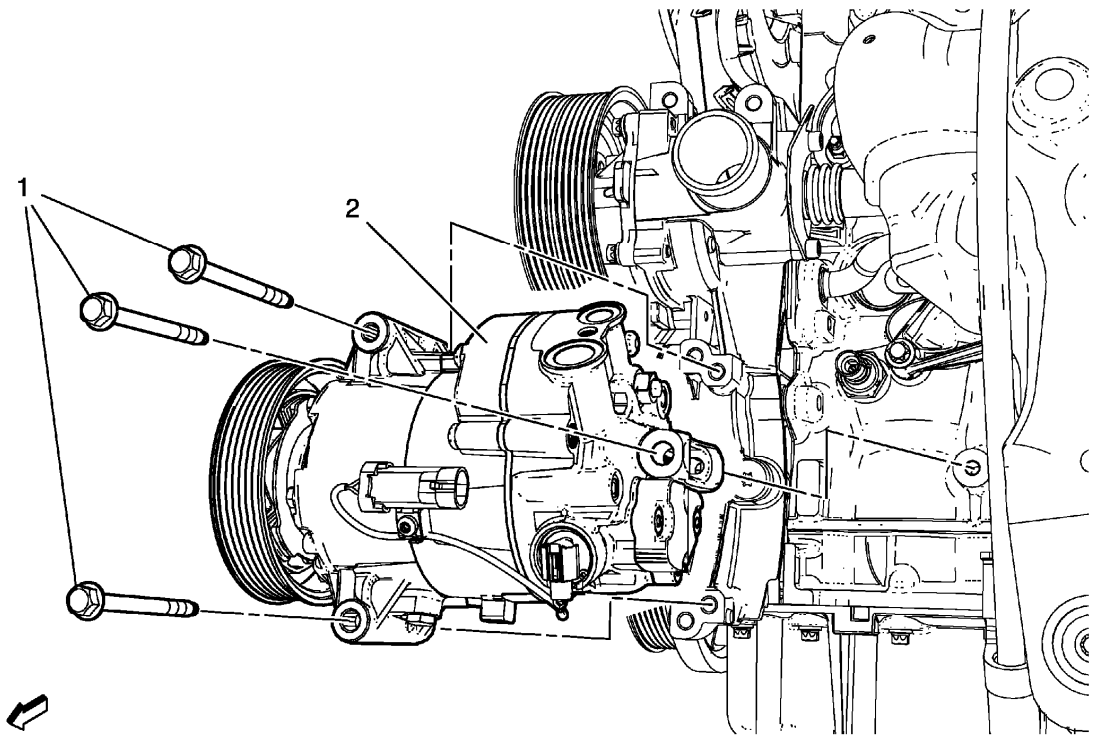

Fig. 7: Air Conditioning Compressor And Bolts
Courtesy of GENERAL MOTORS COMPANY

Air Conditioning Compressor Replacement (1.8L LUW and LWE)

Callout	Component Name
Preliminary Procedures 1. Recover the refrigerant. Refer to **Refrigerant Recovery and Recharging**.	

2. Remove the drive belt. Refer to **Drive Belt Replacement** .
3. Disconnect the air conditioning compressor electrical connector.
4. Loosen the air conditioning compressor and condenser hose from the air conditioning compressor. Refer to **Air Conditioning Compressor and Condenser Hose Replacement (1.8L LUW and LWE)**, **Air Conditioning Compressor and Condenser Hose Replacement (1.4L LUV)**.

1	Air Conditioning Compressor Bolt (Qty: 3) **CAUTION:** **Refer to Fastener Caution .** **Tighten** 22 (17 lb ft)
2	Air Conditioning Compressor **Procedure** • Use a low viscosity, poly-alkylene glycol (PAG) oil. Use of the incorrect oil can result in compressor failure. • When replacing the A/C compressor, balance the compressor oil. Refer to **Air Conditioning Compressor Oil Balancing** • Use **GE-39400** detector leak test A/C compressor fittings. **Special Tools** **GE-39400** Electronic Halogen Leak Detector For equivalent regional tools, refer to **Special Tools**.

AIR CONDITIONING CLUTCH ASSEMBLY REPLACEMENT

Special Tools

GE-48965 Holding Wrench

For equivalent regional tools, refer to **Special Tools**.

Removal Procedure

1. Remove the A/C compressor. Refer to **Air Conditioning Compressor Replacement (1.8L LUW and LWE)**, **Air Conditioning Compressor Replacement (1.4L LUV)**.
2. Clamp air conditioning compressor in a soft jawed vice.

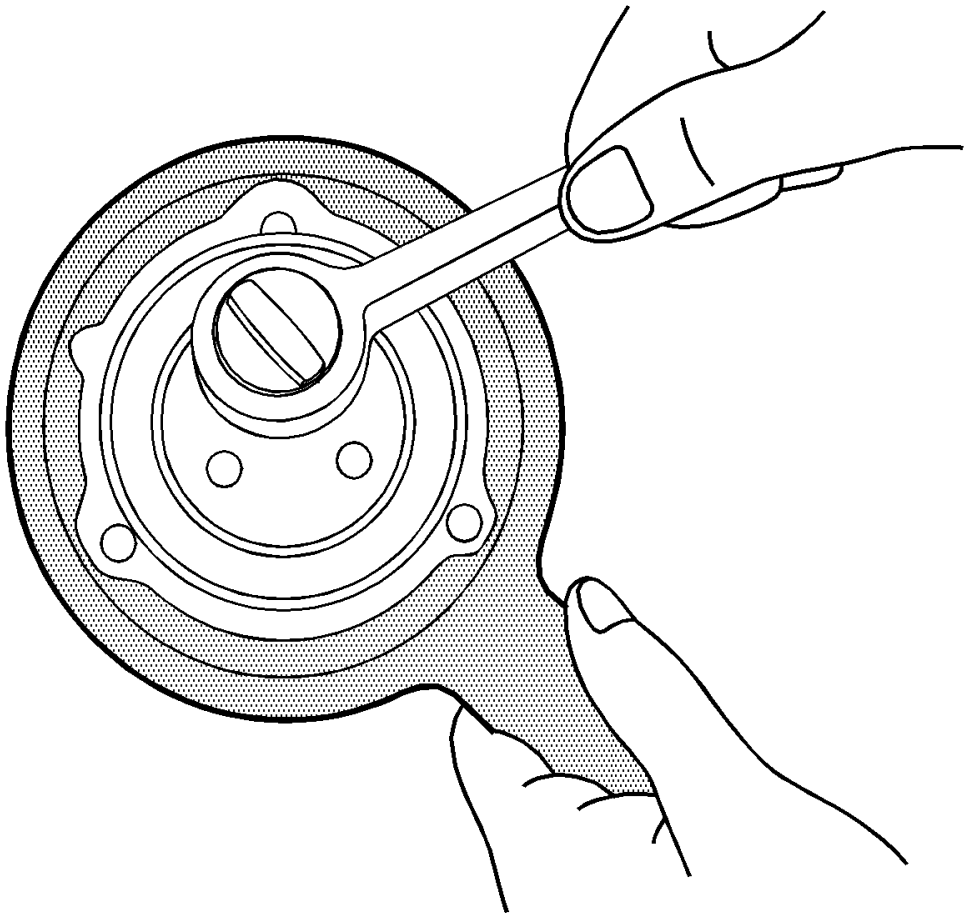

Fig. 8: Compressor Clutch Plate And Special Tool
Courtesy of GENERAL MOTORS COMPANY

3. Remove the compressor clutch plate.
    - Remove the bolt.
    - Counterhold with **GE-48965** wrench.

NOTE: Re-use spacer washers when refitting.

4. Remove the spacer washers.

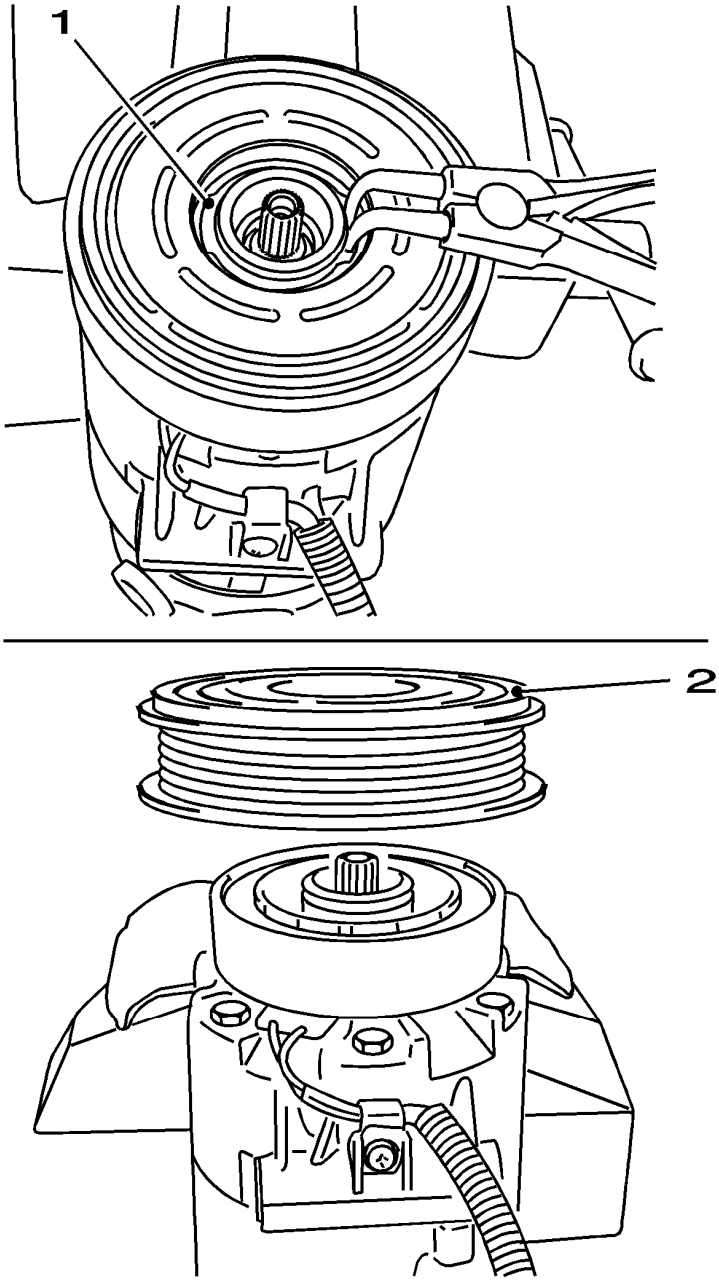

Fig. 9: View Of Retaining Ring And Compressor Pulley
Courtesy of GENERAL MOTORS COMPANY

5. Remove the retaining ring (1) from belt pulley.
6. Pull off the compressor pulley (2).

Installation Procedure

1. Install the compressor pulley on the compressor housing.
2. Install the retaining ring in the groove in the compressor housing.

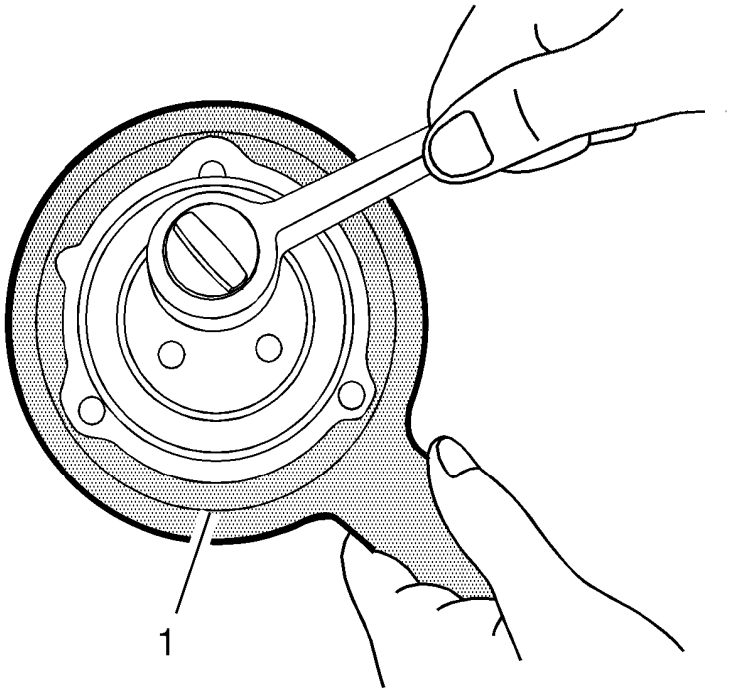

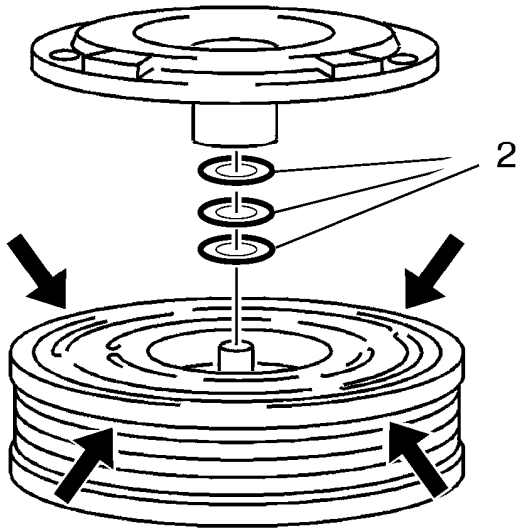

Fig. 10: Compressor Clutch Plate And Spacing Washer
Courtesy of GENERAL MOTORS COMPANY

3. Install the compressor clutch plate.

   Insert the spacing washer (2).

   CAUTION: Refer to Fastener Caution .

4. Tighten the compressor clutch plate bolt to 13.5 N.m (119 lb in). Counterhold with **GE-48965** wrench (1).

   NOTE: Check reference gap between clutch plate and the belt pulley at 4 points with feeler gauge and form mean value.

5. Inspect reference gap of compressor clutch.

   Reference value: 0.3 mm - 0.6 mm (0.012 in - 0.024 in).

   NOTE: If the reference gap is too large, install thicker spacing washer (2) between compressor shaft and clutch, install a thinner one if the reference gap is too small. Spacing washers available: 0.1 mm, 0.3 mm, 0.5 mm.

6. Correct the reference gap for the compressor clutch.

   Detach the compressor clutch plate and change spacing washer.

7. Repeat inspection as described.
8. Remove the A/C compressor from the bench vise.
9. Install the A/C compressor. Refer to **Air Conditioning Compressor Replacement (1.8L LUW and LWE)**, **Air Conditioning Compressor Replacement (1.4L LUV)**.

COMPRESSOR PRESSURE RELIEF VALVE REPLACEMENT (1.4L LUV)

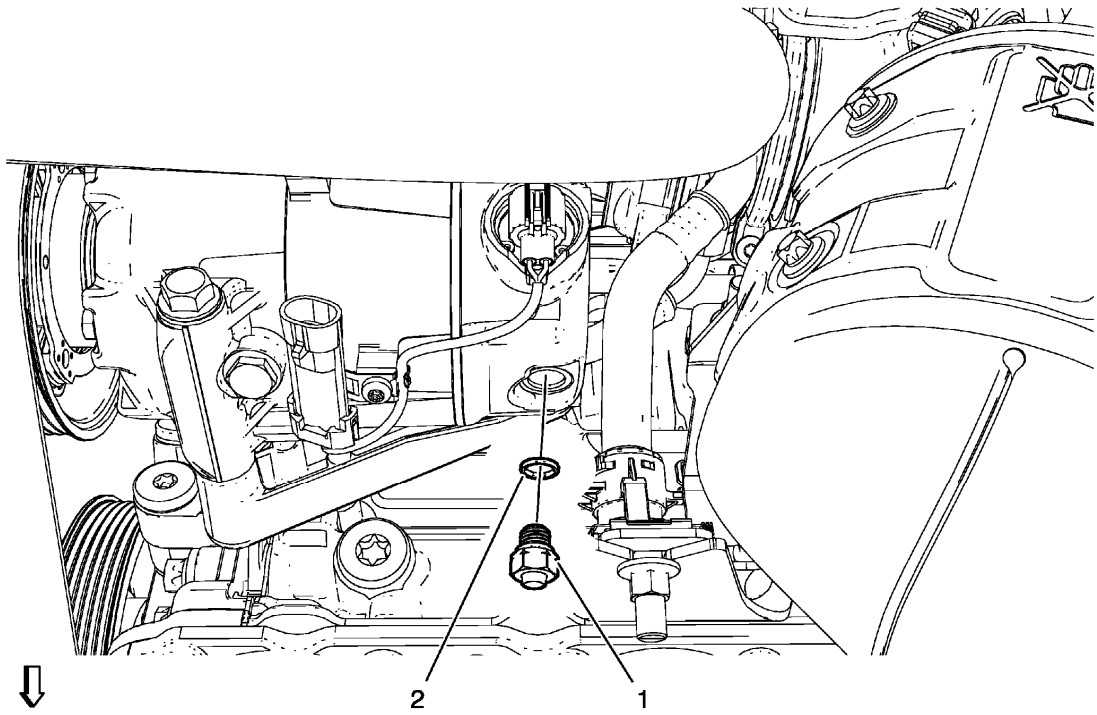

Fig. 11: Compressor Pressure Relief Valve
Courtesy of GENERAL MOTORS COMPANY

Compressor Pressure Relief Valve Replacement (1.4L LUV)

Callout	Component Name
Preliminary Procedures Recover the refrigerant. Refer to **Refrigerant Recovery and Recharging**.	
1	Air Conditioning Compressor Pressure Relief Valve **CAUTION:** **Refer to Fastener Caution .** **Tighten** 10 N.m (89 lb in)
2	Air Conditioning Compressor Pressure Relief Valve Sealing Ring

COMPRESSOR PRESSURE RELIEF VALVE REPLACEMENT (1.8L LUW)

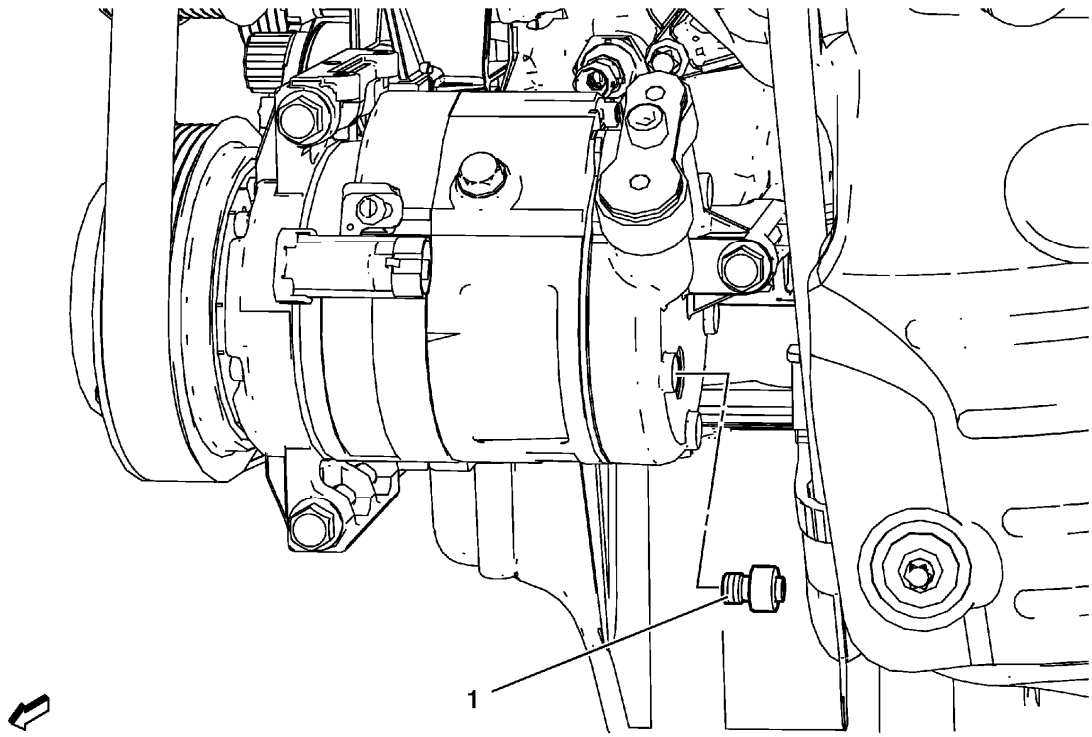

Fig. 12: Compressor Pressure Relief Valve - (1.8L LUW)
Courtesy of GENERAL MOTORS COMPANY

Compressor Pressure Relief Valve Replacement (1.8L LUW)

Callout	Component Name
Preliminary Procedures Recover the refrigerant. Refer to **Refrigerant Recovery and Recharging**.	
1	Air Conditioning Compressor Pressure Relief Valve **CAUTION:** **Refer to Fastener Caution** **Tighten** 10 N.m (89 lb in)

COMPRESSOR PRESSURE RELIEF VALVE REPLACEMENT (1.8L LWE)

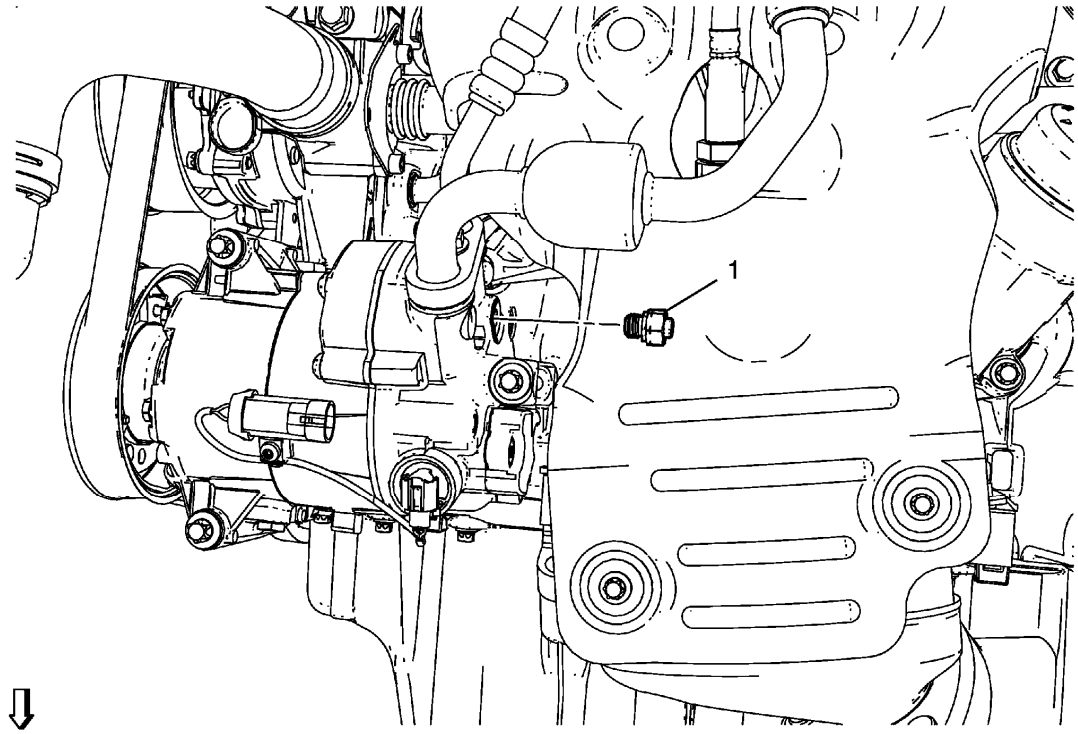

Fig. 13: Compressor Pressure Relief Valve (1.8L LWE)
Courtesy of GENERAL MOTORS COMPANY

Compressor Pressure Relief Valve Replacement (1.8L LWE)

Callout	Component Name
Preliminary Procedures 1. Disconnect the negative battery cable. Refer to **Battery Negative Cable Disconnection and Connection** . 2. Recover the refrigerant. Refer to **Refrigerant Recovery and Recharging**. 3. Remove the oil level indicator tube. Refer to **Oil Level Indicator Tube Replacement** .	
1	Compressor Pressure Relief Valve **CAUTION:** **Refer to Fastener Caution .** **Tighten** 10 N.m (89 lb in)

AIR CONDITIONING COMPRESSOR BRACKET REPLACEMENT

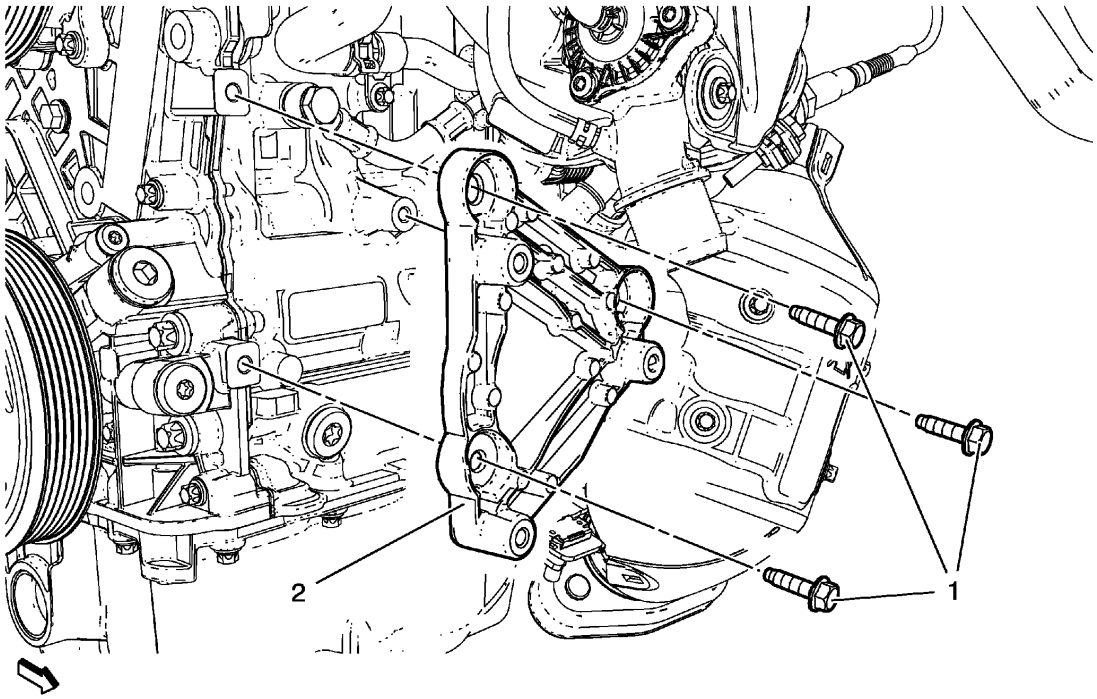

Fig. 14: Air Conditioning Compressor Bracket
Courtesy of GENERAL MOTORS COMPANY

Air Conditioning Compressor Bracket Replacement

Callout	Component Name
Preliminary Procedures Remove air conditioning compressor. Refer to **Air Conditioning Compressor Replacement (1.8L LUW and LWE)**, **Air Conditioning Compressor Replacement (1.4L LUV)**.	
1	Air Conditioning Compressor Bracket Bolt (Qty: 3) **CAUTION:** **Refer to Fastener Caution .** **Tighten** 22 N.m (16 lb ft)
2	Air Conditioning Compressor Bracket

AIR CONDITIONING SYSTEM SEAL REPLACEMENT

Removal Procedure

1. Disassemble the A/C refrigerant components. Refer to the appropriate repair procedure.

NOTE: Cap or tape the open A/C refrigerant components immediately to prevent

system contamination.

2. Cap or tape the A/C refrigerant components.

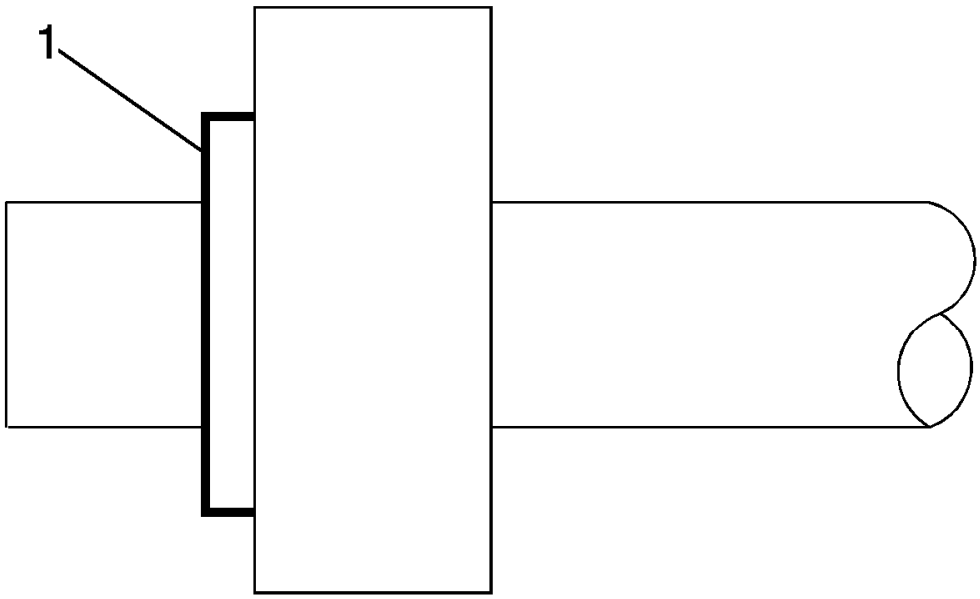

Fig. 15: Sealing Washer
Courtesy of GENERAL MOTORS COMPANY

3. Remove the sealing washer (1) from the A/C refrigerant component.
4. Inspect the seal washer for signs of damage to help determine the root cause of the failure.
5. Inspect the A/C refrigerant components for damage or burrs. Repair if necessary.

NOTE: DO NOT reuse sealing washer.

6. DISCARD the sealing washer.

Installation Procedure

NOTE: Flat washer type seals do not require lubrication.

1. Inspect the new sealing washer for any signs of cracks, cuts, or damage.

   Do not use a damaged sealing washer.

2. Remove the cap or tape from the A/C refrigerant components.

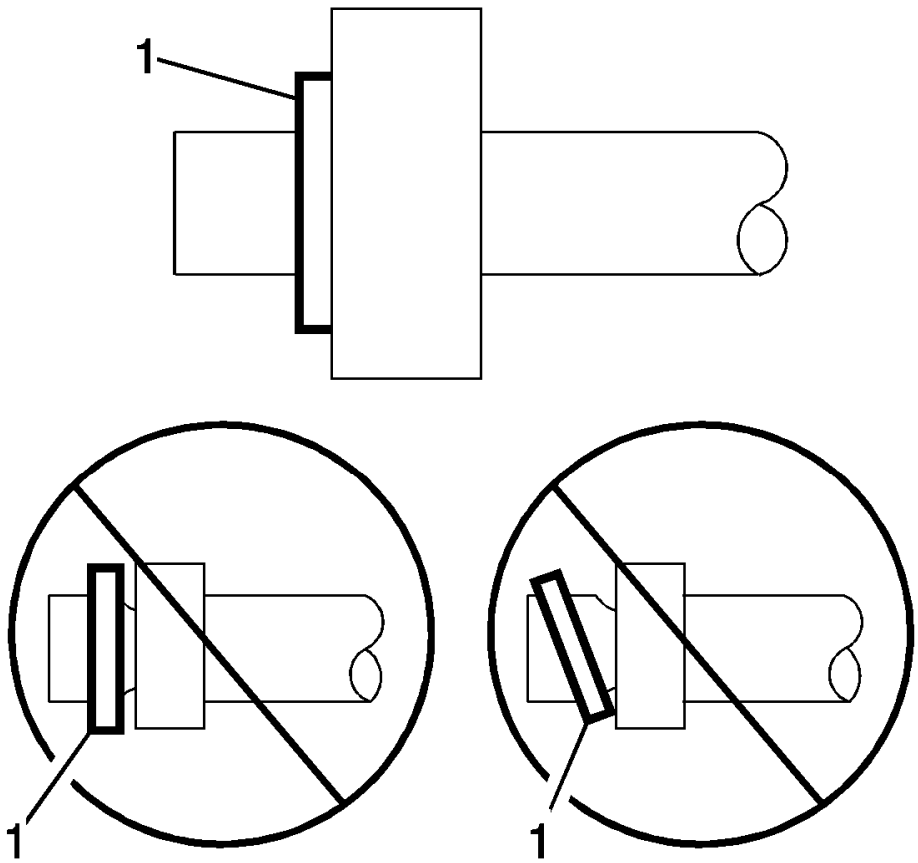

Fig. 16: Identifying Proper Seating Of A/C Refrigerant O-Ring
Courtesy of GENERAL MOTORS COMPANY

3. Using a lint-free clean, dry cloth, clean the sealing surfaces of the A/C refrigerant components.
4. Carefully install the NEW sealing washer (1) onto the A/C refrigerant component.

   The sealing washer (1) must completely bottom against the surface of the fitting.

NOTE: **After tightening the A/C components, there should be a slight sealing gap of approximately 1.2 mm (3/64 in) between the A/C line and the A/C component.**

5. Assemble the remaining A/C refrigerant components. Refer to the appropriate repair procedure.

AIR CONDITIONING O-RING SEAL REPLACEMENT

Removal Procedure

1. Disassemble the A/C refrigerant components. Refer to the appropriate repair procedure.
2. Remove the O-ring seal from the A/C refrigerant component.
3. Inspect the O-ring seal for signs of damage to help determine the root cause of the failure.
4. Inspect the A/C components for damage or burrs. Repair if necessary.

NOTE: Cap or tape the open A/C refrigerant components immediately to prevent system contamination.

5. Cap or tape the A/C refrigerant components.
6. Discard the O-ring seal.

Installation Procedure

1. Inspect the new O-ring seal for any sign or cracks, cuts, or damage. Replace if necessary.
2. Remove the cap or tape from the A/C refrigerant components.
3. Using a lint-free clean, dry cloth, carefully clean the sealing surfaces of the A/C refrigerant components.

NOTE: DO NOT allow any of the mineral base 525 viscosity refrigerant oil on the new O-ring seal to enter the refrigerant system.

4. Lightly coat the new O-ring seal with mineral base 525 viscosity refrigerant oil.

NOTE: DO NOT reuse O-ring seals.

5. Carefully slide the new O-ring seal onto the A/C refrigerant component.

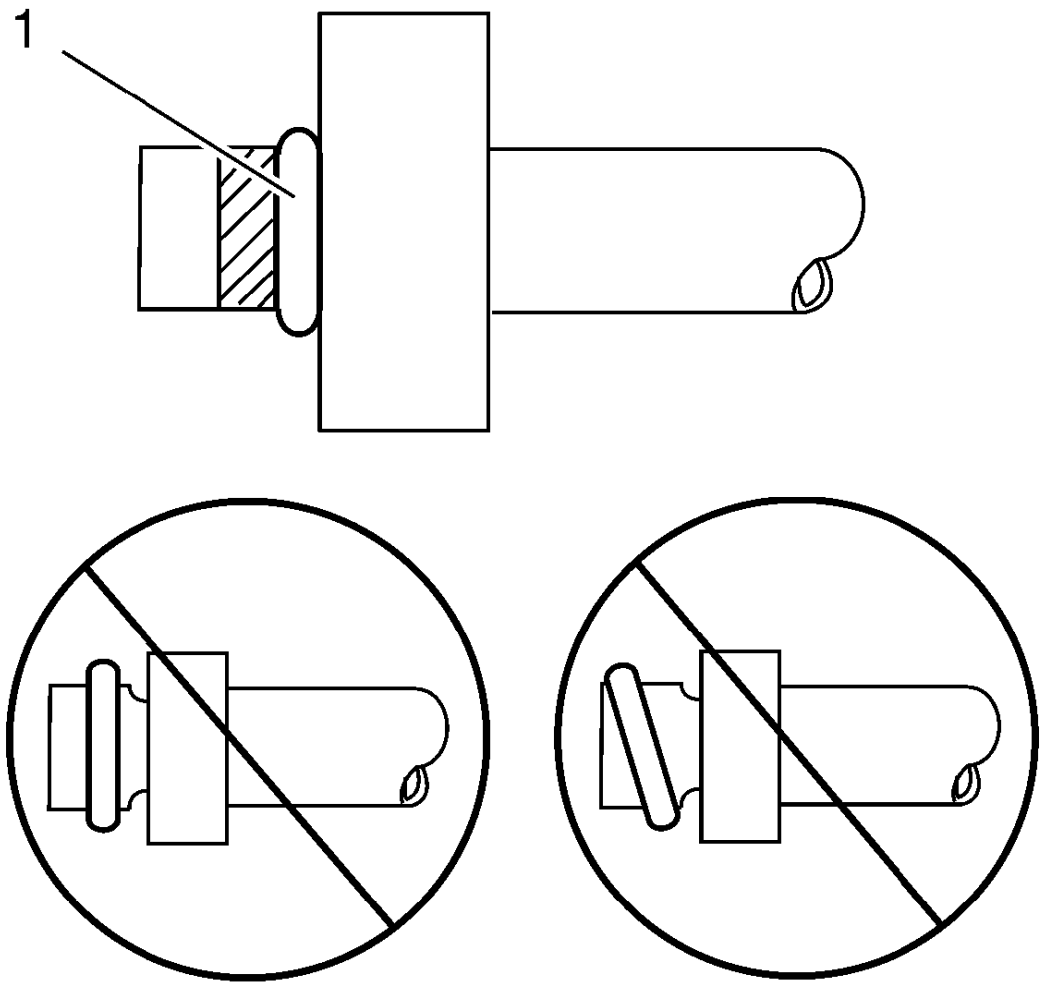

Fig. 17: O-ring
Courtesy of GENERAL MOTORS COMPANY

6. The O-ring (1) seal must be fully seated.
7. Assemble the A/C components.

AIR CONDITIONING COMPRESSOR AND CONDENSER HOSE REPLACEMENT (1.4L LUV)

Removal Procedure

1. Recover the refrigerant. Refer to **Refrigerant Recovery and Recharging**.
2. Remove front bumper fascia. Refer to **Front Bumper Fascia Replacement** .
3. Remove headlamp - right side. Refer to **Headlamp Replacement** .

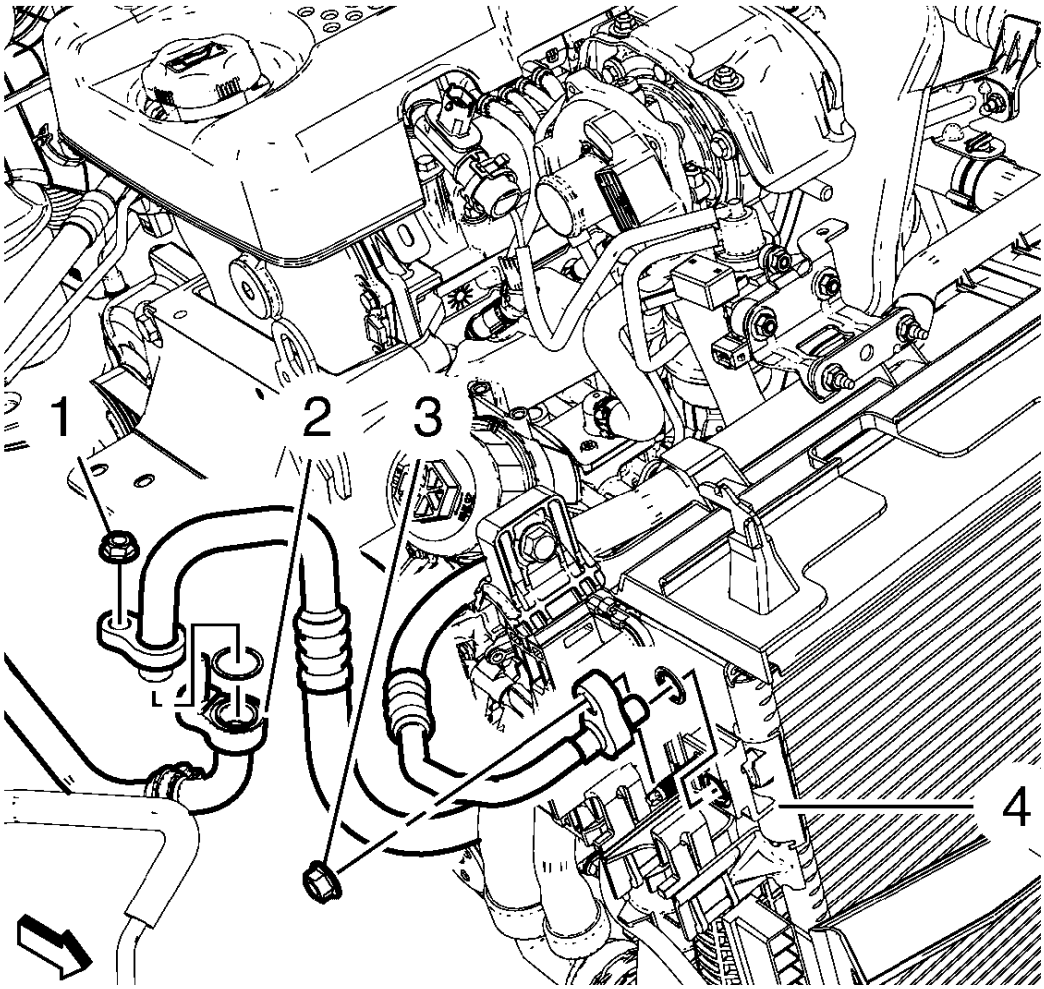

Fig. 18: Condenser Hose Nut
Courtesy of GENERAL MOTORS COMPANY

4. Remove air conditioning compressor and condenser hose nut (1) from refrigerant hose (2).
5. Remove air conditioning compressor and condenser hose nut (3) from air conditioning condenser (4).
6. Remove and DISCARD the seals from the air conditioning compressor and condenser hose.

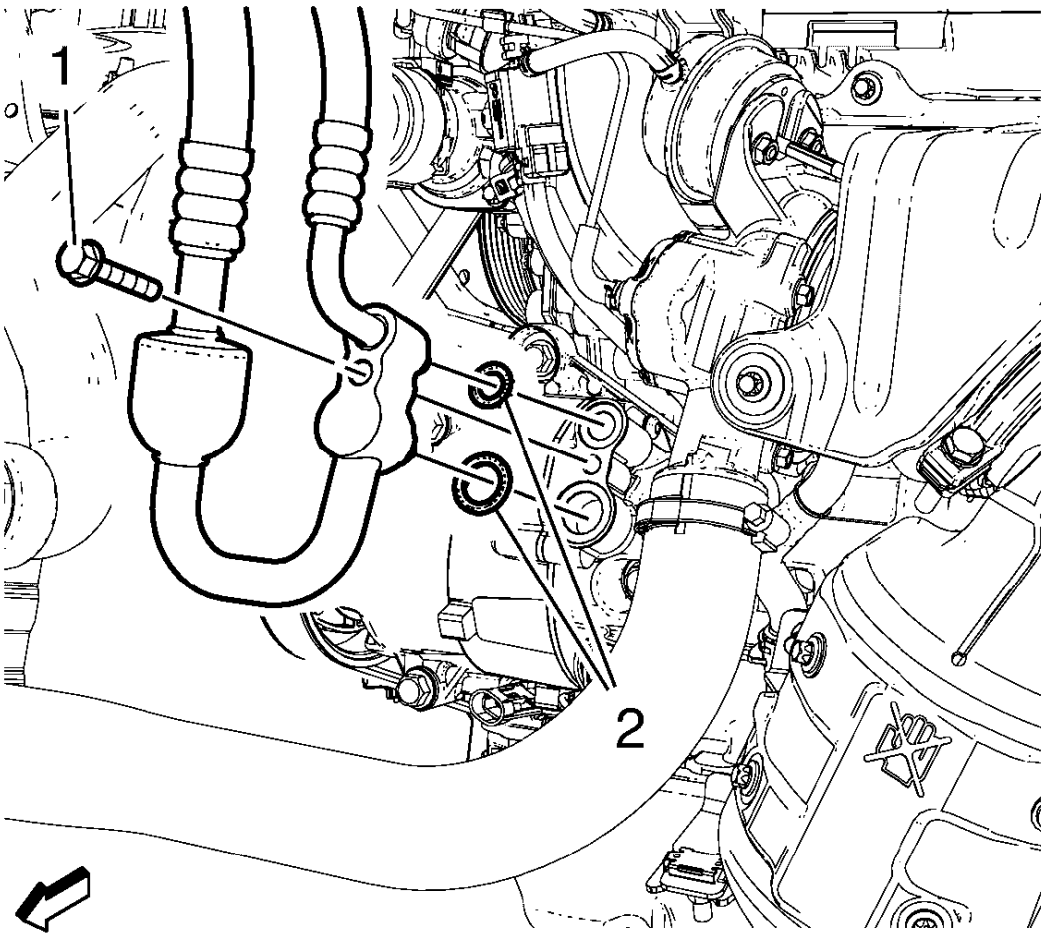

Fig. 19: Condenser Hose Bolt
Courtesy of GENERAL MOTORS COMPANY

7. Remove air conditioning compressor and condenser hose bolt (1).
8. Remove air conditioning compressor and condenser hose.
9. Remove and DISCARD the air conditioning compressor and condenser hose seals (2).

Installation Procedure

1. Install 4 NEW system seals to the air conditioning compressor and condenser hose. Refer to **Air Conditioning System Seal Replacement**.
2. Install air conditioning compressor and condenser hose.

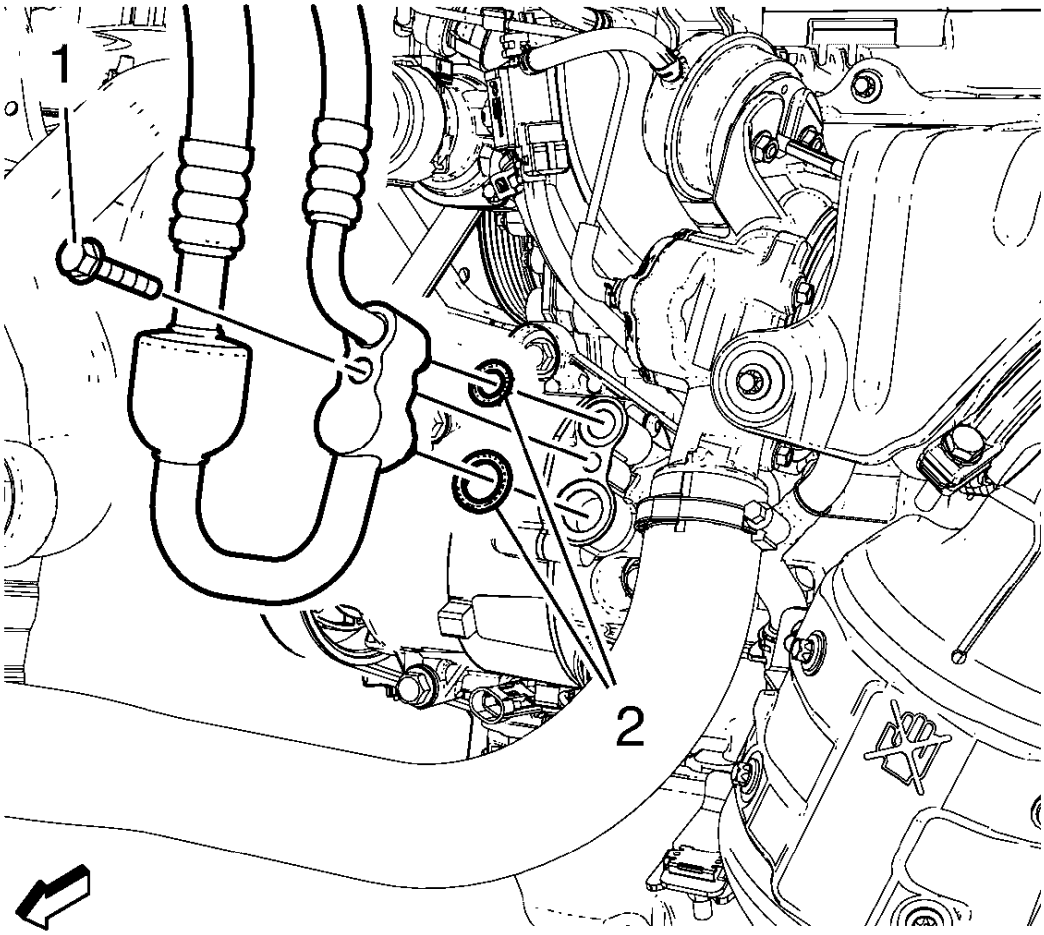

Fig. 20: Condenser Hose Bolt
Courtesy of GENERAL MOTORS COMPANY

CAUTION: Refer to Fastener Caution .

3. Install air conditioning compressor and condenser hose bolt (1) tighten to 19 N.m (14 lb ft).

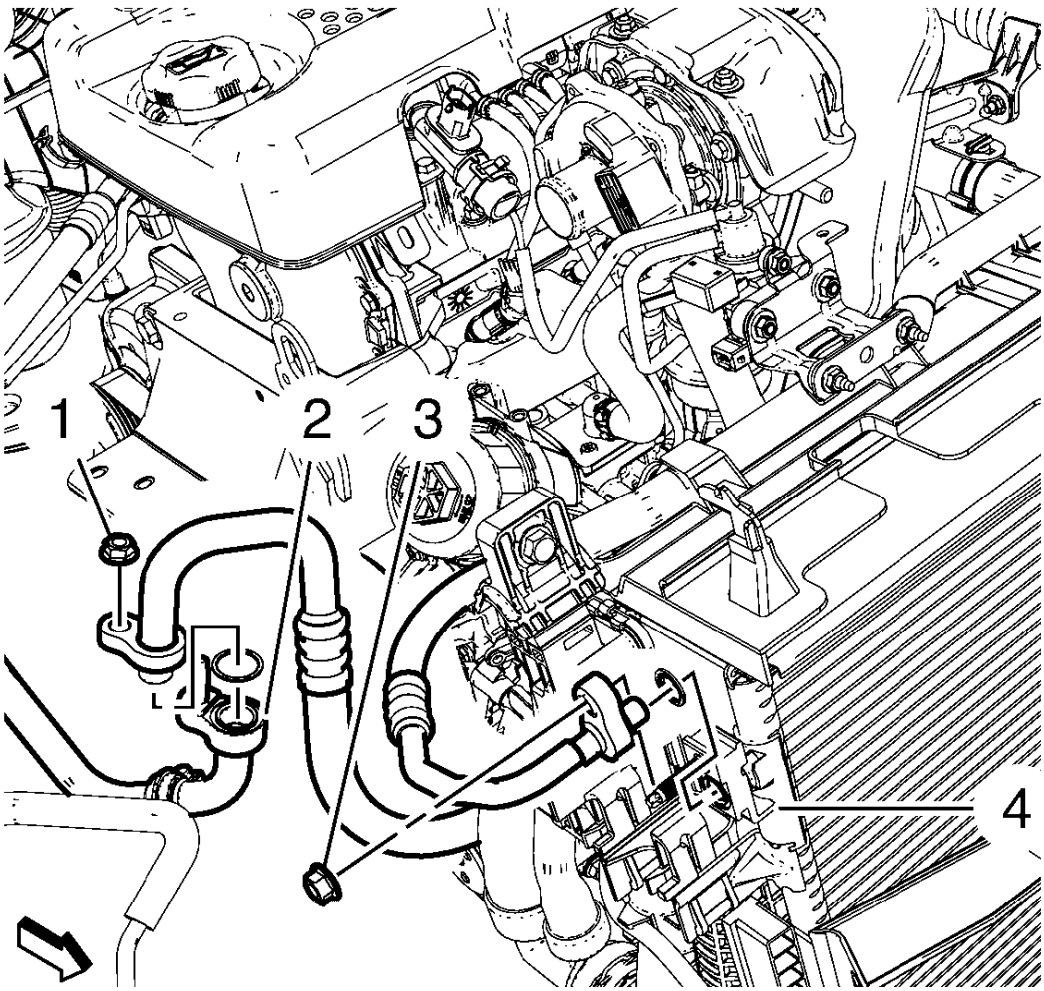

Fig. 21: Condenser Hose Nut
Courtesy of GENERAL MOTORS COMPANY

4. Install air conditioning compressor and condenser hose nut (3) to air conditioning condenser (4) and tighten to 19 N.m (14 lb ft).
5. Install air conditioning compressor and condenser hose nut (1) to air conditioning refrigerant hose (2) and tighten to 19 N.m (14 lb ft).
6. Install headlamp - right side. Refer to **Headlamp Replacement** .
7. Install front bumper fascia. Refer to **Front Bumper Fascia Replacement** .
8. Evacuate and charge the refrigerant system. Refer to **Refrigerant Recovery and Recharging**.

AIR CONDITIONING COMPRESSOR AND CONDENSER HOSE REPLACEMENT (1.8L LUW AND LWE)

Removal Procedure

1. Recover the refrigerant. Refer to **Refrigerant Recovery and Recharging**.
2. Remove front bumper fascia. Refer to **Front Bumper Fascia Replacement** .

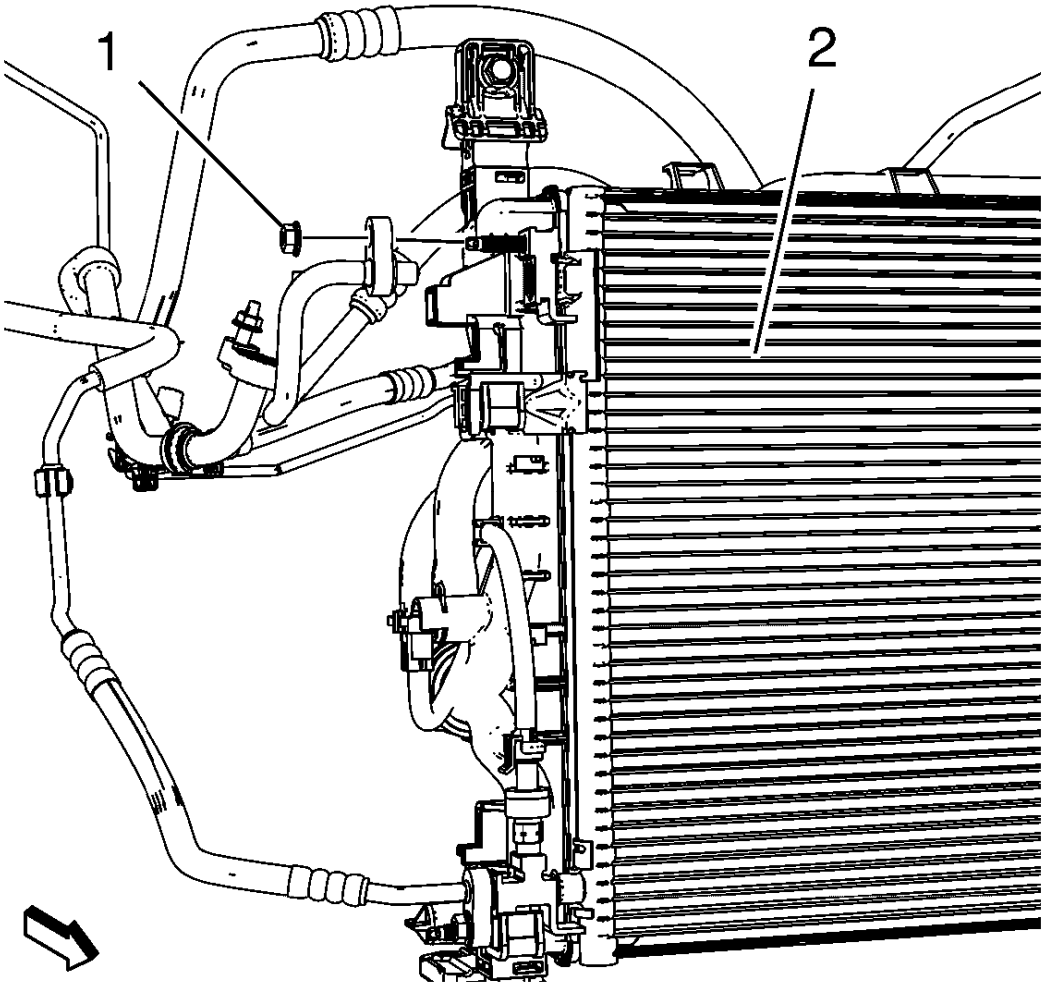

Fig. 22: Air Conditioning Condenser
Courtesy of GENERAL MOTORS COMPANY

3. Remove air conditioning compressor and condenser hose nut (1) from air conditioning condenser (2).

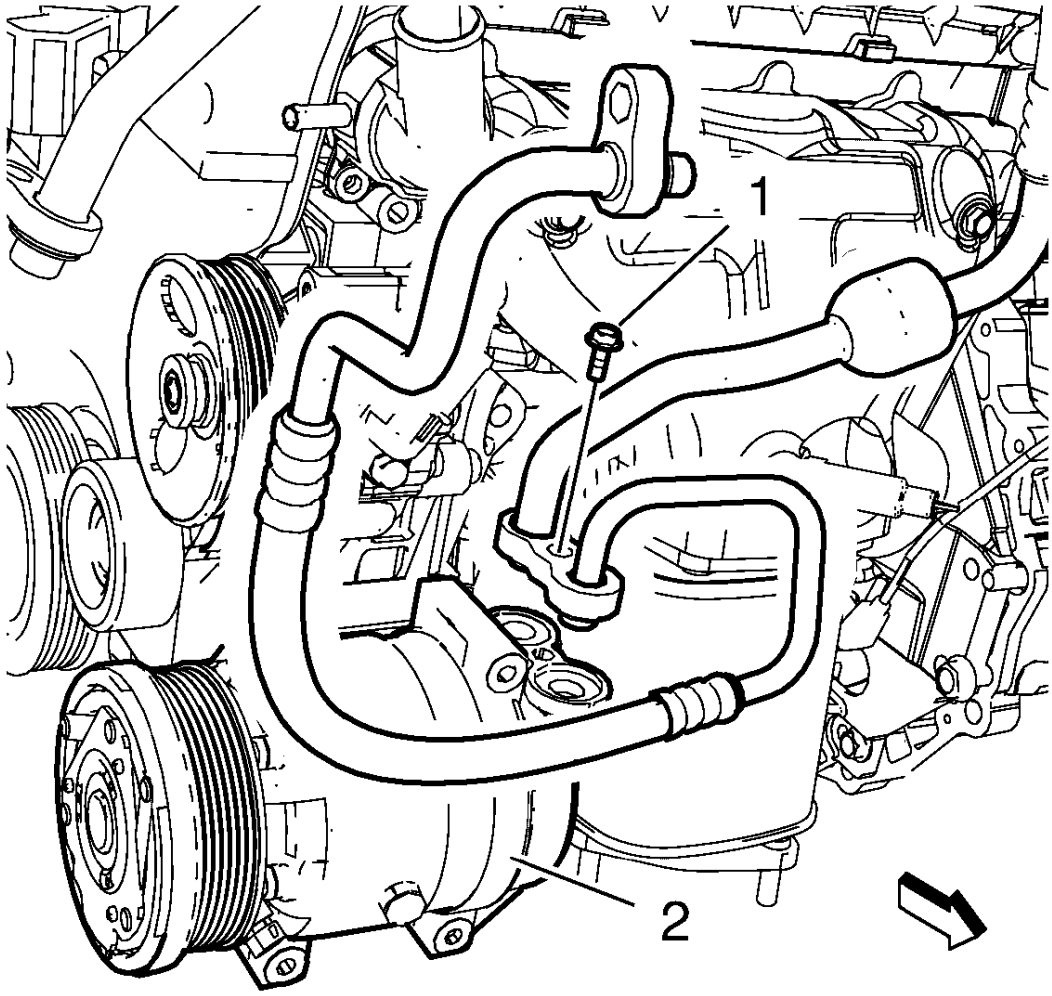

Fig. 23: Air Conditioning Compressor
Courtesy of GENERAL MOTORS COMPANY

4. Remove air conditioning compressor and condenser hose bolt (1) from air conditioning compressor (2).

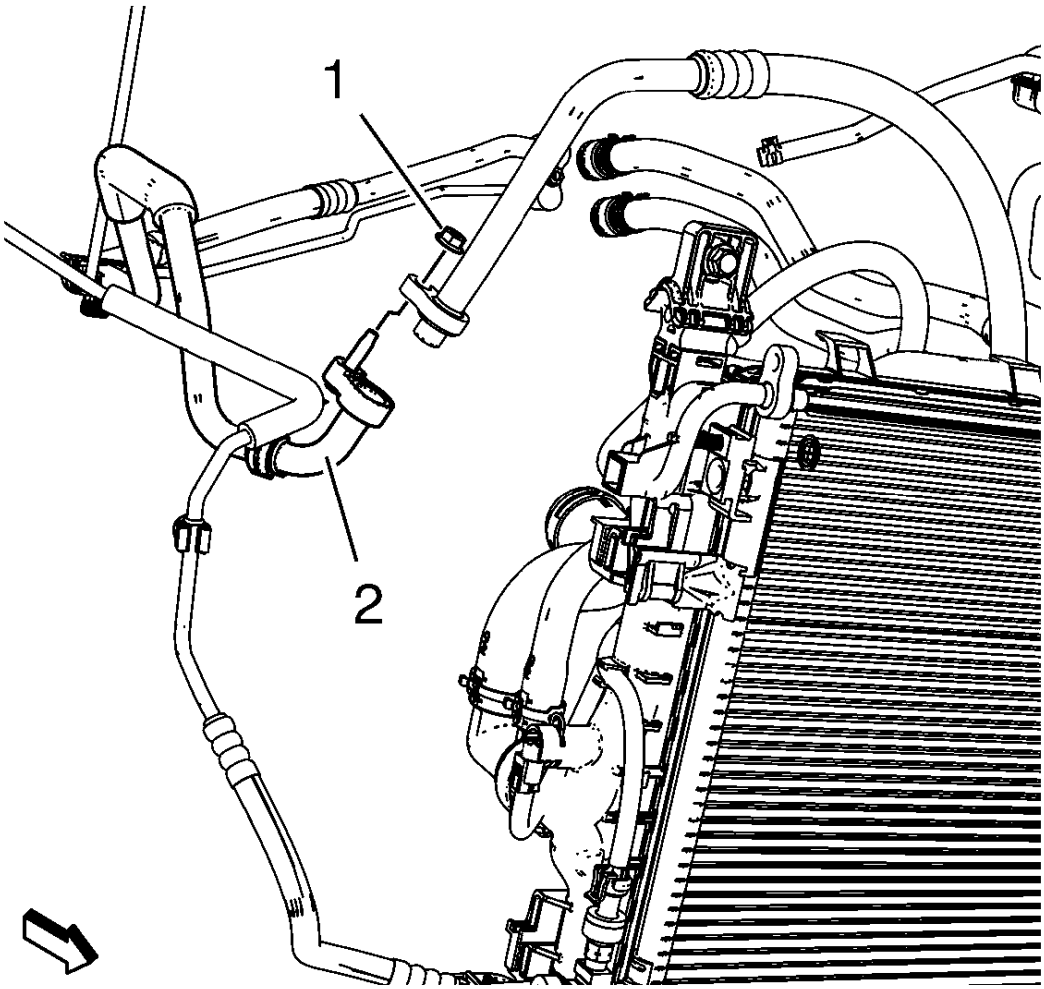

Fig. 24: Air Conditioning Evaporator Hose
Courtesy of GENERAL MOTORS COMPANY

5. Remove air conditioning compressor and condenser hose nut (1) from air conditioning evaporator hose (2).
6. Remove air conditioning compressor and condenser hose.
7. Remove and DISCARD 4 air conditioning compressor and condenser hose seals.

Installation Procedure

1. Install 4 NEW air conditioning compressor and condenser hose seals. Refer to **Air Conditioning System Seal Replacement**.
2. Install air conditioning compressor and condenser hose.

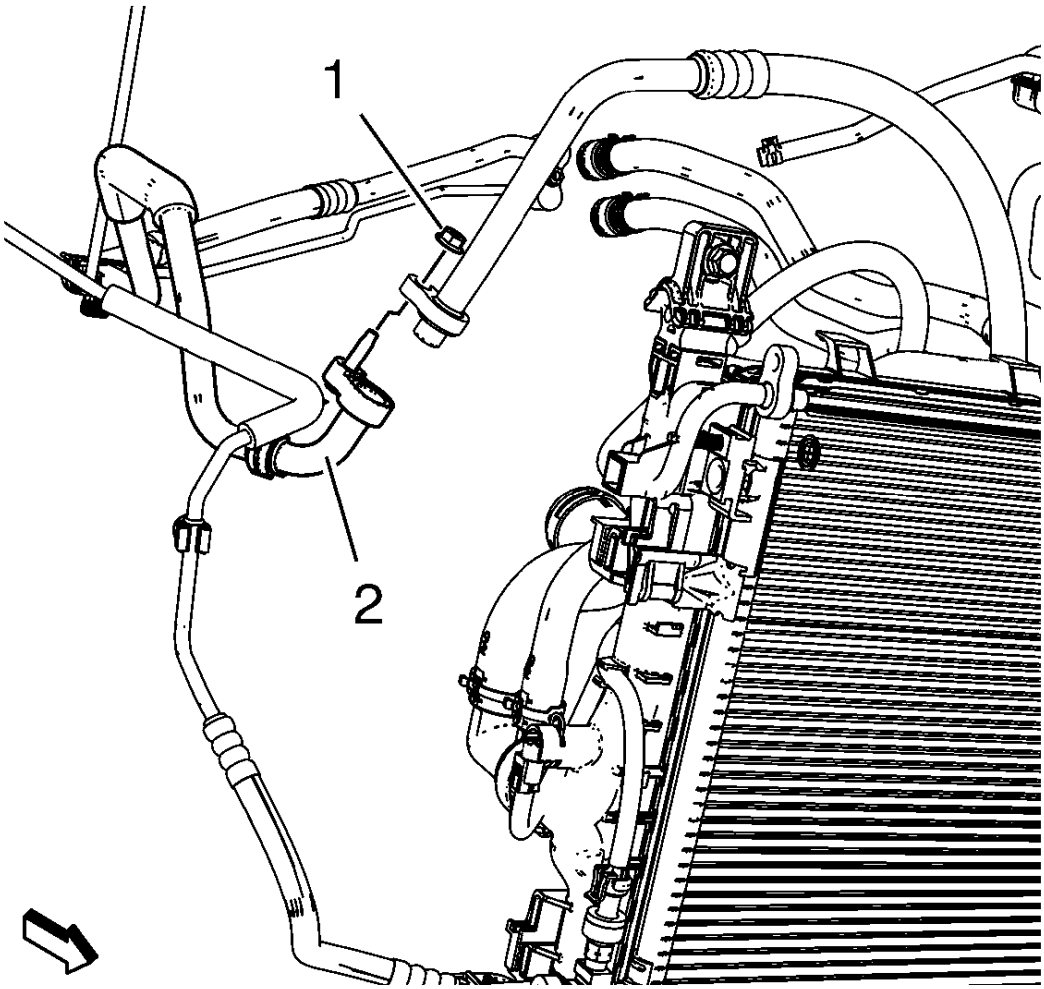

Fig. 25: Air Conditioning Evaporator Hose
Courtesy of GENERAL MOTORS COMPANY

CAUTION: Refer to Fastener Caution .

3. Install air conditioning compressor and condenser hose nut (1) to air conditioning evaporator hose (2). Tighten nut to 19 N.m (14 lb ft).

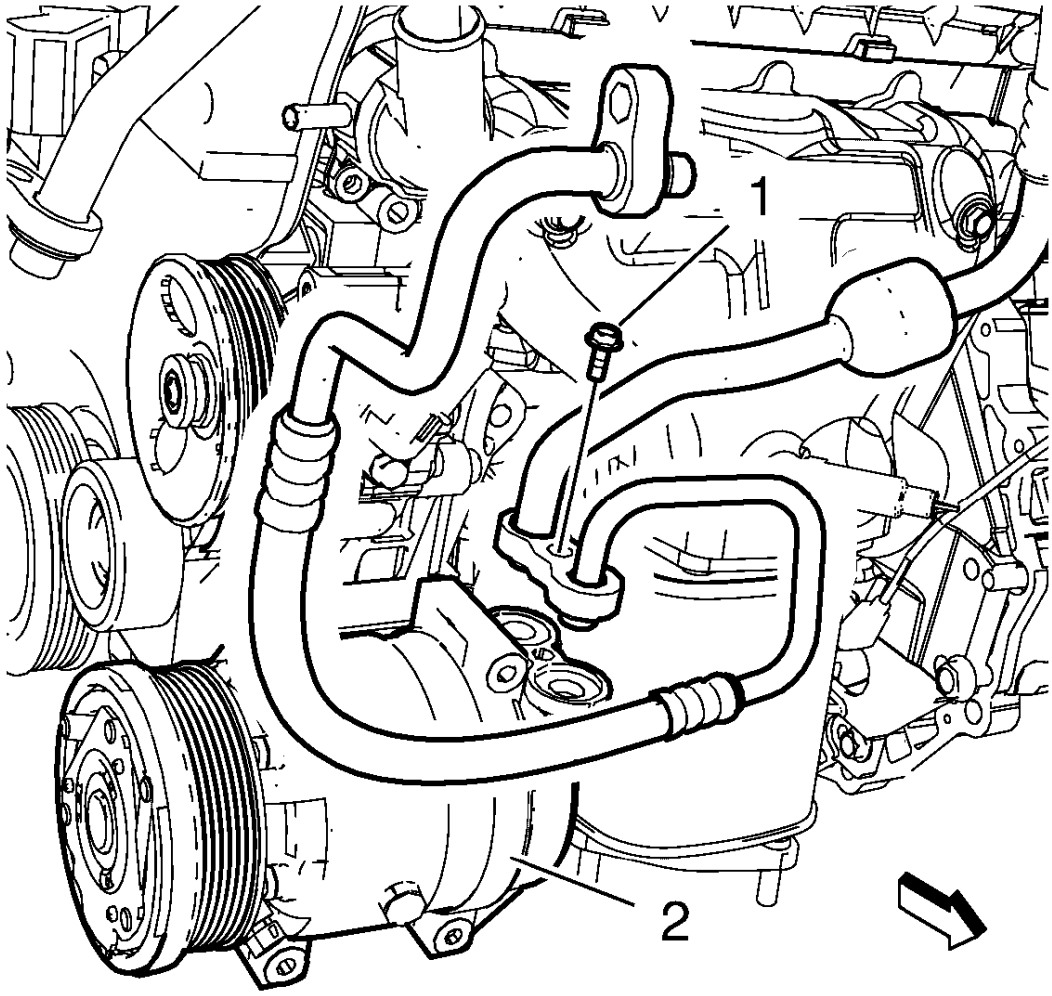

Fig. 26: Air Conditioning Compressor
Courtesy of GENERAL MOTORS COMPANY

4. Install air conditioning compressor and condenser hose bolt (1) to air conditioning compressor (2). Tighten bolt to 19 N.m (14 lb ft).

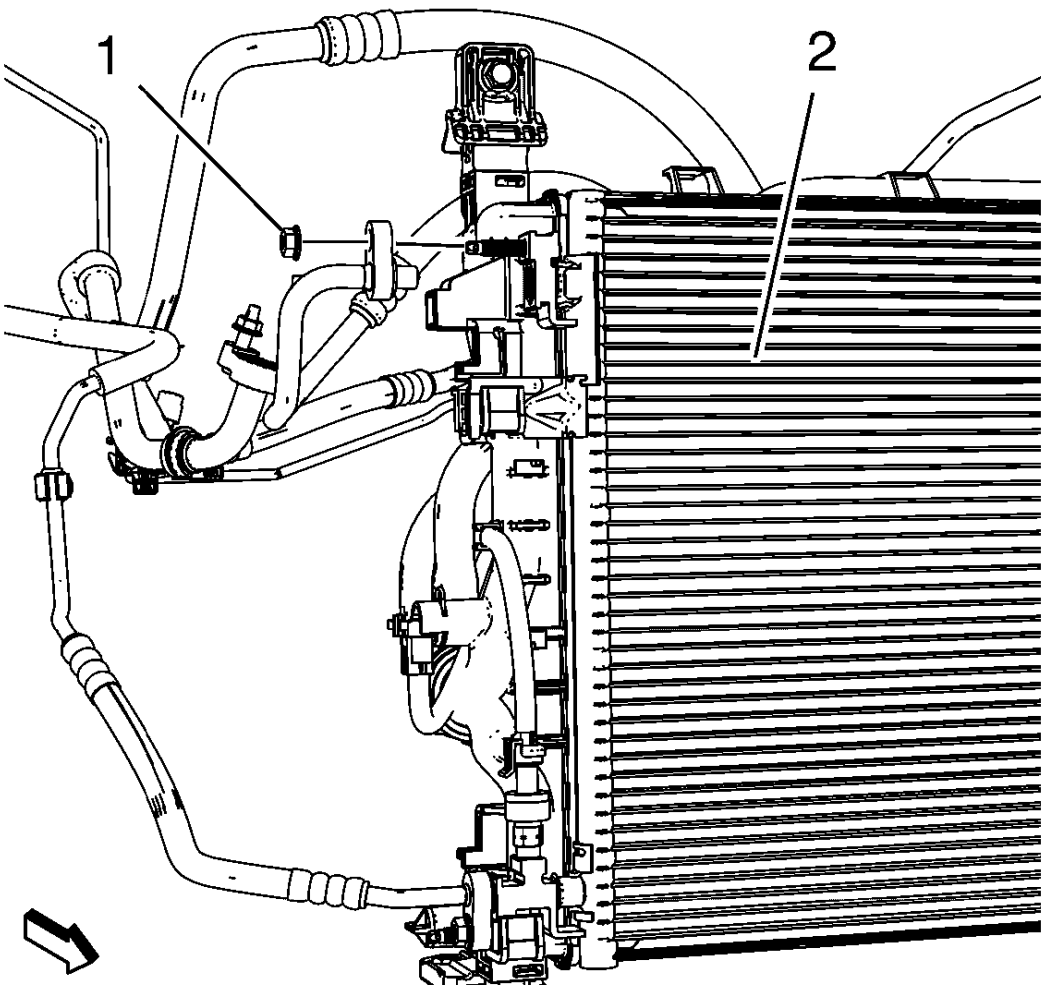

Fig. 27: Air Conditioning Condenser
Courtesy of GENERAL MOTORS COMPANY

5. Install air conditioning compressor and condenser hose nut (1) to air conditioning condenser (2). Tighten nut to 19 N.m (14 lb ft).
6. Install front bumper fascia. Refer to **Front Bumper Fascia Replacement** .
7. Evacuate and charge the refrigerant system. Refer to **Refrigerant Recovery and Recharging**.

AIR CONDITIONING EVAPORATOR HOSE ASSEMBLY REPLACEMENT

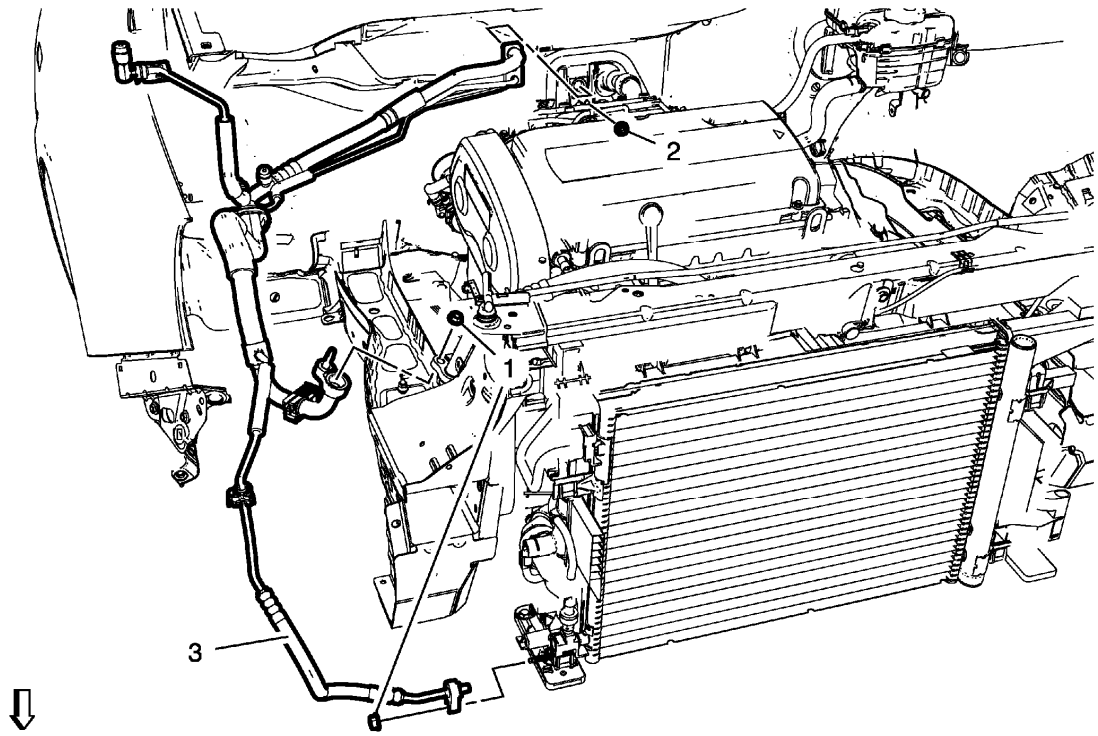

Fig. 28: Air Conditioning Evaporator Hose Assembly
Courtesy of GENERAL MOTORS COMPANY

Air Conditioning Evaporator Hose Assembly Replacement

Callout	Component Name
Preliminary Procedures 1. Disconnect the negative battery cable. Refer to **Battery Negative Cable Disconnection and Connection** . 2. Recover the refrigerant. Refer to **Refrigerant Recovery and Recharging**. 3. Remove the headlamp - right side. Refer to **Headlamp Replacement** . 4. Remove the brake pipes from the dash lower extension panel. 5. Remove engine mount. • 1.4L LUV - Refer to **Engine Mount Replacement - Right Side** . • 1.8L LUW and LWE - Refer to **Engine Mount Replacement - Right Side** .	
1	Air Conditioning Evaporator Hose Assembly Nut (Qty: 2) **CAUTION:** **Refer to Fastener Caution .** **Tighten** 19 N.m (14 lb ft)

2	Air Conditioning Evaporator Hose Assembly Nut to Air Conditioning Evaporator Thermal Expansion Valve **Tighten** 19 N.m (14 lb ft)
3	Air Conditioning Evaporator Hose Assembly **Procedure** Unclip from body.

SUCTION SCREEN INSTALLATION

Special Tools

GE-44551 Suction Screen Kit

Installation Procedure

NOTE: Suction screens are intended to be installed in the suction hose after a major compressor failure.

1. Remove the A/C compressor and condenser hose from the A/C compressor. Refer to **Air Conditioning Compressor and Condenser Hose Replacement (1.8L LUW and LWE)**, **Air Conditioning Compressor and Condenser Hose Replacement (1.4L LUV)**.
2. Using a caliper that reads to 3 decimal places, measure the ID of the manifold suction fitting. To determine the correct size screen for the application, refer to **Compressor Suction Screen and Tool Selection Specifications**.

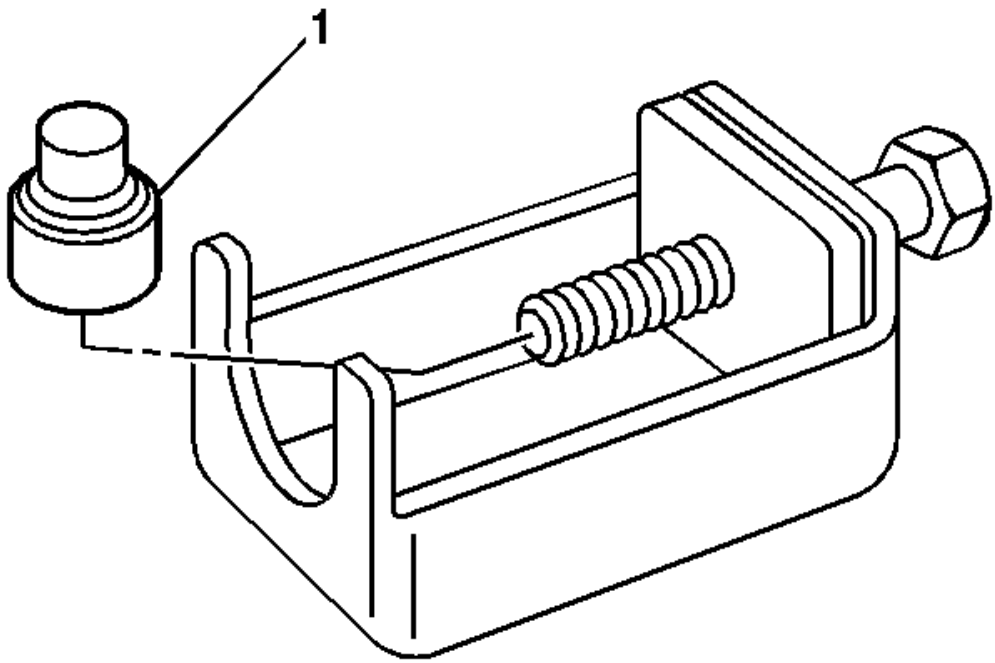

Fig. 29: View Of Mandrel And Special Tool
Courtesy of GENERAL MOTORS COMPANY

3. Select and install the correct mandrel (1) on the threaded portion of the installation tool bolt:
   - The brass universal mandrel is for use on hose fittings with a smooth bore where the screen installs flush with the end of the fitting.
   - The 11.96 mm (0.471 in) mandrel is only for the 11.96 mm (0.471 in) screen in hose fittings with an internal hourglass shape where the screen installs at the recessed, reduced diameter point.

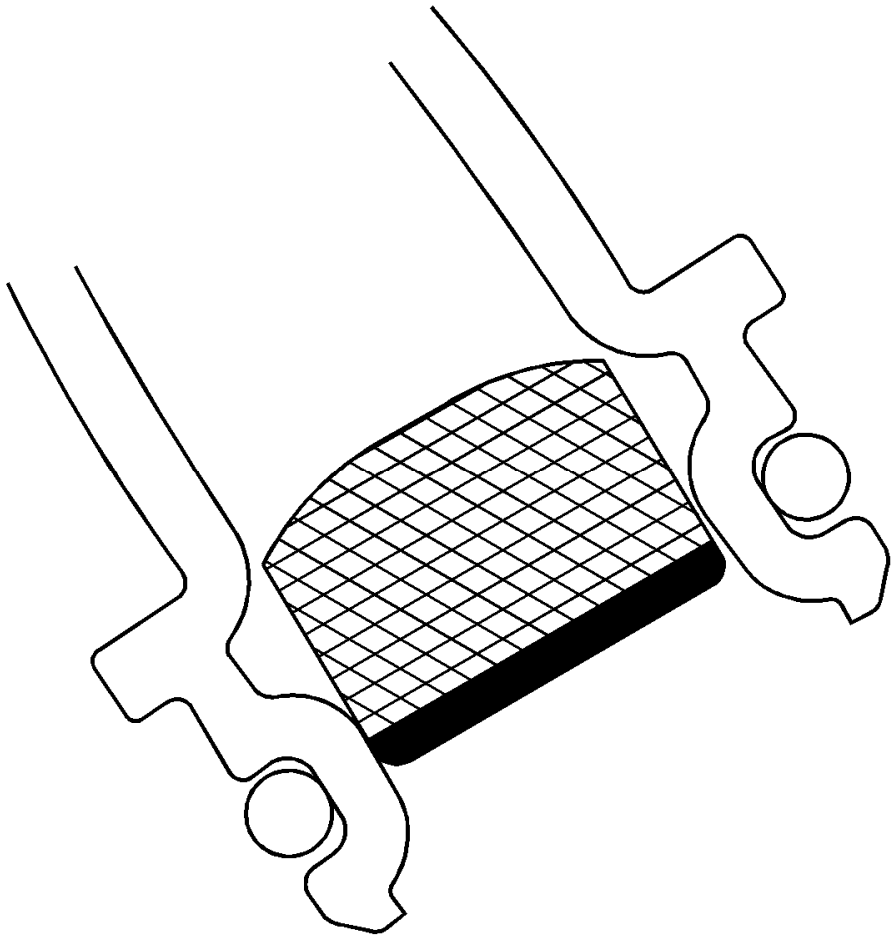

Fig. 30: View of Screen
Courtesy of GENERAL MOTORS COMPANY

4. Install the 11.96 mm (0.471 in) screen in the middle of the reduced diameter point of the fitting.

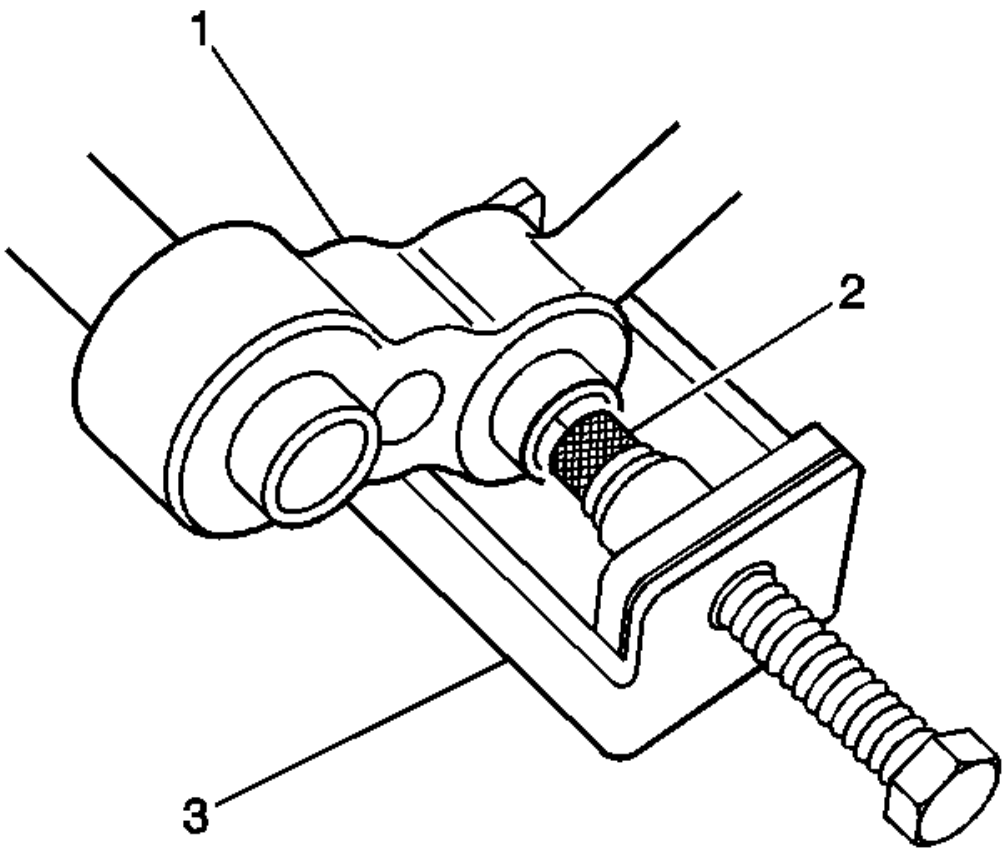

Fig. 31: Proper Placement Of J 44551-5
Courtesy of GENERAL MOTORS COMPANY

5. Place the suction hose side of the manifold into the **GE-44551-5** installation tool fixture (3) so it is supported by the tools legs.

NOTE: Correct placement of the GE-44551-5 installation tool fixture is critical.

6. Lubricate the A/C suction screen with the applicable refrigerant oil.
7. Align the screen (2), basket first into the suction hose bore then hand tighten the bolt until contact is made between the hose, screen and tool.
8. Turn the bolt of the installation tool clockwise pressing the screen into the bore until the mandrel shoulder contacts the end of the hose fitting.
9. Unscrew the bolt and remove the installation tool from the manifold.

NOTE: Clean the surface to be used for attaching the label.

10. Install the **GE-44551-1** Suction Screen Notification Label.

11. Install the A/C compressor and condenser hose to the A/C compressor. Refer to **Air Conditioning Compressor and Condenser Hose Replacement (1.8L LUW and LWE)**, **Air Conditioning Compressor and Condenser Hose Replacement (1.4L LUV)**.

AIR CONDITIONING COMPRESSOR SUCTION SCREEN REPLACEMENT

Special Tools

GE-44551 Suction Screen Kit

Removal Procedure

NOTE: Suction screens are intended to be installed in the suction hose after a major compressor failure.

1. Remove the A/C compressor and condenser hose from the A/C compressor. Refer to **Air Conditioning Compressor and Condenser Hose Replacement (1.8L LUW and LWE)**, **Air Conditioning Compressor and Condenser Hose Replacement (1.4L LUV)**.

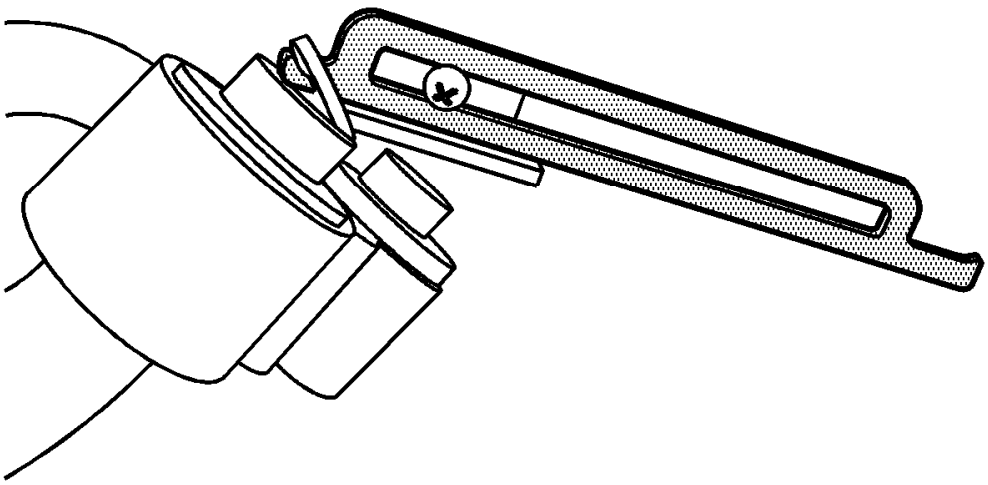

Fig. 32: View Of Universal Removal Tool
Courtesy of GENERAL MOTORS COMPANY

2. Using the **GE-44551-9** Universal Removal Tool, place the tip of the tool under the inside edge of the compression band of the suction screen and the cushioning fulcrum pad against the open end of the manifold fitting.

NOTE: Do not damage the end of the hose or manifold.

3. Pry upward on the band and move the tool around the diameter of the screen as necessary to remove the screen.

Installation Procedure

1. Using a caliper that reads to 3 decimal places, measure the ID of the manifold suction fitting. To determine the correct size screen for the application, refer to **Compressor Suction Screen and Tool Selection Specifications**.

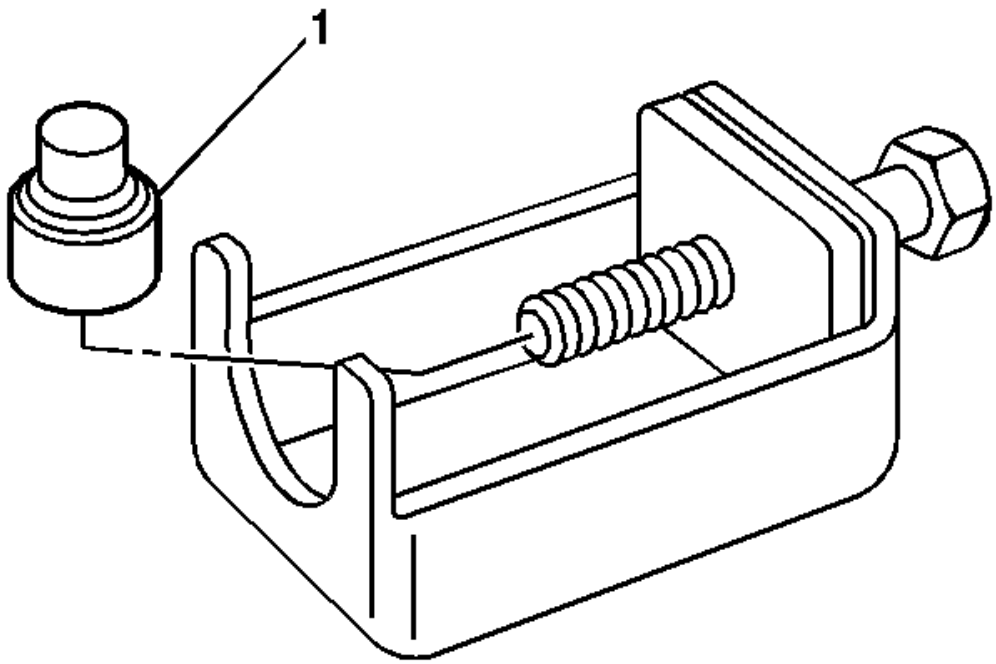

Fig. 33: View Of Mandrel And Special Tool

Courtesy of GENERAL MOTORS COMPANY

2. Select and install the correct mandrel (1) on the threaded portion of the installation tool bolt:
   - The brass universal mandrel is for use on hose fittings with a smooth bore where the screen installs flush with the end of the fitting.
   - The 11.96 mm (0.471 in) mandrel is only for the 11.96 mm (0.471 in) screen in hose fittings with an internal hourglass shape where the screen installs at the recessed, reduced diameter point.

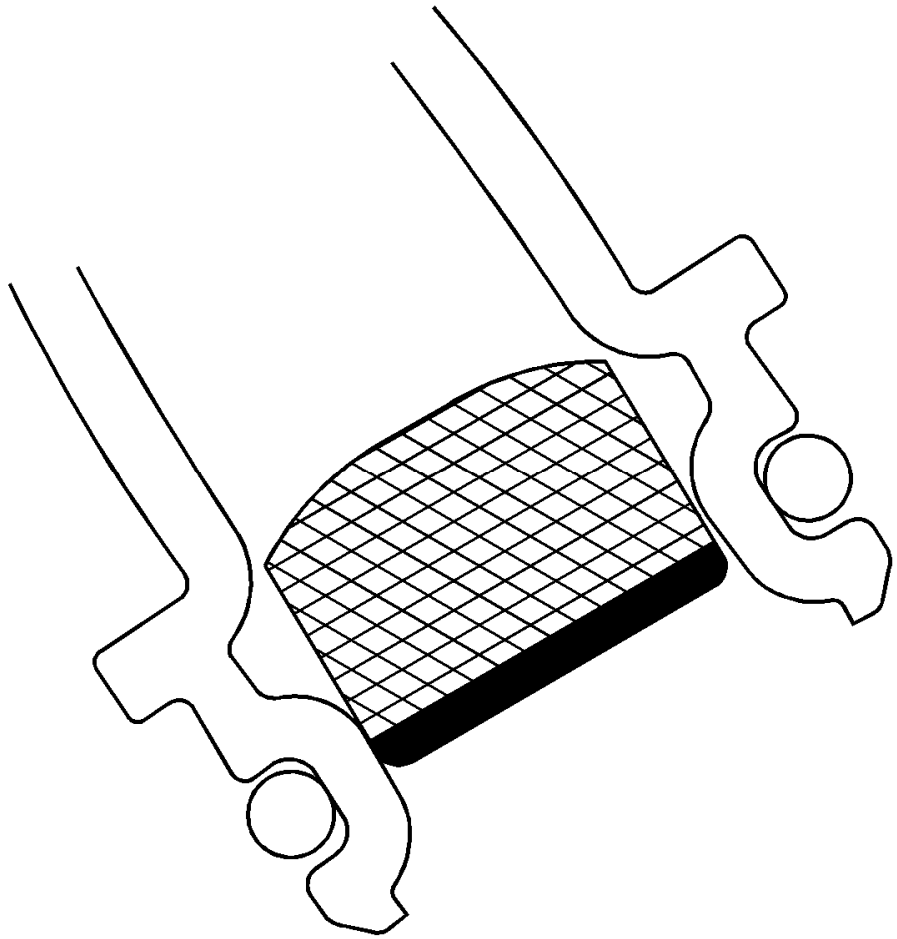

Fig. 34: View of Screen
Courtesy of GENERAL MOTORS COMPANY

- Install the 11.96 mm (0.471 in) screen in the middle of the reduced diameter point of the fitting.

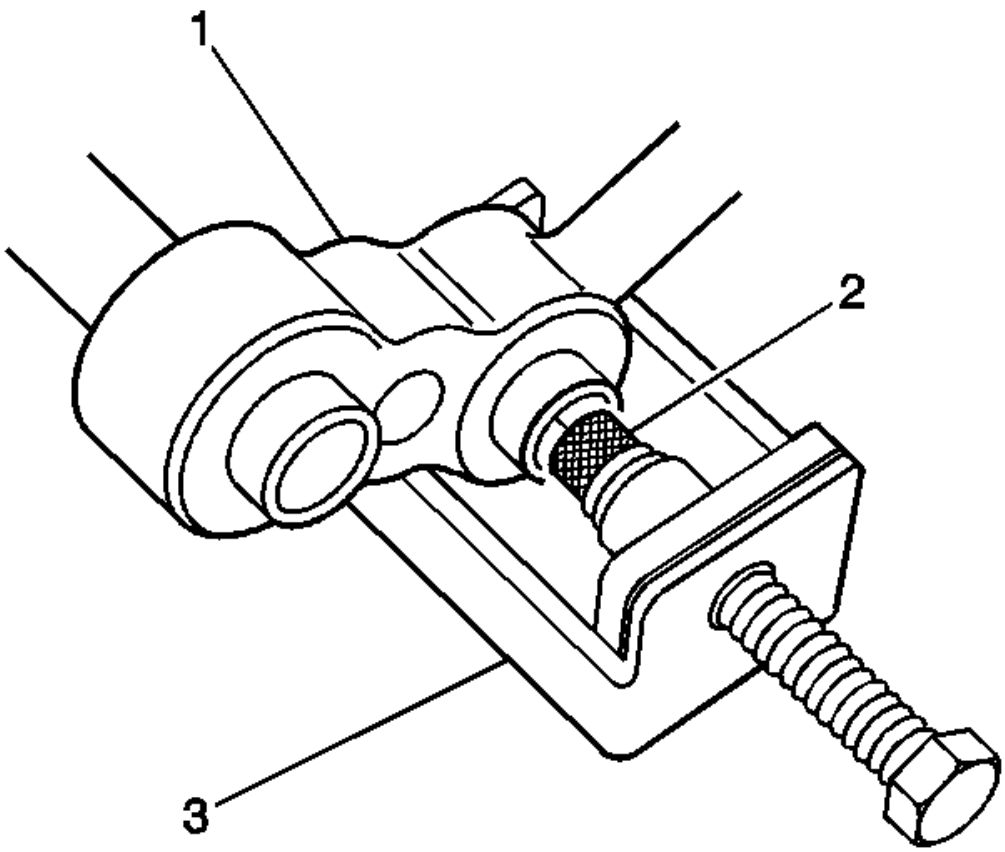

Fig. 35: Proper Placement Of J 44551-5
Courtesy of GENERAL MOTORS COMPANY

3. Place the suction hose side of the manifold into the **GE-44551-5** installation tool fixture (3) so it is supported by the tools legs.

NOTE: Correct placement of the GE-44551-5 installation tool fixture is critical.

4. Lubricate the A/C suction screen with the applicable refrigerant oil.
5. Align the screen (2), basket first into the suction hose bore then hand tighten the bolt until contact is made between the hose, screen and tool.
6. Turn the bolt of the installation tool clockwise pressing the screen into the bore until the mandrel shoulder contacts the end of the hose fitting.
7. Unscrew the bolt and remove the installation tool from the manifold.

NOTE: Clean the surface to be used for attaching the label.

8. Install the **GE-44551-1** Suction Screen Notification Label.

9. Install the A/C compressor and condenser hose to the A/C compressor. Refer to **Air Conditioning Compressor and Condenser Hose Replacement (1.8L LUW and LWE)**, **Air Conditioning Compressor and Condenser Hose Replacement (1.4L LUV)**.

AIR CONDITIONING REFRIGERANT SERVICE VALVE CORE REPLACEMENT

Special Tools

- **GE-39400-A** Halogen Leak Detector
- **GE-46246** Valve Core Removal Tool

For equivalent regional tools, refer to **Special Tools**.

Removal Procedure

1. Recover the refrigerant. Refer to **Refrigerant Recovery and Recharging**.

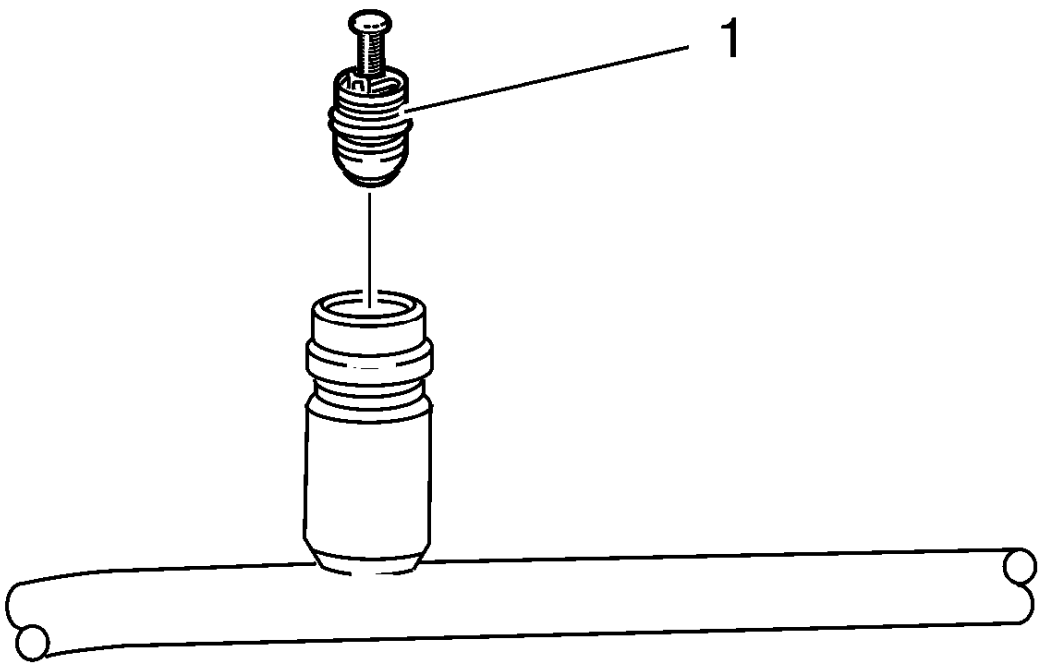

Fig. 36: Service Port Valve Core
Courtesy of GENERAL MOTORS COMPANY

2. Remove the service port valve core (1) using **GE-46246** remover.

Installation Procedure

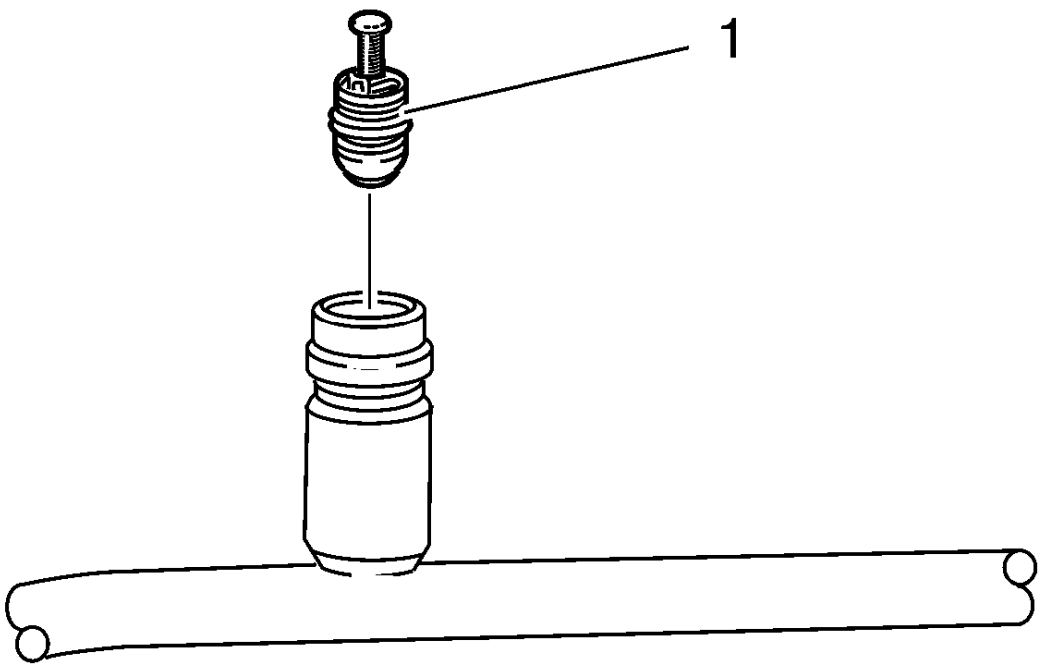

Fig. 37: Service Port Valve Core
Courtesy of GENERAL MOTORS COMPANY

CAUTION: Refer to Fastener Caution .

1. Install the service port valve core using (1) **GE-46246** remover and tighten to 3 N.m (22 lb in).
2. Evacuate and charge the refrigerant system. Refer to **Refrigerant Recovery and Recharging**.
3. Leak test the fittings using the **GE-39400-A** detector.

AIR CONDITIONING REFRIGERANT DESICCANT REPLACEMENT

Special Tools

GE 39400-A Halogen Leak Detector

For equivalent regional tools, refer to **Special Tools**.

Removal Procedure

1. Disconnect the negative battery cable. Refer to **Battery Negative Cable Disconnection and Connection** .
2. Recover the refrigerant. Refer to **Refrigerant Recovery and Recharging**.
3. Remove the front bumper fascia opening lower cover. Refer to **Front Bumper Fascia Opening Lower Cover Replacement** .

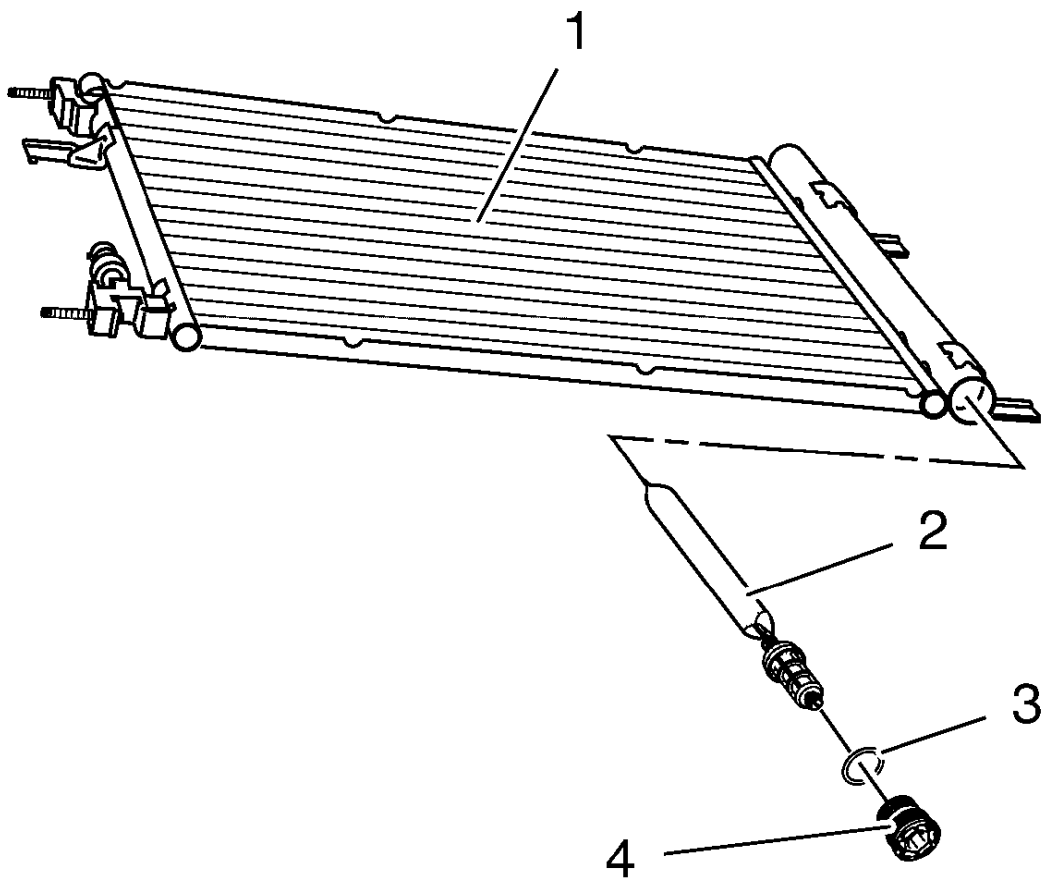

Fig. 38: Air Conditioning Receiver And Dehydrator Plug

Courtesy of GENERAL MOTORS COMPANY

4. Remove the air conditioning receiver and dehydrator plug (4).

NOTE: Cap all air conditioning components immediately to prevent system contamination.

5. Remove and DISCARD the sealing washers (3).
6. Remove the air conditioning refrigerant desiccant (2) from the air conditioning condenser (1).

Installation Procedure

1. Uncap air conditioning components.

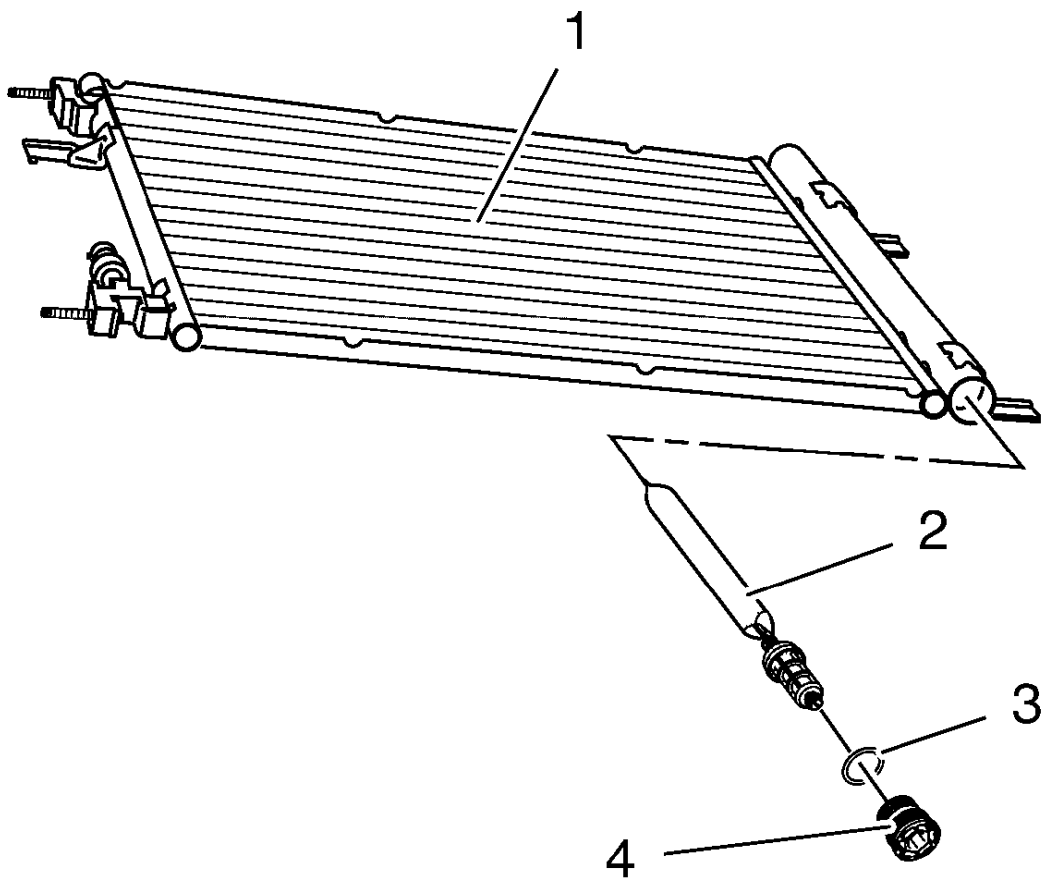

Fig. 39: Air Conditioning Receiver And Dehydrator Plug
Courtesy of GENERAL MOTORS COMPANY

2. Install NEW sealing washers (3).
3. Install the air conditioning refrigerant desiccant (2) into air conditioning condenser (1).
4. Install the air conditioning receiver and dehydrator plug (4).
5. Install the front bumper fascia opening lower cover. Refer to **Front Bumper Fascia Opening Lower Cover Replacement** .
6. Evacuate and charge the refrigerant system. Refer to **Refrigerant Recovery and Recharging**.
7. Leak test the fittings using the **GE 39400-A** detector.
8. Connect the negative battery cable. Refer to **Battery Negative Cable Disconnection and Connection** .

AIR CONDITIONING EVAPORATOR THERMAL EXPANSION VALVE REPLACEMENT

Special Tools

GE 39400-A Halogen Leak Detector

For equivalent regional tools, refer to **Special Tools**.

Removal Procedure

1. Recover the refrigerant. Refer to **Refrigerant Recovery and Recharging**.
2. Unclip brake pipes.

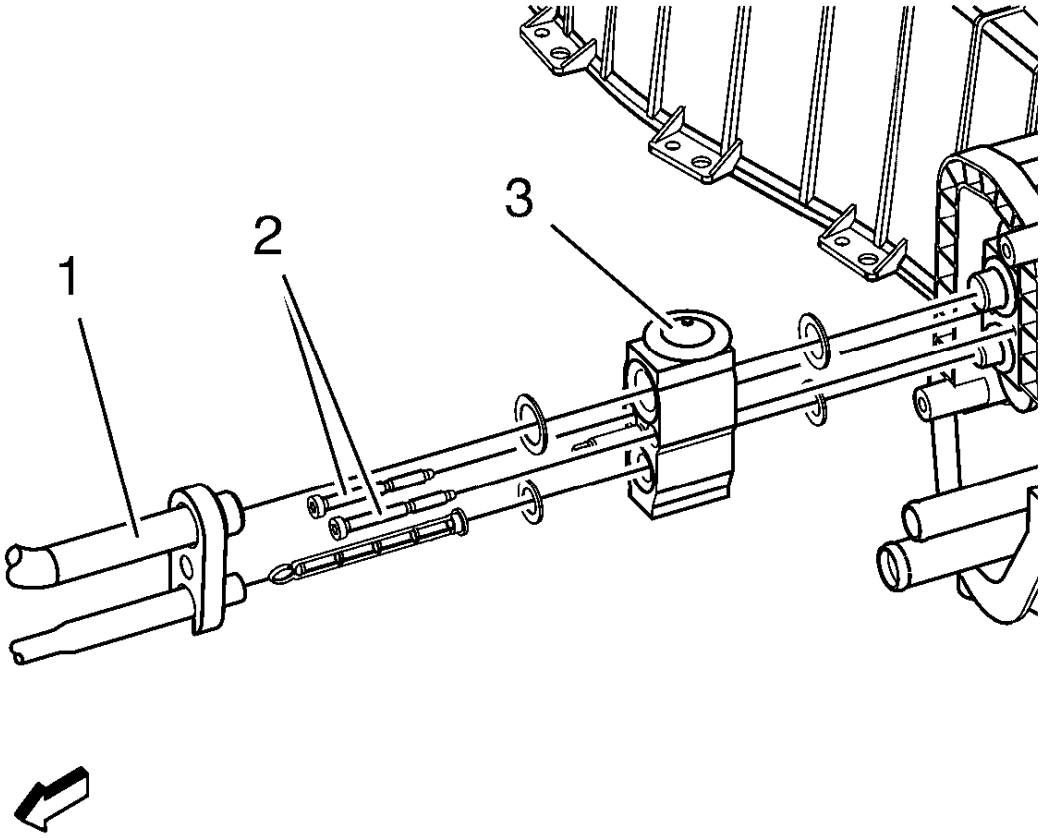

Fig. 40: Air Conditioning Evaporator Hose, Thermal Expansion Valve And Bolts
Courtesy of GENERAL MOTORS COMPANY

3. Remove the air conditioning evaporator hose bolt from the air conditioning evaporator thermal expansion valve.
4. Remove the air conditioning evaporator hose (1) from air conditioning evaporator thermal expansion valve.
5. Remove the 2 air conditioning evaporator thermal expansion valve bolts (2).
6. Remove the air conditioning evaporator thermal expansion valve (3).
7. Remove and DISCARD the seals from the air conditioning evaporator hose and from the evaporator core pipes.

Installation Procedure

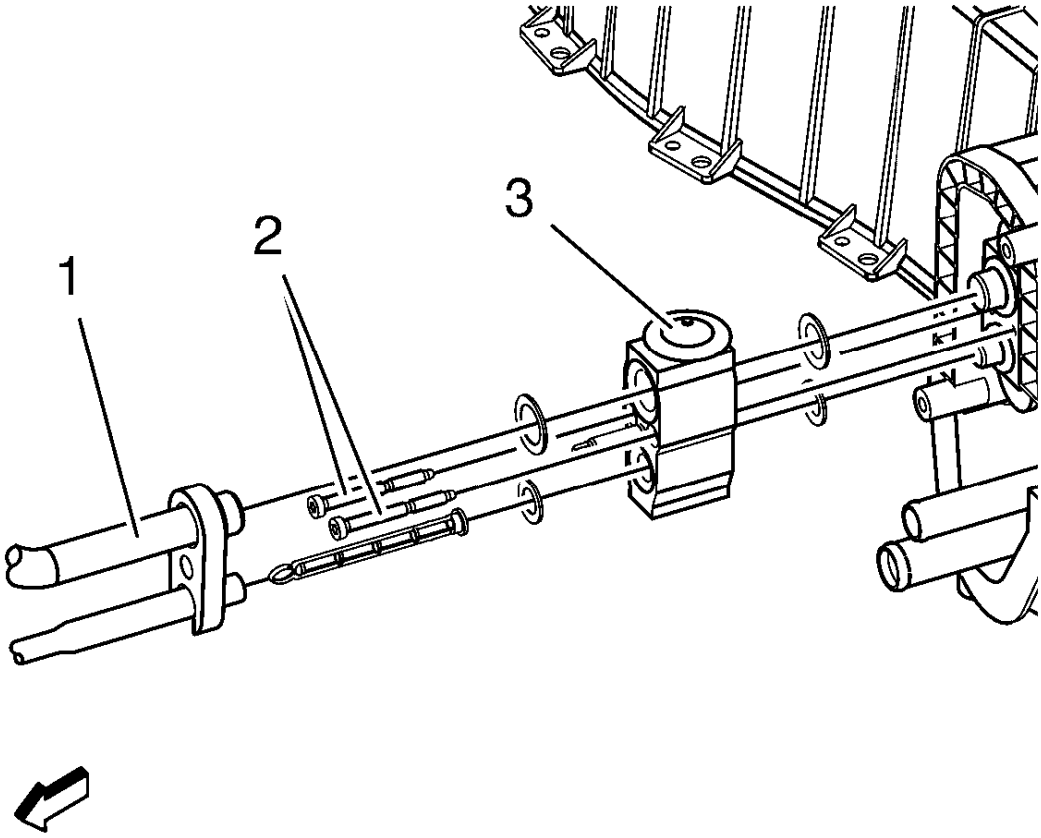

Fig. 41: Air Conditioning Evaporator Hose, Thermal Expansion Valve And Bolts
Courtesy of GENERAL MOTORS COMPANY

1. Install NEW system seals. Refer to **Air Conditioning System Seal Replacement**.

CAUTION: Refer to Fastener Caution .

2. Install air conditioning evaporator thermal expansion valve (3) and the 2 air conditioning evaporator thermal expansion valve bolts (2) and tighten to 15 N.m (11 lb ft).
3. Install air conditioning evaporator hose (1) to air conditioning evaporator thermal expansion valve (3).

   Install and tighten hose bolt to 19 N.m (14 lb ft).

4. Install brake pipes.
5. Evacuate and charge the refrigerant system. Refer to **Refrigerant Recovery and Recharging**.

6. Leak test the fittings using the **GE 39400-A** detector.

AIR CONDITIONING (A/C) REFRIGERANT PRESSURE SENSOR REPLACEMENT

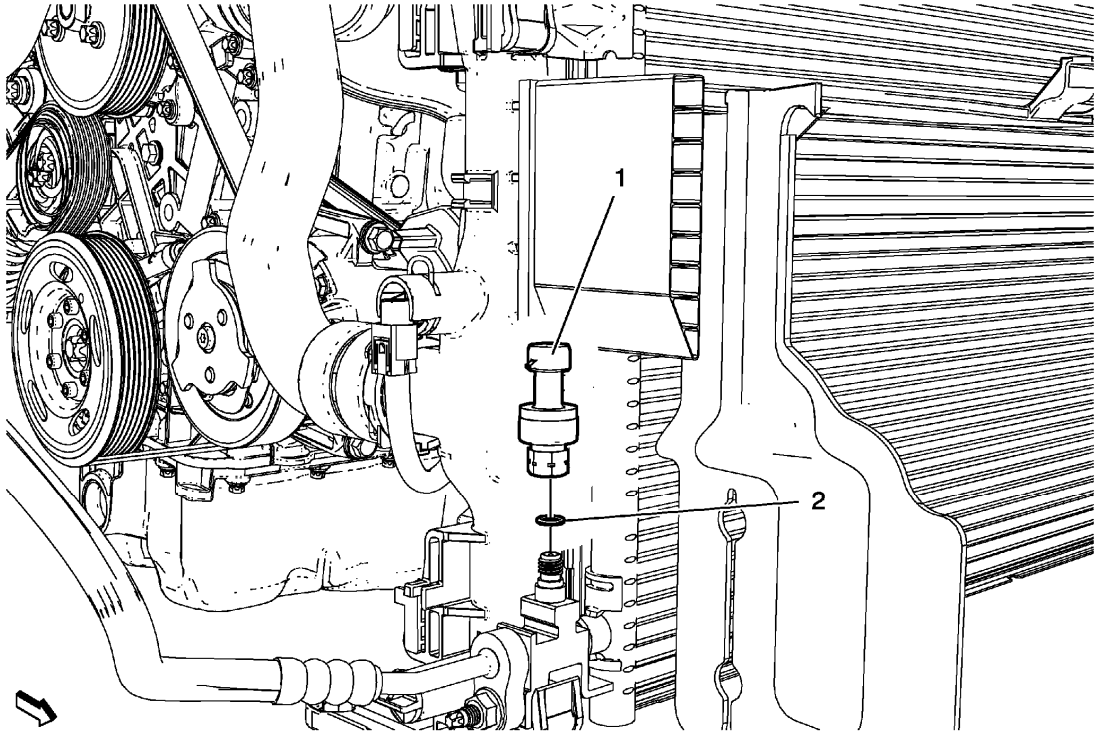

Fig. 42: Air Conditioning Refrigerant Pressure Sensor
Courtesy of GENERAL MOTORS COMPANY

Air Conditioning (A/C) Refrigerant Pressure Sensor Replacement

Callout	Component Name
Preliminary Procedures Remove front bumper fascia. Refer to **Front Bumper Fascia Replacement** .	
1	Air Conditioning Refrigerant Pressure Sensor **CAUTION:** **Refer to Fastener Caution .** **Procedure** Disconnect electrical connector. **Tighten** 6 N.m (53 lb in)
2	Air Conditioning Refrigerant Pressure Sensor O-ring **Procedure** Using **GE 39400-A** detector leak test A/C compressor fittings. **Special Tools**

	GE 39400-A Electronic Halogen Leak Detector For equivalent regional tools, refer to **Special Tools**.

AIR CONDITIONING CONDENSER REPLACEMENT

Removal Procedure

1. Recover the refrigerant. Refer to **Refrigerant Recovery and Recharging**.
2. Remove front bumper fascia. Refer to **Front Bumper Fascia Replacement** .

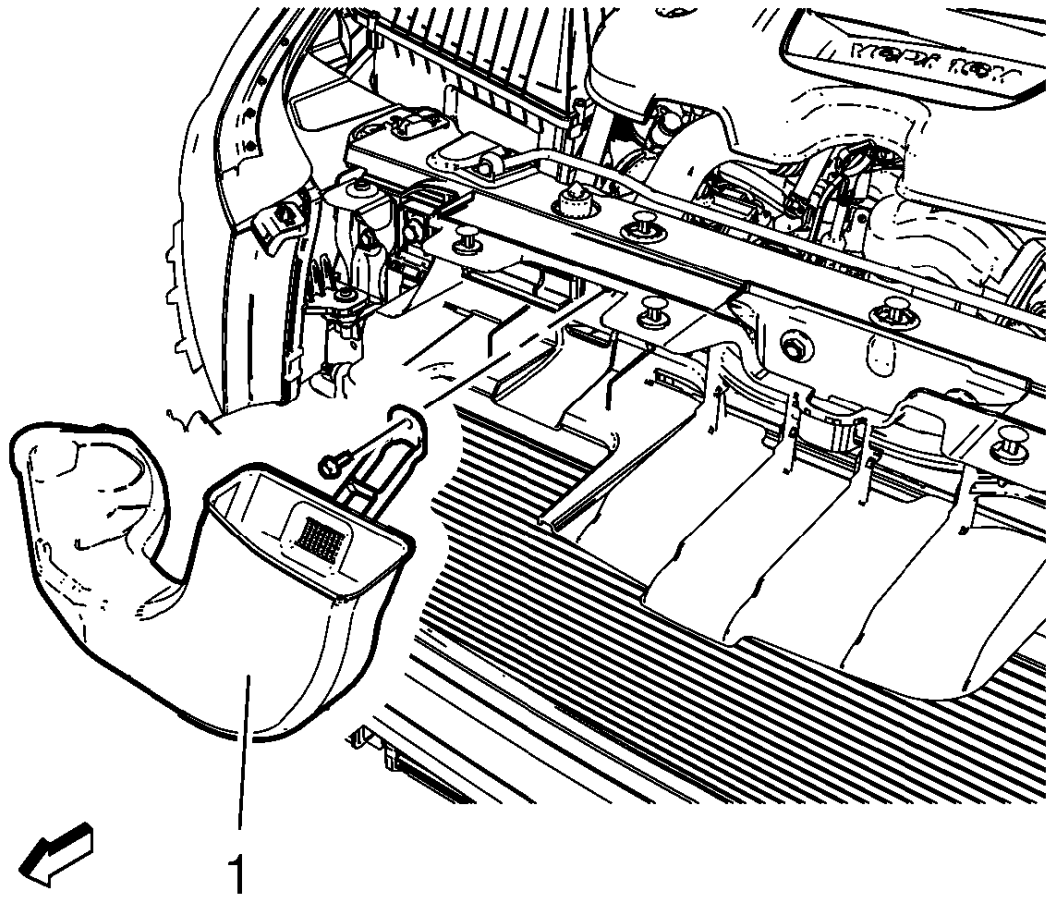

Fig. 43: Air Intake Duct
Courtesy of GENERAL MOTORS COMPANY

3. Remove air intake duct (1).
4. Remove air conditioning compressor and condenser hose from condenser. Refer to **Air Conditioning Compressor and Condenser Hose Replacement (1.8L LUW and LWE)**, **Air Conditioning Compressor and Condenser Hose Replacement (1.4L LUV)**.

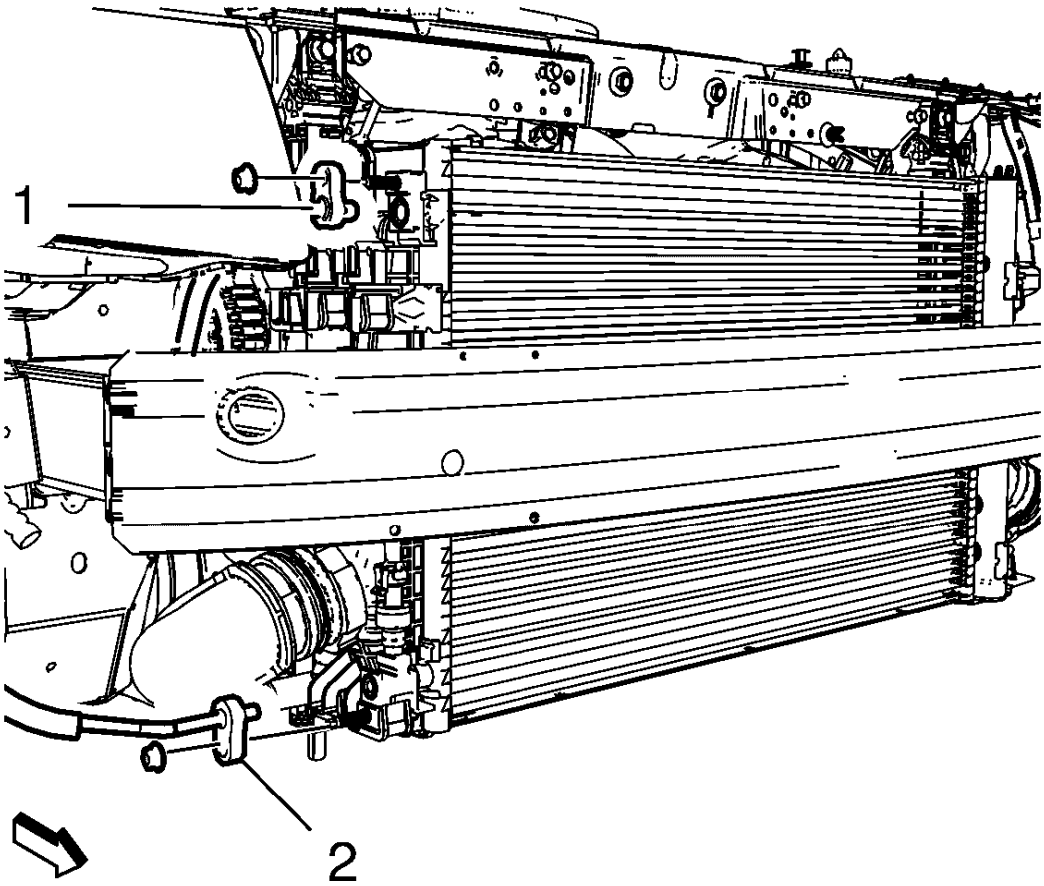

Fig. 44: Air Conditioning Condenser Hose
Courtesy of GENERAL MOTORS COMPANY

5. Remove air conditioning condenser hose bolt and air conditioning condenser hose (1, 2).
6. Remove air conditioning refrigerant pressure sensor. Refer to **Air Conditioning (A/C) Refrigerant Pressure Sensor Replacement**.

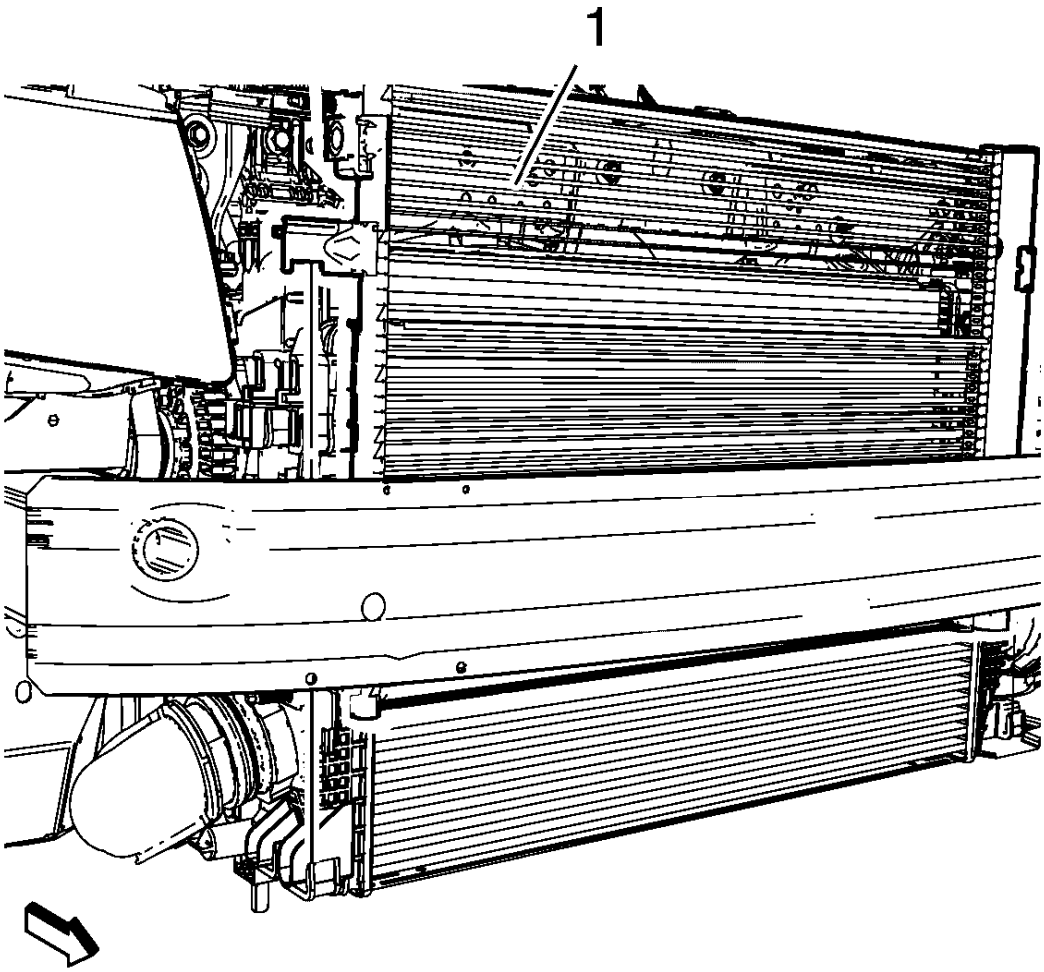

Fig. 45: Air Conditioning Condensor
Courtesy of GENERAL MOTORS COMPANY

7. Remove air conditioning condenser (1).

Installation Procedure

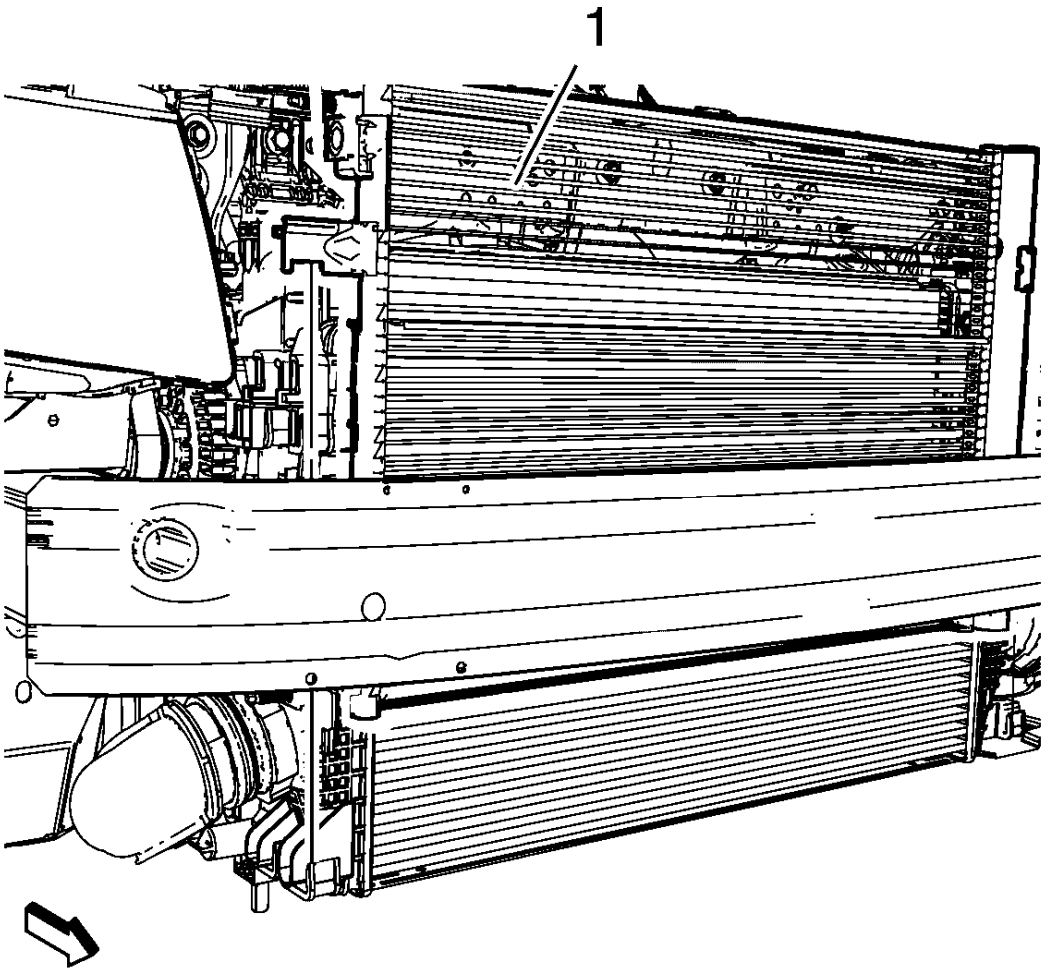

Fig. 46: Air Conditioning Condensor
Courtesy of GENERAL MOTORS COMPANY

1. Install air conditioning condenser (1).
2. Install air conditioning refrigerant pressure sensor. Refer to **Air Conditioning (A/C) Refrigerant Pressure Sensor Replacement**.

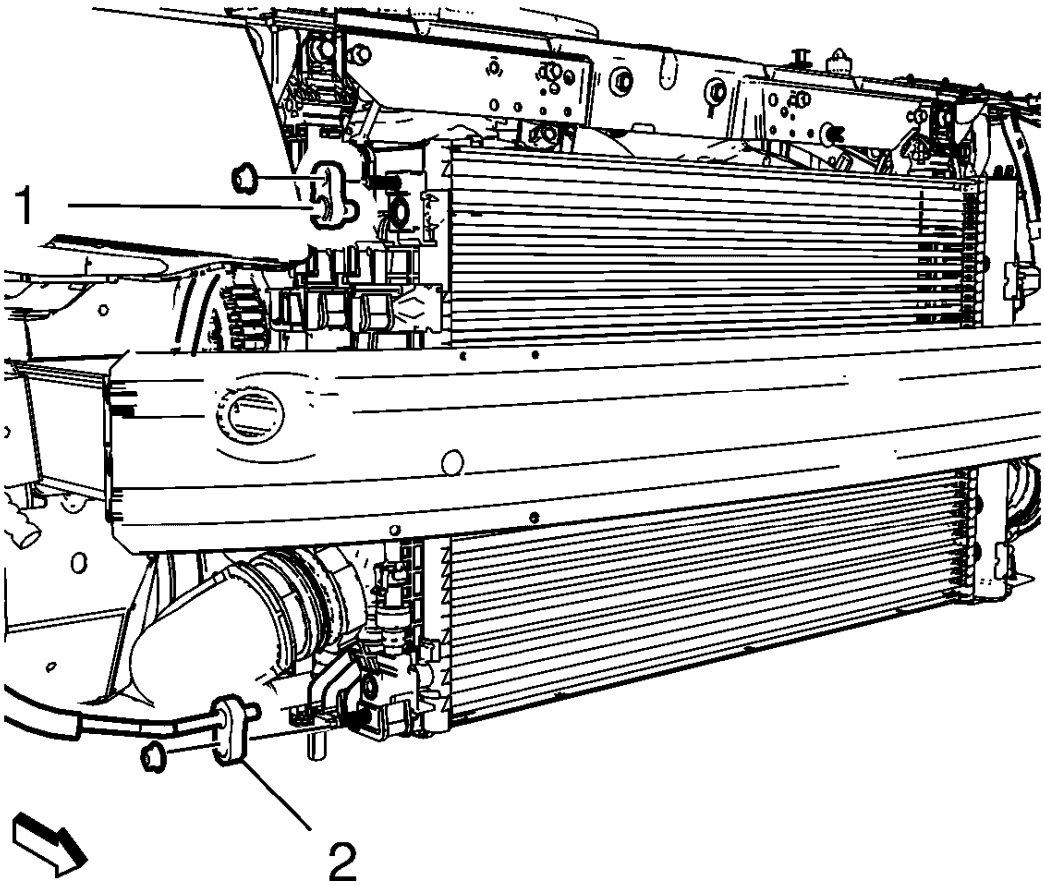

Fig. 47: Air Conditioning Condenser Hose
Courtesy of GENERAL MOTORS COMPANY

CAUTION: Refer to Fastener Caution .

3. Install air conditioning condenser hose (1, 2) and air conditioning condenser hose bolt and tighten to 19 N.m (14 lb ft).
4. Install air conditioning compressor and condenser hose to air conditioning condenser. Refer to **Air Conditioning Compressor and Condenser Hose Replacement (1.8L LUW and LWE)**, **Air Conditioning Compressor and Condenser Hose Replacement (1.4L LUV)**.

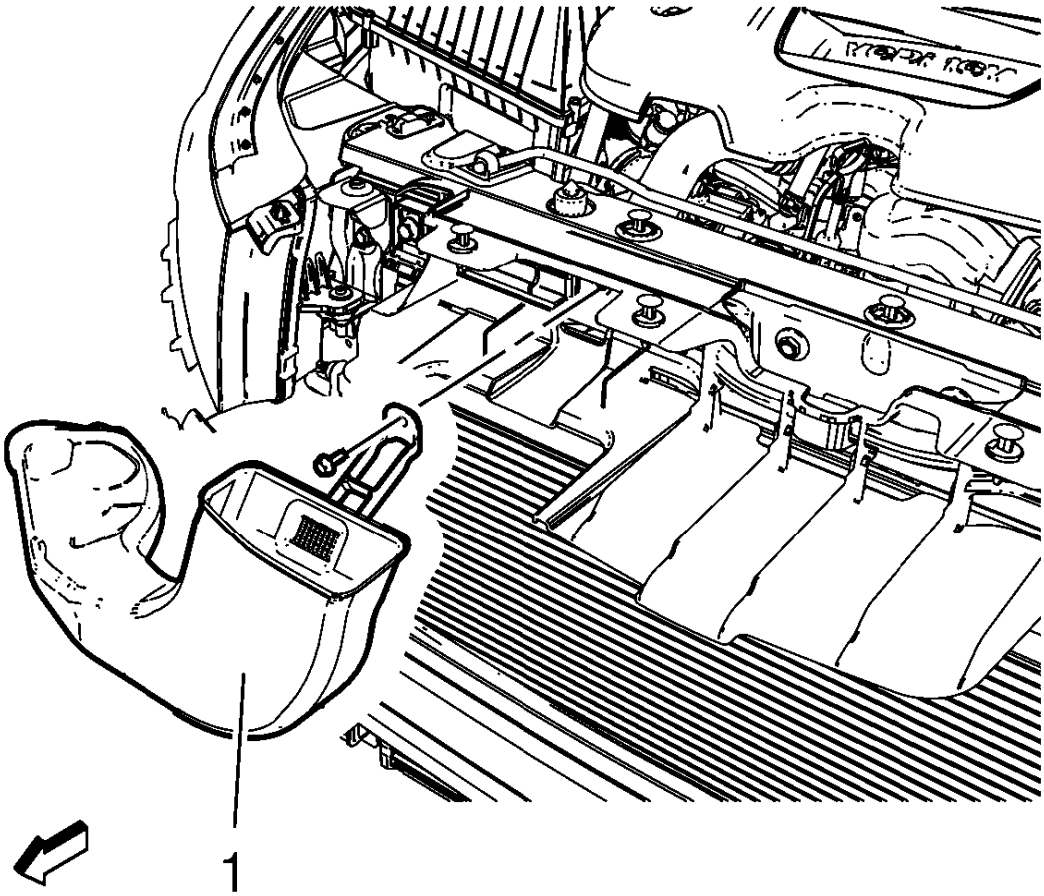

Fig. 48: Air Intake Duct
Courtesy of GENERAL MOTORS COMPANY

5. Install air intake duct (1).
6. Install front bumper fascia. Refer to **Front Bumper Fascia Replacement** .
7. Evacuate and charge the refrigerant system. Refer to **Refrigerant Recovery and Recharging**.

HEATER AND AIR CONDITIONING EVAPORATOR CASE REPLACEMENT

Removal Procedure

1. Recover the refrigerant. Refer to **Refrigerant Recovery and Recharging**.
2. Drain the cooling system. **Cooling System Draining and Filling (Static Fill)** , **Cooling System Draining and Filling (GE-47716 Fill)** .
3. Remove instrument panel assembly. Refer to **Instrument Panel Assembly Replacement** .

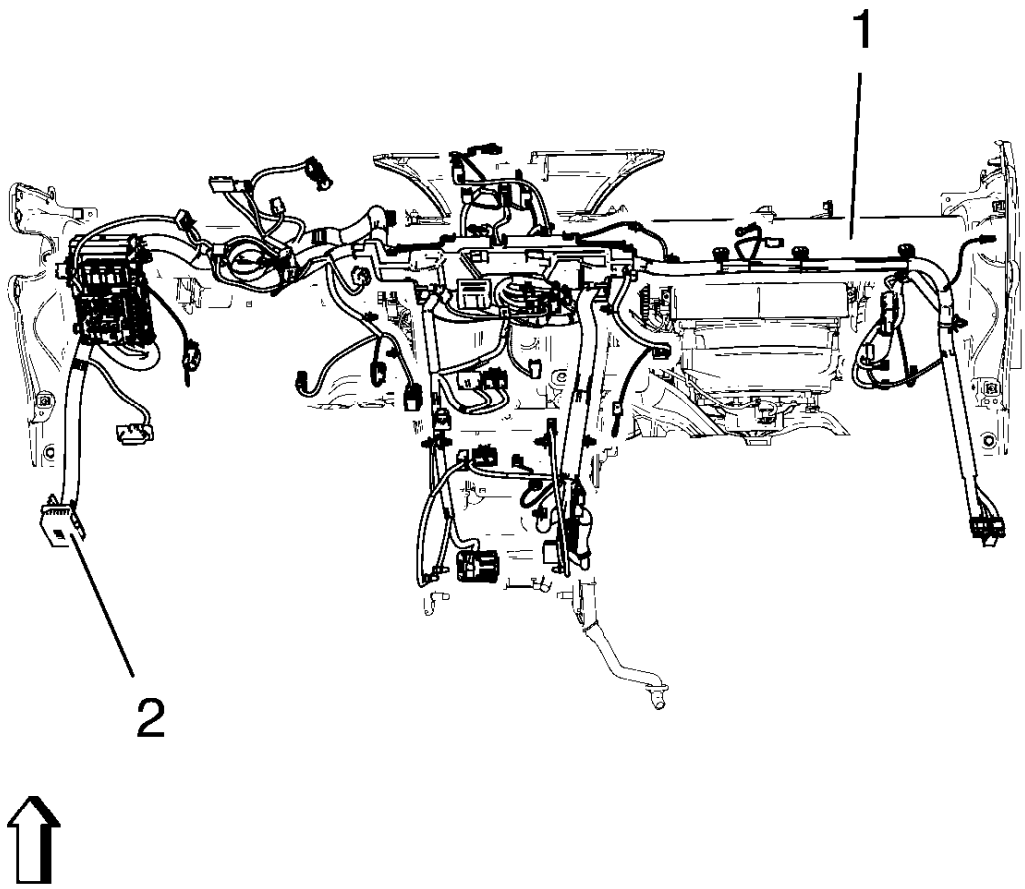

Fig. 49: Instrument Panel Wiring Harness And Instrument Panel Tie Bar
Courtesy of GENERAL MOTORS COMPANY

4. Remove instrument panel wiring harness (2) from instrument panel tie bar (1).

   Disconnect electrical connectors.

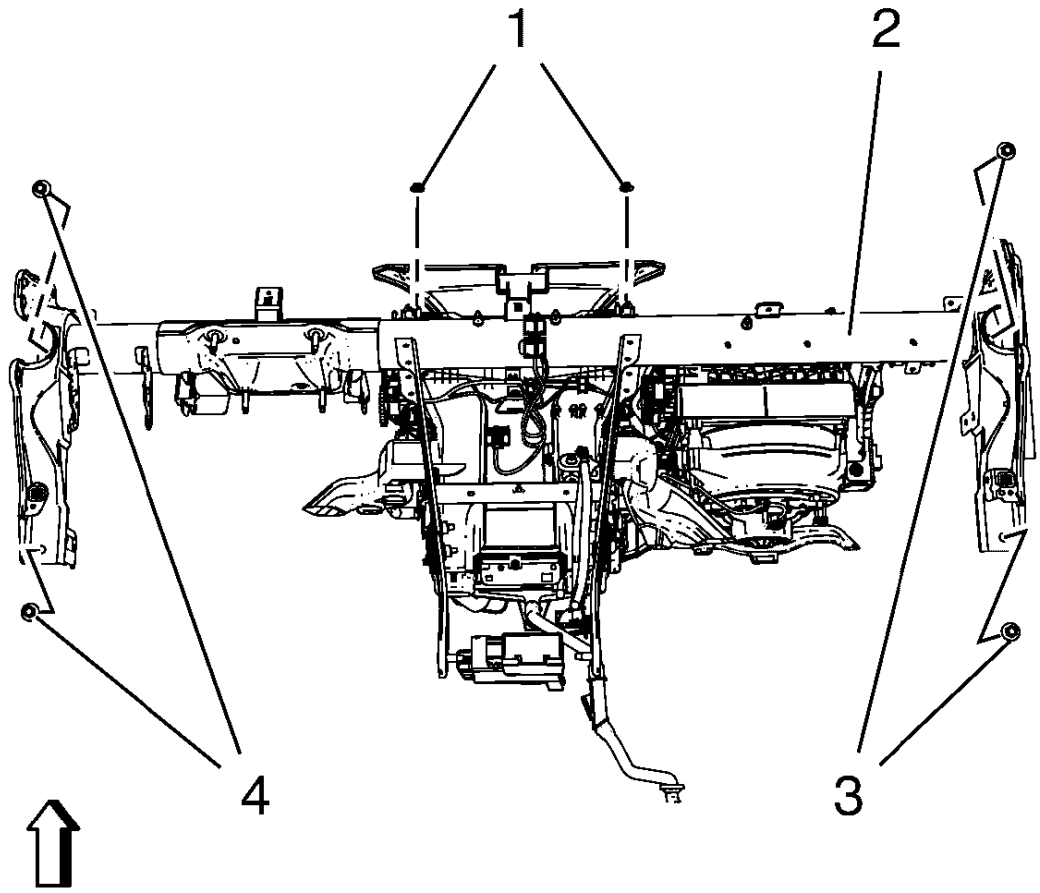

Fig. 50: Instrument Panel Tie Bar, Bolts And Nuts
Courtesy of GENERAL MOTORS COMPANY

5. Remove instrument panel tie bar (2).
    1. Remove 4 instrument panel tie bar bolts (3, 4).
    2. Remove 2 instrument panel tie bar nuts (1).

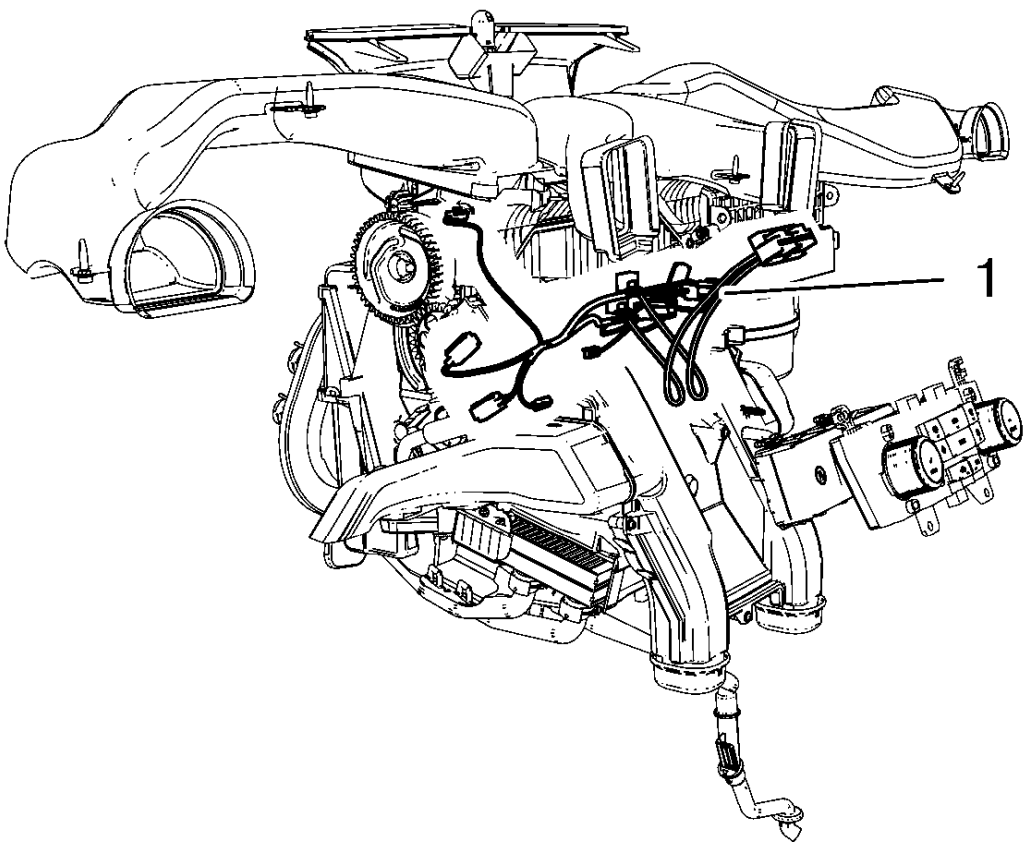

Fig. 51: Air Conditioning Module Wiring Harness
Courtesy of GENERAL MOTORS COMPANY

6. Remove air conditioning module wiring harness (1).

   Disconnect electrical connectors.

7. Remove heater core. Refer to **Heater Core Replacement**.
8. Remove blower motor. Refer to **Blower Motor Replacement**.
9. Remove heater and blower and air conditioning control module. Refer to **Heater and Blower and Air Conditioning Control Module Replacement** , or **Heater and Blower and Air Conditioning Control Module Replacement** .

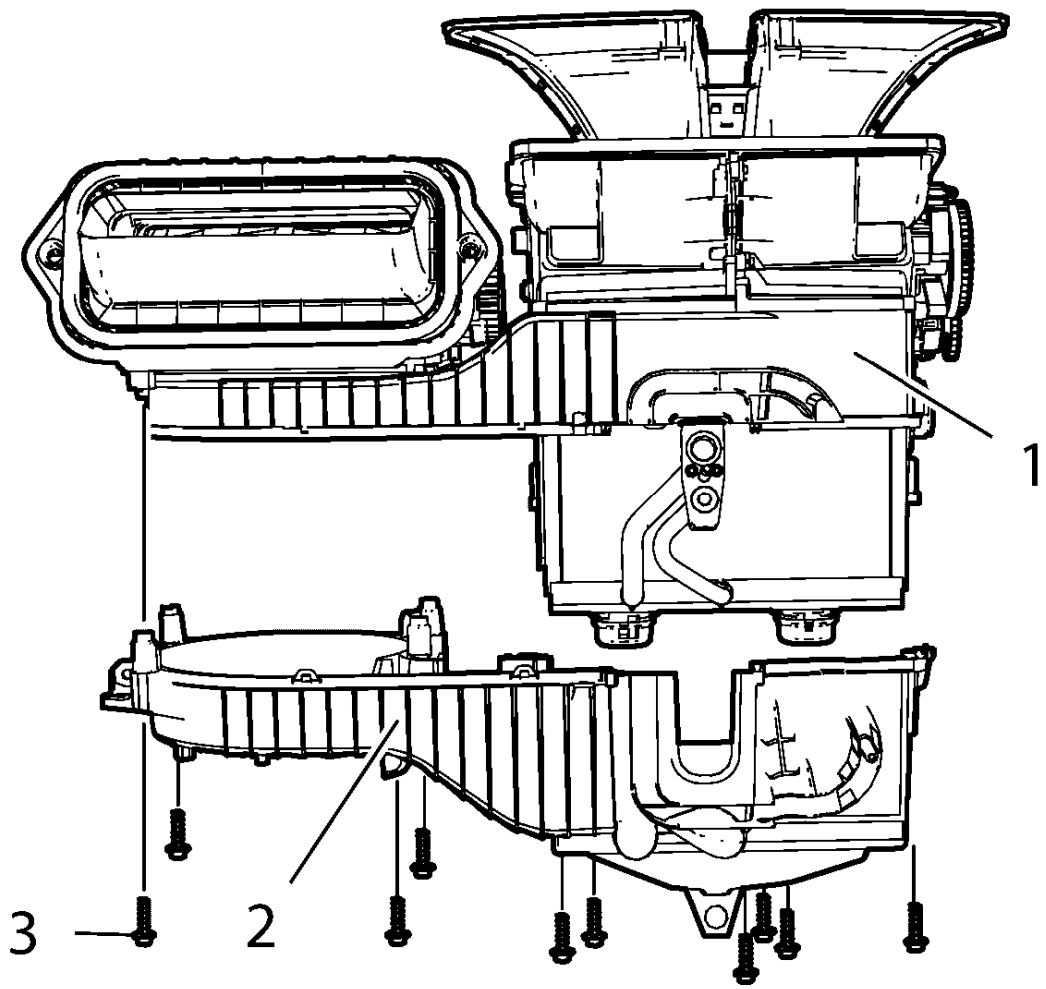

Fig. 52: Heater And Air Conditioning Evaporator Case
Courtesy of GENERAL MOTORS COMPANY

10. Remove heater and air conditioning evaporator case (2) from heater and blower and air conditioning control module (1).
11. Remove 10 heater and air conditioning evaporator case bolts (3).

Installation Procedure

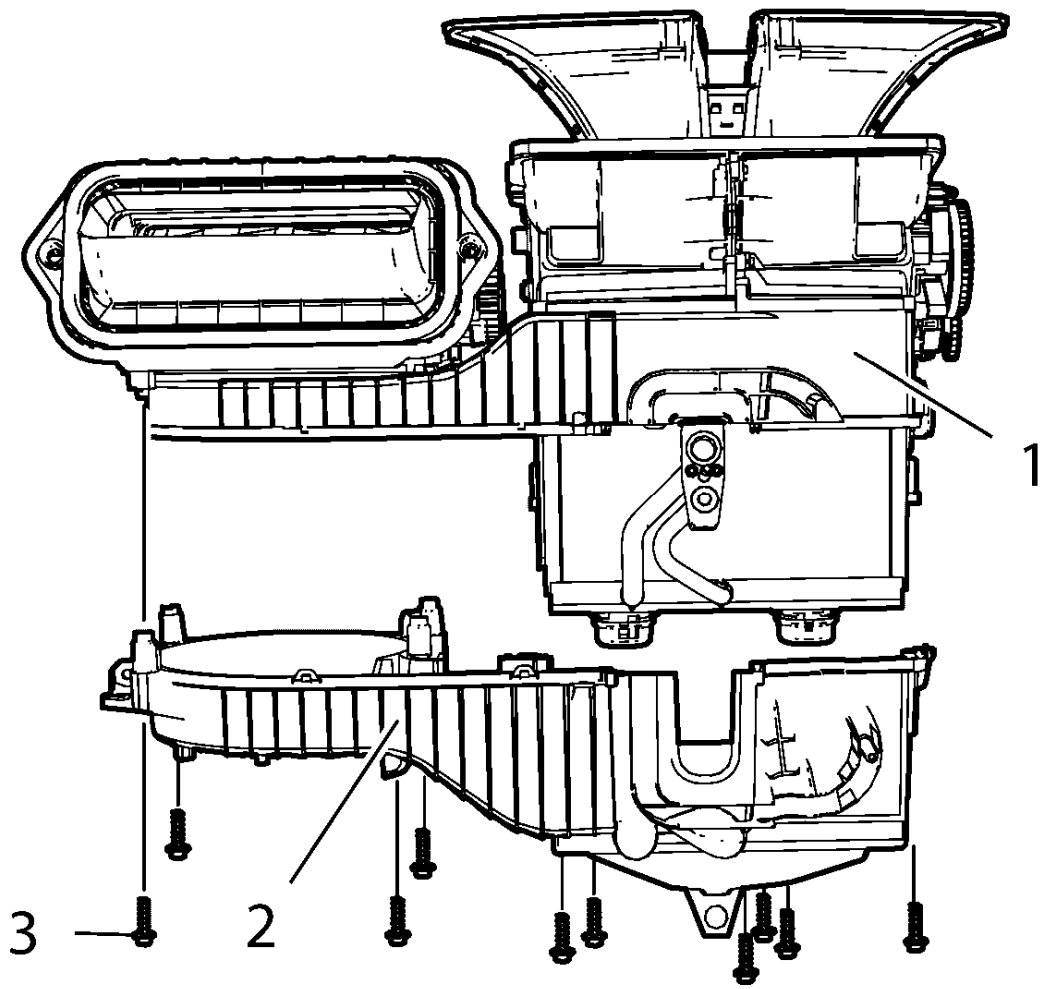

Fig. 53: Heater And Air Conditioning Evaporator Case
Courtesy of GENERAL MOTORS COMPANY

1. Install heater and air conditioning evaporator case (2) to heater and blower and air conditioning control module (1).

CAUTION: Refer to Fastener Caution .

2. Install 10 heater and air conditioning evaporator case bolts (3) and tighten to 2.5 Y (23 lb in).
3. Install heater and blower and air conditioning control module. Refer to **Heater and Blower and Air Conditioning Control Module Replacement** , or **Heater and Blower and Air Conditioning Control Module Replacement** .
4. Install blower motor. Refer to **Blower Motor Replacement**.
5. Install heater core. Refer to **Heater Core Replacement**.

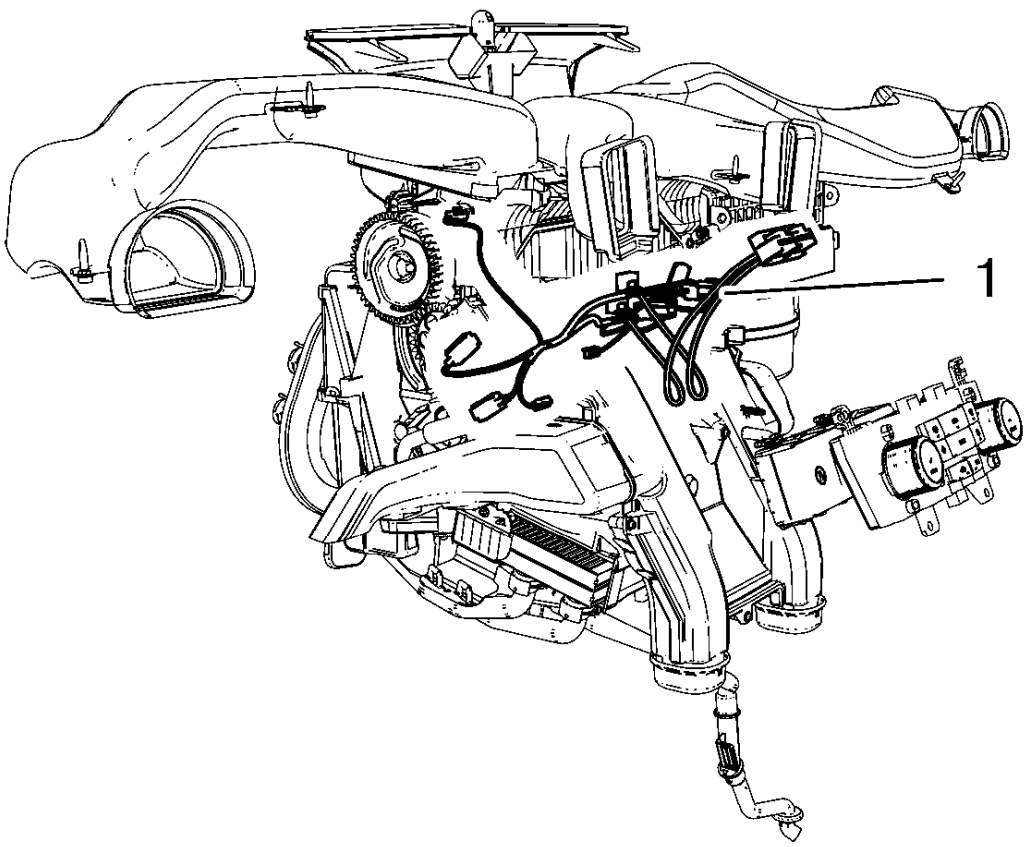

Fig. 54: Air Conditioning Module Wiring Harness
Courtesy of GENERAL MOTORS COMPANY

6. Install air conditioning module wiring harness (1).

   Connect electrical connectors.

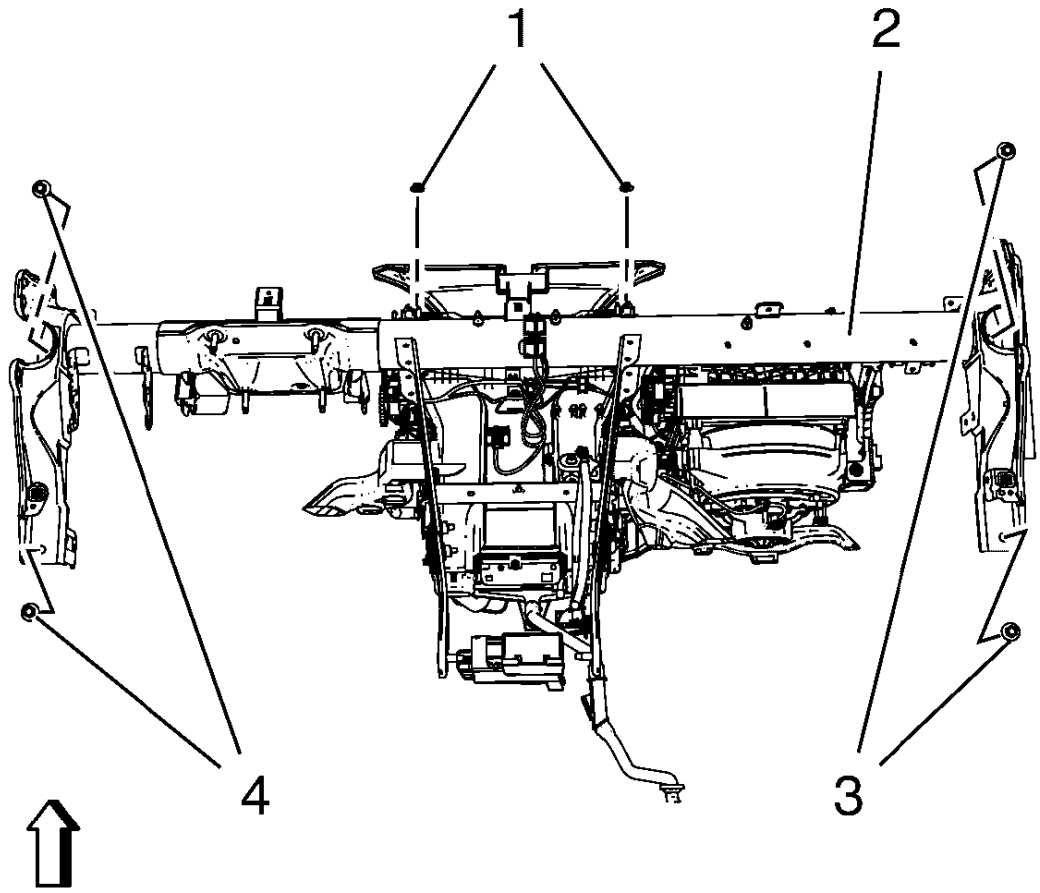

Fig. 55: Instrument Panel Tie Bar, Bolts And Nuts
Courtesy of GENERAL MOTORS COMPANY

7. Install instrument panel tie bar (2).
    1. Install 4 instrument panel tie bar bolts (3, 4) and tighten to 22 N.m (17 lb ft).
    2. Install 2 instrument panel tie bar nuts (1) and tighten to 9 N.m (80 lb in).

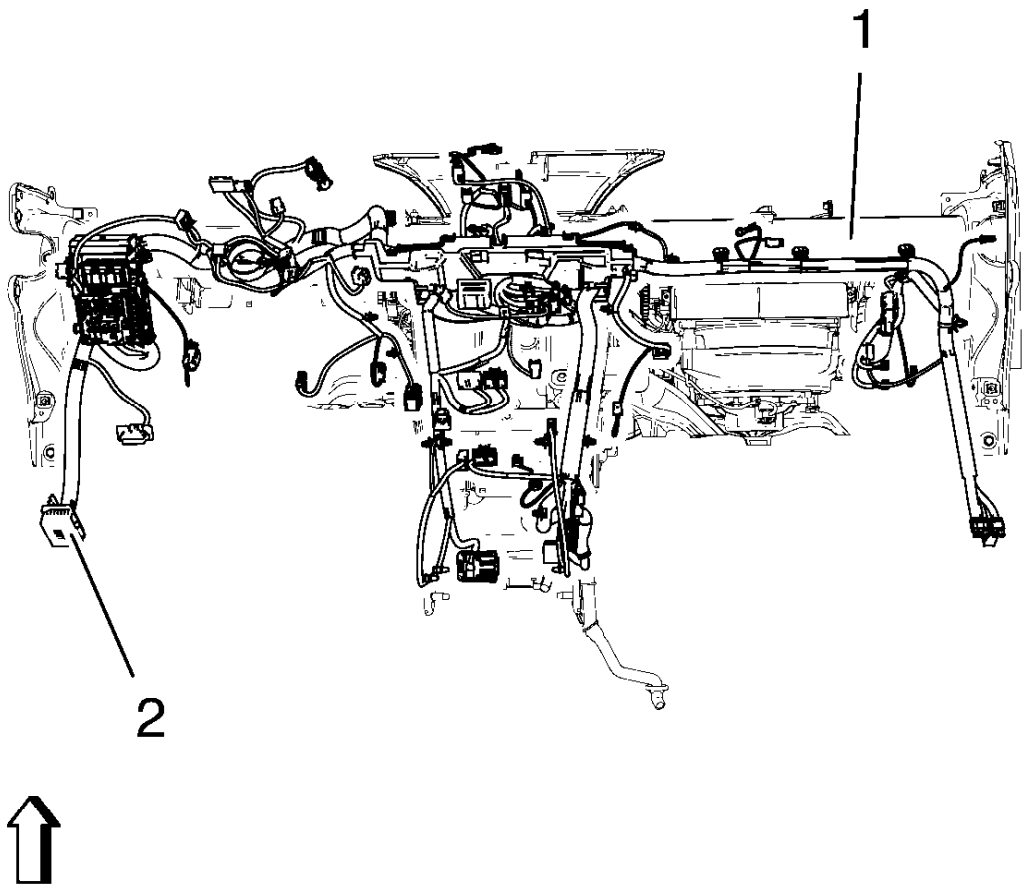

Fig. 56: Instrument Panel Wiring Harness And Instrument Panel Tie Bar
Courtesy of GENERAL MOTORS COMPANY

8. Install instrument panel wiring harness (2) from instrument panel tie bar (1).

   Connect electrical connectors.

9. Install instrument panel assembly. Refer to **Instrument Panel Assembly Replacement** .
10. Fill the cooling system. **Cooling System Draining and Filling (Static Fill)** , **Cooling System Draining and Filling (GE-47716 Fill)** .
11. Evacuate and charge the refrigerant system. Refer to **Refrigerant Recovery and Recharging**.

AIR CONDITIONING EVAPORATOR CORE REPLACEMENT

Removal Procedure

1. Remove instrument panel assembly. Refer to **Instrument Panel Assembly Replacement** .

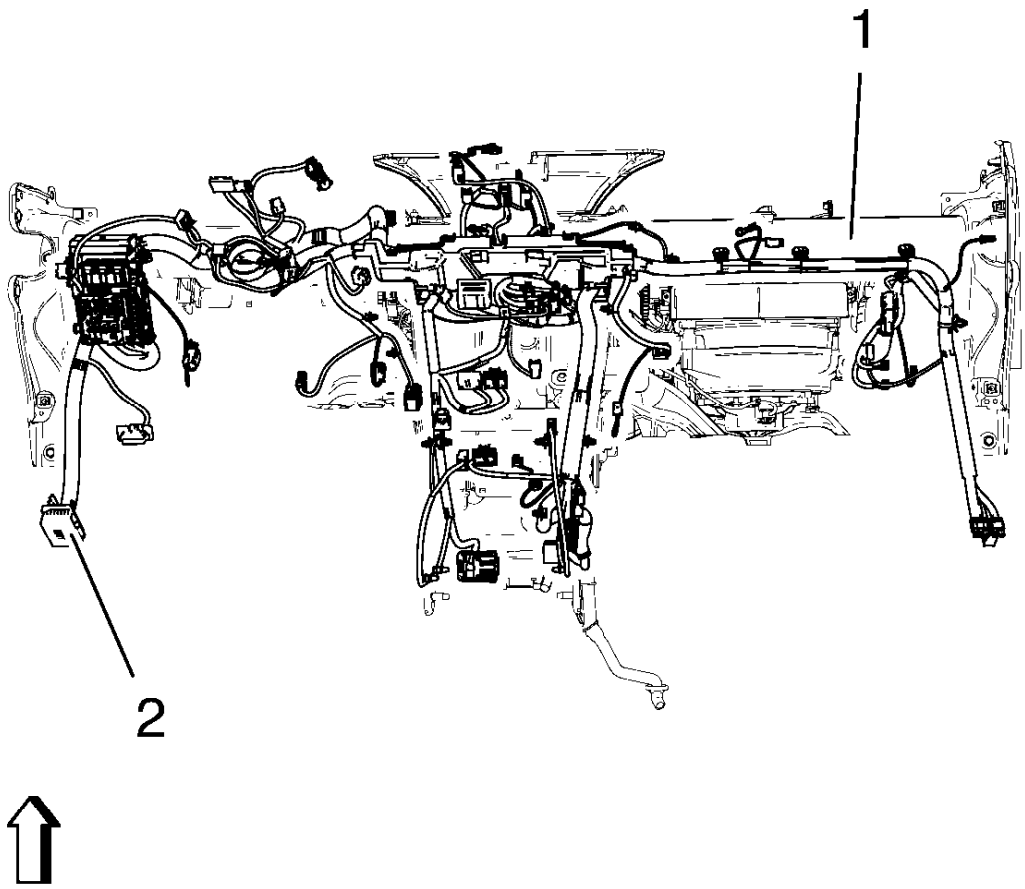

Fig. 57: Instrument Panel Wiring Harness And Instrument Panel Tie Bar
Courtesy of GENERAL MOTORS COMPANY

2. Remove instrument panel wiring harness (2) from instrument panel tie bar (1).

   Disconnect electrical connectors.

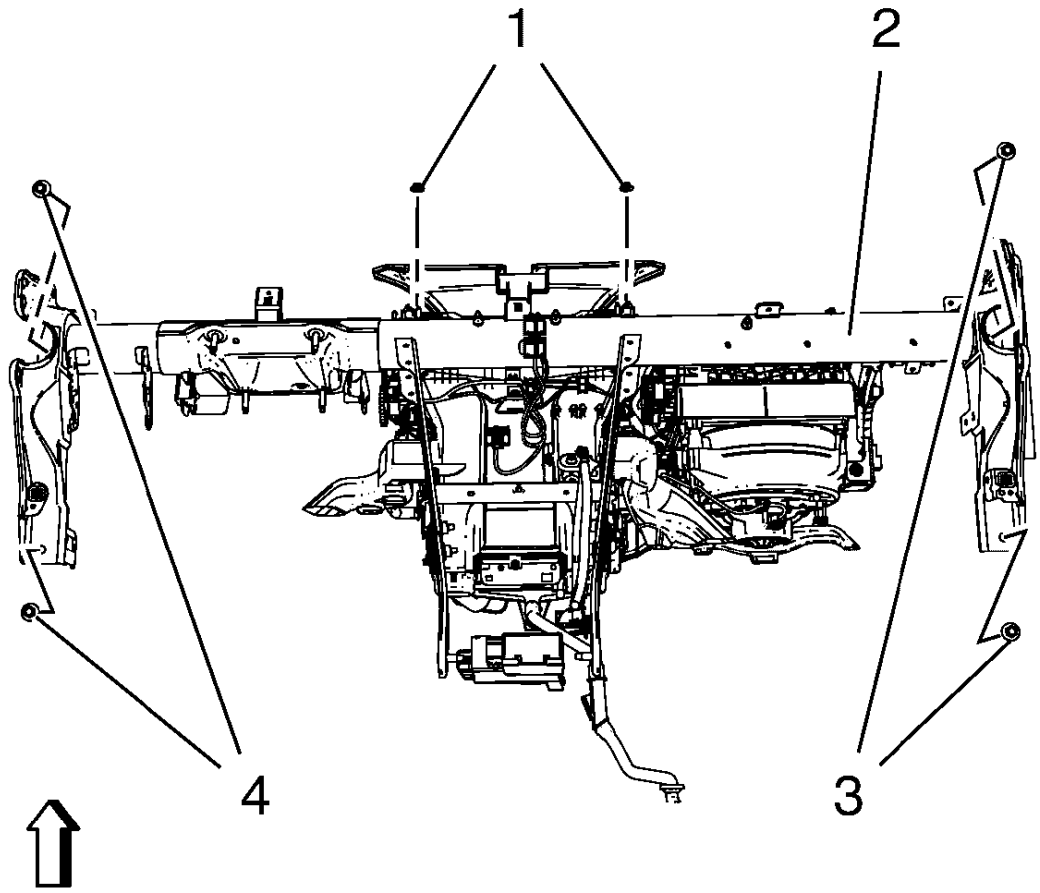

Fig. 58: Instrument Panel Tie Bar, Bolts And Nuts
Courtesy of GENERAL MOTORS COMPANY

3. Remove instrument panel tie bar (2).
    1. Remove 4 instrument panel tie bar bolts (3, 4).
    2. Remove 2 instrument panel tie bar nuts (1).

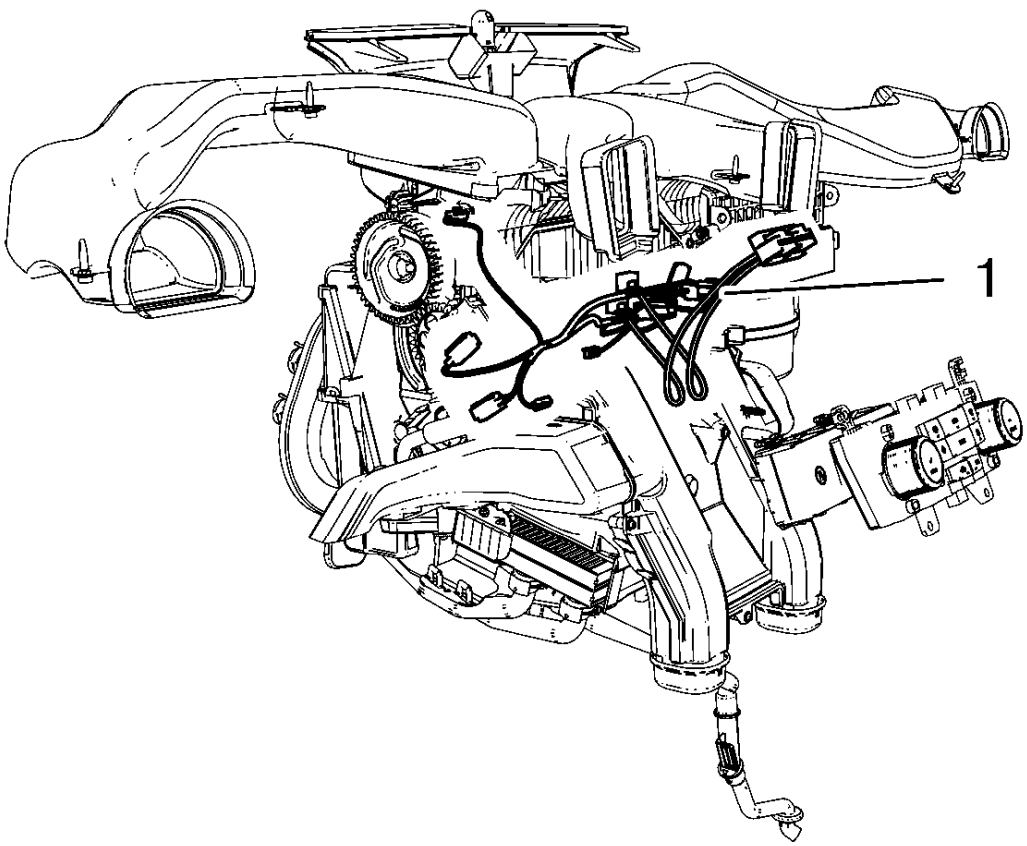

Fig. 59: Air Conditioning Module Wiring Harness
Courtesy of GENERAL MOTORS COMPANY

4. Remove air conditioning module wiring harness (1).

   Disconnect electrical connectors.

5. Remove heater core. Refer to **Heater Core Replacement**.
6. Remove blower motor. Refer to **Blower Motor Replacement**.
7. Remove heater and blower and air conditioning control module. Refer to **Heater and Blower and Air Conditioning Control Module Replacement** , or **Heater and Blower and Air Conditioning Control Module Replacement** .
8. Recover the refrigerant. Refer to **Refrigerant Recovery and Recharging**.

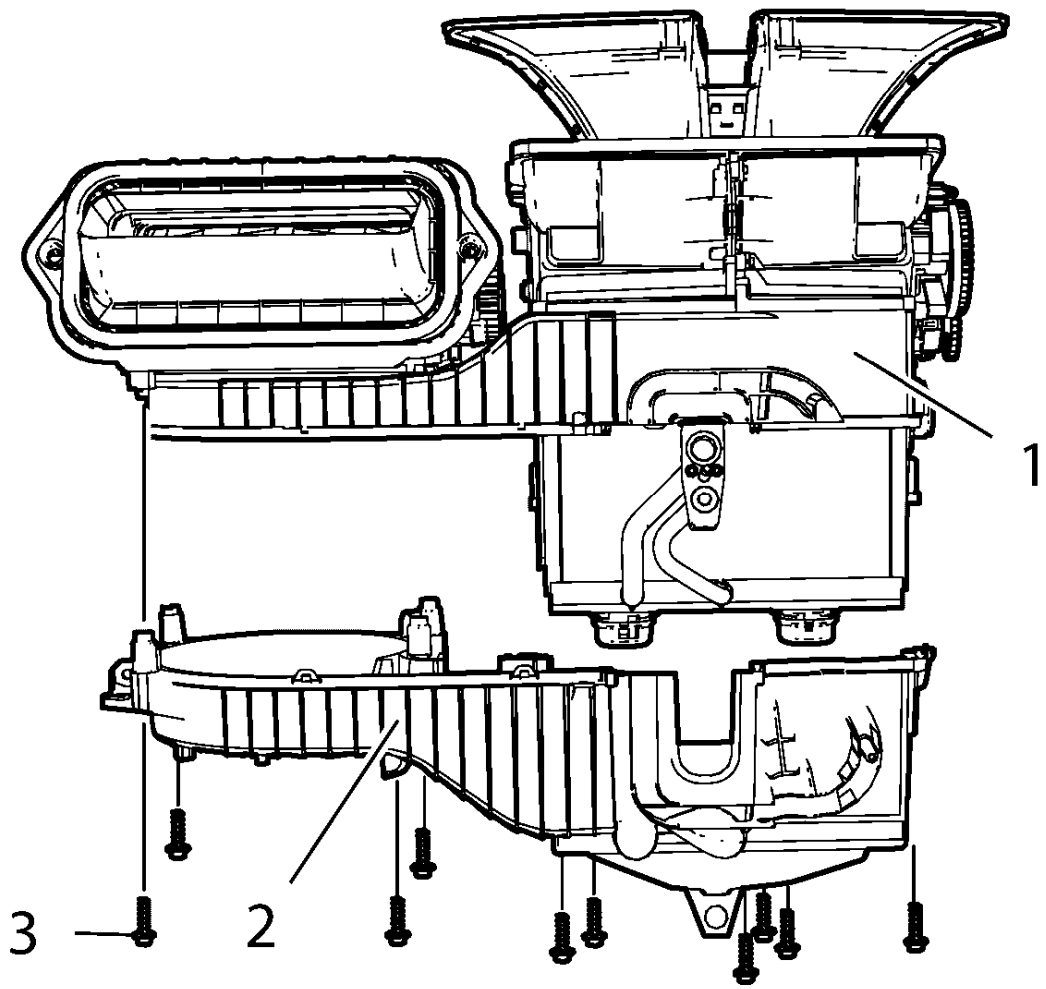

Fig. 60: Heater And Air Conditioning Evaporator Case
Courtesy of GENERAL MOTORS COMPANY

9. Remove heater and air conditioning evaporator case (2) from heater and blower and air conditioning control module (1).
10. Remove 10 heater and air conditioning evaporator case bolts (3).
11. Remove air conditioning evaporator core from heater and blower and air conditioning control module.

Installation Procedure

1. Install air conditioning evaporator core to heater and blower and air conditioning control module.

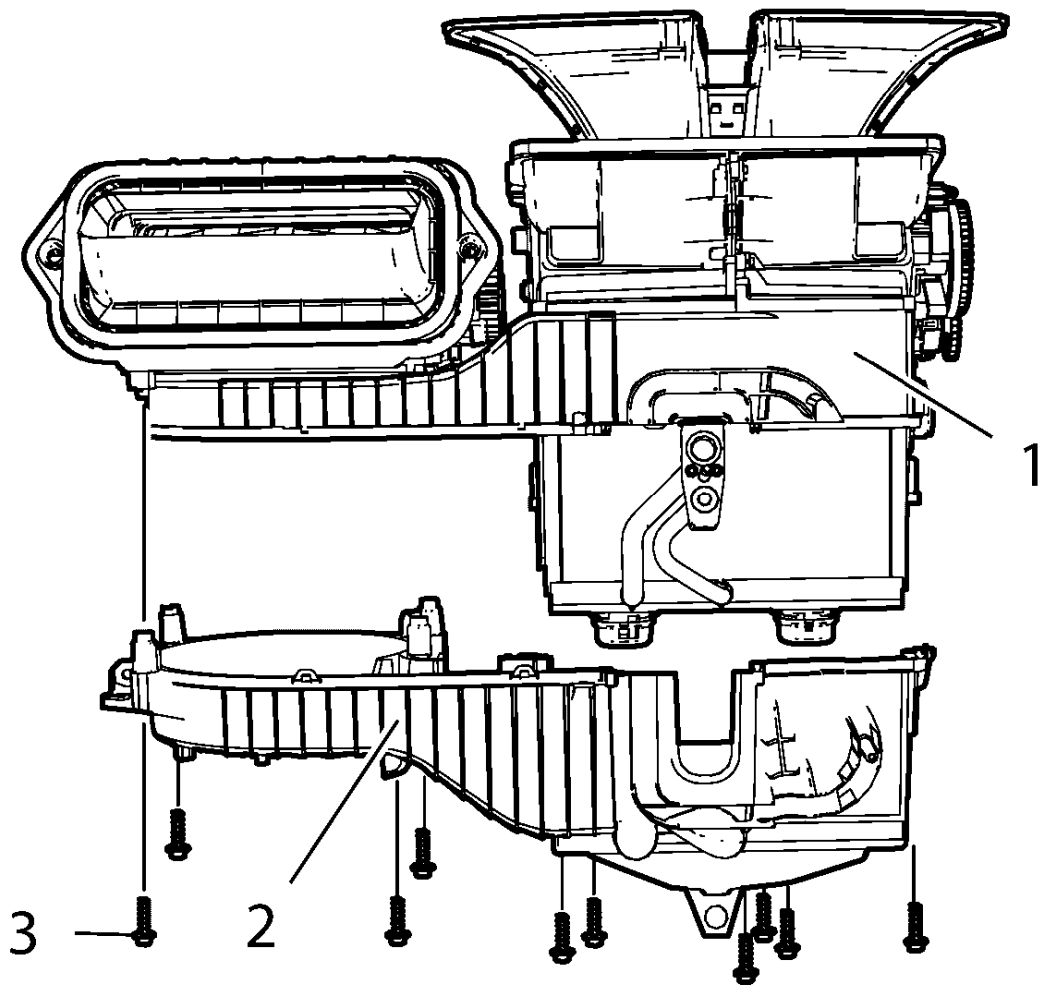

Fig. 61: Heater And Air Conditioning Evaporator Case
Courtesy of GENERAL MOTORS COMPANY

2. Install heater and air conditioning evaporator case (2) to heater and blower and air conditioning control module (1).

CAUTION: Refer to Fastener Caution .

3. Install 10 heater and air conditioning evaporator case bolts (3) and tighten to 2.5 N.m (22 lb in).
4. Refrigerant recovery and recharging. Refer to **Refrigerant Recovery and Recharging**.
5. Install heater and blower and air conditioning control module. Refer to **Heater and Blower and Air Conditioning Control Module Replacement** , or **Heater and Blower and Air Conditioning Control Module Replacement** .
6. Install blower motor. Refer to **Blower Motor Replacement**.
7. Install heater core. Refer to **Heater Core Replacement**.

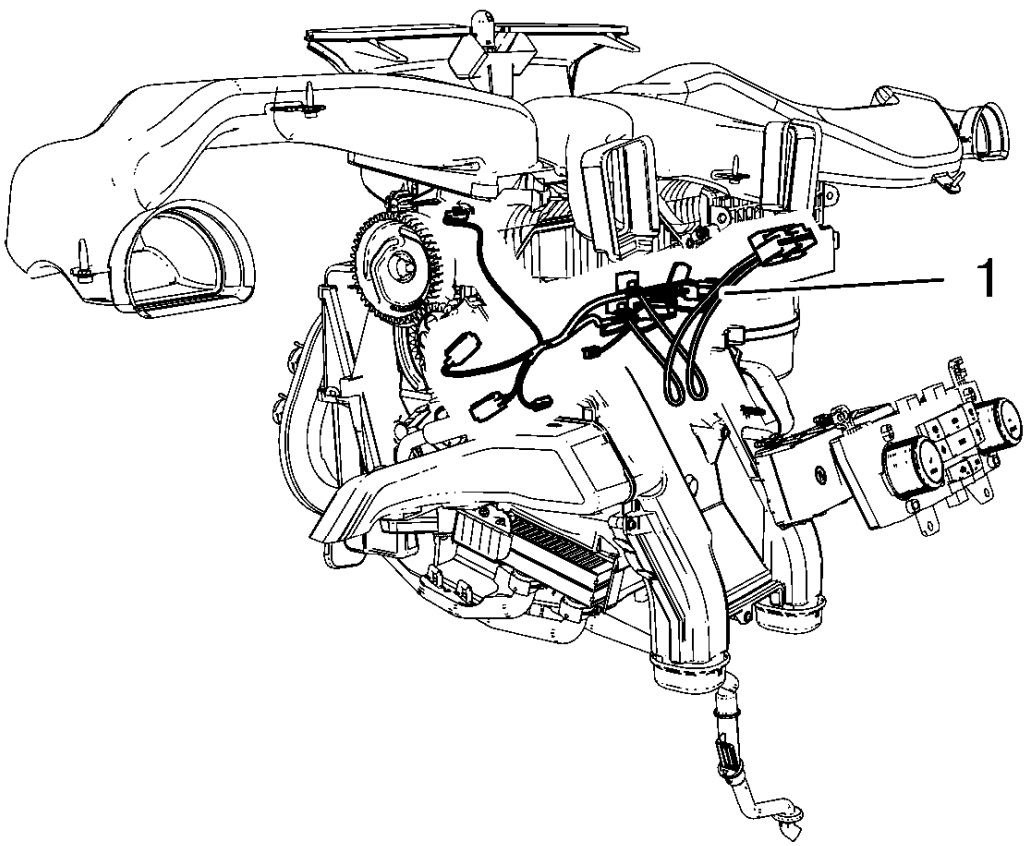

Fig. 62: Air Conditioning Module Wiring Harness
Courtesy of GENERAL MOTORS COMPANY

8. Install air conditioning module wiring harness (1).

   Connect electrical connectors.

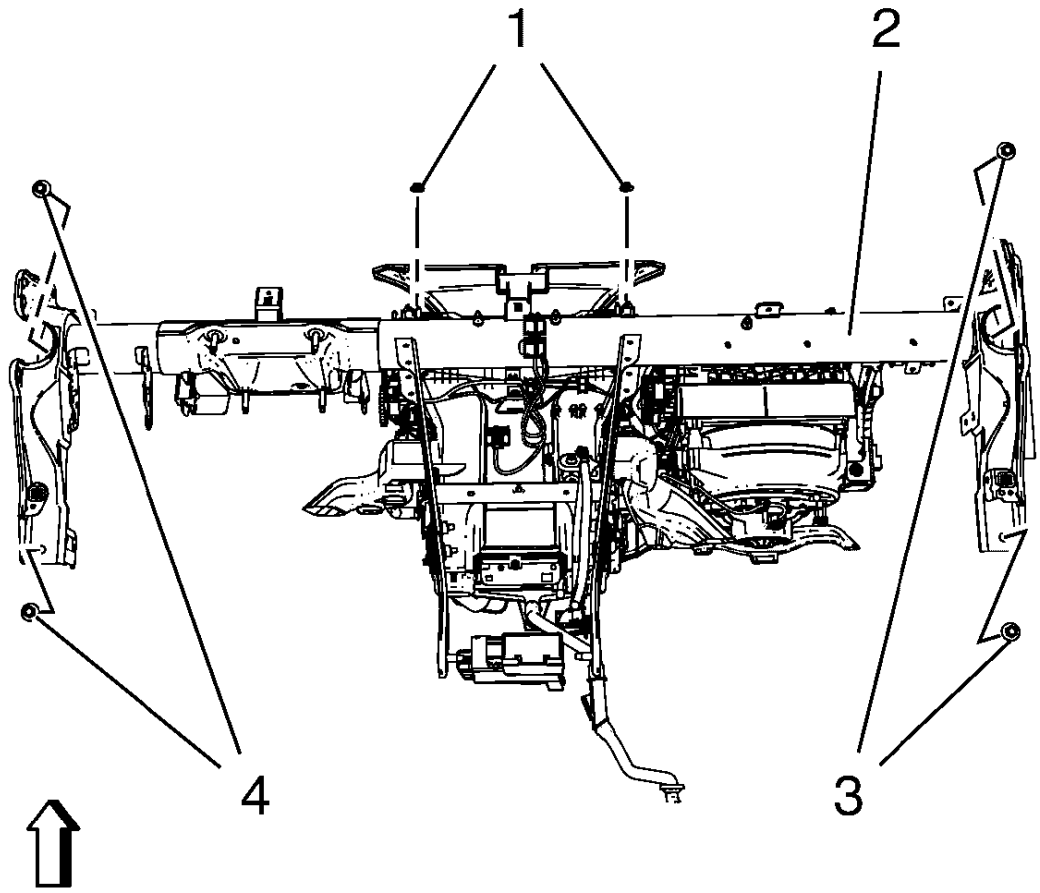

Fig. 63: Instrument Panel Tie Bar, Bolts And Nuts
Courtesy of GENERAL MOTORS COMPANY

9. Install instrument panel tie bar (2).
    1. Install 4 instrument panel tie bar bolts (3, 4) and tighten to 22 N.m (17 lb ft).
    2. Install 2 instrument panel tie bar nuts (1) and tighten to 6 N.m (53 lb in).

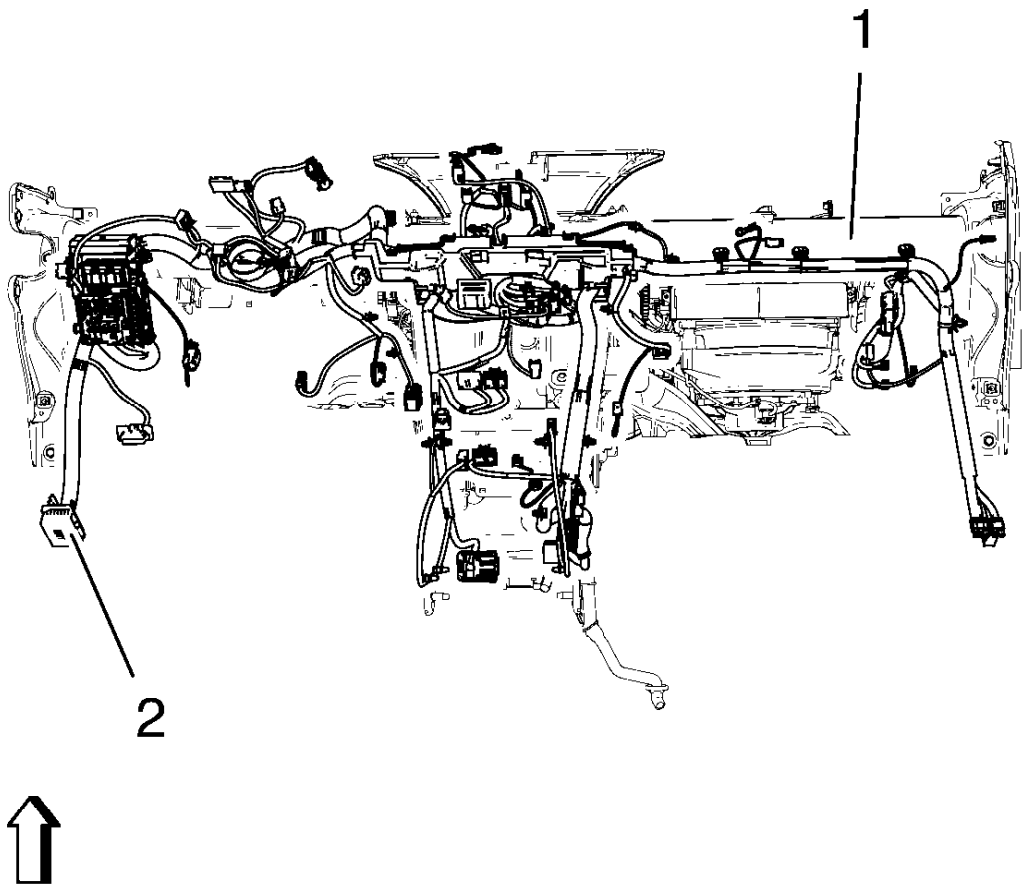

Fig. 64: Instrument Panel Wiring Harness And Instrument Panel Tie Bar
Courtesy of GENERAL MOTORS COMPANY

10. Install instrument panel wiring harness (2) from instrument panel tie bar (1).

    Connect electrical connectors.

11. Install instrument panel assembly. Refer to **Instrument Panel Assembly Replacement** .

AIR CONDITIONING EVAPORATOR AND BLOWER MODULE DRAIN HOSE REPLACEMENT

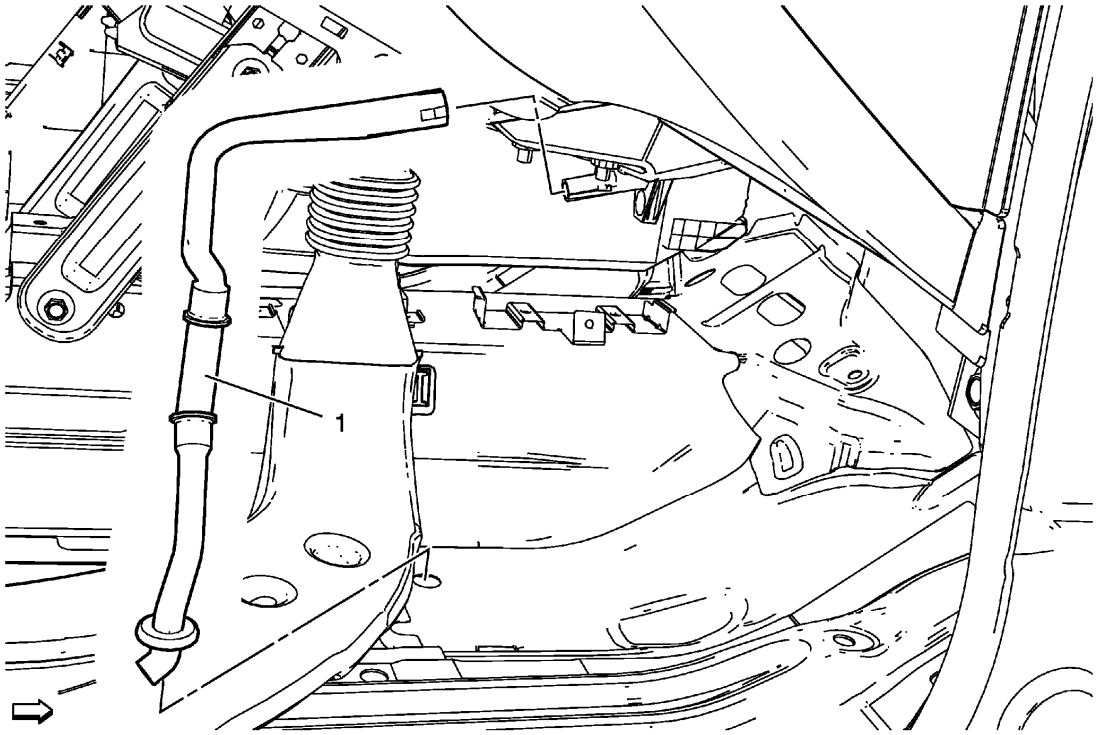

Fig. 65: Air Conditioning Evaporator And Air Conditioning Blower Module Drain Hose
Courtesy of GENERAL MOTORS COMPANY

Air Conditioning Evaporator and Blower Module Drain Hose Replacement

Callout	Component Name
Preliminary Procedures Remove front floor panel carpet passenger side. Refer to **Front Floor Panel Carpet Replacement** .	
1	Air Conditioning Evaporator and Blower Module Drain Hose

HEATER INLET HOSE REPLACEMENT (1.4L LUV)

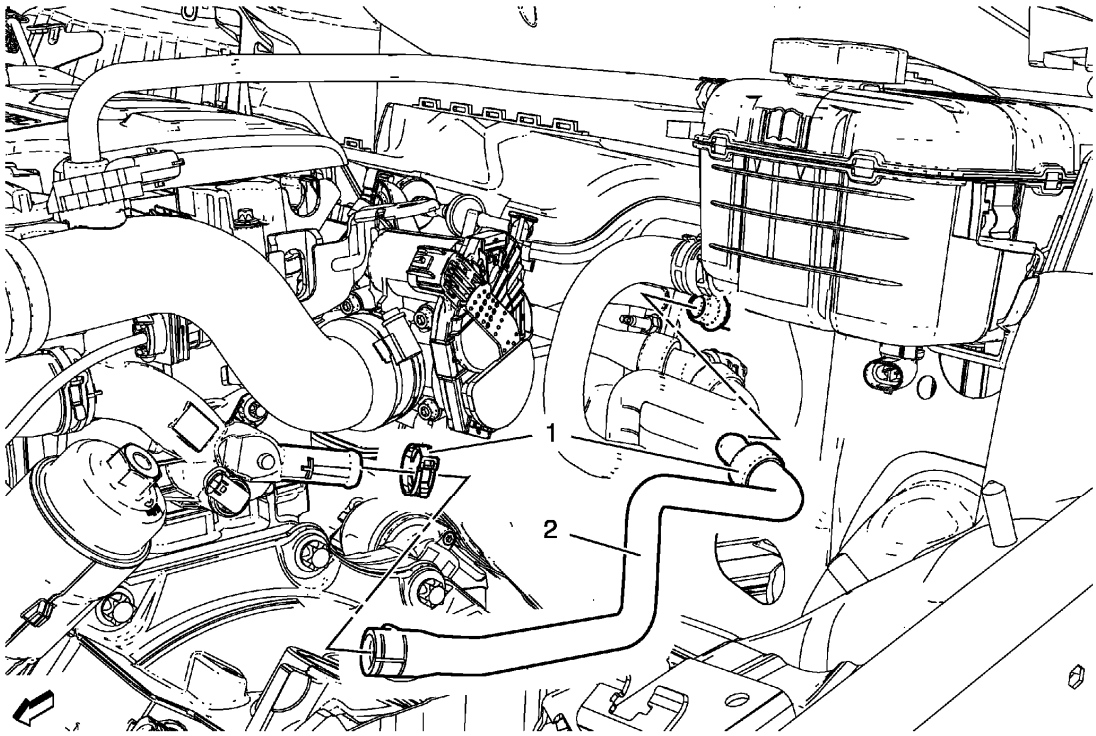

Fig. 66: Heater Inlet Hose (1.4L LUV)
Courtesy of GENERAL MOTORS COMPANY

Heater Inlet Hose Replacement (1.4L LUV)

Callout	Component Name
Preliminary Procedures Drain the cooling system. Refer to **Cooling System Draining and Filling (Static Fill)** , **Cooling System Draining and Filling (GE-47716 Fill)** .	
1	Heater Inlet Hose Clamp (Qty: 2)
2	Heater Inlet Hose

HEATER INLET HOSE REPLACEMENT (1.8L LUW AND LWE)

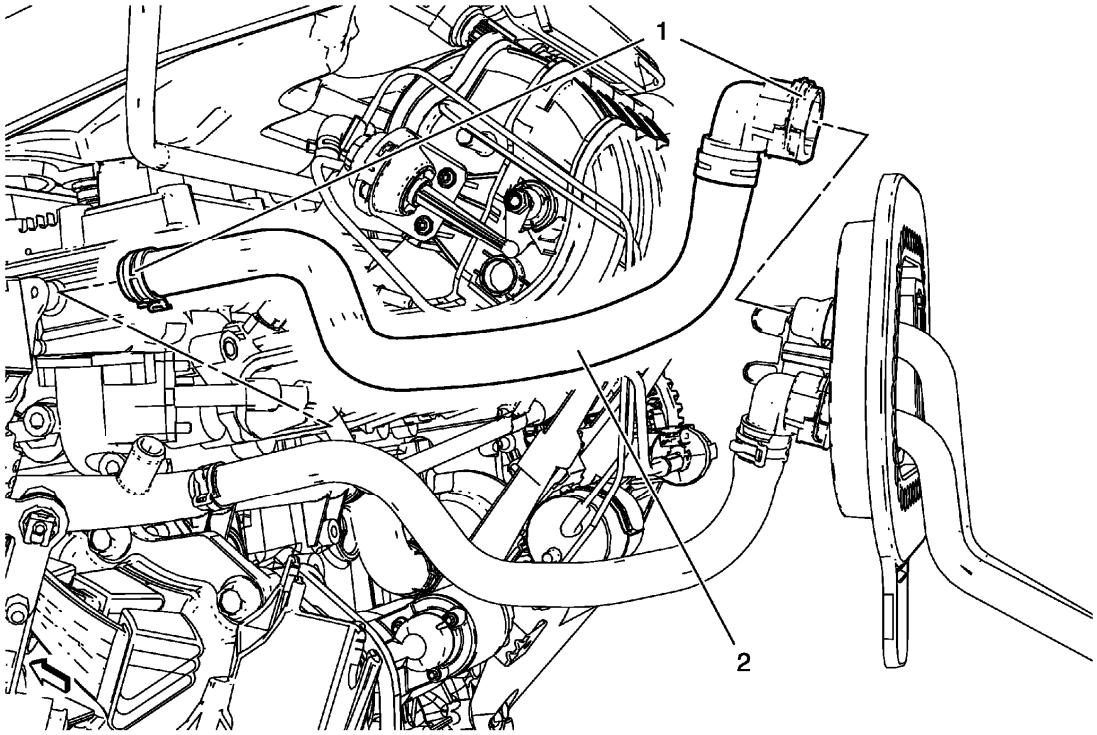

Fig. 67: Heater Inlet Hose - (1.8L LUW and LWE)
Courtesy of GENERAL MOTORS COMPANY

Heater Inlet Hose Replacement (1.8L LUW and LWE)

Callout	Component Name
Preliminary Procedures Drain the cooling system. Refer to **Cooling System Draining and Filling (Static Fill)** , **Cooling System Draining and Filling (GE-47716 Fill)** .	
1	Heater Inlet Hose Clamp (Qty: 2)
2	Heater Inlet Hose

HEATER OUTLET HOSE REPLACEMENT (1.4L LUV)

Removal Procedure

1. Drain the cooling system. Refer to **Cooling System Draining and Filling (Static Fill)** , **Cooling System Draining and Filling (GE-47716 Fill)** .

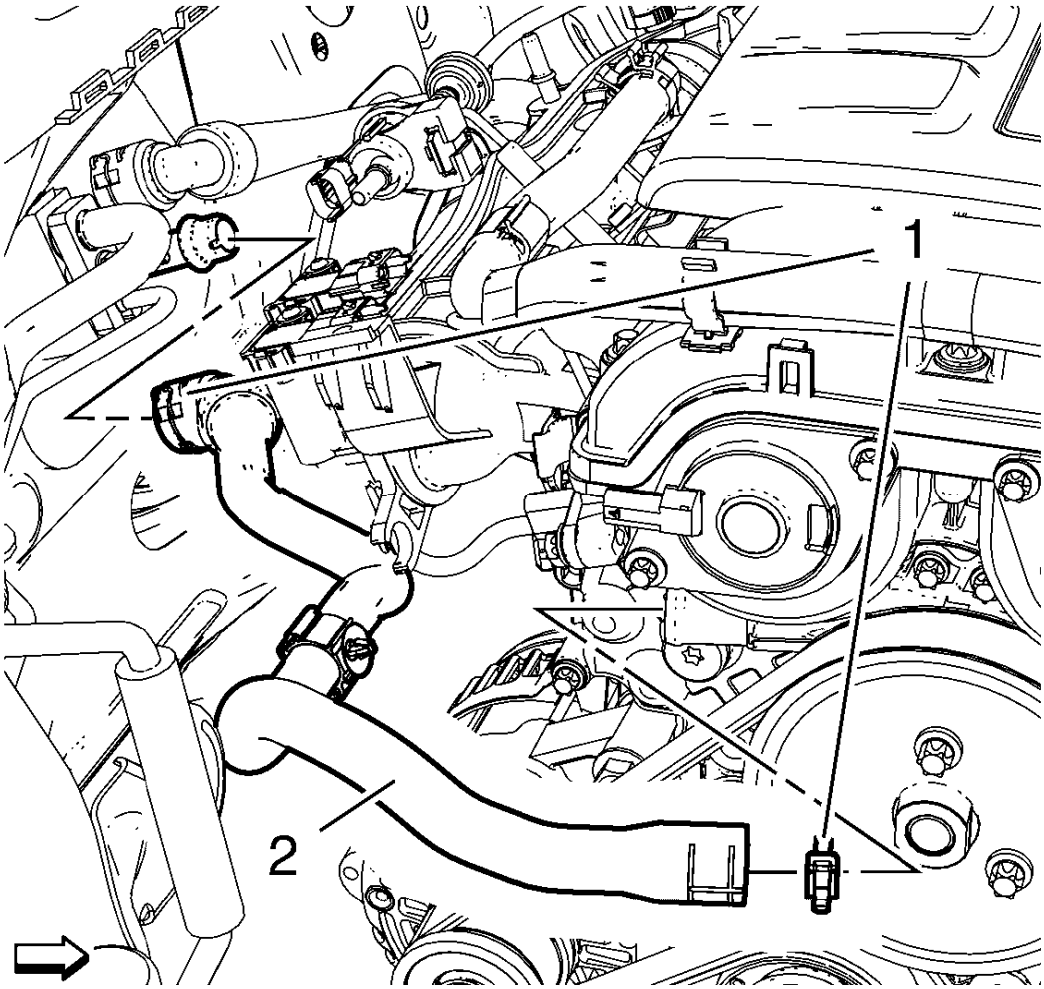

Fig. 68: Heater Outlet Hose
Courtesy of GENERAL MOTORS COMPANY

2. Remove 2 heater outlet hose clamps (1).
3. Remove heater outlet hose (2).

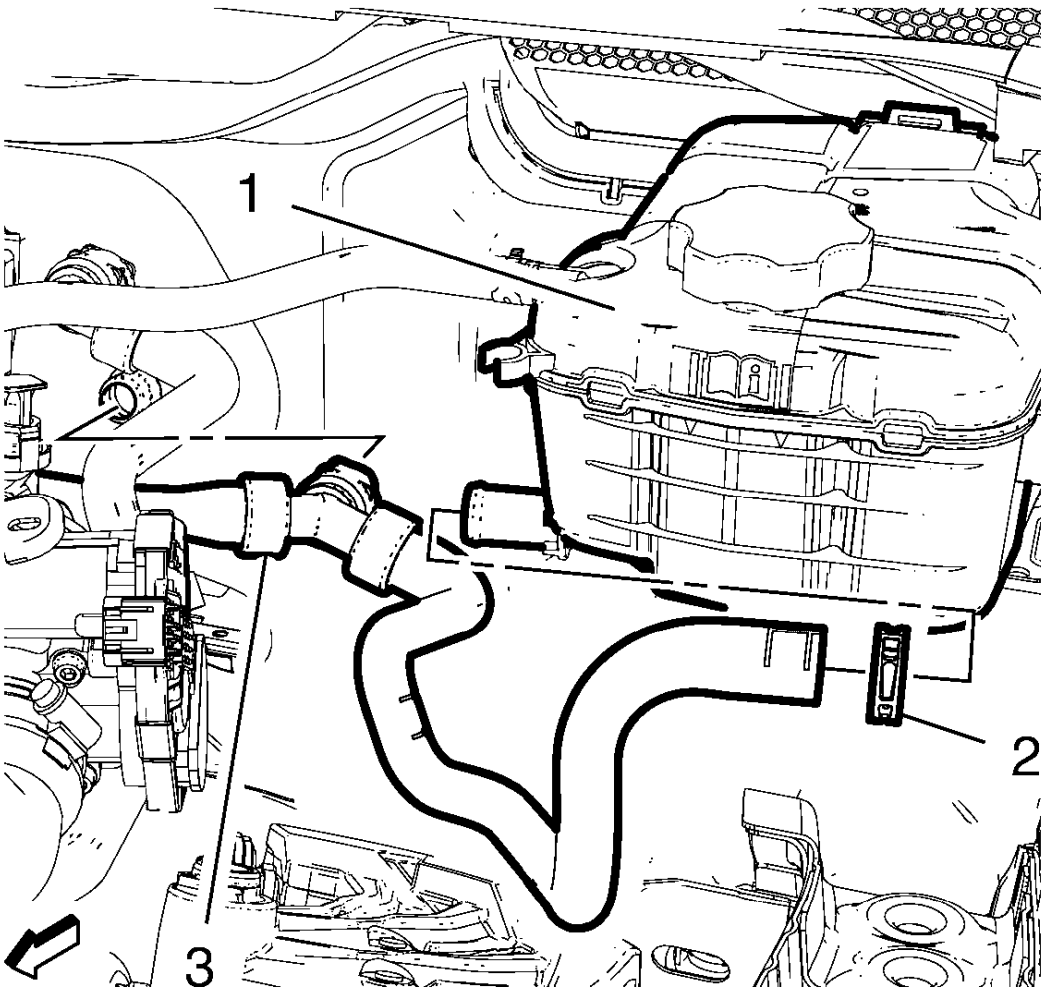

Fig. 69: Radiator Surge Tank
Courtesy of GENERAL MOTORS COMPANY

4. Remove heater outlet hose clamps (2).
5. Remove heater outlet hose (3) from radiator surge tank (1).

Installation Procedure

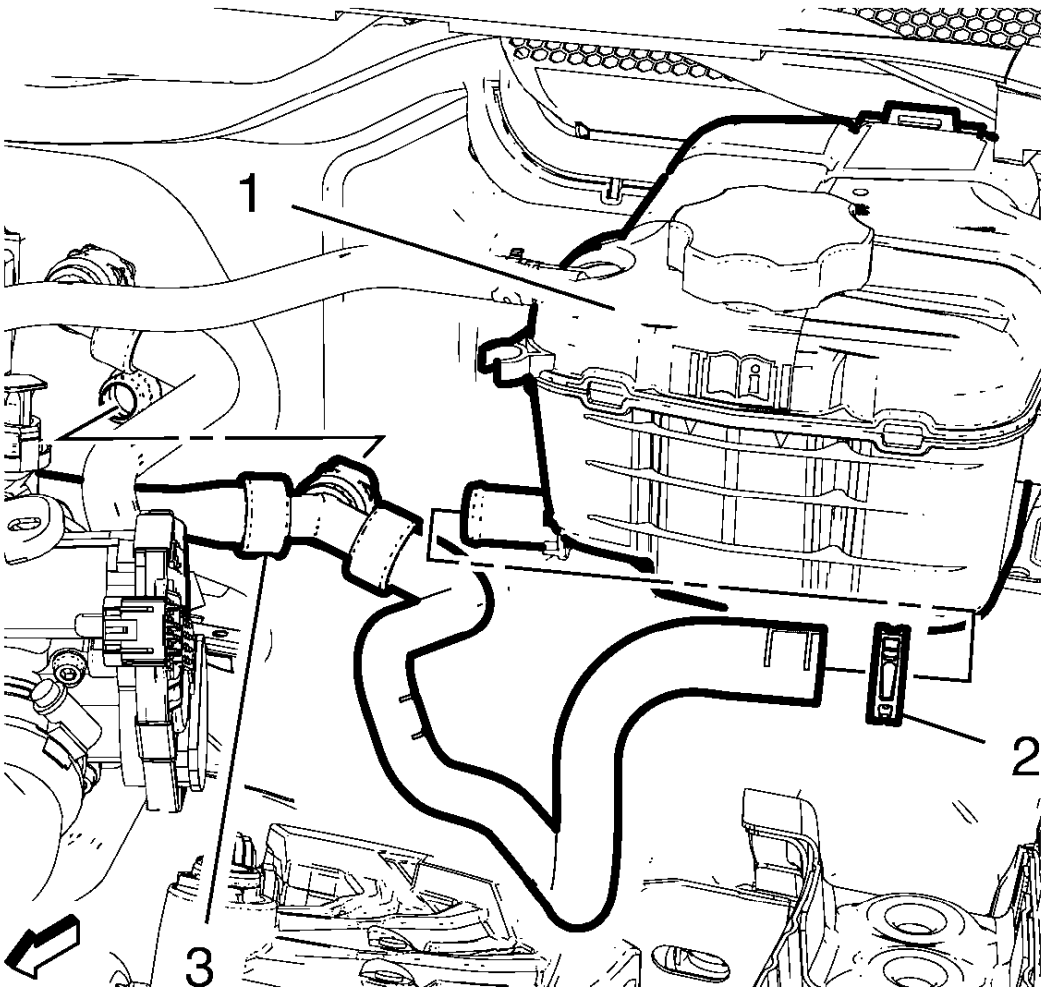

Fig. 70: Radiator Surge Tank
Courtesy of GENERAL MOTORS COMPANY

1. Install heater outlet hose (3) to radiator surge tank (1).
2. Install heater outlet hose clamps (2).

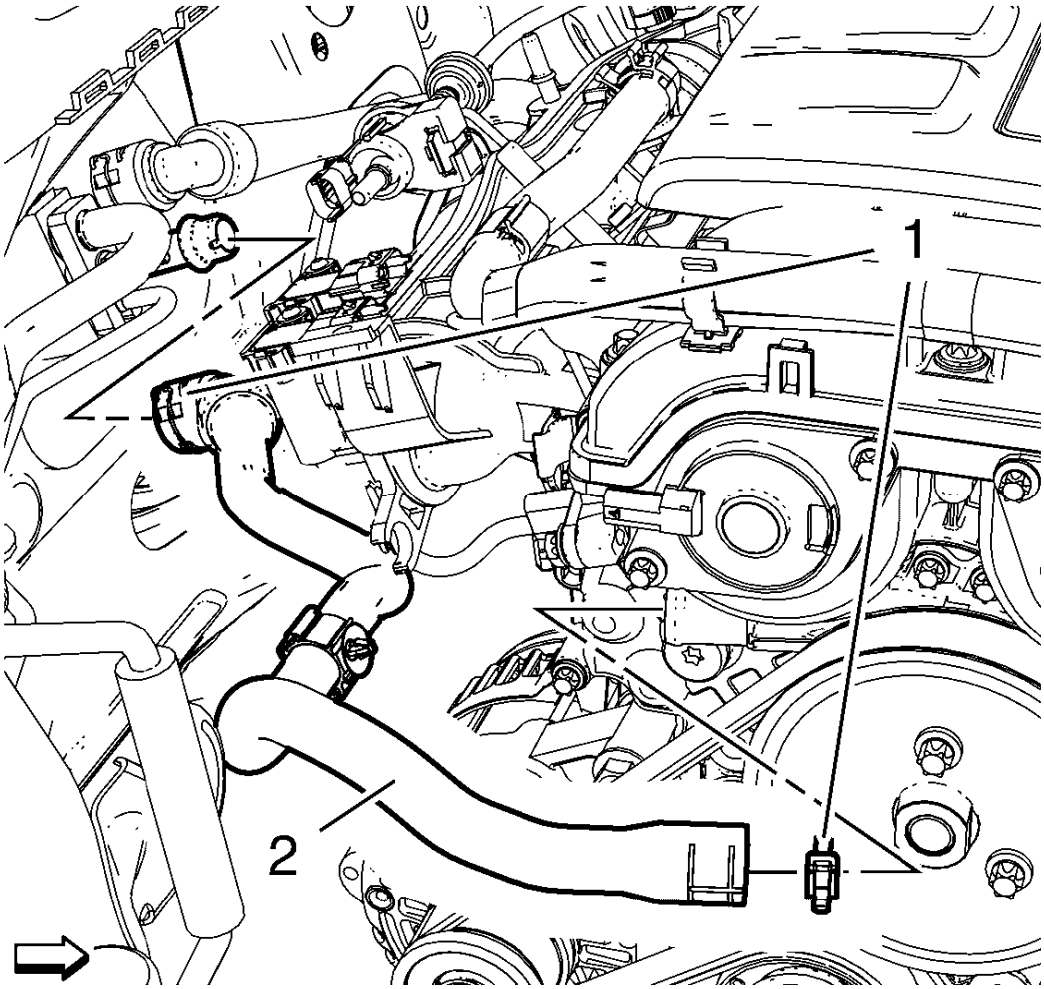

Fig. 71: Heater Outlet Hose
Courtesy of GENERAL MOTORS COMPANY

3. Install heater outlet hose (2).
4. Install 2 heater outlet hose clamps (1).
5. Refill the cooling system. Refer to **Cooling System Draining and Filling (Static Fill)** , **Cooling System Draining and Filling (GE-47716 Fill)** .

HEATER OUTLET HOSE REPLACEMENT (1.8L LUW)

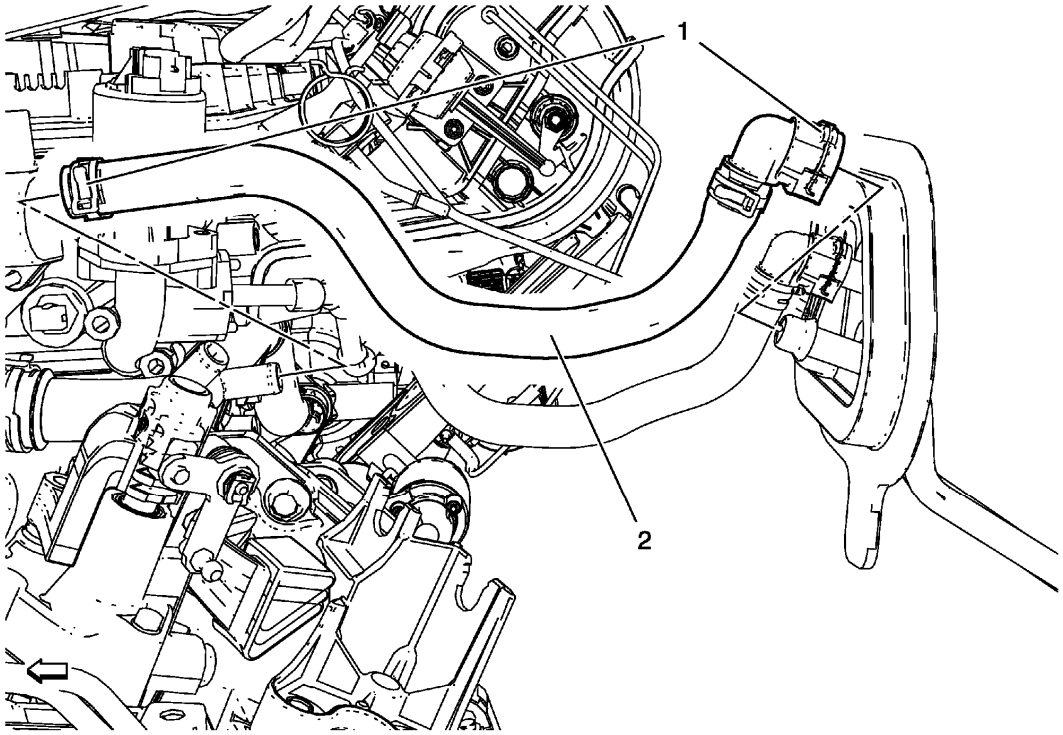

Fig. 72: Heater Outlet Hose - (1.8L LUW)
Courtesy of GENERAL MOTORS COMPANY

Heater Outlet Hose Replacement (1.8L LUW)

Callout	Component Name
Preliminary Procedures Drain the cooling system. Refer to **Cooling System Draining and Filling (Static Fill)** , **Cooling System Draining and Filling (GE-47716 Fill)** .	
1	Heater Outlet Hose Clamp (Qty: 2)
2	Heater Outlet Hose

HEATER OUTLET HOSE REPLACEMENT (1.8L LWE)

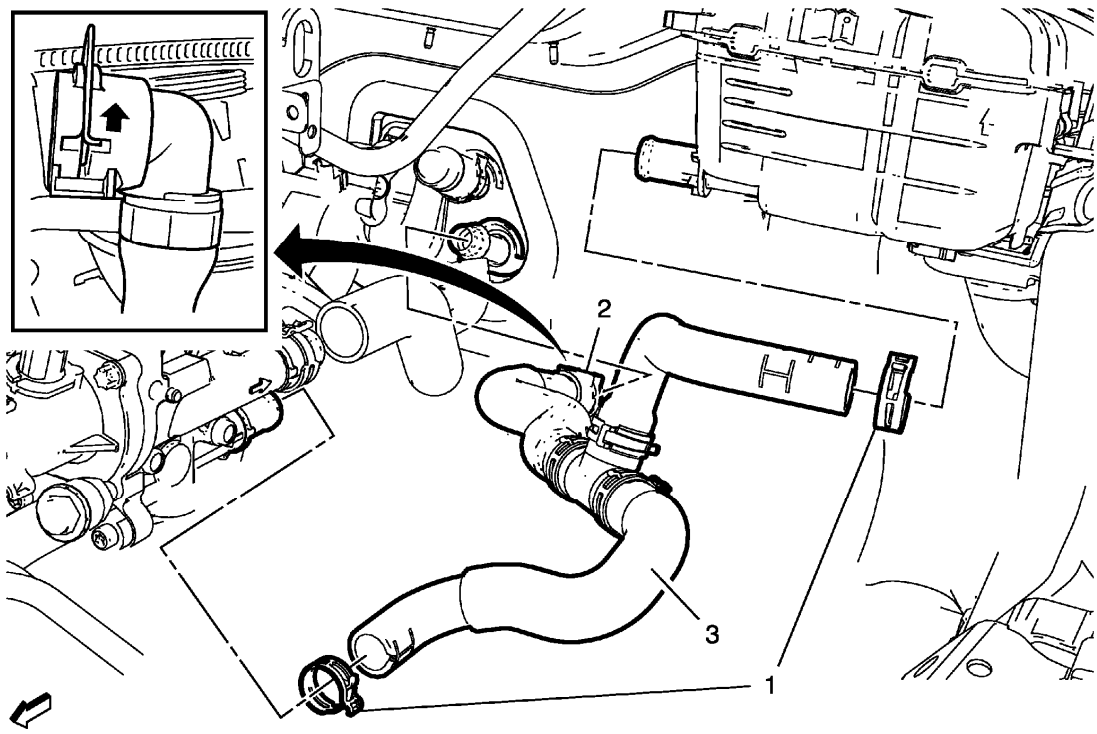

Fig. 73: Heater Outlet Hose (1.8L LWE)
Courtesy of GENERAL MOTORS COMPANY

Heater Outlet Hose Replacement (1.8L LWE)

Callout	Component Name
Preliminary Procedures 1. Disconnect the battery negative cable. Refer to **Battery Negative Cable Disconnection and Connection** . 2. Drain the cooling system. Refer to **Cooling System Draining and Filling (Static Fill)** , **Cooling System Draining and Filling (GE-47716 Fill)** . 3. Remove the engine control module. Refer to **Engine Control Module Replacement** .	
1	Heater Outlet Hose Clamp (Qty: 2)
2	Heater Outlet Hose Retainer Spring
3	Heater Outlet Hose

HEATER CORE OUTLET TUBE REPLACEMENT

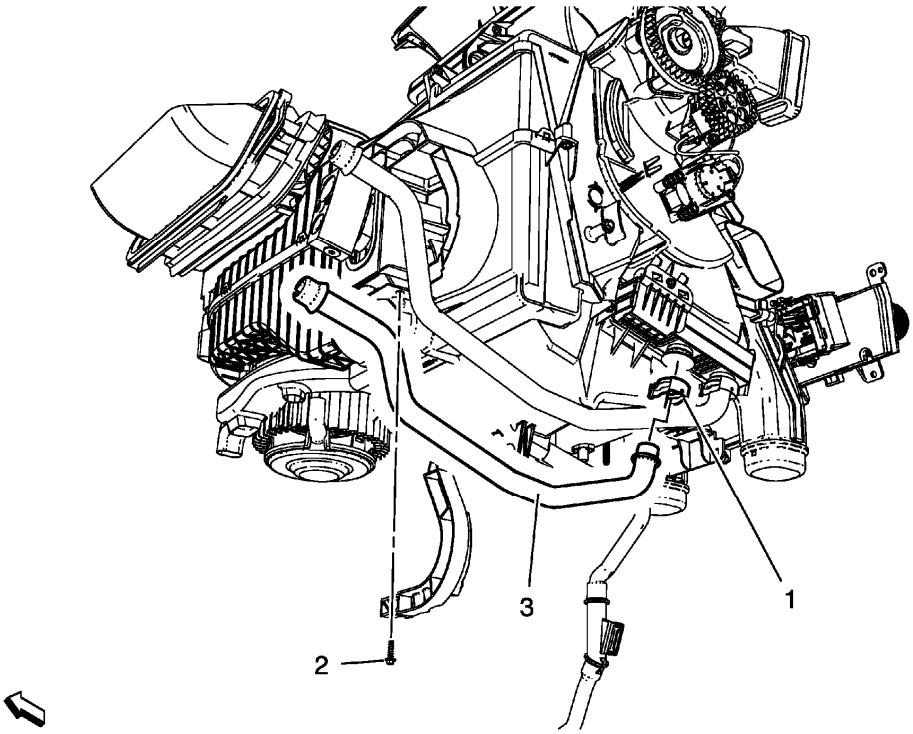

Fig. 74: Heater Core Outlet Tube
Courtesy of GENERAL MOTORS COMPANY

Heater Core Outlet Tube Replacement

Callout	Component Name
Preliminary Procedure Remove the heater and air conditioning evaporator case. Refer to **Heater and Air Conditioning Evaporator Case Replacement**.	
1	Heater Core Outlet Tube Clamp
2	Bracket Heater Core Outlet Tube Bolt **CAUTION:** **Refer to Fastener Caution** **Tighten** 2.5 N.m (22 lb in)
3	Heater Core Outlet Tube **Procedure** DISCARD core tube seal and use NEW only.

HEATER CORE INLET TUBE REPLACEMENT

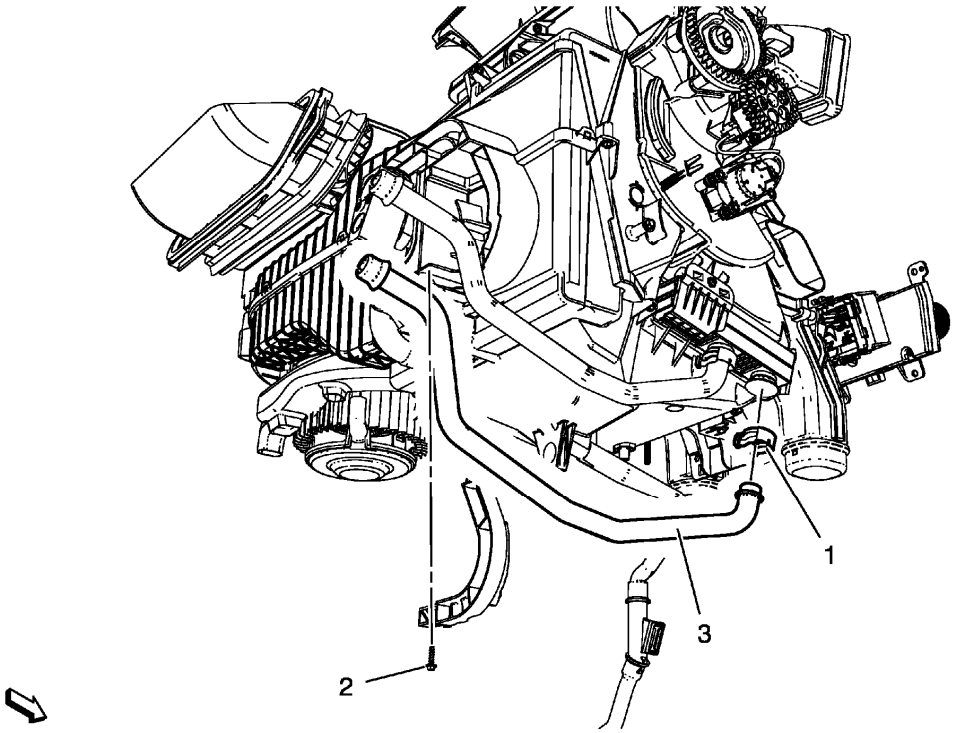

Fig. 75: Heater Core Outlet Tube
Courtesy of GENERAL MOTORS COMPANY

Heater Core Inlet Tube Replacement

Callout	Component Name
Preliminary Procedure Remove the heater and air conditioning evaporator case. Refer to **Heater and Air Conditioning Evaporator Case Replacement**.	
1	Heater Core Inlet Tube Clamp
2	Bracket Heater Core Inlet Tube Bolt **CAUTION:** **Refer to Fastener Caution** **Tighten** 2.5 N.m (22 lb in)
3	Heater Core Inlet Tube **Procedure** DISCARD core tube seal and use NEW only.

PASSENGER COMPARTMENT AIR FILTER REPLACEMENT

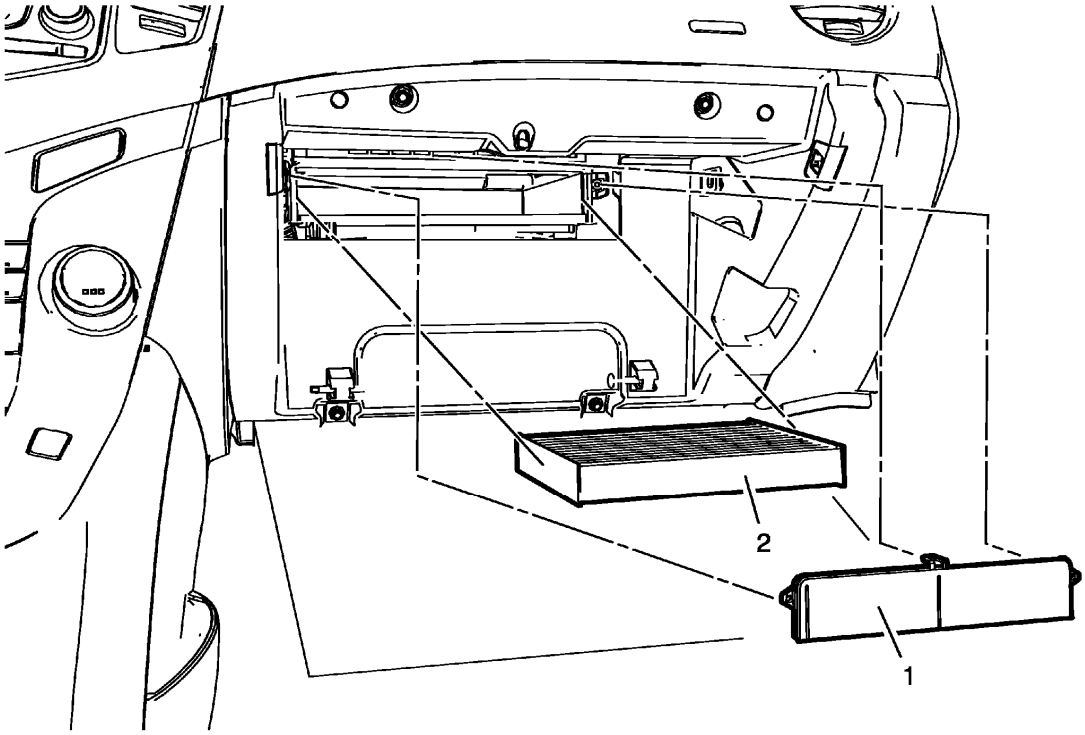

Fig. 76: Passenger Compartment Air Filter
Courtesy of GENERAL MOTORS COMPANY

Passenger Compartment Air Filter Replacement

Callout	Component Name
Preliminary Procedure Unhinge the instrument panel compartment door.	
1	Passenger Compartment Air Filter Cover **Procedure** Unlock the 3 retaining tabs.
2	Passenger Compartment Air Filter

AIR INLET HOUSING REPLACEMENT

Removal Procedure

1. Remove heater and air conditioning evaporator and blower module. Refer to **Heater and Air Conditioning Evaporator Case Replacement**.

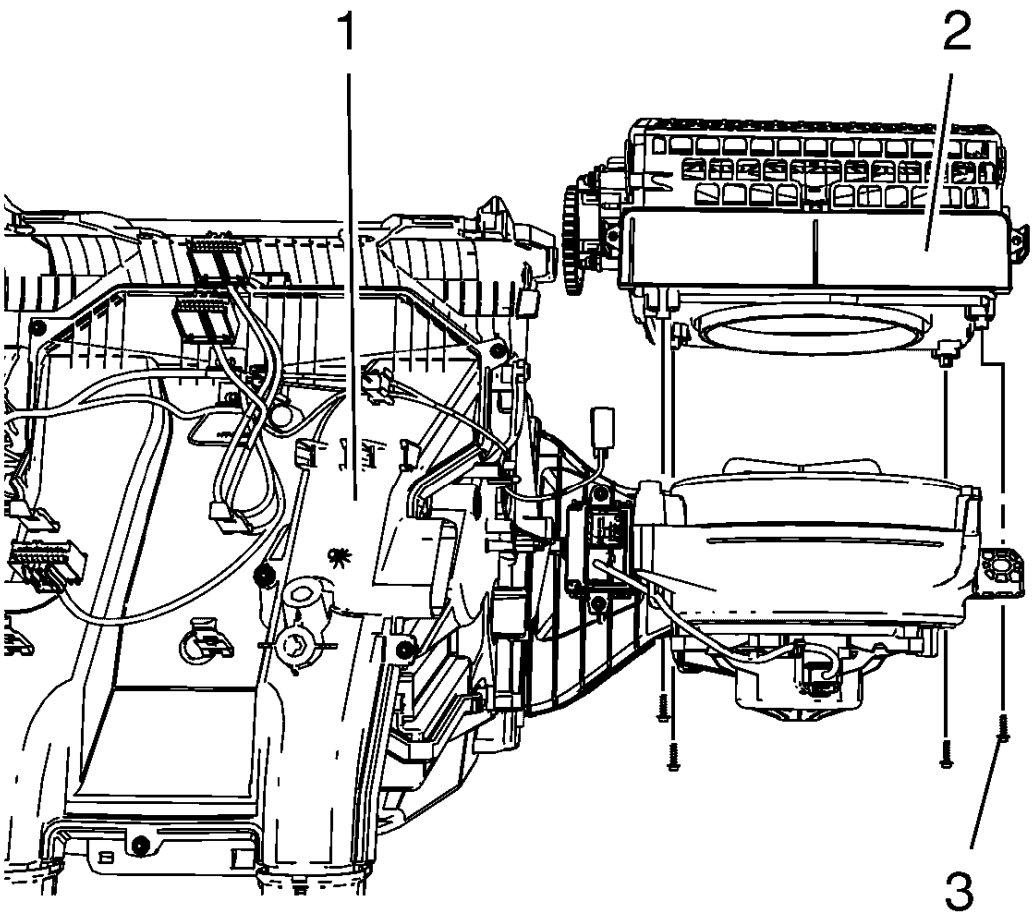

Fig. 77: Air Inlet Housing
Courtesy of GENERAL MOTORS COMPANY

2. Remove air inlet housing (2) from heater and air conditioning evaporator and blower module (1).
   - Disconnect electrical connectors.
   - Remove 4 air inlet housing bolts (3).
3. Remove air inlet valve actuator. Refer to **Air Inlet Valve Actuator Replacement** .
4. Remove air inlet valve and inside air valve control cam. Refer to **Air Inlet Valve and Inside Air Valve Control Cam Replacement** .

Installation Procedure

1. Install air inlet valve and inside air valve control cam. Refer to **Air Inlet Valve and Inside Air Valve Control Cam Replacement** .
2. Install air inlet valve actuator. Refer to **Air Inlet Valve Actuator Replacement** .

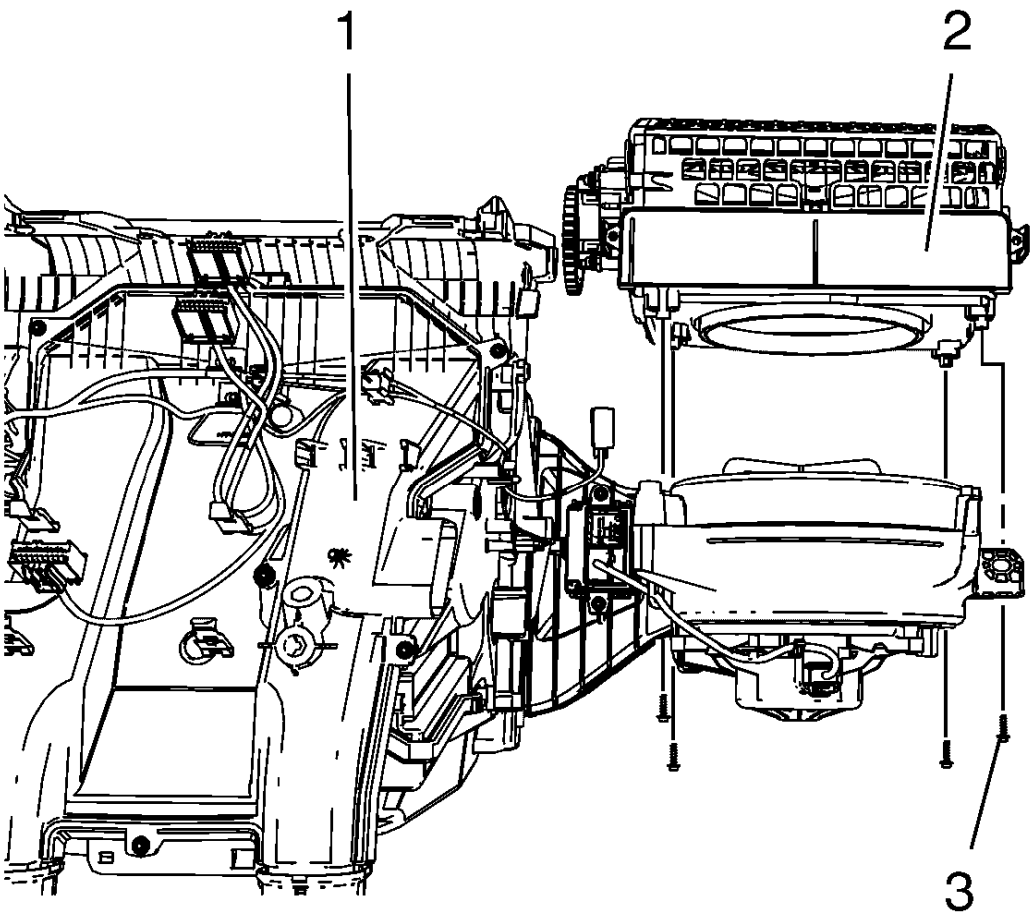

Fig. 78: Air Inlet Housing
Courtesy of GENERAL MOTORS COMPANY

CAUTION: Refer to Fastener Caution .

3. Install air inlet housing (2) to heater and air conditioning evaporator and blower module (1).
   - Connect electrical connectors.
   - Install 4 air inlet housing bolts (3) and tighten to 2.5 N.m (22 lb in).
4. Install heater and air conditioning evaporator and blower module. Refer to **Heater and Air Conditioning Evaporator Case Replacement**.

BLOWER MOTOR REPLACEMENT

Removal Procedure

1. Remove the right floor air outlet duct. Refer to **Floor Air Outlet Duct Replacement - Right Side**.
2. Remove the blower motor wire harness connector.

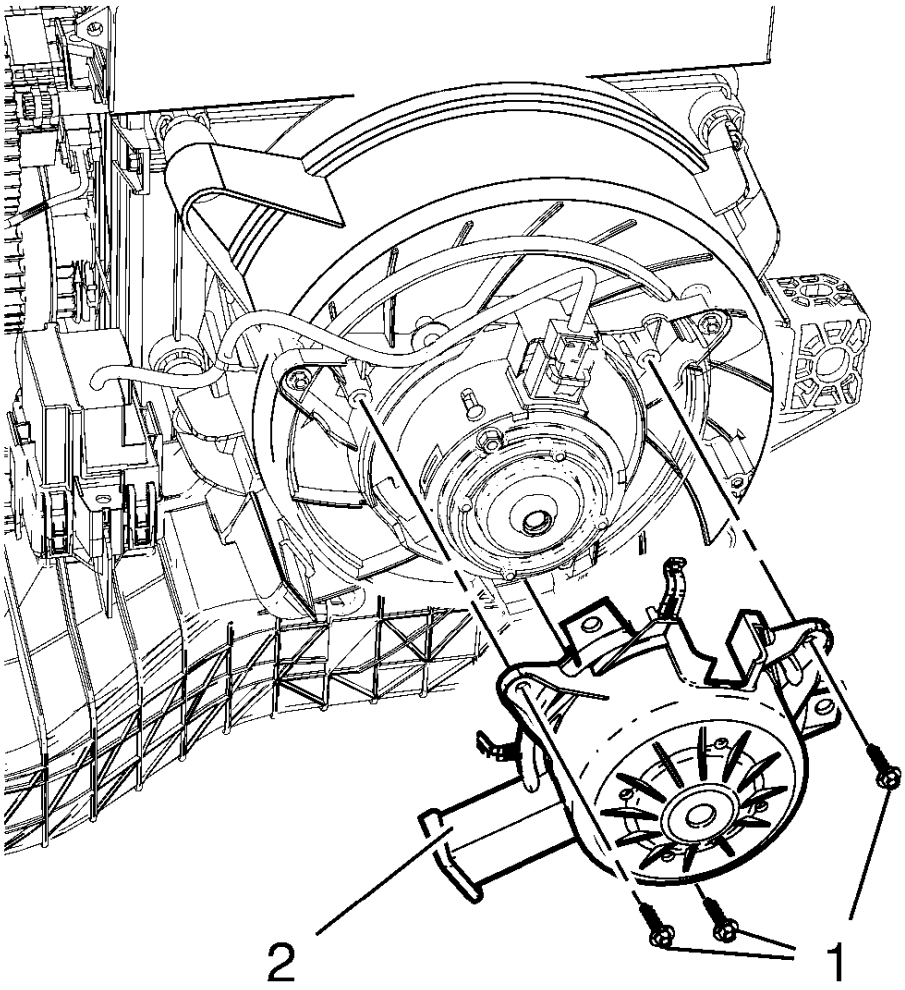

Fig. 79: Blower Motor Cup And Bolts
Courtesy of GENERAL MOTORS COMPANY

3. Remove the blower motor cup bolts (1).
4. Remove the blower motor cup from the blower motor (2).

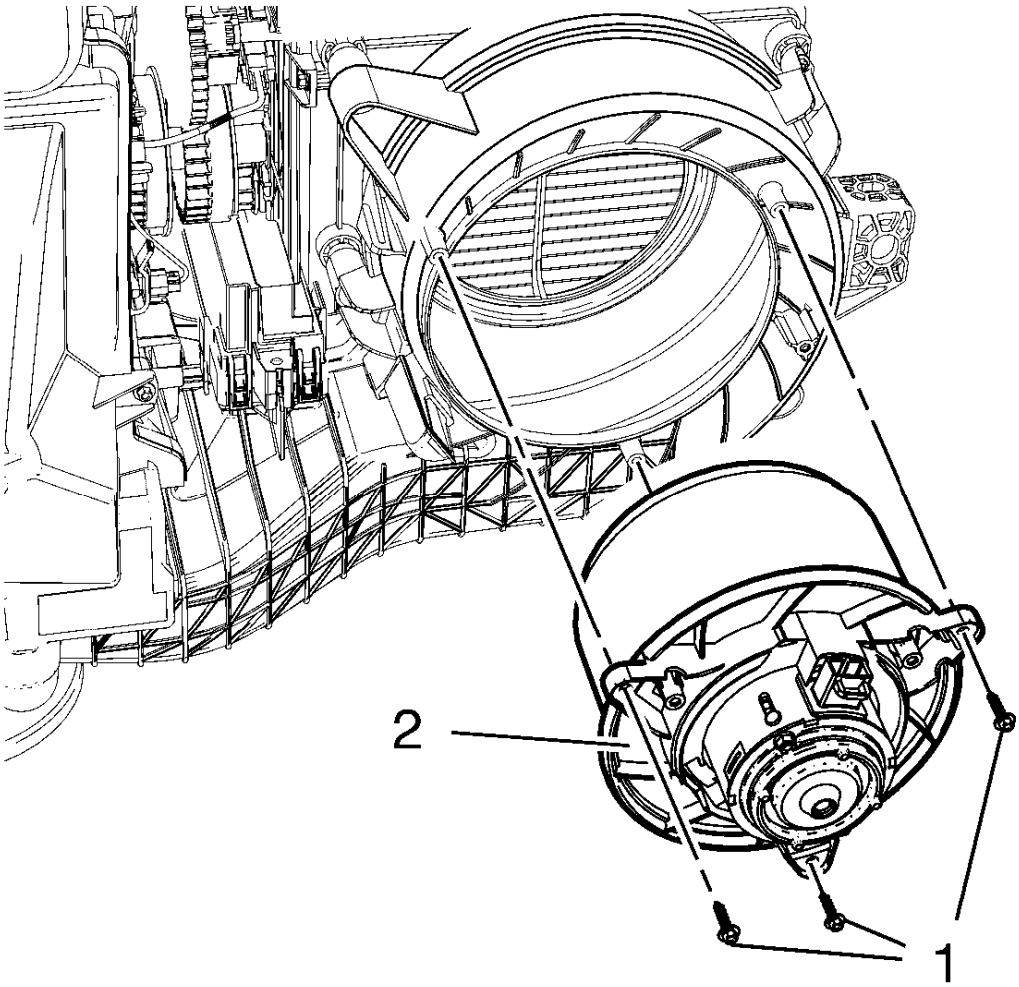

Fig. 80: Blower Motor And Bolts
Courtesy of GENERAL MOTORS COMPANY

5. Remove the blower motor bolts (1).
6. Remove the blower motor (2) from the heater case.

Installation Procedure

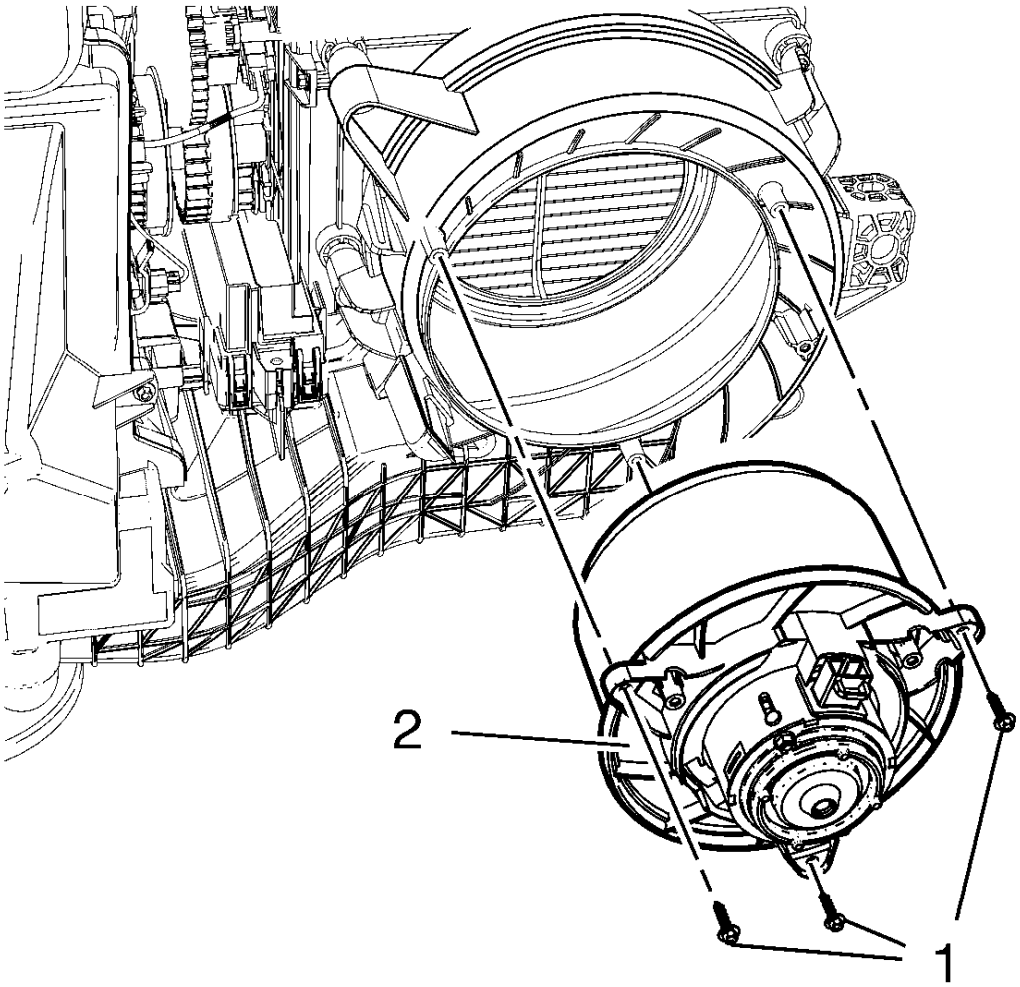

Fig. 81: Blower Motor And Bolts
Courtesy of GENERAL MOTORS COMPANY

1. Install the new blower motor (2) to the heater case.

CAUTION: Refer to Fastener Caution

2. Install the blower motor bolts (1) and tighten to 4.5 N.m (40 lb in).
3. Install the motor blower cup to the blower motor.
4. Install the blower motor cup bolts and tighten to 2.5 N.m (23 lb in).
5. Install the blower motor wire harness connector.
6. Install the right floor air outlet duct. Refer to **Floor Air Outlet Duct Replacement - Right Side**.

INSTRUMENT PANEL OUTER AIR OUTLET REPLACEMENT - LEFT SIDE

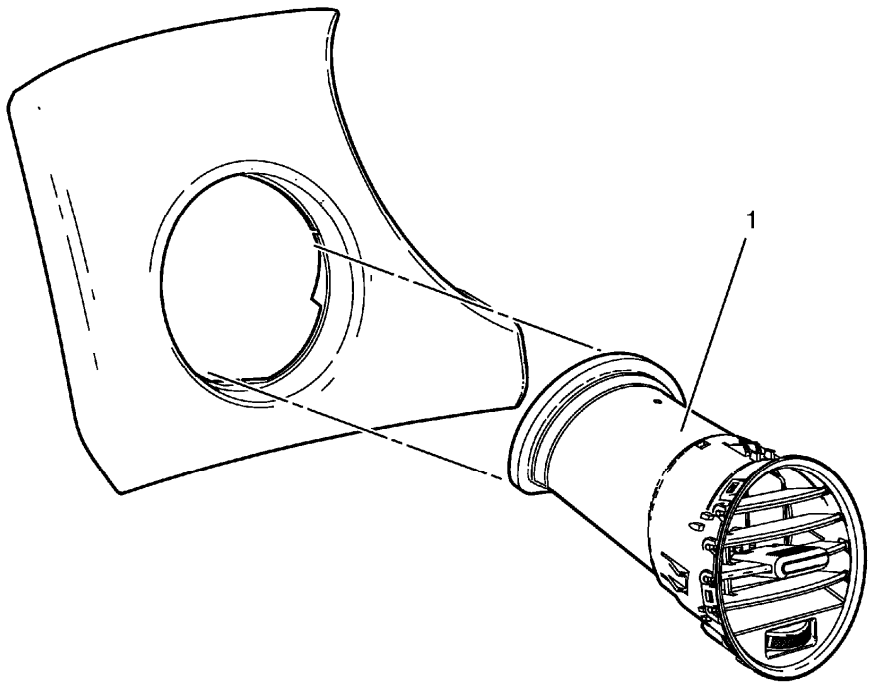

Fig. 82: Instrument Panel Outer Air Outlet - Left Side
Courtesy of GENERAL MOTORS COMPANY

Instrument Panel Outer Air Outlet Replacement - Left Side

Callout	Component Name
Preliminary Procedures Remove instrument panel upper trim panel. Refer to **Instrument Panel Upper Trim Panel Replacement - Left Side** .	
1	Instrument Panel Outer Air Outlet **Procedure** Remove clip (Qty: 4).

INSTRUMENT PANEL CENTER AIR OUTLET REPLACEMENT

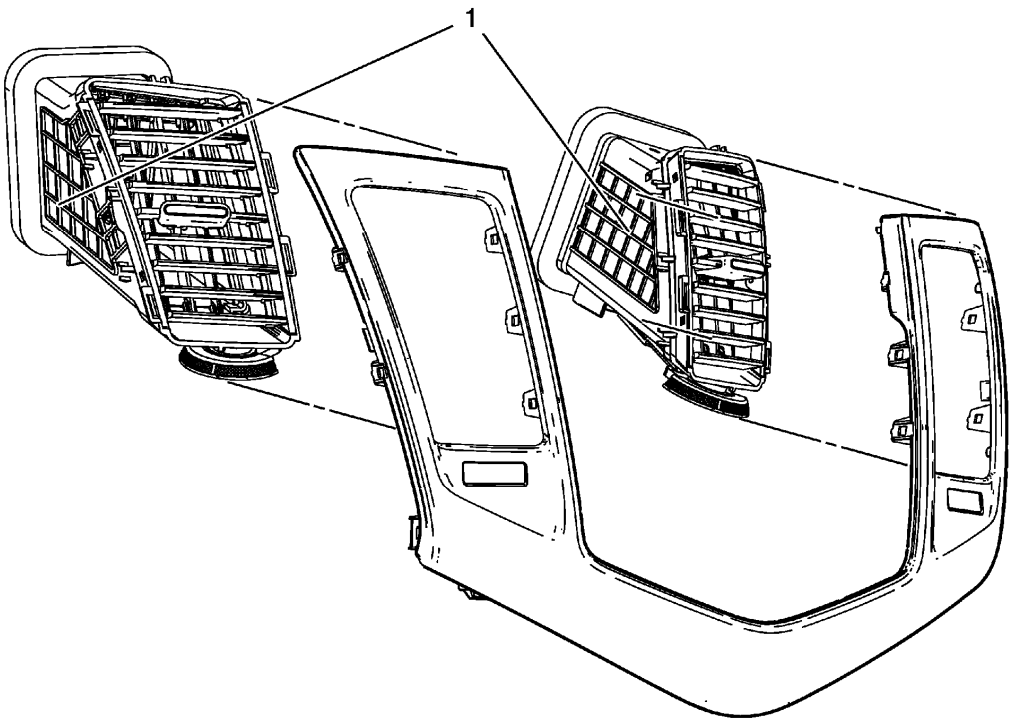

Fig. 83: Instrument Panel Center Air Outlet
Courtesy of GENERAL MOTORS COMPANY

Instrument Panel Center Air Outlet Replacement

Callout	Component Name
Preliminary Procedure Remove instrument panel center upper molding. Refer to **Instrument Panel Center Upper Molding Replacement** .	
1	Instrument Panel Center Air Outlet **Procedure** Unclip instrument panel center air outlet from instrument panel center upper molding.

INSTRUMENT PANEL OUTER AIR OUTLET REPLACEMENT - RIGHT SIDE

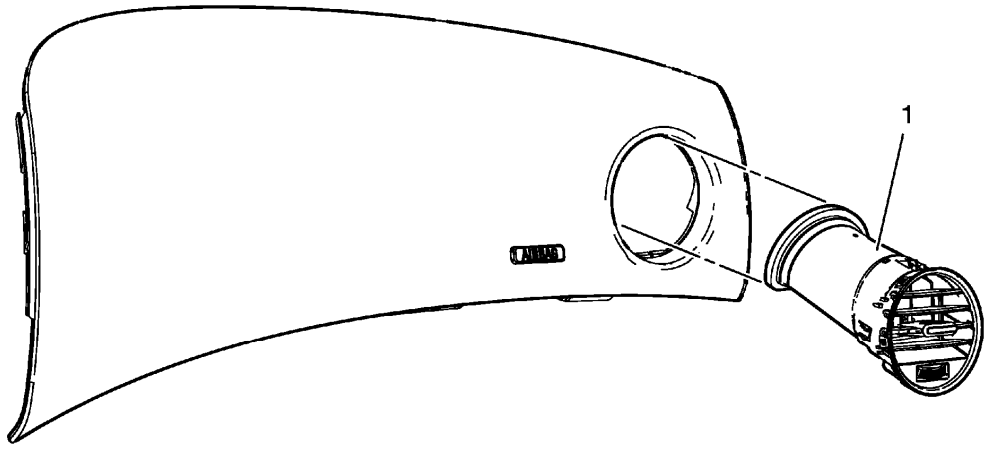

Fig. 84: Instrument Panel Outer Air Outlet - Right Side
Courtesy of GENERAL MOTORS COMPANY

Instrument Panel Outer Air Outlet Replacement - Right Side

Callout	Component Name
Preliminary Procedure Remove instrument panel upper trim panel. Refer to **Instrument Panel Upper Trim Panel Replacement - Right Side** .	
1	Instrument Panel Outer Air Outlet Assembly **Procedure** 1. Remove instrument panel outer air oulet duct right side. 2. Remove clip (Qty: 4).

BODY AIR OUTLET DEFLECTOR REPLACEMENT

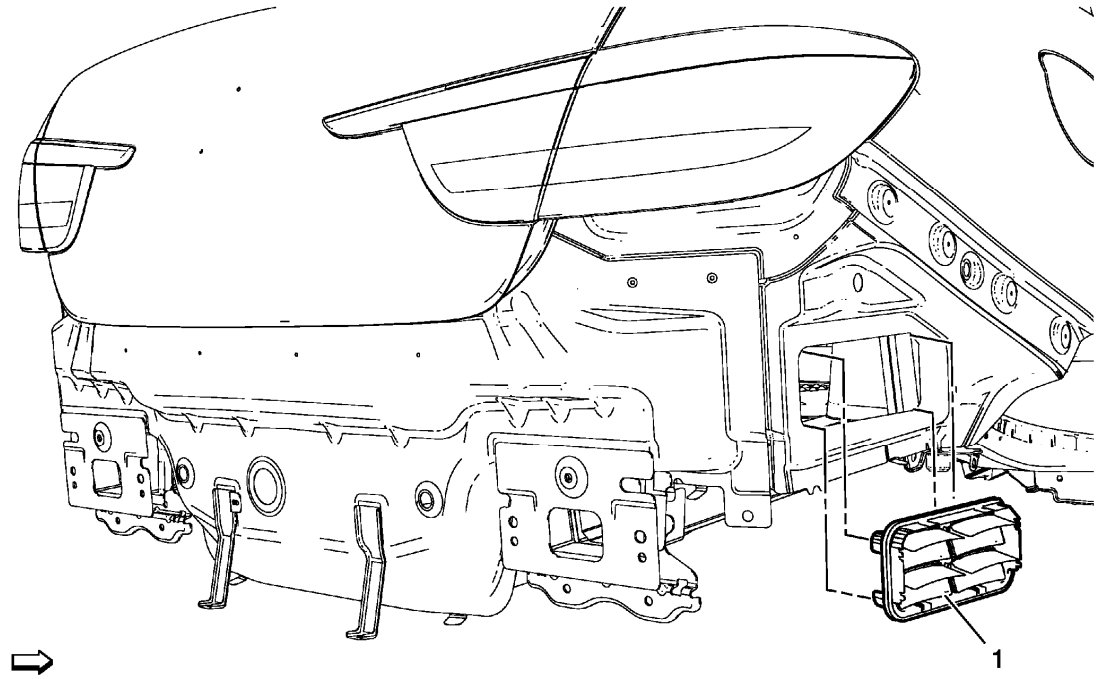

Fig. 85: Body Air Outlet Deflector - (Notchback)
Courtesy of GENERAL MOTORS COMPANY

Body Air Outlet Deflector Replacement

Callout	Component Name
Preliminary Procedures Remove the rear bumper fascia. Refer to **Rear Bumper Fascia Replacement** .	
1	Body Air Outlet Deflector **Procedure** Unclip 4 body air outlet deflector tabs.

FLOOR AIR OUTLET REPLACEMENT

Removal Procedure

1. Remove the instrument panel assembly. Refer to **Instrument Panel Assembly Replacement** .

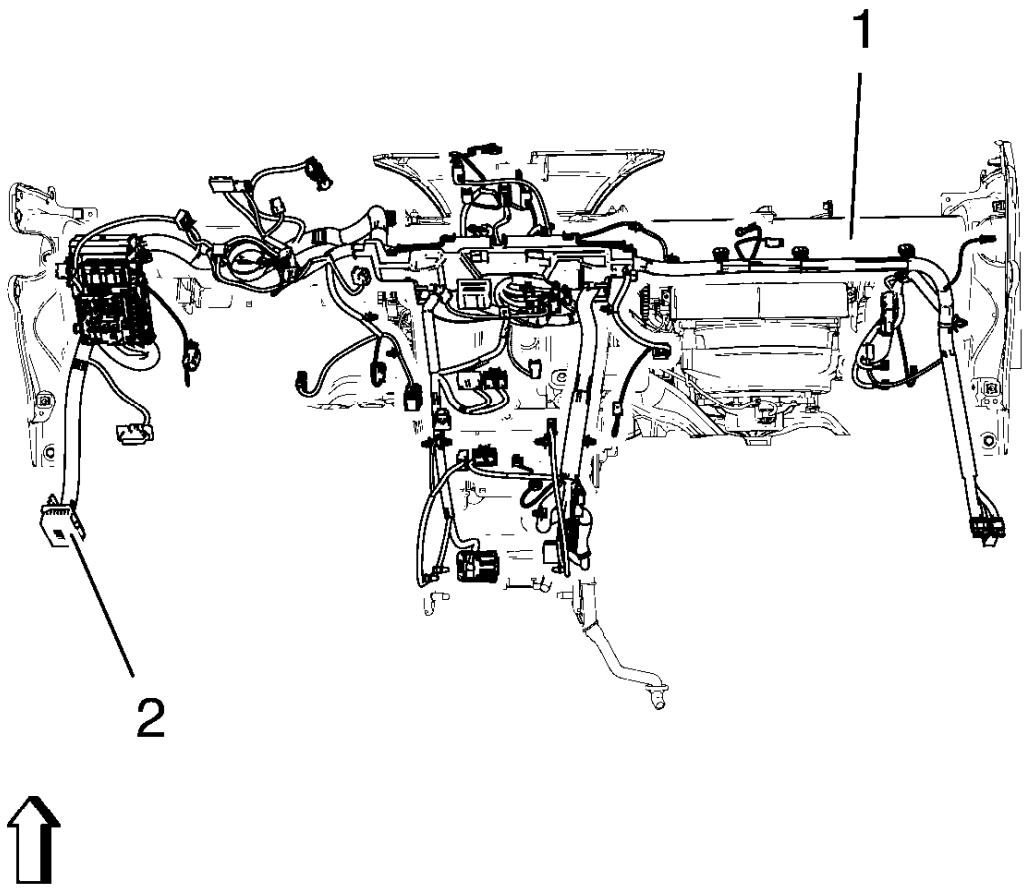

Fig. 86: Instrument Panel Wiring Harness And Instrument Panel Tie Bar
Courtesy of GENERAL MOTORS COMPANY

2. Remove the instrument panel wiring harness (2) from the instrument panel tie bar (1).

   Disconnect the electrical connectors.

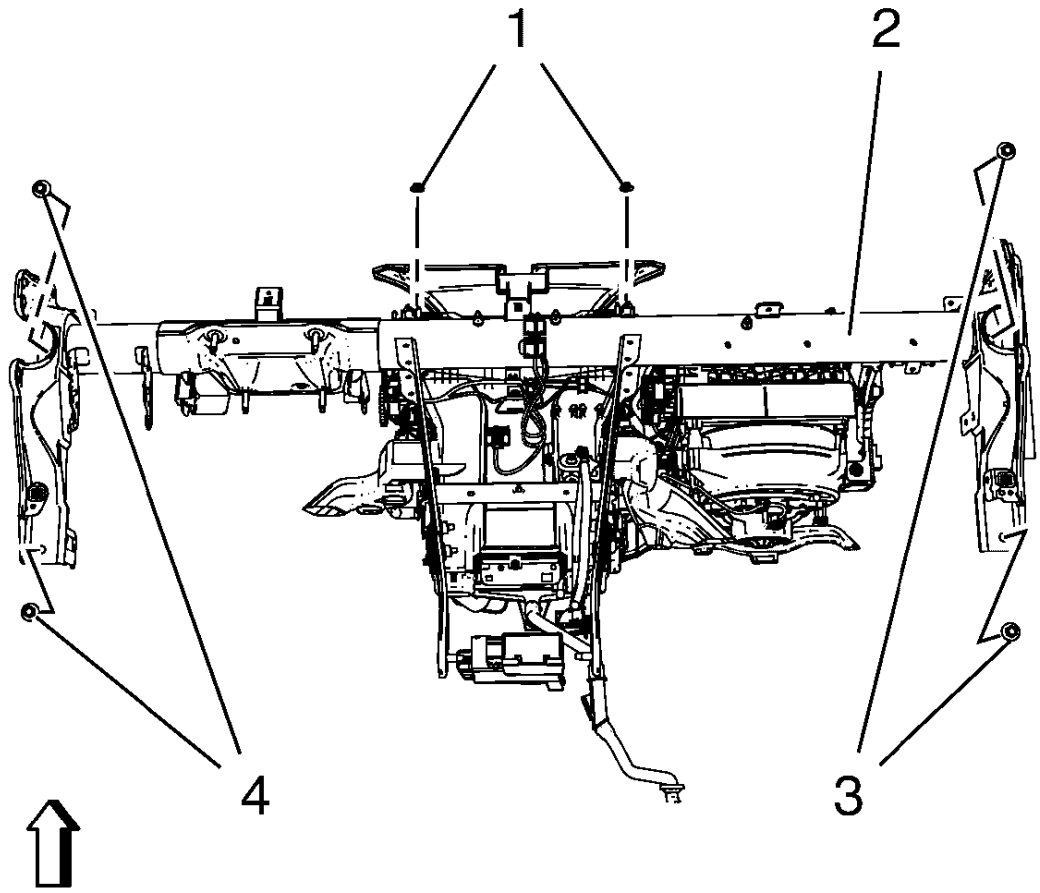

Fig. 87: Instrument Panel Tie Bar, Bolts And Nuts
Courtesy of GENERAL MOTORS COMPANY

3. Remove the instrument panel tie bar (2).
    - Remove the 4 instrument panel tie bar bolts (3, 4).
    - Remove the 2 instrument panel tie bar nuts (1).
4. Remove the heater wiring harness.

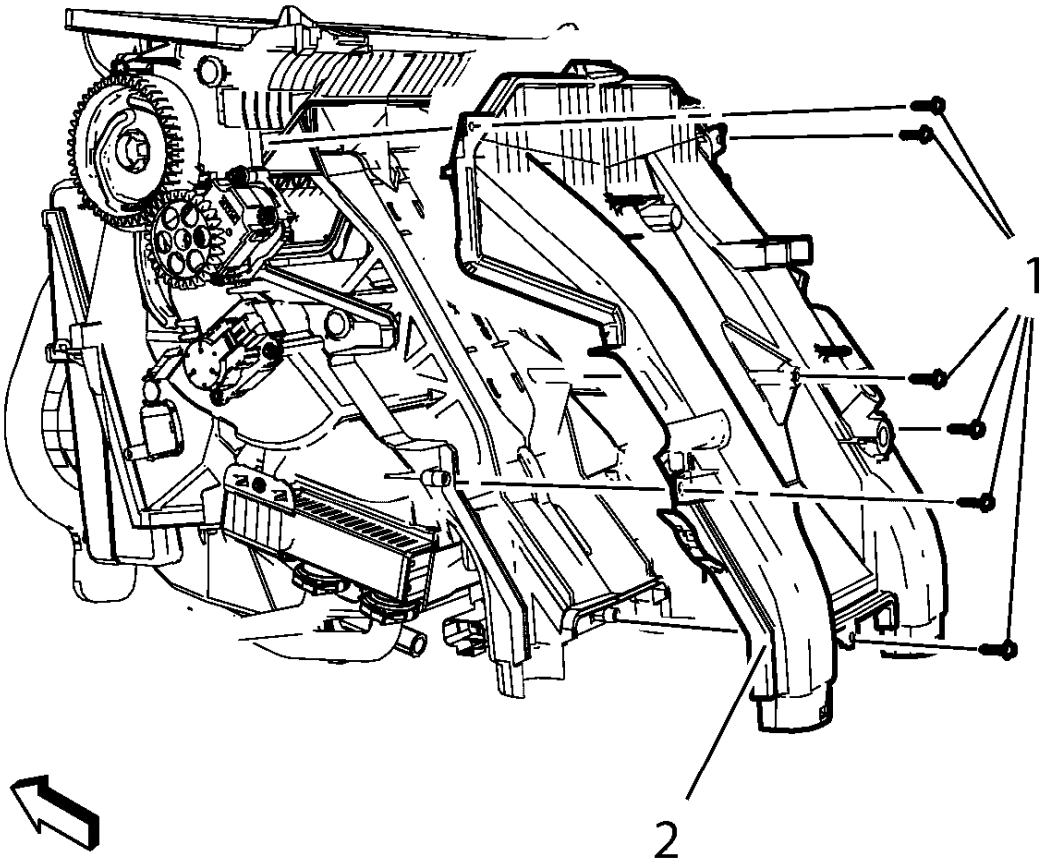

Fig. 88: Floor Air Outlet
Courtesy of GENERAL MOTORS COMPANY

5. Remove the floor air outlet (2).

   Remove the 6 floor air outlet bolts (1).

Installation Procedure

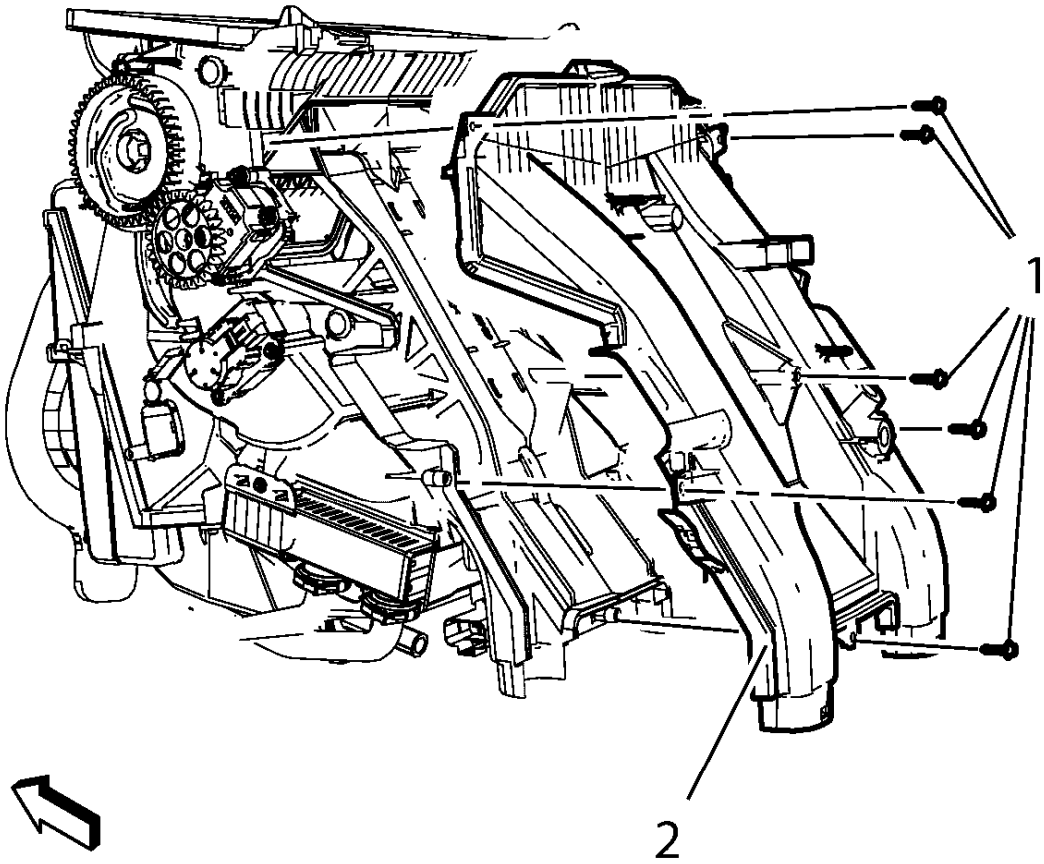

Fig. 89: Floor Air Outlet
Courtesy of GENERAL MOTORS COMPANY

CAUTION: Refer to Fastener Caution .

1. Install the floor air outlet (2).

   Install the 6 floor air outlet bolts (1) and tighten to 2.5 N.m (23 lb in).

2. Install the heater wiring harness.

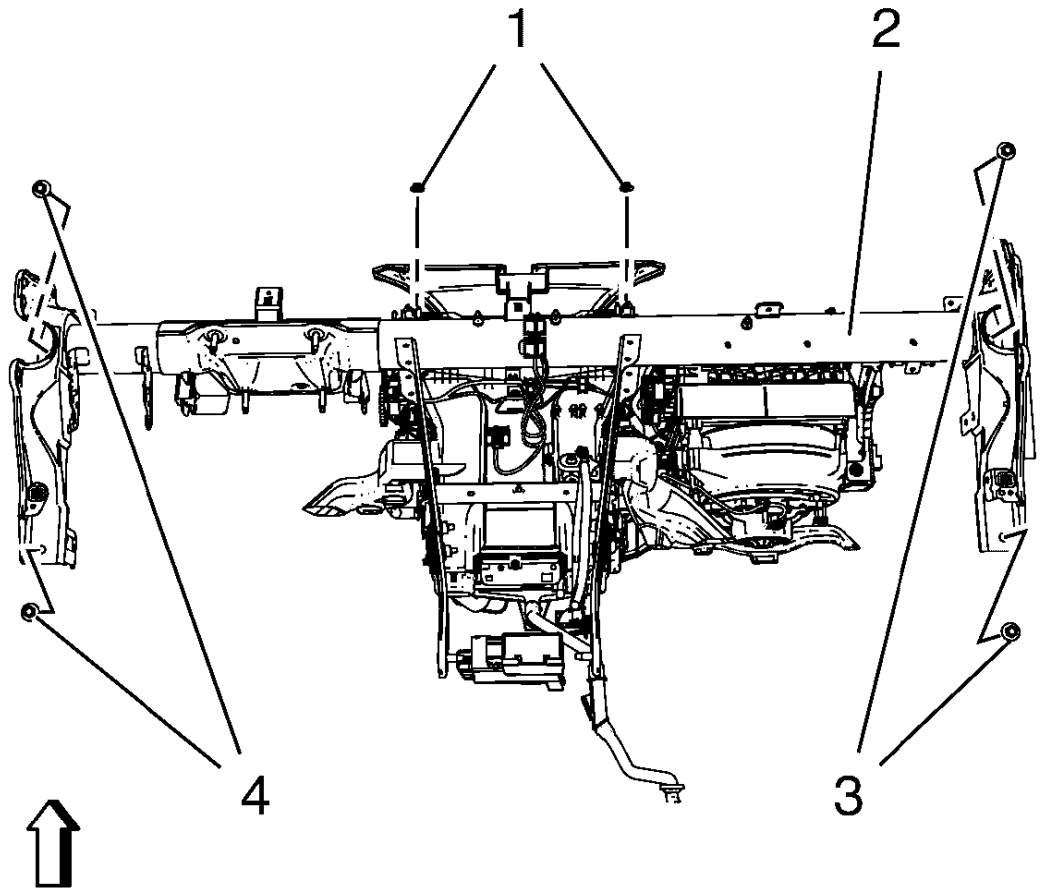

Fig. 90: Instrument Panel Tie Bar, Bolts And Nuts
Courtesy of GENERAL MOTORS COMPANY

3. Install the instrument panel tie bar (2).
    - Install the 4 instrument panel tie bar bolts (3, 4) and tighten to 22 N.m (17 lb ft).
    - Install the 2 instrument panel tie bar nuts (1) and tighten to 9 N.m (80 lb in).

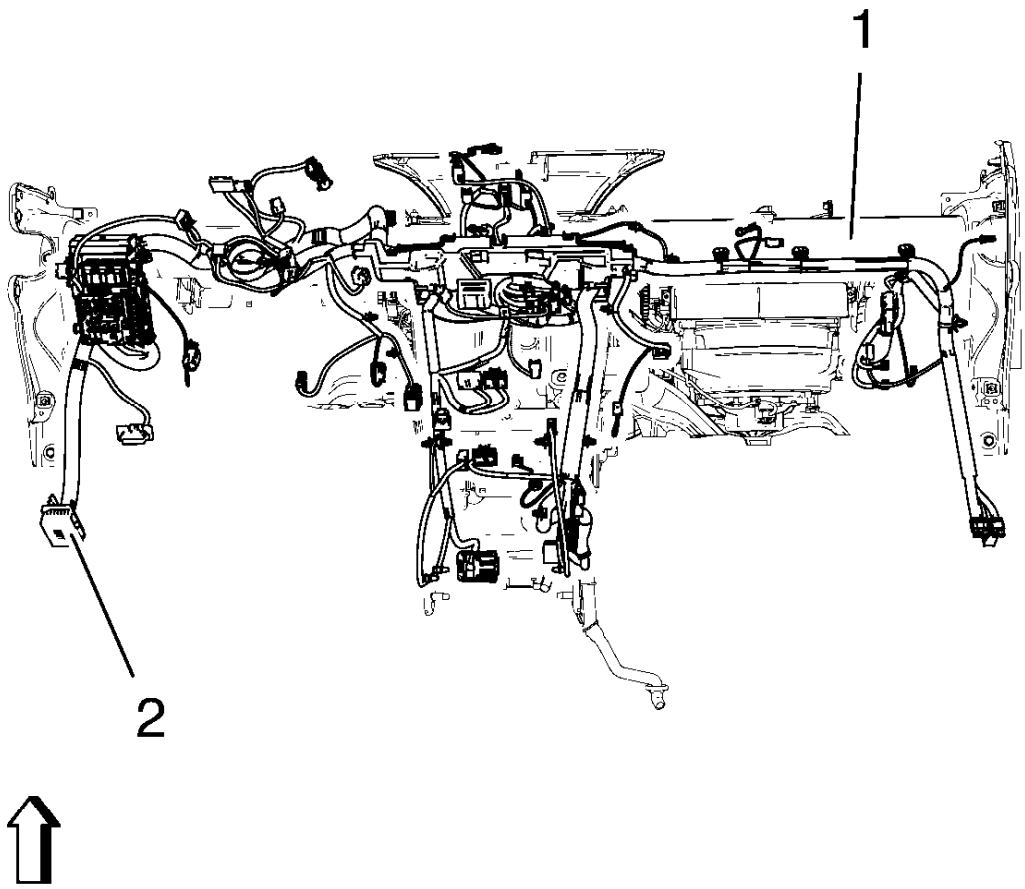

Fig. 91: Instrument Panel Wiring Harness And Instrument Panel Tie Bar
Courtesy of GENERAL MOTORS COMPANY

4. Attach the instrument panel wiring harness (2) to the instrument panel tie bar (1).

   Connect the electrical connectors.

5. Install the instrument panel assembly. Refer to **Instrument Panel Assembly Replacement** .

FLOOR FRONT AIR OUTLET DUCT ADAPTER REPLACEMENT

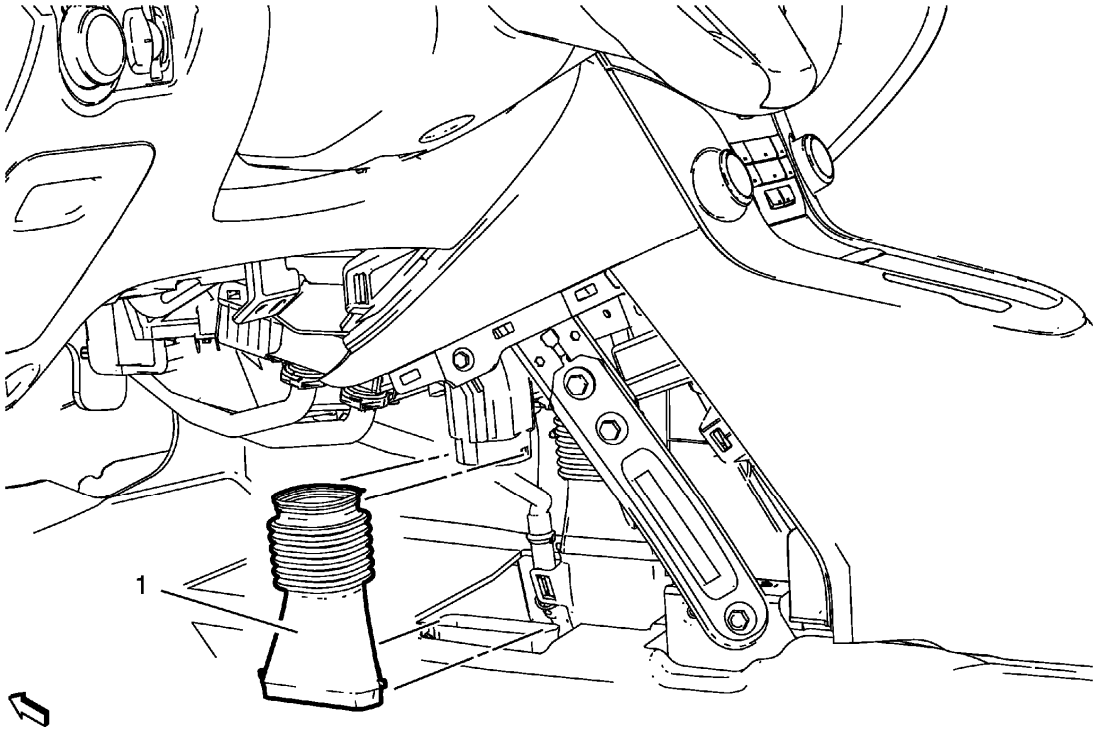

Fig. 92: Floor Front Air Outlet Duct Adapter
Courtesy of GENERAL MOTORS COMPANY

Floor Front Air Outlet Duct Adapter Replacement

Callout	Component Name
Preliminary Procedures Remove the instrument panel lower trim panel- left side. Refer to **Instrument Panel Lower Trim Panel Replacement - Left Side** .	
1	Floor Front Air Outlet Duct Adapter

INSTRUMENT PANEL OUTER AIR OUTLET DUCT REPLACEMENT

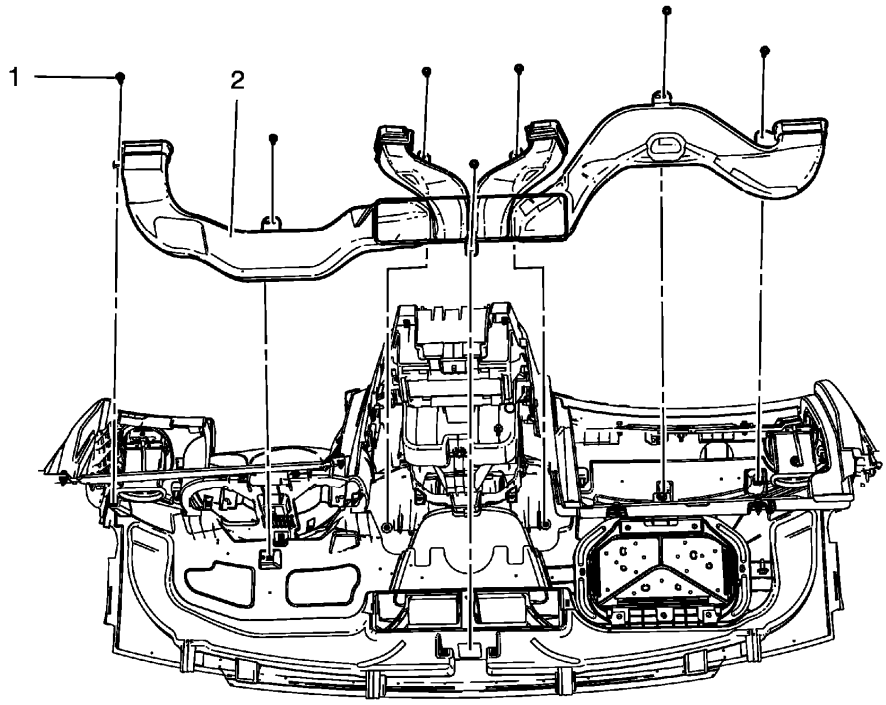

Fig. 93: Instrument Panel Outer Air Outlet Duct
Courtesy of GENERAL MOTORS COMPANY

Instrument Panel Outer Air Outlet Duct Replacement

Callout	Component Name
Preliminary Procedure Remove instrument panel assembly. Refer to **Instrument Panel Assembly Replacement** .	
1	Instrument Panel Outer Air Outlet Duct Screw (Qty: 7) **CAUTION:** **Refer to Fastener Caution .** **Tighten** 2.5 N.m (22 lb in)
2	Instrument Panel Outer Air Outlet Duct

WINDSHIELD DEFROSTER NOZZLE REPLACEMENT

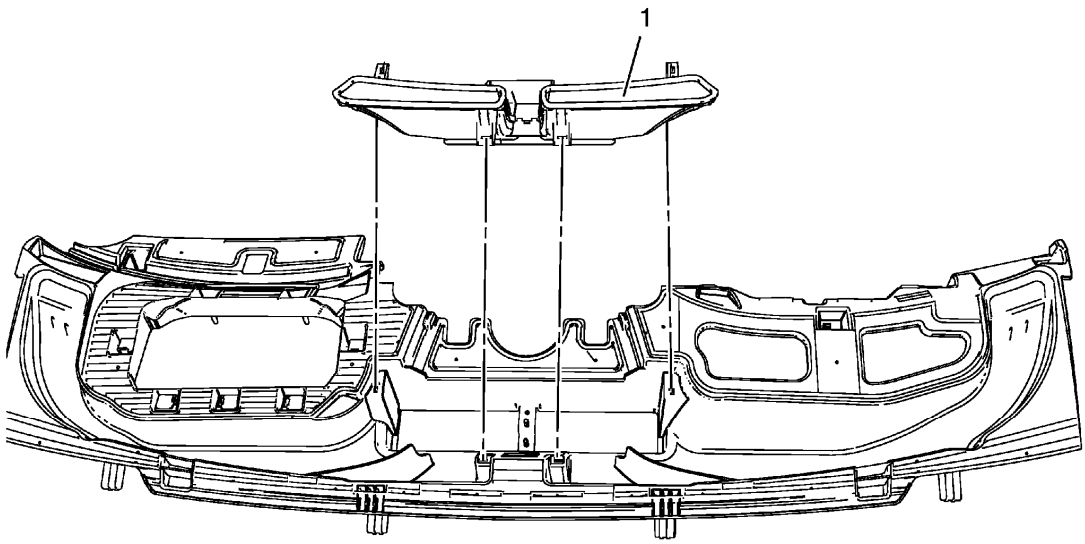

Fig. 94: Windshield Defroster Nozzle
Courtesy of GENERAL MOTORS COMPANY

Windshield Defroster Nozzle Replacement

Callout	Component Name
Preliminary Procedure Remove instrument panel. Refer to **Instrument Panel Assembly Replacement**	
1	Windshield Defroster Nozzle **Procedure** Unclip from instrument panel assembly.

FLOOR AIR OUTLET DUCT REPLACEMENT - LEFT SIDE

Removal Procedure

1. Remove instrument outer trim cover - left side. Refer to **Instrument Panel Outer Trim Cover Replacement - Left Side** .
2. Remove instrument panel lower trim pad cover - left side. Refer to **Instrument Panel Lower Trim Pad Cover Replacement (without Knee Airbag)** , **Instrument Panel Lower Trim Pad Cover Replacement (with Knee Airbag)** .

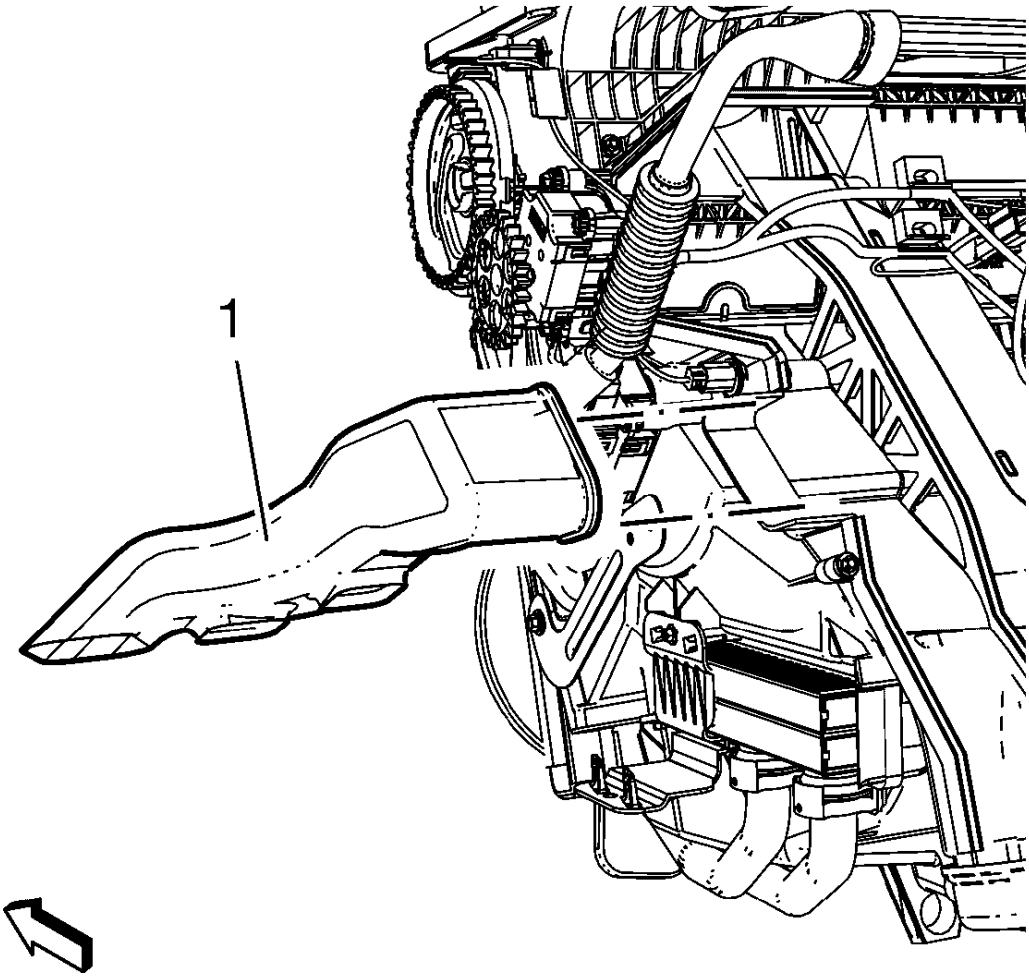

Fig. 95: Floor Air Outlet Duct - Left Side (Left Hand Drive)
Courtesy of GENERAL MOTORS COMPANY

3. Remove floor air outlet duct (1) - left side.

Installation Procedure

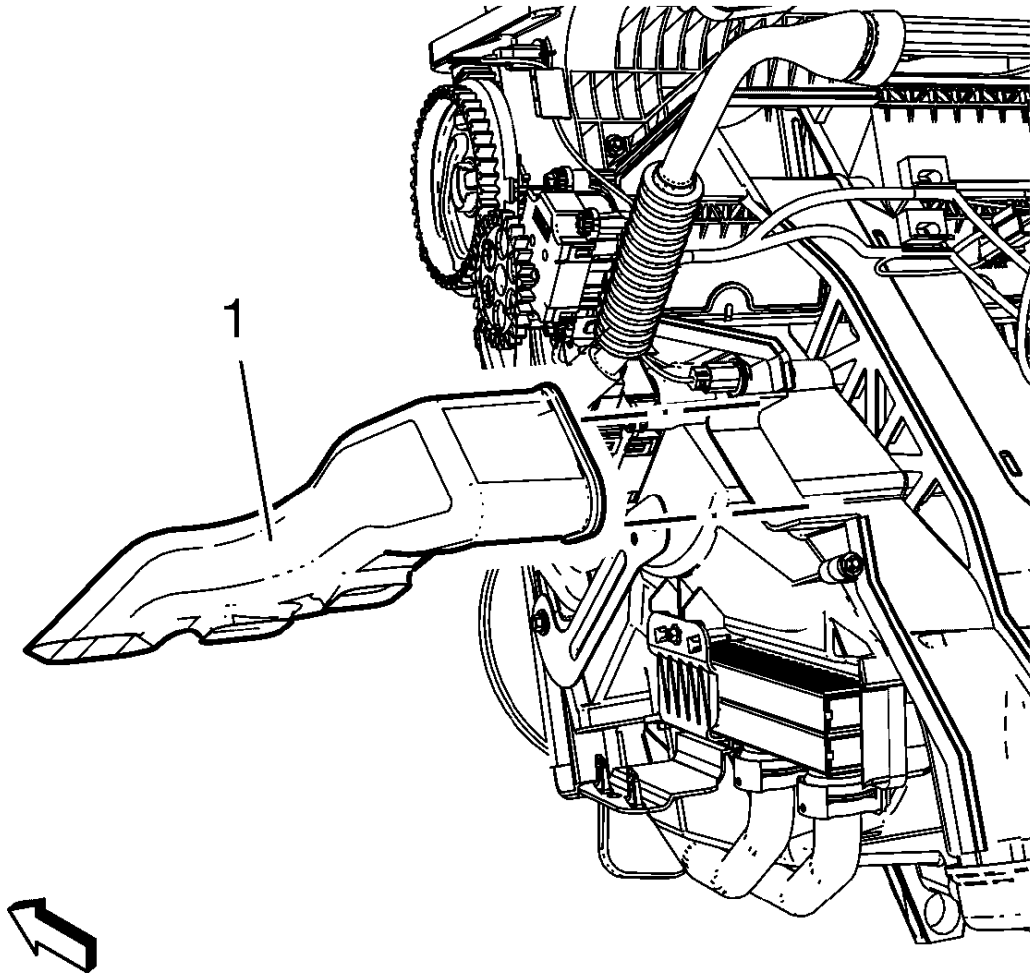

Fig. 96: Floor Air Outlet Duct - Left Side (Left Hand Drive)
Courtesy of GENERAL MOTORS COMPANY

1. Install floor air outlet duct (1) - left side.
2. Install instrument panel lower trim pad cover - left side. Refer to **Instrument Panel Lower Trim Pad Cover Replacement (without Knee Airbag)** , **Instrument Panel Lower Trim Pad Cover Replacement (with Knee Airbag)** .
3. Install instrument outer trim cover - left side. Refer to **Instrument Panel Outer Trim Cover Replacement - Left Side** .

FLOOR AIR OUTLET DUCT REPLACEMENT - RIGHT SIDE

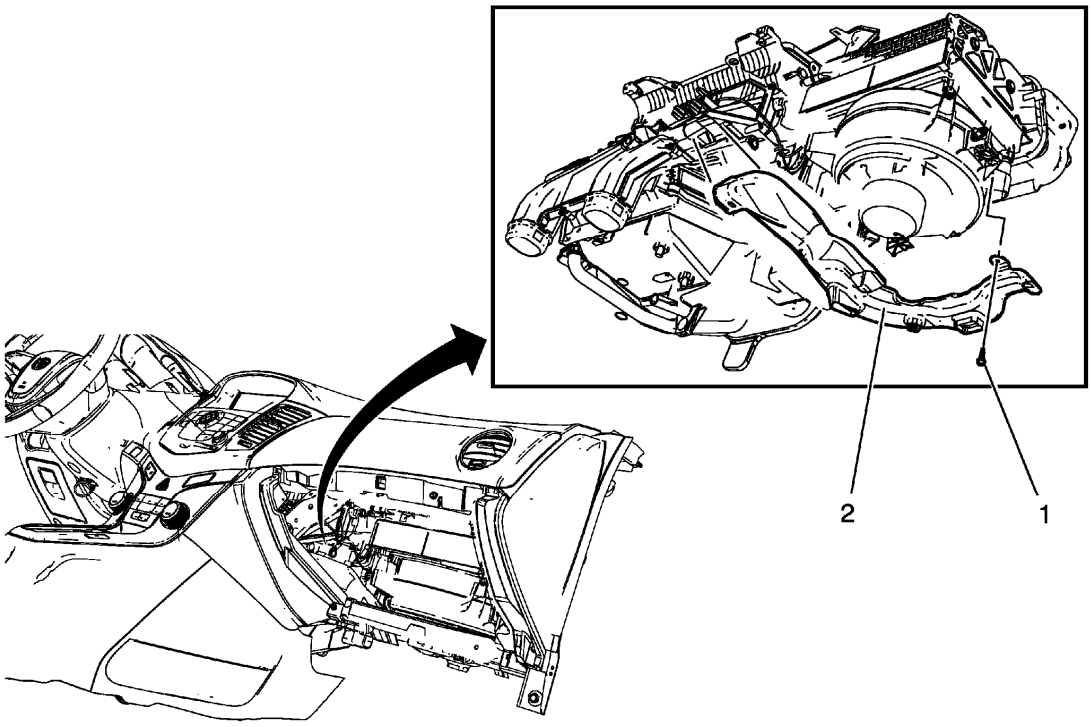

Fig. 97: Floor Front Air Outlet Duct
Courtesy of GENERAL MOTORS COMPANY

Floor Air Outlet Duct Replacement - Right Side

Callout	Component Name
Preliminary Procedure Remove instrument panel compartment. Refer to **Instrument Panel Compartment Replacement** .	
1	Floor Air Outlet Duct Bolt **CAUTION:** **Refer to Fastener Caution .** **Tighten** 2.5 N.m (22 lb in)
2	Floor Air Outlet Duct

FLOOR REAR AIR OUTLET DUCT REPLACEMENT - LEFT SIDE

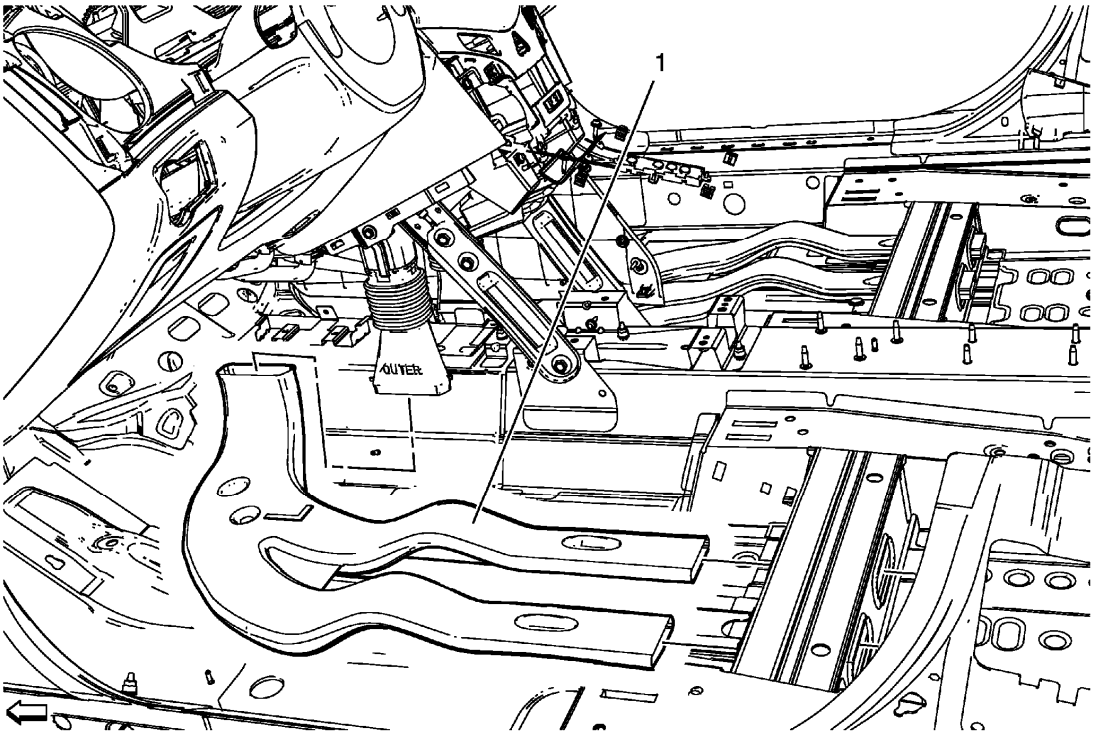

Fig. 98: Floor Rear Air Outlet Duct - Left Side
Courtesy of GENERAL MOTORS COMPANY

Floor Rear Air Outlet Duct Replacement - Left Side

Callout	Component Name
Preliminary Procedures Remove front floor panel carpet. Refer to **Front Floor Panel Carpet Replacement** .	
1	Floor Rear Air Outlet Duct

FLOOR REAR AIR OUTLET DUCT REPLACEMENT - RIGHT SIDE

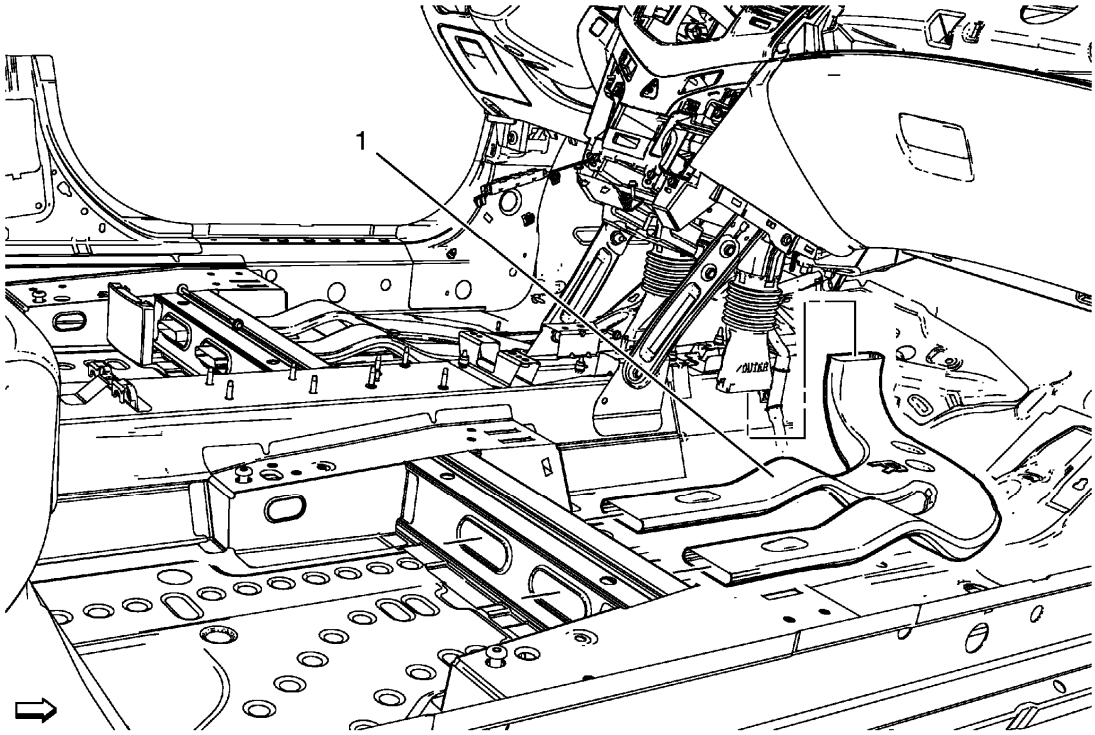

Fig. 99: Floor Rear Air Outlet Duct - Right Side
Courtesy of GENERAL MOTORS COMPANY

Floor Rear Air Outlet Duct Replacement - Right Side

Callout	Component Name
Preliminary Procedures Remove front floor panel carpet. Refer to **Front Floor Panel Carpet Replacement** .	
1	Floor Rear Air Outlet Duct

HEATER AND AIR CONDITIONING REMOTE CONTROL REPLACEMENT

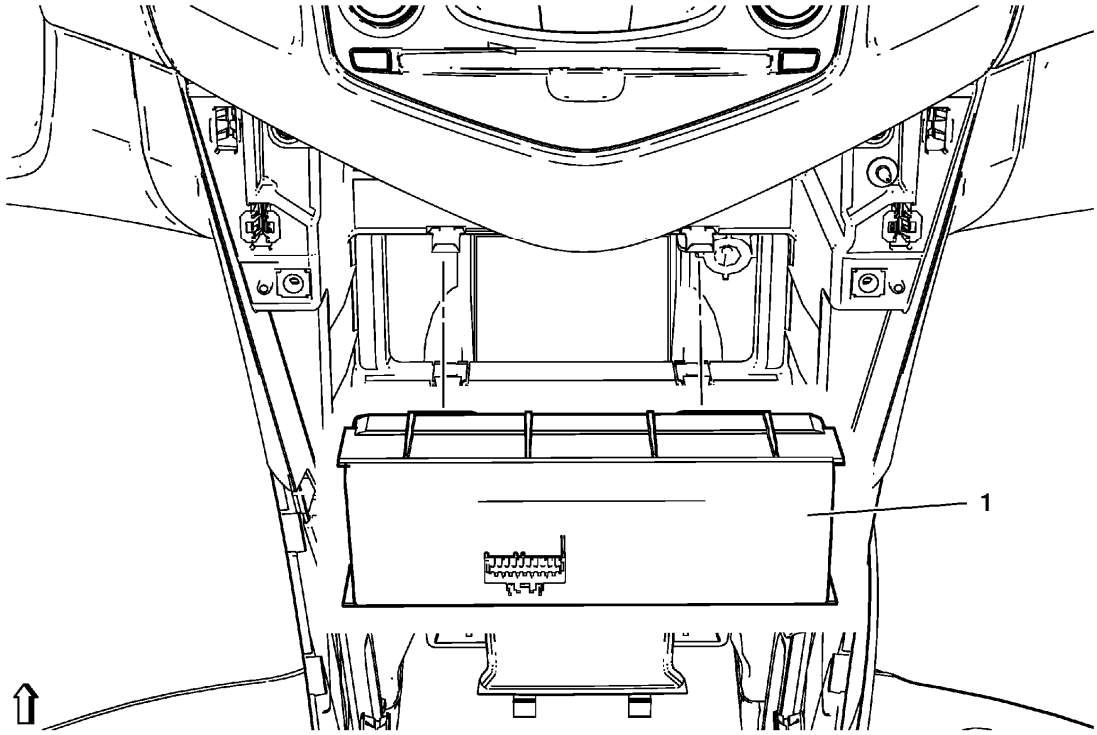

Fig. 100: Heater and Air Conditioning Remote Control
Courtesy of GENERAL MOTORS COMPANY

Heater and Air Conditioning Remote Control Replacement

Callout	Component Name
Preliminary Procedure 1. Prepare heater and air conditioning remote control for replacement, refer to **Control Module References** . 2. Disconnect the negative battery cable. Refer to **Battery Negative Cable Disconnection and Connection** 3. Remove heater and air conditioning control. Refer to **Heater and Air Conditioning Control Replacement** .	
1	Heater and Air Conditioning Remote Control **Procedure** 1. Disconnect electrical components. 2. Unclip remote control from instrument panel. 3. After repairs, refer to **Control Module References** for programming and set up information.

FRONT SIDE DOOR AIR OUTLET REPLACEMENT

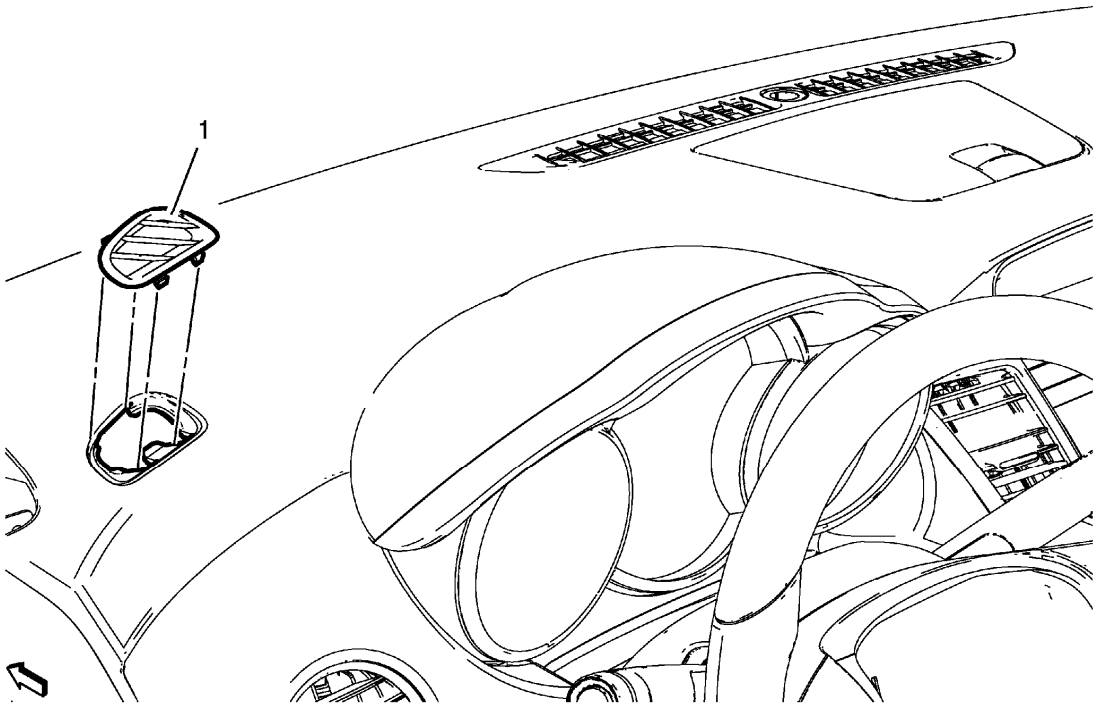

Fig. 101: Front Side Door Air Outlet
Courtesy of GENERAL MOTORS COMPANY

Front Side Door Air Outlet Replacement

Callout	Component Name
1	Front Side Door Air Outlet **Procedure** Using a plastic trim tool, release the air outlet retainers from the instrument panel.

HEATER CORE REPLACEMENT

Removal Procedure

1. Drain the cooling system. Refer to **Cooling System Draining and Filling (Static Fill)** , **Cooling System Draining and Filling (GE-47716 Fill)** .
2. Remove the instrument panel lower trim panel. Refer to **Instrument Panel Lower Trim Panel Replacement - Left Side** .
3. Remove the inflatable restraint instrument panel lower module - driver side. Refer to **Instrument Panel Lower Airbag Replacement - Driver Side** .

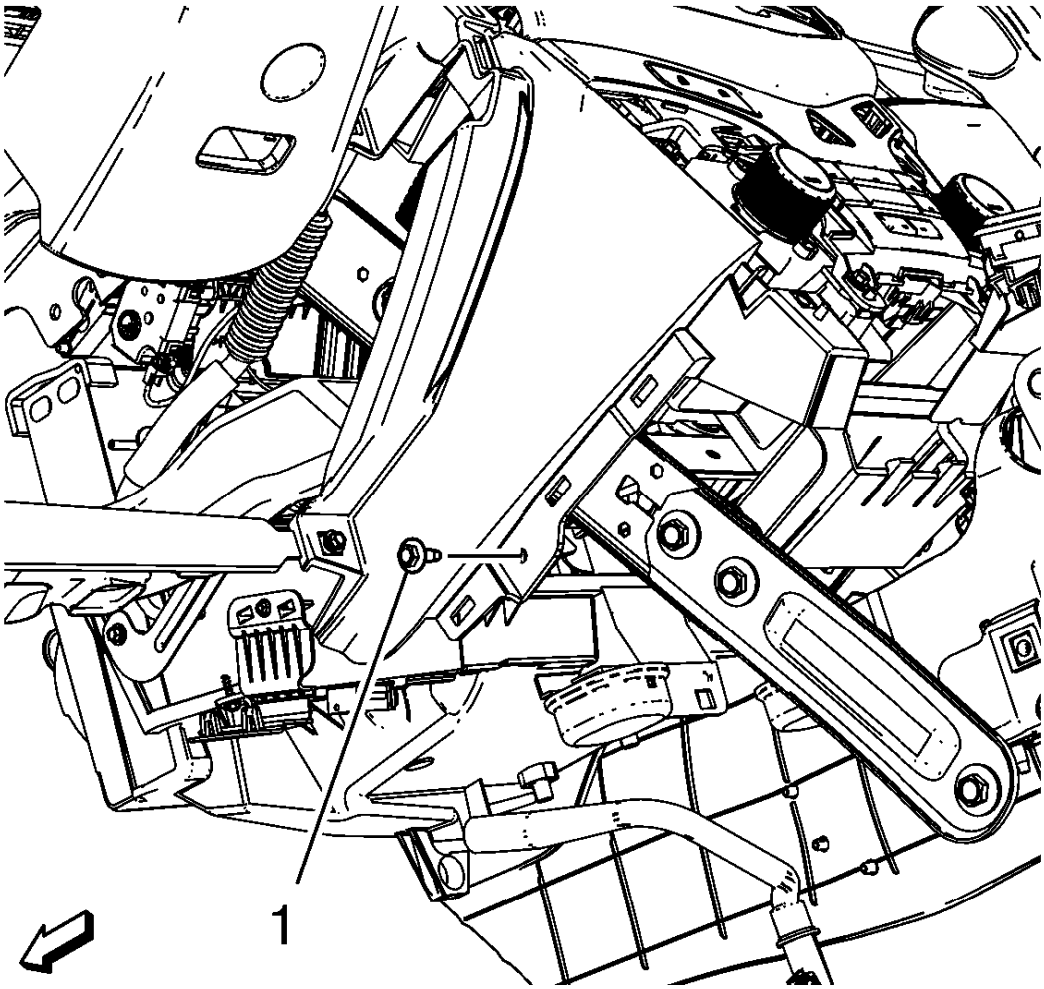

Fig. 102: Instrument Panel Bolt
Courtesy of GENERAL MOTORS COMPANY

4. Remove instrument panel bolt (1).

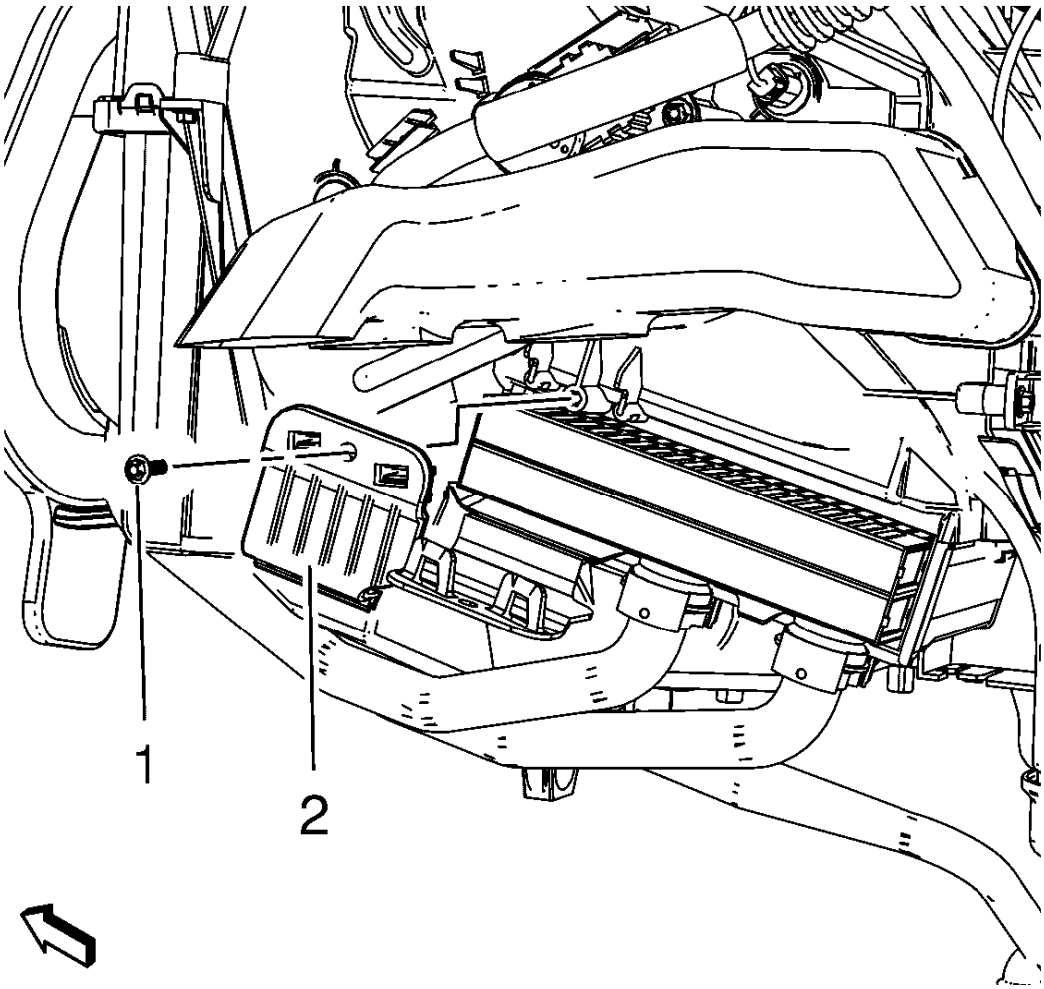

Fig. 103: Heater Core Cover
Courtesy of GENERAL MOTORS COMPANY

5. Remove heater core cover bolt (1) and heater core cover (2).

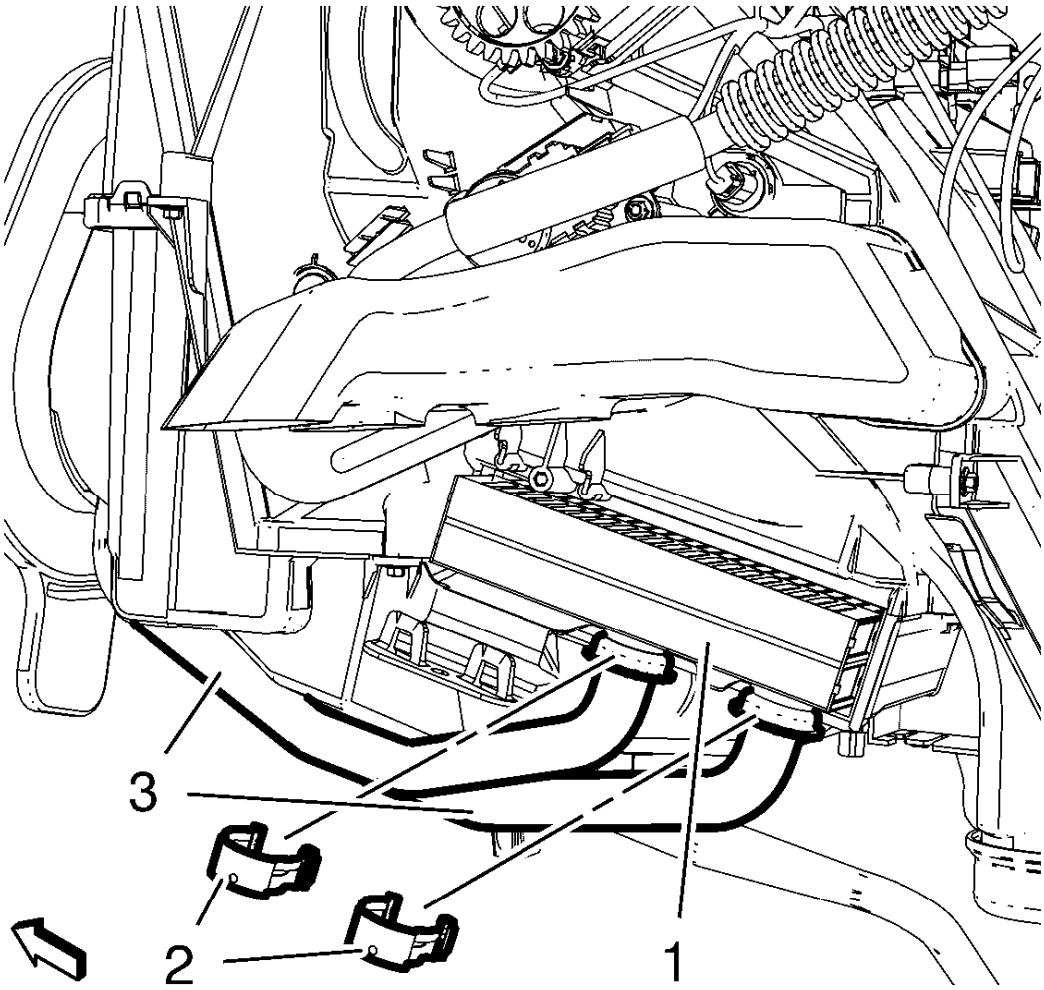

Fig. 104: Heater Core
Courtesy of GENERAL MOTORS COMPANY

NOTE: Some coolant may remain in the heater core. Place a protective cover on the floor and position a small container to catch residual coolant during heater core tube removal.

6. Remove the 2 heater core clamps (2).
7. Remove the 2 heater core tubes (3).
8. Remove the heater core (1).
9. Change the 2 heater core tube sealing rings.

Installation Procedure

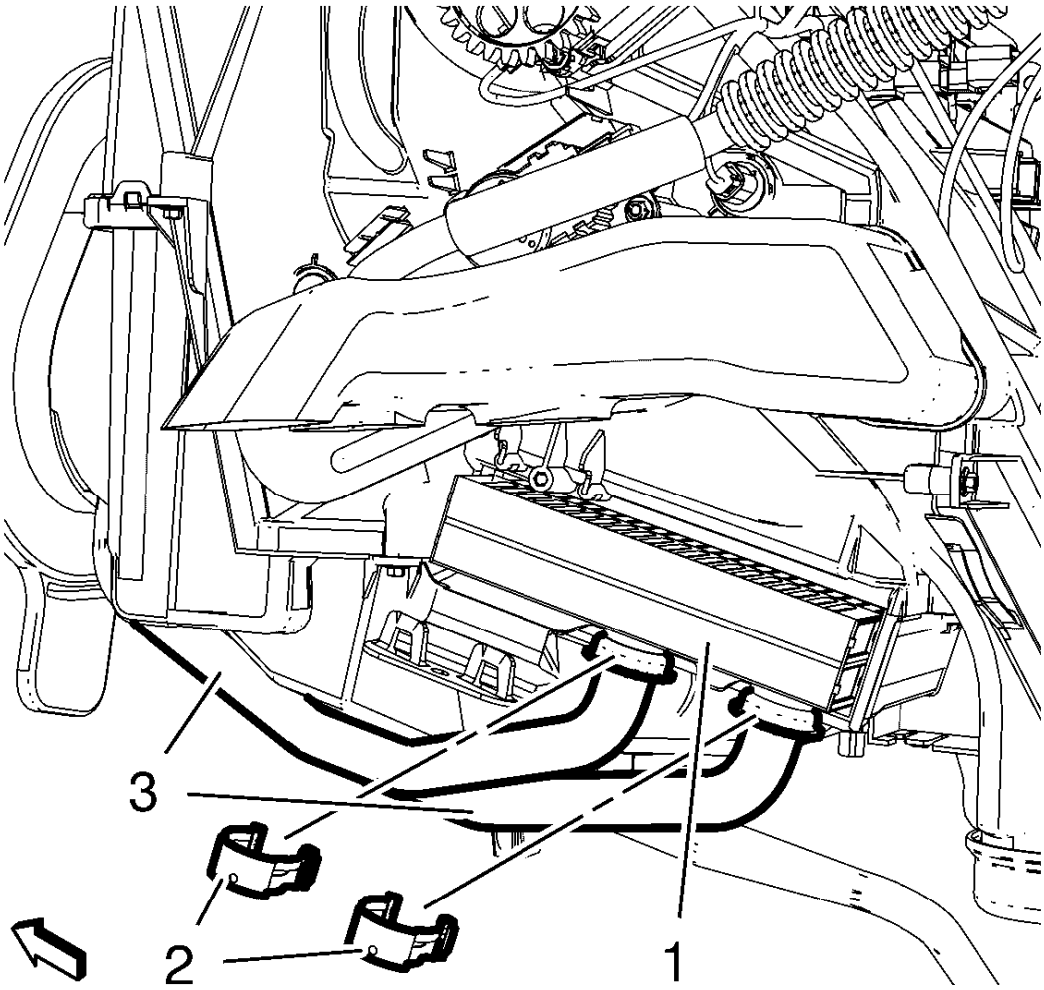

Fig. 105: Heater Core
Courtesy of GENERAL MOTORS COMPANY

1. Install the heater core (1).
2. Install the 2 heater core tubes (3).
3. Tighten the 2 heater core clamps (2).

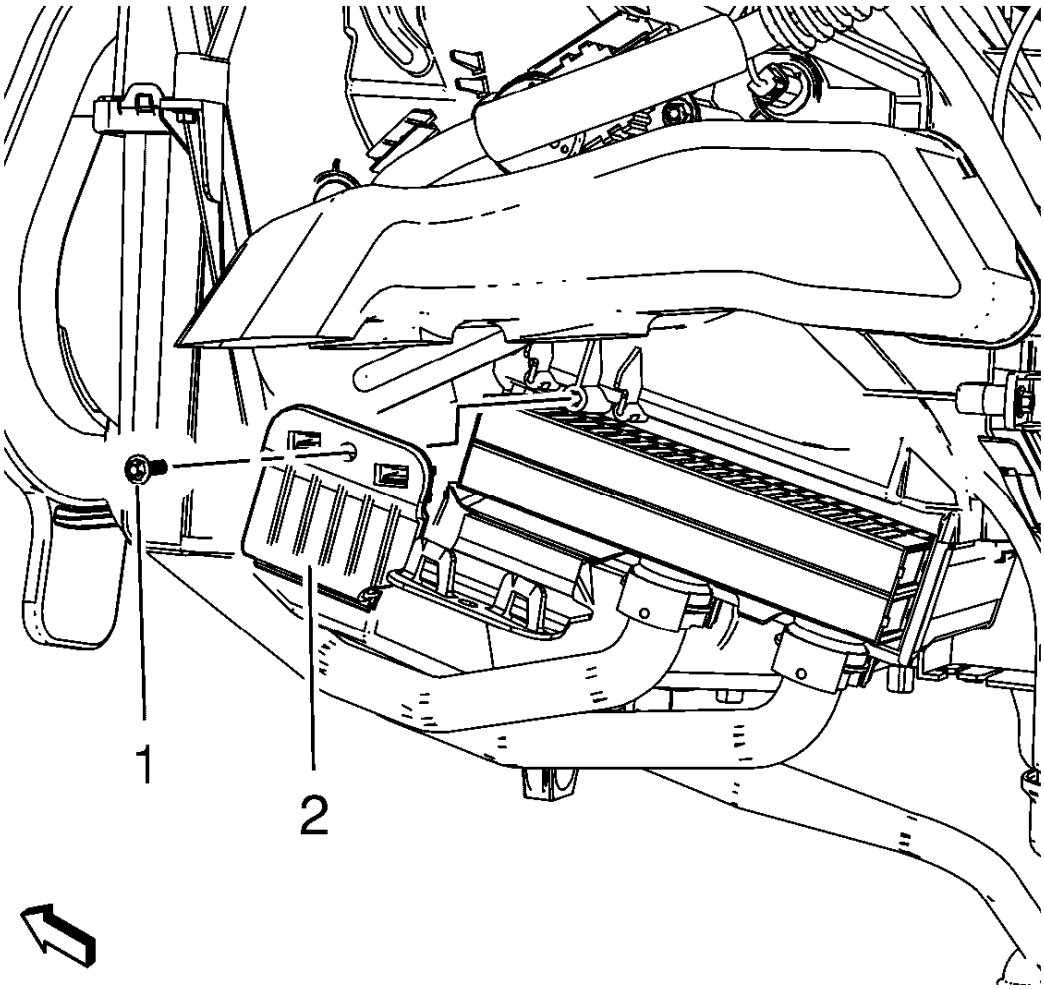

Fig. 106: Heater Core Cover
Courtesy of GENERAL MOTORS COMPANY

4. Install the heater core cover bolt (1) and heater core cover (2).

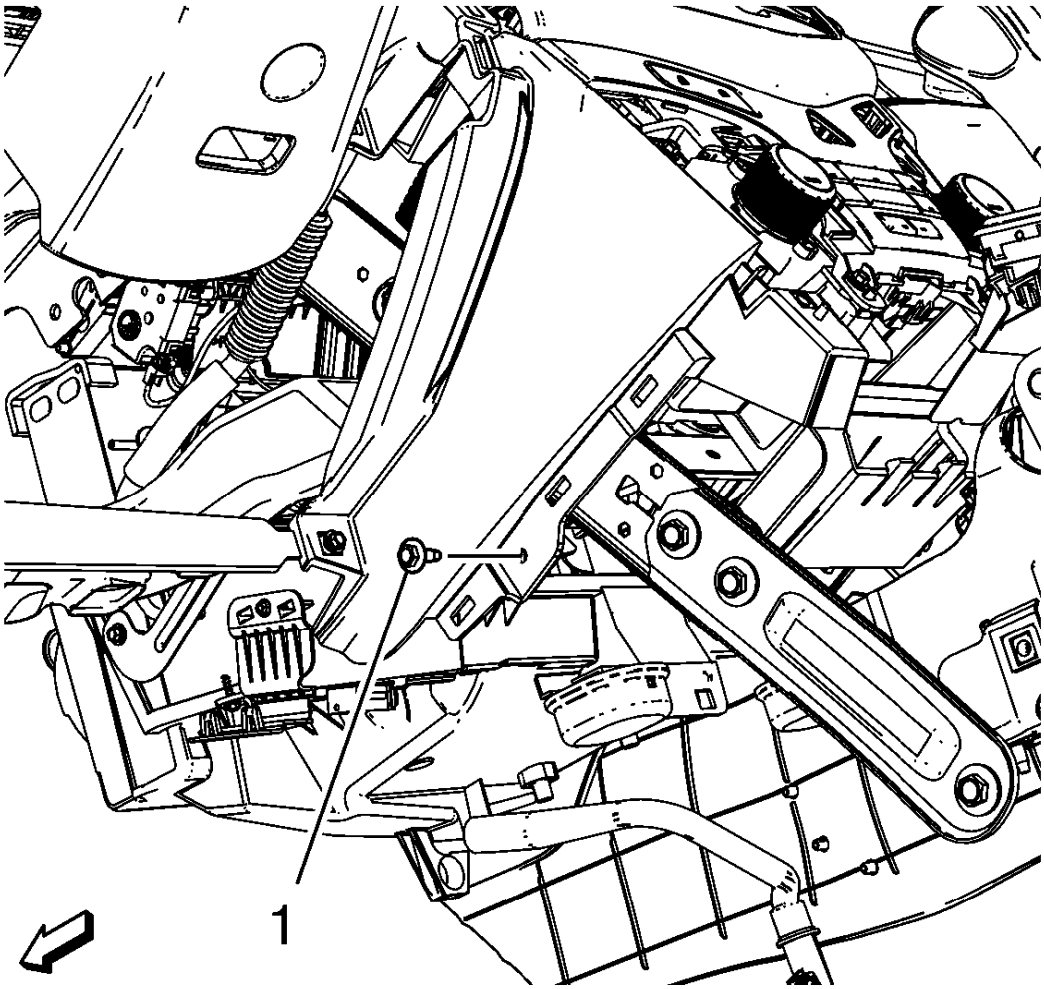

Fig. 107: Instrument Panel Bolt
Courtesy of GENERAL MOTORS COMPANY

5. Install instrument panel bolt (1).
6. Install the inflatable restraint instrument panel lower module - driver side. Refer to **Instrument Panel Lower Airbag Replacement - Driver Side** .
7. Install the instrument panel lower trim panel. Refer to **Instrument Panel Lower Trim Panel Replacement - Left Side** .
8. Bleed the cooling system. Refer to **Cooling System Draining and Filling (Static Fill)** , **Cooling System Draining and Filling (GE-47716 Fill)** .

DESCRIPTION AND OPERATION

HEATING AND AIR CONDITIONING SYSTEM DESCRIPTION AND OPERATION

Engine Coolant

Engine coolant is the key element of the heating system. The thermostat controls engine operating coolant temperature. The thermostat also creates a restriction for the cooling system that promotes a positive coolant flow and helps prevent cavitation. Coolant enters the heater core through the inlet heater hose, in a pressurized state.

The heater core is located inside the HVAC module. The heat of the coolant flowing through the heater core is absorbed by the ambient air drawn through the HVAC module. Heated air is distributed to the passenger compartment, through the HVAC module, for passenger comfort.

The amount of heat delivered to the passenger compartment is controlled by opening or closing the HVAC module air temperature door. The coolant exits the heater core through the return heater hose and recirculated back through the engine cooling system.

A/C Cycle

Refrigerant is the key element in an air conditioning system. R-134a is presently the only EPA approved refrigerant for automotive use. R-134a is an very low temperature gas that can transfer the undesirable heat and moisture from the passenger compartment to the outside air.

The A/C compressor is belt driven and operates when the magnetic clutch is engaged. The compressor builds pressure on the vapor refrigerant. Compressing the refrigerant also adds heat to the refrigerant. The refrigerant is discharged from the compressor, through the discharge hose, and forced to flow to the condenser and then through the balance of the A/C system. The A/C system is mechanically protected with the use of a high pressure relief valve. If the high pressure switch were to fail or if the refrigerant system becomes restricted and refrigerant pressure continued to rise, the high pressure relief will pop open and release refrigerant from the system.

Compressed refrigerant enters the condenser in a high temperature, high pressure vapor state. As the refrigerant flows through the condenser, the heat of the refrigerant is transferred to the ambient air passing through the condenser. Cooling the refrigerant causes the refrigerant to condense and change from a vapor to a liquid state.

The condenser is located in front of the radiator for maximum heat transfer. The condenser is made of aluminum and aluminum cooling fins, which allows rapid heat transfer for the refrigerant. The semi-cooled liquid refrigerant exits the condenser and flows through the liquid line, to the thermal expansion valve.

The thermal expansion valve is located in the liquid line between the condenser and the evaporator. The thermal expansion valve is the dividing point for the high and the low pressure sides of the A/C system. As the refrigerant passes through the thermal expansion valve, the pressure of the refrigerant is lowered. Due to the pressure differential of the liquid refrigerant, the refrigerant will begin to vaporize at the thermal expansion valve. The thermal expansion valve also meters the amount of liquid refrigerant that can flow into the evaporator.

Refrigerant exiting the thermal expansion valve flows into the evaporator core in a low pressure, liquid state. Ambient air is drawn through the HVAC module and passes through the evaporator core. Warm and moist air will cause the liquid refrigerant boil inside of the evaporator core. The boiling refrigerant absorbs heat from the ambient air and draws moisture onto the evaporator. The refrigerant exits the evaporator back through the thermal expansion valve and into the suction line and back to the compressor, in a vapor state completing the A/C cycle of heat removal. At the compressor, the refrigerant is compressed again and the cycle of heat removal

is repeated.

The conditioned air is distributed through the HVAC module for passenger comfort. The heat and moisture removed from the passenger compartment will also change form, or condense, and is discharged from the HVAC module as water under the vehicle.

SPECIAL TOOLS AND EQUIPMENT

SPECIAL TOOLS

Illustration	Tool Number/ Description
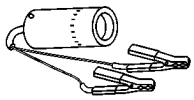	BO-42220 J-42220 Universal 12V Leak Detection Lamp
	EL-47955 J-2534 Multi Diagnostic Interface MDI
	GE-806 GE-33027-A Holding Wrench
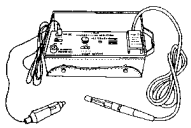	GE-39400 J-39400 GE-50078 Electric Halogen Leak Detector
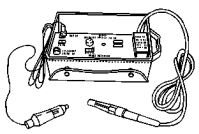	GE-39400-A J-39400-A GE-50078 Halogen Leak Detector
	GE-41447 J-41447 R-134A A/C Tracer Dye - Box of 24

	GE-43872 J-43872 Florescent Dye Cleaner
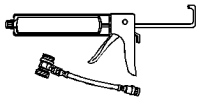	GE-45037-A J-45037-A A/C Oil Injector
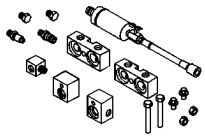	GE-45268 J-45268 A/C Flushing Adapter Kit
	GE-46246 J-46246 Valve Core Tool
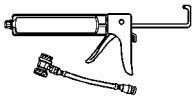	GE-46297 J-46297 A/C Dye Injector Kit
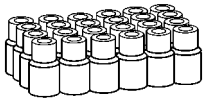	GE-46297-12 J-46297-12 Replacement Dye Cartridges
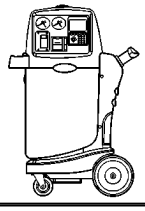	J-43600 A/C Filling Device

2013 HVAC

HVAC - Automatic - Cruze

SPECIFICATIONS

FASTENER TIGHTENING SPECIFICATIONS

Fastener Tightening Specifications

Application	Specification	
	Metric	English
Air Conditioning Control Module Bolt	2.5 N.m	22 lb in
Air Conditioning Module Wiring Harness Bolt	5 N.m	44 lb in
Air Inlet Housing Bolt	2.5 N.m	22 lb in
Air Inlet Valve Actuator Bolt	2.5 N.m	22 lb in
Instrument Panel Tie Bar Bolts	22 N.m	16 lb ft
Instrument Panel Tie Bar Nuts	9 N.m	80 lb in
Mode Control Cam Actuator Screw	2.5 N.m	22 lb in
Mode Valve Actuator Bolt	2.5 N.m	22 lb in
Temperature Valve Actuator Bolt	2.5 N.m	22 lb in

WIRING SCHEMATICS

HVAC WIRING SCHEMATICS

Module Power and Ground, Blower Control, and Serial Data Wiring Schematics

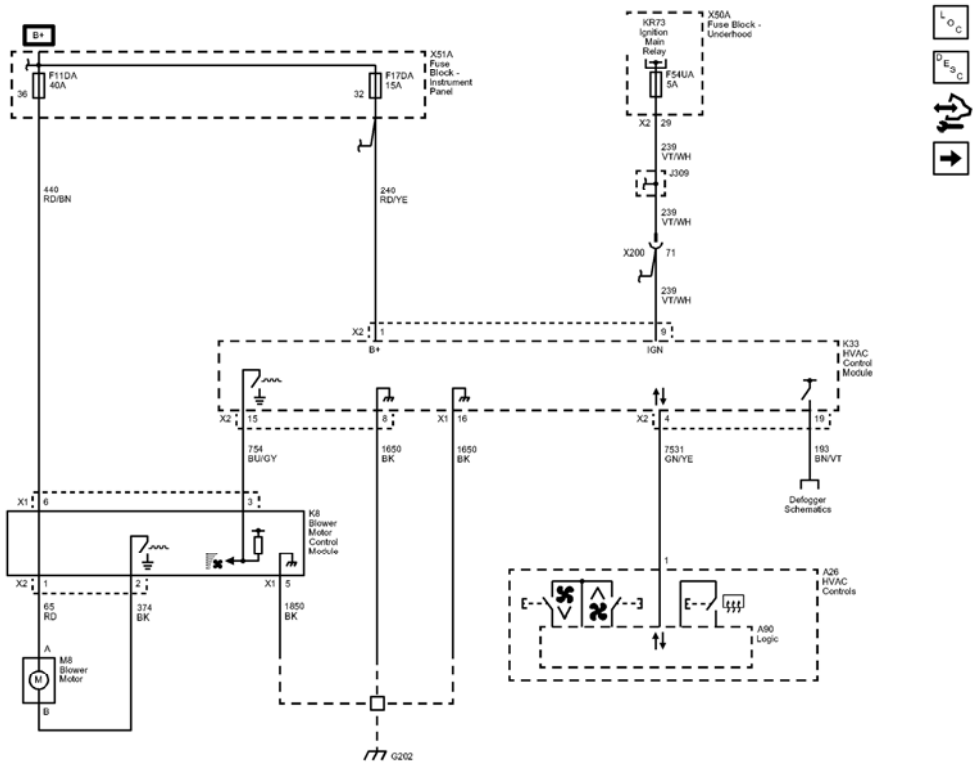

Fig. 1: Module Power and Ground, Blower Control, and Serial Data Wiring Schematics
Courtesy of GENERAL MOTORS COMPANY

Callout	Component Name
CAV_36	36
CAV_32	32
440	Battery Positive Voltage
440_RD/BN	440 RD/BN
CAV_6	6
CONN_X1	X1
240	Battery Positive Voltage
240_RD/YE	240 RD/YE
CAV_1	1
CONN_X2	X2
239	Run/Crank Ignition 1 Voltage
239_VT/WH	239 VT/WH
CAV_9	9
CAV_29	29
CONN_X2	X2
754	Blower Motor Speed Control
754_BU/GY	754 BU/GY

CAV_3	3
CAV_15	15
CONN_X2	X2
1650	Ground
1650_BK	1650 BK
CAV_8	8
193	Rear Defog Relay Control
193_BN/VT	193 BN/VT
CAV_19	19
7531	Linear Interconnect Network Bus 9
7531_GN/YE	7531 GN/YE
CAV_1	1
CAV 4	4
CONN_X2	X2
65	Blower Motor Supply Voltage
65_RD	65 RD
CAV_A	A
CAV_1	1
CONN_X2	X2
374	Blower Motor Fan Control
374_BK	374 BK
CAV_B	B
CAV_2	2
1850	Ground
1850_BK	1850 BK
CAV_5	5
CONN_X1	X1
1650 BK	1650 BK
CAV_16	16
CONN X1	X1
239_VT/WH	239 VT/WH
CAV_71	71
239_VT/WH	239 VT/WH
G202	G202
F54UA	F54UA 5A
F11DA	F11DA 40A
F17DA	F17DA 15A
X200	X200
Defogger_Schematics_REF	Defogger Schematics
M8	
K8	

X51A	
A90	Logic
KR73	
X50A	
A26	

Air Delivery and Temperature Controls

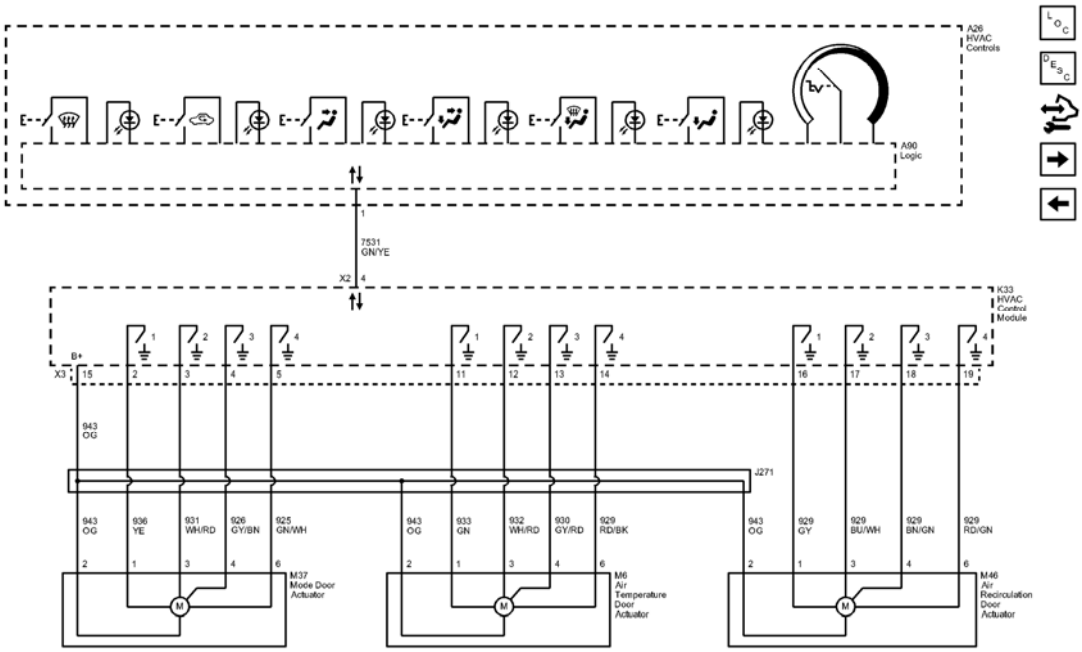

Fig. 2: Air Delivery and Temperature Controls
Courtesy of GENERAL MOTORS COMPANY

Callout	Component Name
7531	Linear Interconnect Network Bus 9
7531 GN/YE	7531 GN/YE
CAV_4	4
CONN_X2	X2
CAV_1	1
943_OG	943 OG
CAV_2	2
CAV_15	15

CONN_X3	X3
936_YE	936 YE
CAV_1	1
CAV_2	2
931_WH/RD	931 WH/RD
CAV_3	3
CAV_3	3
926_GY/BN	926 GY/BN
CAV_4	4
CAV_4	4
925_GN/WH	925 GN/WH
CAV_6	6
CAV 5	5
943_OG	943 OG
CAV_2	2
933_GN	933 GN
CAV_1	1
CAV_11	11
932_WH/RD	932 WH/RD
CAV_3	3
CAV_12	12
930_GY/RD	930 GY/RD
CAV_4	4
CAV_13	13
929_RD/BK	929 RD/BK
CAV_6	6
CAV_14	14
943 OG	943 OG
CAV_2	2
929 GY	929 GY
CAV_1	1
CAV_16	16
929_BU/WH	929 BU/WH
CAV_3	3
CAV_17	17
929_BN/GN	929 BN/GN
CAV_4	4
CAV_18	18
929_RD/GN	929 RD/GN
CAV_6	6
CAV_19	19
943_OG	

	943 OG
J271	J271
A90	Logic
K33	
M37	
M6	
M46	
A26	

Compressor Controls Wiring Schematics

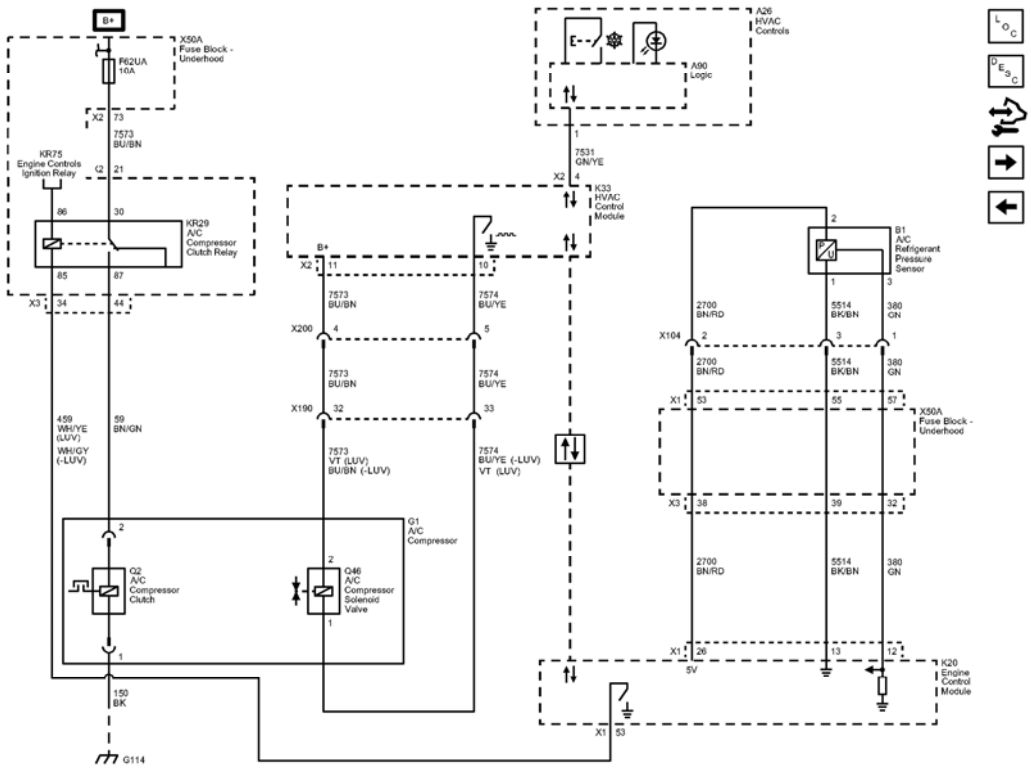

Fig. 3: Compressor Controls Wiring Schematics
Courtesy of GENERAL MOTORS COMPANY

Callout	Component Name
7573	Electric Variable Displacement Supply
7573_BU/BN	7573 BU/BN
CAV_21	21
CONN_X2	X2
CAV_73	73

CONN_X2	X2
CAV_30	30
CAV_87	87
CAV_85	85
459	A/C Compressor Clutch Relay Control
459_WH/YE	459 WH/YE
CAV_53	53
CONN_X1	X1
CAV_34	34
CONN_X3	X3
WH/GY	WH/GY
LUV	ENGINE-GAS, 4 CYL, 1.4L, MFI, DOHC, TURBO, VVT, ALUM, GME, E85 MAX
LUV	ENGINE-GAS, 4 CYL, 1.4L, MFI, DOHC, TURBO, VVT, ALUM, GME, E85 MAX
CAV 86	86
59	A/C Compressor Clutch Supply Voltage
59_BN/GN	59 BN/GN
CAV_44	44
CAV_2	2
CAV_1	1
150	Ground
150 BK	150 BK
7573_BU/BN	7573 BU/BN
CAV 11	11
CONN_X2	X2
7573_BU/BN	7573 BU/BN
7573_VT	7573 VT
BU/BN	BU/BN
LUV	ENGINE-GAS, 4 CYL, 1.4L, MFI, DOHC, TURBO, VVT, ALUM, GME, E85 MAX
LUV	ENGINE-GAS, 4 CYL, 1.4L, MFI, DOHC, TURBO, VVT, ALUM, GME, E85 MAX
CAV_2	2
7574	Electric Variable Displacement Control
7574_BU/YE	7574 BU/YE

CAV_10	10
7574_BU/YE	7574 BU/YE
CAV_1	1
7574_BU/YE	7574 BU/YE
VT	VT
LUV	ENGINE-GAS, 4 CYL, 1.4L, MFI, DOHC, TURBO, VVT, ALUM, GME, E85 MAX
LUV	ENGINE-GAS, 4 CYL, 1.4L, MFI, DOHC, TURBO, VVT, ALUM, GME, E85 MAX
7531	Linear Interconnect Network Bus 9
7531_GN/YE	7531 GN/YE
CAV_4	4
CONN_X2	X2
CAV_1	1
SD	Serial Data
Data_Communication_Schematics_REF	Data Communication Schematics
2700	A/C Pressure Sensor 5 Volt Reference
2700_BN/RD	2700 BN/RD
CAV_26	26
CONN_X1	X1
CAV_38	38
CONN_X3	X3
5514	A/C Refrigerant Pressure Sensor Low Reference
5514_BK/BN	5514 BK/BN
CAV_13	13
CAV_39	39
380	A/C Refrigerant Pressure Sensor Signal
380_GN	380 GN
CAV_12	12
CAV_32	32
2700_BN/RD	2700 BN/RD
CAV_53	53
CONN_X1	X1
CAV_2	2
2700_BN/RD	2700 BN/RD

5514_BK/BN	5514 BK/BN
CAV_55	55
CAV_1	1
5514_BK/BN	5514 BK/BN
380_GN	380 GN
CAV_57	57
CAV_3	3
380_GN	380 GN
X200	X200
CAV_4	4
CAV_5	5
X190	X190
CAV 32	32
CAV_33	33
X104	X104
CAV_2	2
CAV_3	3
CAV_1	1
G114	G114
F62UA	F62UA 10A
X200	X200
X190	X190
X104	X104
B1	
K20	
A90	Logic
K33	
X50A	
Q46	
Q2	
G1	
KR75	
KR29	
X50A	
A26	

Temperature Sensors Wiring Schematics

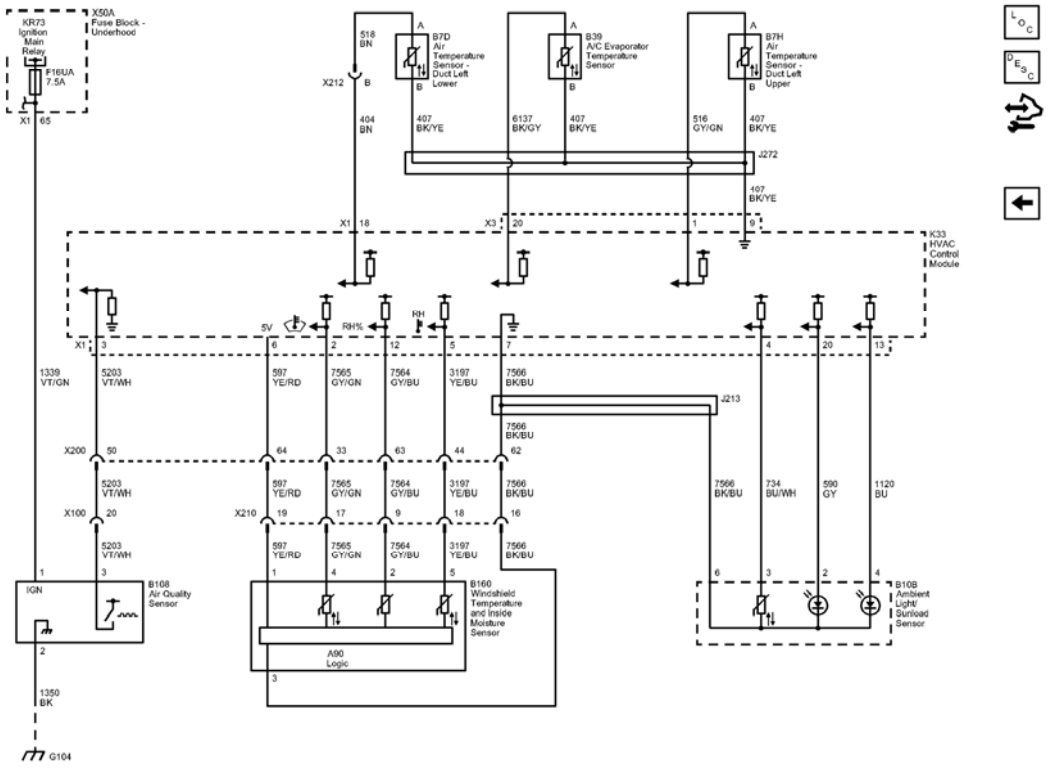

Fig. 4: Temperature Sensors Wiring Schematics
Courtesy of GENERAL MOTORS COMPANY

Callout	Component Name
1339	Run/Crank Ignition 1 Voltage
1339 VT/GN	1339 VT/GN
CAV_1	1
CAV_65	65
CONN_X1	X1
518	Lower Left Air Temperature Sensor Signal
518_BN	518 BN
CAV_18	18
CONN_X1	X1
CAV_A	A
404_BN	404 BN
CAV_B	B
6137	EVAP Core Temperature Sensor Signal
6137_BK/GY	6137 BK/GY
CAV_20	20
CONN_X3	X3
CAV_A	A

407	Sensor Low Reference
407_BK/YE	407 BK/YE
CAV_B	B
407_BK/YE	407 BK/YE
CAV_B	B
516	Upper Left Air Temperature Sensor Signal
516_GY/GN	516 GY/GN
CAV_1	1
CAV_A	A
407_BK/YE	407 BK/YE
CAV_9	9
CAV_B	B
407 BK/YE	407 BK/YE
5203	Air Quality Sensor Signal
5203_VT/WH	5203 VT/WH
CAV_3	3
CAV_3	3
CONN_X1	X1
5203_VT/WH	5203 VT/WH
5203_VT/WH	5203 VT/WH
CAV_20	20
597	5 Volt Reference
597_YE/RD	597 YE/RD
CAV_1	1
CAV_6	6
597_YE/RD	597 YE/RD
597_YE/RD	597 YE/RD
7565	Windscreen Temp Sensor Signal
7565_GY/GN	7565 GY/GN
CAV 4	4
CAV_2	2
7565_GY/GN	7565 GY/GN
7565_GY/GN	7565 GY/GN
7564	Humidity Sensor Signal
7564_GY/BU	7564 GY/BU
CAV_2	2
CAV_12	12
7564_GY/BU	7564 GY/BU
7564_GY/BU	7564 GY/BU
3197	Humidity Temperature Sensor Signal
3197_YE/BU	3197 YE/BU

	5
CAV_5	5
3197_YE/BU	3197 YE/BU
3197_YE/BU	3197 YE/BU
7566	Humidity/Windscreen Temp Sensor Low Reference
7566_BK/BU	7566 BK/BU
CAV_3	3
CAV_7	7
7566_BK/BU	7566 BK/BU
7566_BK/BU	7566 BK/BU
7566_BK/BU	7566 BK/BU
1350	Ground
1350_BK	1350 BK
CAV_2	2
1120	Solar Sensor Pulsed Supply Voltage
1120_BU	1120 BU
CAV_4	4
CAV_13	13
590	Solar Sensor Driver Signal
590_GY	590 GY
CAV_2	2
CAV_20	20
734	Inside Air Temperature Sensor Signal
734_BU/WH	734 BU/WH
CAV_3	3
CAV_4	4
7566_BK/BU	7566 BK/BU
CAV_6	6
X200	X200
CAV_50	50
CAV_64	64
CAV_33	33
CAV_63	63
CAV_44	44
CAV_62	62
X210	X210
CAV_19	19
CAV_17	17
CAV_9	9
CAV_18	18
CAV_16	16
C104	

	G104
F16UA	F16UA 7.5A
X212	X212
J272	J272
X100	X100
J213	J213
X200	X200
X210	X210
B108	(C68)
K33	
X50A	
B160	(C68)
B10B	
B39	
B7H	(C68)
B7D	(C68)
KR73	
A90	Logic

DIAGNOSTIC INFORMATION AND PROCEDURES

HVAC COMPONENT REPLACEMENT REFERENCE

HVAC Component Replacement Reference

Scan Tool Name	Component Code / Schematic Name	Service Name	Repair Instruction Name
Air Recirculation Door Actuator	M46 Air Recirculation Door Actuator	Air Recirculation Door Actuator	**Air Inlet Valve Actuator Replacement**
Left Temperature Door Actuator	M6 Air Temperature Actuator	Air Temperature Actuator	**Temperature Valve Actuator Replacement**
Mode Door Actuator	M37 Mode Door Actuator	Mode Door Actuator	**Mode Control Cam Replacement**
Blower Motor	M8 Blower Motor	Blower Motor	**Blower Motor Replacement**
A/C High Side Pressure Sensor	B1 A/C Refrigerant Pressure Sensor	A/C Refrigerant Pressure Sensor	**Air Conditioning (A/C) Refrigerant Pressure Sensor Replacement**
A/C Compressor Clutch	Q2 A/C Compressor Clutch	A/C Compressor Clutch	**Air Conditioning Clutch Assembly Replacement**
Radio/HVAC Control	A20 Radio/HVAC Control	Radio/HVAC Control	**Heater and Air Conditioning Remote Control Replacement**

Remote Heater and Air Conditioning Control Module	K33 HVAC Control Module	HVAC Control Module	**Heater and Air Conditioning Remote Control Replacement**

DIAGNOSTIC CODE INDEX

DIAGNOSTIC CODE INDEX

DTC	Description
DTC B0163	DTC B0163 02 Passenger Compartment Temperature Sensor Circuit Short to Ground DTC B0163 05 Passenger Compartment Temperature Sensor Circuit High Voltage/Open
DTC B0173, B0178, or B3933	DTC B0173 02 Upper Left Duct Air Temperature Sensor Circuit Short to Ground DTC B0173 05 Upper Left Duct Air Temperature Sensor Circuit High Voltage/Open DTC B0178 02 Lower Left Duct Air Temperature Sensor Circuit Short to Ground DTC B0178 05 Lower Left Duct Air Temperature Sensor Circuit High Voltage/Open DTC B3933 02 Air Conditioning Evaporator Temperature Sensor Circuit Short to Ground DTC B3933 05 Air Conditioning Evaporator Temperature Sensor Circuit High Voltage/Open
DTC B018A, B048C, B048F, or B1395	DTC B018A 02 Windshield Temperature Sensor Circuit Short to Ground DTC B018A 05 Windshield Temperature Sensor Circuit High Voltage/Open DTC B048C 02 Humidity Sensor Humidity Circuit Short to Ground DTC B048C 05 Humidity Sensor Humidity Circuit High Voltage/Open DTC B048F 02 Humidity Sensor Temperature Circuit Short to Ground DTC B048F 05 Humidity Sensor Temperature Circuit High Voltage/Open DTC B1395 03 Control Module Voltage Reference Output Circuit Low Voltage DTC B1395 07 Control Module Voltage Reference Output Circuit High Voltage
DTC B0183	DTC B0183 02 Solar Load Sensor Circuit Short to Ground DTC B0183 05 Solar Load Sensor Circuit High Voltage/Open
DTC B0193	DTC B0193 01 Front Blower Motor Speed Circuit Short to Battery DTC B0193 06 Front Blower Motor Speed Circuit

	Low Voltage/Open
DTC B0223, B0233, B023A, or B0408	DTC B0223 01 Recirculate Position Command 1 Circuit Short to Battery DTC B0223 06 Recirculate Position Command 1 Circuit Low Voltage/Open DTC B0233 01 Air Flow Control Circuit Short to Battery DTC B0233 06 Air Flow Control Circuit Low Voltage/Open DTC B023A 02 HVAC Actuators Supply Voltage Short to Ground DTC B0408 01 Main Temperature Control Circuit Short to Battery DTC B0408 06 Main Temperature Control Circuit Low Voltage/Open
DTC B3843	DTC B3843 02 Air Quality Sensor Circuit Short to Ground DTC B3843 05 Air Quality Sensor Circuit High Voltage/Open DTC B3843 08 Air Quality Sensor Circuit Performance - Signal Invalid
DTC B393B	DTC B393B 04 Air Conditioning Compressor Valve Control Circuit Open DTC B393B 0B Air Conditioning Compressor Valve Control Circuit High Current
DTC P0530, P0532, or P0533	DTC P0530 03 Air Conditioning (A/C) Refrigerant Pressure Sensor Circuit Low Voltage DTC P0530 07 Air Conditioning (A/C) Refrigerant Pressure Sensor Circuit High Voltage DTC P0532 00 Air Conditioning (A/C) Refrigerant Pressure Sensor Circuit Low Voltage DTC P0533 00 Air Conditioning (A/C) Refrigerant Pressure Sensor Circuit High Voltage
DTC P0645, P0646, or P0647	DTC P0645 Air Conditioning (A/C) Compressor Clutch Relay Control Circuit DTC P0646 Air Conditioning (A/C) Compressor Clutch Relay Control Circuit Low Voltage DTC P0647 Air Conditioning (A/C) Compressor Clutch Relay Control Circuit High Voltage

DTC B0163

Diagnostic Instructions

- Perform the **Diagnostic System Check - Vehicle** prior to using this diagnostic procedure.
- Review **Strategy Based Diagnosis** for an overview of the diagnostic approach.

- **Diagnostic Procedure Instructions** provides an overview of each diagnostic category.

DTC Descriptors

DTC B0163 02

Passenger Compartment Temperature Sensor Circuit Short to Ground

DTC B0163 05

Passenger Compartment Temperature Sensor Circuit High Voltage/Open

Diagnostic Fault Information

Circuit	Short to Ground	Open/High Resistance	Short to Voltage	Signal Performance
Signal Terminal 3	B0163 02	B0163 05	B0163 05	1
Low Reference	-	B0163 05, B0183 05	-	-
1. HVAC Malfunction				

Circuit/System Description

The ambient light/sunload sensor includes the sunload sensor and passenger compartment temperature sensor.

This sensor assembly provides information about:

- Sun heat intensity
- Passenger compartment temperature

The vehicle uses a sunload sensor that is integrated into one sensor assembly along with the passenger compartment temperature sensor. Low reference and signal circuits enable the sensor to operate. The sensor signal varies between 0-5 V.

The passenger compartment temperature sensor is a negative temperature co-efficient thermistor. A signal and low reference circuit enables the sensor to operate. As the air temperature increases, the sensor resistance decreases. The sensor signal varies between 0-5 V.

Bright or high intensity light causes the vehicles interior temperature to increase. The HVAC system compensates for the increased temperature by diverting additional cool air into the vehicle.

Conditions for Running the DTC

- Ignition ON
- The HVAC control module is ON.

Conditions for Setting the DTC

The HVAC control module detects the sensor signal out of range. The signal voltage is less than 0.1 V or greater than 4.9 V for more than 50 ms.

Action Taken When the DTC Sets

The system operates using a default value.

Conditions for Clearing the DTC

The sensor signal is within specified range between 0.1-4.9 V.

Reference Information

Schematic Reference

HVAC Schematics

Connector End View Reference

COMPONENT CONNECTOR END VIEWS - INDEX

Description and Operation

Automatic HVAC Description and Operation

Electrical Information Reference

- **Circuit Testing**
- **Connector Repairs**
- **Testing for Intermittent Conditions and Poor Connections**
- **Wiring Repairs**

Scan Tool Reference

Control Module References

Circuit/System Testing

1. Ignition OFF, disconnect the harness connector at the B10B Ambient Light/Sunload Sensor. It may take up to 2 minutes for all vehicle systems to power down.
2. Test for less than 10 ohms between the low reference circuit terminal 6 and ground.
    - **If 10 ohms or greater**
    1. Ignition OFF, disconnect the harness connector at the K33 HVAC Control Module.
    2. Test for less than 2 ohms in the low reference circuit end to end.

    - If 2 ohms or greater, repair the open/high resistance in the circuit.
    - If less than 2 ohms, replace the K33 HVAC Control Module.
  - **If less than 10 ohms**
3. Ignition ON.
4. Verify the scan tool parameter Passenger Compartment Air Temperature (Unfiltered) is less than -35°F.
  - **If -35°F or greater**
    1. Ignition OFF, disconnect the harness connector at the K33 HVAC Control Module.
    2. Test for infinite resistance between the signal circuit terminal 3 and ground.
      - If less than infinite resistance, repair the short to ground on the circuit.
      - If infinite resistance, replace the K33 HVAC Control Module.
  - **If less than -35°F**
5. Install a 3 A fused jumper wire between the signal circuit terminal 3 and the low reference circuit terminal 6.
6. Verify the scan tool parameter Passenger Compartment Air Temperature (Unfiltered) is greater than 240° F.
  - **If 240°F or less**
    1. Ignition OFF, disconnect the harness connector at the K33 HVAC Control Module, ignition ON.
    2. Test for less than 1 V between the signal circuit and ground.
      - If 1 V or greater, repair the short to voltage on the circuit.
      - If less than 1 V
    3. Ignition OFF
    4. Test for less than 2 ohms in the signal circuit end to end.
      - If 2 ohms or greater, repair the open/high resistance in the circuit.
      - If less than 2 ohms, replace the K33 HVAC Control Module.
  - **If greater than 240°F**
7. Test or replace the B10B Ambient Light/Sunload Sensor.

Repair Instructions

Perform the **Diagnostic Repair Verification** after completing the diagnostic procedure.

- **HVAC Component Replacement Reference**
- **Control Module References** for HVAC control module replacement, programming and setup

DTC B0173, B0178, OR B3933

Diagnostic Instructions

- Perform the **Diagnostic System Check - Vehicle** prior to using this diagnostic procedure.
- Review **Strategy Based Diagnosis** for an overview of the diagnostic approach.
- **Diagnostic Procedure Instructions** provides an overview of each diagnostic category.

DTC Descriptors

DTC B0173 02

Upper Left Duct Air Temperature Sensor Circuit Short to Ground

DTC B0173 05

Upper Left Duct Air Temperature Sensor Circuit High Voltage/Open

DTC B0178 02

Lower Left Duct Air Temperature Sensor Circuit Short to Ground

DTC B0178 05

Lower Left Duct Air Temperature Sensor Circuit High Voltage/Open

DTC B3933 02

Air Conditioning Evaporator Temperature Sensor Circuit Short to Ground

DTC B3933 05

Air Conditioning Evaporator Temperature Sensor Circuit High Voltage/Open

Circuit/System Description

The air temperature sensors are a 2-wire negative temperature co-efficient thermistor. The vehicle uses the following air temperature sensors:

- Air temperature sensor - left upper
- Air temperature sensor - left lower
- A/C evaporator temperature sensor

A signal and low reference circuit enables the sensor to operate. As the air temperature surrounding the sensor increases, the sensor resistance decreases. The sensor signal voltage decreases as the resistance decreases. The sensor operates within a temperature range between -40 to +85°C (-40 to +185°F). The sensor signal varies between 0-5 V. The HVAC control module converts the signal to a range between 0-255 counts. As the air temperature increases the count value will decrease. If the HVAC control module detects a malfunctioning sensor, then the control module software will use a default air temperature value. The default action ensures that the HVAC system can adjust the inside air temperature near the desired temperature until the condition is corrected.

Conditions for Running the DTC

- Ignition ON

- The HVAC control module is ON.

Conditions for Setting the DTC

The HVAC control module detects the sensor signal out of range. The signal voltage is less than 0.1 V or greater than 4.9 V for more than 50 ms.

Action Taken When the DTC Sets

The system operates using a default value.

Conditions for Clearing the DTC

The sensor signal is within specified range between 0.1-4.9 V.

Reference Information

Schematic Reference

HVAC Schematics

Connector End View Reference

COMPONENT CONNECTOR END VIEWS - INDEX

Description and Operation

Automatic HVAC Description and Operation

Electrical Information Reference

- **Circuit Testing**
- **Connector Repairs**
- **Testing for Intermittent Conditions and Poor Connections**
- **Wiring Repairs**

Scan Tool Reference

Control Module References

Circuit/System Testing

1. Ignition OFF and all vehicle systems OFF, disconnect the harness connector at the appropriate temperature sensor It may take up to 2 minutes for all vehicle systems to power down.
2. Test for less than 10 ohms between the low reference circuit terminal B and ground.
    - **If 10 ohms or greater**

1. Ignition OFF, disconnect the harness connector at the K33 HVAC Control Module.
2. Test for less than 2 ohms in the low reference circuit end to end.
    - If 2 ohms or greater, repair the open/high resistance in the circuit.
    - If less than 2 ohms, replace the K33 HVAC Control Module.

- **If less than 10 ohms**

3. Ignition ON.
4. Verify the appropriate scan tool Temperature Sensor parameter is less than -35°C (-39°F).
    - **If -35°C (-39°F) or less**
    1. Ignition OFF, disconnect the harness connector at the K33 HVAC Control Module.
    2. Test for infinite resistance between the signal circuit terminal A and ground.
        - If less than infinite resistance, repair the short to ground on the circuit.
        - If infinite resistance, replace the K33 HVAC Control Module.

    - **If greater than -35°C (-39°F)**
5. Install a 3 A fused jumper wire between the signal circuit terminal A and the low reference circuit terminal B.
6. Verify the scan tool temperature sensor parameter is greater than 85°C (185°F).
    - **If 85°C (185°F) or greater**
    1. Ignition OFF, disconnect the harness connector at the HVAC control module, ignition ON.
    2. Test for less than 1 V between the signal circuit and ground.
        - If 1 V or greater, repair the short to voltage on the circuit.
        - If less than 1 V
    3. Ignition OFF
    4. Test for less than 2 ohms in the signal circuit end to end.
        - If 2 ohms or greater, repair the open/high resistance in the circuit.
        - If less than 2 ohms, replace the K33 HVAC Control Module.

    - **If less than 0.1 V**
7. Test or replace the temperature sensor.

Repair Instructions

Perform the **Diagnostic Repair Verification** after completing the diagnostic procedure.

- **HVAC Component Replacement Reference**
- **Control Module References** for HVAC control module replacement, programming and setup

DTC B018A, B048C, B048F, OR B1395

Diagnostic Instructions

- Perform the **Diagnostic System Check - Vehicle** prior to using this diagnostic procedure.

- Review **Strategy Based Diagnosis** for an overview of the diagnostic approach.
- **Diagnostic Procedure Instructions** provides an overview of each diagnostic category.

DTC Descriptors

DTC B018A 02

Windshield Temperature Sensor Circuit Short to Ground

DTC B018A 05

Windshield Temperature Sensor Circuit High Voltage/Open

DTC B048C 02

Humidity Sensor Humidity Circuit Short to Ground

DTC B048C 05

Humidity Sensor Humidity Circuit High Voltage/Open

DTC B048F 02

Humidity Sensor Temperature Circuit Short to Ground

DTC B048F 05

Humidity Sensor Temperature Circuit High Voltage/Open

DTC B1395 03

Control Module Voltage Reference Output Circuit Low Voltage

DTC B1395 07

Control Module Voltage Reference Output Circuit High Voltage

Diagnostic Fault Information

Circuit	Short to Ground	Open/High Resistance	Short to Voltage	Signal Performance
5 V Reference	B1395 03	B1395 03	B1395 07	-
Signal Terminal 2	B048C 02	B048C 05	B048C 05	-
Signal Terminal 4	B018A 02	B018A 05	B018A 05	-
Signal Terminal 5	B048F 02	B048F 05	B048F 05	-
		B018A 05, B048C		

Low Reference	-	05, B048F 05, B1395 03	-	-

Circuit/System Description

The windshield temperature and inside moisture sensor includes the relative humidity sensor, windshield temperature sensor and humidity sensing element temperature sensor.

This sensor assembly provides information about:

- Relative humidity level at windshield inside
- Temperature of the windshield inside
- Temperature of the humidity sensor element

The relative humidity sensor measures the relative humidity of the compartment side of the windshield. It also detects the temperature of the windshield surface on the compartment side. Both values are used as control inputs for the HVAC control module application to calculate the fog risk on windshield compartment side and ability to reduce fuel consumption by decreasing A/C compressor power to a minimum without causing any fog. The sensor will also enable partial recirculation mode in order to improve heat-up performance of the passenger compartment under cold ambient temperature conditions without the risk of mist build-up on the windshield. The humidity sensor element temperature sensor supplies the temperature of the humidity sensor element. It is only needed if the thermal contact between the humidity sensing element and the inside windshield surface is not sufficient.

Conditions for Running the DTC

- Ignition ON.
- The HVAC control module is ON.

Conditions for Setting the DTC

B018A 02, B048C 02, B048F 02 or B1395 03

The HVAC control module detects the sensor signal out of range. The signal voltage is less than 0.1 V for more than 50 ms.

B018A 05, B048C 05, B048F 05 or B1395 07

The HVAC control module detects the sensor signal out of range. The signal voltage is greater than 4.9 V for more than 50 ms.

Action Taken When the DTC Sets

- The system will use the last valid values as default.
- If no value is read at the time of fault, the HVAC control module uses 60% for humidity.

Conditions for Clearing the DTC

The condition for setting the DTC is no longer present.

Reference Information

Schematic Reference

HVAC Schematics

Connector End View Reference

COMPONENT CONNECTOR END VIEWS - INDEX

Description and Operation

Automatic HVAC Description and Operation

Electrical Information Reference

- **Circuit Testing**
- **Connector Repairs**
- **Testing for Intermittent Conditions and Poor Connections**
- **Wiring Repairs**

Scan Tool Reference

Control Module References for scan tool information

Circuit/System Testing

1. Ignition OFF and all vehicle systems OFF, disconnect the harness connector at the B160 Windshield Temperature and Inside Moisture Sensor. It may take up to 10 min for all vehicle systems to power down.

   NOTE: The scan tool must be disconnected from the vehicle before performing the next test.

2. Test for less than 10 ohms between the low reference circuit terminal 3 and ground.
   - **If 10 ohms or greater**
     1. Ignition OFF, disconnect the harness connector at the K33 HVAC Control Module.
     2. Test for less than 2 ohms in the low reference circuit end to end.
        - If 2 ohms or greater, repair the open/high resistance in the circuit.
        - If less than 2 ohms, replace the K33 HVAC Control Module.
   - **If less than 10 ohms**
3. Ignition ON.
4. Test for 4.8-5.2 V between the 5 V reference circuit terminal 1 and ground.

- **If less than 4.8 V**

1. Ignition OFF, disconnect the harness connector at the K33 HVAC Control Module.
2. Test for infinite resistance between the 5 V reference circuit and ground.
    - If less than infinite resistance, repair the short to ground on the circuit.
    - If infinite resistance
3. Test for less than 2 ohms in the 5 V reference circuit end to end.
    - If 2 ohms or greater, repair the open/high resistance in the circuit.
    - If less than 2 ohms, replace the K33 HVAC Control Module.

- **If greater than 5.2 V**

1. Ignition OFF, disconnect the harness connector at the K33 HVAC Control Module, ignition ON.
2. Test for less than 1 V between the 5 V reference circuit and ground.
    - If 1 V or greater, repair the short to voltage on the circuit.
    - If less than 1 V, replace the K33 HVAC Control Module.

- **If between 4.8-5.2 V**

5. Verify the scan tool parameters listed below are less than -37°C (-35°F).
    - Windshield Temperature
    - Passenger Compartment Humidity Sensor Temperature
    - **If -37°C (-35°F) or greater**

    1. Ignition OFF, disconnect the harness connector at the K33 HVAC Control Module.
    2. Test for infinite resistance between ground and the signal circuit terminals listed below:
        - Windshield temperature sensor signal terminal 4
        - Passenger compartment humidity sensor temperature signal terminal 5
        - If less than infinite resistance, repair the short to ground on the circuit.
        - If infinite resistance, replace the K33 HVAC Control Module.

    - **If less than -37°C (-35°F)**

6. Install a 3 A fused jumper wire between the low reference circuit terminal 3 and each signal circuit terminal listed below:
    - Windshield temperature sensor signal terminal 4
    - Passenger compartment humidity sensor temperature signal terminal 5
7. Verify the appropriate scan tool parameter listed below is greater than 114°C (238°F).
    - Windshield Temperature
    - Passenger Compartment Humidity Sensor Temperature
    - **If 114°C (238°F) or less**

    1. Ignition OFF, remove the jumper wire and disconnect the harness connector at the K33 HVAC Control Module, ignition ON.
    2. Test for less than 1 V between the signal circuit terminals listed below and ground.
        - Windshield temperature sensor signal terminal 4
        - Passenger compartment humidity sensor temperature signal terminal 5

- If 1 V or greater, repair the short to voltage on the circuit.
- If less than 1 V

3. Test for less than 2 ohms in the signal circuit end to end.
   - If 2 ohms or greater, repair the open/high resistance in the circuit.
   - If less than 2 ohms, replace the K33 HVAC Control Module.

- **If greater than 114°C (238°F)**

8. Remove the jumper wire.
9. Verify the scan tool Passenger Compartment Humidity parameter is greater than 95%.
   - **If 95% or less**

   1. Ignition OFF, disconnect the harness connector at the K33 HVAC Control Module, ignition ON.
   2. Test for infinite resistance between the signal circuit terminal 2 and ground.
      - If less than infinite resistance, repair the short to ground on the circuit.
      - If infinite resistance, replace the K33 HVAC Control Module.

   - **If greater than 95%**

10. Install a 3 A fused jumper wire between the passenger compartment humidity sensor signal circuit terminal 2 and the low reference circuit terminal 3.
11. Verify the scan tool Passenger Compartment Humidity Sensor parameter is less than 5%.
    - **If 5% or greater**

    1. Ignition OFF, remove the jumper wire and disconnect the harness connector at the K33 HVAC Control Module, ignition ON.
    2. Test for less than 1 V between the signal circuit terminal 2 and ground.
       - If 1 V or greater, repair the short to voltage on the circuit.
       - If less than 1 V
    3. Test for less than 2 ohms in the signal circuit end to end.
       - If 2 ohms or greater, repair the open/high resistance in the circuit.
       - If less than 2 ohms, replace the K33 HVAC Control Module.

    - **If less than 5%**

12. Test or replace the B160 Windshield Temperature and Inside Moisture Sensor.

Repair Instructions

Perform the **Diagnostic Repair Verification** after completing the repair.

- **HVAC Component Replacement Reference**
- **Control Module References** for HVAC control module replacement, programming and setup

DTC B0183

Diagnostic Instructions

- Perform the **Diagnostic System Check - Vehicle** prior to using this diagnostic procedure.

- Review **Strategy Based Diagnosis** for an overview of the diagnostic approach.
- **Diagnostic Procedure Instructions** provides an overview of each diagnostic category.

DTC Descriptors

DTC B0183 02

Solar Load Sensor Circuit Short to Ground

DTC B0183 05

Solar Load Sensor Circuit High Voltage/Open

Diagnostic Fault Information

Circuit	Short to Ground	Open/High Resistance	Short to Voltage	Signal Performance
Signal	B0183 05	B0183 02	B0183 02	1
Low Reference	-	B0163 05, B0183 05	-	-
1. Air Temperature Malfunction				

Circuit/System Description

The ambient light/sunload sensor integrates the sunload sensor and passenger compartment temperature sensor.

This sensor assembly provides information about:

- Sun heat intensity
- Passenger Compartment Temperature

The solar sensor is connected to ground and to the 5 V stabilized voltage supply through the HVAC control module. As the sunload increases, the sensor signal voltage also increases and vice versa. The signal varies between 1.4-4.5 V and is provided to the HVAC control module.

The passenger compartment temperature sensor is a negative temperature co-efficient thermistor. A signal and low reference circuit enables the sensor to operate. As the air temperature increases, the sensor resistance decreases. The sensor signal varies between 0-5 V.

Bright or high intensity light causes the vehicles interior temperature to increase. The HVAC system compensates for the increased temperature by diverting additional cool air into the vehicle.

Conditions for Running the DTC

- Ignition ON
- The HVAC Control Module is ON.

Conditions for Setting the DTC

B0183 02

The input signal is out of range. The voltage is less than 0.1 V.

B0183 05

The input signal is out of range. The voltage is greater than 4.9 V.

Action Taken When the DTC Sets

- The system will use the last valid values as default.
- If no value is read at the time of fault, the HVAC control module uses 0 W/m^2 as intensity.

Conditions for Clearing the DTC

The condition for setting the DTC is no longer present.

Reference Information

Schematic Reference

HVAC Schematics

Connector End View Reference

COMPONENT CONNECTOR END VIEWS - INDEX

Description and Operation

Automatic HVAC Description and Operation

Electrical Information Reference

- **Circuit Testing**
- **Connector Repairs**
- **Testing for Intermittent Conditions and Poor Connections**
- **Wiring Repairs**

Scan Tool Reference

Control Module References for scan tool information

Circuit/System Testing

1. Ignition OFF and all vehicle systems OFF, disconnect the harness connector at the B10B Ambient Light/Sunload Sensor. It may take up to 2 minutes for all vehicle systems to power down.
2. Test for less than 10 ohms between the low reference circuit terminal 6 and ground.
    - **If 10 ohms or greater**
    1. Ignition OFF, disconnect the harness connector at the K33 HVAC Control Module.
    2. Test for less than 2 ohms in the low reference circuit end to end.
        - If 2 ohms or greater, repair the open/high resistance in the circuit.
        - If less than 2 ohms, replace the K33 HVAC Control Module.
    - **If less than 10 ohms**
3. Ignition ON.
4. Verify the Sunload scan tool parameter is less than 2 W/m2.
    - **If 2 W/m2 or greater**
    1. Ignition OFF, disconnect the harness connector at the K33 HVAC Control Module.
    2. Test for infinite resistance between the signal circuit terminal 4 and ground.
        - If less than infinite resistance, repair the short to ground on the circuit.
        - If infinite resistance, replace the K33 HVAC Control Module.
    - **If less than 2 W/m2**
5. Install a 3 A fused jumper wire between the signal circuit terminal 4 and the low reference circuit terminal 6.
6. Verify the scan tool parameter is greater than 20 W/m2.
    - **If 20 W/m2 or less**
    1. Ignition OFF, disconnect the harness connector at the K33 HVAC Control Module, ignition ON.
    2. Test for less than 1 V between the signal circuit terminal 4 and ground.
        - If 1 V or greater, repair the short to voltage on the circuit.
        - If less than 1 V
    3. Ignition OFF
    4. Test for less than 2 ohms in the signal circuit end to end.
        - If 2 ohms or greater, repair the open/high resistance in the circuit.
        - If less than 2 ohms, replace the K33 HVAC Control Module.
    - **If greater than 20 W/m2**
7. Test or replace the B10B Ambient Light/Sunload Sensor.

Repair Instructions

Perform the **Diagnostic Repair Verification** after completing the diagnostic procedure.

- **HVAC Component Replacement Reference**
- **Control Module References** for HVAC control module programming and setup

DTC B0193

Diagnostic Instructions

- Perform the **Diagnostic System Check - Vehicle** prior to using this diagnostic procedure.
- Review **Strategy Based Diagnosis** for an overview of the diagnostic approach.
- **Diagnostic Procedure Instructions** provides an overview of each diagnostic category.

DTC Descriptors

DTC B0193 01

Front Blower Motor Speed Circuit Short to Battery

DTC B0193 06

Front Blower Motor Speed Circuit Low Voltage/Open

Diagnostic Fault Information

Circuit	Short to Ground	Open/High Resistance	Short to Voltage	Signal Performance
B+	B0193 06	B0193 06	-	-
Control	B0193 06	B0193 06	B0193 01	-
Ground	-	B0193 06	-	-

Circuit/System Description

The blower motor control module is an interface between the HVAC control module and the blower motor. The blower motor speed control from the HVAC control module, battery positive and ground circuits enable the blower motor control module to operate. The HVAC control module provides a pulse width modulation (PWM) signal to the blower motor control module in order to command the blower motor speed. The blower motor control module transfers the PWM signal into a corresponding blower motor voltage.

Conditions for Running the DTC

- Ignition ON.
- The HVAC control module is ON.

Conditions for Setting the DTC

B0193 01

The voltage at the HVAC control module output to the blower motor control module is always high.

B0193 06

The voltage at the HVAC control module output to the blower motor control module is always low or

fluctuating.

Action Taken When the DTC Sets

The blower motor is inoperative.

Conditions for Clearing the DTC

The condition for setting the DTC is no longer present.

Diagnostic Aids

Prior to motor replacement connect a direct independent B+ and ground to verify operation.

Inspect the motor shaft for rust or other foreign material which may prohibit proper motor operation.

If the motor operates properly please reinstall it, check for PIs or TSBs, and refer to Testing for Intermittent Conditions and Poor Connections in the Electrical Information Reference section of this document.

Reference Information

Schematic Reference

HVAC Schematics

Connector End View Reference

COMPONENT CONNECTOR END VIEWS - INDEX

Description and Operation

Automatic HVAC Description and Operation

Electrical Information Reference

- **Circuit Testing**
- **Connector Repairs**
- **Testing for Intermittent Conditions and Poor Connections**
- **Wiring Repairs**

Scan Tool Reference

Control Module References for scan tool information

Circuit/System Testing

1. Ignition OFF and all vehicle systems off, disconnect the X1 harness connector at the K8 Blower Motor

Control Module. It may take up to 2 minutes for all vehicle systems to power down.

2. Test for less than 10 ohms between the ground circuit terminal 5 and ground.
    - **If 10 ohms or greater**
    1. Ignition OFF.
    2. Test for less than 2 ohms in the ground circuit end to end.
        - If 2 ohms or greater, repair the open/high resistance in the circuit.
        - If less than 2 ohms, repair the open/high resistance in the ground connection.
    - **If less than 10 ohms**
3. Ignition ON.
4. Verify a test lamp illuminates between the B+ circuit terminal 6 and ground.
    - **If the test lamp does not illuminate and the circuit fuse is good**
    1. Ignition OFF.
    2. Test for less than 2 ohms in the B+ circuit end to end.
        - If 2 ohms or greater, repair the open/high resistance in the circuit.
        - If less than 2 ohms, verify the fuse is not open and there is voltage at the fuse.
    - **If the test lamp does not illuminate and the circuit fuse is open**
    1. Ignition OFF.
    2. Test for infinite resistance between the B+ circuit terminal 6 and ground.
        - If less than infinite resistance, repair the short to ground on the circuit.
        - If infinite resistance, replace the K8 Blower Motor Control Module.
    - **If the test lamp illuminates**
5. Connect a DMM between the control circuit terminal 3 and ground.
6. Verify the resistance value is between 500 ohms and 230 kohms and there is a noticeable change with each change in commanded fan speed.
    - **If not within the specified range or there is no noticeable change**
    1. Ignition OFF, disconnect the X2 harness connector at the K33 HVAC Control Module.
    2. Test for less than 1 V between the control circuit and ground.
        - If 1 V or greater, repair the short to voltage on the circuit.
        - If less than 1 V
    3. Test for infinite resistance between the control circuit and ground.
        - If less than infinite resistance, repair the short to ground on the circuit.
        - If infinite resistance.
    4. Test for less than 2 ohms in the control circuit end to end.
        - If 2 ohms or greater, repair the open/high resistance in the circuit.
        - If less than 2 ohms replace the K33 HVAC Control Module.
    - **If within the specified range and there is a noticeable change**
7. Ignition OFF, connect the X1 harness connector at the K8 Blower Motor Control Module, and disconnect the harness connector at the M8 Blower Motor, ignition ON and blower ON.

8. Verify a test lamp illuminates between the control circuit terminal B and ground.
    - **If the test lamp does not illuminate**
    1. Ignition OFF, disconnect the X2 harness connector at the K8 Blower Motor Control Module.
    2. Test for infinite resistance between the control circuit and ground.
        - If less than infinite resistance, repair the short to ground on the circuit.
        - If infinite resistance.
    3. Test for less than 2 ohms in the control circuit end to end.
        - If 2 ohms or greater, repair the open/high resistance in the circuit.
        - If less than 2 ohms replace the K8 Blower Motor Control Module.
    - **If the test lamp illuminates**
9. Connect a test lamp between control circuit terminal A and control circuit terminal B.
10. Verify the test lamp becomes progressively brighter as the blower speed is increased and progressively dimmer as the blower speed is decreased.
    - **If the test lamp does not illuminate**
    1. Ignition OFF, disconnect the X2 harness connector at the K8 Blower Motor Control Module.
    2. Test for less than 1 V between the control circuit terminal A and ground.
        - If 1 V or greater, repair the short to voltage on the circuit.
        - If less than 1 V
    3. Test for less than 2 ohms in the control circuit end to end.
        - If 2 ohms or greater, repair the open/high resistance in the circuit.
        - If less than 2 ohms replace the K8 Blower Motor Control Module.
    - **If the test lamp illuminates, but does not change in brightness**
    1. Ignition OFF, disconnect the X2 harness connector at the K8 Blower Motor Control Module.
    2. Test for infinite resistance between the control circuit and ground.
        - If less than infinite resistance, repair the short to ground on the circuit.
        - If infinite resistance, replace the K8 Blower Motor Control Module.
    - **If the test lamp changes in brightness as the blower speed is changed**
11. Test or replace the M8 Blower Motor.

Repair Instructions

Perform the **Diagnostic Repair Verification** after completing the repair.

- **HVAC Component Replacement Reference**
- **Control Module References** for HVAC control module replacement, programming and setup.

DTC B0223, B0233, B023A, OR B0408

Diagnostic Instructions

- Perform the **Diagnostic System Check - Vehicle** prior to using this diagnostic procedure.
- Review **Strategy Based Diagnosis** for an overview of the diagnostic approach.
- **Diagnostic Procedure Instructions** provides an overview of each diagnostic category.

DTC Descriptor

DTC B0223 01

Recirculate Position Command 1 Circuit Short to Battery

DTC B0223 06

Recirculate Position Command 1 Circuit Low Voltage/Open

DTC B0233 01

Air Flow Control Circuit Short to Battery

DTC B0233 06

Air Flow Control Circuit Low Voltage/Open

DTC B023A 02

HVAC Actuators Supply Voltage Short to Ground

DTC B0408 01

Main Temperature Control Circuit Short to Battery

DTC B0408 06

Main Temperature Control Circuit Low Voltage/Open

Diagnostic Fault Information

Circuit	Short to Ground	Open/High Resistance	Short to Voltage	Signal Performance
Stepper Motors 12 V Reference	B023A 02	B0223 06, B0233 06, B0408 06, 1	-	-
Recirculation Actuator Control 1	B0223 06, 1	B0223 06, 1	B0223 01, 1	-
Recirculation Actuator Control 2	B0223 06, 1	B0223 06, 1	B0223 01, 1	-
Recirculation Actuator Control 3	B0223 06, 1	B0223 06, 1	B0223 01, 1	-

Recirculation Actuator Control 4	B0223 06, 1	B0223 06, 1	B0223 01, 1	-
Air Temperature Actuator Control 1	B0408 06, 1	B0408 06, 1	B0408 01, 1	-
Air Temperature Actuator Control 2	B0408 06, 1	B0408 06, 1	B0408 01, 1	-
Air Temperature Actuator Control 3	B0408 06, 1	B0408 06, 1	B0408 01, 1	-
Air Temperature Actuator Control 4	B0408 06, 1	B0408 06, 1	B0408 01, 1	-
Mode Actuator Control 1	B0233 06, 1	B0233 06, 1	B0233 01, 1	-
Mode Actuator Control 2	B0233 06, 1	B0233 06, 1	B0233 01, 1	-
Mode Actuator Control 3	B0233 06, 1	B0233 06, 1	B0233 01, 1	-
Mode Actuator Control 4	B0233 06, 1	B0233 06, 1	B0233 01, 1	-
1. Actuator door malfunction				

Circuit/System Description

Stepper motors are used for temperature regulation, air distribution control and recirculation flap control.

With the appropriate switches at the HVAC control, the desired door positions can be selected. The selected values are passed to the HVAC control module via serial data. The HVAC control module supplies a 12 V reference voltage to the stepper motors and energizes the stepper motors with a pulsed ground signal. The stepper motors put the appropriate door into the calculated position in order to reach the desired temperature, mode. and recirculation position.

Conditions for Running the DTC

- Ignition ON.
- The HVAC control module is ON.

Conditions for Setting the DTC

B023A 02

The stepper motors supply output is shorted to ground.

B0223 01, B0233 01, B023A 01, or B0408 01

At least one control output (of 4 possible outputs) of the appropriate stepper motor is shorted to voltage when motor starts moving. Faults are not detected when motor is already running or target position is already reached.

B0223 06, B0233 06, B0233 06, or B0408 06

At least one control output (of 4 possible outputs) of the appropriate stepper motor is shorted to ground or open when motor starts moving. Faults are not detected when motor is already running or target position is already

reached.

Action Taken When the DTC Sets

B023A 02

- The affected output will be switched off for hardware protection.
- All stepper motors are deactivated.

B0223, B0233, B023A, or B0408,

- The affected output will be switched off for hardware protection.
- The affected stepper motor is deactivated.

Conditions for Clearing the DTC

The condition for setting the DTC is no longer present.

Reference Information

Schematic Reference

HVAC Schematics

Connector End View Reference

COMPONENT CONNECTOR END VIEWS - INDEX

Description and Operation

Automatic HVAC Description and Operation

Electrical Information Reference

- **Circuit Testing**
- **Connector Repairs**
- **Testing for Intermittent Conditions and Poor Connections**
- **Wiring Repairs**

Scan Tool Reference

Control Module References for scan tool information

Circuit/System Testing

1. Ignition OFF, disconnect the harness connector at the appropriate door actuator, ignition ON.

2. Connect a test lamp between the B+ circuit terminal 2 and ground.
3. Verify the test lamp turns ON then OFF when commanding the appropriate actuator listed below ON but not OFF with a scan tool.
    - Mode Door Position
    - Air Recirculation Door Actuator Direction
    - Left Temperature Door Actuator Direction
    - **If the test lamp is always OFF**
    1. Ignition OFF, disconnect the X3 harness connector at the K33 HVAC control module.
    2. Test for infinite resistance between the control circuit and ground.
        - If less than infinite resistance, repair the short to ground on the circuit.
        - If infinite resistance
    3. Test for less than 2 ohms in the control circuit end to end.
        - If 2 ohms or greater, repair the open/high resistance in the circuit.
        - If less than 2 ohms, replace the K33 HVAC control module.
    - **If the test lamp is always ON**
    1. Ignition OFF, disconnect the harness connector at the K33 HVAC control module, ignition ON.
    2. Test for less than 1 V between the control circuit and ground.
        - If 1 V or greater, repair the short to voltage on the circuit.
        - If less than 1 V, replace the K33 HVAC control module.
    - **If the test lamp turns ON then OFF**
4. Ignition OFF, disconnect the X3 harness connector at the K33 HVAC control module, ignition ON.
5. Test for less than 1 V between each actuator harness connector terminal listed below and ground.
    - Control Circuit - terminal 1
    - Control Circuit - terminal 3
    - Control Circuit - terminal 4
    - Control Circuit - terminal 6
    - **If 1 V or greater**

      Repair the short to voltage on the circuit.

    - **If less than 1 V**
6. Ignition OFF.
7. Test for infinite resistance between each actuator harness connector terminal listed below and ground.
    - Control Circuit - terminal 1
    - Control Circuit - terminal 3
    - Control Circuit - terminal 4
    - Control Circuit - terminal 6
    - **If less than infinite resistance**

Repair the short to ground on the circuit.

- **If Infinite resistance**

8. Test for less than 2 ohms between each harness connector terminal listed below end to end.

NOTE: See schematic for the K33 HVAC control module terminal numbers.

- Control circuit terminal 1
- Control circuit terminal 3
- Control circuit terminal 4
- Control circuit terminal 6

- **If 2 ohms or greater**

Repair the open/high resistance in the circuit.

- **If less than 2 ohms**

9. Test or replace the actuator.
10. Verify the DTC does not set and the correct door position is achieved while operating the HVAC system under the Conditions for Running the DTC.
    - **If the DTC sets or door position is incorrect**

      Replace the K33 HVAC control module.

    - **If the DTC does not set and door position is correct**
11. All OK.

Repair Instructions

Perform the **Diagnostic Repair Verification** after completing the repair.

- **HVAC Component Replacement Reference**
- **Control Module References** for HVAC control module replacement, programming and setup

DTC B3843

Diagnostic Instructions

- Perform the **Diagnostic System Check - Vehicle** prior to using this diagnostic procedure.
- Review **Strategy Based Diagnosis** for an overview of the diagnostic approach.
- **Diagnostic Procedure Instructions** provides an overview of each diagnostic category.

DTC Descriptors

DTC B3843 02

Air Quality Sensor Circuit Short to Ground

DTC B3843 05

Air Quality Sensor Circuit High Voltage/Open

DTC B3843 08

Air Quality Sensor Circuit Performance - Signal Invalid

Diagnostic Fault Information

Circuit	Short to Ground	Open/High Resistance	Short to Voltage	Signal Performance
Ignition	B3843 05	B3843 05	-	-
Signal	B3843 02	B3843 05	B3843 05	B3843 08
Ground	-	B3843 05	-	-

Circuit/System Description

The HVAC control module uses an air quality sensor to detect hydrocarbons. This sensor operates using an ignition voltage circuit, a ground circuit and a signal circuit.

This information is sent to the HVAC control module using a pulse width modulated (PWM) signal. It is used only when the automatic HVAC mode is requested by the customer.

When the HVAC module detects the concentration of hydrocarbons exceeds a preset value, recirculation mode is commanded to keep the passenger compartment free of pollutants.

Conditions for Running the DTC

- Ignition ON
- The HVAC control module is ON.

Conditions for Setting the DTC

B3843 02

No PWM is detected and the signal is low.

B3843 05

No PWM is detected and the signal is high.

B3843 08

The sensor sends a 5% PWM signal indicating an internal sensor short circuit or open circuit.

Action Taken When the DTC Sets

The automatic recirculation mode is disabled.

Conditions for Clearing the DTC

The condition for setting the DTC is no longer present.

Diagnostic Aids

When the conditions that caused the DTC are present, the scan tool Air Quality Sensor parameter will display a constant 100%.

Reference Information

Schematic Reference

HVAC Schematics

Connector End View Reference

COMPONENT CONNECTOR END VIEWS - INDEX

Description and Operation

Automatic HVAC Description and Operation

Electrical Information Reference

- **Circuit Testing**
- **Connector Repairs**
- **Testing for Intermittent Conditions and Poor Connections**
- **Wiring Repairs**

Scan Tool Reference

Control Module References for scan tool information

Circuit/System Testing

1. Ignition OFF and all vehicle systems OFF, disconnect the harness connector at the B108 Air Quality Sensor. It may take up to 2 min for all vehicle systems to power down.
2. Test for less than 10 ohms between the ground circuit terminal 2 and ground.
    - **If 10 ohms or greater**
    1. Ignition OFF.
    2. Test for less than 2 ohms in the ground circuit end to end.

- If 2 ohms or greater, repair the open/high resistance in the circuit.
- If less than 2 ohms, repair the open/high resistance in the ground connection.

- **If less than 10 ohms**

3. Ignition ON.
4. Verify a test lamp illuminates between the ignition circuit terminal 1 and ground.
   - **If the test lamp does not illuminate and the circuit fuse is good**
   1. Ignition OFF.
   2. Test for less than 2 ohms in the ignition circuit end to end.
      - If 2 ohms or greater, repair the open/high resistance in the circuit.
      - If less than 2 ohms, verify the fuse is OK and there is voltage at the fuse.
   - **If the test lamp does not illuminate and the circuit fuse is open**
   1. Ignition OFF.
   2. Test for infinite resistance between the ignition circuit and ground.
      - If less than infinite resistance, repair the short to ground on the circuit.
      - If infinite resistance, replace the B108 Air Quality Sensor.
   - **If the test lamp illuminates**
5. Install a 3 A fused jumper wire at the signal circuit terminal 3.
6. Verify the scan tool Air Quality Sensor parameter changes while rapidly tapping the fused jumper wire to ground.
   - **If the parameter does not change**
   1. Ignition OFF, disconnect the harness connector at the K33 HVAC Control Module, ignition ON.
   2. Test for less than 1 V between the signal circuit and ground.
      - If 1 V or greater, repair the short to voltage on the circuit.
      - If less than 1 V
   3. Ignition OFF
   4. Test for infinite resistance between the signal circuit and ground.
      - If less than infinite resistance, repair the short to ground on the circuit.
      - If infinite resistance
   5. Test for less than 2 ohms in the signal circuit end to end.
      - If 2 ohms or greater, repair the open/high resistance in the circuit.
      - If less than 2 ohms, replace the K33 HVAC Control Module.
   - **If the parameter does change**
7. Replace the B108 Air Quality Sensor.

Repair Instructions

Perform the **Diagnostic Repair Verification** after completing the repair.

- **HVAC Component Replacement Reference**

- **Control Module References** for HVAC control module replacement, programming and setup

DTC B393B

Diagnostic Instructions

- Perform the **Diagnostic System Check - Vehicle** prior to using this diagnostic procedure.
- Review **Strategy Based Diagnosis** for an overview of the diagnostic approach.
- **Diagnostic Procedure Instructions** provides an overview of each diagnostic category.

DTC Descriptors

DTC B393B 04

Air Conditioning Compressor Valve Control Circuit Open

DTC B393B 0B

Air Conditioning Compressor Valve Control Circuit High Current

Diagnostic Fault Information

Circuit	Short to Ground	Open/High Resistance	Short to Voltage	Signal Performance
Electric Variable Displacement Control	B393B 04	B393B 04	B393B 0B	-
Electric Variable Displacement Supply	-	B393B 04	-	-

Circuit/System Description

This A/C system uses a conventional clutch to engage and mechanically turn the compressor, and a variable displacement solenoid valve to alter the amount of displacement created by the turning of the compressor. The HVAC control module provides both battery voltage and a pulse width modulated ground to the variable displacement solenoid valve. When the A/C switch is pressed, the HVAC control module grounds the variable displacement solenoid using a (PWM) signal in order to determine the amount of compressor displacement. The performance of the A/C compressor is regulated based on the adjusted interior temperature.

Conditions for Running the DTC

- Ignition ON.
- The HVAC control module is ON.

Conditions for Setting the DTC

B393B 04

A PWM greater than 10% is sent but no current is read back.

B393B 0B

Measured current is above threshold of 815 mA.

Action Taken When the DTC Sets

B393B 04

The variable displacement solenoid valve is disabled and defaults to the position of lowest possible compressor displacement. The compressor clutch is not disengaged.

B393B 0B

- The variable displacement solenoid valve is disabled and defaults to the position of lowest possible compressor displacement. The compressor clutch is not disengaged.
- Output will be switched off for hardware protection.

Conditions for Clearing the DTC

The condition for setting the DTC is no longer present.

Reference Information

Schematic Reference

HVAC Schematics

Connector End View Reference

COMPONENT CONNECTOR END VIEWS - INDEX

Description and Operation

Automatic HVAC Description and Operation

Electrical Information Reference

- **Circuit Testing**
- **Connector Repairs**
- **Testing for Intermittent Conditions and Poor Connections**
- **Wiring Repairs**

Scan Tool Reference

Control Module References for scan tool information

Circuit/System Testing

1. Ignition OFF and all vehicle systems OFF, disconnect the harness connector at the Q46 A/C Compressor Solenoid Valve. It may take up to 2 minutes for all vehicle systems to power down.
2. Verify a test lamp illuminates between the B+ circuit terminal A and ground.
   - **If the test lamp does not illuminate**
   1. Test for infinite resistance between the B+ circuit and ground.
      - If less than infinite resistance, repair the short to ground on the circuit.
      - If infinite resistance.
   2. Test for less than 2 ohms in the B+ circuit end to end.
      - If 2 ohms or greater, repair the open/high resistance in the circuit.
      - If less than 2 ohms, replace the K33 HVAC Control Module.
   - **If the test lamp illuminates**
3. Ignition ON, connect a test lamp between the control circuit terminal B and the B+ circuit terminal A.
4. Verify the test lamp turns ON and OFF when commanding the A/C Compressor Refrigerant Solenoid Valve ON and OFF with a scan tool.
   - **If the test lamp is always OFF**
   1. Ignition OFF, disconnect the harness connector at the K33 HVAC Control Module, ignition ON.
   2. Test for less than 1 V between the control circuit and ground.
      - If 1 V or greater, repair the short to voltage on the circuit.
      - If less than 1 V
   3. Ignition OFF.
   4. Test for less than 2 ohms in the control circuit end to end.
      - If 2 ohms or greater, repair the open/high resistance in the circuit.
      - If less than 2 ohms, replace the K33 HVAC Control Module.
   - **If the test lamp is always ON**
   1. Ignition OFF, disconnect the harness connector at the K33 HVAC Control Module.
   2. Test for infinite resistance between the control circuit and ground.
      - If less than infinite resistance, repair the short to ground on the circuit.
      - If infinite resistance, replace the K33 HVAC Control Module.
   - **If the test lamp turns ON and OFF**
5. Test or replace the Q46 A/C Compressor Solenoid Valve.

Component Testing

Static Test

1. Ignition OFF, disconnect the harness connector at the Q46 A/C Compressor Solenoid Valve.

2. Test for 7-15 ohms between the B+ circuit terminal A and the control circuit terminal B.
   - **If less than 7 ohms or greater than 15 ohms**

     Replace the Q46 A/C Compressor Solenoid Valve

   - **If between 7-15 ohms**
3. Test for infinite resistance between each terminal and the Q46 A/C Compressor Solenoid Valve housing/case.
   - **If less than infinite resistance**

     Replace the Q46 A/C Compressor Solenoid Valve

   - **If infinite resistance**
4. All OK

Repair Instructions

Perform the **Diagnostic Repair Verification** after completing the repair.

- **HVAC Component Replacement Reference**
- **Control Module References** for HVAC control module replacement, programming, and setup.

DTC P0530, P0532, OR P0533

Diagnostic Instructions

- Perform the **Diagnostic System Check - Vehicle** prior to using this diagnostic procedure.
- Review **Strategy Based Diagnosis** for an overview of the diagnostic approach.
- **Diagnostic Procedure Instructions** provides an overview of each diagnostic category.

DTC Descriptors

DTC P0530 03

Air Conditioning (A/C) Refrigerant Pressure Sensor Circuit Low Voltage

DTC P0530 07

Air Conditioning (A/C) Refrigerant Pressure Sensor Circuit High Voltage

DTC P0532 00

Air Conditioning (A/C) Refrigerant Pressure Sensor Circuit Low Voltage

DTC P0533 00

Air Conditioning (A/C) Refrigerant Pressure Sensor Circuit High Voltage

Diagnostic Fault Information

Circuit	Short to Ground	Open/High Resistance	Short to Voltage	Signal Performance
5 V Reference	P0530 03 P0532 00	P0530 03 P0532 00	-	-
Signal	P0530 03 P0532 00	P0530 03 P0532 00	P0530 07 P0533 00	-
Low Reference	-	P0530 03 P0532 00	-	-

Circuit/System Description

The engine control module (ECM) monitors the high side refrigerant pressure through the A/C refrigerant pressure sensor. The ECM supplies a 5 V reference and a low reference to the sensor. Changes in the A/C refrigerant pressure cause the sensor signal to the ECM to vary. When the pressure is high, the signal voltage is high. When the pressure is low, the signal voltage is low. When pressure is high, the ECM commands the cooling fans on. When pressure is too high or too low, the ECM will not allow the activation of the A/C compressor.

Conditions for Running the DTC

Engine is running.

Conditions for Setting the DTC

P0530 03 or P0532 00

The ECM detects a short to ground or open at the A/C pressure sensor signal circuit.

P0530 07 or P0533 00

The ECM detects a short to voltage at the A/C pressure sensor signal circuit.

Action Taken When the DTC Sets

- The A/C compressor is disabled.
- The ECM will illuminate the malfunction indicator lamp (MIL).

Conditions for Clearing the DTC

The condition for setting the DTC is no longer present.

Reference Information

Schematic Reference

HVAC Schematics

Connector End View Reference

COMPONENT CONNECTOR END VIEWS - INDEX

Description and Operation

Automatic HVAC Description and Operation

Electrical Information Reference

- **Circuit Testing**
- **Connector Repairs**
- **Testing for Intermittent Conditions and Poor Connections**
- **Wiring Repairs**

Scan Tool Reference

Control Module References for scan tool information

Circuit/System Testing

1. Ignition OFF and all vehicle systems OFF, disconnect the harness connector at the B1 A/C refrigerant pressure sensor. It may take up to 2 minutes for all vehicle systems to power down.
2. Test for less than 10 ohms between the low reference circuit terminal 1 and ground.
    - **If 10 ohms or greater**
    1. Ignition OFF, disconnect the harness connector at the K20 ECM.
    2. Test for less than 2 ohms in the low reference circuit end to end.
        - If 2 ohms or greater, repair the open/high resistance in the circuit.
        - If less than 2 ohms, replace the K20 ECM.
    - **If less than 10 ohms**
3. Ignition ON.
4. Test for 4.8-5.2 V between the 5 V reference circuit terminal 2 and ground.
    - **If less than 4.8 V**
    1. Ignition OFF, disconnect the harness connector at the K20 ECM control module.
    2. Test for infinite resistance between the 5 V reference circuit and ground.
        - If less than infinite resistance, repair the short to ground on the circuit.
        - If infinite resistance
    3. Test for less than 2 ohms in the 5 V reference circuit end to end.

- If 2 ohms or greater, repair the open/high resistance in the circuit.
- If less than 2 ohms, replace the K20 ECM.

- **If greater than 5.2 V**

1. Ignition OFF, disconnect the harness connector at the K20 ECM control module, ignition ON.
2. Test for less than 1 V between the 5 V reference circuit and ground.
   - If 1 V or greater, repair the short to voltage on the circuit.
   - If less than 1 V, replace the K20 ECM.

- **If between 4.8-5.2 V**

5. Verify the scan tool A/C High Side Presure Sensor parameter is less than 4.8-5.2 V.
   - **If 4.8-5.2 V or greater**
   1. Ignition OFF, disconnect the harness connector at the K20 ECM, ignition ON.
   2. Test for less than 1 V between the signal circuit terminal 3 and ground.
      - If 1 V or greater, repair the short to voltage on the circuit.
      - If less than 1 V, replace the K20 ECM.
   - **If less than 4.8-5.2 V**
6. Install a 3 A fused jumper wire between the signal circuit terminal 3 and the 5 V reference circuit terminal 2.
7. Verify the scan tool A/C High Side Pressure Sensor parameter is greater than.02 V.
   - **If.02 V or less**
   1. Ignition OFF, disconnect the harness connector at the K20 ECM.
   2. Test for infinite resistance between the signal circuit terminal 3 and ground.
      - If less than infinite resistance, repair the short to ground on the circuit.
      - If infinite resistance
   3. Test for less than 2 ohms in the signal circuit end to end.
      - If 2 ohms or greater, repair the open/high resistance in the circuit.
      - If less than 2 ohms, replace the K20 ECM.
   - **If greater than.02 V**
8. Test or replace the B1 A/C refrigerant pressure sensor.

Repair Instructions

Perform the **Diagnostic Repair Verification** after completing the diagnostic procedure.

- **HVAC Component Replacement Reference**
- **Control Module References** for engine control module (ECM) replacement, setup, and programming

DTC P0645, P0646, OR P0647

Diagnostic Instructions

- Perform the **Diagnostic System Check - Vehicle** prior to using this diagnostic procedure.
- Review **Strategy Based Diagnosis** for an overview of the diagnostic approach.
- **Diagnostic Procedure Instructions** provides an overview of each diagnostic category.

DTC Descriptors

DTC P0645

Air Conditioning (A/C) Compressor Clutch Relay Control Circuit

DTC P0646

Air Conditioning (A/C) Compressor Clutch Relay Control Circuit Low Voltage

DTC P0647

Air Conditioning (A/C) Compressor Clutch Relay Control Circuit High Voltage

Diagnostic Fault Information

Circuit	Short to Ground	Open/High Resistance	Short to Voltage	Signal Performance
Relay Coil Ignition	P0645	P0645	-	-
Relay Switch B+	1	1	-	-
Relay Coil Control	P0646	P0645	P0647	-
Relay Switch Control	1	1	1	-
Ground	-	1	-	-
1. A/C Compressor Malfunction				

Circuit/System Description

When the A/C switch is pressed, the HVAC control module sends an A/C request message to the engine control module (ECM) via serial data. The ECM then grounds the A/C compressor clutch relay coil control circuit, closing the relay contacts. The closed relay contacts provide voltage to the compressor clutch causing it to engage.

Conditions for Running the DTC

- Engine is running.
- The HVAC control module is ON.
- The A/C switch is active.

Conditions for Setting the DTC

P0645 or P0646

The ECM detects a short to ground or an open at the A/C compressor clutch relay control circuit.

P0647

The ECM detects a short to voltage at the A/C compressor clutch relay control circuit.

Action Taken When the DTC Sets

P0645 or P0646

The A/C compressor is inoperative or always active. The A/C compressor solenoid is commanded to 0% displacement. This causes warm air from the ducts, even with unwanted clutch engagement.

P0647

The A/C compressor is inoperative.

Conditions for Clearing the DTC

The condition for setting the DTC is no longer present.

Reference Information

Schematic Reference

HVAC Schematics

Connector End View Reference

COMPONENT CONNECTOR END VIEWS - INDEX

Description and Operation

Automatic HVAC Description and Operation

Electrical Information Reference

- **Circuit Testing**
- **Connector Repairs**
- **Testing for Intermittent Conditions and Poor Connections**
- **Wiring Repairs**

DTC Type Reference

Powertrain Diagnostic Trouble Code (DTC) Type Definitions

Scan Tool Reference

Control Module References for scan tool information

Circuit/System Testing

1. Ignition OFF, disconnect the KR29 A/C Compressor Clutch Relay, ignition ON.
2. Verify a test lamp illuminates between the B+ circuit terminal 30 and ground.
   - **If the test lamp does not illuminate and the circuit fuse is good**
   1. Ignition OFF, remove the test lamp.
   2. Test for less than 2 ohms in the B+ circuit end to end.
      - If 2 ohms or greater, repair the open/high resistance in the circuit.
      - If less than 2 ohms, verify the fuse is not open and there is voltage at the fuse.
   - **If the test lamp does not illuminate and the circuit fuse is open**
   1. Ignition OFF, remove the test lamp.
   2. Test for infinite resistance between the B+ circuit and ground.
      - If less than infinite resistance, repair the short to ground on the circuit.
      - If infinite resistance
   3. Disconnect the harness connector at the Q2 A/C Compressor Clutch.
   4. Test for infinite resistance between the control circuit terminal 87 and ground.
      - If less than infinite resistance, repair the short to ground on the circuit.
      - If infinite resistance, test or replace the Q2 A/C Compressor Clutch.
   - **If the test lamp illuminates**
3. Ignition ON.
4. Verify a test lamp illuminates between the ignition circuit terminal 86 and ground.
   - **If the test lamp does not illuminate**

     Refer to **Power Mode Mismatch** .
   - **If the test lamp illuminates**
5. Connect a test lamp between the ignition circuit terminal 86 and the control circuit terminal 85.
6. Verify the test lamp turns ON and OFF when commanding the ECM A/C Compressor Clutch Relay On and Off with a scan tool.
   - **If the test lamp is always OFF**
   1. Ignition OFF, remove the test lamp and disconnect the harness connector at the K20 Engine Control Module, ignition ON.
   2. Test for less than 1 V between the control circuit and ground.
      - If 1 V or greater, repair the short to voltage on the circuit.
      - If less than 1 V
   3. Ignition OFF.
   4. Test for less than 2 ohms in the control circuit end to end.
      - If 2 ohms or greater, repair the open/high resistance in the circuit.

- If less than 2 ohms, replace the K20 Engine Control Module.

- **If the test lamp is always ON**

1. Ignition OFF, remove the test lamp and disconnect the harness connector at the K20 Engine Control Module.
2. Test for infinite resistance between the control circuit and ground.
   - If less than infinite resistance, repair the short to ground on the circuit.
   - If infinite resistance, replace the K20 Engine Control Module.

- **If the test lamp turns ON and OFF**

7. Verify a test lamp does not illuminate between the control circuit terminal 87 and ground.
   - **If the test lamp illuminates**

     Repair the short to voltage on the circuit.

   - **If the test lamp does not illuminate**
8. Ignition OFF and all vehicle systems OFF, disconnect the harness connector at the Q2 A/C Compressor Clutch. It may take up to 2 min for all vehicle systems to power down.
9. Test for less than 10 ohms between the ground circuit terminal 1 and ground.
   - **If 10 ohms or greater**

   1. Ignition OFF.
   2. Test for less than 2 ohms in the ground circuit end to end.
      - If 2 ohms or greater, repair the open/high resistance in the circuit.
      - If less than 2 ohms, repair the open/high resistance in the ground connection.

   - **If less than 10 ohms**
10. Connect the harness connector at the Q2 A/C Compressor Clutch.
11. Ignition ON, connect a 10 A fused jumper wire between the B+ circuit terminal 30 and the control circuit terminal 87.
12. Verify the Q2 A/C Compressor Clutch is engaged.
    - **If the Q2 A/C Compressor Clutch does not engage**

    1. Ignition OFF, disconnect the harness connector at the Q2 A/C Compressor Clutch.
    2. Test for less than 2 ohms in the control circuit end to end.
       - If 2 ohms or greater, repair the open/high resistance in the circuit.
       - If less than 2 ohms, test or replace the Q2 A/C Compressor Clutch.

    - **If the Q2 A/C Compressor Clutch is engaged**
13. Test or replace the KR29 A/C Compressor Clutch Relay.

Component Testing

1. Ignition OFF, disconnect the KR29 A/C Compressor Clutch Relay.
2. Test for 60-180 ohms between terminals 85 and 86.
   - **If not between 60-180 ohms**

Replace the KR29 A/C Compressor Clutch Relay.

- **If between 60-180 ohms**

3. Test for infinite resistance between the terminals listed below:
   - 30 and 86
   - 30 and 87
   - 30 and 85
   - 85 and 87
   - **If less than infinite resistance**

     Replace the KR29 A/C Compressor Clutch Relay.

   - **If infinite resistance**
4. Install a 15 A fused jumper wire between terminal 86 and 12 V. Install a jumper wire between terminal 85 and ground.
5. Test for less than 2 ohms between terminals 30 and 87.
   - **If 2 ohms or greater**

     Replace the KR29 A/C Compressor Clutch Relay.

   - **If less than 2 ohms**
6. All OK.

Repair Instructions

Perform the **Diagnostic Repair Verification** after completing the repair.

- **HVAC Component Replacement Reference**
- **Control Module References** for engine control module replacement, programming and setup

SYMPTOMS - HVAC SYSTEMS - AUTOMATIC

NOTE: The following steps must be completed before using the symptom tables:

1. Perform the **Diagnostic System Check - Vehicle** before using the HVAC System Malfunction procedure in order to verify that all of the following are true:
   - There are no DTCs set.
   - The control modules can communicate via the serial data link.
2. Review the system operation in order to familiarize yourself with the system functions. Refer to **Automatic HVAC Description and Operation**.

Visual/Physical Inspection

- Inspect for aftermarket devices which may affect the operation of the HVAC System. Refer to **Checking**

Aftermarket Accessories .

- Inspect the easily accessible or visible system components for obvious damage or conditions which may cause the symptom.
- Verify the A/C compressor turns freely and is not seized.
- Verify that the customer is using the correct key to enable personalization and is not inadvertently activating auxiliary HVAC controls.
- The A/C compressor will not operate in cold outside air temperatures.
- The following conditions may cause window fogging:
  - Wet carpet or mats
  - High humidity
  - Interior water leak
  - Blocked A/C evaporator drain tube
  - Maximum passenger capacity
  - Blocked body pressure relief valves
- Inspect the air distribution system for causes of reduced air flow:
  - Obstructed or dirty passenger compartment air filter, if equipped
  - Blocked or damaged air inlet or outlet vents

Intermittent

Faulty electrical connections or wiring may be the cause of intermittent conditions. Refer to **Testing for Intermittent Conditions and Poor Connections** .

Symptom List

Refer to **HVAC System Malfunction** in order to diagnose the symptom.

HVAC SYSTEM MALFUNCTION

Diagnostic Instructions

- Perform the **Diagnostic System Check - Vehicle** prior to using this diagnostic procedure.
- Review **Strategy Based Diagnosis** for an overview of the diagnostic approach.
- **Diagnostic Procedure Instructions** provides an overview of each diagnostic category.

Diagnostic Aids

Check the following mechanical fault sources:

- Air distribution box
- Air distribution hoses/air distribution ducts

Reference Information

Schematic Reference

HVAC Schematics

Connector End View Reference

COMPONENT CONNECTOR END VIEWS - INDEX

Description and Operation

Automatic HVAC Description and Operation

Electrical Information Reference

- **Circuit Testing**
- **Connector Repairs**
- **Testing for Intermittent Conditions and Poor Connections**
- **Wiring Repairs**

Scan Tool Reference

Control Module References for scan tool information

Special Tools

J43600 ACR Air Conditioning Service Center

Circuit/System Verification

NOTE: Check for bulletins before proceeding.

1. Ignition ON.
2. Verify the scan tool Blower Motor Switch parameter changes when rotating the blower switch through each speed position.
   - **If the parameter does not change for each speed position**

     Replace the A26 HVAC Controls.

   - **If the parameter changes for each speed position**
3. Verify the blower motor operates properly with the blower motor switch in each speed position.
   - **If the blower motor does not operate in each speed position**

     Refer to **DTC B0193**.

   - **If the blower motor operates properly in each speed position**

4. Verify the scan tool parameters listed below change when pressing the appropriate switch.
   - Left Temperature
   - Right Temperature
   - Air Recirculation Mode Switch
   - Bi-Level Switch
   - **If any parameter does not change**

     Replace the A26 HVAC Controls

   - **If all parameters change**
5. Verify the Air Quality Sensor parameter changes while introducing hydrocarbons from a suitable source into the vicinity of the B108 Air Quality Sensor.
   - **If the Air Quality Sensor parameter does not change**

     Refer to **DTC B3843**.

   - **If the Air Quality Sensor parameter changes**
6. Verify the HVAC doors listed below move when pressing the appropriate switch.
   - Temperature
   - Bi-Level mode
   - Recirculation
   - **If any HVAC door does not move**

     Refer to **DTC B0223, B0233, B023A, or B0408**.

   - **If all HVAC doors move**
7. Install the J43600 ACR Air Conditioning Service Center.
8. Verify the high side pressure reading on the Air Conditioning Service Center is within 10% of the scan tool A/C High Side Pressure Sensor parameter.
   - **If the reading is not within 10%**

     Refer to **DTC P0530, P0532, or P0533**.

   - **If the reading is within 10%**
9. Verify the A/C High Side Pressure Sensor parameter is between 269-2929 kPa (39-425 PSI).
   - **If the reading is not between 269-2929 kPa (39-425 PSI)**

     Refer to **Air Conditioning (A/C) System Performance Test**

   - **If the reading is between 269-2929 kPa (39-425 PSI)**
10. Verify the scan tool parameters listed below are within 10% of ambient temperature.
    - Lower Left Duct Air Temperature Sensor

- Upper Left Duct Air Temperature Sensor
- A/C Evaporator Temperature Sensor
  - **If not within 10% of ambient temperature**

    Refer to **DTC B0173, B0178, or B3933**.

  - **If within 10% of ambient temperature**

11. Verify the scan tool Windshield Temperature parameter is within 10% of ambient temperature.
    - **If not within 10% of ambient temperature**

      Refer to **DTC B018A, B048C, B048F, or B1395**.

    - **If within 10% of ambient temperature**
12. Verify the scan tool Passenger Compartment Humidity parameter is within 10% of actual humidity.
    - **If not within 10% of actual humidity**

      Refer to **DTC B018A, B048C, B048F, or B1395**.

    - **If within 10% of actual humidity**
13. Engine ON, A/C system ON
14. Verify cool air flows from the ducts with the temperature control in the coldest position.
    - **If the air is not cool**
    1. Verify the Q2 A/C Compressor Clutch is engaged.
       - If the Q2 A/C Compressor Clutch is not engaged, refer to **Air Conditioning Compressor Malfunction**.
       - If the Q2 A/C Compressor Clutch is engaged, refer to **Air Conditioning (A/C) System Performance Test** , and **DTC B393B**.
    - **If the air is cool**
15. Verify warm air flows from the ducts with the temperature control in the warmest position.
    - **If the air is not warm**

      Refer to **Heating Performance Diagnostic** .

    - **If the air is warm**
16. Engine OFF, ignition ON.
17. Verify the Sunload parameter changes while covering the B10B Ambient Light/Sunload Sensor with a shop towel or other suitable item.
    - **If the Sunload parameter does not change**

      Refer to **DTC B0183**.

    - **If the Sunload parameter changes**

18. Verify the actual inside air temperature, using a thermometer, is less than 3°C (5°F) difference from the scan tool Inside Passenger Compartment Air Temp. Sensor parameter.
    - **If greater than a 3°C (5°F) difference**

      Refer to **DTC B0163**.

    - **If less than a 3°C (5°F) difference**
19. Verify the vehicle is equipped with an E40 Electrical Auxiliary Heater (C32).
    - **If the vehicle is not equipped with an E40 Electrical Auxiliary Heater (C32)**

      Refer to step 21.

    - **If the vehicle is equipped with an E40 Electrical Auxiliary Heater (C32)**
20. Verify the E40 Electrical Auxiliary Heater (C32) turns On and Off when commanding the Auxiliary Heater Request On and Off with a scan tool.
    - **If the E40 Electrical Auxiliary Heater (C32) does not turn On and Off**

      Refer to .

    - **If the E40 Electrical Auxiliary Heater (C32) does turn On and Off**
21. All OK.

Repair Instructions

Perform the **Diagnostic Repair Verification** after completing the diagnostic procedure.

- **HVAC Component Replacement Reference**
- **Control Module References** for HVAC control module replacement, programming, and setup.

AIR CONDITIONING COMPRESSOR MALFUNCTION

Diagnostic Instructions

- Perform the **Diagnostic System Check - Vehicle** prior to using this diagnostic procedure.
- Review **Strategy Based Diagnosis** for an overview of the diagnostic approach.
- **Diagnostic Procedure Instructions** provides an overview of each diagnostic category.

DTC Descriptors

DTC P0645

Air Conditioning (A/C) Compressor Clutch Relay Control Circuit

DTC P0646

Air Conditioning (A/C) Compressor Clutch Relay Control Circuit Low Voltage

DTC P0647

Air Conditioning (A/C) Compressor Clutch Relay Control Circuit High Voltage

Diagnostic Fault Information

Circuit	Short to Ground	Open/High Resistance	Short to Voltage	Signal Performance
A/C Compressor Clutch Relay Coil Ignition	P0646	P0645, P0646	-	-
A/C Compressor Clutch Relay Coil Control	P0646	P0645, P0646	P0647	1
1. A/C Compressor Malfunction				

Circuit/System Description

When the A/C switch is pressed, the HVAC control module sends an A/C request message to the engine control module (ECM) via CAN-Bus. Therefore, the ECM grounds the A/C compressor clutch relay control circuit, which will switch the A/C compressor clutch relay. With the relay contacts closed, battery voltage is supplied to the A/C compressor clutch. The A/C compressor clutch will be activated.

Conditions for Running the DTC

- Engine is running.
- The HVAC control module is ON.
- The A/C switch is active.

Conditions for Setting the DTC

P0645 or P0646

The ECM detects a short to ground or an open at the A/C compressor clutch relay control circuit.

P0647

The ECM detects a short to voltage at the A/C compressor clutch relay control circuit.

Action Taken When the DTC Sets

P0645 or P0646

The A/C compressor is inoperative or always active.

P0647

The A/C compressor is inoperative.

Conditions for Clearing the DTC

The condition for setting the DTC is no longer present.

Reference Information

Schematic Reference

HVAC Schematics

Connector End View Reference

COMPONENT CONNECTOR END VIEWS - INDEX

Description and Operation

Automatic HVAC Description and Operation

Electrical Information Reference

- **Circuit Testing**
- **Connector Repairs**
- **Testing for Intermittent Conditions and Poor Connections**
- **Wiring Repairs**

Scan Tool Reference

Control Module References for scan tool information

Circuit/System Testing

1. Ignition OFF, remove the KR29 A/C Compressor Clutch Relay.
2. Ignition ON, test for greater than 11 V between the ignition circuit terminal 86 at the KR29 A/C Compressor Clutch Relay and ground.
    - If less than the specified value, test the ignition circuit for a short to ground or an open/high resistance.
3. Ignition OFF, disconnect the X2 harness connector at the K20 Engine Control Module.
4. Ignition ON, test for less than 0.3 V between the control circuit terminal 85 at the KR29 A/C Compressor Clutch Relay and ground.
    - If greater than the specified value, test the control circuit for a short to voltage.
5. Ignition OFF, test for infinite resistance between the control circuit terminal 85 at the KR29 A/C Compressor Clutch Relay and ground.
    - If less than the specified value, test the control circuit for a short to ground.

6. Test for less than 5 ohms between the KR29 A/C Compressor Clutch Relay control circuit terminal 85 and the appropriate control circuit terminal at the K20 Engine Control Module harness connector listed below:
    - Terminal 91 X2 with LXV
    - Terminal 51 X2 with LXT
    - Terminal 91 X2 with 2H0
    - Terminal 29 X2 with LLW
    - If greater than the specified value, test the control circuit for an open/high resistance.
7. If all circuits test normal, test or replace the KR29 A/C Compressor Clutch Relay.

Component Testing

Static Test

1. Ignition OFF, disconnect the KR29 A/C Compressor Clutch Relay.
2. Test for 60-180 ohms between the B+ terminal 85 and the control terminal 86 of the KR29 A/C Compressor Clutch Relay.
    - If not within the specified range, replace the KR29 A/C Compressor Clutch Relay.
3. Test for the resistance between the following terminals:
    - 30 and 86
    - 30 and 87
    - 30 and 85
    - 85 and 87
    - If not the specified value, replace the KR29 A/C Compressor Clutch Relay.

Repair Instructions

Perform the **Diagnostic Repair Verification** after completing the diagnostic procedure.

Control Module References for engine control module replacement, setup, and programming

AFTERBLOW ENABLING

The afterblow mode can be enabled using the scan tool. The afterblow mode allows the blower motor to operate after the engine has been turned off. This operation of the blower motor dries the evaporator core, which reduces the amount of microbial growth which can create undesirable odors.

Use the following procedure in order to enable the afterblow mode:

1. Connect the Scan Tool.
2. Turn ON the ignition, with the engine OFF.
3. Build the vehicle with the scan tool.
4. Select Module Diagnosis.

5. Select Remote Heater and Air Conditioning Control Module.
6. Select Configuration/Reset Functions.
7. Select HVAC Afterblow Configuration.

When afterblow has been enabled by the scan tool the blower motor will operate at 68% blower speed, following the sequence below up to 5 times. This could last up to an hour:

1. The blower motor will be OFF for 7-11 minutes.
2. The blower motor will RUN for 25-30 seconds.

The following conditions must be met for the HVAC module to operate the afterblow:

- The engine must be turned off for at least 30 min.
- The outside air temperature must be at least 21°C (70°F).
- The A/C compressor must have operated for more than 2 minutes before shut down during the latest key cycle.
- The system voltage must be at least 12 V.

ACTUATOR RECALIBRATION

NOTE: Do not adjust any controls on the HVAC control module while the HVAC control module is self-calibrating. If interrupted, improper HVAC performance will result.

When replacing the HVAC control module it will be necessary to allow the HVAC control module to perform a calibration process. When installing the HVAC control module be sure to perform the following:

1. Place the ignition switch to the OFF position.
2. Disconnect the scan tool.
3. Install the HVAC control module.
4. Connect all previously disconnected components.
5. Start the vehicle.
6. Wait 40 s for the HVAC control module to self-calibrate.
7. Verify that no DTCs have set as current DTCs.

When replacing the HVAC actuator it will be necessary to allow the HVAC control module to perform a calibration process. When installing the HVAC actuator be sure to perform one of the following:

Preferred Method (with Scan Tool)

NOTE: Do not adjust any controls on the HVAC control module while the HVAC control module is self-calibrating. If interrupted, improper HVAC performance will result.

1. Clear all DTCs.
2. Place the ignition switch in the OFF position.
3. Install the HVAC actuator.
4. Connect all previously disconnected components.
5. Start the vehicle.
6. With the scan tool, initiate the HVAC Actuators re-calibration feature of the Heating and Air Conditioning Special Functions menu.
7. Verify that no DTCs have set as current DTCs.

Alternate Method (without Scan Tool)

NOTE: Do not adjust any controls on the HVAC control module while the HVAC control module is self-calibrating. If interrupted, improper HVAC performance will result.

1. Clear all DTCs.
2. Place the ignition switch to the OFF position.
3. Install the HVAC actuator.
4. Connect all previously disconnected components.
5. Remove the HVAC control module fuse for a minimum of 10 s.
6. Install the HVAC control module fuse.
7. Start the vehicle.
8. Wait 40 s for the HVAC control module to self-calibrate.
9. Verify that no DTCs have set as current DTCs.

REPAIR INSTRUCTIONS

HEATER AND AIR CONDITIONING CONTROL REPLACEMENT

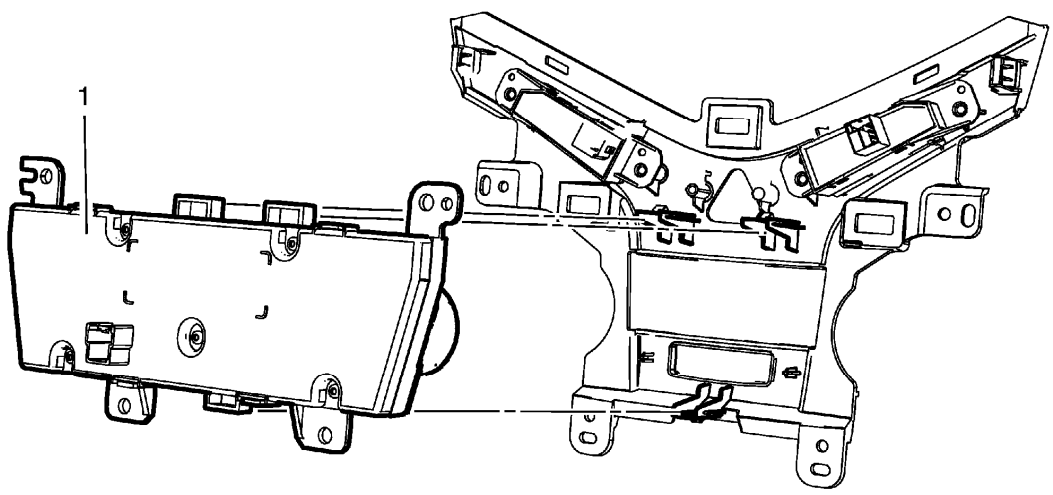

Fig. 5: Heater And Air Conditioning Control
Courtesy of GENERAL MOTORS COMPANY

Heater and Air Conditioning Control Replacement

Callout	Component Name
Preliminary Procedures Remove instrument panel accessory bezel. Refer to **Instrument Panel Accessory Bezel Replacement** .	
1	Heater and Air Conditioning Control **Procedure** 1. Unclip the retainer tabs. 2. For programming and set up information, refer to **Control Module References**

HEATER AND AIR CONDITIONING REMOTE CONTROL REPLACEMENT

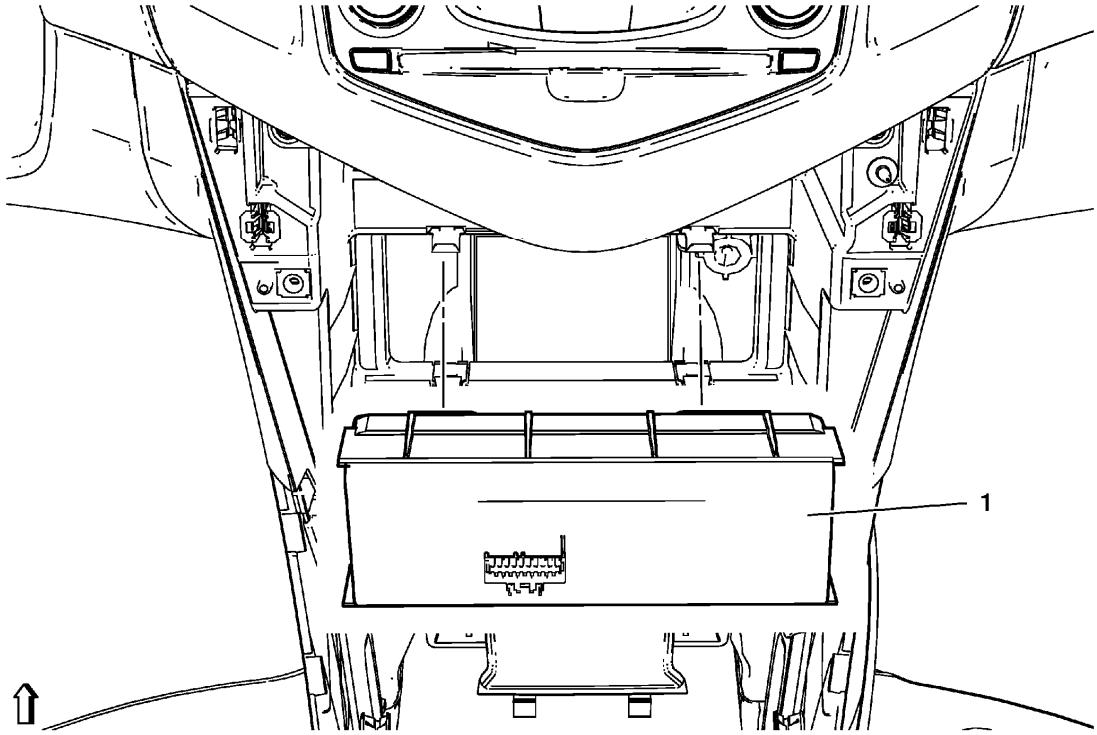

Fig. 6: Heater and Air Conditioning Remote Control
Courtesy of GENERAL MOTORS COMPANY

Heater and Air Conditioning Remote Control Replacement

Callout	Component Name
Preliminary Procedure 1. Prepare heater and air conditioning remote control for replacement, refer to **Control Module References** . 2. Disconnect the negative battery cable. Refer to **Battery Negative Cable Disconnection and Connection** 3. Remove heater and air conditioning control. Refer to **Heater and Air Conditioning Control Replacement**.	
1	Heater and Air Conditioning Remote Control **Procedure** 1. Disconnect electrical components. 2. Unclip remote control from instrument panel. 3. After repairs, refer to **Control Module References** for programming and set up information.

HEATER AND BLOWER AND AIR CONDITIONING CONTROL MODULE REPLACEMENT

Removal Procedure

1. Remove instrument panel compartment. Refer to **Instrument Panel Compartment Replacement** .
2. Remove floor air outlet duct right side. Refer to **Floor Air Outlet Duct Replacement - Right Side** .

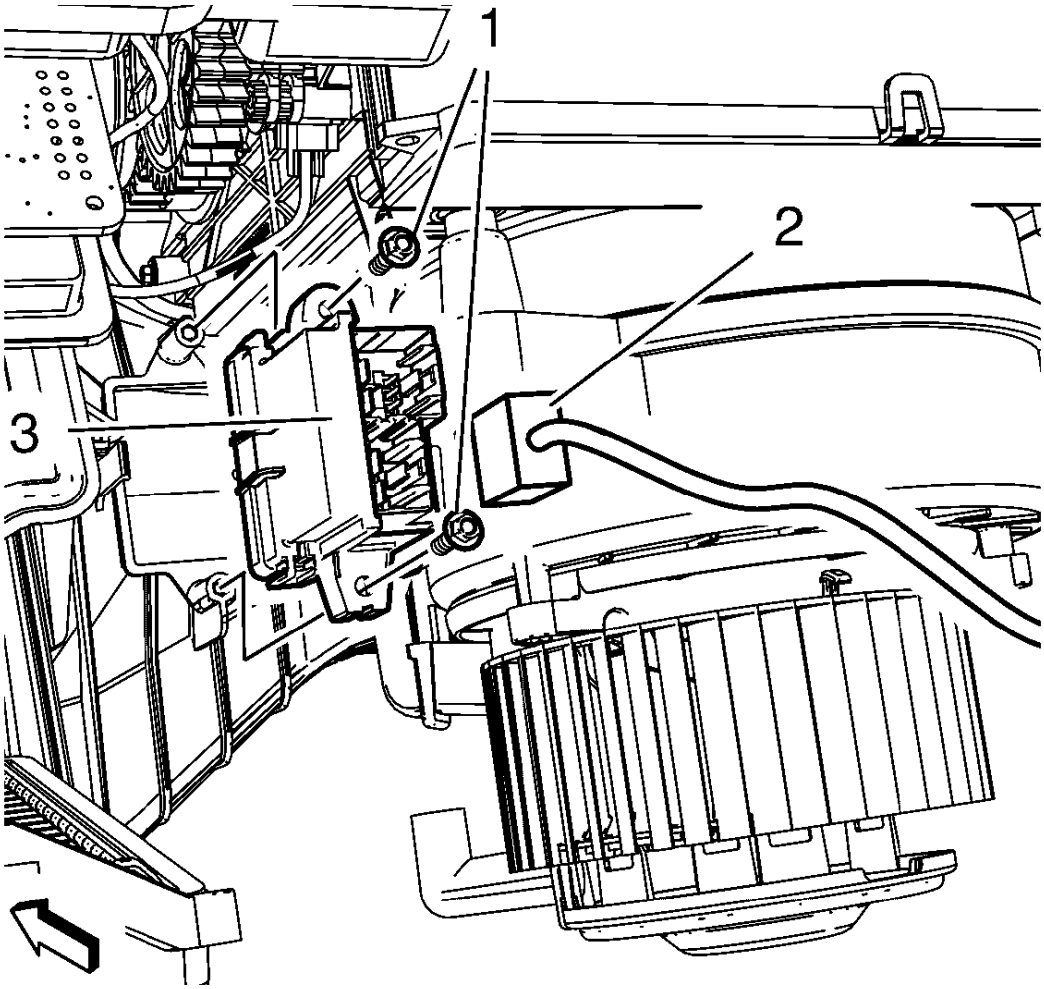

Fig. 7: Heater And Blower Control Module, Wiring Harness Plug And Bolts
Courtesy of GENERAL MOTORS COMPANY

3. Remove the 2 heater and blower and air conditioning control module bolts (1) and the heater and blower and air conditioning control module wiring harness plug (2).
4. Remove heater and blower and air conditioning control module (3).

Installation Procedure

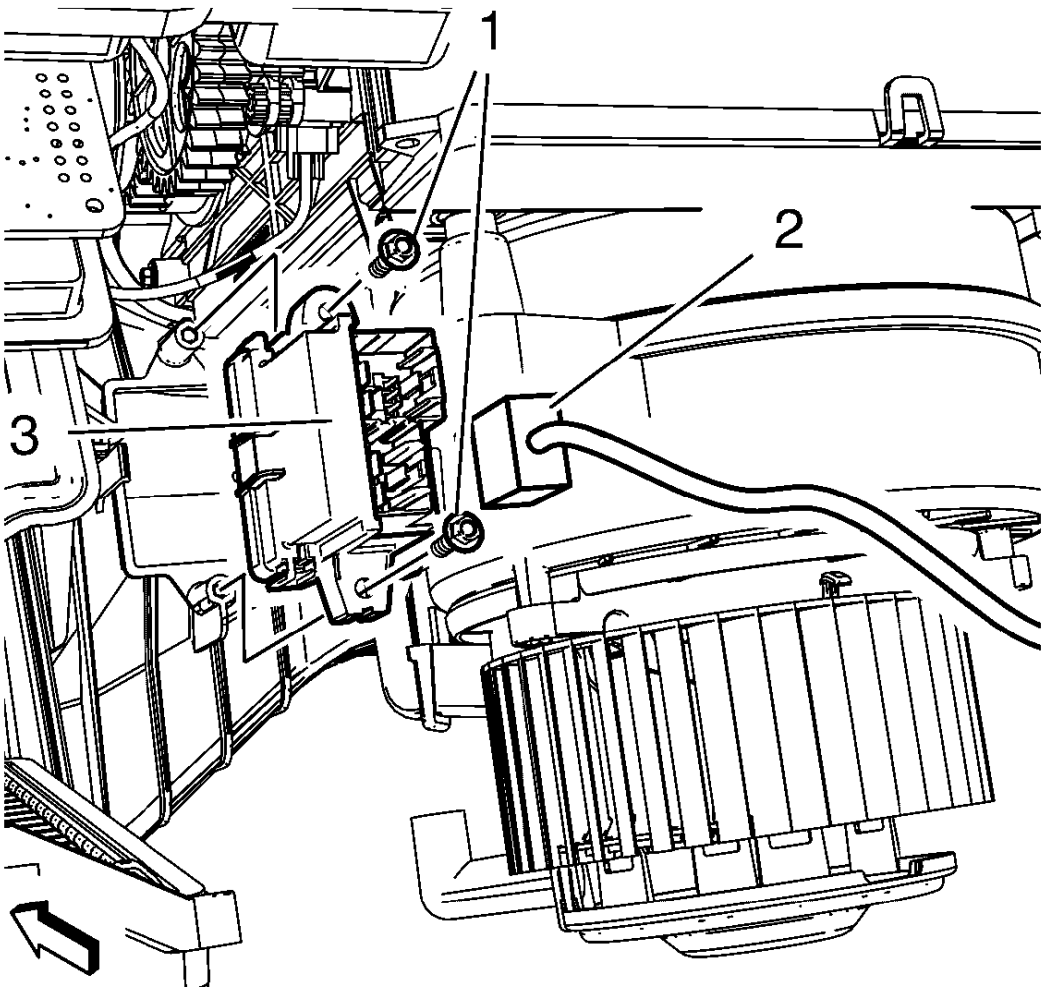

Fig. 8: Heater And Blower Control Module, Wiring Harness Plug And Bolts
Courtesy of GENERAL MOTORS COMPANY

1. Install heater and blower and air conditioning control module (3).

CAUTION: Refer to Fastener Caution .

2. Install the heater and blower and air conditioning control module wiring harness plug (2) and the 2 heater and blower and air conditioning control module bolts (1). Tighten to 2.5 Y (23 lb in).
3. Install floor air outlet duct - right side. Refer to **Floor Air Outlet Duct Replacement - Right Side** .
4. Install instrument panel compartment. Refer to **Instrument Panel Compartment Replacement** .

MODE VALVE LEVER REPLACEMENT

Removal Procedure

1. Remove instrument panel assembly. Refer to **Instrument Panel Assembly Replacement** .

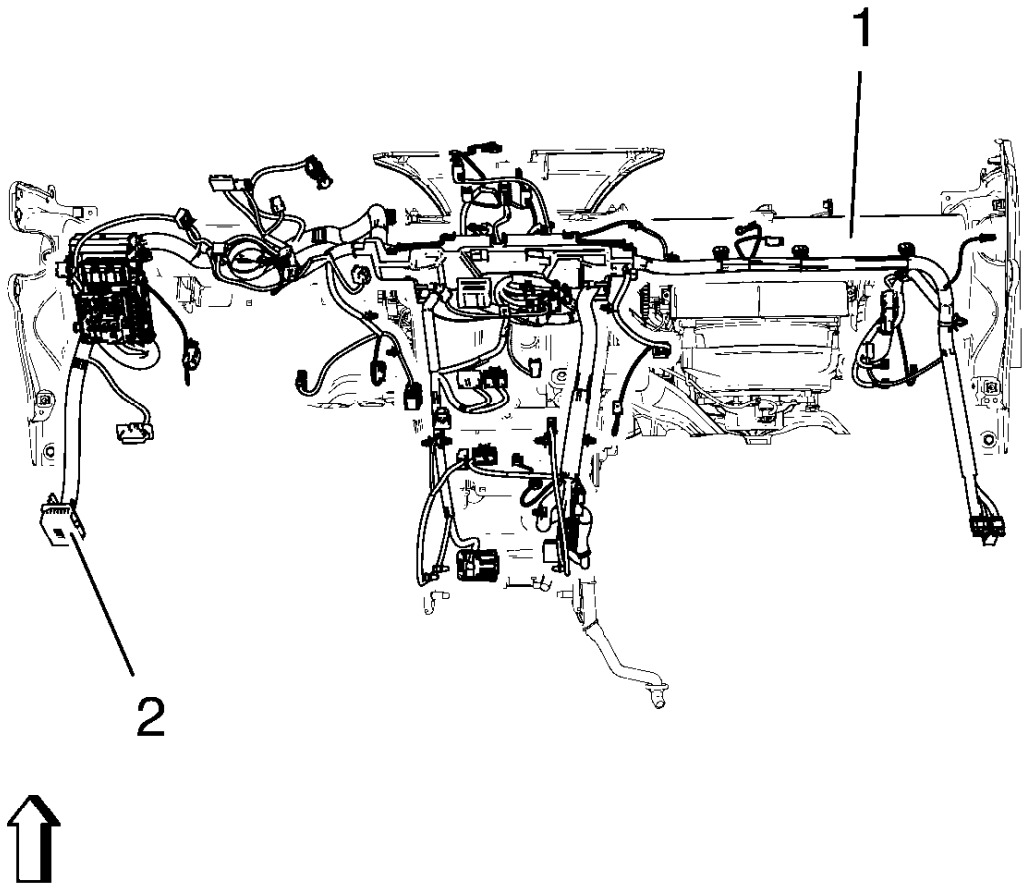

Fig. 9: Instrument Panel Wiring Harness And Instrument Panel Tie Bar
Courtesy of GENERAL MOTORS COMPANY

2. Remove instrument panel wiring harness (2) from instrument panel tie bar (1).

   Disconnect electrical connectors.

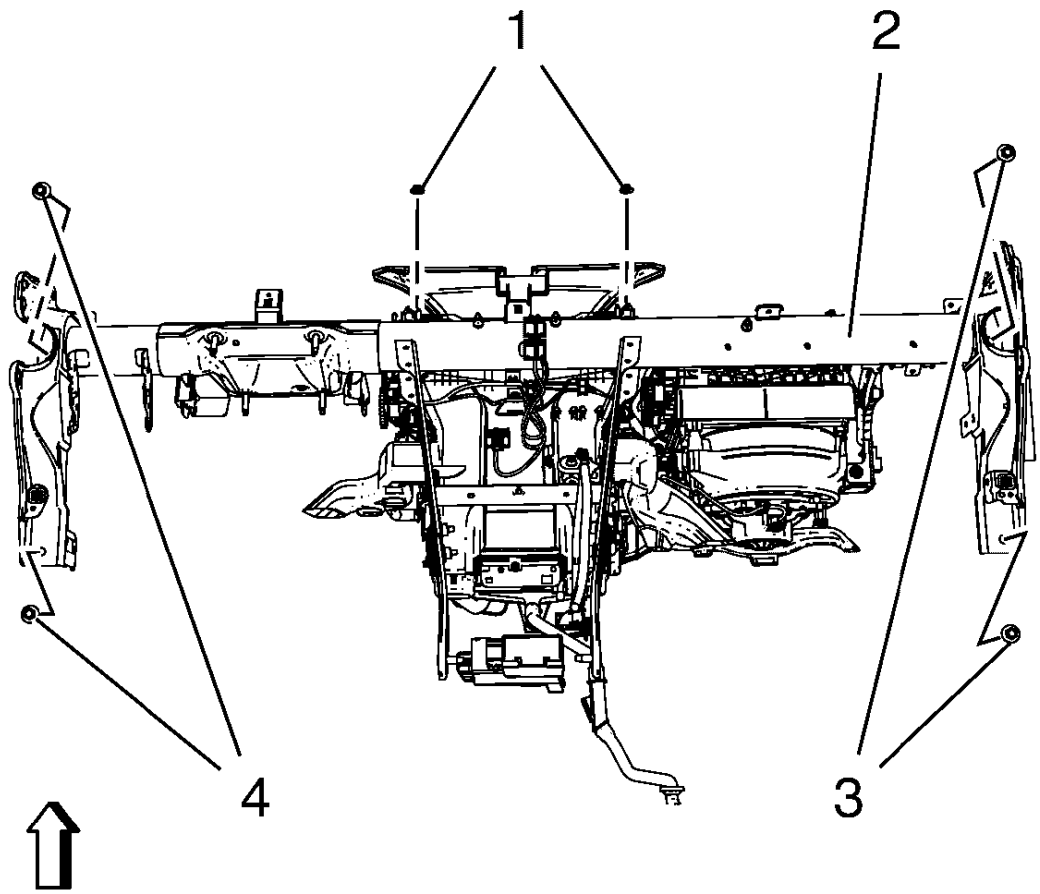

Fig. 10: Instrument Panel Tie Bar, Bolts And Nuts
Courtesy of GENERAL MOTORS COMPANY

3. Remove instrument panel tie bar (2).
    - Remove 4 instrument panel tie bar bolts (3, 4).
    - Remove 2 instrument panel tie bar nuts (1).

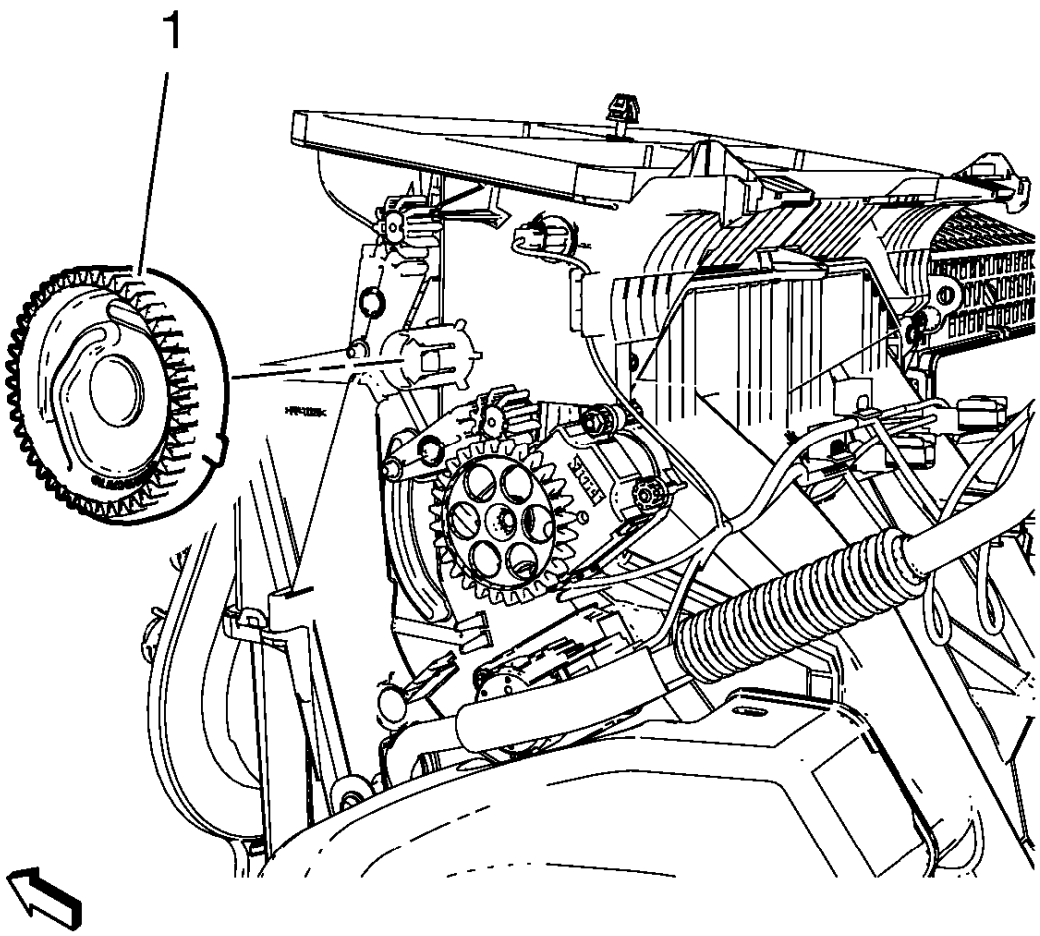

Fig. 11: Mode Control Cam
Courtesy of GENERAL MOTORS COMPANY

4. Remove mode control cam (1).

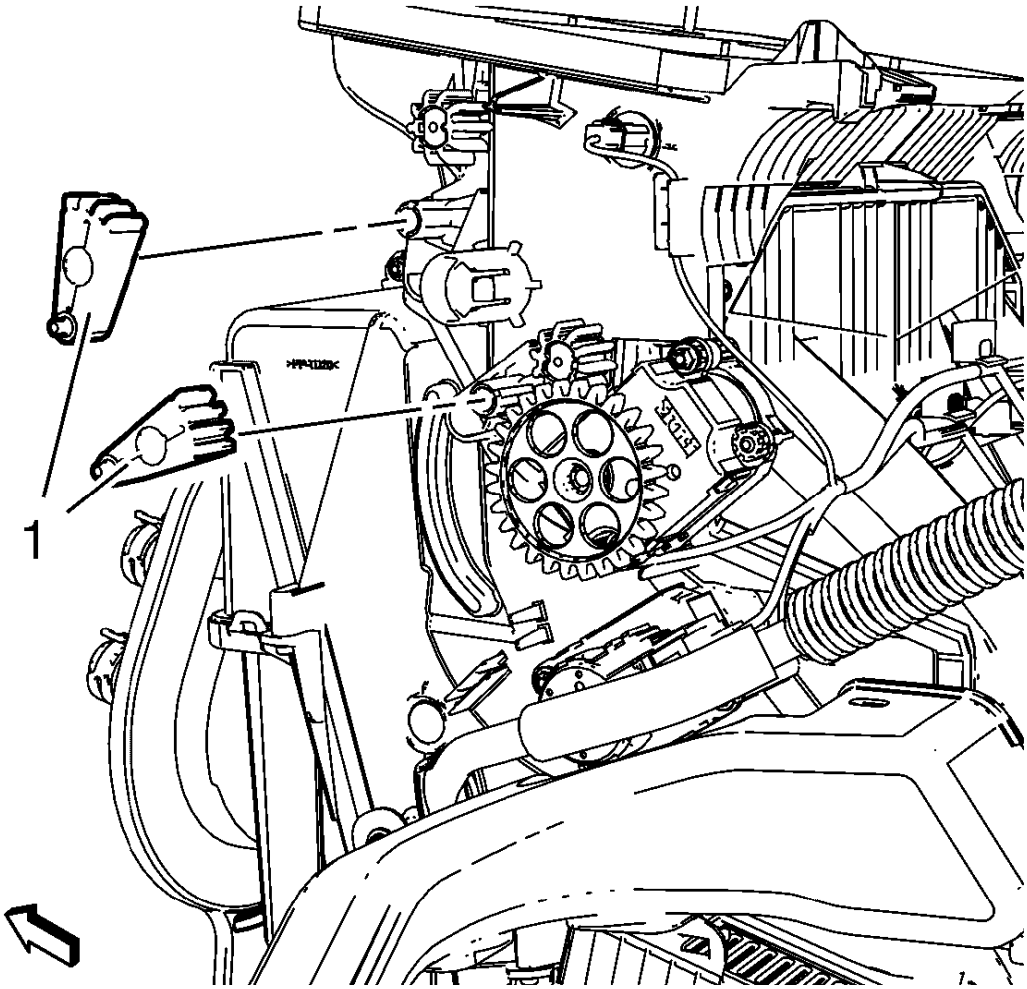

Fig. 12: Mode Valve Lever
Courtesy of GENERAL MOTORS COMPANY

5. Remove 2 mode valve lever (1).

Installation Procedure

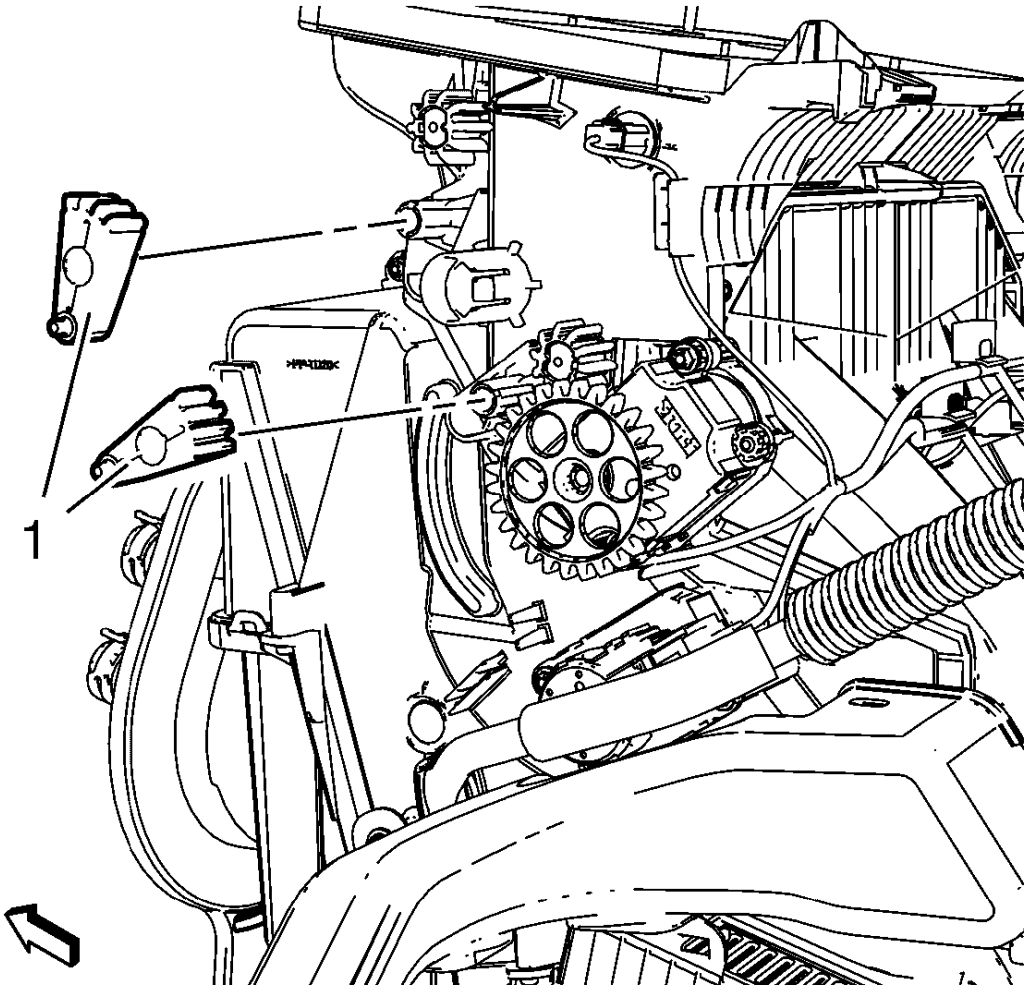

Fig. 13: Mode Valve Lever
Courtesy of GENERAL MOTORS COMPANY

1. Install 2 mode valve lever (1).

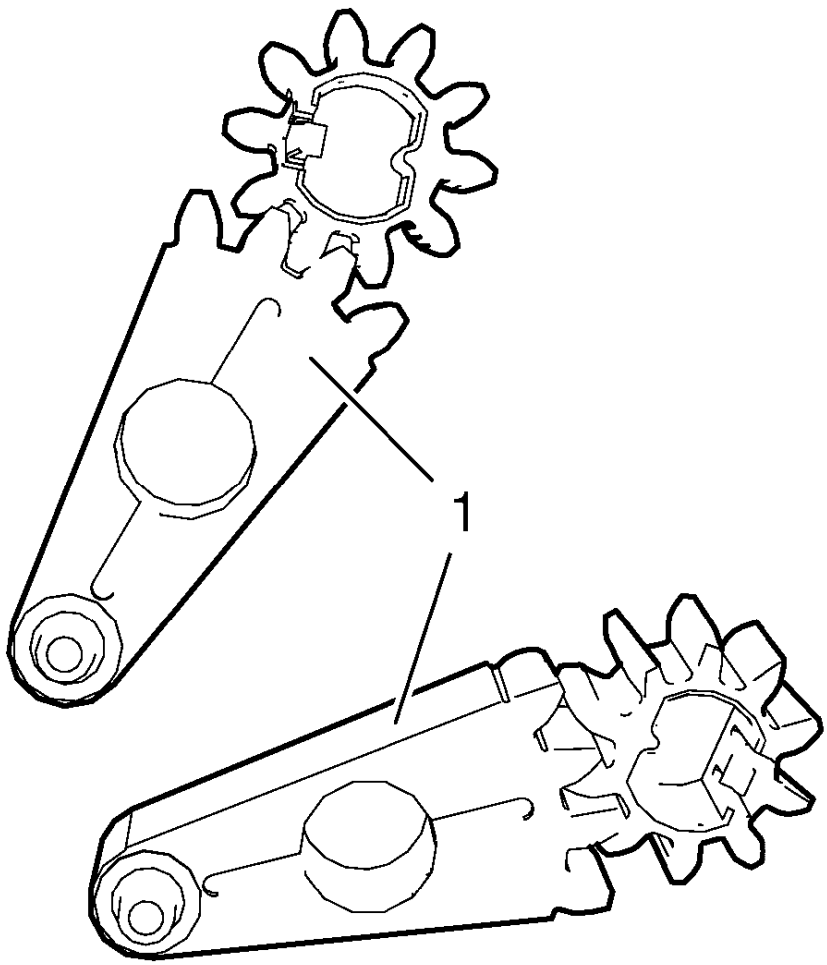

Fig. 14: Mode Valve Levers
Courtesy of GENERAL MOTORS COMPANY

NOTE: The mode valve levers have to be fitted to the according mode valve gears in figured position. The ventilation dampers have to be in middle position.

2. Make sure that mode valve gears of mode valve levers (1) are fitted as shown in graphic above.

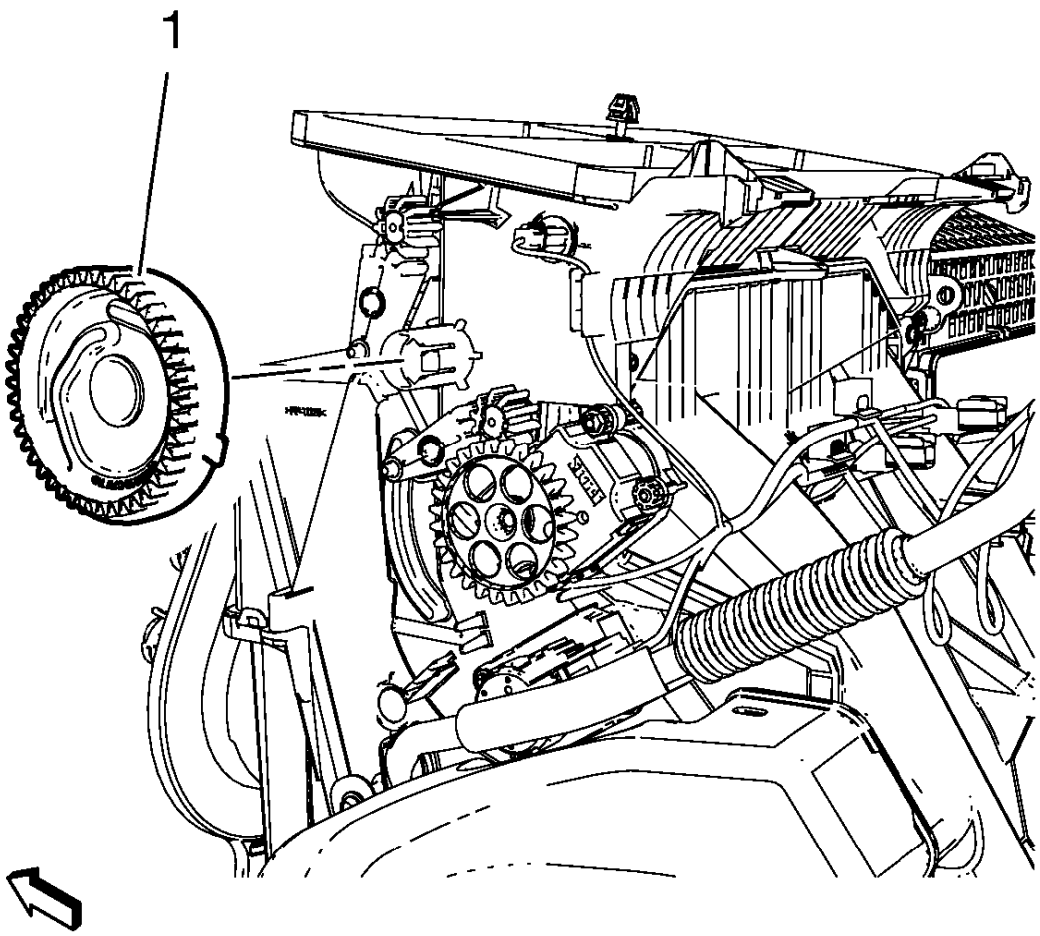

Fig. 15: Mode Control Cam
Courtesy of GENERAL MOTORS COMPANY

NOTE: The mode control cam can only be fitted in one position.

3. Install mode control cam (1).

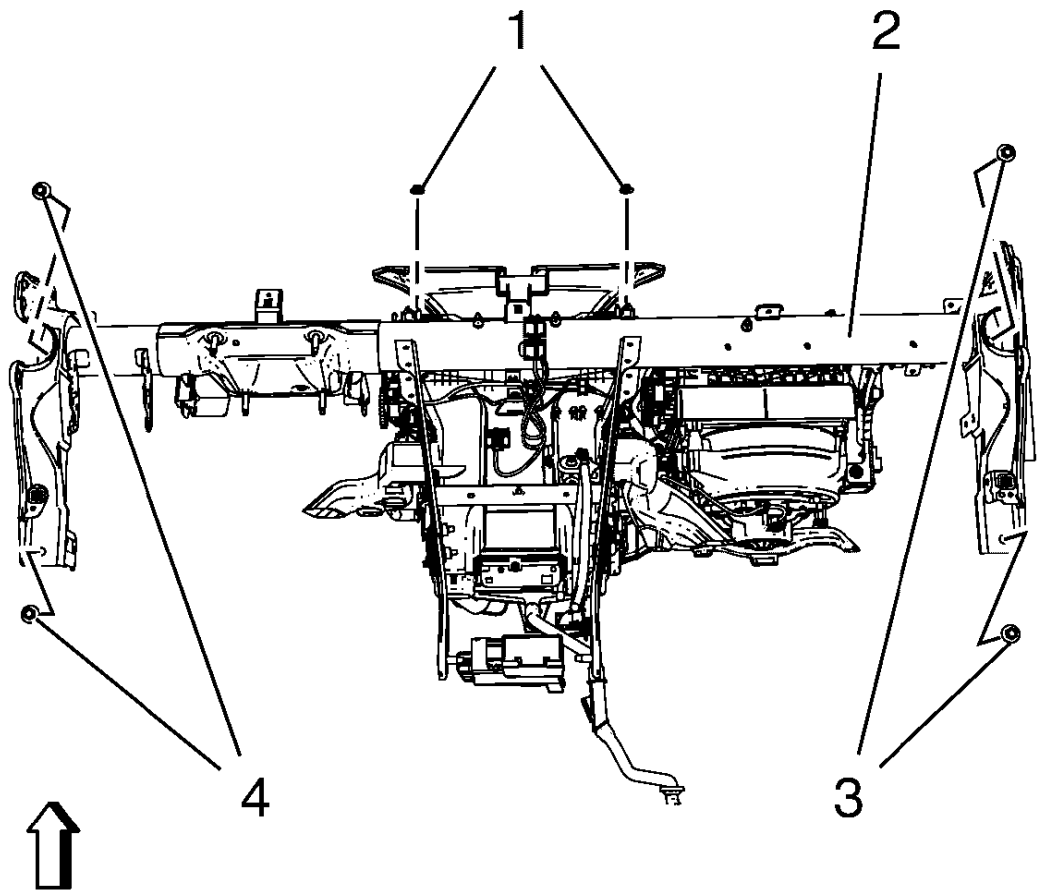

Fig. 16: Instrument Panel Tie Bar, Bolts And Nuts
Courtesy of GENERAL MOTORS COMPANY

CAUTION: Refer to Fastener Caution

4. Install instrument panel tie bar (2).
    - Install 4 instrument panel tie bar bolts (3, 4) and tighten to 22 N.m (17 lb ft).
    - Install 2 instrument panel tie bar nuts (1) and tighten to 9 N.m (80 lb in).

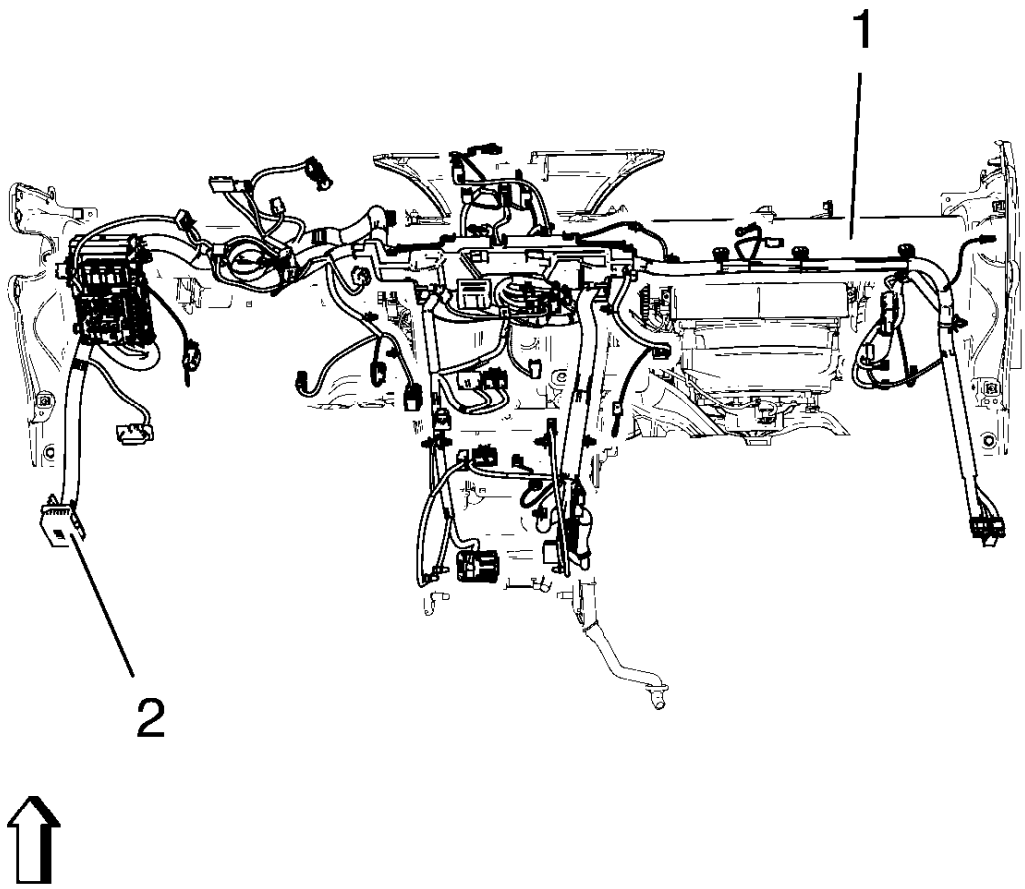

Fig. 17: Instrument Panel Wiring Harness And Instrument Panel Tie Bar
Courtesy of GENERAL MOTORS COMPANY

5. Install instrument panel wiring harness (2) from instrument panel tie bar (1).

   Connect electrical connectors.

6. Install instrument panel assembly. Refer to **Instrument Panel Assembly Replacement** .

VENT VALVE LEVER REPLACEMENT

Removal Procedure

1. Remove instrument panel assembly. Refer to **Instrument Panel Assembly Replacement** .

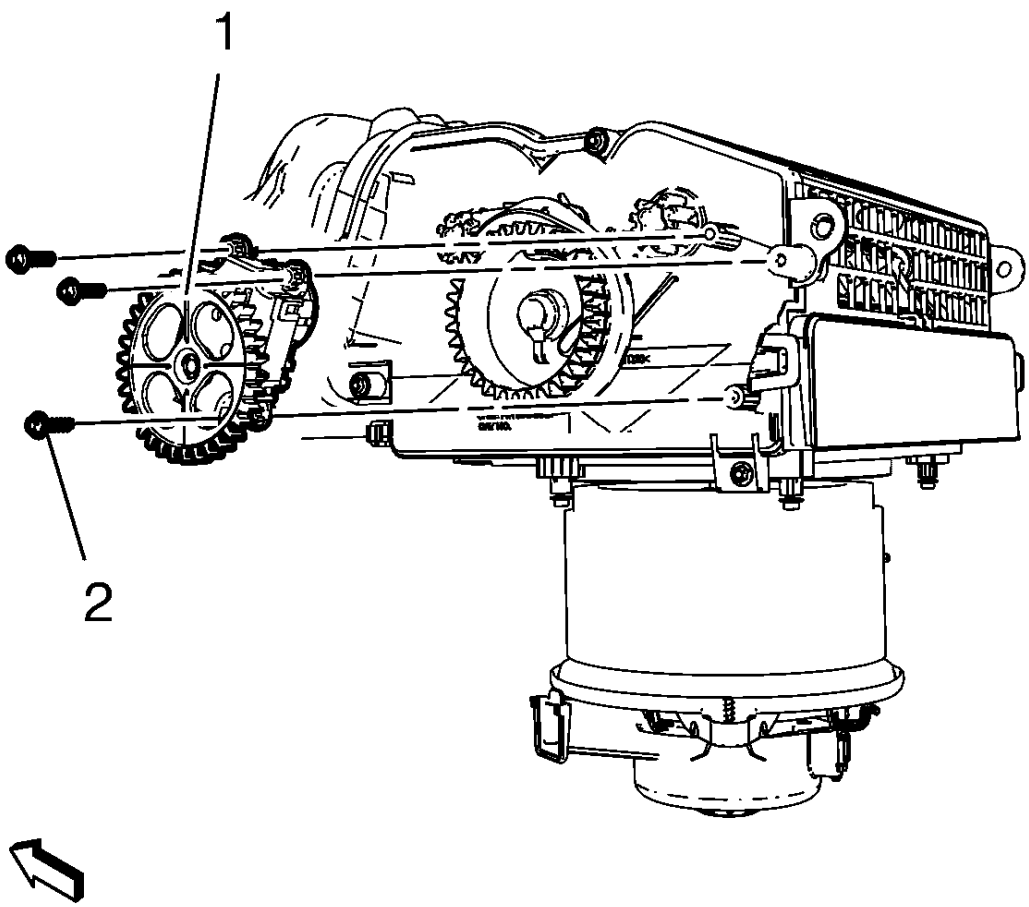

Fig. 18: Mode Control Cam Actuator
Courtesy of GENERAL MOTORS COMPANY

NOTE: The graphic shows air inlet housing without attaching parts for better clarity.

2. Disconnect electrical connector and remove 3 mode control cam actuator screws (2) and remove mode control cam actuator (1).

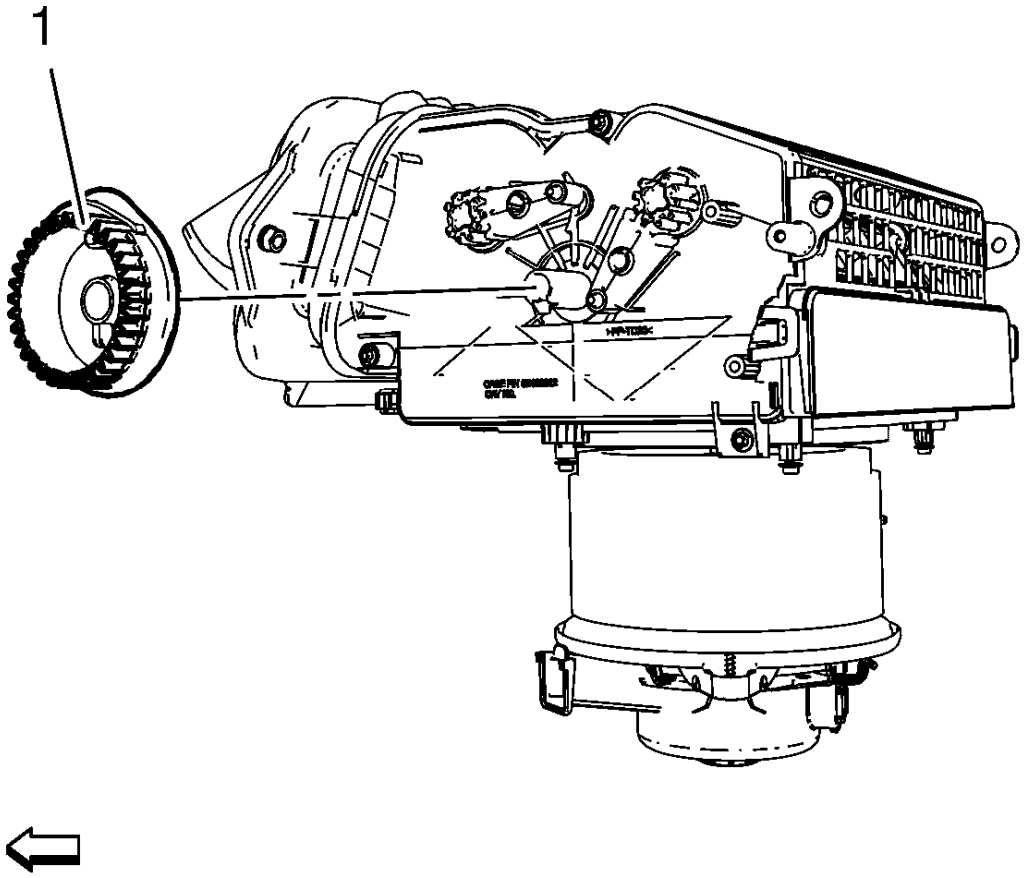

Fig. 19: Inside Air Valve Control Cam
Courtesy of GENERAL MOTORS COMPANY

3. Remove air inlet valve and inside air valve control cam (1).

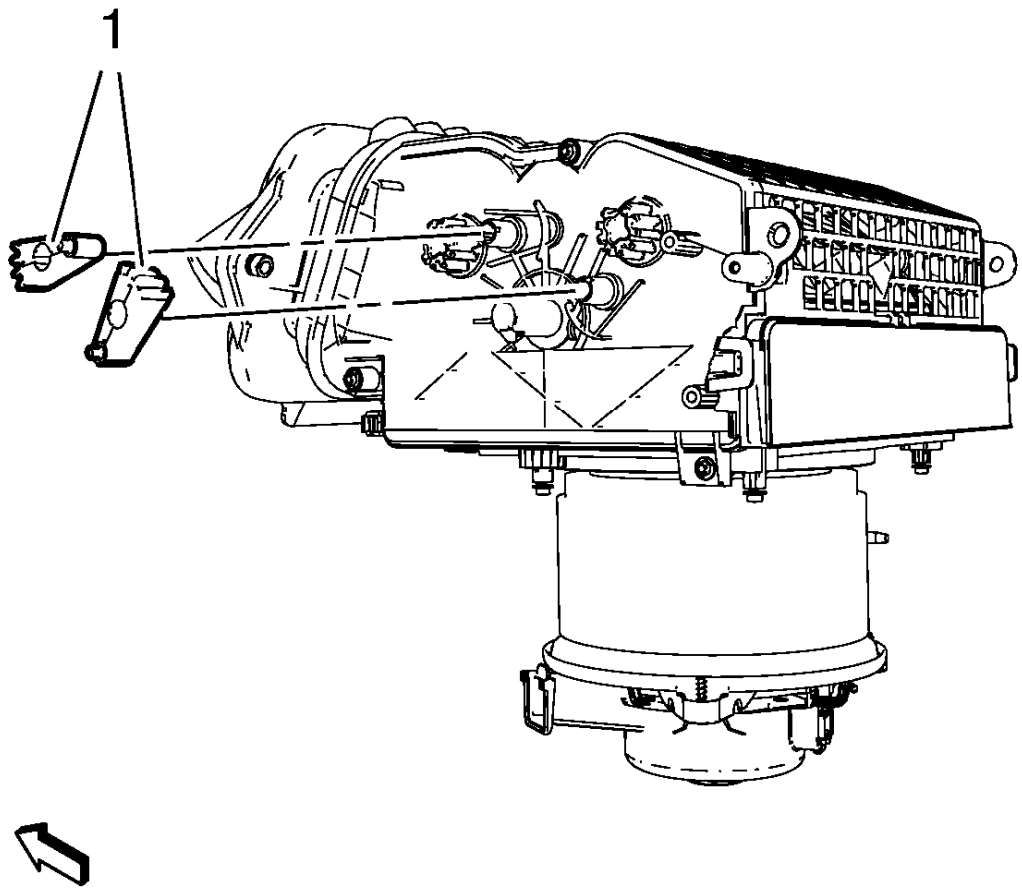

Fig. 20: Vent Valve Levers
Courtesy of GENERAL MOTORS COMPANY

4. Remove 2 vent valve levers (1).

Installation Procedure

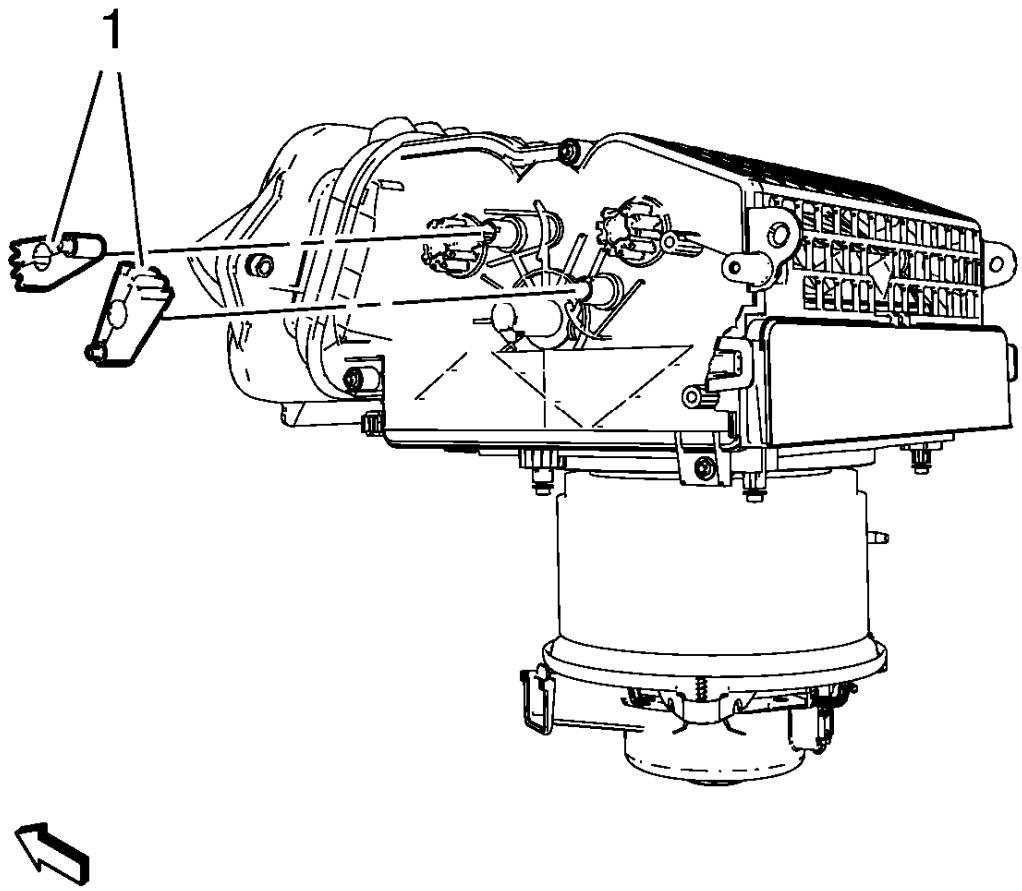

Fig. 21: Vent Valve Levers
Courtesy of GENERAL MOTORS COMPANY

1. Install 2 vent valve levers (1).

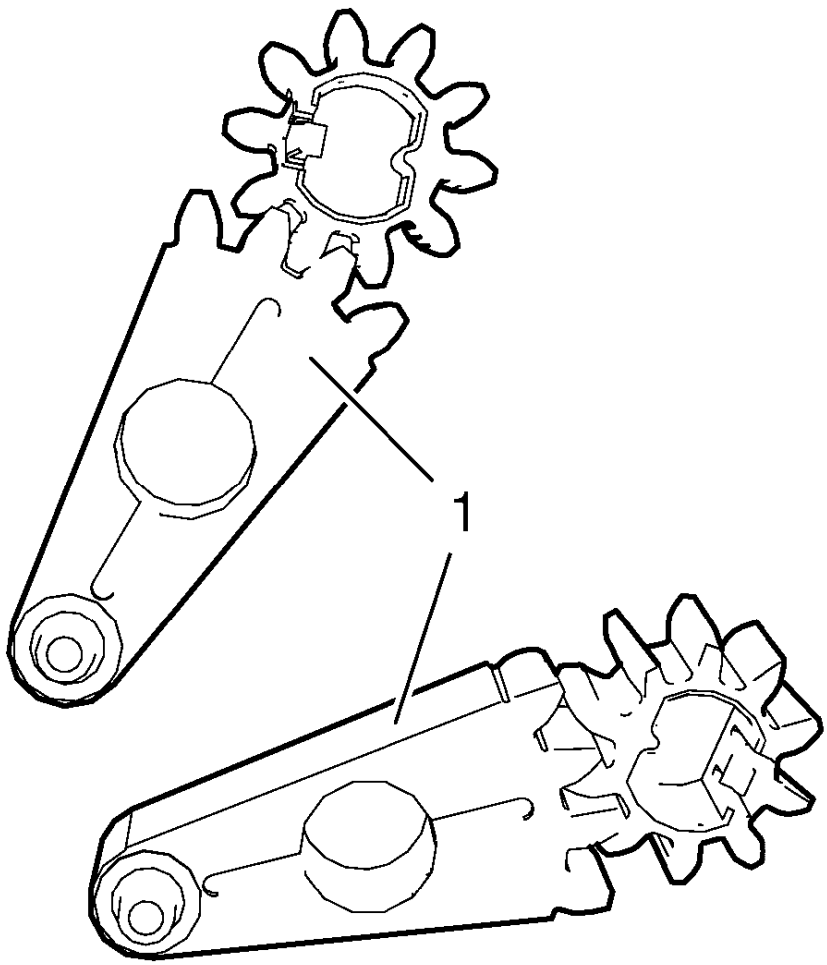

Fig. 22: Mode Valve Levers
Courtesy of GENERAL MOTORS COMPANY

NOTE: The vent valve levers have to be fitted to the according vent valve gears in figured position. The air circulation dampers have to be in middle position.

2. Make sure that mode valve gears of valve vent levers (1) are fitted as shown in graphic above

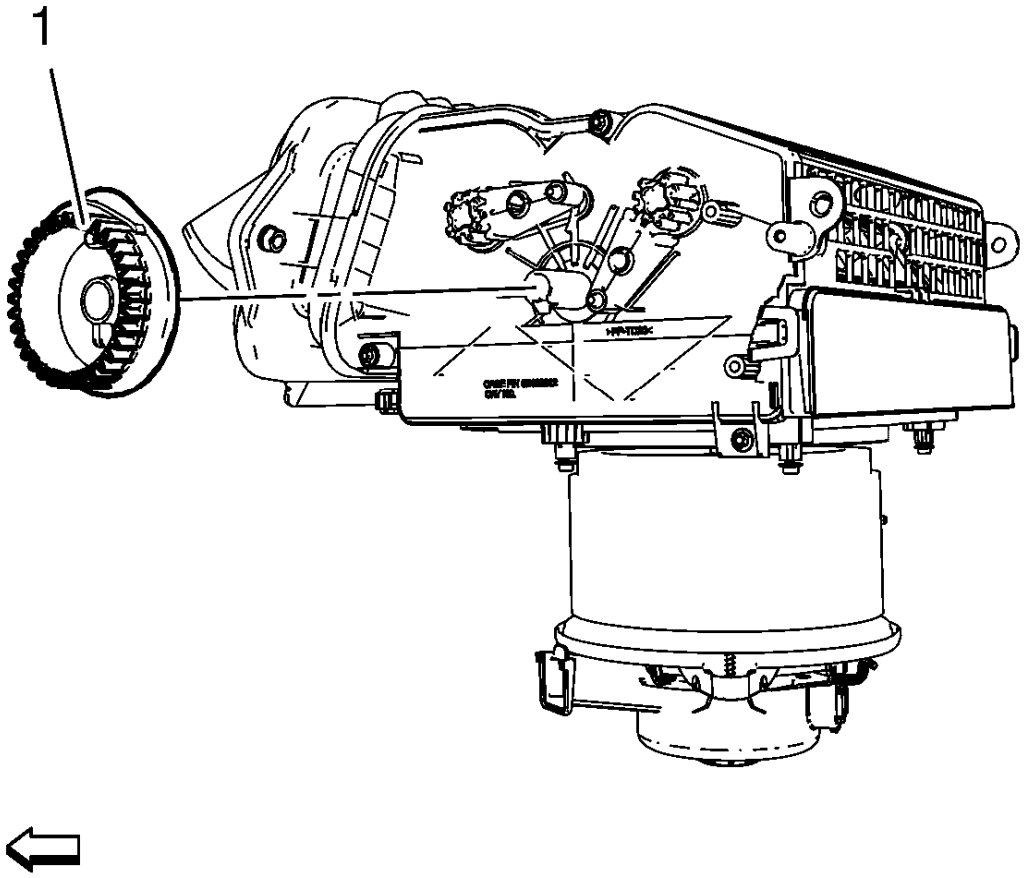

Fig. 23: Inside Air Valve Control Cam
Courtesy of GENERAL MOTORS COMPANY

NOTE: The air inlet valve and inside air valve control cam can only be fitted in one position.

3. Install air inlet valve and inside air valve control cam (1).

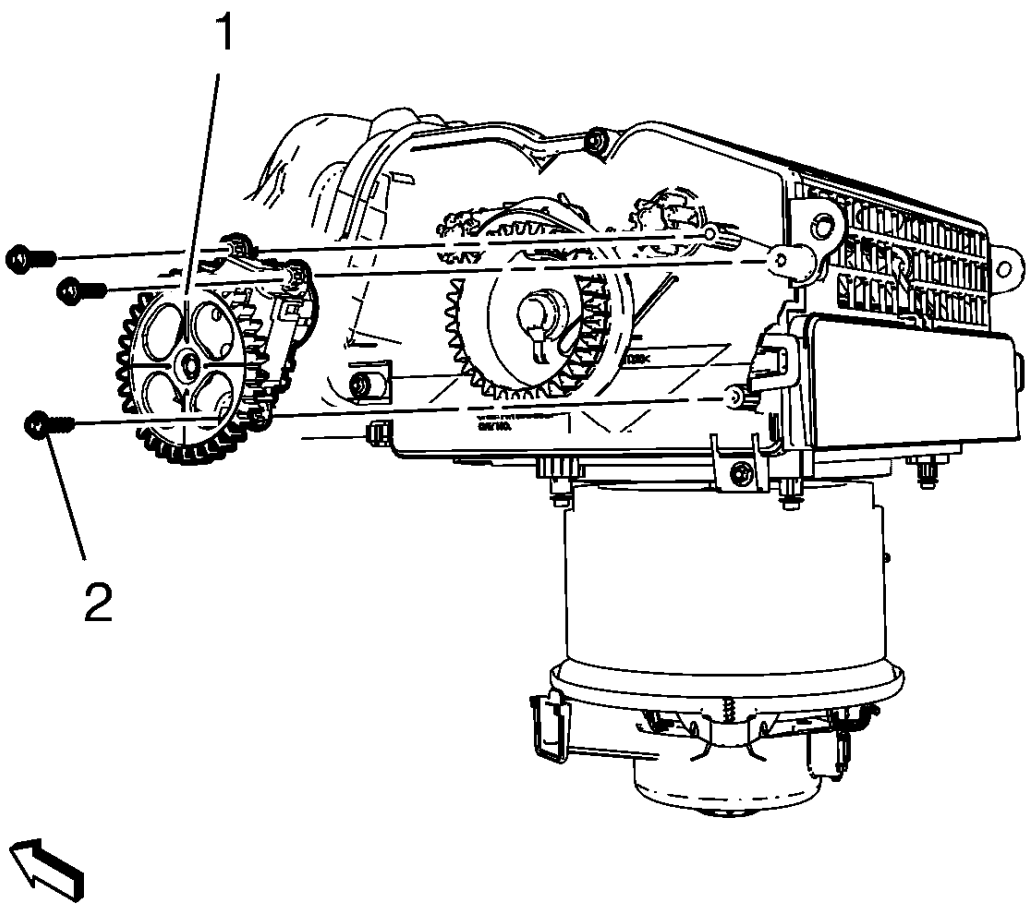

Fig. 24: Mode Control Cam Actuator
Courtesy of GENERAL MOTORS COMPANY

CAUTION: Refer to Fastener Caution .

4. Install mode control cam actuator (1) and install 3 mode control cam actuator screws (2) and connect electrical connector.

   Tighten

   2.5 N.m (23 lb in).

5. Install instrument panel assembly. Refer to **Instrument Panel Assembly Replacement** .

MODE VALVE GEAR REPLACEMENT

Removal Procedure

1. Remove instrument panel assembly. Refer to **Instrument Panel Assembly Replacement** .

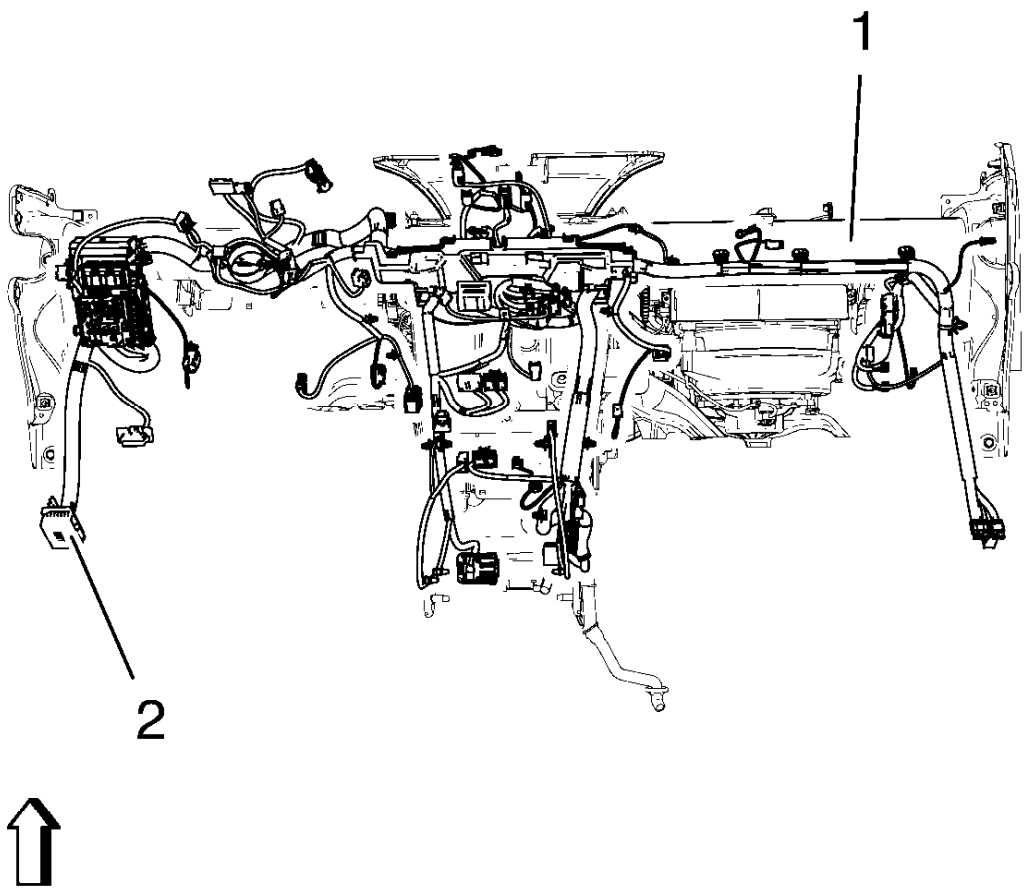

Fig. 25: Instrument Panel Wiring Harness And Instrument Panel Tie Bar
Courtesy of GENERAL MOTORS COMPANY

2. Remove instrument panel wiring harness (2) from instrument panel tie bar (1).

   Disconnect electrical connectors.

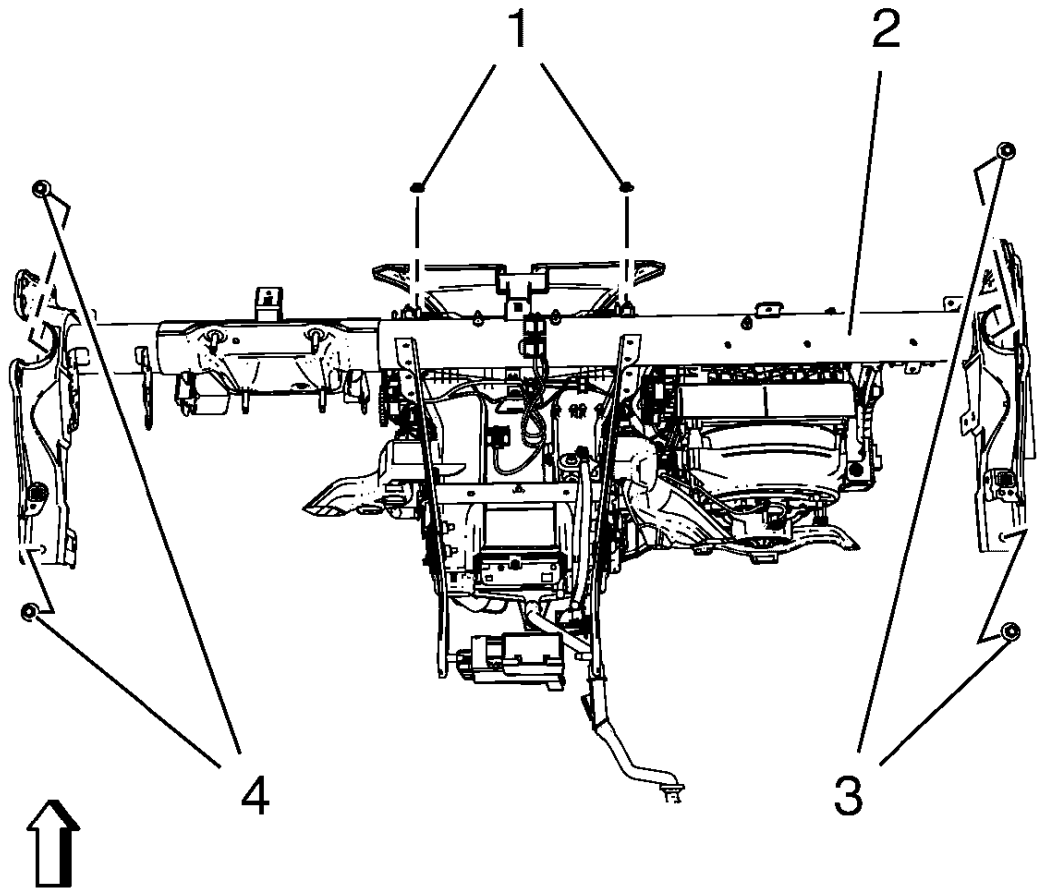

Fig. 26: Instrument Panel Tie Bar, Bolts And Nuts
Courtesy of GENERAL MOTORS COMPANY

3. Remove instrument panel tie bar (2).
    - Remove 4 instrument panel tie bar bolts (3, 4).
    - Remove 2 instrument panel tie bar nuts (1).

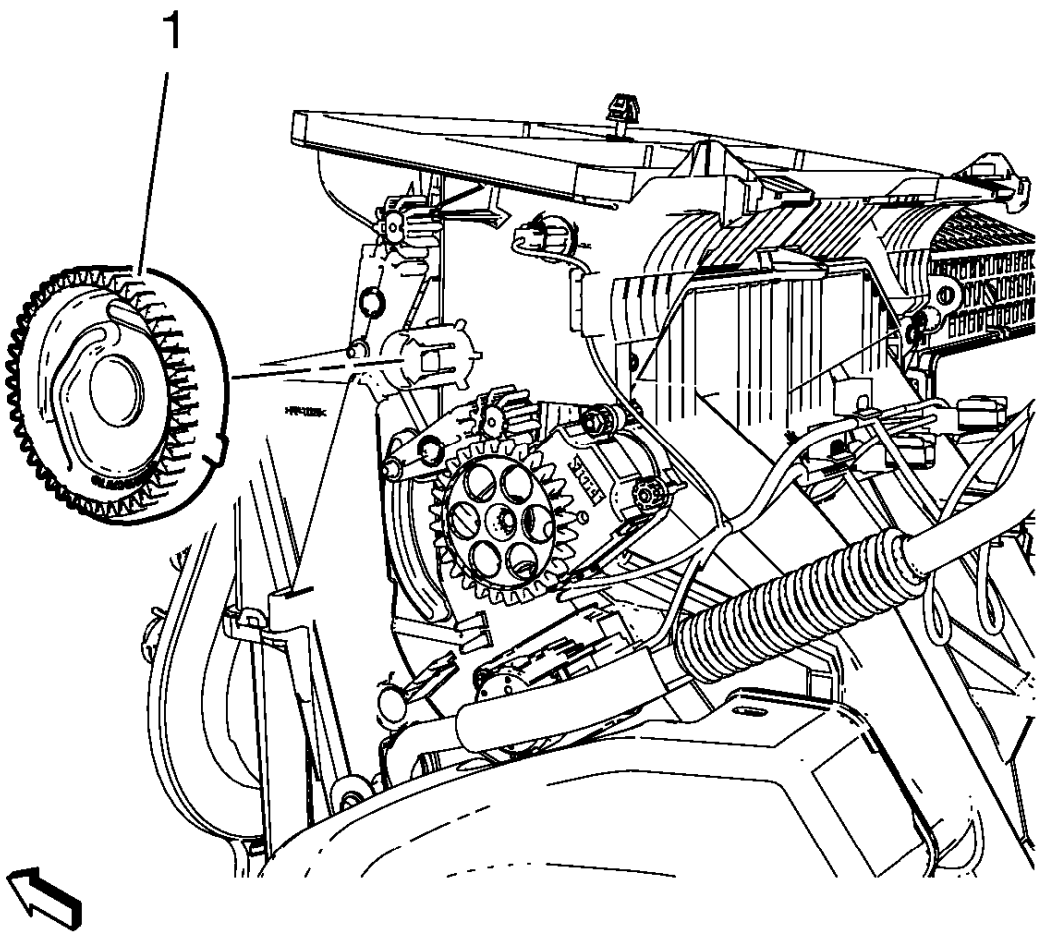

Fig. 27: Mode Control Cam
Courtesy of GENERAL MOTORS COMPANY

4. Remove mode control cam (1).

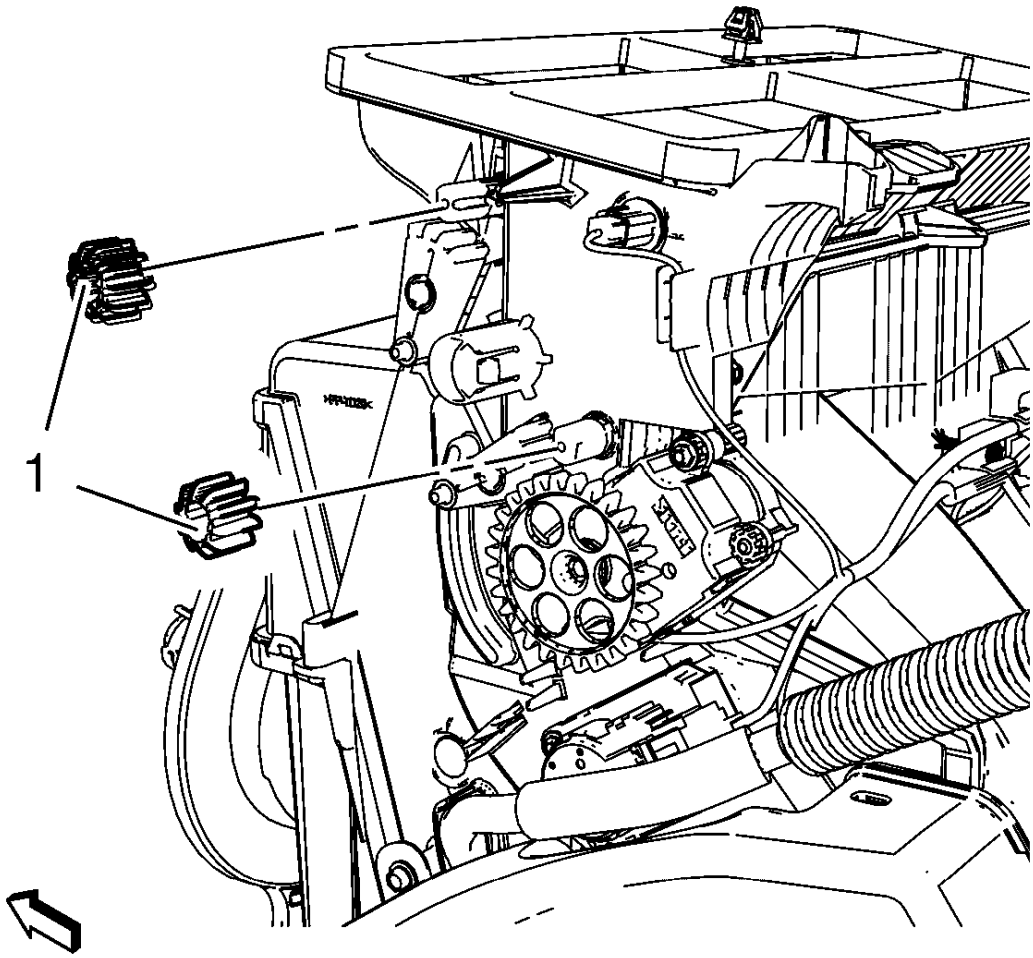

Fig. 28: Mode Valve Gear
Courtesy of GENERAL MOTORS COMPANY

5. Remove 2 mode valve gear (1).

Installation Procedure

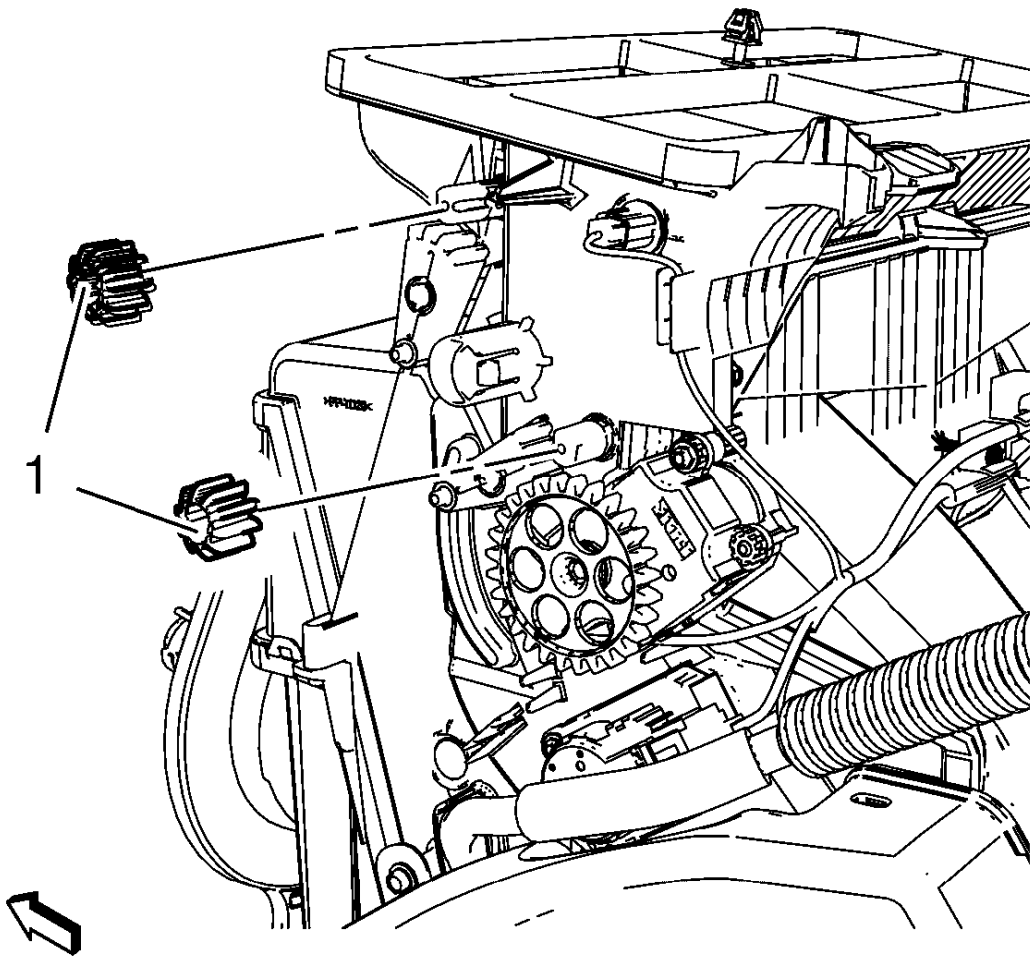

Fig. 29: Mode Valve Gear
Courtesy of GENERAL MOTORS COMPANY

1. Install 2 mode valve gear (1).

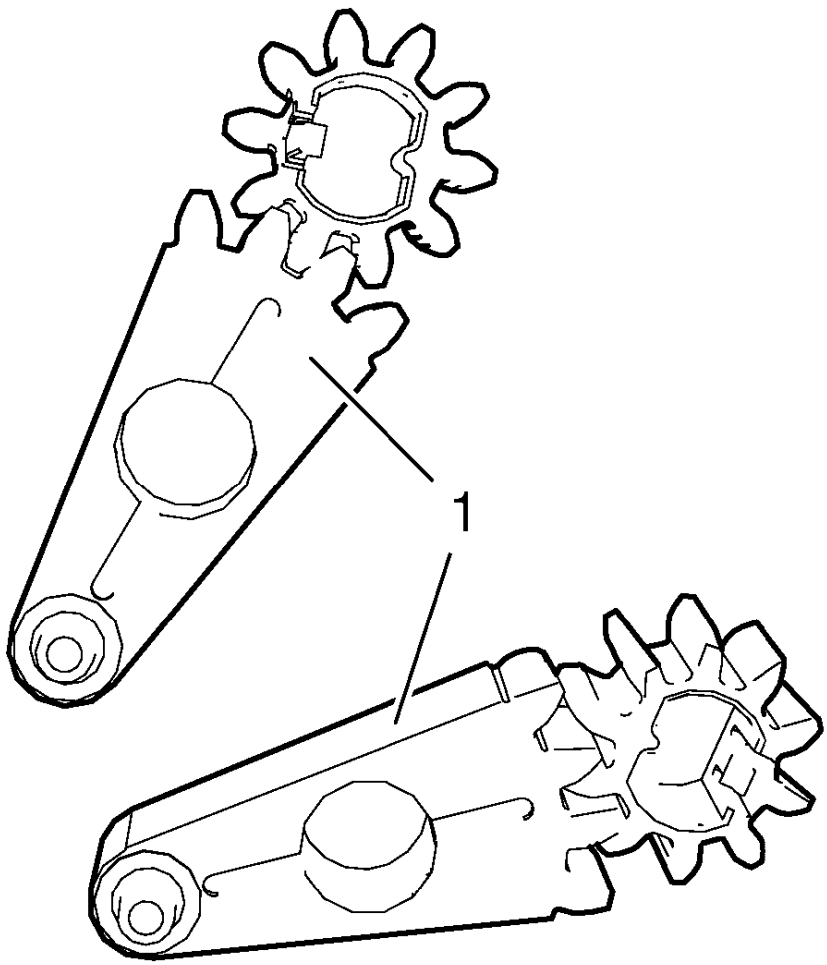

Fig. 30: Mode Valve Levers
Courtesy of GENERAL MOTORS COMPANY

NOTE: The mode valve gear can only be fitted in one position. The mode valve gears have to be fitted to the according mode valve levers in figured position. The ventilation dampers have to be in middle position.

2. Make sure that mode valve gears of mode valve levers (1) are fitted as shown in graphic above.

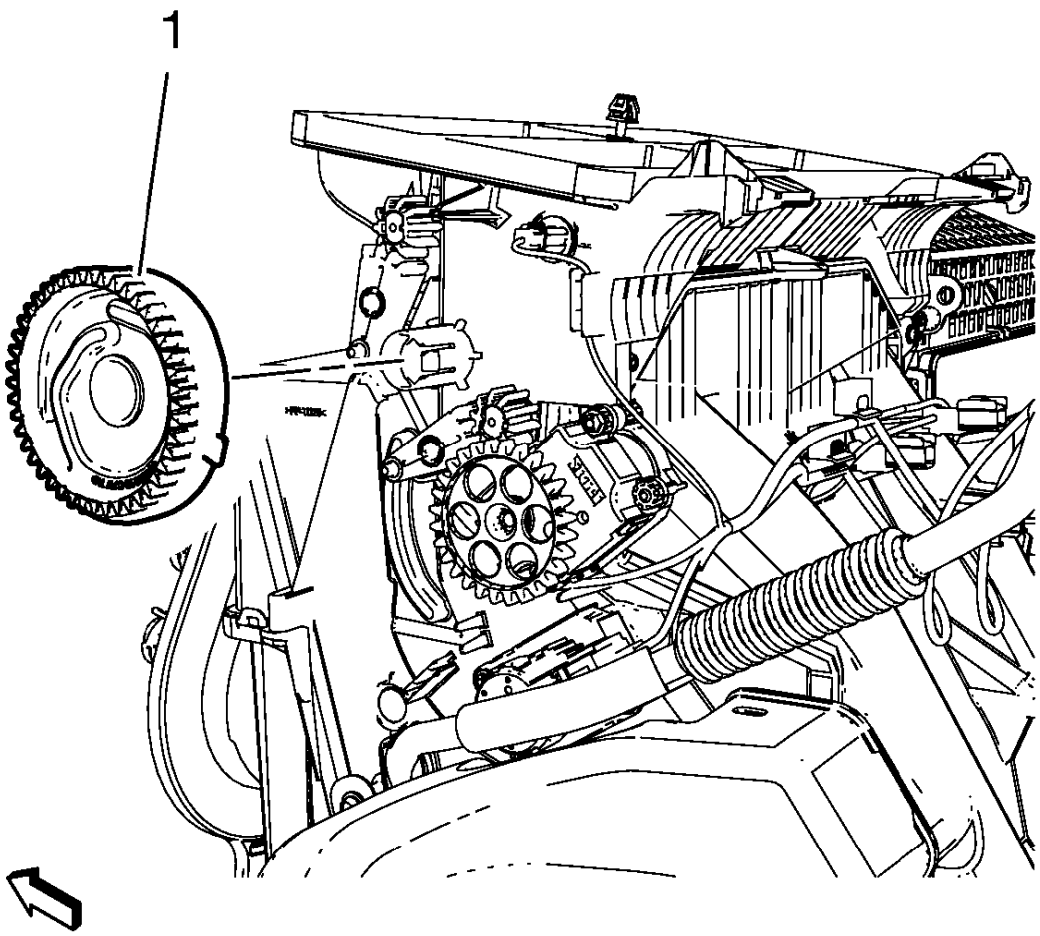

Fig. 31: Mode Control Cam
Courtesy of GENERAL MOTORS COMPANY

NOTE: The mode control cam can only be fitted in one position.

3. Install mode control cam (1).

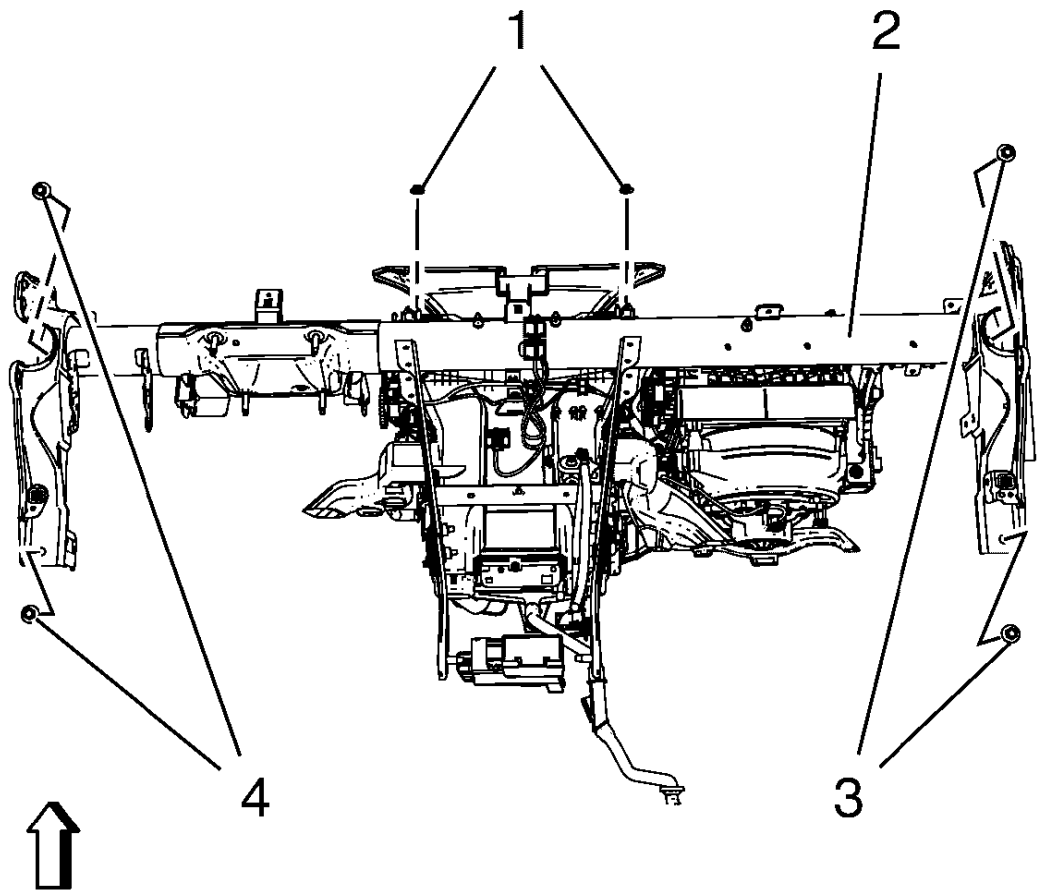

Fig. 32: Instrument Panel Tie Bar, Bolts And Nuts
Courtesy of GENERAL MOTORS COMPANY

CAUTION: Refer to Fastener Caution .

4. Install instrument panel tie bar (2).
    - Install 4 instrument panel tie bar bolts (3, 4) and tighten to 22 N.m (17 lb ft).
    - Install 2 instrument panel tie bar nuts (1) and tighten to 9 N.m (80 lb in).

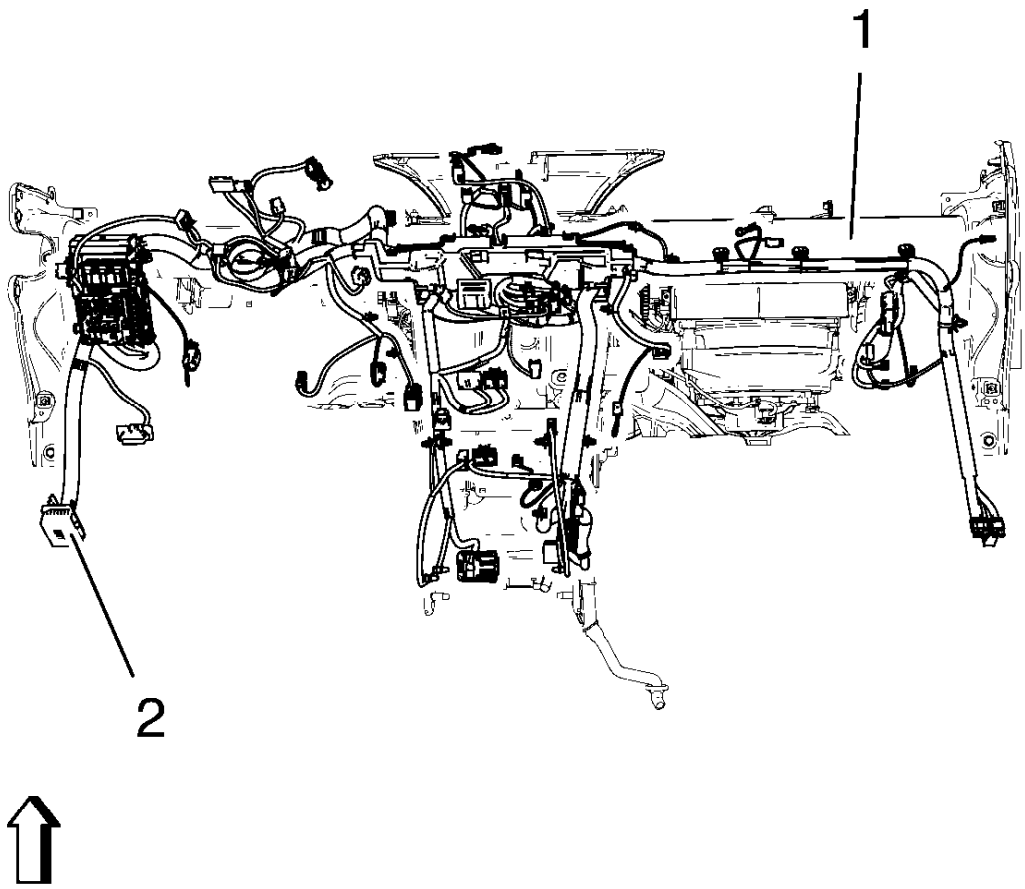

Fig. 33: Instrument Panel Wiring Harness And Instrument Panel Tie Bar
Courtesy of GENERAL MOTORS COMPANY

5. Install instrument panel wiring harness (2) from instrument panel tie bar (1).

   Connect electrical connectors.

6. Install instrument panel assembly. Refer to **Instrument Panel Assembly Replacement** .

AIR INLET VALVE ACTUATOR GEAR REPLACEMENT

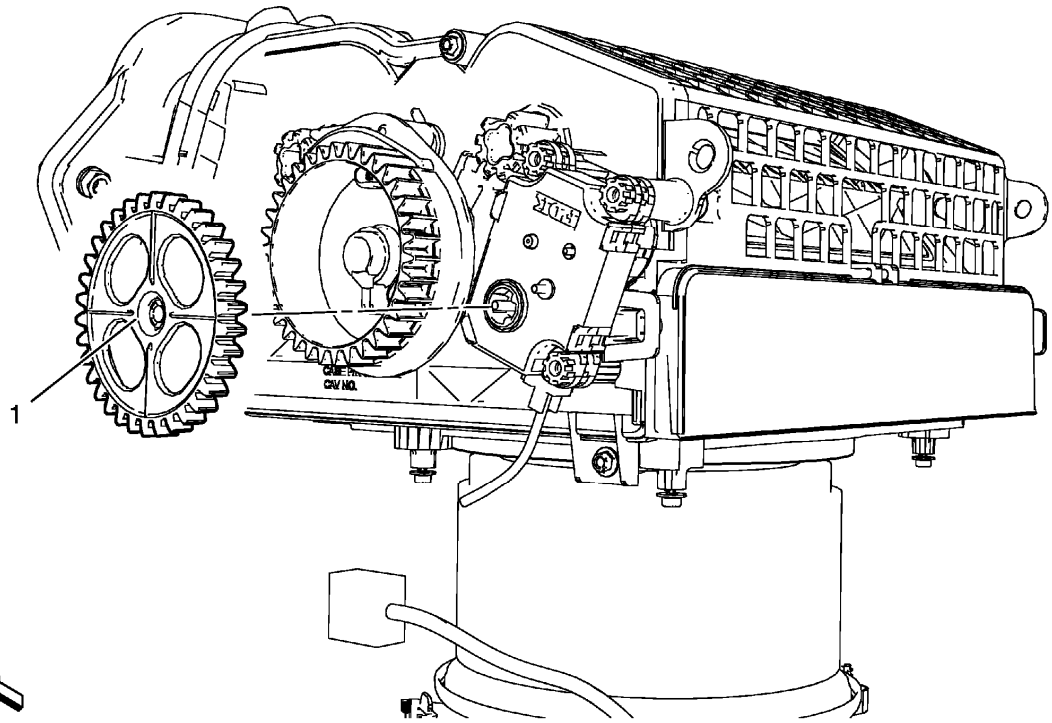

Fig. 34: Air Inlet Valve Actuator Gear (Left Hand Drive)
Courtesy of GENERAL MOTORS COMPANY

Air Inlet Valve Actuator Gear Replacement

Callout	Component Name
Preliminary Procedure Remove instrument panel compartment. Refer to **Instrument Panel Compartment Replacement** .	
1	Air Inlet Valve Actuator Gear **Procedure** Pull air inlet valve actuator gear from air inlet valve actuator.

AIR INLET VALVE ACTUATOR REPLACEMENT

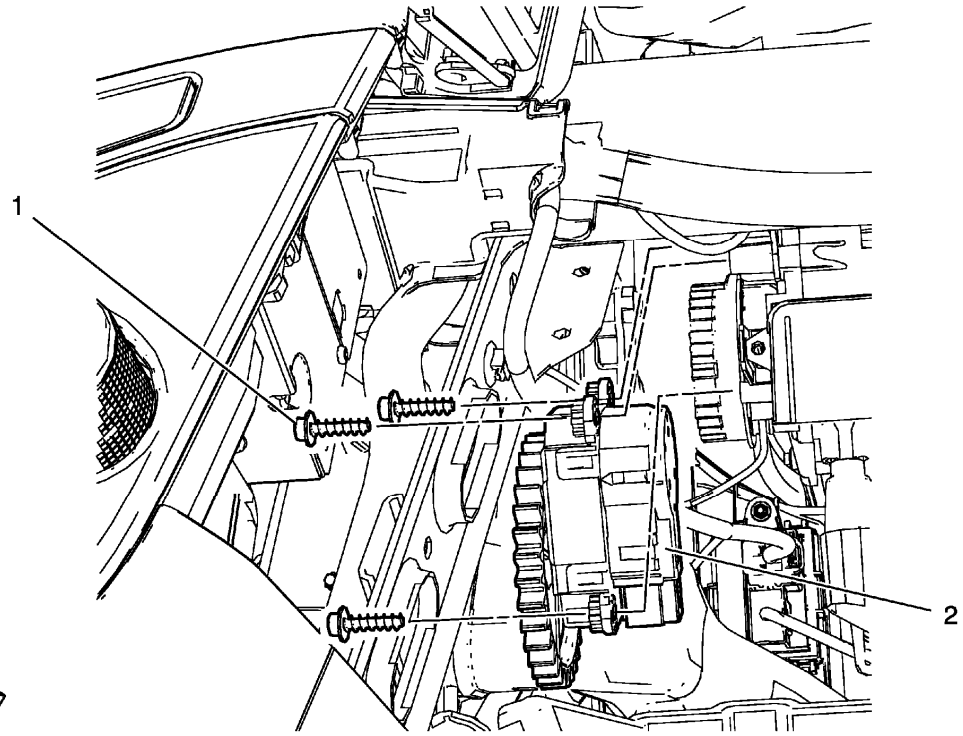

Fig. 35: Air Inlet Valve Actuator And Bolts
Courtesy of GENERAL MOTORS COMPANY

Air Inlet Valve Actuator Replacement

Callout	Component Name
Preliminary Procedures Remove the instrument panel compartment. Refer to **Instrument Panel Compartment Replacement** .	
1	Air Inlet Valve Actuator Bolt (Qty: 3) **CAUTION:** **Refer to Fastener Caution .**
2	Air Inlet Valve Actuator **Procedure** 1. Disconnect the electrical connector. 2. Recalibrate the air inlet valve actuator, Refer to **Actuator Recalibration**.

AIR INLET VALVE AND INSIDE AIR VALVE CONTROL CAM REPLACEMENT

Removal Procedure

1. Remove instrument panel compartment assembly. Refer to **Instrument Panel Compartment Replacement** .

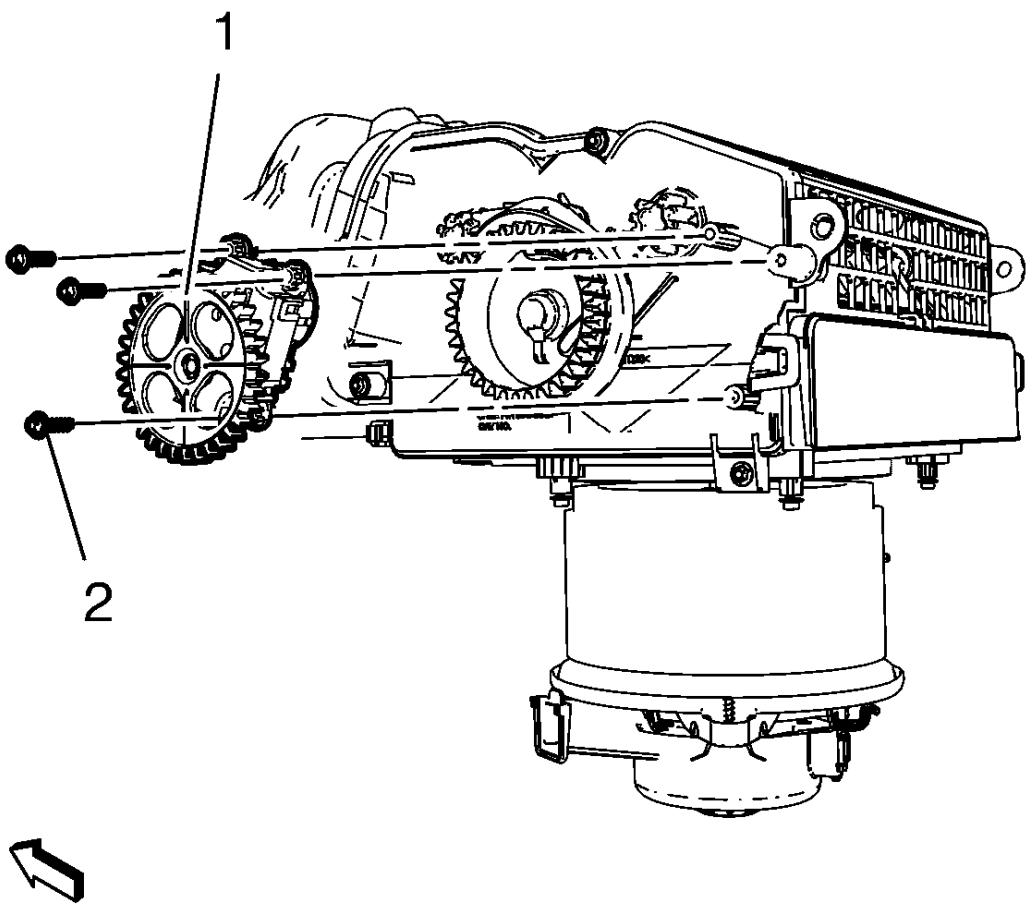

Fig. 36: Mode Control Cam Actuator
Courtesy of GENERAL MOTORS COMPANY

NOTE: The graphic shows Air Inlet Housing without attaching parts for better clarity.

2. Disconnect electrical connector and remove mode control cam actuator screws (2) and remove mode control cam actuator (1).

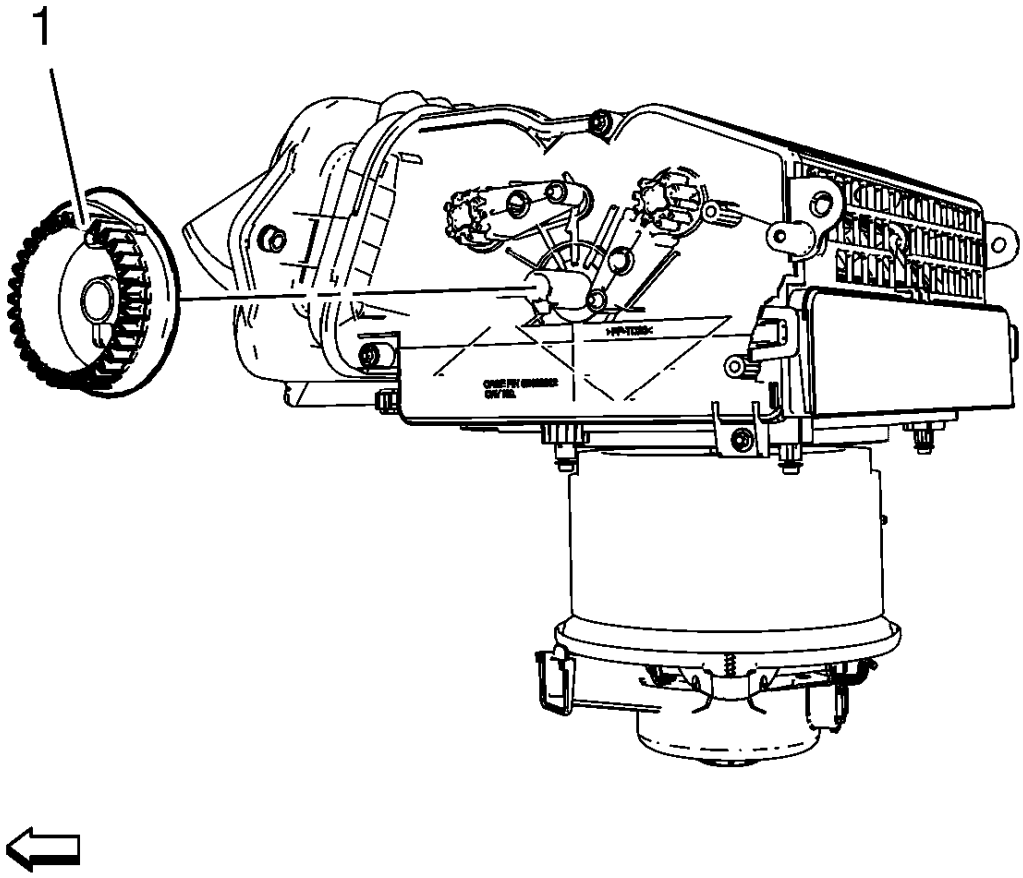

Fig. 37: Inside Air Valve Control Cam
Courtesy of GENERAL MOTORS COMPANY

3. Remove air inlet valve and inside air valve control cam (1).

Installation Procedure

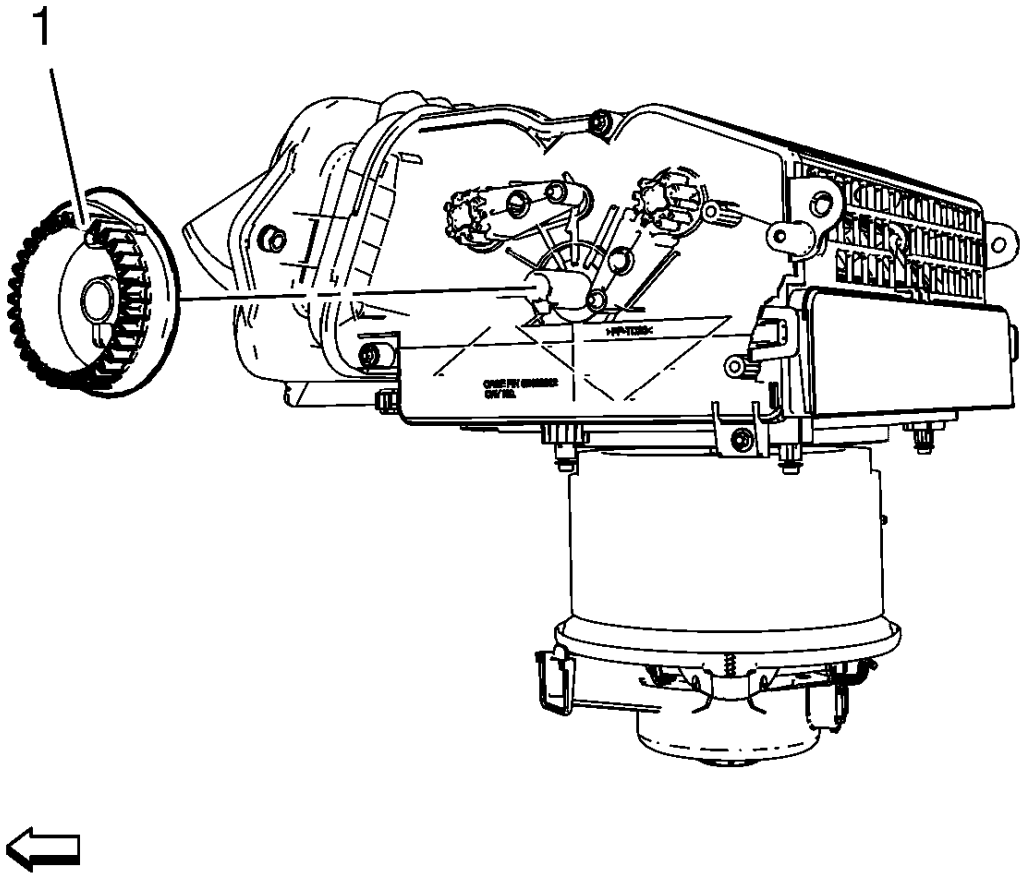

Fig. 38: Inside Air Valve Control Cam
Courtesy of GENERAL MOTORS COMPANY

NOTE: The air inlet valve and inside air valve control cam can only be fitted in one position.

1. Install air inlet valve and inside air valve control cam (1).

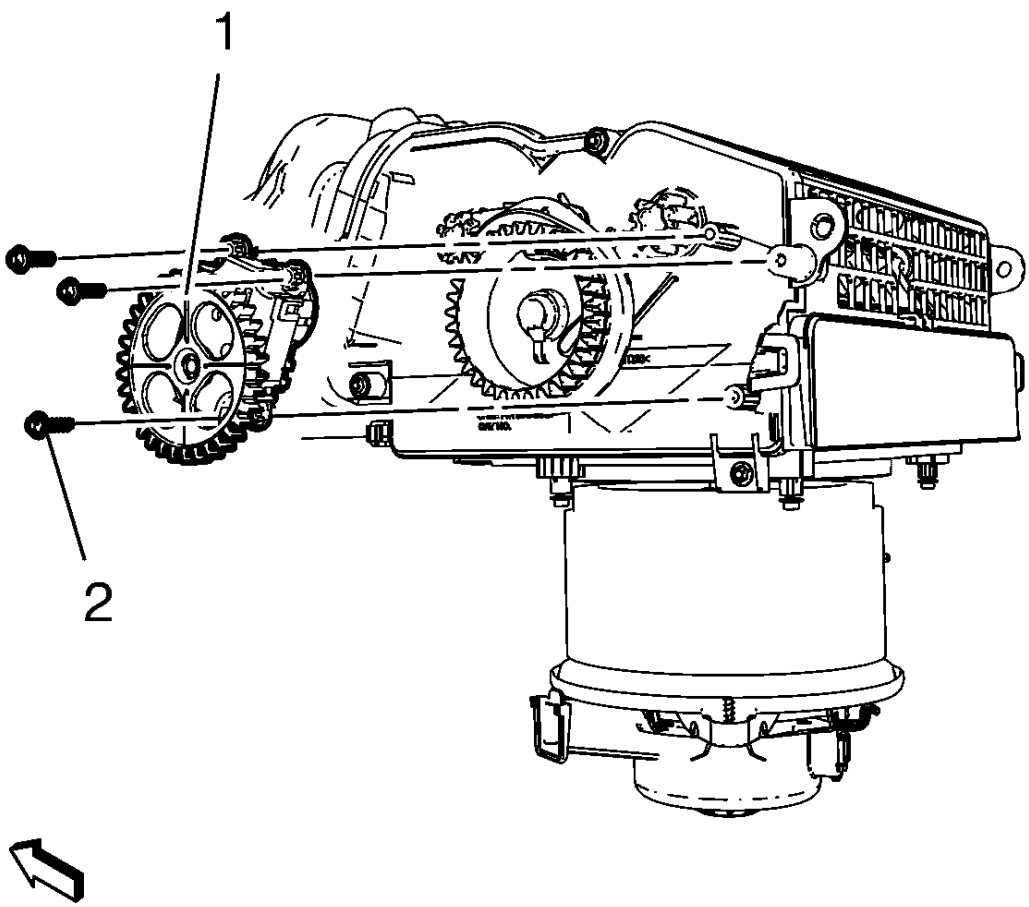

Fig. 39: Mode Control Cam Actuator
Courtesy of GENERAL MOTORS COMPANY

CAUTION: Refer to Fastener Caution .

2. Install mode control cam actuator (1) and Install mode control cam actuator screws (2) and connect electrical connector.

   Tighten

   2.5 N.m (23 lb in)

3. Install instrument panel compartment assembly. Refer to **Instrument Panel Compartment Replacement** .

MODE CONTROL CAM ACTUATOR REPLACEMENT

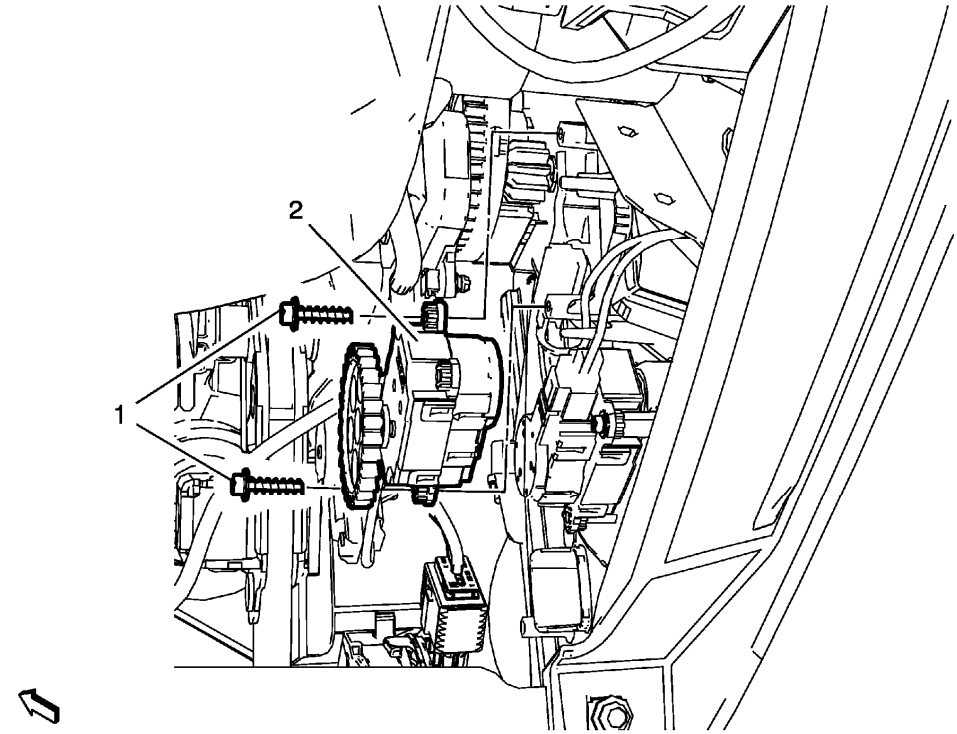

Fig. 40: Mode Control Cam Actuator And Bolts
Courtesy of GENERAL MOTORS COMPANY

Mode Control Cam Actuator Replacement

Callout	Component Name
Preliminary Procedure Remove brake, accelerator, and clutch pedal. Refer to **Brake, Accelerator, and Clutch Pedal Replacement** .	
1	Mode Control Cam Actuator Bolt (Qty: 2) **CAUTION:** **Refer to Fastener Caution .**
2	Mode Control Cam Actuator **Procedure** 1. Disconnect electrical connector. 2. Recalibrate the mode control cam actuator. Refer to **Actuator Recalibration**.

MODE CONTROL CAM REPLACEMENT

Removal Procedure

1. Remove the brake, accelerator, and clutch pedal. Refer to **Brake, Accelerator, and Clutch Pedal**

Replacement .

2. Remove the mode control cam actuator. Refer to **Mode Control Cam Actuator Replacement**

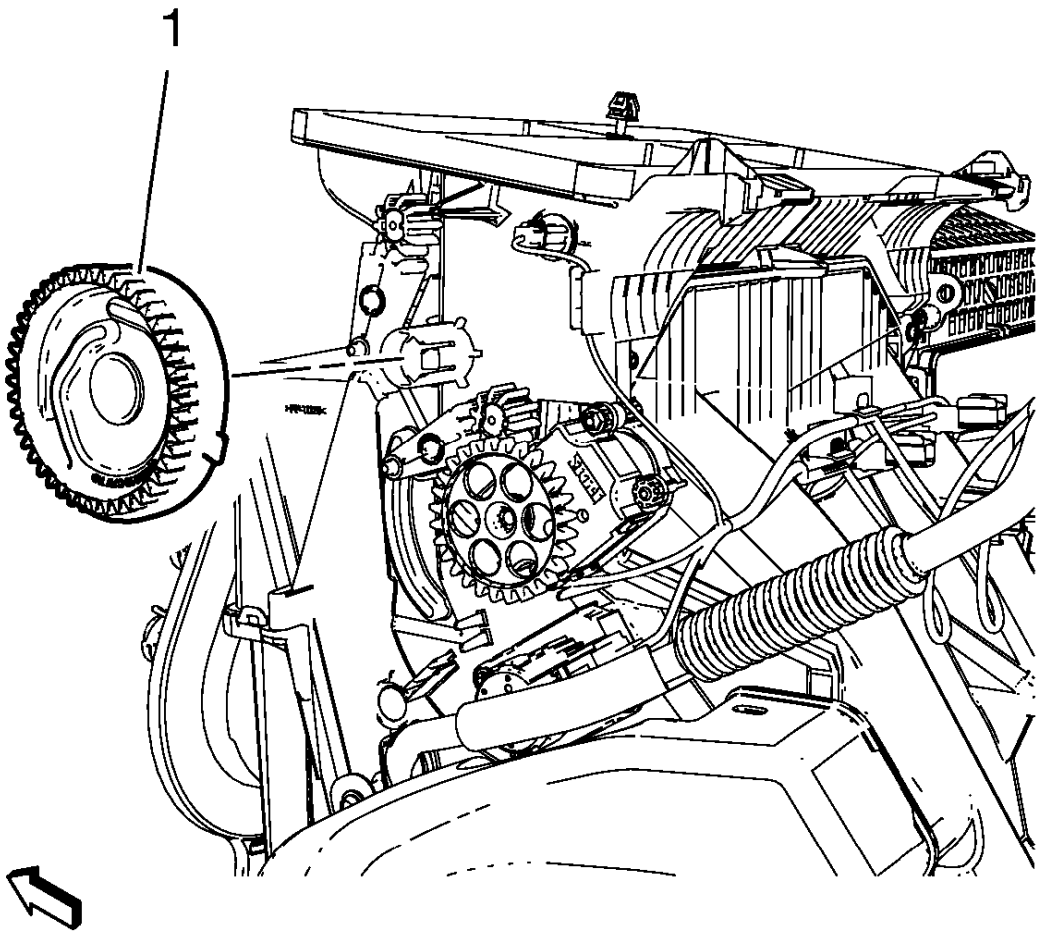

Fig. 41: Mode Control Cam
Courtesy of GENERAL MOTORS COMPANY

3. Remove mode control cam (1).

Installation Procedure

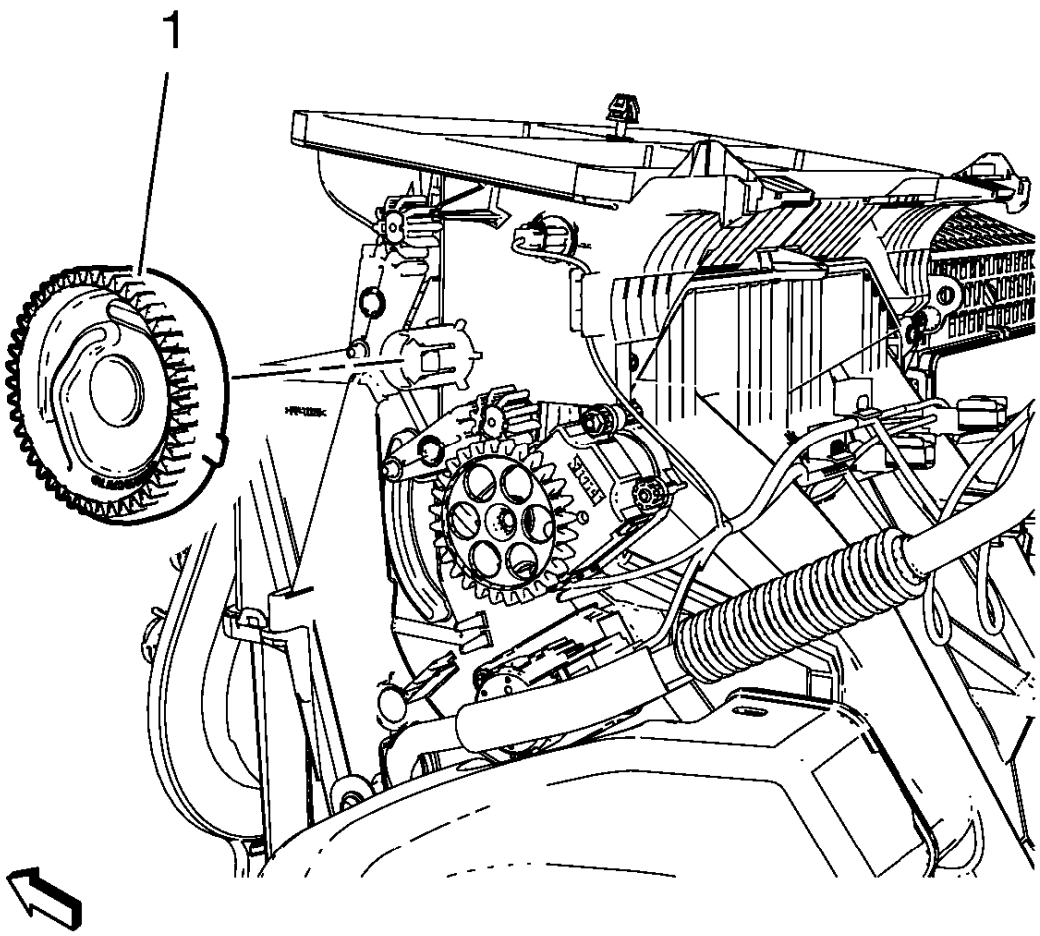

Fig. 42: Mode Control Cam
Courtesy of GENERAL MOTORS COMPANY

NOTE: The mode control cam can only be fitted in one position.

1. Install mode control cam (1).
2. Install the mode control cam actuator. Refer to **Mode Control Cam Actuator Replacement**
3. Install the brake, accelerator, and clutch pedal. Refer to **Brake, Accelerator, and Clutch Pedal Replacement** .

TEMPERATURE VALVE ACTUATOR REPLACEMENT

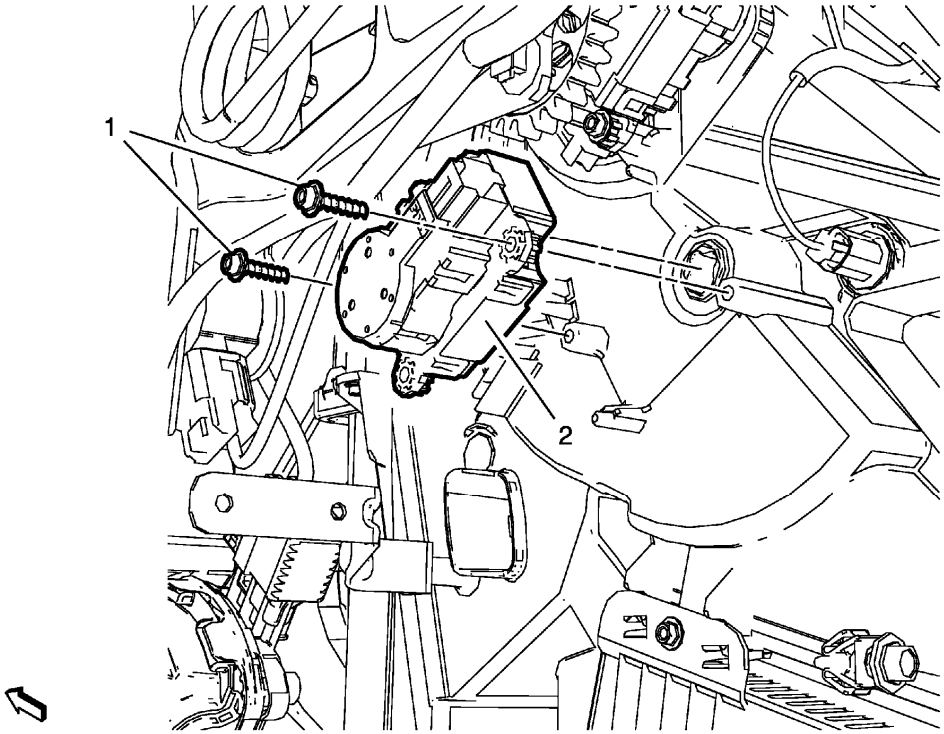

Fig. 43: Temperature Valve Actuator And Bolts
Courtesy of GENERAL MOTORS COMPANY

Temperature Valve Actuator Replacement

Callout	Component Name
Preliminary Procedures 1. Remove instrument outer trim cover - left side. Refer to **Instrument Panel Outer Trim Cover Replacement - Left Side** . 2. Remove instrument panel lower trim pad cover - left side. Refer to **Instrument Panel Lower Trim Panel Replacement - Left Side** . 3. Remove floor air outlet duct - left side. Refer to **Floor Air Outlet Duct Replacement - Left Side** .	
1	Temperature Valve Actuator Bolt (Qty: 2) **CAUTION:** **Refer to Fastener Caution .**
2	Temperature Valve Actuator **Procedure** 1. Disconnect electrical connector. 2. Recalibrate the temperature valve actuator. Refer to **Actuator Recalibration**.

AIR CONDITIONING REFRIGERANT TEMPERATURE SENSOR REPLACEMENT - RIGHT SIDE

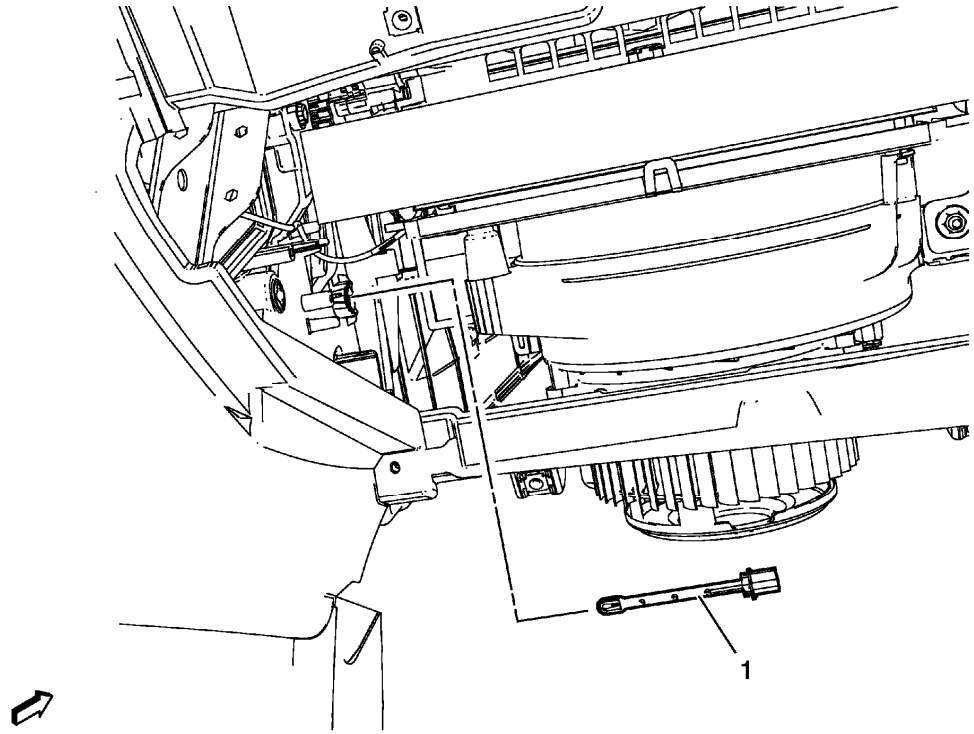

Fig. 44: Air Conditioning Refrigerant Temperature Sensor - Right Side (Left Hand Drive)
Courtesy of GENERAL MOTORS COMPANY

Air Conditioning Refrigerant Temperature Sensor Replacement - Right Side

Callout	Component Name
Preliminary Procedures Remove the heater and blower and air conditioning control module. Refer to **Heater and Blower and Air Conditioning Control Module Replacement**.	
1	Air Conditioning Refrigerant Temperature Sensor - Right Side. **Procedure** Disconnect the electrical connector.

AIR CONDITIONING REFRIGERANT TEMPERATURE SENSOR REPLACEMENT - LEFT SIDE

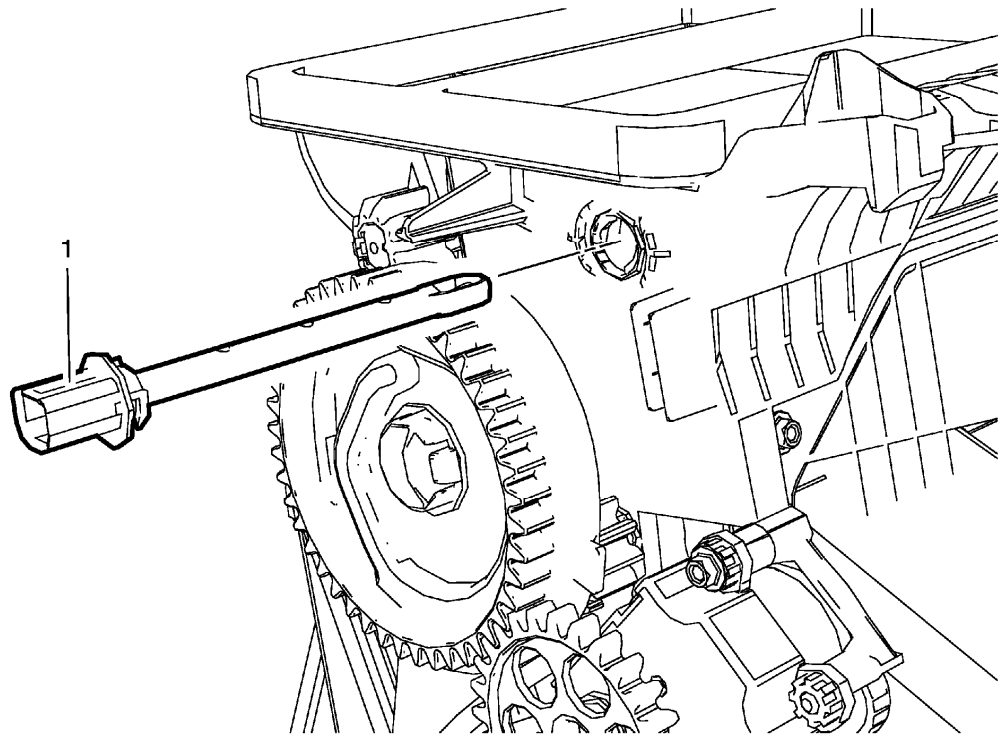

Fig. 45: Air Conditioning Refrigerant Temperature Sensor (Left Side)
Courtesy of GENERAL MOTORS COMPANY

Air Conditioning Refrigerant Temperature Sensor Replacement - Left Side

Callout	Component Name
Preliminary Procedures Remove the instrument panel compartment assembly. Refer to **Instrument Panel Compartment Replacement** .	
1	Air Conditioning Refrigerant Temperature Sensor - Left Side **Procedure** Disconnect the electrical connector.

AMBIENT AIR QUALITY SENSOR REPLACEMENT

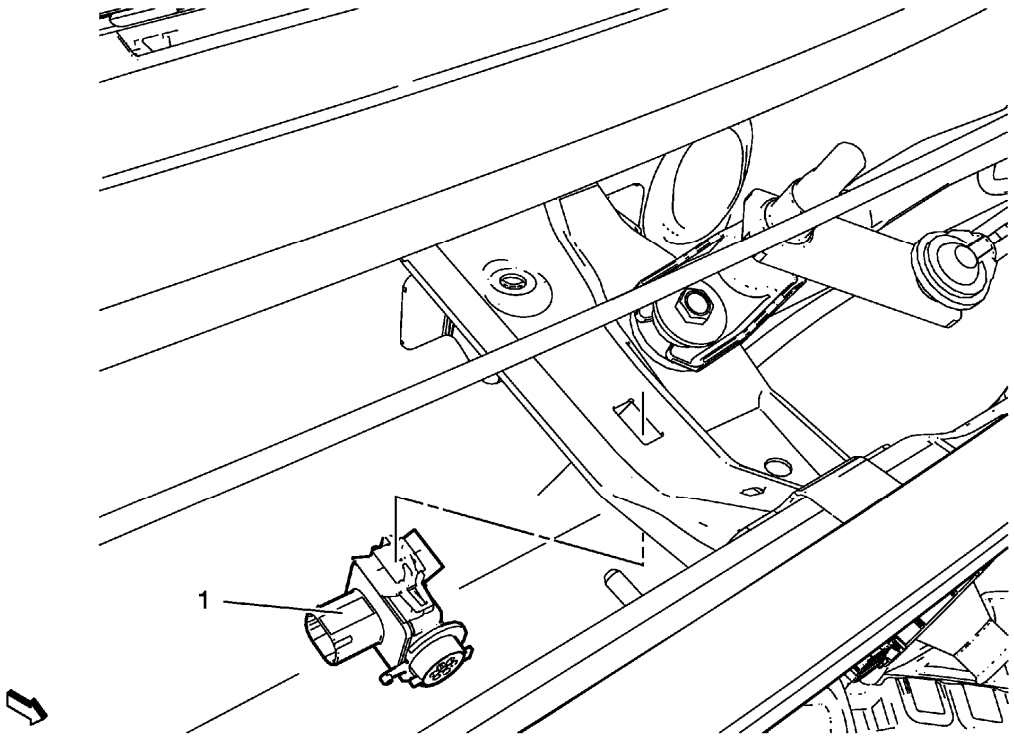

Fig. 46: Ambient Air Quality Sensor
Courtesy of GENERAL MOTORS COMPANY

Ambient Air Quality Sensor Replacement

Callout	Component Name
Preliminary Procedure Remove air inlet grille panel. Refer to **Air Inlet Grille Panel Replacement** .	
1	Ambient Air Quality Sensor **Procedure** Disconnect wiring connector

INSIDE AIR TEMPERATURE SENSOR REPLACEMENT

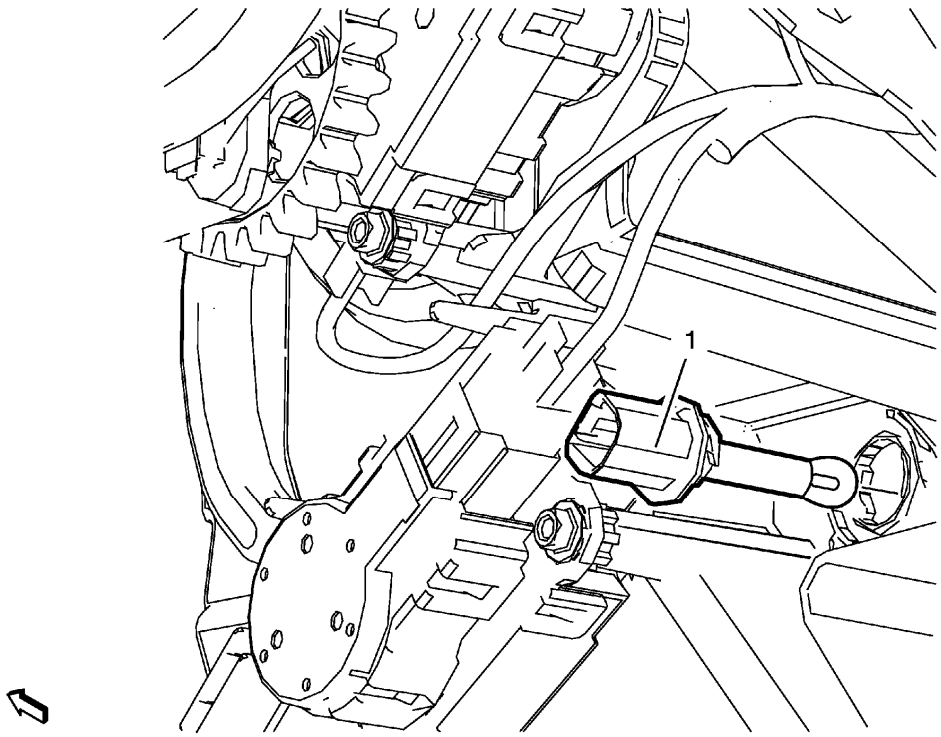

Fig. 47: Inside Air Temperature Sensor And Wiring Harness Connector
Courtesy of GENERAL MOTORS COMPANY

Inside Air Temperature Sensor Replacement

Callout	Component Name
Preliminary Procedures Remove the floor air outlet duct - left side. Refer to **Floor Air Outlet Duct Replacement - Left Side** .	
1	Inside Air Temperature Sensor **Procedure** 1. Disconnect the electrical connector. 2. Rotate the inside air temperature sensor to remove.

INSIDE AIR MOISTURE AND WINDSHIELD TEMPERATURE SENSOR REPLACEMENT

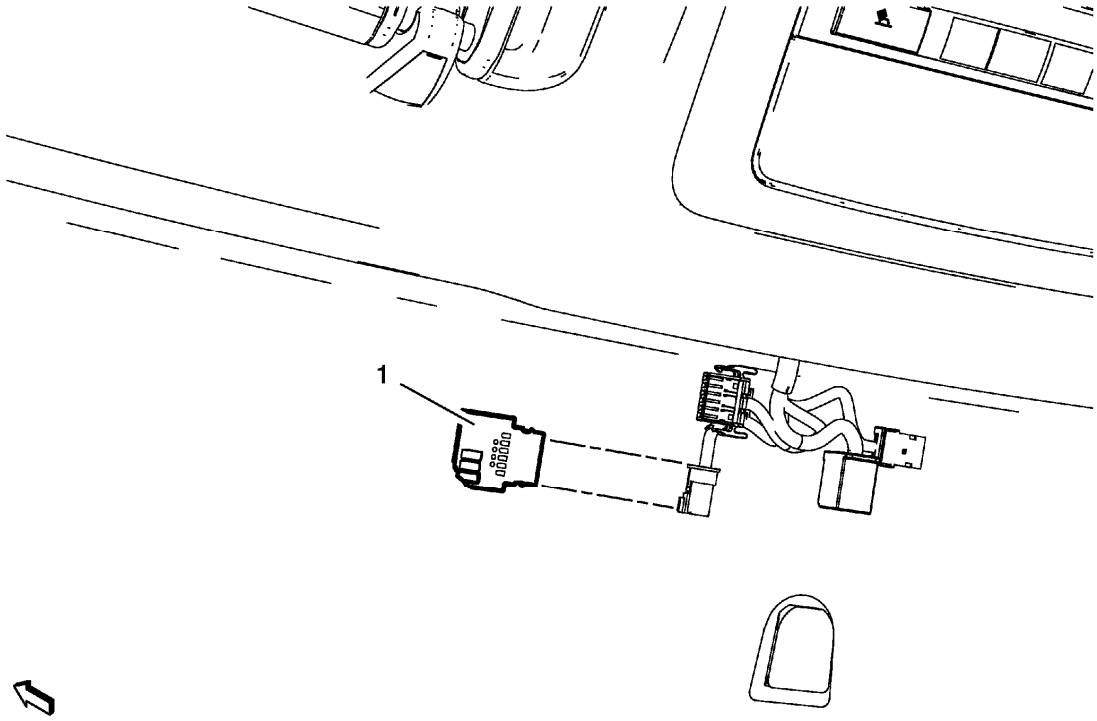

Fig. 48: Inside Air Moisture and Windshield Temperature Sensor With Wiring Harness Connector
Courtesy of GENERAL MOTORS COMPANY

Inside Air Moisture and Windshield Temperature Sensor Replacement

Callout	Component Name
Preliminary Procedures Remove the inside rearview mirror mount plate cover. Refer to **Inside Rearview Mirror Mount Plate Cover Replacement** .	
1	Inside Air Moisture and Windshield Temperature Sensor

SUN LOAD TEMPERATURE AND HEADLAMP AUTOMATIC CONTROL AMBIENT LIGHT SENSOR REPLACEMENT

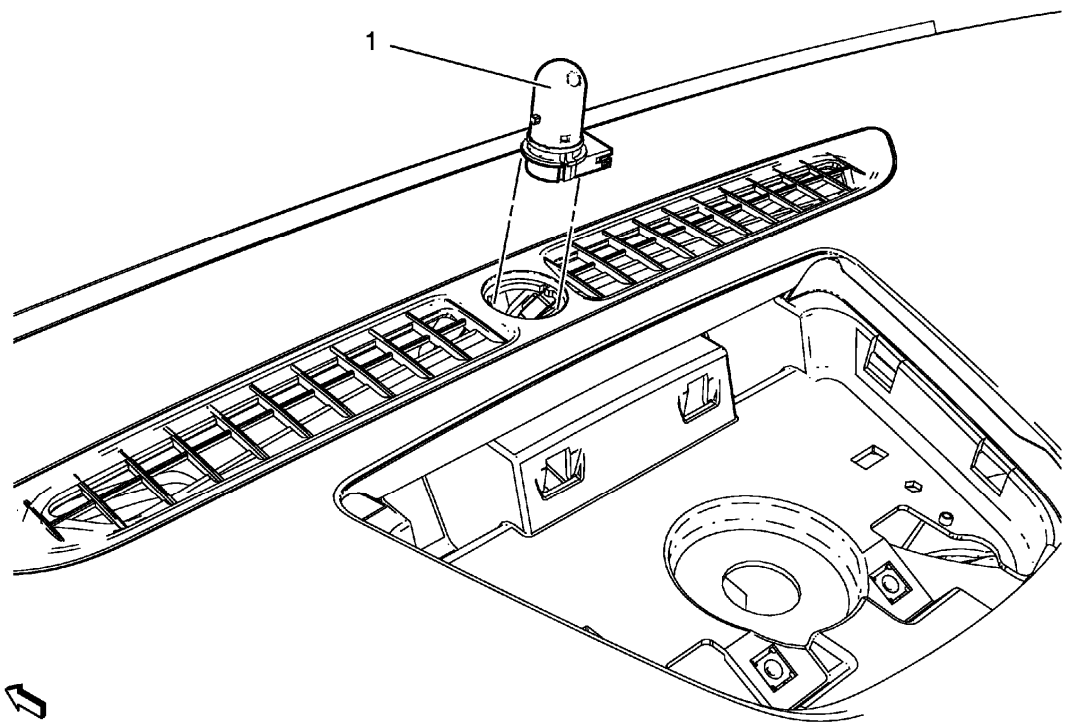

Fig. 49: Sun Load Temperature and Headlamp Automatic Control Ambient Light Sensor
Courtesy of GENERAL MOTORS COMPANY

Sun Load Temperature and Headlamp Automatic Control Ambient Light Sensor Replacement

Callout	Component Name
1	Sun Load Temperature and Headlamp Automatic Control Ambient Light Sensor **Procedure** 1. Unclip from instrument panel assembly. 2. Disconnect the electrical connection.

DESCRIPTION AND OPERATION

AUTOMATIC HVAC DESCRIPTION AND OPERATION

The air temperature and the air delivery description and operation are divided into eight areas:

- HVAC Control Components
- Air Speed
- Air Delivery
- Heating and A/C Operation
- Recirculation Operation

- Automatic Operation
- Engine Coolant
- A/C Cycle

HVAC Control Components

HVAC Control

The HVAC control contains all switches, which are required to control the functions of HVAC and serve as interface between the operator and the HVAC control module. The selected values are passed to the HVAC control module via LIN-Bus.

HVAC Control Module

The HVAC control module is a GMLAN device that interfaces between the operator and the HVAC system to maintain and control desired air temperature and air distribution settings. The battery positive voltage circuit provides power that the HVAC control module uses for keep alive memory. If the battery positive voltage circuit loses power, all HVAC DTCs and settings will be erased from keep alive memory. The body control module (BCM), which is the vehicle mode master, provides a device ON-Signal. The HVAC control module provides blower, air delivery mode and air temperature settings.

The HVAC control module supports the following features:

Feature	Availability
Purge	Yes
Personalization	Yes
Actuator Calibration	Yes

Mode Actuator

The mode actuator is a 5-wire stepper motor. The HVAC control module supplies a 12 V reference voltage to the stepper motor and energizes the 4 stepper motor coils with a pulsed ground signal. The stepper motor puts the mode flap into the calculated position in order to reach the selected position. The null point of the stepper motor will be calibrated, if the stepper motor is new. When the stepper motor is calibrated, the HVAC control module can drive the applicable coil to reach exactly the desired position of the flap.

Air Temperature Actuator

The air temperature actuator is a 5-wire stepper motor. The HVAC control module supplies a 12 V reference voltage to the stepper motor and energizes the 4 stepper motor coils with a pulsed ground signal. The stepper motor puts the mixed air flap into the calculated position, in order to reach the selected temperature. The null point of the stepper motor will be calibrated, if the stepper motor is new. When the stepper motor is calibrated, the HVAC control module can drive the applicable coil to reach exactly the desired position of the flap.

Recirculation Actuator

The recirculation actuator is a 5-wire stepper motor. The HVAC control module supplies a 12 V reference voltage to the stepper motor and energizes the 4 stepper motor coils with a pulsed ground signal. The stepper motor puts the recirculation flap into the calculated position in order to reach the desired position. The null point of the stepper motor will be calibrated, if the stepper motor is new. When the stepper motor is calibrated, the HVAC control module can drive the applicable coil to reach exactly the desired position of the flap.

Blower Motor Control Processor

The blower motor control processor controls the speed of the blower motor by increasing or decreasing the voltage drop on the ground side of the blower motor. The HVAC control module provides a low side pulse width modulation (PWM) signal to the blower motor control processor via the blower motor speed control circuit. As the requested blower speed increases, the HVAC control module increases the amount of time that the speed signal is modulated to ground. As the requested blower speed decreases, the HVAC control module decreases the amount of time that the signal is modulated to ground.

Air Quality Sensor

The HVAC control module detects exhaust gas by an air quality sensor. The air quality sensor is a 3-wire sensor with an ignition voltage circuit, a ground circuit and a signal circuit. The HVAC control module evaluates the information of the air quality sensor and closes the recirculation flap, while the air quality sensor switch is pressed, as soon as the concentration of pollutants exceeds a predefined value.

Duct Temperature Sensors

The air temperature sensors are 2-wire negative temperature co-efficient thermistors. The sensors operate within a temperature range of -40 to +85°C (-40 to +185°F). The sensors are installed in the air distribution ducts and measure the temperature of the air that streams from the ducts. The HVAC control module uses these values to calculate the mixed air flap position.

Evaporator Temperature Sensor

The evaporator temperature sensor is a 2-wire negative temperature co-efficient thermistor. The sensor operates within a temperature range of -40 to +85°C (-40 to +185°F). The sensor is installed at the evaporator and measures its temperature. If the temperature drops under 3°C (38°F), the compressor will be switched off in order to prevent a frozen evaporator.

A/C Refrigerant Pressure Sensor

The A/C refrigerant pressure sensor is a 3-wire piezoelectric pressure transducer. A 5 V reference voltage, low reference, and signal circuits enable the sensor to operate. The A/C pressure signal can be between 0.2-4.8 V. When the A/C refrigerant pressure is low, the signal value is near 0 V. When the A/C refrigerant pressure is high, the signal value is near 5 V. The engine control module (ECM) converts the voltage signal to a pressure value. When pressure is too high or too low, the ECM will not allow the A/C compressor clutch to engage.

A/C Compressor

This A/C system does not use a conventional clutch to engage the compressor. It uses only a variable displacement solenoid valve to alter the amount of displacement created by the turning of the compressor. The

HVAC control module provides both battery voltage and a pulse width modulated ground to the variable displacement solenoid valve. When the A/C switch is pressed, the HVAC control module grounds the variable displacement solenoid using a (PWM) signal in order to determine the amount of compressor displacement. The performance of the A/C compressor is based on adjusted interior temperature and engine load.

Windshield Temperature and Inside Moisture Sensor

The windshield temperature and inside moisture sensor includes the relative humidity sensor, windshield temperature sensor and humidity sensing element temperature sensor.

This sensor assembly provides information about:

- Relative humidity level at windshield (compartment side)
- Temperature of the windshield inside (compartment side)
- Temperature of the humidity sensor element

The relative humidity sensor measures the relative humidity of the compartment side of the windshield. It also detects the temperature of the windshield surface on the passenger compartment side. Both values are used as control inputs for the HVAC control module application to calculate the fog risk on windshield compartment side and ability to reduce fuel consumption by decreasing A/C compressor power to a minimum without causing any fog. The sensor will also enable partial recirculation mode in order to improve heat-up performance of the passenger compartment under cold ambient temperature conditions without the risk of mist build-up on the windshield. The humidity sensor element temperature sensor supplies the temperature of the humidity sensor element. It is only needed if the thermal contact between the humidity sensing element and the inside windshield surface is not sufficient.

Ambient Light/Sunload Sensor

The ambient light/sunload sensor includes the sunload sensor and passenger compartment temperature sensor.

This sensor assembly provides information about:

- Sun heat intensity
- Passenger compartment temperature

The solar sensor is connected to ground and to a 5 V stabilized voltage supply through the HVAC control module. As the sunload increases, the sensor signal voltage also increases and vice versa. The signal varies between 1.4-4.5 V and is provided to the HVAC control module.

The passenger compartment temperature sensor is a negative temperature co-efficient thermistor. A signal and low reference circuit enables the sensor to operate. As the air temperature increases, the sensor resistance decreases. The sensor signal varies between 0-5 V.

Bright or high intensity light causes the vehicles interior temperature to increase. The HVAC system compensates for the increased temperature by diverting additional cool air into the vehicle.

Air Speed

The blower control switch is part of the HVAC control. The selected value of the blower switch position is sent to the HVAC control module via LIN-Bus.

The blower motor control module is an interface between HVAC control module and blower motor. The blower motor control module regulates supply voltage and ground circuits to blower motor. The HVAC control module provides a PWM signal to the blower motor control module in order to command the desired blower motor speed. The blower motor control module supplies battery voltage to the blower motor and uses the blower motor ground as a low side control to adjust the blower motor speed. The voltage amounts between 2-13 V and changes linear to the height of the PWM signal.

Air Delivery

The HVAC control module controls the distribution of air by the use of recirculation and mode actuator. The modes that may be selected are:

- Defrost
- Defog
- Panel
- Floor

The desired air distribution mode can be selected with the air distribution switches at the HVAC control. The HVAC control delivers the values to the HVAC control module via LIN-Bus. The HVAC control module controls the air distribution actuator so that it drives the flap to the calculated position. Depending on the position of the flap, air is distributed through various ducts leading to the outlets in the dash. Turning the mode flap to the defrost position, the HVAC control module will move the recirculation actuator to outside air, reducing window fogging. When defrost is selected, the blower motor will be activated, regardless of the coolant temperature. The HVAC control module enables a high volume of air delivered to the front defrost vents. A/C is available in all modes.

The rear window defogger does not affect the HVAC system.

Heating and A/C Operation

The purpose of the heating and A/C system is to provide heated and cooled air to the interior of the vehicle. The A/C system will also remove humidity from the interior and reduce windshield fogging. Regardless of the temperature setting, the following can affect the rate that the HVAC system can achieve the desired temperature:

- Recirculation actuator setting
- Difference between inside and desired temperature
- Blower motor speed setting
- Mode setting

Pressing the A/C switch or AUTO switch enables the HVAC control module to request A/C compressor engagement and turn ON the A/C switch LED respectively the AUTO switch LED if the AUTO switch is pressed. The HVAC control module sends a message to the engine control module (ECM) for A/C compressor

engagement. The ECM will provide a ground for the A/C compressor relay enabling it to close its internal contacts to send battery voltage to the A/C compressor clutch coil. The A/C compressor diode will prevent a voltage peak, resulting from the collapse of the magnetic field of the coil, from entering the vehicle electrical system when the compressor is disengaged.

The following conditions must be met in order to activate the A/C compressor:

- Battery voltage is between 9-18 V.
- Engine coolant temperature is less than 124°C (255°F).
- Engine speed is greater than 600 RPM.
- Engine speed is less than 5 500 RPM.
- A/C high side pressure is between 269-2 929 kPa (39-425 PSI).
- Throttle position is less than 100%.
- Evaporator temperature is greater than 3°C (38°F).
- ECM does not detect immoderate torque load.
- ECM does not detect insufficient idle quality.
- The ambient temperature is above 1°C (34°F).

The sensor information is used by the ECM to determine the following:

- The A/C high side pressure
- An A/C system load on the engine
- The heat load at the A/C condenser

The air streams into the passenger compartment through the heater core and the evaporator core. The air temperature actuator drives the mixed air flap to induce the airflow. If the interior temperature should be increased, the mixed air flap is put into the position in which more air streams through the heater core. If the interior temperature should be decreased, the mixed air flap is put into the position in which more air streams through the evaporator core.

Recirculation Operation

The recirculation switch is part of the HVAC control. The selected recirculation switch position is sent to the HVAC control module via LIN-Bus. The HVAC control module controls the air intake through the recirculation actuator. The recirculation switch closes the recirculation flap in order to circulate the air within the vehicle. Through renewed selection of the recirculation switch, the recirculation flap is opened again in order to route outside air into the vehicle.

Recirculation is only available if the defrost mode is not active. When the defrost mode is active, the recirculation actuator opens the recirculation flap and outside air is circulated to the windshield to reduce fogging.

The HVAC control module evaluates the information of the air quality sensor and closes the recirculation flap while the air quality sensor switch is pressed, as soon as the concentration of pollutants exceeds a predefined value.

In automatic mode the values of the windshield temperature and inside moisture sensor are used as control inputs for the HVAC control module application to calculate the fog risk on the passenger compartment side of the windshield. The A/C compressor and the defrost mode are activated to prevent or remove fog on the passenger compartment side of the windshield.

Automatic Operation

In automatic operation, the HVAC control module maintains the comfort level inside of the vehicle by controlling the A/C compressor clutch, the blower motor, the air temperature actuators, mode actuator and recirculation actuator.

To put the HVAC system in automatic mode, the following is required:

1. The auto switch must be activated.
2. The air temperature switch must be in any other position than full hot or full cold position.

Once the desired temperature is reached, the blower motor, mode, recirculation and temperature actuators automatically adjust to maintain the temperature selected. The HVAC control module performs the following functions to maintain the desired air temperature:

- Monitors the following sensors:
  - Ambient air temperature sensor
  - Lower left air temperature sensor
  - Upper left air temperature sensor
  - Windshield temperature and inside moisture sensor
  - Ambient light/sunload sensor
  - Air quality sensor
- Regulate blower motor speed
- Position the air temperature actuator
- Position the mode actuator
- Position the recirculation actuator
- Request A/C operation

When the warmest position is selected in automatic operation the blower speed will increase gradually until the vehicle reaches normal operating temperature. When normal operating temperature is reached the blower stays on high speed and the air temperature actuators stays in the full heat position.

When the coldest position is selected in automatic operation the blower stays on high and the air temperature actuators stay in full cold position. The mode actuator remains in the panel position and the recirculation actuator will remain in the recirculation position.

Under cold ambient temperatures, the automatic HVAC system provides heat in the most efficient manner. The operator can select an extreme temperature setting but the system will not warm the vehicle any faster. Under warm ambient temperatures, the automatic HVAC system also provides air conditioning in the most efficient manner. Selecting an extreme cool temperature will not cool the vehicle any faster.

The HVAC control module evaluates the information of the air quality sensor and closes the recirculation flap while the air quality sensor switch is pressed, as soon as the concentration of pollutants exceeds a predefined value.

In automatic mode the values of the windshield temperature and inside moisture sensor are used as control inputs for the HVAC control module application to calculate the fog risk on the passenger compartment side of the windshield and ability to reduce fuel consumption by decreasing A/C compressor power to a minimum without causing any fog. The A/C compressor and the defrost mode are activated to prevent or remove fog on the passenger compartment side of the windshield. The sensor will also enable partial recirculation mode in order to improve heat-up performance of the passenger compartment under cold ambient temperature conditions without the risk of mist build-up on the windshield.

Engine Coolant

Engine coolant is the essential element of the heating system. The thermostat controls the normal engine operating coolant temperature. The thermostat also creates a restriction for the cooling system that promotes a positive coolant flow and helps prevent cavitation.

Coolant enters the heater core through the inlet heater hose, in a pressurized state. The heater core is located inside the HVAC control module. The ambient air drawn through the HVAC control module absorbs the heat of the coolant flowing through the heater core. Heated air is distributed to the passenger compartment, through the HVAC control module, for passenger comfort. Opening or closing the air temperature flap controls the amount of heat delivered to the passenger compartment. The coolant exits the heater core through the return heater hose and recirculates back to the engine cooling system.

A/C Cycle

Refrigerant is the key element in an air conditioning system. R-134a is presently the only Environmental Protection Agency approved refrigerant for automotive use. R-134a is a very low temperature gas that can transfer the undesirable heat and moisture from the passenger compartment to the outside air.

The compressor builds pressure on the vapor refrigerant. Compressing the refrigerant also adds heat to the refrigerant. The refrigerant is discharged from the compressor, through the discharge hose, and forced to flow to the condenser and then through the balance of the A/C system. The A/C system is mechanically protected with the use of a high pressure relief valve. If the A/C refrigerant pressure sensor fails or if the refrigerant system becomes restricted and refrigerant pressure continued to rise, the high pressure relief will pop open and release refrigerant from the system.

Compressed refrigerant enters the condenser in a high temperature, high pressure vapor state. As the refrigerant flows through the condenser, the heat of the refrigerant is transferred to the ambient air passing through the condenser. Cooling the refrigerant causes the refrigerant to condense and change from a vapor to a liquid state.

The condenser is located in front of the radiator for maximum heat transfer. The condenser is made of aluminum tubing and aluminum cooling fins, which allows rapid heat transfer for the refrigerant. The semi-cooled liquid refrigerant exits the condenser and flows to the Receiver/Dehydrator(R/D).

The R/D contains desiccant that absorbs moisture that may be in the refrigerant system. The R/D also acts as a storage vessel to ensure that a steady flow of liquid reaches the Thermal Expansion Valve (TXV). The

refrigerant exits the R/D and flows through the liquid line to the TXV.

The TXV is located at the front of dash and attaches to the evaporator inlet and outlet pipes. The TXV is the dividing point for the high and the low pressure sides of the A/C system. As the refrigerant passes through the TXV, the pressure on the refrigerant is lowered. The TXV also meters the amount of liquid refrigerant that can flow into the evaporator.

Refrigerant exiting the TXV flows into the evaporator core in a low pressure, liquid state. Ambient air is drawn through the HVAC control module and passes through the evaporator core. Warm and moist air will cause the liquid refrigerant boil inside of the evaporator core. The boiling refrigerant absorbs heat from the ambient air and draws moisture onto the evaporator. The refrigerant exits the evaporator through the suction line and back to the A/C compressor, in a vapor state, and completing the A/C cycle of heat removal. At the A/C compressor, the refrigerant is compressed again and the cycle of heat removal is repeated.

The conditioned air is distributed through the HVAC control module for passenger comfort. The heat and moisture removed from the passenger compartment will also change form, or condense, and is discharged from the HVAC control module as water.

2013 HVAC

HVAC - Manual - Cruze

SPECIFICATIONS

FASTENER TIGHTENING SPECIFICATIONS

Fastener Tightening Specifications

Application	Specification	
	Metric	English
Air Conditioning Control Module Bolt	2.5 N.m	22 lb in
Air Inlet Housing Bolt	2.5 N.m	22 lb in
Air Inlet Valve Actuator Bolt	2.5 N.m	22 lb in
Heater and Air Conditioning Evaporator Case Bolt	2.5 N.m	22 lb in
Instrument Panel Tie Bar Bolts	22 N.m	16 lb ft
Instrument Panel Tie Bar Nuts	9 N.m	80 lb in
Mode Control Cam Actuator Screw	2.5 N.m	22 lb in
Mode Valve Actuator Bolt	2.5 N.m	22 lb in
Temperature Valve Actuator Bolt	2.5 N.m	22 lb in

WIRING SCHEMATIC DIAGRAMS

HVAC WIRING SCHEMATICS

Module Power and Ground, Blower Control, and Serial Data Wiring Schematics

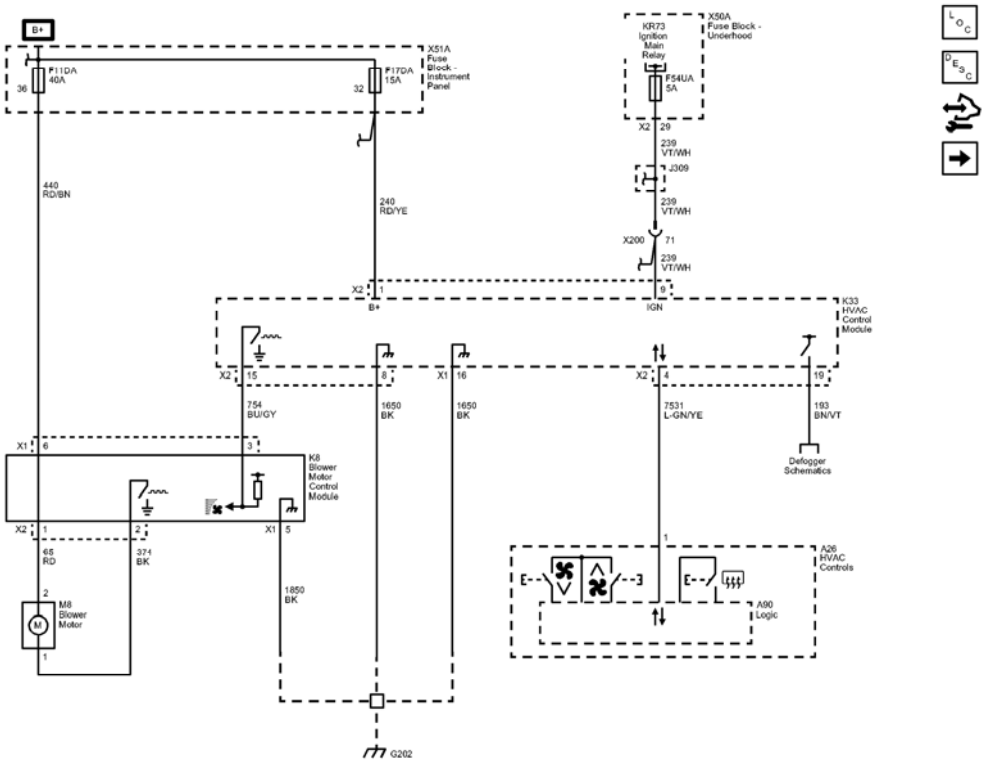

Fig. 1: Module Power and Ground, Blower Control, and Serial Data Wiring Schematics
Courtesy of GENERAL MOTORS COMPANY

Callout	Component Name
440	Battery Positive Voltage
440 RD/BN	440 RD/BN
CAV_6	6
CONN_X1	X1
240	Battery Positive Voltage
240_RD/YE	240 RD/YE
CAV_1	1
CONN_X2	X2
239	Run/Crank Ignition 1 Voltage
239_VT/WH	239 VT/WH
CAV_9	9
CAV_29	29
CONN_X2	X2
193	Rear Defog Relay Control
193_BN/VT	193 BN/VT
CAV_19	19
7531	Linear Interconnect Network Bus 9

7531_L-GN/YE	7531 L-GN/YE
CAV_1	1
CAV_4	4
CONN_X2	X2
1650	Ground
1650_BK	1650 BK
CAV_16	16
CONN_X1	X1
1650_BK	1650 BK
CAV_8	8
754	Blower Motor Speed Control
754_BU/GY	754 BU/GY
CAV 3	3
CAV_15	15
CONN_X2	X2
65	Blower Motor Supply Voltage
65_RD	65 RD
CAV_2	2
CAV_1	1
CONN_X2	X2
374	Blower Motor Fan Control
374_BK	374 BK
CAV_1	1
CAV_2	2
1850	Ground
1850_BK	1850 BK
CAV_5	5
CONN X1	X1
CAV_71	71
239 VT/WH	239 VT/WH
239_VT/WH	239 VT/WH
CAV_36	36
CAV_32	32
G202	G202
F54UA	F54UA 5A
F17DA	F17DA 15A
F11DA	F11DA 40A
X200	X200
M8	
K8	
A90	Logic

X51A	
KR73	
X50A	
Defogger_Schematics_REF	Defogger Schematics
A26	

Air Delivery and Temperature Controls Wiring Schematics

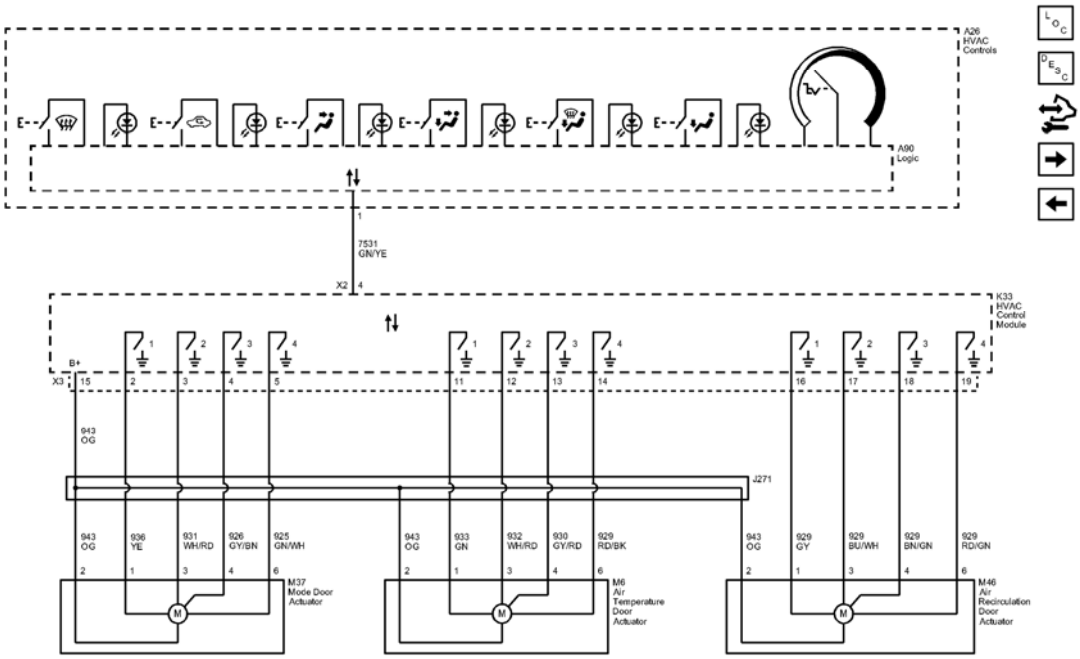

Fig. 2: Air Delivery and Temperature Controls Wiring Schematics
Courtesy of GENERAL MOTORS COMPANY

Callout	Component Name
7531	Linear Interconnect Network Bus 9
7531 GN/YE	7531 GN/YE
CAV_4	4
CONN_X2	X2
CAV_1	1
943_OG	943 OG
CAV_2	2
CAV_15	15

CONN_X3	X3
936_YE	936 YE
CAV_1	1
CAV_2	2
931_WH/RD	931 WH/RD
CAV_3	3
CAV_3	3
926_GY/BN	926 GY/BN
CAV_4	4
CAV_4	4
925_GN/WH	925 GN/WH
CAV_6	6
CAV 5	5
943_OG	943 OG
CAV_2	2
933_GN	933 GN
CAV_1	1
CAV_11	11
932_WH/RD	932 WH/RD
CAV_3	3
CAV_12	12
930_GY/RD	930 GY/RD
CAV_4	4
CAV_13	13
929_RD/BK	929 RD/BK
CAV_6	6
CAV_14	14
943 OG	943 OG
CAV_2	2
929 GY	929 GY
CAV_1	1
CAV_16	16
929_BU/WH	929 BU/WH
CAV_3	3
CAV_17	17
929_BN/GN	929 BN/GN
CAV_4	4
CAV_18	18
929_RD/GN	929 RD/GN
CAV_6	6
CAV_19	19
943_OG	

	943 OG
J271	J271
A90	Logic
K33	
M37	
M6	
M46	
A26	

Evaporator Temperature Sensor and Compressor Controls (C67) Wiring Schematics

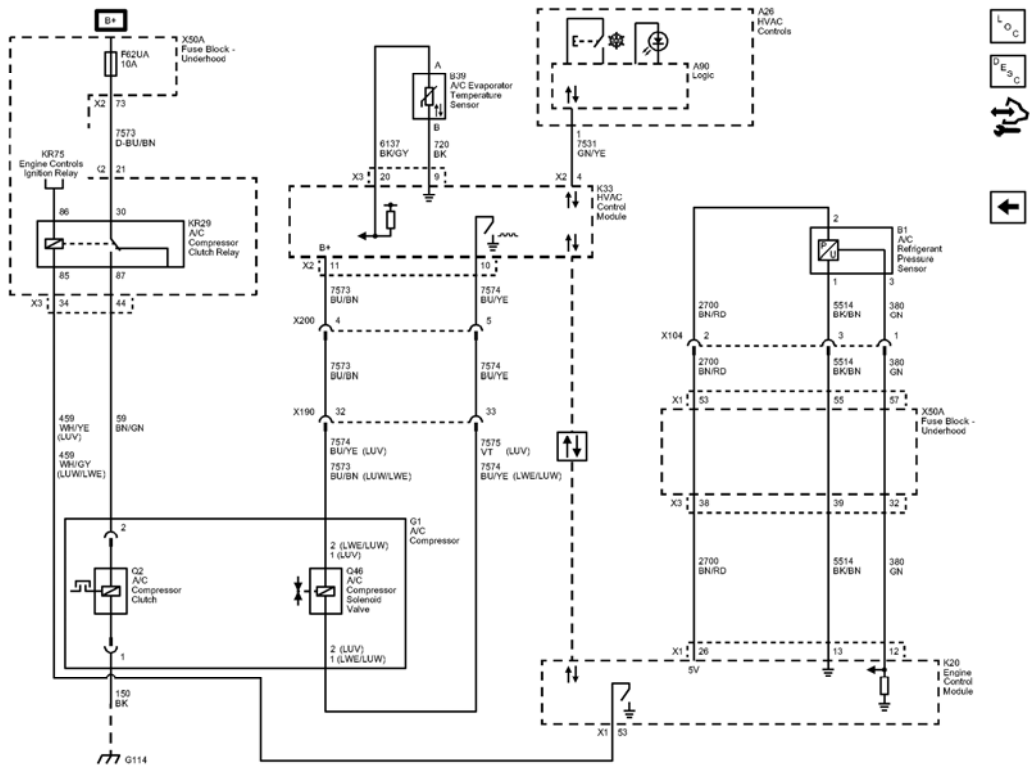

Fig. 3: Evaporator Temperature Sensor and Compressor Controls (C67) Wiring Schematics
Courtesy of GENERAL MOTORS COMPANY

Callout	Component Name
7573	Electric Variable Displacement Supply
7573_D-BU/BN	7573 D-BU/BN
CAV_73	73
CONN_X2	X2
CAV_21	21

CONN_X2	X2
59	A/C Compressor Clutch Supply Voltage
59 BN/GN	59 BN/GN
CAV_44	44
459	A/C Compressor Clutch Relay Control
459_WH/YE	459 WH/YE
CAV_53	53
CONN_X1	X1
CAV_34	34
CONN X3	X3
459_WH/GY	459 WH/GY
LUV	ENGINE-GAS, 4 CYL, 1.4L, MFI, DOHC, TURBO, VVT, ALUM, GME, E85 MAX
LUW	ENGINE-GAS, 4 CYL, 1.8L, MFI, 103KW, DOHC, E85 MAX
LWE	ENGINE-GAS, 4 CYL, 1.8L, MFI, DOHC, VVT, 103 KW, GME
CAV_85	85
CAV_87	87
CAV_30	30
CAV 86	86
150	Ground
150_BK	150 BK
CAV_1	1
CAV_2	2
6137	EVAP Core Temperature Sensor Signal
6137_BK/GY	6137 BK/GY
CAV 20	20
CONN_X3	X3
CAV A	A
720	Sensor Low Reference
720_BK	720 BK
CAV_9	9
CAV_B	B
7573_BU/BN	7573 BU/BN
CAV_11	11

CONN_X2	X2
7573_BU/BN	7573 BU/BN
7574_BU/YE	7574 BU/YE
7573_BU/BN	7573 BU/BN
LUV	ENGINE-GAS, 4 CYL, 1.4L, MFI, DOHC, TURBO, VVT, ALUM, GME, E85 MAX
CAV_1	1
CAV_2	2
LWE	ENGINE-GAS, 4 CYL, 1.8L, MFI, DOHC, VVT, 103 KW, GME
LUW	ENGINE-GAS, 4 CYL, 1.8L, MFI, 103KW, DOHC, E85 MAX
LUV	ENGINE-GAS, 4 CYL, 1.4L, MFI, DOHC, TURBO, VVT, ALUM, GME, E85 MAX
7574	Electric Variable Displacement Control
7574_BU/YE	7574 BU/YE
CAV_10	10
7574_BU/YE	7574 BU/YE
CAV_1	1
CAV_2	2
LUV	ENGINE-GAS, 4 CYL, 1.4L, MFI, DOHC, TURBO, VVT, ALUM, GME, E85 MAX
LWE	ENGINE-GAS, 4 CYL, 1.8L, MFI, DOHC, VVT, 103 KW, GME
LUW	ENGINE-GAS, 4 CYL, 1.8L, MFI, 103KW, DOHC, E85 MAX
7575 VT	7575 VT
7574_BU/YE	7574 BU/YE
LUV	ENGINE-GAS, 4 CYL, 1.4L, MFI, DOHC, TURBO, VVT, ALUM, GME, E85 MAX
LWE	ENGINE-GAS, 4 CYL, 1.8L, MFI, DOHC, VVT, 103 KW, GME
LUW	ENGINE-GAS, 4 CYL, 1.8L, MFI, 103KW, DOHC, E85

	MAX
SD	Serial Data
Data_Communication_Schematics_REF	Data Communication Schematics
7531	Linear Interconnect Network Bus 9
7531_GN/YE	7531 GN/YE
CAV_4	4
CONN_X2	X2
CAV_1	1
2700	A/C Pressure Sensor 5 Volt Reference
2700_BN/RD	2700 BN/RD
CAV_53	53
CONN_X1	X1
CAV_2	2
2700_BN/RD	2700 BN/RD
5514	A/C Refrigerant Pressure Sensor Low Reference
5514_BK/BN	5514 BK/BN
CAV_55	55
CAV_1	1
5514_BK/BN	5514 BK/BN
380	A/C Refrigerant Pressure Sensor Signal
380_GN	380 GN
CAV_57	57
CAV_3	3
380_GN	380 GN
2700_BN/RD	2700 BN/RD
CAV_26	26
CONN_X1	X1
CAV_38	38
CONN_X3	X3
5514_BK/BN	5514 BK/BN
CAV 13	13
CAV_39	39
380 GN	380 GN
CAV_12	12
CAV_32	32
LUW	ENGINE-GAS, 4 CYL, 1.8L, MFI, 103KW, DOHC, E85

	MAX
LWE	ENGINE-GAS, 4 CYL, 1.8L, MFI, DOHC, VVT, 103 KW, GME
X200	X200
CAV_4	4
CAV_5	5
X190	X190
CAV_32	32
CAV_33	33
X104	X104
CAV_2	2
CAV_3	3
CAV_1	1
G114	G114
F62UA	F62UA 10A
X200	X200
X190	X190
X104	X104
B1	
K20	
A90	Logic
K33	
X50A	
B39	
Q46	
Q2	
G1	
KR75	
KR29	
X50A	
A26	

DIAGNOSTIC INFORMATION AND PROCEDURES

HVAC COMPONENT REPLACEMENT REFERENCE

HVAC Component Replacement Reference

Scan Tool Name	Component Code / Schematic Name	Service Name	Repair Instruction Name
Air Recirculation Door Actuator	M46 Air Recirculation Door Actuator	Air Recirculation Door Actuator	**Air Inlet Valve Actuator Replacement**

Left Temperature Door Actuator	M6 Air Temperature Actuator	Air Temperature Actuator	
Mode Door Actuator	M37 Mode Door Actuator	Mode Door Actuator	**Mode Control Cam Replacement**
A/C High Side Pressure Sensor	B1 A/C Refrigerant Pressure Sensor	A/C Refrigerant Pressure Sensor	**Air Conditioning (A/C) Refrigerant Pressure Sensor Replacement**
Blower Motor	M8 Blower Motor	Blower Motor	**Blower Motor Replacement**
A/C Compressor Clutch	Q2 A/C Compressor Clutch	A/C Compressor Clutch	**Air Conditioning Compressor Replacement (1.8L LUW and LWE)** , **Air Conditioning Compressor Replacement (1.4L LUV)**
Blower Motor Control Module	K8 Blower Motor Control Module	Blower Motor Control Module	
Radio/HVAC Control	A20 Radio/HVAC Control	Radio/HVAC Control	**Heater and Air Conditioning Control Replacement**
Remote Heater and Air Conditioning Control Module	K33 HVAC Control Module	HVAC Control Module	

DIAGNOSTIC CODE INDEX

DIAGNOSTIC CODE INDEX

DTC	Description
DTC B0193	DTC B0193 01 Front Blower Motor Speed Circuit Short to Battery DTC B0193 06 Front Blower Motor Speed Circuit Low Voltage/Open
DTC B0223, B0233, B023A, or B0408	DTC B0223 01 Recirculate Position Command 1 Circuit Short to Battery DTC B0223 06 Recirculate Position Command 1 Circuit Low Voltage/Open DTC B0233 01 Air Flow Control Circuit Short to Battery DTC B0233 06 Air Flow Control Circuit Low Voltage/Open DTC B023A 02 HVAC Actuators Supply Voltage Short to Ground DTC B0408 01 Main Temperature Control Circuit Short to Battery

	DTC B0408 06 Main Temperature Control Circuit Low Voltage/Open
DTC B3933	DTC B3933 02 Air Conditioning Evaporator Temperature Sensor Circuit Short to Ground DTC B3933 05 Air Conditioning Evaporator Temperature Sensor Circuit High Voltage/Open DTC B3933 13 Air Conditioning Evaporator Temperature Sensor Circuit High Temperature
DTC B393B	DTC B393B 04 Air Conditioning Compressor Valve Control Circuit Open DTC B393B 0B Air Conditioning Compressor Valve Control Circuit High Current
DTC P0532 or P0533	DTC P0532 00 Air Conditioning (A/C) Refrigerant Pressure Sensor Circuit Low Voltage DTC P0533 00 Air Conditioning (A/C) Refrigerant Pressure Sensor Circuit High Voltage
DTC P0645, P0646, or P0647	DTC P0645 Air Conditioning (A/C) Compressor Clutch Relay Control Circuit DTC P0646 Air Conditioning (A/C) Compressor Clutch Relay Control Circuit Low Voltage DTC P0647 Air Conditioning (A/C) Compressor Clutch Relay Control Circuit High Voltage

DTC B0193

Diagnostic Instructions

- Perform the **Diagnostic System Check - Vehicle** prior to using this diagnostic procedure.
- Review **Strategy Based Diagnosis** for an overview of the diagnostic approach.
- **Diagnostic Procedure Instructions** provides an overview of each diagnostic category.

DTC Descriptors

DTC B0193 01

Front Blower Motor Speed Circuit Short to Battery

DTC B0193 06

Front Blower Motor Speed Circuit Low Voltage/Open

Diagnostic Fault Information

Circuit	Short to Ground	Open/High Resistance	Short to Voltage	Signal Performance
B+	B0193 06	B0193 06	-	-

Control	B0193 06	B0193 06	B0193 01	-
Ground	-	B0193 06	-	-

Circuit/System Description

The blower motor control module is an interface between the HVAC control module and the blower motor. The blower motor speed control from the HVAC control module, battery positive and ground circuits enable the blower motor control module to operate. The HVAC control module provides a pulse width modulation (PWM) signal to the blower motor control module in order to command the blower motor speed. The blower motor control module transfers the PWM signal into a corresponding blower motor voltage. The voltage resides between 2-13 V and changes linear to the height of the PWM signal.

Conditions for Running the DTC

- Ignition ON.
- The HVAC control module is ON.

Conditions for Setting the DTC

B0193 01

The voltage at the HVAC control module output to the blower motor control module is always high.

B0193 06

The voltage at the HVAC control module output to the blower motor control module is always low or floating.

Action Taken When the DTC Sets

The blower motor is inoperative.

Conditions for Clearing the DTC

The condition for setting the DTC is no longer present.

Diagnostic Aids

Prior to motor replacement connect a direct independent B+ and ground to verify operation.

Inspect the motor shaft for rust or other foreign material which may prohibit proper motor operation.

If the motor operates properly please reinstall it, check for PIs or TSBs, and refer to Testing for Intermittent Conditions and Poor Connections in the Electrical Information Reference information of this document.

Reference Information

Schematic Reference

HVAC Schematics

Connector End View Reference

COMPONENT CONNECTOR END VIEWS - INDEX

Description and Operation

Manual HVAC Description and Operation

Electrical Information Reference

- **Circuit Testing**
- **Connector Repairs**
- **Testing for Intermittent Conditions and Poor Connections**
- **Wiring Repairs**

Scan Tool Reference

Control Module References for scan tool information

Circuit/System Testing

1. Ignition OFF and all vehicle systems off, disconnect the X1 harness connector at the K8 Blower Motor Control Module. It may take up to 2 minutes for all vehicle systems to power down.
2. Test for less than 10 ohms between the ground circuit terminal 5 and ground.
    - **If 10 ohms or greater**
    1. Ignition OFF.
    2. Test for less than 2 ohms in the ground circuit end to end.
        - If 2 ohms or greater, repair the open/high resistance in the circuit.
        - If less than 2 ohms, repair the open/high resistance in the ground connection.
    - **If less than 10 ohms**
3. Ignition ON.
4. Verify a test lamp illuminates between the B+ circuit terminal 6 and ground.
    - **If the test lamp does not illuminate and the circuit fuse is good**
    1. Ignition OFF.
    2. Test for less than 2 ohms in the B+ circuit end to end.
        - If 2 ohms or greater, repair the open/high resistance in the circuit.
        - If less than 2 ohms, verify the fuse is not open and there is voltage at the fuse.
    - **If the test lamp does not illuminate and the circuit fuse is open**
    1. Ignition OFF.
    2. Test for infinite resistance between the B+ circuit terminal 6 and ground.

- If less than infinite resistance, repair the short to ground on the circuit.
- If infinite resistance, replace the K8 Blower Motor Control Module.

- **If the test lamp illuminates**

5. Connect a DMM between the control circuit terminal 3 and ground.
6. Verify the resistance value is between 500 ohms and 140K ohms and there is a noticeable change when moving between commanded fan speeds.
   - **If not within the specified range or there is no noticeable change**
   1. Ignition OFF, disconnect the X2 harness connector at the K33 HVAC Control Module.
   2. Test for less than 1 V between the control circuit and ground.
      - If 1 V or greater, repair the short to voltage on the circuit.
      - If less than 1 V
   3. Test for infinite resistance between the control circuit and ground.
      - If less than infinite resistance, repair the short to ground on the circuit.
      - If infinite resistance.
   4. Test for less than 2 ohms in the control circuit end to end.
      - If 2 ohms or greater, repair the open/high resistance in the circuit.
      - If less than 2 ohms replace the K33 HVAC Control Module.
   - **If within the specified range and there is a noticeable change**
7. Ignition OFF, connect the X1 harness connector at the K8 Blower Motor Control Module, and disconnect the harness connector at the M8 Blower Motor, Ignition ON and blower ON.
8. Verify a test lamp illuminates between the control circuit terminal B and ground.
   - **If the test lamp does not illuminate**
   1. Ignition OFF, disconnect the X2 harness connector at the K8 Blower Motor Control Module.
   2. Test for infinite resistance between the control circuit and ground.
      - If less than infinite resistance, repair the short to ground on the circuit.
      - If infinite resistance.
   3. Test for less than 2 ohms in the control circuit end to end.
      - If 2 ohms or greater, repair the open/high resistance in the circuit.
      - If less than 2 ohms replace the K8 Blower Motor Control Module.
   - **If the test lamp illuminates**
9. Connect a test lamp between control circuit terminal A and control circuit terminal B.
10. Verify the test lamp becomes progressively brighter as the blower speed is increased and progressively dimmer as the blower speed is decreased.
    - **If the test lamp does not illuminate**
    1. Ignition OFF, disconnect the X2 harness connector at the K8 Blower Motor Control Module.
    2. Test for less than 1 V between the control circuit terminal A and ground.
       - If 1 V or greater, repair the short to voltage on the circuit.
       - If less than 1 V

3. Test for less than 2 ohms in the control circuit end to end.
    - If 2 ohms or greater, repair the open/high resistance in the circuit.
    - If less than 2 ohms replace the K8 Blower Motor Control Module.
- **If the test lamp illuminates, but does not change in brightness**

1. Ignition OFF, disconnect the X2 harness connector at the K8 Blower Motor Control Module.
2. Test for infinite resistance between the control circuit and ground.
    - If less than infinite resistance, repair the short to ground on the circuit.
    - If infinite resistance, replace the K8 Blower Motor Control Module.
- **If the test lamp changes in brightness as the blower speed is changed**

11. Test or replace the M8 Blower Motor.

Repair Instructions

Perform the **Diagnostic Repair Verification** after completing the diagnostic procedure.

- **HVAC Component Replacement Reference**
- **Control Module References** for HVAC control module replacement, programming, and setup.

DTC B0223, B0233, B023A, OR B0408

Diagnostic Instructions

- Perform the **Diagnostic System Check - Vehicle** prior to using this diagnostic procedure.
- Review **Strategy Based Diagnosis** for an overview of the diagnostic approach.
- **Diagnostic Procedure Instructions** provides an overview of each diagnostic category.

DTC Descriptor

DTC B0223 01

Recirculate Position Command 1 Circuit Short to Battery

DTC B0223 06

Recirculate Position Command 1 Circuit Low Voltage/Open

DTC B0233 01

Air Flow Control Circuit Short to Battery

DTC B0233 06

Air Flow Control Circuit Low Voltage/Open

DTC B023A 02

HVAC Actuators Supply Voltage Short to Ground

DTC B0408 01

Main Temperature Control Circuit Short to Battery

DTC B0408 06

Main Temperature Control Circuit Low Voltage/Open

Diagnostic Fault Information

Circuit	Short to Ground	Open/High Resistance	Short to Voltage	Signal Performance
Stepper Motors 12 V Reference	B023A 02, B0223 06, B0233 06, B0408 06	B0223 06, B0233 06, B0408 06	-	-
Recirculation Actuator Control 1	B0223 06	B0223 06	B0223 01	1
Recirculation Actuator Control 2	B0223 06	B0223 06	B0223 01	1
Recirculation Actuator Control 3	B0223 06	B0223 06	B0223 01	1
Recirculation Actuator Control 4	B0223 06	B0223 06	B0223 01	1
Air Temperature Actuator Control 1	B0408 06	B0408 06	B0408 01	2
Air Temperature Actuator Control 2	B0408 06	B0408 06	B0408 01	2
Air Temperature Actuator Control 3	B0408 06	B0408 06	B0408 01	2
Air Temperature Actuator Control 4	B0408 06	B0408 06	B0408 01	2
Mode Actuator Control 1	B0233 06	B0233 06	B0233 01	3
Mode Actuator Control 2	B0233 06	B0233 06	B0233 01	3
Mode Actuator Control 3	B0233 06	B0233 06	B0233 01	3
Mode Actuator Control 4	B0233 06	B0233 06	B0233 01	3
1. Air Recirculation Malfunction 2. Air Temperature Malfunction 3. Air Distribution Malfunction				

Circuit/System Description

Stepper motors are used for temperature regulation, air distribution control and recirculation flap control.

With the appropriate switches at the Radio/HVAC control, the desired air temperature flap position, air distribution flap position and recirculation flap position can be put in. The selected values are passed to the HVAC control module via the LIN-Bus. The HVAC control module supplies a 12 V reference voltage to the stepper motors and energizes the 4 stepper motor coils with a pulsed ground signal. The stepper motors put the appropriate flap into the calculated position, in order to reach the put in temperature/position.

Conditions for Running the DTC

- Ignition ON.
- The HVAC control module is ON.

Conditions for Setting the DTC

B023A 02

The stepper motors supply output is shorted to ground.

B0223 01, B0233 01, B023A 01, or B0408 01

At least one control output (of four possible outputs) of the appropriate stepper motor is shorted to voltage when motor starts moving. Faults are not detected when motor is already running or target position is already reached.

B0223 06, B0233 06, B023A 06, or B0408 06

At least one control output (of four possible outputs) of the appropriate stepper motor is shorted to ground or open when motor starts moving. Faults are not detected when motor is already running or target position is already reached.

Action Taken When the DTC Sets

B023A 02

- The affected output will be switched off for hardware protection.
- All stepper motors are deactivated.

B0223, B0233, B023A, or B0408,

- The affected output will be switched off for hardware protection.
- The affected stepper motor is deactivated.

Conditions for Clearing the DTC

The condition for setting the DTC is no longer present.

Reference Information

Schematic Reference

HVAC Schematics

Connector End View Reference

COMPONENT CONNECTOR END VIEWS - INDEX

Description and Operation

Manual HVAC Description and Operation

Electrical Information Reference

- **Circuit Testing**
- **Connector Repairs**
- **Testing for Intermittent Conditions and Poor Connections**
- **Wiring Repairs**

Scan Tool Reference

Control Module References for scan tool information

Circuit/System Testing

1. Ignition OFF, disconnect the harness connector at the appropriate door actuator, ignition ON.
2. Connect a test lamp between the B+ circuit terminal 2 and ground.
3. Verify the test lamp turns ON and OFF repeatedly when commanding the actuator ON but not OFF with a scan tool.
    - **If the test lamp is always OFF**
    1. Ignition OFF, disconnect the harness connector at the K33 HVAC control module.
    2. Test for infinite resistance between the control circuit and ground.
        - If less than infinite resistance, repair the short to ground on the circuit.
        - If infinite resistance
    3. Test for less than 2 ohms in the control circuit end to end.
        - If 2 ohms or greater, repair the open/high resistance in the circuit.
        - If less than 2 ohms, replace the K33 HVAC control module.
    - **If the test lamp is always ON**
    1. Ignition OFF, disconnect the harness connector at the K33 HVAC control module, ignition ON.
    2. Test for less than 1 V between the control circuit and ground.
        - If 1 V or greater, repair the short to voltage on the circuit.
        - If less than 1 V, replace the K33 HVAC control module.

- **If the test lamp turns ON and OFF**

4. Connect a test lamp between each actuator harness connector terminal listed below one at a time and B+.
   - Control Circuit - terminal 1
   - Control Circuit - terminal 3
   - Control Circuit - terminal 4
   - Control Circuit - terminal 6
5. Verify the test lamp turns ON and OFF repeatedly when commanding the actuator ON but not OFF with a scan tool.
   - **If the test lamp is always OFF**
   1. Ignition OFF, disconnect the harness connector at the K33 HVAC control module, Ignition ON.
   2. Test for less than 1 V between the control circuit and ground.
      - If less 1 V or greater, repair the short to voltage on the circuit.
      - If less than 1 V
   3. Ignition OFF
   4. Test for less than 2 ohms in the control circuit end to end.
      - If 2 ohms or greater, repair the open/high resistance in the circuit.
      - If less than 2 ohms, replace the K33 HVAC control module.
   - **If the test lamp is always ON**
   1. Ignition OFF, disconnect the harness connector at the K33 HVAC control module.
   2. Test for infinite resistance between the control circuit and ground.
      - If less than infinite resistance, repair the short to ground on the circuit.
      - If infinite resistance, replace the K33 HVAC control module.
   - **If the test lamp turns ON and OFF**
6. Replace the appropriate HVAC door actuator.

Repair Instructions

Perform the **Diagnostic Repair Verification** after completing the diagnostic procedure.

- **HVAC Component Replacement Reference**
- **Control Module References** for HVAC control module replacement, setup, and programming

DTC B3933

Diagnostic Instructions

- Perform the **Diagnostic System Check - Vehicle** prior to using this diagnostic procedure.
- Review **Strategy Based Diagnosis** for an overview of the diagnostic approach.
- **Diagnostic Procedure Instructions** provides an overview of each diagnostic category.

DTC Descriptors

DTC B3933 02

Air Conditioning Evaporator Temperature Sensor Circuit Short to Ground

DTC B3933 05

Air Conditioning Evaporator Temperature Sensor Circuit High Voltage/Open

DTC B3933 13

Air Conditioning Evaporator Temperature Sensor Circuit High Temperature

Diagnostic Fault Information

Circuit	Short to Ground	Open/High Resistance	Short to Voltage	Signal Performance
Signal	B3933 02	B3933 05	B3933 05	1
Low Reference	-	B3933 05	B3933 05	-
1. Air Temperature Malfunction				

Circuit/System Description

The evaporator air temperature sensor is 2-wire negative temperature coefficient thermistor.

A signal and low reference circuit enables the sensor to operate. As the air temperature surrounding the sensor increases, the sensor resistance decreases. The sensor signal voltage decreases as the resistance decreases. The sensor operates within a temperature range between -40 to +85°C (-40 to +185°F). The sensor signal varies between 0-5 V. The HVAC control module uses this information to keep the evaporator as close to the desired temperature without evaporator icing. If the HVAC control module detects a malfunctioning sensor, then the control module software will use a default air temperature value. The default action ensures that the HVAC system can adjust the inside air temperature near the desired temperature until the condition is corrected.

Conditions for Running the DTC

- Ignition ON
- The HVAC control module is ON.

Conditions for Setting the DTC

The HVAC control module detects the sensor signal out of range. The signal voltage is less than 0.1 V or greater than 4.9 V for more than 50 ms.

Action Taken When the DTC Sets

The system operates using a default value.

Conditions for Clearing the DTC

The sensor signal is within specified range between 0.1-4.9 V.

Reference Information

Schematic Reference

HVAC Schematics

Connector End View Reference

COMPONENT CONNECTOR END VIEWS - INDEX

Description and Operation

Manual HVAC Description and Operation

Electrical Information Reference

- **Circuit Testing**
- **Connector Repairs**
- **Testing for Intermittent Conditions and Poor Connections**
- **Wiring Repairs**

Scan Tool Reference

Control Module References for scan tool information

Circuit/System Testing

1. Ignition OFF and all vehicle systems OFF, disconnect the harness connector at the B39 A/C Evaporator Temperature Sensor. It may take up to 2 min for all vehicle systems to power down.
2. Test for less than 10 ohms between the low reference circuit terminal B and ground.
    - **If 10 ohms or greater**
    1. Ignition OFF, disconnect the harness connector at the K33 HVAC Control Module.
    2. Test for less than 2 ohms in the low reference circuit end to end.
        - If 2 ohms or greater, repair the open/high resistance in the circuit.
        - If less than 2 ohms, replace the K33 HVAC Control Module.
    - **If less than 10 ohms**
3. Ignition ON.
4. Verify the A/C Evaporator Temperature scan tool parameter is more than 4.9 V.
    - **If less than 4.9 V**
    1. Ignition OFF, disconnect the harness connector at the K33 HVAC Control Module.
    2. Test for infinite resistance between the signal circuit terminal A and ground.

- If less than infinite resistance, repair the short to ground on the circuit.
- If infinite resistance, replace the K33 HVAC Control Module.

- **If 4.9 V or greater**

5. Install a 3 A fused jumper wire between the signal circuit terminal A and the low reference circuit terminal B.
6. Verify the A/C Evaporator Temperature Sensor scan tool parameter is less than 0.1 V.
   - **If 0.1 V or greater**
   1. Ignition OFF, disconnect the harness connector at the K33 HVAC Control Module, ignition ON.
   2. Test for less than 1 V between the signal circuit and ground.
      - If 1 V or greater, repair the short to voltage on the circuit.
      - If less than 1 V
   3. Ignition OFF
   4. Test for less than 2 ohms in the signal circuit end to end.
      - If 2 ohms or greater, repair the open/high resistance in the circuit.
      - If less than 2 ohms, replace the K33 HVAC Control Module.
   - **If less than 0.1 V**
7. Test or replace the B39 A/C Evaporator Temperature Sensor.

Repair Instructions

Perform the **Diagnostic Repair Verification** after completing the repair.

- **HVAC Component Replacement Reference**
- **Control Module References** for HVAC control module replacement, programming and setup

DTC B393B

Diagnostic Instructions

- Perform the **Diagnostic System Check - Vehicle** prior to using this diagnostic procedure.
- Review **Strategy Based Diagnosis** for an overview of the diagnostic approach.
- **Diagnostic Procedure Instructions** provides an overview of each diagnostic category.

DTC Descriptors

DTC B393B 04

Air Conditioning Compressor Valve Control Circuit Open

DTC B393B 0B

Air Conditioning Compressor Valve Control Circuit High Current

Diagnostic Fault Information

Circuit	Short to Ground	Open/High Resistance	Short to Voltage	Signal Performance
Electric Variable Displacement Control	B393B 04	B393B 04	B393B 0B	-
Electric Variable Displacement Supply	B393B 0B	B393B 04	-	-

Circuit/System Description

This A/C system uses a conventional clutch to engage and mechanically turn the compressor, and a variable displacement solenoid valve to alter the amount of displacement created by the turning of the compressor. The HVAC control module supplies battery voltage to the variable displacement solenoid valve. When the A/C switch is pressed, the HVAC control module provides a pulse width modulated (PWM) signal to the variable displacement solenoid valve in order to determine the amount of compressor displacement. The performance of the A/C compressor is regulated according to adjusted interior temperature on the basis of characteristic lines. Therefore the HVAC control module grounds the A/C compressor with the PWM signal.

Conditions for Running the DTC

- Ignition ON.
- The HVAC control module is ON.

Conditions for Setting the DTC

B393B 04

A PWM greater than 10% is sent but no current is read back.

B393B 0B

Measured current is above threshold of 815 mA.

Action Taken When the DTC Sets

B393B 04

The variable displacement solenoid valve is disabled and defaults to the position of lowest possible compressor displacement. The compressor clutch is not disengaged.

B393B 0B

- The variable displacement solenoid valve is disabled and defaults to the position of lowest possible compressor displacement. The compressor clutch is not disengaged.
- Output will be switched off for hardware protection.

Conditions for Clearing the DTC

The condition for setting the DTC is no longer present.

Reference Information

Schematic Reference

HVAC Schematics

Connector End View Reference

COMPONENT CONNECTOR END VIEWS - INDEX

Description and Operation

Manual HVAC Description and Operation

Electrical Information Reference

- **Circuit Testing**
- **Connector Repairs**
- **Testing for Intermittent Conditions and Poor Connections**
- **Wiring Repairs**

Scan Tool Reference

Control Module References for scan tool information

Circuit/System Testing

1. Ignition OFF and all vehicle systems OFF, disconnect the harness connector at the Q46 A/C Compressor Solenoid Valve. It may take up to 2 minutes for all vehicle systems to power down.
2. Verify a test lamp illuminates between the B+ circuit terminal A and ground.
    - **If the test lamp does not illuminate**
        1. Test for infinite resistance between the B+ circuit and ground.
            - If less than infinite resistance, repair the short to ground on the circuit.
            - If infinite resistance.
        2. Test for less than 2 ohms in the B+ circuit end to end.
            - If 2 ohms or greater, repair the open/high resistance in the circuit.
            - If less than 2 ohms, replace the K33 HVAC Control Module.
    - **If the test lamp illuminates**
3. Ignition ON, connect a test lamp between the control circuit terminal B and the B+ circuit terminal A.
4. Verify the test lamp turns ON and OFF when commanding the A/C Compressor Refrigerant Solenoid

Valve ON and OFF with a scan tool.

- **If the test lamp is always OFF**

1. Ignition OFF, disconnect the harness connector at the K33 HVAC Control Module, ignition ON.
2. Test for less than 1 V between the control circuit and ground.
   - If 1 V or greater, repair the short to voltage on the circuit.
   - If less than 1 V
3. Ignition OFF.
4. Test for less than 2 ohms in the control circuit end to end.
   - If 2 ohms or greater, repair the open/high resistance in the circuit.
   - If less than 2 ohms, replace the K33 HVAC Control Module.

- **If the test lamp is always ON**

1. Ignition OFF, disconnect the harness connector at the K33 HVAC Control Module.
2. Test for infinite resistance between the control circuit and ground.
   - If less than infinite resistance, repair the short to ground on the circuit.
   - If infinite resistance, replace the K33 HVAC Control Module.

- **If the test lamp turns ON and OFF**

5. Test or replace the Q46 A/C Compressor Solenoid Valve.

Component Testing

Static Test

1. Ignition OFF, disconnect the harness connector at the Q46 A/C Compressor Solenoid Valve.
2. Test for 7-15 ohms between the B+ circuit terminal A and the control circuit terminal B.
   - **If less than 7 ohms or greater than 15 ohms**

     Replace the Q46 A/C Compressor Solenoid Valve

   - **If between 7-15 ohms**
3. Test for infinite resistance between each terminal and the Q46 A/C Compressor Solenoid Valve housing/case.
   - **If less than infinite resistance**

     Replace the Q46 A/C Compressor Solenoid Valve

   - **If infinite resistance**
4. All OK

Repair Instructions

Perform the **Diagnostic Repair Verification** after completing the repair.

- **HVAC Component Replacement Reference**
- **Control Module References** for HVAC control module replacement, programming, and setup.

DTC P0532 OR P0533

Diagnostic Instructions

- Perform the **Diagnostic System Check - Vehicle** prior to using this diagnostic procedure.
- Review **Strategy Based Diagnosis** for an overview of the diagnostic approach.
- **Diagnostic Procedure Instructions** provides an overview of each diagnostic category.

DTC Descriptors

DTC P0532 00

Air Conditioning (A/C) Refrigerant Pressure Sensor Circuit Low Voltage

DTC P0533 00

Air Conditioning (A/C) Refrigerant Pressure Sensor Circuit High Voltage

Diagnostic Fault Information

Circuit	Short to Ground	Open/High Resistance	Short to Voltage	Signal Performance
5 V Reference	P0532 00 P0641 00	P0532 00	P0641 00	-
Signal	P0532 00	P0532 00	P0533 00	-
Low Reference	-	P0533 00	-	-

Circuit/System Description

The engine control module (ECM) monitors the high side refrigerant pressure through the A/C refrigerant pressure sensor. The ECM supplies a 5 V reference and a low reference to the sensor. Changes in the A/C refrigerant pressure cause the sensor signal to the ECM to vary. When the pressure is high, the signal voltage is high. When the pressure is low, the signal voltage is low. When pressure is high, the ECM commands the cooling fans on. When pressure is too high or too low, the ECM will not allow the activation of the A/C compressor.

Conditions for Running the DTC

Engine is running.

Conditions for Setting the DTC

P0532 00

The ECM detects a short to ground or open at the A/C pressure sensor signal circuit.

P0533 00

The ECM detects a short to voltage at the A/C pressure sensor signal circuit.

Action Taken When the DTC Sets

- The A/C compressor is disabled.
- The ECM will illuminate the malfunction indicator lamp (MIL).

Conditions for Clearing the DTC

The condition for setting the DTC is no longer present.

Reference Information

Schematic Reference

HVAC Schematics

Connector End View Reference

COMPONENT CONNECTOR END VIEWS - INDEX

Description and Operation

Manual HVAC Description and Operation

Electrical Information Reference

- **Circuit Testing**
- **Connector Repairs**
- **Testing for Intermittent Conditions and Poor Connections**
- **Wiring Repairs**

Scan Tool Reference

Control Module References for scan tool information

Circuit/System Testing

1. Ignition OFF and all vehicle systems OFF, disconnect the harness connector at the B1 A/C refrigerant pressure sensor. It may take up to 2 minutes for all vehicle systems to power down.
2. Test for less than 5 ohms between the low reference circuit terminal 1 and ground.
    - **If 5 ohms or greater**

1. Ignition OFF, disconnect the harness connector at the K20 ECM.
2. Test for less than 2 ohms in the low reference circuit end to end.
    - If 2 ohms or greater, repair the open/high resistance in the circuit.
    - If less than 2 ohms, replace the K20 ECM.

- **If less than 5 ohms**

3. Ignition ON.
4. Test for 4.8-5.2 V between the 5 V reference circuit terminal 2 and ground.

- **If less than 4.8 V**

1. Ignition OFF, disconnect the harness connector at the K20 ECM control module.
2. Test for infinite resistance between the 5 V reference circuit and ground.
    - If less than infinite resistance, repair the short to ground on the circuit.
    - If infinite resistance
3. Test for less than 2 ohms in the 5 V reference circuit end to end.
    - If 2 ohms or greater, repair the open/high resistance in the circuit.
    - If less than 2 ohms, replace the K20 ECM.

- **If greater than 5.2 V**

1. Ignition OFF, disconnect the harness connector at the K20 ECM control module, ignition ON.
2. Test for less than 1 V between the 5 V reference circuit and ground.
    - If 1 V or greater, repair the short to voltage on the circuit.
    - If less than 1 V, replace the K20 ECM.

- **If between 4.8-5.2 V**

5. Verify the scan tool A/C High Side Pressure Sensor parameter is less than.02 V.

- **If.02 V or greater**

1. Ignition OFF, disconnect the harness connector at the K20 ECM, ignition ON.
2. Test for less than 1 V between the signal circuit terminal 3 and ground.
    - If 1 V or greater, repair the short to voltage on the circuit.
    - If less than 1 V, replace the K20 ECM.

- **If less than.02 V**

6. Install a 3 A fused jumper wire between the signal circuit terminal 3 and the 5 V reference circuit terminal 2.
7. Verify the scan tool A/C High Side Pressure Sensor parameter is greater than 4.8 V.

- **If 4.8 V or less**

1. Ignition OFF, disconnect the harness connector at the K20 ECM.
2. Test for infinite resistance between the signal circuit terminal 3 and ground.
    - If less than infinite resistance, repair the short to ground on the circuit.
    - If infinite resistance
3. Test for less than 2 ohms in the signal circuit end to end.
    - If 2 ohms or greater, repair the open/high resistance in the circuit.

- If less than 2 ohms, replace the K20 ECM.
- **If greater than 4.8 V**

8. Test or replace the B1 A/C refrigerant pressure sensor.

Repair Instructions

Perform the **Diagnostic Repair Verification** after completing the repair.

- **HVAC Component Replacement Reference**
- **Control Module References** for engine control module (ECM) replacement, programming, and setup

DTC P0645, P0646, OR P0647

Diagnostic Instructions

- Perform the **Diagnostic System Check - Vehicle** prior to using this diagnostic procedure.
- Review **Strategy Based Diagnosis** for an overview of the diagnostic approach.
- **Diagnostic Procedure Instructions** provides an overview of each diagnostic category.

DTC Descriptors

DTC P0645

Air Conditioning (A/C) Compressor Clutch Relay Control Circuit

DTC P0646

Air Conditioning (A/C) Compressor Clutch Relay Control Circuit Low Voltage

DTC P0647

Air Conditioning (A/C) Compressor Clutch Relay Control Circuit High Voltage

Diagnostic Fault Information

Circuit	Short to Ground	Open/High Resistance	Short to Voltage	Signal Performance
B+	1	1	-	-
A/C Compressor Clutch Supply Voltage	1	1	1	-
Ignition	P0645	P0645	-	-
A/C Compressor Clutch Control	P0645	P0645	P0645	-
Ground	-	1	-	-
1. A/C Compressor Malfunction				

Circuit/System Description

When the A/C switch is pressed, the HVAC control module sends an A/C request message to the engine control module (ECM) via serial data. The ECM then grounds the A/C compressor clutch relay coil control circuit, closing the relay contacts. The closed relay contacts provide voltage to the compressor clutch causing it to engage.

Conditions for Running the DTC

- Engine is running.
- The HVAC control module is ON.
- The A/C switch is active.

Conditions for Setting the DTC

P0645 or P0646

The ECM detects a short to ground or an open at the A/C compressor clutch relay control circuit.

P0647

The ECM detects a short to voltage at the A/C compressor clutch relay control circuit.

Action Taken When the DTC Sets

P0645 or P0646

The A/C compressor is inoperative or always active. The A/C compressor solenoid is commanded to 0% displacement. This causes warm air from the ducts, even with unwanted clutch engagement.

P0647

The A/C compressor is inoperative.

Conditions for Clearing the DTC

The condition for setting the DTC is no longer present.

Reference Information

Schematic Reference

HVAC Schematics

Connector End View Reference

COMPONENT CONNECTOR END VIEWS - INDEX

Description and Operation

Manual HVAC Description and Operation

Electrical Information Reference

- **Circuit Testing**
- **Connector Repairs**
- **Testing for Intermittent Conditions and Poor Connections**
- **Wiring Repairs**

DTC Type Reference

Powertrain Diagnostic Trouble Code (DTC) Type Definitions

Scan Tool Reference

Control Module References for scan tool information

Circuit/System Testing

1. Ignition OFF, disconnect the KR29 A/C Compressor Clutch Relay, ignition ON.
2. Verify a test lamp illuminates between the B+ circuit terminal 30 and ground.
    - **If the test lamp does not illuminate and the circuit fuse is good**
    1. Ignition OFF, remove the test lamp.
    2. Test for less than 2 ohms in the B+ circuit end to end.
        - If 2 ohms or greater, repair the open/high resistance in the circuit.
        - If less than 2 ohms, verify the fuse is not open and there is voltage at the fuse.
    - **If the test lamp does not illuminate and the circuit fuse is open**
    1. Ignition OFF, remove the test lamp.
    2. Test for infinite resistance between the B+ circuit and ground.
        - If less than infinite resistance, repair the short to ground on the circuit.
        - If infinite resistance,
    3. Disconnect the harness connector at the Q2 A/C Compressor Clutch.
    4. Test for infinite resistance between the control circuit terminal 87 and ground.
        - If less than infinite resistance, repair the short to ground on the circuit.
        - If infinite resistance, test or replace the Q2 A/C Compressor Clutch.
    - **If the test lamp illuminates**
3. Ignition ON.
4. Verify a test lamp illuminates between the ignition circuit terminal 86 and ground.
    - **If the test lamp does not illuminate**

Refer to **Power Mode Mismatch** .

- **If the test lamp illuminates**

5. Connect a test lamp between the ignition circuit terminal 86 and the control circuit terminal 85.
6. Verify the test lamp turns ON and OFF when commanding the ECM A/C Compressor Clutch Relay On and Off with a scan tool.
   - **If the test lamp is always OFF**
   1. Ignition OFF, remove the test lamp and disconnect the harness connector at the K20 Engine Control Module, ignition ON.
   2. Test for less than 1 V between the control circuit and ground.
      - If 1 V or greater, repair the short to voltage on the circuit.
      - If less than 1 V
   3. Ignition OFF.
   4. Test for less than 2 ohms in the control circuit end to end.
      - If 2 ohms or greater, repair the open/high resistance in the circuit.
      - If less than 2 ohms, replace the K20 Engine Control Module.
   - **If the test lamp is always ON**
   1. Ignition OFF, remove the test lamp and disconnect the harness connector at the K20 Engine Control Module.
   2. Test for infinite resistance between the control circuit and ground.
      - If less than infinite resistance, repair the short to ground on the circuit.
      - If infinite resistance, replace the K20 Engine Control Module.
   - **If the test lamp turns ON and OFF**
7. Verify a test lamp does not illuminate between the control circuit terminal 87 and ground.
   - **If the test lamp illuminates**

     Repair the short to voltage on the circuit.

   - **If the test lamp does not illuminate**
8. Ignition OFF and all vehicle systems OFF, disconnect the harness connector at the Q2 A/C Compressor Clutch. It may take up to 2 min for all vehicle systems to power down.
9. Test for less than 10 ohms between the ground circuit terminal 1 and ground.
   - **If 10 ohms or greater**
   1. Ignition OFF.
   2. Test for less than 2 ohms in the ground circuit end to end.
      - If 2 ohms or greater, repair the open/high resistance in the circuit.
      - If less than 2 ohms, repair the open/high resistance in the ground connection.
   - **If less than 10 ohms**
10. Connect the harness connector at the Q2 A/C Compressor Clutch.
11. Ignition ON, connect a 10 A fused jumper wire between the B+ circuit terminal 30 and the control circuit

terminal 87.

12. Verify the Q2 A/C Compressor Clutch is engaged.
    - **If the Q2 A/C Compressor Clutch does not engage**
    1. Ignition OFF, disconnect the harness connector at the Q2 A/C Compressor Clutch.
    2. Test for less than 2 ohms in the control circuit end to end.
        - If 2 ohms or greater, repair the open/high resistance in the circuit.
        - If less than 2 ohms, test or replace the Q2 A/C Compressor Clutch.
    - **If the Q2 A/C Compressor Clutch is engaged**
13. Test or replace the KR29 A/C Compressor Clutch Relay.

Component Testing

1. Ignition OFF, disconnect the KR29 A/C Compressor Clutch Relay.
2. Test for 60-180 ohms between terminals 85 and 86.
    - **If not between 60-180 ohms**

      Replace the KR29 A/C Compressor Clutch Relay.

    - **If between 60-180 ohms**
3. Test for infinite resistance between the terminals listed below:
    - 30 and 86
    - 30 and 87
    - 30 and 85
    - 85 and 87
    - **If less than infinite resistance**

      Replace the KR29 A/C Compressor Clutch Relay.

    - **If infinite resistance**
4. Install a 15 A fused jumper wire between terminal 86 and 12 V. Install a jumper wire between terminal 85 and ground.
5. Test for less than 2 ohms between terminals 30 and 87.
    - **If 2 ohms or greater**

      Replace the KR29 A/C Compressor Clutch Relay.

    - **If less than 2 ohms**
6. All OK.

Repair Instructions

Perform the **Diagnostic Repair Verification** after completing the repair.

- **HVAC Component Replacement Reference**
- **Control Module References** for engine control module replacement, programming and setup

SYMPTOMS - HVAC SYSTEMS - MANUAL

NOTE: The following steps must be completed before using the symptom tables:

1. Perform the **Diagnostic System Check - Vehicle** before using the Symptom Tables in order to verify that all of the following are true:
   - There are no DTCs set.
   - The control modules can communicate via the serial data link.
2. Review the system operation in order to familiarize yourself with the system functions. Refer to **Manual HVAC Description and Operation**.

Visual/Physical Inspection

- Inspect for aftermarket devices which may affect the operation of the HVAC System. Refer to **Checking Aftermarket Accessories** .
- Inspect the easily accessible or visible system components for obvious damage or conditions which may cause the symptom.
- Verify the A/C compressor turns freely and is not seized.
- Verify that the customer is using the correct key to enable personalization and is not inadvertently activating auxiliary HVAC controls.
- The A/C compressor will not operate in cold outside air temperatures.
- The following conditions may cause window fogging:
  - Wet carpet or mats
  - High humidity
  - Interior water leak
  - Blocked A/C evaporator drain tube
  - Maximum passenger capacity
  - Blocked body pressure relief valves
- Inspect the air distribution system for causes of reduced air flow:
  - Obstructed or dirty passenger compartment air filter, if equipped
  - Blocked or damaged air inlet or outlet vents

Intermittent

Faulty electrical connections or wiring may be the cause of intermittent conditions. Refer to **Testing for Intermittent Conditions and Poor Connections** .

Symptom List

Refer to a symptom diagnostic procedure from the following list in order to diagnose the symptom:

- **HVAC System Malfunction**
-

HVAC SYSTEM MALFUNCTION

Diagnostic Instructions

- Perform the **Diagnostic System Check - Vehicle** prior to using this diagnostic procedure.
- Review **Strategy Based Diagnosis** for an overview of the diagnostic approach.
- **Diagnostic Procedure Instructions** provides an overview of each diagnostic category.

Diagnostic Aids

Check the following mechanical fault sources:

- Air distribution box
- Air distribution hoses/air distribution ducts

Reference Information

Schematic Reference

HVAC Schematics

Connector End View Reference

COMPONENT CONNECTOR END VIEWS - INDEX

Description and Operation

Manual HVAC Description and Operation

Electrical Information Reference

- **Circuit Testing**
- **Connector Repairs**
- **Testing for Intermittent Conditions and Poor Connections**
- **Wiring Repairs**

Scan Tool Reference

Control Module References

Circuit/System Verification

NOTE: Check for bulletins before proceeding.

1. Ignition ON, place the blower motor switch in each speed position. Verify that the blower motor operates properly in each position.
   - If the blower motor does not operate properly in all speeds, refer to **DTC B0193**.
2. Using the scan tool observe the mode, temperature, air inlet and recirculation door positions. Verify the actual and commanded door positions are within 4 counts of each other.
   - If not within the specified range, refer to Circuit/System Testing **DTC B0223, B0233, B023A, or B0408**.
3. Engine ON, A/C ON, place the temperature control in the coldest position. Verify that cool air flows from the ducts in the vehicle.
   - If the air is not cool, refer to **Air Conditioning (A/C) System Performance Test** .
4. Turn the A/C OFF and place the temperature control in the warmest position.
   - If the air is insufficiently heated refer to **Heating Performance Diagnostic** .
5. Ignition ON, observe the scan tool A/C Evaporator Temperature Sensor parameter. The reading should be between -39°F and 185°F and change with evaporator air temperature changes.
   - If not within the specified range, refer to Circuit/System Testing **DTC B3933**.

Repair Instructions

Perform the **Diagnostic Repair Verification** after completing the diagnostic procedure.

- **HVAC Component Replacement Reference**
- **Control Module References** for HVAC control module replacement, setup, and programming

AIR CONDITIONING COMPRESSOR MALFUNCTION

Diagnostic Instructions

- Perform the **Diagnostic System Check - Vehicle** prior to using this diagnostic procedure.
- Review **Strategy Based Diagnosis** for an overview of the diagnostic approach.
- **Diagnostic Procedure Instructions** provides an overview of each diagnostic category.

DTC Descriptors

DTC P0645

Air Conditioning (A/C) Compressor Clutch Relay Control Circuit

DTC P0646

Air Conditioning (A/C) Compressor Clutch Relay Control Circuit Low Voltage

DTC P0647

Air Conditioning (A/C) Compressor Clutch Relay Control Circuit High Voltage

Diagnostic Fault Information

Circuit	Short to Ground	Open/High Resistance	Short to Voltage	Signal Performance
A/C Compressor Clutch Relay Coil Ignition	P0646	P0645, P0646	-	-
A/C Compressor Clutch Relay Coil Control	P0646	P0645, P0646	P0647	1
1. A/C Compressor Malfunction				

Circuit/System Description

When the A/C switch is pressed, the HVAC control module sends an A/C request message to the engine control module (ECM) via CAN-Bus. Therefore, the ECM grounds the A/C compressor clutch relay control circuit, which will switch the A/C compressor clutch relay. With the relay contacts closed, battery voltage is supplied to the A/C compressor clutch. The A/C compressor clutch will be activated.

Conditions for Running the DTC

- Engine is running.
- The HVAC control module is ON.
- The A/C switch is active.

Conditions for Setting the DTC

P0645 or P0646

The ECM detects a short to ground or an open at the A/C compressor clutch relay control circuit.

P0647

The ECM detects a short to voltage at the A/C compressor clutch relay control circuit.

Action Taken When the DTC Sets

P0645 or P0646

The A/C compressor is inoperative or always active.

P0647

The A/C compressor is inoperative.

Conditions for Clearing the DTC

The condition for setting the DTC is no longer present.

Reference Information

Schematic Reference

HVAC Schematics

Connector End View Reference

COMPONENT CONNECTOR END VIEWS - INDEX

Description and Operation

Manual HVAC Description and Operation

Electrical Information Reference

- **Circuit Testing**
- **Connector Repairs**
- **Testing for Intermittent Conditions and Poor Connections**
- **Wiring Repairs**

Scan Tool Reference

Control Module References for scan tool information

Circuit/System Testing

1. Ignition OFF, remove the KR29 A/C Compressor Clutch Relay.
2. Ignition ON, test for greater than 11 V between the ignition circuit terminal 86 at the KR29 A/C Compressor Clutch Relay and ground.
    - If less than the specified value, test the ignition circuit for a short to ground or an open/high resistance.
3. Ignition OFF, disconnect the X2 harness connector at the K20 Engine Control Module.
4. Ignition ON, test for less than 0.3 V between the control circuit terminal 85 at the KR29 A/C Compressor Clutch Relay and ground.
    - If greater than the specified value, test the control circuit for a short to voltage.
5. Ignition OFF, test for infinite resistance between the control circuit terminal 85 at the KR29 A/C Compressor Clutch Relay and ground.
    - If less than the specified value, test the control circuit for a short to ground.
6. Test for less than 5 ohms between the KR29 A/C Compressor Clutch Relay control circuit terminal 85 and the appropriate control circuit terminal at the K20 Engine Control Module harness connector listed below:

- Terminal 91 X2 with LXV
- Terminal 51 X2 with LXT
- Terminal 91 X2 with 2H0
- Terminal 29 X2 with LLW
  - If greater than the specified value, test the control circuit for an open/high resistance.

7. If all circuits test normal, test or replace the KR29 A/C Compressor Clutch Relay.

Component Testing

Static Test

1. Ignition OFF, disconnect the KR29 A/C Compressor Clutch Relay.
2. Test for 60-180 ohms between the B+ terminal 85 and the control terminal 86 of the KR29 A/C Compressor Clutch Relay.
   - If not within the specified range, replace the KR29 A/C Compressor Clutch Relay.
3. Test for the resistance between the following terminals:
   - 30 and 86
   - 30 and 87
   - 30 and 85
   - 85 and 87
   - If not the specified value, replace the KR29 A/C Compressor Clutch Relay.

Repair Instructions

Perform the **Diagnostic Repair Verification** after completing the diagnostic procedure.

Control Module References for engine control module replacement, setup, and programming

AFTERBLOW ENABLING

The afterblow mode can be enabled using the scan tool. The afterblow mode allows the blower motor to operate after the engine has been turned off. This operation of the blower motor dries the evaporator core, which reduces the amount of microbial growth which can create undesirable odors.

Use the following procedure in order to enable the afterblow mode:

1. Connect the Scan Tool.
2. Turn ON the ignition, with the engine OFF.
3. Build the vehicle with the scan tool.
4. Select Module Diagnosis.
5. Select Remote Heater and Air Conditioning Control Module.
6. Select Configuration/Reset Functions.

7. Select HVAC Afterblow Configuration.

When afterblow has been enabled by the scan tool the blower motor will operate at 68% blower speed, following the sequence below up to 5 times. This could last up to an hour:

1. The blower motor will be OFF for 7-11 minutes.
2. The blower motor will RUN for 25-30 seconds.

The following conditions must be met for the HVAC module to operate the afterblow:

- The engine must be turned off for at least 30 min.
- The outside air temperature must be at least 21°C (70°F).
- The A/C compressor must have operated for more than 2 minutes before shut down during the latest key cycle.
- The system voltage must be at least 12 V.

ACTUATOR RECALIBRATION

NOTE: Do not adjust any controls on the HVAC control module while the HVAC control module is self-calibrating. If interrupted, improper HVAC performance will result.

When replacing the HVAC control module it will be necessary to allow the HVAC control module to perform a calibration process. When installing the HVAC control module be sure to perform the following:

1. Place the ignition switch to the OFF position.
2. Disconnect the scan tool.
3. Install the HVAC control module.
4. Connect all previously disconnected components.
5. Ignition ON.
6. Wait 40 s for the HVAC control module to self-calibrate.
7. Verify that no DTCs have set as current DTCs.

When replacing the HVAC actuator it will be necessary to allow the HVAC control module to perform a calibration process. When installing the HVAC actuator be sure to perform one of the following:

Preferred Method (with Scan Tool)

NOTE: Do not adjust any controls on the HVAC control module while the HVAC control module is self-calibrating. If interrupted, improper HVAC performance will result.

1. Clear all DTCs.
2. Place the ignition switch in the OFF position.

3. Install the HVAC actuator.
4. Connect all previously disconnected components.
5. Start the vehicle.
6. With the scan tool, initiate the HVAC Actuators re-calibration feature of the Remote Heater and Air Conditioning Control Module Special Functions menu.
7. Verify that no DTCs have set as current DTCs.

Alternate Method (without Scan Tool)

NOTE: Do not adjust any controls on the HVAC control module while the HVAC control module is self-calibrating. If interrupted, improper HVAC performance will result.

1. Clear all DTCs.
2. Place the ignition switch to the OFF position.
3. Install the HVAC actuator.
4. Connect all previously disconnected components.
5. Remove the HVAC control module fuse for a minimum of 10 s.
6. Install the HVAC control module fuse.
7. Ignition ON.
8. Wait 40 s for the HVAC control module to self-calibrate.
9. Verify that no DTCs have set as current DTCs.

REPAIR INSTRUCTIONS

HEATER AND AIR CONDITIONING CONTROL REPLACEMENT

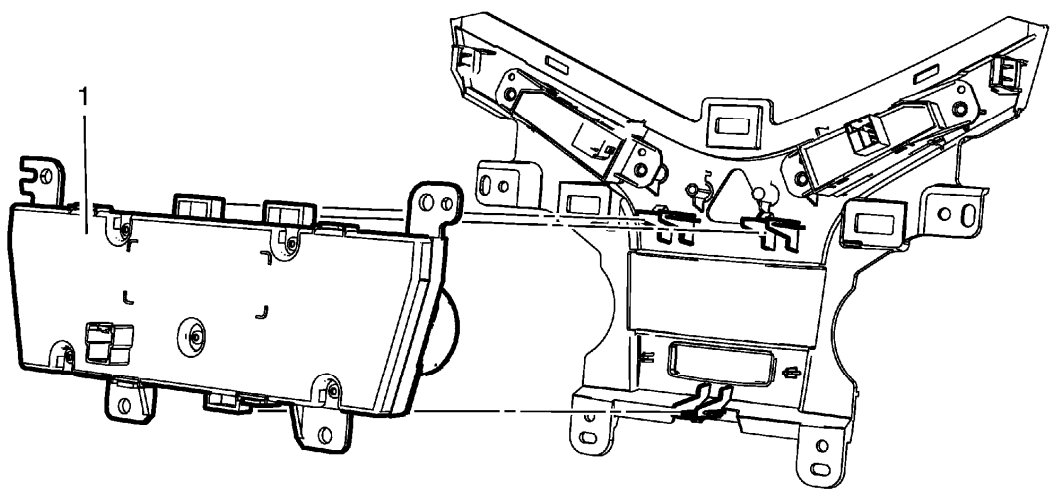

Fig. 4: Heater And Air Conditioning Control
Courtesy of GENERAL MOTORS COMPANY

Heater and Air Conditioning Control Replacement

Callout	Component Name
Preliminary Procedures Remove instrument panel accessory bezel. Refer to **Instrument Panel Accessory Bezel Replacement** .	
1	Heater and Air Conditioning Control **Procedure** 1. Unclip the retainer tabs. 2. For programming and set up information, refer to **Control Module References**

HEATER AND BLOWER AND AIR CONDITIONING CONTROL MODULE REPLACEMENT

Removal Procedure

1. Remove instrument panel compartment. Refer to **Instrument Panel Compartment Replacement** .
2. Remove floor air outlet duct right side. Refer to **Floor Air Outlet Duct Replacement - Right Side** .

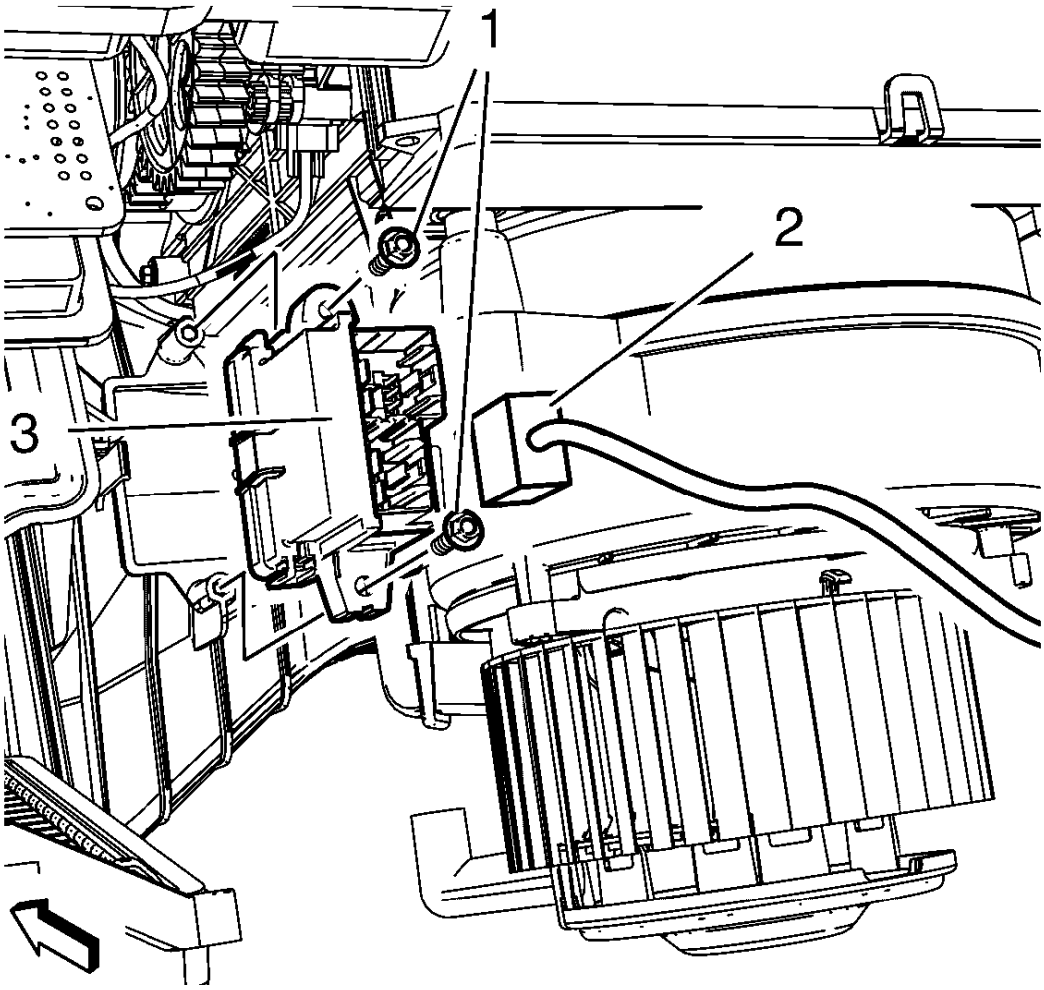

Fig. 5: Heater And Blower Control Module, Wiring Harness Plug And Bolts
Courtesy of GENERAL MOTORS COMPANY

3. Remove the 2 heater and blower and air conditioning control module bolts (1) and the heater and blower and air conditioning control module wiring harness plug (2).
4. Remove heater and blower control module (3).

Installation Procedure

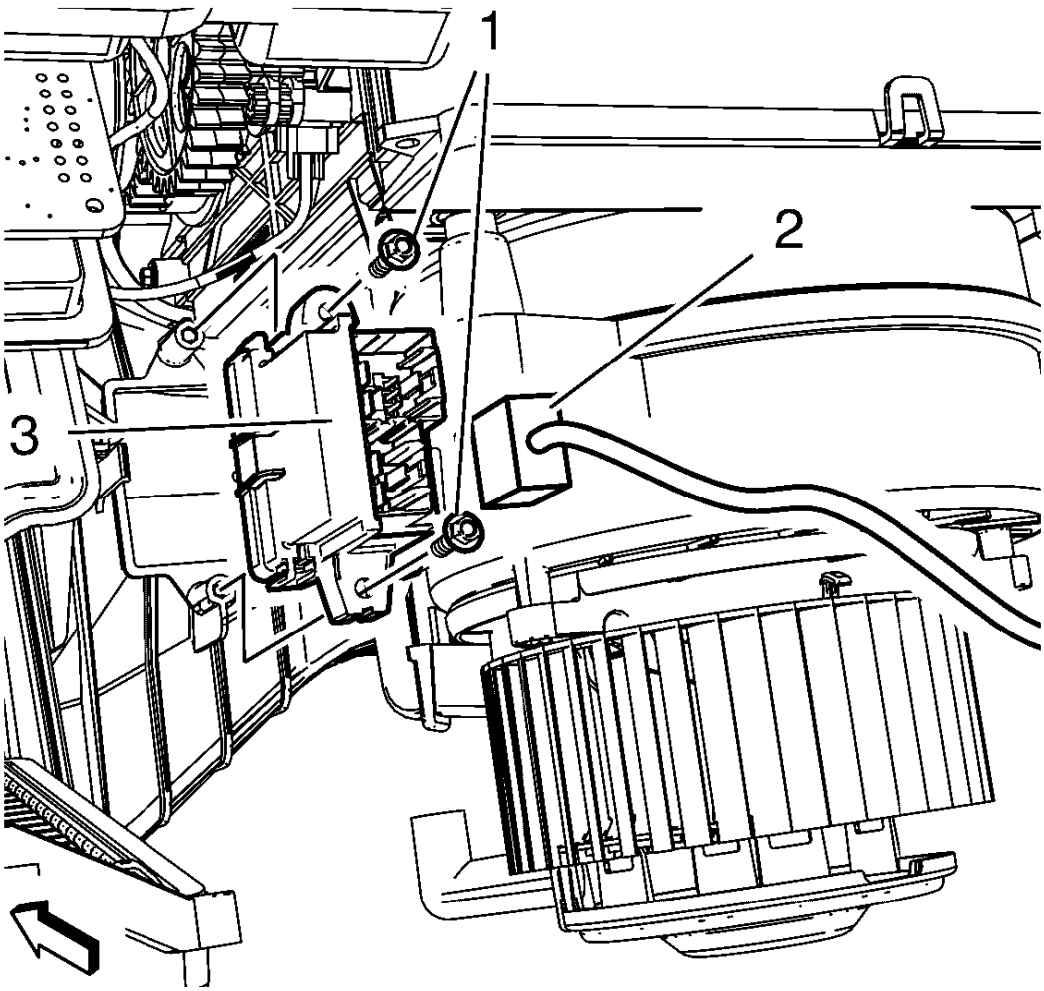

Fig. 6: Heater And Blower Control Module, Wiring Harness Plug And Bolts
Courtesy of GENERAL MOTORS COMPANY

1. Install heater and blower control module (3).

CAUTION: Refer to Fastener Caution .

2. Install the heater and blower and air conditioning control module wiring harness plug (2) and the 2 heater and blower and air conditioning control module bolts (1). Tighten to 2.5 N.m (22 lb in).
3. Install floor air outlet duct right side. Refer to **Floor Air Outlet Duct Replacement - Right Side** .
4. Install instrument panel compartment. Refer to **Instrument Panel Compartment Replacement** .

TEMPERATURE VALVE ACTUATOR REPLACEMENT

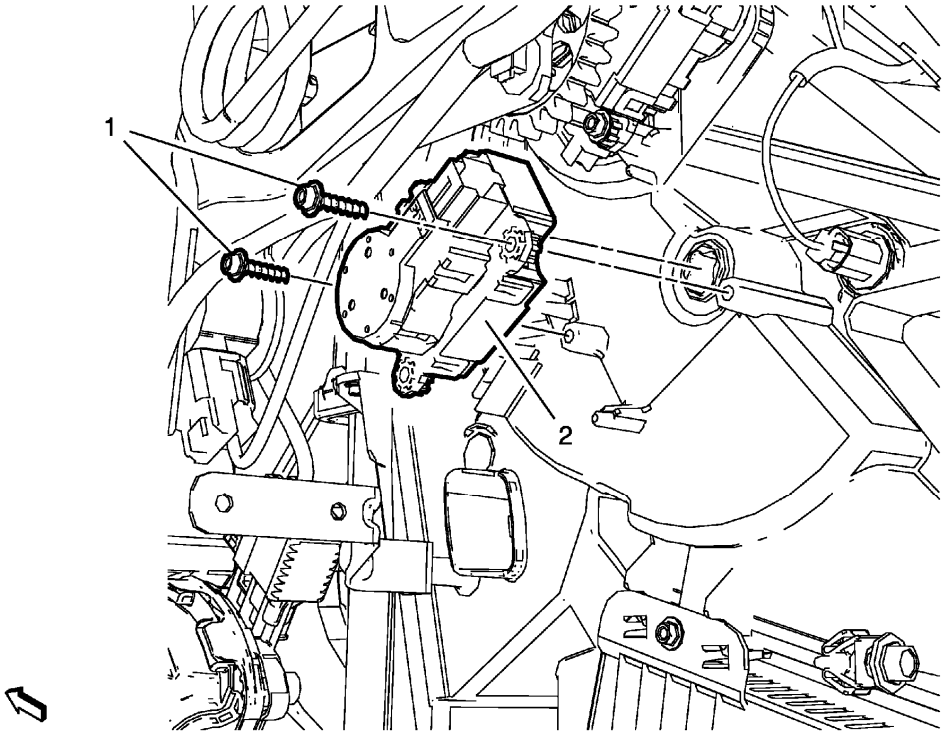

Fig. 7: Temperature Valve Actuator And Bolts
Courtesy of GENERAL MOTORS COMPANY

Temperature Valve Actuator Replacement

Callout	Component Name
Preliminary Procedures 1. Remove instrument outer trim cover - left side. Refer to **Instrument Panel Outer Trim Cover Replacement - Left Side** . 2. Remove instrument panel lower trim pad cover - left side. Refer to **Instrument Panel Lower Trim Panel Replacement - Left Side** . 3. Remove floor air outlet duct - left side. Refer to **Floor Air Outlet Duct Replacement - Left Side** .	
1	Temperature Valve Actuator Bolt (Qty: 2) **CAUTION:** **Refer to Fastener Caution .**
2	Temperature Valve Actuator **Procedure** 1. Disconnect electrical connector. 2. Recalibrate the temperature valve actuator. Refer to **Actuator Recalibration** .

MODE VALVE LEVER REPLACEMENT

Removal Procedure

1. Remove instrument panel assembly. Refer to **Instrument Panel Assembly Replacement** .

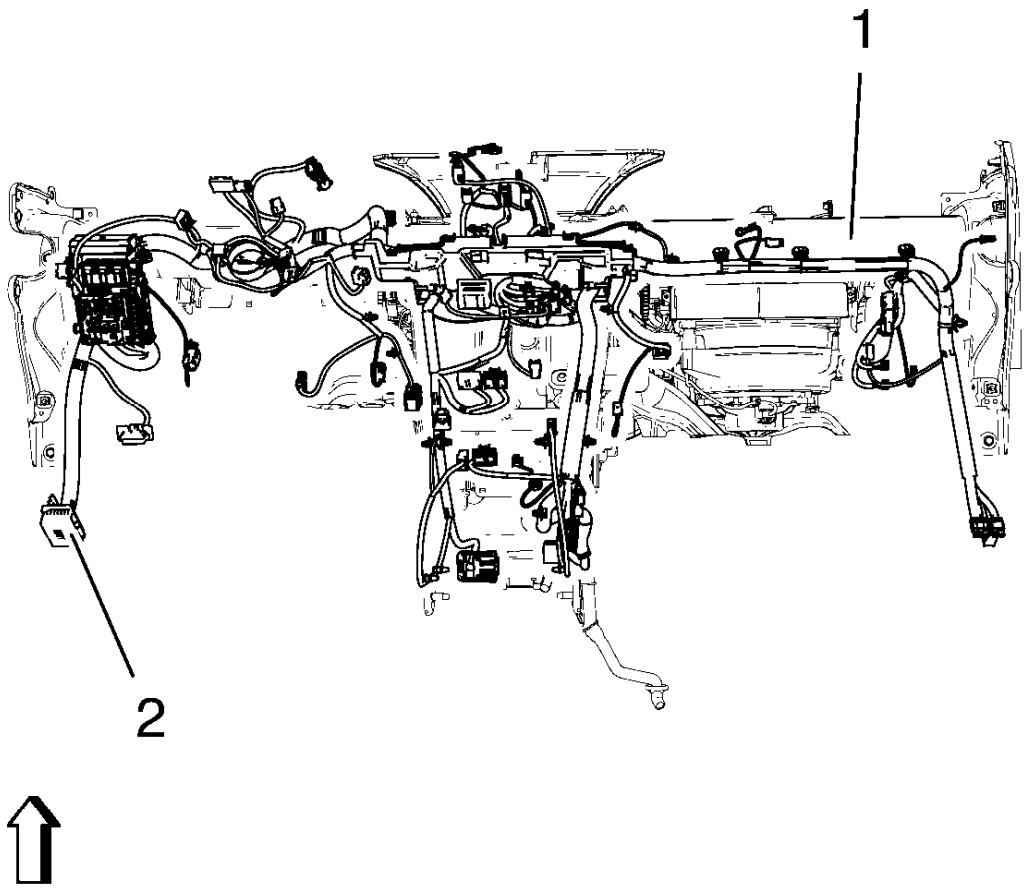

Fig. 8: Instrument Panel Wiring Harness And Instrument Panel Tie Bar
Courtesy of GENERAL MOTORS COMPANY

2. Remove instrument panel wiring harness (2) from instrument panel tie bar (1).

   Disconnect electrical connectors.

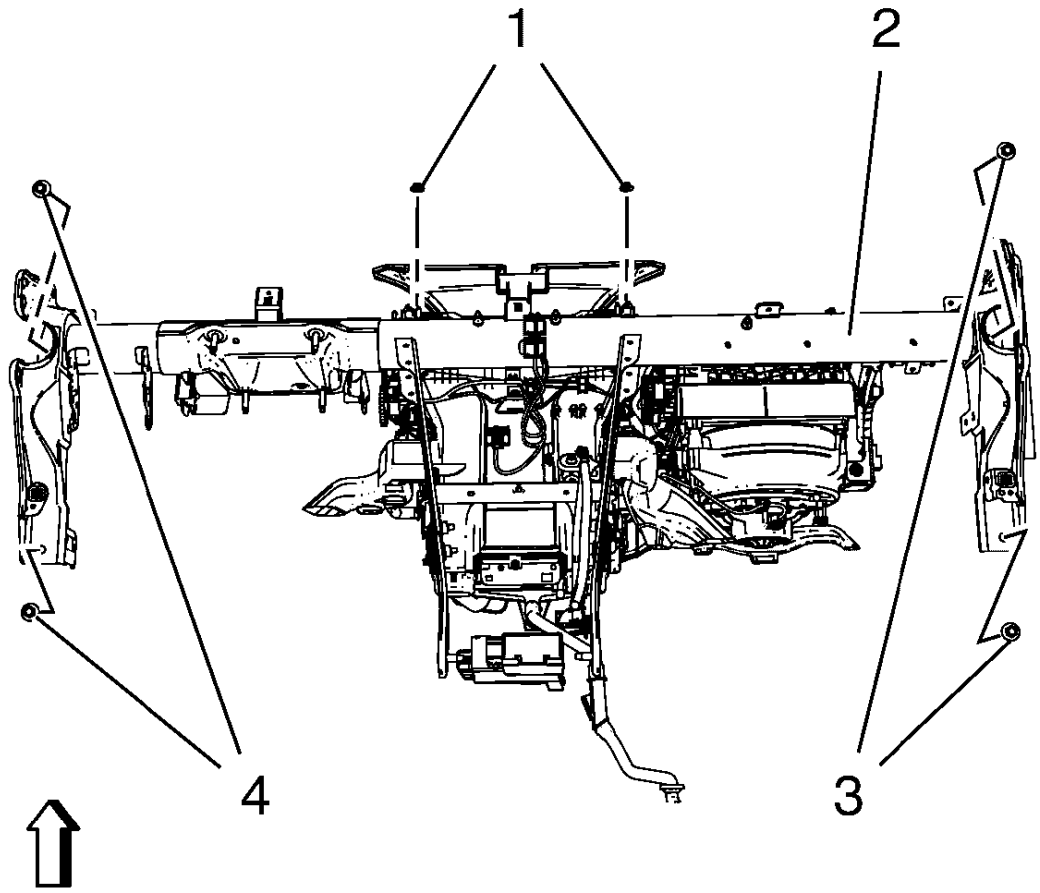

Fig. 9: Instrument Panel Tie Bar, Bolts And Nuts
Courtesy of GENERAL MOTORS COMPANY

3. Remove instrument panel tie bar (2).
    - Remove 4 instrument panel tie bar bolts (3, 4).
    - Remove 2 instrument panel tie bar nuts (1).

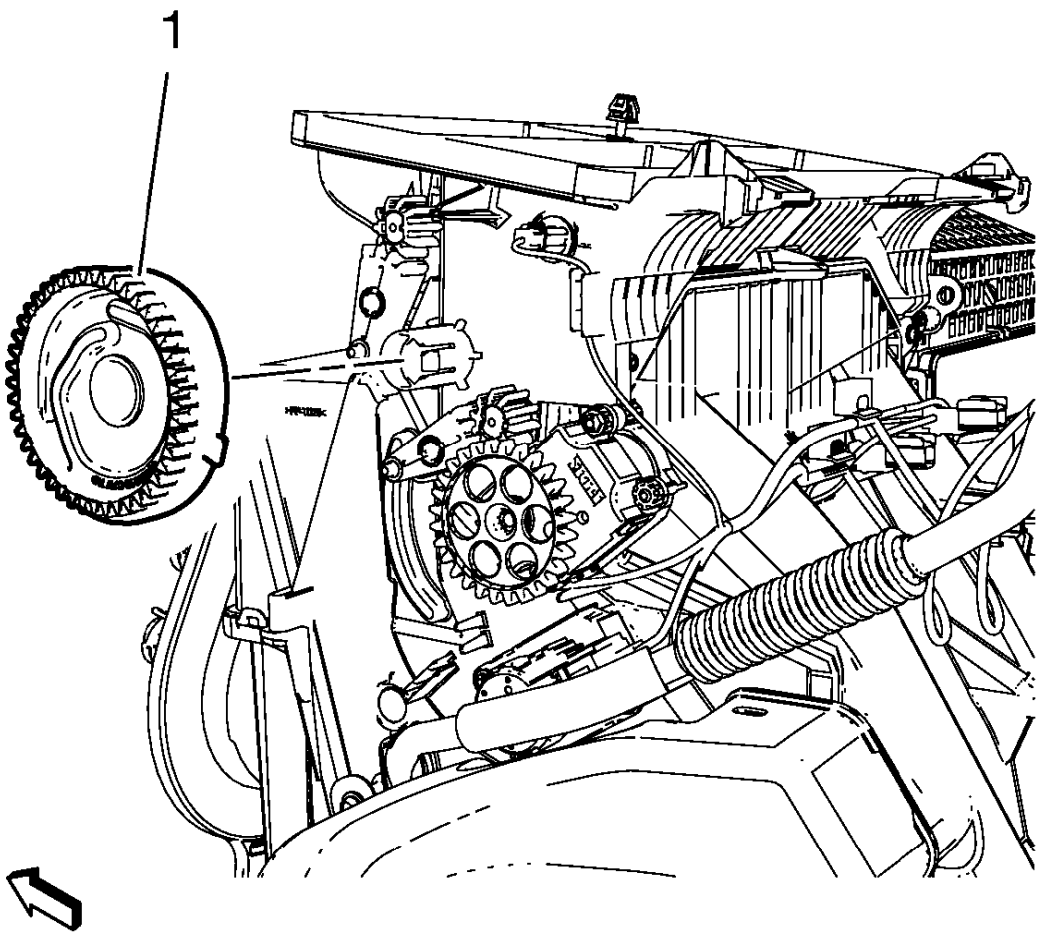

Fig. 10: Mode Control Cam
Courtesy of GENERAL MOTORS COMPANY

4. Remove mode control cam (1).

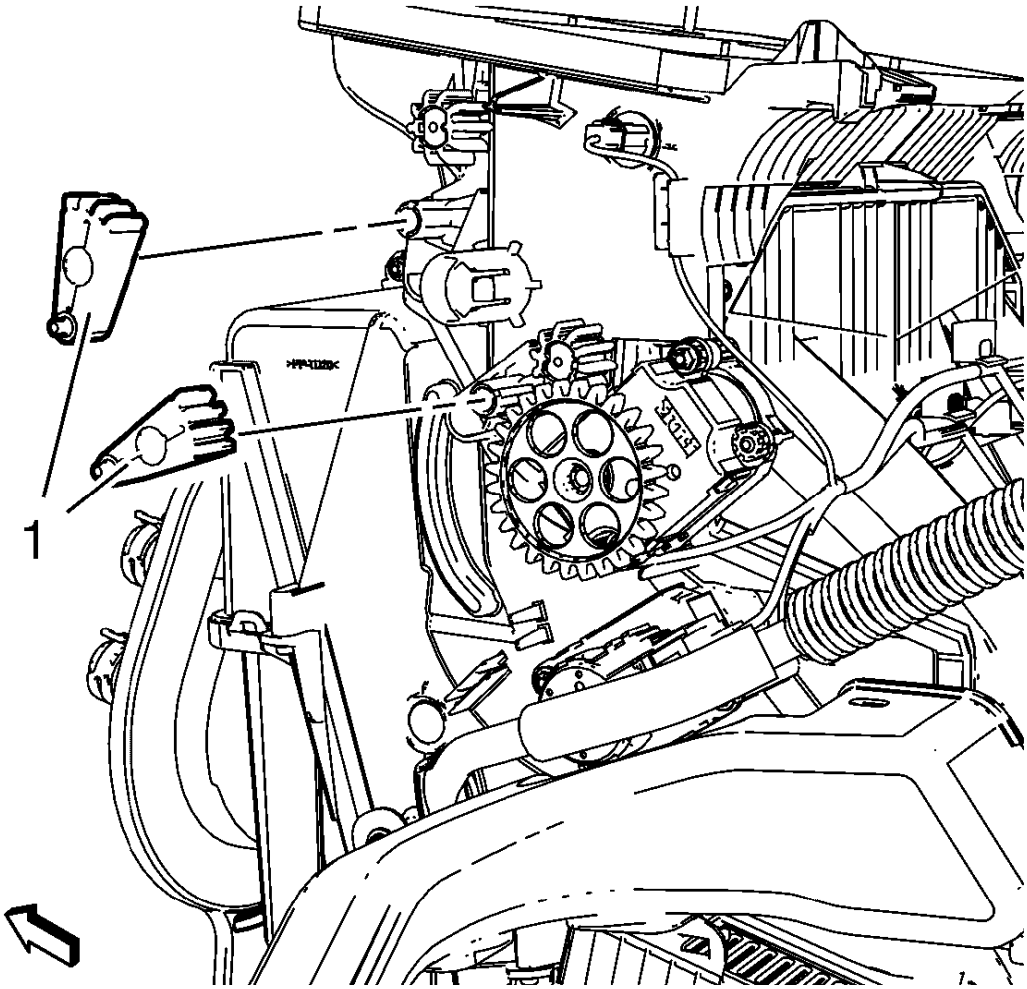

Fig. 11: Mode Valve Lever
Courtesy of GENERAL MOTORS COMPANY

5. Remove 2 mode valve lever (1).

Installation Procedure

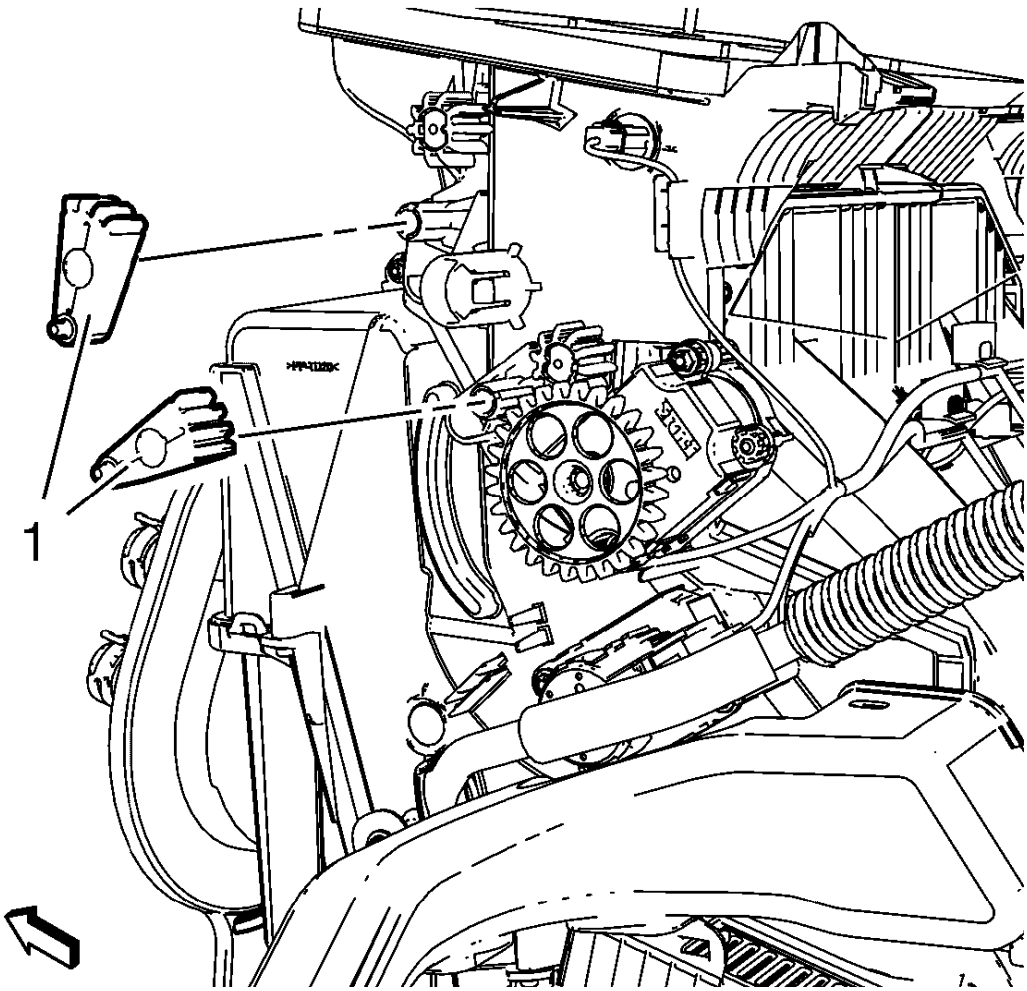

Fig. 12: Mode Valve Lever
Courtesy of GENERAL MOTORS COMPANY

1. Remove 2 mode valve lever (1).

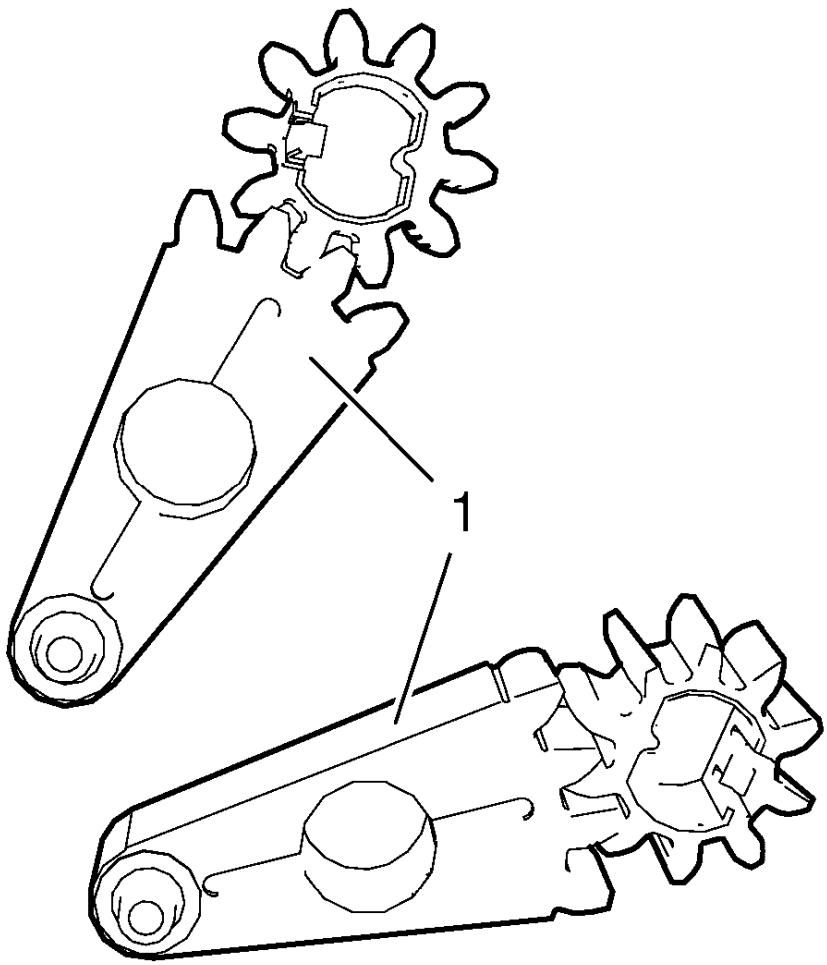

Fig. 13: Mode Valve Levers
Courtesy of GENERAL MOTORS COMPANY

NOTE: The mode valve levers have to be fitted to the according mode valve gears in figured position. The ventilation dampers have to be in middle position.

2. Make sure that mode valve gears of mode valve levers (1) are fitted as shown in graphic above.

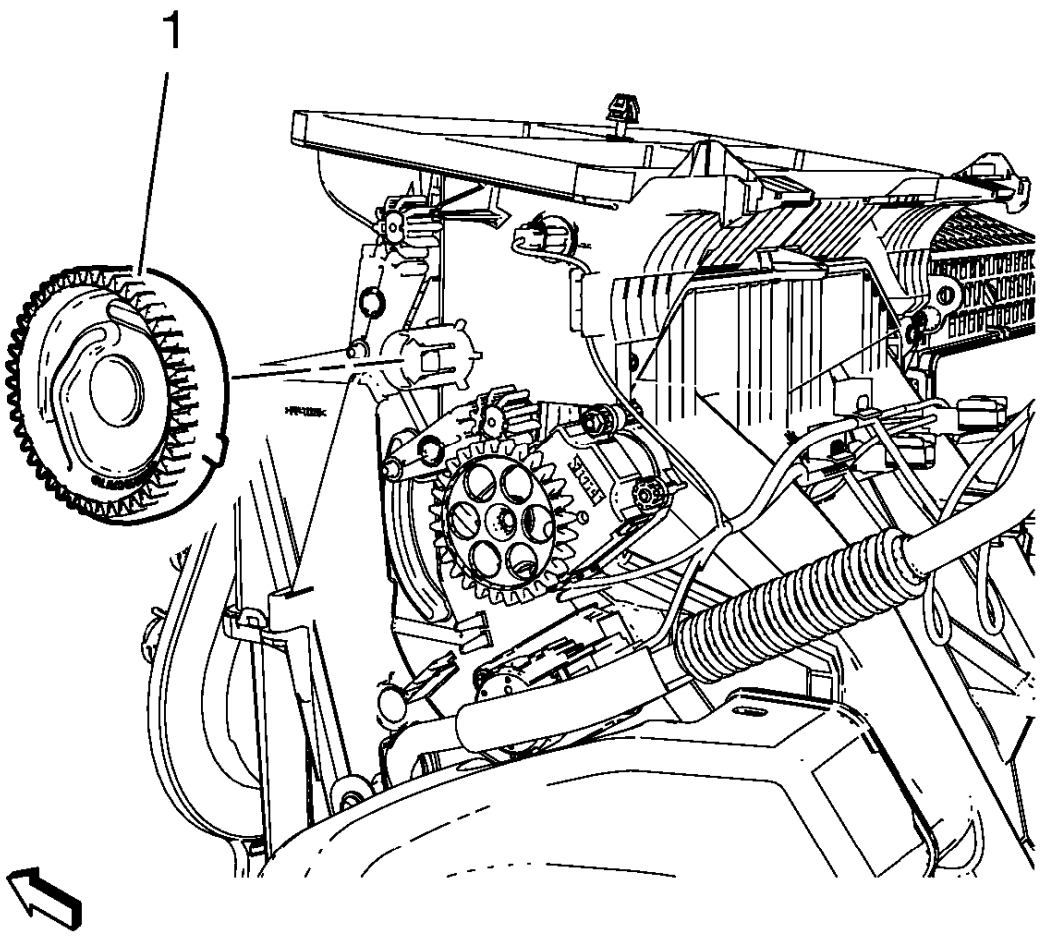

Fig. 14: Mode Control Cam
Courtesy of GENERAL MOTORS COMPANY

NOTE: The mode control cam can only be fitted in one position.

3. Install mode control cam (1).

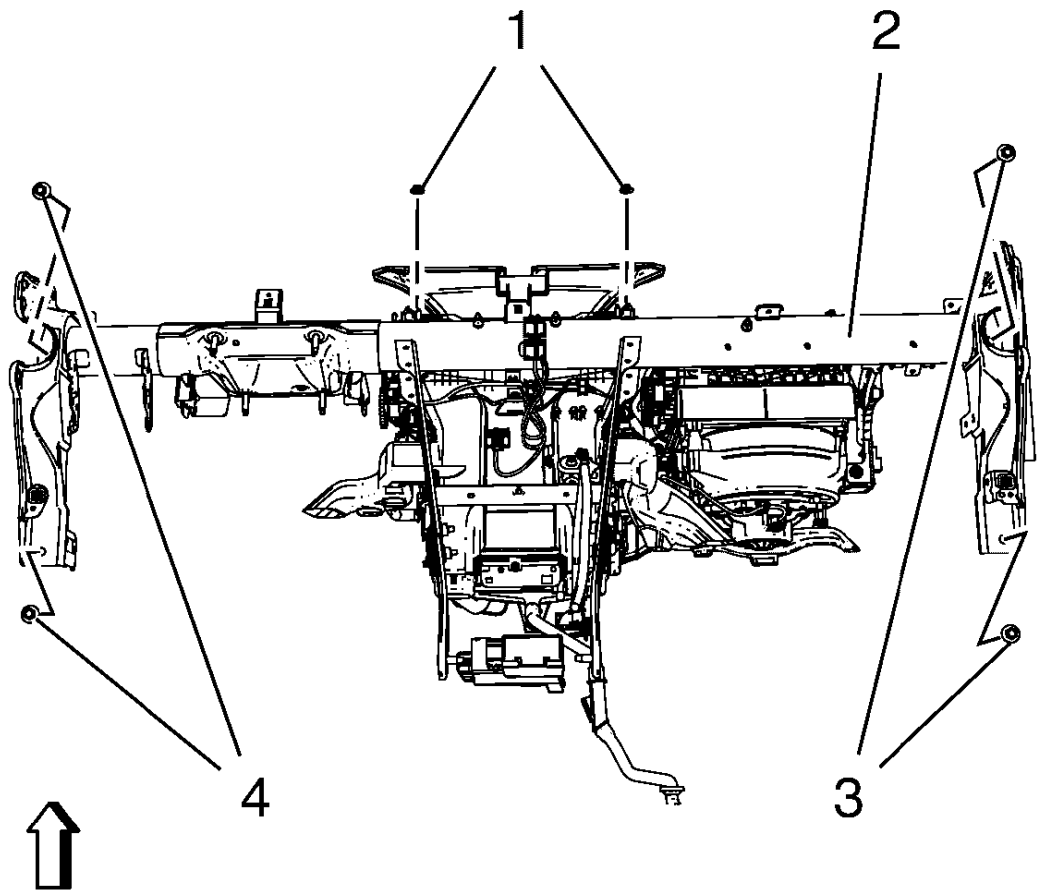

Fig. 15: Instrument Panel Tie Bar, Bolts And Nuts
Courtesy of GENERAL MOTORS COMPANY

CAUTION: Refer to Fastener Caution .

4. Install instrument panel tie bar (2).
    - Install 4 instrument panel tie bar bolts (3, 4) and tighten to 22 N.m (17 lb ft).
    - Install 2 instrument panel tie bar nuts (1) and tighten to 9 N.m (80 lb in).

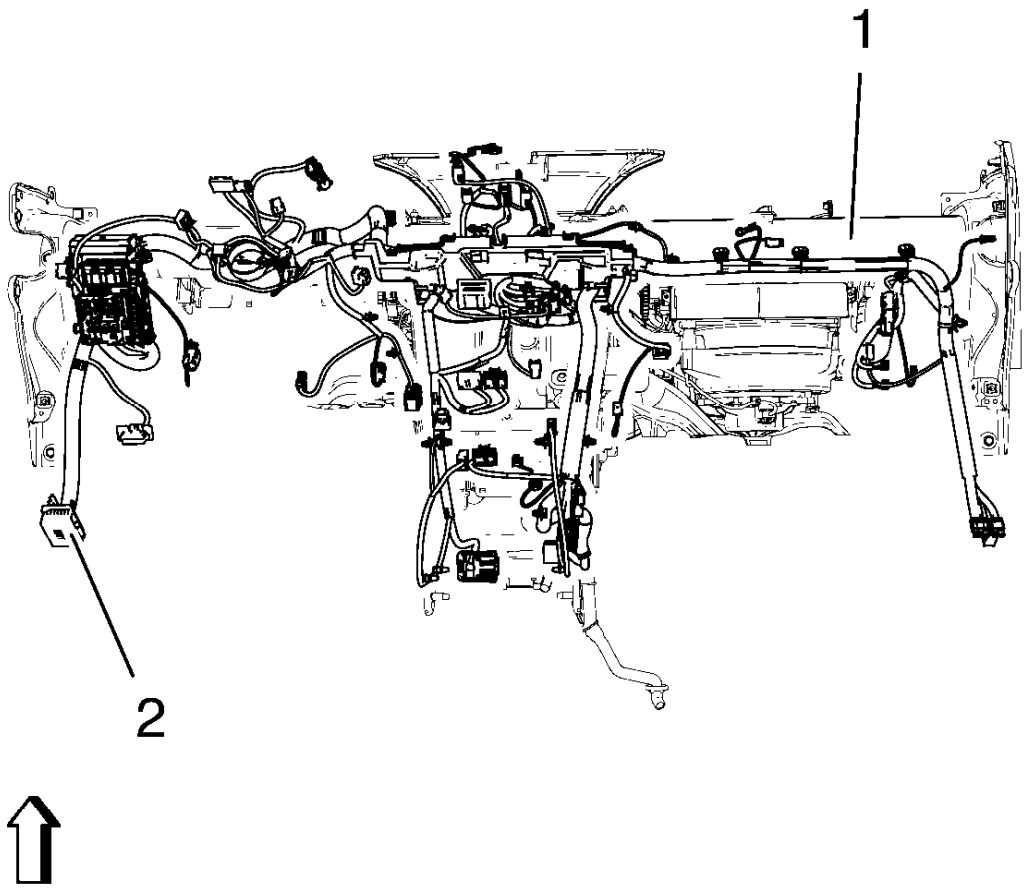

Fig. 16: Instrument Panel Wiring Harness And Instrument Panel Tie Bar
Courtesy of GENERAL MOTORS COMPANY

5. Install instrument panel wiring harness (2) from instrument panel tie bar (1).

   Connect electrical connectors.

6. Install instrument panel assembly. Refer to **Instrument Panel Assembly Replacement** .

VENT VALVE LEVER REPLACEMENT

Removal Procedure

1. Remove instrument panel assembly. Refer to **Instrument Panel Assembly Replacement** .

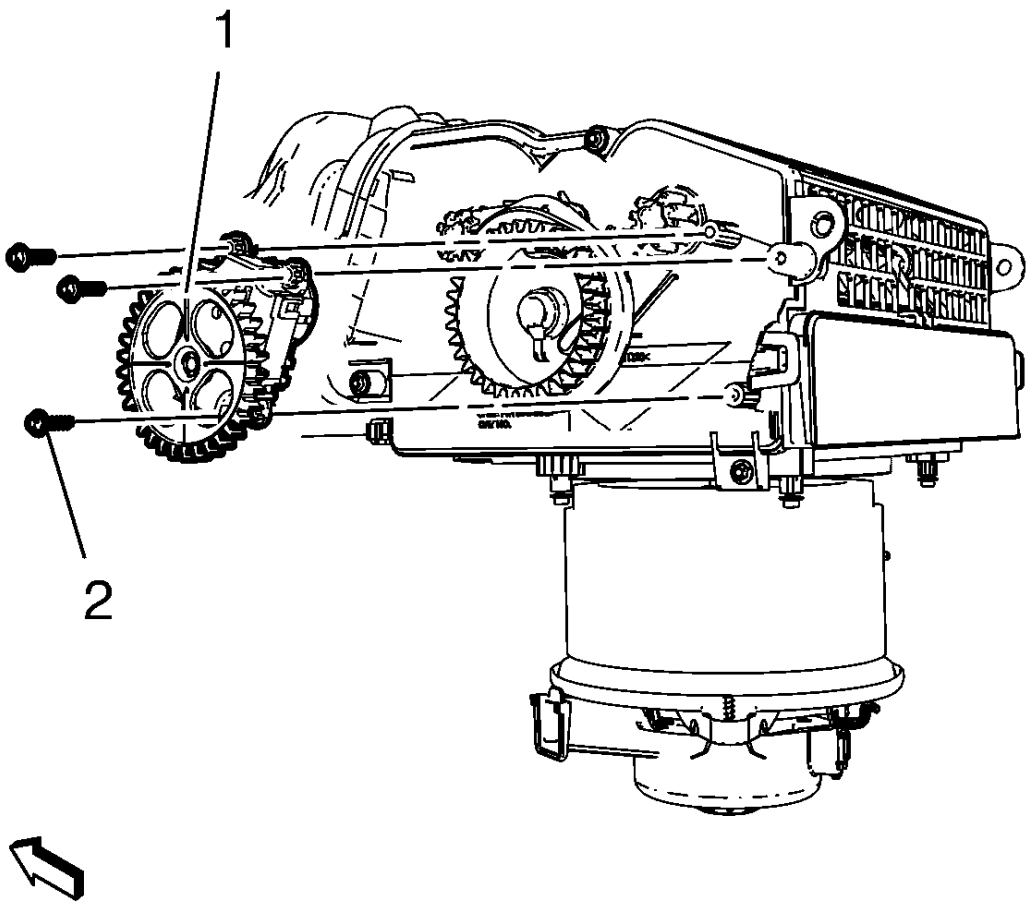

Fig. 17: Mode Control Cam Actuator
Courtesy of GENERAL MOTORS COMPANY

2. Disconnect electrical connector and remove 3 mode control cam actuator screws (2) and remove mode control cam actuator (1).

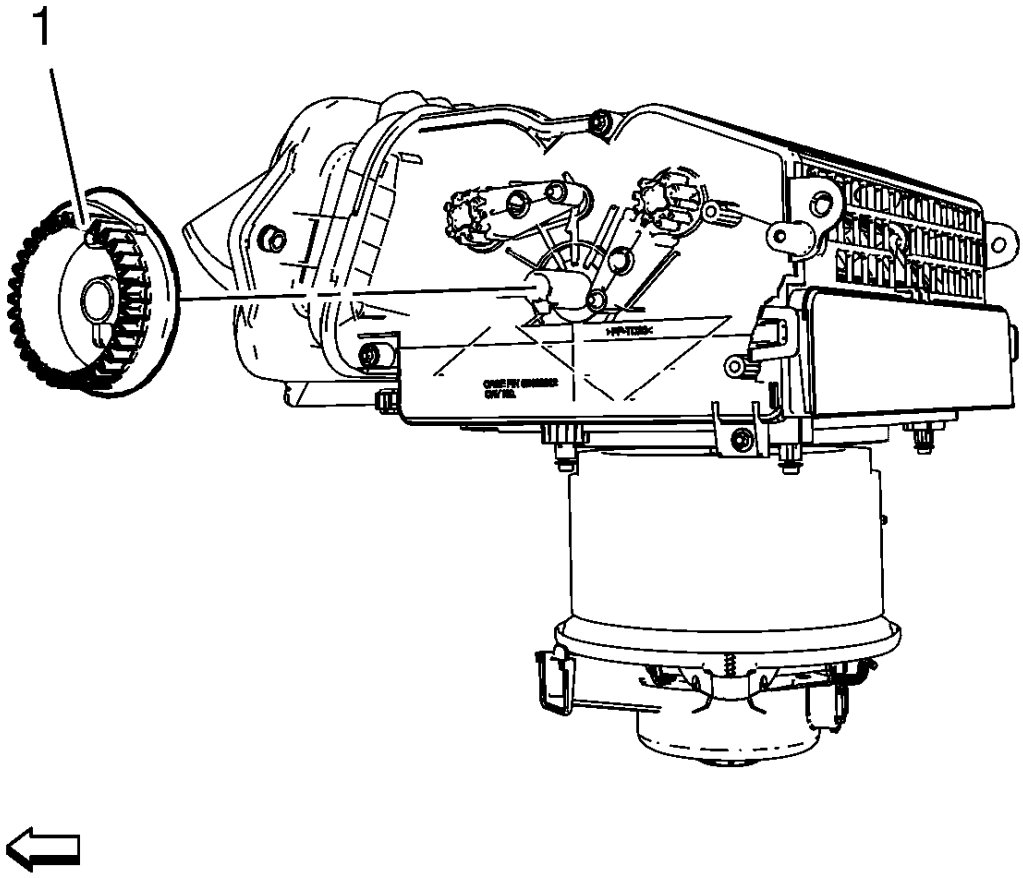

Fig. 18: Inside Air Valve Control Cam
Courtesy of GENERAL MOTORS COMPANY

NOTE: The graphic shows air inlet housing without attaching parts for better clarity.

3. Remove air inlet valve and inside air valve control cam (1).

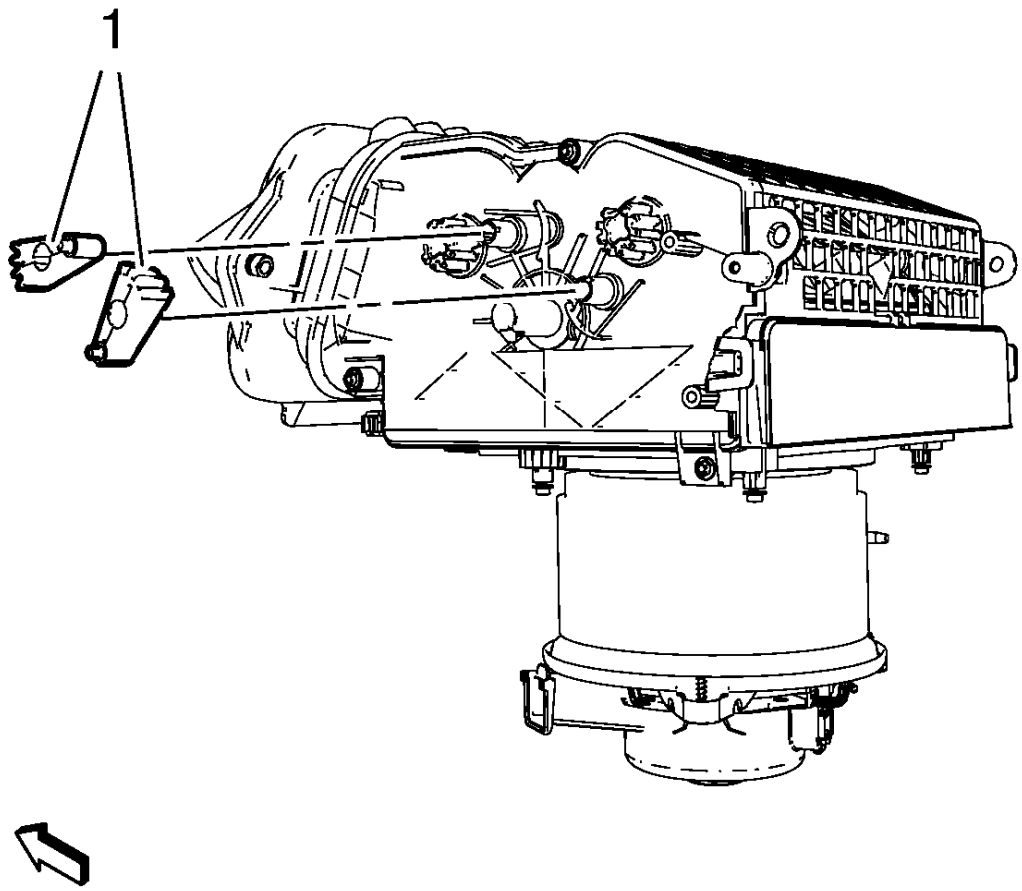

Fig. 19: Vent Valve Levers
Courtesy of GENERAL MOTORS COMPANY

4. Remove 2 vent valve levers (1).

Installation Procedure

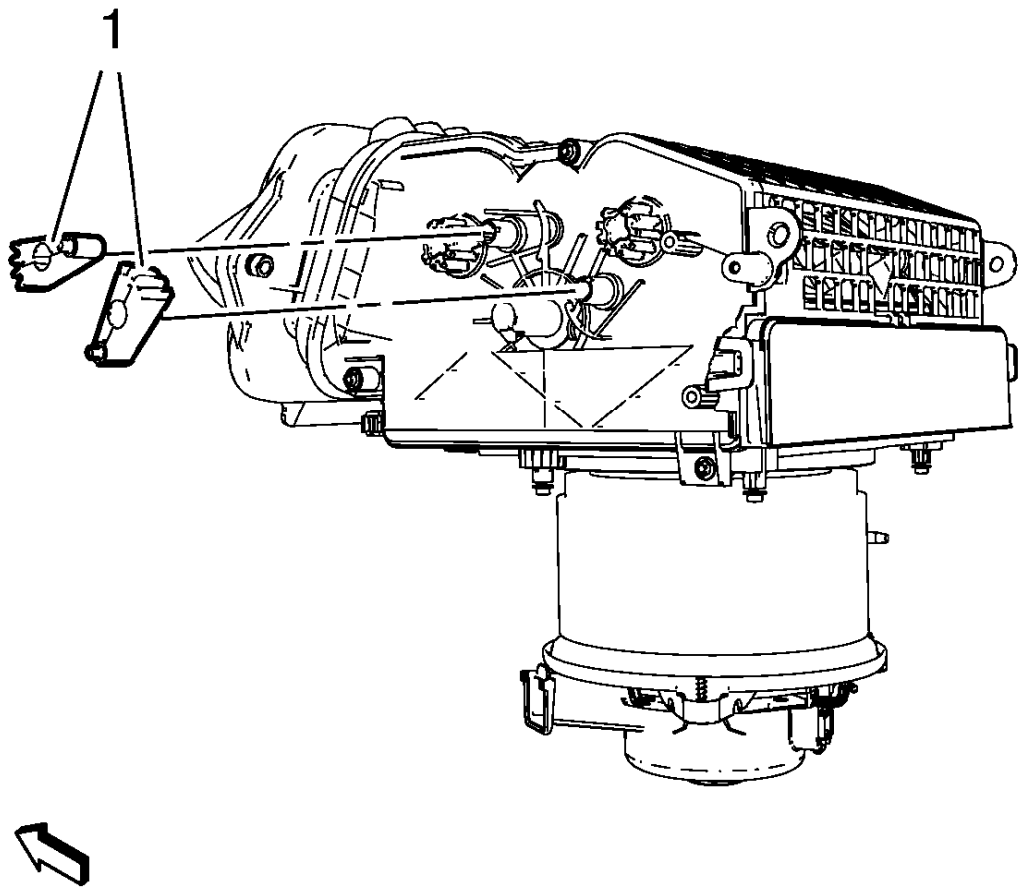

Fig. 20: Vent Valve Levers
Courtesy of GENERAL MOTORS COMPANY

1. Install 2 vent valve levers (1).

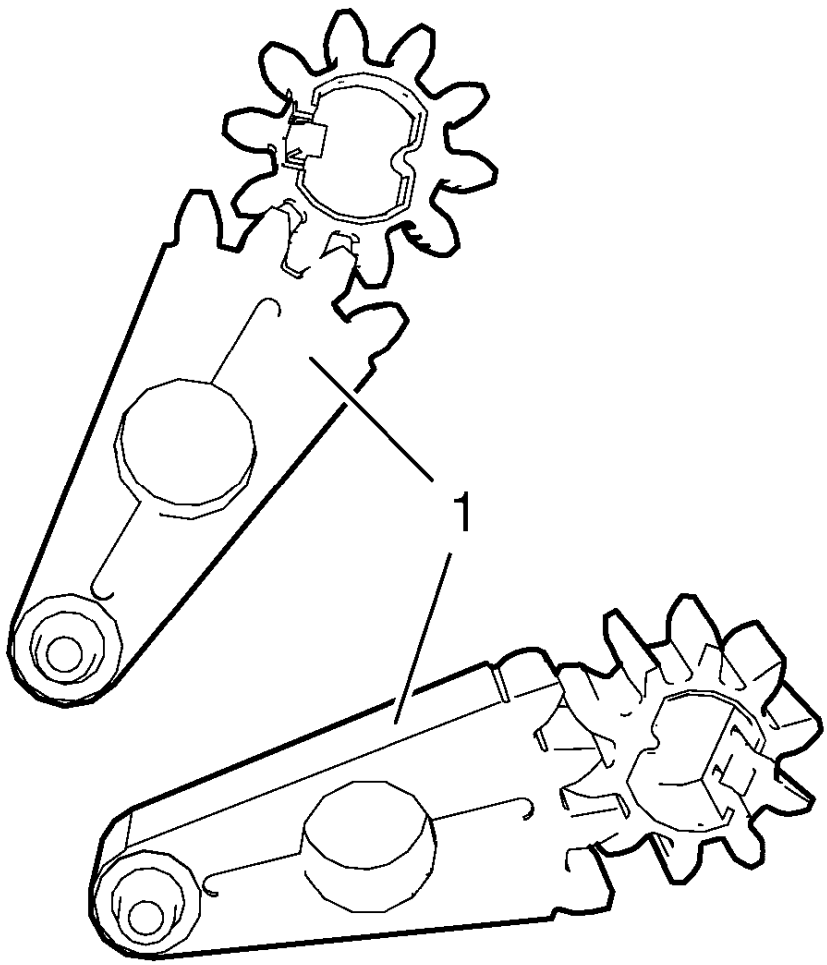

Fig. 21: Mode Valve Levers
Courtesy of GENERAL MOTORS COMPANY

NOTE: The vent valve levers have to be fitted to the according vent valve gears in figured position. The air circulation dampers have to be in middle position.

2. Make sure that mode valve gears of vent valve levers (1) are fitted as shown in graphic above.

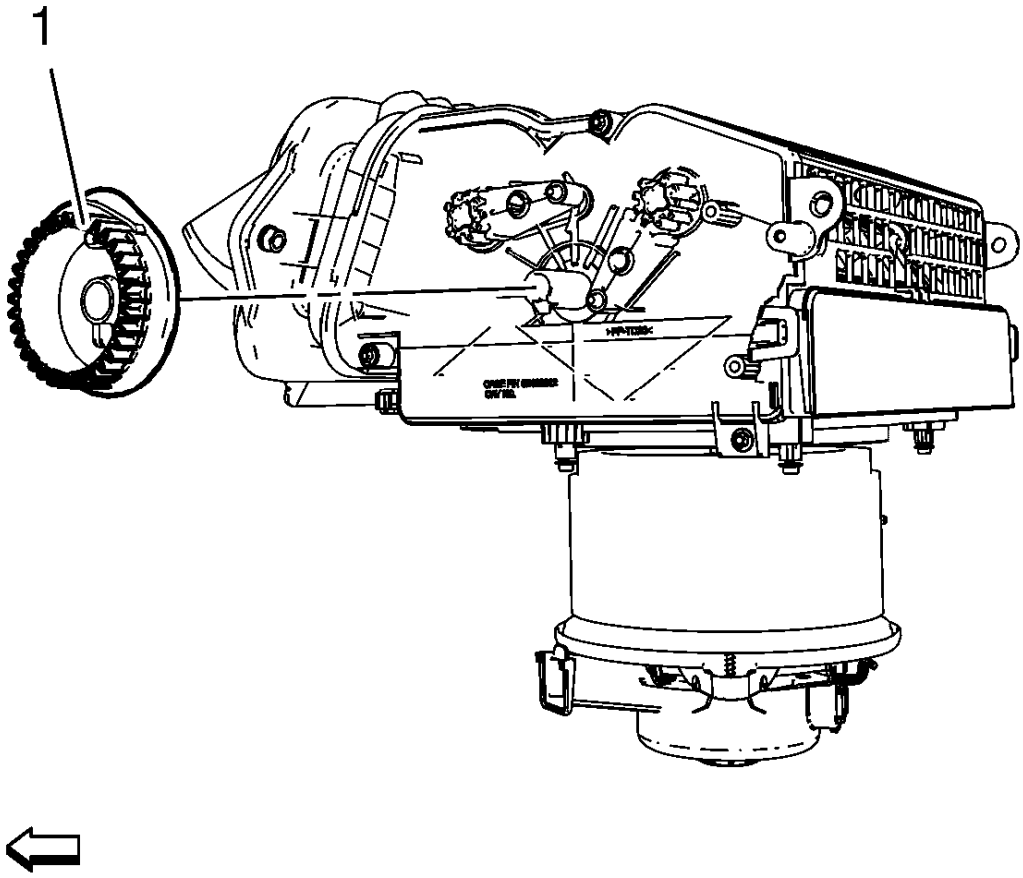

Fig. 22: Inside Air Valve Control Cam
Courtesy of GENERAL MOTORS COMPANY

NOTE: The air inlet valve and inside air valve control cam can only be fitted in one position.

3. Install air inlet valve and inside air valve control cam (1).

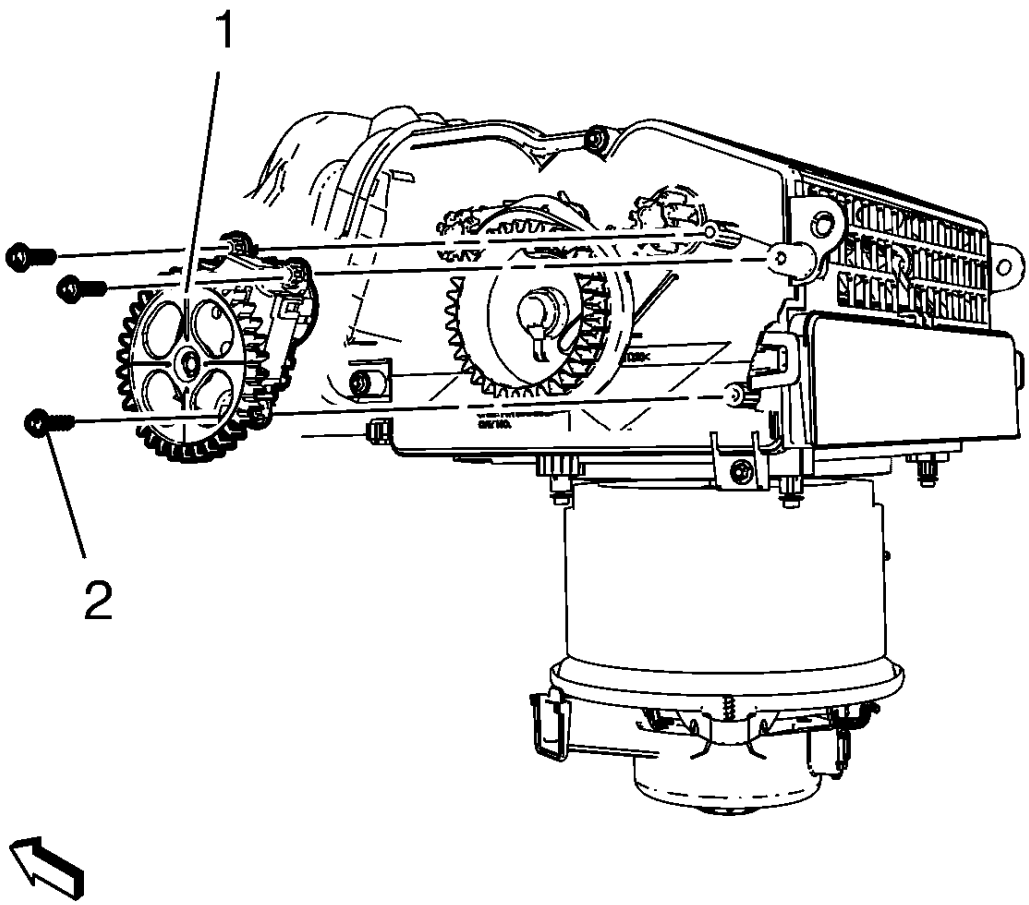

Fig. 23: Mode Control Cam Actuator
Courtesy of GENERAL MOTORS COMPANY

CAUTION: Refer to Fastener Caution .

4. Install mode control cam actuator (1) and Install 3 mode control cam actuator screws (2) and connect electrical connector.

   Tighten

   2.5 N.m (23 lb in)

5. Install instrument panel assembly. Refer to **Instrument Panel Assembly Replacement** .

MODE VALVE GEAR REPLACEMENT

Removal Procedure

1. Remove instrument panel assembly. Refer to **Instrument Panel Assembly Replacement** .

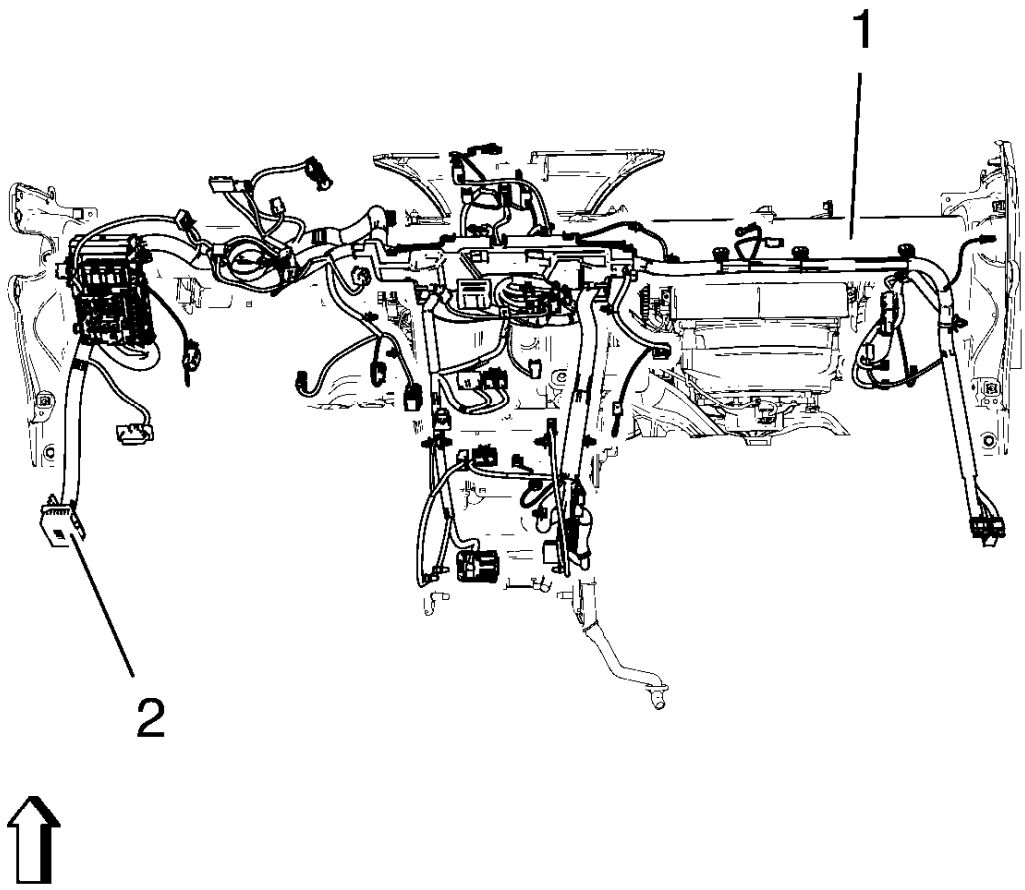

Fig. 24: Instrument Panel Wiring Harness And Instrument Panel Tie Bar
Courtesy of GENERAL MOTORS COMPANY

2. Remove instrument panel wiring harness (2) from instrument panel tie bar (1).

   Disconnect electrical connectors.

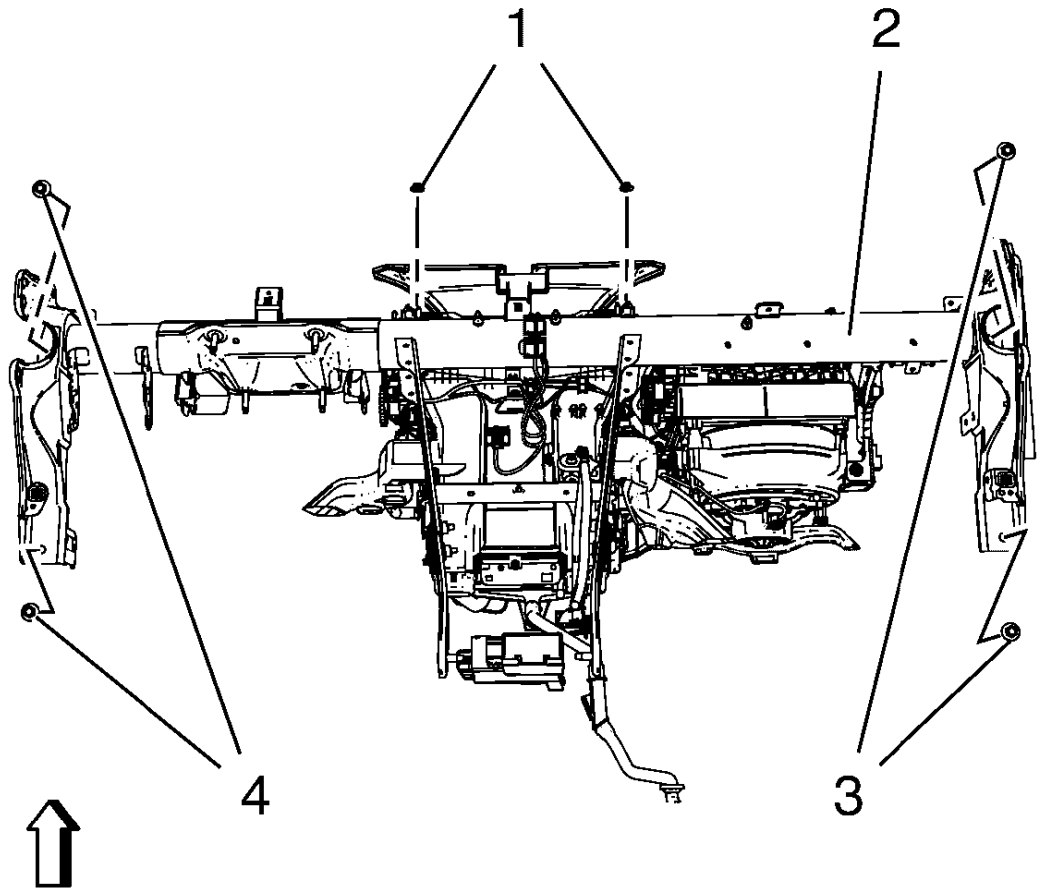

Fig. 25: Instrument Panel Tie Bar, Bolts And Nuts
Courtesy of GENERAL MOTORS COMPANY

3. Remove instrument panel tie bar (2).
    - Remove 4 instrument panel tie bar bolts (3, 4).
    - Remove 2 instrument panel tie bar nuts (1).

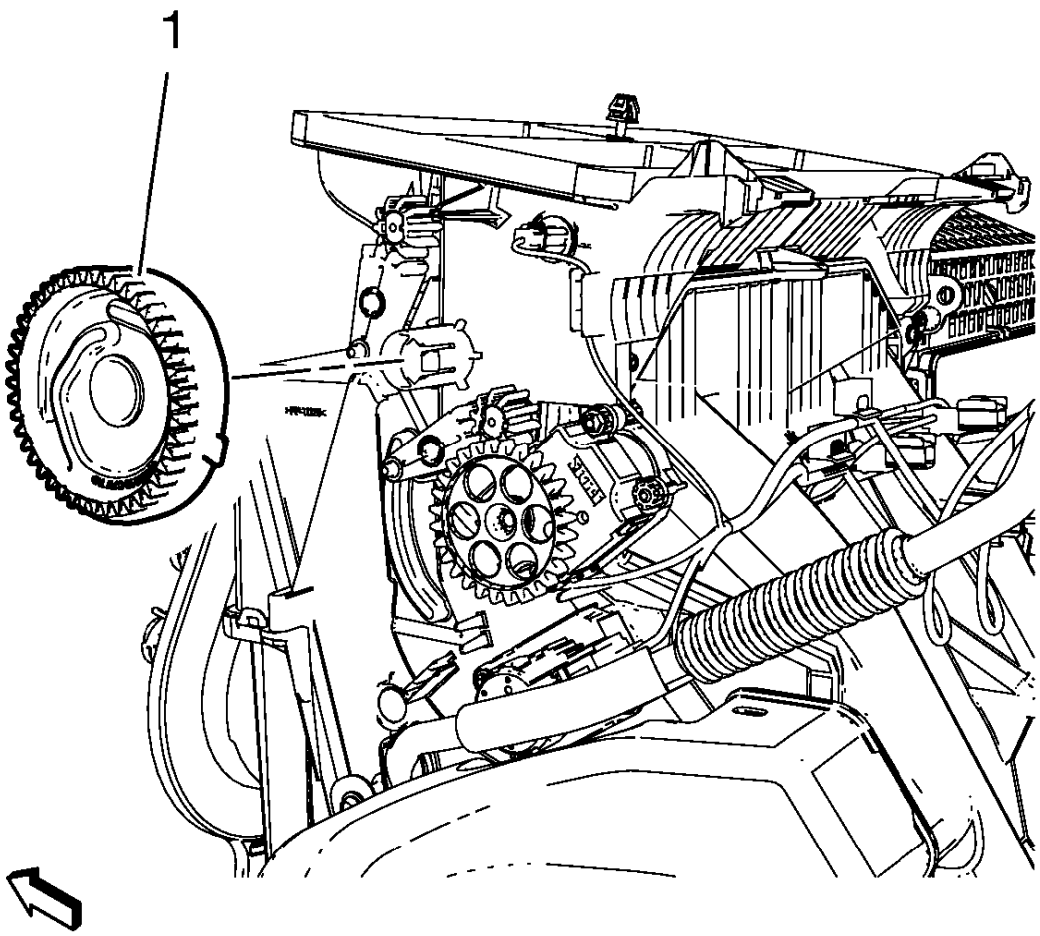

Fig. 26: Mode Control Cam
Courtesy of GENERAL MOTORS COMPANY

4. Remove mode control cam (1).

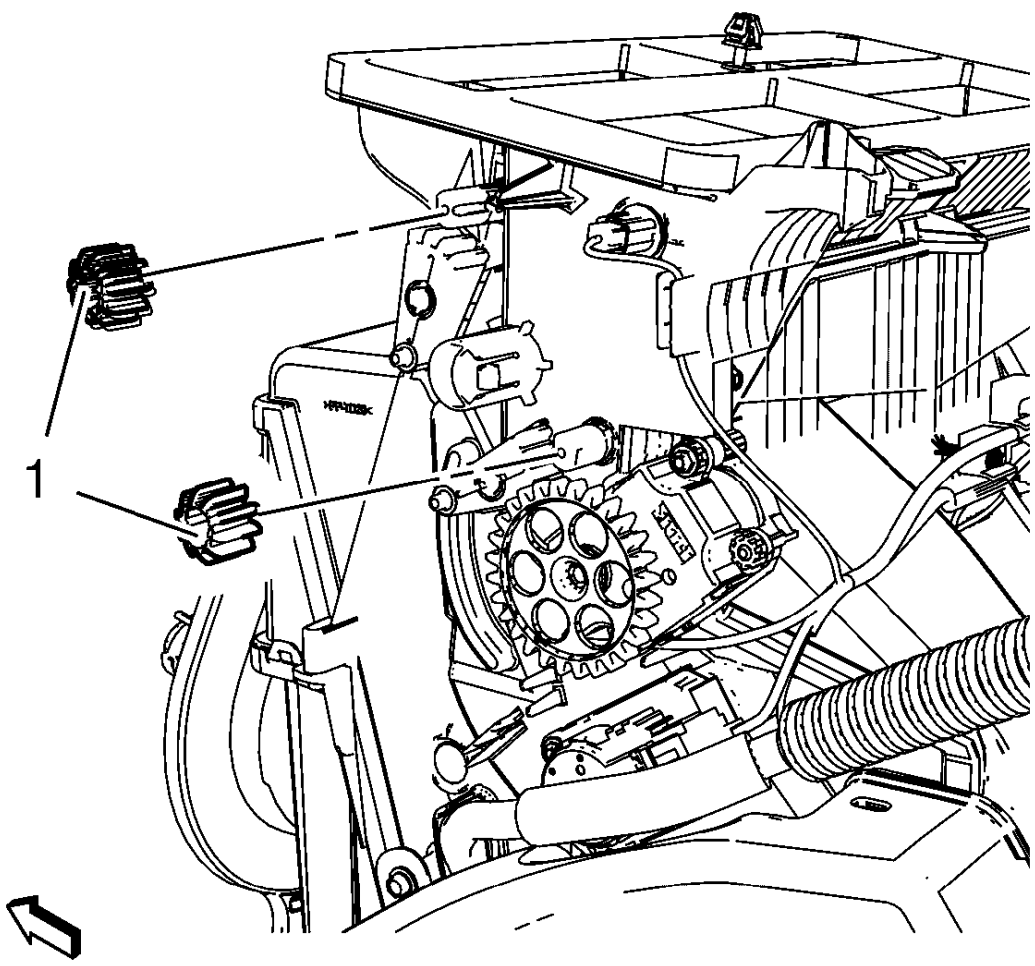

Fig. 27: Mode Valve Gear
Courtesy of GENERAL MOTORS COMPANY

5. Remove 2 mode valve gear (1).

Installation Procedure

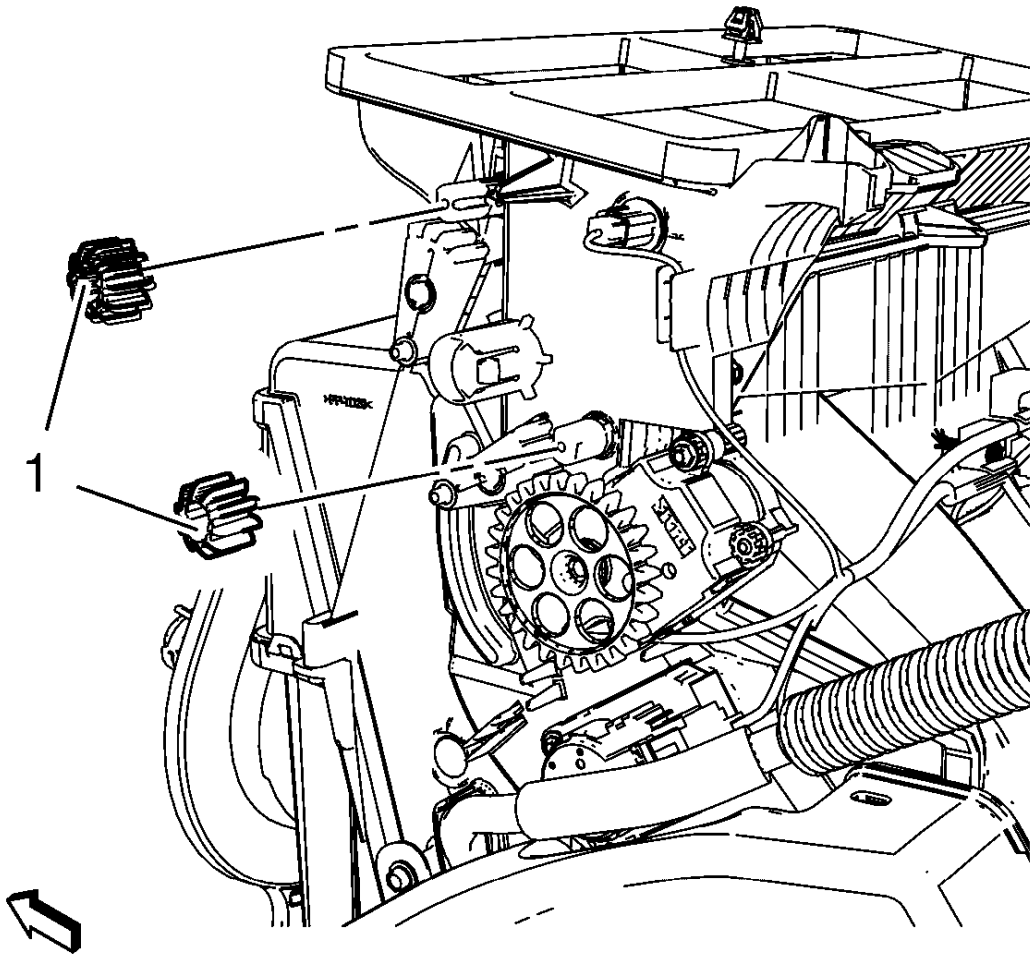

Fig. 28: Mode Valve Gear
Courtesy of GENERAL MOTORS COMPANY

1. Install 2 mode valve gear (1).

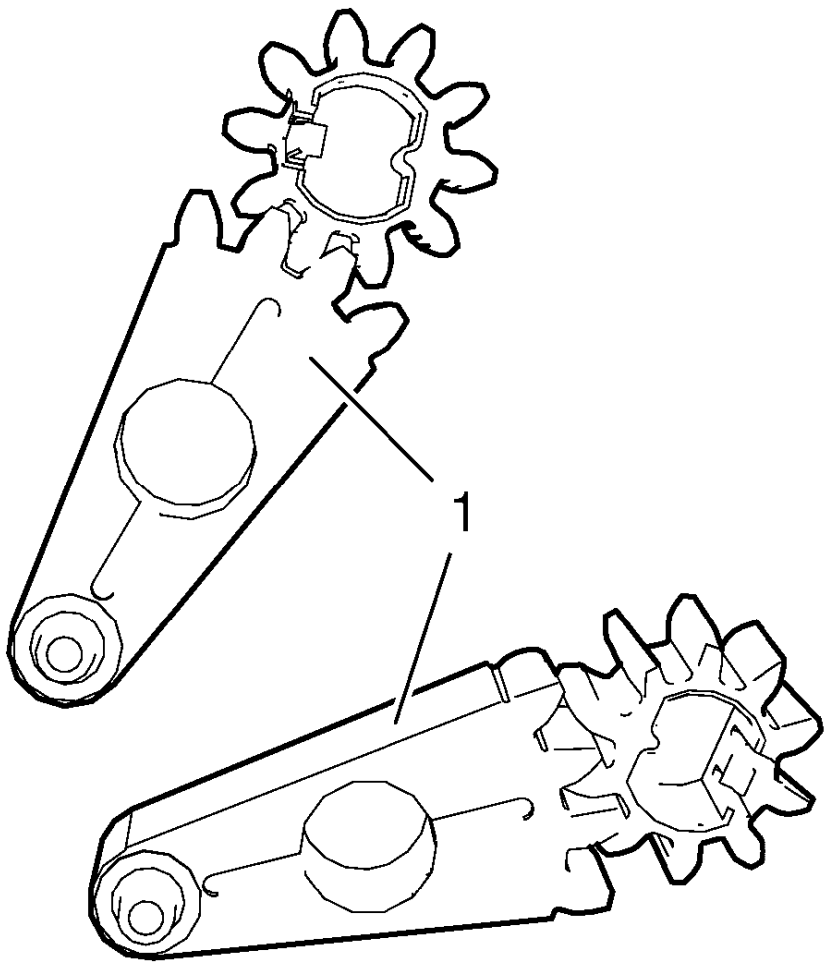

Fig. 29: Mode Valve Levers
Courtesy of GENERAL MOTORS COMPANY

NOTE: The mode valve gear can only be fitted in one position. The mode valve gears have to be fitted to the according mode valve levers in figured position. The ventilation dampers have to be in middle position.

2. Make sure that mode valve gears of mode valve levers (1) are fitted as shown in graphic above.

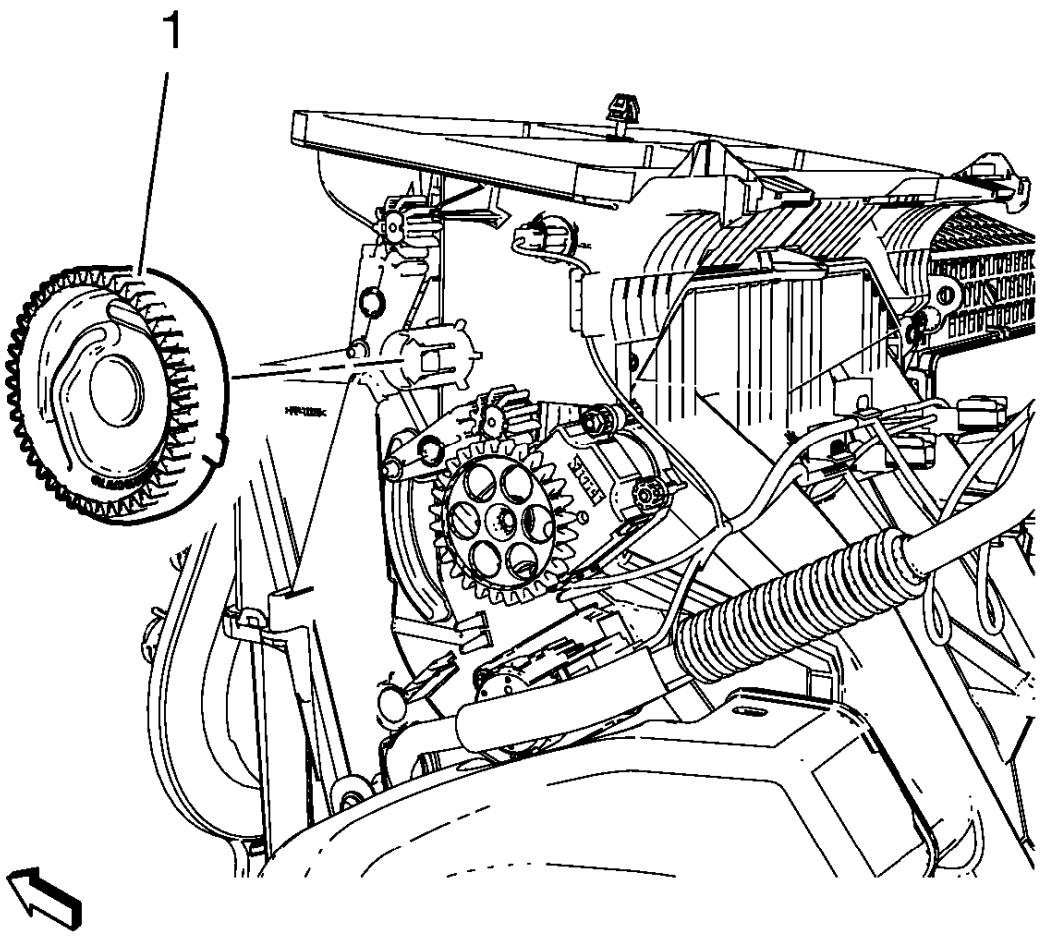

Fig. 30: Mode Control Cam
Courtesy of GENERAL MOTORS COMPANY

NOTE: The mode control cam can only be fitted in one position.

3. Install mode control cam (1).

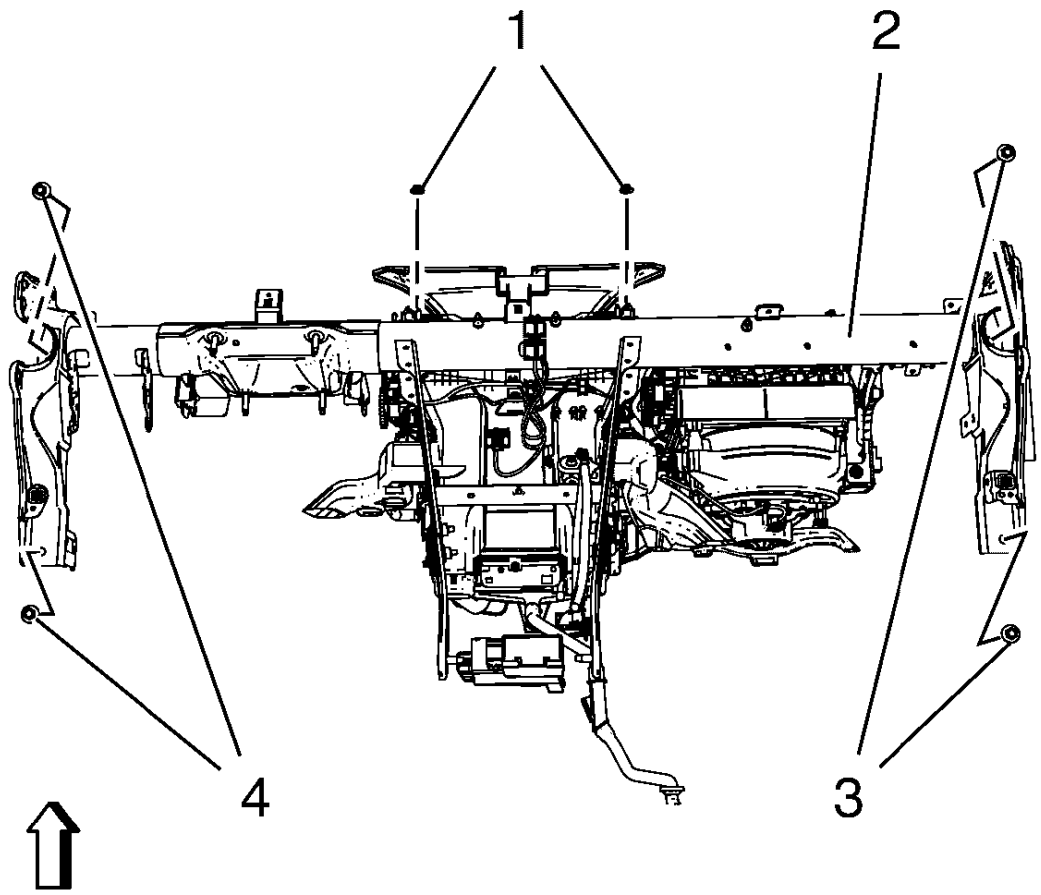

Fig. 31: Instrument Panel Tie Bar, Bolts And Nuts
Courtesy of GENERAL MOTORS COMPANY

CAUTION: Refer to Fastener Caution .

4. Install instrument panel tie bar (2).
   - Install 4 instrument panel tie bar bolts (3, 4) and tighten to 22 N.m (17 lb ft).
   - Install 2 instrument panel tie bar nuts (1) and tighten to 9 N.m (80 lb in).

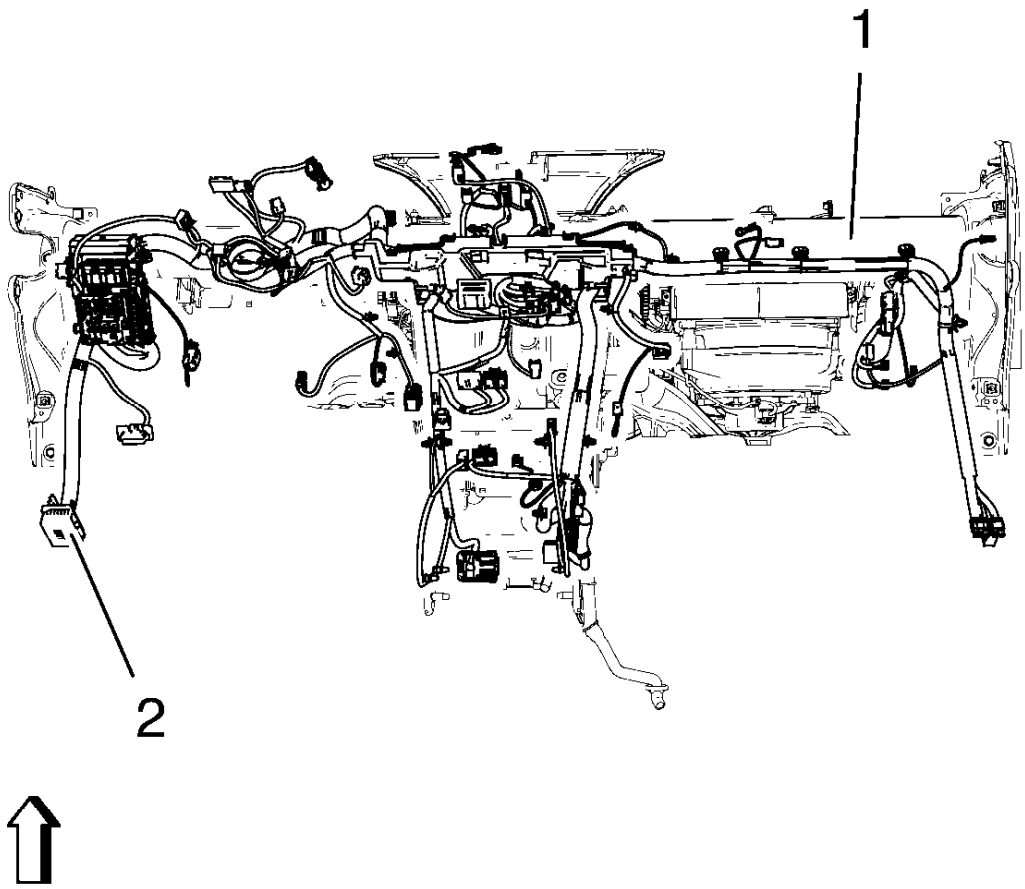

Fig. 32: Instrument Panel Wiring Harness And Instrument Panel Tie Bar
Courtesy of GENERAL MOTORS COMPANY

5. Install instrument panel wiring harness (2) from instrument panel tie bar (1).

   Connect electrical connectors.

6. Install instrument panel assembly. Refer to **Instrument Panel Assembly Replacement** .

AIR INLET VALVE ACTUATOR GEAR REPLACEMENT

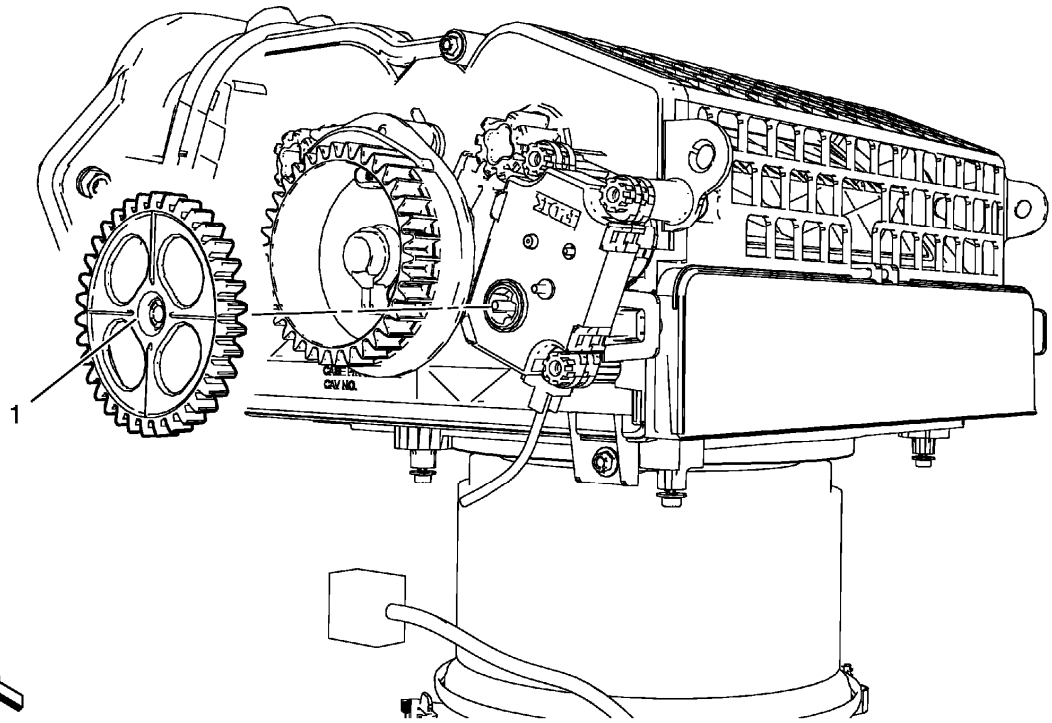

Fig. 33: Air Inlet Valve Actuator Gear (Left Hand Drive)
Courtesy of GENERAL MOTORS COMPANY

Air Inlet Valve Actuator Gear Replacement

Callout	Component Name
Preliminary Procedure Remove instrument panel compartment assembly. Refer to **Instrument Panel Compartment Replacement** .	
1	Air Inlet Valve Actuator Gear **Procedure** Pull air inlet valve actuator gear from air inlet valve actuator.

AIR INLET VALVE ACTUATOR REPLACEMENT

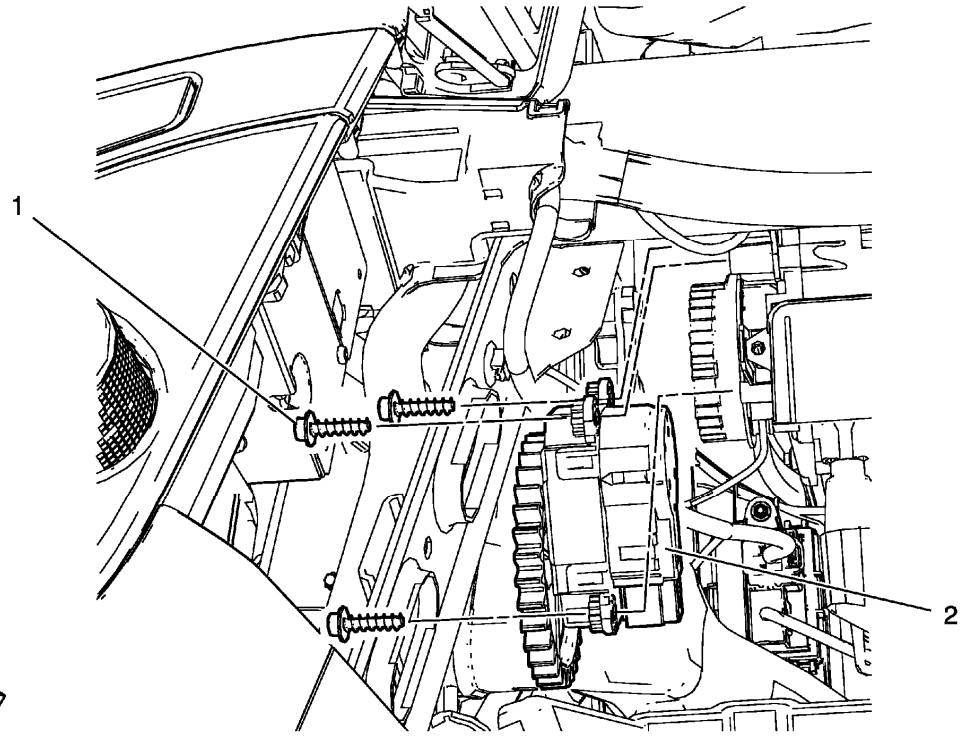

Fig. 34: Air Inlet Valve Actuator And Bolts
Courtesy of GENERAL MOTORS COMPANY

Air Inlet Valve Actuator Replacement

Callout	Component Name
Preliminary Procedures Remove the instrument panel compartment. Refer to **Instrument Panel Compartment Replacement** .	
1	Air Inlet Valve Actuator Bolt (Qty: 3) **CAUTION:** **Refer to Fastener Caution .**
2	Air Inlet Valve Actuator **Procedure** 1. Disconnect electrical connector. 2. Recalibrate the air inlet valve actuator. Refer to **Actuator Recalibration** .

AIR INLET VALVE AND INSIDE AIR VALVE CONTROL CAM REPLACEMENT

Removal Procedure

1. Remove instrument panel compartment assembly. Refer to **Instrument Panel Compartment Replacement** .

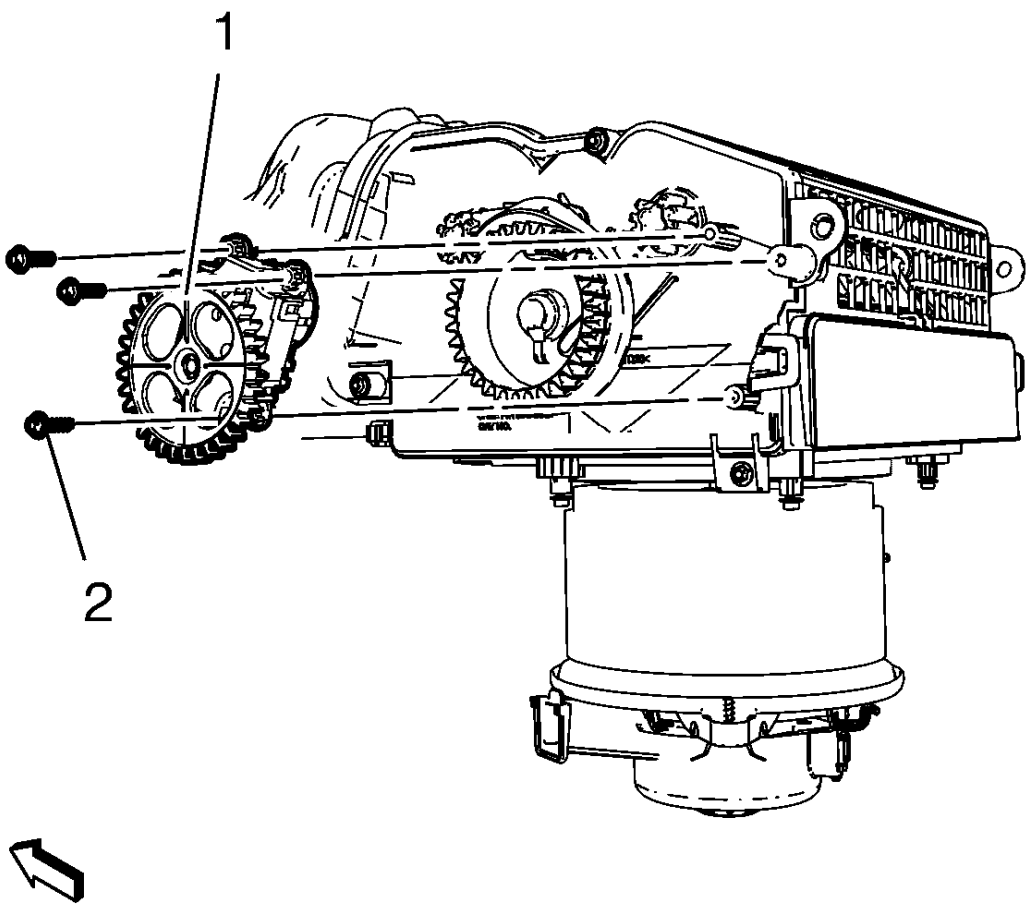

Fig. 35: Mode Control Cam Actuator
Courtesy of GENERAL MOTORS COMPANY

2. Disconnect electrical connector and remove 3 mode control cam actuator screws (2) and remove mode control cam actuator (1).

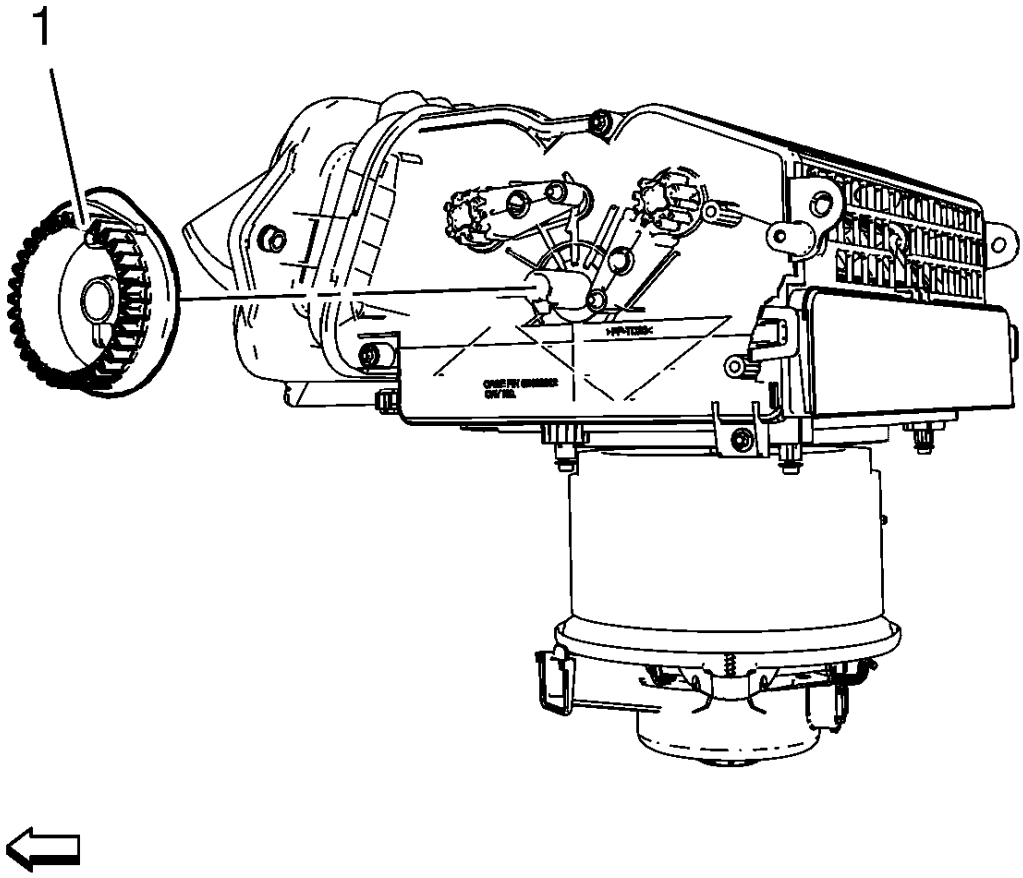

Fig. 36: Inside Air Valve Control Cam
Courtesy of GENERAL MOTORS COMPANY

NOTE: The graphic shows Air Inlet Housing without attaching parts for better clarity.

3. Remove air inlet valve and inside air valve control cam (1).

Installation Procedure

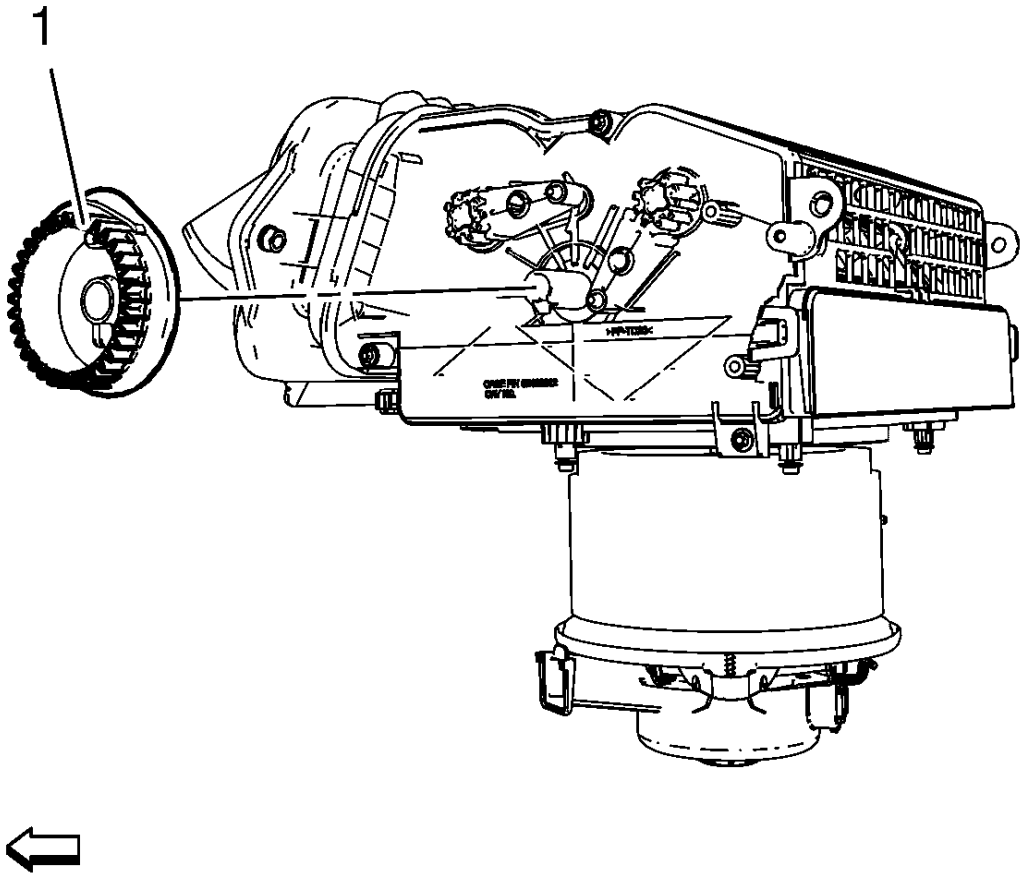

Fig. 37: Inside Air Valve Control Cam
Courtesy of GENERAL MOTORS COMPANY

NOTE: The air inlet valve and inside air valve control cam can only be fitted in one position.

1. Install air inlet valve and inside air valve control cam (1).

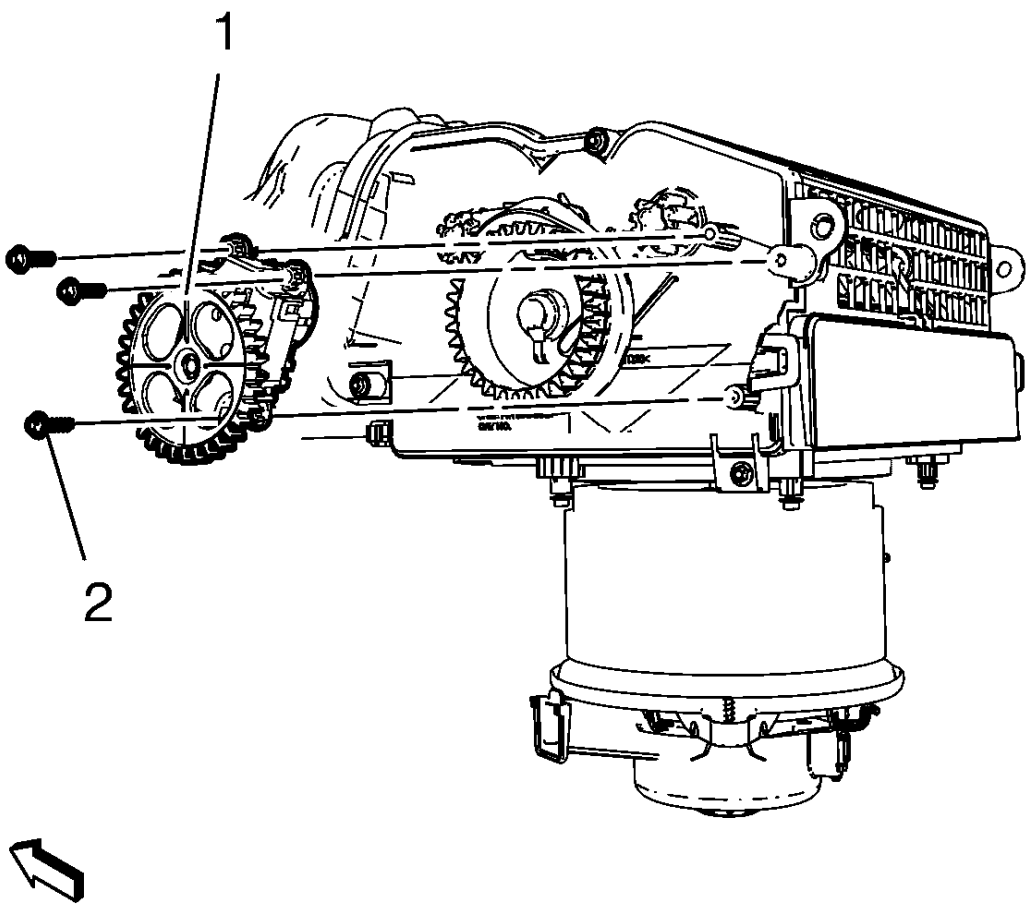

Fig. 38: Mode Control Cam Actuator
Courtesy of GENERAL MOTORS COMPANY

CAUTION: Refer to Fastener Caution .

2. Install mode control cam actuator (1) and install 3 mode control cam actuator screws (2) and connect electrical connector. Tighten to 2.5 N.m (23 lb in).
3. Install instrument panel compartment assembly. Refer to **Instrument Panel Compartment Replacement** .

MODE CONTROL CAM REPLACEMENT

Removal Procedure

1. Remove the instrument panel assembly. Refer to **Instrument Panel Assembly Replacement**

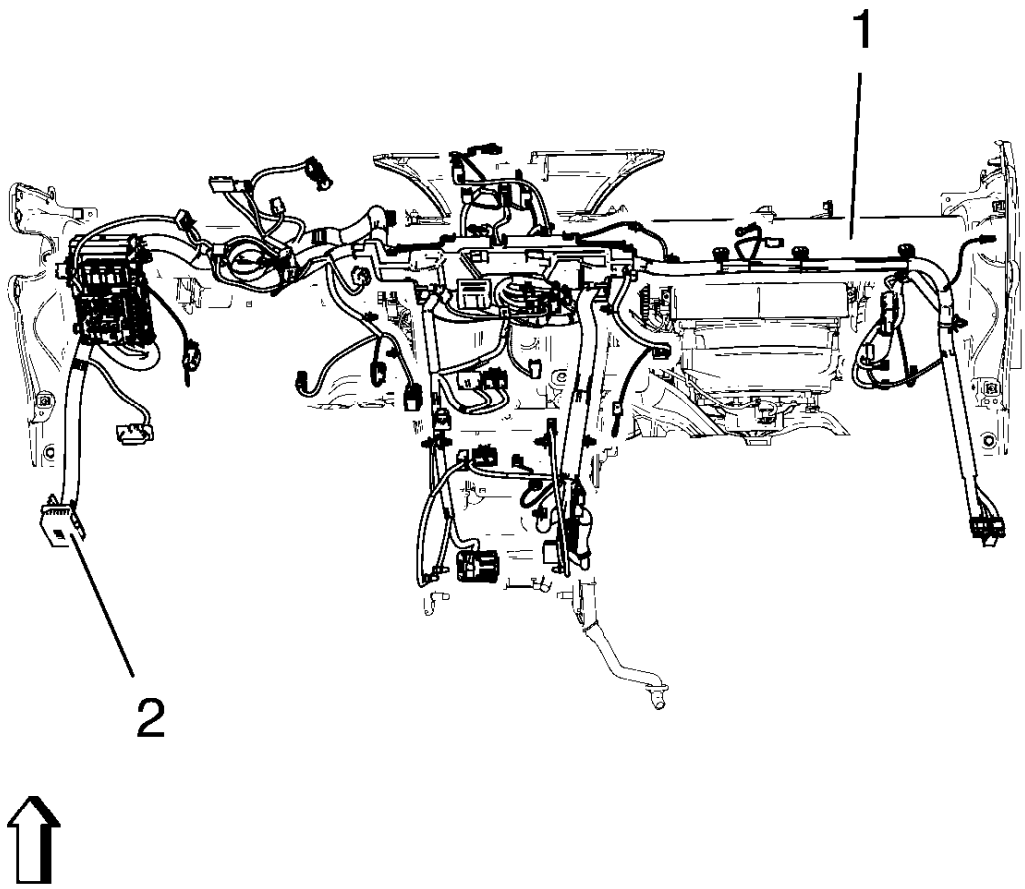

Fig. 39: Instrument Panel Wiring Harness And Instrument Panel Tie Bar
Courtesy of GENERAL MOTORS COMPANY

2. Remove the instrument panel wiring harness (2) from the instrument panel tie bar (1).

   Disconnect the electrical connectors.

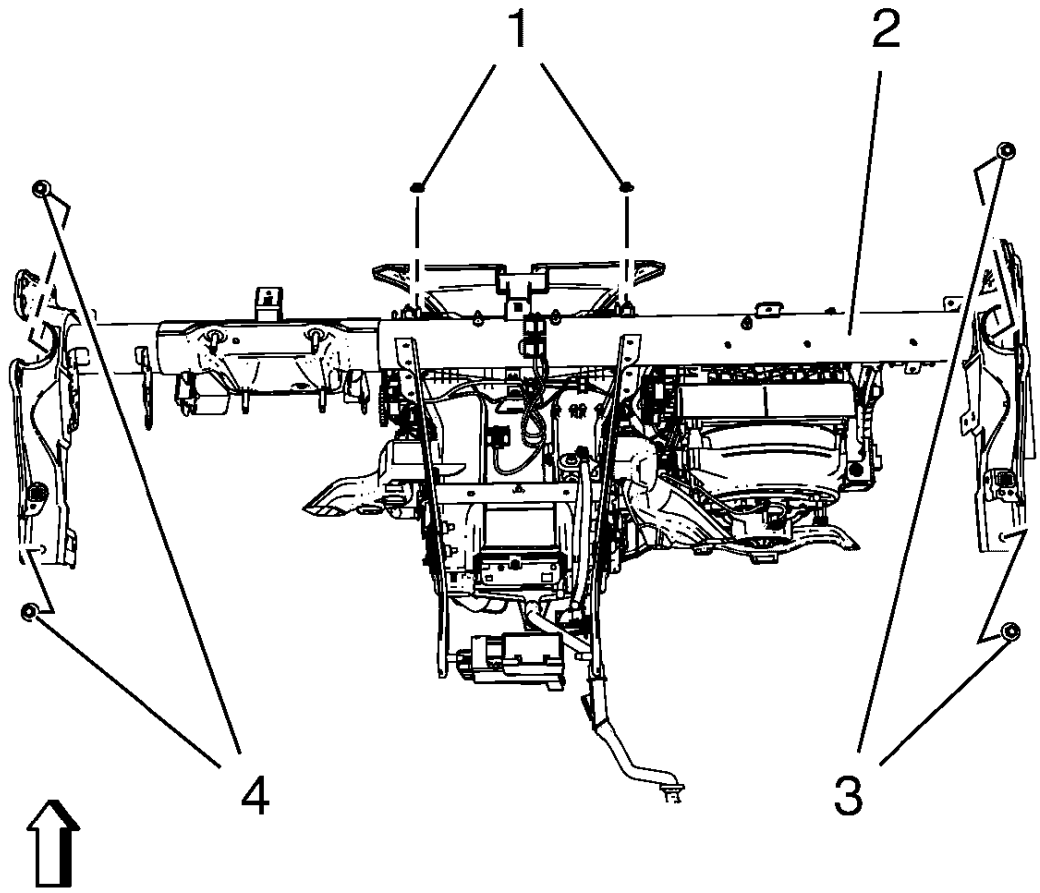

Fig. 40: Instrument Panel Tie Bar, Bolts And Nuts
Courtesy of GENERAL MOTORS COMPANY

3. Remove the instrument panel tie bar (2).
    - Remove the 4 instrument panel tie bar bolts (3, 4).
    - Remove the 2 instrument panel tie bar nuts (1).

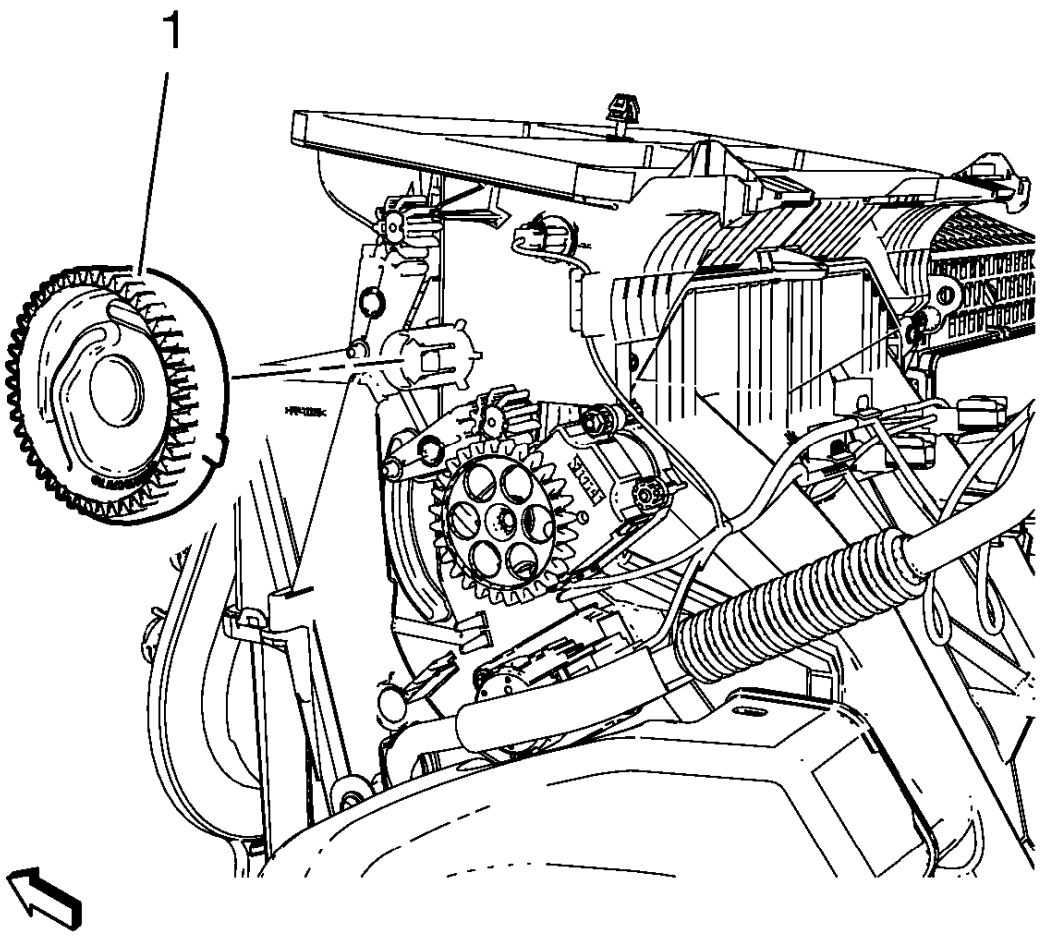

Fig. 41: Mode Control Cam
Courtesy of GENERAL MOTORS COMPANY

4. Remove the mode control cam (1).

Installation Procedure

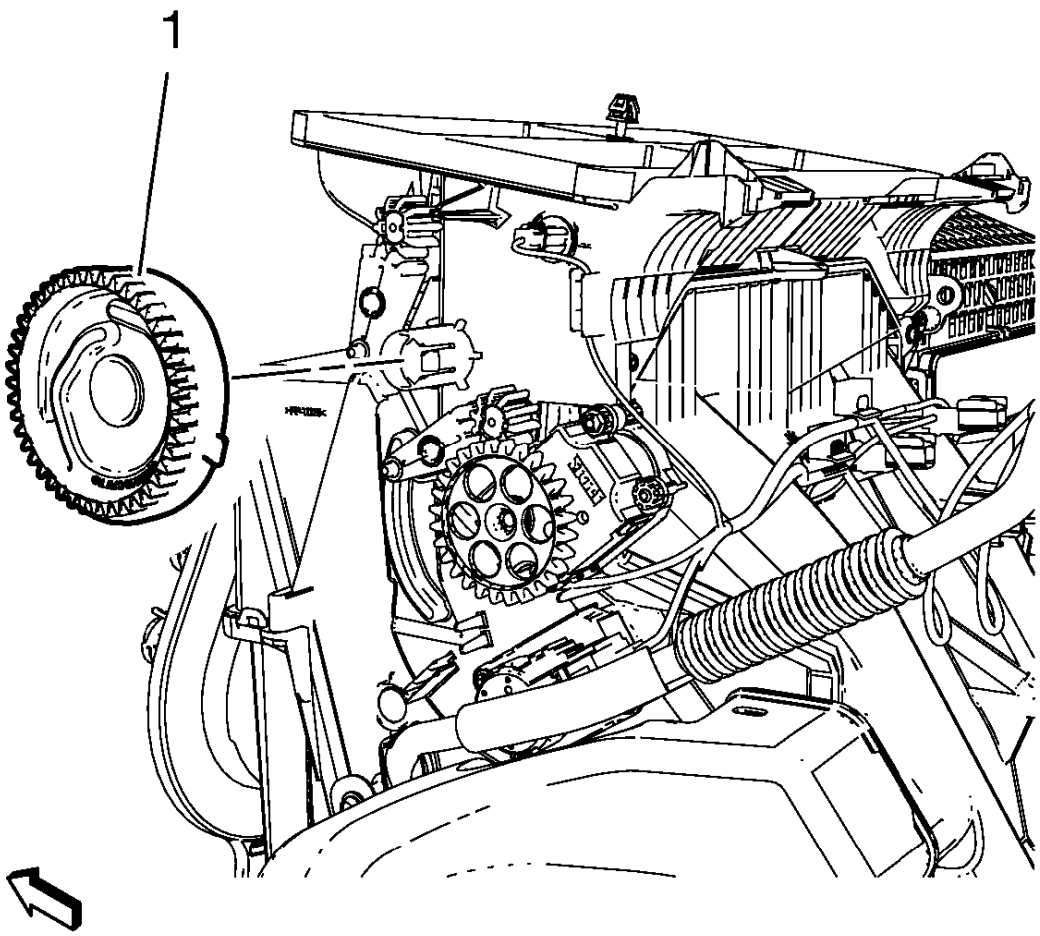

Fig. 42: Mode Control Cam
Courtesy of GENERAL MOTORS COMPANY

NOTE: The mode control cam can only be fitted in one position.

1. Install the mode control cam (1).

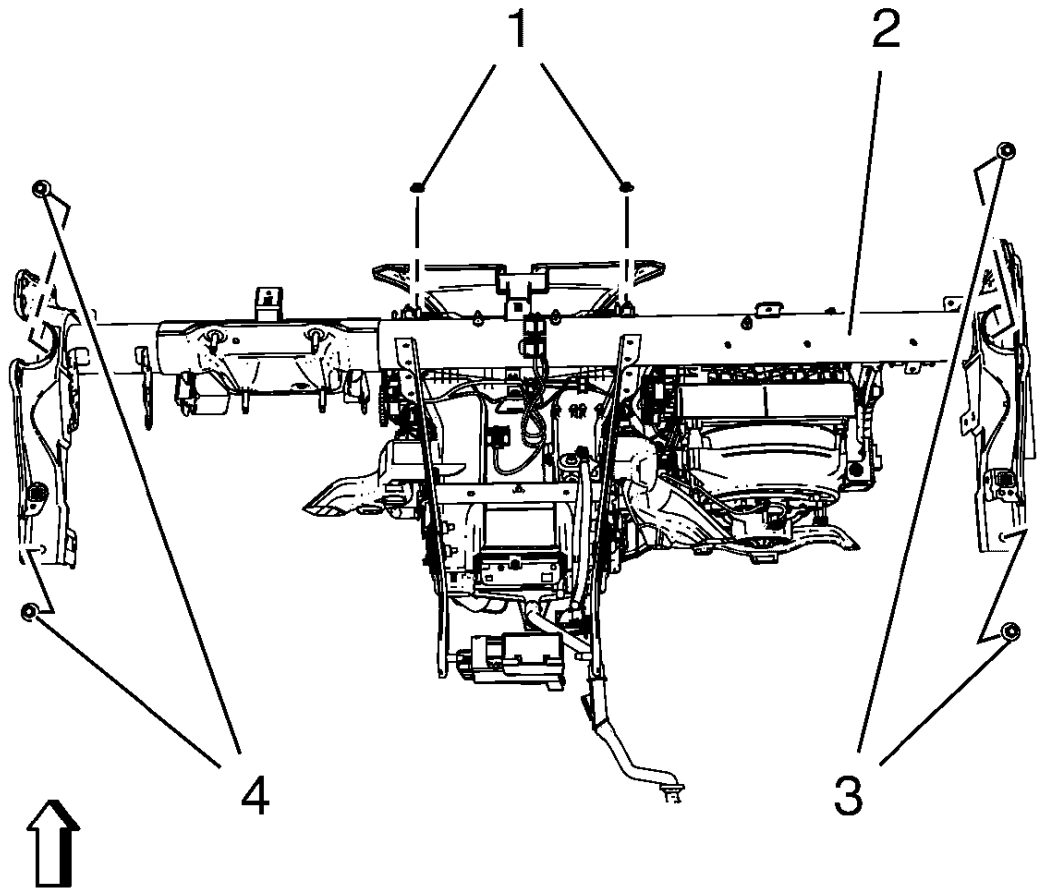

Fig. 43: Instrument Panel Tie Bar, Bolts And Nuts
Courtesy of GENERAL MOTORS COMPANY

CAUTION: Refer to Fastener Caution

2. Install the instrument panel tie bar (2).
    - Install the 4 instrument panel tie bar bolts (3, 4) and tighten to 19 N.m(17 lb ft).
    - Install the 2 instrument panel tie bar nuts (1) and tighten to 9 N.m(80 lb in).

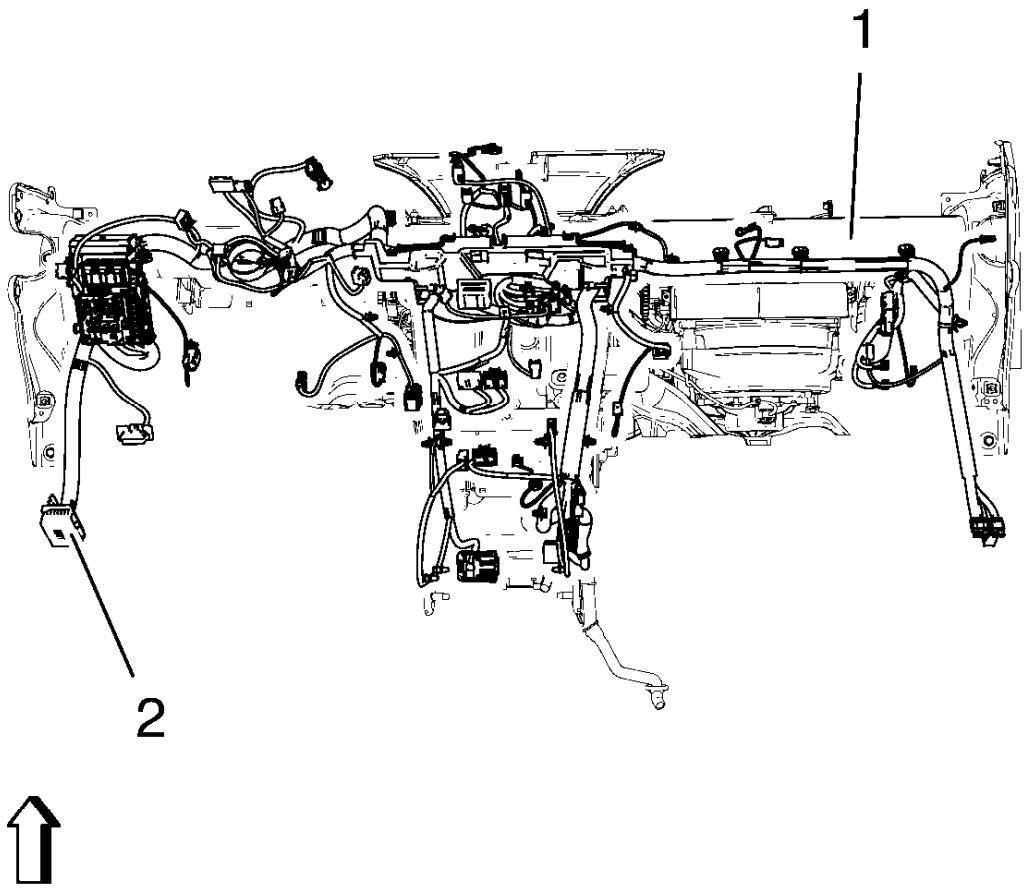

Fig. 44: Instrument Panel Wiring Harness And Instrument Panel Tie Bar
Courtesy of GENERAL MOTORS COMPANY

3. Install the instrument panel wiring harness (2) from the instrument panel tie bar (1).

   Connect the electrical connectors.

4. Install the instrument panel assembly. Refer to **Instrument Panel Assembly Replacement** .

AIR CONDITIONING REFRIGERANT TEMPERATURE SENSOR REPLACEMENT - RIGHT SIDE

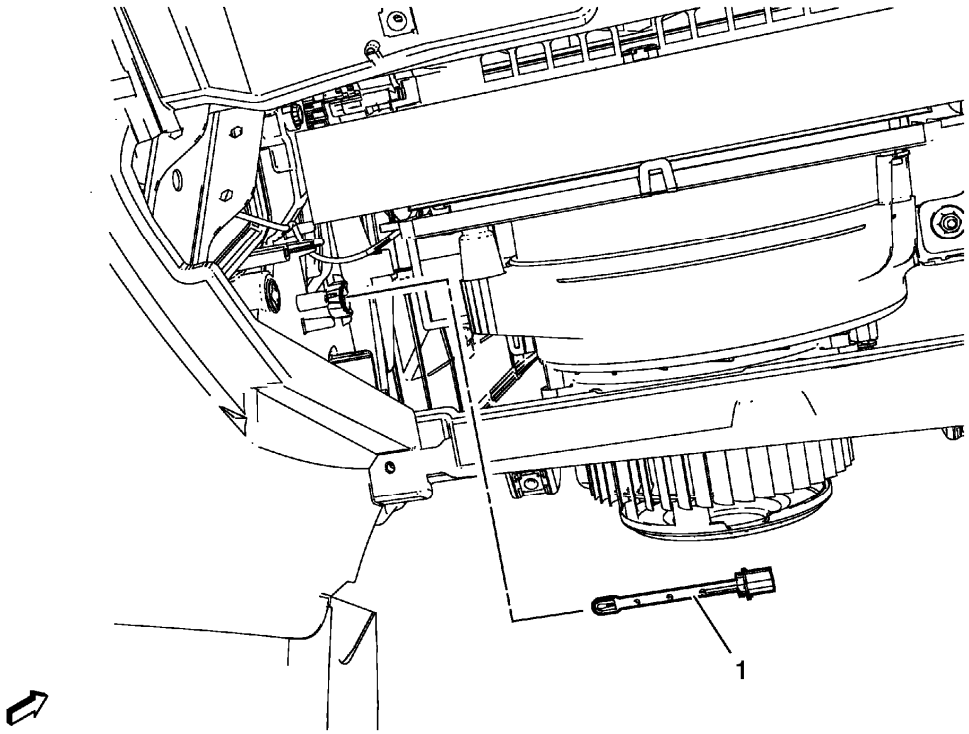

Fig. 45: Air Conditioning Refrigerant Temperature Sensor - Right Side (Left Hand Drive)
Courtesy of GENERAL MOTORS COMPANY

Air Conditioning Refrigerant Temperature Sensor Replacement - Right Side

Callout	Component Name
Preliminary Procedures Remove the heater and the blower and the air conditioning control module. Refer to **Heater and Blower and Air Conditioning Control Module Replacement** .	
1	Air Conditioning Refrigerant Temperature Sensor - Right Side. **Procedure** Disconnect the electrical connector.

DESCRIPTION AND OPERATION

MANUAL HVAC DESCRIPTION AND OPERATION

The air temperature and the air delivery description and operation are divided into eight areas:

- HVAC Control Components
- Air Speed
- Air Delivery
- Heating and A/C Operation
- Recirculation Operation
- Engine Coolant

- A/C Cycle

HVAC Control Components

HVAC Control

The HVAC control contains all switches, which are required to control the functions of HVAC and serve as interface between the operator and the HVAC control module. The selected values are passed to the HVAC control module via the LIN-Bus.

HVAC Control Module

The HVAC control module is a GMLAN device that interfaces between the operator and the HVAC system to maintain and control desired air temperature and air distribution settings. The battery positive voltage circuit provides power that the HVAC control module uses for keep alive memory. If the battery positive voltage circuit loses power, all HVAC DTCs and settings will be erased from keep alive memory. The body control module (BCM), which is the vehicle mode master, provides a device ON-Signal. The HVAC control module provides blower, air delivery mode and air temperature settings.

There are some manual HVAC outputs that are controlled by the module without any customer input. Refer to Recirculation Operation for examples.

The HVAC control module supports the following features:

Feature	Availability
Purge	Yes
Personalization	Yes
Actuator Calibration	Yes

Mode Actuator

The mode actuator is a 5-wire stepper motor. The HVAC control module supplies a 12 V reference voltage to the stepper motor and energizes the 4 stepper motor coils with a pulsed ground signal. The stepper motor puts the mode flap into the calculated position in order to reach the selected position. The null point of the stepper motor will be calibrated, if the stepper motor is new. When the stepper motor is calibrated, the HVAC control module can drive the applicable coil to reach exactly the desired position of the flap.

Air Temperature Actuator

The air temperature actuator is a 5-wire stepper motor. The HVAC control module supplies a 12 V reference voltage to the stepper motor and energizes the 4 stepper motor coils with a pulsed ground signal. The stepper motor puts the mixed air flap into the calculated position, in order to reach the selected temperature. The null point of the stepper motor will be calibrated, if the stepper motor is new. When the stepper motor is calibrated, the HVAC control module can drive the applicable coil to reach exactly the desired position of the flap.

Recirculation Actuator

The recirculation actuator is a 5-wire stepper motor. The HVAC control module supplies a 12 V reference voltage to the stepper motor and energizes the 4 stepper motor coils with a pulsed ground signal. The stepper motor puts the recirculation flap into the calculated position in order to reach the desired position. The null point of the stepper motor will be calibrated, if the stepper motor is new. When the stepper motor is calibrated, the HVAC control module can drive the applicable coil to reach exactly the desired position of the flap.

Blower Motor Control Processor

The blower motor control processor controls the speed of the blower motor by increasing or decreasing the voltage drop on the ground side of the blower motor. The HVAC control module provides a low side pulse width modulation (PWM) signal to the blower motor control processor via the blower motor speed control circuit. As the requested blower speed increases, the HVAC control module increases the amount of time that the speed signal is modulated to ground. As the requested blower speed decreases, the HVAC control module decreases the amount of time that the signal is modulated to ground.

Evaporator Temperature Sensor

The evaporator temperature sensor is a 2-wire negative temperature co-efficient thermistor. The sensor operates within a temperature range of -40 to +85°C (-40 to +185°F). The sensor is installed at the evaporator and measures its temperature. If the temperature drops under 3°C (38°F), the compressor will be switched off in order to prevent a frozen evaporator.

A/C Refrigerant Pressure Sensor

The A/C refrigerant pressure sensor is a 3-wire piezoelectric pressure transducer. A 5 V reference voltage, low reference, and signal circuits enable the sensor to operate. The A/C pressure signal can be between 0.2-4.8 V. When the A/C refrigerant pressure is low, the signal value is near 0 V. When the A/C refrigerant pressure is high, the signal value is near 5 V. The engine control module (ECM) converts the voltage signal to a pressure value. When pressure is too high or too low, the ECM will not allow the A/C compressor clutch to engage.

A/C Compressor

This A/C system uses a conventional clutch to engage and mechanically turn the compressor, and a variable displacement solenoid valve to alter the amount of displacement created by the turning of the compressor. The HVAC control module provides both battery voltage and a pulse width modulated ground to the variable displacement solenoid valve. When the A/C switch is pressed, the HVAC control module grounds the variable displacement solenoid using a (PWM) signal in order to determine the amount of compressor displacement. The performance of the A/C compressor is based on adjusted interior temperature and engine load.

Air Speed

The blower control switch is part of the HVAC control. The selected value of the blower switch position is sent to the HVAC control module via the LIN-Bus.

The blower motor control module is an interface between HVAC control module and blower motor. The blower motor control module regulates supply voltage and ground circuits to blower motor. The HVAC control module provides a PWM signal to the blower motor control module in order to command the desired blower motor speed. The blower motor control module supplies battery voltage to the blower motor and uses the blower

motor ground as a low side control to adjust the blower motor speed. The voltage amounts between 2-13 V and changes linear to the height of the PWM signal.

Air Delivery

The HVAC control module controls the distribution of air by the use of recirculation and mode actuator. The modes that may be selected are:

- Defrost
- Defog
- Panel
- Floor

The desired air distribution mode can be selected with the air distribution switches at the HVAC control. The HVAC control delivers the values to the HVAC control module via LIN-Bus. The HVAC control module controls the air distribution actuator so that it drives the flap to the calculated position. Depending on the position of the flap, air is distributed through various ducts leading to the outlets in the dash. Turning the mode flap to the defrost position, the HVAC control module will move the recirculation actuator to outside air, reducing window fogging. When defrost is selected, the blower motor will be activated, regardless of the coolant temperature. The HVAC control module enables a high volume of air delivered to the front defrost vents. A/C is available in all modes.

The rear window defogger does not affect the HVAC system.

Recirculation Operation

The recirculation switch is part of the HVAC control. The selected recirculation switch position is sent to the HVAC control module via LIN-Bus. The HVAC control module controls the air intake through the recirculation actuator. The recirculation switch closes the recirculation flap in order to circulate the air within the vehicle. Through renewed selection of the recirculation switch, the recirculation flap is opened again in order to route outside air into the vehicle.

Below are examples of manual HVAC outputs that are controlled by the module without any customer input.

Recirculation is only available if the defrost mode is not active. When the defrost mode is active, the recirculation actuator opens the recirculation flap and outside air is circulated to the windshield to reduce fogging.

When the temperature is set to full cold, the air inlet door will be forced to the recirculation position. The system will relieve the accumulation of CO_2 in the cabin after 30 minutes of recirculation, by moving to the actuator to intake fresh air.

Engine Coolant

Engine coolant is the essential element of the heating system. The thermostat controls the normal engine operating coolant temperature. The thermostat also creates a restriction for the cooling system that promotes a positive coolant flow and helps prevent cavitation.

Coolant enters the heater core through the inlet heater hose, in a pressurized state. The heater core is located inside the HVAC control module. The ambient air drawn through the HVAC control module absorbs the heat of the coolant flowing through the heater core. Heated air is distributed to the passenger compartment, through the HVAC control module, for passenger comfort. Opening or closing the air temperature flap controls the amount of heat delivered to the passenger compartment. The coolant exits the heater core through the return heater hose and recirculates back to the engine cooling system.

A/C Cycle

Refrigerant is the key element in an air conditioning system. R-134a is presently the only Environmental Protection Agency approved refrigerant for automotive use. R-134a is a very low temperature gas that can transfer the undesirable heat and moisture from the passenger compartment to the outside air.

The compressor builds pressure on the vapor refrigerant. Compressing the refrigerant also adds heat to the refrigerant. The refrigerant is discharged from the compressor, through the discharge hose, and forced to flow to the condenser and then through the balance of the A/C system. The A/C system is mechanically protected with the use of a high pressure relief valve. If the A/C refrigerant pressure sensor fails or if the refrigerant system becomes restricted and refrigerant pressure continued to rise, the high pressure relief will pop open and release refrigerant from the system.

Compressed refrigerant enters the condenser in a high temperature, high pressure vapor state. As the refrigerant flows through the condenser, the heat of the refrigerant is transferred to the ambient air passing through the condenser. Cooling the refrigerant causes the refrigerant to condense and change from a vapor to a liquid state.

The condenser is located in front of the radiator for maximum heat transfer. The condenser is made of aluminum tubing and aluminum cooling fins, which allows rapid heat transfer for the refrigerant. The semi-cooled liquid refrigerant exits the condenser and flows to the Receiver/Dehydrator(R/D).

The R/D contains desiccant that absorbs moisture that may be in the refrigerant system. The R/D also acts as a storage vessel to ensure that a steady flow of liquid reaches the thermal expansion valve. The refrigerant exits the R/D and flows through the liquid line to the thermal expansion valve.

The thermal expansion valve is located at the front of dash and attaches to the evaporator inlet and outlet pipes. The thermal expansion valve is the dividing point for the high and the low pressure sides of the A/C system. As the refrigerant passes through the thermal expansion valve, the pressure on the refrigerant is lowered. The thermal expansion valve also meters the amount of liquid refrigerant that can flow into the evaporator.

Refrigerant exiting the thermal expansion valve flows into the evaporator core in a low pressure, liquid state. Ambient air is drawn through the HVAC control module and passes through the evaporator core. Warm and moist air will cause the liquid refrigerant boil inside of the evaporator core. The boiling refrigerant absorbs heat from the ambient air and draws moisture onto the evaporator. The refrigerant exits the evaporator through the suction line and back to the A/C compressor, in a vapor state, and completing the A/C cycle of heat removal. At the A/C compressor, the refrigerant is compressed again and the cycle of heat removal is repeated.

The conditioned air is distributed through the HVAC control module for passenger comfort. The heat and moisture removed from the passenger compartment will also change form, or condense, and is discharged from the HVAC control module as water.

2013 ACCESSORIES AND EQUIPMENT

Lighting - Cruz

SPECIFICATIONS

FASTENER TIGHTENING SPECIFICATIONS

Fastener Tightening Specifications

Application	Specification	
	Metric	English
Backup Lamp Bolt	5 N.m	44 lb in
Brake Pedal Position Sensor Bolt	3 N.m	27 lb in
Front Fog Lamp Bolt	2.5 N.m	22 lb in
Hazard Warning Switch	2.5 N.m	22 lb in
Headlamp Bolt	2.5 N.m	22 lb in
High Mount Stop Lamp Screw	2.5 N.m	22 lb in
Rear License Plate Lamp Screws	3 N.m	27 lb in
Tail Lamp Bolt	2.5 N.m	22 lb in
Tail Lamp Nut	5 N.m	44 lb in

SCHEMATIC WIRING DIAGRAMS

HEADLIGHTS/DAYTIME RUNNING LIGHTS (DRL) WIRING SCHEMATICS

Headlamps Wiring Schematics

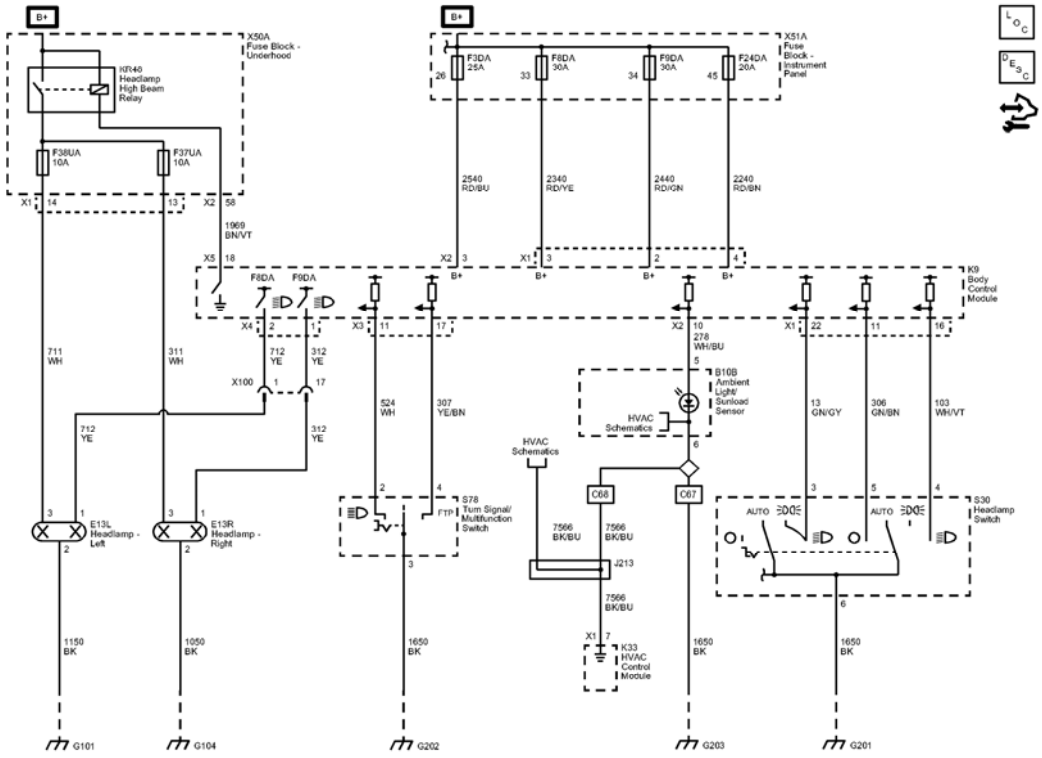

Fig. 1: Headlamps Wiring Schematics
Courtesy of GENERAL MOTORS COMPANY

Callout	Component Name
CAV_26	26
CAV_33	33
CAV_34	34
CAV_45	45
711	Left Headlamp High Beam Supply Voltage
711_WH	711 WH
CAV_3	3
CAV_14	14
CONN_X1	X1
311	Right Headlamp High Beam Supply Voltage
311_WH	311 WH
CAV_3	3
CAV_13	13
1969	Headlamp High Beam Relay Control
1969_BN/VT	1969 BN/VT
CAV_18	18
CONN_X5	X5

CAV_58	58
CONN_X2	X2
712	Left Headlamp Low Beam Supply Voltage
712_YE	712 YE
CAV_1	1
CAV_2	2
CONN_X4	X4
312	Right Headlamp Low Beam Supply Voltage
312_YE	312 YE
CAV_1	1
CAV_1	1
524	Headlamp Dimmer Switch High Beam Signal
524 WH	524 WH
CAV_2	2
CAV_11	11
CONN_X3	X3
307	Headlamp Switch Flash To Pass Signal
307_YE/BN	307 YE/BN
CAV_4	4
CAV_17	17
712_YE	712 YE
312_YE	312 YE
1150	Ground
1150_BK	1150 BK
CAV_2	2
1050	Ground
1050_BK	1050 BK
CAV 2	2
1650	Ground
1650 BK	1650 BK
CAV_3	3
7566	Humidity/Windscreen Temp Sensor Low Reference
7566_BK/BU	7566 BK/BU
1650_BK	1650 BK
CAV 6	6
7566_BK/BU	7566 BK/BU
CAV_7	7
CONN_X1	X1
7566_BK/BU	7566 BK/BU
C68	HVAC SYSTEM-AIR CONDITIONER FRT,

	AUTO, ELECTRONIC CONTROLS
C67	HVAC SYSTEM-AIR CONDITIONER FRT, ELECTRONIC CONTROLS
278	Ambient Light Sensor Signal
278_WH/BU	278 WH/BU
CAV_5	5
CAV_10	10
CONN_X2	X2
13	Headlamp Switch Park Lamp Signal
13_GN/GY	13 GN/GY
CAV_3	3
CAV_22	22
CONN_X1	X1
306	Headlamp Switch Headlamps Off Signal Control
306_GN/BN	306 GN/BN
CAV_5	5
CAV_11	11
103	Headlamp Switch On Signal
103 WH/VT	103 WH/VT
CAV_4	4
CAV 16	16
1650_BK	1650 BK
CAV_6	6
2540	Battery Positive Voltage
2540_RD/BU	2540 RD/BU
CAV_3	3
CONN_X2	X2
2340	Battery Positive Voltage
2340_RD/YE	2340 RD/YE
CAV_3	3
CONN_X1	X1
2440	Battery Positive Voltage
2440_RD/GN	2440 RD/GN
CAV_2	2
2240	Battery Positive Voltage
2240 RD/BN	2240 RD/BN
CAV_4	4
X100	X100
CAV_1	1
CAV_17	17
G101	G101

G104	G104
G202	G202
G203	G203
G201	G201
F38UA	F38UA 10A
F37UA	F37UA 10A
F3DA	F3DA 25A
F8DA	F8DA 30A
F9DA	F9DA 30A
F24DA	F24DA 20A
F8DA	F8DA
F9DA	F9DA
J213	J213
X100	X100
S30	
E13R	
E13L	
KR48	
X50A	
K9	
X51A	
K33	
HVAC_Schematics_REF	HVAC Schematics
HVAC_Schematics_REF	HVAC Schematics
B10B	
S78	

FOG LIGHTS WIRING SCHEMATICS

Front Fog Lamps (T3U) Wiring Schematics

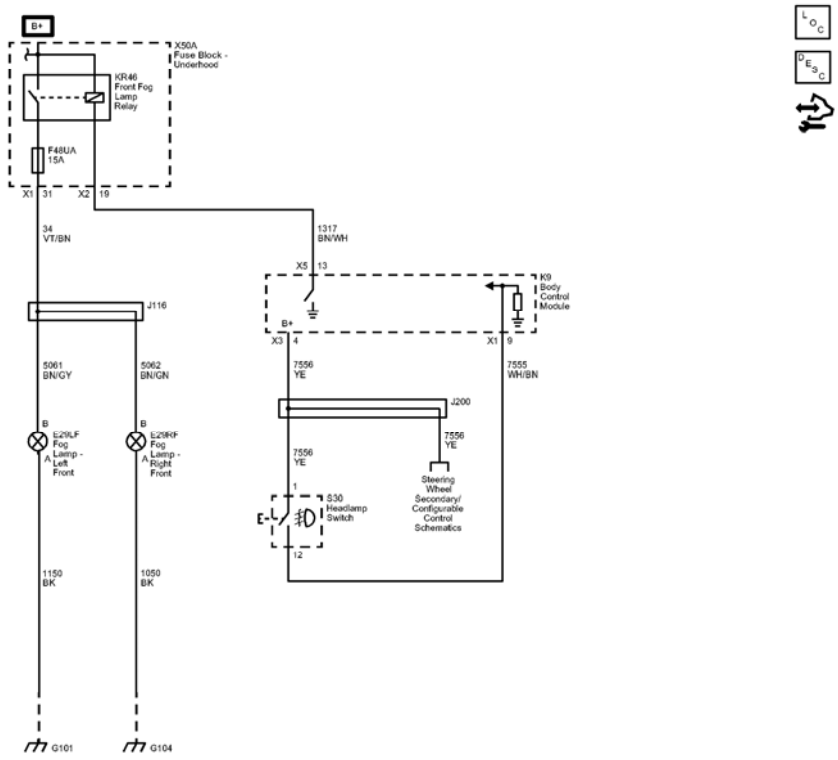

Fig. 2: Front Fog Lamps (T3U) Wiring Schematics
Courtesy of GENERAL MOTORS COMPANY

Callout	Component Name
34	Front Fog Lamp Supply Voltage
34_VT/BN	34 VT/BN
CAV_31	31
CONN_X1	X1
5061	Left Front Fog Lamp Supply Voltage
5061_BN/GY	5061 BN/GY
CAV_B	B
1317	Fog Lamp Relay Control
1317_BN/WH	1317 BN/WH
CAV_13	13
CONN_X5	X5
CAV_19	19
CONN_X2	X2
5062	Right Front Fog Lamp Supply Voltage

5062_BN/GN	5062 BN/GN
CAV_B	B
1150	Ground
1150_BK	1150 BK
CAV_A	A
1050	Ground
1050_BK	1050 BK
CAV_A	A
7556	Lighting Control Switch Reference
7556_YE	7556 YE
CAV_1	1
CAV_4	4
CONN_X3	X3
7556_YE	7556 YE
7556_YE	7556 YE
7555	Lighting Control Switch Signal
7555_WH/BN	7555 WH/BN
CAV_12	12
CAV_9	9
CONN_X1	X1
G101	G101
G104	G104
F48UA	F48UA 15A
J200	J200
J116	J116
X50A	
KR46	
S30	
E29LF	(T3U)
E29RF	(T3U)
K9	
Steering_Wheel_Secondary/Configurable_Control_Schematics_REF	Steering Wheel Secondary/Configurable Control Schematics

EXTERIOR LIGHTS WIRING SCHEMATICS

Park and Tail Lamps Wiring Schematics

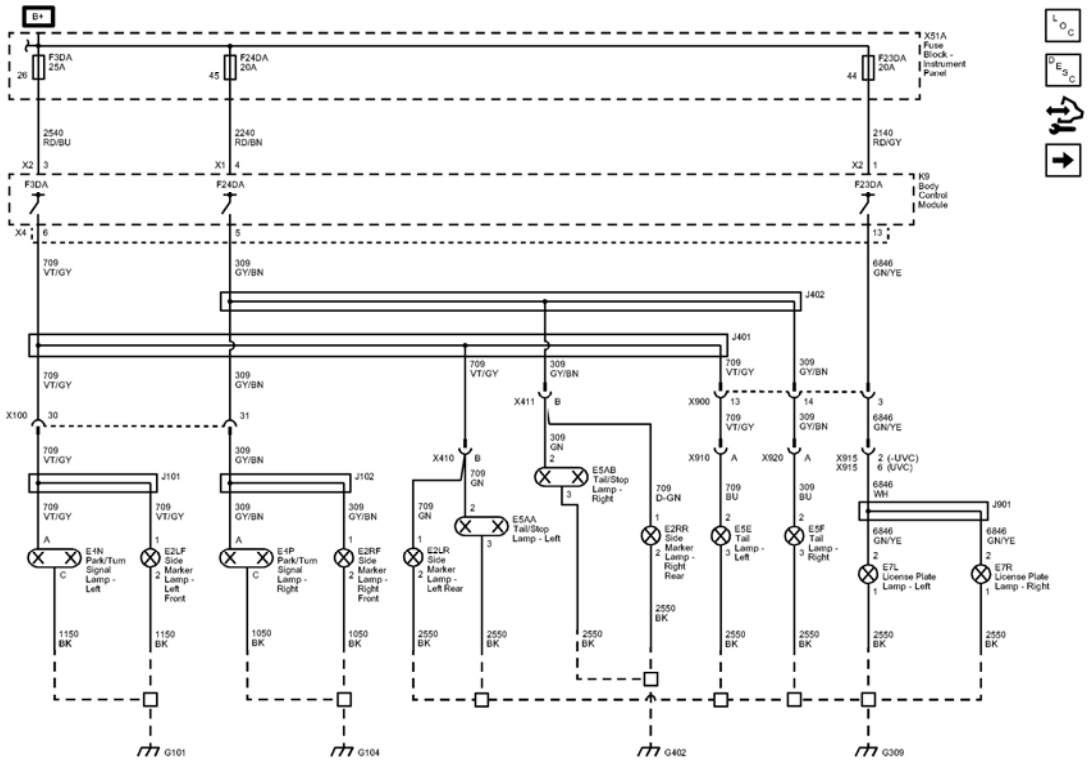

Fig. 3: Park and Tail Lamps Wiring Schematics
Courtesy of GENERAL MOTORS COMPANY

Callout	Component Name
CAV_44	44
2140	Battery Positive Voltage
2140_RD/GY	2140 RD/GY
CAV_1	1
CONN_X2	X2
CAV_45	45
CAV_26	26
2540	Battery Positive Voltage
2540_RD/BU	2540 RD/BU
CAV 3	3
CONN_X2	X2
2240	Battery Positive Voltage
2240_RD/BN	2240 RD/BN
CAV_4	4
CONN_X1	X1
709	Left Park Lamp Supply Voltage
CAV_A	A

CAV_6	6
CONN_X4	X4
709_VT/GY	709 VT/GY
709_VT/GY	709 VT/GY
709_VT/GY	709 VT/GY
709_VT/GY	709 VT/GY
309	Right Park Lamp Supply Voltage
CAV_A	A
CAV_5	5
309_GY/BN	309 GY/BN
309_GY/BN	309 GY/BN
309_GY/BN	309 GY/BN
309 GY/BN	309 GY/BN
709_VT/GY	709 VT/GY
CAV_1	1
309_GY/BN	309 GY/BN
CAV_1	1
709_VT/GY	709 VT/GY
709_GN	709 GN
CAV_2	2
709_GN	709 GN
CAV_1	1
CAV_B	B
309_GY/BN	309 GY/BN
309_GN	309 GN
CAV_2	2
709_D-GN	709 D-GN
CAV 1	1
CAV_B	B
709 VT/GY	709 VT/GY
709_VT/GY	709 VT/GY
709_BU	709 BU
CAV_2	2
CAV_A	A
CAV_2	2
309_GY/BN	309 GY/BN
309_GY/BN	309 GY/BN
309_BU	309 BU
CAV_A	A
6846	Rear License Lamp Supply Voltage
CAV_2	2

	13
6846_GN/YE	6846 GN/YE
6846_GN/YE	6846 GN/YE
6846_GN/YE	6846 GN/YE
6846_WH	6846 WH
CAV_2	2
CAV_6	6
UVC	VISION-REAR VIEW, MONO
UVC	VISION-REAR VIEW, MONO
1150	Ground
1150_BK	1150 BK
CAV_C	C
1150 BK	1150 BK
CAV_2	2
1050	Ground
1050_BK	1050 BK
CAV_C	C
1050_BK	1050 BK
CAV_2	2
2550	Ground
CAV_1	1
CAV_2	2
2550_BK	2550 BK
2550_BK	2550 BK
2550_BK	2550 BK
CAV_3	3
2550_BK	2550 BK
CAV 3	3
2550_BK	2550 BK
CAV 2	2
2550_BK	2550 BK
CAV_3	3
2550_BK	2550 BK
CAV_3	3
2550_BK	2550 BK
CAV_1	1
6846_GN/YE	6846 GN/YE
CAV_2	2
X100	X100
CAV_30	30
CAV_31	31
X200	

	X900
CAV_13	13
CAV_14	14
CAV_3	3
G309	G309
G104	G104
G101	G101
G402	G402
F23DA	F23DA 20A
F23DA	F23DA
F24DA	F24DA
F3DA	F3DA
F24DA	F24DA 20A
F3DA	F3DA 25A
X410	X410
X411	X411
X910	X910
X920	X920
X915	X915
J402	J402
J401	J401
J901	J901
J101	J101
J102	J102
X100	X100
X900	X900
E5AA	
E5AB	
E5E	
E5F	
X51A	
E2RF	
E2LF	
E4N	
E4P	
K9	
E2LR	
E2RR	
E7R	
E7L	

Turn Signal Lamps Wiring Schematics

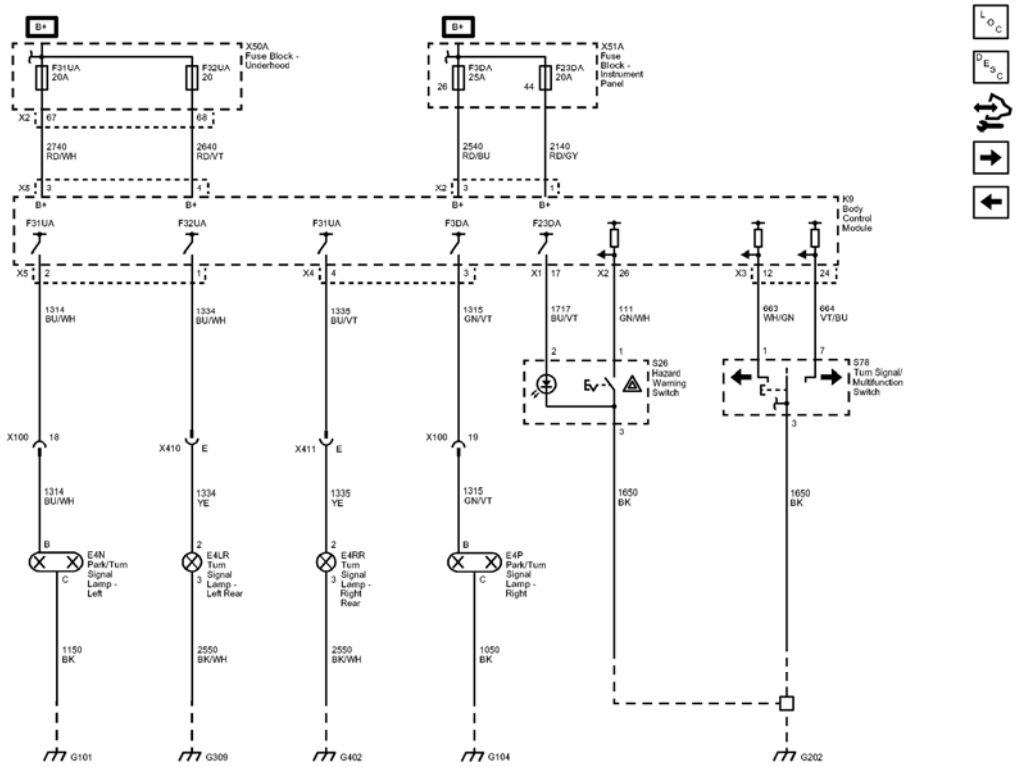

Fig. 4: Turn Signal Lamps Wiring Schematics
Courtesy of GENERAL MOTORS COMPANY

Callout	Component Name
2740	Battery Positive Voltage
2740_RD/WH	2740 RD/WH
CAV_3	3
CONN_X5	X5
CAV_67	67
CONN_X2	X2
2640	Battery Positive Voltage
2640_RD/VT	2640 RD/VT
CAV_4	4
CAV_68	68
CAV_26	26
CAV_44	44
2540	Battery Positive Voltage
2540 RD/BU	2540 RD/BU
CAV_3	3

CONN_X2	X2
2140	Battery Positive Voltage
2140_RD/GY	2140 RD/GY
CAV_1	1
1314	Left Front Turn Signal Lamp Supply Voltage
1314_BU/WH	1314 BU/WH
CAV_B	B
CAV_2	2
CONN_X5	X5
CAV_1	1
1334	Left Rear Turn Signal Lamp Supply Voltage
1334_BU/WH	1334 BU/WH
CAV_1	1
1334_YE	1334 YE
CAV_2	2
1335	Right Rear Turn Signal Lamp Supply Voltage
1335_BU/VT	1335 BU/VT
CAV_4	4
CONN_X4	X4
1335_YE	1335 YE
CAV_2	2
1315	Right Front Turn Signal Lamp Supply Voltage
1315_GN/VT	1315 GN/VT
CAV_B	B
CAV_3	3
CAV_18	18
CAV_E	E
1314_BU/WH	1314 BU/WH
CAV_E	E
CAV_19	19
1315_GN/VT	1315 GN/VT
1717	Hazard Switch Turn Flasher Control
1717_BU/VT	1717 BU/VT
CAV_2	2
CAV_17	17
CONN_X1	X1
111	Hazard Switch Signal
111_GN/WH	111 GN/WH
CAV_1	1
CAV_26	26
CONN_X2	X2

	Hazard Switch Left Turn Signal
663_WH/GN	663 WH/GN
CAV_1	1
CAV_12	12
CONN_X3	X3
664	Hazard Switch Right Turn Signal
664_VT/BU	664 VT/BU
CAV_7	7
CAV_24	24
1650	Ground
1650_BK	1650 BK
CAV_3	3
1650_BK	1650 BK
CAV_3	3
1150	Ground
1150_BK	1150 BK
CAV_C	C
2550	Ground
2550_BK/WH	2550 BK/WH
CAV_3	3
2550_BK/WH	2550 BK/WH
CAV_3	3
1050	Ground
1050_BK	1050 BK
CAV_C	C
F31UA	F31UA 20A
F32UA	F32UA 20
F3DA	F3DA 25A
F23DA	F23DA 20A
X100	X100
X410	X410
X411	X411
X100	X100
G101	G101
G309	G309
G402	G402
G104	G104
G202	G202
F31UA	F31UA
F32UA	F32UA
F31UA	F31UA
F3D	

	F3DA
F23DA	F23DA
X50A	
K9	
X51A	
E4LR	
E4N	
E4P	
E4RR	
S26	
S78	

Stop Lamps Wiring Schematics

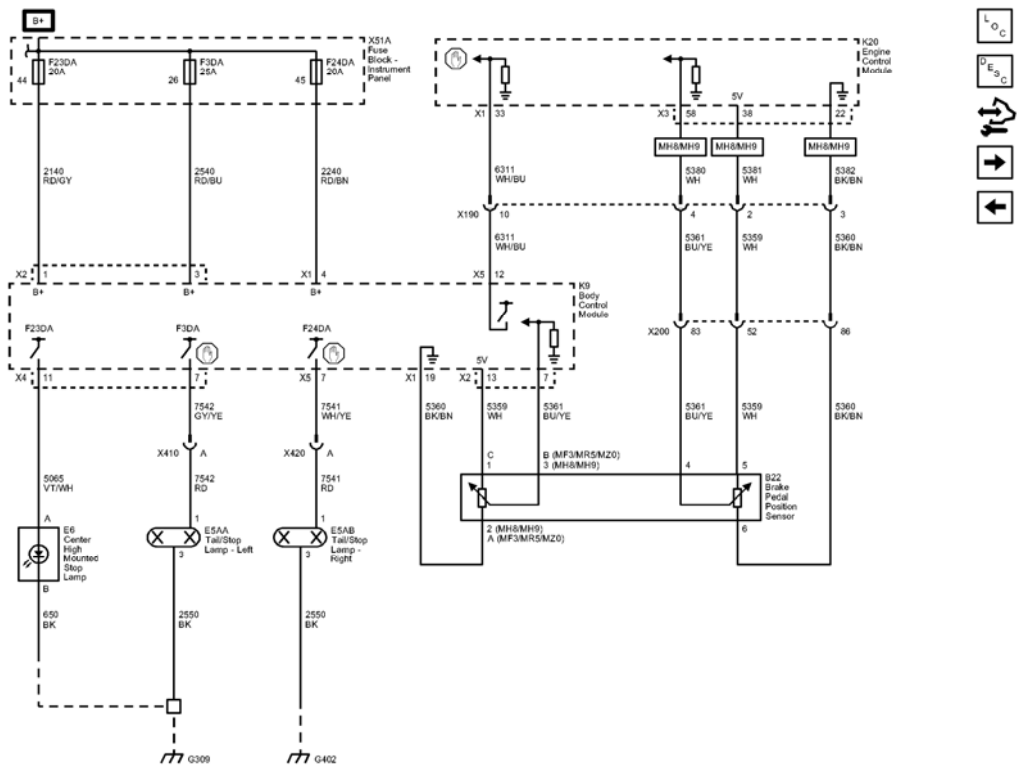

Fig. 5: Stop Lamps Wiring Schematics
Courtesy of GENERAL MOTORS COMPANY

Callout	Component Name
CAV_44	44
CAV_26	26
CAV_45	45

2140	Battery Positive Voltage
2140_RD/GY	2140 RD/GY
CAV_1	1
CONN_X2	X2
2540	Battery Positive Voltage
2540_RD/BU	2540 RD/BU
CAV_3	3
2240	Battery Positive Voltage
2240_RD/BN	2240 RD/BN
CAV_4	4
CONN_X1	X1
6311	Cruise/ETC/TCC Brake Signal
6311 WH/BU	6311 WH/BU
CAV_12	12
CONN_X5	X5
CAV_33	33
CONN_X1	X1
6311_WH/BU	6311 WH/BU
5380	Brake Position Sensor Signal
5380_WH	5380 WH
CAV_58	58
CONN_X3	X3
5381	Brake Position Sensor 5 Volt Reference
5381_WH	5381 WH
CAV_38	38
5382	Brake Position Sensor Low Reference
5382_BK/BN	5382 BK/BN
CAV 22	22
MH8	TRANSMISSION-AUTO 6 SPD, HMD, X23F
MH9	TRANSMISSION-AUTO 6 SPD, HMD, X24F
MH8	TRANSMISSION-AUTO 6 SPD, HMD, X23F
MH9	TRANSMISSION-AUTO 6 SPD, HMD, X24F
MH8	TRANSMISSION-AUTO 6 SPD, HMD, X23F
MH9	TRANSMISSION-AUTO 6 SPD, HMD, X24F
5361	Brake Apply Sensor Signal
5361_BU/YE	5361 BU/YE
CAV_4	4
5359	Brake Apply Sensor Supply Voltage
5359_WH	5359 WH
CAV_5	5
5360	Brake Apply Sensor Low Reference
5360_BK/BN	

	5360 BK/BN
CAV_6	6
5361_BU/YE	5361 BU/YE
5359_WH	5359 WH
5360_BK/BN	5360 BK/BN
CAV_86	86
5065	Stop Lamp Relay Coil Supply Voltage
5065_VT/WH	5065 VT/WH
CAV_A	A
CAV_11	11
CONN_X4	X4
7542	Left Rear Stop Lamp Supply Voltage
7542 GY/YE	7542 GY/YE
CAV_7	7
7542_RD	7542 RD
CAV_1	1
CAV_A	A
7541	Right Rear Stop Lamp Supply Voltage
7541_WH/YE	7541 WH/YE
CAV_7	7
CONN_X5	X5
7541_RD	7541 RD
CAV_1	1
CAV_A	A
5360_BK/BN	5360 BK/BN
CAV_2	2
CAV_19	19
CONN X1	X1
CAV_A	A
MH8	TRANSMISSION-AUTO 6 SPD, HMD, X23F
MH9	TRANSMISSION-AUTO 6 SPD, HMD, X24F
MF3	TRANSMISSION-MAN 6 SPD, OPEL, 76.5 MM, 4.273 1ST, 2.158 2ND, 1.302 3RD, 0.959 4TH, 0.744 5TH, 0.614 6TH, M32-6 WR
MR5	TRANSMISSION-MAN 6 SPD, OPEL, 76.5 MM, 4.273 1ST, 2.353 2ND, 1.475 3RD, 1.067 4TH, 0.875 5TH, 0.744 6TH, M32-6 WR
MZ0	TRANSMISSION-MAN 6 SPD, OPEL, 76.5 MM, 3.82 1ST, 0.74 6TH, (M32 WR)
5359_WH	5359 WH
CAV_1	1
CAV_13	13

CONN_X2	X2
5361_BU/YE	5361 BU/YE
CAV_3	3
CAV_7	7
CAV_C	C
CAV_B	B
MF3	TRANSMISSION-MAN 6 SPD, OPEL, 76.5 MM, 4.273 1ST, 2.158 2ND, 1.302 3RD, 0.959 4TH, 0.744 5TH, 0.614 6TH, M32-6 WR
MR5	TRANSMISSION-MAN 6 SPD, OPEL, 76.5 MM, 4.273 1ST, 2.353 2ND, 1.475 3RD, 1.067 4TH, 0.875 5TH, 0.744 6TH, M32-6 WR
MZ0	TRANSMISSION-MAN 6 SPD, OPEL, 76.5 MM, 3.82 1ST, 0.74 6TH, (M32 WR)
MH8	TRANSMISSION-AUTO 6 SPD, HMD, X23F
MH9	TRANSMISSION-AUTO 6 SPD, HMD, X24F
650	Ground
650_BK	650 BK
CAV B	B
2550	Ground
2550_BK	2550 BK
CAV_3	3
2550_BK	2550 BK
CAV_3	3
X190	X190
CAV_10	10
CAV_4	4
CAV_2	2
CAV_3	3
X200	X200
CAV_83	83
CAV_52	52
G309	G309
G402	G402
F23DA	F23DA 20A
F3DA	F3DA 25A
F24DA	F24DA 20A
X410	X410
X420	X420
F23DA	F23DA
F3DA	F3DA
F24DA	F24DA

X190	X190
X200	X200
E5AA	
E5AB	
K9	
X51A	
E6	
K20	
B22	

Backup Lamps Wiring Schematics

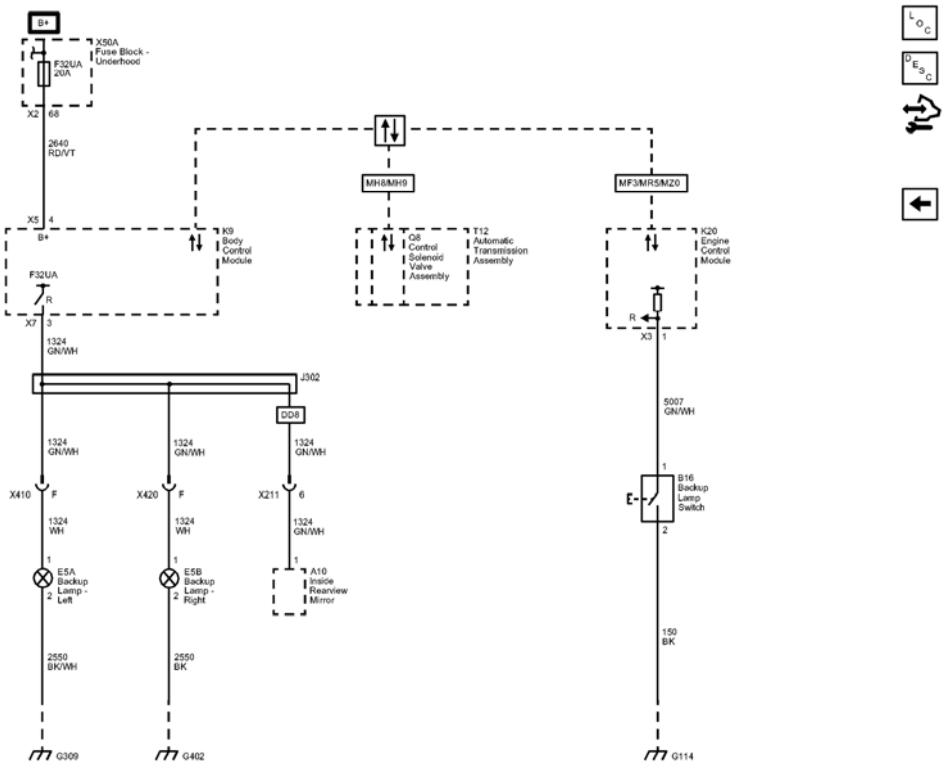

Fig. 6: Backup Lamps Wiring Schematics
Courtesy of GENERAL MOTORS COMPANY

Callout	Component Name
2640	Battery Positive Voltage
2640_RD/VT	2640 RD/VT
CAV_4	4
CONN_X5	X5
CAV_68	68

CONN_X2	X2
1324	Backup Lamp Supply Voltage
1324_GN/WH	1324 GN/WH
CAV_1	1
CAV_3	3
1324_GN/WH	1324 GN/WH
CAV_1	1
1324_GN/WH	1324 GN/WH
CAV_1	1
1324_WH	1324 WH
1324_WH	1324 WH
CONN_X7	X7
CAV F	F
CAV_F	F
CAV_6	6
DD8	MIRROR I/S R/V-LT SENSITIVE
1324_GN/WH	1324 GN/WH
Data Communication Schematics REF	Data Communication Schematics
MH8	TRANSMISSION-AUTO 6 SPD, HMD, X23F
MH9	TRANSMISSION-AUTO 6 SPD, HMD, X24F
MF3	TRANSMISSION-MAN 6 SPD, OPEL, 76.5 MM, 4.273 1ST, 2.158 2ND, 1.302 3RD, 0.959 4TH, 0.744 5TH, 0.614 6TH, M32-6 WR
MR5	TRANSMISSION-MAN 6 SPD, OPEL, 76.5 MM, 4.273 1ST, 2.353 2ND, 1.475 3RD, 1.067 4TH, 0.875 5TH, 0.744 6TH, M32-6 WR
MZ0	TRANSMISSION-MAN 6 SPD, OPEL, 76.5 MM, 3.82 1ST, 0.74 6TH, (M32 WR)
1324_GN/WH	1324 GN/WH
2550	Ground
2550_BK/WH	2550 BK/WH
CAV_2	2
2550_BK	2550 BK
CAV_2	2
5007	Reverse Switch Signal

5007_GN/WH	5007 GN/WH
CAV_1	1
CAV_1	1
CONN_X3	X3
150	Ground
150_BK	150 BK
CAV_2	2
F32UA	F32UA 20A
F32UA	F32UA
X410	X410
X420	X420
X211	X211
J302	J302
G309	G309
G402	G402
G114	G114
E5A	
E5B	
K9	
B16	(MF3 or MZ0)
X50A	
K20	
Q8	(MH8/MH9)
T12	(MH8/MH9)
A10	(DD8)

INTERIOR LIGHTS WIRING SCHEMATICS

Interior Lights Wiring Schematics

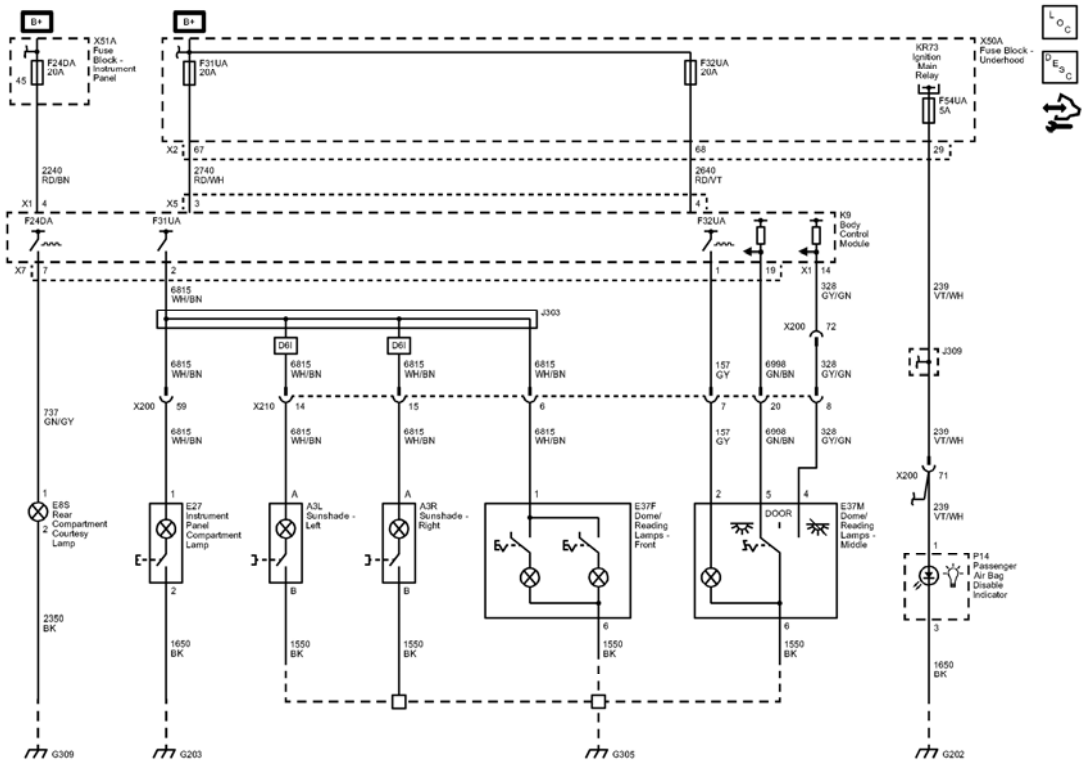

Fig. 7: Interior Lights Wiring Schematics
Courtesy of GENERAL MOTORS COMPANY

Callout	Component Name
CAV_45	45
2240	Battery Positive Voltage
2240_RD/BN	2240 RD/BN
CAV_4	4
CONN_X1	X1
2740	Battery Positive Voltage
2740_RD/WH	2740 RD/WH
CAV_3	3
CONN_X5	X5
CAV_67	67
CONN_X2	X2
2640	Battery Positive Voltage
2640_RD/VT	2640 RD/VT
CAV_4	4
CAV_68	68
239	Run/Crank Ignition 1 Voltage
239_VT/WH	239 VT/WH

CAV_1	1
CAV_29	29
737	Trunk Lamp Control
737_GN/GY	737 GN/GY
CAV_1	1
CAV_7	7
CONN_X7	X7
6815	Inadvertent Power Control
6815_WH/BN	6815 WH/BN
CAV_1	1
CAV_2	2
CAV_A	A
6815 WH/BN	6815 WH/BN
CAV_A	A
6815_WH/BN	6815 WH/BN
CAV_1	1
6815_WH/BN	6815 WH/BN
6815_WH/BN	6815 WH/BN
6815_WH/BN	6815 WH/BN
6815_WH/BN	6815 WH/BN
6815_WH/BN	6815 WH/BN
6815_WH/BN	6815 WH/BN
2350	Ground
2350_BK	2350 BK
CAV_2	2
1650	Ground
1650_BK	1650 BK
CAV 2	2
1550	Ground
1550 BK	1550 BK
CAV_6	6
CAV_B	B
1550_BK	1550 BK
CAV_B	B
1550_BK	1550 BK
1650_BK	1650 BK
CAV_3	3
1550_BK	1550 BK
CAV_6	6
157	Interior Lamp Control
157_GY	157 GY

	2
CAV_1	1
6998	Inadvertent Load 1 Supply Voltage
6998_GN/BN	6998 GN/BN
CAV_5	5
CAV_19	19
328	Interior Lamp Defeat Switch Signal
328_GY/GN	328 GY/GN
CAV_4	4
CAV_14	14
CONN_X1	X1
157_GY	157 GY
6998 GN/BN	6998 GN/BN
328_GY/GN	328 GY/GN
328_GY/GN	328 GY/GN
239_VT/WH	239 VT/WH
239_VT/WH	239 VT/WH
CAV_71	71
CAV_72	72
CAV_59	59
D6I	MIRROR I/S FRT VAN-SUNSHADE, DRIVER, W/MIRROR, COVER, ILLUM, PASS, W/MIRROR, COVER, ILLUM
D6I	MIRROR I/S FRT VAN-SUNSHADE, DRIVER, W/MIRROR, COVER, ILLUM, PASS, W/MIRROR, COVER, ILLUM
X210	X210
CAV 14	14
CAV_15	15
CAV_6	6
CAV_7	7
CAV_20	20
CAV_8	8
G305	G305
G309	G309
G203	G203
G202	G202
F24DA	F24DA 20A
F31UA	F31UA 20A
F32UA	F32UA 20A
F54UA	F54UA 5A
F24DA	F24DA

F31UA	F31UA
F32UA	F32UA
J303	J303
X200	X200
X200	X200
X200	X200
X210	X210
E27	
A3L	(D6I)
E8S	
A3R	(D6I)
E37F	
E37M	
X51A	
KR73	
P14	
K9	
X50A	

INTERIOR LIGHTS DIMMING WIRING SCHEMATICS

Instrument Panel, Console, and Steering Wheel Wiring Schematics

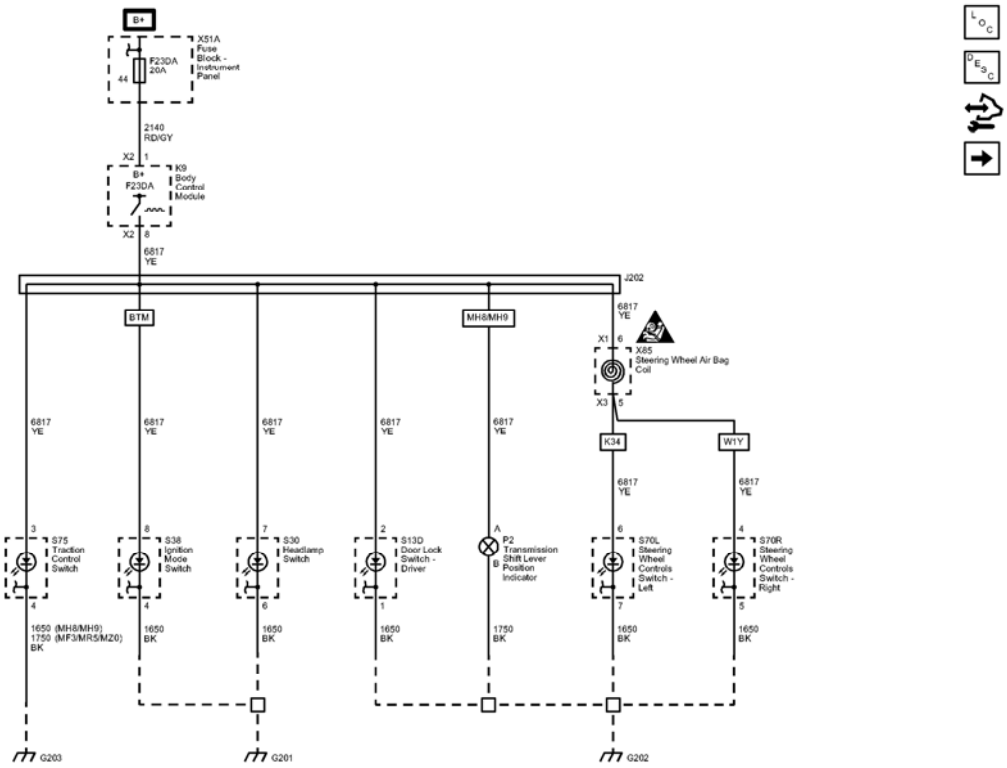

Fig. 8: Instrument Panel, Console, and Steering Wheel Wiring Schematics
Courtesy of GENERAL MOTORS COMPANY

Callout	Component Name
CAV_44	44
2140	Battery Positive Voltage
2140_RD/GY	2140 RD/GY
CAV_1	1
CONN_X2	X2
6817	LED Backlight Dimming Control
6817_YE	6817 YE
CAV_8	8
CAV_8	8
CONN_X2	X2
6817_YE	6817 YE
CAV_3	3
6817_YE	6817 YE
CAV_7	7
6817_YE	6817 YE
CAV_2	2
6817_YE	6817 YE

CAV_A	A
BTM	SWITCH-ENGINE START, KEYLESS
6817_YE	6817 YE
6817_YE	6817 YE
CAV_6	6
CONN_X1	X1
6817_YE	6817 YE
CAV_6	6
CAV_5	5
CONN_X3	X3
K34	CRUISE CONTROL-AUTOMATIC, ELECTRONIC
6817_YE	6817 YE
CAV_4	4
W1Y	CONTROL-STEERING WHEEL, RADIO, REDUNDANT CONTROLS
1650	Ground
1650_BK	1650 BK
CAV_1	1
1750	Ground
1750_BK	1750 BK
CAV_B	B
1650_BK	1650 BK
CAV_7	7
1650_BK	1650 BK
CAV_5	5
1750_BK	1750 BK
CAV_4	4
MF3	TRANSMISSION-MAN 6 SPD, OPEL, 76.5 MM, 4.273 1ST, 2.158 2ND, 1.302 3RD, 0.959 4TH, 0.744 5TH, 0.614 6TH, M32-6 WR
MR5	TRANSMISSION-MAN 6 SPD, OPEL, 76.5 MM, 4.273 1ST, 2.353 2ND, 1.475 3RD, 1.067 4TH, 0.875 5TH, 0.744 6TH, M32-6 WR
MZ0	TRANSMISSION-MAN 6 SPD, OPEL, 76.5 MM, 3.82 1ST, 0.74 6TH, (M32 WR)
1650	1650
1650_BK	1650 BK
CAV_6	6
1650_BK	1650 BK
CAV_4	4
MH8	TRANSMISSION-AUTO 6 SPD, HMD, X23F
MH9	TRANSMISSION-AUTO 6 SPD, HMD, X24F

MH8	TRANSMISSION-AUTO 6 SPD, HMD, X23F
MH9	TRANSMISSION-AUTO 6 SPD, HMD, X24F
G203	G203
G202	G202
G201	G201
F23DA	F23DA 20A
F23DA	F23DA
J202	J202
P2	(MH8/MH9)
X51A	
K9	
S75	(FX3)
S30	
S13D	
S70L	(K34)
S70R	(W1Y)
S38	(BTM)
X85	

Door and Roof Wiring Schematics

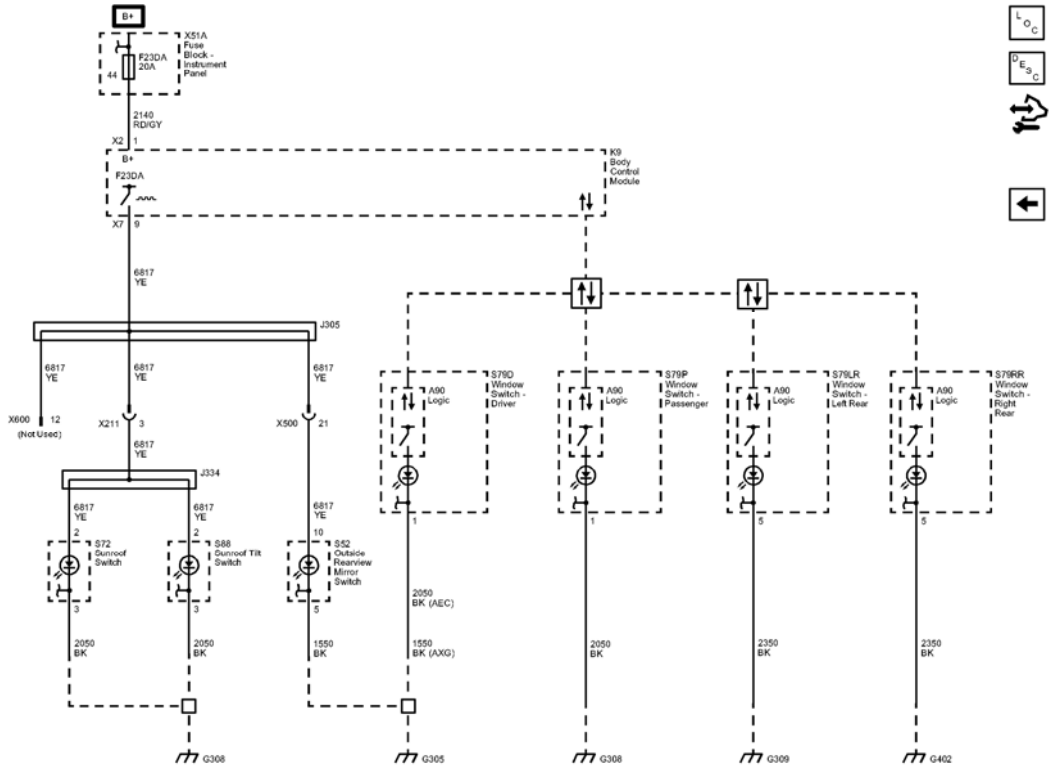

Fig. 9: Door and Roof Wiring Schematics
Courtesy of GENERAL MOTORS COMPANY

Callout	Component Name
CAV_44	44
2140	Battery Positive Voltage
2140_RD/GY	2140 RD/GY
CAV_1	1
CONN_X2	X2
6817	LED Backlight Dimming Control
CAV_9	9
CONN_X7	X7
6817_YE	6817 YE
6817_YE	6817 YE
6817_YE	6817 YE
6817_YE	6817 YE
CAV_3	3
CAV 10	10
6817_YE	6817 YE
6817 YE	6817 YE
CAV_21	21
6817_YE	6817 YE
CAV_2	2
6817_YE	6817 YE
CAV_2	2
2050	Ground
2050_BK	2050 BK
CAV_3	3
2050_BK	2050 BK
CAV_3	3
1550	Ground
1550_BK	1550 BK
CAV_5	5
2050_BK	2050 BK
CAV 1	1
1550_BK	1550 BK
AEC	WINDOW-POWER OPERATED, DRIVER EXPRESS DOWN
AXG	WINDOW-POWER OPERATED-EXPRESS

	DRIVER UP/DOWN
2050_BK	2050 BK
CAV_1	1
2350	Ground
2350_BK	2350 BK
CAV_5	5
2350_BK	2350 BK
CAV_5	5
Data_Communication_Schematics_REF	Data Communication Schematics
Data_Communication_Schematics_REF	Data Communication Schematics
CAV_12	12
G308	G308
G308	G308
G309	G309
G402	G402
G305	G305
F23DA	F23DA 20A
F23DA	F23DA
X211	X211
X500	X500
J334	J334
J305	J305
X600	X600
A90	Logic
S79D	
A90	Logic
S79P	
A90	Logic
S79LR	
A90	Logic
S79RR	
X51A	
K9	
S52	
S72	(CF5)
S88	(CF5)

DIAGNOSTIC INFORMATION AND PROCEDURES

DIAGNOSTIC CODE INDEX

DIAGNOSTIC CODE INDEX

DTC	Description
DTC B096A	DTC B096A 01 Hazard Lamps Switch Backlighting Circuit Short to Battery DTC B096A 02 Hazard Lamps Switch Backlighting Circuit Short to Ground DTC B096A 04 Hazard Lamps Switch Backlighting Circuit Open
DTC B1395	DTC B1395 03 Control Module Voltage Reference Output 1 Circuit Low Voltage DTC B1395 07 Control Module Voltage Reference Output 1 Circuit High Voltage
DTC B1480	DTC B1480 02 Battery Rundown Protection Circuit Short to Ground
DTC B2530	DTC B2530 01 Front Fog Lamps Control Circuit Short to Battery DTC B2530 02 Front Fog Lamps Control Circuit Short to Ground DTC B2530 04 Front Fog Lamps Control Circuit Open
DTC B2545	DTC B2545 01 Backup Lamps Circuit Short to Battery DTC B2545 02 Backup Lamps Circuit Short to Ground DTC B2545 04 Backup Lamps Circuit Open
DTC B2575 or B2699	DTC B2575 01 Headlamps Control Circuit Short to Battery DTC B2575 02 Headlamps Control Circuit Short to Ground DTC B2575 04 Headlamps Control Circuit Open DTC B2699 01 Right Headlamp Control Circuit Short to Battery DTC B2699 02 Right Headlamp Control Circuit Short to Ground DTC B2699 04 Right Headlamp Control Circuit Open
DTC B257A	DTC B257A 00 Headlamp Switch Input Signals Correlation Malfunction
DTC B257B	DTC B257B 03 Lighting Control Switch Signal Low Voltage DTC B257B 07 Lighting Control Switch Signal High Voltage
DTC B2580	DTC B2580 01 High Beam Control Circuit Short to Battery DTC B2580 02 High Beam Control Circuit Short to Ground

	DTC B2580 04 High Beam Control Circuit Open
DTC B2585 or B3867	DTC B2585 01 Left Park Lamps Control Circuit Short to Battery DTC B2585 02 Left Park Lamps Control Circuit Short to Ground DTC B2585 04 Left Park Lamps Control Circuit Open DTC B3867 01 Right Park Lamps Control Circuit Short to Battery DTC B3867 02 Right Park Lamps Control Circuit Short to Ground DTC B3867 04 Right Park Lamps Control Circuit Open
DTC B2645	DTC B2645 03 Ambient Light Sensor Circuit Low Voltage DTC B2645 07 Ambient Light Sensor Circuit High Voltage
DTC B3596	DTC B3596 00 Hazard Lamps Request Circuit Malfunction
DTC B3600	DTC B3600 03 Passenger Compartment Dimming Request Signal Circuit Low Voltage DTC B3600 07 Passenger Compartment Dimming Request Signal Circuit High Voltage
DTC B3650	DTC B3650 08 High Beam Request Signal Circuit Performance - Signal Invalid
DTC B3806	DTC B3806 00 High Beam and Headlamp Flash Select Circuit Malfunction
DTC B3883	DTC B3883 01 License Plate Lamp Circuit Short to Battery DTC B3883 02 License Plate Lamp Circuit Short to Ground DTC B3883 04 License Plate Lamp Circuit Open
DTC B3948 or B3949	DTC B3948 01 Left Front Turn Signal Circuit Short to Battery DTC B3948 02 Left Front Turn Signal Circuit Short to Ground DTC B3948 04 Left Front Turn Signal Circuit Open DTC B3949 01 Right Front Turn Signal Circuit Short to Battery DTC B3949 02 Right Front Turn Signal Circuit Short to Ground DTC B3949 04 Right Front Turn Signal Circuit Open
	DTC B3950 01 Left Rear Turn Signal Circuit Short to Battery DTC B3950 02 Left Rear Turn Signal Circuit Short

DTC B3950 or B3951	to Ground DTC B3950 04 Left Rear Turn Signal Circuit Open DTC B3951 01 Right Rear Turn Signal Circuit Short to Battery DTC B3951 02 Right Rear Turn Signal Circuit Short to Ground DTC B3951 04 Right Rear Turn Signal Circuit Open
DTC C0277 or C0890	DTC C0277 06 Brake Pedal Position Sensor Circuit Low Voltage/Open DTC C0277 07 Brake Pedal Position Sensor Circuit High Voltage DTC C0277 09 Brake Pedal Position Sensor Circuit Too Fast Transitions DTC C0277 4B Brake Pedal Position Sensor Circuit Calibration Not Learned DTC C0890 03 Control Module Voltage Reference Output 3 Circuit Low Voltage DTC C0890 07 Control Module Voltage Reference Output 3 Circuit High Voltage
DTC C0297	DTC C0297 02 Brake Applied Output Circuit Short to Ground

DTC B096A

Diagnostic Instructions

- Perform the **Diagnostic System Check - Vehicle** prior to using this diagnostic procedure.
- Review **Strategy Based Diagnosis** for an overview of the diagnostic approach.
- **Diagnostic Procedure Instructions** provides an overview of each diagnostic category.

DTC Descriptors

DTC B096A 01

Hazard Lamps Switch Backlighting Circuit Short to Battery

DTC B096A 02

Hazard Lamps Switch Backlighting Circuit Short to Ground

DTC B096A 04

Hazard Lamps Switch Backlighting Circuit Open

Diagnostic Fault Information

Circuit	Short to Ground	Open/High Resistance	Short to Voltage	Signal Performance
Hazard Switch LED Backlighting Control	B096A 02	B096A 01, B096A 04	1	-
Hazard Switch Ground	-	B096A 01, B096A 04	-	-
1. Hazard Lamps Malfunction				

Circuit/System Description

The I/P dimmer switch controls are located on the headlamp switch assembly and are used to increase and decrease the brightness of the interior backlighting components. When the I/P dimmer switch is placed in a desired brightness position, the body control module (BCM) receives a signal from the I/P dimmer switch and responds by applying a pulse width modulated (PWM) voltage to the hazard switch light emitting diode (LED) backlighting control circuit illuminating the LED to the desired level of brightness.

Conditions for Running the DTC

- Battery voltage must be between 9-16 V.
- Park lamps ON.

Conditions for Setting the DTC

DTC B096A 01

- The BCM detects an open/high resistance in the hazard switch LED backlighting control circuit.
- The BCM detects an open/high resistance in the hazard switch ground circuit.

DTC B096A 02

The BCM detects a short to ground in the hazard switch LED backlighting control circuit.

DTC B096A 04

- The BCM detects an open/high resistance in the hazard switch LED backlighting control circuit.
- The BCM detects an open/high resistance in the hazard switch ground circuit.

Actions Taken When the DTC Sets

The hazard switch LED backlighting will not illuminate.

Conditions for Clearing the DTC

- The condition responsible for setting the DTC no longer exists.
- A history DTC will clear once 100 consecutive malfunction-free ignition cycles have occurred.

Reference Information

Schematic Reference

Exterior Lights Schematics

Connector End View Reference

COMPONENT CONNECTOR END VIEWS - INDEX

Description and Operation

Interior Lighting Systems Description and Operation

Electrical Information Reference

- **Circuit Testing**
- **Connector Repairs**
- **Testing for Intermittent Conditions and Poor Connections**
- **Wiring Repairs**

Scan Tool Reference

Control Module References for scan tool information

Circuit/System Testing

1. Ignition OFF, scan tool disconnected, all doors closed, all accessories OFF, disconnect the harness connector at the S26 hazard lamps switch. It may take up to 2 minutes for all vehicle systems to power down.
2. Test for less than 5 ohms between the ground circuit terminal 3 and ground.
    - **If 5 ohms or greater**
    1. Ignition OFF.
    2. Test for less than 2 ohms in the ground circuit end to end.
        - If 2 ohms or greater, repair the open/high resistance in the circuit.
        - If less than 2 ohms, repair the open/high resistance in the ground connection.
    - **If less than 5 ohms**
3. Connect a test lamp between the control circuit terminal 2 and ground, ignition ON.
4. Verify the test lamp turns ON and OFF when commanding the Hazard Lamps Switch Backlight ON and OFF with a scan tool.
    - **If the test lamp is always OFF**
    1. Ignition OFF, disconnect the X1 harness connector at the K9 body control module.
    2. Test for infinite resistance between the control circuit and ground.

- If less than infinite resistance, repair the short to ground on the circuit.
- If infinite resistance

3. Test for less than 2 ohms in the control circuit end to end.
   - If 2 ohms or greater, repair the open/high resistance in the circuit.
   - If less than 2 ohms, replace the K9 body control module.

- **If the test lamp is always ON**

1. Ignition OFF, disconnect the X1 harness connector at the K9 body control module, ignition ON.
2. Test for less than 1 V between the control circuit terminal and ground.
   - If 1 V or greater, repair the short to voltage on the circuit.
   - If less than 1 V, replace the K9 body control module.

- **If the test lamp turns ON and OFF**

5. Test or replace the S26 hazard lamps switch.

Repair Instructions

Perform the **Diagnostic Repair Verification** after completing the repair.

- **Hazard Warning Switch Replacement**
- **Control Module References** for BCM replacement, programming, and setup

DTC B1395

Diagnostic Instructions

- Perform the **Diagnostic System Check - Vehicle** prior to using this diagnostic procedure.
- Review **Strategy Based Diagnosis** for an overview of the diagnostic approach.
- **Diagnostic Procedure Instructions** provides an overview of each diagnostic category.

DTC Descriptors

DTC B1395 03

Control Module Voltage Reference Output 1 Circuit Low Voltage

DTC B1395 07

Control Module Voltage Reference Output 1 Circuit High Voltage

Diagnostic Fault Information

Circuit	Short to Ground	Open/High Resistance	Short to Voltage	Signal Performance
I/P Dimmer Switch B+	B257B 03,	B257B 03, B1395		

Reference	B1405 03, B1395 03	03	B1395 07	-
I/P Dimmer Switch Signal	B257B 03	B257B 03	B257B 07	-
LED Backlight Dimming Control Terminal 8 X2	1	1	1	-
LED Backlight Dimming Control Terminal 9 X7	1	1	1	-
1. Interior Backlighting Malfunction				

Circuit/System Description

The instrument panel (I/P) dimmer switch is used to increase and decrease the brightness of the interior backlighting components. The I/P dimmer switch provides a voltage signal to the body control module (BCM) that will increase as the brightness of the lights are increased and decrease as the brightness of the lights are decreased. The BCM provides a low reference signal and a B+ voltage reference to the I/P dimmer switch. When the I/P dimmer switch is placed in the desired position, the dimmed voltage setting is applied from the I/P dimmer switch through the I/P dimmer switch signal circuit to the BCM. The BCM interprets the signal and applies a pulse width modulated (PWM) voltage through the light emitting diode (LED) dimming 1 and dimming 2 control circuits illuminating the interior backlighting to the requested level of brightness.

Conditions for Running the DTC

- Battery voltage must be between 9-16 V.
- Park Lamps ON.

Conditions for Setting the DTC

DTC B1395 03

The BCM detects a short to ground or an open/high resistance in the I/P dimmer switch B+ reference circuit.

DTC B1395 07

The BCM detects a short to voltage in the I/P dimmer switch B+ reference circuit.

Actions Taken When the DTC Sets

The BCM will not dim any interior backlighting. All interior backlighting will default to the level selected prior to the fault being present.

Conditions for Clearing the DTC

- The condition responsible for setting the DTC no longer exists.
- A history DTC will clear once 100 consecutive malfunction-free ignition cycles have occurred.

Reference Information

Schematic Reference

Interior Lights Dimming Schematics

Connector End View Reference

COMPONENT CONNECTOR END VIEWS - INDEX

Description and Operation

Interior Lighting Systems Description and Operation

Electrical Information Reference

- **Circuit Testing**
- **Connector Repairs**
- **Testing for Intermittent Conditions and Poor Connections**
- **Wiring Repairs**

Scan Tool Reference

Control Module References for scan tool information

Circuit/System Testing

1. Ignition OFF and all vehicle systems OFF, disconnect the harness connector at the S30 Headlamp Switch, ignition ON.
2. Test for B+ between the B+ circuit terminal 1 and ground.
    - **If less than B+**
    1. Ignition OFF, disconnect the X3 harness connector at the K9 Body Control Module.
    2. Test for infinite resistance between the B+ circuit and ground.
        - If less than infinite resistance, repair the short to ground on the circuit.
        - If infinite resistance
    3. Test for less than 2 ohms in the B+ circuit end to end.
        - If 2 ohms or greater, repair the open/high resistance in the circuit.
        - If less than 2 ohms, replace the K9 Body Control Module.
    - **If B+**
3. Verify a test lamp does not illuminate between the B+ circuit terminal 1 and the signal circuit terminal 12.
    - **If the test lamp illuminates**
    1. Ignition OFF, disconnect the X1 harness connector at the K9 Body Control Module.
    2. Test for infinite resistance between the signal circuit and ground.
        - If less than infinite resistance, repair the short to ground on the circuit.

- If infinite resistance, replace the K9 Body Control Module.
- **If the test lamp does not illuminate**

4. Test for B+ between the B+ circuit terminal 1 and the signal circuit terminal 12.
   - **If less than B+**
   1. Ignition OFF, disconnect the X1 harness connector at the K9 Body Control Module, ignition ON.
   2. Test for less than 1 V between the signal circuit terminal 12 and ground.
      - If 1 V or greater, repair the short to voltage on the circuit.
      - If less than 1 V
   3. Test for less than 2 ohms in the signal circuit end to end.
      - If 2 ohms or greater, repair the open/high resistance in the circuit.
      - If less than 2 ohms, replace the K9 Body Control Module.
   - **If B+**
5. Test or replace the S30 Headlamp Switch.

Repair Instructions

Perform the **Diagnostic Repair Verification** after completing the repair.

- **Headlamp Switch Replacement**
- **Control Module References** for BCM replacement, programming, and setup

DTC B1480

Diagnostic Instructions

- Perform the **Diagnostic System Check - Vehicle** prior to using this diagnostic procedure.
- Review **Strategy Based Diagnosis** for an overview of the diagnostic approach.
- **Diagnostic Procedure Instructions** provides an overview of each diagnostic category.

DTC Descriptor

DTC B1480 02

Battery Rundown Protection Circuit Short to Ground

Diagnostic Fault Information

Circuit	Short to Ground	Open/High Resistance	Short to Voltage	Signal Performance
Courtesy Lamps Control - Terminal 2 X7	B1480 02	1	1	-
Dome/Reading Lamps - Front Ground	-	1	-	-

Dome/Reading Lamps - Rear Ground	-	1	-	-
Instrument Panel Compartment Lamp Ground	-	1	-	-
Sunshade Mirror Lamp - Left Ground	-	1	-	-
Sunshade Mirror Lamp - Right Ground	-	1	-	-
1. Courtesy Lamps Malfunction				

Circuit/System Description

The body control module (BCM) supplies battery voltage to the front reading lamps, left and right sunshade lamps, and instrument panel compartment lamp via the courtesy lamp control circuit. When the instrument panel compartment or a sunshade mirror is opened, the switch contact close allowing battery voltage to flow illuminating the respective lamps. The front reading lamps are controlled by individual switches that are activated by the operator when additional cabin lighting is required. In the event that any of these courtesy lamps were to remain illuminated for more than 10 minutes with the ignition switch in the OFF position and no doors opened, the BCM will deactivate the courtesy lamp control circuit to prevent total battery discharge.

Conditions for Running the DTC

Battery voltage must be between 9-16 V.

Conditions for Setting the DTC

The BCM detects a short to ground in the reading lamp control circuit.

Actions Taken When the DTC Sets

The BCM will disable the circuit and the reading lamp will be inoperative.

Conditions for Clearing the DTC

- The condition responsible for setting the DTC no longer exists.
- A history DTC will clear once 100 consecutive malfunction-free ignition cycles have occurred.

Reference Information

Schematic Reference

- **Interior Lights Schematics**
- **Body Control System Schematics**

Connector End View Reference

COMPONENT CONNECTOR END VIEWS - INDEX

Description and Operation

Interior Lighting Systems Description and Operation

Electrical Information Reference

- **Circuit Testing**
- **Connector Repairs**
- **Testing for Intermittent Conditions and Poor Connections**
- **Wiring Repairs**

Scan Tool Reference

Control Module References for scan tool information

Circuit/System Testing

1. Ignition OFF, exterior lamps OFF, disconnect the harness connectors at the components listed below.
    - E37F dome/reading lamps - front
    - A3L sunshade mirror lamp - left
    - A3R sunshade mirror lamp - right
    - E27 instrument panel compartment lamp
2. Connect a test lamp between the appropriate control circuit terminal listed below and ground.
    - E37F dome/reading lamps - front terminal 1
    - A3L sunshade mirror lamp - left terminal 1
    - A3R sunshade mirror lamp - right terminal 1
    - E27 instrument panel compartment lamp terminal 1
3. Verify the test lamp turns ON and OFF when commanding the Inadvertent Load ON and OFF with a scan tool.
    - **If the test lamp is always OFF**
    1. Ignition OFF, disconnect the X7 harness connector at the K9 body control module.
    2. Test for infinite resistance between the control circuit and ground.
        - If less than infinite resistance, repair the short to ground on the circuit.
        - If infinite resistance
    3. Test for less than 2 ohms in the control circuit end to end.
        - If 2 ohms or greater, repair the open/high resistance in the circuit.
        - If less than 2 ohms, replace the K9 body control module.
    - **If the test lamp is always ON**
    1. Ignition OFF, disconnect the X7 harness connector at the K9 body control module, ignition ON.

2. Test for less than 1 V between the control circuit terminal and ground.
    - If 1 V or greater, repair the short to voltage on the circuit.
    - If less than 1 V, replace the K9 body control module.
- **If the test lamp turns ON and OFF**

4. Test or replace the appropriate courtesy lamp.

Repair Instructions

Perform the **Diagnostic Repair Verification** after completing the repair.

- **Sunshade Replacement**
- **Instrument Panel Compartment Lamp Replacement**
- **Dome Lamp Bulb Replacement**
- **Reading Lamp Replacement**
- **Control Module References** for BCM replacement, programming, and setup

DTC B2530

Diagnostic Instructions

- Perform the **Diagnostic System Check - Vehicle** prior to using this diagnostic procedure.
- Review **Strategy Based Diagnosis** for an overview of the diagnostic approach.
- **Diagnostic Procedure Instructions** provides an overview of each diagnostic category.

DTC Descriptors

DTC B2530 01

Front Fog Lamps Control Circuit Short to Battery

DTC B2530 02

Front Fog Lamps Control Circuit Short to Ground

DTC B2530 04

Front Fog Lamps Control Circuit Open

Diagnostic Fault Information

Circuit	Short to Ground	Open/High Resistance	Short to Voltage	Signal Performance
	C0890 03, B101E 43,	C0890 03, B101E		

F23DA (BCM 1) Fuse B+	B1405 03, B1529 03, U0121 00	43, B1405 03, B1529 03, U0121 00	-	-
Front Fog Lamp and I/P Dimmer Switch B+ Reference	B257B 03, B1405 03	B257B 03	-	-
Front Fog Lamp and I/P Dimmer Switch Signal	B257B 03	B257B 03	1	-
Front Fog Lamp Relay Control	B2530 02	B2530 04	B2530 01	-
Front Fog Lamp Control	1	1	1	-
Front Fog Lamp Ground - Left	-	1	-	-
Front Fog Lamp Ground - Right	-	1	-	-
1. Front Fog Lamps Malfunction				

Circuit/System Description

The front fog lamp relay is supplied with battery voltage at all times. The front fog lamp switch signal circuit is grounded through a resistor momentarily when the front fog lamp switch is pressed. The body control module (BCM) energizes the front fog lamp relay by applying ground to the front fog lamp relay control circuit. When the front fog lamp relay is energized, the relay contacts close and battery voltage is applied through the F48UA fuse to the front fog lamp control circuit which illuminates the front fog lamps.

Conditions for Running the DTC

- Battery voltage must be between 9-16 V.
- Front fog lamps ON.

Conditions for Setting the DTC

DTC B2530 01

The BCM detects a short to voltage in the front fog lamp relay control circuit for 5 seconds or greater.

DTC B2530 02

The BCM detects a short to ground in the front fog lamp relay control circuit.

DTC B2530 04

The BCM detects an open in the front fog lamp relay control circuit.

Actions Taken When the DTC Sets

The front fog lamps will not operate when the park lamps are ON and the front fog lamp switch is active.

Conditions for Clearing the DTC

- The condition responsible for setting the DTC no longer exists.
- A history DTC will clear once 100 consecutive malfunction-free ignition cycles have occurred.

Reference Information

Schematic Reference

Fog Lights Schematics

Connector End View Reference

COMPONENT CONNECTOR END VIEWS - INDEX

Description and Operation

Exterior Lighting Systems Description and Operation

Electrical Information Reference

- **Circuit Testing**
- **Connector Repairs**
- **Testing for Intermittent Conditions and Poor Connections**
- **Wiring Repairs**

Scan Tool Reference

Control Module References for scan tool information

Circuit/System Testing

1. Ignition OFF, disconnect the X5 harness connector at the K9 body control module, ignition ON.
2. Verify a test lamp illuminates between the control circuit terminal 13 and ground.
    - **If the test lamp does not illuminate**
    1. Ignition OFF, disconnect the X2 harness connector at the X50A fuse block - underhood.
    2. Test for infinite resistance between the control circuit terminal and ground.
        - If less than infinite resistance, repair the short to ground on the circuit.
        - If infinite resistance
    3. Test for less than 2 ohms in the control circuit end to end.
        - If 2 ohms or greater, repair the open/high resistance in the circuit.
        - If less than 2 ohms, replace the X50A fuse block - underhood.

- **If the test lamp illuminates**

3. Ignition OFF, connect a 3 A fused jumper between the control circuit terminal 13 and ground.
4. Remove the F48UA fuse at the X50A fuse block - underhood, ignition ON.
5. Verify a test lamp illuminates between the F48UA fuse B+ switch control terminal and ground.
   - **If the test lamp does not illuminate**
   1. Ignition OFF, disconnect the X2 harness connector at the X50A fuse block - underhood, ignition ON.
   2. Test for less than 1 V between the control circuit terminal 13 and ground.
      - If 1 V or greater, repair the short to voltage on the circuit.
      - If less than 1 V, replace the X50A fuse block - underhood.
   - **If the test lamp illuminates**
6. Test or replace the K9 body control module.

Repair Instructions

Perform the **Diagnostic Repair Verification** after completing the repair.

- **Front Compartment Fuse Block Replacement**
- **Control Module References** for BCM replacement, programming, and setup

DTC B2545

Diagnostic Instructions

- Perform the **Diagnostic System Check - Vehicle** prior to using this diagnostic procedure.
- Review **Strategy Based Diagnosis** for an overview of the diagnostic approach.
- **Diagnostic Procedure Instructions** provides an overview of each diagnostic category.

DTC Descriptors

DTC B2545 01

Backup Lamps Circuit Short to Battery

DTC B2545 02

Backup Lamps Circuit Short to Ground

DTC B2545 04

Backup Lamps Circuit Open

Diagnostic Fault Information

Circuit	Short to Ground	Open/High Resistance	Short to Voltage	Signal Performance
F32UA (BCM VBATT 06) Fuse B+	B2545 01, B2545 04, B3950 01, B3950 04	B2545 01, B2545 04, B3950 01, B3950 04	-	-
Backup Lamp Switch Signal (Manual Transmission)	P0812	P0812	1	-
Backup Lamps Control	B2545 02	B2545 01, B2545 04	1	-
Backup Lamp Switch Ground (Manual Transmission)	-	P0812	-	-
Backup Lamp Ground - Left	-	1	-	-
Backup Lamp Ground - Right	-	1	-	-
1. Backup Lamps Malfunction				

Circuit/System Description

Automatic Transmission

With the engine running and the transmission in the reverse position, the transmission control module (TCM) sends a serial data message to the body control module (BCM). The message indicates that the gear selector is in the reverse position. The BCM applies battery voltage to the backup lamps control circuit illuminating the backup lamps. Once the driver moves the gear selector out of the reverse position, a message is sent by the TCM via serial data requesting the BCM to remove battery voltage from the backup lamps control circuit. The engine must be running for the backup lamps to operate.

Manual Transmission

The engine control module (ECM) provides a signal circuit to the backup lamp switch which is permanently grounded. With the engine running and the transmission in the reverse position, the backup lamp switch signal circuit is pulled low and the ECM responds by sending a serial data message to the body control module (BCM). The message indicates that the gear selector is in the reverse position. The BCM applies battery voltage to the backup lamps control circuit illuminating the backup lamps. Once the driver moves the gear selector out of the reverse position, a message is sent by the ECM via serial data requesting the BCM to remove battery voltage from the backup lamps control circuit. The engine must be running for the backup lamps to operate.

Conditions for Running the DTC

- Battery voltage must be between 9-16 V.
- Engine RUNNING.
- Transmission placed in REVERSE gear.

Conditions for Setting the DTC

DTC B2545 01 and B2545 04

- The BCM detects an open/high resistance in the backup lamps control circuit.
- The BCM detects a short to ground or an open/high resistance in the F32UA fuse B+ circuit.

DTC B2545 02

The BCM detects a short to ground in the backup lamps control circuit.

Actions Taken When the DTC Sets

The backup lamps will not operate.

Conditions for Clearing the DTC

- The condition responsible for setting the DTC no longer exists.
- A history DTC will clear once 100 consecutive malfunction-free ignition cycles have occurred.

Reference Information

Schematic Reference

Exterior Lights Schematics

Connector End View Reference

COMPONENT CONNECTOR END VIEWS - INDEX

Description and Operation

Exterior Lighting Systems Description and Operation

Electrical Information Reference

- **Circuit Testing**
- **Connector Repairs**
- **Testing for Intermittent Conditions and Poor Connections**
- **Wiring Repairs**

Scan Tool Reference

Control Module References for scan tool information

Circuit/System Testing

1. Ignition OFF, disconnect the X5 harness connector at the K9 body control module, ignition ON.
2. Verify a test lamp illuminates between the B+ circuit terminal 4 and ground.
    - **If the test lamp does not illuminate and the circuit fuse is good**
    1. Ignition OFF, disconnect the X2 harness connector at the X50A fuse block - underhood.
    2. Test for less than 2 ohms in the B+ circuit end to end.
        - If 2 ohms or greater, repair the open/high resistance in the circuit.
        - If less than 2 ohms, verify the fuse is not open and there is voltage at the fuse.
    - **If the test lamp does not illuminate and the circuit fuse is open**
    1. Ignition OFF, disconnect the X2 harness connector at the X50A fuse block - underhood.
    2. Test for infinite resistance between the B+ circuit and ground.
        - If less than infinite resistance, repair the short to ground on the circuit.
        - If infinite resistance, replace the K9 body control module.
    - **If the test lamp illuminates**
3. Ignition OFF, connect the X5 harness connector at the K9 body control module.
4. Ignition OFF, exterior lamps OFF, disconnect the harness connector at the appropriate E5 backup lamp.
5. Test for less than 5 ohms between the ground circuit terminal 2 and ground.
    - **If 5 ohms or greater**
    1. Ignition OFF.
    2. Test for less than 2 ohms in the ground circuit end to end.
        - If 2 ohms or greater, repair the open/high resistance in the circuit.
        - If less than 2 ohms, repair the open/high resistance in the ground connection.
    - **If less than 5 ohms**
6. Connect a test lamp between the control circuit terminal 1 and ground, ignition ON.
7. Verify the test lamp turns ON and OFF when commanding the Backup Lamps ON and OFF with a scan tool.
    - **If the test lamp is always OFF**
    1. Ignition OFF, disconnect the X7 harness connector at the K9 body control module.
    2. Test for infinite resistance between the control circuit and ground.
        - If less than infinite resistance, repair the short to ground on the circuit.
        - If infinite resistance
    3. Test for less than 2 ohms in the control circuit end to end.
        - If 2 ohms or greater, repair the open/high resistance in the circuit.
        - If less than 2 ohms, replace the K9 body control module.
    - **If the test lamp is always ON**
    1. Ignition OFF, disconnect the X7 harness connector at the K9 body control module, ignition ON.
    2. Test for less than 1 V between the control circuit terminal and ground.
        - If 1 V or greater, repair the short to voltage on the circuit.
        - If less than 1 V, replace the K9 body control module.

- **If the test lamp turns ON and OFF**

8. Test or replace the appropriate E5 backup lamp.

Repair Instructions

Perform the **Diagnostic Repair Verification** after completing the repair.

- **Backup Lamp Bulb Replacement**
- **Control Module References** for BCM replacement, programming, and setup

DTC B2575 OR B2699

Diagnostic Instructions

- Perform the **Diagnostic System Check - Vehicle** prior to using this diagnostic procedure.
- Review **Strategy Based Diagnosis** for an overview of the diagnostic approach.
- **Diagnostic Procedure Instructions** provides an overview of each diagnostic category.

DTC Descriptors

DTC B2575 01

Headlamps Control Circuit Short to Battery

DTC B2575 02

Headlamps Control Circuit Short to Ground

DTC B2575 04

Headlamps Control Circuit Open

DTC B2699 01

Right Headlamp Control Circuit Short to Battery

DTC B2699 02

Right Headlamp Control Circuit Short to Ground

DTC B2699 04

Right Headlamp Control Circuit Open

Diagnostic Fault Information

Circuit	Short to Ground	Open/High Resistance	Short to Voltage	Signal Performance
F8DA (BCM 3) Fuse B+	B2575 01, B2575 04	B2575 01, B2575 04	-	-
F9DA (BCM 4) Fuse B+	B2699 01, B2699 04	B2699 01, B2699 04	-	-
Low Beam Headlamp Control - Left	B2575 02	B2575 01, B2575 04	1	-
Low Beam Headlamp Control - Right	B2699 02	B2699 01, B2699 04	1	-
Headlamp Ground - Left	-	1	-	-
Headlamp Ground - Right	-	1	-	-
1. Headlamps Malfunction				

Circuit/System Description

With the headlamp switch in the ON position, the headlamp switch headlamp ON signal circuit is grounded through the headlamp switch. The body control module (BCM) responds by applying battery positive voltage to the left and right low beam headlamp control circuits illuminating the low beam headlamps.

Conditions for Running the DTC

- Battery voltage must be between 9-16 V.
- Low beam headlamps ON.

Conditions for Setting the DTC

DTC B2575 01 and B2575 04

- The BCM detects an open/high resistance in the left low beam headlamp control circuit.
- The BCM detects a short to ground or an open/high resistance in the F8DA fuse B+ circuit.

DTC B2575 02

The BCM detects a short to ground in the left low beam headlamp control circuit.

DTC B2699 01 and B2699 04

- The BCM detects an open/high resistance in the right low beam headlamp control circuit.
- The BCM detects a short to ground or an open/high resistance in the F9DA fuse B+ circuit.

DTC B2699 02

The BCM detects a short to ground in the right low beam headlamp control circuit.

Actions Taken When the DTC Sets

- When DTC B2575 sets, the left low beam headlamp will be inoperative.
- When DTC B2699 sets, the right low beam headlamp will be inoperative.

Conditions for Clearing the DTC

- The condition responsible for setting the DTC no longer exists.
- A history DTC will clear once 100 consecutive malfunction-free ignition cycles have occurred.

Reference Information

Schematic Reference

Headlights/Daytime Running Lights (DRL) Schematics

Connector End View Reference

COMPONENT CONNECTOR END VIEWS - INDEX

Description and Operation

Exterior Lighting Systems Description and Operation

Electrical Information Reference

- **Circuit Testing**
- **Connector Repairs**
- **Testing for Intermittent Conditions and Poor Connections**
- **Wiring Repairs**

Scan Tool Reference

Control Module References for scan tool information

Circuit/System Testing

DTC B2575

1. Ignition OFF, disconnect the X1 harness connector at the K9 body control module, ignition ON.
2. Verify a test lamp illuminates between the B+ circuit terminal 3 and ground.
    - **If the test lamp does not illuminate and the circuit fuse is good**
    1. Ignition OFF, disconnect the X2 harness connector at the X51A fuse block - instrument panel.
    2. Test for less than 2 ohms in the B+ circuit end to end.
        - If 2 ohms or greater, repair the open/high resistance in the circuit.
        - If less than 2 ohms, verify the fuse is not open and there is voltage at the fuse.

- **If the test lamp does not illuminate and the circuit fuse is open**
  1. Ignition OFF, disconnect the X2 harness connector at the X51A fuse block - instrument panel.
  2. Test for infinite resistance between the B+ circuit and ground.
     - If less than infinite resistance, repair the short to ground on the circuit.
     - If infinite resistance, replace the K9 body control module.
- **If the test lamp illuminates**

3. Ignition OFF, connect the X1 harness connector at the K9 body control module.
4. Ignition OFF, exterior lamps OFF, disconnect the harness connector at the E13L headlamp - left.
5. Test for less than 5 ohms between the ground circuit terminal 2 and ground.
   - **If 5 ohms or greater**
     1. Ignition OFF.
     2. Test for less than 2 ohms in the ground circuit end to end.
        - If 2 ohms or greater, repair the open/high resistance in the circuit.
        - If less than 2 ohms, repair the open/high resistance in the ground connection.
   - **If less than 5 ohms**
6. Connect a test lamp between the control circuit terminal 1 and ground, ignition ON.
7. Verify the test lamp turns ON and OFF when commanding the Left Low Beam/Daytime Running Lamp ON and OFF with a scan tool.
   - **If the test lamp is always OFF**
     1. Ignition OFF, disconnect the X4 harness connector at the K9 body control module.
     2. Test for infinite resistance between the control circuit and ground.
        - If less than infinite resistance, repair the short to ground on the circuit.
        - If infinite resistance
     3. Test for less than 2 ohms in the control circuit end to end.
        - If 2 ohms or greater, repair the open/high resistance in the circuit.
        - If less than 2 ohms, replace the K9 body control module.
   - **If the test lamp is always ON**
     1. Ignition OFF, disconnect the X4 harness connector at the K9 body control module, ignition ON.
     2. Test for less than 1 V between the control circuit terminal and ground.
        - If 1 V or greater, repair the short to voltage on the circuit.
        - If less than 1 V, replace the K9 body control module.
   - **If the test lamp turns ON and OFF**
8. Test or replace the E13L headlamp bulb - left.

DTC B2699

1. Ignition OFF, disconnect the X1 harness connector at the K9 body control module, ignition ON.
2. Verify a test lamp illuminates between the B+ circuit terminal 2 and ground.
   - **If the test lamp does not illuminate and the circuit fuse is good**

1. Ignition OFF, disconnect the X2 harness connector at the X51A fuse block - instrument panel.
2. Test for less than 2 ohms in the B+ circuit end to end.
    - If 2 ohms or greater, repair the open/high resistance in the circuit.
    - If less than 2 ohms, verify the fuse is not open and there is voltage at the fuse.

- **If the test lamp does not illuminate and the circuit fuse is open**

1. Ignition OFF, disconnect the X2 harness connector at the X51A fuse block - instrument panel.
2. Test for infinite resistance between the B+ circuit and ground.
    - If less than infinite resistance, repair the short to ground on the circuit.
    - If infinite resistance, replace the K9 body control module.

- **If the test lamp illuminates**

3. Ignition OFF, connect the X1 harness connector at the K9 body control module.
4. Ignition OFF, exterior lamps OFF, disconnect the harness connector at the E13R headlamp - right.
5. Test for less than 5 ohms between the ground circuit terminal 2 and ground.
    - **If 5 ohms or greater**

    1. Ignition OFF.
    2. Test for less than 2 ohms in the ground circuit end to end.
        - If 2 ohms or greater, repair the open/high resistance in the circuit.
        - If less than 2 ohms, repair the open/high resistance in the ground connection.

    - **If less than 5 ohms**

6. Connect a test lamp between the control circuit terminal 1 and ground, ignition ON.
7. Verify the test lamp turns ON and OFF when commanding the Right Low Beam/Daytime Running Lamp ON and OFF with a scan tool.
    - **If the test lamp is always OFF**

    1. Ignition OFF, disconnect the X4 harness connector at the K9 body control module.
    2. Test for infinite resistance between the control circuit and ground.
        - If less than infinite resistance, repair the short to ground on the circuit.
        - If infinite resistance
    3. Test for less than 2 ohms in the control circuit end to end.
        - If 2 ohms or greater, repair the open/high resistance in the circuit.
        - If less than 2 ohms, replace the K9 body control module.

    - **If the test lamp is always ON**

    1. Ignition OFF, disconnect the X4 harness connector at the K9 body control module, ignition ON.
    2. Test for less than 1 V between the control circuit terminal and ground.
        - If 1 V or greater, repair the short to voltage on the circuit.
        - If less than 1 V, replace the K9 body control module.

    - **If the test lamp turns ON and OFF**

8. Test or replace the E13R headlamp bulb - right.

Repair Instructions

Perform the **Diagnostic Repair Verification** after completing the repair.

- **Headlamp Bulb Replacement**
- **Control Module References** for BCM replacement, programming, and setup

DTC B257A

Diagnostic Instructions

- Perform the **Diagnostic System Check - Vehicle** prior to using this diagnostic procedure.
- Review **Strategy Based Diagnosis** for an overview of the diagnostic approach.
- **Diagnostic Procedure Instructions** provides an overview of each diagnostic category.

DTC Descriptor

DTC B257A 00

Headlamp Switch Input Signals Correlation Malfunction

Diagnostic Fault Information

Circuit	Short to Ground	Open/High Resistance	Short to Voltage	Signal Performance
Headlamp Switch Park Lamps ON Signal	2	B257A 00	2	-
Headlamp Switch Headlamps OFF Signal	B257A 00	1	1	-
Headlamp Switch Headlamps ON Signal	B257A 00	1	1	-
Headlamp Switch Ground	-	1	-	-
1. Headlamps Malfunction 2. Park, License, and/or Tail Lamps Malfunction				

Circuit/System Description

For headlamp operation, the body control module (BCM) monitors three signal circuits from the headlamp switch. When the headlamp switch is in the AUTO position, the three signal circuits are unaffected and the BCM relies on the ambient light sensor input to turn the headlamps and daytime running lamps (DRLs) ON and OFF. When the headlamp switch is placed in the OFF position, the headlamp switch headlamps OFF signal circuit is grounded, indicating to the BCM that the exterior lamps should be turned OFF. With the headlamp switch in the PARK LAMPS position, the headlamp switch park lamps ON signal circuit is grounded, indicating that the park lamps have been requested. When the headlamp switch is in the HEADLAMP position, both the headlamp switch park lamps ON signal circuit and the headlamp switch headlamps ON signal circuit are grounded. The BCM responds by commanding the park lamps and headlamps ON.

Conditions for Running the DTC

Battery voltage must be between 9-16 V.

Conditions for Setting the DTC

- The BCM detects an open/high resistance in the headlamp switch park lamps ON signal circuit.
- The BCM detects a short to ground in the headlamp switch headlamps ON signal circuit.
- The BCM detects a short to ground in the headlamp switch headlamps OFF signal circuit.

Actions Taken When the DTC Sets

- When DTC B257A 00 is present on the headlamp switch headlamps OFF signal circuit, the low beam headlamps are always ON in the AUTO position. The headlamp switch operates in all positions other than AUTO. The AUTO headlamp defeat is inoperative.
- When DTC B257A 00 is present on the headlamp switch headlamps ON signal circuit, the low beam headlamps are always ON. The BCM disregards all headlamp switch inputs.
- When DTC B257A 00 is present on the headlamp switch park lamps ON signal circuit, the park lamps and low beam headlamps are inoperative in the PARK and HEAD positions. Headlamps and park lamps operate in AUTO position.

Conditions for Clearing the DTC

- The condition responsible for setting the DTC no longer exists.
- A history DTC will clear once 100 consecutive malfunction-free ignition cycles have occurred.

Reference Information

Schematic Reference

Headlights/Daytime Running Lights (DRL) Schematics

Connector End View Reference

COMPONENT CONNECTOR END VIEWS - INDEX

Description and Operation

Exterior Lighting Systems Description and Operation

Electrical Information Reference

- **Circuit Testing**
- **Connector Repairs**
- **Testing for Intermittent Conditions and Poor Connections**
- **Wiring Repairs**

Scan Tool Reference

Control Module References for scan tool information

Circuit/System Testing

1. Ignition OFF, all doors closed, all accessories OFF, disconnect the harness connector at the S30 Headlamp Switch. It may take up to 2 minutes for all vehicle systems to power down.
2. Test for less than 15 ohms between the ground circuit terminal 6 and ground.
    - **If 15 ohms or greater**
    1. Ignition OFF.
    2. Test for less than 2 ohms in the ground circuit end to end.
        - If 2 ohms or greater, repair the open/high resistance in the circuit.
        - If less than 2 ohms, repair the open/high resistance in the ground connection.
    - **If less than 15 ohms**
3. Ignition ON.
4. Verify the scan tool Automatic Headlamps Disable Switch parameter is Inactive.
    - **If not Inactive**
    1. Ignition OFF, disconnect the X1 harness connector at the K9 Body Control Module.
    2. Test for infinite resistance between the signal circuit terminal 5 and ground.
        - If less than infinite resistance, repair the short to ground on the circuit.
        - If infinite resistance, replace the K9 Body Control Module.
    - **If Inactive**
5. Install a 3 A fused jumper wire between the signal circuit terminal 5 and the ground circuit terminal 6.
6. Verify the scan tool Automatic Headlamps Disable Switch parameter is Active.
    - **If not Active**
    1. Ignition OFF, disconnect the X1 harness connector at the K9 Body Control Module, ignition ON.
    2. Test for less than 1 V between the signal circuit terminal 5 and ground.
        - If 1 V or greater, repair the short to voltage on the circuit.
        - If less than 1 V
    3. Test for less than 2 ohms in the signal circuit end to end.
        - If 2 ohms or greater, repair the open/high resistance in the circuit.
        - If less than 2 ohms, replace the K9 Body Control Module.
    - **If Active**
7. Verify the scan tool Park Lamps Switch parameter is Inactive.
    - **If not Inactive**
    1. Ignition OFF, disconnect the X1 harness connector at the K9 Body Control Module.
    2. Test for infinite resistance between the signal circuit terminal 3 and ground.
        - If less than infinite resistance, repair the short to ground on the circuit.

- If infinite resistance, replace the K9 Body Control Module.
- **If Inactive**

8. Install a 3 A fused jumper wire between the signal circuit terminal 3 and the ground circuit terminal 6.
9. Verify the scan tool Park Lamps Switch parameter is Active.
   - **If not Active**
   1. Ignition OFF, disconnect the X1 harness connector at the K9 Body Control Module, ignition ON.
   2. Test for less than 1 V between the signal circuit terminal 3 and ground.
      - If 1 V or greater, repair the short to voltage on the circuit.
      - If less than 1 V
   3. Test for less than 2 ohms in the signal circuit end to end.
      - If 2 ohms or greater, repair the open/high resistance in the circuit.
      - If less than 2 ohms, replace the K9 Body Control Module.
   - **If Active**
10. Verify the scan tool Headlamps On Switch parameter is Inactive.
    - **If not Inactive**
    1. Ignition OFF, disconnect the X1 harness connector at the K9 Body Control Module.
    2. Test for infinite resistance between the signal circuit terminal 4 and ground.
       - If less than infinite resistance, repair the short to ground on the circuit.
       - If infinite resistance, replace the K9 Body Control Module.
    - **If Inactive**
11. Install a 3 A fused jumper wire between the signal circuit terminal 4 and the ground circuit terminal 6.
12. Verify the scan tool Headlamps On Switch parameter is Active.
    - **If not Active**
    1. Ignition OFF, disconnect the X1 harness connector at the K9 Body Control Module, ignition ON.
    2. Test for less than 1 V between the signal circuit terminal 4 and ground.
       - If 1 V or greater, repair the short to voltage on the circuit.
       - If less than 1 V
    3. Test for less than 2 ohms in the signal circuit end to end.
       - If 2 ohms or greater, repair the open/high resistance in the circuit.
       - If less than 2 ohms, replace the K9 Body Control Module.
    - **If Active**
13. Test or replace the S30 Headlamp Switch.

Repair Instructions

Perform the **Diagnostic Repair Verification** after completing the repair.

- **Headlamp Switch Replacement**
- **Control Module References** for BCM replacement, programming, and setup

DTC B257B

Diagnostic Instructions

- Perform the **Diagnostic System Check - Vehicle** prior to using this diagnostic procedure.
- Review **Strategy Based Diagnosis** for an overview of the diagnostic approach.
- **Diagnostic Procedure Instructions** provides an overview of each diagnostic category.

DTC Descriptors

DTC B257B 03

Lighting Control Switch Signal Low Voltage

DTC B257B 07

Lighting Control Switch Signal High Voltage

Diagnostic Fault Information

Circuit	Short to Ground	Open/High Resistance	Short to Voltage	Signal Performance
Instrument Panel Dimmer Switch B+	B257B 03, B1405 03	B257B 03	-	-
Instrument Panel Dimmer Switch Signal	B257B 03	B257B 03	B257B 07	-
LED Backlight Dimming Control Terminal 8 X2	1	1	1	-
LED Backlight Dimming Control Terminal 9 X7	1	1	1	-
1. Interior Backlighting Malfunction				

Circuit/System Description

The instrument panel dimmer switch is used to increase and decrease the brightness of the interior backlighting components. The instrument panel dimmer switch provides a voltage signal to the body control module (BCM) that will increase as the brightness of the lights are increased and decrease as the brightness of the lights are decreased. The BCM provides a low reference signal and a B+ voltage reference to the instrument panel dimmer switch. When the instrument panel dimmer switch is placed in the desired position, the dimmed voltage setting is applied from the instrument panel dimmer switch through the instrument panel dimmer switch signal circuit to the BCM. The BCM interprets the signal and applies a pulse width modulated (PWM) voltage through the light emitting diode (LED) dimming control circuits illuminating the interior backlighting to the requested level of brightness.

Conditions for Running the DTC

- Battery voltage must be between 9-16 V.
- Park lamps ON.

Conditions for Setting the DTC

DTC B257B 03

- The BCM detects a short to ground or an open/high resistance in the instrument panel dimmer switch B+ circuit.
- The BCM detects a short to ground or an open/high resistance in the instrument panel dimmer switch signal circuit.

DTC B257B 07

The BCM detects a short to voltage in the instrument panel dimmer switch signal circuit.

Actions Taken When the DTC Sets

The BCM will not dim any interior backlighting. All interior backlighting will default to the level selected prior to the fault being present.

Conditions for Clearing the DTC

- The condition responsible for setting the DTC no longer exists.
- A history DTC will clear once 100 consecutive malfunction-free ignition cycles have occurred.

Reference Information

Schematic Reference

- **Interior Lights Dimming Schematics**
- **Fog Lights Schematics**

Connector End View Reference

COMPONENT CONNECTOR END VIEWS - INDEX

Description and Operation

Interior Lighting Systems Description and Operation

Electrical Information Reference

- **Circuit Testing**
- **Connector Repairs**
- **Testing for Intermittent Conditions and Poor Connections**

- **Wiring Repairs**

Scan Tool Reference

Control Module References for scan tool information

Circuit/System Testing

1. Ignition OFF and all vehicle systems OFF, disconnect the harness connector at the S30 Headlamp Switch, ignition ON.
2. Test for B+ between the B+ circuit terminal 1 and ground.
   - **If less than B+**
   1. Ignition OFF, disconnect the X3 harness connector at the K9 Body Control Module.
   2. Test for infinite resistance between the B+ circuit and ground.
      - If less than infinite resistance, repair the short to ground on the circuit.
      - If infinite resistance
   3. Test for less than 2 ohms in the B+ circuit end to end.
      - If 2 ohms or greater, repair the open/high resistance in the circuit.
      - If less than 2 ohms, replace the K9 Body Control Module.
   - **If B+**
3. Verify a test lamp does not illuminate between the B+ circuit terminal 1 and the signal circuit terminal 12.
   - **If the test lamp illuminates**
   1. Ignition OFF, disconnect the X1 harness connector at the K9 Body Control Module.
   2. Test for infinite resistance between the signal circuit and ground.
      - If less than infinite resistance, repair the short to ground on the circuit.
      - If infinite resistance, replace the K9 Body Control Module.
   - **If the test lamp does not illuminate**
4. Test for B+ between the B+ circuit terminal 1 and the signal circuit terminal 12.
   - **If less than B+**
   1. Ignition OFF, disconnect the X1 harness connector at the K9 Body Control Module, ignition ON.
   2. Test for less than 1 V between the signal circuit terminal 12 and ground.
      - If 1 V or greater, repair the short to voltage on the circuit.
      - If less than 1 V
   3. Test for less than 2 ohms in the signal circuit end to end.
      - If 2 ohms or greater, repair the open/high resistance in the circuit.
      - If less than 2 ohms, replace the K9 Body Control Module.
   - **If B+**
5. Test or replace the S30 Headlamp Switch.

Repair Instructions

Perform the **Diagnostic Repair Verification** after completing the repair.

- **Headlamp Switch Replacement**
- **Control Module References** for BCM replacement, programming, and setup

DTC B2580

Diagnostic Instructions

- Perform the **Diagnostic System Check - Vehicle** prior to using this diagnostic procedure.
- Review **Strategy Based Diagnosis** for an overview of the diagnostic approach.
- **Diagnostic Procedure Instructions** provides an overview of each diagnostic category.

DTC Descriptors

DTC B2580 01

High Beam Control Circuit Short to Battery

DTC B2580 02

High Beam Control Circuit Short to Ground

DTC B2580 04

High Beam Control Circuit Open

Diagnostic Fault Information

Circuit	Short to Ground	Open/High Resistance	Short to Voltage	Signal Performance
Headlamp High Beam Relay Control	B2580 02	B2580 04	B2580 01	-
Headlamp High Beam Control - Left	1	1	1	-
Headlamp High Beam Control - Right	1	1	1	-
Headlamp Ground - Left	-	1	-	-
Headlamp Ground - Right	-	1	-	-
1. Headlamps Malfunction				

Circuit/System Description

The headlamp high beam relay is supplied with battery voltage at all times. When the low beam headlamps are on and the turn signal/multifunction switch is placed in the high beam position, ground is applied to the body control module (BCM) through the high beam signal circuit. The BCM responds to the high beam request by

applying ground to the high beam relay control circuit which energizes the headlamp high beam relay. With the high beam relay energized, the switch contacts close allowing battery voltage to flow through the high beam fuses to the high beam control circuits illuminating the high beam headlamps.

Conditions for Running the DTC

- Battery voltage must be between 9-16 V.
- High beam headlamps ON.

Conditions for Setting the DTC

DTC B2580 01

The BCM detects a short to voltage in the headlamp high beam relay control circuit.

DTC B2580 02

The BCM detects a short to ground in the headlamp high beam relay control circuit.

DTC B2580 04

The BCM detects an open/high resistance in the headlamp high beam control circuit.

Actions Taken When the DTC Sets

- For an open/high resistance fault, the high beam headlamps and flash to pass function are inoperative. The high beam indicator on the instrument cluster operates normally.
- For a short to voltage fault, the high beam headlamps and flash to pass function are inoperative.

Conditions for Clearing the DTC

- The condition responsible for setting the DTC no longer exists.
- A history DTC will clear once 100 consecutive malfunction-free ignition cycles have occurred.

Reference Information

Schematic Reference

Headlights/Daytime Running Lights (DRL) Schematics

Connector End View Reference

COMPONENT CONNECTOR END VIEWS - INDEX

Description and Operation

Exterior Lighting Systems Description and Operation

Electrical Information Reference

- **Circuit Testing**
- **Connector Repairs**
- **Testing for Intermittent Conditions and Poor Connections**
- **Wiring Repairs**

Scan Tool Reference

Control Module References for scan tool information

Circuit/System Testing

1. Ignition OFF, disconnect the X5 harness connector at the K9 Body Control Module, ignition ON.
2. Verify a test lamp illuminates between the control circuit terminal 18 and ground.
    - **If the test lamp does not illuminate**
    1. Ignition OFF, disconnect the X2 harness connector at the X50A Fuse Block - Underhood.
    2. Test for infinite resistance between the control circuit terminal and ground.
        - If less than infinite resistance, repair the short to ground on the circuit.
        - If infinite resistance
    3. Test for less than 2 ohms in the control circuit end to end.
        - If 2 ohms or greater, repair the open/high resistance in the circuit.
        - If less than 2 ohms, replace the X50A Fuse Block - Underhood.
    - **If the test lamp illuminates**
3. Ignition OFF, connect a 3 A fused jumper between the control circuit terminal 18 and ground.
4. Verify the high beam headlamps illuminate.
    - **If the high beam headlamps do not illuminate**
    1. Ignition OFF, disconnect the X2 harness connector at the X50A Fuse Block - Underhood, ignition ON.
    2. Test for less than 1 V between the control circuit terminal 18 and ground.
        - If 1 V or greater, repair the short to voltage on the circuit.
        - If less than 1 V, replace the X50A Fuse Block - Underhood.
    - **If the high beam headlamps illuminate**
5. Test or replace the K9 Body Control Module.

Repair Instructions

Perform the **Diagnostic Repair Verification** after completing the repair.

- **Fuse Block Replacement**
- **Control Module References** for BCM, replacement, programming, and setup

DTC B2585 OR B3867

Diagnostic Instructions

- Perform the **Diagnostic System Check - Vehicle** prior to using this diagnostic procedure.
- Review **Strategy Based Diagnosis** for an overview of the diagnostic approach.
- **Diagnostic Procedure Instructions** provides an overview of each diagnostic category.

DTC Descriptors

DTC B2585 01

Left Park Lamps Control Circuit Short to Battery

DTC B2585 02

Left Park Lamps Control Circuit Short to Ground

DTC B2585 04

Left Park Lamps Control Circuit Open

DTC B3867 01

Right Park Lamps Control Circuit Short to Battery

DTC B3867 02

Right Park Lamps Control Circuit Short to Ground

DTC B3867 04

Right Park Lamps Control Circuit Open

Diagnostic Fault Information

Circuit	Short to Ground	Open/High Resistance	Short to Voltage	Signal Performance
F3DA (BCM 5) Fuse B+	B2585 01, B2585 04, B3949 01, B3949 04	B2585 01, B2585 04, B3949 01, B3949 04	-	-
F24DA (BCM 2) Fuse B+	B147F 01, B147F 04, B270A 01, B3867 01,	B147F 01, B147F 04, B270A 01, B3867 01,	-	-

	B3867 04	B3867 04		
Headlamp Switch Park Lamps ON Signal	2	B257A 00	2	-
License Plate Lamp Control	B3883 02	B3883 01, B3883 04	B3883 01	-
Park Lamps Control - Left	B2585 02	B2585 01, B2585 04	B2585 01, B2585 04	-
Park Lamps Control - Right	B3867 02	B3867 01, B3867 04	B3867 01, B3867 04	-
Headlamp Switch Ground	-	2	-	-
License Plate Lamp Ground - Left	-	B3883 01, B3883 04	-	-
License Plate Lamp Ground - Right	-	B3883 01, B3883 04	-	-
Park Lamp Ground - Left Front	-	1	-	-
Park Lamp Ground - Right Front	-	1	-	-
Side Marker Lamp Ground - Left Front	-	1	-	-
Side Marker Lamp Ground - Right Front	-	1	-	-
Tail Lamp Ground - Left	-	1	-	-
Tail Lamp Ground - Right	-	1	-	-
Tail/Stop Lamps Ground - Left	-	1	-	-
Tail/Stop Lamps Ground - Right	-	1	-	-
1. Park, License, and/or Tail Lamps Malfunction 2. Park Lamp Switch Malfunction				

Circuit/System Description

When the headlamp switch is placed in the HEAD or PARK position, ground is applied to the park lamp switch ON signal circuit to the body control module (BCM). The BCM responds by applying voltage to the park lamps, tail lamps, and license lamps control circuits illuminating the park, tail, and license lamps.

Conditions for Running the DTC

- Battery voltage must be between 9-16 V.
- Park lamps ON.

Conditions for Setting the DTC

DTC B2585 01 and B2585 04

- The BCM detects a short to voltage or an open/high resistance in the left park lamps control circuit.
- The BCM detects a short to ground or an open/high resistance in the F3DA (BCM 5) fuse B+ circuit.

DTC B2585 02

The BCM detects a short to ground in the left park lamps control circuit.

DTC B3867 01 and B3867 04

- The BCM detects a short to voltage or an open/high resistance in the right park lamps control circuit.
- The BCM detects a short to ground or an open/high resistance in the F24DA (BCM 2) fuse B+ circuit.

DTC B3867 02

The BCM detects a short to ground in the right park lamps control circuit.

Actions Taken When the DTC Sets

DTC B2585 01

The left park lamps are always ON.

DTC B2585 02 and B2585 04

The left park lamps are always OFF.

DTC B3867 01

The right park lamps are always ON.

DTC B3867 02 and B3867 04

The right park lamps are always OFF.

Conditions for Clearing the DTC

- The condition responsible for setting the DTC no longer exists.
- A history DTC will clear once 100 consecutive malfunction-free ignition cycles have occurred.

Reference Information

Schematic Reference

- **Exterior Lights Schematics**
- **Body Control System Schematics**

Connector End View Reference

COMPONENT CONNECTOR END VIEWS - INDEX

Description and Operation

Exterior Lighting Systems Description and Operation

Electrical Information Reference

- **Circuit Testing**
- **Connector Repairs**
- **Testing for Intermittent Conditions and Poor Connections**
- **Wiring Repairs**

Scan Tool Reference

Control Module References for scan tool information

Circuit/System Testing

DTC B2585

1. Ignition OFF, disconnect the X2 harness connector at the K9 body control module, ignition ON.
2. Verify a test lamp illuminates between the B+ circuit terminal 3 and ground.
    - **If the test lamp does not illuminate and the circuit fuse is good**
    1. Ignition OFF, disconnect the X2 harness connector at the X51A fuse block - instrument panel.
    2. Test for less than 2 ohms in the B+ circuit end to end.
        - If 2 ohms or greater, repair the open/high resistance in the circuit.
        - If less than 2 ohms, verify the fuse is not open and there is voltage at the fuse.
    - **If the test lamp does not illuminate and the circuit fuse is open**
    1. Ignition OFF, disconnect the X2 harness connector at the X51A fuse block - instrument panel.
    2. Test for infinite resistance between the B+ circuit and ground.
        - If less than infinite resistance, repair the short to ground on the circuit.
        - If infinite resistance, replace the K9 body control module.
    - **If the test lamp illuminates**
3. Ignition OFF, connect the X2 harness connector at the K9 body control module.
4. Ignition OFF, exterior lamps OFF, disconnect the harness connector at the appropriate left park lamp.
5. Test for less than 5 ohms between the appropriate ground circuit terminal listed below and ground.
    - E4N left front park lamp - terminal C
    - E2LF left front side marker lamp - terminal 2
    - E5AA left tail/stop lamp - terminal 3
    - E5E left tail lamp - terminal 3
    - E2LR left rear side marker lamp - terminal 2
    - **If 5 ohms or greater**

1. Ignition OFF.
2. Test for less than 2 ohms in the ground circuit end to end.
    - If 2 ohms or greater, repair the open/high resistance in the circuit.
    - If less than 2 ohms, repair the open/high resistance in the ground connection.

- **If less than 5 ohms**

6. Connect a test lamp between the appropriate control circuit terminal listed below and ground, ignition ON.
    - E4N left front park lamp - terminal A
    - E2LF left front side marker lamp - terminal 1
    - E5AA left tail/stop lamp - terminal 2
    - E5E left tail lamp - terminal 2
    - E2LR left rear side marker lamp - terminal 1
7. Verify the test lamp turns ON and OFF when commanding the Left Park Lamps ON and OFF with a scan tool.

- **If the test lamp is always OFF**

1. Ignition OFF, disconnect the X4 harness connector at the K9 body control module.
2. Test for infinite resistance between the control circuit and ground.
    - If less than infinite resistance, repair the short to ground on the circuit.
    - If infinite resistance
3. Test for less than 2 ohms in the control circuit end to end.
    - If 2 ohms or greater, repair the open/high resistance in the circuit.
    - If less than 2 ohms, replace the K9 body control module.

- **If the test lamp is always ON**

1. Ignition OFF, disconnect the X4 harness connector at the K9 body control module, ignition ON.
2. Test for less than 1 V between the control circuit terminal and ground.
    - If 1 V or greater, repair the short to voltage on the circuit.
    - If less than 1 V, replace the K9 body control module.

- **If the test lamp turns ON and OFF**

8. Test or replace the appropriate left park lamp.

DTC B3867

1. Ignition OFF, disconnect the X1 harness connector at the K9 body control module, ignition ON.
2. Verify a test lamp illuminates between the B+ circuit terminal 4 and ground.

- **If the test lamp does not illuminate and the circuit fuse is good**

1. Ignition OFF, disconnect the X2 harness connector at the X51A fuse block - instrument panel.
2. Test for less than 2 ohms in the B+ circuit end to end.
    - If 2 ohms or greater, repair the open/high resistance in the circuit.
    - If less than 2 ohms, verify the fuse is not open and there is voltage at the fuse.

- **If the test lamp does not illuminate and the circuit fuse is open**

1. Ignition OFF, disconnect the X2 harness connector at the X51A fuse block - instrument panel.
2. Test for infinite resistance between the B+ circuit and ground.
    - If less than infinite resistance, repair the short to ground on the circuit.
    - If infinite resistance, replace the K9 body control module.

- **If the test lamp illuminates**

3. Ignition OFF, connect the X1 harness connector at the K9 body control module.
4. Ignition OFF, exterior lamps OFF, disconnect the harness connector at the appropriate right park lamp.
5. Test for less than 5 ohms between the appropriate ground circuit terminal listed below and ground.
    - E4P right front park lamp - terminal C
    - E2RF right front side marker lamp - terminal 2
    - E5AB right tail/stop lamp - terminal 3
    - E5F right tail lamp - terminal 3
    - E2RR right rear side marker lamp - terminal 2
    - **If 5 ohms or greater**

    1. Ignition OFF.
    2. Test for less than 2 ohms in the ground circuit end to end.
        - If 2 ohms or greater, repair the open/high resistance in the circuit.
        - If less than 2 ohms, repair the open/high resistance in the ground connection.

    - **If less than 5 ohms**

6. Connect a test lamp between the appropriate control circuit terminal listed below and ground, ignition ON.
    - E4P right front park lamp - terminal A
    - E2RF right front side marker lamp - terminal 1
    - E5AB right tail/stop lamp - terminal 2
    - E5F right tail lamp - terminal 2
    - E2RR right rear side marker lamp - terminal 1
7. Verify the test lamp turns ON and OFF when commanding the Right Park Lamps ON and OFF with a scan tool.
    - **If the test lamp is always OFF**

    1. Ignition OFF, disconnect the X4 harness connector at the K9 body control module.
    2. Test for infinite resistance between the control circuit and ground.
        - If less than infinite resistance, repair the short to ground on the circuit.
        - If infinite resistance
    3. Test for less than 2 ohms in the control circuit end to end.
        - If 2 ohms or greater, repair the open/high resistance in the circuit.
        - If less than 2 ohms, replace the K9 body control module.

    - **If the test lamp is always ON**

1. Ignition OFF, disconnect the X4 harness connector at the K9 body control module, ignition ON.
2. Test for less than 1 V between the control circuit terminal and ground.
    - If 1 V or greater, repair the short to voltage on the circuit.
    - If less than 1 V, replace the K9 body control module.

- **If the test lamp turns ON and OFF**

8. Test or replace the appropriate right park lamp.

Repair Instructions

Perform the **Diagnostic Repair Verification** after completing the repair.

- **Tail Lamp Bulb Replacement**
- **Front Side Marker Lamp Bulb Replacement**
- **Control Module References** for BCM replacement, programming, and setup

DTC B2645

Diagnostic Instructions

- Perform the **Diagnostic System Check - Vehicle** prior to using this diagnostic procedure.
- Review **Strategy Based Diagnosis** for an overview of the diagnostic approach.
- **Diagnostic Procedure Instructions** provides an overview of each diagnostic category.

DTC Descriptors

DTC B2645 03

Ambient Light Sensor Circuit Low Voltage

DTC B2645 07

Ambient Light Sensor Circuit High Voltage

Diagnostic Fault Information

Circuit	Short to Ground	Open/High Resistance	Short to Voltage	Signal Performance
F8DA (BCM 3) Fuse B+	B2575 01, B2575 04	B2575 01, B2575 04	-	-
F9DA (BCM 4) Fuse B+	B2699 01, B2699 04	B2699 01, B2699 04	-	-
Ambient Light Sensor Signal	B2645 03	B2645 07	B2645 07	-
Low Beam Headlamp	B2575 02	B2575 01, B2575 04	1	-

Control - Left				
Low Beam Headlamp Control - Right	B2699 02	B2699 01, B2699 04	1	-
Ambient Light Sensor Low Reference (C68)	2	B2645 07, B0163 05, B0183 05	2	-
Ambient Light Sensor Ground (C67)	-	B2645 07	-	-
Headlamp Ground - Left	-	1	-	-
Headlamp Ground - Right	-	1	-	-
1. Headlamps Malfunction 2. Daytime Running Lamps Malfunction				

Circuit/System Description

With Manual HVAC

The ambient light sensor is used to monitor outside lighting conditions. The ambient light sensor provides a voltage signal that will vary between 0.2 and 4.9 volts depending on outside lighting conditions. The body control module (BCM) provides a 5-volt reference signal to the ambient light sensor which is permanently grounded at G203. The BCM monitors the ambient light sensor signal circuit to determine if outside lighting conditions are correct for either daytime running lights (DRL) or automatic lamp control (ALC) when the headlamp switch is in the AUTO position. In daylight conditions the BCM will command the DRLs ON. During low light conditions the BCM will command the low beam headlamps ON. Any function or condition that turns on the headlamps will cancel DRL operation.

With Automatic HVAC

The ambient light sensor is used to monitor outside lighting conditions. The ambient light sensor provides a voltage signal that will vary between 0.2 and 4.9 volts depending on outside lighting conditions. The body control module (BCM) provides a 5-volt reference signal to the ambient light sensor and the HVAC control module provides a low reference ground. The BCM monitors the ambient light sensor signal circuit to determine if outside lighting conditions are correct for either daytime running lights (DRL) or automatic lamp control (ALC) when the headlamp switch is in the AUTO position. In daylight conditions the BCM will command the DRLs ON. During low light conditions the BCM will command the low beam headlamps ON. Any function or condition that turns on the headlamps will cancel DRL operation.

Conditions for Running the DTC

Battery voltage must be between 9-16 V.

Conditions for Setting the DTC

DTC B2645 03

The BCM detects a short to ground in the ambient light sensor signal circuit.

DTC B2645 07

- The BCM detects a short to voltage or an open/high resistance in the ambient light sensor signal circuit.
- The BCM detects an open/high resistance in the ambient light sensor low reference circuit.

Actions Taken When the DTC Sets

- Automatic lamp control (ALC) and daytime running lamps are inoperative.
- The BCM defaults to low light status and commands the low beam headlamps ON.

Conditions for Clearing the DTC

- The condition responsible for setting the DTC no longer exists.
- A history DTC will clear once 100 consecutive malfunction-free ignition cycles have occurred.

Reference Information

Schematic Reference

Headlights/Daytime Running Lights (DRL) Schematics

Connector End View Reference

COMPONENT CONNECTOR END VIEWS - INDEX

Description and Operation

Exterior Lighting Systems Description and Operation

Electrical Information Reference

- **Circuit Testing**
- **Connector Repairs**
- **Testing for Intermittent Conditions and Poor Connections**
- **Wiring Repairs**

Scan Tool Reference

Control Module References for scan tool information

Circuit/System Testing

With C67

1. Ignition OFF, scan tool disconnected, all doors closed, all accessories OFF, disconnect the harness connector at the B10B ambient light/sunload sensor. It may take up to 2 minutes for all vehicle systems to power down.
2. Test for less than 5 ohms between the ground circuit terminal 6 and ground.

- **If 5 ohms or greater**

1. Ignition OFF.
2. Test for less than 2 ohms in the ground circuit end to end.
   - If 2 ohms or greater, repair the open/high resistance in the circuit.
   - If less than 2 ohms, repair the open/high resistance in the ground connection.

- **If less than 5 ohms**

3. Ignition ON.
4. Verify the scan tool Ambient Light Sensor parameter is greater than 4.65 V.
   - **If 4.65 V or less**
   1. Ignition OFF, disconnect the X2 harness connector at the K9 body control module.
   2. Test for infinite resistance between the signal circuit terminal 5 and ground.
      - If less than infinite resistance, repair the short to ground on the circuit.
      - If infinite resistance, replace the K9 body control module.
   - **If greater than 4.65 V**
5. Install a 3 A fused jumper wire between the signal circuit terminal 5 and the ground circuit terminal 6.
6. Verify the scan tool Ambient Light Sensor parameter is less than 0.196 V.
   - **If 0.196 V or greater**
   1. Ignition OFF, disconnect the X2 harness connector at the K9 body control module, ignition ON.
   2. Test for less than 1 V between the signal circuit terminal 5 and ground.
      - If 1 V or greater, repair the short to voltage on the circuit.
      - If less than 1 V
   3. Test for less than 2 ohms in the signal circuit end to end.
      - If 2 ohms or greater, repair the open/high resistance in the circuit.
      - If less than 2 ohms, replace the K9 body control module.
   - **If less than 0.196 V**
7. Test or replace the B10B ambient light/sunload sensor.

With C68

1. Ignition OFF, scan tool disconnected, all doors closed, all accessories OFF, disconnect the harness connector at the B10B ambient light/sunload sensor. It may take up to 2 minutes for all vehicle systems to power down.
2. Test for less than 10 ohms between the low reference circuit terminal 6 and ground.
   - **If 10 ohms or greater**
   1. Ignition OFF, disconnect the X1 harness connector at the K33 HVAC control module.
   2. Test for less than 2 ohms in the low reference circuit end to end.
      - If 2 ohms or greater, repair the open/high resistance in the circuit.
      - If less than 2 ohms, replace the K33 HVAC control module.
   - **If less than 10 ohms**

3. Ignition ON.
4. Verify the scan tool Ambient Light Sensor parameter is greater than 4.65 V.
    - **If 4.65 V or less**
    1. Ignition OFF, disconnect the X2 harness connector at the K9 body control module.
    2. Test for infinite resistance between the signal circuit terminal 5 and ground.
        - If less than infinite resistance, repair the short to ground on the circuit.
        - If infinite resistance, replace the K9 body control module.
    - **If greater than 4.65 V**
5. Install a 3 A fused jumper wire between the signal circuit terminal 5 and the low reference circuit terminal 6.
6. Verify the scan tool Ambient Light Sensor parameter is less than 0.196 V.
    - **If 0.196 V or greater**
    1. Ignition OFF, disconnect the X2 harness connector at the K9 body control module, ignition ON.
    2. Test for less than 1 V between the signal circuit terminal 5 and ground.
        - If 1 V or greater, repair the short to voltage on the circuit.
        - If less than 1 V
    3. Test for less than 2 ohms in the signal circuit end to end.
        - If 2 ohms or greater, repair the open/high resistance in the circuit.
        - If less than 2 ohms, replace the K9 body control module.
    - **If less than 0.196 V**
7. Test or replace the B10B ambient light/sunload sensor.

Repair Instructions

Perform the **Diagnostic Repair Verification** after completing the repair.

- **Sun Load Temperature and Headlamp Automatic Control Ambient Light Sensor Replacement**
- **Control Module References** for BCM or HVAC Control Module replacement, programming, and setup

DTC B3596

Diagnostic Instructions

- Perform the **Diagnostic System Check - Vehicle** prior to using this diagnostic procedure.
- Review **Strategy Based Diagnosis** for an overview of the diagnostic approach.
- **Diagnostic Procedure Instructions** provides an overview of each diagnostic category.

DTC Descriptor

DTC B3596 00

Hazard Lamps Request Circuit Malfunction

Diagnostic Fault Information

Circuit	Short to Ground	Open/High Resistance	Short to Voltage	Signal Performance
Hazard Warning Switch Signal	1	1	1	B3596 00
Hazard Warning Switch LED Backlighting Control	B096A 02	B096A 01, B096A 04	2	-
Hazard Warning Switch Ground	-	B096A 01, B096A 04	-	-
1. Hazard Lamps Malfunction 2. Hazard Warning Switch Backlighting Malfunction				

Circuit/System Description

The hazard flashers may be activated in any power mode. The hazard warning switch signal circuit is momentarily grounded when the hazard warning switch is pressed. The body control module (BCM) responds to the hazard warning switch signal input by supplying battery voltage to all four turn signal lamps in an ON and OFF duty cycle. When the hazard warning switch is activated, the BCM sends a serial data message to the instrument cluster requesting both turn signal indicators to be cycled ON and OFF.

Conditions for Running the DTC

- Battery voltage must be between 9-16 V.
- Hazard lamps ON.

Conditions for Setting the DTC

The hazard warning switch input is Active for longer than 60 seconds.

Actions Taken When the DTC Sets

The hazard lamps are inoperative.

Conditions for Clearing the DTC

- The condition responsible for setting the DTC no longer exists.
- A history DTC will clear once 100 consecutive malfunction-free ignition cycles have occurred.

Reference Information

Schematic Reference

Exterior Lights Schematics

Connector End View Reference

COMPONENT CONNECTOR END VIEWS - INDEX

Description and Operation

Exterior Lighting Systems Description and Operation

Electrical Information Reference

- **Circuit Testing**
- **Connector Repairs**
- **Testing for Intermittent Conditions and Poor Connections**
- **Wiring Repairs**

Scan Tool Reference

Control Module References for scan tool information

Circuit/System Testing

1. Ignition OFF, scan tool disconnected, all doors closed, all accessories OFF, disconnect the harness connector at the S26 hazard warning switch. It may take up to 2 minutes for all vehicle systems to power down.
2. Test for less than 5 ohms between the ground circuit terminal 3 and ground.
    - **If 5 ohms or greater**
    1. Ignition OFF.
    2. Test for less than 2 ohms in the ground circuit end to end.
        - If 2 ohms or greater, repair the open/high resistance in the circuit.
        - If less than 2 ohms, repair the open/high resistance in the ground connection.
    - **If less than 5 ohms**
3. Ignition ON.
4. Verify the scan tool Hazard Lamps Switch parameter is Inactive.
    - **If not Inactive**
    1. Ignition OFF, disconnect the X2 harness connector at the K9 body control module.
    2. Test for infinite resistance between the signal circuit terminal 1 and ground.
        - If less than infinite resistance, repair the short to ground on the circuit.
        - If infinite resistance, replace the K9 body control module.
    - **If Inactive**
5. Install a 3 A fused jumper wire between the signal circuit terminal 1 and the ground circuit terminal 3.
6. Verify the scan tool Hazard Lamps Switch parameter is Active.
    - **If not Active**
    1. Ignition OFF, disconnect the X2 harness connector at the K9 body control module, ignition ON.

2. Test for less than 1 V between the signal circuit terminal 1 and ground.
    - If 1 V or greater, repair the short to voltage on the circuit.
    - If less than 1 V
3. Test for less than 2 ohms in the signal circuit end to end.
    - If 2 ohms or greater, repair the open/high resistance in the circuit.
    - If less than 2 ohms, replace the K9 body control module.

- **If Active**

7. Test or replace the S26 hazard warning switch.

Repair Instructions

Perform the **Diagnostic Repair Verification** after completing the repair.

- **Hazard Warning Switch Replacement**
- **Control Module References** for BCM replacement, programming, and setup

DTC B3600

Diagnostic Instructions

- Perform the **Diagnostic System Check - Vehicle** prior to using this diagnostic procedure.
- Review **Strategy Based Diagnosis** for an overview of the diagnostic approach.
- **Diagnostic Procedure Instructions** provides an overview of each diagnostic category.

DTC Descriptors

DTC B3600 03

Passenger Compartment Dimming Request Signal Circuit Low Voltage

DTC B3600 07

Passenger Compartment Dimming Request Signal Circuit High Voltage

Diagnostic Fault Information

Circuit	Short to Ground	Open/High Resistance	Short to Voltage	Signal Performance
I/P Dimmer Switch B+ Reference	B257B 03, B1405 03	B257B 03	-	-
I/P Dimmer Switch Signal	B257B 03, B3600 03	B257B 03, B3600 03	B257B 07, B3600 07	-
LED Backlight Dimming Control Terminal 8 X2	1	1	1	-

LED Backlight Dimming Control Terminal 9 X7	1	1	1	-
1. Interior Backlighting Malfunction				

Circuit/System Description

The instrument panel (I/P) dimmer switch is used to increase and decrease the brightness of the interior backlighting components. The I/P dimmer switch provides a voltage signal to the body control module (BCM) that will increase as the brightness of the lights are increased and decrease as the brightness of the lights are decreased. The BCM provides a low reference signal and a B+ voltage reference to the I/P dimmer switch. When the I/P dimmer switch is placed in the desired position, the dimmed voltage setting is applied from the I/P dimmer switch through the I/P dimmer switch signal circuit to the BCM. The BCM interprets the signal and applies a pulse width modulated (PWM) voltage through the light emitting diode (LED) dimming 1 and dimming 2 control circuits illuminating the interior backlighting to the requested level of brightness.

Conditions for Running the DTC

- Battery voltage must be between 9-16 V.
- Park Lamps ON.

Conditions for Setting the DTC

DTC B3600 03

The BCM detects a short to ground or an open/high resistance in the I/P dimmer switch signal circuit.

DTC B3600 07

The BCM detects a short to voltage in the I/P dimmer switch signal circuit.

Action Taken When the DTC Sets

The BCM will not dim any interior backlighting. All interior backlighting will default to the level selected prior to the fault being present.

Conditions for Clearing the DTC

- The condition responsible for setting the DTC no longer exists.
- A history DTC will clear once 100 consecutive malfunction-free ignition cycles have occurred.

Reference Information

Schematic Reference

Interior Lights Dimming Schematics

Connector End View Reference

COMPONENT CONNECTOR END VIEWS - INDEX

Description and Operation

Interior Lighting Systems Description and Operation

Electrical Information Reference

- **Circuit Testing**
- **Connector Repairs**
- **Testing for Intermittent Conditions and Poor Connections**
- **Wiring Repairs**

Scan Tool Reference

Control Module References for scan tool information

Circuit/System Testing

1. Ignition OFF and all vehicle systems OFF, disconnect the harness connector at the S30 Headlamp Switch, ignition ON.
2. Test for B+ between the B+ circuit terminal 1 and ground.
    - **If less than B+**
    1. Ignition OFF, disconnect the X3 harness connector at the K9 Body Control Module.
    2. Test for infinite resistance between the B+ circuit and ground.
        - If less than infinite resistance, repair the short to ground on the circuit.
        - If infinite resistance
    3. Test for less than 2 ohms in the B+ circuit end to end.
        - If 2 ohms or greater, repair the open/high resistance in the circuit.
        - If less than 2 ohms, replace the K9 Body Control Module.
    - **If B+**
3. Verify a test lamp does not illuminate between the B+ circuit terminal 1 and the signal circuit terminal 12.
    - **If the test lamp illuminates**
    1. Ignition OFF, disconnect the X1 harness connector at the K9 Body Control Module.
    2. Test for infinite resistance between the signal circuit and ground.
        - If less than infinite resistance, repair the short to ground on the circuit.
        - If infinite resistance, replace the K9 Body Control Module.
    - **If the test lamp does not illuminate**
4. Test for B+ between the B+ circuit terminal 1 and the signal circuit terminal 12.
    - **If less than B+**
    1. Ignition OFF, disconnect the X1 harness connector at the K9 Body Control Module, ignition ON.

2. Test for less than 1 V between the signal circuit terminal 12 and ground.
    - If 1 V or greater, repair the short to voltage on the circuit.
    - If less than 1 V
3. Test for less than 2 ohms in the signal circuit end to end.
    - If 2 ohms or greater, repair the open/high resistance in the circuit.
    - If less than 2 ohms, replace the K9 Body Control Module.
- **If B+**

5. Test or replace the S30 Headlamp Switch.

Repair Instructions

Perform the **Diagnostic Repair Verification** after completing the repair.

- **Headlamp Switch Replacement**
- **Control Module References** for BCM replacement, programming, and setup

DTC B3650

Diagnostic Instructions

- Perform the **Diagnostic System Check - Vehicle** prior to using this diagnostic procedure.
- Review **Strategy Based Diagnosis** for an overview of the diagnostic approach.
- **Diagnostic Procedure Instructions** provides an overview of each diagnostic category.

DTC Descriptor

DTC B3650 08

High Beam Request Signal Circuit Performance - Signal Invalid

Diagnostic Fault Information

Circuit	Short to Ground	Open/High Resistance	Short to Voltage	Signal Performance
Headlamp Switch Headlamps OFF Signal	B257A 00	1	1	-
Headlamp Switch Headlamps ON Signal	B257A 00	1	1	-
Headlamp Switch Park Lamps ON Signal	2	B257A 00	2	-
Turn Signal/Multifunction Switch Flash To Pass Signal	B3806 00	1	1	-
Turn Signal/Multifunction Switch High Beam Signal	B3650 08	1	1	-

Headlamp Switch Ground	-	1	-	-
Turn Signal/Multifunction Switch Ground	-	1	-	-
1. Headlamps Malfunction 2. Park, License, and/or Tail Lamps Malfunction				

Circuit/System Description

When the low beam headlamps are on and the turn signal/multifunction switch is placed in the high beam position, ground is applied to the body control module (BCM) through the high beam signal circuit. The BCM responds to the high beam request by applying ground to the high beam relay control circuit which energizes the high beam relay. With the high beam relay energized, the switch contacts close allowing battery voltage to flow through the high beam fuses to the high beam control circuits illuminating the high beam headlamps.

Conditions for Running the DTC

Battery voltage must be between 9-16 V.

Conditions for Setting the DTC

The BCM detects a short to ground in the turn signal/multifunction switch high beam signal circuit.

Actions Taken When the DTC Sets

The high beam headlamps will not operate.

Conditions for Clearing the DTC

- The condition responsible for setting the DTC no longer exists.
- A history DTC will clear once 100 consecutive malfunction-free ignition cycles have occurred.

Reference Information

Schematic Reference

Headlights/Daytime Running Lights (DRL) Schematics

Connector End View Reference

COMPONENT CONNECTOR END VIEWS - INDEX

Description and Operation

Exterior Lighting Systems Description and Operation

Electrical Information Reference

- **Circuit Testing**
- **Connector Repairs**
- **Testing for Intermittent Conditions and Poor Connections**
- **Wiring Repairs**

Scan Tool Reference

Control Module References for scan tool information

Circuit/System Testing

1. Ignition OFF, scan tool disconnected, all doors closed, all accessories OFF, disconnect the harness connector at the S78 turn signal/multifunction switch. It may take up to 2 minutes for all vehicle systems to power down.
2. Test for less than 5 ohms between the ground circuit terminal 3 and ground.
    - **If 5 ohms or greater**
    1. Ignition OFF.
    2. Test for less than 2 ohms in the ground circuit end to end.
        - If 2 ohms or greater, repair the open/high resistance in the circuit.
        - If less than 2 ohms, repair the open/high resistance in the ground connection.
    - **If less than 5 ohms**
3. Ignition ON.
4. Verify the scan tool High Beam Select Switch parameter is Inactive.
    - **If not Inactive**
    1. Ignition OFF, disconnect the X3 harness connector at the K9 body control module.
    2. Test for infinite resistance between the signal circuit terminal 2 and ground.
        - If less than infinite resistance, repair the short to ground on the circuit.
        - If infinite resistance, replace the K9 body control module.
    - **If Inactive**
5. Install a 3 A fused jumper wire between the signal circuit terminal 2 and the ground circuit terminal 3.
6. Verify the scan tool High Beam Select Switch parameter is Active.
    - **If not Active**
    1. Ignition OFF, disconnect the X3 harness connector at the K9 body control module, ignition ON.
    2. Test for less than 1 V between the signal circuit terminal 2 and ground.
        - If 1 V or greater, repair the short to voltage on the circuit.
        - If less than 1 V
    3. Test for less than 2 ohms in the signal circuit end to end.
        - If 2 ohms or greater, repair the open/high resistance in the circuit.
        - If less than 2 ohms, replace the K9 body control module.
    - **If Active**

7. Test or replace the S78 turn signal/multifunction switch.

Repair Instructions

Perform the **Diagnostic Repair Verification** after completing the repair.

- **Turn Signal Switch Replacement**
- **Control Module References** for BCM replacement, programming, and setup

DTC B3806

Diagnostic Instructions

- Perform the **Diagnostic System Check - Vehicle** prior to using this diagnostic procedure.
- Review **Strategy Based Diagnosis** for an overview of the diagnostic approach.
- **Diagnostic Procedure Instructions** provides an overview of each diagnostic category.

DTC Descriptor

DTC B3806 00

High Beam and Headlamp Flash Select Circuit Malfunction

Diagnostic Fault Information

Circuit	Short to Ground	Open/High Resistance	Short to Voltage	Signal Performance
Headlamp Switch Headlamps OFF Signal	B257A 00	1	1	-
Headlamp Switch Headlamps ON Signal	B257A 00	1	1	-
Headlamp Switch Park Lamps ON Signal	2	B257A 00	2	-
Turn Signal/Multifunction Switch Flash To Pass Signal	B3806 00	1	1	-
Turn Signal/Multifunction Switch High Beam Signal	B3650 08	1	1	-
Headlamp Switch Ground	-	1	-	-
Turn Signal/Multifunction Switch Ground	-	1	-	-
1. Headlamps Malfunction 2. Park, License, and/or Tail Lamps Malfunction				

Circuit/System Description

When the turn signal/multifunction switch is momentarily placed in the flash to pass position, ground is applied to the body control module (BCM) through the flash to pass signal circuit. The BCM responds to the flash to pass request by applying ground to the high beam relay control circuit which energizes the high beam relay. With the high beam relay energized, the switch contacts close allowing battery voltage to flow through the high beam fuses to the high beam control circuits illuminating the high beam headlamps. The high beam headlamps will only illuminate for as long at the flash to pass switch is activated.

Conditions for Running the DTC

Battery voltage must be between 9-16 V.

Conditions for Setting the DTC

The BCM detects a short to ground in the turn signal/multifunction switch flash to pass signal circuit.

Actions Taken When the DTC Sets

The high beam lamps and the high beam indicator on the instrument panel cluster (IPC) are always ON.

Conditions for Clearing the DTC

- The condition responsible for setting the DTC no longer exists.
- A history DTC will clear once 100 consecutive malfunction-free ignition cycles have occurred.

Reference Information

Schematic Reference

Headlights/Daytime Running Lights (DRL) Schematics

Connector End View Reference

COMPONENT CONNECTOR END VIEWS - INDEX

Description and Operation

Exterior Lighting Systems Description and Operation

Electrical Information Reference

- **Circuit Testing**
- **Connector Repairs**
- **Testing for Intermittent Conditions and Poor Connections**
- **Wiring Repairs**

Scan Tool Reference

Control Module References for scan tool information

Circuit/System Testing

1. Ignition OFF, scan tool disconnected, all doors closed, all accessories OFF, disconnect the harness connector at the S78 turn signal/multifunction switch. It may take up to 2 minutes for all vehicle systems to power down.
2. Test for less than 5 ohms between the ground circuit terminal 3 and ground.
    - **If 5 ohms or greater**
    1. Ignition OFF.
    2. Test for less than 2 ohms in the ground circuit end to end.
        - If 2 ohms or greater, repair the open/high resistance in the circuit.
        - If less than 2 ohms, repair the open/high resistance in the ground connection.
    - **If less than 5 ohms**
3. Ignition ON.
4. Verify the scan tool Headlamps Flash Switch parameter is Inactive.
    - **If not Inactive**
    1. Ignition OFF, disconnect the X3 harness connector at the K9 body control module.
    2. Test for infinite resistance between the signal circuit terminal 4 and ground.
        - If less than infinite resistance, repair the short to ground on the circuit.
        - If infinite resistance, replace the K9 body control module.
    - **If Inactive**
5. Install a 3 A fused jumper wire between the signal circuit terminal 4 and the ground circuit terminal 3.
6. Verify the scan tool Headlamps Flash Switch parameter is Active.
    - **If not Active**
    1. Ignition OFF, disconnect the X3 harness connector at the K9 body control module, ignition ON.
    2. Test for less than 1 V between the signal circuit terminal 4 and ground.
        - If 1 V or greater, repair the short to voltage on the circuit.
        - If less than 1 V
    3. Test for less than 2 ohms in the signal circuit end to end.
        - If 2 ohms or greater, repair the open/high resistance in the circuit.
        - If less than 2 ohms, replace the K9 body control module.
    - **If Active**
7. Test or replace the S78 turn signal/multifunction switch.

Repair Instructions

Perform the **Diagnostic Repair Verification** after completing the repair.

- **Turn Signal Switch Replacement**

- **Control Module References** for BCM replacement, programming, and setup

DTC B3883

Diagnostic Instructions

- Perform the **Diagnostic System Check - Vehicle** prior to using this diagnostic procedure.
- Review **Strategy Based Diagnosis** for an overview of the diagnostic approach.
- **Diagnostic Procedure Instructions** provides an overview of each diagnostic category.

DTC Descriptors

DTC B3883 01

License Plate Lamp Circuit Short to Battery

DTC B3883 02

License Plate Lamp Circuit Short to Ground

DTC B3883 04

License Plate Lamp Circuit Open

Diagnostic Fault Information

Circuit	Short to Ground	Open/High Resistance	Short to Voltage	Signal Performance
License Plate Lamp Control	B3883 02	B3883 01, B3883 04	B3883 01	-
License Plate Lamp Ground - Right	-	B3883 01, B3883 04	-	-
License Plate Lamp Ground - Left	-	B3883 01, B3883 04	-	-

Circuit/System Description

When the headlamp switch is placed in the HEAD or PARK position, ground is applied to the park lamp switch ON signal circuit to the body control module (BCM). The BCM responds by applying voltage to the park lamps, tail lamps, and license lamps control circuits illuminating the park, tail, and license lamps.

Conditions for Running the DTC

Battery voltage must be between 9-16 V.

DTC B3883 01

Headlamp switch in OFF position.

DTC B3883 02 or B3883 04

Headlamp switch in AUTO, PARK or ON positions.

Conditions for Setting the DTC

DTC B3883 01

- The BCM detects a short to voltage in the license lamps control circuit.
- The BCM detects an open/high resistance in the license lamps ground circuit.

DTC B3883 02

The BCM detects a short to ground in the license lamps control circuit.

DTC B3883 04

- The BCM detects an open/high resistance in the license lamps control circuit.
- The BCM detects an open/high resistance in the license lamps ground circuit.

Actions Taken When the DTC Sets

DTC B3883 01

License lamps always ON.

DTC B3883 02 or B3883 04

License lamps inoperative.

Conditions for Clearing the DTC

- The condition responsible for setting the DTC no longer exists.
- A history DTC will clear once 100 consecutive malfunction-free ignition cycles have occurred.

Reference Information

Schematic Reference

Exterior Lights Schematics

Connector End View Reference

COMPONENT CONNECTOR END VIEWS - INDEX

Description and Operation

Exterior Lighting Systems Description and Operation

Electrical Information Reference

- **Circuit Testing**
- **Connector Repairs**
- **Testing for Intermittent Conditions and Poor Connections**
- **Wiring Repairs**

Scan Tool Reference

Control Module References for scan tool information

Circuit/System Testing

1. Ignition OFF, exterior lamps OFF, remove both E7 license plate lamp bulbs.
2. Test for less than 5 ohms between each ground circuit terminal 1 and ground.
    - **If 5 ohms or greater**
    1. Ignition OFF.
    2. Test for less than 2 ohms in the ground circuit end to end.
        - If 2 ohms or greater, repair the open/high resistance in the circuit.
        - If less than 2 ohms, repair the open/high resistance in the ground connection.
    - **If less than 5 ohms**
3. Connect a test lamp between the E7L license plate lamp - left control circuit terminal 2 and ground, ignition ON.
4. Verify the test lamp turns ON and OFF when commanding the License Plate Lamps ON and OFF with a scan tool.
    - **If the test lamp is always OFF**
    1. Ignition OFF, disconnect the X4 harness connector at the K9 body control module.
    2. Test for infinite resistance between the control circuit and ground.
        - If less than infinite resistance, repair the short to ground on the circuit.
        - If infinite resistance
    3. Test for less than 2 ohms in the control circuit end to end.
        - If 2 ohms or greater, repair the open/high resistance in the circuit.
        - If less than 2 ohms, replace the K9 body control module.
    - **If the test lamp is always ON**
    1. Ignition OFF, disconnect the X4 harness connector at the K9 body control module, ignition ON.
    2. Test for less than 1 V between the control circuit terminal and ground.
        - If 1 V or greater, repair the short to voltage on the circuit.

- If less than 1 V, replace the K9 body control module.
- **If the test lamp turns ON and OFF**

5. Ignition OFF.
6. Connect a test lamp between the E7R license plate lamp - right control circuit terminal 2 and ground, ignition ON.
7. Verify the test lamp turns ON and OFF when commanding the License Plate Lamps ON and OFF with a scan tool.
   - **If the test lamp is always OFF**
   1. Ignition OFF, disconnect the X4 harness connector at the K9 body control module.
   2. Test for infinite resistance between the control circuit and ground.
      - If less than infinite resistance, repair the short to ground on the circuit.
      - If infinite resistance
   3. Test for less than 2 ohms in the control circuit end to end.
      - If 2 ohms or greater, repair the open/high resistance in the circuit.
   - **If the test lamp turns ON and OFF**
8. Test or replace the appropriate E7 license plate lamp bulb.

Repair Instructions

Perform the **Diagnostic Repair Verification** after completing the repair.

- **Rear License Plate Lamp Bulb Replacement**
- **Control Module References** for BCM replacement, programming, and setup

DTC B3948 OR B3949

Diagnostic Instructions

- Perform the **Diagnostic System Check - Vehicle** prior to using this diagnostic procedure.
- Review **Strategy Based Diagnosis** for an overview of the diagnostic approach.
- **Diagnostic Procedure Instructions** provides an overview of each diagnostic category.

DTC Descriptors

DTC B3948 01

Left Front Turn Signal Circuit Short to Battery

DTC B3948 02

Left Front Turn Signal Circuit Short to Ground

DTC B3948 04

Left Front Turn Signal Circuit Open

DTC B3949 01

Right Front Turn Signal Circuit Short to Battery

DTC B3949 02

Right Front Turn Signal Circuit Short to Ground

DTC B3949 04

Right Front Turn Signal Circuit Open

Diagnostic Fault Information

Circuit	Short to Ground	Open/High Resistance	Short to Voltage	Signal Performance
F3DA (BCM 5) Fuse B+	B2585 01, B2585 04, B3949 01, B3949 04	B2585 01, B2585 04, B3949 01, B3949 04	-	-
F31UA (BCM VBATT 07) Fuse B+	B3948 01, B3948 04, B3951 01, B3951 04	B3948 01, B3948 04, B3951 01, B3951 04	-	-
F32UA (BCM VBATT 06) Fuse B+	B2545 01, B2545 04, B3950 01, B3950 04	B2545 01, B2545 04, B3950 01, B3950 04	-	-
Turn Signal Switch Signal - Left	1	1	1	-
Turn Signal Switch Signal - Right	1	1	1	-
Turn Signal Control - Left Front	B3948 02	B3948 01, B3948 04	1	-
Turn Signal Control - Left Rear	B3950 02	B3950 01, B3950 04	1	-
Turn Signal Control - Right Front	B3949 02	B3949 01, B3949 04	1	-
Turn Signal Control - Right Rear	B3951 02	B3951 01, B3951 04	1	-
Park/Turn Signal Lamp Ground - Left Front	-	B3948 01, B3948 04	-	-
Park/Turn Signal Lamp Ground - Right Front	-	B3949 01, B3949 04	-	-
Tail/Stop Lamp Ground - Left	-	B3950 01, B3950 04	-	-

Tail/Stop Lamp Ground - Right	-	B3951 01, B3951 04	-	-
Turn Signal/Multifunction Switch Ground	-	1	-	-
1. Turn Signal Lamps and/or Indicators Malfunction				

Circuit/System Description

Ground is applied at all times to the turn signal/multifunction switch. The turn signal lamps may only be activated with the ignition switch in the ON or START positions. When the turn signal/multifunction switch is placed in either the TURN RIGHT or TURN LEFT position, ground is applied to the body control module (BCM) through either the right turn or left turn signal switch signal circuit. The BCM responds to the turn signal switch input by applying a pulsating voltage to the front and rear turn signal lamps through there respective control circuits. When a turn signal request is received by the BCM, a serial data message is sent to the instrument panel cluster (IPC) requesting the respective turn signal indicator be pulsed ON and OFF.

Conditions for Running the DTC

Battery voltage must be between 9-16 V.

Conditions for Setting the DTC

DTC B3948 01 and B3948 04

- The BCM detects a short to ground or an open/high resistance in the F31UA (BCM VBATT 07) fuse B+ circuit.
- The BCM detects an open/high resistance in the left front turn signal control circuit.
- The BCM detects an open/high resistance in the left front turn signal ground circuit.

DTC B3948 02

The BCM detects a short to ground in the left front turn signal control circuit.

DTC B3949 01 and B3949 04

- The BCM detects a short to ground or an open/high resistance in the F3DA (BCM 5) fuse B+ circuit.
- The BCM detects an open/high resistance in the right front turn signal control circuit.
- The BCM detects an open/high resistance in the right front turn signal ground circuit.

DTC B3949 02

The BCM detects a short to ground in the right front turn signal control circuit.

Actions Taken When the DTC Sets

DTC B3948

- The left front turn signal is inoperative.
- The left turn signal indicator on the IPC flashes rapidly.

DTC B3949

- The right front turn signal is inoperative.
- The right turn signal indicator on the IPC flashes rapidly.

Conditions for Clearing the DTC

- The condition responsible for setting the DTC no longer exists.
- A history DTC will clear once 100 consecutive malfunction-free ignition cycles have occurred.

Reference Information

Schematic Reference

Exterior Lights Schematics

Connector End View Reference

COMPONENT CONNECTOR END VIEWS - INDEX

Description and Operation

Exterior Lighting Systems Description and Operation

Electrical Information Reference

- **Circuit Testing**
- **Connector Repairs**
- **Testing for Intermittent Conditions and Poor Connections**
- **Wiring Repairs**

Scan Tool Reference

Control Module References for scan tool information

Circuit/System Testing

DTC B3948

1. Ignition OFF, disconnect the X5 harness connector at the K9 Body Control Module, ignition ON.
2. Verify a test lamp illuminates between the B+ circuit terminal 3 and ground.
    - **If the test lamp does not illuminate and the circuit fuse is good**

1. Ignition OFF, disconnect the X2 harness connector at the X50A Fuse Block - Underhood.
2. Test for less than 2 ohms in the B+ circuit end to end.
    - If 2 ohms or greater, repair the open/high resistance in the circuit.
    - If less than 2 ohms, verify the fuse is not open and there is voltage at the fuse.

- **If the test lamp does not illuminate and the circuit fuse is open**

1. Ignition OFF, disconnect the X2 harness connector at the X50A Fuse Block - Underhood.
2. Test for infinite resistance between the B+ circuit and ground.
    - If less than infinite resistance, repair the short to ground on the circuit.
    - If infinite resistance, replace the K9 Body Control Module.

- **If the test lamp illuminates**

3. Ignition OFF, connect the X5 harness connector at the K9 Body Control Module.
4. Ignition OFF, exterior lamps OFF, disconnect the harness connector at the E4N Park/Turn Signal Lamp - Left.
5. Test for less than 5 ohms between the ground circuit terminal C and ground.
    - **If 5 ohms or greater**

    1. Ignition OFF.
    2. Test for less than 2 ohms in the ground circuit end to end.
        - If 2 ohms or greater, repair the open/high resistance in the circuit.
        - If less than 2 ohms, repair the open/high resistance in the ground connection.

    - **If less than 5 ohms**

6. Connect a test lamp between the control circuit terminal B and ground, ignition ON.
7. Verify the test lamp turns ON and OFF when commanding the Left Front Turn Signal Lamp ON and OFF with a scan tool.
    - **If the test lamp is always OFF**

    1. Ignition OFF, disconnect the X5 harness connector at the K9 Body Control Module.
    2. Test for infinite resistance between the control circuit and ground.
        - If less than infinite resistance, repair the short to ground on the circuit.
        - If infinite resistance
    3. Test for less than 2 ohms in the control circuit end to end.
        - If 2 ohms or greater, repair the open/high resistance in the circuit.
        - If less than 2 ohms, replace the K9 Body Control Module.

    - **If the test lamp is always ON**

    1. Ignition OFF, disconnect the X5 harness connector at the K9 Body Control Module, ignition ON.
    2. Test for less than 1 V between the control circuit terminal and ground.
        - If 1 V or greater, repair the short to voltage on the circuit.
        - If less than 1 V, replace the K9 Body Control Module.

    - **If the test lamp turns ON and OFF**

8. Test or replace the E4N Park/Turn Signal Lamp - Left.

DTC B3949

1. Ignition OFF, disconnect the X2 harness connector at the K9 Body Control Module, ignition ON.
2. Verify a test lamp illuminates between the B+ circuit terminal 3 and ground.
    - **If the test lamp does not illuminate and the circuit fuse is good**
    1. Ignition OFF, disconnect the X2 harness connector at the X51A Fuse Block - Instrument panel.
    2. Test for less than 2 ohms in the B+ circuit end to end.
        - If 2 ohms or greater, repair the open/high resistance in the circuit.
        - If less than 2 ohms, verify the fuse is not open and there is voltage at the fuse.
    - **If the test lamp does not illuminate and the circuit fuse is open**
    1. Ignition OFF, disconnect the X2 harness connector at the X51A Fuse Block - Instrument Panel.
    2. Test for infinite resistance between the B+ circuit and ground.
        - If less than infinite resistance, repair the short to ground on the circuit.
        - If infinite resistance, replace the K9 Body Control Module.
    - **If the test lamp illuminates**
3. Ignition OFF, connect the X2 harness connector at the K9 Body Control Module.
4. Ignition OFF, exterior lamps OFF, disconnect the harness connector at the E4P Park/Turn Signal Lamp - Right.
5. Test for less than 5 ohms between the ground circuit terminal C and ground.
    - **If 5 ohms or greater**
    1. Ignition OFF.
    2. Test for less than 2 ohms in the ground circuit end to end.
        - If 2 ohms or greater, repair the open/high resistance in the circuit.
        - If less than 2 ohms, repair the open/high resistance in the ground connection.
    - **If less than 5 ohms**
6. Connect a test lamp between the control circuit terminal B and ground, ignition ON.
7. Verify the test lamp turns ON and OFF when commanding the Right Front Turn Signal Lamp ON and OFF with a scan tool.
    - **If the test lamp is always OFF**
    1. Ignition OFF, disconnect the X4 harness connector at the K9 Body Control Module.
    2. Test for infinite resistance between the control circuit and ground.
        - If less than infinite resistance, repair the short to ground on the circuit.
        - If infinite resistance
    3. Test for less than 2 ohms in the control circuit end to end.
        - If 2 ohms or greater, repair the open/high resistance in the circuit.
        - If less than 2 ohms, replace the K9 Body Control Module.
    - **If the test lamp is always ON**
    1. Ignition OFF, disconnect the X4 harness connector at the K9 Body Control Module, ignition ON.
    2. Test for less than 1 V between the control circuit terminal and ground.

- If 1 V or greater, repair the short to voltage on the circuit.
- If less than 1 V, replace the K9 Body Control Module.

- **If the test lamp turns ON and OFF**

8. Test or replace the E4P Park/Turn Signal Lamp - Right.

Repair Instructions

Perform the **Diagnostic Repair Verification** after completing the repair.

- **Front Side Turn Signal Lamp Replacement**
- **Control Module References** for BCM replacement, programming, and setup

DTC B3950 OR B3951

Diagnostic Instructions

- Perform the **Diagnostic System Check - Vehicle** prior to using this diagnostic procedure.
- Review **Strategy Based Diagnosis** for an overview of the diagnostic approach.
- **Diagnostic Procedure Instructions** provides an overview of each diagnostic category.

DTC Descriptors

DTC B3950 01

Left Rear Turn Signal Circuit Short to Battery

DTC B3950 02

Left Rear Turn Signal Circuit Short to Ground

DTC B3950 04

Left Rear Turn Signal Circuit Open

DTC B3951 01

Right Rear Turn Signal Circuit Short to Battery

DTC B3951 02

Right Rear Turn Signal Circuit Short to Ground

DTC B3951 04

Right Rear Turn Signal Circuit Open

Diagnostic Fault Information

Circuit	Short to Ground	Open/High Resistance	Short to Voltage	Signal Performance
F3DA (BCM 5) Fuse B+	B2585 01, B2585 04, B3949 01, B3949 04	B2585 01, B2585 04, B3949 01, B3949 04	-	-
F31UA (BCM VBATT 07) Fuse B+	B3948 01, B3948 04, B3951 01, B3951 04	B3948 01, B3948 04, B3951 01, B3951 04	-	-
F32UA (BCM VBATT 06) Fuse B+	B2545 01, B2545 04, B3950 01, B3950 04	B2545 01, B2545 04, B3950 01, B3950 04	-	-
Turn Signal Switch Signal - Left	1	1	1	-
Turn Signal Switch Signal - Right	1	1	1	-
Turn Signal Control - Left Front	B3948 02	B3948 01, B3948 04	1	-
Turn Signal Control - Left Rear	B3950 02	B3950 01, B3950 04	1	-
Turn Signal Control - Right Front	B3949 02	B3949 01, B3949 04	1	-
Turn Signal Control - Right Rear	B3951 02	B3951 01, B3951 04	1	-
Park/Turn Signal Lamp Ground - Left Front	-	B3948 01, B3948 04	-	-
Park/Turn Signal Lamp Ground - Right Front	-	B3949 01, B3949 04	-	-
Tail/Stop Lamp Ground - Left	-	B3950 01, B3950 04	-	-
Tail/Stop Lamp Ground - Right	-	B3951 01, B3951 04	-	-
Turn Signal/Multifunction Switch Ground	-	1	-	-
1. Turn Signal Lamps and/or Indicators Malfunction				

Circuit/System Description

Ground is applied at all times to the turn signal/multifunction switch. The turn signal lamps may only be activated with the ignition switch in the ON or START positions. When the turn signal/multifunction switch is placed in either the TURN RIGHT or TURN LEFT position, ground is applied to the body control module (BCM) through either the right turn or left turn signal switch signal circuit. The BCM responds to the turn signal switch input by applying a pulsating voltage to the front and rear turn signal lamps through there

respective control circuits. When a turn signal request is received by the BCM, a serial data message is sent to the instrument panel cluster (IPC) requesting the respective turn signal indicator be pulsed ON and OFF.

Conditions for Running the DTC

Battery voltage must be between 9-16 V.

Conditions for Setting the DTC

DTC B3950 01 and B3950 04

- The BCM detects a short to ground or an open/high resistance in the F32UA (BCM VBATT 06) fuse B+ circuit.
- The BCM detects an open/high resistance in the left rear turn signal control circuit.
- The BCM detects an open/high resistance in the left rear turn signal ground circuit.

DTC B3950 02

The BCM detects a short to ground in the left rear turn signal control circuit.

DTC B3951 01 and B3951 04

- The BCM detects a short to ground or an open/high resistance in the F31UA (BCM VBATT 07) fuse B+ circuit.
- The BCM detects an open/high resistance in the right rear turn signal control circuit.
- The BCM detects an open/high resistance in the right rear turn signal ground circuit.

DTC B3951 02

The BCM detects a short to ground in the right rear turn signal control circuit.

Actions Taken When the DTC Sets

DTC B3950

- The left rear turn signal is inoperative.
- The "Check Left Rear Turn Signal Lamp" message is displayed on the driver information center (DIC) display.
- The left turn signal indicator on the IPC flashes rapidly.

DTC B3951

- The right rear turn signal is inoperative.
- The "Check Right Rear Turn Signal Lamp" message is displayed on the driver information center (DIC) display.
- The right turn signal indicator on the IPC flashes rapidly.

Conditions for Clearing the DTC

- The condition responsible for setting the DTC no longer exists.
- A history DTC will clear once 100 consecutive malfunction-free ignition cycles have occurred.

Diagnostic Aids

NOTE: When testing at the rear turn signal lamp bulb socket, make sure all measurements and test lamp connections are in the correct terminal location and do not come in contact with each other during testing.

Reference Information

Schematic Reference

Exterior Lights Schematics

Connector End View Reference

COMPONENT CONNECTOR END VIEWS - INDEX

Description and Operation

Exterior Lighting Systems Description and Operation

Electrical Information Reference

- **Circuit Testing**
- **Connector Repairs**
- **Testing for Intermittent Conditions and Poor Connections**
- **Wiring Repairs**

Scan Tool Reference

Control Module References for scan tool information

Circuit/System Testing

DTC B3950

1. Ignition OFF, disconnect the X5 harness connector at the K9 Body Control Module, ignition ON.
2. Verify a test lamp illuminates between the B+ circuit terminal 4 and ground.
    - **If the test lamp does not illuminate and the circuit fuse is good**
    1. Ignition OFF, disconnect the X2 harness connector at the X50A Fuse Block - Underhood.
    2. Test for less than 2 ohms in the B+ circuit end to end.

- If 2 ohms or greater, repair the open/high resistance in the circuit.
- If less than 2 ohms, verify the fuse is not open and there is voltage at the fuse.

- **If the test lamp does not illuminate and the circuit fuse is open**

1. Ignition OFF, disconnect the X2 harness connector at the X50A Fuse Block - Underhood.
2. Test for infinite resistance between the B+ circuit and ground.
   - If less than infinite resistance, repair the short to ground on the circuit.
   - If infinite resistance, replace the K9 Body Control Module.

- **If the test lamp illuminates**

3. Ignition OFF, connect the X5 harness connector at the K9 Body Control Module.
4. Ignition OFF, exterior lamps OFF, remove the E4LR Turn Signal Lamp - Left Rear.
5. Test for less than 5 ohms between the ground circuit terminal 3 and ground.
   - **If 5 ohms or greater**

   1. Ignition OFF.
   2. Test for less than 2 ohms in the ground circuit end to end.
      - If 2 ohms or greater, repair the open/high resistance in the circuit.
      - If less than 2 ohms, repair the open/high resistance in the ground connection.

   - **If less than 5 ohms**

6. Connect a test lamp between the control circuit terminal 2 and ground, ignition ON.
7. Verify the test lamp turns ON and OFF when commanding the Left Rear Turn Signal Lamp ON and OFF with a scan tool.
   - **If the test lamp is always OFF**

   1. Ignition OFF, disconnect the X5 harness connector at the K9 Body Control Module.
   2. Test for infinite resistance between the control circuit and ground.
      - If less than infinite resistance, repair the short to ground on the circuit.
      - If infinite resistance
   3. Test for less than 2 ohms in the control circuit end to end.
      - If 2 ohms or greater, repair the open/high resistance in the circuit.
      - If less than 2 ohms, replace the K9 Body Control Module.

   - **If the test lamp is always ON**

   1. Ignition OFF, disconnect the X5 harness connector at the K9 Body Control Module, ignition ON.
   2. Test for less than 1 V between the control circuit terminal and ground.
      - If 1 V or greater, repair the short to voltage on the circuit.
      - If less than 1 V, replace the K9 Body Control Module.

   - **If the test lamp turns ON and OFF**

8. Test or replace the E4LR Turn Signal Lamp - Left Rear.

DTC B3951

1. Ignition OFF, disconnect the X5 harness connector at the K9 Body Control Module, ignition ON.

2. Verify a test lamp illuminates between the B+ circuit terminal 3 and ground.
    - **If the test lamp does not illuminate and the circuit fuse is good**
    1. Ignition OFF, disconnect the X2 harness connector at the X50A Fuse Block - Underhood.
    2. Test for less than 2 ohms in the B+ circuit end to end.
        - If 2 ohms or greater, repair the open/high resistance in the circuit.
        - If less than 2 ohms, verify the fuse is not open and there is voltage at the fuse.
    - **If the test lamp does not illuminate and the circuit fuse is open**
    1. Ignition OFF, disconnect the X2 harness connector at the X50A Fuse Block - Underhood.
    2. Test for infinite resistance between the B+ circuit and ground.
        - If less than infinite resistance, repair the short to ground on the circuit.
        - If infinite resistance, replace the K9 Body Control Module.
    - **If the test lamp illuminates**
3. Ignition OFF, connect the X5 harness connector at the K9 Body Control Module.
4. Ignition OFF, exterior lamps OFF, remove the E4RR Turn Signal Lamp - Right Rear.
5. Test for less than 5 ohms between the ground circuit terminal 3 and ground.
    - **If 5 ohms or greater**
    1. Ignition OFF.
    2. Test for less than 2 ohms in the ground circuit end to end.
        - If 2 ohms or greater, repair the open/high resistance in the circuit.
        - If less than 2 ohms, repair the open/high resistance in the ground connection.
    - **If less than 5 ohms**
6. Connect a test lamp between the control circuit terminal 2 and ground, ignition ON.
7. Verify the test lamp turns ON and OFF when commanding the Right Rear Turn Signal Lamp ON and OFF with a scan tool.
    - **If the test lamp is always OFF**
    1. Ignition OFF, disconnect the X4 harness connector at the K9 Body Control Module.
    2. Test for infinite resistance between the control circuit and ground.
        - If less than infinite resistance, repair the short to ground on the circuit.
        - If infinite resistance
    3. Test for less than 2 ohms in the control circuit end to end.
        - If 2 ohms or greater, repair the open/high resistance in the circuit.
        - If less than 2 ohms, replace the K9 Body Control Module.
    - **If the test lamp is always ON**
    1. Ignition OFF, disconnect the X4 harness connector at the K9 Body Control Module, ignition ON.
    2. Test for less than 1 V between the control circuit terminal and ground.
        - If 1 V or greater, repair the short to voltage on the circuit.
        - If less than 1 V, replace the K9 Body Control Module.
    - **If the test lamp turns ON and OFF**

8. Test or replace the E4RR Turn Signal Lamp - Right Rear.

Repair Instructions

Perform the **Diagnostic Repair Verification** after completing the repair.

- **Tail Lamp Bulb Replacement**
- **Control Module References** for BCM replacement, programming, and setup

DTC C0277 OR C0890

Diagnostic Instructions

- Perform the **Diagnostic System Check - Vehicle** prior to using this diagnostic procedure.
- Review **Strategy Based Diagnosis** for an overview of the diagnostic approach.
- **Diagnostic Procedure Instructions** provides an overview of each diagnostic category.

DTC Descriptors

DTC C0277 06

Brake Pedal Position Sensor Circuit Low Voltage/Open

DTC C0277 07

Brake Pedal Position Sensor Circuit High Voltage

DTC C0277 09

Brake Pedal Position Sensor Circuit Too Fast Transitions

DTC C0277 4B

Brake Pedal Position Sensor Circuit Calibration Not Learned

DTC C0890 03

Control Module Voltage Reference Output 3 Circuit Low Voltage

DTC C0890 07

Control Module Voltage Reference Output 3 Circuit High Voltage

Diagnostic Fault Information

	Short to	Open/High	Short to	

Circuit	Ground	Resistance	Voltage	Signal Performance
F23DA (BCM 1) Fuse B+	C0890 03, B101E 43, B1405 03, B1529 03, U0121 00	C0890 03, B101E 43, B1405 03, B1529 03, U0121 00	-	-
Brake Pedal Position Sensor 5 V Reference	C0277 06, C0890 03, U0140 71	C0277 06, U0140 71	C0277 07, C0890 07, U0140 71	-
Brake Pedal Position Sensor Signal	C0277 06, U0140 71	C0277 06, U0140 71	C0277 07, C0890 07, U0140 71	C0277 09
Center High Mounted Stop Lamp Control	2	2	2	-
Stop Lamp Control - Left	1	1	1	-
Stop Lamp Control - Right	1	1	1	-
Brake Pedal Position Sensor Low Reference	-	C0277 07, U0140 71	1	-
Center High Mounted Stop Lamp Ground	-	2	-	-
Tail/Stop Lamp Ground - Left	-	1	-	-
Tail/Stop Lamp Ground - Right	-	1	-	-
1. Stop Lamps Malfunction 2. Center High Mounted Stop Lamp Malfunction				

Circuit/System Description

The brake pedal position (BPP) sensor is used to sense the action of the driver application of the brake pedal. The BPP sensor provides an analog voltage signal that will increase as the brake pedal is applied. The body control module (BCM) provides a low reference signal and a 5-volt reference voltage to the BPP sensor. When the variable signal reaches a voltage threshold indicating the brakes have been applied, the BCM will apply battery voltage to the left and right stop lamp control circuits as well as the center high mounted stop lamp (CHMSL) control circuit illuminating the left and right stop lamps and the CHMSL.

Conditions for Running the DTC

- Battery voltage must be between 9-16 V.
- Brakes APPLIED.

Conditions for Setting the DTC

DTC C0277 06

- The BCM detects a short to ground or an open/high resistance in the BPP sensor 5 V reference circuit.

- The BCM detects a short to ground or an open/high resistance in the BPP sensor signal circuit.

DTC C0277 07

- The BCM detects a short to voltage in the BPP sensor 5 V reference circuit.
- The BCM detects a short to voltage in the BPP sensor signal circuit.
- The BCM detects an open/high resistance in the BPP sensor low reference circuit.

DTC C0277 09

The BCM detects the BPP sensor signal is changing faster than possible under normal operating conditions.

DTC C0277 4B

The DTC will set when the BPP sensor home position is not learned.

DTC C0890 03

- The BCM detects a short to ground in the BPP sensor 5 V reference circuit.
- The BCM detects a short to ground or an open/high resistance in the F23DA (BCM 1) fuse B+ circuit.

DTC C0890 07

- The BCM detects a short to voltage in the BPP sensor 5 V reference circuit.
- The BCM detects a short to voltage in the BPP sensor low reference circuit.

Actions Taken When the DTC Sets

- The Traction Control indicator is commanded ON.
- For DTC C0277 4B, the stop lamps may not activate at the expected brake pedal positions.

Conditions for Clearing the DTC

- The condition responsible for setting the DTC no longer exists.
- For DTC C0277 07 the ignition must be cycled before the code can be cleared.
- For DTC C0277 4B a successful brake pedal position sensor calibration has been performed.
- A history DTC will clear once 50 malfunction-free ignition cycles have occurred.
- A DTC will not clear the current status until the next ignition cycle.

Reference Information

Schematic Reference

Exterior Lights Schematics

Connector End View Reference

COMPONENT CONNECTOR END VIEWS - INDEX

Description and Operation

Exterior Lighting Systems Description and Operation

Electrical Information Reference

- **Circuit Testing**
- **Connector Repairs**
- **Testing for Intermittent Conditions and Poor Connections**
- **Wiring Repairs**

Scan Tool Reference

Control Module References for scan tool information

Circuit/System Testing

DTC C0277 06, C0277 07, C0890 03, and C0890 07

1. Ignition OFF, disconnect the harness connector at the B22 brake pedal position sensor, ignition ON.
2. Verify a test lamp illuminates between the appropriate low reference circuit terminal listed below and B+.
    - Terminal 2 - with MH8
    - Terminal A - with MF3/MZ0
    - **If the test lamp does not illuminate**
    1. Ignition OFF, disconnect the X1 harness connector at the K9 body control module.
    2. Test for less than 2 ohms in the low reference circuit end to end.
        - If 2 ohms or greater, repair the open/high resistance in the circuit.
        - If less than 2 ohms, replace the K9 body control module.
    - **If the test lamp illuminates**
3. Ignition ON.
4. Test for 4.8-5.2 V between the appropriate 5 V reference circuit terminal listed below and ground.
    - Terminal 1 - with MH8
    - Terminal C - with MF3/MZ0
    - **If less than 4.8 V**
    1. Ignition OFF, disconnect the X2 harness connector at the K9 body control module.
    2. Test for infinite resistance between the 5 V reference circuit and ground.
        - If less than infinite resistance, repair the short to ground on the circuit.
        - If infinite resistance

3. Test for less than 2 ohms in the 5 V reference circuit end to end.
    - If 2 ohms or greater, repair the open/high resistance in the circuit.
    - If less than 2 ohms, replace the K9 body control module.
- **If greater than 5.2 V**

1. Ignition OFF, disconnect the X2 harness connector at the K9 body control module, ignition ON.
2. Test for less than 1 V between the 5 V reference circuit and ground.
    - If 1 V or greater, repair the short to voltage on the circuit.
    - If less than 1 V, replace the K9 body control module.

- **If between 4.8-5.2 V**

5. Verify the scan tool Brake Pedal Applied parameter is Inactive.
    - **If not Inactive**

    1. Ignition OFF, disconnect the X2 harness connector at the K9 body control module, ignition ON.
    2. Test for less than 1 V between the appropriate signal circuit terminal listed below and ground.
        - Terminal 3 - with MH8
        - Terminal B - with MF3/MZ0
        - If 1 V or greater, repair the short to voltage on the circuit.
        - If less than 1 V, replace the K9 body control module.

    - **If Active**

6. Install a 3 A fused jumper wire between the appropriate 5-volt reference and signal circuit terminals listed below.
    - 5 V reference terminal 1 and signal terminal 3 - with MH8
    - 5 V reference terminal C and signal terminal B - with MF3/MZ0
7. Verify the scan tool Brake Pedal Applied parameter is Active.
    - **If not Active**

    1. Ignition OFF, disconnect the X2 harness connector at the K9 body control module.
    2. Test for infinite resistance between the signal circuit and ground.
        - If less than infinite resistance, repair the short to ground on the circuit.
        - If infinite resistance
    3. Test for less than 2 ohms in the signal circuit end to end.
        - If 2 ohms or greater, repair the open/high resistance in the circuit.
        - If less than 2 ohms, replace the K9 body control module.

    - **If Active**

8. Test or replace the B22 brake pedal position sensor.

DTC C0277 4B

1. Verify DTC C0277 4B is not set.
    - **If DTC C0277 4B is set**

    1. Ignition ON

2. Perform the BPP sensor recalibration procedure for the K9 body control module. Refer to **Brake Pedal Position Sensor Calibration**.
3. Verify the DTC does not reset while operating the vehicle under the conditions for running the DTC.
    - If the DTC resets, replace the B22 brake pedal position sensor.
    - If the DTC does not reset
4. All OK.

- **If DTC C0277 4B is not set**

2. All OK.

DTC C0277 09

1. Verify DTC C0277 09 is not set.
    - **If DTC C0277 09 is set**
    1. Replace the B22 brake pedal position sensor.
    2. Perform the BPP sensor recalibration procedure for the K9 body control module. Refer to **Brake Pedal Position Sensor Calibration**.
    3. Verify the DTC does not reset while operating the vehicle under the conditions for running the DTC.
        - If the DTC resets, replace the K9 body control module.
        - If the DTC does not reset
    4. All OK.
    - **If DTC C0277 09 is not set**
2. All OK.

Repair Instructions

Perform the **Diagnostic Repair Verification** after completing the repair.

- **Brake Pedal Position Sensor Calibration**
- **Brake Pedal Position Sensor Replacement**
- **Control Module References** for BCM replacement, programming, and setup

DTC C0297

Diagnostic Instructions

- Perform the **Diagnostic System Check - Vehicle** prior to using this diagnostic procedure.
- Review **Strategy Based Diagnosis** for an overview of the diagnostic approach.
- **Diagnostic Procedure Instructions** provides an overview of each diagnostic category.

DTC Descriptor

DTC C0297 02

Brake Applied Output Circuit Short to Ground

Diagnostic Fault Information

Circuit	Short to Ground	Open/High Resistance	Short to Voltage	Signal Performance
Brake Applied Signal	C0297 02	C0297 02	1	-
1. Cruise Control Malfunction				

Circuit/System Description

The brake pedal position sensor is used to sense the action of the driver application of the brake pedal. The brake pedal position sensor provides an analog voltage signal that will increase as the brake pedal is applied. The body control module (BCM) provides a low reference signal and a 5 V reference voltage to the brake pedal position sensor. When the variable signal reaches a voltage threshold indicating the brakes have been applied, the BCM will apply battery voltage to the right and left stop lamp control circuits, engine control module (ECM), and center high mounted stop lamp control circuit.

Conditions for Running the DTC

- Battery voltage must be between 9-16 V.
- Brakes APPLIED.

Conditions for Setting the DTC

The BCM detects a short to ground or an open/high resistance on the brake applied signal circuit.

Actions Taken When the DTC Sets

The cruise control system is disabled.

Conditions for Clearing the DTC

- The condition responsible for setting the DTC no longer exists.
- A history DTC will clear once 50 consecutive malfunction-free ignition cycles have occurred.

Diagnostic Aids

Verify that the brake pedal position sensor is properly calibrated.

Reference Information

Schematic Reference

Exterior Lights Schematics

Connector End View Reference

COMPONENT CONNECTOR END VIEWS - INDEX

Description and Operation

Exterior Lighting Systems Description and Operation

Electrical Information Reference

- **Circuit Testing**
- **Connector Repairs**
- **Testing for Intermittent Conditions and Poor Connections**
- **Wiring Repairs**

Scan Tool Reference

Control Module References for scan tool information

Circuit/System Testing

1. Ignition OFF, disconnect the X1 harness connector at the K20 engine control module.
2. Connect a test lamp between the appropriate signal circuit terminal listed below and ground, ignition ON.
    - Terminal 25 - with LUW
    - Terminal 33 - with LUJ
3. Verify the test lamp turns ON and OFF while pressing and releasing the brake pedal.
    - **If the test lamp is always OFF**
    1. Ignition OFF, disconnect the X5 harness connector at the K9 body control module.
    2. Test for infinite resistance between the signal circuit and ground.
        - If less than infinite resistance, repair the short to ground on the circuit.
        - If infinite resistance
    3. Test for less than 2 ohms in the signal circuit end to end.
        - If 2 ohms or greater, repair the open/high resistance in the circuit.
        - If less than 2 ohms, replace the K9 body control module.
    - **If the test lamp is always ON**
    1. Ignition OFF, disconnect the X5 harness connector at the K9 body control module, ignition ON.
    2. Test for less than 1 V between the signal circuit terminal and ground.
        - If 1 V or greater, repair the short to voltage on the circuit.
        - If less than 1 V, replace the K9 body control module.
    - **If the test lamp turns ON and OFF**
4. Replace the K20 engine control module.

Repair Instructions

Perform the **Diagnostic Repair Verification** after completing the repair.

- **Brake Pedal Position Sensor Calibration**
- **Control Module References** for BCM or ECM replacement, programming, and setup

SYMPTOMS - LIGHTING

NOTE: The following steps must be completed before using a symptom table.

- Perform the **Diagnostic System Check - Vehicle** before using a symptom table in order to verify that all of the following conditions are true:
  - There are no DTCs set.
  - The control modules can communicate via the serial data link.
- Review the system description and operation in order to familiarize yourself with the system functions. Refer to the following:
  - **Exterior Lighting Systems Description and Operation**
  - **Interior Lighting Systems Description and Operation**

Visual/Physical Inspection

- Inspect for aftermarket devices which could affect the operation of the lighting system. Refer to **Checking Aftermarket Accessories** .
- Inspect the easily accessible or visible system components for obvious damage or conditions which could cause the symptom.

Intermittent

Thoroughly inspect the wiring and connectors. An incomplete inspection of the wiring and connectors may result in misdiagnosis causing part replacement with the reappearance of the malfunction. If an intermittent malfunction exists, refer to **Testing for Intermittent Conditions and Poor Connections** .

Symptom List

Refer to a symptom diagnostic procedure from the following list in order to diagnose the symptom:

- **Backup Lamps Malfunction (Manual Transmission)**, **Backup Lamps Malfunction (Automatic Transmission)**
- **Courtesy Lamps Malfunction**
- **Daytime Running Lamps Malfunction**
- **Dome Lamps Malfunction**
- **Front Fog Lamps Malfunction**
- **Hazard Lamps Malfunction**

- **Headlamps Malfunction**
- **Interior Backlighting Malfunction**
- **Park, License, and/or Tail Lamps Malfunction**
- **Rear Compartment Lamp Malfunction**
- **Stop Lamps Malfunction**
- **Turn Signal Lamps and/or Indicators Malfunction**

BACKUP LAMPS MALFUNCTION (AUTOMATIC TRANSMISSION)

Diagnostic Instructions

- Perform the **Diagnostic System Check - Vehicle** prior to using this diagnostic procedure.
- Review **Strategy Based Diagnosis** for an overview of the diagnostic approach.
- **Diagnostic Procedure Instructions** provides an overview of each diagnostic category.

Diagnostic Fault Information

Circuit	Short to Ground	Open/High Resistance	Short to Voltage	Signal Performance
F32UA (BCM VBATT 06) Fuse B+	B2545 01, B2545 04, B3950 01, B3950 04	B2545 01, B2545 04, B3950 01, B3950 04	-	-
Backup Lamps Control	B2545 02	B2545 01, B2545 04	1	-
Backup Lamp - Left Ground	-	1	-	-
Backup Lamp - Right Ground	-	1	-	-
1. Backup Lamps Malfunction				

Circuit/System Description

With the engine running and the transmission in the reverse position, the transmission control module (TCM) sends a serial data message to the body control module (BCM). The message indicates that the gear selector is in the reverse position. The BCM applies battery voltage to the backup lamps control circuit illuminating the backup lamps. Once the driver moves the gear selector out of the reverse position, a message is sent by the TCM via serial data requesting the BCM to remove battery voltage from the backup lamps control circuit. The engine must be running for the backup lamps to operate.

Reference Information

Schematic Reference

Exterior Lights Schematics

Connector End View Reference

COMPONENT CONNECTOR END VIEWS - INDEX

Description and Operation

Exterior Lighting Systems Description and Operation

Electrical Information Reference

- **Circuit Testing**
- **Connector Repairs**
- **Testing for Intermittent Conditions and Poor Connections**
- **Wiring Repairs**

Scan Tool Reference

Control Module References for scan tool information

Circuit/System Testing

1. Ignition OFF, exterior lamps OFF, disconnect the harness connector at the appropriate E5 backup lamp.
2. Test for less than 5 ohms between the ground circuit terminal 2 and ground.
    - **If 5 ohms or greater**
    1. Ignition OFF.
    2. Test for less than 2 ohms in the ground circuit end to end.
        - If 2 ohms or greater, repair the open/high resistance in the circuit.
        - If less than 2 ohms, repair the open/high resistance in the ground connection.
    - **If less than 5 ohms**
3. Connect a test lamp between the control circuit terminal 1 and ground, ignition ON.
4. Verify the test lamp turns ON and OFF when commanding the Backup Lamps ON and OFF with a scan tool.
    - **If the test lamp is always OFF**
    1. Ignition OFF, disconnect the X7 harness connector at the K9 body control module.
    2. Test for infinite resistance between the control circuit and ground.
        - If less than infinite resistance, repair the short to ground on the circuit.
        - If infinite resistance
    3. Test for less than 2 ohms in the control circuit end to end.
        - If 2 ohms or greater, repair the open/high resistance in the circuit.
        - If less than 2 ohms, replace the K9 body control module.
    - **If the test lamp is always ON**
    1. Ignition OFF, disconnect the X7 harness connector at the K9 body control module, ignition ON.

2. Test for less than 1 V between the control circuit terminal and ground.
    - If 1 V or greater, repair the short to voltage on the circuit.
    - If less than 1 V, replace the K9 body control module.
- **If the test lamp turns ON and OFF**

5. Test or replace the appropriate E5 backup lamp.

Repair Instructions

Perform the **Diagnostic Repair Verification** after completing the repair.

- **Backup Lamp Bulb Replacement**
- **Control Module References** for BCM replacement, programming, and setup

BACKUP LAMPS MALFUNCTION (MANUAL TRANSMISSION)

Diagnostic Instructions

- Perform the **Diagnostic System Check - Vehicle** prior to using this diagnostic procedure.
- Review **Strategy Based Diagnosis** for an overview of the diagnostic approach.
- **Diagnostic Procedure Instructions** provides an overview of each diagnostic category.

Diagnostic Fault Information

Circuit	Short to Ground	Open/High Resistance	Short to Voltage	Signal Performance
F32UA (BCM VBATT 06) Fuse B+	B2545 01, B2545 04, B3950 01, B3950 04	B2545 01, B2545 04, B3950 01, B3950 04	-	-
Backup Lamp Switch Signal	P0812	P0812	1	-
Backup Lamps Control	B2545 02	B2545 01, B2545 04	1	-
Backup Lamp Switch Ground	-	P0812	-	-
Backup Lamp - Left Ground	-	1	-	-
Backup Lamp - Right Ground	-	1	-	-
1. Backup Lamps Malfunction				

Circuit/System Description

The engine control module (ECM) provides a signal circuit to the backup lamp switch which is permanently grounded. With the engine running and the transmission in the reverse position, the backup lamp switch signal

circuit is pulled low and the ECM responds by sending a serial data message to the body control module (BCM). The message indicates that the gear selector is in the reverse position. The BCM applies battery voltage to the backup lamps control circuit illuminating the backup lamps. Once the driver moves the gear selector out of the reverse position, a message is sent by the ECM via serial data requesting the BCM to remove battery voltage from the backup lamps control circuit. The engine must be running for the backup lamps to operate.

Reference Information

Schematic Reference

Exterior Lights Schematics

Connector End View Reference

COMPONENT CONNECTOR END VIEWS - INDEX

Description and Operation

Exterior Lighting Systems Description and Operation

Electrical Information Reference

- **Circuit Testing**
- **Connector Repairs**
- **Testing for Intermittent Conditions and Poor Connections**
- **Wiring Repairs**

Scan Tool Reference

Control Module References for scan tool information

Circuit/System Verification

1. Engine ON.
2. Verify the scan tool Reverse Position Switch parameter changes between ON and OFF while shifting the vehicle between the neutral and reverse gears.
    - **If the parameter does not change**

      Refer to Backup Lamp Switch Malfunction below.

    - **If the parameter changes**
3. Verify the backup lamps turn ON and OFF when commanding the Backup Lamps ON and OFF with a scan tool.
    - **If the backup lamps do not turn ON and OFF**

      Refer to Backup Lamps Malfunction below.

- **If the backup lamps turn ON and OFF**

4. All OK.

Circuit/System Testing

Backup Lamp Switch Malfunction

1. Ignition OFF, exterior lamps OFF, all doors closed, disconnect the harness connector at the B16 backup lamp switch. It may take up to 2 minutes for all vehicle systems to power down.
2. Test for less than 5 ohms between the ground circuit terminal 2 and ground.
   - **If 5 ohms or greater**
   1. Ignition OFF.
   2. Test for less than 2 ohms in the ground circuit end to end.
      - If 2 ohms or greater, repair the open/high resistance in the circuit.
      - If less than 2 ohms, repair the open/high resistance in the ground connection.
   - **If less than 5 ohms**
3. Ignition ON.
4. Verify the scan tool Reverse Position Switch parameter is Off.
   - **If not Off**
   1. Ignition OFF, disconnect the appropriate harness connector listed below at the K20 engine control module.
      - X1 - with LUW
      - X3 - with LUJ
   2. Test for infinite resistance between the signal circuit terminal 1 and ground.
      - If less than infinite resistance, repair the short to ground on the circuit.
      - If infinite resistance, replace the K20 engine control module.
   - **If Off**
5. Install a 3 A fused jumper wire between the signal circuit terminal 1 and the ground circuit terminal 2.
6. Verify the scan tool Reverse Position Switch parameter is On.
   - **If not On**
   1. Ignition OFF, disconnect the appropriate harness connector listed below at the K20 engine control module, ignition ON.
      - X1 - with LUW
      - X3 - with LUJ
   2. Test for less than 1 V between the signal circuit terminal 1 and ground.
      - If 1 V or greater, repair the short to voltage on the circuit.
      - If less than 1 V
   3. Test for less than 2 ohms in the signal circuit end to end.
      - If 2 ohms or greater, repair the open/high resistance in the circuit.

- If less than 2 ohms, replace the K20 engine control module.
- **If On**

7. Test or replace the B16 backup lamp switch.

Backup Lamps Malfunction

1. Ignition OFF, exterior lamps OFF, disconnect the harness connector at the appropriate E5 backup lamp.
2. Test for less than 5 ohms between the ground circuit terminal 2 and ground.
   - **If 5 ohms or greater**
   1. Ignition OFF.
   2. Test for less than 2 ohms in the ground circuit end to end.
      - If 2 ohms or greater, repair the open/high resistance in the circuit.
      - If less than 2 ohms, repair the open/high resistance in the ground connection.
   - **If less than 5 ohms**
3. Connect a test lamp between the control circuit terminal 1 and ground, ignition ON.
4. Verify the test lamp turns ON and OFF when commanding the Backup Lamps ON and OFF with a scan tool.
   - **If the test lamp is always OFF**
   1. Ignition OFF, disconnect the X7 harness connector at the K9 body control module.
   2. Test for infinite resistance between the control circuit and ground.
      - If less than infinite resistance, repair the short to ground on the circuit.
      - If infinite resistance
   3. Test for less than 2 ohms in the control circuit end to end.
      - If 2 ohms or greater, repair the open/high resistance in the circuit.
      - If less than 2 ohms, replace the K9 body control module.
   - **If the test lamp is always ON**
   1. Ignition OFF, disconnect the X7 harness connector at the K9 body control module, ignition ON.
   2. Test for less than 1 V between the control circuit terminal and ground.
      - If 1 V or greater, repair the short to voltage on the circuit.
      - If less than 1 V, replace the K9 body control module.
   - **If the test lamp turns ON and OFF**
5. Test or replace the appropriate E5 backup lamp.

Repair Instructions

Perform the **Diagnostic Repair Verification** after completing the repair.

- **Backup Lamp Bulb Replacement**
- **Backup Lamp Switch Replacement**
- **Control Module References** for BCM or ECM replacement, programming, and setup

COURTESY LAMPS MALFUNCTION

Diagnostic Instructions

- Perform the **Diagnostic System Check - Vehicle** prior to using this diagnostic procedure.
- Review **Strategy Based Diagnosis** for an overview of the diagnostic approach.
- **Diagnostic Procedure Instructions** provides an overview of each diagnostic category.

Diagnostic Fault Information

Circuit	Short to Ground	Open/High Resistance	Short to Voltage	Signal Performance
Courtesy Lamp Control - Terminal 2 X7	B1480 02	1	1	-
Dome/Reading Lamps - Front Ground	-	1	-	-
Instrument Panel Compartment Lamp Ground	-	1	-	-
Sunshade Mirror Lamp - Left Ground	-	1	-	-
Sunshade Mirror Lamp - Right Ground	-	1	-	-
1. Courtesy Lamps Malfunction				

Circuit/System Description

The body control module (BCM) supplies battery voltage to the dome/reading lamps - front, left and right sunshade lamps, and instrument panel compartment lamp via the courtesy lamp control circuit. When the instrument panel compartment or a sunshade mirror is opened, the switch contact close allowing battery voltage to flow illuminating the respective lamps. The front reading lamps are controlled by individual switches that are activated by the operator when additional cabin lighting is required. In the event that any of these courtesy lamps were to remain illuminated for more than 10 minutes with the ignition switch in the OFF position and no doors opened, the BCM will deactivate the courtesy lamp control circuit to prevent total battery discharge.

Reference Information

Schematic Reference

Interior Lights Schematics

Connector End View Reference

COMPONENT CONNECTOR END VIEWS - INDEX

Description and Operation

Interior Lighting Systems Description and Operation

Electrical Information Reference

- **Circuit Testing**
- **Connector Repairs**
- **Testing for Intermittent Conditions and Poor Connections**
- **Wiring Repairs**

Scan Tool Reference

Control Module References for scan tool information

Circuit/System Testing

1. Ignition OFF, scan tool disconnected, all doors closed, all accessories OFF, disconnect the harness connector at the inoperative courtesy lamp. It may take up to 2 minutes for all vehicle systems to power down.
2. Test for less than 5 ohms between the appropriate ground circuit terminal listed below and ground.
    - E37F dome/reading lamps - front terminal 6
    - E27 instrument panel compartment lamp terminal 2
    - A31L sunshade - left terminal B
    - A31R sunshade - right terminal B
    - **If 5 ohms or greater**
    1. Ignition OFF.
    2. Test for less than 2 ohms in the ground circuit end to end.
        - If 2 ohms or greater, repair the open/high resistance in the circuit.
        - If less than 2 ohms, repair the open/high resistance in the ground connection.
    - **If less than 5 ohms**
3. Connect a test lamp between the appropriate control circuit terminal listed below and ground.
    - E37F dome/reading lamps - front terminal 1
    - E27 instrument panel compartment lamp terminal 1
    - A31L sunshade - left terminal A
    - A31R sunshade - right terminal A
4. Verify the test lamp turns ON and OFF when commanding the Inadvertent Load ON and OFF with a scan tool.
    - **If the test lamp is always OFF**
    1. Ignition OFF, disconnect the X7 harness connector at the K9 body control module.
    2. Test for infinite resistance between the control circuit and ground.
        - If less than infinite resistance, repair the short to ground on the circuit.
        - If infinite resistance
    3. Test for less than 2 ohms in the control circuit end to end.
        - If 2 ohms or greater, repair the open/high resistance in the circuit.

- If less than 2 ohms, replace the K9 body control module.

- **If the test lamp is always ON**

1. Ignition OFF, disconnect the X7 harness connector at the K9 body control module, ignition ON.
2. Test for less than 1 V between the control circuit terminal and ground.
   - If 1 V or greater, repair the short to voltage on the circuit.
   - If less than 1 V, replace the K9 body control module.

- **If the test lamp turns ON and OFF**

5. Test or replace the appropriate courtesy lamp.

Repair Instructions

Perform the **Diagnostic Repair Verification** after completing the repair.

- **Instrument Panel Compartment Lamp Replacement**
- **Dome Lamp Replacement (with Sunroof)**, **Dome Lamp Replacement (without Sunroof)**
- **Sunshade Illuminated Mirror Lamp Bulb Replacement**
- **Reading Lamp Replacement**
- **Control Module References** for BCM replacement, programming, and setup

DAYTIME RUNNING LAMPS MALFUNCTION

Diagnostic Instructions

- Perform the **Diagnostic System Check - Vehicle** prior to using this diagnostic procedure.
- Review **Strategy Based Diagnosis** for an overview of the diagnostic approach.
- **Diagnostic Procedure Instructions** provides an overview of each diagnostic category.

Diagnostic Fault Information

Circuit	Short to Ground	Open/High Resistance	Short to Voltage	Signal Performance
F8DA (BCM 3) Fuse B+	B2575 01, B2575 04	B2575 01, B2575 04	-	-
F9DA (BCM 4) Fuse B+	B2699 01, B2699 04	B2699 01, B2699 04	-	-
Ambient Light Sensor Signal	B2645 03	B2645 07	B2645 07	-
Low Beam Headlamp Control - Left	B2575 02	B2575 01, B2575 04	1	-
Low Beam Headlamp Control - Right	B2699 02	B2699 01, B2699 04	1	-
Ambient Light Sensor Low Reference (C68)	2	B2645 07, B0163 05, B0183 05	2	-

Ambient Light Sensor Ground (C67)	-	B2645 07	-	-
Headlamp Ground - Left	-	1	-	-
Headlamp Ground - Right	-	1	-	-
1. Headlamps Malfunction 2. Daytime Running Lamps Malfunction				

Circuit/System Description

With Manual HVAC

The ambient light sensor is used to monitor outside lighting conditions. The ambient light sensor provides a voltage signal that will vary between 0.2 and 4.9 volts depending on outside lighting conditions. The body control module (BCM) provides a 5-volt reference signal to the ambient light sensor which is permanently grounded at G203. The BCM monitors the ambient light sensor signal circuit to determine if outside lighting conditions are correct for either daytime running lights (DRL) or automatic lamp control (ALC) when the headlamp switch is in the AUTO position. In daylight conditions the BCM will command the DRLs ON. During low light conditions the BCM will command the low beam headlamps ON. Any function or condition that turns on the headlamps will cancel DRL operation.

With Automatic HVAC

The ambient light sensor is used to monitor outside lighting conditions. The ambient light sensor provides a voltage signal that will vary between 0.2 and 4.9 volts depending on outside lighting conditions. The body control module (BCM) provides a 5-volt reference signal to the ambient light sensor and the HVAC control module provides a low reference ground. The BCM monitors the ambient light sensor signal circuit to determine if outside lighting conditions are correct for either daytime running lights (DRL) or automatic lamp control (ALC) when the headlamp switch is in the AUTO position. In daylight conditions the BCM will command the DRLs ON. During low light conditions the BCM will command the low beam headlamps ON. Any function or condition that turns on the headlamps will cancel DRL operation.

Reference Information

Schematic Reference

Headlights/Daytime Running Lights (DRL) Schematics

Connector End View Reference

COMPONENT CONNECTOR END VIEWS - INDEX

Description and Operation

Exterior Lighting Systems Description and Operation

Electrical Information Reference

- **Circuit Testing**
- **Connector Repairs**
- **Testing for Intermittent Conditions and Poor Connections**
- **Wiring Repairs**

Scan Tool Reference

Control Module References for scan tool information

Circuit/System Verification

1. Ignition ON.
2. Verify the low beam headlamps turn on & off when commanding the Low Beam Headlamps ON and OFF with a scan tool.
   - **If the low beam headlamps do not turn ON and OFF**

     Refer to **Headlamps Malfunction**.

   - **If the low beam headlamps turn ON and OFF**
3. Ignition ON, park brake released.
4. Verify the scan tool BCM Park Brake Status parameter displays released.
   - **If the park brake status parameter does not display released**

     Refer to **Brake Warning Indicator Malfunction** .

   - **If the parameter displays released**
5. Refer to Circuit/System Testing below.

Circuit/System Testing

With C67

1. Ignition OFF, scan tool disconnected, all doors closed, all accessories OFF, disconnect the harness connector at the B10B ambient light/sunload sensor. It may take up to 2 minutes for all vehicle systems to power down.
2. Test for less than 5 ohms between the ground circuit terminal 6 and ground.
   - **If 5 ohms or greater**
   1. Ignition OFF.
   2. Test for less than 2 ohms in the ground circuit end to end.
      - If 2 ohms or greater, repair the open/high resistance in the circuit.
      - If less than 2 ohms, repair the open/high resistance in the ground connection.
   - **If less than 5 ohms**
3. Ignition ON.

4. Verify the scan tool Ambient Light Sensor parameter is greater than 4.65 V.
    - **If 4.65 V or less**
    1. Ignition OFF, disconnect the X2 harness connector at the K9 body control module.
    2. Test for infinite resistance between the signal circuit terminal 5 and ground.
        - If less than infinite resistance, repair the short to ground on the circuit.
        - If infinite resistance, replace the K9 body control module.
    - **If greater than 4.65 V**
5. Install a 3 A fused jumper wire between the signal circuit terminal 5 and the ground circuit terminal 6.
6. Verify the scan tool Ambient Light Sensor parameter is less than 0.196 V.
    - **If 0.196 V or greater**
    1. Ignition OFF, disconnect the X2 harness connector at the K9 body control module, ignition ON.
    2. Test for less than 1 V between the signal circuit terminal 5 and ground.
        - If 1 V or greater, repair the short to voltage on the circuit.
        - If less than 1 V
    3. Test for less than 2 ohms in the signal circuit end to end.
        - If 2 ohms or greater, repair the open/high resistance in the circuit.
        - If less than 2 ohms, replace the K9 body control module.
    - **If less than 0.196 V**
7. Test or replace the B10B ambient light/sunload sensor.

With C68

1. Ignition OFF, scan tool disconnected, all doors closed, all accessories OFF, disconnect the harness connector at the B10B ambient light/sunload sensor. It may take up to 2 minutes for all vehicle systems to power down.
2. Test for less than 10 ohms between the low reference circuit terminal 6 and ground.
    - **If 10 ohms or greater**
    1. Ignition OFF, disconnect the X1 harness connector at the K33 HVAC control module.
    2. Test for less than 2 ohms in the low reference circuit end to end.
        - If 2 ohms or greater, repair the open/high resistance in the circuit.
        - If less than 2 ohms, replace the K33 HVAC control module.
    - **If less than 10 ohms**
3. Ignition ON.
4. Verify the scan tool Ambient Light Sensor parameter is greater than 4.65 V.
    - **If 4.65 V or less**
    1. Ignition OFF, disconnect the X2 harness connector at the K9 body control module.
    2. Test for infinite resistance between the signal circuit terminal 5 and ground.
        - If less than infinite resistance, repair the short to ground on the circuit.
        - If infinite resistance, replace the K9 body control module.

- **If greater than 4.65 V**

5. Install a 3 A fused jumper wire between the signal circuit terminal 5 and the low reference circuit terminal 6.
6. Verify the scan tool Ambient Light Sensor parameter is less than 0.196 V.
   - **If 0.196 V or greater**
   1. Ignition OFF, disconnect the X2 harness connector at the K9 body control module, ignition ON.
   2. Test for less than 1 V between the signal circuit terminal 5 and ground.
      - If 1 V or greater, repair the short to voltage on the circuit.
      - If less than 1 V
   3. Test for less than 2 ohms in the signal circuit end to end.
      - If 2 ohms or greater, repair the open/high resistance in the circuit.
      - If less than 2 ohms, replace the K9 body control module.
   - **If less than 0.196 V**
7. Test or replace the B10B ambient light/sunload sensor.

Repair Instructions

Perform the **Diagnostic Repair Verification** after completing the repair.

- **Sun Load Temperature and Headlamp Automatic Control Ambient Light Sensor Replacement**
- **Control Module References** for BCM or HVAC control module replacement, programming, and setup

DOME LAMPS MALFUNCTION

Diagnostic Instructions

- Perform the **Diagnostic System Check - Vehicle** prior to using this diagnostic procedure.
- Review **Strategy Based Diagnosis** for an overview of the diagnostic approach.
- **Diagnostic Procedure Instructions** provides an overview of each diagnostic category.

Diagnostic Fault Information

Circuit	Short to Ground	Open/High Resistance	Short to Voltage	Signal Performance
F32UA (BCM VBATT 06) Fuse B+	B2545 01, B2545 04, B3950 01, B3950 04	B2545 01, B2545 04, B3950 01, B3950 04	-	-
Dome Lamp - Middle Control	1	1	1	-
Dome Lamp Switch - Middle Cancel Signal	2	2	2	-
Dome Lamp Switch -				

Middle ON Signal	2	2	2	-
Dome Lamp - Middle Ground	-	1, 2	-	-
1. Dome Lamp Malfunction 2. Dome Lamp Switch Malfunction				

Circuit/System Description

The dome lamp switch has 3 positions: DOOR, OFF, and ON. The ON position provides a ground for continuous operation and the dome lamp will remain illuminated until the switch is placed in either the DOOR or OFF position. When in the DOOR position, the dome lamp operation is controlled by the body control module (BCM). When any door is opened, the door ajar switch contacts close and the BCM receives a door-open input. The BCM illuminates the dome lamp when any door is opened or a door lock/unlock request is activated with the key fob. After all doors have been closed, the dome lamp will remain illuminated approximately 3 seconds after the last door closes. When the driver places the dome lamp switch in the OFF position, the dome lamp will be disabled. In the event that the dome lamp were to remain illuminated for more than 10 minutes with the ignition switch in the OFF position and no doors opened, the BCM will deactivate the dome lamp control circuit to prevent total battery discharge.

Reference Information

Schematic Reference

Interior Lights Schematics

Connector End View Reference

COMPONENT CONNECTOR END VIEWS - INDEX

Description and Operation

Interior Lighting Systems Description and Operation

Electrical Information Reference

- **Circuit Testing**
- **Connector Repairs**
- **Testing for Intermittent Conditions and Poor Connections**
- **Wiring Repairs**

Scan Tool Reference

Control Module References for scan tool information

Circuit/System Verification

1. Ignition ON.
2. Verify the scan tool Door Ajar Sw. parameter changes between Active and Inactive while opening and closing each vehicle door.
   - **If the parameter does not change**

     Refer to **Door Ajar Indicator Malfunction** .

   - **If the parameter changes**
3. Verify the scan tool Interior/Courtesy Lighting Master Switch parameter changes between Door, On, and Cancel while placing the dome lamp switch in the Door, On, and Cancel positions.
   - **If the parameter does not change**

     Refer to Dome Lamp Switch Malfunction below.

   - **If the parameter changes**
4. Verify the dome lamps turn ON and OFF while commanding the Courtesy Lamps ON and OFF with a scan tool.
   - **If the dome lamps do not turn ON and OFF**

     Refer to Dome Lamp Malfunction below.

   - **If the dome lamps turn ON and OFF**
5. All OK.

Circuit/System Testing

Dome Lamp Switch Malfunction

1. Ignition OFF, scan tool disconnected, all doors closed, all accessories OFF, disconnect the harness connector at the E37M dome/reading lamps - middle. It may take up to 2 minutes for all vehicle systems to power down.
2. Test for less than 5 ohms between the ground circuit terminal 6 and ground.
   - **If 5 ohms or greater**
   1. Ignition OFF.
   2. Test for less than 2 ohms in the ground circuit end to end.
      - If 2 ohms or greater, repair the open/high resistance in the circuit.
      - If less than 2 ohms, repair the open/high resistance in the ground connection.
   - **If less than 5 ohms**
3. Ignition ON.
4. Verify the scan tool Interior/Courtesy Lighting Master Switch parameter is Door.
   - **If Cancel**
   1. Ignition OFF, disconnect the X1 harness connector at the K9 body control module.

2. Test for infinite resistance between the signal circuit terminal 4 and ground.
    - If less than infinite resistance, repair the short to ground on the circuit.
    - If infinite resistance, replace the K9 body control module.

- **If On**

1. Ignition OFF, disconnect the X7 harness connector at the K9 body control module.
2. Test for infinite resistance between the signal circuit terminal 5 and ground.
    - If less than infinite resistance, repair the short to ground on the circuit.
    - If infinite resistance, replace the K9 body control module.

- **If Door**

5. Install a 3 A fused jumper wire between the signal circuit terminal 4 and the ground circuit terminal 6.
6. Verify the scan tool Interior/Courtesy Lighting Master Switch parameter is Cancel.
    - **If not Cancel**
    1. Ignition OFF, disconnect the X1 harness connector at the K9 body control module, ignition ON.
    2. Test for less than 1 V between the signal circuit terminal 4 and ground.
        - If 1 V or greater, repair the short to voltage on the circuit.
        - If less than 1 V
    3. Test for less than 2 ohms in the signal circuit end to end.
        - If 2 ohms or greater, repair the open/high resistance in the circuit.
        - If less than 2 ohms, replace the K9 body control module.
    - **If Cancel**
7. Install a 3 A fused jumper wire between the signal circuit terminal 5 and the ground circuit terminal 6.
8. Verify the scan tool Interior/Courtesy Lighting Master Switch parameter is On.
    - **If not On**
    1. Ignition OFF, disconnect the X7 harness connector at the K9 body control module, ignition ON.
    2. Test for less than 1 V between the signal circuit terminal 5 and ground.
        - If 1 V or greater, repair the short to voltage on the circuit.
        - If less than 1 V
    3. Test for less than 2 ohms in the signal circuit end to end.
        - If 2 ohms or greater, repair the open/high resistance in the circuit.
        - If less than 2 ohms, replace the K9 body control module.
    - **If On**
9. Test or replace the E37M dome/reading lamps - middle.

Dome Lamp Malfunction

1. Ignition OFF, scan tool disconnected, all doors closed, all accessories OFF, disconnect the harness connector at the E37M dome/reading lamps - middle. It may take up to 2 minutes for all vehicle systems to power down.
2. Test for less than 5 ohms between the ground circuit terminal 6 and ground.

- **If 5 ohms or greater**
  1. Ignition OFF.
  2. Test for less than 2 ohms in the ground circuit end to end.
     - If 2 ohms or greater, repair the open/high resistance in the circuit.
     - If less than 2 ohms, repair the open/high resistance in the ground connection.
- **If less than 5 ohms**

3. Connect a test lamp between the control circuit terminal 2 and ground.
4. Verify the test lamp turns ON and OFF when commanding the Courtesy Lamps ON and OFF with a scan tool.
   - **If the test lamp is always OFF**
   1. Ignition OFF, disconnect the X7 harness connector at the K9 body control module.
   2. Test for infinite resistance between the control circuit and ground.
      - If less than infinite resistance, repair the short to ground on the circuit.
      - If infinite resistance
   3. Test for less than 2 ohms in the control circuit end to end.
      - If 2 ohms or greater, repair the open/high resistance in the circuit.
      - If less than 2 ohms, replace the K9 body control module.
   - **If the test lamp is always ON**
   1. Ignition OFF, disconnect the X7 harness connector at the K9 body control module, ignition ON.
   2. Test for less than 1 V between the control circuit terminal and ground.
      - If 1 V or greater, repair the short to voltage on the circuit.
      - If less than 1 V, replace the K9 body control module.
   - **If the test lamp turns ON and OFF**
5. Test or replace the inoperative E37M dome/reading lamps - middle.

Repair Instructions

Perform the **Diagnostic Repair Verification** after completing the repair.

- **Dome Lamp Replacement (with Sunroof)**, **Dome Lamp Replacement (without Sunroof)**
- **Dome Lamp Bulb Replacement**
- **Control Module References** for BCM replacement, programming, and setup

FRONT FOG LAMPS MALFUNCTION

Diagnostic Instructions

- Perform the **Diagnostic System Check - Vehicle** prior to using this diagnostic procedure.
- Review **Strategy Based Diagnosis** for an overview of the diagnostic approach.
- **Diagnostic Procedure Instructions** provides an overview of each diagnostic category.

Diagnostic Fault Information

Circuit	Short to Ground	Open/High Resistance	Short to Voltage	Signal Performance
F23DA (BCM 1) Fuse B+	C0890 03, B101E 43, B1405 03, B1529 03, U0121 00	C0890 03, B101E 43, B1405 03, B1529 03, U0121 00	-	-
Front Fog Lamp and I/P Dimmer Switch B+	B257B 03, B1405 03	B257B 03	-	-
Front Fog Lamp and I/P Dimmer Switch Signal	B257B 03	B257B 03	2	-
Front Fog Lamp Relay Control	B2530 02	B2530 04	B2530 01	-
Front Fog Lamp Control	1	1	1	-
Front Fog Lamp Ground - Left	-	1	-	-
Front Fog Lamp Ground - Right	-	1	-	-
1. Front Fog Lamps Malfunction 2. Front Fog Lamp Switch Malfunction				

Circuit/System Description

The front fog lamp switch is an input to the body control module (BCM) and is contained in the headlamp switch assembly. The BCM supplies voltage to the front fog lamp switch via the front fog lamp and I/P dimmer switch B+ circuit. When the front fog lamp switch is pressed, voltage from the B+ circuit is pulled down through the front fog lamp switch resistor. The front fog lamp resistor is part of the resistor ladder that also provides the dimming signals for the I/P dimmer switches. The BCM receives the voltage signal through the front fog lamp and I/P dimmer switch signal circuit.

The front fog lamp relay is supplied with battery voltage at all times. The front fog lamp switch signal circuit is grounded momentarily by pressing the front fog lamp switch. The body control module (BCM) energizes the front fog lamp relay by applying ground to the front fog lamp relay control circuit. When the front fog lamp relay is energized, the relay switch contacts close and battery voltage is applied through the fog lamp fuse to the front fog lamp control circuit which illuminates the front fog lamps.

Reference Information

Schematic Reference

Fog Lights Schematics

Connector End View Reference

COMPONENT CONNECTOR END VIEWS - INDEX

Description and Operation

Exterior Lighting Systems Description and Operation

Electrical Information Reference

- **Circuit Testing**
- **Connector Repairs**
- **Testing for Intermittent Conditions and Poor Connections**
- **Wiring Repairs**

Scan Tool Reference

Control Module References for scan tool information

Circuit/System Verification

1. Ignition ON, headlamps ON.
2. Verify the scan tool Front Fog Lamps Switch parameter changes between Active and Inactive while commanding the front fog lamps ON and OFF with the front fog lamp switch.
   - **If the parameter does not change**

     Refer to Front Fog Lamp Switch Malfunction below.

   - **If the parameter changes**
3. Verify the front fog lamps turn ON and OFF when commanding the Front Fog Lamps ON and OFF with a scan tool.
   - **If the front fog lamps do not turn ON and OFF**

     Refer to Front Fog Lamps Malfunction below.

   - **If the front fog lamps turn ON and OFF**
4. Verify the front fog lamp indicator on the instrument cluster turns ON and OFF while commanding the front fog lamps ON and OFF with the front fog lamp switch.
   - **If the front fog lamp indicator does not turn ON and OFF**

     Refer to Front Fog Lamp Indicator Malfunction below.

   - **If the front fog lamp indicator turns ON and OFF**
5. All OK.

Circuit/System Testing

Front Fog Lamp Switch Malfunction

1. Ignition OFF and all vehicle systems OFF, disconnect the harness connector at the S30 Headlamp Switch, ignition ON.
2. Test for B+ between the B+ circuit terminal 1 and ground.
    - **If less than B+**
    1. Ignition OFF, disconnect the X3 harness connector at the K9 Body Control Module.
    2. Test for infinite resistance between the B+ circuit and ground.
        - If less than infinite resistance, repair the short to ground on the circuit.
        - If infinite resistance
    3. Test for less than 2 ohms in the B+ circuit end to end.
        - If 2 ohms or greater, repair the open/high resistance in the circuit.
        - If less than 2 ohms, replace the K9 Body Control Module.
    - **If B+**
3. Verify a test lamp does not illuminate between the B+ circuit terminal 1 and the signal circuit terminal 12.
    - **If the test lamp illuminates**
    1. Ignition OFF, disconnect the X1 harness connector at the K9 Body Control Module.
    2. Test for infinite resistance between the signal circuit and ground.
        - If less than infinite resistance, repair the short to ground on the circuit.
        - If infinite resistance, replace the K9 Body Control Module.
    - **If the test lamp does not illuminate**
4. Test for B+ between the B+ circuit terminal 1 and the signal circuit terminal 12.
    - **If less than B+**
    1. Ignition OFF, disconnect the X1 harness connector at the K9 Body Control Module, ignition ON.
    2. Test for less than 1 V between the signal circuit terminal 12 and ground.
        - If 1 V or greater, repair the short to voltage on the circuit.
        - If less than 1 V
    3. Test for less than 2 ohms in the signal circuit end to end.
        - If 2 ohms or greater, repair the open/high resistance in the circuit.
        - If less than 2 ohms, replace the K9 Body Control Module.
    - **If B+**
5. Test or replace the S30 Headlamp Switch.

Front Fog Lamps Malfunction

1. Ignition OFF, disconnect the X5 harness connector at the K9 Body Control Module, ignition ON.
2. Verify a test lamp illuminates between the control circuit terminal 13 and ground.
    - **If the test lamp does not illuminate**
    1. Ignition OFF, disconnect the X2 harness connector at the X50A Fuse Block - Underhood.

2. Test for infinite resistance between the control circuit terminal and ground.
    - If less than infinite resistance, repair the short to ground on the circuit.
    - If infinite resistance
3. Test for less than 2 ohms in the control circuit end to end.
    - If 2 ohms or greater, repair the open/high resistance in the circuit.
    - If less than 2 ohms, replace the X50A Fuse Block - Underhood.

- **If the test lamp illuminates**

3. Ignition OFF, connect a 3 A fused jumper between the control circuit terminal 13 and ground.
4. Remove the fog lamp fuse at the X50A Fuse Block - Underhood, ignition ON.
5. Verify a test lamp illuminates between the fog lamp fuse fuse B+ switch control terminal and ground.
    - **If the test lamp does not illuminate**

    1. Ignition OFF, disconnect the X2 harness connector at the X50A Fuse Block - Underhood, ignition ON.
    2. Test for less than 1 V between the control circuit terminal 13 and ground.
        - If 1 V or greater, repair the short to voltage on the circuit.
        - If less than 1 V, replace the X50A Fuse Block - Underhood.

    - **If the test lamp illuminates**

6. Ignition OFF, connect the X5 harness connector at the K9 Body Control Module.
7. Install the F48UA fuse at the X50A Fuse Block - Underhood.
8. Disconnect the harness connector at the appropriate E29 Fog Lamp, ignition OFF, exterior lamps OFF.
9. Test for less than 10 ohms between the ground circuit terminal 1 and ground.
    - **If 10 ohms or greater**

    1. Ignition OFF.
    2. Test for less than 2 ohms in the ground circuit end to end.
        - If 2 ohms or greater, repair the open/high resistance in the circuit.
        - If less than 2 ohms, repair the open/high resistance in the ground connection.

    - **If less than 10 ohms**

10. Connect a test lamp between the control circuit terminal 2 and ground, ignition ON.
11. Verify the test lamp turns ON and OFF when commanding the Front Fog Lamps ON and OFF with a scan tool.
    - **If the test lamp is always OFF**

    1. Ignition OFF, disconnect the X1 harness connector at the X50A Fuse Block - Underhood.
    2. Test for infinite resistance between the control circuit and ground.
        - If less than infinite resistance, repair the short to ground on the circuit.
        - If infinite resistance
    3. Test for less than 2 ohms in the control circuit end to end.
        - If 2 ohms or greater, repair the open/high resistance in the circuit.
        - If less than 2 ohms, replace the K9 Body Control Module.

- **If the test lamp is always ON**

1. Ignition OFF, disconnect the X1 harness connector at the X50A Fuse Block - Underhood, ignition ON.
2. Test for less than 1 V between the control circuit terminal and ground.
   - If 1 V or greater, repair the short to voltage on the circuit.
   - If less than 1 V, replace the K9 Body Control Module.

- **If the test lamp turns ON and OFF**

12. Test or replace the appropriate E29 Fog Lamp.

Front Fog Lamp Indicator Malfunction

1. Ignition ON.
2. Verify the front fog lamp indicator turns ON and OFF when commanding the Instrument Cluster All Indicators Test ON and OFF with a scan tool.
   - **If the front fog lamp indicator is always OFF or remains ON**

     Replace the P16 Instrument Cluster.

   - **If the front fog lamp indicator turns ON and OFF**
3. Replace the K9 Body Control Module.

Repair Instructions

Perform the **Diagnostic Repair Verification** after completing the repair.

- **Headlamp Switch Replacement**
- **Front Fog Lamp Bulb Replacement**
- **Front Compartment Fuse Block Replacement**
- **Control Module References** for BCM or Instrument Cluster replacement, programming, and setup

HAZARD LAMPS MALFUNCTION

Diagnostic Instructions

- Perform the **Diagnostic System Check - Vehicle** prior to using this diagnostic procedure.
- Review **Strategy Based Diagnosis** for an overview of the diagnostic approach.
- **Diagnostic Procedure Instructions** provides an overview of each diagnostic category.

Diagnostic Fault Information

Circuit	Short to Ground	Open/High Resistance	Short to Voltage	Signal Performance
Hazard Warning Switch	1	1	1	B3596 00

Signal				
Hazard Warning Switch LED Backlighting Control	B096A 02	B096A 01, B096A 04	2	-
Hazard Warning Switch Ground	-	B096A 01, B096A 04	-	-
1. Hazard Lamps Malfunction 2. Hazard Warning Switch Backlighting Malfunction				

Circuit/System Description

The hazard flashers may be activated in any power mode. The hazard warning switch signal circuit is momentarily grounded when the hazard warning switch is pressed. The body control module (BCM) responds to the hazard warning switch signal input by supplying battery voltage to all four turn signal lamps in an ON and OFF duty cycle. When the hazard warning switch is activated, the BCM sends a serial data message to the instrument cluster requesting both turn signal indicators to be cycled ON and OFF.

The instrument panel dimmer switch controls are located on the headlamp switch assembly and are used to increase and decrease the brightness of the interior backlighting components. When the instrument panel dimmer switch is placed in a desired brightness position, the body control module (BCM) receives a signal from the instrument panel dimmer switch and responds by applying a pulse width modulated (PWM) voltage to the hazard switch LED backlighting control circuit illuminating the LED to the desired level of brightness.

Reference Information

Schematic Reference

Exterior Lights Schematics

Connector End View Reference

COMPONENT CONNECTOR END VIEWS - INDEX

Description and Operation

Exterior Lighting Systems Description and Operation

Electrical Information Reference

- **Circuit Testing**
- **Connector Repairs**
- **Testing for Intermittent Conditions and Poor Connections**
- **Wiring Repairs**

Scan Tool Reference

Control Module References for scan tool information

Circuit/System Verification

1. Ignition ON.
2. Verify the scan tool Hazard Lamps Switch parameter changes between Active and Inactive while commanding the hazard lamps ON and OFF with the hazard warning switch.
   - **If the parameter does not change**

     Refer to Hazard Warning Switch Malfunction below.

   - **If the parameter changes**
3. Verify all left and right turn signal lamps turn ON and OFF while commanding the hazard lamps ON and OFF with the hazard warning switch.
   - **If all turn signal lamps do not turn ON and OFF**

     Refer to **Turn Signal Lamps and/or Indicators Malfunction**

   - **If all turn signal lamps turn ON and OFF**
4. Verify the hazard warning switch backlighting turns ON and OFF while commanding the Hazard Lamps Switch Backlight ON and OFF with a scan tool.
   - **If the hazard warning switch backlighting does not turn ON and OFF**

     Refer to Hazard Warning Switch Backlighting Malfunction below.

   - **If the hazard warning switch backlighting turns ON and OFF**
5. All OK.

Hazard Warning Switch Malfunction

1. Ignition OFF, scan tool disconnected, all doors closed, all accessories OFF, disconnect the harness connector at the S26 hazard warning switch. It may take up to 2 minutes for all vehicle systems to power down.
2. Test for less than 5 ohms between the ground circuit terminal 3 and ground.
   - **If 5 ohms or greater**
     1. Ignition OFF.
     2. Test for less than 2 ohms in the ground circuit end to end.
        - If 2 ohms or greater, repair the open/high resistance in the circuit.
        - If less than 2 ohms, repair the open/high resistance in the ground connection.
   - **If less than 5 ohms**
3. Ignition ON.
4. Verify the scan tool Hazard Lamps Switch parameter is Inactive.
   - **If not Inactive**
     1. Ignition OFF, disconnect the X2 harness connector at the K9 body control module.
     2. Test for infinite resistance between the signal circuit terminal 1 and ground.

- If less than infinite resistance, repair the short to ground on the circuit.
- If infinite resistance, replace the K9 body control module.

- **If Inactive**

5. Install a 3 A fused jumper wire between the signal circuit terminal 1 and ground.
6. Verify the scan tool Hazard Lamps Switch parameter is Active.
   - **If not Active**
   1. Ignition OFF, disconnect the X2 harness connector at the K9 body control module, ignition ON.
   2. Test for less than 1 V between the signal circuit terminal 1 and ground.
      - If 1 V or greater, repair the short to voltage on the circuit.
      - If less than 1 V
   3. Test for less than 2 ohms in the signal circuit end to end.
      - If 2 ohms or greater, repair the open/high resistance in the circuit.
      - If less than 2 ohms, replace the K9 body control module.
   - **If Active**
7. Test or replace the S26 hazard warning switch.

Hazard Warning Switch Backlighting Malfunction

1. Ignition OFF, scan tool disconnected, all doors closed, all accessories OFF, disconnect the harness connector at the S26 hazard warning switch. It may take up to 2 minutes for all vehicle systems to power down.
2. Test for less than 5 ohms between the ground circuit terminal 3 and ground.
   - **If 5 ohms or greater**
   1. Ignition OFF.
   2. Test for less than 2 ohms in the ground circuit end to end.
      - If 2 ohms or greater, repair the open/high resistance in the circuit.
      - If less than 2 ohms, repair the open/high resistance in the ground connection.
   - **If less than 5 ohms**
3. Connect a test lamp between the control circuit terminal 2 and ground, ignition ON.
4. Verify the test lamp turns ON and OFF when commanding the Hazard Lamps Switch Backlight ON and OFF with a scan tool.
   - **If the test lamp is always OFF**
   1. Ignition OFF, disconnect the X1 harness connector at the K9 body control module.
   2. Test for infinite resistance between the control circuit and ground.
      - If less than infinite resistance, repair the short to ground on the circuit.
      - If infinite resistance
   3. Test for less than 2 ohms in the control circuit end to end.
      - If 2 ohms or greater, repair the open/high resistance in the circuit.
      - If less than 2 ohms, replace the K9 body control module.

- **If the test lamp is always ON**

1. Ignition OFF, disconnect the X1 harness connector at the K9 body control module, ignition ON.
2. Test for less than 1 V between the control circuit terminal and ground.
   - If 1 V or greater, repair the short to voltage on the circuit.
   - If less than 1 V, replace the K9 body control module.

- **If the test lamp turns ON and OFF**

5. Test or replace the S26 hazard warning switch.

Repair Instructions

Perform the **Diagnostic Repair Verification** after completing the repair.

- **Hazard Warning Switch Replacement**
- **Control Module References** for BCM replacement, programming and setup

HEADLAMPS MALFUNCTION

Diagnostic Instructions

- Perform the **Diagnostic System Check - Vehicle** prior to using this diagnostic procedure.
- Review **Strategy Based Diagnosis** for an overview of the diagnostic approach.
- **Diagnostic Procedure Instructions** provides an overview of each diagnostic category.

Diagnostic Fault Information

Circuit	Short to Ground	Open/High Resistance	Short to Voltage	Signal Performance
F8DA (BCM 3) Fuse B+	B2575 01, B2575 04	B2575 01, B2575 04	-	-
F9DA (BCM 4) Fuse B+	B2699 01, B2699 04	B2699 01, B2699 04	-	-
Headlamp High Beam Relay Control	2	2	2	-
Low Beam Headlamp Control - Left	B2575 02	B2575 01, B2575 04	1	-
Low Beam Headlamp Control - Right	B2699 02	B2699 01, B2699 04	1	-
High Beam Headlamp Control - Left	2	2	2	-
High Beam Headlamp Control - Right	2	2	2	-
Headlamp Switch Headlamps OFF Signal	B257A 00	3	3	-
Headlamp Switch Headlamps ON				

Signal	B257A 00	3	3	-
Turn Signal/Multifunction Switch Flash To Pass Signal	B3806 00	4	4	-
Turn Signal/Multifunction Switch High Beam Signal	B3650 08	4	4	-
Headlamp Ground - Left	-	B2575 04	-	-
Headlamp Ground - Right	-	B2699 04	-	-
Headlamp Switch Ground	-	3	-	-
Turn Signal/Multifunction Switch Ground	-	4	-	-
1. Headlamps Malfunction - Low Beam 2. Headlamps Malfunction - High Beam 3. Headlamp Switch Malfunction 4. Turn Signal/Multifunction Switch Malfunction				

Circuit/System Description

The body control module (BCM) monitors three signal circuits from the headlamp switch. When the headlamp switch is in the AUTO position, all three signal circuits are open. When placed in the AUTO position, the BCM monitors inputs from the ambient light sensor to determine if headlamps are required or if daytime running lamps will be activated based on outside lighting conditions. When the headlamp switch is placed in the OFF position, the headlamp switch headlamps OFF signal circuit is grounded, indicating to the BCM that the exterior lamps should be turned OFF. With the headlamp switch in the PARK position, the headlamp switch park lamps ON signal circuit is grounded, indicating that the park lamps have been requested. When the headlamp switch is placed in the HEADLAMP position, both the headlamp switch park lamps ON signal circuit and the headlamp switch headlamps ON signal circuit are grounded. The BCM responds to the inputs by illuminating the park lamps and headlamps. When the low beam headlamps are requested, the BCM applies B+ to both low beam headlamp control circuits illuminating the low beam headlamps.

The high beam and flash to pass functions are contained within the turn signal/multifunction switch. The BCM provides the turn signal/multifunction switch with two signal circuits, the high beam signal circuit and the flash to pass signal circuit. When the low beam headlamps are ON and the turn signal/multifunction switch is placed in the high beam position, ground is applied to the BCM through the high beam signal circuit. The BCM responds to the high beam request by applying ground to the high beam relay control circuit which energizes the high beam relay. With the high beam relay energized, the switch contacts close allowing battery voltage to flow through the high beam fuses to the high beam control circuits illuminating the high beam headlamps.

When the turn signal/multifunction switch is momentarily placed in the flash to pass position, ground is applied to the BCM through the flash to pass signal circuit. The BCM responds by applying ground to the high beam relay control circuit which energizes the high beam relay illuminating the high beams for a brief moment or until the flash to pass switch is released.

Reference Information

Schematic Reference

Headlights/Daytime Running Lights (DRL) Schematics

Connector End View Reference

COMPONENT CONNECTOR END VIEWS - INDEX

Description and Operation

Exterior Lighting Systems Description and Operation

Electrical Information Reference

- **Circuit Testing**
- **Connector Repairs**
- **Testing for Intermittent Conditions and Poor Connections**
- **Wiring Repairs**

Scan Tool Reference

Control Module References for scan tool information

Circuit/System Verification

1. Ignition ON.
2. Verify the scan tool Headlamps On Switch parameter changes between Active and Inactive while commanding the headlamp ON and OFF with the headlamp switch.
    - **If the parameter does not change**

      Refer to Headlamp Switch Malfunction below.

    - **If the parameter changes**
3. Verify the scan tool Automatic Headlamps Disable Switch parameter changes between Active and Inactive while commanding the automatic lamp control ON and OFF with the headlamp switch.
    - **If the parameter does not change**

      Refer to Headlamp Switch Malfunction below.

    - **If the parameter changes**
4. Verify the scan tool Headlamps Flash Switch parameter changes between Active and Inactive while commanding the flash to pass ON and OFF with the turn signal/multifunction switch.
    - **If the parameter does not change**

      Refer to Turn Signal/Multifunction Switch Malfunction below.

    - **If the parameter changes**
5. Verify the scan tool High Beam Select Switch parameter changes between Active and Inactive while commanding the high beams ON and OFF with the turn signal/multifunction switch.

- **If the parameter does not change**

  Refer to Turn Signal/Multifunction Switch Malfunction below.

- **If the parameter changes**

6. Verify the left low beam/daytime running lamp turn ON and OFF when commanding the Left Low Beam/Daytime Running Lamp ON and OFF with a scan tool.
   - **If the left low beam/daytime running lamp does not turn ON and OFF**

     Refer to Headlamps Malfunction - Low Beam below.

   - **If the left low beam/daytime running lamp turns ON and OFF**
7. Verify the right low beam/daytime running lamp turn ON and OFF when commanding the Right Low Beam/Daytime Running Lamp ON and OFF with a scan tool.
   - **If the right low beam/daytime running lamp does not turn ON and OFF**

     Refer to Headlamps Malfunction - Low Beam below.

   - **If the right low beam/daytime running lamp turns ON and OFF**
8. Verify the high beams turn ON and OFF when commanding the High Beams ON and OFF with a scan tool.
   - **If the high beams do not turn ON and OFF**

     Refer to Headlamps Malfunction - High Beam below.

   - **If the high beams turn ON and OFF**
9. Verify the high beam indicator on the instrument cluster turns ON and OFF while commanding the All Indicators Test ON and OFF with a scan tool.
   - **If the high beam indicator does not turn ON and OFF**

     Refer to High Beam Indicator Malfunction below.

   - **If the high beam indicator turns ON and OFF**
10. All OK.

Circuit/System Testing

Headlamp Switch Malfunction

1. Ignition OFF, scan tool disconnected, all doors closed, all accessories OFF, disconnect the harness connector at the S30 headlamp switch. It may take up to 2 minutes for all vehicle systems to power down.
2. Test for less than 5 ohms between the ground circuit terminal 6 and ground.
   - **If 5 ohms or greater**
   1. Ignition OFF.

2. Test for less than 2 ohms in the ground circuit end to end.
    - If 2 ohms or greater, repair the open/high resistance in the circuit.
    - If less than 2 ohms, repair the open/high resistance in the ground connection.
- **If less than 5 ohms**

3. Ignition ON.
4. Verify the scan tool Automatic Headlamps Disable Switch parameter is Inactive.
    - **If not Inactive**
    1. Ignition OFF, disconnect the X1 harness connector at the K9 body control module.
    2. Test for infinite resistance between the signal circuit terminal 5 and ground.
        - If less than infinite resistance, repair the short to ground on the circuit.
        - If infinite resistance, replace the K9 body control module.
    - **If Inactive**
5. Install a 3 A fused jumper wire between the signal circuit terminal 5 and the ground circuit terminal 6.
6. Verify the scan tool Automatic Headlamps Disable Switch parameter is Active.
    - **If not Active**
    1. Ignition OFF, disconnect the X1 harness connector at the K9 body control module, ignition ON.
    2. Test for less than 1 V between the signal circuit terminal 5 and ground.
        - If 1 V or greater, repair the short to voltage on the circuit.
        - If less than 1 V
    3. Test for less than 2 ohms in the signal circuit end to end.
        - If 2 ohms or greater, repair the open/high resistance in the circuit.
        - If less than 2 ohms, replace the K9 body control module.
    - **If Active**
7. Verify the scan tool Park Lamps Switch parameter is Inactive.
    - **If not Inactive**
    1. Ignition OFF, disconnect the X1 harness connector at the K9 body control module.
    2. Test for infinite resistance between the signal circuit terminal 3 and ground.
        - If less than infinite resistance, repair the short to ground on the circuit.
        - If infinite resistance, replace the K9 body control module.
    - **If Inactive**
8. Install a 3 A fused jumper wire between the signal circuit terminal 3 and the ground circuit terminal 6.
9. Verify the scan tool Park Lamps Switch parameter is Active.
    - **If not Active**
    1. Ignition OFF, disconnect the X1 harness connector at the K9 body control module, ignition ON.
    2. Test for less than 1 V between the signal circuit terminal 3 and ground.
        - If 1 V or greater, repair the short to voltage on the circuit.
        - If less than 1 V
    3. Test for less than 2 ohms in the signal circuit end to end.

- If 2 ohms or greater, repair the open/high resistance in the circuit.
- If less than 2 ohms, replace the K9 body control module.

- **If Active**

10. Verify the scan tool Headlamps On Switch parameter is Inactive.
    - **If not Inactive**
    1. Ignition OFF, disconnect the X1 harness connector at the K9 body control module.
    2. Test for infinite resistance between the signal circuit terminal 4 and ground.
        - If less than infinite resistance, repair the short to ground on the circuit.
        - If infinite resistance, replace the K9 body control module.
    - **If Inactive**
11. Install a 3 A fused jumper wire between the signal circuit terminal 4 and the ground circuit terminal 6.
12. Verify the scan tool Headlamps On Switch parameter is Active.
    - **If not Active**
    1. Ignition OFF, disconnect the X1 harness connector at the K9 body control module, ignition ON.
    2. Test for less than 1 V between the signal circuit terminal 4 and ground.
        - If 1 V or greater, repair the short to voltage on the circuit.
        - If less than 1 V
    3. Test for less than 2 ohms in the signal circuit end to end.
        - If 2 ohms or greater, repair the open/high resistance in the circuit.
        - If less than 2 ohms, replace the K9 body control module.
    - **If Active**
13. Test or replace the S30 headlamp switch.

Turn Signal/Multifunction Switch Malfunction

1. Ignition OFF, scan tool disconnected, all doors closed, all accessories OFF, disconnect the harness connector at the S78 turn signal/multifunction switch. It may take up to 2 minutes for all vehicle systems to power down.
2. Test for less than 5 ohms between the ground circuit terminal 3 and ground.
    - **If 5 ohms or greater**
    1. Ignition OFF.
    2. Test for less than 2 ohms in the ground circuit end to end.
        - If 2 ohms or greater, repair the open/high resistance in the circuit.
        - If less than 2 ohms, repair the open/high resistance in the ground connection.
    - **If less than 5 ohms**
3. Ignition ON.
4. Verify the scan tool High Beam Select Switch parameter is Inactive.
    - **If not Inactive**
    1. Ignition OFF, disconnect the X3 harness connector at the K9 body control module.

2. Test for infinite resistance between the signal circuit terminal 2 and ground.
    - If less than infinite resistance, repair the short to ground on the circuit.
    - If infinite resistance, replace the K9 body control module.
- **If Inactive**

5. Install a 3 A fused jumper wire between the signal circuit terminal 2 and the ground circuit terminal 3.
6. Verify the scan tool High Beam Select Switch parameter is Active.
    - **If not Active**
    1. Ignition OFF, disconnect the X3 harness connector at the K9 body control module, ignition ON.
    2. Test for less than 1 V between the signal circuit terminal 2 and ground.
        - If 1 V or greater, repair the short to voltage on the circuit.
        - If less than 1 V
    3. Test for less than 2 ohms in the signal circuit end to end.
        - If 2 ohms or greater, repair the open/high resistance in the circuit.
        - If less than 2 ohms, replace the K9 body control module.
    - **If Active**
7. Verify the scan tool Headlamps Flash Switch parameter is Inactive.
    - **If not Inactive**
    1. Ignition OFF, disconnect the X3 harness connector at the K9 body control module.
    2. Test for infinite resistance between the signal circuit terminal 4 and ground.
        - If less than infinite resistance, repair the short to ground on the circuit.
        - If infinite resistance, replace the K9 body control module.
    - **If Inactive**
8. Install a 3 A fused jumper wire between the signal circuit terminal 4 and the ground circuit terminal 3.
9. Verify the scan tool Headlamps Flash Switch parameter is Active.
    - **If not Active**
    1. Ignition OFF, disconnect the X3 harness connector at the K9 body control module, ignition ON.
    2. Test for less than 1 V between the signal circuit terminal 4 and ground.
        - If 1 V or greater, repair the short to voltage on the circuit.
        - If less than 1 V
    3. Test for less than 2 ohms in the signal circuit end to end.
        - If 2 ohms or greater, repair the open/high resistance in the circuit.
        - If less than 2 ohms, replace the K9 body control module.
    - **If Active**
10. Test or replace the S78 turn signal/multifunction switch.

Headlamps Malfunction - Low Beam

1. Ignition OFF, exterior lamps OFF, disconnect the harness connector at the appropriate E13 headlamp.

2. Test for less than 5 ohms between the ground circuit terminal 2 and ground.
    - **If 5 ohms or greater**
    1. Ignition OFF.
    2. Test for less than 2 ohms in the ground circuit end to end.
        - If 2 ohms or greater, repair the open/high resistance in the circuit.
        - If less than 2 ohms, repair the open/high resistance in the ground connection.
    - **If less than 5 ohms**
3. Connect a test lamp between the control circuit terminal 1 and ground, ignition ON.
4. Verify the test lamp turns ON and OFF when commanding the appropriate Low Beam/Daytime Running Lamp ON and OFF with a scan tool.
    - **If the test lamp is always OFF**
    1. Ignition OFF, disconnect the X4 harness connector at the K9 body control module.
    2. Test for infinite resistance between the control circuit and ground.
        - If less than infinite resistance, repair the short to ground on the circuit.
        - If infinite resistance
    3. Test for less than 2 ohms in the control circuit end to end.
        - If 2 ohms or greater, repair the open/high resistance in the circuit.
        - If less than 2 ohms, replace the K9 body control module.
    - **If the test lamp is always ON**
    1. Ignition OFF, disconnect the X4 harness connector at the K9 body control module, ignition ON.
    2. Test for less than 1 V between the control circuit terminal and ground.
        - If 1 V or greater, repair the short to voltage on the circuit.
        - If less than 1 V, replace the K9 body control module.
    - **If the test lamp turns ON and OFF**
5. Test or replace the appropriate E13 headlamp.

Headlamps Malfunction - High Beam

1. Ignition OFF, disconnect the X5 harness connector at the K9 body control module, ignition ON.
2. Verify a test lamp illuminates between the control circuit terminal 18 and ground.
    - **If the test lamp does not illuminate**
    1. Ignition OFF, disconnect the X2 harness connector at the X50A fuse block - underhood.
    2. Test for infinite resistance between the control circuit terminal and ground.
        - If less than infinite resistance, repair the short to ground on the circuit.
        - If infinite resistance
    3. Test for less than 2 ohms in the control circuit end to end.
        - If 2 ohms or greater, repair the open/high resistance in the circuit.
        - If less than 2 ohms, replace the X50A fuse block - underhood.
    - **If the test lamp illuminates**

3. Ignition OFF, connect a 3 A fused jumper between the control circuit terminal 18 and ground.
4. Remove the F37UA fuse at the X50A fuse block - underhood, ignition ON.
5. Verify a test lamp illuminates between the F37UA fuse B+ switch control terminal and ground.
    - **If the test lamp does not illuminate**
    1. Ignition OFF, disconnect the X2 harness connector at the X50A fuse block - underhood, ignition ON.
    2. Test for less than 1 V between the control circuit terminal 18 and ground.
        - If 1 V or greater, repair the short to voltage on the circuit.
        - If less than 1 V, replace the X50A fuse block - underhood.
    - **If the test lamp illuminates**
6. Ignition OFF, connect the X5 harness connector at the K9 body control module.
7. Install the F37UA fuse at the X50A fuse block - underhood, ignition OFF, exterior lamps OFF.
8. Disconnect the harness connector at the appropriate E13 headlamp.
9. Test for less than 5 ohms between the ground circuit terminal 2 and ground.
    - **If 5 ohms or greater**
    1. Ignition OFF.
    2. Test for less than 2 ohms in the ground circuit end to end.
        - If 2 ohms or greater, repair the open/high resistance in the circuit.
        - If less than 2 ohms, repair the open/high resistance in the ground connection.
    - **If less than 5 ohms**
10. Connect a test lamp between the control circuit terminal 1 and ground, ignition ON.
11. Verify the test lamp turns ON and OFF when commanding the High Beams ON and OFF with a scan tool.
    - **If the test lamp is always OFF**
    1. Ignition OFF, disconnect the X1 harness connector at the X50A fuse block - underhood.
    2. Test for infinite resistance between the control circuit and ground.
        - If less than infinite resistance, repair the short to ground on the circuit.
        - If infinite resistance
    3. Test for less than 2 ohms in the control circuit end to end.
        - If 2 ohms or greater, repair the open/high resistance in the circuit.
        - If less than 2 ohms, replace the K9 body control module.
    - **If the test lamp is always ON**
    1. Ignition OFF, disconnect the X1 harness connector at the X50A fuse block - underhood, ignition ON.
    2. Test for less than 1 V between the control circuit terminal and ground.
        - If 1 V or greater, repair the short to voltage on the circuit.
        - If less than 1 V, replace the K9 body control module.
    - **If the test lamp turns ON and OFF**

12. Test or replace the appropriate E13 headlamp.

High Beam Indicator Malfunction

1. Ignition ON.
2. Verify the high beam indicator turns ON and OFF when commanding the Instrument Cluster All Indicators Test ON and OFF with a scan tool.
   - **If the high beam indicator is always OFF or remains ON**

     Replace the P16 instrument cluster.

   - **If the high beam indicator turns ON and OFF**
3. Replace the K9 body control module.

Repair Instructions

Perform the **Diagnostic Repair Verification** after completing the repair.

- **Front Compartment Fuse Block Replacement**
- **Headlamp Bulb Replacement**
- **Headlamp Switch Replacement**
- **Turn Signal Switch Replacement**
- **Control Module References** for BCM or Instrument Cluster replacement, programming, and setup

INTERIOR BACKLIGHTING MALFUNCTION

Diagnostic Instructions

- Perform the **Diagnostic System Check - Vehicle** prior to using this diagnostic procedure.
- Review **Strategy Based Diagnosis** for an overview of the diagnostic approach.
- **Diagnostic Procedure Instructions** provides an overview of each diagnostic category.

Diagnostic Fault Information

Circuit	Short to Ground	Open/High Resistance	Short to Voltage	Signal Performance
F23DA (BCM 1) Fuse B+	C0890 03, B101E 43, B1405 03, B1529 03, U0121 00	C0890 03, B101E 43, B1405 03, B1529 03, U0121 00	-	-
F54UA Fuse B+	3	3	3	-
I/P Dimmer Switch B+ Reference	B257B 03, B1405 03	B257B 03	-	-

I/P Dimmer Switch Signal	B257B 03	B257B 03	B257B 07	-
Passenger Air Bag Disable Indicator Backlighting Control	3	3	3	-
LED Backlight Dimming Control Terminal 8 X2	2	2	2	-
LED Backlight Dimming Control Terminal 9 X7	2	2	2	-
Door Lock Switch - Driver Ground	-	2	-	-
Headlamp Switch Ground	1	1	1	-
Outside Rearview Mirror Switch Ground	-	U1538 00	-	-
Passenger Air Bag Disable Indicator Backlighting Ground	-	3	-	-
Steering Wheel Controls Switch - Left Ground	-	2	-	-
Steering Wheel Controls Switch - Right Ground	-	2	-	-
Sunroof Switch Ground	-	2	-	-
Sunroof Tilt Switch Ground	-	2	-	-
Traction Control Switch Ground	-	2	-	-
Transmission Shift Lever Position Indicator Ground	-	2	-	-
Window Switch - Driver Ground	-	U1538 00	-	-
Window Switch - Passenger Ground	-	U153A 00	-	-
Window Switch - Left Rear Ground	-	U1548 00	-	-
Window Switch - Right Rear Ground	-	U154A 00	-	-
1. Dimmer Switch Malfunction 2. Interior Backlighting Malfunction 3. Passenger Air Bag Disable Indicator Backlighting Malfunction				

Circuit/System Description

The instrument panel (I/P) dimmer switch is used to increase and decrease the brightness of the interior backlighting components. The I/P dimmer switch provides a voltage signal to the body control module (BCM) that will increase as the brightness of the lights are increased and decrease as the brightness of the lights are decreased. The BCM provides a low reference signal and a B+ voltage reference to the I/P dimmer switch.

When the I/P dimmer switch is placed in the desired position, the dimmed voltage setting is applied from the I/P dimmer switch through the I/P dimmer switch signal circuit to the BCM. The BCM interprets the signal and applies a pulse width modulated (PWM) voltage through the light emitting diode (LED) dimming 1 and dimming 2 control circuits illuminating the interior backlighting to the requested level of brightness.

Reference Information

Schematic Reference

Interior Lights Dimming Schematics

Connector End View Reference

COMPONENT CONNECTOR END VIEWS - INDEX

Description and Operation

Interior Lighting Systems Description and Operation

Electrical Information Reference

- **Circuit Testing**
- **Connector Repairs**
- **Testing for Intermittent Conditions and Poor Connections**
- **Wiring Repairs**

Scan Tool Reference

Control Module References for scan tool information

Circuit/System Verification

1. Ignition ON.
2. Verify the scan tool LED Backlight Dimming Command parameter changes between a high percentage to a low percentage while operating the dimmer switch from high to low.
    - **If the parameter does not change**

      Refer to Dimmer Switch Malfunction below.

    - **If the parameter changes**
3. Verify the backlighting components turn ON and OFF while commanding the LED Backlight Dimming ON and OFF with a scan tool.
    - **If the backlighting components do not turn ON and OFF**

      Refer to Interior Backlighting Malfunction below.

- **If the backlighting components turn ON and OFF**

4. Verify the phrase PASSENGER AIR BAG is illuminated on the Passenger Air Bag Disable Indicator.
   - **If the phrase PASSENGER AIR BAG is not illuminated**

     Refer to Passenger Air Bag Disable Indicator Backlighting Malfunction below.

   - **If the phrase PASSENGER AIR BAG is illuminated**
5. All OK.

Circuit/System Testing

Dimmer Switch Malfunction

1. Ignition OFF and all vehicle systems OFF, disconnect the harness connector at the S30 Headlamp Switch, ignition ON.
2. Test for B+ between the B+ circuit terminal 1 and ground.
   - **If less than B+**
   1. Ignition OFF, disconnect the X3 harness connector at the K9 Body Control Module.
   2. Test for infinite resistance between the B+ circuit and ground.
      - If less than infinite resistance, repair the short to ground on the circuit.
      - If infinite resistance
   3. Test for less than 2 ohms in the B+ circuit end to end.
      - If 2 ohms or greater, repair the open/high resistance in the circuit.
      - If less than 2 ohms, replace the K9 Body Control Module.
   - **If B+**
3. Verify a test lamp does not illuminate between the B+ circuit terminal 1 and the signal circuit terminal 12.
   - **If the test lamp illuminates**
   1. Ignition OFF, disconnect the X1 harness connector at the K9 Body Control Module.
   2. Test for infinite resistance between the signal circuit and ground.
      - If less than infinite resistance, repair the short to ground on the circuit.
      - If infinite resistance, replace the K9 Body Control Module.
   - **If the test lamp does not illuminate**
4. Test for B+ between the B+ circuit terminal 1 and the signal circuit terminal 12.
   - **If less than B+**
   1. Ignition OFF, disconnect the X1 harness connector at the K9 Body Control Module, ignition ON.
   2. Test for less than 1 V between the signal circuit terminal 12 and ground.
      - If 1 V or greater, repair the short to voltage on the circuit.
      - If less than 1 V
   3. Test for less than 2 ohms in the signal circuit end to end.
      - If 2 ohms or greater, repair the open/high resistance in the circuit.

- If less than 2 ohms, replace the K9 Body Control Module.
- **If B+**

5. Test or replace the S30 Headlamp Switch.

Interior Backlighting Malfunction

NOTE: Each component with backlighting may need to be disconnected to isolate a short to voltage or short to ground. Use the schematics to identify the following:

- **Backlighting components the vehicle is equipped with**
- **Each component's control and ground circuit terminals**
- **Component locations on the backlighting control circuit**

1. Ignition OFF, scan tool disconnected, all doors closed, all accessories OFF, disconnect the harness connector at the component with inoperative backlighting. It may take up to 2 minutes for all vehicle systems to power down.
2. Test for less than 5 ohms between the appropriate ground circuit terminal listed below and ground.
   - S75 traction control switch - terminal 4
   - S30 headlamp switch - terminal 6
   - S13D door lock switch - driver - terminal 1
   - P2 transmission shift lever position indicator - terminal B
   - S70R steering wheel controls switch - right - terminal 5
   - S70L steering wheel controls switch - left - terminal 7
   - S72 sunroof switch - terminal 3
   - S88 sunroof tilt switch - terminal 3
   - S52 outside rearview mirror switch - terminal 5
   - **If 5 ohms or greater**

   1. Ignition OFF.
   2. Test for less than 2 ohms in the ground circuit end to end.
      - If 2 ohms or greater, repair the open/high resistance in the circuit.
      - If less than 2 ohms, repair the open/high resistance in the ground connection.

   - **If less than 5 ohms**
3. Connect a test lamp between the appropriate control circuit terminal listed below and ground.
   - S75 traction control switch - terminal 3
   - S30 headlamp switch - terminal 7
   - S13D door lock switch - driver - terminal 2
   - P2 transmission shift lever position indicator - terminal A
   - S70R steering wheel controls switch - right - terminal 4
   - S70L steering wheel controls switch - left - terminal 6

- S72 sunroof switch - terminal 2
- S88 sunroof tilt switch - terminal 2
- S52 outside rearview mirror switch - terminal 10

4. Verify the test lamp turns ON and OFF when commanding the LED Backlight Dimming ON and OFF with a scan tool.
   - **If the test lamp is always OFF**
   1. Ignition OFF, disconnect the appropriate harness connector at the K9 body control module.
   2. Test for infinite resistance between the control circuit and ground.
      - If less than infinite resistance, repair the short to ground on the circuit.
      - If infinite resistance
   3. Test for less than 2 ohms in the control circuit end to end.
      - If 2 ohms or greater, repair the open/high resistance in the circuit.
      - If less than 2 ohms, replace the K9 body control module.
   - **If the test lamp is always ON**
   1. Ignition OFF, disconnect the appropriate harness connector at the K9 body control module, ignition ON.
   2. Test for less than 1 V between the control circuit terminal and ground.
      - If 1 V or greater, repair the short to voltage on the circuit.
      - If less than 1 V, replace the K9 body control module.
   - **If the test lamp turns ON and OFF**
5. Test or replace the component with inoperative backlighting.

Passenger Air Bag Disable Indicator Backlighting Malfunction

1. Ignition OFF, scan tool disconnected, all doors closed, all accessories OFF, disconnect the harness connector at the P14 passenger air bag disable indicator. It may take up to 2 minutes for all vehicle systems to power down.
2. Test for less than 5 ohms between the ground circuit terminal 3 and ground.
   - **If 5 ohms or greater**
   1. Ignition OFF.
   2. Test for less than 2 ohms in the ground circuit end to end.
      - If 2 ohms or greater, repair the open/high resistance in the circuit.
      - If less than 2 ohms, repair the open/high resistance in the ground connection.
   - **If less than 5 ohms**
3. Connect a test lamp between the control circuit terminal 1 and ground.
4. Verify the test lamp turns ON and OFF while turning the ignition switch ON and OFF.
   - **If the test lamp is always OFF**
   1. Ignition OFF, disconnect the X2 harness connector at the X50A fuse block - underhood.
   2. Test for infinite resistance between the control circuit and ground.

- If less than infinite resistance, repair the short to ground on the circuit.
- If infinite resistance

3. Test for less than 2 ohms in the control circuit end to end.
   - If 2 ohms or greater, repair the open/high resistance in the circuit.
   - If less than 2 ohms, replace the X50A fuse block - underhood.

- **If the test lamp is always ON**

1. Ignition OFF, disconnect the X2 harness connector at the X50A fuse block - underhood, ignition ON.
2. Test for less than 1 V between the control circuit terminal and ground.
   - If 1 V or greater, repair the short to voltage on the circuit.
   - If less than 1 V, replace the X50A fuse block - underhood.

- **If the test lamp turns ON and OFF**

5. Test or replace the P14 passenger air bag disable indicator.

Repair Instructions

Perform the **Diagnostic Repair Verification** after completing the repair.

- **Automatic or Manual Transmission Control Lever Trim Cover Replacement**
- **Door Lock Switch Replacement**
- **Headlamp Switch Replacement**
- **Outside Rearview Mirror Remote Control Switch Replacement**
- **Radio Control Switch Replacement - Steering Wheel**
- **Sunroof Switch Replacement**
- **Control Module References** for BCM replacement, programming, and setup

PARK, LICENSE, AND/OR TAIL LAMPS MALFUNCTION

Diagnostic Instructions

- Perform the **Diagnostic System Check - Vehicle** prior to using this diagnostic procedure.
- Review **Strategy Based Diagnosis** for an overview of the diagnostic approach.
- **Diagnostic Procedure Instructions** provides an overview of each diagnostic category.

Diagnostic Fault Information

Circuit	Short to Ground	Open/High Resistance	Short to Voltage	Signal Performance
F3DA (BCM 5) Fuse B+	B2585 01, B2585 04, B3949 01, B3949 04	B2585 01, B2585 04, B3949 01, B3949 04	-	-

F24DA (BCM 2) Fuse B+	B147F 01, B147F 04, B270A 01, B3867 01, B3867 04	B147F 01, B147F 04, B270A 01, B3867 01, B3867 04	-	-
Headlamp Switch Park Lamps ON Signal	2	B257A 00	2	-
License Plate Lamp Control	B3883 02	B3883 01, B3883 04	B3883 01	-
Park Lamps Control - Left	B2585 02	B2585 01, B2585 04	B2585 01, B2585 04	-
Park Lamps Control - Right	B3867 02	B3867 01, B3867 04	B3867 01, B3867 04	-
Headlamp Switch Ground	-	2	-	-
License Plate Lamp Ground - Left	-	B3883 01, B3883 04	-	-
License Plate Lamp Ground - Right	-	B3883 01, B3883 04	-	-
Park Lamp Ground - Left Front	-	1	-	-
Park Lamp Ground - Right Front	-	1	-	-
Side Marker Lamp Ground - Left Front	-	1	-	-
Side Marker Lamp Ground - Right Front	-	1	-	-
Tail Lamp Ground - Left	-	1	-	-
Tail Lamp Ground - Right	-	1	-	-
Tail/Stop Lamps Ground - Left	-	1	-	-
Tail/Stop Lamps Ground - Right	-	1	-	-
1. Park, License, and/or Tail Lamps Malfunction 2. Park Lamp Switch Malfunction				

Circuit/System Description

When the headlamp switch is placed in the HEAD or PARK position, ground is applied to the park lamp switch ON signal circuit to the body control module (BCM). The BCM responds by applying voltage to the park lamps, tail lamps, and license lamps control circuits illuminating the park, tail, and license lamps.

Reference Information

Schematic Reference

Exterior Lights Schematics

Connector End View Reference

COMPONENT CONNECTOR END VIEWS - INDEX

Description and Operation

Exterior Lighting Systems Description and Operation

Electrical Information Reference

- **Circuit Testing**
- **Connector Repairs**
- **Testing for Intermittent Conditions and Poor Connections**
- **Wiring Repairs**

Scan Tool Reference

Control Module References for scan tool information

Circuit/System Verification

1. Ignition ON.
2. Verify the scan tool Park Lamp Switch parameter changes between Active and Inactive while commanding the park lamps ON and OFF with the headlamp switch.
   - **If the parameter does not change**

     Refer to Park Lamp Switch Malfunction below.

   - **If the parameter changes**
3. Verify the left park lamps turn ON and OFF when commanding the Left Park Lamps ON and OFF with a scan tool.
   - **If the left park lamps do not turn ON and OFF**

     Refer to Park Lamps Malfunction below

   - **If the left park lamps turn ON and OFF**
4. Verify the right park lamps turn ON and OFF when commanding the Right Park Lamps ON and OFF with a scan tool.
   - **If the right park lamps do not turn ON and OFF**

     Refer to Park Lamps Malfunction below.

   - **If the right park lamps turn ON and OFF**
5. Verify the license plate lamps turn ON and OFF when commanding the License Plate Lamps ON and OFF with a scan tool.
   - **If the license plate lamps do not turn ON and OFF**

Refer to License Plate Lamps Malfunction below.

- **If the license plate lamps turn ON and OFF**

6. All OK.

Circuit/System Testing

Park Lamp Switch Malfunction

1. Ignition OFF, scan tool disconnected, all doors closed, all accessories OFF, disconnect the harness connector at the S30 headlamp switch. It may take up to 2 minutes for all vehicle systems to power down.
2. Test for less than 5 ohms between the ground circuit terminal 6 and ground.
   - **If 5 ohms or greater**
   1. Ignition OFF.
   2. Test for less than 2 ohms in the ground circuit end to end.
      - If 2 ohms or greater, repair the open/high resistance in the circuit.
      - If less than 2 ohms, repair the open/high resistance in the ground connection.
   - **If less than 5 ohms**
3. Ignition ON.
4. Verify the scan tool Park Lamps Switch parameter is Inactive.
   - **If not Inactive**
   1. Ignition OFF, disconnect the X1 harness connector at the K9 body control module.
   2. Test for infinite resistance between the signal circuit terminal 3 and ground.
      - If less than infinite resistance, repair the short to ground on the circuit.
      - If infinite resistance, replace the K9 body control module.
   - **If Inactive**
5. Install a 3 A fused jumper wire between the signal circuit terminal 3 and the ground circuit terminal 6.
6. Verify the scan tool Park Lamps Switch parameter is Active.
   - **If not Active**
   1. Ignition OFF, disconnect the X1 harness connector at the K9 body control module, ignition ON.
   2. Test for less than 1 V between the signal circuit terminal 3 and ground.
      - If 1 V or greater, repair the short to voltage on the circuit.
      - If less than 1 V
   3. Test for less than 2 ohms in the signal circuit end to end.
      - If 2 ohms or greater, repair the open/high resistance in the circuit.
      - If less than 2 ohms, replace the K9 body control module.
   - **If Active**
7. Test or replace the S30 headlamp switch.

Park Lamps Malfunction

1. Ignition OFF, exterior lamps OFF, disconnect the harness connector at the appropriate park lamp.
2. Test for less than 5 ohms between the appropriate ground circuit terminal listed below and ground.
    - E4N left front park lamp - terminal C
    - E4P right front park lamp - terminal C
    - E2LF left front side market lamp - terminal 2
    - E2RF right front side market lamp - terminal 2
    - E5AA left tail/stop lamp - terminal 3
    - E5AB right tail/stop lamp - terminal 3
    - E5E left tail lamp - terminal 3
    - E5F right tail lamp - terminal 3
    - E2LR left rear side marker lamp - terminal 2
    - E2RR right rear side marker lamp - terminal 2
    - **If 5 ohms or greater**
    1. Ignition OFF.
    2. Test for less than 2 ohms in the ground circuit end to end.
        - If 2 ohms or greater, repair the open/high resistance in the circuit.
        - If less than 2 ohms, repair the open/high resistance in the ground connection.
    - **If less than 5 ohms**
3. Connect a test lamp between the appropriate control circuit terminal listed below and ground, ignition ON.
    - E4N left front park lamp - terminal A
    - E4P right front park lamp - terminal A
    - E2LF left front side market lamp - terminal 1
    - E2RF right front side market lamp - terminal 1
    - E5AA left tail/stop lamp - terminal 2
    - E5AB right tail/stop lamp - terminal 2
    - E5E left tail lamp - terminal 2
    - E5F right tail lamp - terminal 2
    - E2LR left rear side marker lamp - terminal 1
    - E2RR right rear side marker lamp - terminal 1
4. Verify the test lamp turns ON and OFF when commanding the appropriate Park Lamps ON and OFF with a scan tool.
    - **If the test lamp is always OFF**
    1. Ignition OFF, disconnect the X4 harness connector at the K9 body control module.
    2. Test for infinite resistance between the control circuit and ground.
        - If less than infinite resistance, repair the short to ground on the circuit.
        - If infinite resistance
    3. Test for less than 2 ohms in the control circuit end to end.

- If 2 ohms or greater, repair the open/high resistance in the circuit.
- If less than 2 ohms, replace the K9 body control module.

- **If the test lamp is always ON**

1. Ignition OFF, disconnect the X4 harness connector at the K9 body control module, ignition ON.
2. Test for less than 1 V between the control circuit terminal and ground.
   - If 1 V or greater, repair the short to voltage on the circuit.
   - If less than 1 V, replace the K9 body control module.

- **If the test lamp turns ON and OFF**

5. Test or replace the appropriate park lamp.

License Plate Lamps Malfunction

1. Ignition OFF, exterior lamps OFF, remove both E7 license plate lamp bulbs.
2. Test for less than 5 ohms between each ground circuit terminal 1 and ground.
   - **If 5 ohms or greater**

   1. Ignition OFF.
   2. Test for less than 2 ohms in the ground circuit end to end.
      - If 2 ohms or greater, repair the open/high resistance in the circuit.
      - If less than 2 ohms, repair the open/high resistance in the ground connection.

   - **If less than 5 ohms**
3. Connect a test lamp between the license plate lamp - left control circuit terminal 2 and ground, ignition ON.
4. Verify the test lamp turns ON and OFF when commanding the License Plate Lamps ON and OFF with a scan tool.
   - **If the test lamp is always OFF**

   1. Ignition OFF, disconnect the X4 harness connector at the K9 body control module.
   2. Test for infinite resistance between the control circuit and ground.
      - If less than infinite resistance, repair the short to ground on the circuit.
      - If infinite resistance
   3. Test for less than 2 ohms in the control circuit end to end.
      - If 2 ohms or greater, repair the open/high resistance in the circuit.
      - If less than 2 ohms, replace the K9 body control module.

   - **If the test lamp is always ON**

   1. Ignition OFF, disconnect the X4 harness connector at the K9 body control module, ignition ON.
   2. Test for less than 1 V between the control circuit terminal and ground.
      - If 1 V or greater, repair the short to voltage on the circuit.
      - If less than 1 V, replace the K9 body control module.

   - **If the test lamp turns ON and OFF**
5. Connect a test lamp between the license plate lamp - right control circuit terminal 2 and ground, ignition

ON.

6. Verify the test lamp turns ON and OFF when commanding the License Plate Lamps ON and OFF with a scan tool.
    - **If the test lamp is always OFF**
    1. Ignition OFF, disconnect the X4 harness connector at the K9 body control module.
    2. Test for infinite resistance between the control circuit and ground.
        - If less than infinite resistance, repair the short to ground on the circuit.
        - If infinite resistance
    3. Test for less than 2 ohms in the control circuit end to end.
        - If 2 ohms or greater, repair the open/high resistance in the circuit.
        - If less than 2 ohms, replace the K9 body control module.
    - **If the test lamp turns ON and OFF**
7. Test or replace the appropriate E7 license plate lamp bulb.

Repair Instructions

Perform the **Diagnostic Repair Verification** after completing the repair.

- **Front Side Marker Lamp Bulb Replacement**
- **Headlamp Switch Replacement**
- **Rear License Plate Lamp Bulb Replacement**
- **Tail Lamp Bulb Replacement**
- **Control Module References** for BCM replacement, programming, and setup

REAR COMPARTMENT LAMP MALFUNCTION

Diagnostic Instructions

- Perform the **Diagnostic System Check - Vehicle** prior to using this diagnostic procedure.
- Review **Strategy Based Diagnosis** for an overview of the diagnostic approach.
- **Diagnostic Procedure Instructions** provides an overview of each diagnostic category.

Diagnostic Fault Information

Circuit	Short to Ground	Open/High Resistance	Short to Voltage	Signal Performance
F24DA (BCM 2) Fuse B+	B147F 01, B147F 04, B270A 01, B3867 01, B3867 04	B147F 01, B147F 04, B270A 01, B3867 01, B3867 04	-	-
Rear Compartment Courtesy Lamp Control	1	1	1	-

Rear Compartment Courtesy Lamp Ground	-	1	-	-
1. Rear Compartment Lamp Malfunction				

Circuit/System Description

The body control module (BCM) applies battery voltage to the rear compartment courtesy lamp through the rear compartment lamp control circuit. When the BCM receives a rear compartment lid open input from the rear compartment lid latch, the BCM applies battery voltage to the rear compartment lamp control circuit illuminating the rear compartment courtesy lamp. In the event that the rear compartment lamp were to remain illuminated for more than 10 minutes with the ignition switch in the OFF position and no doors opened, the BCM will deactivate the rear compartment lamp control circuit to prevent total battery discharge.

Reference Information

Schematic Reference

Interior Lights Schematics

Connector End View Reference

COMPONENT CONNECTOR END VIEWS - INDEX

Description and Operation

Interior Lighting Systems Description and Operation

Electrical Information Reference

- **Circuit Testing**
- **Connector Repairs**
- **Testing for Intermittent Conditions and Poor Connections**
- **Wiring Repairs**

Scan Tool Reference

Control Module References for scan tool information

Circuit/System Testing

1. Ignition OFF, exterior lamps OFF, disconnect the harness connector at the E8S rear compartment courtesy lamp.
2. Test for less than 5 ohms between the ground circuit terminal 2 and ground.
    - **If 5 ohms or greater**
    1. Ignition OFF.

2. Test for less than 2 ohms in the ground circuit end to end.
    - If 2 ohms or greater, repair the open/high resistance in the circuit.
    - If less than 2 ohms, repair the open/high resistance in the ground connection.
- **If less than 5 ohms**

3. Connect a test lamp between the control circuit terminal 1 and ground, ignition ON.
4. Verify the test lamp turns ON and OFF when commanding the Trunk Lamp ON and OFF with a scan tool.
    - **If the test lamp is always OFF**
    1. Ignition OFF, disconnect the X7 harness connector at the K9 body control module.
    2. Test for infinite resistance between the control circuit and ground.
        - If less than infinite resistance, repair the short to ground on the circuit.
        - If infinite resistance
    3. Test for less than 2 ohms in the control circuit end to end.
        - If 2 ohms or greater, repair the open/high resistance in the circuit.
        - If less than 2 ohms, replace the K9 body control module.
    - **If the test lamp is always ON**
    1. Ignition OFF, disconnect the X7 harness connector at the K9 body control module, ignition ON.
    2. Test for less than 1 V between the control circuit terminal and ground.
        - If 1 V or greater, repair the short to voltage on the circuit.
        - If less than 1 V, replace the K9 body control module.
    - **If the test lamp turns ON and OFF**
5. Test or replace the appropriate E8S rear compartment courtesy lamp.

Repair Instructions

Perform the **Diagnostic Repair Verification** after completing the repair.

- **Cargo Center Courtesy Lamp Bulb Replacement**
- **Control Module References** for BCM replacement, programming, and setup

STOP LAMPS MALFUNCTION

Diagnostic Instructions

- Perform the **Diagnostic System Check - Vehicle** prior to using this diagnostic procedure.
- Review **Strategy Based Diagnosis** for an overview of the diagnostic approach.
- **Diagnostic Procedure Instructions** provides an overview of each diagnostic category.

Diagnostic Fault Information

	Short to	Open/High	Short to	

Circuit	Ground	Resistance	Voltage	Signal Performance
F3DA (BCM 5) Fuse B+	B2585 01, B2585 04, B3949 01, B3949 04	B2585 01, B2585 04, B3949 01, B3949 04	-	-
F23DA (BCM 1) Fuse B+	C0890 03, B101E 43, B1405 03, B1529 03, U0121 00	C0890 03, B101E 43, B1405 03, B1529 03, U0121 00	-	-
F24DA (BCM 2) Fuse B+	B147F 01, B147F 04, B270A 01, B3867 01, B3867 04	B147F 01, B147F 04, B270A 01, B3867 01, B3867 04	-	-
Brake Pedal Position Sensor 5 V Reference	C0277 06, C0890 03, U0140 71	C0277 06, U0140 71	C0277 07, C0890 07, U0140 71	-
Brake Pedal Position Sensor Signal	C0277 06, U0140 71	C0277 06, U0140 71	C0277 07, C0890 07, U0140 71	C0277 09
Center High Mounted Stop Lamp (CHMSL) Control	2	2	2	-
Stop Lamp Control - Left	1	1	1	-
Stop Lamp Control - Right	1	1	1	-
Brake Pedal Position Sensor Low Reference	1	C0277 07, U0140 71	1	-
Center High Mounted Stop Lamp (CHMSL) Ground	-	2	-	-
Stop Lamp Ground - Left	-	1	-	-
Stop Lamp Ground - Right	-	1	-	-
1. Stop Lamps Malfunction 2. Center High Mounted Stop Lamp (CHMSL) Malfunction				

Circuit/System Description

The brake pedal position (BPP) sensor is used to sense the action of the driver application of the brake pedal. The BPP sensor provides an analog voltage signal that will increase as the brake pedal is applied. The body control module (BCM) provides a low reference signal and a 5-volt reference voltage to the BPP sensor. When the variable signal reaches a voltage threshold indicating the brakes have been applied, the BCM will apply battery voltage to the left and right stop lamp control circuits as well as the center high mounted stop lamp (CHMSL) control circuit illuminating the left and right stop lamps and the CHMSL.

Reference Information

Schematic Reference

Exterior Lights Schematics

Connector End View Reference

COMPONENT CONNECTOR END VIEWS - INDEX

Description and Operation

Exterior Lighting Systems Description and Operation

Electrical Information Reference

- **Circuit Testing**
- **Connector Repairs**
- **Testing for Intermittent Conditions and Poor Connections**
- **Wiring Repairs**

Scan Tool Reference

Control Module References for scan tool information

Circuit/System Verification

1. Ignition ON.
2. Verify the scan tool Brake Pedal Applied parameter changes between Active and Inactive while pressing and releasing the brake pedal.
    - **If the parameter does not change**

      Refer to Brake Pedal Position Sensor Malfunction below.

    - **If the parameter changes**
3. Verify the left brake lamp turns ON and OFF when commanding the Left Brake Lamp ON and OFF with a scan tool.
    - **If the left brake lamp does not turn ON and OFF**

      Refer to Stop Lamps Malfunction below.

    - **If the left brake lamp turns ON and OFF**
4. Verify the right brake lamp turns ON and OFF when commanding the Right Brake Lamp ON and OFF with a scan tool.
    - **If the right brake lamp does not turn ON and OFF**

      Refer to Stop Lamps Malfunction below.

    - **If the right brake lamp turns ON and OFF**

5. Verify the center high mounted stop lamp turns ON and OFF when commanding the Center Brake Lamp ON and OFF with a scan tool.
    - **If the center high mounted stop does not turn ON and OFF**

      Refer to Center High Mount Stop Lamp Malfunction below.

    - **If the center high mounted stop turns ON and OFF**
6. All OK.

Circuit/System Testing

Brake Pedal Position Sensor Malfunction

1. Ignition OFF, disconnect the harness connector at the B22 brake pedal position sensor, ignition ON.
2. Test for less than 1 V between the appropriate low reference circuit terminal listed below and ground.
    - Terminal 2 - with MH8
    - Terminal A - with MF3/MZ0
    - **If 1 V or greater**
    1. Ignition OFF, disconnect the X1 harness connector at the K9 body control module, ignition ON.
    2. Test for less than 1 V between the low reference circuit and ground.
        - If 1 V or greater, repair the short to voltage on the circuit.
        - If less than 1 V, replace the K9 body control module.
    - **If less than 1 V**
3. Test or replace the B22 brake pedal position sensor.

Stop Lamps Malfunction

1. Ignition OFF, exterior lamps OFF, disconnect the harness connector at the appropriate E5A tail/stop lamp.
2. Test for less than 5 ohms between the ground circuit terminal 3 and ground.
    - **If 5 ohms or greater**
    1. Ignition OFF.
    2. Test for less than 2 ohms in the ground circuit end to end.
        - If 2 ohms or greater, repair the open/high resistance in the circuit.
        - If less than 2 ohms, repair the open/high resistance in the ground connection.
    - **If less than 5 ohms**
3. Connect a test lamp between the control circuit terminal 1 and ground, ignition ON.
4. Verify the test lamp turns ON and OFF when commanding the appropriate Brake Lamp ON and OFF with a scan tool.
    - **If the test lamp is always OFF**
    1. Ignition OFF, disconnect the appropriate harness connector listed below at the K9 body control

module.
- X4 left stop lamp
- X5 right stop lamp

2. Test for infinite resistance between the control circuit and ground.
   - If less than infinite resistance, repair the short to ground on the circuit.
   - If infinite resistance
3. Test for less than 2 ohms in the control circuit end to end.
   - If 2 ohms or greater, repair the open/high resistance in the circuit.
   - If less than 2 ohms, replace the K9 body control module.

- **If the test lamp is always ON**

1. Ignition OFF, disconnect the appropriate harness connector listed below at the K9 body control module, ignition ON.
   - X4 left stop lamp
   - X5 right stop lamp
2. Test for less than 1 V between the control circuit terminal and ground.
   - If 1 V or greater, repair the short to voltage on the circuit.
   - If less than 1 V, replace the K9 body control module.

- **If the test lamp turns ON and OFF**

5. Test or replace the appropriate E5 brake lamp.

Center High Mount Stop Lamp Malfunction

1. Ignition OFF, exterior lamps OFF, disconnect the harness connector at the E6 center high mounted stop lamp.
2. Test for less than 5 ohms between the ground circuit terminal B and ground.
   - **If 5 ohms or greater**

   1. Ignition OFF.
   2. Test for less than 2 ohms in the ground circuit end to end.
      - If 2 ohms or greater, repair the open/high resistance in the circuit.
      - If less than 2 ohms, repair the open/high resistance in the ground connection.

   - **If less than 5 ohms**
3. Connect a test lamp between the control circuit terminal A and ground, ignition ON.
4. Verify the test lamp turns ON and OFF when commanding the Center Brake Lamp ON and OFF with a scan tool.
   - **If the test lamp is always OFF**

   1. Ignition OFF, disconnect the X4 harness connector at the K9 body control module.
   2. Test for infinite resistance between the control circuit and ground.
      - If less than infinite resistance, repair the short to ground on the circuit.
      - If infinite resistance

3. Test for less than 2 ohms in the control circuit end to end.
    - If 2 ohms or greater, repair the open/high resistance in the circuit.
    - If less than 2 ohms, replace the K9 body control module.
- **If the test lamp is always ON**

1. Ignition OFF, disconnect the X4 harness connector at the K9 body control module, ignition ON.
2. Test for less than 1 V between the control circuit terminal and ground.
    - If 1 V or greater, repair the short to voltage on the circuit.
    - If less than 1 V, replace the K9 body control module.

- **If the test lamp turns ON and OFF**

5. Test or replace the E6 center high mounted stop lamp.

Repair Instructions

Perform the **Diagnostic Repair Verification** after completing the repair.

- **High Mount Stop Lamp Replacement**
- **Tail Lamp Bulb Replacement**
- **Brake Pedal Position Sensor Replacement**
- **Brake Pedal Position Sensor Calibration**
- **Control Module References** for BCM replacement, programming, and setup

TURN SIGNAL LAMPS AND/OR INDICATORS MALFUNCTION

Diagnostic Instructions

- Perform the **Diagnostic System Check - Vehicle** prior to using this diagnostic procedure.
- Review **Strategy Based Diagnosis** for an overview of the diagnostic approach.
- **Diagnostic Procedure Instructions** provides an overview of each diagnostic category.

Diagnostic Fault Information

Circuit	Short to Ground	Open/High Resistance	Short to Voltage	Signal Performance
F3DA (BCM 5) Fuse B+	B2585 01, B2585 04, B3949 01, B3949 04	B2585 01, B2585 04, B3949 01, B3949 04	-	-
F31UA (BCM VBATT 07) Fuse B+	B3948 01, B3948 04, B3951 01, B3951 04	B3948 01, B3948 04, B3951 01, B3951 04	-	-
F32UA (BCM VBATT 06) Fuse	B2545 01, B2545 04,	B2545 01, B2545		

B+	B3950 01, B3950 04	04, B3950 01, B3950 04	-	-
Turn Signal Switch Signal - Left	2	2	2	-
Turn Signal Switch Signal - Right	2	2	2	-
Turn Signal Control - Left Front	B3948 02	B3948 01, B3948 04	1	-
Turn Signal Control - Left Rear	B3950 02	B3950 01, B3950 04	1	-
Turn Signal Control - Right Front	B3949 02	B3949 01, B3949 04	1	-
Turn Signal Control - Right Rear	B3951 02	B3951 01, B3951 04	1	-
Park/Turn Signal Lamp Ground - Left Front	-	B3948 01, B3948 04	-	-
Park/Turn Signal Lamp Ground - Right Front	-	B3949 01, B3949 04	-	-
Tail/Stop Lamp Ground - Left	-	B3950 01, B3950 04	-	-
Tail/Stop Lamp Ground - Right	-	B3951 01, B3951 04	-	-
Turn Signal/Multifunction Switch Ground	-	2	-	-
1. Turn Signal Lamps and/or Indicators Malfunction 2. Turn Signal/Multifunction Switch Malfunction				

Circuit/System Description

Ground is applied at all times to the turn signal/multifunction switch. The turn signal lamps may only be activated with the ignition switch in the ON or START positions. When the turn signal/multifunction switch is placed in either the TURN RIGHT or TURN LEFT position, ground is applied to the body control module (BCM) through either the right turn or left turn signal switch signal circuit. The BCM responds to the turn signal switch input by applying a pulsating voltage to the front and rear turn signal lamps through there respective control circuits. When a turn signal request is received by the BCM, a serial data message is sent to the instrument panel cluster (IPC) requesting the respective turn signal indicator be pulsed ON and OFF.

Reference Information

Schematic Reference

Exterior Lights Schematics

Connector End View Reference

COMPONENT CONNECTOR END VIEWS - INDEX

Description and Operation

Exterior Lighting Systems Description and Operation

Electrical Information Reference

- **Circuit Testing**
- **Connector Repairs**
- **Testing for Intermittent Conditions and Poor Connections**
- **Wiring Repairs**

Scan Tool Reference

Control Module References for scan tool information

Circuit/System Verification

1. Ignition ON.
2. Verify the scan tool Right Turn Signal Switch and Left Turn Signal Switch parameters change between Active and Inactive while cycling the turn signal switch between the right and left positions.
   - **If the parameters do not change**

     Refer to Turn Signal/Multifunction Switch Malfunction below.

   - **If the parameters change**
3. Verify the left front turn signal lamps turn ON and OFF while commanding the Left Front Turn Signal Lamp ON and OFF with a scan tool.
   - **If the left front turn signal lamps do not turn ON and OFF**

     Refer to Turn Signal Lamps Malfunction below.

   - **If the left front turn signal lamps turn ON and OFF**
4. Verify the right front turn signal lamps turn ON and OFF while commanding the Right Front Turn Signal Lamp ON and OFF with a scan tool.
   - **If the right front turn signal lamps do not turn ON and OFF**

     Refer to Turn Signal Lamps Malfunction below.

   - **If the right front turn signal lamps turn ON and OFF**
5. Verify the left rear turn signal lamps turn ON and OFF while commanding the Left Rear Turn Signal Lamp ON and OFF with a scan tool.
   - **If the left rear turn signal lamps do not turn ON and OFF**

     Refer to Turn Signal Lamps Malfunction below.

   - **If the left rear turn signal lamps turn ON and OFF**

6. Verify the right rear turn signal lamps turn ON and OFF while commanding the Right Rear Turn Signal Lamp ON and OFF with a scan tool.
    - **If the right rear turn signal lamps do not turn ON and OFF**

      Refer to Turn Signal Lamps Malfunction below.

    - **If the right rear turn signal lamps turn ON and OFF**
7. Verify the left and right turn signal indicators turn ON and OFF while commanding the All Indicators Test ON and OFF with a scan tool.
    - **If the left or right turn signal indictors do not turn ON and OFF**

      Refer to Turn Signal Indicators Malfunction below.

    - **If the left and right turn signal indictors turn ON and OFF**
8. All OK.

Circuit/System Testing

Turn Signal/Multifunction Switch Malfunction

1. Ignition OFF, scan tool disconnected, all doors closed, all accessories OFF, disconnect the harness connector at the S78 Turn Signal/Multifunction Switch. It may take up to 2 minutes for all vehicle systems to power down.
2. Test for less than 5 ohms between the ground circuit terminal 3 and ground.
    - **If 5 ohms or greater**
    1. Ignition OFF.
    2. Test for less than 2 ohms in the ground circuit end to end.
        - If 2 ohms or greater, repair the open/high resistance in the circuit.
        - If less than 2 ohms, repair the open/high resistance in the ground connection.
    - **If less than 5 ohms**
3. Ignition ON.
4. Verify the scan tool Left Turn Signal Switch parameter is Inactive.
    - **If not Inactive**
    1. Ignition OFF, disconnect the X3 harness connector at the K9 Body Control Module.
    2. Test for infinite resistance between the signal circuit terminal 1 and ground.
        - If less than infinite resistance, repair the short to ground on the circuit.
        - If infinite resistance, replace the K9 Body Control Module.
    - **If Inactive**
5. Install a 3 A fused jumper wire between the signal circuit terminal 1 and the ground circuit terminal 3.
6. Verify the scan tool Left Turn Signal Switch parameter is Active.
    - **If not Active**

1. Ignition OFF, disconnect the X3 harness connector at the K9 Body Control Module, ignition ON.
2. Test for less than 1 V between the signal circuit terminal 1 and ground.
    - If 1 V or greater, repair the short to voltage on the circuit.
    - If less than 1 V
3. Test for less than 2 ohms in the signal circuit end to end.
    - If 2 ohms or greater, repair the open/high resistance in the circuit.
    - If less than 2 ohms, replace the K9 Body Control Module.

- **If Active**

7. Verify the scan tool Right Turn Signal Switch parameter is Inactive.
    - **If not Inactive**
    1. Ignition OFF, disconnect the X3 harness connector at the K9 Body Control Module.
    2. Test for infinite resistance between the signal circuit terminal 7 and ground.
        - If less than infinite resistance, repair the short to ground on the circuit.
        - If infinite resistance, replace the K9 Body Control Module.
    - **If Inactive**
8. Install a 3 A fused jumper wire between the signal circuit terminal 7 and the ground circuit terminal 3.
9. Verify the scan tool Right Turn Signal Switch parameter is Active.
    - **If not Active**
    1. Ignition OFF, disconnect the X3 harness connector at the K9 Body Control Module, ignition ON.
    2. Test for less than 1 V between the signal circuit terminal 7 and ground.
        - If 1 V or greater, repair the short to voltage on the circuit.
        - If less than 1 V
    3. Test for less than 2 ohms in the signal circuit end to end.
        - If 2 ohms or greater, repair the open/high resistance in the circuit.
        - If less than 2 ohms, replace the K9 Body Control Module.
    - **If Active**
10. Test or replace the S78 Turn Signal/Multifunction Switch.

Turn Signal Lamps Malfunction

1. Ignition OFF, exterior lamps OFF, disconnect the harness connector at the appropriate E4 Turn Signal Lamp.
2. Test for less than 5 ohms between the appropriate ground circuit terminal listed below and ground.
    - E4N Park/Turn Signal Lamp - Left terminal C
    - E4P Park/Turn Signal Lamp - Right terminal C
    - E4LR Turn Signal Lamp - Left Rear terminal 3
    - E4RR Turn Signal Lamp - Right Rear terminal 3
    - **If 5 ohms or greater**
    1. Ignition OFF.

2. Test for less than 2 ohms in the ground circuit end to end.
    - If 2 ohms or greater, repair the open/high resistance in the circuit.
    - If less than 2 ohms, repair the open/high resistance in the ground connection.
- **If less than 5 ohms**

3. Connect a test lamp between the appropriate control circuit terminal listed below and ground.
    - E4N Park/Turn Signal Lamp - Left terminal B
    - E4P Park/Turn Signal Lamp - Right terminal B
    - E4LR Turn Signal Lamp - Left Rear terminal 2
    - E4RR Turn Signal Lamp - Right Rear terminal 2
4. Verify the test lamp turns ON and OFF when commanding the appropriate Turn Signal Lamp ON and OFF with a scan tool.
    - **If the test lamp is always OFF**
    1. Ignition OFF, disconnect the appropriate harness connector listed below at the K9 Body Control Module.
        - X5 left turn signals
        - X4 right turn signals
    2. Test for infinite resistance between the control circuit and ground.
        - If less than infinite resistance, repair the short to ground on the circuit.
        - If infinite resistance
    3. Test for less than 2 ohms in the control circuit end to end.
        - If 2 ohms or greater, repair the open/high resistance in the circuit.
        - If less than 2 ohms, replace the K9 Body Control Module.
    - **If the test lamp is always ON**
    1. Ignition OFF, disconnect the appropriate harness connector listed below at the K9 Body Control Module, ignition ON.
        - X5 left turn signals
        - X4 right turn signals
    2. Test for less than 1 V between the control circuit terminal and ground.
        - If 1 V or greater, repair the short to voltage on the circuit.
        - If less than 1 V, replace the K9 Body Control Module.
    - **If the test lamp turns ON and OFF**
5. Test or replace the appropriate E4 Turn Signal Lamp.

Turn Signal Indicators Malfunction

1. Ignition ON.
2. Verify the left and right turn signal indicators turn ON and OFF while commanding the All Indicators Test ON and OFF with a scan tool.
    - **If the left or right turn signal indictors are always OFF or remain ON**

Replace the P16 Instrument Cluster.

- **If the left and right turn signal indictors turn ON and OFF**

3. Replace the K9 Body Control Module.

Repair Instructions

Perform the **Diagnostic Repair Verification** after completing the repair.

- **Tail Lamp Bulb Replacement**
- **Turn Signal Switch Replacement**
- **Front Side Turn Signal Lamp Replacement**
- **Control Module References** for BCM or Instrument Cluster replacement, programming, and setup

REPAIR INSTRUCTIONS

BRAKE PEDAL POSITION SENSOR CALIBRATION

NOTE: Brake system does not use a brake switch, stoplight switch or brakelight switch. System uses a Brake Pedal Position Sensor to control these functions.

Calibration Criteria

NOTE: Do not apply the brake pedal during the brake pedal position sensor calibration procedure. Any movement of the brake pedal during this procedure will cause the calibration procedure to fail. If this occurs, the brake pedal position sensor calibration must be repeated.

Brake pedal position sensor calibration must be performed after the brake pedal position sensor, body control module (BCM), or engine control module (ECM) have been serviced. The calibration procedure will set the brake pedal position sensor home value. This value is used by the BCM and ECM to determine the action of the driver applying the brake system and to provide this information to the vehicle subsystems via serial data.

Calibration Procedure

1. Apply the parking brake.
2. Ignition ON, engine OFF, place the transmission in the PARK position for automatic transmission or NEUTRAL position for manual transmission.
3. Install a scan tool.
4. Clear all DTCs before proceeding.
5. Navigate to the Configuration/Reset Functions menu of the BCM.
6. Select the Brake Pedal Position Sensor Learn procedure and follow the directions displayed on the screen.
7. Navigate to the Configuration/Reset Functions menu of the ECM.
8. Select the Learn Functions menu.

9. Select the Brake Pedal Position Sensor Learn procedure and follow the directions displayed on the screen.

BRAKE PEDAL POSITION SENSOR REPLACEMENT

NOTE: Brake system does not use a brake switch, stoplight switch or brakelight switch. System uses a Brake Pedal Position Sensor to control these functions.

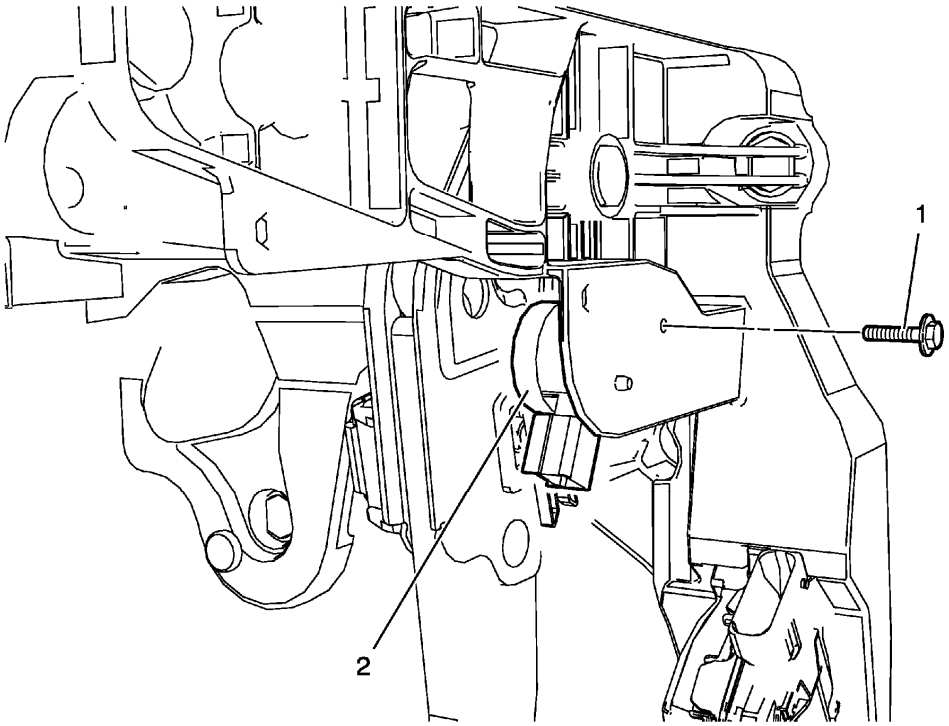

Fig. 10: Brake Pedal Position Sensor
Courtesy of GENERAL MOTORS COMPANY

Brake Pedal Position Sensor Replacement

Callout	Component Name
Preliminary Procedures Remove the instrument panel lower trim pad cover. Refer to **Instrument Panel Lower Trim Pad Cover Replacement (without Knee Airbag)** , **Instrument Panel Lower Trim Pad Cover Replacement (with Knee Airbag)** .	
1	Brake Pedal Position Sensor Bolt **CAUTION:** **Refer to Fastener Caution .** **Tighten** 3 N.m (27 lb in)

2	Brake Pedal Position Sensor **Procedure** 1. Disconnect the electrical connector. 2. Calibrate the brake pedal position sensor. Refer to **Brake Pedal Position Sensor Calibration**.

HEADLAMP SWITCH REPLACEMENT

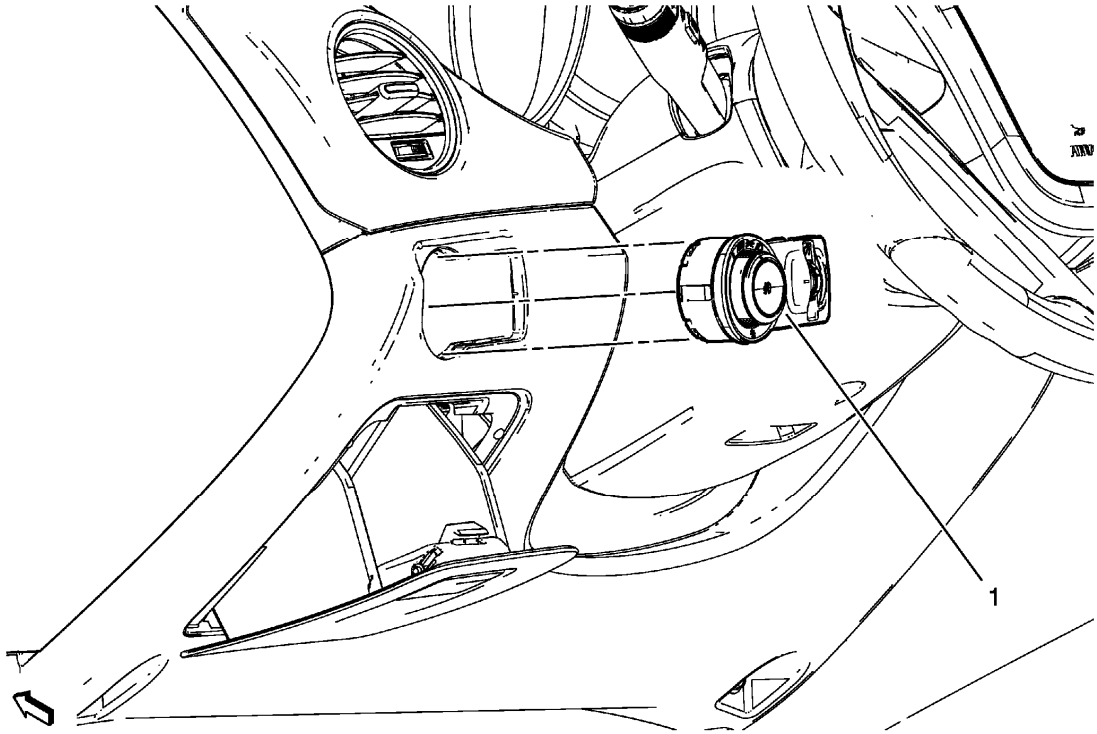

Fig. 11: Headlamp Switch
Courtesy of GENERAL MOTORS COMPANY

Headlamp Switch Replacement

Callout	Component Name
1	Headlamp Switch Assembly **Procedure** 1. Open the compartment or remove the fuse access cover to remove the headlamp switch. 2. Disconnect the electrical connection.

HAZARD WARNING SWITCH REPLACEMENT

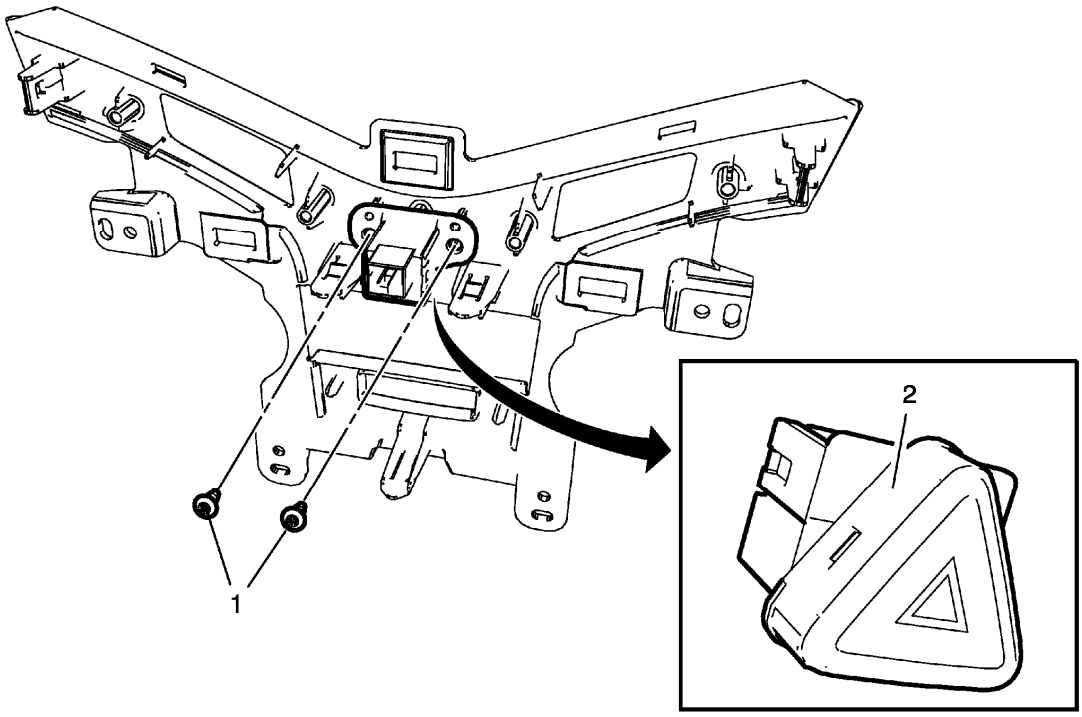

Fig. 12: Hazard Warning Switch
Courtesy of GENERAL MOTORS COMPANY

Hazard Warning Switch Replacement

Callout	Component Name
Preliminary Procedures Remove instrument panel accessory bezel. Refer to **Instrument Panel Accessory Bezel Replacement** .	
1	Hazard Warning Switch Bolt (Qty: 3) **CAUTION:** **Refer to Fastener Caution .** **Tighten** 2.5 N.m (22 lb in)
2	Hazard Warning Switch

HEADLAMP AUTOMATIC CONTROL AMBIENT LIGHT SENSOR REPLACEMENT

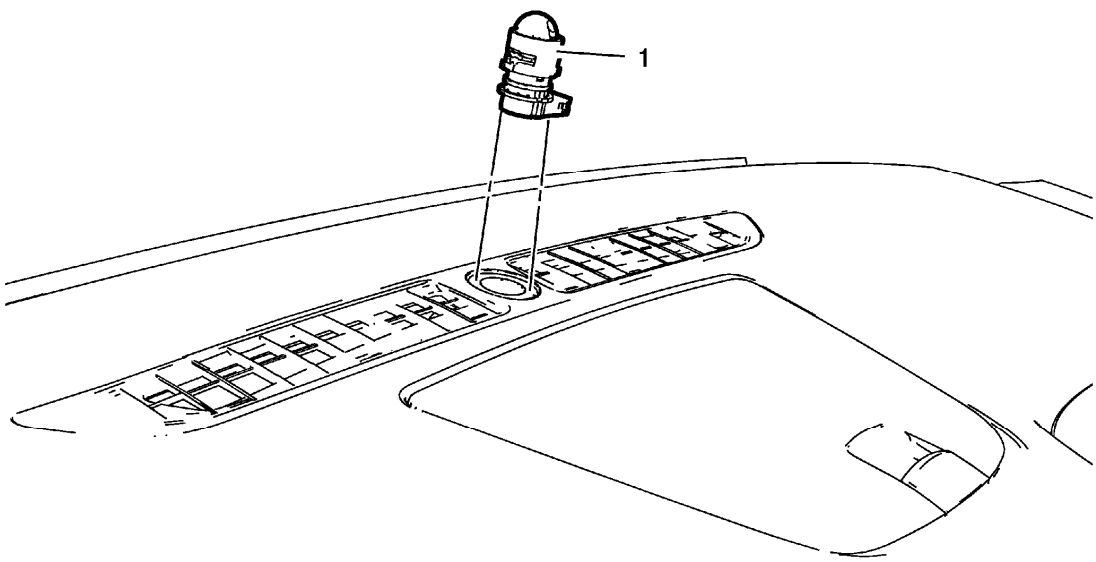

Fig. 13: Headlamp Automatic Control Ambient Light Sensor
Courtesy of GENERAL MOTORS COMPANY

Headlamp Automatic Control Ambient Light Sensor Replacement

callout	Component Name
1	Headlamp Automatic Control Ambient Light Sensor **Procedure** Disconnect electrical connector.

READING LAMP BULB REPLACEMENT

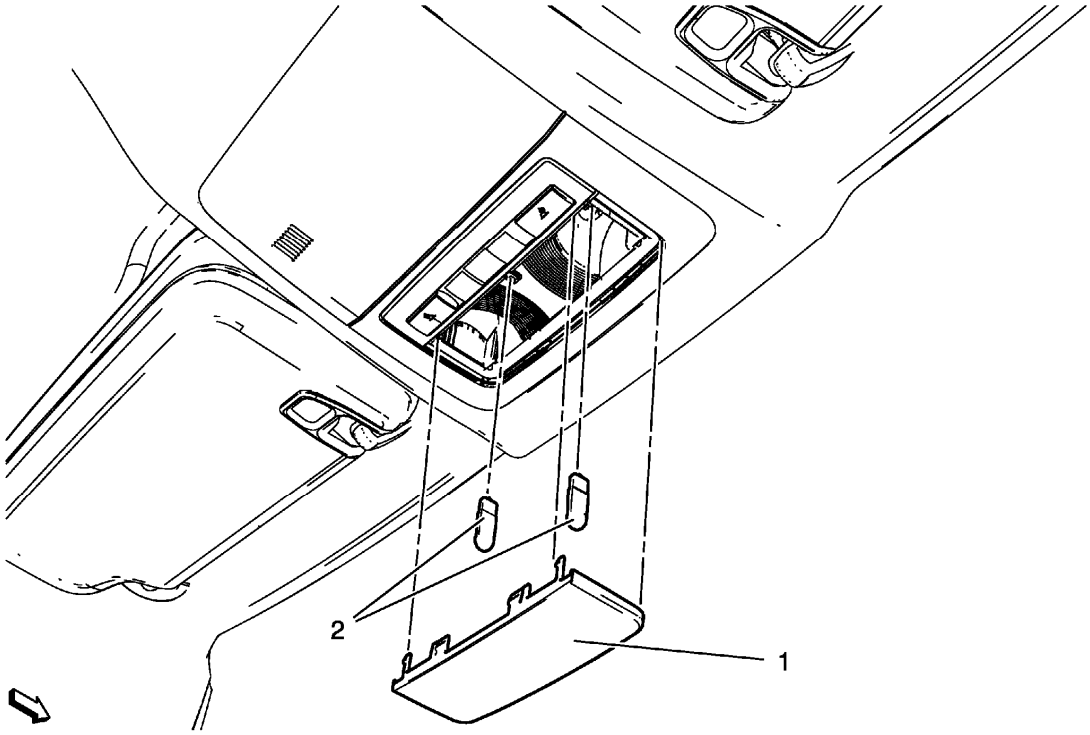

Fig. 14: Reading Lamp Bulb
Courtesy of GENERAL MOTORS COMPANY

Reading Lamp Bulb Replacement

Callout	Component Name
1	Reading Lamp Lens **Procedure** Using a plastic flat-bladed tool, gently pry the rear edge of the reading lamp lens to remove.
2	Reading Lamp Bulb (Qty: 2) **Procedure** Pull to release bulb from socket.

READING LAMP REPLACEMENT

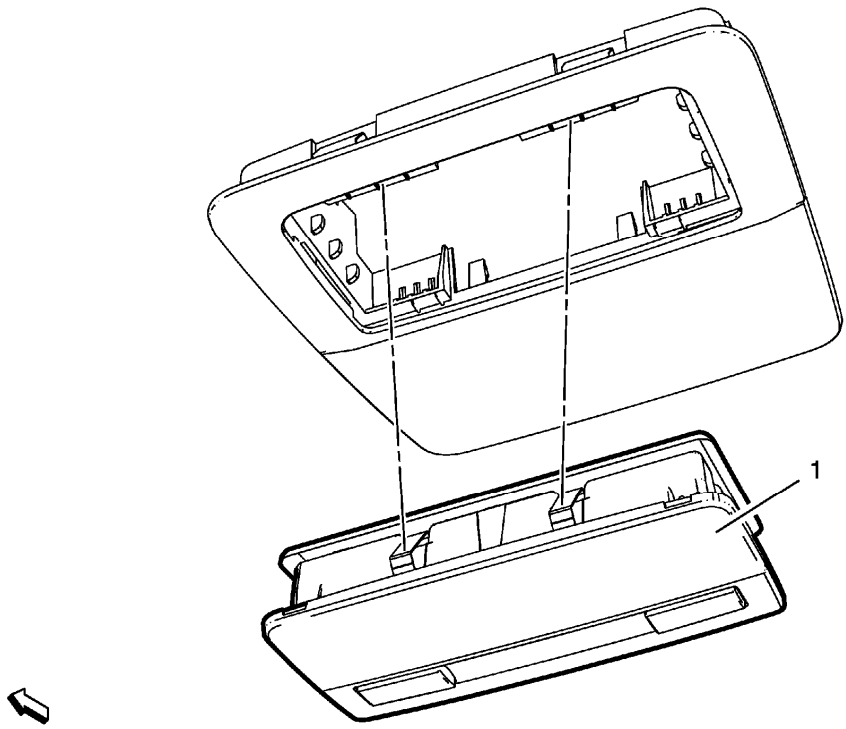

Fig. 15: Reading Lamp
Courtesy of GENERAL MOTORS COMPANY

Reading Lamp Replacement

Callout	Component Name
Preliminary Procedures Remove roof console. Refer to **Roof Console Replacement** .	
1	Reading Lamp **Procedure** 1. Disconnect the electrical connector. 2. Change the bulb, as needed.

INSTRUMENT PANEL COMPARTMENT LAMP REPLACEMENT

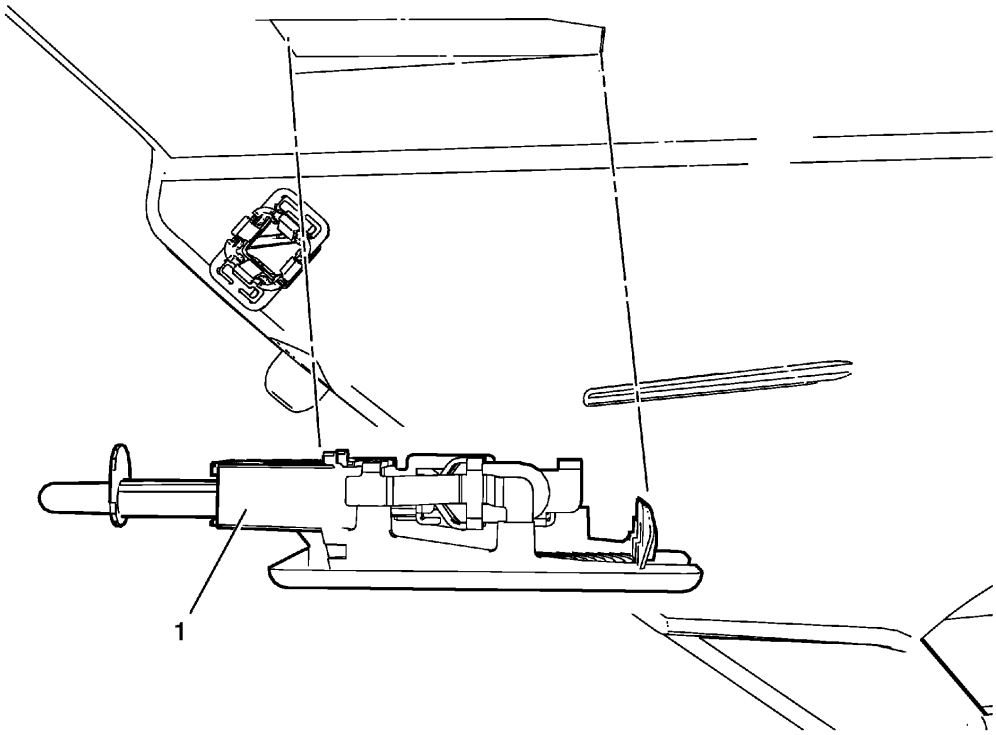

Fig. 16: Instrument Panel Compartment Lamp
Courtesy of GENERAL MOTORS COMPANY

Instrument Panel Compartment Lamp Replacement

Callout	Component Name
Preliminary Procedures Remove the instrument panel compartment. Refer to **Instrument Panel Compartment Replacement** .	
1	Instrument Panel Compartment Lamp **Procedure** 1. Disconnect electrical connector. 2. Replace the bulb, as needed. 3. Observe the correct installation of the instrument panel compartment lamp plunger.

INSTRUMENT PANEL COMPARTMENT LAMP BULB REPLACEMENT

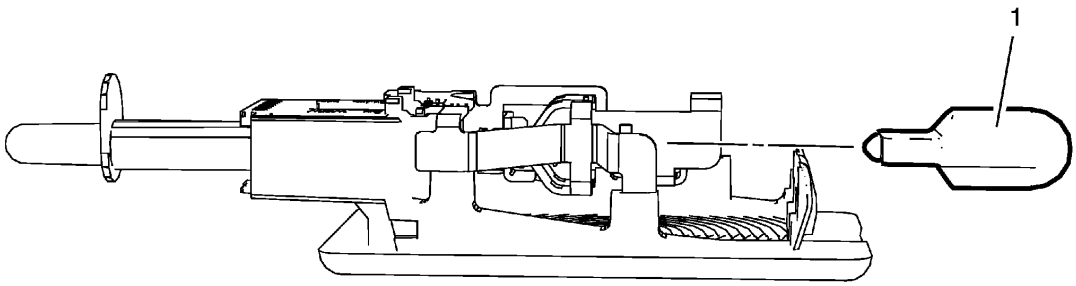

Fig. 17: Instrument Panel Compartment Lamp Bulb
Courtesy of GENERAL MOTORS COMPANY

Instrument Panel Compartment Lamp Bulb Replacement

Callout	Component Name
Preliminary Procedures Remove instrument panel compartment lamp. Refer to **Instrument Panel Compartment Lamp Replacement**.	
1	Instrument Panel Compartment Lamp Bulb

SUNSHADE ILLUMINATED MIRROR LAMP BULB REPLACEMENT

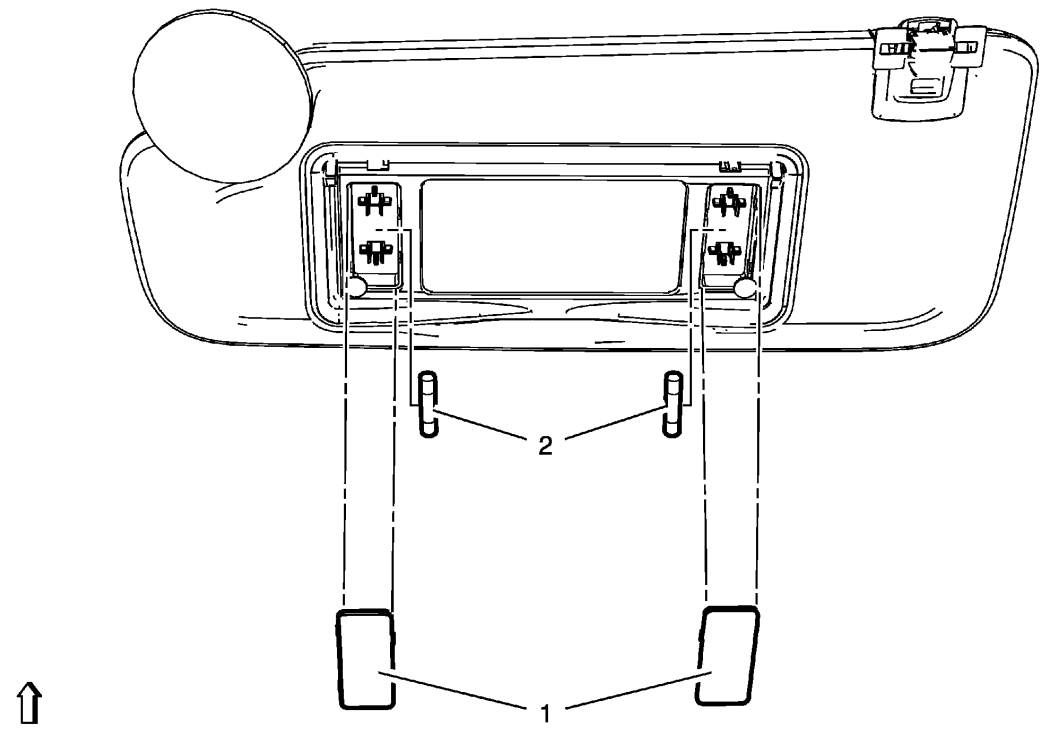

Fig. 18: Sunshade Illuminated Mirror Lamp Bulb
Courtesy of GENERAL MOTORS COMPANY

Sunshade Illuminated Mirror Lamp Bulb Replacement

Callout	Component Name
1	Sunshade Illuminated Mirror Lamp Lens **Procedure** Using a small flat bladed tool, gently pry to release the tabs at either side of the lens.
2	Sunshade Illuminated Mirror Lamp Bulb **Procedure** Pull bulb from the contacts.

DOME LAMP REPLACEMENT (WITH SUNROOF)

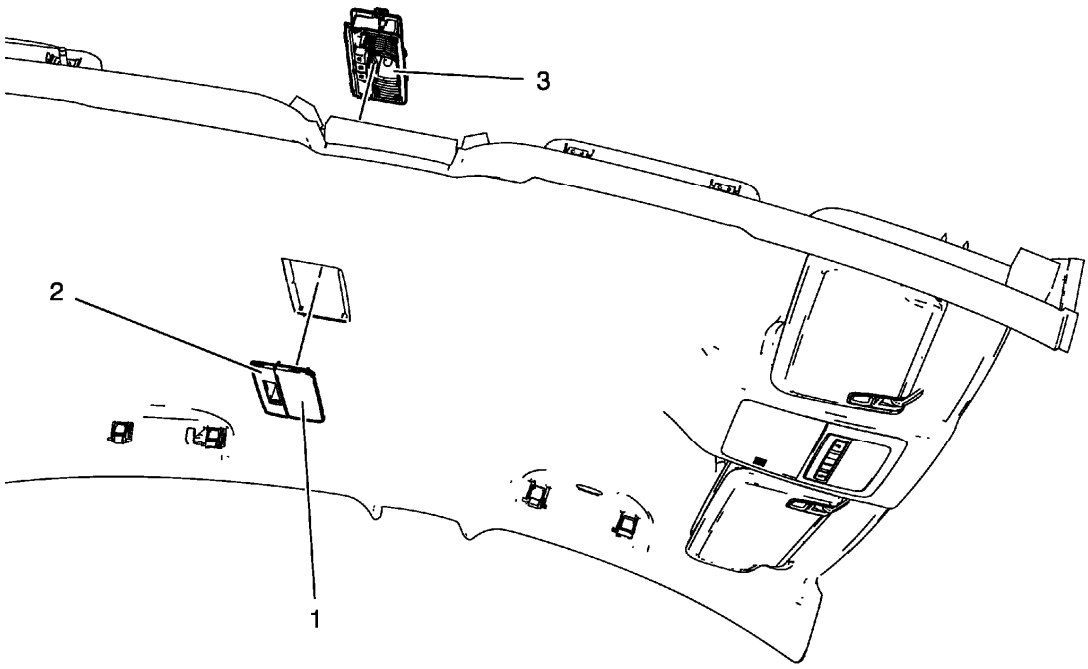

Fig. 19: Dome Lamp (with Sunroof)
Courtesy of GENERAL MOTORS COMPANY

Dome Lamp Replacement (with Sunroof)

Callout	Component Name
Preliminary Procedure Lower the headliner enough to gain access to the dome lamp housing. Refer to **Headlining Trim Panel Replacement (without Sunroof)** , **Headlining Trim Panel Replacement (with Sunroof)** .	
1	Dome Lamp Lens
2	Dome Lamp Switch Bezel
3	Dome Lamp Housing Assembly **Procedure** 1. Carefully use a flat-bladed tool, and release the tabs retaining the dome lamp to the headliner. 2. Disconnect the electrical connector.

DOME LAMP REPLACEMENT (WITHOUT SUNROOF)

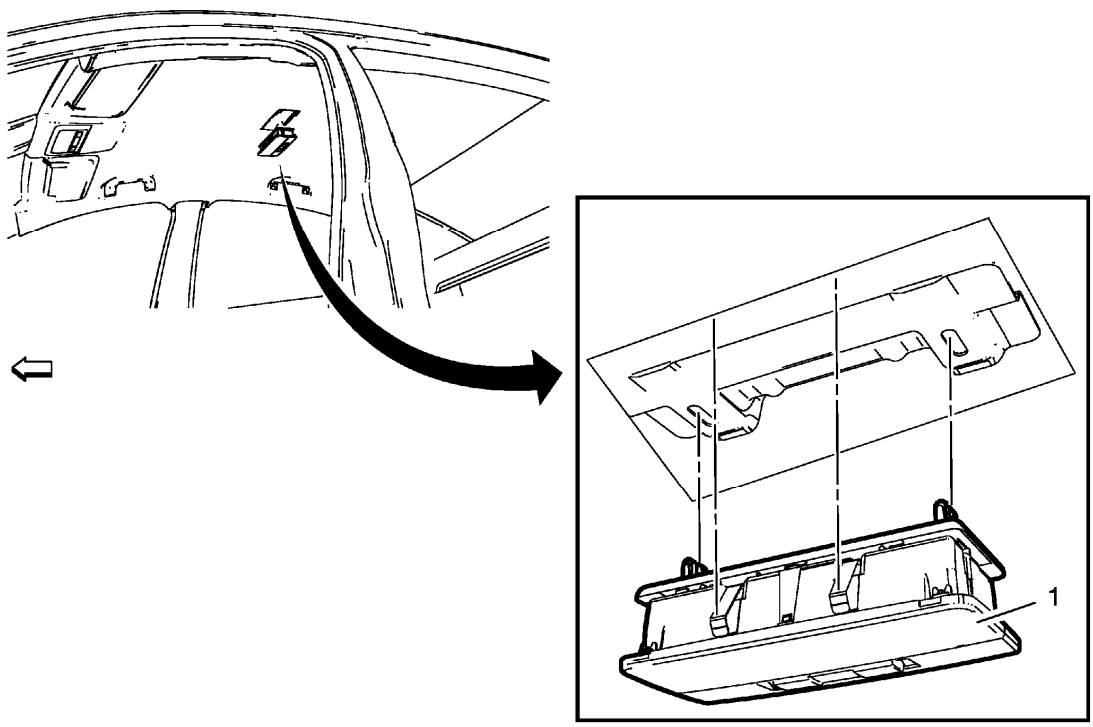

Fig. 20: Dome Lamp (without Sunroof)
Courtesy of GENERAL MOTORS COMPANY

Dome Lamp Replacement (without Sunroof)

Callout	Component Name
1	Dome Lamp Assembly **Procedure** 1. Carefully use a flat-bladed tool, and release the tabs retaining the dome lamp to headliner and roof. 2. Carefully use a suitable screw driver, and remove the spring clips from the roof bow. 3. Disconnect electrical connector.

DOME LAMP BULB REPLACEMENT

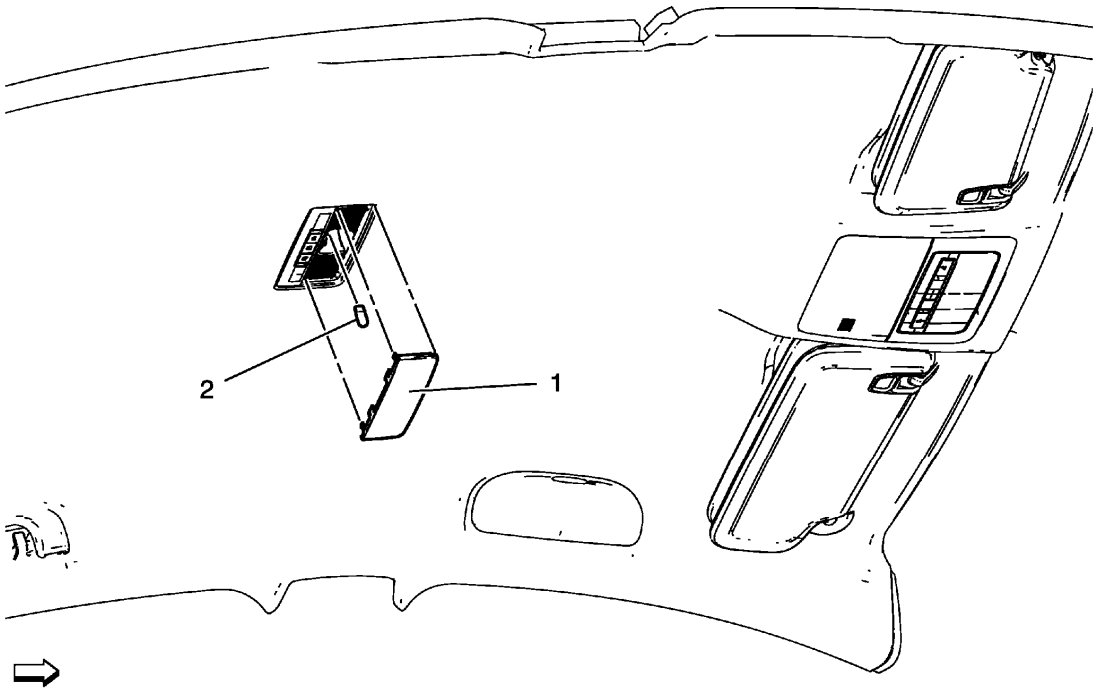

Fig. 21: Dome Lamp Bulb
Courtesy of GENERAL MOTORS COMPANY

Dome Lamp Bulb Replacement

Callout	Component Name
1	Dome and Reading Lamp Lens
2	Dome Lamp Bulb

HEADLAMP REPLACEMENT

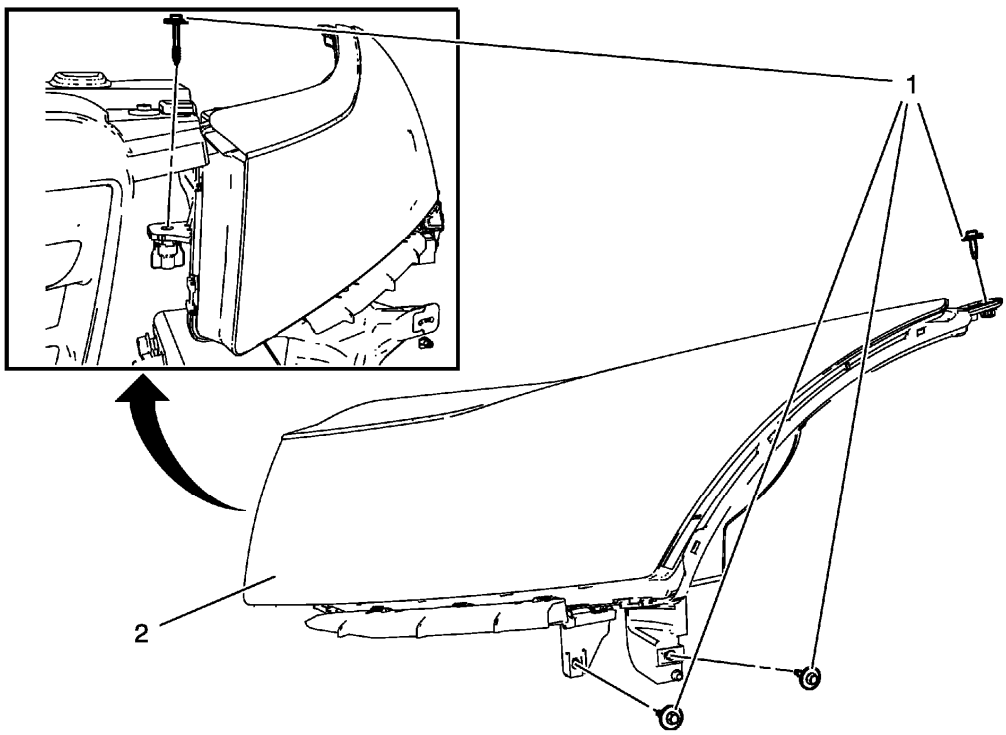

Fig. 22: Headlamp
Courtesy of GENERAL MOTORS COMPANY

Headlamp Replacement

Callout	Component Name
Preliminary Procedures Remove the front bumper fascia guide. Refer to **Front Bumper Fascia Guide Replacement** .	
1	Headlamp Screw (Qty: 4) **CAUTION:** **Refer to Fastener Caution .** **Procedure** Secure the headlamp fasteners in sequence, as indicated. **Tighten** 2.5 N.m (22 lb in)
	Headlamp Assembly **Procedure** 1. Pull forward on the outside edge of the headlamp in order to release the up and down locator tabs on the backside of the headlamp. 2. Pull forward on the top inside edge of the headlamp to release the

2	inboard up/down locator. 3. Pull the headlamp assembly down. 4. Pull the headlamp assembly forward far enough to access the electrical connection. 5. Disconnect the headlamp electrical connector from the forward lamp harness connector. 6. Remove the headlamp assembly. 7. Aim the headlamps after installation. Refer to **Headlamp Aiming**.

HEADLAMP BULB REPLACEMENT

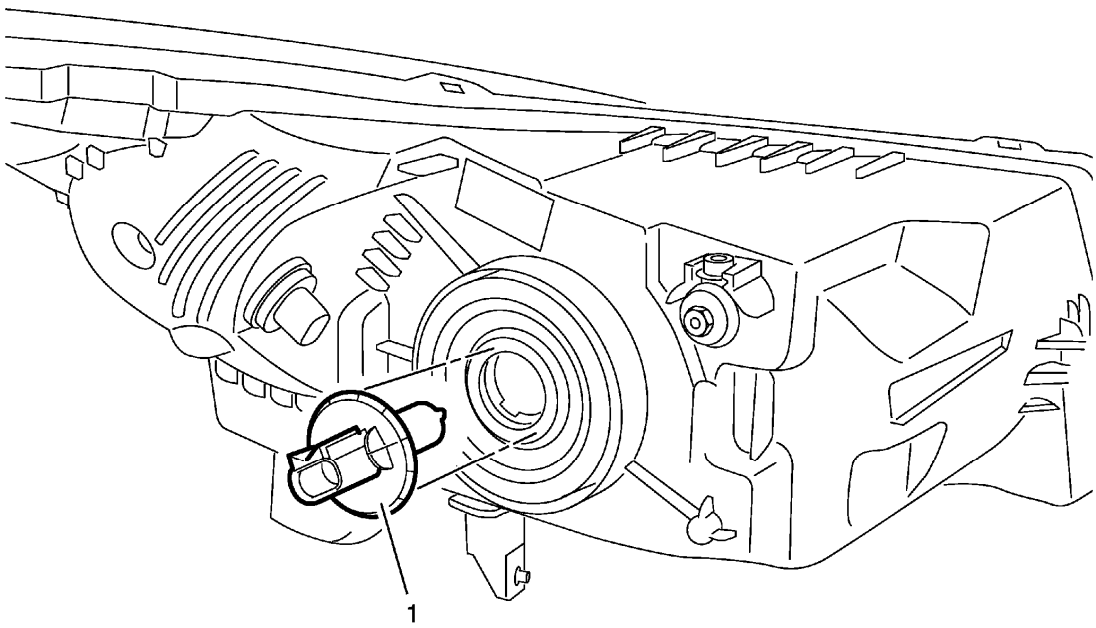

Fig. 23: Headlamp Bulb
Courtesy of GENERAL MOTORS COMPANY

Headlamp Bulb Replacement

Callout	Component Name
1	Headlamp Bulb **WARNING:** **Refer to Halogen Bulb Warning .** **Procedure**

	1. Disconnect electrical connector. 2. Rotate the headlamp bulb counter clockwise to remove from the headlamp.

HEADLAMP AIMING

Visual Aiming Preparation Procedure

NOTE: Some state and local laws specify requirements for headlamp aim. Comply with all of these laws when performing any headlamp aiming operations.

Headlamp aim should be checked:

- When a new headlamp capsule is installed.
- If service or repairs to the front end area have, or may have, disturbed the headlamps or their mounting.

The aiming screen should meet the following criteria:

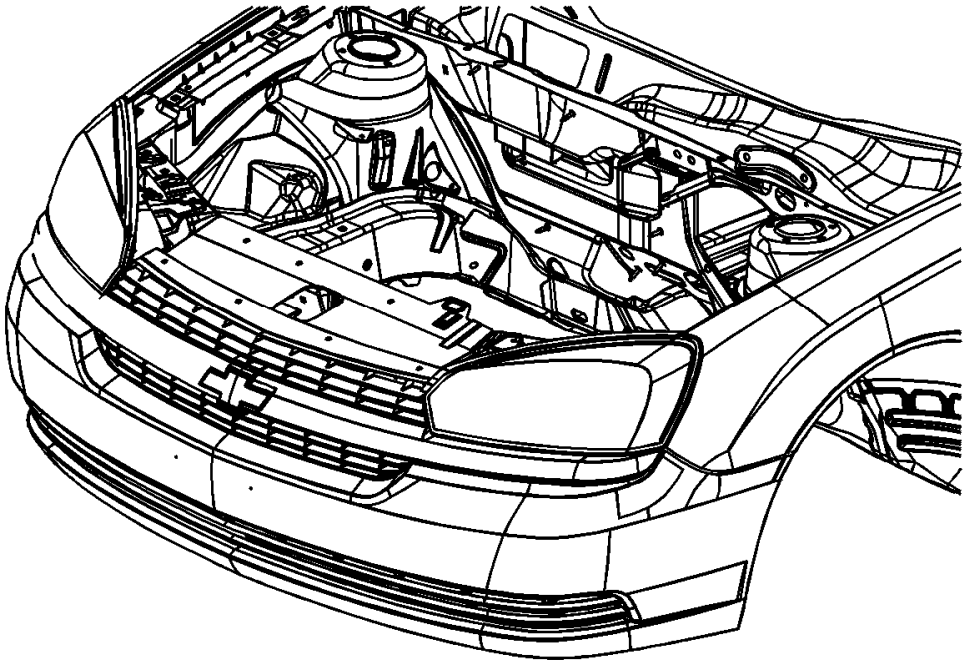

Fig. 24: View Of Visual Aiming Preparation
Courtesy of GENERAL MOTORS COMPANY

- The area will consist of a level surface large enough to allow for a vehicle and an additional 7.62 m (25 ft) measured from face of lamps to the front of the aiming screen.
- The screen will be 1.52 m (5 ft) high x 3.66 m (12 ft) wide with a matte white surface well shaded from extraneous light, and properly adjusted to the floor on which the vehicle stands. Provisions should be made to align the aiming screen parallel with the vehicle.
- The screen shall be provided with a fixed vertical centerline, two laterally adjustable vertical tapes, and one vertically adjustable horizontal tape.
- If a regular commercial aiming screen is not available, the screen may consist of a vertical wall having a clear uninterrupted area approximately 1.83 m (6 ft) high and 3.66 m (12 ft) wide. The surface should be finished with a washable non-gloss white paint.

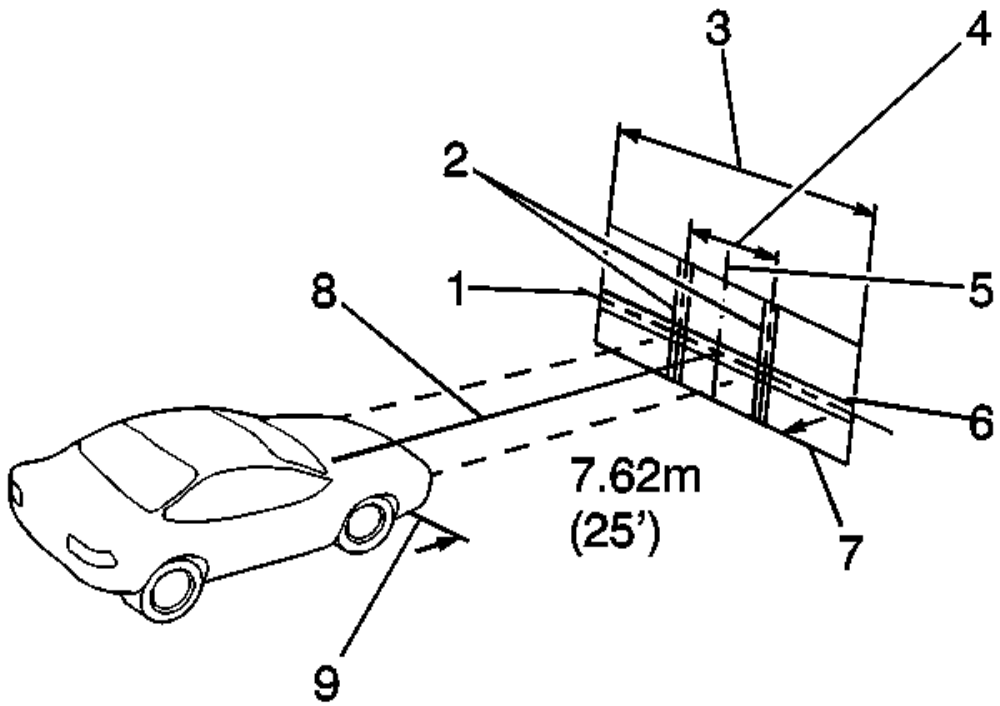

Fig. 25: Headlamp Aiming/Adjusting
Courtesy of GENERAL MOTORS COMPANY

- After the aiming screen has been set up in a permanent location, paint a reference line on the floor directly under the lens of the lamps to indicate the proper location of the headlamps when they are being aimed:
  - Distance between headlamps (1)
  - Center line of screen (2)
  - Adjustable vertical pointer (3)
  - Adjustable horizontal tape (4)
  - Diagram of light screen (5)
  - Vertical center line ahead of right headlamp pointer position (6)
  - 7.62 m (25 ft) (7)
  - Car axis (8)
  - Adjustable vertical pointer
  - Horizontal center line of lamps
  - Vertical center line ahead of left headlamp

Prior to aiming the headlamps, the following steps must be taken:

1. Remove any snow, ice or mud from the vehicle.
2. Check the tire pressure of all wheels. If necessary adjust the tire pressure to the prescriptive pressure.
3. The vehicle must have a full tank of gas.
4. The light switch must been in second position.
5. Stop all other work on the vehicle.

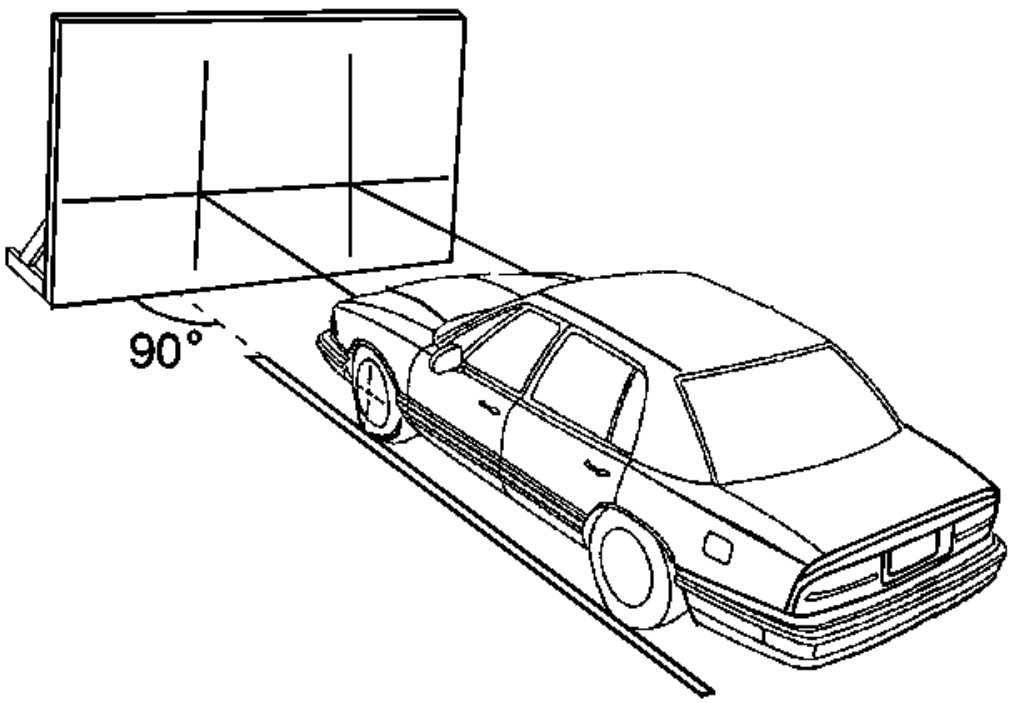

Fig. 26: View Of Headlamp Aiming Screen & Vehicle Alignment
Courtesy of GENERAL MOTORS COMPANY

6. If any service has been performed on the vehicle, make sure that all of the components are back in their original place.
7. The vehicle must be on a level surface.
8. The vehicle left tires must be aligned with the reference line extending from the screen with the headlamps aligned with the reference line.
9. Do not load any cargo in the vehicle.
10. The vehicle must contain approximately 75 kg (165 lb) on the driver seat.
11. Inflate the tires to the proper pressure.
12. Simulate the vehicle loads if the intended use of the vehicle is for hauling heavy loads or towing a trailer.
13. Rock the vehicle in order to stabilize the suspension.
14. Turn on the headlamps to low beam and observe the left and the top edges of the high intensity zone on the screen. The edges of the high intensity zone should fall within the specifications.

Headlamp Aiming Procedure

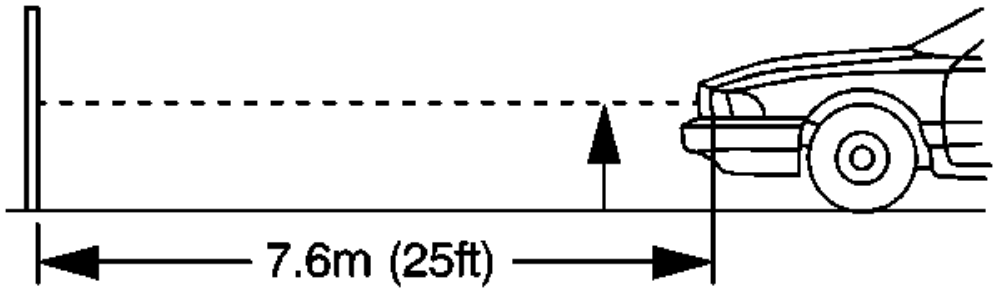

Fig. 27: Measuring Distance Between Headlamps Face & Aiming Screen
Courtesy of GENERAL MOTORS COMPANY

1. Measure from the floor to the center of the headlamp bulb. Some headlamps have an aim dot marked on the headlamp lens.
2. At the screen, measure from the floor and place the horizontal tape at the measured distance.
3. Measure from the reference line on the floor to the left headlamp bulb centerline.
4. At the screen, measure from the reference line and place the vertical tape at the measured distance.
5. Measure from the reference line on the floor to the right headlamp bulb centerline.
6. At the screen, measure from the reference line and place the vertical tape at the measured distance.

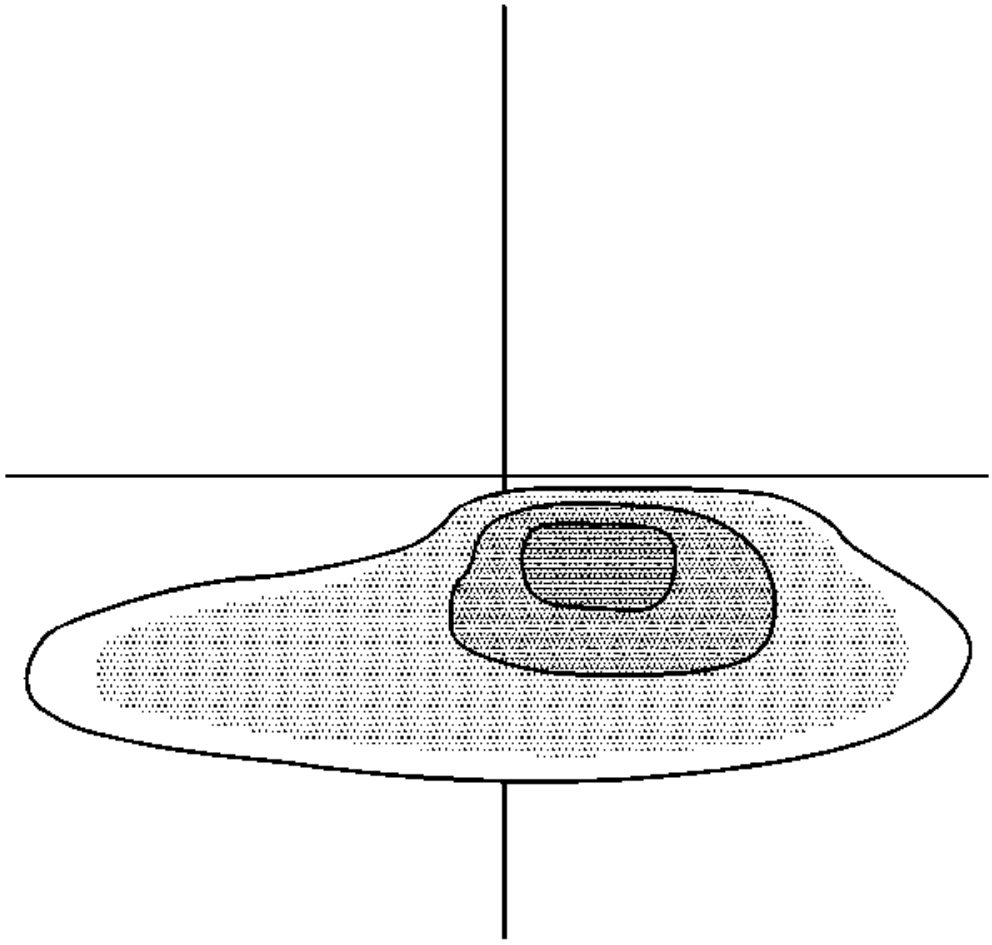

Fig. 28: Identifying Right Side Low Beam Proper Screen Positioning
Courtesy of GENERAL MOTORS COMPANY

NOTE: DO NOT cover the headlamp. This may cause excessive heat build up.

7. Turn ON the low beam headlamps. Block the light from projecting onto the screen from the passenger side headlamp.

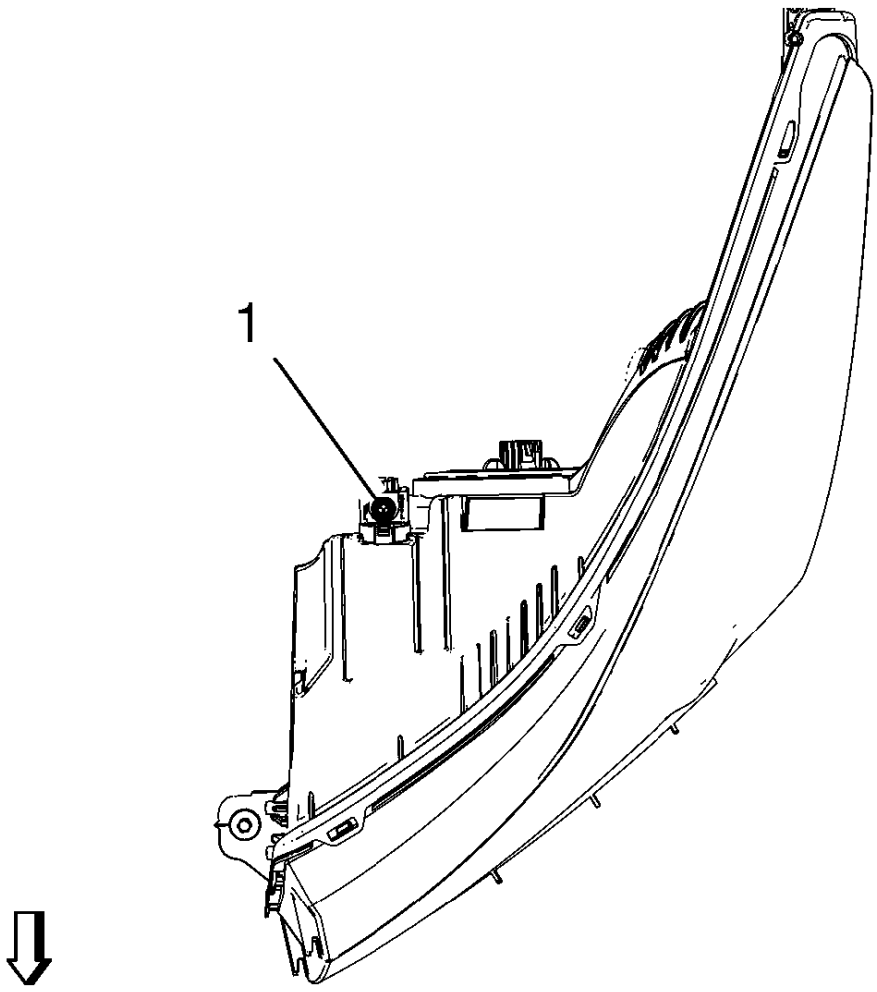

Fig. 29: Vertical Head Lamp Adjusting Screw
Courtesy of GENERAL MOTORS COMPANY

8. Adjust the vertical (1) aim screw of the headlamps to the specifications required by the state and the local authorities.
9. Repeat the aiming procedure for the passenger side headlamp while blocking the light from projecting onto the screen from the driver side headlamp.
10. Turn the headlamps OFF.

FRONT FOG LAMP REPLACEMENT

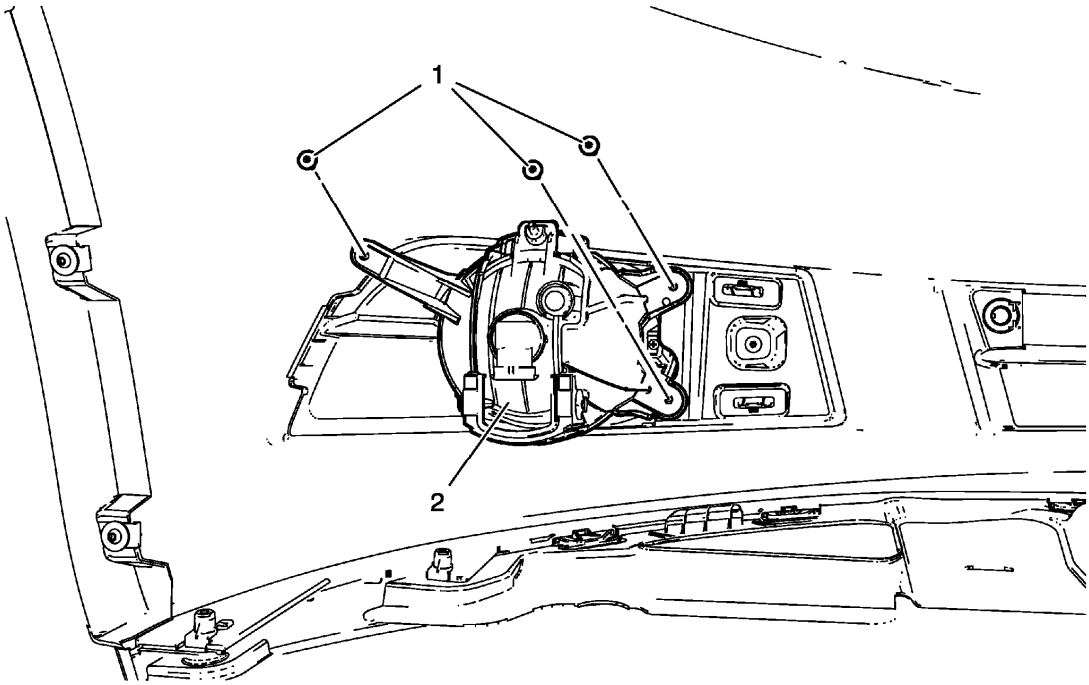

Fig. 30: Front Fog Lamp
Courtesy of GENERAL MOTORS COMPANY

Front Fog Lamp Replacement

Callout	Component Name
Preliminary Procedures Remove the front bumper fascia. Refer to **Front Bumper Fascia Replacement** .	
1	Front Fog Lamp Screws (Qty: 3) **CAUTION:** **Refer to Fastener Caution .** **Tighten** 2.5 N.m (22 lb in)
2	Front Fog Lamp Assembly **Procedure** Aim the fog lamp after installation. Refer to **Fog Lamp Aiming**.

FRONT FOG LAMP BULB REPLACEMENT

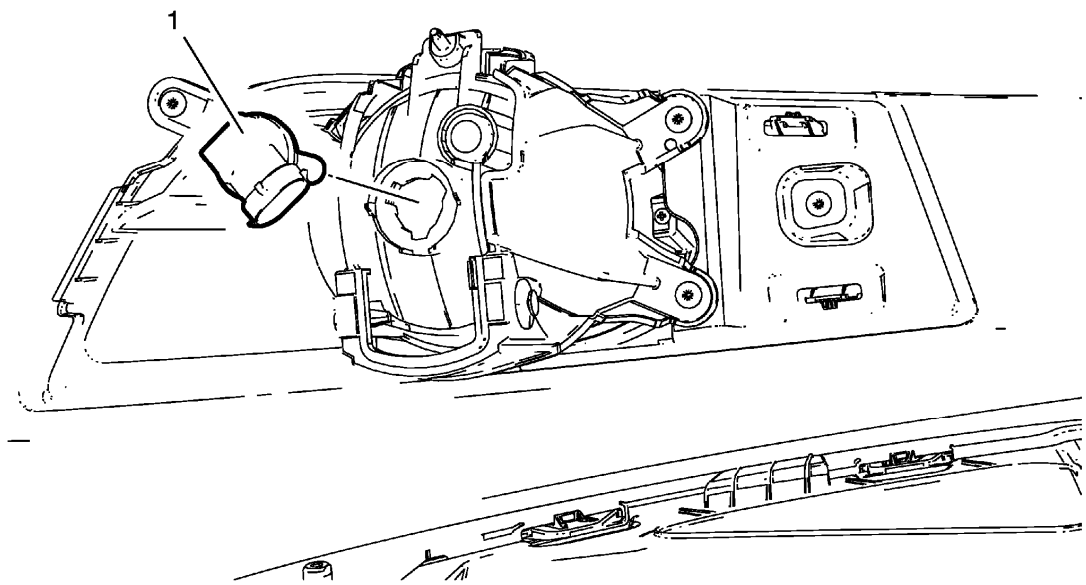

Fig. 31: Front Fog Lamp Bulb
Courtesy of GENERAL MOTORS COMPANY

Front Fog Lamp Bulb Replacement

Callout	Component Name
Preliminary Procedures 1. Raise and support the vehicle. Refer to **Lifting and Jacking the Vehicle** . 2. Remove the Front Bumper Fascia Opening Lower Cover. Refer to **Front Bumper Fascia Opening Lower Cover Replacement** .	
1	Front Fog Lamp Bulb **WARNING:** **Refer to Halogen Bulb Warning .** **Procedure** 1. Rotate the bulb socket counterclockwise to remove from the lamp housing. 2. Disconnect electrical connectors.

REAR FOG LAMP REPLACEMENT

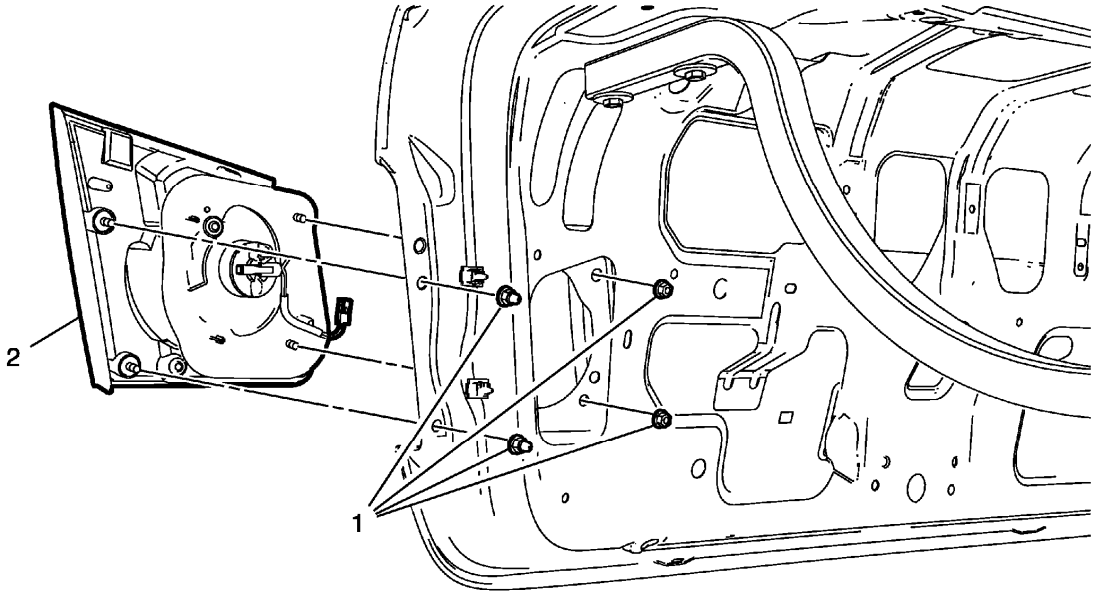

Fig. 32: Rear Fog Lamp
Courtesy of GENERAL MOTORS COMPANY

Rear Fog Lamp Replacement

Callout	Component Name
Preliminary Procedure Remove the rear compartment lid inner panel trim. Refer to **Rear Compartment Lid Inner Panel Trim Replacement** .	
1	Rear Fog Lamp Nut (Qty: 4) **CAUTION:** **Refer to Fastener Caution .** **Tighten** 5 (44 lb in)
2	Rear Fog Lamp **WARNING:** **Refer to Halogen Bulb Warning .** **Procedure** 1. Disconnect electrical connectors.

	2. Reach inside the rear compartment lid inner panel and remove the lower and upper retainer nuts securing the lamp assembly to the outer rear compartment lid panel. 3. Push the inside edge of the lamp assembly outward from the rear outer compartment lid panel. 4. Remove and transfer the bulb socket from the rear fog lamp assembly.

REAR FOG LAMP BULB REPLACEMENT

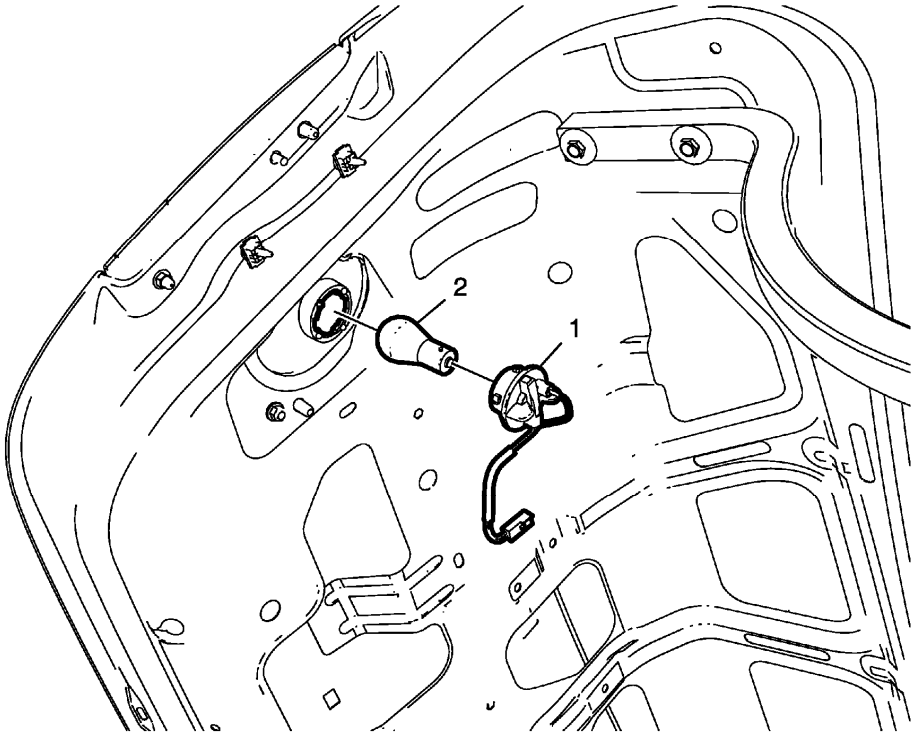

Fig. 33: Rear Fog Lamp Bulb
Courtesy of GENERAL MOTORS COMPANY

Rear Fog Lamp Bulb Replacement

Callout	Component Name
WARNING: **Refer to Glass and Sheet Metal Handling Warning .** **Preliminary Procedures** Remove the rear compartment lid inner panel trim. Refer to **Rear Compartment Lid Inner Panel Trim Replacement** .	
1	Rear Fog Lamp Socket **Procedure** Rotate the lamp socket counterclockwise and remove from the tail lamp housing.

2	Rear Fog Lamp Bulb **WARNING:** **Refer to Halogen Bulb Warning .**

FOG LAMP AIMING

Preparation Procedure

NOTE: Horizontal aim is not adjustable on this vehicle. Vertical aim is done by a dial located under the fog lamp. Prior to aiming the fog lamps, perform the following steps:

1. Completely assemble all of the components on the vehicle
2. Place the vehicle on a level surface.
3. Stop all unnecessary operations or work that could affect the ride height of the vehicle.
4. Close the doors and verify that the luggage compartment is empty.
5. Stabilize the suspension by rocking the vehicle sideways.
6. Ensure that the fuel level is full.
7. Ensure that the tires are inflated to the proper pressure.
8. Ensure that the driver or a similar weight, approximately 75 kg (165 lb), is in the vehicle driver seat.

Aiming Procedure

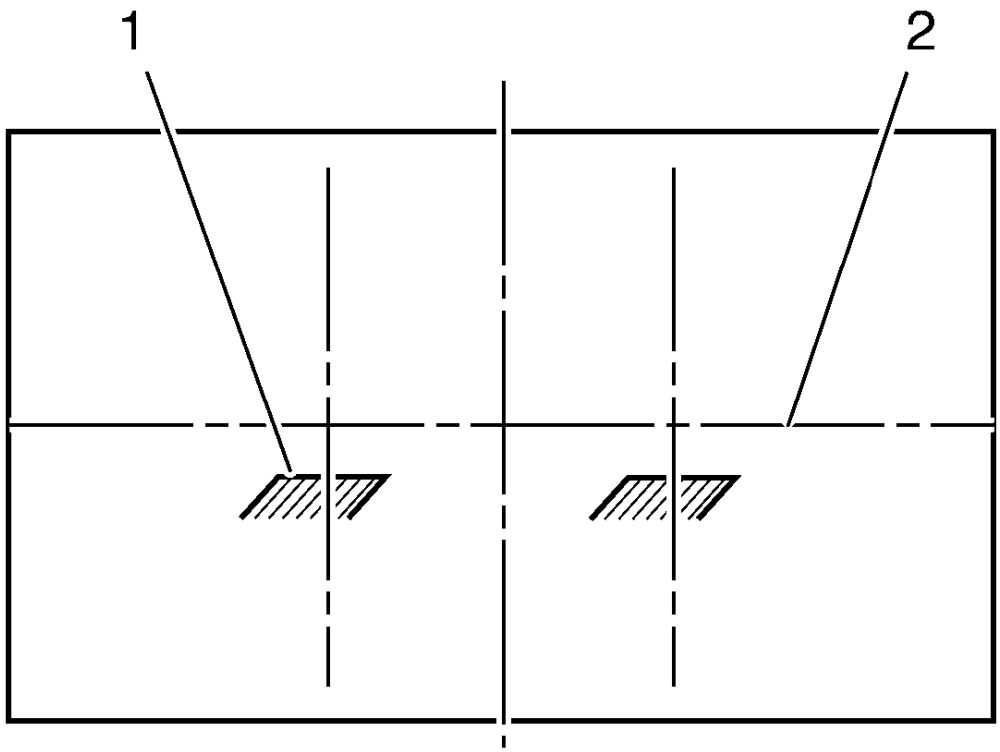

Fig. 34: Fog Lamp Beam Image
Courtesy of GENERAL MOTORS COMPANY

1. Park the vehicle 7.6 m (25 ft) away from the target screen.
2. Measure from the center of the fog lamp to the ground line. Using this measurement, mark the horizontal centerline (2) of the fog lamp on the target screen directly in front of the vehicle.
3. Turn ON the fog lamps. The top of the fog lamp beam image (1) on the target screen should be 102 mm (4 in) below the center of the fog lamp lens height.
4. Adjust the fog lamp as required using the dial under the fog lamp behind the front of the front bumper fascia.
5. Turn OFF the fog lamps.

FRONT SIDE MARKER LAMP REPLACEMENT

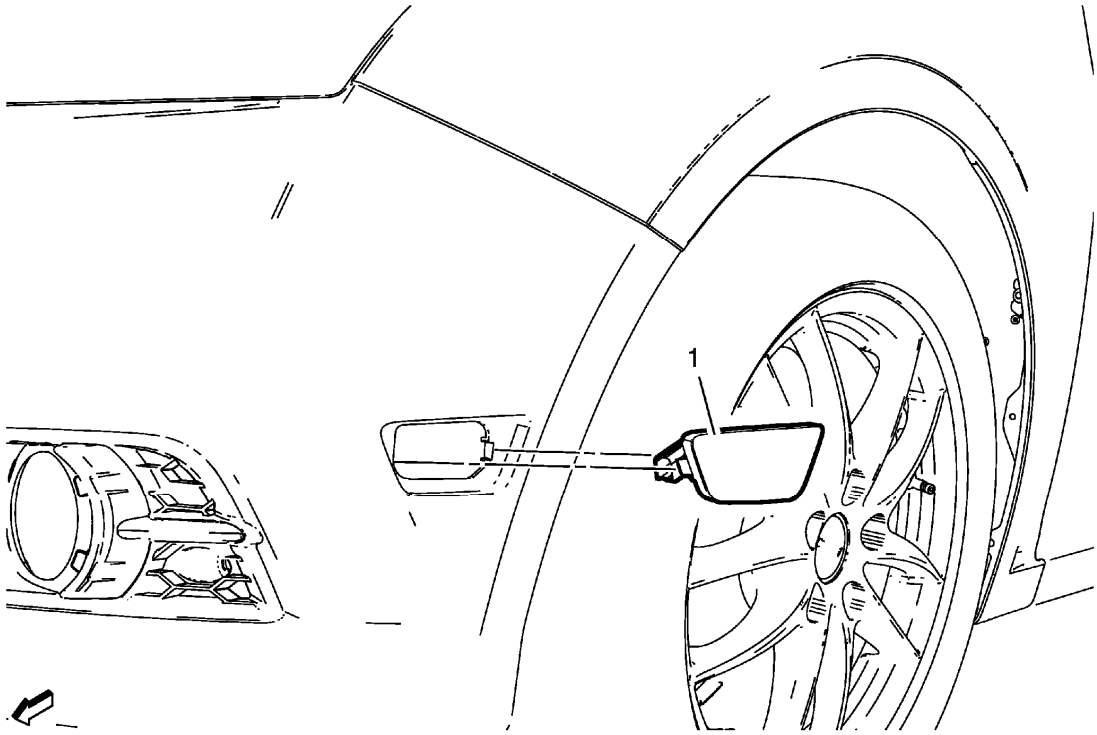

Fig. 35: Front Side Marker Lamp
Courtesy of GENERAL MOTORS COMPANY

Front Side Marker Lamp Replacement

Callout	Component Name
Preliminary Procedure Loosen the front portion of the front wheelhouse liner to gain access to the front side mark lamp clip. Refer to **Front Wheelhouse Liner Replacement** .	
1	Front Side Marker Lamp **Procedure** 1. Depress the retaining clip at the rear edge of the front side marker lamp. 2. Remove the front side marker lamp from the fascia. 3. Disconnect the electrical connector.

FRONT SIDE MARKER LAMP BULB REPLACEMENT

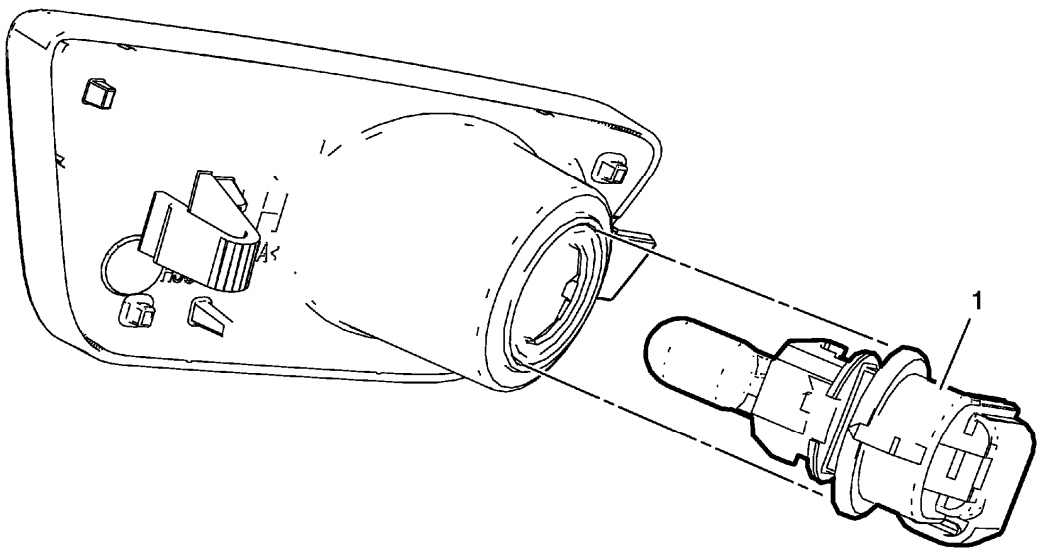

Fig. 36: Front Side Marker Lamp Bulb
Courtesy of GENERAL MOTORS COMPANY

Front Side Marker Lamp Bulb Replacement

callout	Component Name
Preliminary Procedure Remove the front side marker lamp. Refer to **Front Side Marker Lamp Replacement**	
1	Front Side Marker Lamp Bulb Socket **Procedure** Remove the front side marker lamp bulb from the bulb socket.

FRONT SIDE TURN SIGNAL LAMP REPLACEMENT

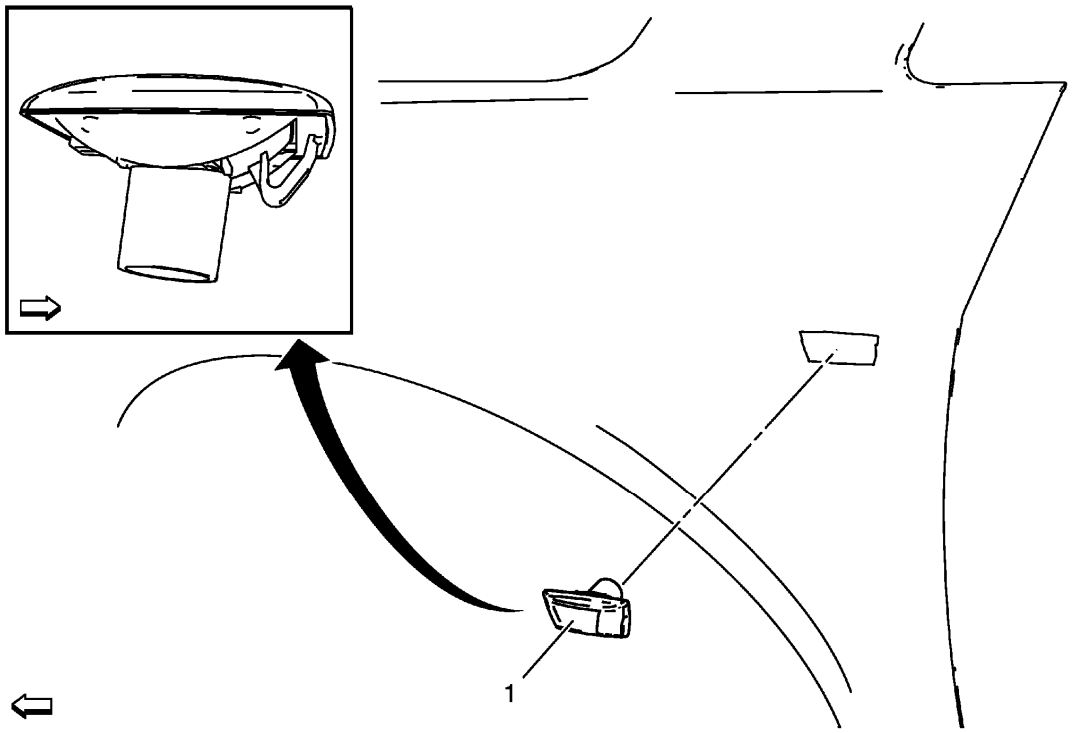

Fig. 37: Front Side Turn Signal Lamp
Courtesy of GENERAL MOTORS COMPANY

Front Side Turn Signal Lamp Replacement

Callout	Component Name
Preliminary Procedures Remove the front wheelhouse liner. Refer to **Front Wheelhouse Liner Replacement** .	
1	Front Turn Signal Lamp Assembly **Procedure** 1. Disconnect electrical connector. 2. Replace the bulb, as needed.

HIGH MOUNT STOP LAMP REPLACEMENT

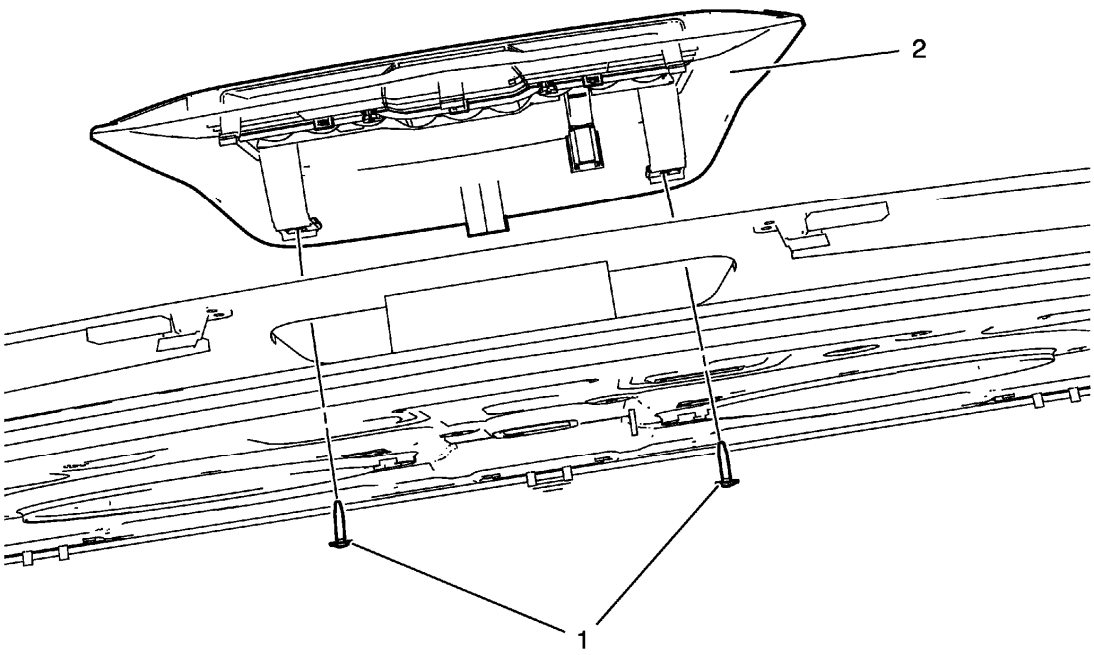

Fig. 38: High Mount Stop Lamp
Courtesy of GENERAL MOTORS COMPANY

High Mount Stop Lamp Replacement

Callout	Component Name
1	High Mount Stop Lamp Screw (Qty: 2) **CAUTION:** **Refer to Fastener Caution .**
2	High Mount Stop Lamp Assembly **Procedure** Disconnect electrical connector.

CARGO CENTER COURTESY LAMP BULB REPLACEMENT

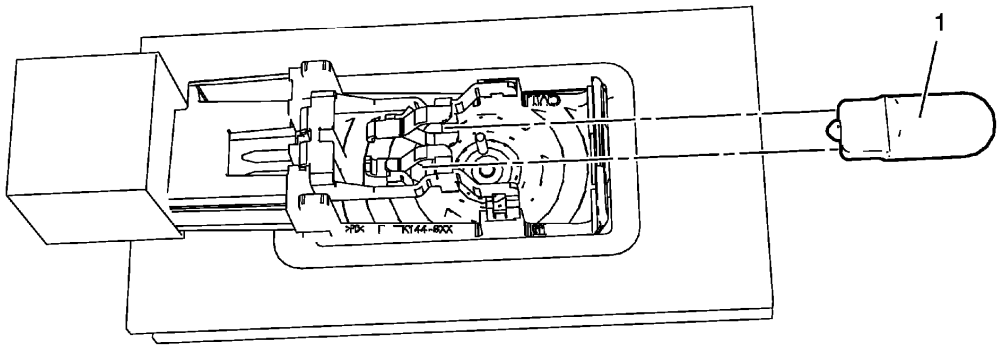

Fig. 39: Cargo Lamp Bulb
Courtesy of GENERAL MOTORS COMPANY

Cargo Center Courtesy Lamp Bulb Replacement

Callout	Component Name
Preliminary Procedures Remove rear compartment courtesy lamp. Refer to **Rear Compartment Courtesy Lamp Replacement**.	
1	Cargo Lamp Bulb

BACKUP LAMP REPLACEMENT

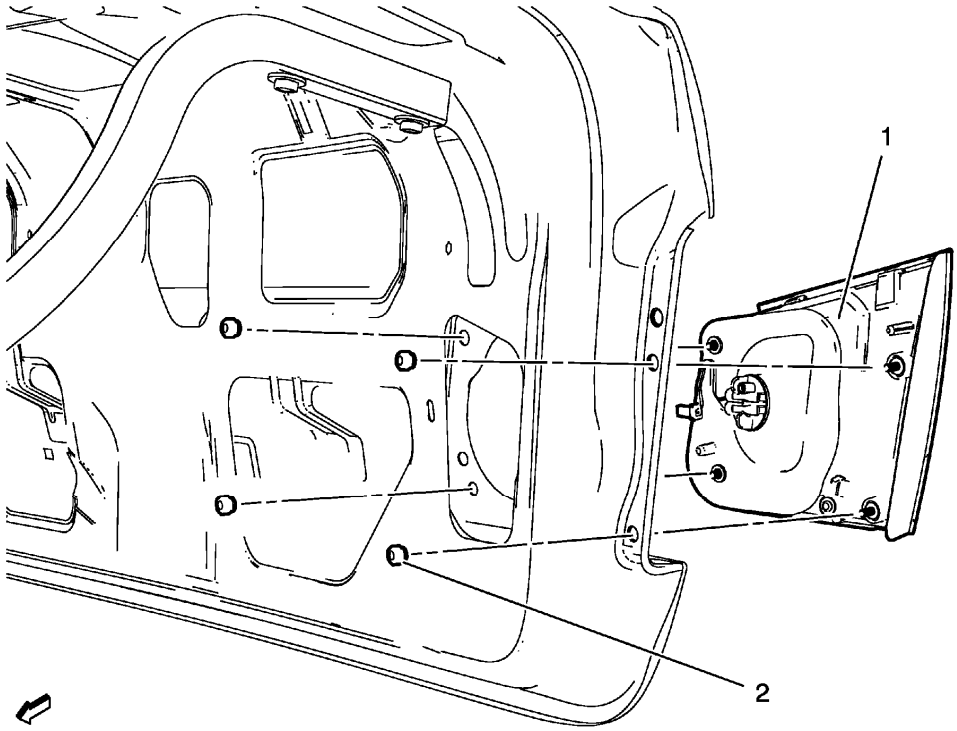

Fig. 40: Backup Lamp
Courtesy of GENERAL MOTORS COMPANY

Backup Lamp Replacement

Callout	Component Name
Preliminary Procedures Remove the rear compartment lid inner panel trim. Refer to **Rear Compartment Lid Inner Panel Trim Replacement** .	
1	Back Up Lamp Nut (Qty: 4) **CAUTION:** **Refer to Fastener Caution .** **Tighten** 5 N.m (44 lb ft)
	Back Up Lamp Assembly **WARNING:** **Refer to Glass and Sheet Metal Handling Warning .** **WARNING:** **Refer to Halogen Bulb Warning .**

2	**Procedure** 1. Disconnect electrical connectors. 2. Reach inside the rear compartment lid inner panel and remove the lower and upper retainer nuts securing the lamp assembly to the outer rear compartment lid panel. 3. Push the inside edge of the lamp assembly outward from the rear outer compartment lid panel. 4. Remove and transfer the bulb socket from the back up lamp assembly.

BACKUP LAMP BULB REPLACEMENT

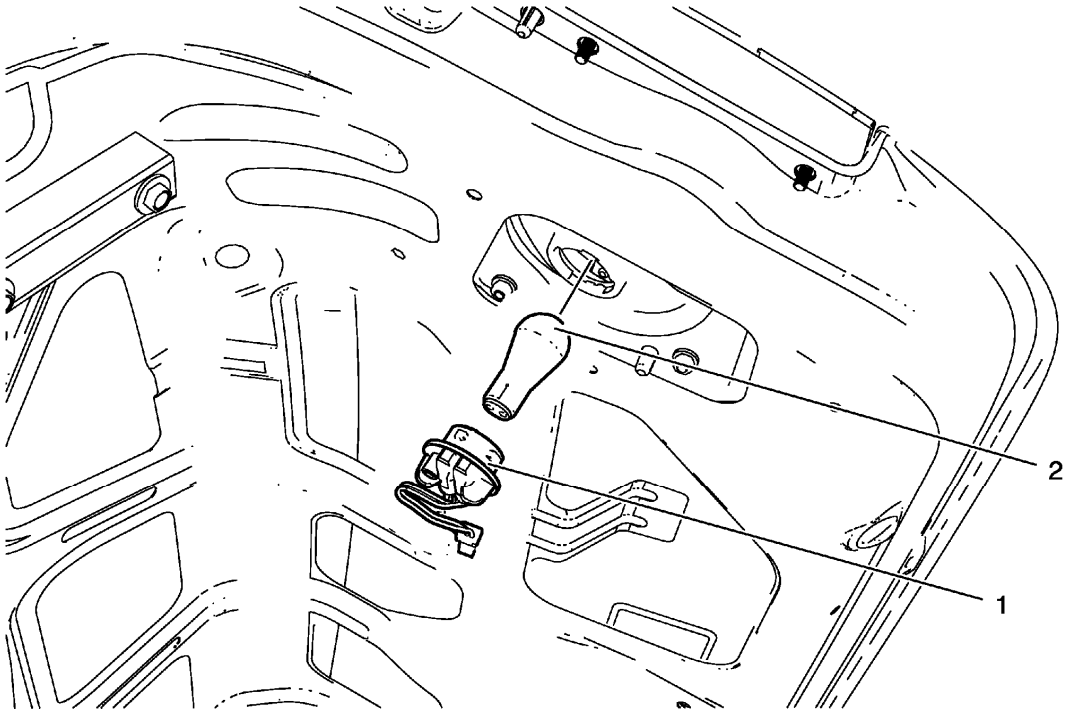

Fig. 41: Backup Lamp Bulb
Courtesy of GENERAL MOTORS COMPANY

Backup Lamp Bulb Replacement

Callout	Component Name
WARNING: **Refer to Glass and Sheet Metal Handling Warning .** **Preliminary Procedures** Remove the rear compartment lid inner panel trim. Refer to **Rear Compartment Lid Inner Panel Trim Replacement**	
	Back Up Lamp Socket

1	**Procedure** Rotate the lamp socket counterclockwise and remove from the tail lamp housing.
2	Back Up Lamp Bulb **WARNING:** **Refer to Halogen Bulb Warning .**

REAR LICENSE PLATE LAMP REPLACEMENT

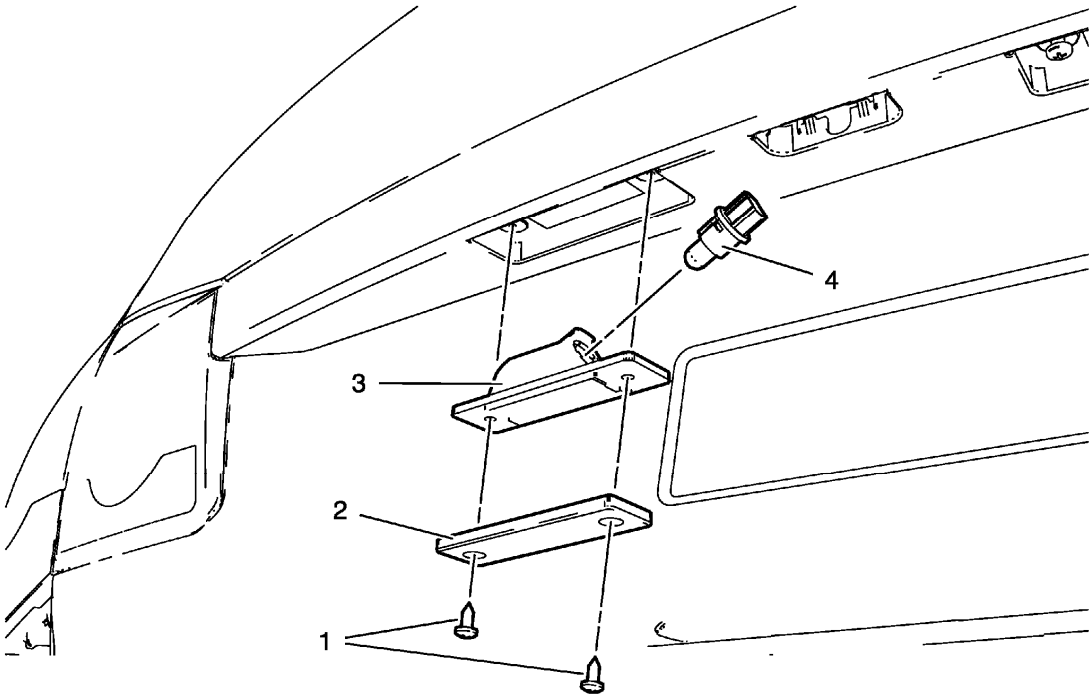

Fig. 42: Rear License Plate Lamp
Courtesy of GENERAL MOTORS COMPANY

Rear License Plate Lamp Replacement

Callout	Component Name
1	Rear License Plate Lamp Screw (Qty: 2) **CAUTION:** **Refer to Fastener Caution .** **Tighten** 3 N.m (27 lb in)
2	Rear License Plate Lamp Lens

3	Rear License Plate Lamp **Procedure** Rotate the lamp socket counterclockwise and remove.
4	Rear License Plate Lamp Bulb **Procedure** Change the bulb, as needed.

REAR LICENSE PLATE LAMP BULB REPLACEMENT

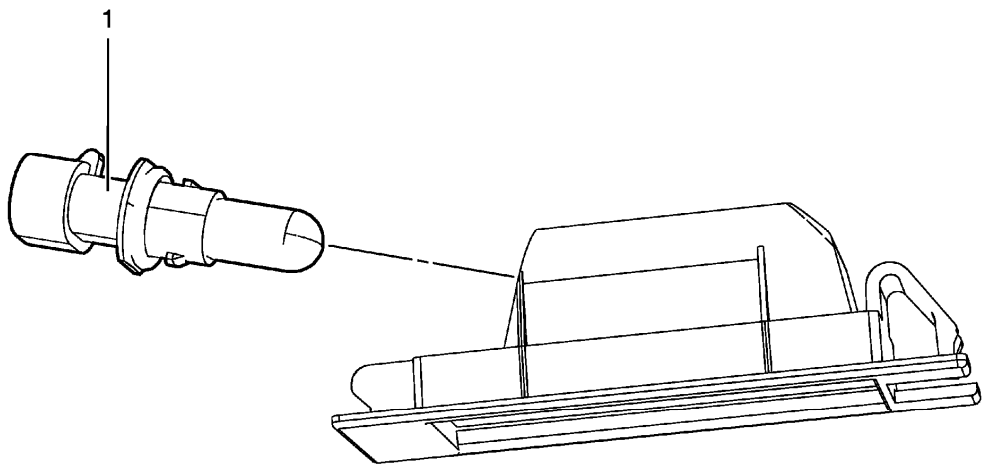

Fig. 43: Rear License Plate Lamp Bulb
Courtesy of GENERAL MOTORS COMPANY

Rear License Plate Lamp Bulb Replacement

Callout	Component Name
Preliminary Procedures Remove rear license plate lamp. Refer to **Rear License Plate Lamp Replacement**.	
1	Rear License Plate Lamp Bulb

REAR LICENSE PLATE LAMP WIRING HARNESS REPLACEMENT

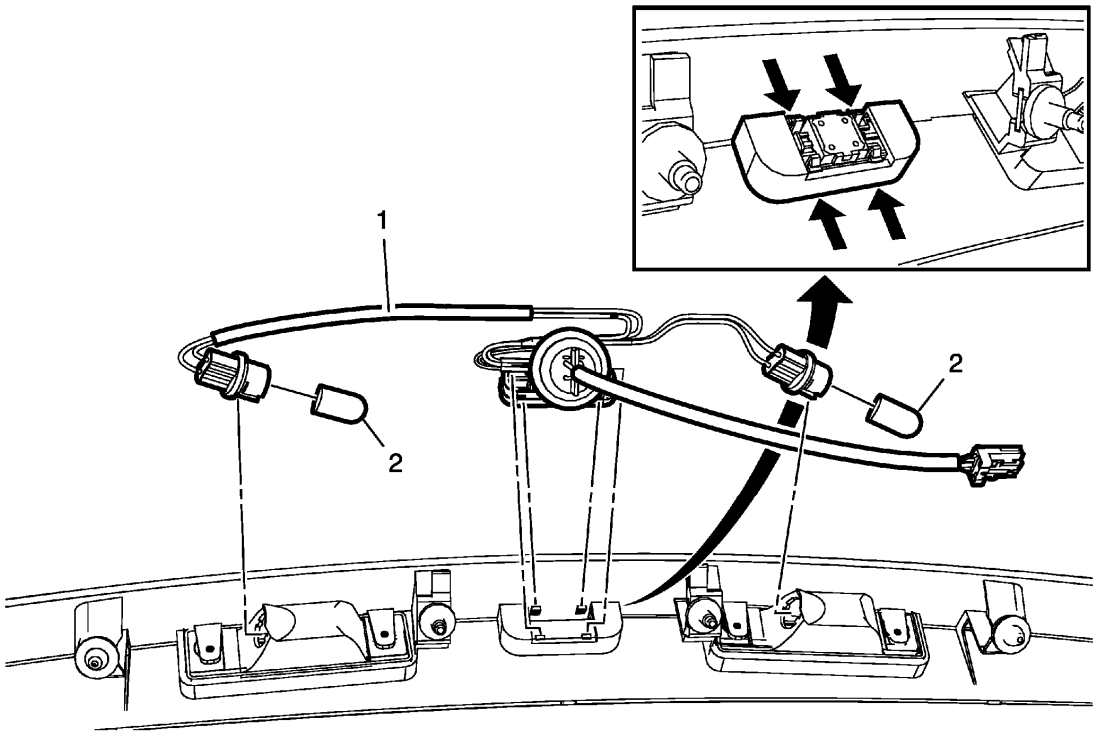

Fig. 44: Rear License Plate Lamp Wiring Harness
Courtesy of GENERAL MOTORS COMPANY

Rear License Plate Lamp Wiring Harness Replacement

Callout	Component Name
Preliminary Procedures Remove the rear compartment lid applique. Refer to **Rear Compartment Lid Applique Replacement** .	
1	Rear License Plate Lamp Wiring Harness **Procedure** Squeeze retainers of release switch in order to remove switch from applique.
2	Rear License Plate Lamp Bulb **Procedure** 1. Disconnect bulbs from wiring harness if needed. 2. Transfer bulbs to new wiring harness if needed.

TAIL LAMP REPLACEMENT

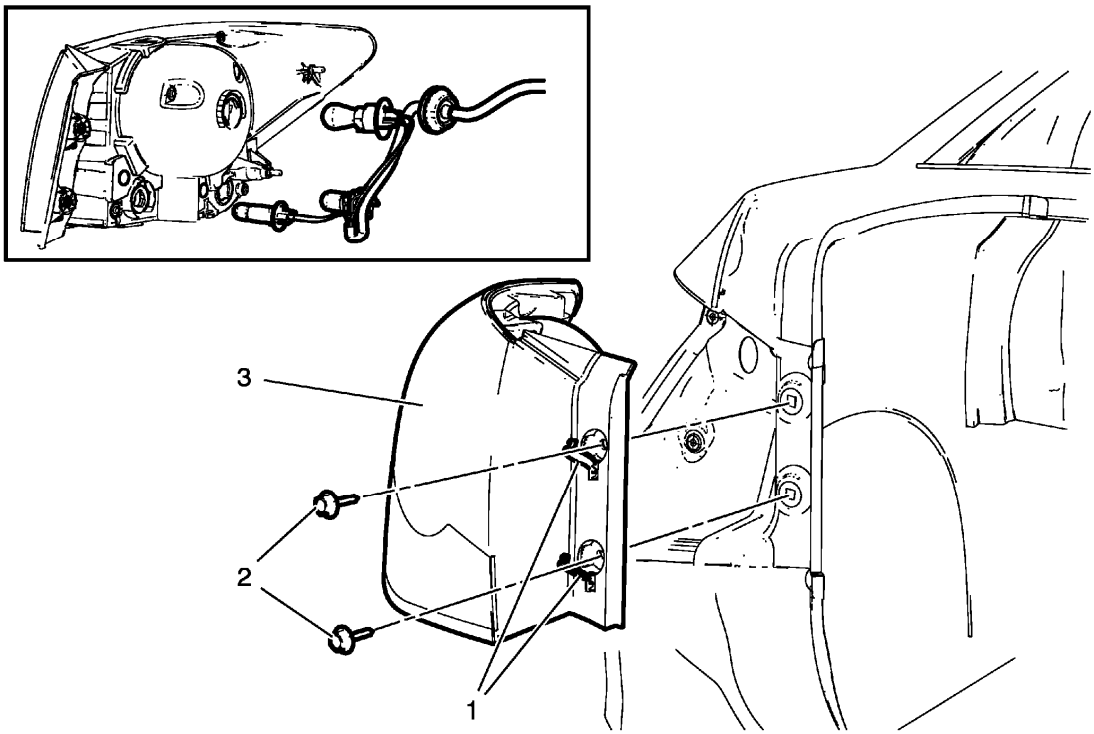

Fig. 45: Tail Lamp
Courtesy of GENERAL MOTORS COMPANY

Tail Lamp Replacement

Callout	Component Name
Preliminary Procedures Open the rear compartment lid.	
1	Tail Lamp Bolt Opening Cover (Qty: 2) **Procedure** Open covers with suitable screw driver.
2	Tail Lamp Bolt (Qty: 2) **CAUTION:** **Refer to Fastener Caution .** **Tighten** 2.5 N.m (22 lb in)
3	Tail Lamp Assembly **WARNING:** **Refer to Halogen Bulb Warning .** **Procedure**

	1. Pull the tail lamp assembly straight rearward to disengage the tail lamp studs from the tail lamp pocket. 2. Rotate the 3 tail lamp bulb sockets with bulbs counterclockwise and remove from the tail lamp housing in order to disengage the wiring harness from the tail lamp housing.

TAIL LAMP BULB REPLACEMENT

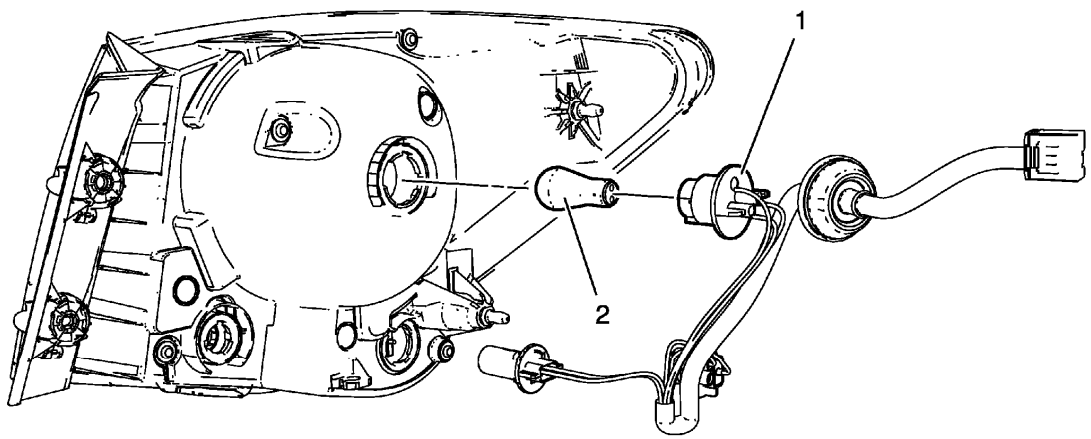

Fig. 46: Tail Lamp Bulb
Courtesy of GENERAL MOTORS COMPANY

Tail Lamp Bulb Replacement

Callout	Component Name
Preliminary Procedures Remove the tail lamp assembly. Refer to **Tail Lamp Replacement**.	
1	Tail Lamp Bulb Harness Socket **Procedure** Rotate the bulb socket from the tail lamp housing.
2	Tail Lamp Bulb **Procedure** Pull the bulb straight from the lamp harness socket.

TAIL LAMP CONTROL MODULE WITH BULB REPLACEMENT

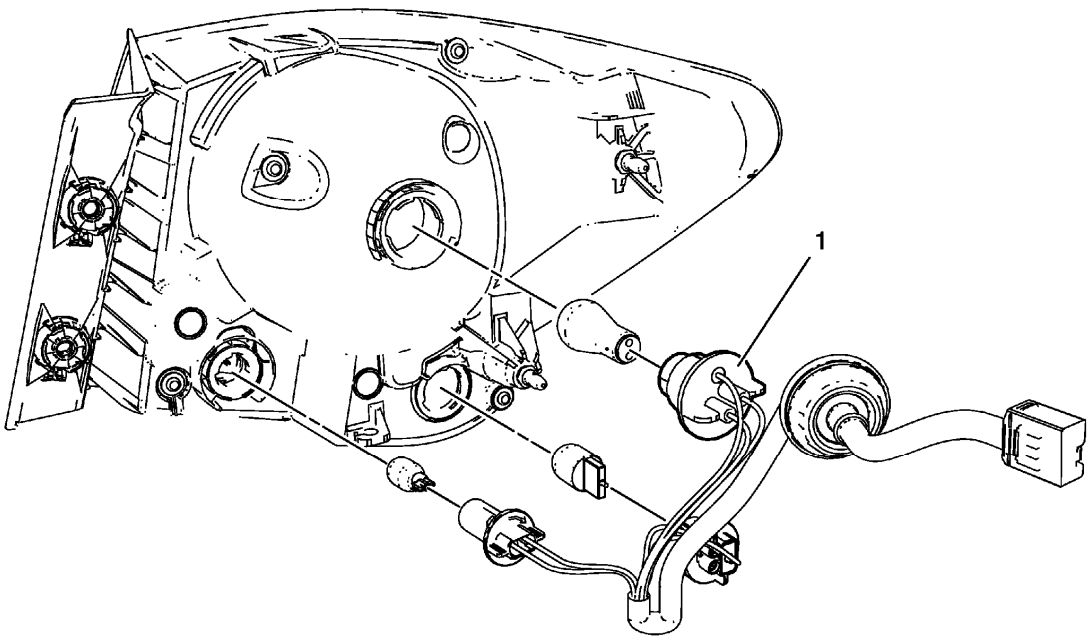

Fig. 47: Tail Lamp Control Module
Courtesy of GENERAL MOTORS COMPANY

Tail Lamp Control Module with Bulb Replacement

Callout	Component Name
Preliminary Procedures Remove the tail lamp assembly. Refer to **Tail Lamp Replacement**.	
1	Tail Lamp Control Module **Procedure** 1. Rotate the tail lamp control module counterclockwise and remove from the tail lamp housing. 2. Change bulb, as needed.

REAR COMPARTMENT COURTESY LAMP REPLACEMENT

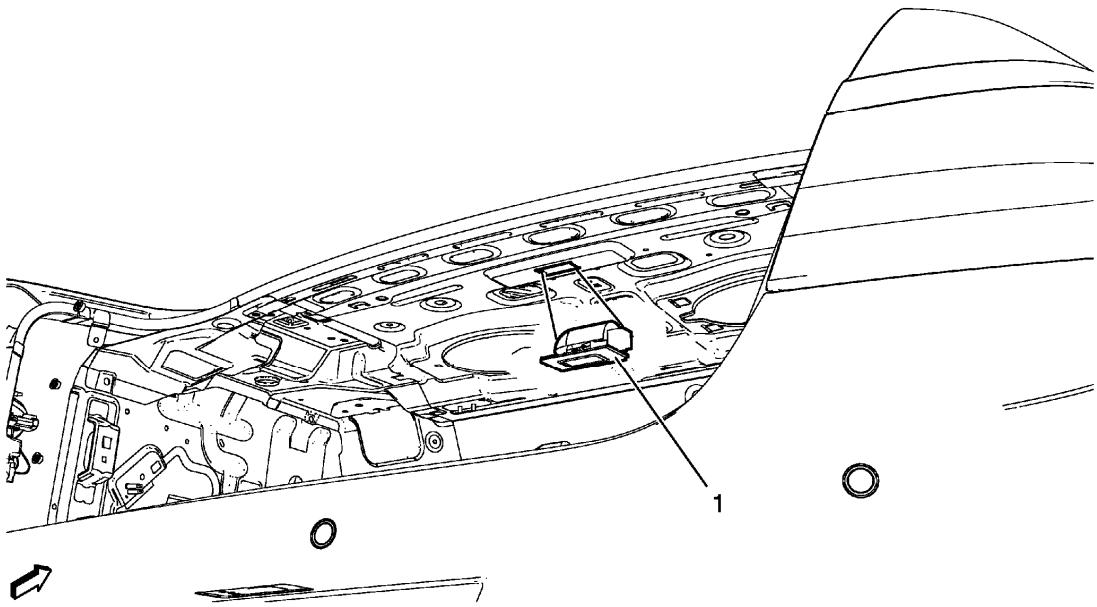

Fig. 48: Rear Compartment Courtesy Lamp
Courtesy of GENERAL MOTORS COMPANY

Rear Compartment Courtesy Lamp Replacement

Callout	Component Name
1	Rear Compartment Courtesy Lamp **Procedure** 1. Disconnect electrical connector. 2. Change the bulb, as needed.

DESCRIPTION AND OPERATION

EXTERIOR LIGHTING SYSTEMS DESCRIPTION AND OPERATION

The exterior lighting system consist of the following lamps:

- Backup lamps
- Daytime running lamps (DRL)
- Front fog lamps
- Hazard warning lamps
- Headlamps
- Park, tail, license, and marker lamps

- Stop lamps
- Turn signal lamps

Low Beam Headlamps

The body control module (BCM) monitors three signal circuits from the headlamp switch. When the headlamp switch is in the AUTO position, all three signal circuits are open. When placed in the AUTO position, the BCM monitors inputs from the ambient light sensor to determine if headlamps are required or if daytime running lamps will be activated based on outside lighting conditions. When the headlamp switch is placed in the OFF position, the headlamp switch headlamps OFF signal circuit is grounded, indicating to the BCM that the exterior lamps should be turned OFF. With the headlamp switch in the PARK position, the headlamp switch park lamps ON signal circuit is grounded, indicating that the park lamps have been requested. When the headlamp switch is placed in the HEADLAMP position, both the headlamp switch park lamps ON signal circuit and the headlamp switch headlamps ON signal circuit are grounded. The BCM responds to the inputs by illuminating the park lamps and headlamps. When the low beam headlamps are requested, the BCM applies B+ to both low beam headlamp control circuits illuminating the low beam headlamps.

The BCM will also command the low beam headlamps ON during daylight conditions when the following conditions are met:

- Headlamp switch in the AUTO position
- Windshield wipers ON
- Vehicle in any gear but PARK - automatic transmission
- Vehicle in motion - manual transmission

When the BCM commands the low beam headlamps ON, the operator will notice the interior backlighting for the instrument cluster and the various other switches dim to the level of brightness selected by the instrument panel dimmer switch.

High Beam Headlamps

When the low beam headlamps are ON and the turn signal/multifunction switch is placed in the high beam position, ground is applied to the BCM through the high beam signal circuit. The BCM responds to the high beam request by applying ground to the high beam relay control circuit which energizes the high beam relay. With the high beam relay energized, the switch contacts close allowing battery voltage to flow through the left and right high beam fuses to the high beam control circuits illuminating the left and right high beam headlamps. Each headlamp is permanently grounded at ground G101 for the left headlamp and ground G104 for the right headlamp.

Daytime Running Lamps (DRL)

The daytime running lamps (DRL) will illuminate the right and left low beam headlamps continuously. The DRLs will operate when the following conditions are met:

- The ignition is in the RUN or CRANK position
- The shift lever is out of the PARK position for vehicles equipped with automatic transmissions or the

parking brake is released for vehicles with manual transmissions
- The low and high beam headlamps are OFF

With Manual HVAC

The ambient light sensor is used to monitor outside lighting conditions. The ambient light sensor provides a voltage signal that will vary between 0.2 and 4.9 volts depending on outside lighting conditions. The body control module (BCM) provides a 5-volt reference signal to the ambient light sensor which is permanently grounded at G203. The BCM monitors the ambient light sensor signal circuit to determine if outside lighting conditions are correct for either daytime running lights (DRL) or automatic lamp control (ALC) when the headlamp switch is in the AUTO position. In daylight conditions the BCM will command the low beam headlamps ON. The low beam headlamps are the designated DRL's. During low light conditions the BCM will command the low beam headlamps ON. Any function or condition that turns on the headlamps will cancel DRL operation.

With Automatic HVAC

The ambient light sensor is used to monitor outside lighting conditions. The ambient light sensor provides a voltage signal that will vary between 0.2 and 4.9 volts depending on outside lighting conditions. The body control module (BCM) provides a 5-volt reference signal to the ambient light sensor and the HVAC control module provides a low reference ground. The BCM monitors the ambient light sensor signal circuit to determine if outside lighting conditions are correct for either daytime running lights (DRL) or automatic lamp control (ALC) when the headlamp switch is in the AUTO position. In daylight conditions the BCM will command the low beam headlamps ON. The low beam headlamps are the designated DRL's. During low light conditions the BCM will command the low beam headlamps ON. Any function or condition that turns on the headlamps will cancel DRL operation.

Flash to Pass (FTP)

When the turn signal/multifunction switch is momentarily placed in the flash to pass (FTP) position, ground is applied from G202 to the turn signal/multifunction switch. The turn signal/multifunction switch applies ground to the body control module (BCM) through the FTP switch signal circuit. The BCM then applies ground to the high beam relay control circuit. This energizes the high beam relay, closing the switch side contacts of the high beam relay, applying battery voltage to the left and right high beam fuses. Battery voltage is applied from the high beam fuses through the high beam control circuit to the high beam headlamp assemblies. This causes the high beam headlamps to illuminate at full brightness momentarily.

Front Fog Lamps

The front fog lamp switch is an input to the body control module (BCM) and is contained in the headlamp switch assembly. The BCM supplies voltage to the front fog lamp switch via the front fog lamp and I/P dimmer switch B+ circuit. When the front fog lamp switch is pressed, voltage from the B+ circuit is pulled down through the front fog lamp switch resistor. The front fog lamp resistor is part of the resistor ladder that also provides the dimming signals for the I/P dimmer switches. The BCM receives the voltage signal through the front fog lamp and I/P dimmer switch signal circuit.

The front fog lamp relay is supplied with battery voltage at all times. The front fog lamp switch signal circuit is grounded momentarily by pressing the front fog lamp switch. The body control module (BCM) energizes the

front fog lamp relay by applying ground to the front fog lamp relay control circuit. When the front fog lamp relay is energized, the relay switch contacts close and battery voltage is applied through the front fog lamp fuse to the front fog lamp control circuit which illuminates the front fog lamps.

Hazard Lamps

The hazard flashers may be activated in any power mode. The hazard switch signal circuit is momentarily grounded when the hazard switch is pressed. The body control module (BCM) responds to the hazard switch signal input by supplying battery voltage to all four turn signal lamps in an ON and OFF duty cycle. When the hazard switch is activated, the BCM sends a serial data message to the instrument panel cluster (IPC) requesting both turn signal indicators to be cycled ON and OFF.

The I/P dimmer switch controls are located on the headlamp switch assembly and are used to increase and decrease the brightness of the interior backlighting components. When the I/P dimmer switch is placed in a desired brightness position, the body control module (BCM) receives a signal from the I/P dimmer switch and responds by applying a pulse width modulated (PWM) voltage to the hazard switch light emitting diode (LED) backlighting control circuit illuminating the LED to the desired level of brightness.

Park, Tail, and License Lamps

When the headlamp switch is placed in the HEAD or PARK position, ground is applied to the park lamp switch ON signal circuit to the body control module (BCM). The BCM responds by applying voltage to the park lamps, tail lamps, and license lamps control circuits illuminating the park, tail, and license lamps.

Stop Lamps

NOTE: Brake system does not use a brake switch, stoplight switch or brakelight switch. System uses a Brake Pedal Position Sensor to control these functions.

The brake pedal position (BPP) sensor is used to sense the action of the driver application of the brake pedal. The BPP sensor provides an analog voltage signal that will increase as the brake pedal is applied. The body control module (BCM) provides a low reference signal and a 5-volt reference voltage to the BPP sensor. When the variable signal reaches a voltage threshold indicating the brakes have been applied, the BCM will apply battery voltage to the left and right stop lamp control circuits as well as the center high mounted stop lamp (CHMSL) control circuit illuminating the left and right stop lamps and the CHMSL.

Turn Signal Lamps

Ground is applied at all times to the turn signal/multifunction switch. The turn signal lamps may only be activated with the ignition switch in the ON or START positions. When the turn signal/multifunction switch is placed in either the TURN RIGHT or TURN LEFT position, ground is applied to the body control module (BCM) through either the right turn or left turn signal switch signal circuit. The BCM responds to the turn signal switch input by applying a pulsating voltage to the front and rear turn signal lamps through there respective control circuits. When a turn signal request is received by the BCM, a serial data message is sent to the instrument panel cluster (IPC) requesting the respective turn signal indicator be pulsed ON and OFF.

Backup Lamps

Automatic Transmission

With the engine ON and the transmission in the REVERSE position, the transmission control module (TCM) sends a serial data message to the body control module (BCM). The message indicates that the gear selector is in the REVERSE position. The BCM applies battery voltage to the backup lamps control circuit illuminating the backup lamps. Once the driver moves the gear selector out of the REVERSE position, a message is sent by the TCM via serial data requesting the BCM to remove battery voltage from the backup lamps control circuit. The engine must be ON for the backup lamps to operate.

Manual Transmission

The engine control module (ECM) provides a signal circuit to the backup lamp switch which is permanently grounded at G114. With the engine ON and the transmission in the REVERSE position, the backup lamp switch signal circuit is pulled low and the ECM responds by sending a serial data message to the body control module (BCM). The message indicates that the gear selector is in the REVERSE position. The BCM applies battery voltage to the backup lamps control circuit illuminating the backup lamps. Once the driver moves the gear selector out of the REVERSE position, a message is sent by the ECM via serial data requesting the BCM to remove battery voltage from the backup lamps control circuit. The engine must be ON for the backup lamps to operate.

Battery Run Down Protection/Inadvertent Power

To provide battery run down protection, the exterior lamps will be deactivated automatically under certain conditions. The BCM monitors the state of the headlamp switch. If the park or headlamp switch is ON when the ignition switch is placed in either the CRANK or RUN position and then placed in the OFF position, the BCM initiates a 10 min timer. At the end of the 10 min, the BCM will turn off the control power output to the park lamp controls as well as the headlamp relay coils, deactivating the exterior lamps. This feature will be cancelled if any power mode other than OFF becomes active. The BCM will disable battery run down protection if any of the following conditions exist. The park or headlamp switch is placed in the ON to OFF position, and back to the ON position during battery run down protection. The BCM determined that the park or headlamp switch was not active when the ignition was turned OFF.

INTERIOR LIGHTING SYSTEMS DESCRIPTION AND OPERATION

Interior Lamps

The interior lighting system consist of two groups. This first group includes lamps that may not be dimmed.

- Dome lamps
- I/P compartment lamp
- Reading lamps
- Rear compartment courtesy lamp
- Sunshade mirror lamps

Dome Lamps

The dome lamp switch has 3 positions: DOOR, OFF, and ON. The ON position provides a ground for

continuous operation and the dome lamps will remain illuminated until the switch is placed in either the DOOR or OFF position. When in the DOOR position, dome lamps operation is controlled by the body control module (BCM). When any door is opened, the door ajar switch contacts close and the BCM receives a door-open input. The BCM illuminates the dome lamps when any door is opened or a door lock/unlock request is activated with the key fob. After all doors have been closed, the dome lamps will turn OFF immediately if the ignition switch is turned to the ON position or approximately 20 seconds after the last door closes. When the driver places the dome lamp switch in the OFF position, the dome lamps will be disabled. In the event that the dome lamps were to remain illuminated for more than 10 minutes with the ignition switch in the OFF position and no doors opened, the BCM will deactivate the dome lamp control circuit to prevent total battery discharge. The dome lamps will normally turn OFF using the theater dimming feature when controlled by the BCM.

Instrument Panel (I/P) Compartment Lamp

The inadvertent power supply voltage circuit from the BCM provides battery voltage to the I/P compartment (glove box) lamp. When the I/P compartment is opened, the I/P compartment lamp switch contacts close providing a path to ground and the I/P compartment lamp illuminates. If the operator inadvertently leaves the I/P compartment door open with the I/P compartment lamp ON, the BCM will turn all interior lamps OFF after 10 minutes has passed since any switch activation has been detected by the BCM. The I/P compartment lamp is permanently grounded at ground G203.

Reading Lamps

The inadvertent power supply voltage circuit from the BCM provides battery positive voltage to each reading lamp. When the reading lamp switch is activated, the switch contacts close providing a path to ground and the reading lamp illuminates. If the operator inadvertently leaves a reading lamp ON, the BCM will turn all interior lamps OFF after 10 minutes has passed since any switch activation has been detected by the BCM. The reading lamps are permanently grounded at ground G305.

Rear Compartment Courtesy Lamp

When the rear compartment is opened, the rear compartment lid latch opens providing a rear compartment open input signal to the BCM. The BCM responds by applying battery voltage to the rear compartment courtesy lamp control circuit illuminating the rear compartment courtesy lamp. The rear compartment courtesy lamp is permanently grounded at ground G309.

Sunshade Mirror Lamps

The inadvertent power supply voltage circuit from the BCM provides battery voltage to each set of sunshade mirror lamps. When the sunshade mirror cover is opened, a switch closes providing ground and the sunshade lamps illuminate. If the operator inadvertently leaves a sunshade mirror cover open with the lamps ON, the BCM will turn all interior lamps OFF after 10 minutes has passed since any switch activation has been detected by the BCM. The sunshade mirror lamps are permanently grounded at ground G305.

Keyless Entry Interior Illumination

When the operator uses the keyless entry transmitter in order to unlock the doors, the BCM receives a door-unlock signal. The BCM must receive inputs from various systems that indicate that the ignition switch is OFF, the courtesy lamp switch is OFF, and all doors are closed before the BCM will activate the interior lamps. After

all doors have been closed, the courtesy lamps will turn OFF immediately if the ignition switch is turned to the ON position, the door locks are LOCKED, or approximately 20 seconds after the last door closes. The BCM will turn off the courtesy lamps through the theater dimming feature. The BCM keeps the courtesy lamps on for 40 seconds after an alarm event is completed.

Interior Lamps Dimming

The second group includes lamps which may be dimmed. This group may use a combination of light emitting diodes (LED), incandescent lamps, and pulse width modulation (PWM) illumination.

- Door lock switch - driver
- Headlamp switch
- Hazard switch
- HVAC control head assembly
- Instrument cluster
- Ignition mode switch
- Outside rearview mirror switch
- Radio
- Steering wheel control switch - left
- Steering wheel control switch - right
- Sun roof switch
- Sun roof tilt switch
- Traction control switch
- Transmission shift lever position indicator
- Window switch - driver
- Window switch - passenger
- Window switch - left rear
- Window switch - right rear

With the headlamp switch in the PARK or HEAD position, the park lamp switch signal circuit provides an input to the body control module (BCM). The BCM responds by applying voltage to the park lamps as well as the backlight dimming control circuits illuminating all components with interior backlighting. All interior backlighting turns ON at the dimming level indicated by the instrument panel (I/P) dimmer switch. The instrument panel (I/P) dimmer switch is a momentary type switch and utilizes a resistor ladder to increase and decrease the brightness of the interior backlighting components. The I/P dimmer switch provides a voltage signal to the BCM that will increase as the brightness of the lights are increased and decrease as the brightness of the lights are decreased. The BCM provides a low reference signal and a B+ circuit to the I/P dimmer switch. When the I/P dimmer switch is held in the desired position, the dimmed voltage setting is applied from the I/P dimmer switch through the I/P dimmer switch signal circuit to the BCM. The BCM interprets the signal and applies a pulse width modulated (PWM) voltage through the backlighting control circuits illuminating the interior backlighting to the requested level of brightness.

Battery Rundown Protection/Inadvertent Power

The BCM inadvertent power supply voltage circuit provides battery voltage to all of the interior courtesy lamps. In the event that any of these lamps were to remain illuminated for a period of more than 10 minutes with the ignition switch in the OFF position, the BCM will deactivate the inadvertent power supply voltage circuit to prevent total battery discharge. If the ignition switch is turned to any position other than OFF, or if a lamp switch is activated during this 10 minute period, the timer resets for another 10 minutes.

2013 GENERAL INFORMATION

Maintenance and Lubrication - Cruze

SPECIFICATIONS

APPROXIMATE FLUID CAPACITIES

The following approximate capacities are given in English and metric conversions. All capacities are approximate. When adding, be sure to fill to the approximate level as recommended in this manual. Recheck fluid level after filling.

Approximate Fluid Capacities

Application	Specification	
	Metric	English
Engine Coolant		
• 1.4L (LUV) Engine	6.2 liters	6.6 quarts
• 1.8L (LWE/LUW) Engine	5.6 liters	5.92 quarts
Engine Oil with Filter		
• 1.4L (LUV) Engine	4.0 liters	4.25 quarts
• 1.8L (LWE/LUW) Engine	4.5 liters	4.75 quarts
Transmission Fluid		
• Automatic Transmission 6T30/6T40/6T45/6T50	8.0 liters	8.45 quarts
• Manual Transmission M32	2.2 liters	2.32 quarts

FLUID AND LUBRICANT RECOMMENDATIONS

Fluid and Lubricant Recommendations

Usage	Fluid/Lubricant
Engine Oil	The engine requires engine oil approved to the dexos™1 specification. Oils meeting this specification can be identified with the dexos™ certification mark. Look for and use only an engine oil that displays the dexos™ certification mark of the proper viscosity grade. SAE 5W-30 GM P/N 19293000 (Canadian P/N 19286321) is the best viscosity grade for the vehicle. Do not use other viscosity oils such as SAE 10W-30, 10W-40, or 20W-50.
Engine Coolant	50/50 mixture of clean, drinkable water and use only DEX-COOL Coolant GM P/N 12346290 (Canadian P/N 10953464).
Hydraulic Brake/Clutch System	DOT 3 Hydraulic Brake Fluid GM P/N 88863461 (Canadian P/N 88863462)
Windshield Washer	Optikleen® Washer Solvent

Automatic Transmission	DEXRON®-VI GM P/N 88861003 (Canadian P/N 88861004)
Manual Transmission	Castrol BOT 0402 Transmission Fluid GM P/N 19259104 (Canadian P/N 19259105)
Key Lock Cylinders	Multi-Purpose Lubricant, Superlube GM P/N 12346241 (Canadian P/N 10953474)
Hood Latch Assembly, Secondary Latch, Pivots, Spring Anchor, and Release Pawl	Lubriplate Lubricant Aerosol GM P/N 12346293 (Canadian P/N 992723) or lubricant meeting requirements of NLGI #2, Category LB or GC-LB
Hood and Door Hinges	Multi-Purpose Lubricant, Superlube GM P/N 12346241 (Canadian P/N 10953474)
Weather-strip Conditioning	Weather-strip Lubricant GM P/N 3634770 (Canadian P/N 10953518) or Dielectric Silicone Grease GM P/N 12345579 (Canadian P/N 10953481)

MAINTENANCE ITEMS

The Normal Maintenance Replacement Parts information will only be found in the Owner's Manual. Refer to the Maintenance Schedule subsection of the Owner's Manual.

You may be able to use the Search information function using the words Replacement Parts.

MAINTENANCE

MAINTENANCE SCHEDULE

The Maintenance Schedule information will only be found in the Owner's Manual.

Refer to the Maintenance Schedule subsection of the Owner's Manual, or you may be able to use the Search information function using the words Scheduled Maintenance.

GM OIL LIFE SYSTEM RESETTING

The engine oil life system lets you know when to change the engine oil and filter. Based on driving conditions, the interval at which an engine oil and filter change will be indicated can vary considerably. How to display the remaining oil duration is described in the Owners Manual under Instruments and controls. For the oil life system to work properly, the system must be reset every time the oil is changed. When the system has calculated that oil life has been diminished, it will indicate that an oil change is necessary. The uplevel display will indicate CHANGE ENGINE OIL SOON. The low level display will indicate a certain code which is referenced in the Owners Manual. The engine oil and filter must be changed by a workshop within one week or 500 km (300 miles). It is possible that, if the vehicle is driven under the best conditions, the oil life system may not indicate that an oil change is necessary for over a year. However, the engine oil and filter must be changed by 30 000 km (18, 640 miles) but at least once a year and at this time the system must be reset. Remember to reset the oil life system whenever the oil and filter is changed.

Manual Oil Life System Reset

1. Turn on ignition.
2. Push Menu button on the turn signal switch.
3. Use adjustment wheel and select menu - Vehicle Information System.
4. Use adjustment wheel and select menu - Oil Life System
5. Push SET/CLR button on the turn signal switch and push brake pedal at same time.

Automatic Oil Life System Reset

1. Turn on ignition.
2. Connect scan tool.
3. Select Module Diagnosis.
4. Select Engine Control Module.
5. Select Configuration/Reset function.
6. Select Engine Oil System Reset.
7. Push Enter button to run function.
8. Confirm Executed successfully.
9. Turn ignition off and confirm.
10. Turn ignition on and confirm.

2013 RESTRAINTS

Seat Belts - Cruze

SPECIFICATIONS

FASTENER TIGHTENING SPECIFICATIONS

Fastener Tightening Specifications

Application	Specification	
	Metric	English
Front Seat Belt Buckle	45 N.m	33 lb ft
Front Seat Retractor Side Belt	45 N.m	33 lb ft
Front Seat Shoulder Belt	45 N.m	33 lb ft
Front Seat Shoulder Belt Bracket Bolt	9 N.m	80 lb in
Front Seat Shoulder Belt Guide Adjuster	45 N.m	33 lb ft
Rear Seat Center Shoulder Belt Buckle	45 N.m	33 lb ft
Rear Seat Center Shoulder Belt Nut	45 N.m	33 lb ft
Rear Seat Rear Bracket Nut	45 Y	33 lb ft
Rear Seat Shoulder Belt	45 N.m	33 lb ft
Rear Seat Shoulder Belt Bracket Bolt	45 N.m	33 lb ft
Rear Seat Shoulder Belt Retractor Bolt	45 N.m	33 lb ft

WIRING SCHEMATICS

SEAT BELT WIRING SCHEMATICS

Seat Belts Wiring Schematics

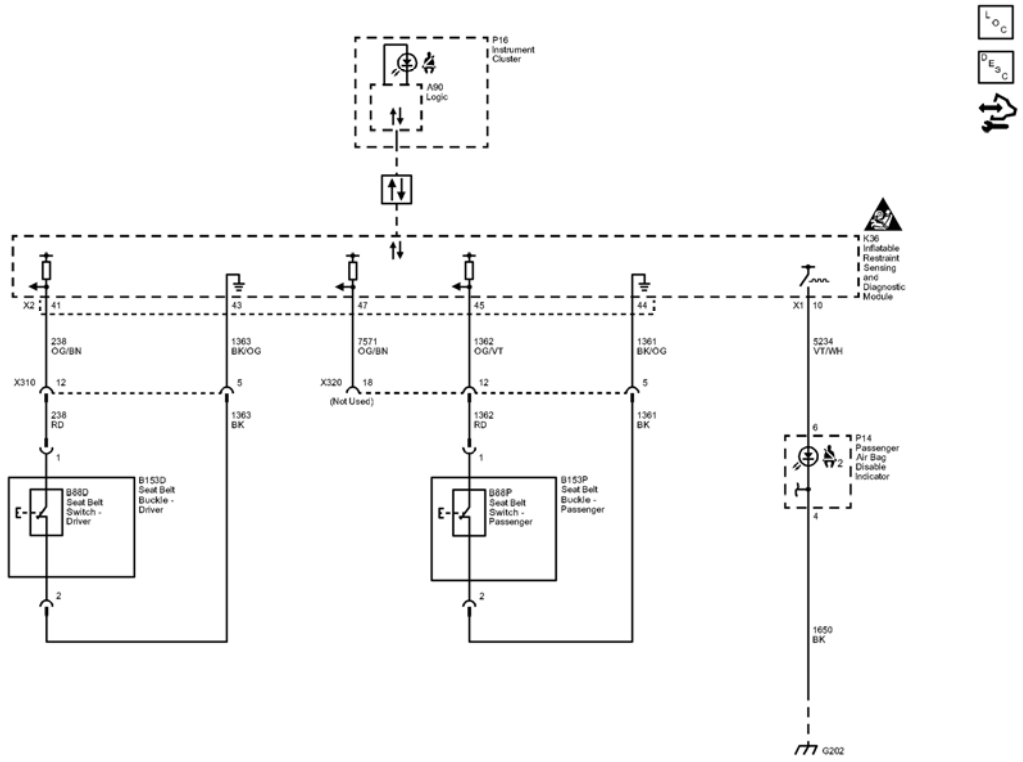

Fig. 1: Seat Belts Wiring Schematics
Courtesy of GENERAL MOTORS COMPANY

Callout	Component Name
238	Driver Seat Belt Switch Signal
238_OG/BN	238 OG/BN
CAV_41	41
CONN_X2	X2
238_RD	238 RD
1363	Driver Seat Belt Switch Low Reference
1363_BK	1363 BK
CAV_43	43
1363_BK/OG	1363 BK/OG
7571	Passenger Seat Belt Reminder Signal
7571_OG/BN	7571 OG/BN
CAV_47	47
1362	Passenger Seat Belt Switch Signal

1362_OG/VT	1362 OG/VT
CAV_45	45
1362_RD	1362 RD
1361	Passenger Seat Belt Switch Low Reference
1361_BK	1361 BK
CAV_44	44
1361_BK/OG	1361 BK/OG
5234	Passenger Seat Belt Indicator
5234_VT/WH	5234 VT/WH
CAV_6	6
CAV_10	10
CONN_X1	X1
1650	Ground
1650_BK	1650 BK
CAV_4	4
SD	Serial Data
Data_Communication_Schematics_REF	Data Communication Schematics
CAV_1	1
CAV_2	2
CAV_1	1
CAV_2	2
CAV_5	5
CAV_12	12
CAV_18	18
X310	X310
CAV_12	12
CAV 5	5
G202	G202
X310	X310
K36	
B153D	
B153P	
B88D	
B88P	
A90	Logic
P16	
P14	

DIAGNOSTIC INFORMATION AND PROCEDURES

DIAGNOSTIC CODE INDEX

DIAGNOSTIC CODE INDEX

DTC	Description
DTC B0072 or B0073	DTC B0072 Driver Seat Belt Switch Circuit DTC B0073 Passenger Seat Belt Switch Circuit
DTC B059A	DTC B059A 01 Passenger Seat Belt Indicator Circuit Short to Battery DTC B059A 02 Passenger Seat Belt Indicator Circuit Short to Ground DTC B059A 04 Passenger Seat Belt Indicator Circuit Open

DTC B0072 OR B0073

Diagnostic Instructions

- Perform the **Diagnostic System Check - Vehicle** prior to using this diagnostic procedure.
- Review **Strategy Based Diagnosis** for an overview of the diagnostic approach.
- **Diagnostic Procedure Instructions** provides an overview of each diagnostic category

DTC Descriptors

DTC B0072

Driver Seat Belt Switch Circuit

DTC B0073

Passenger Seat Belt Switch Circuit

For symptom byte information refer to **Symptom Byte List** .

Diagnostic Fault Information

Circuit	Short to Ground	High Resistance	Open	Short to Voltage	Signal Performance
Driver Seat Belt Switch Signal	B0072 02, B0072 0B	B0072 04, B0072 06, B0072 0C	B0072 04, B0072 06	B0072 01, B0072 05	B0072 08
Passenger Seat Belt Switch Signal	B0073 02, B0073 0B	B0073 04, B0073 06, B0073 0C	B0073 04, B0073 06	B0073 01, B0073 05	B0073 08

Circuit/System Description

The inflatable restraint seat belt buckle switch is within the seat belt buckle and provides an input to the inflatable restraint sensing and diagnostic module (SDM). The inflatable restraint sensing and diagnostic

module supplies a low reference circuit and a seat belt switch signal circuit to determine a buckled or unbuckled condition. The inflatable restraint sensing and diagnostic module monitors the seat belt switch circuits and if a fault is detected a DTC will be set.

Conditions for Running the DTC

Ignition voltage is between 9-16 V.

Conditions for Setting the DTC

B0072 01 or B0073 01

The seat belt switch circuit is shorted to voltage.

B0072 02 or B0073 02

The seat belt switch circuit is shorted to ground.

B0072 04 or B0073 03

The seat belt switch circuit is open.

B0072 05 or B0073 05

The seat belt switch circuit is shorted to voltage or open.

B0072 06 or B0073 06

The seat belt switch circuit is shorted to ground or open.

B0072 08 or B0073 08

The seat belt switch signal is invalid.

B0072 0B or B0073 0B

The seat belt switch signal is above threshold.

B0072 0C or B0073 0C

The seat belt switch signal is below threshold.

Action Taken When the DTC Sets

The inflatable restraint sensing and diagnostic module will store a DTC and illuminate the air bag indicator in the instrument cluster.

Conditions for Clearing the DTC

The condition for setting the DTC no longer exists.

Reference Information

Schematic Reference

SIR Schematics

Connector End View Reference

COMPONENT CONNECTOR END VIEWS - INDEX

Description and Operation

Supplemental Inflatable Restraint System Description and Operation

Electrical Information Reference

- **Circuit Testing**
- **Testing for Intermittent Conditions and Poor Connections**
- **Wiring Repairs**
- **Connector Repairs**

Scan Tool Reference

Control Module References for scan tool information

Circuit/System Verification

1. Ignition ON.
2. Verify the appropriate scan tool Seat Belt Status parameter changes between Buckled and Unbuckled when the seat belt is buckled and unbuckled.
   - **If the parameter does not change**

     Refer to Circuit/System Testing below.

   - **If the parameter changes**
3. All OK.

Circuit/System Testing

NOTE: When removing connectors inspect for damage or corrosion. Damage or corrosion in the following requires repair or replacement of the affected component/connector.

- **B153D Seat Belt Buckle-Driver**

- **B153P Seat Belt Buckle-Passenger**
- **K36 Inflatable Restraint Sensing and Diagnostic Module**

1. Ignition OFF. Scan tool disconnected. Disconnect the harness connector at the appropriate B153 Seat Belt Buckle. It may take up to 2 min for all vehicle systems to power down.
2. Test for less than 5 ohms between the low reference circuit terminal 2 and ground.
    - **If 5 ohms or greater**
    1. Ignition OFF, disconnect the harness connector at the K36 Inflatable Restraint Sensing and Diagnostic Module.
    2. Test for less than 2 ohms in the low reference circuit end to end.
        - If 2 ohms or greater, repair the open/high resistance in the circuit.
        - If less than 2 ohms, replace the K36 Inflatable Restraint Sensing and Diagnostic Module.
    - **If less than 5 ohms**
3. Ignition ON.
4. Verify the appropriate scan tool Seat Belt Status parameter is Buckled.
    - **If not Buckled**
    1. Ignition OFF, disconnect the harness connector at the K36 Inflatable Restraint Sensing and Diagnostic Module.
    2. Test for infinite resistance between the signal circuit terminal 1 and ground.
        - If less than infinite resistance, repair the short to ground on the circuit.
        - If infinite resistance, replace the K36 Inflatable Restraint Sensing and Diagnostic Module.
    - **If Buckled**
5. Install a 3 A fused jumper wire between the signal circuit terminal 1 and the low reference circuit terminal 2.
6. Verify the appropriate scan tool Seat Belt Status parameter is Unbuckled.
    - **If not Unbuckled**
    1. Ignition OFF, disconnect the harness connector at the K36 Inflatable Restraint Sensing and Diagnostic Module, ignition ON.
    2. Test for less than 1 V between the signal circuit and ground.
        - If 1 V or greater, repair the short to voltage on the circuit.
        - If less than 1 V
    3. Test for less than 2 ohms in the signal circuit end to end.
        - If 2 ohms or greater, repair the open/high resistance in the circuit.
        - If less than 2 ohms, replace the K36 Inflatable Restraint Sensing and Diagnostic Module.
    - **If Unbuckled**
7. Test or replace the B153 Seat Belt Buckle.

Component Testing

1. Ignition OFF. Scan tool disconnected. Disconnect the harness connector at the appropriate B153 Seat Belt

Buckle. It may take up to 2 min for all vehicle systems to power down.

2. Test for infinite resistance between the signal terminal 1 and the low reference terminal 2.
    - **If less than infinite resistance**

      Replace the B153 Seat Belt Buckle.

    - **If infinite resistance**
3. Insert the seat belt into the buckle.
4. Test for less than 5 ohms between the signal terminal 1 and the low reference terminal 2.
    - **If 5 ohms or greater**

      Replace the B153 Seat Belt Buckle.

    - **If less than 5 ohms**
5. All OK.

Repair Instructions

Perform the **Diagnostic Repair Verification** after completing the repair.

- **Front Seat Belt Buckle Replacement**
- **SIR/SRS Wiring Repairs**
- **Control Module References** for inflatable restraint sensing and diagnostic module replacement, programming, and setup.

DTC B059A

Diagnostic Instructions

- Perform the **Diagnostic System Check - Vehicle** prior to using this diagnostic procedure.
- Review **Strategy Based Diagnosis** for an overview of the diagnostic approach.
- **Diagnostic Procedure Instructions** provides an overview of each diagnostic category

DTC Descriptors

DTC B059A 01

Passenger Seat Belt Indicator Circuit Short to Battery

DTC B059A 02

Passenger Seat Belt Indicator Circuit Short to Ground

DTC B059A 04

Passenger Seat Belt Indicator Circuit Open

Diagnostic Fault Information

Circuit	Short to Ground	Open/High Resistance	Short to Voltage	Signal Performance
Passenger Seat Belt Indicator Control	B059A 02	B059A 04	B059A 01	-

Circuit/System Description

The Inflatable Restraint Sensing and Diagnostic Module (SDM) monitors the passenger seat status and the passenger seat belt buckle switch and provides an output to the passenger seat belt indicator. When the Inflatable Restraint Sensing and Diagnostic Module detects the passenger seat is occupied and the seat belt is not fastened, the Inflatable Restraint Sensing and Diagnostic Module supplies a pulse width modulated signal to control the passenger seat belt indicator circuit. The Inflatable Restraint Sensing and Diagnostic Module monitors the passenger seat belt indicator circuits and if a fault is detected a DTC will be set.

Conditions for Running the DTC

Ignition voltage is between 9-16 V.

Conditions for Setting the DTC

B059A 01

The passenger seat belt indicator circuit is shorted to voltage.

B059A 02

The passenger seat belt indicator circuit is shorted to ground.

B059A 04

The passenger seat belt indicator circuit circuit is open.

Action Taken When the DTC Sets

The Inflatable Restraint Sensing and Diagnostic Module will store the DTC.

Conditions for Clearing the DTC

The condition for setting the DTC no longer exists.

Reference Information

Schematic Reference

Seat Belt Schematics

Connector End View Reference

COMPONENT CONNECTOR END VIEWS - INDEX

Description and Operation

Seat Belt System Description and Operation

Electrical Information Reference

- **Circuit Testing**
- **Testing for Intermittent Conditions and Poor Connections**
- **Wiring Repairs**
- **Connector Repairs**

Scan Tool Reference

Control Module References for scan tool information

Circuit/System Testing

NOTE: When removing connectors inspect for damage or corrosion. Damage or corrosion in the following requires repair or replacement of the affected component/connector.

- **P14 Passenger Air Bag Disable Indicator**
- **K36 Inflatable Restraint Sensing and Diagnostic Module**

1. Ignition OFF, disconnect the harness connector at the P14 Passenger Air Bag Disable Indicator.
2. Test for less than 10 ohms between the ground circuit terminal 4 and ground.
    - **If 10 ohms or greater**
    1. Ignition OFF.
    2. Test for less than 2 ohms in the ground circuit end to end.
        - If 2 ohms or greater, repair the open/high resistance in the circuit.
        - If less than 2 ohms, repair the open/high resistance in the ground connection.
    - **If less than 10 ohms**
3. Connect a test lamp between the control circuit terminal 6 and ground, ignition ON.
4. Verify the test lamp turns OFF and ON when the passenger seat belt is buckled and unbuckled.
    - **If the test lamp is always on**
    1. Ignition OFF, disconnect the harness connector at the K36 Inflatable Restraint Sensing and Diagnostic Module, ignition ON.

2. Test for less than 1 V between the signal circuit and ground.
    - If 1V or greater, repair the short to voltage on the circuit.
    - If less than 1V, replace the K36 Inflatable Restraint Sensing and Diagnostic Module.
- **If the test lamp is always off**

1. Disconnect the harness connector at the K36 Inflatable Restraint Sensing and Diagnostic Module.
2. Test for infinite resistance between the seat belt switch signal circuit terminal 45 and ground.
    - If less than infinite resistance, repair the short to ground on the circuit.
    - If infinite resistance
3. Test for less than 2 ohms in each control circuit end to end.
    - If 2 ohms or greater, repair the open/high resistance in the circuit.
    - If less than 2 ohms, replace the K36 Inflatable Restraint Sensing and Diagnostic Module.

- **If test lamp turns on and off while changing between the commanded states**

5. Test or replace the P14 Passenger Air Bag Disable Indicator.

Repair Instructions

Perform the **Diagnostic Repair Verification** after completing the repair.

- **Instrument Panel Airbag Arming Status Display Replacement** for passenger air bag disable indicator replacement
- **Control Module References** for Inflatable Restraint Sensing and Diagnostic Module replacement, programming, and setup

SYMPTOMS - SEAT BELTS

NOTE: Review the seat belt system description and operation in order to familiarize yourself with the system and how it functions. Refer to Seat Belt System Description and Operation.

Visual/Physical Inspection

- Inspect for aftermarket devices which could affect the operation of the seat belt system. Refer to **Checking Aftermarket Accessories** .
- Inspect the easily accessible or visible system components for obvious damage or conditions which could cause the symptom.

Intermittent

Faulty electrical connections or wiring may be the cause of intermittent conditions. Refer to **Testing for Intermittent Conditions and Poor Connections** .

Symptom List

Refer to the following symptom diagnostic procedure in order to diagnose the symptom:

- **Seat Belt Indicator Malfunction - Driver**
- **Seat Belt Indicator Malfunction - Passenger**

SEAT BELT DOES NOT RETRACT

1. Grasp the seat belt and pull it out slowly and evenly from the retractor, do that in 15-25 mm (5/8-1 in) increments, continuing until the seat belts entire length has been pulled out.
2. Release the seat belt and allow the retractor to slowly retract the full length of the seat belt. The seat belt must retract without any additional help.
3. Additionally, make sure that the seat belt can be stopped at any time while retracting and then resumed while being released again. This muss also be possible in all retracting positions.
4. Should problems be observed in step 3, perform the first two steps 2 more times.
5. Should the retractor, after performing these steps, not function freely and properly, it is to be replaced with a new part.

SEAT BELT INDICATOR MALFUNCTION - DRIVER

Diagnostic Instructions

- Perform the **Diagnostic System Check - Vehicle** prior to using this diagnostic procedure.
- Review **Strategy Based Diagnosis** for an overview of the diagnostic approach.
- **Diagnostic Procedure Instructions** provides an overview of each diagnostic category.

Diagnostic Fault Information

Circuit	Short to Ground	Open/High Resistance	Short to Voltage	Signal Performance
Driver Seat Belt Switch Signal	1	2	2	-
Driver Seat Belt Switch Low Reference	-	2	-	-
1. Indicator will remain ON with seat belt buckled. 2. Indicator will illuminate only for the bulb check.				

Circuit/System Description

The driver seat belt switch is a 2-wire switch wired to the Inflatable Restraint Sensing and Diagnostic Module (SDM) using a signal circuit and a low reference circuit. When the seat belt is unbuckled the switch is closed, and when the seat belt is buckled the switch is open. The Inflatable Restraint Sensing and Diagnostic Module sends the status of the driver seat belt via serial data to the instrument cluster. After receiving the message, the instrument cluster controls the illumination of the driver seat belt indicator.

Reference Information

Schematic Reference

Seat Belt Schematics

Connector End View Reference

COMPONENT CONNECTOR END VIEWS - INDEX

Description and Operation

Seat Belt System Description and Operation

Electrical Information Reference

- **Circuit Testing**
- **Connector Repairs**
- **Testing for Intermittent Conditions and Poor Connections**
- **Wiring Repairs**

Scan Tool Reference

Control Module References for scan tool information

Circuit/System Verification

1. Verify the driver seat belt indicator turns ON and OFF when commanding the instrument cluster all indicators ON and OFF with a scan tool.
    - **If the driver seat belt indicator does not turn ON and OFF as commanded** .

      Replace the P16 Instrument Cluster.

    - **If the driver seat belt indicator does turn ON and OFF as commanded**
2. Verify the scan tool Diver Seat Belt Switch parameter changes between Buckled and Unbuckled when buckling and unbuckling the driver seat belt.
    - **If the parameter does not change**

      Refer to Circuit/System Testing below.

    - **If the parameter changes**
3. All OK.

Circuit/System Testing

NOTE: When removing connectors inspect for damage or corrosion. Damage or corrosion in the following requires repair or replacement of the affected component/connector.

- **B153D Seat Belt Buckle-Driver**
- **Seat belt switch harness connector**
- **K36 Inflatable Restraint Sensing and Diagnostic Module**
- **Inflatable Restraint Sensing and Diagnostic Module wiring harness connector**

1. Ignition OFF and all vehicle systems OFF, disconnect the harness connector at the B153D Seat Belt Buckle-Driver. It may take up to 2 minutes for all vehicle systems to power down.
2. Test for less than 5 ohms between the low reference circuit terminal 2 and ground.
   - **If 5 ohms or greater**
   1. Disconnect the X2 harness connector at the K36 Inflatable Restraint Sensing and Diagnostic Module.
   2. Test for less than 2 ohms in each low reference circuit end to end.
      - If 2 ohms or greater, repair the open/high resistance in the circuit.
      - If less than 2 ohms, replace the K36 Inflatable Restraint Sensing and Diagnostic Module.
   - **If less than 5 ohms**
3. Ignition ON.
4. Verify the scan tool Driver Seat Belt Status parameter is Buckled.
   - **If not Buckled**
   1. Ignition OFF, disconnect the X2 harness connector at the K36 Inflatable Restraint Sensing and Diagnostic Module.
   2. Test for infinite resistance between the seat belt switch signal circuit terminal 1 and ground.
      - If less than infinite resistance, repair the short to ground on the circuit.
      - If infinite resistance, replace the K36 Inflatable Restraint Sensing and Diagnostic Module.
   - **If Buckled**
5. Install a 3 A fused jumper wire between the signal circuit terminal 1 and the low reference circuit terminal 2.
6. Verify the scan tool Driver Seat Belt Status parameter is Unbuckled.
   - **If Unbuckled**
   1. Ignition OFF, disconnect the X2 harness connector at the K36 Inflatable Restraint Sensing and Diagnostic Module, ignition ON.
   2. Test for less than 1 V between the signal circuit and ground.
      - If 1 V or greater, repair the short to voltage on the circuit.
      - If less than 1 V
   3. Test for less than 2 ohms in each circuit end to end.
      - If 2 ohms or greater, repair the open/high resistance in the circuit.
      - If less than 2 ohms, replace the K36 Inflatable Restraint Sensing and Diagnostic Module.
   - **If Unbuckled**
7. Test or replace the B153D Seat Belt Buckle-Driver.

Component Testing

1. Ignition OFF, disconnect the harness connector at the B153D Seat Belt Buckle-Driver, buckle the driver seat belt.
2. Test for infinite resistance between the signal circuit terminal 1 and the low reference terminal 2.
   - **If not infinite resistance**

     Replace the B153D Seat Belt Buckle-Driver.

   - **If infinite resistance**
3. Unbuckle the driver seat belt.
4. Test for less than 1 ohms between the signal circuit terminal 1 and the low reference terminal 2.
   - **If 1 ohms or greater**

     Replace the B153D Seat Belt Buckle-Driver.

   - **If less than 1 ohms**
5. All OK.

Repair Instructions

Perform the **Diagnostic Repair Verification** after completing the repair.

- **Front Seat Belt Buckle Replacement**
- **Control Module References** for Inflatable Restraint Sensing and Diagnostic Module or instrument cluster replacement, programming and setup

SEAT BELT INDICATOR MALFUNCTION - PASSENGER

Diagnostic Instructions

- Perform the **Diagnostic System Check - Vehicle** prior to using this diagnostic procedure.
- Review **Strategy Based Diagnosis** for an overview of the diagnostic approach.
- **Diagnostic Procedure Instructions** provides an overview of each diagnostic category.

Diagnostic Fault Information

Circuit	Short to Ground	High Resistance	Open	Short to Voltage	Signal Performance
Passenger Seat Belt Switch Signal	1	2	2	2	-
Passenger Seat Belt Switch Low Reference	-	2	2	2	-
1. Indicator will remain ON with seat belt buckled. 2. Indicator will illuminate only for the bulb check.					

Circuit/System Description

When an individual is sitting in the passenger seat the passenger presence sensor detects the individual. A signal to the inflatable restraint sensing and diagnostic module indicates a person is in the passenger seat. The inflatable restraint sensing and diagnostic module will turn the passenger seat belt indicator. The passenger seat belt switch is a 2-wire switch wired to the inflatable restraint sensing and diagnostic module (SDM) using a signal circuit and a low reference circuit. When the seat belt is unbuckled the switch is closed, and when the seat belt is buckled the switch is open. The inflatable restraint sensing and diagnostic module sends the status of the passenger seat belt via a hard wire to the passenger air bag disable indicator. After receiving the message, the passenger air bag disable indicator controls the illumination of the passenger seat belt indicator.

Diagnostic Aids

Objects on the passenger seat can cause the passenger seat belt reminder to be commanded on. Depending on the sensing technology used, a conductive object (computers, MP3 players, cell phones, diagnostic scan tool, wires, a hand, etc.) placed on the passenger seat may cause the Passenger Presence Detection Module to command the passenger air bag indicator ON and/or command the passenger seat belt indicator ON. The fasten seat belt chime will also sound.

Reference Information

Schematic Reference

Seat Belt Schematics

Connector End View Reference

COMPONENT CONNECTOR END VIEWS - INDEX

Description and Operation

Seat Belt System Description and Operation

Electrical Information Reference

- **Circuit Testing**
- **Connector Repairs**
- **Testing for Intermittent Conditions and Poor Connections**
- **Wiring Repairs**

Scan Tool Reference

Control Module References for scan tool information

Circuit/System Verification

1. Ignition ON.

2. With a scan tool, Command the Passenger Seat Belt Reminder Indicator ON and OFF.
    - If the passenger seat belt reminder indicator turns ON and OFF as commanded, refer to Passenger Seat Belt Switch Malfunction.
    - If the passenger seat belt reminder indicator does not turn ON and OFF as commanded, refer to Passenger Seat Belt Indicator Malfunction.

Circuit/System Testing

Passenger Seat Belt Switch Malfunction

1. Ignition OFF. Disconnect the harness connector at the B88P seat belt switch-passenger.
2. Test for less than 5 ohms between the low reference circuit terminal 2 and ground.
    - **If 5 ohms or greater**
    1. Disconnect the X2 harness connector at the K36 inflatable restraint sensing and diagnostic module.
    2. Test for less than 2 ohms in each control circuit end to end.
        - If 2 ohms or greater, repair the open/high resistance in the circuit.
        - If less than 2 ohms, replace the K36 inflatable restraint sensing and diagnostic module.
    - **If less than 5 ohms**
3. Ignition ON.
4. Verify the scan tool Passenger Seat Belt Status parameter listed below is Buckled.
    - **If the scan tool Passenger Seat Belt Status parameter does not display Buckled**
    1. Disconnect the X2 harness connector at the K36 inflatable restraint sensing and diagnostic module.
    2. Test for infinite resistance between the seat belt switch signal circuit terminal 1 and ground.
        - If less than infinite resistance, repair the short to ground on the circuit.
        - If less than 2 ohms, replace the K36 inflatable restraint sensing and diagnostic module.
    - **If the scan tool Passenger Seat Belt Status parameter does display Buckled**
5. Install a 3 A fused jumper wire between the signal circuit terminal 1 and the low reference circuit terminal 2.
6. Verify the scan tool Passenger Seat Belt Status parameter is Unbuckled.
    - **If the scan tool Passenger Seat Belt Status parameter does not display Unbuckled**
    1. Ignition OFF. Disconnect the X2 harness connector at the K36 inflatable restraint sensing and diagnostic module. Ignition ON.
    2. Test for less than 1 V between the signal circuit and ground.
        - If 1 V or greater, repair the short to voltage on the circuit.
    3. Test for less than 2 ohms in each circuit end to end.
        - If 2 ohms or greater, repair the open/high resistance in the circuit.
        - If less than 2 ohms, replace the K36 inflatable restraint sensing and diagnostic module.
    - **If the scan tool Passenger Seat Belt Status parameter does display Unbuckled**
7. Replace the B88P seat belt switch-passenger.

Passenger Seat Belt Indicator Malfunction

1. Ignition OFF. Disconnect the harness connector at the P14 passenger air bag disable indicator.
2. Test for less than 10 ohms between the ground circuit terminal 4 and ground.
    - **If 10 ohms or greater**

      Repair the open/high resistance in the circuit.

    - **If less than 10 ohms**
3. Ignition ON. With a scan tool, command the Passenger Seat Belt Reminder Indicator OFF.
4. Test for less than 11 V between the control circuit terminal 6 and ground.
    - **If 11 V or greater**
    1. Ignition OFF. Disconnect the X1 harness connector at the K36 inflatable restraint sensing and diagnostic module. Ignition ON.
    2. Test for less than 1 V between the control circuit terminal 6 and ground.
        - If 1 V or greater, repair the short to voltage on the circuit.
        - If less than 1 V, replace the K36 inflatable restraint sensing and diagnostic module.
    - **If less than 11 V**
5. With a scan tool, command the Passenger Seat Belt Reminder Indicator ON.
6. Test for greater than 4 V between the control circuit terminal 6 and ground.
    - **If 4 V or less**
    1. Ignition OFF. Disconnect the X 1 harness connector at the K36 inflatable restraint sensing and diagnostic module.
    2. Test for infinite resistance between the control circuit terminal 6 and ground.
        - If less than infinite resistance, repair the short to ground on the circuit.
    3. Test for less than 2 ohms between the control circuit terminal 6 and ground.
        - If 2 ohms or greater repair the open/high resistance in the circuit.
        - If less than 2 ohms replace the K36 inflatable restraint sensing and diagnostic module.
    - **If greater than 4 V**
7. Replace the P14 passenger air bag disable indicator.

Component Testing

1. Ignition OFF. Disconnect the harness connector at the B88P seat belt switch-passenger. Buckle the B88P seat belt switch-passenger.
2. Test for infinite resistance between the signal circuit terminal 1 and the low reference terminal 2 at the B88P seat belt switch-passenger.
    - **If there is not infinite resistance**

      Replace the B88P seat belt switch-passenger.

    - **If there is infinite resistance**

3. Unbuckle the B88P seat belt switch-passenger.
4. Test for less than 1 ohms between the signal circuit terminal 1 and the low reference terminal 2 at the B88P seat belt switch-passenger.
   - **If 1 ohms or greater**

     Replace the B88P seat belt switch-passenger.

   - **If less than 1 ohms**
5. All OK.

Repair Instructions

Perform the **Diagnostic Repair Verification** after completing the repair.

- **Instrument Panel Airbag Arming Status Display Replacement**
- **Front Seat Belt Buckle Replacement**
- **Front Seat Cushion Cover and Pad Replacement**
- **Control Module References** for inflatable restraint sensing and diagnostic module, passenger presence system, and instrument cluster replacement, programming and setup

REPAIR INSTRUCTIONS

REPAIRS AND INSPECTIONS REQUIRED AFTER A COLLISION

WARNING: Restraint systems can be damaged in a collision. To help avoid injury and ensure that all parts in need of replacement are replaced:

- **Replace any seat belt system that was in use during the collision serious enough to deploy any automatic restraint device such as air bags and seat belt pretensioners. This not only includes seat belt systems in use by people of adult size, but seat belt systems used to secure child restraints, infant carriers and booster seats, including LATCH system and top tether anchorages.**
- **Replace any seat belt system that has torn, worn, or damaged components. This not only includes adult seat belt systems, but built-in child restraints and LATCH system components, if any.**
- **Replace any seat belt system if you observe the words "REPLACE" or "CAUTION", or if a yellow tag is visible. Do not replace a seat belt if only the child seat caution label is visible.**
- **Replace any seat belt system if you are doubtful about its condition. This not only includes adult seat belt systems, but built-in child restraints, LATCH system components, and any restraint system used to secure infant carriers, child restraints, and booster seats.**

Do NOT replace single seat belt system components in vehicles that have been in a collision as described above. Always replace the entire seat belt system with the buckle, guide and retractor assembly, which includes the latch and webbing material.

After a minor collision where no automatic restraint device was deployed, seat belt system replacement may not be necessary, unless some of the parts are torn, worn, or damaged.

SEAT BELT LATCH STOP INSTALLATION

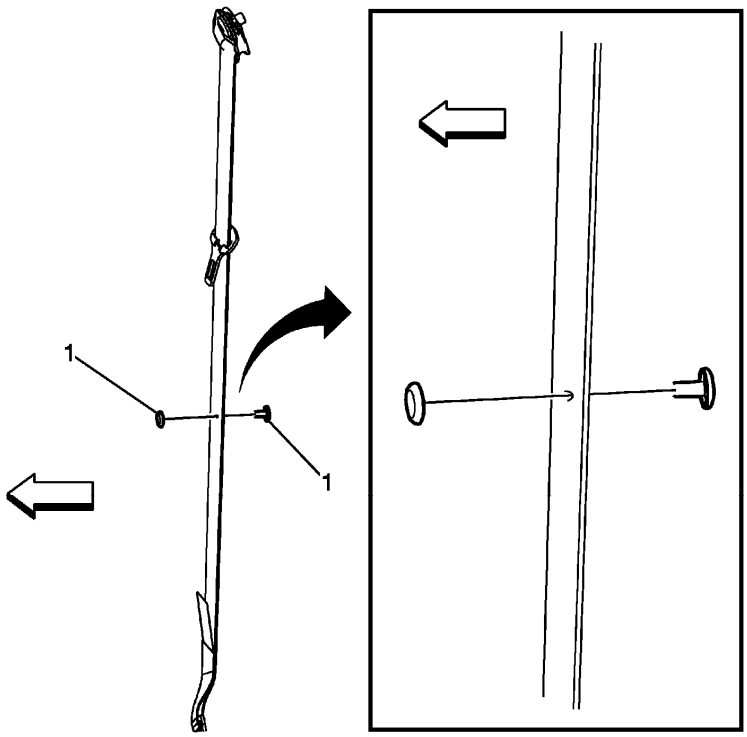

Fig. 2: View Of Seat Belt Latch Stop Components
Courtesy of GENERAL MOTORS COMPANY

Seat Belt Latch Stop Installation

Callout	Component Name
Preliminary Procedures 1. Locate the hole in the seat belt webbing where the original seat belt stop button was located. 2. If the original hole in the seat belt webbing is not visible, perform the following: • If either the right or left stop button is missing use the opposing seat belt as a reference. • With the opposing seat belt fully stowed, measure the distance between the seat belt lower anchor and the stop button. • Using the measurement obtained above, measure and mark the location of the missing stop button on the center of the seat belt webbing.	

3. Ensure the seat belt latch plate is located above the mark or original hole.	
1	Seat Belt Stop Button **Procedure** 1. Work the male half of the stop button through the hole in the webbing or at the marked location. 2. Align the female half of the stop button with the male half of the stop button. 3. Snap the two halves together. 4. Trim off any access of the male half of the stop button flush with the female half of the stop button. **TIP:** Ensure the male half of the stop button is facing forward in the vehicle in order to ensure the stop button will not snag customers clothing.

FRONT SEAT BELT BUCKLE REPLACEMENT

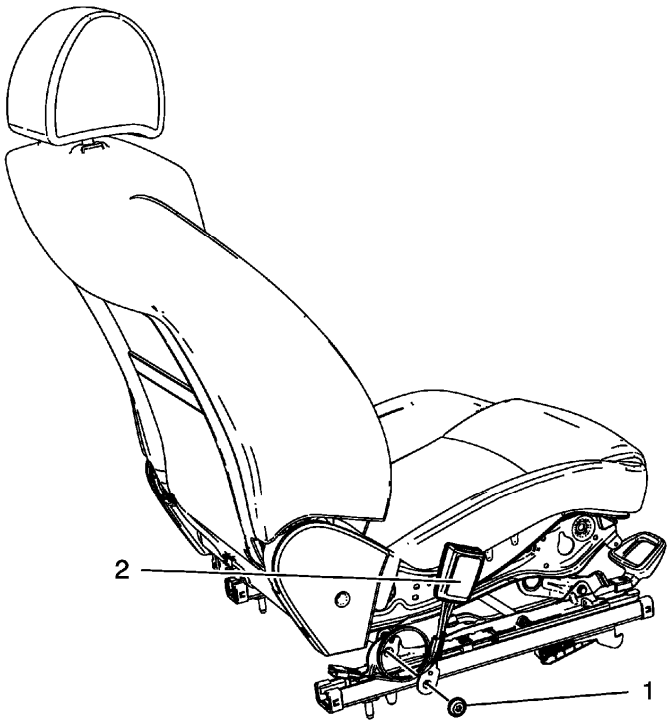

Fig. 3: Seat Belt Buckle
Courtesy of GENERAL MOTORS COMPANY

Front Seat Belt Buckle Replacement

Callout	Component Name
Preliminary Procedures Remove the front seat. Refer to **Driver or Passenger Seat Removal and Installation** .	
1	Front Seat Belt Buckle Bolt **CAUTION:** **Refer to Fastener Caution .** **Tighten** 45 N.m (33 lb ft)
2	Front Seat Belt Buckle

REAR SEAT BUCKLE SIDE BELT REPLACEMENT

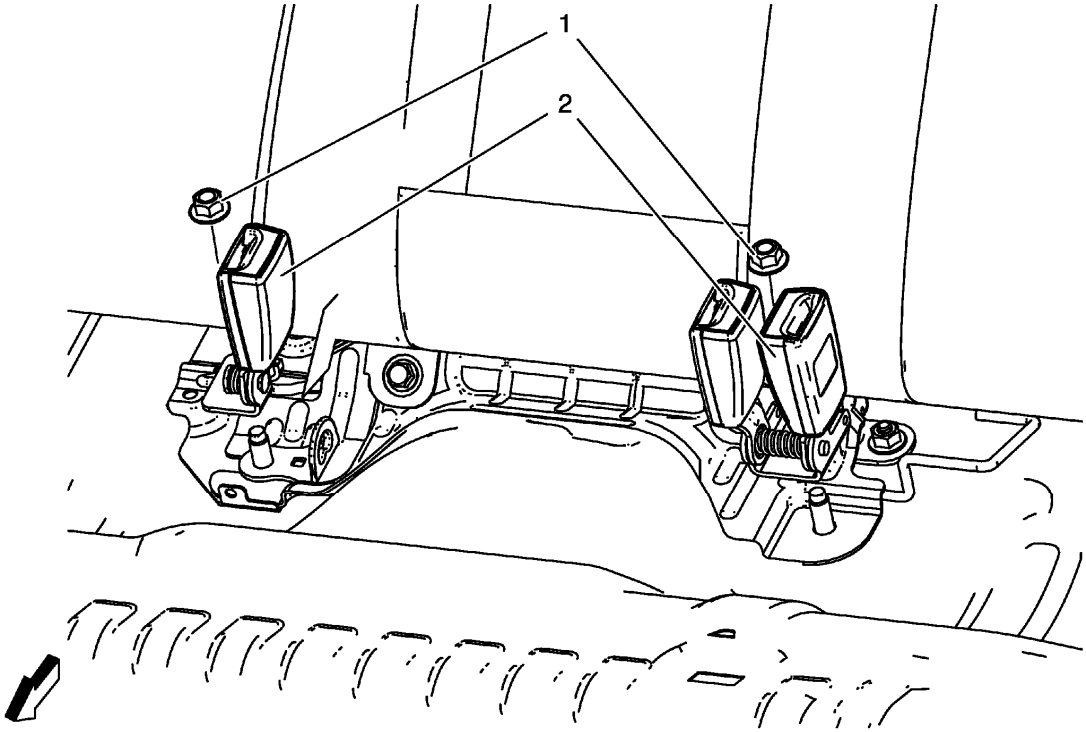

Fig. 4: Rear Seat Buckle Side Belt
Courtesy of GENERAL MOTORS COMPANY

Rear Seat Buckle Side Belt Replacement

Callout	Component Name
Preliminary Procedures Remove the rear seat cushion. Refer to **Rear Seat Cushion Removal and Installation** .	
	Rear Seat Rear Bracket Nut

1	**CAUTION:** **Refer to Fastener Caution .** **Tighten** 45 N.m (33 lb ft)
2	Rear Seat Belt Buckle

REAR SEAT CENTER SHOULDER BELT REPLACEMENT

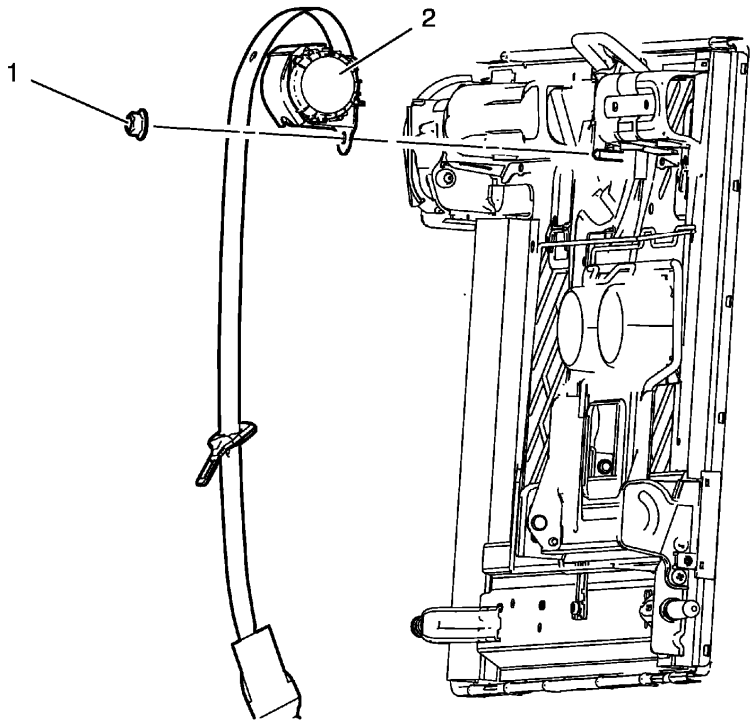

Fig. 5: Rear Seat Center Shoulder Belt And Rear Seat Center Shoulder Belt Nut
Courtesy of GENERAL MOTORS COMPANY

Rear Seat Center Shoulder Belt Replacement

Callout	Component Name
Preliminary Procedures Remove the right rear seat back cushion cover and pad. Refer to **Rear Seat Back Cushion Cover and Pad Replacement - Right Side** .	
1	Rear Seat Center Shoulder Belt Nut **CAUTION:** **Refer to Fastener Caution .**

	Tighten 45 N.m (33 lb ft)
2	Rear Seat Center Shoulder Belt

SHOULDER BELT REPLACEMENT - REAR

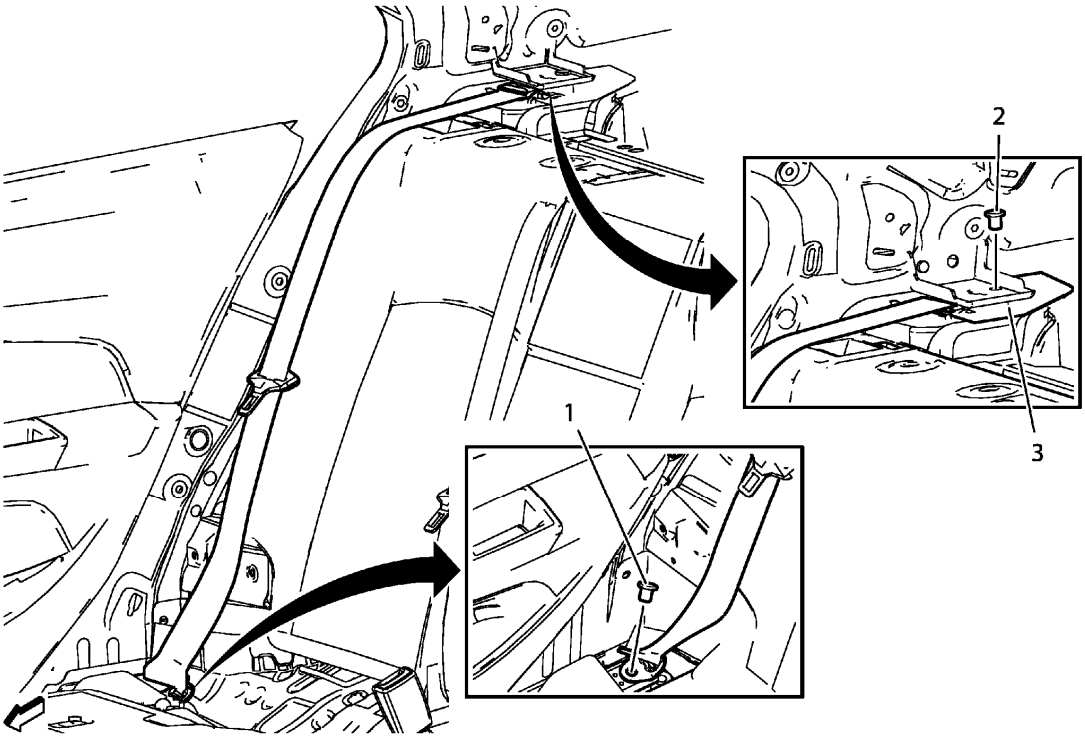

Fig. 6: Rear Seat Shoulder Belt & Components
Courtesy of GENERAL MOTORS COMPANY

Shoulder Belt Replacement - Rear

Callout	Component Name
Preliminary Procedures 1. Disable the SIR system. Refer to **SIR Disabling and Enabling** . 2. Remove the rear seat back cushion bolster. Refer to **Rear Seat Back Bolster Replacement** . 3. Remove the rear seat back. Refer to **Rear Seat Removal and Installation (40 Percent Seat)** , **Rear Seat Removal and Installation (60 Percent Seat)** . 4. Remove the quarter window garnish molding. Refer to **Quarter Window Garnish Molding Replacement** . 5. Remove the rear side door sill trim plate. **Rear Side Door Sill Trim Plate Replacement** . 6. Remove the body side trim panel. Refer to **Body Side Trim Panel Replacement** . 7. Remove the rear window panel trim. Refer to **Rear Window Panel Trim Replacement** .	
	Rear Seat Shoulder Belt Anchor Plate Bolt

1	**CAUTION:** **Refer to Fastener Caution .** **Tighten** 45 N.m (33 lb ft)
2	Rear Seat Shoulder Belt Retractor Bolt **Tighten** 45 N.m (33 lb ft)
3	Rear Seat Shoulder Belt

FRONT SEAT BELT GUIDE ADJUSTER REPLACEMENT

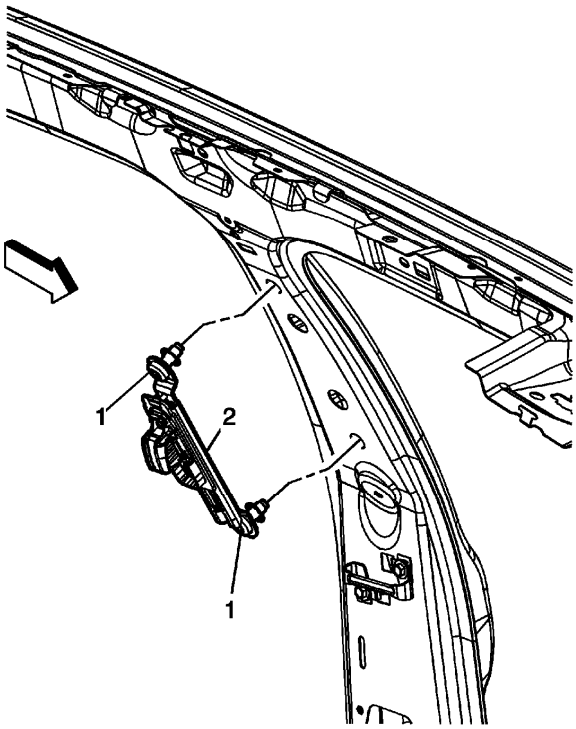

Fig. 7: Identifying Front Shoulder Belt Guide Adjuster
Courtesy of GENERAL MOTORS COMPANY

Front Seat Belt Guide Adjuster Replacement

Callout	Component Name
Preliminary Procedures Remove the center pillar upper garnish molding. Refer to **Center Pillar Upper Garnish Molding Replacement** .	
	Front Seat Shoulder Belt Guide Adjuster Bolt (Qty: 2) **CAUTION:**

1	**Refer to Fastener Caution .** **Tighten** 45 N.m (33 lb ft)
2	Front Seat Shoulder Belt Guide Adjuster

DESCRIPTION AND OPERATION

SEAT BELT SYSTEM DESCRIPTION AND OPERATION

Restraint System

NOTE: If the vehicle has been in a collision, refer to Repairs and Inspections Required After a Collision

The vehicle has front and rear seat belts that are the primary means of occupant restraint. Seat belts help to keep the occupants inside the passenger compartment and to gradually reduce the impact forces during the following events:

- Frontal impact type crashes
- Rear impact type crashes
- Side impact type crashes
- Roll-over type crashes

All seat belt retractors have emergency locks. The retractors remain unlocked during normal operation and under normal driving conditions. The retractors remain unlocked during normal conditions in order to allow free movement of the upper body of each occupant. A pendulum locks the seat belt webbing into position. The pendulum causes a locking bar to engage a cog on the spool of the retractor mechanism when the following conditions occur:

- A rapid extraction of the seat belt webbing from the retractor
- An abrupt change in vehicle speed
- An abrupt change in vehicle direction
- Operation of the vehicle on a steep upgrade
- Operation of the vehicle on a downgrade

The seat belts have an automatic locking (cinch) feature. The cinch feature is activated when the seat belt webbing is completely extended from the retractor. The cinch feature prevents the webbing from extending beyond the position from which it is allowed to retract. Use of the cinch feature is recommended for securing a child seat. The cinch feature may be cancelled by allowing the webbing to wind back completely into the retractor. After the cinch feature is cancelled, the webbing is unlocked. After the cinch feature is cancelled, the webbing will extend from the retractor. This vehicle is also equipped with a supplemental inflatable restraint (SIR) system. Refer to **Supplemental Inflatable Restraint System Description and Operation**

Front Seat Belt System

The front seat belt system includes a driver and passenger seat belt pretensioner retractor. Both front seat belt pretensioners includes a seat belt switch in the seat buckle which controls a reminder lamp and a tone alarm.

NOTE: The front passenger seat is equipped with a passenger presence detection sensor, which detects an occupant. If the passenger presence detection sensor detects an empty front passenger seat, then the passenger fasten safety belt indicator will be disabled.

- When the driver seat belt is buckled and the ignition switch is turned ON, the following events will occur:
  - The tone alarm will not operate.
  - The reminder lamp will not operate.
- When the passenger seat belt is buckled with an occupant sitting in the passenger front seat, then the ignition switch is turned ON, the following events will occur:
  - The tone alarm will not operate.
  - The reminder lamp, which is located within the Passenger Air Bag Disable Indicator, will not be turned ON.
- When the driver seat belt is not buckled and the ignition switch is in the ON position, the following events will occur:
  - The tone alarm will operate for 4-8 seconds and then go OFF.
  - The fasten safety belt indicator will turn ON for 20 seconds, until the driver seat belt is buckled.
- When the passenger seat belt is not buckled with an occupant sitting in the passenger front seat, then the ignition switch is turned ON, the following events will occur:
  - The tone alarm will operate for 4-8 seconds and then go OFF.
  - The reminder lamp, which is located within the Passenger Air Bag Disable Indicator, will be turned ON.

Rear Seat Belt System

The Rear Seat Belt System includes the following components:

- The rear seat belt retractor is located at the wheelhouse panel and attached to the floor panel by the rear seat shoulder belt retractor bracket.
- The rear seat belt buckles and the center seat belt buckle are attached to each seat.

Child Seat Restraint System

WARNING: A child in a rear-facing child restraint can be seriously injured if the right-front passengers air bag inflates. This is because the back of a rear-facing child restraint would be very close to the inflating air bag. NEVER use a rear-facing child restraint in this vehicle. If a forward-facing child restraint is suitable for your child, ALWAYS move the front passenger seat as far back as it will go and then install the child restraint. Be sure the child

restraint position does not conflict with any additional requirements provided by the manufacturer. For more information, refer to the vehicle owners manual and the instruction that came with the child restraint.

A child in a rear-facing child restraint can be seriously injured if the right-front passengers air bag inflates. This is because the back of a rear-facing child restraint would be very close to the inflating air bag. NEVER use a rear-facing child restraint in this vehicle. If a forward-facing child restraint is suitable for your child, ALWAYS move the front passenger seat as far back as it will go and then install the child restraint. Be sure the child restraint position does not conflict with any additional requirements provided by the manufacturer. For more information, refer to the vehicle owners manual and the instruction that came with the child restraint.

The child seat may only be used in a forward facing seating location. The child seat should be installed and secured according to the manufacturer's directions. If the child seat has a top strap, the seat will need to be anchored. Passengers should not be allowed to sit at locations where the seat belts are being used to secure the child seat.

All vehicles are equipped with a dual-mode type retractor with emergency and automatic locking features. The automatic locking feature is for restraint of a child seat. The child seat can be secured by pulling the seat belt all the way out to lock it. Then tighten the seat belt around the child seat.

If a child seat is to be used in the second seat position, a special dealer-installed anchor must be used in order to anchor the child seat top strap. This only applies to the seats designed with the top strap provision and for the vehicles sold in Canada. In order to ensure the correct top strap angle, the child seat is only to be used at the seating position for which the top strap anchor is installed.

Fasten Safety Belt Indicators

There are two fasten safety belt indicators for this vehicle. The driver fasten safety belt reminder is displayed in the instrument cluster, and the passenger fasten safety belt reminder is displayed in the passenger air bag disable indicator. The fasten safety belt indicator may only be ON during RUN. The fasten safety belt indicator illuminates under the following conditions:

- During the bulb check
- The inflatable restraint sensing and diagnostic module (SDM) sends the status of the driver seat belt to the instrument cluster via serial data. The passenger seat belt status is sent to the passenger air bag disable indicator via a hardwire. If any of the seat belts are unfastened, the instrument cluster will send a message requesting a chime sound to be turned ON after a bulb check.

2013 RESTRAINTS

Supplemental Inflatable Restraints - Cruze

SPECIFICATIONS

FASTENER TIGHTENING SPECIFICATIONS

Fastener Tightening Specifications

Application	Specification	
	Metric	English
Front End Inflatable Restraint Discriminating Sensor	7.5 N.m	66 lb in
Inflatable Restraint Control Module Bracket Bolt	10 N.m	89 lb in
Inflatable Restraint Instrument Panel Module Nut	8 N.m	71 lb in
Inflatable Restraint Sensing and Diagnostic Module	10 N.m	89 lb in
Inflatable Restraint Side Impact Sensor	7.5 N.m	66 lb in
Instrument Panel Inflatable Restraint Module Bracket Bolt	9 N.m	80 lb in
Instrument Panel Inflatable Restraint Module Trim Cover Hinge Bolt	2.5 N.m	22 lb in
Steering Wheel Inflatable Restraint Module Coil	1.5 N.m	13 lb in

WIRING SCHEMATICS

SIR WIRING SCHEMATICS

Module Power, Ground, MIL, Indicators, and Passenger Presence Wiring Schematics

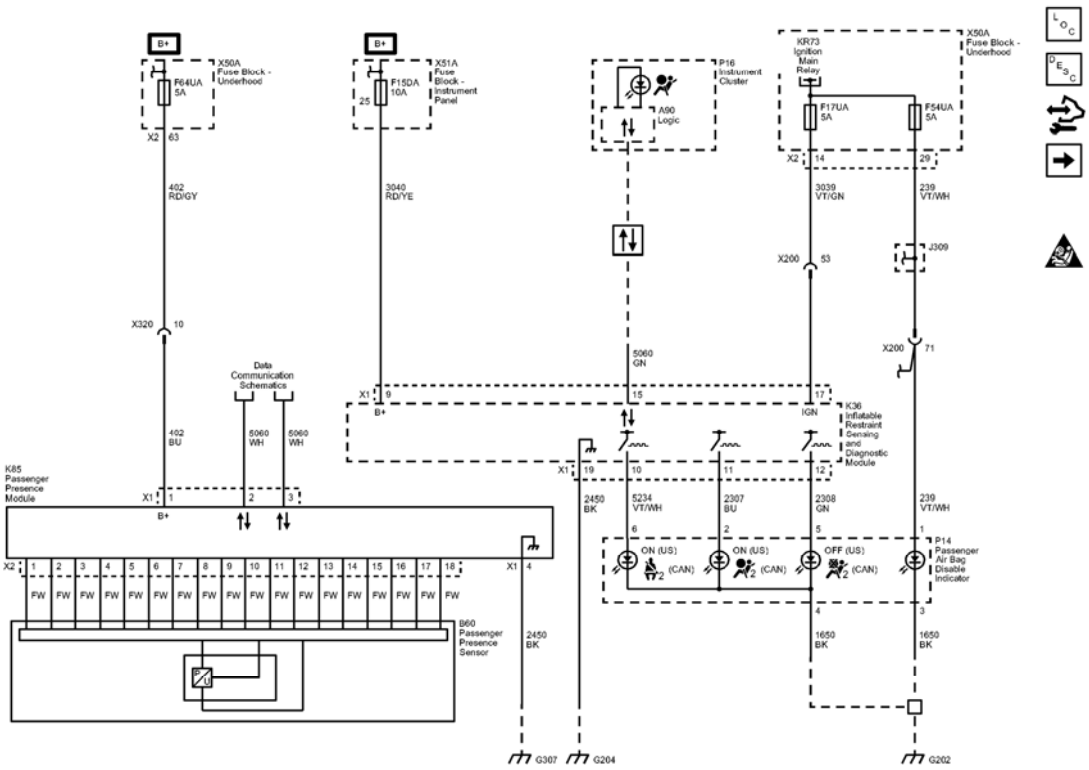

Fig. 1: Module Power, Ground, MIL, Indicators, and Passenger Presence Wiring Schematics
Courtesy of GENERAL MOTORS COMPANY

Callout	Component Name
402	Battery Positive Voltage
402 BU	402 BU
CAV_1	1
CONN_X1	X1
CAV_63	63
CONN_X2	X2
402_RD/GY	402 RD/GY
CAV_10	10
5060	Low Speed GMLAN Serial Data
5060_WH	5060 WH
CAV 2	2
5060_WH	5060 WH
CAV_3	3
3040	Battery Positive Voltage
3040_RD/YE	3040 RD/YE
CAV_9	9

CONN_X1	X1
5060_GN	5060 GN
CAV_15	15
Data_Communication_Schematics_REF	Data Communication Schematics
3039	Run/Crank Ignition 1 Voltage
3039_VT/GN	3039 VT/GN
CAV_17	17
CAV_14	14
CONN_X2	X2
239	Run/Crank Ignition 1 Voltage
239_VT/WH	239 VT/WH
CAV_1	1
CAV_29	29
239_VT/WH	239 VT/WH
CAV_53	53
1650	Ground
1650_BK	1650 BK
CAV 3	3
1650_BK	1650 BK
CAV 4	4
2308	Passenger Air Bag Off Indicator Control
2308_GN	2308 GN
CAV_5	5
CAV_12	12
2307	Passenger Air Bag On Indicator Control
2307_BU	2307 BU
CAV_2	2
CAV_11	11
5234	Passenger Seat Belt Indicator
5234_VT/WH	5234 VT/WH
CAV_6	6
CAV_10	10
2450	Ground
2450 BK	2450 BK
CAV_19	19
CONN_X1	X1
CAV_71	71
2450_BK	2450 BK
CAV_4	4

CONN_X1	X1
FW	FW
CAV_1	1
CONN_X2	X2
FW	FW
CAV_2	2
FW	FW
CAV_3	3
FW	FW
CAV_4	4
FW	FW
CAV_5	5
FW	FW
CAV_6	6
FW	FW
CAV_7	7
FW	FW
CAV_8	8
FW	FW
CAV_9	9
FW	FW
CAV_10	10
FW	FW
CAV_11	11
FW	FW
CAV_12	12
FW	FW
CAV_13	13
FW	FW
CAV_14	14
FW	FW
CAV_15	15
FW	FW
CAV_16	16
FW	FW
CAV_17	17
FW	FW
CAV_18	18
CAV_25	25
G202	G202
G204	G204
G207	

	G307
X320	X320
X200	X200
X200	X200
F64UA	F64UA 5A
F15DA	F15DA 10A
F17UA	F17UA 5A
F54UA	F54UA 5A
K36	
X50A	
P14	
KR73	
X51A	
Data_Communication_Schematics_REF	Data Communication Schematics
X50A	
A90	Logic
P16	
B60	
K85	Passenger Presence Module

Side Impact Sensors, and Roof Rail, Driver, and Passenger Air Bags Wiring Schematics

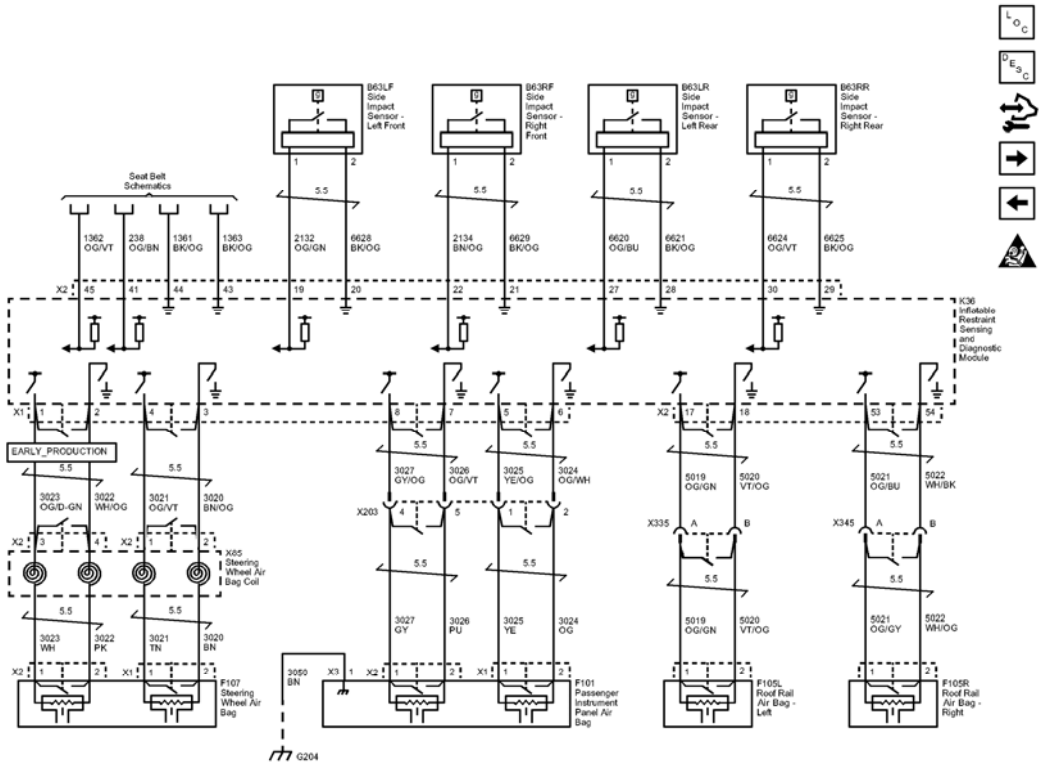

Fig. 2: Side Impact Sensors, and Roof Rail, Driver, and Passenger Air Bags Wiring Schematics
Courtesy of GENERAL MOTORS COMPANY

Callout	Component Name
1362	Passenger Seat Belt Switch Signal
1362 OG/VT	1362 OG/VT
CAV_45	45
CONN_X2	X2
238	Driver Seat Belt Switch Signal
238_OG/BN	238 OG/BN
CAV_41	41
1361	Passenger Seat Belt Switch Low Reference
1361 BK/OG	1361 BK/OG
CAV_44	44
1363	Driver Seat Belt Switch Low Reference
1363_BK/OG	1363 BK/OG
CAV_43	43
2132	Left Front Side Impact Sensing Module Signal

2132_OG/GN	2132 OG/GN
CAV_19	19
CAV_1	1
6628	Left Front Side Impact Sensing Module Low Reference
6628_BK/OG	6628 BK/OG
CAV_20	20
CAV_2	2
2134	Right Front Side Impact Sensing Module Signal
2134_BN/OG	2134 BN/OG
CAV_22	22
CAV_1	1
6629	Right Front Side Impact Sensing Module Low Reference
6629_BK/OG	6629 BK/OG
CAV_21	21
CAV_2	2
6620	Left Middle Side Impact Sensing Module Signal
6620_OG/BU	6620 OG/BU
CAV_27	27
CAV_1	1
6621	Left Middle Side Impact Sensing Module Low Reference
6621_BK/OG	6621 BK/OG
CAV_28	28
CAV_2	2
6624	Right Middle Side Impact Sensing Module Signal
6624_OG/VT	6624 OG/VT
CAV_30	30
CAV_1	1
6625	Right Middle Side Impact Sensing Module Low Reference
6625_BK/OG	6625 BK/OG
CAV_29	29
CAV_2	2
3021	Steering Wheel Module Stage 1 High Control
3021_OG/VT	3021 OG/VT
3020	Steering Wheel Module Stage 1 Low

	Control
3020_BN/OG	3020 BN/OG
CAV_2	2
CAV_3	3
3021_TN	3021 TN
3020_BN	3020 BN
CAV_2	2
3050	Ground
3050_BN	3050 BN
CAV_1	1
CONN_X3	X3
3027	Passenger IP Module Stage 2 High Control
3027_GY/OG	3027 GY/OG
CAV_8	8
3027_GY	3027 GY
CAV_1	1
CONN_X2	X2
3026	Passenger IP Module Stage 2 Low Control
3026_OG/VT	3026 OG/VT
CAV_7	7
3026_PU	3026 PU
CAV_2	2
3025	Passenger IP Module Stage 1 High Control
3025_YE/OG	3025 YE/OG
CAV_5	5
3025_YE	3025 YE
CAV_1	1
CONN_X1	X1
3024	Passenger IP Module Stage 1 Low Control
3024_OG/WH	3024 OG/WH
CAV_6	6
3024_OG	3024 OG
CAV_2	2
5019	Left Front Head Curtain Module High Control
CAV_1	1
CAV_17	17
CONN_X2	X2

5020	Left Front Head Curtain Module Low Control
CAV_2	2
CAV 18	18
5021	Right Front Head Curtain Module High Control
5021_OG/BU	5021 OG/BU
CAV_53	53
5021_OG/GY	5021 OG/GY
CAV_1	1
5022	Right Front Head Curtain Module Low Control
5022_WH/BK	5022 WH/BK
CAV_54	54
5022_WH/OG	5022 WH/OG
CAV_2	2
5019_OG/GN	5019 OG/GN
5020_VT/OG	5020 VT/OG
5019_OG/GN	5019 OG/GN
5020 VT/OG	5020 VT/OG
CAV_4	4
CAV 1	1
CONN_X2	X2
CAV_1	1
CONN_X1	X1
3022	Steering Wheel Module Stage 2 Low Control
3022 PK	3022 PK
CAV_2	2
3023	Steering Wheel Module Stage 2 High Control
3023_WH	3023 WH
CAV_1	1
CONN_X2	X2
3022_WH/OG	3022 WH/OG
CAV 4	4
CAV_2	2
3023 OG/D-GN	3023 OG/D-GN
CAV_3	3
CONN_X2	X2
CAV_1	1
CONN_X1	X1

EARLYPRODUCTION	
X203	X203
CAV_4	4
CAV_5	5
CAV_1	1
CAV_2	2
X335	X335
CAV_A	A
CAV_B	B
X345	X345
CAV_A	A
CAV_B	B
G204	G204
TWIST_5.5	5.5
TWIST_5.5	5.5
TWIST_5.5	5.5
TWIST_5.5	5.5
TWIST_5.5	5.5
TWIST_5.5	5.5
TWIST_5.5	5.5
TWIST_5.5	5.5
TWIST_5.5	5.5
TWIST_5.5	5.5
TWIST_5.5	5.5
TWIST_5.5	5.5
TWIST_5.5	5.5
TWIST_5.5	5.5
TWIST_5.5	5.5
TWIST_5.5	5.5
TWIST_5.5	5.5
TWIST 5.5	5.5
TWIST_5.5	5.5
X203	X203
X335	X335
X345	X345
K36	
Seat_Belt_Schematics_REF	Seat Belt Schematics
B63LF	
B63RF	
X85	
F107	
F105L	
F105R	
B63LR	

F101	

Front Impact Sensors, Seat Belt Pretensioners, and Front Side Air Bags Wiring Schematics

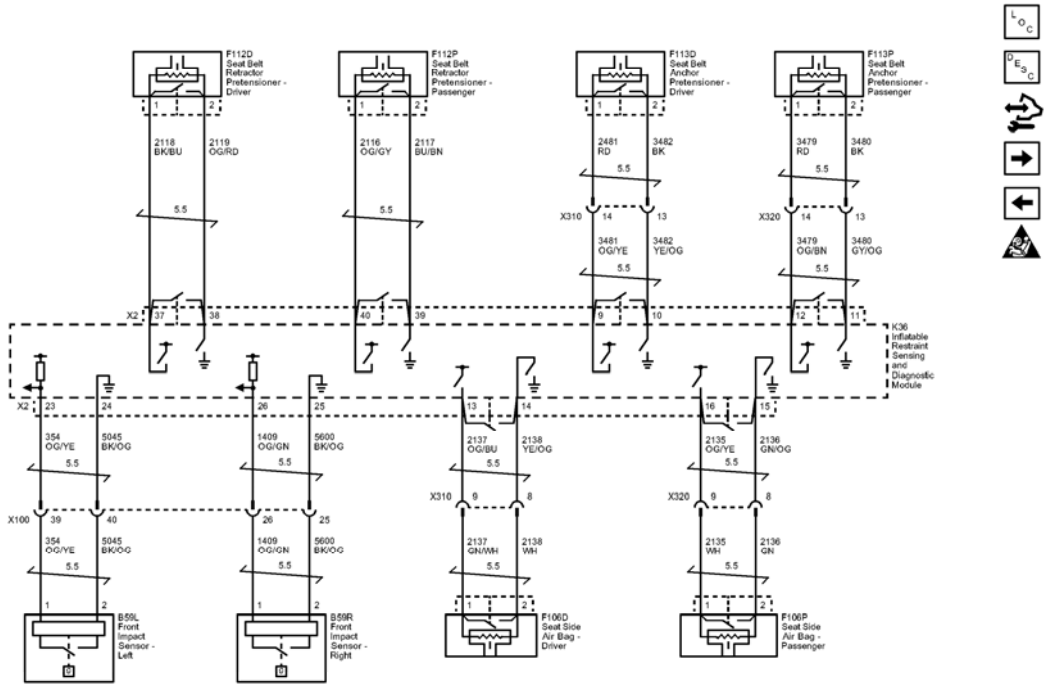

Fig. 3: Front Impact Sensors, Seat Belt Pretensioners, and Front Side Air Bags Wiring Schematics
Courtesy of GENERAL MOTORS COMPANY

Callout	Component Name
2118	Driver Seat Belt Pretensioner High Control
2118_BK/BU	2118 BK/BU
CAV_37	37
CONN X2	X2
CAV_1	1
2119	Driver Seat Belt Pretensioner Low Control
2119_OG/RD	2119 OG/RD
CAV_38	38
CAV_2	2
2116	Passenger Seat Belt Pretensioner High Control
2116_OG/GY	2116 OG/GY
CAV_40	40

CAV_1	1
2117	Passenger Seat Belt Pretensioner Low Control
2117_BU/BN	2117 BU/BN
CAV_39	39
CAV_2	2
2481	Passenger Heated Back Element Supply Voltage
2481_RD	2481 RD
CAV_1	1
3482	Driver Seat Belt Anchor Pretensioner Low Control
3482_BK	3482 BK
CAV_2	2
3481	Driver Seat Belt Anchor Pretensioner High Control
3481 OG/YE	3481 OG/YE
CAV_9	9
3482_YE/OG	3482 YE/OG
CAV_10	10
3479	Passenger Seat Belt Anchor Pretensioner High Control
3479 RD	3479 RD
CAV_1	1
3479 OG/BN	3479 OG/BN
CAV_12	12
3480	Passenger Seat Belt Anchor Pretensioner Low Control
3480_BK	3480 BK
CAV_2	2
3480_GY/OG	3480 GY/OG
CAV_11	11
354	Left Front Discriminating Sensor Signal
354_OG/YE	354 OG/YE
CAV_1	1
CAV_23	23
CONN_X2	X2
5045	Left Front Discriminating Sensor Low Reference
5045_BK/OG	5045 BK/OG
CAV_2	2
CAV_24	24
1409	Right Front Discriminating Sensor Signal
1409_OG/GN	1409 OG/GN
CAV_1	1
CAV_26	26

5600	Right Front Discriminating Sensor Low Reference
5600_BK/OG	5600 BK/OG
CAV_2	2
CAV_25	25
2137	Left Front Side Impact Module High Control
2137_OG/BU	2137 OG/BU
CAV_13	13
2137_GN/WH	2137 GN/WH
CAV_1	1
2138	Left Front Side Impact Module Low Control
2138_YE/OG	2138 YE/OG
CAV_14	14
2138 WH	2138 WH
CAV_2	2
2135	Right Front Side Impact Module High Control
2135_OG/YE	2135 OG/YE
CAV_16	16
2135_WH	2135 WH
CAV_1	1
2136	Right Front Side Impact Module Low Control
2136_GN/OG	2136 GN/OG
CAV_15	15
2136_GN	2136 GN
CAV_2	2
354_OG/YE	354 OG/YE
5045_BK/OG	5045 BK/OG
1409_OG/GN	1409 OG/GN
5600 BK/OG	5600 BK/OG
X100	X100
CAV 39	39
CAV_40	40
CAV_26	26
CAV_25	25
X310	X310
CAV_9	9
CAV_8	8
X320	X320
CAV_9	9
CAV_8	8
X320	X320
CAV_13	13
CAV_14	

	14
X310	X310
CAV_14	14
CAV_13	13
TWIST_5.5	5.5
TWIST_5.5	5.5
TWIST_5.5	5.5
TWIST_5.5	5.5
TWIST_5.5	5.5
TWIST_5.5	5.5
TWIST_5.5	5.5
TWIST_5.5	5.5
TWIST_5.5	5.5
TWIST 5.5	5.5
TWIST_5.5	5.5
TWIST_5.5	5.5
TWIST_5.5	5.5
TWIST_5.5	5.5
TWIST_5.5	5.5
X100	X100
X310	X310
X320	X320
X320	X320
X310	X310
K36	
F112D	
F112P	
B59L	
B59R	
F113D	
F113P	
F106D	Seat Side Air Bag - Driver
F106P	Seat Side Air Bag - Passenger

Rear Side and Knee Air Bags Wiring Schematics

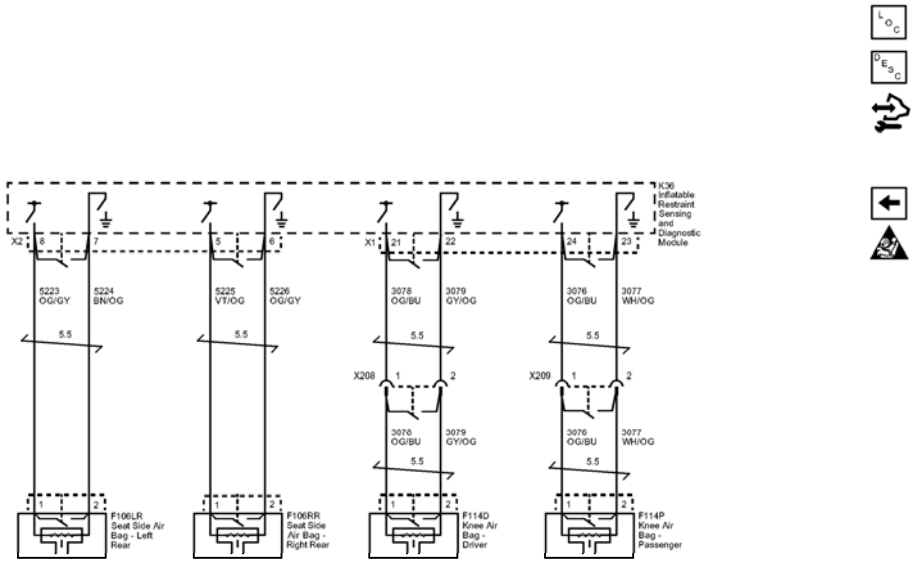

Fig. 4: Rear Side and Knee Air Bags Wiring Schematics
Courtesy of GENERAL MOTORS COMPANY

Callout	Component Name
5223	Left Rear Side Impact SIR Inflator Supply Voltage
5223 OG/GY	5223 OG/GY
CAV_1	1
CAV_8	8
CONN_X2	X2
5224	Left Rear Side Impact SIR Inflator Control
5224_BN/OG	5224 BN/OG
CAV_2	2
CAV_7	7
5225	Right Rear Side Impact SIR Inflator Supply Voltage
5225_VT/OG	5225 VT/OG
CAV_1	1
CAV_5	5
5226	Right Rear Side Impact SIR Inflator Control
5226_OG/GY	5226 OG/GY
CAV_2	2
CAV_6	6

3078	Driver Knee Module High Control
3078_OG/BU	3078 OG/BU
CAV_1	1
CAV_21	21
CONN_X1	X1
3079	Driver Knee Module Low Control
3079_GY/OG	3079 GY/OG
CAV_2	2
CAV_22	22
3076	Passenger Knee Module High Control
3076_OG/BU	3076 OG/BU
CAV_1	1
CAV 24	24
3077	Passenger Knee Module Low Control
3077_WH/OG	3077 WH/OG
CAV_2	2
CAV_23	23
3078_OG/BU	3078 OG/BU
3079_GY/OG	3079 GY/OG
3076_OG/BU	3076 OG/BU
3077_WH/OG	3077 WH/OG
X208	X208
CAV_1	1
CAV_2	2
X209	X209
CAV_2	2
CAV_1	1
TWIST 5.5	5.5
TWIST_5.5	5.5
TWIST 5.5	5.5
TWIST_5.5	5.5
TWIST_5.5	5.5
TWIST_5.5	5.5
X208	X208
X209	X209
K36	
F114D	
F114P	
F106LR	Seat Side Air Bag - Left Rear
F106RR	Seat Side Air Bag - Right Rear

COMPONENT LOCATOR

SIR IDENTIFICATION VIEWS

The SIR Identification Views shown below illustrate the approximate location of all SIR components available for the vehicle. This will assist in determining the appropriate SIR Disabling and Enabling for a given service procedure, refer to **SIR Disabling and Enabling**.

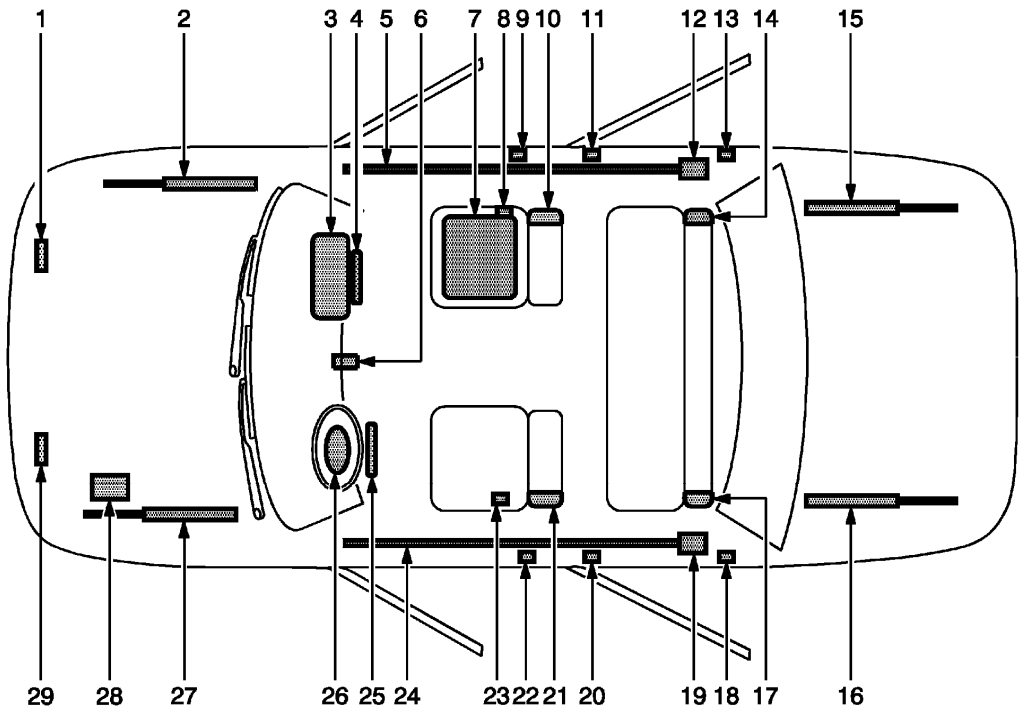

Fig. 5: SIR Identification Views
Courtesy of GENERAL MOTORS COMPANY

Callout	Component Name
1	Front Right Impact Sensor-Located under the hood on the right side of the vehicle
2	Front Hood Assist Rod-A gas shock located under the front hood on the passenger side
3	Instrument Panel Air Bag-Located at the top right under the instrument panel
4	Right Knee Air Bag-Located below the glove box in the I/P
5	Roof Rail Air Bag-Located under the headliner, extending from the passenger front windshield pillar to the passenger rear windshield pillar
6	Sensing and Diagnostic Module (SDM)-Located underneath the center stack

7	Passenger Presence System (PPS)-Located on the passenger front seat underneath the seat bottom trim
8	Seat Belt Anchor Pretensioner-Located on the outboard side of the passengers seat
9	Right Front Side Impact Sensor (SIS)-Located at the B-pillar underneath the door sill
10	Passenger Seat Side Air Bag-Located on the seat back of passenger seat
11	Seat Belt Retractor Pretensioner-Located under the trim near the bottom of the center pillar on the passenger side of vehicle
12	Inflator Module for Roof Rail Air Bag-Located behind the garnish molding on the upper rear pillar
13	Right Rear Side Impact Sensor (SIS)-Located at the C-pillar underneath the door sill
14	Right Rear Seat Side Air Bag-Located on the seat back bolster of the rear passenger seat
15	Rear Hood Assist Rod-A gas shock located under the rear truck lid on the passenger side
16	Rear Hood Assist Rod-A gas shock located under the rear truck lid on the driver side
17	Left Rear Seat Side Air Bag-Located on the seat back bolster of the rear passenger seat
18	Left Rear Side Impact Sensor (SIS)-Located at the C-pillar underneath the door sill
19	Inflator Module for Roof Rail Air Bag-Located behind garnish molding on the upper rear pillar
20	Seat Belt Retractor Pretensioner-Located under the trim near the bottom of the center pillar on the driver side of vehicle
21	Driver Seat Side Air Bag-Located on the seat back of driver seat
22	Left Front Side Impact Sensor (SIS)-Located at the B-pillar underneath the door sill
23	Seat Belt Anchor Pretensioner-Located on the outboard side of the drivers seat
24	Roof Rail Air Bag-Located under the headliner, extending from the driver front windshield pillar to the driver rear windshield pillar
25	Left Knee Air Bag-Located below the steering wheel in the I/P
26	Steering Wheel Air Bag-Located on the steering wheel
27	Front Hood Assist Rod-A gas shock located under the front hood on the driver side
28	Vehicle Battery-Located under the hood on the left side
29	Left Front Impact Sensor-Located under the hood on the left side of the vehicle

DIAGNOSTIC INFORMATION AND PROCEDURES

DIAGNOSTIC CODE INDEX

DIAGNOSTIC CODE INDEX

DTC	Description
DTC B0012 or B0013	DTC B0012 01 Driver Steering Wheel Air Bag Deployment Loop Stage 1 Short to Battery DTC B0012 02 Driver Steering Wheel Air Bag Deployment Loop Stage 1 Short to Ground DTC B0012 04 Driver Steering Wheel Air Bag Deployment Loop Stage 1 Open DTC B0012 0D Driver Steering Wheel Air Bag Deployment Loop Stage 1 High Resistance DTC B0012 0E Driver Steering Wheel Air Bag Deployment Loop Stage 1 Low Resistance
DTC B0014, B0021, B0031, or B0038	DTC B0014 01 Driver Seat Side Air Bag Deployment Loop Short to Battery DTC B0014 02 Driver Seat Side Air Bag Deployment Loop Short to Ground DTC B0014 04 Driver Seat Side Air Bag Deployment Loop Open DTC B0014 0D Driver Seat Side Air Bag Deployment Loop High Resistance DTC B0014 0E Driver Seat Side Air Bag Deployment Loop Low Resistance DTC B0021 01 Passenger Seat Side Air Bag Deployment Loop Short to Battery DTC B0021 02 Passenger Seat Side Air Bag Deployment Loop Short to Ground DTC B0021 04 Passenger Seat Side Air Bag Deployment Loop Open DTC B0021 0D Passenger Seat Side Air Bag Deployment Loop High Resistance DTC B0021 0E Passenger Seat Side Air Bag Deployment Loop Low Resistance DTC B0031 01 Left Rear Seat Side Air Bag Deployment Loop Short to Battery DTC B0031 02 Left Rear Seat Side Air Bag Deployment Loop Short to Ground DTC B0031 04 Left Rear Seat Side Air Bag Deployment Loop Open DTC B0031 0D Left Rear Seat Side Air Bag Deployment Loop High Resistance DTC B0031 0E Left Rear Seat Side Air Bag Deployment Loop Low Resistance DTC B0038 01 Right Rear Seat Side Air Bag Deployment Loop Short to Battery DTC B0038 02 Right Rear Seat Side Air Bag Deployment Loop Short to Ground

	DTC B0038 04 Right Rear Seat Side Air Bag Deployment Loop Open DTC B0038 0D Right Rear Seat Side Air Bag Deployment Loop High Resistance DTC B0038 0E Right Rear Seat Side Air Bag Deployment Loop Low Resistance
DTC B0015, B001A, B001B, or B0022	DTC B0015 01 Driver Seat Belt Retractor Pretensioner Deployment Loop Short to Battery DTC B0015 02 Driver Seat Belt Retractor Pretensioner Deployment Loop Short to Ground DTC B0015 04 Driver Seat Belt Retractor Pretensioner Deployment Loop Open DTC B0015 0D Driver Seat Belt Retractor Pretensioner Deployment Loop High Resistance DTC B0015 0E Driver Seat Belt Retractor Pretensioner Deployment Loop Low Resistance DTC B001A 01 Driver Seat Belt Anchor Pretensioner Deployment Loop Short to Battery DTC B001A 02 Driver Seat Belt Anchor Pretensioner Deployment Loop Short to Ground DTC B001A 04 Driver Seat Belt Anchor Pretensioner Deployment Loop Open DTC B001A 0D Driver Seat Belt Anchor Pretensioner Deployment Loop High Resistance DTC B001A 0E Driver Seat Belt Anchor Pretensioner Deployment Loop Low Resistance DTC B001B 01 Passenger Seat Belt Anchor Pretensioner Deployment Loop Short to Battery DTC B001B 02 Passenger Seat Belt Anchor Pretensioner Deployment Loop Short to Ground DTC B001B 04 Passenger Seat Belt Anchor Pretensioner Deployment Loop Open DTC B001B 0D Passenger Seat Belt Anchor Pretensioner Deployment Loop High Resistance DTC B001B 0E Passenger Seat Belt Anchor Pretensioner Deployment Loop Low Resistance DTC B0022 01 Passenger Seat Belt Retractor Pretensioner Deployment Loop Short to Battery DTC B0022 02 Passenger Seat Belt Retractor Pretensioner Deployment Loop Short to Ground DTC B0022 04 Passenger Seat Belt Retractor Pretensioner Deployment Loop Open Circuit DTC B0022 0D Passenger Seat Belt Retractor Pretensioner Deployment Loop High Resistance DTC B0022 0E Passenger Seat Belt Retractor Pretensioner Deployment Loop Low Resistance
	DTC B0016 01 Left Roof Rail Air Bag Deployment Loop Short to Battery

DTC B0016, B0018, B0023, or B0025	DTC B0016 02 Left Roof Rail Air Bag Deployment Loop Short to Ground DTC B0016 04 Left Roof Rail Air Bag Deployment Loop Open DTC B0016 0D Left Roof Rail Air Bag Deployment Loop High Resistance DTC B0016 0E Left Roof Rail Air Bag Deployment Loop Low Resistance DTC B0023 01 Right Roof Rail Air Bag Deployment Loop Short to Battery DTC B0023 02 Right Roof Rail Air Bag Deployment Loop Short to Ground DTC B0023 04 Right Roof Rail Air Bag Deployment Loop Open DTC B0023 0D Right Roof Rail Air Bag Deployment Loop High Resistance DTC B0023 0E Right Roof Rail Air Bag Deployment Loop Low Resistance
DTC B0017 or B0024	DTC B0017 01 Driver Knee Air Bag Deployment Loop Short to Battery DTC B0017 02 Driver Knee Air Bag Deployment Loop Short to Ground DTC B0017 04 Driver Knee Air Bag Deployment Loop Open DTC B0017 0D Driver Knee Air Bag Deployment Loop High Resistance DTC B0017 0E Driver Knee Air Bag Deployment Loop Low Resistance DTC B0024 01 Passenger Knee Air Bag Deployment Loop Short to Battery DTC B0024 02 Passenger Knee Air Bag Deployment Loop Short to Battery DTC B0024 04 Passenger Knee Air Bag Deployment Loop Open DTC B0024 0D Passenger Knee Air Bag Deployment Loop High Resistance DTC B0024 0E Passenger Knee Air Bag Deployment Loop Low Resistance
	DTC B0019 01 Passenger Instrument Panel Air Bag Deployment Loop Stage 1 Short to Battery DTC B0019 02 Passenger Instrument Panel Air Bag Deployment Loop Stage 1 Short to Ground DTC B0019 04 Passenger Instrument Panel Air Bag Deployment Loop Stage 1 Open DTC B0019 0D Passenger Instrument Panel Air Bag Deployment Loop Stage 1 High Resistance DTC B0019 0E Passenger Instrument Panel Air Bag Deployment Loop Stage 1 Low Resistance

DTC B0019 or B0020	DTC B0020 01 Passenger Instrument Panel Air Bag Deployment Loop Stage 2 Short to Battery DTC B0020 02 Passenger Instrument Panel Air Bag Deployment Loop Stage 2 Short to Ground DTC B0020 04 Passenger Instrument Panel Air Bag Deployment Loop Stage 2 Open DTC B0020 0D Passenger Instrument Panel Air Bag Deployment Loop Stage 2 High Resistance DTC B0020 0E Passenger Instrument Panel Air Bag Deployment Loop Stage 2 Low Resistance
DTC B0052	DTC B0052 00 Deployment Commanded DTC B0052 56 Deployment Commanded Too Many Transitions
DTC B0074	DTC B0074 0D Passenger Presence Sensor High Resistance DTC B0074 0E Passenger Presence Sensor Low Resistance
DTC B0081 (Inflatable Restraint Sensing and Diagnostic Module)	DTC B0081 00 Passenger Presence Module Malfunction DTC B0081 3A Passenger Presence Module Incorrect Component Installed DTC B0081 71 Passenger Presence Module Invalid Serial Data Received
DTC B0081 (Passenger Presence Module)	DTC B0081 11 Passenger Presence Module High Input DTC B0081 4B Calibration Not Programmed
DTC B0083 or B0084	DTC B0083 02 Left Front Impact Sensor Short to Ground DTC B0083 05 Left Front Impact Sensor High Voltage/Open DTC B0083 39 Left Front Impact Sensor Internal Electronic Failure DTC B0083 3A Left Front Impact Sensor Incorrect Component Installed DTC B0083 71 Left Front Impact Sensor Invalid Serial Data Received DTC B0084 02 Right Front Impact Sensor Short to Ground DTC B0084 05 Right Front Impact Sensor High Voltage/Open DTC B0084 39 Right Front Impact Sensor Internal Electronic Failure DTC B0084 3A Right Front Impact Sensor Incorrect Component Installed DTC B0084 71 Right Front Impact Sensor Invalid Serial Data Received
	DTC B0085 02 Left Front Side Impact Sensor Short

DTC B0085 or B0088	to Ground DTC B0085 05 Left Front Side Impact Sensor High Voltage/Open DTC B0085 39 Left Front Side Impact Sensor Internal Malfunction DTC B0085 3A Left Front Side Impact Sensor Incorrect Component Installed DTC B0085 71 Left Front Side Impact Sensor Invalid Data DTC B0088 02 Right Rear Side Impact Sensor Short to Ground DTC B0088 05 Right Rear Side Impact Sensor High Voltage/Open DTC B0088 39 Right Rear Side Impact Sensor Internal Malfunction DTC B0088 3A Right Rear Side Impact Sensor Incorrect Component Installed DTC B0088 71 Right Rear Side Impact Sensor Invalid Data
DTC B0086 or B0087	DTC B0086 02 Right Front Side Impact Sensor Short to Ground DTC B0086 05 Right Front Side Impact Sensor High Voltage/Open DTC B0086 39 Right Front Side Impact Sensor Internal Malfunction DTC B0086 3A Right Front Side Impact Sensor Incorrect Component Installed DTC B0086 71 Right Front Side Impact Sensor Invalid Data DTC B0087 02 Left Rear Side Impact Sensor Short to Ground DTC B0087 05 Left Rear Side Impact Sensor High Voltage/Open DTC B0087 39 Left Rear Side Impact Sensor Internal Malfunction DTC B0087 3A Left Rear Side Impact Sensor Incorrect Component Installed DTC B0087 71 Left Rear Side Impact Sensor Invalid Data
DTC B067F or B0680	DTC B067F 01 Passenger Air Bag On Indicator Circuit Short to Battery DTC B067F 02 Passenger Air Bag On Indicator Circuit Short to Ground DTC B067F 04 Passenger Air Bag On Indicator Circuit Open DTC B0680 01 Passenger Air Bag Off Indicator Circuit Short to Battery DTC B0680 02 Passenger Air Bag Off Indicator

	Circuit Short to Ground DTC B0680 04 Passenger Air Bag Off Indicator Circuit Open
DTC B1001 (Passenger Presence System)	DTC B1001 00 Option Configuration Error
DTC B1001 (Inflatable Restraint Sensing and Diagnostic Module)	DTC B1001 00 Option Configuration
DTC B1019	DTC B1019 00 System Configuration Error

DTC B0012 OR B0013

Diagnostic Instructions

- Perform the **Diagnostic System Check - Vehicle** prior to using this diagnostic procedure.
- Review **Strategy Based Diagnosis** for an overview of the diagnostic approach.
- **Diagnostic Procedure Instructions** provides an overview of each diagnostic category

DTC Descriptors

DTC B0012 01

Driver Steering Wheel Air Bag Deployment Loop Stage 1 Short to Battery

DTC B0012 02

Driver Steering Wheel Air Bag Deployment Loop Stage 1 Short to Ground

DTC B0012 04

Driver Steering Wheel Air Bag Deployment Loop Stage 1 Open

DTC B0012 0D

Driver Steering Wheel Air Bag Deployment Loop Stage 1 High Resistance

DTC B0012 0E

Driver Steering Wheel Air Bag Deployment Loop Stage 1 Low Resistance

Diagnostic Fault Information

Circuit	Short to Ground	High Resistance	Open	Short to Voltage	Signal Performance
High Control	B0012 02, B0012 0E	B0012 0D	B0012 04, B0012 0D	B0012 01	-
Low Control	B0012 02, B0012 0E	B0012 0D	B0012 04, B0012 0D	B0012 01	-

Circuit/System Description

During a frontal crash of sufficient force the Inflatable Restraint Sensing and Diagnostic Module (SDM) will allow current to flow through the deployment loop in order to deploy the driver steering wheel air bag. The Inflatable Restraint Sensing and Diagnostic Module performs continuous diagnostic tests on the deployment loops to check for proper circuit continuity and for shorts to ground or voltage. There is a shorting bar used within the driver steering wheel air bag coil connector which will short together the driver steering wheel air bag stage high circuit and driver steering wheel air bag stage low circuit when the connector is disconnected. This will help to prevent unwanted deployment of the steering wheel air bag during servicing.

Conditions for Running the DTC

Ignition voltage is between 9-16 V.

Conditions for Setting the DTC

B0012 01 stage 1

The driver steering wheel air bag deployment loop is shorted to voltage for 2 seconds.

B0012 02 stage 1

The driver steering wheel air bag deployment loop is shorted to ground for 2 seconds.

B0012 04 stage 1

The driver steering wheel air bag deployment loop is open for 2 seconds.

B0012 0D stage 1

The driver steering wheel air bag deployment loop resistance is greater than 4.4 ohms for 2 seconds.

B0012 0E stage 1

The driver steering wheel air bag deployment loop resistance is less than 1.7 ohms for 2 seconds.

Action Taken When the DTC Sets

- The Inflatable Restraint Sensing and Diagnostic Module requests the instrument cluster to illuminate the AIR BAG indicator.
- The Inflatable Restraint Sensing and Diagnostic Module will store a DTC, however if an event occurs the system will still attempt deployment.

Conditions for Clearing the DTC

- The condition for setting the DTC is no longer exists.
- A history DTC will clear once 100 malfunction-free ignition cycles have occurred.

Diagnostic Aid

NOTE: The following diagnostic aids apply for both current and history DTCs.

A worn steering wheel air bag coil can cause a repeated history DTC to set. To verify this condition, turn the steering wheel 360 degrees in one direction then back 360 degrees in the other direction, multiple times, while viewing the scan tool Deployment Loop Resistance 1 and 2 parameters.

An incorrectly installed connector position assurance (CPA) or incorrectly seated connector can cause a shorting bar to short both control circuits together. Check the connectors and CPAs if a DTC with symptom byte 02 or 0E is set, to ensure the shorting bars are not causing the circuits to be shorted together. Shorting bars are used in the locations listed below:

- Steering wheel air bag assembly
- Steering wheel air bag coil assembly
- Inline harness connectors
- Harness side of the Inflatable Restraint Sensing and Diagnostic Module connector

Terminal fretting or incorrectly seated connector can cause an open/high resistance condition. Check the circuit terminals for fretting or incorrectly seated connector if a DTC with symptom byte 04 or 0D is set.

Reference Information

Schematic Reference

SIR Schematics

Connector End View Reference

COMPONENT CONNECTOR END VIEWS - INDEX

Description and Operation

Supplemental Inflatable Restraint System Description and Operation

Electrical Information Reference

- **Circuit Testing**
- **Testing for Intermittent Conditions and Poor Connections**
- **Wiring Repairs**
- **Connector Repairs**

Scan Tool Reference

Control Module References for scan tool information

Special Tools

EL-38125-580 Terminal Release Tool Kit

Circuit/System Verification

NOTE: **Refer to SIR Service Precautions.**

Inspect all terminals for damage or corrosion when disconnecting connectors. Damage or corrosion in the following requires repair or replacement of the affected component/connector.

- **Steering Wheel Air bag**
- **Steering wheel air bag coil**
- **Inflatable Restraint Sensing and Diagnostic Module**
- **Air bag wiring harness connector**
- **Inflatable Restraint Sensing and Diagnostic Module wiring harness connector**

NOTE: **The connector and connector position assurance (CPA) may seat independent of each other. Both the connector and CPA should seat with an audible and/or tactile click. The CPA isolates the shorting-bars within the connector allowing the deployment circuit to operate properly.**

If the condition is intermittent or cannot be duplicated, disconnect the connectors and add dielectric grease / lubricant (Nyogel 760G or equivalent, meeting GM specification 9986087). This procedure will correct the high resistance condition due to terminal fretting corrosion.

1. Verify the appropriate scan tool Deployment Loop Resistance parameter stays consistently between 2.1 and 4.0 ohms without any spikes or dropouts while turning the steering wheel 360 degrees in one direction then back 360 degrees in the other direction.
   - **If less than 2.1 or greater than 4.0 ohms**

     Refer to Circuit/System Testing below.

   - **If there are spikes or dropouts**

     Replace the X85 Steering Wheel Air Bag Coil.

   - **If within 2.1 and 4.0 ohms without any spikes or dropouts**
2. Verify DTC B0012 is only set as a history DTC.
   - **If the DTC is set as current**

     Refer to Circuit/System Testing below.

- **If the DTC is set as history**

3. Verify the scan tool Deployment Loop Resistance parameter stays consistently between 2.1 and 4.0 ohms without any drop outs or spikes while moving the harness near each connector listed below.
   - X85 Steering Wheel Air Bag Coil
   - F107 Steering Wheel Air Bag
   - Any inline harness connector
   - K36 Inflatable Restraint Sensing and Diagnostic Module
   - **If the reading is erratic while moving the harness, perform the following**
   - Inspect each connector terminal for damage or corrosion and repair as necessary.
   - Apply dielectric grease / lubricant (Nyogel 760G or equivalent, meeting GM specification 9986087) to each connector terminal.
   - Insure each connector and CPA is correctly seated.
   - **If within 2.1 and 4.0 ohms without any spikes or dropouts**
4. All OK

Circuit/System Testing

1. Ignition OFF, disconnect the scan tool and disconnect the F107 Steering Wheel Air Bag harness connector. It may take up to 2 minutes for all vehicle systems to power down.
2. Test for greater than 25 ohms between the control circuit terminal 1 and the control circuit terminal 2.
   - **If 25 ohms or less**
   1. Disconnect the X1 harness connector at the K36 Inflatable Restraint Sensing and Diagnostic Module.

      NOTE: Some connectors may be equipped with shorting bars as a safety component to prevent accidental inflator deployment. When testing on a connector with shorting bars, the shorting bars must be disabled to ensure accurate test results. Insert an appropriate pick from EL-38125-580 and depress the shorting bars above the appropriate terminals. This will lift the shorting bar from the terminal and allow accurate test results. Take care not to damage the connector, shorting bar, or terminal when depressing the shorting bar.

   2. Test for infinite resistance between the two control circuits.
      - If less than infinite resistance, repair the short between the two circuits.
      - If infinite resistance, replace the K36 Inflatable Restraint Sensing and Diagnostic Module.
   - **If greater than 25 ohms**
3. Ignition ON.
4. Test for less than 11 V between the control circuit terminals listed below and ground:
   - Control circuit terminal 1
   - Control circuit terminal 2

- **If 11 V or greater**

1. Ignition OFF, disconnect the X1 harness connector at the K36 Inflatable Restraint Sensing and Diagnostic Module, ignition ON.
2. Test for less than 1 V between the control circuit and ground.
   - If 1 V or greater, repair the short to voltage on the circuit.
   - If less than 1 V, replace the K36 Inflatable Restraint Sensing and Diagnostic Module.

- **If less than 11 V**

5. Ignition OFF.
6. Test for greater than 25 ohms between the control circuit terminals listed below and ground:
   - Control circuit terminal 1
   - Control circuit terminal 2
   - **If 25 ohms or less**

1. Disconnect the X1 harness connector at the K36 Inflatable Restraint Sensing and Diagnostic Module.
2. Test for infinite resistance between the control circuit and ground.
   - If less than infinite resistance, repair the short to ground on the circuit.
   - If infinite resistance, replace the K36 Inflatable Restraint Sensing and Diagnostic Module.

- **If greater than 25 ohms**

7. Ignition OFF, install a 3 A fused jumper wire between the control circuit terminal 1 and the control circuit terminal 2, ignition ON.
8. Verify the scan tool Deployment Loop Resistance parameter is consistently less than 2 ohms while turning the steering wheel 360 degrees in one direction then back 360 degrees in the other direction.
   - **If the reading is erratic while turning the steering wheel**

     Replace the X85 Steering Wheel Air Bag Coil.

   - **If 2 ohms or greater**

1. Ignition OFF, disconnect the X1 harness connector at the K36 Inflatable Restraint Sensing and Diagnostic Module.
2. Test for less than 2 ohms in the X85 Steering Wheel Air Bag Coil and each control circuit end to end.
   - If 2 ohms or greater, replace the coil or repair the open/high resistance in the circuit.
   - If less than 2 ohms, replace the K36 Inflatable Restraint Sensing and Diagnostic Module.

- **If less than 2 ohms**

9. Ignition OFF, connect the harness connector at the F107 Steering Wheel Air Bag, press in the CPA (if equipped) until an audible and/or tactile click is heard.
10. Ignition ON, clear DTCs. Operate the vehicle within the Conditions for Running the DTC.
11. Verify DTC B0012 or B0013 is not set.
    - **If DTC B0012 or B0013 is set**

Replace the F107 Steering Wheel Air Bag.

- **If DTC B0012 or B0013 is not set**

12. All OK.

Repair Instructions

Perform the **Diagnostic Repair Verification** after completing the repair.

- **Steering Wheel Airbag Coil Replacement**
- **Airbag Steering Wheel Module Replacement**
- **SIR/SRS Wiring Repairs**
- **Control Module References** for Inflatable Restraint Sensing and Diagnostic Module replacement, programming and setup

DTC B0014, B0021, B0031, OR B0038

Diagnostic Instructions

- Perform the **Diagnostic System Check - Vehicle** prior to using this diagnostic procedure.
- Review **Strategy Based Diagnosis** for an overview of the diagnostic approach.
- **Diagnostic Procedure Instructions** provides an overview of each diagnostic category.

DTC Descriptors

DTC B0014 01

Driver Seat Side Air Bag Deployment Loop Short to Battery

DTC B0014 02

Driver Seat Side Air Bag Deployment Loop Short to Ground

DTC B0014 04

Driver Seat Side Air Bag Deployment Loop Open

DTC B0014 0D

Driver Seat Side Air Bag Deployment Loop High Resistance

DTC B0014 0E

Driver Seat Side Air Bag Deployment Loop Low Resistance

DTC B0021 01

Passenger Seat Side Air Bag Deployment Loop Short to Battery

DTC B0021 02

Passenger Seat Side Air Bag Deployment Loop Short to Ground

DTC B0021 04

Passenger Seat Side Air Bag Deployment Loop Open

DTC B0021 0D

Passenger Seat Side Air Bag Deployment Loop High Resistance

DTC B0021 0E

Passenger Seat Side Air Bag Deployment Loop Low Resistance

DTC B0031 01

Left Rear Seat Side Air Bag Deployment Loop Short to Battery

DTC B0031 02

Left Rear Seat Side Air Bag Deployment Loop Short to Ground

DTC B0031 04

Left Rear Seat Side Air Bag Deployment Loop Open

DTC B0031 0D

Left Rear Seat Side Air Bag Deployment Loop High Resistance

DTC B0031 0E

Left Rear Seat Side Air Bag Deployment Loop Low Resistance

DTC B0038 01

Right Rear Seat Side Air Bag Deployment Loop Short to Battery

DTC B0038 02

Right Rear Seat Side Air Bag Deployment Loop Short to Ground

DTC B0038 04

Right Rear Seat Side Air Bag Deployment Loop Open

DTC B0038 0D

Right Rear Seat Side Air Bag Deployment Loop High Resistance

DTC B0038 0E

Right Rear Seat Side Air Bag Deployment Loop Low Resistance

Diagnostic Fault Information

Circuit	Short to Ground	High Resistance	Open	Short to Voltage	Signal Performance
Left Front Seat Side Air Bag High Control	B0014 02, B0014 0E	B0014 0D	B0014 04, B0014 0D	B0014 01	-
Left Front Seat Side Air Bag Low Control	B0014 02, B0014 0E	B0014 0D	B0014 04, B0014 0D	B0014 01	-
Right Front Seat Side Air Bag High Control	B0021 02, B0021 0E	B0021 0D	B0021 04, B0021 0D	B0021 01	-
Right Front Seat Side Air Bag Low Control	B0021 02, B0021 0E	B0021 0D	B0021 04, B0021 0D	B0021 01	-
Left Rear Seat Side Air Bag High Control	B0031 02, B0031 0E	B0031 0D	B0031 04, B0031 0D	B0031 01	-
Left Rear Seat Side Air Bag Low Control	B0031 02, B0031 0E	B0031 0D	B0031 04, B0031 0D	B0031 01	-
Right Rear Seat Side Air Bag High Control	B0038 02, B0038 0E	B0038 0D	B0038 04, B0038 0D	B0038 01	-
Right Rear Seat Side Air Bag Low Control	B0038 02, B0038 0E	B0038 0D	B0038 04, B0038 0D	B0038 01	-

Circuit/System Description

During a side or frontal crash of sufficient force, the inflatable restraint sensing and diagnostic module (SDM) will allow current to flow through the deployment loop in order to deploy an air bag. There are 2 shorting bars used within the connector that will short the control circuits together when the connector is disconnected. This will help to prevent unwanted deployment of the air bag or retractor pretensioner during servicing.

Conditions for Running the DTC

Ignition voltage is between 9-16 V.

Conditions for Setting the DTC

B0014 01, B0021 01, B0031 01, B0038 01

The air bag control circuit is shorted to voltage for 2 seconds.

B0014 02, B0021 02, B0031 02, B0038 02

The air bag control circuit is shorted to ground for 2 seconds.

B0014 04, B0021 04, B0031 04, B0038 04

The air bag control circuit is open for 2 seconds.

B0014 0D, B0021 0D, B0031 0D, B0038 0D

The air bag deployment loop resistance is greater than 4.2 ohms for 2 seconds.

B0014 0E, B0021 0E, B0031 0E, B0038 0E

The air bag deployment loop resistance is less than 1.4 ohms for 2 seconds.

Action Taken When the DTC Sets

- The inflatable restraint sensing and diagnostic module requests the instrument cluster to illuminate the AIR BAG indicator.
- The inflatable restraint sensing and diagnostic module will store a DTC, however if an event occurs the system will still attempt deployments.

Conditions for Clearing the DTC

- The condition for setting the DTC no longer exists.
- A history DTC will clear once 100 malfunction-free ignition cycles have occurred.

Diagnostic Aid

NOTE: The following diagnostic aids apply for both current and history DTCs.

An incorrectly installed connector position assurance (CPA) or incorrectly seated connector can cause a shorting bar to short both control circuits together. Check the connectors and CPAs if a DTC with symptom byte 02 or 0E is set, to ensure the shorting bars are not causing the circuits to be shorted together. Shorting bars are used in the locations listed below:

- Front and rear seat side air bags
- Left and right roof rail air bags
- Inline harness connectors
- Harness side of the inflatable restraint sensing and diagnostic module connector

Terminal fretting or incorrectly seated connector can cause an open/high resistance condition. Check the circuit terminals for fretting or incorrectly seated connector if a DTC with symptom byte 04 or 0D is set. DTCs of

deployment loops which are in the seat can occur because of stress or damage to the harness due to seat movement. Move the seat to the full extent of travel while using the scan tool to observe deployment type loop parameters.

Reference Information

Schematic Reference

SIR Schematics

Connector End View Reference

COMPONENT CONNECTOR END VIEWS - INDEX

Description and Operation

Supplemental Inflatable Restraint System Description and Operation

Electrical Information Reference

- **Circuit Testing**
- **Testing for Intermittent Conditions and Poor Connections**
- **Wiring Repairs**
- **Connector Repairs**

Scan Tool Reference

Control Module References for scan tool information

Special Tools

EL-38125-580 Terminal Release Tool Kit

Circuit/System Verification

NOTE:

- **Refer to SIR Service Precautions.**
- **Inspect all terminals for damage or corrosion when disconnecting connectors. Damage or corrosion in the following requires repair or replacement of the affected component/connector.**
  - **Seat side air bag**
  - **Inflatable restraint sensing and diagnostic module**
  - **All wiring harness connectors**
  - **Inflatable restraint sensing and diagnostic module wiring harness connector**

- **The connector and connector position assurance (CPA) may seat independent of each other. Both the connector and CPA should seat with an audible and/or tactile click. The CPA isolates the shorting-bars within the connector allowing the deployment circuit to operate properly.**
- **If the condition is intermittent or cannot be duplicated, disconnect the connectors and add dielectric grease/lubricant (Nyogel 760G or equivalent, meeting GM specification 9986087). This procedure will correct the high resistance condition due to terminal fretting corrosion.**

1. Verify the appropriate scan tool Deployment Loop Resistance parameters stay consistently between 2.1-4.0 ohms without any spikes or dropouts while moving the harness near each connector.
   - F106 Seat Side Air Bag
   - Any inline harness connector
   - K36 Inflatable Restraint Sensing and Diagnostic Module
   - **If less than 2.1 ohms or greater than 4.0 ohms**

     Refer to Circuit/System Testing below.

   - **If there are spikes or dropouts, perform the following:**
   - Inspect each connector terminal and harness for damage or corrosion and repair as necessary.
   - Apply dielectric grease/lubricant (Nyogel 760G or equivalent, meeting GM specification 9986087) to each connector terminal.
   - Ensure each connector and CPA is correctly seated.
   - **If between 2.1-4.0 ohms without any spikes or dropouts**
2. All OK

Circuit/System Testing

1. Ignition OFF, scan tool disconnected, disconnect the harness connector at the appropriate F106 Seat Side Air Bag.
2. Test for greater than 25 ohms between the control circuit terminals 1 and 2.
   - **If 25 ohms or less**
   1. Disconnect the X2 harness connector at the K36 Inflatable Restraint Sensing and Diagnostic Module.

      NOTE: Some connectors may be equipped with shorting bars as a safety component to prevent accidental deployment. When testing on a connector with shorting bars, the shorting bars must be disabled to ensure accurate test results. Insert an appropriate pick from EL-38125-580 and depress the shorting bars above the appropriate terminals. This will lift the shorting bar from the terminal and allow accurate test results. Take care not to damage the connector, shorting bar, or terminal when depressing the shorting bar.

2. Test for infinite resistance between the 2 control circuits.
    - If less than infinite resistance, repair the short between the 2 circuits.
    - If infinite resistance, replace the K36 Inflatable Restraint Sensing and Diagnostic Module.
- **If greater than 25 ohms**

3. Ignition ON.
4. Test for less than 11 V between each control circuit terminal listed below and ground:
    - Control circuit terminal 1
    - Control circuit terminal 2
    - **If 11 V or greater**
    1. Ignition OFF, disconnect the X2 harness connector at the K36 Inflatable Restraint Sensing and Diagnostic Module, ignition ON.
    2. Test for less than 1 V between the control circuit and ground.
        - If 1 V or greater, repair the short to voltage on the circuit.
        - If less than 1 V, replace the K36 Inflatable Restraint Sensing and Diagnostic Module.
    - **If less than 11 V**
5. Ignition OFF.
6. Test for greater than 25 ohms between each control circuit terminal listed below and ground:
    - Control circuit terminal 1
    - Control circuit terminal 2
    - **If 25 ohms or less**
    1. Disconnect the X2 harness connector at the K36 Inflatable Restraint Sensing and Diagnostic Module.
    2. Test for infinite resistance between the control circuit and ground.
        - If less than infinite resistance, repair the short to ground on the circuit.
        - If infinite resistance, replace the K36 Inflatable Restraint Sensing and Diagnostic Module.
    - **If greater than 25 ohms**
7. Install a 3 A fused jumper wire between the control circuit terminals 1 and 2, ignition ON.
8. Verify the appropriate scan tool Deployment Loop Resistance parameter is less than 2 ohms.
    - **If 2 ohms or greater**
    1. Ignition OFF, disconnect the X2 harness connector at the K36 Inflatable Restraint Sensing and Diagnostic Module.
    2. Test for less than 2 ohms in each control circuit end to end.
        - If 2 ohms or greater, repair the open/high resistance in the circuit.
        - If less than 2 ohms, replace the K36 Inflatable Restraint Sensing and Diagnostic Module.
    - **If less than 2 ohms**
9. Ignition OFF, connect the harness connector at the F106 Seat Side Air Bag, press in the CPA (if equipped) until an audible and/or tactile click is heard.
10. Ignition ON, clear DTCs. Operate the vehicle within the Conditions for Running the DTC.

11. Verify DTC B0014, B0021, B0031, or B0038 is not set.
    - **If DTC B0014, B0021, B0031, or B0038 is set**

      Test or replace the F106 Seat Side Air Bag.

    - **If DTC B0014, B0021, B0031, or B0038 is not set**
12. All OK.

Repair Instructions

Perform the **Diagnostic Repair Verification** after completing the repair.

- **Front Seat Outboard Seat Back Airbag Replacement**
- **Rear Seat Outboard Seat Back Airbag Replacement**
- **Control Module References** for inflatable restraint sensing and diagnostic module replacement, programming, and setup

DTC B0015, B001A, B001B, OR B0022

Diagnostic Instructions

- Perform the **Diagnostic System Check - Vehicle** prior to using this diagnostic procedure.
- Review **Strategy Based Diagnosis** for an overview of the diagnostic approach.
- **Diagnostic Procedure Instructions** provides an overview of each diagnostic category.

DTC Descriptors

DTC B0015 01

Driver Seat Belt Retractor Pretensioner Deployment Loop Short to Battery

DTC B0015 02

Driver Seat Belt Retractor Pretensioner Deployment Loop Short to Ground

DTC B0015 04

Driver Seat Belt Retractor Pretensioner Deployment Loop Open

DTC B0015 0D

Driver Seat Belt Retractor Pretensioner Deployment Loop High Resistance

DTC B0015 0E

Driver Seat Belt Retractor Pretensioner Deployment Loop Low Resistance

DTC B001A 01

Driver Seat Belt Anchor Pretensioner Deployment Loop Short to Battery

DTC B001A 02

Driver Seat Belt Anchor Pretensioner Deployment Loop Short to Ground

DTC B001A 04

Driver Seat Belt Anchor Pretensioner Deployment Loop Open

DTC B001A 0D

Driver Seat Belt Anchor Pretensioner Deployment Loop High Resistance

DTC B001A 0E

Driver Seat Belt Anchor Pretensioner Deployment Loop Low Resistance

DTC B001B 01

Passenger Seat Belt Anchor Pretensioner Deployment Loop Short to Battery

DTC B001B 02

Passenger Seat Belt Anchor Pretensioner Deployment Loop Short to Ground

DTC B001B 04

Passenger Seat Belt Anchor Pretensioner Deployment Loop Open

DTC B001B 0D

Passenger Seat Belt Anchor Pretensioner Deployment Loop High Resistance

DTC B001B 0E

Passenger Seat Belt Anchor Pretensioner Deployment Loop Low Resistance

DTC B0022 01

Passenger Seat Belt Retractor Pretensioner Deployment Loop Short to Battery

DTC B0022 02

Passenger Seat Belt Retractor Pretensioner Deployment Loop Short to Ground

DTC B0022 04

Passenger Seat Belt Retractor Pretensioner Deployment Loop Open Circuit

DTC B0022 0D

Passenger Seat Belt Retractor Pretensioner Deployment Loop High Resistance

DTC B0022 0E

Passenger Seat Belt Retractor Pretensioner Deployment Loop Low Resistance

Diagnostic Fault Information

Circuit	Short to Ground	High Resistance	Open	Short to Voltage	Signal Performance
Driver Seat Belt Retractor Pretensioner High Control	B0015 02, B0015 0E	B0015 0D	B0015 04, B0015 0D	B0015 01	-
Driver Seat Belt Retractor Pretensioner Low Control	B0015 02, B0015 0E	B0015 0D	B0015 04, B0015 0D	B0015 01	-
Driver Seat Belt Anchor Pretensioner Low Control	B001A 02, B001A 0E	B001A 0D	B001A 04	B001A 01	-
Driver Seat Belt Anchor Pretensioner High Control	B001A 02, B001A 0E	B001A 0D	B001A 04	B001A 01	-
Passenger Seat Belt Anchor Pretensioner Low Control	B001B 02, B001B 0E	B001B 0D	B001B 04	B001B 01	-
Passenger Seat Belt Anchor Pretensioner High Control	B001B 02, B001B 0E	B001B 0D	B001B 04	B001B 01	-
Passenger Seat Belt Retractor Pretensioner High Control	B0022 02, B0022 0E	B0022 0D	B0022 04, B0022 0D	B0022 01	-
Passenger Seat Belt Retractor Pretensioner Low Control	B0022 02, B0022 0E	B0022 0D	B0022 04, B0022 0D	B0022 01	-

Circuit/System Description

During a side or frontal crash of sufficient force the Inflatable Restraint Sensing and Diagnostic Module will allow current to flow through the deployment loop in order to deploy an air bag or pretensioner. There are 2 shorting bars which will short together control circuits, when the connector is disconnected. This will help to

prevent unwanted deployment of the air bag or pretensioner during servicing.

Conditions for Running the DTC

Ignition voltage is between 9-16 V.

Conditions for Setting the DTC

B0015 01, B001A 01, B001B 01, B0022 01

The pretensioner control circuit is shorted to voltage for 2 seconds.

B0015 02, B001A 02, B001B 02, B0022 02

The pretensioner control circuit is shorted to ground for 2 seconds.

B0015 04, B001A 04, B001B 04, B0022 04

The pretensioner control circuit is open for 2 seconds.

B0015 0D, B001A 0D, B001B 0D, B0022 0D

The pretensioner deployment loop resistance is greater than 4.2 ohms for 2 seconds.

B0015 0E, B001A 0E, B001B 0E, B0022 0E

The pretensioner deployment loop resistance is less than 1.4 ohms for 2 seconds.

Action Taken When the DTC Sets

- The Inflatable Restraint Sensing and Diagnostic Module requests the Instrument Cluster to illuminate the AIR BAG indicator.
- The Inflatable Restraint Sensing and Diagnostic Module will store a DTC, however if an event occurs the system will still attempt deployments.

Conditions for Clearing the DTC

- The condition for setting the DTC no longer exists.
- A history DTC will clear once 100 malfunction-free ignition cycles have occurred.

Diagnostic Aid

NOTE: The following diagnostic aids apply for both current and history DTCs.

An incorrectly installed CPA or incorrectly seated connector can cause a shorting bar to short both control circuits together. Check the connectors and CPAs if a DTC with symptom byte 02 or 0E is set, to ensure the shorting bars are not causing the circuits to be shorted together. Shorting bars are used in the locations listed

below:

- Driver and passenger anchor or retractor pretensioners
- Inline connectors - on the side of the harness connector
- Harness side of the inflatable restraint sensing and diagnostic module connector

Terminal fretting or incorrectly seated connectors can cause an open/high resistance condition. Check the circuit terminals for fretting or incorrectly seated connector if a DTC with symptom byte 04 or 0D is set. DTCs of deployment loops which are in the seat can occur because of stress or damage to the harness due to seat movement. Move the seat to the full extend of travel while using the scan tool to observe deployment type loop parameters.

Reference Information

Schematic Reference

SIR Schematics

Connector End View Reference

COMPONENT CONNECTOR END VIEWS - INDEX

Description and Operation

Supplemental Inflatable Restraint System Description and Operation

Electrical Information Reference

- **Circuit Testing**
- **Testing for Intermittent Conditions and Poor Connections**
- **Wiring Repairs**
- **Connector Repairs**

Scan Tool Reference

Control Module References for scan tool information

Special Tools

EL-38125-580 Terminal Release Tool Kit

Circuit/System Verification

NOTE:

- **Refer to SIR Service Precautions.**
- **Inspect all terminals for damage or corrosion when disconnecting**

connectors. Damage or corrosion in the following requires repair or replacement of the affected component/connector.

- **Seat belt retractor pretensioner**
- **Seat belt retractor pretensioner wiring harness connector**
- **Seat belt anchor pretensioner**
- **Seat belt anchor pretensioner wiring harness connector**
- **Inflatable Restraint Sensing and Diagnostic Module**
- **Inflatable Restraint Sensing and Diagnostic Module wiring harness connector**

- **The connector and connector position assurance (CPA) may seat independent of each other. Both the connector and CPA should seat with an audible and/or tactile click. The CPA isolates the shorting-bars within the connector allowing the deployment circuit to operate properly.**
- **If the condition is intermittent or cannot be duplicated, disconnect the connectors and add dielectric grease / lubricant (Nyogel 760G or equivalent, meeting GM specification 9986087). This procedure will correct the high resistance condition due to terminal fretting corrosion.**

1. Verify the scan tool Deployment Loop Resistance parameters stay consistently between 2.1 and 4.0 ohms without any spikes or dropouts while moving the harness near each connector listed below:
   - F112 Seat Belt Retractor Pretensioner
   - F113 Seat Belt Anchor Pretensioner
   - Any inline harness
   - K36 Inflatable Restraint Sensing and Diagnostic Module
   - **If less than 2.1 or greater than 4.0 ohms**

     Refer to Circuit/System Testing below.

   - **If there are spikes or dropouts, perform the following**
   - Inspect each connector terminal and harness for damage or corrosion and repair as necessary.
   - Apply dielectric grease / lubricant (Nyogel 760G or equivalent, meeting GM specification 9986087) to each connector terminal.
   - Ensure each connector and CPA is correctly seated.
   - **If within 2.1 and 4.0 ohms without any spikes or dropouts**
2. All OK.

Circuit/System Testing

1. Ignition OFF, disconnect the scan tool. It may take up to 2 minutes for all vehicle systems to power down. Disconnect the appropriate harness connector listed below:
   - F112 Seat Belt Retractor Pretensioner
   - F113 Seat Belt Anchor Pretensioner

2. Test for greater than 25 ohms between the appropriate control circuit terminals listed below:
   - F112 Seat Belt Retractor Pretensioner terminals 1 and 2
   - F113 Seat Belt Anchor Pretensioner terminals 1 and 2
   - **If 25 ohms or less**
   1. Disconnect the harness connector at the K36 Inflatable Restraint Sensing and Diagnostic Module.

      NOTE: Some connectors may be equipped with shorting bars as a safety component to prevent accidental inflator deployment. When testing on a connector with shorting bars, the shorting bars must be disabled to ensure accurate test results. Insert an appropriate pick from EL-38125-580 and depress the shorting bars above the appropriate terminals. This will lift the shorting bar from the terminal and allow accurate test results. Take care not to damage the connector, shorting bar, or terminal when depressing the shorting bar.

   2. Test for infinite resistance between the 2 control circuits.
      - If less than infinite resistance, repair the short between the two circuits.
      - If infinite resistance, replace the K36 Inflatable Restraint Sensing and Diagnostic Module.
   - **If greater than 25 ohms**
3. Ignition ON.
4. Test for less than 11 V between the control circuit terminals listed below and ground:
   - F112 Seat Belt Retractor Pretensioner terminal 1
   - F112 Seat Belt Retractor Pretensioner terminal 2
   - F113 Seat Belt Anchor Pretensioner terminal 1
   - F113 Seat Belt Anchor Pretensioner terminal 2
   - **If 11 V or greater**
   1. Ignition OFF, disconnect the harness connector at the K36 Inflatable Restraint Sensing and Diagnostic Module, ignition ON.
   2. Test for less than 1 V between each control circuit and ground.
      - If 1 V or greater, repair the short to voltage on the circuit.
      - If less than 1 V, replace the K36 Inflatable Restraint Sensing and Diagnostic Module.
   - **If less than 11 V**
5. Ignition OFF. It may take up to 2 minutes for all vehicle systems to power down.
6. Test for greater than 25 ohms between the control circuit terminals listed below and ground:
   - F112 Seat Belt Retractor Pretensioner terminal 1
   - F112 Seat Belt Retractor Pretensioner terminal 2
   - F113 Seat Belt Anchor Pretensioner terminal 1
   - F113 Seat Belt Anchor Pretensioner terminal 2
   - **If 25 ohms or less**

1. Disconnect the harness connector at the K36 Inflatable Restraint Sensing and Diagnostic Module.
2. Test for infinite resistance between each control circuit and ground.
    - If less than infinite resistance, repair the short to ground on the circuit.
    - If infinite resistance, replace the K36 Inflatable Restraint Sensing and Diagnostic Module.

- **If greater than 25 ohms**

7. Install a 3 A fused jumper wire between the appropriate control circuit terminals listed below:
    - F112 Seat Belt Retractor Pretensioner terminals 1 and 2
    - F113 Seat Belt Anchor Pretensioner terminals 1 and 2
8. Ignition ON.
9. Verify the scan tool Deployment Loop Resistance parameter is less than 2 ohms.

- **If 2 ohms or greater**

1. Ignition OFF.
2. Disconnect the harness connector at the K36 Inflatable Restraint Sensing and Diagnostic Module.
3. Test for less than 2 ohms in each control circuit end to end.
    - If 2 ohms or greater, repair the open/high resistance in the circuit.
    - If less than 2 ohms, replace the K36 Inflatable Restraint Sensing and Diagnostic Module.

- **If less than 2 ohms**

10. Ignition OFF, connect the harness connector at the F112 Seat Belt Retractor Pretensioner or F113 Seat Belt Anchor Pretensioner, press in the CPA (if equipped) until an audible and/or tactile click is heard.
11. Ignition ON, clear DTCs. Operate the vehicle within the Conditions for Running the DTC.
12. Verify DTC B0015, B001A, B001B, or B0022 is not set.

- **If B0015, B001A, B001B, or B0022 is set**

  Replace the appropriate F112 Seat Belt Retractor Pretensioner or F113 Seat Belt Anchor Pretensioner.

- **If DTC B0015, B001A, B001B, or B0022 is not set**

13. All OK.

Repair Instructions

Perform the **Diagnostic Repair Verification** after completing the repair.

- **Front Seat Belt Anchor Plate Tensioner Replacement**
- **Driver or Passenger Seat Retractor Side Belt Replacement**
- **SIR/SRS Wiring Repairs**
- **Control Module References** for Inflatable Restraint Sensing and Diagnostic Module replacement, programming and setup

DTC B0016, B0018, B0023, OR B0025

Diagnostic Instructions

- Perform the **Diagnostic System Check - Vehicle** prior to using this diagnostic procedure.
- Review **Strategy Based Diagnosis** for an overview of the diagnostic approach.
- **Diagnostic Procedure Instructions** provides an overview of each diagnostic category.

DTC Descriptors

DTC B0016 01

Left Roof Rail Air Bag Deployment Loop Short to Battery

DTC B0016 02

Left Roof Rail Air Bag Deployment Loop Short to Ground

DTC B0016 04

Left Roof Rail Air Bag Deployment Loop Open

DTC B0016 0D

Left Roof Rail Air Bag Deployment Loop High Resistance

DTC B0016 0E

Left Roof Rail Air Bag Deployment Loop Low Resistance

DTC B0023 01

Right Roof Rail Air Bag Deployment Loop Short to Battery

DTC B0023 02

Right Roof Rail Air Bag Deployment Loop Short to Ground

DTC B0023 04

Right Roof Rail Air Bag Deployment Loop Open

DTC B0023 0D

Right Roof Rail Air Bag Deployment Loop High Resistance

DTC B0023 0E

Right Roof Rail Air Bag Deployment Loop Low Resistance

Diagnostic Fault Information

Circuit	Short to Ground	High Resistance	Open	Short to Voltage	Signal Performance
Left Roof Rail Air Bag High Control	B0016 02, B0016 0E	B0016 0D	B0016 04, B0016 0D	B0016 01	-
Left Roof Rail Air Bag Low Control	B0016 02, B0016 0E	B0016 0D	B0016 04, B0016 0D	B0016 01	-
Right Roof Rail Air Bag High Control	B0023 02, B0023 0E	B0023 0D	B0023 04, B0023 0D	B0023 01	-
Right Roof Rail Air Bag Low Control	B0023 02, B0023 0E	B0023 0D	B0023 04, B0023 0D	B0023 01	-

Circuit/System Description

During a side or frontal crash of sufficient force the inflatable restraint sensing and diagnostic module (SDM) will allow current to flow through the deployment loop in order to deploy an air bag or pretensioner. There are 2 shorting bars which will short together control circuits, when the connector is disconnected. This will help to prevent unwanted deployment of the air bag or pretensioner during servicing.

Conditions for Running the DTC

Ignition voltage is between 9-16 V.

Conditions for Setting the DTC

B0016 01, B0023 01

The air bag control circuit is shorted to voltage for 2 seconds.

B0016 02, B0023 02

The air bag control circuit is shorted to ground for 2 seconds.

B0016 04, B0023 04

The air bag control circuit is open for 2 seconds.

B0016 0D, B0023 0D

The air bag deployment loop resistance is greater than 4.2 ohms for 2 seconds.

B0016 0E, B0023 0E

The air bag deployment loop resistance is less than 1.4 ohms for 2 seconds.

Action Taken When the DTC Sets

- The inflatable restraint sensing and diagnostic module requests the instrument cluster to illuminate the AIR BAG indicator.
- The inflatable restraint sensing and diagnostic module will store a DTC, however if an event occurs the system will still attempt deployments.

Conditions for Clearing the DTC

- The condition for setting the DTC no longer exists.
- A history DTC will clear once 100 malfunction-free ignition cycles have occurred.

Diagnostic Aid

NOTE: The following diagnostic aids apply for both current and history DTCs.

An incorrectly installed connector position assurance (CPA) or incorrectly seated connector can cause a shorting bar to short both control circuits together. Check the connectors and CPAs if a DTC with symptom byte 02 or 0E is set, to ensure the shorting bars are not causing the circuits to be shorted together. Shorting bars are used in the locations listed below:

- Left and right roof rail air bags
- Inline harness connectors
- Harness side of the inflatable restraint sensing and diagnostic module connector

Terminal fretting or incorrectly seated connectors can cause an open/high resistance condition. Check the circuit terminals for fretting or incorrectly seated connector if a DTC with symptom byte 04 or 0D is set. DTCs of deployment loops which are in the seat DTC can occur because of stress or damage to the harness due to seat movement. Move the seat to the full extent of travel while using the scan tool to observe deployment type loop parameters.

Reference Information

Schematic Reference

SIR Schematics

Connector End View Reference

COMPONENT CONNECTOR END VIEWS - INDEX

Description and Operation

Supplemental Inflatable Restraint System Description and Operation

Electrical Information Reference

- **Circuit Testing**

- **Testing for Intermittent Conditions and Poor Connections**
- **Wiring Repairs**
- **Connector Repairs**

Scan Tool Reference

Control Module References for scan tool information

Special Tools

EL-38125-580 Terminal Release Tool Kit

Circuit/System Verification

NOTE:

- **Refer to SIR Service Precautions.**
- **Inspect all terminals for damage or corrosion when disconnecting connectors. Damage or corrosion in the following requires repair or replacement of the affected component/connector.**
  - **Roof rail air bag**
  - **Roof rail air bag wiring harness connector**
  - **Inflatable restraint sensing and diagnostic module**
  - **Inflatable restraint sensing and diagnostic module wiring harness connector**
- **The connector and connector position assurance (CPA) may seat independent of each other. Both the connector and CPA should seat with an audible and/or tactile click. The CPA isolates the shorting-bars within the connector allowing the deployment circuit to operate properly.**
- **If the condition is intermittent or cannot be duplicated, disconnect the connectors and add dielectric grease / lubricant (Nyogel 760G or equivalent, meeting GM specification 9986087). This procedure will correct the high resistance condition due to terminal fretting corrosion.**

1. Verify the appropriate scan tool Deployment Loop Resistance parameter stays consistently between 2.1 and 4.0 ohms without any spikes or dropouts while moving the harness near each connector listed below:
   - F105L Roof Rail Air Bag - Left
   - F105R Roof Rail Air Bag - Right
   - Any inline harness connector
   - K36 inflatable restraint sensing and diagnostic module
   - **If less than 2.1 or greater than 4.0 ohms**

     Refer to Circuit/System Testing below.

   - **If there are spikes or dropouts, perform the following**

- Inspect each connector terminal and harness for damage or corrosion and repair as necessary
- Ensure each connector and CPA is correctly seated.
- **If within 2.1 and 4.0 ohms without any spikes or dropouts**

2. All OK

Circuit/System Testing

1. Ignition OFF. Scan tool disconnected. Disconnect the harness connector at the appropriate F105 Roof Rail Air Bag. It may take up to 2 min for all vehicle systems to power down.
2. Test for greater than 25 ohms between the control circuit terminals 1 and 2.
   - **If 25 ohms or less**
   1. Disconnect the X2 harness connector at the K36 inflatable restraint sensing and diagnostic module.

      NOTE: Some connectors may be equipped with shorting bars as a safety component to prevent accidental inflator deployment. When testing on a connector with shorting bars, the shorting bars must be disabled to ensure accurate test results. Insert an appropriate pick from EL-38125-580 and depress the shorting bars above the appropriate terminals. This will lift the shorting bar from the terminal and allow accurate test results. Take care not to damage the connector, shorting bar, or terminal when depressing the shorting bar.

   2. Test for infinite resistance between the two control circuits.
      - If less than infinite resistance, repair the short between the two circuits.
      - If infinite resistance, replace the K36 inflatable restraint sensing and diagnostic module.
   - **If greater than 25 ohms**
3. Ignition ON.
4. Test for less than 11 V between the control circuit terminals listed below and ground:
   - Control circuit terminal 1
   - Control circuit terminal 2
   - **If 11 V or greater**
   1. Ignition OFF. Disconnect the X2 harness connector at the K36 inflatable restraint sensing and diagnostic module. Ignition ON.
   2. Test for less than 1 V between the control circuit and ground.
      - If 1 V or greater, repair the short to voltage on the circuit.
      - If less than 1 V, replace the K36 inflatable restraint sensing and diagnostic module.
   - **If less than 11 V**
5. Ignition OFF.
6. Test for greater than 25 ohms between the control circuit terminals listed below and ground:
   - Control circuit terminal 1

- Control circuit terminal 2
- **If 25 ohms or less**

1. Disconnect the X2 harness connector at the K36 inflatable restraint sensing and diagnostic module.
2. Test for infinite resistance between the control circuit and ground.
   - If less than infinite resistance, repair the short to ground on the circuit.
   - If infinite resistance, replace the K36 inflatable restraint sensing and diagnostic module.

- **If greater than 25 ohms**

7. Ignition OFF. Install a 3 A fused jumper wire between the control circuit terminals 1 and 2. Ignition ON.
8. Verify the scan tool Deployment Loop Resistance parameter is less than 2 ohms.
   - **If 2 ohms or greater**

   1. Ignition OFF. Disconnect the X2 harness connector at the K36 inflatable restraint sensing and diagnostic module.
   2. Test for less than 2 ohms in each control circuit end to end.
      - If 2 ohms or greater, repair the open/high resistance in the circuit.
      - If less than 2 ohms, replace the K36 inflatable restraint sensing and diagnostic module.

   - **If less than 2 ohms**
9. Ignition OFF, connect the harness connector at the F105 Roof Rail Air Bag, press in the CPA (if equipped) until an audible and/or tactile click is heard.
10. Ignition ON, clear DTCs. Operate the vehicle within the Conditions for Running the DTC.
11. Verify DTC B0016 or B0023 is not set.
    - **If DTC B0016 or B0023 is set**

      Test or replace the F105 Roof Rail Air Bag.

    - **If DTC B0016 or B0023 is not set**
12. All OK.

Repair Instructions

Perform the **Diagnostic Repair Verification** after completing the repair.

- **Airbag Roof Side Rail Module Replacement**
- **SIR/SRS Wiring Repairs**
- **Control Module References** for inflatable restraint sensing and diagnostic module replacement, programming and setup

DTC B0017 OR B0024

Diagnostic Instructions

- Perform the **Diagnostic System Check - Vehicle** prior to using this diagnostic procedure.
- Review **Strategy Based Diagnosis** for an overview of the diagnostic approach.

- **Diagnostic Procedure Instructions** provides an overview of each diagnostic category.

DTC Descriptors

DTC B0017 01

Driver Knee Air Bag Deployment Loop Short to Battery

DTC B0017 02

Driver Knee Air Bag Deployment Loop Short to Ground

DTC B0017 04

Driver Knee Air Bag Deployment Loop Open

DTC B0017 0D

Driver Knee Air Bag Deployment Loop High Resistance

DTC B0017 0E

Driver Knee Air Bag Deployment Loop Low Resistance

DTC B0024 01

Passenger Knee Air Bag Deployment Loop Short to Battery

DTC B0024 02

Passenger Knee Air Bag Deployment Loop Short to Battery

DTC B0024 04

Passenger Knee Air Bag Deployment Loop Open

DTC B0024 0D

Passenger Knee Air Bag Deployment Loop High Resistance

DTC B0024 0E

Passenger Knee Air Bag Deployment Loop Low Resistance

Diagnostic Fault Information

	Short to			**Short to**	

Circuit	Ground	High Resistance	Open	Voltage	Signal Performance
Driver Knee Air Bag High Control	B0017 02, B0017 0E	B0017 0D	B0017 04, B0017 0D	B0017 01	-
Driver Knee Air Bag Low Control	B0017 02, B0017 0E	B0017 0D	B0017 04, B0017 0D	B0017 01	-
Passenger Knee Air Bag High Control	B0024 02, B0024 0E	B0024 0D	B0024 04, B0024 0D	B0024 01	-
Passenger Knee Air Bag Low Control	B0024 02, B0024 0E	B0024 0D	B0024 04, B0024 0D	B0024 01	-

Circuit/System Description

During a side or frontal crash of sufficient force the Inflatable Restraint Sensing and Diagnostic Module (SDM) will allow current to flow through the deployment loop in order to deploy an air bag. There are two shorting bars used within the connector that will short together the control circuits, when the connector is disconnected. This will help to prevent unwanted deployment of the air bag or retractor pretensioner during servicing.

Conditions for Running the DTC

Ignition voltage is between 9-16 V.

Conditions for Setting the DTC

B0017 01, B0024 01

The air bag control circuit is shorted to voltage for 2 seconds.

B0017 02, B0024 02

The air bag control circuit is shorted to ground for 2 seconds.

B0017 04, B0024 04

The air bag control circuit is open for 2 seconds.

B0017 0D, B0024 0D

The air bag deployment loop resistance is greater than 4.2 ohms for 2 seconds.

B0017 0E, B0024 0E

The air bag deployment loop resistance is less than 1.4 ohms for 2 seconds.

Action Taken When the DTC Sets

- The Inflatable Restraint Sensing and Diagnostic Module requests the instrument cluster to illuminate the AIR BAG indicator.

- The Inflatable Restraint Sensing and Diagnostic Module will store a DTC, however if an event occurs the system will still attempt deployments.

Conditions for Clearing the DTC

- The condition for setting the DTC no longer exists.
- A history DTC will clear once 100 malfunction-free ignition cycles have occurred.

Diagnostic Aid

NOTE: The following diagnostic aids apply for both current and history DTCs.

An incorrectly installed connector position assurance (CPA) or incorrectly seated connector can cause a shorting bar to short both control circuits together. Check the connectors and CPAs if a DTC with symptom byte 02 or 0E is set, to ensure the shorting bars are not causing the circuits to be shorted together. Shorting bars are used in the locations listed below:

- Driver and passenger knee air bags
- Inline harness connectors
- Harness side of the inflatable restraint sensing and diagnostic module connector

Terminal fretting or incorrectly seated connector can cause an open/high resistance condition. Check the circuit terminals for fretting or incorrectly seated connector if a DTC with symptom byte 04 or 0D is set.

Reference Information

Schematic Reference

SIR Schematics

Connector End View Reference

http://www.chioshealing.com/

Description and Operation

Supplemental Inflatable Restraint System Description and Operation

Electrical Information Reference

- **Circuit Testing**
- **Testing for Intermittent Conditions and Poor Connections**
- **Wiring Repairs**
- **Connector Repairs**

Scan Tool Reference

Control Module References for scan tool information

Special Tools

EL-38125-580 Terminal Release Tool Kit

Circuit/System Verification

NOTE:

- **Refer to SIR Service Precautions.**
- **Inspect all terminals for damage or corrosion when disconnecting connectors. Damage or corrosion in the following requires repair or replacement of the affected component/connector.**
  - **Knee air bag**
  - **Inflatable restraint sensing and diagnostic module**
  - **All wiring harness connectors**
  - **Inflatable restraint sensing and diagnostic module wiring harness connector**
- **The connector and connector position assurance (CPA) may seat independent of each other. Both the connector and CPA should seat with an audible and/or tactile click. The CPA isolates the shorting-bars within the connector allowing the deployment circuit to operate properly.**
- **If the condition is intermittent or cannot be duplicated, disconnect the connectors and add dielectric grease/lubricant (Nyogel 760G or equivalent, meeting GM specification 9986087). This procedure will correct the high resistance condition due to terminal fretting corrosion.**

1. Verify the scan tool Deployment Loop Resistance parameters stay consistently between 2.1 and 4.0 ohms without any spikes or dropouts while moving the harness near each connector listed below:
   - F114D Knee Air Bag - Driver
   - F114P Knee Air Bag - Passenger
   - Any inline harness connector
   - K36 Inflatable Restraint Sensing and Diagnostic Module
   - **If less than 2.1 or greater than 4.0 ohms**

     Refer to Circuit/System Testing below.

   - **If there are spikes or dropouts, perform the following:**
   - Inspect each connector terminal and harness for damage or corrosion and repair as necessary.
   - Apply dielectric grease/lubricant (Nyogel 760G or equivalent, meeting GM specification 9986087) to each connector terminal
   - Ensure each connector and CPA is correctly seated

- **If between 2.1 and 4.0 ohms without any spikes or dropouts**

2. All OK

Circuit/System Testing

1. Ignition OFF, disconnect the scan tool and disconnect the harness connector at the appropriate F114 Knee Air Bag.
2. Test for greater than 25 ohms between the control circuit terminals 1 and 2.
   - **If 25 ohms or less**
   1. Disconnect the X1 harness connector at the K36 Inflatable Restraint Sensing and Diagnostic Module.

      NOTE: Some connectors may be equipped with shorting bars as a safety component to prevent accidental inflator deployment. When testing on a connector with shorting bars, the shorting bars must be disabled to ensure accurate test results. Insert an appropriate pick from EL-38125-580 and depress the shorting bars above the appropriate terminals. This will lift the shorting bar from the terminal and allow accurate test results. Take care not to damage the connector, shorting bar, or terminal when depressing the shorting bar.

   2. Test for infinite resistance between the 2 control circuits.
      - If less than infinite resistance, repair the short between the 2 circuits.
      - If infinite resistance, replace the K36 Inflatable Restraint Sensing and Diagnostic Module.
   - **If greater than 25 ohms**
3. Ignition ON.
4. Test for less than 11 V between the control circuit terminals listed below and ground:
   - Control circuit terminal 1
   - Control circuit terminal 2
   - **If 11 V or greater**
   1. Ignition OFF, disconnect the X1 harness connector at the K36 Inflatable Restraint Sensing and Diagnostic Module, ignition ON.
   2. Test for less than 1 V between the control circuit and ground.
      - If 1 V or greater, repair the short to voltage on the circuit.
      - If less than 1 V, replace the K36 Inflatable Restraint Sensing and Diagnostic Module.
   - **If less than 11 V**
5. Ignition OFF.
6. Test for greater than 25 ohms between the control circuit terminals listed below and ground:
   - Control circuit terminal 1
   - Control circuit terminal 2

- **If 25 ohms or less**

1. Disconnect the X1 harness connector at the K36 Inflatable Restraint Sensing and Diagnostic Module.
2. Test for infinite resistance between the control circuit and ground.
   - If less than infinite resistance, repair the short to ground on the circuit.
   - If infinite resistance, replace the K36 Inflatable Restraint Sensing and Diagnostic Module.

- **If greater than 25 ohms**

7. Install a 3 A fused jumper wire between the control circuit terminals 1 and 2, ignition ON.
8. Verify the scan tool Deployment Loop Resistance parameter is less than 2 ohms.
   - **If 2 ohms or greater**

   1. Ignition OFF, disconnect the X1 harness connector at the K36 Inflatable Restraint Sensing and Diagnostic Module.
   2. Test for less than 2 ohms in each control circuit end to end.
      - If 2 ohms or greater, repair the open/high resistance in the circuit.
      - If less than 2 ohms, replace the K36 Inflatable Restraint Sensing and Diagnostic Module.

   - **If less than 2 ohms**
9. Ignition OFF, connect the harness connector at the F114 Knee Air Bag, press in the CPA (if equipped) until an audible and/or tactile click is heard.
10. Ignition ON, clear DTCs. Operate the vehicle within the Conditions for Running the DTC.
11. Verify DTC B0017 or B0024 is not set.
    - **If DTC B0017 or B0024 is set**

      Replace the appropriate F114 Knee Air Bag.

    - **If DTC B0017 or B0024 is not set**
12. All OK.

Repair Instructions

Perform the **Diagnostic Repair Verification** after completing the repair.

- **Instrument Panel Lower Airbag Replacement - Driver Side**
- **Instrument Panel Lower Airbag Replacement - Passenger Side**
- **Control Module References** for K36 Inflatable Restraint Sensing and Diagnostic Module replacement, programming, and setup

DTC B0019 OR B0020

Diagnostic Instructions

- Perform the **Diagnostic System Check - Vehicle** prior to using this diagnostic procedure.
- Review **Strategy Based Diagnosis** for an overview of the diagnostic approach.

- **Diagnostic Procedure Instructions** provides an overview of each diagnostic category.

DTC Descriptors

DTC B0019 01

Passenger Instrument Panel Air Bag Deployment Loop Stage 1 Short to Battery

DTC B0019 02

Passenger Instrument Panel Air Bag Deployment Loop Stage 1 Short to Ground

DTC B0019 04

Passenger Instrument Panel Air Bag Deployment Loop Stage 1 Open

DTC B0019 0D

Passenger Instrument Panel Air Bag Deployment Loop Stage 1 High Resistance

DTC B0019 0E

Passenger Instrument Panel Air Bag Deployment Loop Stage 1 Low Resistance

DTC B0020 01

Passenger Instrument Panel Air Bag Deployment Loop Stage 2 Short to Battery

DTC B0020 02

Passenger Instrument Panel Air Bag Deployment Loop Stage 2 Short to Ground

DTC B0020 04

Passenger Instrument Panel Air Bag Deployment Loop Stage 2 Open

DTC B0020 0D

Passenger Instrument Panel Air Bag Deployment Loop Stage 2 High Resistance

DTC B0020 0E

Passenger Instrument Panel Air Bag Deployment Loop Stage 2 Low Resistance

Diagnostic Fault Information

	Short to			**Short to**	

Circuit	Ground	High Resistance	Open	Voltage	Signal Performance
Passenger Instrument Panel Air Bag Stage 1 High Control	B0019 02, B0019 0E	B0019 0D	B0019 04, B0019 0D	B0019 01	-
Passenger Instrument Panel Air Bag Stage 1 Low Control	B0019 02, B0019 0E	B0019 0D	B0019 04, B0019 0D	B0019 01	-
Passenger Instrument Panel Air Bag Stage 2 High Control	B0020 02, B0020 0E	B0020 0D	B0020 04, B0020 0D	B0020 01	-
Passenger Instrument Panel Air Bag Stage 2 Low Control	B0020 02, B0020 0E	B0020 0D	B0020 04, B0020 0D	B0020 01	-

Circuit/System Description

During a side or frontal crash of sufficient force the Inflatable Restraint Sensing and Diagnostic Module (SDM) will allow current to flow through the deployment loop in order to deploy an air bag or pretensioner. There are 2 shorting bars which will short the control circuits together when the connector is disconnected. This will help to prevent unwanted deployment of the air bag or pretensioner during servicing.

Conditions for Running the DTC

Ignition voltage is between 9-16 V.

Conditions for Setting the DTC

B0019 01, B0020 01

The air bag control circuit is shorted to voltage for 2 seconds.

B0019 02, B0020 02

The air bag control circuit is shorted to ground for 2 seconds.

B0019 04, B0020 04

The air bag control circuit is open for 2 seconds.

B0019 0D, B0020 0D

The air bag deployment loop resistance is greater than 4.2 ohms for 2 seconds.

B0019 0E, B0020 0E

The air bag deployment loop resistance is less than 1.4 ohms for 2 seconds.

Action Taken When the DTC Sets

- The Inflatable Restraint Sensing and Diagnostic Module requests the instrument cluster to illuminate the AIR BAG indicator.
- The Inflatable Restraint Sensing and Diagnostic Module will store a DTC, however if an event occurs the system will still attempt deployments.

Conditions for Clearing the DTC

- The condition for setting the DTC no longer exists.
- A history DTC will clear once 100 malfunction-free ignition cycles have occurred.

Diagnostic Aid

NOTE: The following diagnostic aids apply for both current and history DTCs.

An incorrectly installed connector position assurance (CPA) or incorrectly seated connector can cause a shorting bar to short both control circuits together. Check the connectors and CPAs if a DTC with symptom byte 02 or 0E is set, to ensure the shorting bars are not causing the circuits to be shorted together. Shorting bars are used in the locations listed below:

- Passenger Instrument Panel Air Bag
- Inline harness connectors
- Harness side of the Inflatable Restraint Sensing and Diagnostic Module connector

Terminal fretting or incorrectly seated connectors can cause an open/high resistance condition. Check the circuit terminals for fretting or incorrectly seated connector if a DTC with symptom byte 04 or 0D is set. DTCs of deployment loops which are in the seat can occur because of stress or damage to the harness due to seat movement. Move the seat to the full extent of travel while using the scan tool to observe deployment type loop parameters.

Reference Information

Schematic Reference

SIR Schematics

Connector End View Reference

COMPONENT CONNECTOR END VIEWS - INDEX

Description and Operation

Supplemental Inflatable Restraint System Description and Operation

Electrical Information Reference

- **Circuit Testing**
- **Testing for Intermittent Conditions and Poor Connections**
- **Wiring Repairs**
- **Connector Repairs**

Scan Tool Reference

Control Module References for scan tool information

Special Tools

EL-38125-580 Terminal Release Tool Kit

Circuit/System Verification

NOTE:

- **Refer to SIR Service Precautions.**
- **Inspect all terminals for damage or corrosion when disconnecting connectors. Damage or corrosion in the following requires repair or replacement of the affected component/connector.**
  - **Passenger Instrument Panel Air Bag**
  - **Inflatable Restraint Sensing and Diagnostic Module**
  - **Passenger Instrument Panel Air Bag wiring harness connector**
  - **Inflatable Restraint Sensing and Diagnostic Module wiring harness connector**
- **The connector and connector position assurance (CPA) may seat independent of each other. Both the connector and CPA should seat with an audible and/or tactile click. The CPA isolates the shorting-bars within the connector allowing the deployment circuit to operate properly.**
- **If the condition is intermittent or cannot be duplicated, disconnect the connectors and add dielectric grease / lubricant (Nyogel 760G or equivalent, meeting GM specification 9986087). This procedure will correct the high resistance condition due to terminal fretting corrosion.**

1. Verify the scan tool Deployment Loop Resistance parameters stay consistently between 2.1-4.0 ohms without any spikes or dropouts while moving the harness near each connector listed below:
   - F101 Passenger Instrument Panel Air Bag
   - Any inline harness connector
   - K36 Inflatable Restraint Sensing and Diagnostic Module
   - **If less than 2.1 ohms or greater than 4.0 ohms**

     Refer to Circuit/System Testing below.

   - **If there are spikes or dropouts, perform the following**

- Inspect each connector terminal and harness for damage or corrosion and repair as necessary
- Apply dielectric grease / lubricant (Nyogel 760G or equivalent, meeting GM specification 9986087) to each connector terminal
- Insure each connector and CPA is correctly seated.
- **If between 2.1-4.0 ohms without any spikes or dropouts**

2. All OK.

Circuit/System Testing

1. Ignition OFF, scan tool disconnected, disconnect the X203 inline harness connector for the F101 Passenger Instrument Panel Air Bag. It may take up to 2 minutes for all vehicle systems to power down.
2. Test for greater than 25 ohms between the appropriate control circuit terminals listed below on the K36 Inflatable Restraint Sensing and Diagnostic Module side of the connector:
   - F101 Passenger Instrument Panel Air Bag stage 1 X203 terminal 1 and 2
   - F101 Passenger Instrument Panel Air Bag stage 2 X203 terminal 4 and 5
   - **If 25 ohms or less**
   1. Disconnect the X1 harness connector at the K36 Inflatable Restraint Sensing and Diagnostic Module.

      NOTE: Some connectors may be equipped with shorting bars as a safety component to prevent accidental inflator deployment. When testing on a connector with shorting bars, the shorting bars must be disabled to ensure accurate test results. Insert an appropriate pick from EL-38125-580 and depress the shorting bars above the appropriate terminals. This will lift the shorting bar from the terminal and allow accurate test results. Take care not to damage the connector, shorting bar, or terminal when depressing the shorting bar.

   2. Test for infinite resistance between the two control circuits.
      - If less than infinite resistance, repair the short between the two circuits.
      - If infinite resistance, replace the K36 Inflatable Restraint Sensing and Diagnostic Module.
   - **If greater than 25 ohms**
3. Ignition ON.
4. Test for less than 11 V between each control circuit terminal listed below and ground:
   - X203 control circuit terminal 1
   - X203 control circuit terminal 2
   - X203 control circuit terminal 4
   - X203 control circuit terminal 5
   - **If 11 V or greater**
   1. Ignition OFF, disconnect the X1 harness connector at the K36 Inflatable Restraint Sensing and Diagnostic Module, ignition ON.

2. Test for less than 1 V between each control circuit and ground.
    - If 1 V or greater, repair the short to voltage on the circuit.
    - If less than 1 V, replace the K36 Inflatable Restraint Sensing and Diagnostic Module.
- **If less than 11 V**

5. Ignition OFF.
6. Test for greater than 25 ohms between each control circuit terminal listed below and ground:
    - X203 control circuit terminal 1
    - X203 control circuit terminal 2
    - X203 control circuit terminal 4
    - X203 control circuit terminal 5
    - **If 25 ohms or less**
    1. Disconnect the X1 harness connector at the K36 Inflatable Restraint Sensing and Diagnostic Module.
    2. Test for infinite resistance between the control circuit and ground.
        - If less than infinite resistance, repair the short to ground on the circuit.
        - If infinite resistance, replace the K36 Inflatable Restraint Sensing and Diagnostic Module.
    - **If greater than 25 ohms**
7. Install a 3 A fused jumper wire between the control circuit terminals listed below:
    - F101 Passenger Instrument Panel Air Bag stage 1 X203 terminal 1 and 2
    - F101 Passenger Instrument Panel Air Bag stage 2 X203 terminal 4 and 5
8. Ignition ON.
9. Verify the scan tool Deployment Loop Resistance parameter is less than 2 ohms.
    - **If 2 ohms or greater**
    1. Ignition OFF, disconnect the X1 harness connector at the K36 Inflatable Restraint Sensing and Diagnostic Module.
    2. Test for less than 2 ohms in each control circuit end to end.
        - If 2 ohms or greater, repair the open/high resistance in the circuit.
        - If less than 2 ohms, replace the K36 Inflatable Restraint Sensing and Diagnostic Module.
    - **If less than 2 ohms**
10. Ignition OFF, connect the X203 inline harness connector and disconnect the appropriate X1 (DTC B0019) or X2 (DTC B0020) harness connector at the F101 Passenger instrument panel air bag, ignition ON.
11. Test for less than 11 V between each control circuit terminals listed below and ground:
    - F101 Passenger Instrument Panel Air Bag control circuit terminal 1 X1
    - F101 Passenger Instrument Panel Air Bag control circuit terminal 2 X1
    - F101 Passenger Instrument Panel Air Bag control circuit terminal 1 X2
    - F101 Passenger Instrument Panel Air Bag control circuit terminal 2 X2
    - **If 11 V or greater**

Repair the short to voltage on the circuit.

- **If less than 11 V**

12. Ignition OFF.
13. Test for greater than 25 ohms between each control circuit terminals listed below and ground:
    - F101 Passenger Instrument Panel Air Bag control circuit terminal 1 X1
    - F101 Passenger Instrument Panel Air Bag control circuit terminal 2 X1
    - F101 Passenger Instrument Panel Air Bag control circuit terminal 1 X2
    - F101 Passenger Instrument Panel Air Bag control circuit terminal 2 X2
    - **If 25 ohms or less**

      Repair the short to ground on the circuit.

    - **If greater than 25 ohms**
14. Install a 3 A fused jumper wire between the control circuit terminals listed below:
    - F101 Passenger Instrument Panel Air Bag stage 1 control circuit terminal 1 X1 and 2 X1
    - F101 Passenger Instrument Panel Air Bag stage 2 control circuit terminal 1 X2 and 2 X2
15. Ignition ON.
16. Verify the scan tool Deployment Loop Resistance parameter is less than 2 ohms.
    - **If 2 ohms or greater**
    1. Ignition OFF, disconnect the X1 harness connector at the K36 Inflatable Restraint Sensing and Diagnostic Module.
    2. Test for less than 2 ohms in each control circuit end to end.
    - If 2 ohms or greater, repair the open/high resistance in the circuit between the F101 Passenger Instrument Panel Air Bag connector and the X203 inline harness connector.
    - If less than 2 ohms, replace the K36 Inflatable Restraint Sensing and Diagnostic Module.
    - **If less than 2 ohms**
17. Ignition OFF, connect the harness connector at the F101 Passenger Instrument Panel Air Bag, press in the CPA (if equipped) until an audible and/or tactile click is heard.
18. Ignition ON, clear DTCs. Operate the vehicle within the Conditions for Running the DTC.
19. Verify DTC B0019 or B0020 is not set.
    - **If DTC B0019 or B0020 is set**

      Replace the F101 Passenger Instrument Panel Air Bag.

    - **If DTC B0019 or B0020 is not set**
20. All OK.

Repair Instructions

Perform the **Diagnostic Repair Verification** after completing the repair.

- **Airbag Instrument Panel Module Replacement**
- **SIR/SRS Wiring Repairs**
- **Control Module References** for Inflatable Restraint Sensing and Diagnostic Module control module replacement, programming and setup

DTC B0052

Diagnostic Instructions

- Perform the **Diagnostic System Check - Vehicle** prior to using the diagnostic procedure.
- Review **Strategy Based Diagnosis** for an overview of the diagnostic approach.
- **Diagnostic Procedure Instructions** provides an overview of each diagnostic category.

DTC Descriptors

DTC B0052 00

Deployment Commanded

DTC B0052 56

Deployment Commanded Too Many Transitions

Circuit/System Description

The inflatable restraint sensing and diagnostic module (SDM) senses vehicle impacts and provides deployment signals to the air bags and anchor and/or retractor pretensioners when warranted. The inflatable restraint sensing and diagnostic module sets DTC B0052 after each command for deployment. DTC B0052 will latch and not clear after 3 commanded deployments by the inflatable restraint sensing and diagnostic module. Therefore the inflatable restraint sensing and diagnostic module has to be replaced.

Conditions for Running the DTC

Ignition voltage is between 9-16 V.

Conditions for Setting the DTC

- The inflatable restraint sensing and diagnostic module detects a frontal impact of sufficient force to warrant deployment of the frontal air bags.
- The inflatable restraint sensing and diagnostic module detects a side impact or rollover (if equipped) of sufficient force to warrant deployment of a seat air bag and/or roof rail air bag.

Action Taken When the DTC Sets

The inflatable restraint sensing and diagnostic module requests the instrument cluster to illuminate the AIR BAG indicator.

Conditions for Clearing the DTC

- DTC B0052 00 is a DTC that may be cleared with a scan tool without replacing the inflatable restraint sensing and diagnostic module. This DTC will not clear if deployment has been commanded more then two times, and the inflatable restraint sensing and diagnostic module would have to be replaced.
- DTC B0052 56 is a latched DTC. The DTC cannot be cleared with the scan tool. Replacement of the inflatable restraint sensing and diagnostic module is required.

Reference Information

Schematic Reference

SIR Schematics

Connector End View Reference

COMPONENT CONNECTOR END VIEWS - INDEX

Description and Operation

Supplemental Inflatable Restraint System Description and Operation

Electrical Information Reference

- **Circuit Testing**
- **Testing for Intermittent Conditions and Poor Connections**
- **Wiring Repairs**
- **Connector Repairs**

Scan Tool Reference

Control Module References for scan tool information

Circuit/System Verification

1. Verify that DTC B0052 00 is not set.
    - **If DTC B0052 00 is set**

      Clear the DTC. If the DTC will not clear, replace the K36 Inflatable Restraint Sensing and Diagnostic Module.

    - **If DTC B0052 00 is not set**
2. Verify that DTC B0052 56 is not set.
    - **If DTC B0052 56 is set**

      Replace the K36 Inflatable Restraint Sensing and Diagnostic Module.

- **If DTC B0052 56 is not set**

3. All OK.

Repair Instructions

Perform the **Diagnostic Repair Verification** after completing the repair.

Control Module References for inflatable restraint sensing and diagnostic module replacement, programming and setup

DTC B0074

Diagnostic Instructions

- Perform the **Diagnostic System Check - Vehicle** prior to using this diagnostic procedure.
- Review **Strategy Based Diagnosis** for an overview of the diagnostic approach.
- **Diagnostic Procedure Instructions** provides an overview of each diagnostic category.

DTC Descriptors

DTC B0074 0D

Passenger Presence Sensor High Resistance

DTC B0074 0E

Passenger Presence Sensor Low Resistance

Circuit/System Description

The Passenger Presence Detection Module monitors the sensor status continually. Whenever the sensor mat has an internal malfunction, the Passenger Presence Detection Module will set DTC B0074.

Conditions for Running the DTC

Ignition voltage is between 9-16 V.

Conditions for Setting the DTC

B0074 0D

The Passenger Presence Detection Module has detected a disconnection from the sensor mat.

B0074 0E

The Passenger Presence Detection Module has detected an open circuit.

The Passenger Presence Detection Module has received a fault signal from the sensor mat.

Action Taken When the DTC Sets

The Inflatable Restraint Sensing and Diagnostic Module requests the instrument cluster to illuminate the AIR BAG indicator.

Conditions for Clearing the DTC

- The condition for setting the DTC no longer exists.
- A history DTC will clear once 100 malfunction-free ignition cycles have occurred.

Diagnostic Aids

- If either the Inflatable Restraint Sensing and Diagnostic Module or Passenger Presence Sensor were replaced verify that the correct part numbers were used for the vehicle application.
- If this DTC is set as either current or history it may have been caused by an electronic device. If an electronic device (Computers, MP3 Players, Cell Phones, Diagnostic Scan Tool, Power Inverter, etc.) was placed on the passenger seat the Passenger Presence Detection Module may command the passenger air bag indicator to turn on and/or command the passenger seat belt indicator to turn on. Make sure there are no objects on the passenger seat and clear the DTCs. If this DTC resets then perform this diagnostic. If the DTC does not reset there is no further work needed on the passenger presence system.
- If this DTC is set as either current or history it may have been caused by an aftermarket seat heater. The aftermarket seat heater may command the passenger air bag indicator to turn on and/or command the passenger seat belt indicator to turn on. Remove the aftermarket seat heater from the passenger seat and clear the DTCs. If this DTC resets then perform this diagnostic. If the DTC does not reset there is no further work needed on the passenger presence system.

Reference Information

Schematic Reference

SIR Schematics

Connector End View Reference

COMPONENT CONNECTOR END VIEWS - INDEX

Description and Operation

Supplemental Inflatable Restraint System Description and Operation

Electrical Information Reference

- **Circuit Testing**
- **Testing for Intermittent Conditions and Poor Connections**
- **Connector Repairs**

- **Wiring Repairs**

Scan Tool Reference

Control Module References for scan tool information

Circuit/System Verification

NOTE: This system allows you to service each component separately (module and sensor/sensing mat). Perform a passenger presence system preload test procedure whenever a component is replaced. Refer to Passenger Presence System Programming and Setup . Inspect the following component connectors for damage or corrosion. Repair or replace the affected component/connector:

- **Passenger Presence Sensor**
- **Passenger Presence Sensor harness connector**
- **Passenger Presence Detection Module**
- **Passenger Presence Detection Module harness connector**
- **Seat wiring harness to vehicle harness connector**

The connector and connector position assurance (CPA) may seat independent of each other. Both the connector and CPA should seat with an audible and/or tactile click.

This system is serviced as a kit (seat foam, module, and/or sensing mat). Perform a Passenger Presence System Preload procedure whenever a component is replaced. Inspect the following component connectors for damage or corrosion. Repair or replace the affected component/connector:

1. Verify that the seat is free of any objects or an aftermarket seat heater.
   - **If objects or an aftermarket seat heater is present**
   1. Remove objects and/or aftermarket seat heater.
   2. Ignition ON, clear the DTC.
   3. Verify that DTC B0074 is not set
      - If the DTC B0074 is set, replace the B60 Passenger Presence Sensor
      - If the DTC B0074 is not set
   4. All OK.
   - **If the seat is empty and does not have an aftermarket seat heater**
2. Verify that DTC B0074 stays current while performing the following:
   - Moving the passenger seat forward and backward through its full range of motion.
   - Moving the harness near the K85 Passenger Presence Detection Module.
   - If applicable, moving the harness near the Passenger Presence Sensor.

- Moving the harness near any seat harness.
- **If DTC B0074 becomes history**

  Insure each connector and CPA is correctly seated and inspect each connector terminal for damage or corrosion and repair as necessary.

- **If DTC B0074 stays current**

3. Replace the B60 Passenger Presence Sensor.

Repair Instructions

Perform the **Diagnostic Repair Verification** after completing the repair.

Control Module References for B60 Passenger Presence Sensor replacement

DTC B0081 (INFLATABLE RESTRAINT SENSING AND DIAGNOSTIC MODULE)

Diagnostic Instructions

- Perform the **Diagnostic System Check - Vehicle** prior to using this diagnostic procedure.
- Review **Strategy Based Diagnosis** for an overview of the diagnostic approach.
- **Diagnostic Procedure Instructions** provides an overview of each diagnostic category.

DTC Descriptors

DTC B0081 00

Passenger Presence Module Malfunction

DTC B0081 3A

Passenger Presence Module Incorrect Component Installed

DTC B0081 71

Passenger Presence Module Invalid Serial Data Received

Circuit/System Description

When the ignition is turned ON, the Inflatable Restraint Sensing and Diagnostic Module and the Passenger Presence Module perform tests to diagnose critical malfunctions. Upon a successful power-up mode the Inflatable Restraint Sensing and Diagnostic Module will illuminate both PASSENGER AIRBAG ON/OFF indicators located in the overhead center console. If the Inflatable Restraint Sensing and Diagnostic Module detects a fault in the Passenger Presence Module, it may disable the front passenger air bag deployment loop, set DTC B0081 00 or DTC B0081 3A and illuminate the AIRBAG indicator.

Conditions for Running the DTC

Ignition voltage is between 9-16 V.

Conditions for Setting the DTC

B0081 00

The Inflatable Restraint Sensing and Diagnostic Module has received a fault present message from the Passenger Presence Module.

B0081 3A

The Inflatable Restraint Sensing and Diagnostic Module has received a message from the Passenger Presence Module indicating a vehicle to Passenger Presence Module mismatch.

B0081 71

The Inflatable Restraint Sensing and Diagnostic Module sets this DTC when the Inflatable Restraint Sensing and Diagnostic Module has received invalid serial data from the Passenger Presence Module.

Action Taken When the DTC Sets

- The Inflatable Restraint Sensing and Diagnostic Module requests the instrument cluster to illuminate the AIR BAG indicator.
- The passenger instrument panel air bag deployment loop will be disabled.

Conditions for Clearing the DTC

- The condition for setting the DTC no longer exists.
- A history DTC will clear once 100 malfunction-free ignition cycles have occurred.

Diagnostic Aids

- If either the Inflatable Restraint Sensing and Diagnostic Module or Passenger Presence Module were replaced verify that the correct part numbers were used for the vehicle application.
- If this DTC is set as either current or history it may have been caused by an electronic device. If an electronic device (Computers, MP3 Players, Cell Phones, Diagnostic Scan Tool, Power Inverter, etc.) was placed on the passenger seat the Passenger Presence Module may command the passenger air bag indicator to turn on and/or command the passenger seat belt indicator to turn on. Make sure there are no objects on the passenger seat and clear the DTCs. If this DTC resets then perform this diagnostic. If the DTC does not reset there is no further work needed on the passenger presence system.
- If this DTC is set as either current or history it may have been caused by an aftermarket seat heater. The aftermarket seat heater may command the passenger air bag indicator to turn on and/or command the passenger seat belt indicator to turn on. Remove the aftermarket seat heater from the passenger seat and clear the DTCs. If this DTC resets then perform this diagnostic. If the DTC does not reset there is no further work needed on the passenger presence system.

Reference Information

Schematic Reference

SIR Schematics

Connector End View Reference

COMPONENT CONNECTOR END VIEWS - INDEX

Description and Operation

Supplemental Inflatable Restraint System Description and Operation

Electrical Information Reference

- **Circuit Testing**
- **Testing for Intermittent Conditions and Poor Connections**
- **Connector Repairs**
- **Wiring Repairs**

Scan Tool Reference

Control Module References for scan tool information

Circuit/System Verification

NOTE: This system allows you to service each component separately (module and sensor/sensing mat). Perform a passenger presence system rezero procedure whenever a component is replaced.

NOTE: Both the Inflatable Restraint Sensing and Diagnostic Module and Passenger Presence Module set DTC B0081 but with different symptom bytes. Therefore it is important to identify which module has set the DTC B0081. Use the symptom bytes as a way of identify the correct module to diagnose. Use the table below in identifying specific module DTC B0081 application and symptom byte that sets with it.

1. Verify that DTC B1001 is not set in the Inflatable Restraint Sensing and Diagnostic Module.
    - **If DTC B1001 is set in the Inflatable Restraint Sensing and Diagnostic Module**

      Refer to **DTC B1001 (Passenger Presence System)**, **DTC B1001 (Inflatable Restraint Sensing and Diagnostic Module)**.

    - **If DTC B1001 does not set in the Inflatable Restraint Sensing and Diagnostic Module**
2. Verify that DTC B0074, B101D, or B101E is not set in the Passenger Presence Module.
    - **If any of these DTCs are set in the Passenger Presence Module, refer to Diagnostic Trouble**

Code (DTC) List - Vehicle

- **If none of these DTCs are set in the Passenger Presence Module**

NOTE: The Inflatable Restraint Sensing and Diagnostic Module sets a redundant B0081 00 DTC when the Passenger Presence Module sets a DTC B0081 11 or B0081 42.

3. Verify that DTC B0081 00 is not set in the Inflatable Restraint Sensing and Diagnostic Module
   - **If DTC B0081 00 is set**

     Refer to the Passenger Presence Module **DTC B0081 (Passenger Presence Module)**, **DTC B0081 (Inflatable Restraint Sensing and Diagnostic Module)**.

   - **If DTC B0081 00 is not set**

NOTE: The Inflatable Restraint Sensing and Diagnostic Module sets a B0081 3A when an incorrect Passenger Presence Module is installed.

4. Verify that DTC B0081 3A is not set in the Inflatable Restraint Sensing and Diagnostic Module.
   - **If DTC B0081 3A is set**

     Replace the K85 Passenger Presence Module.

   - **If DTC B0081 3A is not set**
5. Verify that DTC B0081 71 is not set in the Inflatable Restraint Sensing and Diagnostic Module.
   - **If DTC B0081 71 is set**

     Replace the B60 Passenger Presence Sensor.

   - **If DTC B0081 71 is not set**
6. All OK.

Repair Instructions

Perform the **Diagnostic Repair Verification** after completing the repair.

Control Module References for Passenger Presence Module and Inflatable Restraint Sensing and Diagnostic Module replacement, programming and setup

DTC B0081 (PASSENGER PRESENCE MODULE)

Diagnostic Instructions

- Perform the **Diagnostic System Check - Vehicle** prior to using this diagnostic procedure.
- Review **Strategy Based Diagnosis** for an overview of the diagnostic approach.

- **Diagnostic Procedure Instructions** provides an overview of each diagnostic category.

DTC Descriptors

DTC B0081 11

Passenger Presence Module High Input

DTC B0081 4B

Calibration Not Programmed

Circuit/System Description

When the ignition is turned ON, the Inflatable Restraint Sensing and Diagnostic Module and the Passenger Presence Module perform tests to diagnose critical malfunctions. Upon a successful power-up mode the Inflatable Restraint Sensing and Diagnostic Module will illuminate both PASSENGER AIRBAG ON/OFF indicators located in the overhead center console. If the Inflatable Restraint Sensing and Diagnostic Module detects a fault in the Passenger Presence Module, it may disable the front passenger air bag deployment loop, set DTC B0081 and illuminate the AIRBAG indicator.

Conditions for Running the DTC

Ignition voltage is between 9-16 V.

Conditions for Setting the DTC

Any of the following conditions must exist for 5 seconds.

B0081 11

The Passenger Presence Module has failed the Passenger Presence Module Rezero procedure.

B0081 4B

The Passenger Presence Module Rezero procedure has failed.

Action Taken When the DTC Sets

- The Inflatable Restraint Sensing and Diagnostic Module requests the instrument cluster to illuminate the AIR BAG indicator.
- The passenger instrument panel air bag deployment loop will be disabled.

Conditions for Clearing the DTC

- The condition for setting the DTC no longer exists.
- A history DTC will clear once 100 malfunction-free ignition cycles have occurred.

Diagnostic Aids

- If either the Inflatable Restraint Sensing and Diagnostic Module or Passenger Presence Module were replaced verify that the correct part numbers were used for the vehicle application.
- If this DTC is set as either current or history it may have been caused by an electronic device. If an electronic device (Computers, MP3 Players, Cell Phones, Diagnostic Scan Tool, Power Inverter, etc.) was placed on the passenger seat the Passenger Presence Module may command the passenger air bag indicator to turn on and/or command the passenger seat belt indicator to turn on. Make sure there are no objects on the passenger seat and clear the DTCs. If this DTC resets then perform this diagnostic. If the DTC does not reset there is no further work needed on the passenger presence system.
- If this DTC is set as either current or history it may have been caused by an aftermarket seat heater. The aftermarket seat heater may command the passenger air bag indicator to turn on and/or command the passenger seat belt indicator to turn on. Remove the aftermarket seat heater from the passenger seat and clear the DTCs. If this DTC resets then perform this diagnostic. If the DTC does not reset there is no further work needed on the passenger presence system.

Reference Information

Description and Operation

Supplemental Inflatable Restraint System Description and Operation

Scan Tool Reference

Control Module References for scan tool information

Circuit/System Verification

NOTE:

- **This system allows you to service each component separately (module and sensor/sensing mat). Perform a passenger presence rezero procedure whenever a component is replaced.**
- **The Inflatable Restraint Sensing and Diagnostic Module sets a B0081 3A when an incorrect Passenger Presence Module is installed.**
- **The Inflatable Restraint Sensing and Diagnostic Module and Passenger Presence Module can set DTC B0081 but with different symptoms bytes. Therefore it is important to identify which module has set the DTC B0081. Use the symptom bytes as a way of identify the correct module to diagnose. Use the table below in identifying specific module DTC B0081 application and symptom byte that sets with it.**

DTC	Symptom Bytes	
B0081 - Inflatable Restraint Sensing and Diagnostic Module	00	3A
B0081 - Passenger Presence Module	11	4B

1. Verify that DTC B0081 3A is not set in the Inflatable Restraint Sensing and Diagnostic Module.
   - **If DTC B0081 3A is set in the Inflatable Restraint Sensing and Diagnostic Module**

     Replace the K85 Passenger Presence Module.

   - **If DTC B0081 3A is not set in the Inflatable Restraint Sensing and Diagnostic Module**

   NOTE: The Inflatable Restraint Sensing and Diagnostic Module sets a B0081 00 DTC when the Passenger Presence Module sets a DTC B0081 11 or B0081 4B.

2. Verify that DTC B0081 11 or DTC B0081 4B is not set in the Passenger Presence Module.
   - **If DTC B0081 11 or DTC B0081 4B is set in the Passenger Presence Module**

     Perform the passenger presence system rezero procedure. Refer to **Passenger Presence System Rezeroing**.

   - **If DTC B0081 11 or DTC B0081 4B do not set in the Passenger Presence Module**
3. All OK.

Repair Instructions

Perform the **Diagnostic Repair Verification** after completing the repair.

Control Module References for Passenger Presence Module and Inflatable Restraint Sensing and Diagnostic Module replacement, programming and setup

DTC B0083 OR B0084

Diagnostic Instructions

- Perform the **Diagnostic System Check - Vehicle** prior to using this diagnostic procedure.
- Review **Strategy Based Diagnosis** for an overview of the diagnostic approach.
- **Diagnostic Procedure Instructions** provides an overview of each diagnostic category.

DTC Descriptors

DTC B0083 02

Left Front Impact Sensor Short to Ground

DTC B0083 05

Left Front Impact Sensor High Voltage/Open

DTC B0083 39

Left Front Impact Sensor Internal Electronic Failure

DTC B0083 3A

Left Front Impact Sensor Incorrect Component Installed

DTC B0083 71

Left Front Impact Sensor Invalid Serial Data Received

DTC B0084 02

Right Front Impact Sensor Short to Ground

DTC B0084 05

Right Front Impact Sensor High Voltage/Open

DTC B0084 39

Right Front Impact Sensor Internal Electronic Failure

DTC B0084 3A

Right Front Impact Sensor Incorrect Component Installed

DTC B0084 71

Right Front Impact Sensor Invalid Serial Data Received

Diagnostic Fault Information

Circuit	Short to Ground	Open/High Resistance	Short to Voltage	Signal Performance
Left Front Impact Sensor High Signal	B0083 02	B0083 05	B0083 05	B0083 3A
Left Front Impact Sensor Low Reference	B0083 02	B0083 05	B0083 05	B0083 3A
Right Front Impact Sensor High Signal	B0084 02	B0084 05	B0084 05	B0084 3A
Right Front Impact Sensor Low Signal	B0084 02	B0084 05	B0084 05	B0084 3A

Circuit/System Description

The impact sensors are electronic and are not part of the deployment loops, but instead provide inputs to the inflatable restraint sensing and diagnostic module (SDM). The impact sensors can assist in determining the

severity of some frontal and side collisions. The inflatable restraint sensing and diagnostic module uses the input from the impact sensors to assist in determining the severity of a collision further supporting air bag deployment. If the inflatable restraint sensing and diagnostic module determines a deployment is warranted, the inflatable restraint sensing and diagnostic module will cause current to flow through the deployment loops deploying the air bags.

Conditions for Running the DTC

Ignition voltage is between 9-16 V.

Conditions for Setting the DTC

Any of the following conditions exist for 10 seconds:

B0083 02, B0084 02

- The sensor has been shorted to ground.
- The sensor current is greater than 23 mA for greater than 5 ms.

B0083 05, B0084 05

- The sensor circuit is open.
- The inflatable restraint sensing and diagnostic module has not received a message from the sensor for greater than 375 milliseconds.

B0083 39, B0084 39

- The inflatable restraint sensing and diagnostic module has received a Not OK message from the sensor.
- The inflatable restraint sensing and diagnostic module has not received a message.

B0083 3A, B0084 3A

- The inflatable restraint sensing and diagnostic module has received identification message from the sensor, which does not match the identification stored in the inflatable restraint sensing and diagnostic module memory.
- The inflatable restraint sensing and diagnostic module has reset the impact sensor twice without detecting the correct identification message.

B0083 71, B0084 71

The inflatable restraint sensing and diagnostic module has received invalid serial data from the sensor.

Action Taken When the DTC Sets

The inflatable restraint sensing and diagnostic module requests the instrument cluster to illuminate the air bag indicator.

Conditions for Clearing the DTC

- The condition for setting the DTC no longer exists.
- A history DTC will clear once 100 malfunction-free ignition cycles have occurred.
- An ignition cycle is required for the DTC to go from current to history.

Reference Information

Schematic Reference

SIR Schematics

Connector End View Reference

COMPONENT CONNECTOR END VIEWS - INDEX

Description and Operation

Supplemental Inflatable Restraint System Description and Operation

Electrical Information Reference

- **Circuit Testing**
- **Testing for Intermittent Conditions and Poor Connections**
- **Connector Repairs**
- **Wiring Repairs**

Scan Tool Reference

Control Module References for scan tool information

Circuit/System Verification

NOTE:

- **SIR Service Precautions**
- **Inspect all terminals for damage or corrosion when disconnecting connectors. Damage or corrosion in the following requires repair or replacement of the affected component/connector.**
  - **Impact sensor**
  - **inflatable restraint sensing and diagnostic module**
  - **inflatable restraint sensing and diagnostic module wiring harness connector**
- **The connector and connector position assurance (CPA) may seat independent of each other. Both the connector and CPA should seat with an audible and/or tactile click. The CPA isolates the shorting-bars within**

the connector allowing the deployment circuit to operate properly.

1. Ignition ON.
2. Verify that DTC B0083 or B0084 symptom byte 39 or 71 is not set as current.
   - **If DTC B0083 or B0084 symptom byte 39 or 71 is set as current**

     Replace the appropriate B59 Front Impact Sensor.

   - **If DTC B0083 or B0084 symptom byte 39 or 71 is not set as current**
3. Verify that DTC B0083 or B0084 symptom byte 3A is not set as current.
   - **If DTC B0083 or B0084 symptom byte 3A is set as current**

     Replace the incorrect B59 Front Impact Sensor

   - **If DTC B0083 or B0084 symptom byte 3A is not set as current**
4. Verify that DTC B0083 or B0084 symptom byte 02 or 05 is not set as current.
   - **If DTC B0083 or B0084 symptom byte 02 or 05 is set as current**

     Refer to Circuit/System Testing below.

   - **If DTC B0083 or B0084 symptom byte 02 or 05 is not set as current**
5. All OK.

Circuit/System Testing

1. Ignition OFF. Disconnect the harness connector at the appropriate B59 Front Impact Sensor. It may take up to 2 min for all vehicle systems to power down.
2. Test for less than 10 ohms between the low reference circuit terminal 2 and ground.
   - **If 10 ohms or greater**
   1. Disconnect the X2 harness connector at the K36 Inflatable Restraint Sensing and Diagnostic Module.
   2. Test for less than 2 ohms in the low reference circuit end to end.
      - If 2 ohms or greater, repair the open/high resistance in the circuit.
      - If less than 2 ohms, replace the K36 Inflatable Restraint Sensing and Diagnostic Module.
   - **If less than 10 ohms**
3. Ignition ON.
4. Test for less than 1 V between the signal circuit terminal 1 and ground.
   - **If 1 V or greater**
   1. Ignition OFF. Disconnect the X2 harness connector at the K36 Inflatable Restraint Sensing and Diagnostic Module. Ignition ON.
   2. Test for less than 1 V between the signal circuit terminal 1 and ground.
      - If 1 V or greater, repair the short to voltage on the circuit.

- If less than 1 V, replace the K36 Inflatable Restraint Sensing and Diagnostic Module.
- **If less than 1 V**

5. Ignition OFF.
6. Test for greater than 50k ohms between the signal circuit terminal 1 and ground.
   - **If 50k ohms or less**
   1. Disconnect the X2 harness connector at the K36 Inflatable Restraint Sensing and Diagnostic Module.
   2. Test for infinite resistance between the signal circuit and ground.
      - If less than infinite resistance, repair the short to ground on the circuit.
      - If infinite resistance, replace the K36 Inflatable Restraint Sensing and Diagnostic Module.
   - **If greater than 50k ohms**
7. Disconnect the X2 harness connector at the K36 Inflatable Restraint Sensing and Diagnostic Module.
8. Test for less than 2 ohms between the B59 Front Impact Sensor signal circuit terminal 1 and the appropriate K36 Inflatable Restraint Sensing and Diagnostic Module signal circuit terminal listed below:
   - Right front impact sensor terminal 26 X2
   - Left front impact sensor terminal 23 X2
   - **If 2 ohms or greater**

     Repair the short to voltage or an open/high resistance in the circuit.

   - **If less than 2 ohms**
9. Ignition OFF, connect all harness connectors, press in the CPA (if equipped) until an audible and/or tactile click is heard.
10. Ignition ON, clear DTCs. Operate the vehicle within the Conditions for Running the DTC.
11. Verify DTC B0083 or B0084 does not set.
    - **If the DTC sets**
    1. Replace the B59 Front Impact Sensor.
    2. Verify the DTC does not set.
       - If the DTC sets, replace the K36 Inflatable Restraint Sensing and Diagnostic Module.
       - If the DTC does not set.
    3. All OK.
    - **If the DTC does not set**
12. All OK.

Repair Instructions

Perform the **Diagnostic Repair Verification** after completing the repair.

- **Front End Inflatable Restraint Discriminating Sensor Replacement**
- **Control Module References** for inflatable restraint sensing and diagnostic module control module replacement, programming and setup

DTC B0085 OR B0088

Diagnostic Instructions

- Perform the **Diagnostic System Check - Vehicle** prior to using this diagnostic procedure.
- Review **Strategy Based Diagnosis** for an overview of the diagnostic approach.
- **Diagnostic Procedure Instructions** provides an overview of each diagnostic category.

DTC Descriptors

DTC B0085 02

Left Front Side Impact Sensor Short to Ground

DTC B0085 05

Left Front Side Impact Sensor High Voltage/Open

DTC B0085 39

Left Front Side Impact Sensor Internal Malfunction

DTC B0085 3A

Left Front Side Impact Sensor Incorrect Component Installed

DTC B0085 71

Left Front Side Impact Sensor Invalid Data

DTC B0088 02

Right Rear Side Impact Sensor Short to Ground

DTC B0088 05

Right Rear Side Impact Sensor High Voltage/Open

DTC B0088 39

Right Rear Side Impact Sensor Internal Malfunction

DTC B0088 3A

Right Rear Side Impact Sensor Incorrect Component Installed

DTC B0088 71

Right Rear Side Impact Sensor Invalid Data

Diagnostic Fault Information

Circuit	Short to Ground	Open/High Resistance	Short to Voltage	Signal Performance
Left Front Side Impact Sensor High Signal	B0085 02, B0088 02	B0085 05	B0085 05, B0088 05	B0085 39
Left Front Side Impact Sensor Low Reference	B0085 02, B0088 02	B0085 05	B0085 05, B0088 05	B0085 39
Right Rear Side Impact Sensor High Signal	B0085 02, B0088 02	B0088 05	B0085 05, B0088 05	B0088 39
Right Rear Side Impact Sensor Low Reference	B0085 02, B0088 02	B0088 05	B0085 05, B0088 05	B0088 39

Circuit/System Description

The impact sensors are equipped on vehicles to supplement the supplemental inflatable restraint (SIR) system performance. The impact sensors are electronic and are not part of the deployment loops, but instead provide inputs to the inflatable restraint sensing and diagnostic module (SDM). The impact sensors can assist in determining the severity of some frontal and side collisions. The inflatable restraint sensing and diagnostic module uses the input from the impact sensors to assist in determining the severity of a collision further supporting air bag deployment. If the inflatable restraint sensing and diagnostic module determines a deployment is warranted, the inflatable restraint sensing and diagnostic module will cause current to flow through the deployment loops deploying the air bags.

Conditions for Running the DTC

Ignition voltage is between 9-16 V.

Conditions for Setting the DTC

Any of the following conditions exist for 10 seconds:

B0085 02, B0088 02

- The sensor has been shorted to ground.
- The sensor current is greater than 23 mA for greater than 5 milliseconds.

B0085 05, B0088 05

- The sensor circuit is open.
- The inflatable restraint sensing and diagnostic module has not received a message from the sensor for greater than 375 milliseconds.

B0085 39, B0088 39

- The inflatable restraint sensing and diagnostic module has received a Not OK message from the sensor.
- The inflatable restraint sensing and diagnostic module has not received a message.

B0085 3A, B0088 3A

- The inflatable restraint sensing and diagnostic module has received identification message from the sensor, which does not match the identification stored in the inflatable restraint sensing and diagnostic module memory.
- The inflatable restraint sensing and diagnostic module has reset the impact sensor twice without detecting the correct identification message.

B0085 71, B0088 71

The inflatable restraint sensing and diagnostic module has received invalid serial data from the sensor.

Action Taken When the DTC Sets

The inflatable restraint sensing and diagnostic module requests the instrument cluster to illuminate the air bag indicator.

Conditions for Clearing the DTC

- The condition for setting the DTC no longer exists.
- A history DTC will clear once 100 malfunction-free ignition cycles have occurred.
- An ignition cycle is required for the DTC to go from current to history.

Reference Information

Schematic Reference

SIR Schematics

Connector End View Reference

COMPONENT CONNECTOR END VIEWS - INDEX

Description and Operation

Supplemental Inflatable Restraint System Description and Operation

Electrical Information Reference

- **Circuit Testing**
- **Testing for Intermittent Conditions and Poor Connections**
- **Connector Repairs**

- **Wiring Repairs**

Scan Tool Reference

Control Module References for scan tool information

Circuit/System Verification

NOTE:

- **SIR Service Precautions**
- **Inspect all terminals for damage or corrosion when disconnecting connectors. Damage or corrosion in the following requires repair or replacement of the affected component/connector.**
  - **Impact sensor**
  - **inflatable restraint sensing and diagnostic module**
  - **inflatable restraint sensing and diagnostic module wiring harness connector**
- **The connector and connector position assurance (CPA) may seat independent of each other. Both the connector and CPA should seat with an audible and/or tactile click. The CPA isolates the shorting-bars within the connector allowing the deployment circuit to operate properly.**

1. Ignition ON.
2. Verify that DTC B0085 or B0088 symptom byte 39 or 71 is not set as current.
   - **If DTC B0085 or B0088 symptom byte 39 or 71 is set as current**

     Replace the sensor listed below:

     - B0085 - B63LF Side Impact Sensor-Left Front
     - B0088 - B63RR Side Impact Sensor-Right Rear
   - **If DTC B0085 or B0088 symptom byte 39 or 71 is not set as current**
3. Verify that DTC B0085 or B0088 symptom byte 3A is not set as current.
   - **If DTC B0085 or B0088 symptom byte 3A is set as current**

     Replace the incorrect B63 Side Impact Sensor
   - **If DTC B0085 or B0088 symptom byte 3A is not set as current**
4. Verify that DTC B0085 or B0088 symptom byte 02 or 05 is set as current.
   - **If only DTC B0085 symptom byte 02 or 05 is set as current**

     Refer to Circuit/System Testing below - Only DTC B0085 or B0088 is set.
   - **If only DTC B0088 symptom byte 02 or 05 is set as current**

Refer to Circuit/System Testing below - Only DTC B0085 or B0088 is set.

- **If both DTC B0085 or B0088 symptom byte 02 or 05 is set as current**

  Refer to Circuit/System Testing below - Both DTC B0085 and B0088 are set.

- **If DTC B0085 or B0088 symptom byte 02 or 05 is not set as current**

5. All OK.

Circuit/System Testing

NOTE: The signal circuit is shared at the K36 Inflatable Restraint Sensing and Diagnostic Module between the B63LF Side Impact Sensor - Left Front and the B63RR Side Impact Sensor - Right Rear (DTC B0085 and DTC B0088). Therefore a short to ground or short to voltage in either of these signal circuits can set a DTC for both circuits, and an open in either circuit should only set its corresponding DTC.

Only DTC B0085 or B0088 is set

1. Ignition OFF, disconnect the harness connector at the appropriate B63 Side Impact Sensor. It may take up to 2 min for all vehicle systems to power down.
2. Test for less than 10 ohms between the low reference circuit terminal 2 and ground.
   - **If 10 ohms or greater**
     1. Disconnect the X2 harness connector at the K36 Inflatable Restraint Sensing and Diagnostic Module.
     2. Test for less than 2 ohms in the low reference circuit end to end.
        - If 2 ohms or greater, repair the open/high resistance in the circuit.
        - If less than 2 ohms, replace the K36 Inflatable Restraint Sensing and Diagnostic Module.
   - **If less than 10 ohms**
3. Ignition ON.
4. Test for less than 10 V between the signal circuit terminal 1 and ground.
   - **If 10 V or greater**
     1. Disconnect the X2 harness connector at the K36 Inflatable Restraint Sensing and Diagnostic Module.
     2. Test for less than 1 V between the signal circuit and ground.
        - If 1 V or greater, repair the short to voltage in the circuit.
        - If less than 1 V, replace the K36 Inflatable Restraint Sensing and Diagnostic Module.
   - **If less than 10 V**
5. Disconnect the X2 harness connector at the K36 Inflatable Restraint Sensing and Diagnostic Module.
6. Test for less than 2 ohms between the B63 Side Impact Sensor signal circuit terminal 1 and the appropriate K36 Inflatable Restraint Sensing and Diagnostic Module signal circuit terminal listed below:

- Left front signal terminal 19 X2
- Right rear signal terminal 30 X2
- **If 2 ohms or greater**

  Repair the open/high resistance in the circuit.

- **If less than 2 ohms**

7. Ignition OFF, reconnect all harness connectors, press in the CPA (if equipped) until an audible and/or tactile click is heard.
8. Ignition ON, clear DTCs. Operate the vehicle within the Conditions for Running the DTC.
9. Verify the DTC does not set.
   - **If the DTC sets**

   1. Replace the B63 side impact sensor.
   2. Verify the DTC does not set.
      - If the DTC sets, replace the K36 Inflatable Restraint Sensing and Diagnostic Module.
      - If the DTC does not set.
   3. All OK.

   - **If the DTC does not set**
10. All OK.

Both DTC B0085 and B0088 are set

1. Ignition OFF. Disconnect the X2 harness connector at the K36 Inflatable Restraint Sensing and Diagnostic Module. It may take up to 2 min for all vehicle systems to power down.
2. Test for greater than 50k ohms between each signal circuit listed below and ground:
   - Left front signal circuit - terminal 19 X2
   - Right rear signal circuit - terminal 30 X2
   - **If 50k ohms or less**

   1. Ignition OFF. Disconnect the harness connector at the B63 Side Impact Sensor that failed the test. Ignition ON.
   2. Test for infinite resistance between the signal circuit and ground.
      - If less than infinite resistance, repair the short to ground on the circuit.
      - If infinite resistance, replace the B63 Side Impact Sensor.

   - **If greater than 50k ohms**
3. Ignition ON.
4. Test for less than 1 V between the signal circuit terminals listed below and ground:
   - Left front signal circuit - terminal 19 X2
   - Right rear signal circuit - terminal 30 X2
   - **If 1 V or greater**

   1. Disconnect the harness connector at the B63 Side Impact Sensor that failed the test.

2. Test for less than 1 V between signal circuit and ground.
    - If 1 V or greater, repair the short to voltage in the circuit.
    - If less than 1 V, replace the B63 Side Impact Sensor.
- **If less than 1 V**

5. Ignition OFF, reconnect all harness connectors, press in the CPA (if equipped) until an audible and/or tactile click is heard.
6. Ignition ON, clear DTCs. Operate the vehicle within the Conditions for Running the DTC.
7. Verify the DTC does not set.
    - **If the DTC sets**

      Replace the K36 Inflatable Restraint Sensing and Diagnostic Module.

    - **If the DTC does not set**
8. All OK.

Repair Instructions

Perform the **Diagnostic Repair Verification** after completing the repair.

- **Airbag Side Impact Sensor Replacement (Center Pillar-Mounted)**, **Airbag Side Impact Sensor Replacement (Rear Pillar-Mounted)**
- **Control Module References** for inflatable restraint sensing and diagnostic module replacement, programming and setup

DTC B0086 OR B0087

Diagnostic Instructions

- Perform the **Diagnostic System Check - Vehicle** prior to using this diagnostic procedure.
- Review **Strategy Based Diagnosis** for an overview of the diagnostic approach.
- **Diagnostic Procedure Instructions** provides an overview of each diagnostic category.

DTC Descriptors

DTC B0086 02

Right Front Side Impact Sensor Short to Ground

DTC B0086 05

Right Front Side Impact Sensor High Voltage/Open

DTC B0086 39

Right Front Side Impact Sensor Internal Malfunction

DTC B0086 3A

Right Front Side Impact Sensor Incorrect Component Installed

DTC B0086 71

Right Front Side Impact Sensor Invalid Data

DTC B0087 02

Left Rear Side Impact Sensor Short to Ground

DTC B0087 05

Left Rear Side Impact Sensor High Voltage/Open

DTC B0087 39

Left Rear Side Impact Sensor Internal Malfunction

DTC B0087 3A

Left Rear Side Impact Sensor Incorrect Component Installed

DTC B0087 71

Left Rear Side Impact Sensor Invalid Data

Diagnostic Fault Information

Circuit	Short to Ground	Open/High Resistance	Short to Voltage	Signal Performance
Right Front Side Impact Sensor High Signal	B0086 02, B0087 02	B0086 05	B0086 05, B0087 05	B0086 39
Right Front Side Impact Sensor Low Reference	B0086 02, B0087 02	B0086 05	B0086 05, B0087 05	B0086 39
Left Rear Side Impact Sensor High Signal	B0086 02, B0087 02	B0087 05	B0086 05, B0087 05	B0087 39
Left Rear Side Impact Sensor Low Reference	B0086 02, B0087 02	B0087 05	B0086 05, B0087 05	B0087 39

Circuit/System Description

The impact sensors are equipped on vehicles to supplement the supplemental inflatable restraint (SIR) system performance. The impact sensors are electronic and are not part of the deployment loops, but instead provide

inputs to the inflatable restraint sensing and diagnostic module (SDM). The impact sensors can assist in determining the severity of some frontal and side collisions. The inflatable restraint sensing and diagnostic module uses the input from the impact sensors to assist in determining the severity of a collision further supporting air bag deployment. If the inflatable restraint sensing and diagnostic module determines a deployment is warranted, the inflatable restraint sensing and diagnostic module will cause current to flow through the deployment loops deploying the air bags.

Conditions for Running the DTC

Ignition voltage is between 9-16 V.

Conditions for Setting the DTC

Any of the following conditions exist for 10 seconds:

B0086 02, B0087 02

- The sensor has been shorted to ground.
- The sensor current is greater than 23 mA for greater than 5 milliseconds.

B0086 05, B0087 05

- The sensor circuit is open.
- The inflatable restraint sensing and diagnostic module has not received a message from the sensor for greater than 375 milliseconds.

B0086 39, B0087 39

- The inflatable restraint sensing and diagnostic module has received a Not OK message from the sensor.
- The inflatable restraint sensing and diagnostic module has not received a message.

B0086 3A, B0087 3A

- The inflatable restraint sensing and diagnostic module has received identification message from the sensor, which does not match the identification stored in the inflatable restraint sensing and diagnostic module memory.
- The inflatable restraint sensing and diagnostic module has reset the impact sensor twice without detecting the correct identification message.

B0086 71, B0087 71

The inflatable restraint sensing and diagnostic module has received invalid serial data from the sensor.

Action Taken When the DTC Sets

The inflatable restraint sensing and diagnostic module requests the instrument cluster to illuminate the air bag indicator.

Conditions for Clearing the DTC

- The condition for setting the DTC no longer exists.
- A history DTC will clear once 100 malfunction-free ignition cycles have occurred.
- An ignition cycle is required for the DTC to go from current to history.

Reference Information

Schematic Reference

SIR Schematics

Connector End View Reference

COMPONENT CONNECTOR END VIEWS - INDEX

Description and Operation

Supplemental Inflatable Restraint System Description and Operation

Electrical Information Reference

- **Circuit Testing**
- **Testing for Intermittent Conditions and Poor Connections**
- **Connector Repairs**
- **Wiring Repairs**

Scan Tool Reference

Control Module References for scan tool information

Circuit/System Verification

NOTE:

- **SIR Service Precautions**
- **Inspect all terminals for damage or corrosion when disconnecting connectors. Damage or corrosion in the following requires repair or replacement of the affected component/connector.**
  - **Impact sensor**
  - **inflatable restraint sensing and diagnostic module**
  - **inflatable restraint sensing and diagnostic module wiring harness connector**
- **The connector and connector position assurance (CPA) may seat independent of each other. Both the connector and CPA should seat with an audible and/or tactile click. The CPA isolates the shorting-bars within**

the connector allowing the deployment circuit to operate properly.

1. Ignition ON.
2. Verify that DTC B0086 or B0087 symptom byte 39 or 71 is not set as current.
   - **If DTC B0086 or B0087 symptom byte 39 or 71 is set as current**

     Replace the sensor listed below:

     - B0086 - B63RF Side Impact Sensor - Right Front
     - B0087 - B63LR Side Impact Sensor - Left Rear
   - **If DTC B0086 or B0087 symptom byte 39 or 71 is not set as current**
3. Verify that DTC B0086 or B0087 symptom byte 3A is not set as current.
   - **If DTC B0086 or B0087 symptom byte 3A is set as current**

     Replace the appropriate B63 Side Impact Sensor
   - **If DTC B0086 or B0087 symptom byte 3A is not set as current**
4. Verify that DTC B0086 or B0087 symptom byte 02 or 05 is set as current.
   - **If only DTC B0086 symptom byte 02 or 05 is set as current**

     Refer to Circuit/System Testing below - Only DTC B0086 or B0087 is set.
   - **If only DTC B0087 symptom byte 02 or 05 is set as current**

     Refer to Circuit/System Testing below- Only DTC B0086 or B0087 is set.
   - **If both DTC B0086 or B0087 symptom byte 02 or 05 is set as current**

     Refer to Circuit/System Testing below- Both DTC B0086 and B0087 are set.
   - **If DTC B0086 or B0087 symptom byte 02 or 05 is not set as current**
5. All OK.

Circuit/System Testing

NOTE: The signal circuit is shared at the K36 Inflatable Restraint Sensing and Diagnostic Module between the B63RF Side Impact Sensor Right Front and the B63LR Side Impact Sensor Left Rear (DTC B0086 and DTC B0087). Therefore a short to ground or short to voltage in either of these signal circuits can set a DTC for both circuits, and an open in either circuit should only set its corresponding DTC.

Only DTC B0086 or B0087 is set

1. Ignition OFF, disconnect the harness connector at the appropriate B63 Side Impact Sensor. It may take up to 2 min for all vehicle systems to power down.
2. Test for less than 10 ohms between the low reference circuit terminal 2 and ground.
    - **If 10 ohms or greater**
    1. Disconnect the X2 harness connector at the K36 Inflatable Restraint Sensing and Diagnostic Module.
    2. Test for less than 2 ohms in the low reference circuit end to end.
        - If 2 ohms or greater, repair the open/high resistance in the circuit.
        - If less than 2 ohms, replace the K36 Inflatable Restraint Sensing and Diagnostic Module.
    - **If less than 10 ohms**
3. Ignition ON.
4. Test for less than 10 V between the signal circuit terminal 1 and ground.
    - **If 10 V or greater**
    1. Disconnect the X2 harness connector at the K36 Inflatable Restraint Sensing and Diagnostic Module.
    2. Test for less than 1 V between the signal circuit and ground.
        - If 1 V or greater, repair the short to voltage in the circuit.
        - If less than 1 V, replace the K36 Inflatable Restraint Sensing and Diagnostic Module.
    - **If less than 10 V**
5. Disconnect the X2 harness connector at the K36 Inflatable Restraint Sensing and Diagnostic Module.
6. Test for less than 2 ohms between the B63 Side Impact Sensor signal circuit terminal 1 and the appropriate K36 Inflatable Restraint Sensing and Diagnostic Module signal circuit terminal listed below:
    - Right front signal circuit - terminal 22 X2
    - Left rear signal circuit - terminal 27 X2
    - **If 2 ohms or greater**

      Repair the open/high resistance in the circuit.

    - **If less than 2 ohms**
7. Ignition OFF, reconnect all harness connectors, press in the CPA (if equipped) until an audible and/or tactile click is heard.
8. Ignition ON, clear DTCs. Operate the vehicle within the Conditions for Running the DTC.
9. Verify the DTC does not set.
    - **If the DTC sets**
    1. Replace the B63 Side Impact Sensor.
    2. Verify the DTC does not set.
        - If the DTC sets, replace the K36 Inflatable Restraint Sensing and Diagnostic Module.
        - If the DTC does not set.
    3. All OK.

- **If the DTC does not set**

10. All OK.

Both DTC B0086 and B0087 are set

1. Ignition OFF. Disconnect the X2 harness connector at the K36 Inflatable Restraint Sensing and Diagnostic Module. It may take up to 2 min for all vehicle systems to power down.
2. Test for greater than 50k ohms between each signal circuit listed below and ground:
   - Right front signal circuit - terminal 22 X2
   - Left rear signal circuit - terminal 27 X2
   - **If 50k ohms or less**
     1. Disconnect the harness connector at the B63 Side Impact Sensor that failed the test.
     2. Test for infinite resistance between the signal circuit and ground.
        - If less than infinite resistance, repair the short to ground on the circuit.
        - If infinite resistance, replace the B63 Side Impact Sensor.
   - **If greater than 50k ohms**
3. Ignition ON.
4. Test for less than 1 V between the signal circuit terminals listed below and ground:
   - Right front signal circuit - terminal 22 X2
   - Left rear signal circuit - terminal 27 X2
   - **If 1 V or greater**
     1. Ignition OFF. Disconnect the harness connector at the B63 Side Impact Sensor that failed the test. Ignition ON.
     2. Test for less than 1 V between signal circuit and ground.
        - If 1 V or greater, repair the short to voltage in the circuit.
        - If less than 1 V, replace the B63 Side Impact Sensor.
   - **If less than 1 V**
5. Ignition OFF, reconnect all harness connectors, press in the CPA (if equipped) until an audible and/or tactile click is heard.
6. Ignition ON, clear DTCs. Operate the vehicle within the Conditions for Running the DTC.
7. Verify the DTC does not set.
   - **If the DTC sets**

     Replace the K36 Inflatable Restraint Sensing and Diagnostic Module.

   - **If the DTC does not set**
8. All OK.

Repair Instructions

Perform the **Diagnostic Repair Verification** after completing the repair.

- **Airbag Side Impact Sensor Replacement (Center Pillar-Mounted)**, **Airbag Side Impact Sensor Replacement (Rear Pillar-Mounted)**
- **Control Module References** for inflatable restraint sensing and diagnostic module replacement, programming and setup

DTC B067F OR B0680

Diagnostic Instructions

- Perform the **Diagnostic System Check - Vehicle** prior to using this diagnostic procedure.
- Review **Strategy Based Diagnosis** for an overview of the diagnostic approach.
- **Diagnostic Procedure Instructions** provides an overview of each diagnostic category.

DTC Descriptors

DTC B067F 01

Passenger Air Bag On Indicator Circuit Short to Battery

DTC B067F 02

Passenger Air Bag On Indicator Circuit Short to Ground

DTC B067F 04

Passenger Air Bag On Indicator Circuit Open

DTC B0680 01

Passenger Air Bag Off Indicator Circuit Short to Battery

DTC B0680 02

Passenger Air Bag Off Indicator Circuit Short to Ground

DTC B0680 04

Passenger Air Bag Off Indicator Circuit Open

Diagnostic Fault Information

Circuit	Short to Ground	Open/High Resistance	Short to Voltage	Signal Performance
Passenger Air Bag OFF Indicator Control	B0680 02	B0680 04	B0680 01	-
Passenger Air Bag ON Indicator				

Control	B067F 02	B067F 04	B067F 01	-
Passenger Air Bag Disable Indicator Ground	-	B067F 04, B0680 04	-	-

Circuit/System Description

The passenger air bag ON/OFF indicators are used to notify the driver when the passenger presence system has enabled or disabled the Passenger Instrument Panel Air Bag. When the ignition is turned ON, the ignition voltage is supplied to the Passenger Presence Module. When the Inflatable Restraint Sensing and Diagnostic Module (SDM) receives the appropriate serial data message from the Passenger Presence Module, the Inflatable Restraint Sensing and Diagnostic Module will then provide voltage to the appropriate indicator.

Conditions for Running the DTC

Ignition Voltage is between 9-16 V

Conditions for Setting the DTC

The Inflatable Restraint Sensing and Diagnostic Module detects improper voltage on the control circuit of the passenger air bag ON or OFF indicator.

Actions Taken When the DTC Sets

- The Inflatable Restraint Sensing and Diagnostic Module requests the instrument cluster to illuminate the AIR BAG indicator.
- Passenger air bag ON and OFF indicators are disabled.

Conditions for Clearing the DTC

The condition for setting the DTC no longer exists.

Reference Information

Schematic Reference

SIR Schematics

Connector End View Reference

COMPONENT CONNECTOR END VIEWS - INDEX

Description and Operation

Supplemental Inflatable Restraint System Description and Operation

Electrical Information Reference

- **Circuit Testing**
- **Connector Repairs**
- **Testing for Intermittent Conditions and Poor Connections**
- **Wiring Repairs**

Scan Tool Reference

Control Module References for scan tool information

Circuit/System Verification

NOTE: The passenger air bag ON and OFF indicators may not operate as expected if there are supplemental inflatable restraint (SIR) DTCs. Repair all SIR DTCs before proceeding with this diagnostic.

1. Ignition ON.
2. Verify the passenger air bag ON indicator and passenger air bag OFF indicators turn ON and OFF when commanded ON and OFF with a scan tool.
   - **If the passenger air bag indicators do not change**

     Refer to Circuit/System Testing below

   - **If the passenger air bag indicators change**
3. All OK.

Circuit/System Testing

NOTE: When removing connectors inspect for damage or corrosion. Damage or corrosion in the following requires repair or replacement of the affected.

- **Passenger air bag disable on/off indicator.**
- **Passenger air bag disable on/off indicator wiring harness.**

1. Ignition OFF, disconnect the harness connector at the P14 Passenger Air Bag Disable Indicator.
2. Test for less than 10 ohms between the ground circuit terminal 4 and ground.
   - **If 10 ohms or greater**

     Repair the open/high resistance in the circuit.

   - **If less than 10 ohms**
3. Ignition ON, with a scan tool, command the passenger air bag OFF indictor OFF.
4. Test for less than 11 V between the control circuit terminal 5 and ground.
   - **If 11 V or greater**

1. Ignition OFF, disconnect the X1 harness connector at the K36 Inflatable Restraint Sensing and Diagnostic Module. Ignition ON.
2. Test for less than 1 V between the control circuit and ground.
    - If 1 V or greater, repair the short to voltage on the circuit.
    - If less than 1 V, replace the K36 Inflatable Restraint Sensing and Diagnostic Module.

- **If less than 11 V**

5. With a scan tool, command the passenger air bag OFF indicator ON.
6. Test for greater than 4 V between the control circuit terminal 5 and ground.

- **If 4 V or less**

1. Ignition OFF. Disconnect the X1 harness connector at the K36 Inflatable Restraint Sensing and Diagnostic Module.
2. Test for infinite resistance between the control circuit and ground.
    - If less than infinite resistance, repair the short to ground on the circuit.
3. Test for less than 2 ohms in each control circuit end to end.
    - If 2 ohms or greater, repair the open/high resistance in the circuit.
    - If less than 2 ohms, replace the K36 Inflatable Restraint Sensing and Diagnostic Module.

- **If greater than 4 V**

7. With a scan tool, command the passenger air bag ON indicator OFF.
8. Test for less than 11 V between the control circuit terminal 2 and ground.

- **If 11 V or greater**

1. Ignition OFF, disconnect the X1 harness connector at the K36 Inflatable Restraint Sensing and Diagnostic Module. Ignition ON.
2. Test for less than 1 V between the control circuit and ground.
    - If 1 V or greater, repair the short to voltage on the circuit.
    - If less than 1 V, replace the K36 Inflatable Restraint Sensing and Diagnostic Module.

- **If less than 11 V**

9. With a scan tool, command the passenger air bag ON indicator ON.
10. Test for greater than 4 V between the control circuit terminal 2 and ground.

- **If 4 V or less**

1. Ignition OFF, disconnect the X1 harness connector at the K36 Inflatable Restraint Sensing and Diagnostic Module.
2. Test for infinite resistance between the control circuit and ground.
    - If less than infinite resistance, repair the short to ground on the circuit.
3. Test for less than 2 ohms in each control circuit end to end.
    - If 2 ohms or greater, repair the open/high resistance in the circuit.
    - If less than 2 ohms, replace the K36 Inflatable Restraint Sensing and Diagnostic Module.

- **If greater than 4 V**

11. Replace the P14 Passenger Air Bag Disable Indicator.

Repair Instructions

Perform the **Diagnostic Repair Verification** after completing the repair.

- **Instrument Panel Airbag Arming Status Display Replacement**
- **Control Module References** for K36 Inflatable Restraint Sensing and Diagnostic Module replacement, programming and setup

DTC B1001 (PASSENGER PRESENCE SYSTEM)

Diagnostic Instructions

- Perform the **Diagnostic System Check - Vehicle** prior to using this diagnostic procedure.
- Review **Strategy Based Diagnosis** for an overview of the diagnostic approach.
- **Diagnostic Procedure Instructions** provides an overview of each diagnostic category.

DTC Descriptor

DTC B1001 00

Option Configuration Error

Circuit/System Description

The Inflatable Restraint Sensing and Diagnostic Module (SDM) stores a 4-digit primary key for the Passenger Presence Module. The Inflatable Restraint Sensing and Diagnostic Module sends the Passenger Presence Module the primary key. If the Passenger Presence Module determines that it is the wrong primary key, the Passenger Presence Module will set DTC B1001 and send the Inflatable Restraint Sensing and Diagnostic Module a vehicle mismatch message. The Inflatable Restraint Sensing and Diagnostic Module then will set DTC B0081 and illuminate the SIR warning indicator. The Passenger Presence Module does not use a secondary key.

Conditions for Running the DTC

Ignition voltage is between 9-16 volts.

Conditions for Setting the DTC

The 4-digit primary key stored in the Inflatable Restraint Sensing and Diagnostic Module does not match the 4-digit key stored in the Passenger Presence Module.

Action Taken When the DTC Sets

- The Inflatable Restraint Sensing and Diagnostic Module requests the instrument panel cluster to illuminate the AIR BAG indicator.
- The passenger instrument panel air bag deployment is disabled.

Conditions for Clearing the DTC

The 4-digit Primary Key in the Inflatable Restraint Sensing and Diagnostic Module and in the Passenger Presence Module match.

Diagnostic Aids

This DTC is an indication that the passenger presence system module was not set-up correctly, is not the correct part number or that the Passenger Presence Module is defective.

Reference Information

Schematic Reference

SIR Schematics

Connector End View Reference

COMPONENT CONNECTOR END VIEWS - INDEX

Description and Operation

Supplemental Inflatable Restraint System Description and Operation

Electrical Information Reference

- **Circuit Testing**
- **Connector Repairs**
- **Testing for Intermittent Conditions and Poor Connections**
- **Wiring Repairs**
- **SIR/SRS Wiring Repairs**

Scan Tool Reference

Control Module References for scan tool information

Circuit/System Verification

NOTE: When removing connectors inspect for damage or corrosion. Damage or corrosion in the following requires repair or replacement of the affected.

- **Passenger Presence Module**
- **Passenger Presence Module wiring harness**

1. Verify the correct K85 Passenger Presence Module part number has been installed
    - **If the K85 Passenger Presence Module installed has an incorrect part number, replace the**

K85 Passenger Presence Module

- **If the K85 Passenger Presence Module installed has a correct part number**

2. Verify that DTC B1001 is not set as current in the K85 Passenger Presence Module.
   - **If DTC is set as current. If Inflatable Restraint Sensing and Diagnostic Module part number is correct**
     1. Verify the Inflatable Restraint Sensing and Diagnostic Module part number is correct.
        - If the K36 Inflatable Restraint Sensing and Diagnostic Module part number is incorrect, replace the K36 Inflatable Restraint Sensing and Diagnostic Module
        - If the K36 Inflatable Restraint Sensing and Diagnostic Module part number is correct
     2. Replace the K85 Passenger Presence Module
   - **If the DTC is no set as current**
3. All OK.

Repair Instructions

Perform the **Diagnostic Repair Verification** after completing the diagnostic procedure.

Control Module References for K85 Passenger Presence Module and K36 Inflatable Restraint Sensing and Diagnostic Module replacement, setup, and programming

DTC B1001 (INFLATABLE RESTRAINT SENSING AND DIAGNOSTIC MODULE)

Diagnostic Instructions

- Perform the **Diagnostic System Check - Vehicle** prior to using this diagnostic procedure.
- Review **Strategy Based Diagnosis** for an overview of the diagnostic approach.
- **Diagnostic Procedure Instructions** provides an overview of each diagnostic category

DTC Descriptor

DTC B1001 00

Option Configuration

Circuit/System Description

The inflatable restraint sensing and diagnostic module (SDM) stores a primary data key, which is a 4-digit number. When the ignition is turned ON, the inflatable restraint sensing and diagnostic module compares this information to the information stored in the Body Control Module (BCM) via serial data. If there is a mismatch between the information stored in the inflatable restraint sensing and diagnostic module and Body Control Module, DTC B1001 will set.

Conditions for Running the DTC

System voltage is between 9-16 V.

Conditions for Setting the DTC

The 4-digit Primary Data Key stored in the inflatable restraint sensing and diagnostic module does not match the 4 digits stored in the Body Control Module.

Action Taken When the DTC Sets

- The inflatable restraint sensing and diagnostic module requests the instrument cluster to illuminate the AIR BAG indicator.
- The inflatable restraint sensing and diagnostic module disables all deployments.

Conditions for Clearing the DTC

The last 4-digit Primary Data Key in the inflatable restraint sensing and diagnostic module matches the last 4 digits stored in the Body Control Module.

Diagnostic Aids

- This DTC is an indication that an incorrect inflatable restraint sensing and diagnostic module is installed in the vehicle, or that the inflatable restraint sensing and diagnostic module and/or the Body Control Module was replaced without reprogramming the Body Control Module with the new information.
- If the inflatable restraint sensing and diagnostic module was previously programmed and DTC B1001 is now set, the setup portion of program was not completed. Proceed to the inflatable restraint sensing and diagnostic module Setup portion of the **Inflatable Restraint Sensing and Diagnostic Module Programming and Setup**

Reference Information

Schematic Reference

SIR Schematics

Connector End View Reference

COMPONENT CONNECTOR END VIEWS - INDEX

Description and Operation

Supplemental Inflatable Restraint System Description and Operation

Electrical Information Reference

- **Circuit Testing**
- **Testing for Intermittent Conditions and Poor Connections**
- **Wiring Repairs**
- **Connector Repairs**

Scan Tool Reference

Control Module References for scan tool information

Circuit/System Verification

1. Verify the scan tool K36 Inflatable Restraint Sensing and Diagnostic Module Primary Key Status paramater is Valid.
    - **If the K36 Inflatable Restraint Sensing and Diagnostic Module Primary Key Status parameter is Invalid**

      Perform the K36 Inflatable Restraint Sensing and Diagnostic Module setup. Refer to **Inflatable Restraint Sensing and Diagnostic Module Programming and Setup** .

    - **If the K36 Inflatable Restraint Sensing and Diagnostic Module Primary Key Status parameter is Valid**
2. All OK.

Repair Instructions

Perform the **Diagnostic Repair Verification** after completing the repair.

- **SIR/SRS Wiring Repairs**
- **Control Module References** for K36 Inflatable Restraint Sensing and Diagnostic Module replacement, programming and setup

DTC B1019

Diagnostic Instructions

- Perform the **Diagnostic System Check - Vehicle** prior to using this diagnostic procedure.
- Review **Strategy Based Diagnosis** for an overview of the diagnostic approach.
- **Diagnostic Procedure Instructions** provides an overview of each diagnostic category.

DTC Descriptor

DTC B1019 00

System Configuration Error

Circuit/System Description

The inflatable restraint sensing and diagnostic module monitors the number of safety components installed on the vehicle. When the ignition is turned ON, the inflatable restraint sensing and diagnostic module evaluates the number of safety components installed and compares it to the number of components the inflatable restraint sensing and diagnostic module expects to see on the vehicle with its current calibration. If there is a mismatch between detected components and the components programmed with the inflatable restraint sensing and

diagnostic module calibration, DTC B1019 will set. The components (if equipped) that the inflatable restraint sensing and diagnostic module will detect include inflatable restraint deployment loops, impact sensors, passenger presence system components, seat position sensors, disable switches, and seat belt switches.

Conditions for Running the DTC

Ignition voltage is between 9-16 V.

Conditions for Setting the DTC

The setup for the inflatable restraint sensing and diagnostic module has not been completed and the inflatable restraint sensing and diagnostic module does not detect the passenger presence system (if equipped), the correct number of sensors, or deployment loops, that is expected with this calibration.

Action Taken When the DTC Sets

- The inflatable restraint sensing and diagnostic module requests the instrument cluster to illuminate the AIR BAG warning indicator.
- The DTC must be cleared before running the setup inflatable restraint sensing and diagnostic module.
- Air bag indicator will continue to flash until inflatable restraint sensing and diagnostic module setup procedure is complete.

Conditions for Clearing the DTC

- The condition for setting the DTC is no longer present.
- A history DTC will clear once 100 malfunction-free ignition cycles have occurred.

Diagnostic Aids

The inflatable restraint sensing and diagnostic module scan tool deployment loop, impact sensor, and passenger presence (if equipped) data will match what the inflatable restraint sensing and diagnostic module has been programmed to expect to see on the vehicle. B1019 DTC will set if a deployment loop or impact sensor is added or removed from the system, or if the passenger presence is not detected.

DTC B1019 will set when an open/high resistance DTC sets for a deployment loop or impact sensor. This causes mismatch between the learned and actual components connected to the inflatable restraint sensing and diagnostic module.

DTC B1019 can set with no other DTCs if an unused deployment loop or impact sensor circuit is shorted to ground. This causes a mismatch between the learned and actual components connected to the inflatable restraint sensing and diagnostic module.

Reference Information

Schematic Reference

- **Seat Belt Schematics**

- **SIR Schematics**

Connector End View Reference

COMPONENT CONNECTOR END VIEWS - INDEX

Description and Operation

- **Seat Belt System Description and Operation**
- **Supplemental Inflatable Restraint System Description and Operation**

Electrical Information Reference

- **Circuit Testing**
- **Testing for Intermittent Conditions and Poor Connections**
- **Connector Repairs**
- **Wiring Repairs**

Scan Tool Reference

Control Module References for scan tool information

Circuit/System Verification

NOTE: DTC B1019 can set after the inflatable restraint sensing and diagnostic module has been replaced and/or reprogrammed before the setup procedure is completed. The setup procedure cannot be completed if DTC B1019 is set as current or history. If a short or open is detected in a deployment circuit prior to the setup procedure being performed, the inflatable restraint sensing and diagnostic module will set DTC B1019.

1. Ignition ON.
2. Verify no other K36 Inflatable Restraint Sensing and Diagnostic Module DTCs are set.
    - **If other K36 Inflatable Restraint Sensing and Diagnostic Module DTCs are set**

      Diagnose those DTCs first. Refer to **Diagnostic Trouble Code (DTC) List - Vehicle**

    - **If no other K36 Inflatable Restraint Sensing and Diagnostic Module DTCs are set**
3. Verify the enabled impact sensors identified in the scan tool data list match the number of actual impact sensors installed on the vehicle.
    - **If the number of enabled impact sensors do not match**
    1. Verify the correct K36 Inflatable Restraint Sensing and Diagnostic Module calibration file is loaded in the K36 Inflatable Restraint Sensing and Diagnostic Module.
        - If the K36 Inflatable Restraint Sensing and Diagnostic Module calibration file is correct and

the vehicle contains an incorrect number of sensors, identify which sensors are missing to make the vehicle match the K36 Inflatable Restraint Sensing and Diagnostic Module impact sensor calibration scan tool data list.

- If the calibration file is incorrect

2. Reprogram the K36 Inflatable Restraint Sensing and Diagnostic Module. Refer to **Inflatable Restraint Sensing and Diagnostic Module Programming and Setup**

- **If the number of enabled impact sensors match**

4. Verify the enabled deployment loops identified in the scan tool data list match the deployment loops installed on the vehicle.
   - **If the number of enabled deployment loops do not match**
   1. Verify the correct K36 Inflatable Restraint Sensing and Diagnostic Module calibration file is loaded in the K36 Inflatable Restraint Sensing and Diagnostic Module.
      - If the K36 Inflatable Restraint Sensing and Diagnostic Module calibration file is correct and the vehicle contains an incorrect number of loops, identify which deployment loops are missing to make the vehicle match the K36 Inflatable Restraint Sensing and Diagnostic Module impact sensor calibration scan tool data list.
      - If the calibration file is incorrect
   2. Program the K36 Inflatable Restraint Sensing and Diagnostic Module. Refer to **Inflatable Restraint Sensing and Diagnostic Module Programming and Setup**
   - **If the number of enabled deployment loops match**
5. Verify a passenger presence system is equipped on the vehicle.
   - **If a passenger presence system is not equipped on the vehicle**

     Replace the K36 Inflatable Restraint Sensing and Diagnostic Module.

   - **If a passenger presence system is equipped on the vehicle**
6. Verify the Passenger Presence System Enable Status parameter identified in the scan tool data list is Enabled.
   - **If the Passenger Presence System Enable Status parameter is not Enabled**

     Refer to **Inflatable Restraint Sensing and Diagnostic Module Programming and Setup**

   - **If the Passenger Presence System parameter is Enabled**
7. Verify the Passenger Presence System Learn Status parameter identified in the scan tool data list is Learned.
   - **If the Passenger Presence System Learn Status parameter is not Learned**
   1. Verify the scan tool can communicate with the passenger presence system.
      - If the scan tool will not communicate with the passenger presence system, refer to **Scan Tool Does Not Communicate with Low Speed GMLAN Device**
      - If the scan tool communicates
   2. Ignition OFF, disconnect the scan tool, wait 2 min.
   3. Ignition ON, connect the scan tool, verify DTC B1019 is not set as current.

- If the DTC is set as current, refer to **Inflatable Restraint Sensing and Diagnostic Module Programming and Setup**
- If the DTC is not set as current

4. All OK.
   - **If the Passenger Presence System Learn status is Learned**

8. Replace the K36 Inflatable Restraint Sensing and Diagnostic Module.

Repair Instructions

Perform the **Diagnostic Repair Verification** after completing the repair.

- **SIR/SRS Wiring Repairs**
- **Control Module References** for inflatable restraint sensing and diagnostic module replacement, programming and setup

PASSENGER PRESENCE SYSTEM REZEROING

Introduction

The inflatable restraints passenger presence system is a calibrated system that requires re-zeroing or a zero check anytime the seat cushion trim attachments have been removed or the passenger presence system has been replaced. The procedures below are designed to assist in the re-zeroing of the passenger presence system. Before you start, read these procedures carefully and completely. For further information regarding the passenger presence system refer to **Supplemental Inflatable Restraint System Description and Operation**.

NOTE: The following procedures must be followed:

1. Read this procedure carefully and completely.
2. The passenger presence system will not function properly if the passenger presence system re-zeroing procedure is not performed.
3. Perform the **Diagnostic Repair Verification** after successfully completing the re-zeroing procedure to ensure the system is functioning properly.

Passenger Presence System Re-zeroing Procedure

NOTE:

- **Before the passenger presence system can be re-zeroed the front passenger seat must be completely empty of all items. The presence of any liquid or items on the front passenger seat will affect the calibration and operation of the passenger presence system.**
- **DTC B0081 will set if the re-zero system test is performed with:**
  - **An aftermarket seat heater located too close to the sensor mat**
  - **A scan tool, laptop, or other electronic device is in the seat**
  - **The seat is damp or wet**

- **An object or person is in the seat**

1. Verify that the temperature is between 32°F to 100°F before running a re-zero procedure.
2. Verify the seat is completely dry.
3. Empty the front outboard passenger seat.
4. Verify that all SIR and passenger presence system components, connectors, and connector position assurances are properly connected and mounted.
5. Install a scan tool.
6. Turn ON the ignition, with the engine OFF.

NOTE: The presence of current DTCs, except DTC B0081 11 or B0081 4B, will prevent the passenger presence system from re-zeroing and may set additional DTCs.

7. With a scan tool, perform the Passenger Presence Sensor Learn procedure.
8. If the test fails, confirm that the seat is empty and completely dry. Perform the Passenger Presence Sensor Learn test again. If the test fails again, verify DTC B0081 is not set as current, if the DTC is set refer to **Diagnostic Trouble Code (DTC) List - Vehicle** . If the test successfully completed, cycle the ignition OFF.
9. After the passenger presence system has been successfully re-zeroed, perform the **Diagnostic Repair Verification** .

SYMPTOMS - SIR

NOTE: Complete the following steps before using the symptom tables:

1. **Perform Diagnostic System Check - Vehicle before using the symptom tables in order to verify that all of the following are true:**
   - **There are no DTCs set.**
   - **The inflatable restraint sensing and diagnostic module (SDM) can communicate via the serial data link.**
2. **Review the SIR system description and operation in order to familiarize yourself with the system functions. Refer to Supplemental Inflatable Restraint System Description and Operation.**

Visual/Physical Inspection

- Inspect for aftermarket devices which could affect the operation of the SIR system. Refer to **Checking Aftermarket Accessories** .
- Inspect the easily accessible or visible system components for obvious damage or conditions which could cause the symptom.

Intermittent

Faulty electrical connections or wiring may be the cause of intermittent conditions. Refer to **Testing for Intermittent Conditions and Poor Connections** .

Symptom List

Refer to **Air Bag Indicator Circuit Malfunction (Driver)**, **Air Bag Indicator Circuit Malfunction (Passenger)** in order to diagnose the symptom.

AIR BAG INDICATOR CIRCUIT MALFUNCTION (DRIVER)

Diagnostic Instructions

- Perform the **Diagnostic System Check - Vehicle** prior to using this diagnostic procedure.
- Review **Strategy Based Diagnosis** for an overview of the diagnostic approach.
- **Diagnostic Procedure Instructions** provides an overview of each diagnostic category.

Circuit/System Description

When the ignition is turned ON the driver air bag indicator will illuminate, and then turn OFF after the bulb check is complete. The inflatable restraint sensing and diagnostic module (SDM) performs diagnostic tests on the SIR system during the bulb check. If any malfunction exists the inflatable restraint sensing and diagnostic module will request the instrument cluster to illuminate the air bag indicator steady, via serial data. If a preexisting malfunction exists, the air bag indicator will illuminate steady immediately after the ignition is turned ON. If the ignition 1 voltage is outside of the normal operating voltage range of 9-16 V, the inflatable restraint sensing and diagnostic module will command the instrument cluster to illuminate the air bag indicator ON, even with no DTCs present, and then disable all deployment loops.

Diagnostic Aids

- A DTC B1370 may set if the ignition 1 circuit is outside the 9-16 V range.
- A flashing driver air bag indicator is displayed if the inflatable restraint sensing and diagnostic module was programmed but did not fully complete the programming. For a flashing driver airbag indicator, refer to **Inflatable Restraint Sensing and Diagnostic Module Programming and Setup** .

Reference Information

Schematic Reference

SIR Schematics

Connector End View Reference

COMPONENT CONNECTOR END VIEWS - INDEX

Description and Operation

Supplemental Inflatable Restraint System Description and Operation

Electrical Information Reference

- **Circuit Testing**
- **Testing for Intermittent Conditions and Poor Connections**
- **Connector Repairs**
- **Wiring Repairs**

Scan Tool Reference

Control Module References for scan tool information

Circuit/System Verification

1. Verify the test lamp turns ON and OFF when commanding the Passenger Seat Belt Reminder Indicator ON and OFF with a scan tool.
    - **If the air bag indicator does not turn ON or OFF**

      Replace the P16 Instrument Cluster.

    - **If the air bag indicator does turn ON or OFF**
2. Replace the K36 inflatable restraint sensing and diagnostic module.

Repair Instructions

Perform the **Diagnostic Repair Verification** after completing the repair.

- **SIR/SRS Wiring Repairs**
- **Control Module References** for Instrument Cluster or inflatable restraint sensing and diagnostic module replacement, programming and setup

AIR BAG INDICATOR CIRCUIT MALFUNCTION (PASSENGER)

Diagnostic Instructions

- Perform the **Diagnostic System Check - Vehicle** prior to using this diagnostic procedure.
- Review **Strategy Based Diagnosis** for an overview of the diagnostic approach.
- **Diagnostic Procedure Instructions** provides an overview of each diagnostic category.

Diagnostic Fault Information

Circuit	Short to Ground	Open/High Resistance	Short to Voltage	Signal Performance
Passenger Air Bag OFF Indicator Control	2	2*	4	-
Passenger Air Bag ON Indicator	3	3*	5	-

Control				
Passenger Air Bag Disable Indicator Ground	-	1	1	-

1. Both indicators always OFF
2. The OFF indicator will not illuminate
3. The ON indicator will not illuminate
4. The OFF indictor always ON
5. The ON indicator always ON

* High resistance may cause the appropriate indicator to illuminate less bright than normal

Circuit/System Description

The passenger air bag ON/OFF indicators are used to notify the driver when the passenger presence system has enabled or disabled the passenger instrument panel air bag. When the ignition is turned ON, the ignition voltage is supplied to the passenger presence module. When the Inflatable Restraint Sensing and Diagnostic Module receives the appropriate serial data message from the passenger presence module the Inflatable Restraint Sensing and Diagnostic Module will then provide voltage to the appropriate indicator.

Reference Information

Schematic Reference

SIR Schematics

Connector End View Reference

COMPONENT CONNECTOR END VIEWS - INDEX

Description and Operation

Supplemental Inflatable Restraint System Description and Operation

Electrical Information Reference

- **Circuit Testing**
- **Connector Repairs**
- **Testing for Intermittent Conditions and Poor Connections**
- **Wiring Repairs**

Scan Tool Reference

Control Module References for scan tool information

Circuit/System Verification

1. Ignition ON.

2. Verify no other Inflatable Restraint Sensing and Diagnostic Module DTCs are set.
   - **If other Inflatable Restraint Sensing and Diagnostic Module DTCs are set**

     Diagnose those DTCs first. Refer to **Diagnostic Trouble Code (DTC) List - Vehicle**

   - **If no other Inflatable Restraint Sensing and Diagnostic Module DTCs are set**
3. Verify the passenger air bag ON indicator and passenger air bag OFF indicators turn ON and OFF when commanded ON and OFF with a scan tool.
   - **If the passenger air bag indicators do not change**

     Refer to Circuit/System Testing below

   - **If the passenger air bag indicators change**
4. All OK.

Circuit/System Testing

NOTE: When removing connectors inspect for damage or corrosion. Damage or corrosion in the following requires repair or replacement of the affected:

- **Passenger air bag disable on/off indicator.**
- **Passenger air bag disable on/off indicator wiring harness.**

1. Ignition OFF, disconnect the harness connector at the P14 Passenger Air Bag Disable Indicator.
2. Test for less than 10 ohms between the ground circuit terminal 4 and ground.
   - **If 10 ohms or greater**
   1. Test for less than 2 ohms in the ground circuit end to end.
      - If 2 ohms or greater, repair the open/high resistance in the circuit.
      - If less than 2 ohms, repair the open/high resistance in the ground connection.
   - **If less than 10 ohms**
3. Ignition ON, command the passenger air bag OFF indictor OFF with a scan tool.
4. Test for less than 11 V between the control circuit terminal 5 and ground.
   - **If 11 V or greater**
   1. Ignition OFF, disconnect the X1 harness connector at the K36 Inflatable Restraint Sensing and Diagnostic Module. Ignition ON.
   2. Test for less than 1 V between the control circuit and ground.
      - If 1 V or greater, repair the short to voltage on the circuit.
      - If less than 1 V, replace the K36 Inflatable Restraint Sensing and Diagnostic Module.
   - **If less than 11 V**
5. Command the passenger air bag OFF indicator ON with a scan tool.
6. Test for greater than 4 V between the control circuit terminal 5 and ground.

- **If 4 V or less**

1. Ignition OFF, disconnect the X1 harness connector at the K36 Inflatable Restraint Sensing and Diagnostic Module.
2. Test for infinite resistance between the control circuit and ground.
   - If less than infinite resistance, repair the short to ground on the circuit.
3. Test for less than 2 ohms in each control circuit end to end.
   - If 2 ohms or greater, repair the open/high resistance in the circuit.
   - If less than 2 ohms, replace the K36 Inflatable Restraint Sensing and Diagnostic Module.

- **If greater than 4 V**

7. Command the passenger air bag ON indicator OFF with a scan tool.
8. Test for less than 11 V between the control circuit terminal 2 and ground.
   - **If 11 V or greater**

1. Ignition OFF, disconnect the X1 harness connector at the K36 Inflatable Restraint Sensing and Diagnostic Module. Ignition ON.
2. Test for less than 1 V between the control circuit and ground.
   - If 1 V or greater, repair the short to voltage on the circuit.
   - If less than 1 V, replace the K36 Inflatable Restraint Sensing and Diagnostic Module.

- **If less than 11 V**

9. Command the passenger air bag ON indicator ON with a scan tool.
10. Test for greater than 4 V between the control circuit terminal 2 and ground.
    - **If 4 V or less**

1. Ignition OFF, disconnect the X1 harness connector at the K36 Inflatable Restraint Sensing and Diagnostic Module.
2. Test for infinite resistance between the control circuit and ground.
   - If less than infinite resistance, repair the short to ground on the circuit.
3. Test for less than 2 ohms in each control circuit end to end.
   - If 2 ohms or greater, repair the open/high resistance in the circuit.
   - If less than 2 ohms, replace the K36 Inflatable Restraint Sensing and Diagnostic Module.

- **If greater than 4 V**

11. Replace the P14 Passenger Air Bag Disable Indicator.

Repair Instructions

Perform the **Diagnostic Repair Verification** after completing the repair.

- **Instrument Panel Airbag Arming Status Display Replacement**
- **Control Module References** for K36 Inflatable Restraint Sensing and Diagnostic Module replacement, programming and setup

SIR DISABLING AND ENABLING

SIR component location affects how a vehicle should be serviced. There are parts of the SIR system installed in various locations around a vehicle. To find the location of the SIR components refer to **Supplemental Inflatable Restraint System Description and Operation**.

There are several reasons for disabling the SIR system, such as repairs to the SIR system or servicing a component near or attached to an SIR component. There are several ways to disable the SIR system depending on what type of service is being performed. The following information covers the proper procedures for disabling/enabling the SIR system.

Condition	Action
If the vehicle was involved in an accident with an air bag deployment.	Disconnect the negative battery cable(s) *. Refer to **Repairs and Inspections Required After a Collision**.
When performing SIR diagnostics.	Follow the appropriate SIR service manual diagnostic procedure(s) *
When moving, removing or replacing an SIR component or a component attached to an SIR component. (Anytime you remove fasteners.)	Disconnect the negative battery cable(s) *
If the vehicle is suspected of having shorted electrical wires.	Disconnect the negative battery cable(s) *
When performing electrical diagnosis on components other than the SIR system.	Remove the SIR/Airbag fuse(s) when indicated by the diagnostic procedure to disable the SIR system
* DTCs will be lost when the negative battery cable is disconnected.	

SIR Service Precautions

WARNING: When performing service on or near the SIR components or the SIR wiring, the SIR system must be disabled. Failure to observe the correct procedure could cause deployment of the SIR components. Serious injury can occur. Failure to observe the correct procedure could also result in unnecessary SIR system repairs.

The Inflatable Restraint Sensing and Diagnostic Module (SDM) maintains a reserved energy supply. The reserved energy supply provides deployment power for the air bags if the Inflatable Restraint Sensing and Diagnostic Module loses battery power during a collision. Deployment power is available for as much as 2 minutes after disconnecting the vehicle power. Waiting 2 minutes before working on the system after disabling the SIR system prevents deployment of the air bags from the reserved energy supply.

General Service Instructions

The following are general service instructions which must be followed in order to properly repair the vehicle and return it to its original integrity:

- Do not expose air bags to temperatures above 65°C (149°F).
- Verify the correct replacement part number. Do not substitute a component from a different vehicle.
- Use only original GM replacement parts available from your authorized GM dealer. Do not use salvaged

parts for repairs to the SIR system.

Discard any of the following components if it has been dropped from a height of 92 cm (3 feet) or greater:

- Inflatable Restraint Sensing and Diagnostic Module (SDM)
- Any air bag
- Driver steering wheel air bag coil
- Any impact sensor
- Seat belt anchor and/or retractor pretensioners
- Passenger presence module and/or occupant sensor

Disabling Procedure - Air Bag Fuse

1. Turn the steering wheel so that the vehicles wheels are pointing straight ahead.
2. Place the ignition in the OFF position.

WARNING: The SDM may have more than one fused power input. To ensure there is no unwanted SIR deployment, personal injury, or unnecessary SIR system repairs, remove all fuses supplying power to the SDM. With all SDM fuses removed and the ignition switch in the ON position, the AIR BAG warning indicator illuminates. This is normal operation, and does not indicate a SIR system malfunction.

3. Locate and remove the fuse(s) supplying power to the Inflatable Restraint Sensing and Diagnostic Module. Refer to **SIR Schematics**, or **Electrical Center Identification Views** .
4. Wait 2 minutes before working on the system.

Enabling Procedure - Air Bag Fuse

1. Place the ignition in the OFF position.
2. Install the fuse(s) supplying power to the Inflatable Restraint Sensing and Diagnostic Module. Refer to **SIR Schematics**, or **Electrical Center Identification Views** .
3. Turn the ignition switch to the ON position. The AIR BAG indicator will illuminate or flash then turn OFF.
4. Perform the Diagnostic System Check - Vehicle if the AIR BAG warning indicator does not operate as described. Refer to **Diagnostic System Check - Vehicle** .

Disabling Procedure - Negative Battery Cable

1. Turn the steering wheel so that the vehicles wheels are pointing straight ahead.
2. Place the ignition in the OFF position.
3. Disconnect the negative battery cable from the battery. Refer to **Battery Negative Cable Disconnection and Connection** .
4. Wait 2 minutes before working on system.

Enabling Procedure - Negative Battery Cable

1. Place the ignition in the OFF position.
2. Connect the negative battery cable to the battery. Refer to **Battery Negative Cable Disconnection and Connection** .
3. Turn the ignition switch to the ON position. The AIR BAG indicator will illuminate or flash then turn OFF.
4. Perform the Diagnostic System Check - Vehicle if the AIR BAG warning indicator does not operate as described. Refer to **Diagnostic System Check - Vehicle** .

REPAIR INSTRUCTIONS

SIR SERVICE PRECAUTIONS

General Service Instructions

WARNING: When performing service on or near the SIR components or the SIR wiring, the SIR system must be disabled. Refer to SIR Disabling and Enabling. Failure to observe the correct procedure could cause deployment of the SIR components, personal injury, or unnecessary SIR system repairs.

NOTE: The Inflatable Restraint Sensing and Diagnostic Module (SDM) maintains a reserved energy supply. The reserved energy supply provides deployment power for the SIR air bags. Deployment power may be available for up to 2 minutes after disconnecting the vehicle power. Disabling the SIR system prevents deployment of the SIR air bags from the reserved energy supply.

NOTE: The following are general service instructions which must be followed in order to properly repair the vehicle and return it to its original integrity:

- Do not expose air bags to temperatures above 65°C (149°F)
- Verify the correct replacement part number. Do not substitute a component from a different vehicle
- Use only original GM replacement parts available from your authorized GM dealer. Do not use salvaged parts for repairs to the SIR system

NOTE: Discard any of the following components if it has been dropped from a height of 92 cm (3 ft) or greater:

- Inflatable Restraint Sensing and Diagnostic Module
- Passenger instrument panel air bag
- Driver steering wheel air bag
- Driver steering wheel air bag coil
- Roof rail air bags

- Front and /or side impact sensors
- Seat belt achor and/or retractor pretensioners
- Front seat side air bag

FRONT END INFLATABLE RESTRAINT DISCRIMINATING SENSOR REPLACEMENT

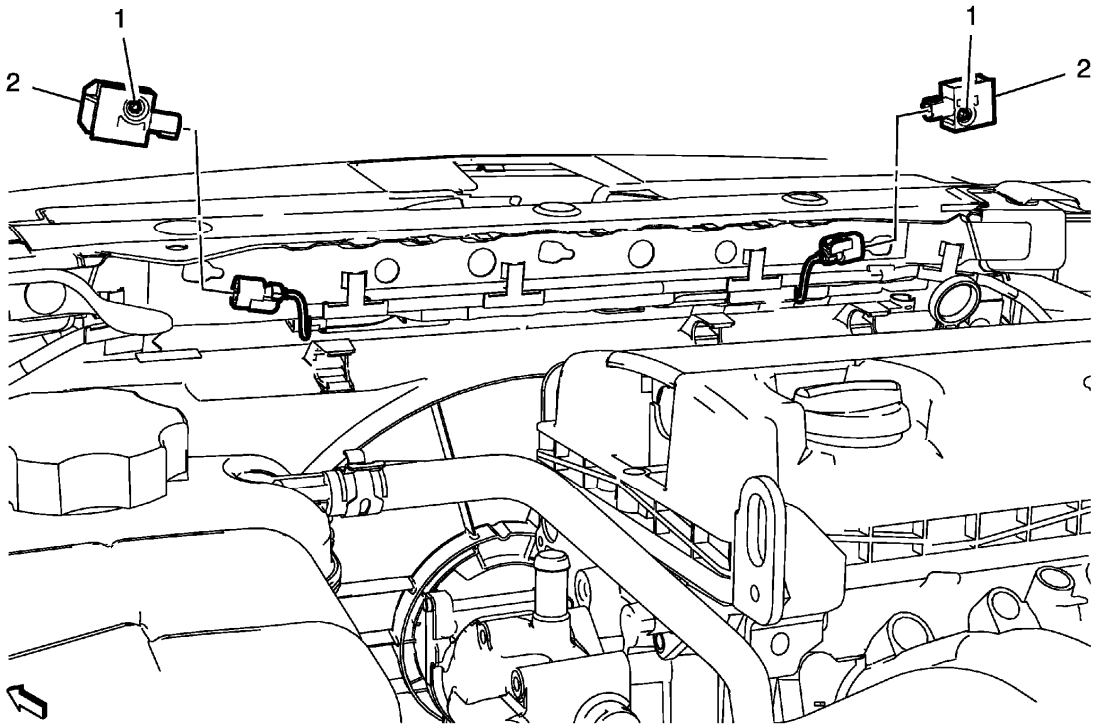

Fig. 6: Front End Inflatable Restraint Discriminating Sensor
Courtesy of GENERAL MOTORS COMPANY

Front End Inflatable Restraint Discriminating Sensor Replacement

Callout	Component Name
WARNING: **Refer to SIR Warning .** **Preliminary Procedures** Disable the SIR system. Refer to **SIR Disabling and Enabling**.	
1	Front End Inflatable Restraint Discriminating Sensor Fastener (Qty: 2) **CAUTION:** **Refer to Fastener Caution .** **Tighten** 7.5 N.m (66 lb in)

	NOTE: **The inflatable restraint discriminating sensor fastener is integral to the sensor assembly, DO NOT remove separately.**
2	Front End Inflatable Restraint Discriminating Sensor (Qty: 2) **Procedure** 1. Disconnect the electrical connector. 2. Loosen the inflatable restraint discriminating sensor fastener and slide the sensor out of the keyhole slot.

AIRBAG SIDE IMPACT SENSOR REPLACEMENT (CENTER PILLAR-MOUNTED)

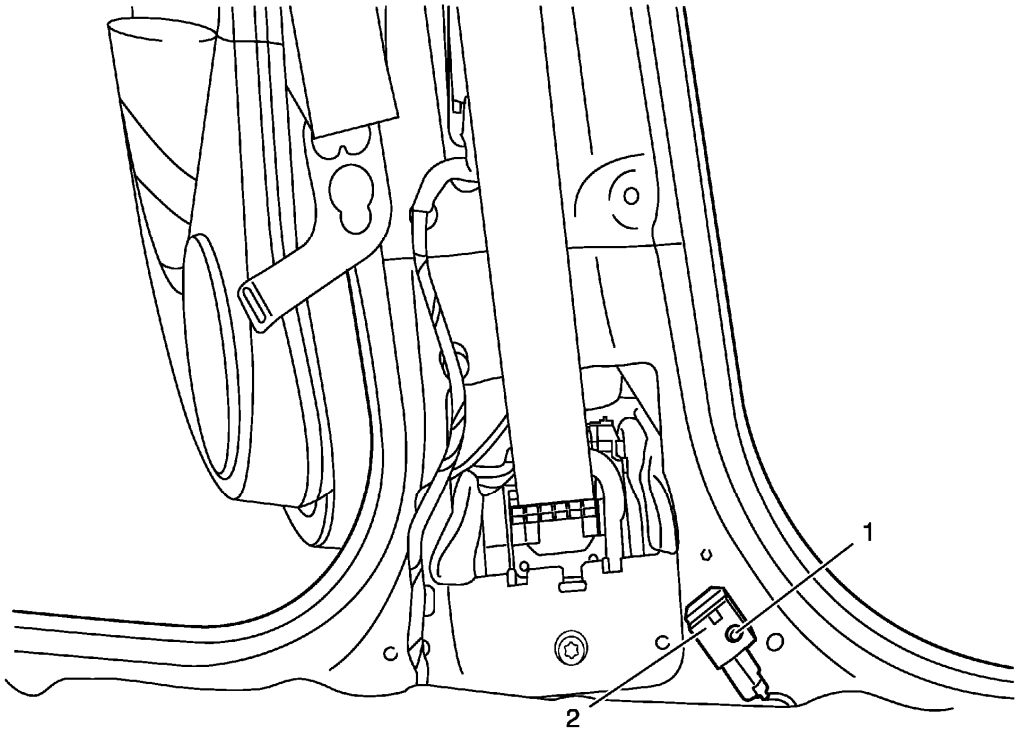

Fig. 7: Inflatable Restraint Side Impact Sensor And Screw
Courtesy of GENERAL MOTORS COMPANY

Airbag Side Impact Sensor Replacement (Center Pillar-Mounted)

Callout	Component Name
WARNING: **Refer to SIR Warning .** **WARNING:** **Refer to SIR Inflator Module Handling and Storage Warning .**	

WARNING:

Following the deployment of a side impact air bag, inspect the following parts for damage. Replace these parts if necessary:

- **The seat cushion frame**
- **The seat recliner, if equipped**
- **The seat adjuster**
- **The seat back frame**

Failure to do so may cause future personal injury.

Preliminary Procedures

1. Disable the SIR system. Refer to **SIR Disabling and Enabling**.
2. Remove the center pillar lower garnish molding. Refer to **Center Pillar Lower Garnish Molding Replacement** .

1	Inflatable Restraint Side Impact Sensor Screw **CAUTION:** **Refer to Fastener Caution .** **Tighten** 7.5 N.m (66 lb in)
2	Inflatable Restraint Side Impact Sensor **Procedure** 1. Disconnect electrical connector. **NOTE:** **The bolt is integral to the sensor assembly, DO NOT remove separately.** 2. Loosen the bolts and slide the sensor out of the keyhole slots.

AIRBAG SIDE IMPACT SENSOR REPLACEMENT (REAR PILLAR-MOUNTED)

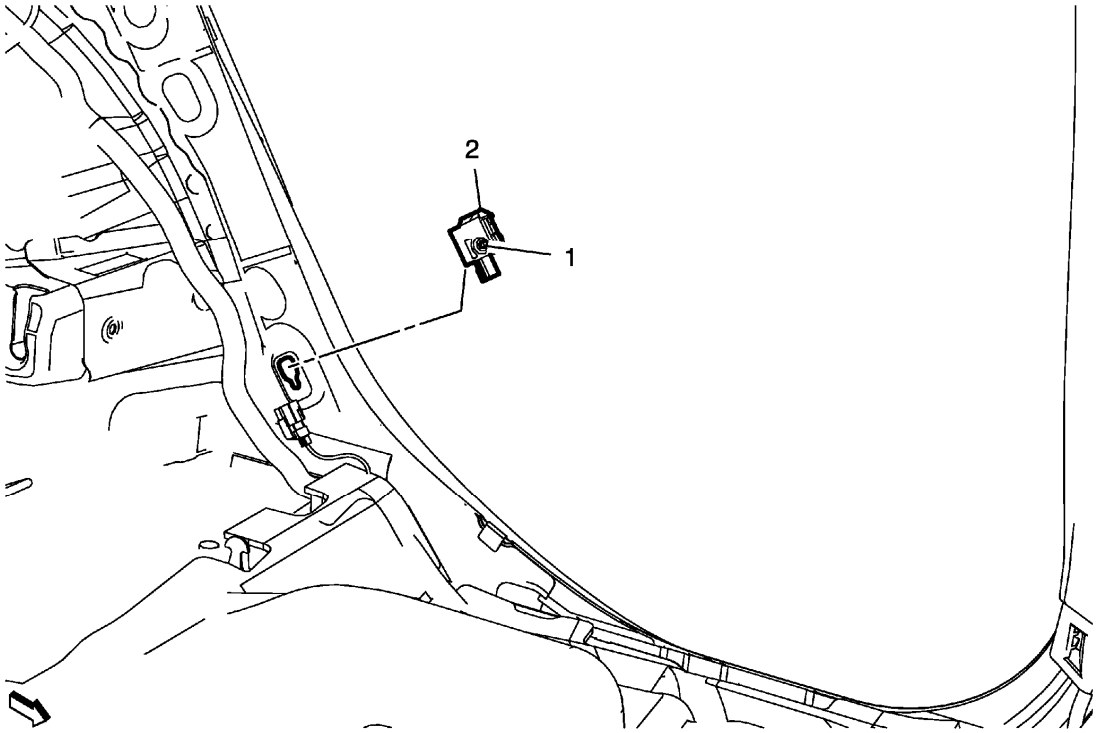

Fig. 8: Inflatable Restraint Side Impact Sensor (Rear Pillar-Mounted)
Courtesy of GENERAL MOTORS COMPANY

Airbag Side Impact Sensor Replacement (Rear Pillar-Mounted)

Callout	Component Name
Preliminary Procedures 1. Disable the SIR system. Refer to **SIR Disabling and Enabling**. 2. Remove the rear seat cushion. Refer to **Rear Seat Cushion Removal and Installation** . 3. Remove the rear seat back cushion bolster. Refer to **Rear Seat Back Bolster Replacement** . 4. Remove the rear side door sill trim plate. Refer to **Rear Side Door Sill Trim Plate Replacement** .	
1	Inflatable Restraint Side Impact Sensor Fastener **CAUTION:** **Refer to Fastener Caution .** **Procedure** Disconnect the electrical connector. **Tighten** 7.5 (66 lb in)
2	Inflatable Restraint Side Impact Sensor

AIRBAG SENSING AND DIAGNOSTIC MODULE REPLACEMENT

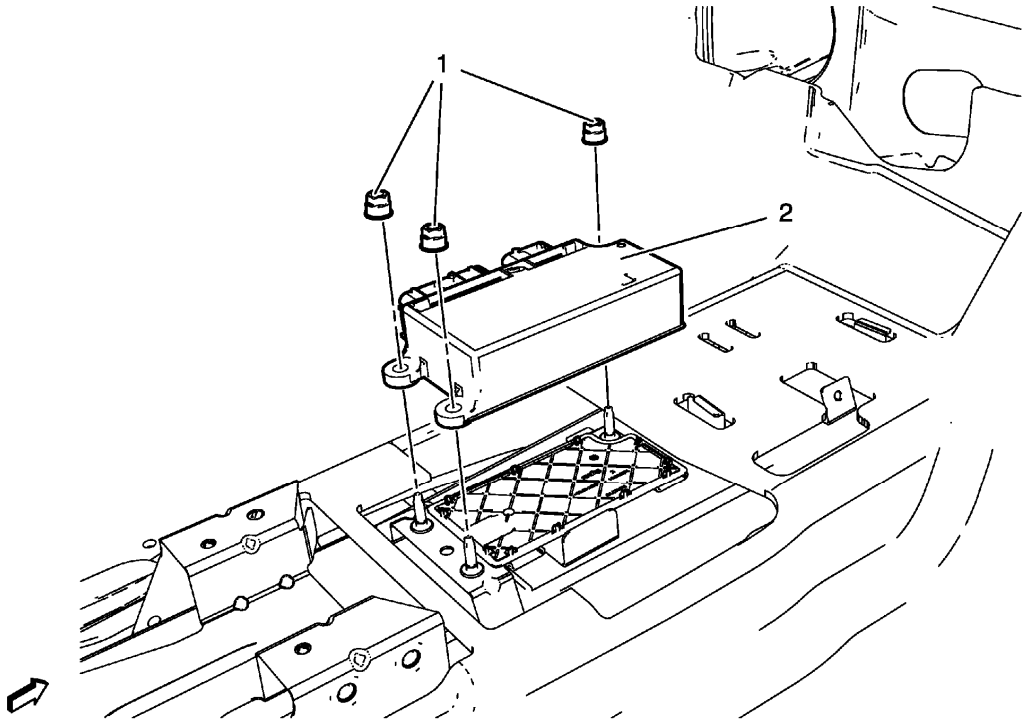

Fig. 9: Inflatable Restraint Sensing and Diagnostic Module Assembly And Nuts
Courtesy of GENERAL MOTORS COMPANY

Airbag Sensing and Diagnostic Module Replacement

Callout	Component Name
Preliminary Procedures 1. Disable the supplemental inflatable restraint (SIR) system. Refer to **SIR Disabling and Enabling**. 2. Remove the instrument panel lower trim panel. Refer to **Instrument Panel Lower Trim Panel Replacement - Left Side** , and **Instrument Panel Lower Trim Panel Replacement - Right Side** . 3. Disconnect the electrical connector.	
1	Inflatable Restraint Sensing and Diagnostic Module Nut (Qty: 3) **CAUTION:** **Refer to Fastener Caution .** **Tighten** 10 N.m (89 lb in)
2	Inflatable Restraint Sensing and Diagnostic Module Assembly **Procedure** If installing a replacement module, program the module. Refer to **Control Module References** .

AIRBAG STEERING WHEEL MODULE REPLACEMENT

Removal Procedure

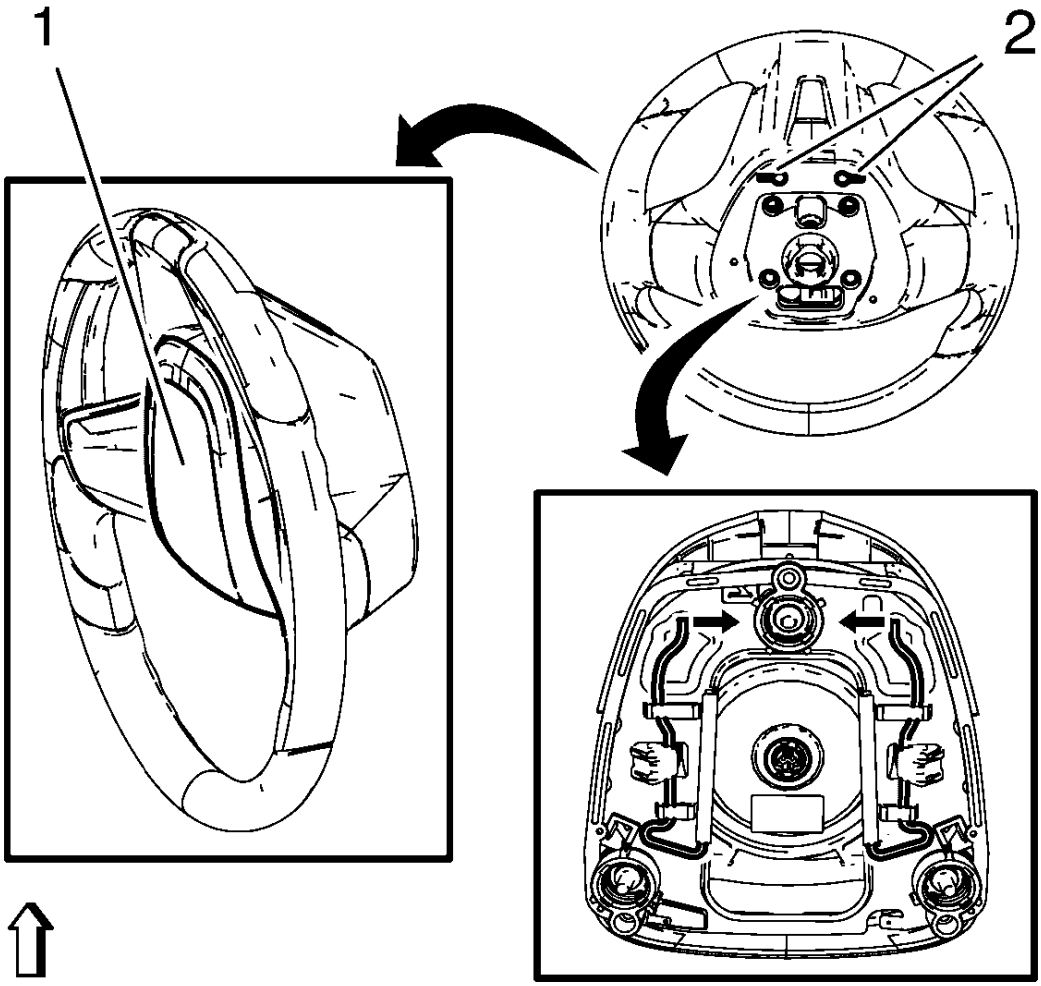

Fig. 10: Steering Wheel Openings
Courtesy of GENERAL MOTORS COMPANY

WARNING: When carrying a live inflator module, make sure the bag opening is pointed away from you. This minimizes the chance of injury in the case of an accidental deployment. Never carry the inflator module by the wires. Never carry the inflator module by the connector on the underside of the module.

Make sure that the bag and trim cover are facing up whenever you place a live inflator module on any surface. This is necessary to provide a free space for the bag to expand in the unlikely event of accidental deployment.

Never rest the steering column assembly on the steering wheel with the inflator module face down, and the column vertical. This may result in personal injury.

WARNING: Refer to SIR Warning .

1. Disable the supplemental inflatable restraint (SIR) system. Refer to **SIR Disabling and Enabling**.
2. Remove the steering column upper trim cover. Refer to **Steering Column Upper Trim Cover Replacement**
3. Insert suitable tools to the openings (2) on both sides of the steering wheel (1).
4. Release the springs in direction of the arrows.
5. Disconnect the electrical connectors.

Installation Procedure

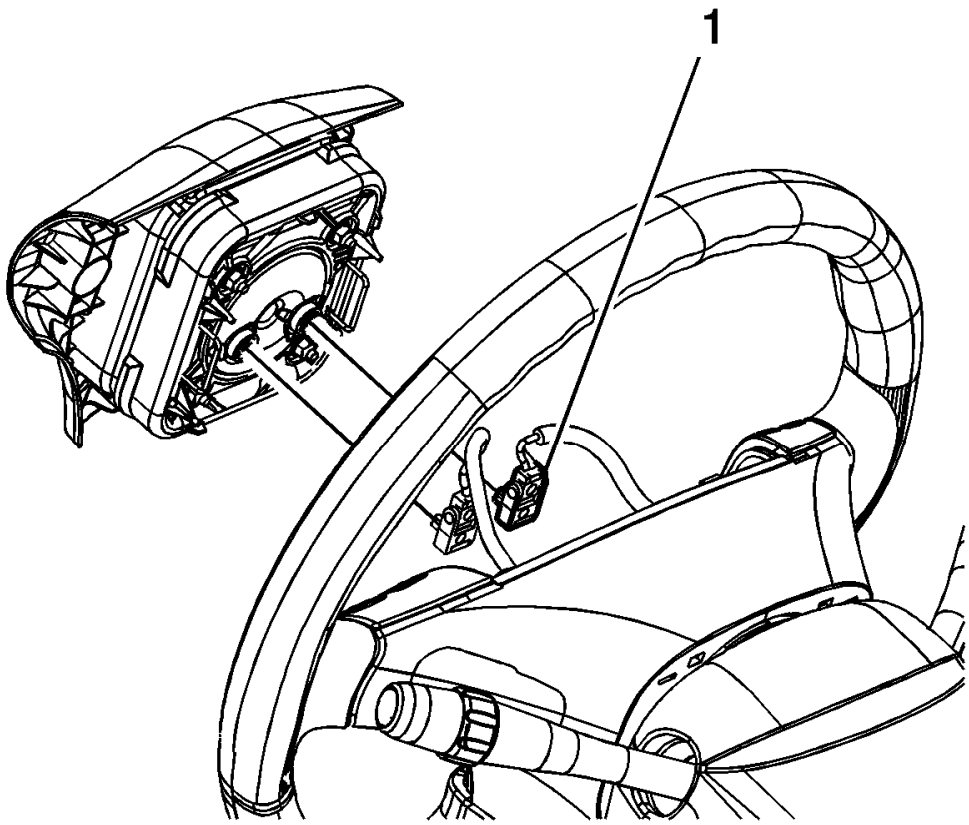

Fig. 11: Steering Wheel Electrical Connectors

Courtesy of GENERAL MOTORS COMPANY

1. Connect the electrical connectors (1).

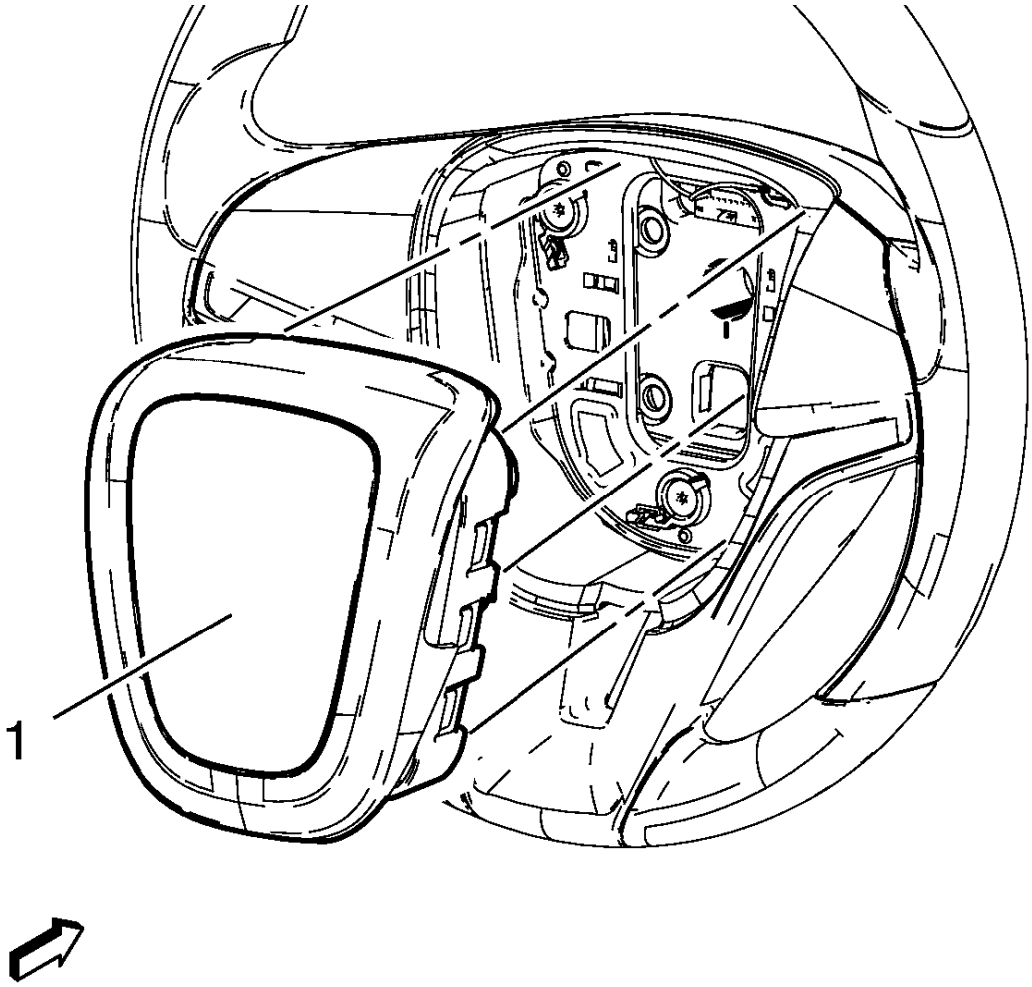

Fig. 12: Steering Wheel SIR Module
Courtesy of GENERAL MOTORS COMPANY

2. Align the steering wheel module fasteners to the steering column fastener holes.
3. Push the steering wheel module (1) firmly into the steering column in order the engage the fasteners.
4. Install the steering column upper trim cover. Refer to **Steering Column Upper Trim Cover Replacement**
5. Enable the SIR system. Refer to **SIR Disabling and Enabling**.
6. After replacing the module, fully deploy the old module before disposal.

STEERING WHEEL AIRBAG COIL REPLACEMENT

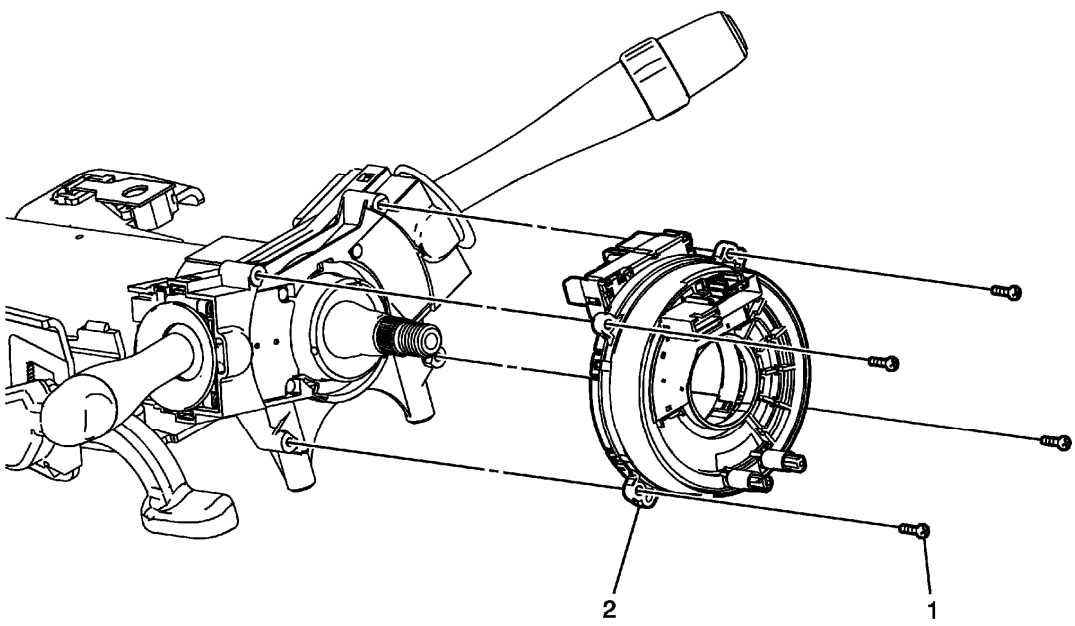

Fig. 13: View Of Inflatable Restraint Steering Wheel Module Coil
Courtesy of GENERAL MOTORS COMPANY

Steering Wheel Airbag Coil Replacement

Callout	Component Name
Preliminary Procedures 1. Remove the steering column upper trim cover. Refer to **Steering Column Upper Trim Cover Replacement** . 2. Remove the steering column lower trim cover. Refer to **Steering Column Lower Trim Cover Replacement** . 3. Remove the steering wheel. Refer to **Steering Wheel Replacement** .	
1	Steering Wheel Inflatable Restraint Module Coil Screw Bolt (Qty: 4) **CAUTION:** **Refer to Fastener Caution .** **Tighten** 1.5 N.m (13 lb in)
	Steering Wheel Inflatable Restraint Module Coil **Procedure** Disconnect any electrical connectors as needed.

2	• Do not remove the centering tab from a new steering wheel inflatable restraint module coil until it has been installed or re-centering will be required. • If re-centering of the steering wheel inflatable restraint module coil is needed then refer to **Airbag Steering Wheel Module Coil Centering**.

AIRBAG STEERING WHEEL MODULE COIL CENTERING

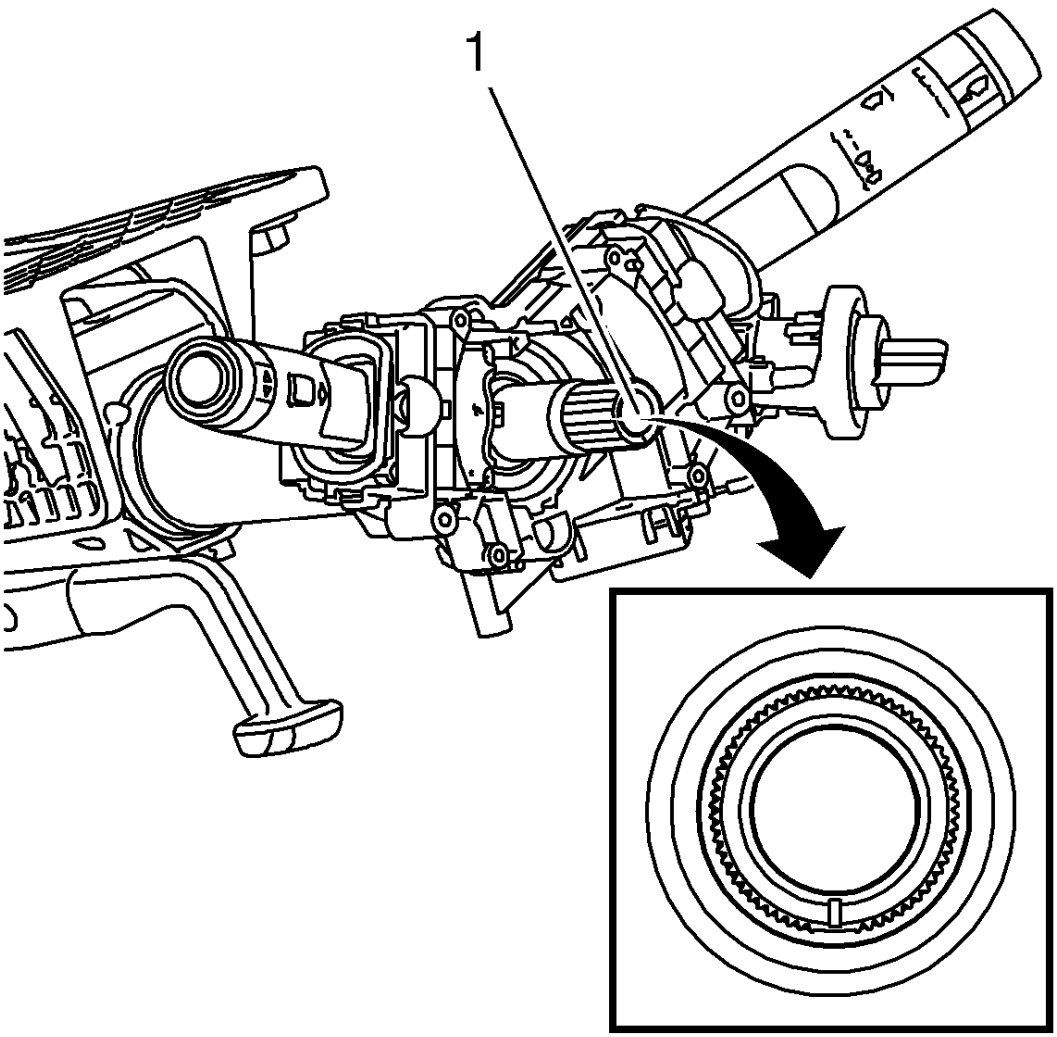

Fig. 14: Steering Shaft Centering Mark
Courtesy of GENERAL MOTORS COMPANY

CAUTION: The new SIR coil assembly will be centered. Improper alignment of the SIR coil assembly may damage the unit, causing an inflatable restraint malfunction.

1. Verify the following conditions before centering the supplemental inflatable restraint (SIR) steering wheel module coil:
   - The wheels on the vehicle are straight ahead.
   - The centering mark (1) of the steering shaft is in the 6 o'clock position.
2. Turn the lobe of the coil clockwise until the coil ribbon stops. Do not force.
3. Turn the lobe of the coil counterclockwise approximately 3 turns to the neutral position.

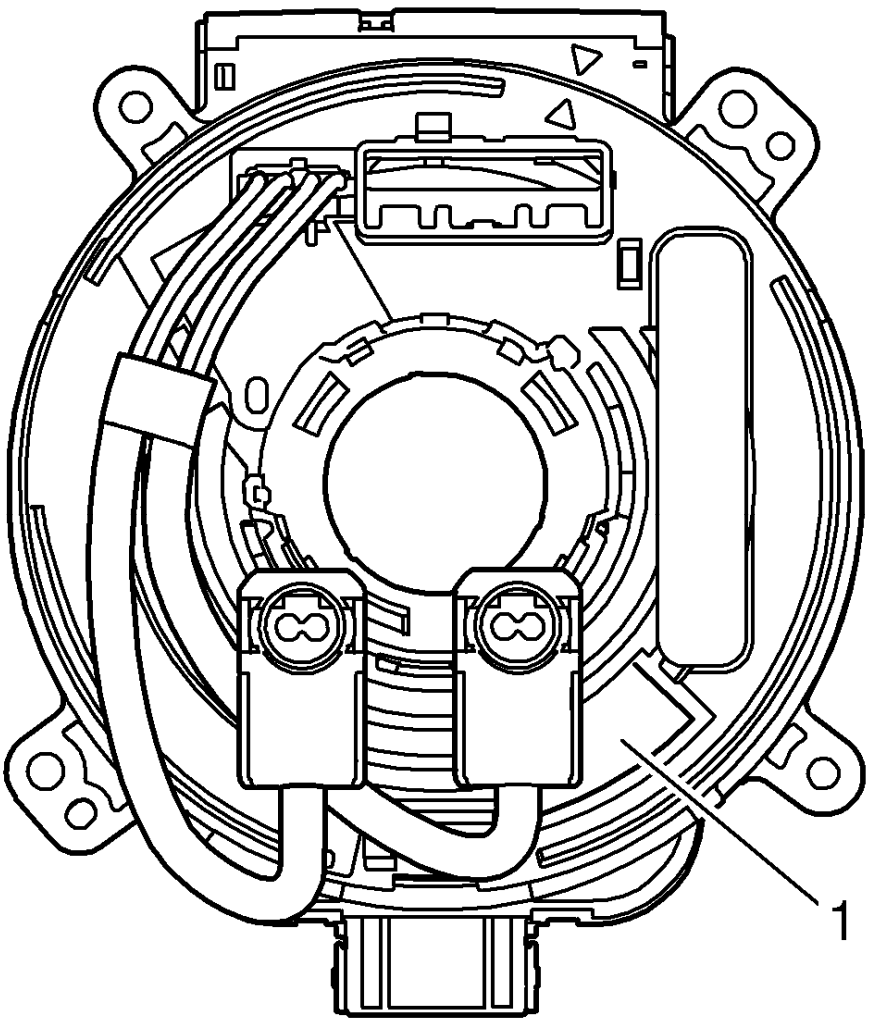

Fig. 15: Centering Window
Courtesy of GENERAL MOTORS COMPANY

NOTE: The quantity of electrical connectors may vary depending upon the content of the vehicle.

4. Properly align the coil until the centering window turns yellow (1). This indicates the CENTER position of the coil.

AIRBAG INSTRUMENT PANEL MODULE REPLACEMENT

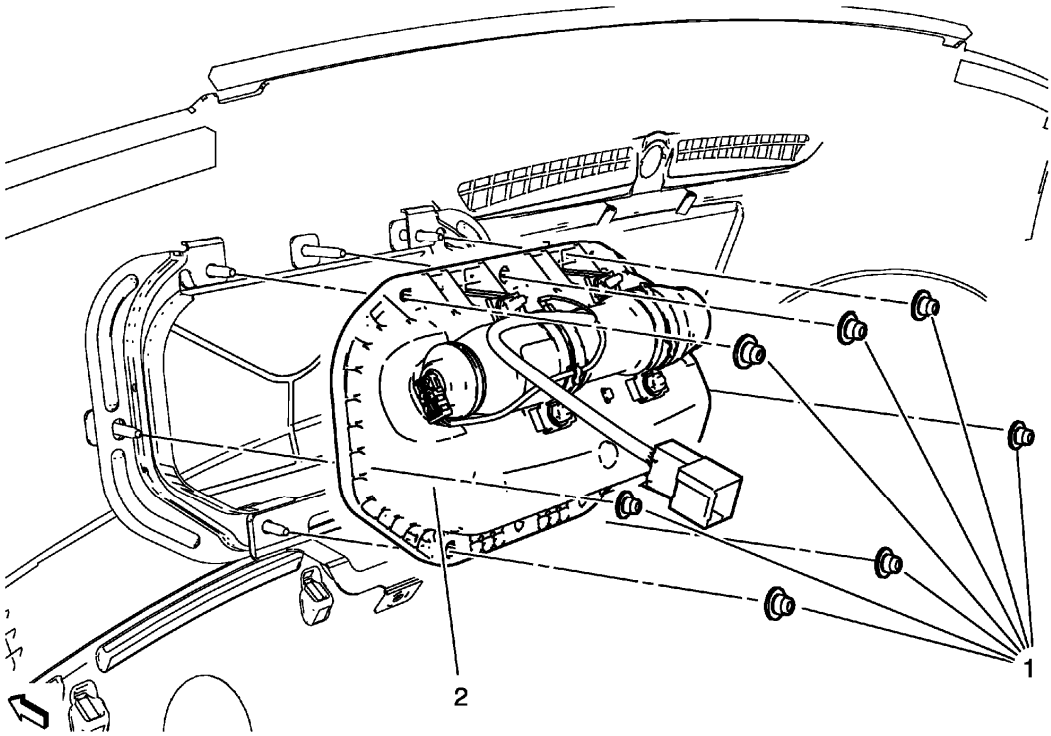

Fig. 16: Instrument Panel Inflatable Restraint Module And Nut
Courtesy of GENERAL MOTORS COMPANY

Airbag Instrument Panel Module Replacement

Callout	Component Name
WARNING: **Refer to SIR Warning .** **Preliminary Procedures** 1. Disable the SIR system. Refer to **SIR Disabling and Enabling**. 2. Remove the instrument panel assembly. Refer to **Instrument Panel Assembly Replacement** .	
1	Instrument Panel Inflatable Restraint Module Nut (Qty: 7) **CAUTION:** **Refer to Fastener Caution .** **Tighten** 8 N.m (71 lb in)
2	Instrument Panel Inflatable Restraint Module **TIP:** Disconnect the electrical connectors.

INSTRUMENT PANEL LOWER AIRBAG REPLACEMENT - DRIVER SIDE

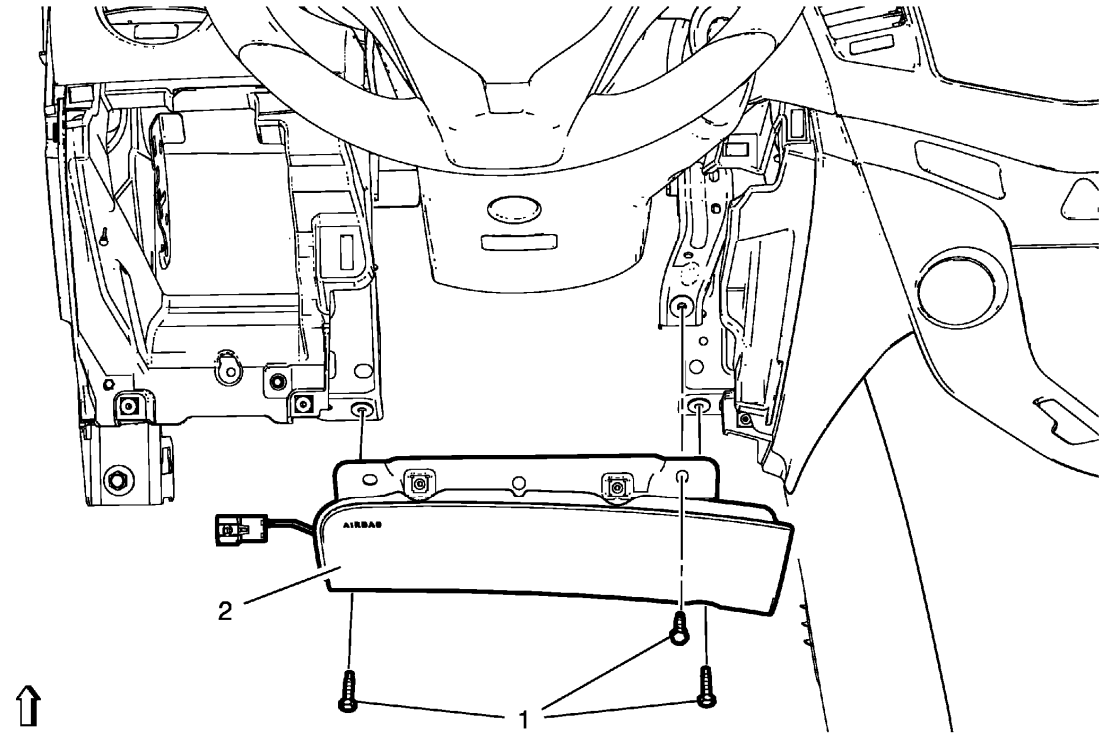

Fig. 17: Instrument Panel Lower Airbag - Driver Side
Courtesy of GENERAL MOTORS COMPANY

Instrument Panel Lower Airbag Replacement - Driver Side

Callout	Component Name
WARNING: **Refer to SIR Warning .** **Preliminary Procedures** 1. Disable the SIR system. Refer to **SIR Disabling and Enabling**. 2. Remove the instrument panel lower trim pad cover. Refer to **Instrument Panel Lower Trim Pad Cover Replacement (without Knee Airbag)** , **Instrument Panel Lower Trim Pad Cover Replacement (with Knee Airbag)** .	
1	Inflatable Restraint Instrument Panel Lower Module Fastener (Qty: 3) **CAUTION:** **Refer to Fastener Caution .** **Tighten** 10 N.m (89 lb in)

2	Inflatable Restraint Instrument Panel Lower Module **Procedure** 1. Disconnect electrical connector. 2. For proper handling and scrapping, refer to **Inflatable Restraint Module Handling and Scrapping**.

INSTRUMENT PANEL LOWER AIRBAG REPLACEMENT - PASSENGER SIDE

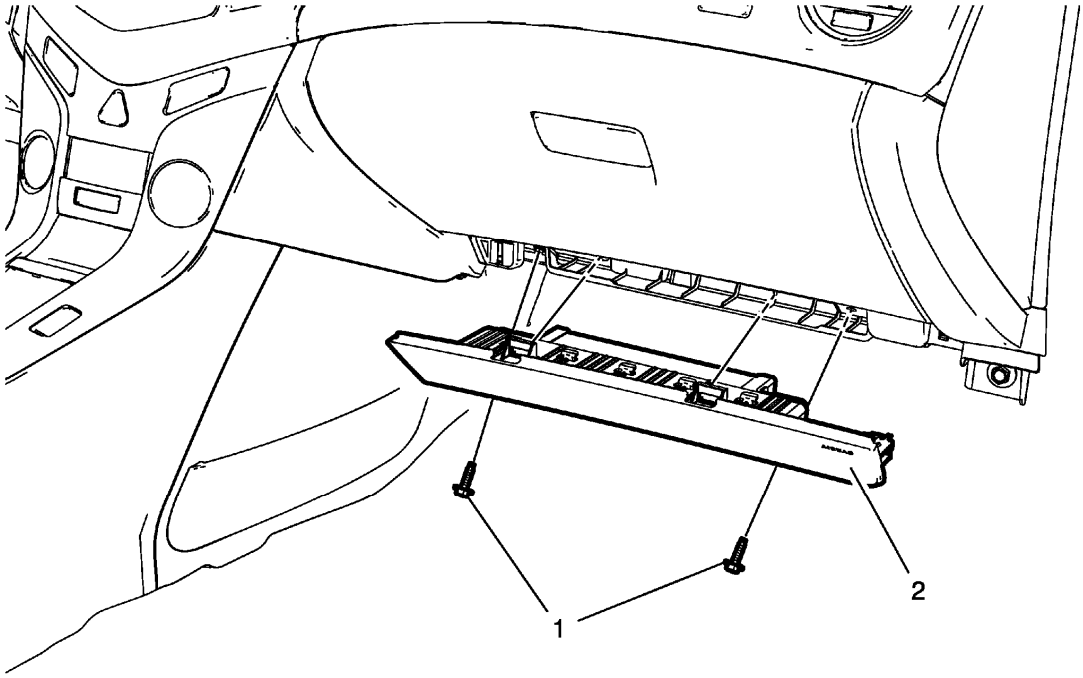

Fig. 18: Inflatable Restraint Instrument Panel Lower Module And Fasteners
Courtesy of GENERAL MOTORS COMPANY

Instrument Panel Lower Airbag Replacement - Passenger Side

Callout	Component Name
WARNING: **Refer to SIR Warning .** **Preliminary Procedures** 1. Disable the SIR system. Refer to **SIR Disabling and Enabling**. 2. Remove the instrument panel insulator panel replacement - right side. Refer to **Instrument Panel Insulator Panel Replacement - Right Side**	
	Inflatable Restraint Instrument Panel Lower Module Fastener (Qty: 2)

1	**CAUTION:** **Refer to Fastener Caution .** **Tighten** 10 N.m (89 lb in)
2	Inflatable Restraint Instrument Panel Lower Module **Procedure** 1. Disconnect electrical connector. 2. For proper handling and scrapping, refer to **Inflatable Restraint Module Handling and Scrapping**

INFLATABLE RESTRAINT FRONT PASSENGER PRESENCE MODULE REPLACEMENT

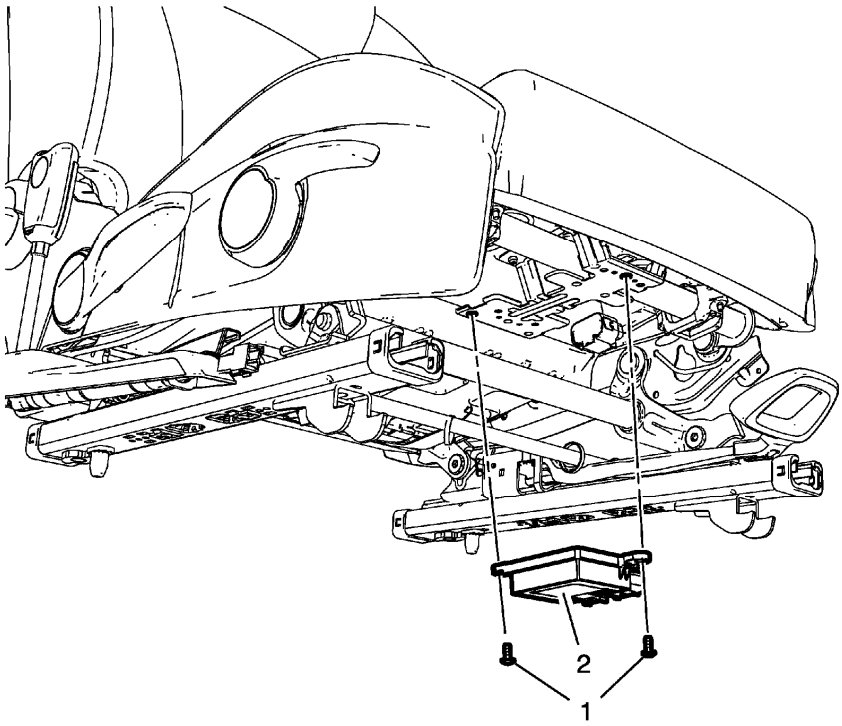

Fig. 19: Inflatable Restraint Front Passenger Presence Module And Fasteners
Courtesy of GENERAL MOTORS COMPANY

Inflatable Restraint Front Passenger Presence Module Replacement

Callout	Component Name
	Inflatable Restraint Front Passenger Presence Module Fastener (Qty: 2) **CAUTION:**

1	**Refer to Fastener Caution .** **Procedure** Position the front seat to allow access to the inflatable restraint front passenger presence module and fasteners.
2	Inflatable Restraint Front Passenger Presence Module **NOTE:** **The inflatable restraint front passenger presence module and sensor are serviced as a calibrated kit. Replacing the module requires replacement of the sensor from the same kit.** **Procedure** 1. Disconnect electrical connector. 2. If replacing the module, the sensor must also be replaced. Refer to **Airbag Front Passenger Presence Sensor Replacement**. 3. Preload test the inflatable restraint passenger presence system whenever the seat cushion or any component of the passenger presence system is removed. Refer to **Control Module References** .

AIRBAG FRONT PASSENGER PRESENCE SENSOR REPLACEMENT

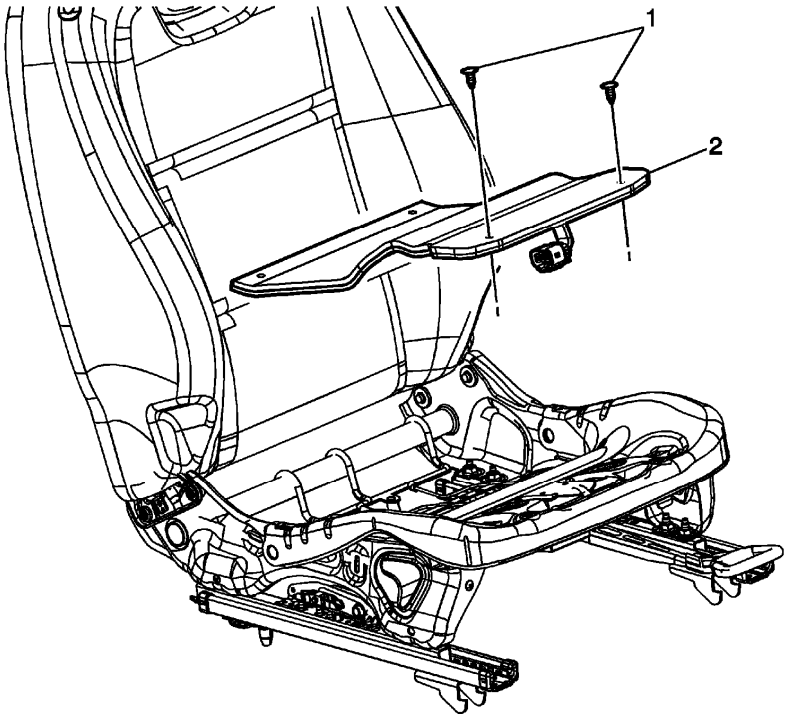

Fig. 20: Inflatable Restraint Front Passenger Presence System And Retainers

Courtesy of GENERAL MOTORS COMPANY

Airbag Front Passenger Presence Sensor Replacement

Callout	Component Name
WARNING: **Refer to SIR Warning .** **WARNING:** **To avoid personal injuries, re-zero the passenger presence system whenever you remove or replace the seat cushion or trim. Failure to do so may cause the system to malfunction.** **Preliminary Procedure** 1. Disable the SIR system. Refer to. **SIR Disabling and Enabling** 2. Remove the front seat cushion cover and pad. Refer to. **Front Seat Cushion Cover and Pad Replacement** 3. When working with the passenger seat re-zero the inflatable restraint passenger presence system whenever the seat cushion or any component of the passenger presence system is removed. Refer to **Control Module References** .	
1	Inflatable Restraint Passenger Presence Sensor Retainer (Qty: 2) **Procedure** Use a flat bladed tool to release retainers from the seat frame.
2	Inflatable Restraint Passenger Presence Sensor **CAUTION:** **Always remove the entire seat cushion cover and pad prior to replacing the Passenger Presence System (PPS) sensor. The PPS sensor is sensitive to placement and fastening. Always verify that the sensor is properly placed, completely flat, and correctly fastened before installing the seat cushion pad and cover. An improperly installed sensor can result in the improper operation of the PPS.** **NOTE:** **The inflatable restraint front passenger presence module and sensor are serviced as a calibrated kit. Replacing the sensor requires replacement of the module from the same kit.** **Procedure** 1. Disconnect the electrical connectors. 2. Remove the passenger presence sensor. 3. If replacing the sensor, the module must also be replaced. Refer to **Inflatable Restraint Front Passenger Presence Module Replacement**. 4. Program the inflatable restraint passenger presence system after

	replacement. Refer to **Control Module References** .

FRONT SEAT OUTBOARD SEAT BACK AIRBAG REPLACEMENT

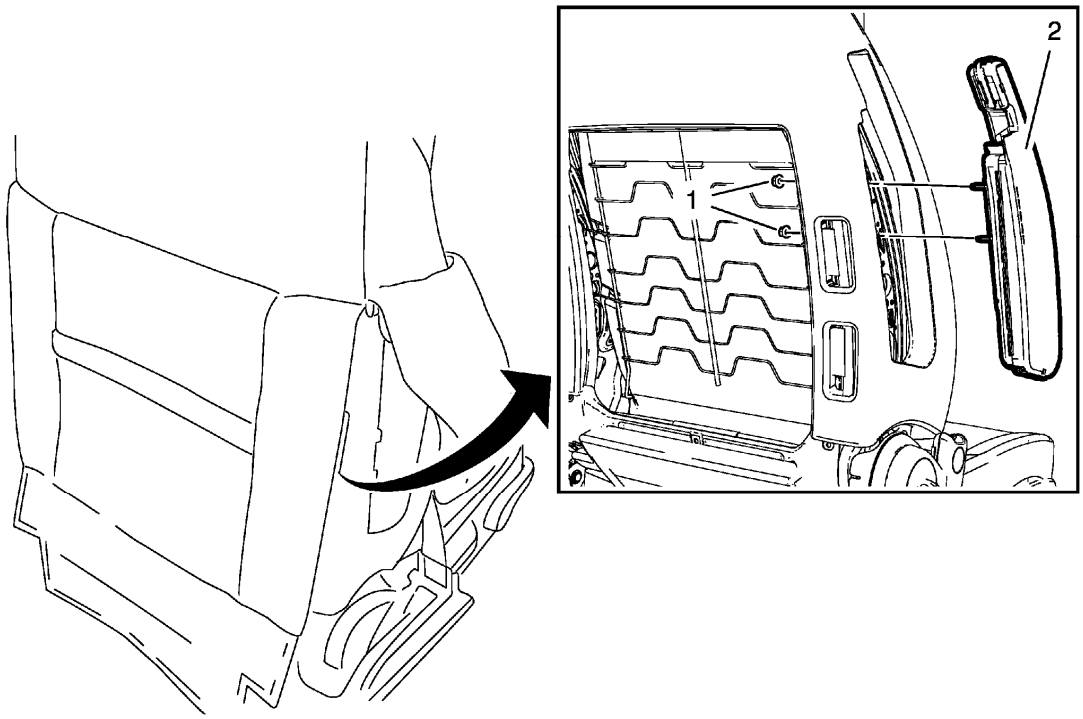

Fig. 21: Front Seat Outboard Seat Back Airbag
Courtesy of GENERAL MOTORS COMPANY

Front Seat Outboard Seat Back Airbag Replacement

Callout	Component Name
WARNING: **Refer to SIR Inflator Module Handling and Storage Warning .** **WARNING:** **Following the deployment of a side impact air bag, inspect the following parts for damage. Replace these parts if necessary:** • **The seat cushion frame** • **The seat recliner, if equipped** • **The seat adjuster** • **The seat back frame** **Failure to do so may cause future personal injury.** **WARNING:**	

Do not repair or replace the seat stitching or seams in the seat back trim cover with an internal mounted seat side airbag module. Replace the complete seat back trim cover from the OEM. Non-OEM seat stitching may cause improper airbag deployment which could result in personal injury.

Preliminary Procedures

1. Disable the SIR system. Refer to **SIR Disabling and Enabling**.
2. Partially remove the seatback cushion cover to gain access to the side airbag. Refer to **Driver or Passenger Seat Back Cover and Pad Replacement** .

1	Front Seat Side Inflatable Restraint Module Nut (Qty: 2) **CAUTION:** **Refer to Fastener Caution .** **Tighten** 4 N.m (36 lb in)
2	Front Seat Side Inflatable Restraint Module **Procedure** 1. Disconnect the CPA connector from the airbag module. 2. Disconnect the electrical harness and note the routing for the re-installation. 3. Detach the two straps wrapping around the side airbag that are connected to the seatback cover. 4. Note mounting and location of the side airbag module for re-installation. 5. Fully deploy the module before disposal. If the module was replaced under warranty, fully deploy and dispose of the module after the required retention period. Refer to **Inflatable Restraint Module Handling and Scrapping**.

REAR SEAT OUTBOARD SEAT BACK AIRBAG REPLACEMENT

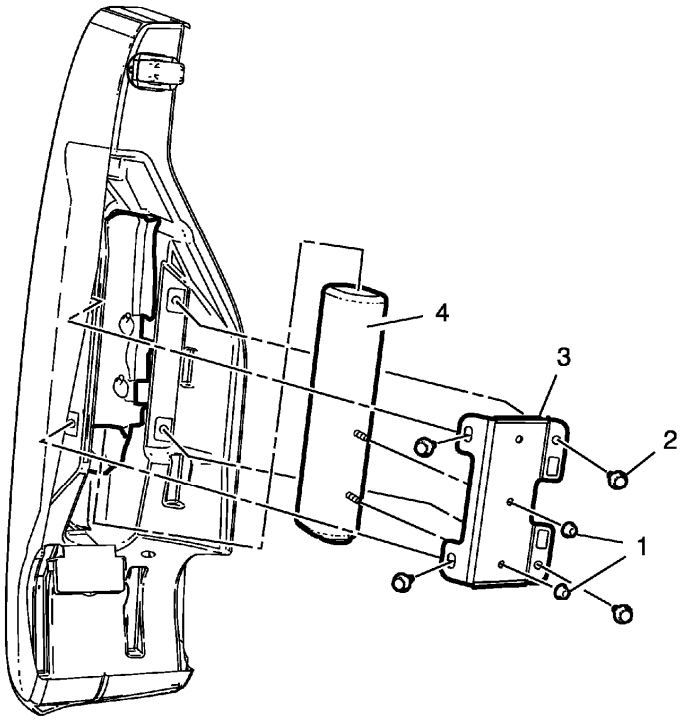

Fig. 22: Rear Seat Side Inflatable Restraint Module
Courtesy of GENERAL MOTORS COMPANY

Rear Seat Outboard Seat Back Airbag Replacement

Callout	Component Name
WARNING: **Refer to SIR Warning .** **WARNING:** **Following the deployment of a rear seat side air bag, inspect the following parts for damage. Replace these parts if necessary:** • **The rear seat side bolster, attachments, brackets and wiring** • **The rear seat back frame, cushion and cover** • **The rear seat cushion frame, cushion and cover** **Failure to do so may cause future personal injury.** **Preliminary Procedures** 1. Disable the SIR. Refer to **SIR Disabling and Enabling**. 2. Remove the rear seat back cushion bolster. Refer to **Rear Seat Back Bolster Replacement** .	
	Rear Seat Side Inflatable Restraint Module Nut (Qty: 2)

1	**CAUTION:** **Refer to Fastener Caution .** **Tighten** 3.25 N.m (29 lb in)
2	Rear Seat Side Inflatable Restraint Bracket
3	Rear Seat Side Inflatable Restraint Bracket Bolt (Qty: 4)
4	Rear Seat Side Inflatable Restraint Module **Procedure** 1. Disconnect electrical connector. 2. Remove seat side airbag from seat cover chute. 3. Install seat side airbag into airbag chute with connector facing down. Airbag mounting studs must fit through airbag chute holes and then into airbag bracket. 4. Fully deploy the module before disposal. If the module was replaced under warranty, fully deploy and dispose of the module after the required retention period. Refer to **Inflatable Restraint Module Handling and Scrapping**.

INSTRUMENT PANEL AIRBAG ARMING STATUS DISPLAY REPLACEMENT

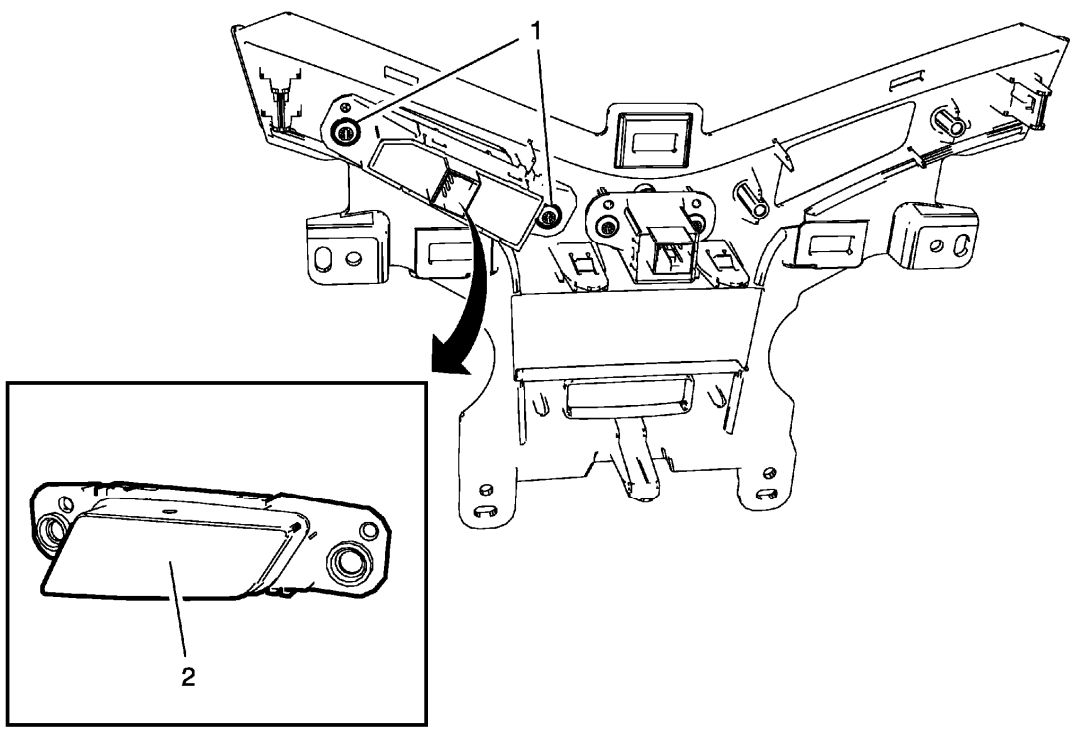

Fig. 23: Inflatable Restraint Instrument Panel Module Indicator And Screws
Courtesy of GENERAL MOTORS COMPANY

Instrument Panel Airbag Arming Status Display Replacement

Callout	Component Name
Preliminary Procedure **Remove the instrument panel accessory bezel. Refer to Instrument Panel Accessory Bezel Replacement .**	
1	Instrument Panel Airbag Arming Status Display Screw (Qty: 2) **CAUTION:** **Refer to Fastener Caution .** **Tighten** 1.5 N.m (13 lb in)
2	Instrument Panel Airbag Arming Status Display **Procedure** Disconnect electrical connector.

AIRBAG ROOF SIDE RAIL MODULE REPLACEMENT

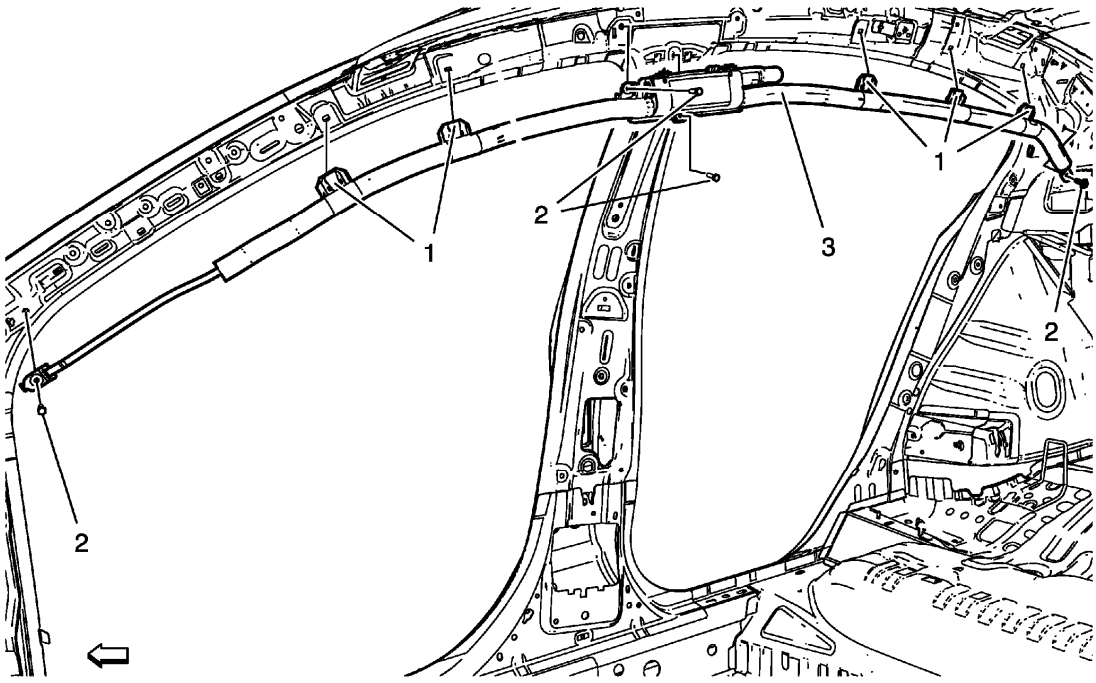

Fig. 24: Roof Side Rail Inflatable Restraint Module, Retainers And Bolts
Courtesy of GENERAL MOTORS COMPANY

Airbag Roof Side Rail Module Replacement

Callout	Component Name
WARNING: **In order to prevent SIR deployment, personal injury, or unnecessary SIR system repairs, do not strike the door or the door pillar in the area of the side impact sensor (SIS). Turn OFF the ignition and remove the key when performing service in the area of the SIS.** **WARNING:** **When performing service on or near the SIR components or the SIR wiring, the SIR system must be disabled. Refer to SIR Disabling and Enabling. Failure to observe the correct procedure could cause deployment of the SIR components, personal injury, or unnecessary SIR system repairs.** **Preliminary Procedures** 1. Disable SIR system. Refer to **SIR Disabling and Enabling**. 2. Remove the headliner. Refer to **Headlining Trim Panel Replacement (without Sunroof)** , **Headlining Trim Panel Replacement (with Sunroof)** .	
1	Inflatable Restraint Roof Rail Retainer (Qty: 5) **Procedure** 1. Insert suitable pliers into the holes on the retainer. 2. Compress the retainer tabs inward and pull the retainer to disengage from the vehicle.
2	Inflatable Restraint Roof Rail Bolt (Qty: 4) **CAUTION:** **Refer to Fastener Caution .** **Tighten** 9.5 N.m (84 lb in)
3	Inflatable Restraint Roof Rail Module **Procedure** Disconnect the roof side rail inflatable restraint module electrical connector. **TIP:** The bolts and the push in retainers are an integral part of the module and should remain with the module.

FRONT SEAT BELT ANCHOR PLATE TENSIONER REPLACEMENT

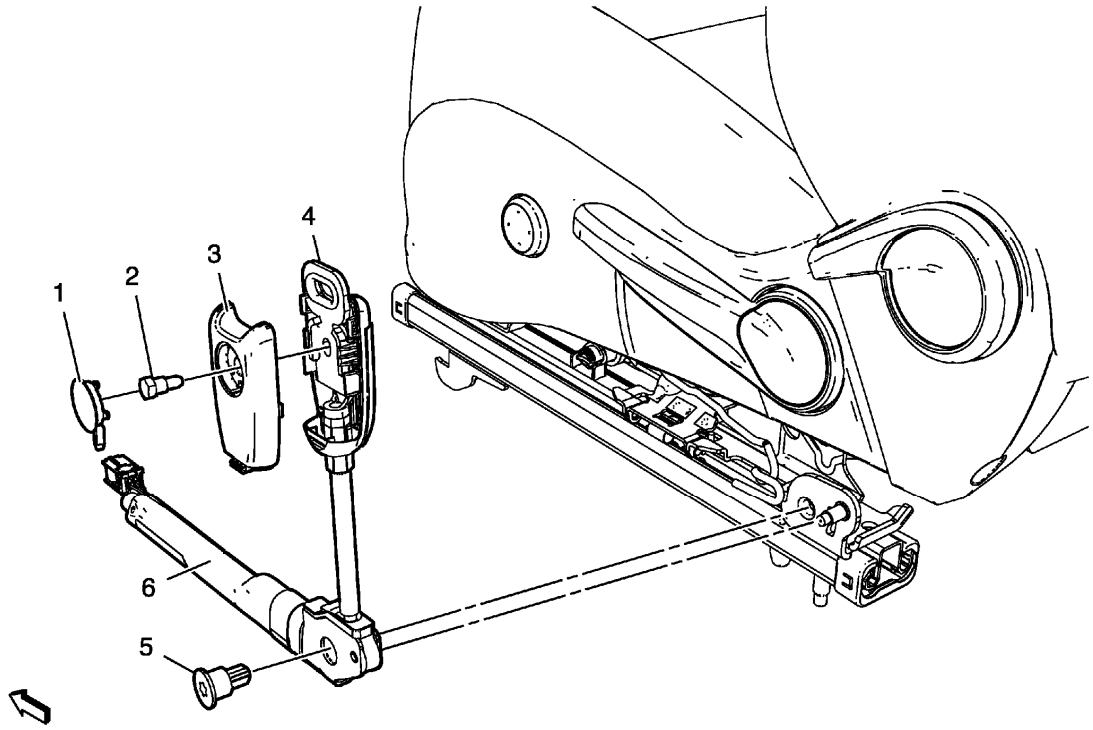

Fig. 25: Front Seat Belt Anchor Plate Tensioner
Courtesy of GENERAL MOTORS COMPANY

Front Seat Belt Anchor Plate Tensioner Replacement

Callout	Component Name
WARNING: **Refer to SIR Seatbelt Pretensioner Handling Warning .** **Preliminary Procedures** Remove the front seat lower finish cover.	
1	Front Seat Belt Tensioner Cap
2	Front Seat Belt Tensioner Fastener **CAUTION:** **Refer to Fastener Caution .** **Tighten** 5 N.m (44 lb in)
3	Front Seat Belt Tensioner Cover
4	Front Seat Belt Tensioner Seat Belt Latch **Procedure** Remove the seat belt with latch from front seat belt tensioner.
5	Front Seat Belt Tensioner Fastener **Tighten**

	55 N.m (41 lb ft)
6	Front Seat Belt Tensioner **Procedure** Disconnect the electrical connector.

DRIVER OR PASSENGER SEAT RETRACTOR SIDE BELT REPLACEMENT

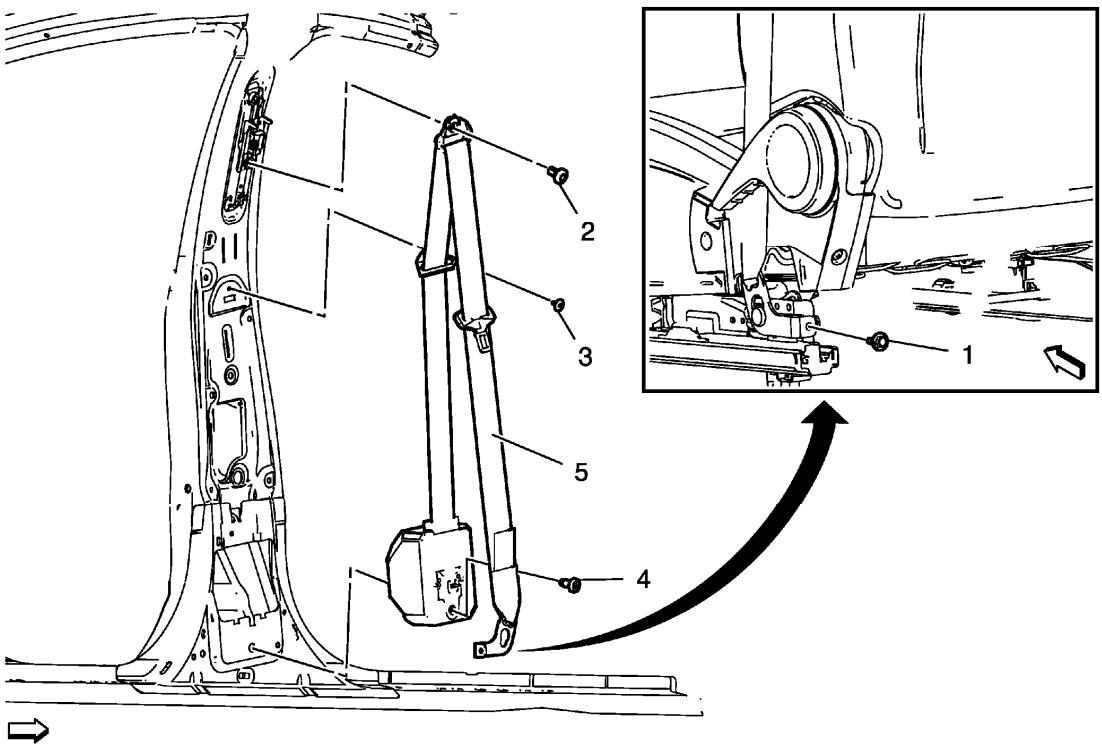

Fig. 26: Driver Or Passenger Seat Retractor Side Belt Components
Courtesy of GENERAL MOTORS COMPANY

Driver or Passenger Seat Retractor Side Belt Replacement

Callout	Component Name
WARNING: **Refer to SIR Warning .** **WARNING:** **In order to prevent accidental deployment and the risk of personal injury, do not dispose of an undeployed inflatable restraint seat belt pretensioner as normal shop waste. Undeployed seat belt pretensioners contain substances that could cause severe illness or personal injury if their sealed containers are damaged during disposal. Use the following deployment procedures to safely dispose of an undeployed seat belt pretensioner. Failure to observe the following disposal methods may be a violation of federal, state, or local laws.** **WARNING:** **Refer to SIR Seatbelt Pretensioner Handling Warning .**	

Preliminary Procedures

1. Remove the center pillar upper garnish molding. Refer to **Center Pillar Upper Garnish Molding Replacement** .
2. Remove the front seat outer recliner upper finish cover. Refer to **Front Seat Outer Recliner Upper Finish Cover Replacement** .

1	Front Seat Belt Anchor Plate Bolt **CAUTION:** **Refer to Fastener Caution .** **Tighten** 9 N.m (80 lb in)
2	Front Seat Belt Retractor D Ring Bolt **Tighten** 45 N.m (33 lb ft)
3	Front Seat Shoulder Belt Guide Retainer
4	Front Seat Shoulder Belt Retractor Bolt **Tighten** 45 N.m (33 lb ft)
5	Front Seat Retractor Side Belt

REPAIRS AND INSPECTIONS REQUIRED AFTER A COLLISION

Accident With or Without Air Bag Deployment - Component Inspections

WARNING: Proper operation of the Supplemental Inflatable Restraint (SIR) sensing system requires that any repairs to the vehicle structure return the vehicle structure to the original production configuration. Not properly repairing the vehicle structure could cause non-deployment of the air bag(s) in a frontal collision or deployment of the air bag(s) for conditions less severe than intended.

After any collision, inspect the following components as indicated. If you detect any damage, replace the component. If you detect any damage to the mounting points or mounting hardware, repair the component or replace the hardware as needed.

- The steering column-Inspect the steering column for bending, twisting, buckling or any type of damage.
- The instrument panel knee bolsters and mounting points-Inspect the knee bolsters for bending, twisting, buckling, or any other type of damage.
- The instrument panel brackets, braces, etc.-Inspect for bending, twisting, buckling, or any other type of damage.
- The seat belts-Perform the seat belt operational and functional checks. Refer to **Repairs and Inspections**

Required After a Collision .

- The instrument panel cross car beam-Inspect for bending, twisting, buckling, or any other type of damage.
- The instrument panel mounting points and brackets-Inspect for bending, twisting, buckling, or any other type of damage.
- The seats and seat mounting points-Inspect for bending, twisting, buckling, or any other type of damage.
- The roof and headliner mounting points.
- The brake pedal --Inspect the brake pedal for bending, twisting, buckling or any type of damage.

Accident With Frontal Air Bag Deployment - Component Replacement and Inspections

After a collision involving air bag deployment, replace the following components.

- Driver Steering Wheel Air Bag
- Passenger instrument panel air bag, if deployed
- Inflatable Restraint Sensing and Diagnostic Module (SDM), if the Inflatable Restraint Sensing and Diagnostic Module has set DTC B0052 and will not clear
- Front and/or Side Impact Sensors
- Driver/Passenger Seat Side Air Bag, if deployed
- Seat back cover if Side Seat Air Bag is deployed
- Driver/Passenger Seat Belt Anchor and/or Retractor Pretensioners

Perform additional inspections on the following components.

- Steering wheel air bag coil and the coil wiring pigtail-Inspect for melting, scorching, or other damage due to excessive heat.
- Mounting points or mounting hardware for the passenger instrument panel air bag, steering wheel air bag, Inflatable Restraint Sensing and Diagnostic Module, seat side air bag (if deployed) and seat belt anchor and/or retractor pretensioners-Inspect for any damage and repair or replace each component as needed.

Accident With Side Seat Air Bag Deployment - Component Replacement and Inspections

After a collision involving driver/passenger side seat air bag deployment, replace the following components.

- Left/right side impact sensors on the side of the impact.
- Left/right roof rail air bag on the side of the impact.
- Inflatable Restraint Sensing and Diagnostic Module (SDM), if the Inflatable Restraint Sensing and Diagnostic Module has set DTC B0052 and will not clear.
- Inflatable Restraint Seat Belt Anchor and/or Retractor Pretensioner.
- Driver or passenger seat back cushion cover replacement.

WARNING: Do not repair or replace the seat stitching or seams in the seat back trim cover with an internal mounted seat side airbag module. Replace the

complete seat back trim cover from the OEM. Non-OEM seat stitching may cause improper airbag deployment which could result in personal injury.

Perform additional inspections on the following components.

- Mounting points or mounting hardware for the side impact sensors, and driver/passenger side seat air bags on the side of impact-Inspect for any damage and repair or replace each component as needed.
- Mounting points, mounting hardware, headliner and trim pieces for the left/right roof rail air bag on the side of impact-Inspect for any damage and repair or replace each component as needed.
- Mounting points or mounting hardware for the Inflatable Restraint Sensing and Diagnostic Module and seat belt anchor and/or retractor pretensioners-Inspect for any damage and repair or replace each component as needed.
- The seat cushion frame
- The seat recliner and cover, if equipped
- The seat adjuster
- The seat back frame
- Door trim assembly
- Impacted seat cushion side covers and switches

Accident With Seat Belt Pretensioner Deployment Only - Component Replacement and Inspections

After a collision involving driver/passenger Seat Belt Retractor or Anchor Pretensioner deployment, replace the following components.

- Driver and Passenger Inflatable restraint seat belt anchor pretensioner and/or retractor pretensioner
- Inflatable Restraint Sensing and Diagnostic Module (SDM), if the Inflatable Restraint Sensing and Diagnostic Module has set DTC B0052 and will not clear

Perform additional inspections for any damage and repair or replace each component as needed on the following components.

- Mounting points or mounting hardware for the Inflatable Restraint Sensing and Diagnostic Module
- Mounting points or mounting hardware for the Seat Belt Anchor Pretensioners
- Mounting points or mounting hardware for the Seat Belt Retractor Pretensioners

Impact Sensor Replacement Guidelines

The impact sensor replacement policy requires replacing sensors in the area of the accident damage. The area of accident damage is defined as the portion of the vehicle which is crushed, bent, or damaged due to a collision. An example of this would be a moderate collision where the front of the vehicle impacts a object. If the vehicle has an impact sensor mounted forward of the radiator, it must be replaced.

- Replace the impact sensor whether or not the air bags have deployed.
- Replace the impact sensor even if it appears to be undamaged.

Impact sensor damage which is not visible, such as slight bending of the mounting bracket or cuts in the wire insulation, can cause improper operation of the SIR system. Do not try to determine whether the impact sensor is undamaged, replace the impact sensor. Also, if you follow a diagnostic trouble code (DTC) procedure and a malfunctioning impact sensor is indicated, replace the impact sensor.

INFLATABLE RESTRAINT MODULE HANDLING AND SCRAPPING

Special Tools

- **EL-38826** SIR Deployment Harness
- **EL-39401-B** SIR Deployment Fixture

For equivalent regional tools, refer to **Special Tools**.

Live and Undeployed Air Bag

WARNING: Refer to SIR Inflator Module Handling and Storage Warning .

Take special care when handling or storing an undeployed air bag. An air bag deployment produces a rapid generation of gas. This may cause the air bag, or an object in front of the air bag, to project through the air in the event of an unlikely deployment.

Dual Stage Air Bags

Dual stage air bags have two deployment stages. If stage 1 was used to deploy a dual stage air bag, stage 2 may still be active. Therefore, a deployed dual stage air bag must be treated as an active air bag. If disposal of a dual stage air bag is required, both deployment loops must be energized to deploy the air bag.

Scrapping Procedure

During the course of a vehicle's useful life, certain situations may arise which will require the disposal of a live and undeployed air bag. Do NOT dispose a live and undeployed air bag through normal disposal channels until the air bag has been deployed.

Do not deploy the air bag in the following situations:

- After replacement of an air bag under warranty-the air bag may need to be returned undeployed to the manufacturer.
- If the vehicle is the subject of a product liability claim, related to the SIR system and is subject to a preliminary investigation - do NOT alter the SIR system in any manner.
- If the vehicle is involved in a campaign affecting the air bags - follow the instructions in the campaign service bulletin for proper SIR handling procedures.

Deployment Procedures

NOTE: **Some countries, states or localities may not allow service deployment of air bags without special permission or training. Local laws regarding deploying and scrapping of air bags/devices with pyrotechnics must be followed.**

You can deploy the air bag either inside or outside of the vehicle. The method used depends upon the final disposition of the vehicle. Review the following procedures in order to determine which will work best in a given situation:

Deployment Outside Vehicle - Steering Wheel Air Bag, Instrument Panel Air Bag, and Roof Rail Air Bag

Deploy the air bag outside of the vehicle when the vehicle will be returned to service. Situations that require deployment outside of the vehicle include the following:

- Using the SIR diagnostics, you determine that the air bag is malfunctioning.
- The air bag is cosmetically damaged, scratched, or ripped.
- The air bag pigtail is damaged.
- The air bag connector is damaged.
- The air bag connector terminals are damaged.

Deployment and disposal of a malfunctioning air bag is subject to any required retention period.

WARNING: **Refer to SIR Inflator Module Disposal Warning .**

1. Turn OFF the ignition.

WARNING: **Refer to SIR Inflator Module Handling and Storage Warning .**

2. Remove the air bag.

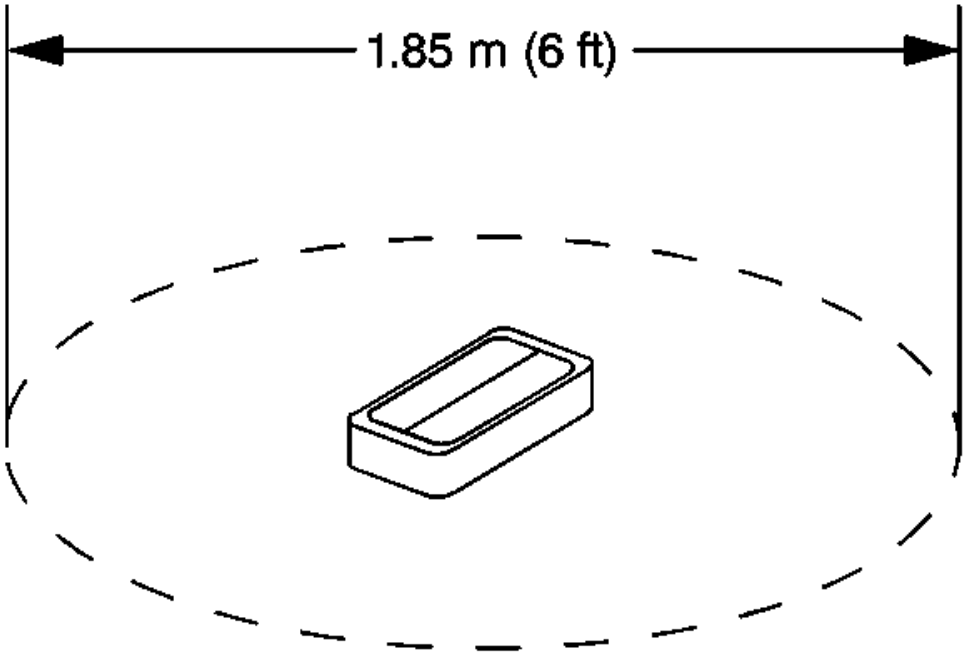

Fig. 27: Identifying Clearance For Deployment Of Inflator Module
Courtesy of GENERAL MOTORS COMPANY

3. Clear a space on the ground about 1.85 m (6 ft) in diameter for deployment of the air bag or deployment fixture. If possible, use a paved, outdoor location free of activity. Otherwise, use a space free of activity on the shop floor. Ensure you have sufficient ventilation.
4. Clear the area of loose or flammable objects.

NOTE: Dual stage deployments are only used in steering wheel and instrument panel air bags. If stage 1 was used to deploy a dual stage air bag, stage 2 may still be active. If disposal of a dual stage air bag is required, both deployment loops must be energized to deploy the air bag.

5. If you are deploying a steering wheel air bag, place the air bag in the center of the space with the vinyl trim cover facing up and away from the surface.

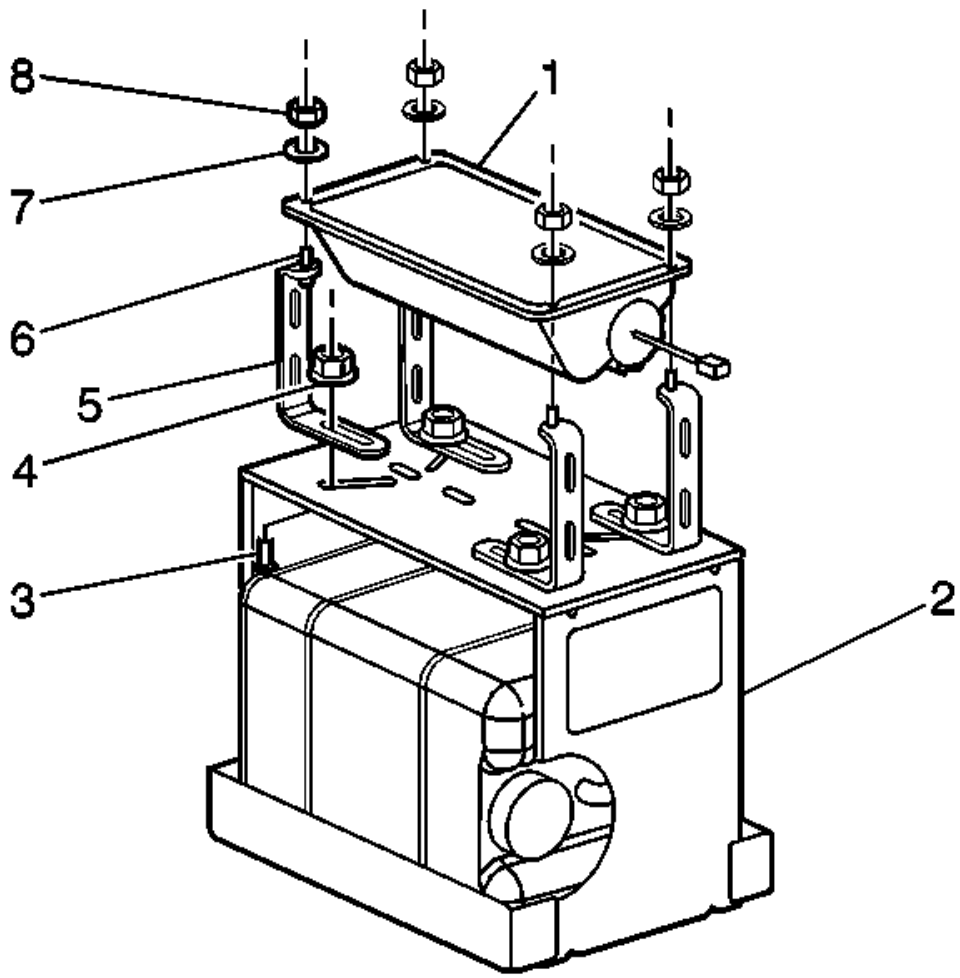

Fig. 28: Identifying I/P Module Components
Courtesy of GENERAL MOTORS COMPANY

6. When deploying an instrument panel air bag, perform the following instructions:
    1. Place the **EL-39401-B** fixture in the center of the cleared area.
    2. Fill the deployment fixture with water or sand.
    3. Using the proper nuts and bolts, mount the instrument panel air bag (1) to the deployment fixture (2), with the vinyl trim facing up.
    4. Securely tighten all fasteners that hold the instrument panel air bag (1) to the deployment fixture (2).

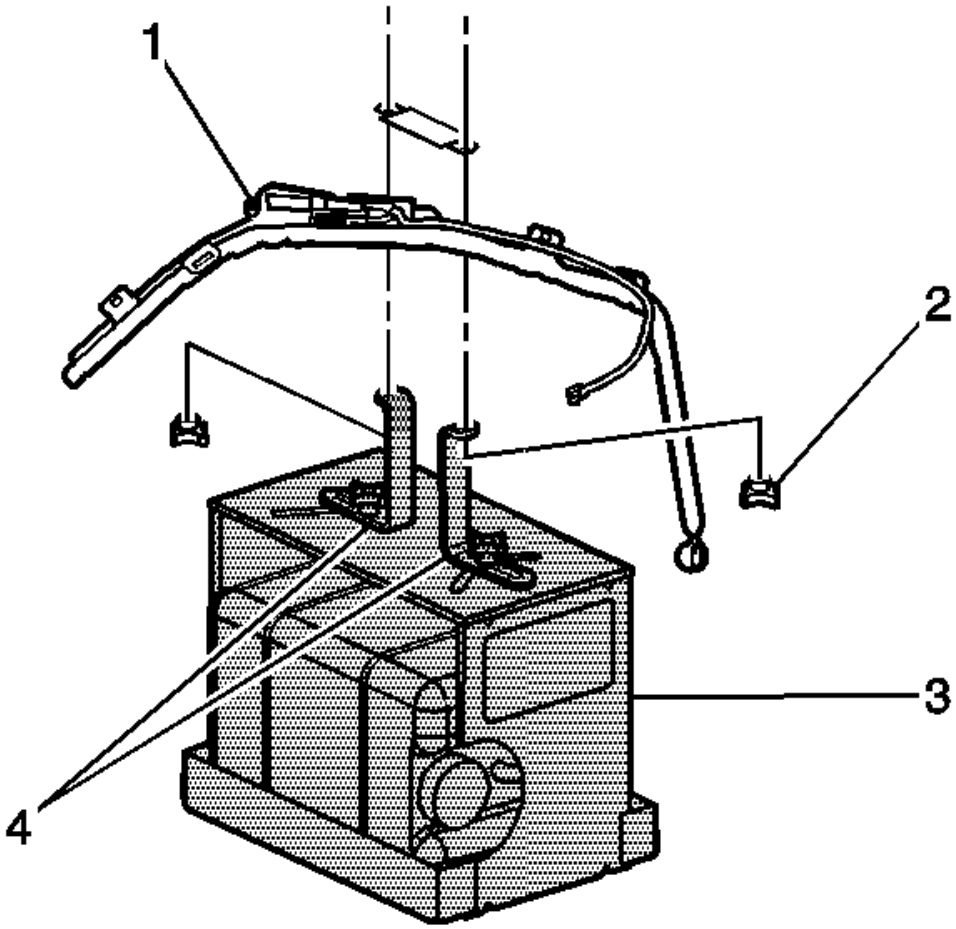

Fig. 29: Identifying Fasteners Holding Side Impact Module To Deployment Fixture
Courtesy of GENERAL MOTORS COMPANY

7. When deploying a roof rail air bag, perform the following instructions:
    1. Place the **EL-39401-B** fixture (3) in the center of the cleared area.
    2. Fill the deployment fixture with water or sand to provide sufficient stabilization of fixture during deployment.
    3. Adjust and secure the fixture arms (4) to the deployment fixture (3), using the proper nuts and bolts.
    4. Attach the roof rail air bag in the deployment fixture and securely tighten all fasteners.

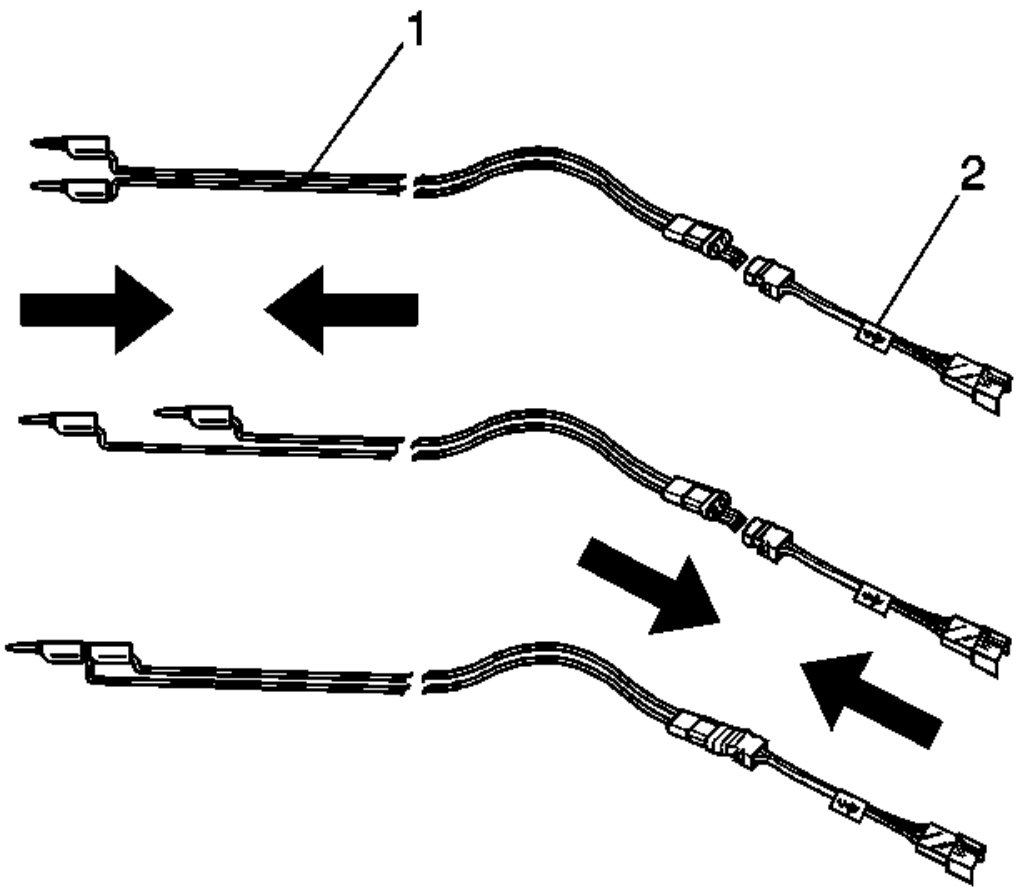

Fig. 30: Identifying SIR Deployment Harness & Adapter
Courtesy of GENERAL MOTORS COMPANY

8. Inspect the **EL-38826** harness and the appropriate pigtail adapter (2) for damage. Replace as needed.
9. Short the 2 SIR deployment harness leads (1) together using one banana plug seated into the other.
10. Connect the appropriate pigtail adapter (2) to the SIR deployment harness (1).

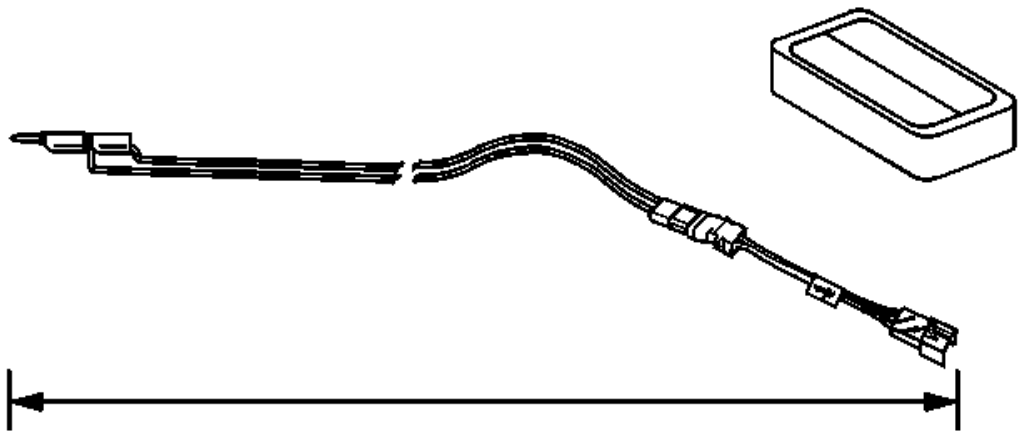

Fig. 31: Extending SIR Deployment Harness & Adapter
Courtesy of GENERAL MOTORS COMPANY

11. Extend the SIR deployment harness and adapter to the full length from the deployment fixture or area.

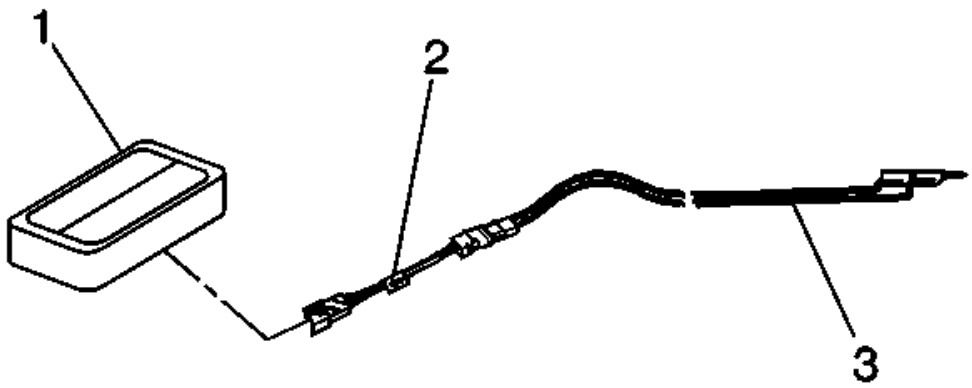

Fig. 32: Identifying Inflator Module, SIR Deployment Harness & Adapter
Courtesy of GENERAL MOTORS COMPANY

NOTE: **On a dual stage air bag, both connectors must be attached to the deployment harness adapter. This will ensure that both stage 1 and stage 2 of the deployment loops are energized, regardless of the deployment state.**

12. Connect the air bag (1) to the adapter (2) on the SIR deployment harness (3).

NOTE:

- **The rapid expansion of gas involved with deploying an air bag is very loud. Notify all the people in the immediate area that you intend to deploy the air bag.**
- **When the air bag deploys, the deployment fixture may jump about 30 cm (1 ft) vertically. This is a normal reaction of the air bag due to the force of the rapid expansion of gas inside the air bag.**

- **If you are deploying a dual stage air bag with stage 1 already deployed, the fixture may not move and the noise may have been reduced.**

13. Clear the area of people.

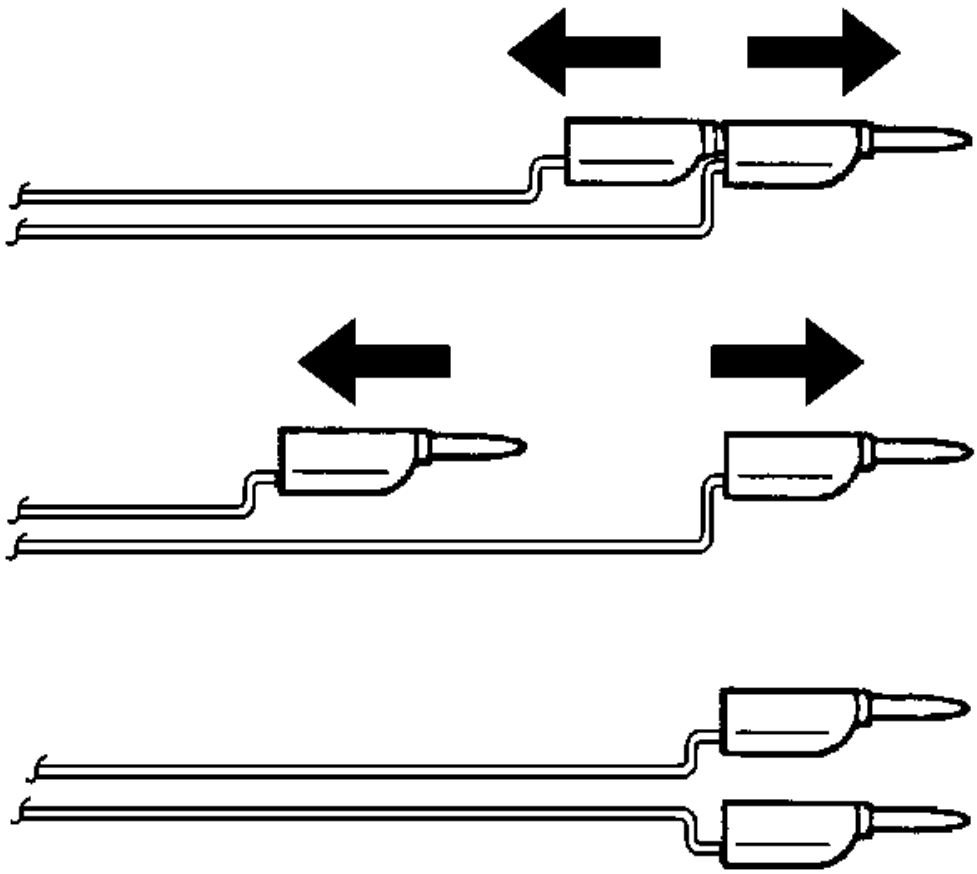

Fig. 33: Separating Banana Plugs
Courtesy of GENERAL MOTORS COMPANY

14. Separate the 2 banana plugs on the SIR deployment harness that were shorted together earlier in the procedure.

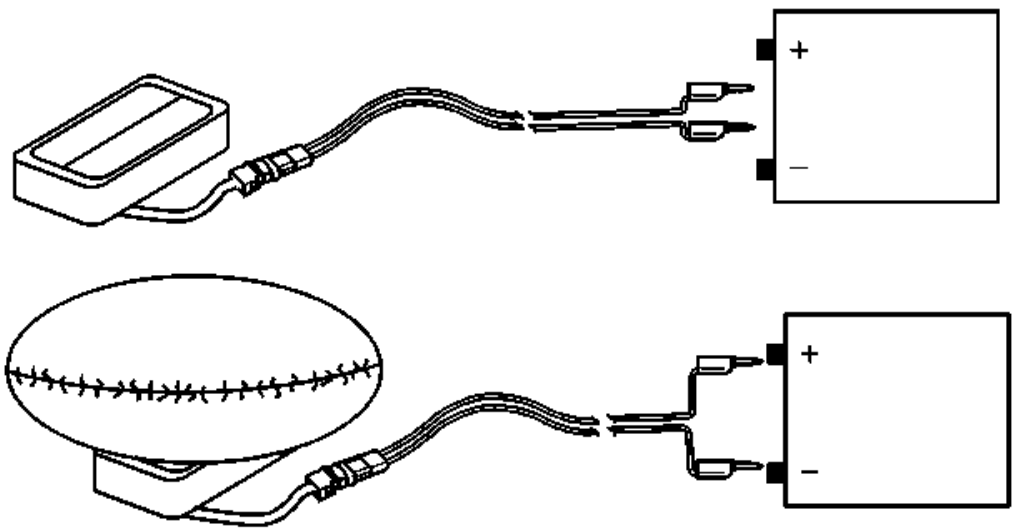

Fig. 34: Connecting SIR Deployment Harness Wires To Power Source
Courtesy of GENERAL MOTORS COMPANY

15. Place a 12 V minimum/2A minimum power source, such as a vehicle battery, near the shorted end of the harness.
16. Connect the SIR deployment harness wires to the power source. Deployment of the air bag will occur when contact is made.

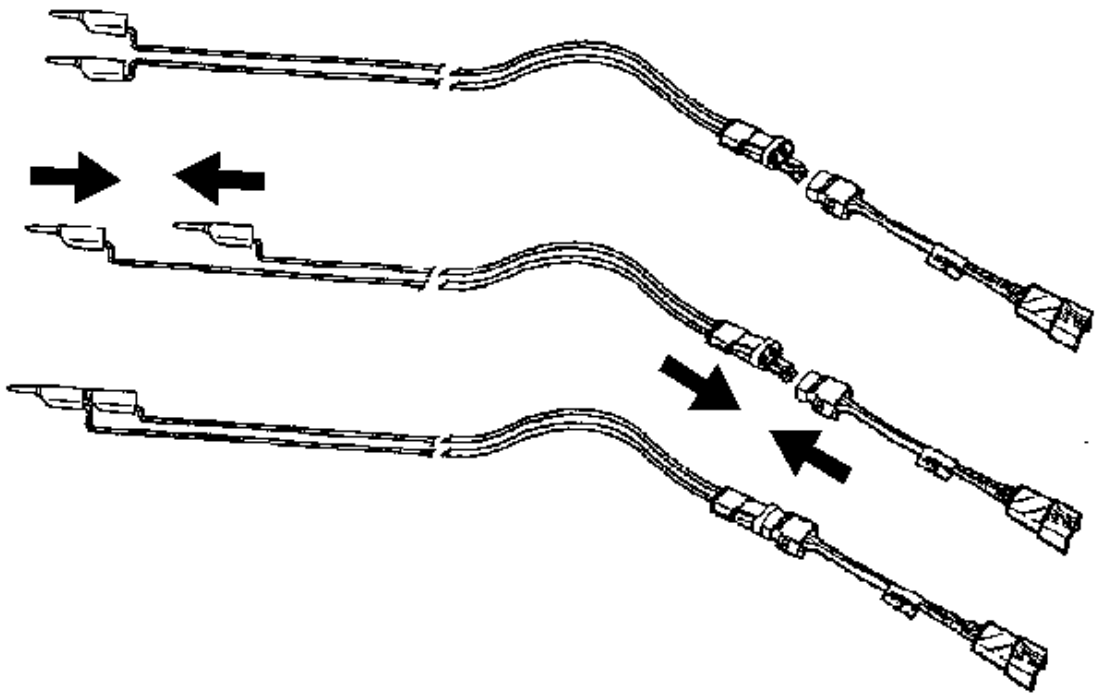

Fig. 35: View Of Deployment Harness Leads
Courtesy of GENERAL MOTORS COMPANY

17. Disconnect the SIR deployment harness from the power source after the air bag deploys.
18. If the air bag did not deploy, disconnect the adapter and discontinue the procedure and contact the Technical Assistance Group.

    If deployment was successful, proceed to the following steps.

WARNING: Refer to SIR Deployed Inflator Modules Are Hot Warning .

19. Seat one banana plug into the other in order to short the deployment harness leads.
20. Put on a pair of shop gloves.

21. Disconnect the pigtail adapter from the air bag as soon as possible.
22. Inspect the pigtail adapter and the SIR deployment harness. Replace as needed.
23. Dispose of the deployed air bag through normal refuse channels.
24. Wash your hands with a mild soap.

Deployment Inside Vehicle - Vehicle Scrapping Procedure

Deploy the air bags inside of the vehicle when destroying the vehicle or when salvaging the vehicle for parts. This includes, but is not limited to, the following situations:

- The vehicle has completed all useful life.
- Irrepairable damage occurred to the vehicle in a non-deployment type accident.
- Irrepairable damage occurred to the vehicle during a theft.
- The vehicle is being salvaged for parts to be used on a vehicle with a different VIN, as opposed to rebuilding as the same VIN.

WARNING: Refer to SIR Inflatable Module Deployment Outside Vehicle Warning .

1. Lower the driver and passenger windows.
2. Turn the ignition switch to the OFF position and remove the ignition key.
3. Check that all air bags which will be deployed are mounted securely.
4. Remove all loose objects from the front seats.

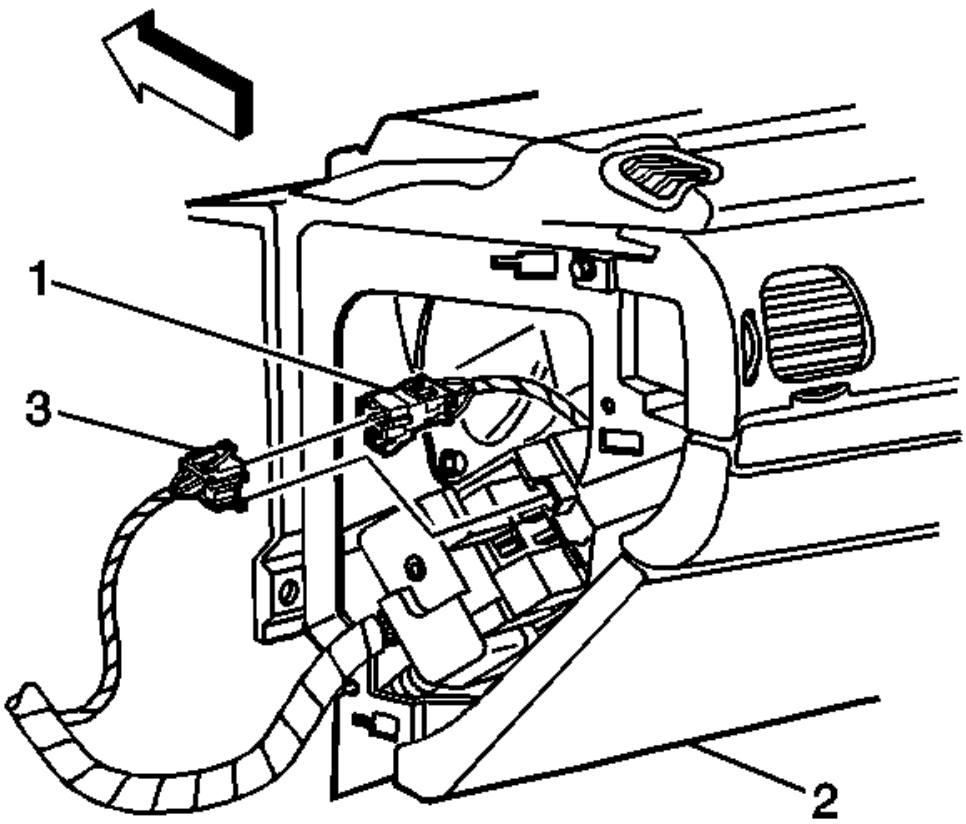

Fig. 36: Identifying I/P Module Connector To Vehicle Harness Connector (LH Side I/P)
Courtesy of GENERAL MOTORS COMPANY

WARNING: A deployed dual stage inflator module will look the same whether one or both stages were used. Always assume a deployed dual stage inflator module has an active stage 2. Improper handling or servicing can activate the inflator module and cause personal injury.

5. Disconnect the steering wheel air bag yellow connector (1) from vehicle harness yellow connector (3).

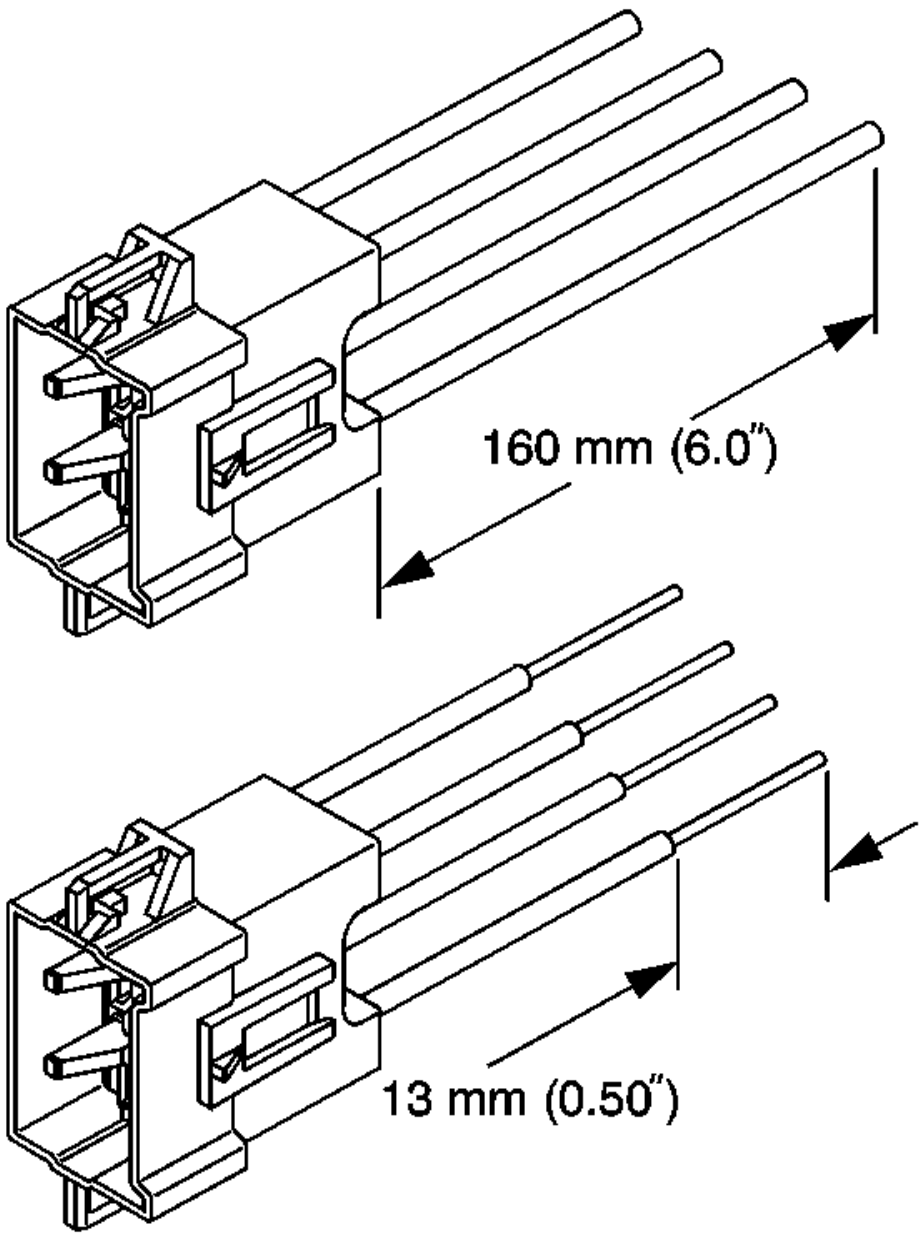

Fig. 37: Stripping SIR Wires
Courtesy of GENERAL MOTORS COMPANY

NOTE: If the vehicle is equipped with dual stage air bags the steering wheel air

bag and instrument panel air bag will each have 4 wires. Refer to COMPONENT CONNECTOR END VIEWS - INDEX for determining high and low circuits.

6. Cut the yellow harness connector out of the vehicle, leaving at least 16 cm (6 in) of wire at the connector.
7. Strip 13 mm (0.5 in) of insulation from each of the connector wire leads.

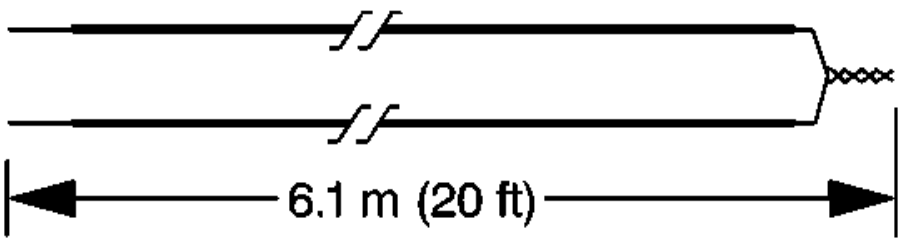

Fig. 38: Fabricating 20 Ft. Deployment Harness
Courtesy of GENERAL MOTORS COMPANY

8. Cut two 6.1 m (20 ft) deployment wires from a 0.8 mm (18 gauge) or thicker multi-strand wire. Use these wires to fabricate the driver deployment harness.
9. Strip 13 mm (0.5 in) of insulation from both ends of the wires.
10. Twist together one end from each of the wires in order to short the wires. Deployment wires shall remain shorted, and not connected to a power source until you are ready to deploy the air bag.

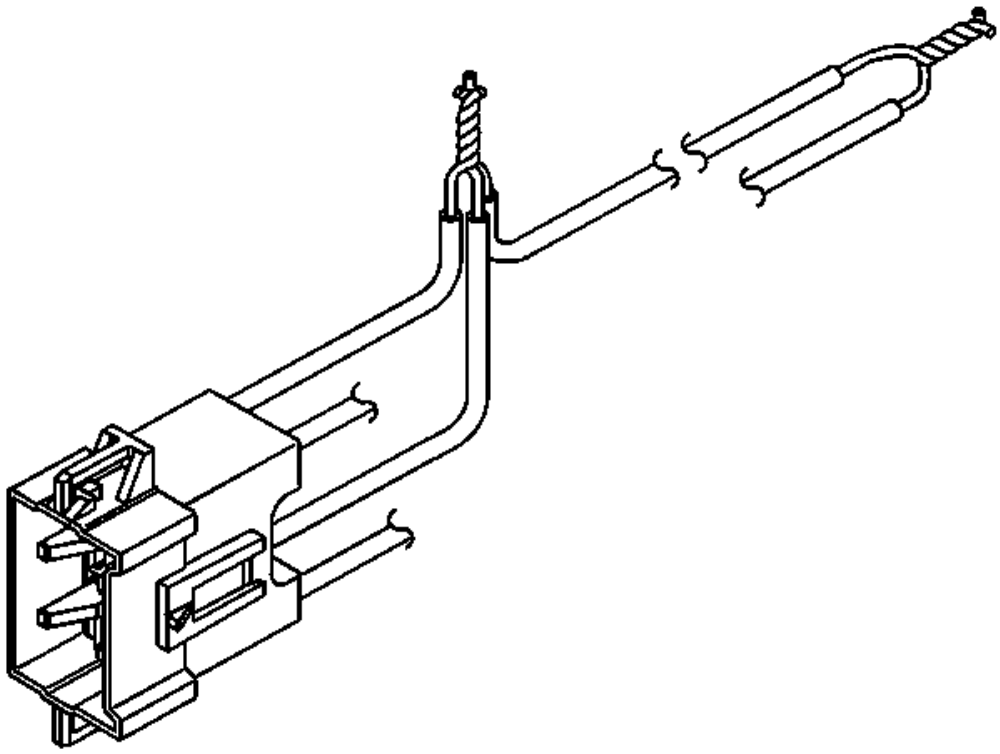

Fig. 39: Twisting Connector Wire Leads (High Circuits) To Deployment Harness Wire
Courtesy of GENERAL MOTORS COMPANY

11. Twist together the 2 connector wire leads from the high circuits from both stages of the steering wheel air bag, to one set of deployment wires. Refer to **COMPONENT CONNECTOR END VIEWS - INDEX** in order to determine the correct circuits.
12. Inspect that the 3-wire connection is secure.
13. Secure and insulate the 3-wire connection to the deployment harness using electrical tape.

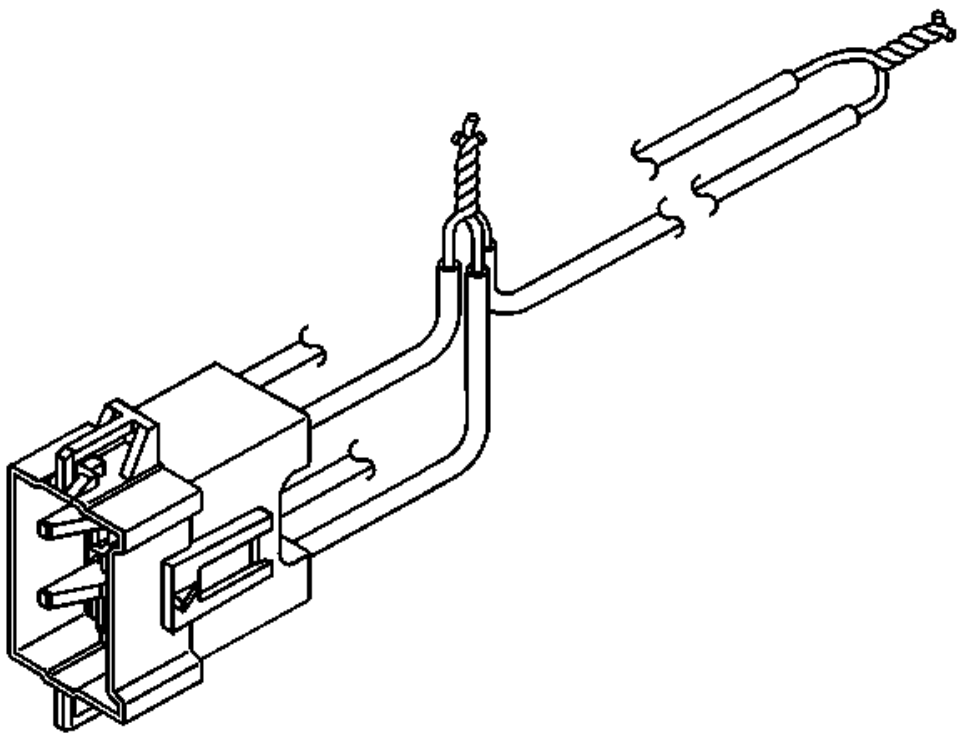

Fig. 40: Twisting Connector Wire Leads (Low Circuits) To Deployment Harness Wire
Courtesy of GENERAL MOTORS COMPANY

14. Twist together the 2 connector wire leads from the low circuits from both stages of the steering wheel air bag, to one set of deployment wires. Refer to **COMPONENT CONNECTOR END VIEWS - INDEX** in order to determine the correct circuits.
15. Inspect that the 3-wire connection is secure.
16. Secure and insulate the 3-wire connection to the deployment harness using electrical tape.
17. Connect the deployment harness to the connector on the steering wheel air bag.
18. Route the deployment harness out of the driver side of the vehicle.
19. Disconnect the yellow left roof rail harness connector from the vehicle harness connector.
20. Cut the harness connector out of the vehicle, leaving at least 16 cm (6 in) of wire at the connector.
21. Strip 13 mm (0.5 in) of insulation from each of the connector wire leads.
22. Cut two 6.1 m (20 ft) deployment wires from a 0.8 mm (18 gauge) or thicker multi-strand wire. These wires will be used to fabricate the roof rail air bag deployment harness.
23. Strip 13 mm (0.5 in) of insulation from both ends of the wires.

24. Twist together one end from each of the wires in order to short the wires.
25. Twist together one connector wire lead to one deployment wire.
26. Secure and insulate the connection using electrical tape.
27. Twist together and tape the remaining connector wire lead to the remaining deployment wire.
28. Connect the deployment harness to the yellow connector of the roof rail air bag.
29. Route the deployment harness out of the driver side of the vehicle.

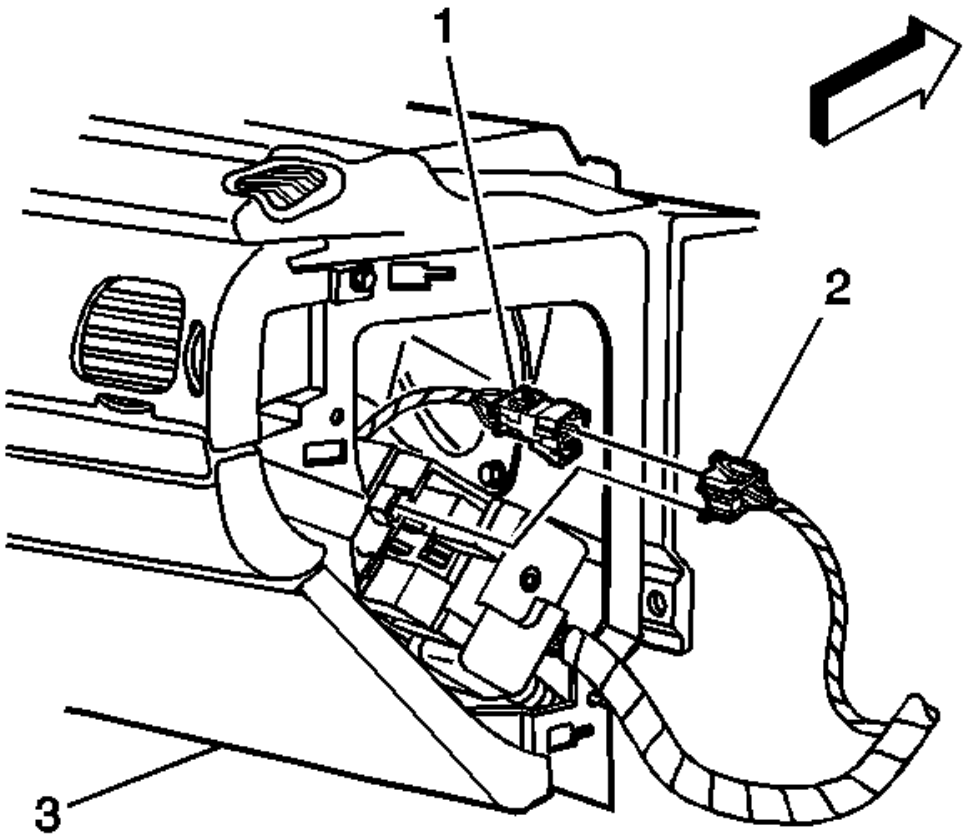

Fig. 41: Identifying I/P Module Connector To Vehicle Harness Connector
Courtesy of GENERAL MOTORS COMPANY

30. Disconnect the instrument panel air bag yellow harness connector (1) from the vehicle harness connector (2).

NOTE: **If the vehicle is equipped with dual stage air bags the steering wheel air bag and instrument panel air bag will each have 4 wires. Refer to COMPONENT CONNECTOR END VIEWS - INDEX for determining high and low circuits.**

31. Cut the yellow harness connector out of the vehicle, leaving at least 16 cm (6 in) of wire at the connector.
32. Strip 13 mm (0.5 in) of insulation from each of the connector wire leads.
33. Cut two 6.1 m (20 ft) deployment wires from a 0.8 mm (18 gauge) or thicker multi-strand wire. These wires will be used to fabricate the passenger deployment harness.
34. Strip 13 mm (0.5 in) of insulation from both ends of the wires.
35. Twist together one end from each of the wires in order to short the wires.
36. Twist together the 2 connector wire leads from the high circuits from both stages of the instrument panel air bag to one set of deployment wires. Refer to **COMPONENT CONNECTOR END VIEWS - INDEX** in order to determine the correct circuits.
37. Inspect that the 3-wire connection is secure.
38. Secure and insulate the 3-wire connection to the deployment harness using electrical tape.
39. Twist together the 2 connector wire leads from the low circuits from both stages of the instrument panel air bag to one set of deployment wires. Refer to **COMPONENT CONNECTOR END VIEWS - INDEX** in order to determine the correct circuits.
40. Inspect that the 3-wire connection is secure.
41. Secure and insulate the 3-wire connection to the deployment harness using electrical tape.
42. Connect the deployment harness to the instrument panel air bag in-line connector.
43. Route the deployment harness out of the passenger side of the vehicle.
44. Disconnect the yellow harness connector to the right roof rail air bag from the vehicle harness connector.
45. Cut the harness connector out of the vehicle, leaving at least 16 cm (6 in) of wire at the connector.
46. Strip 13 mm (0.5 in) of insulation from each of the connector wire leads.
47. Cut two 6.1 m (20 ft) deployment wires from a 0.8 mm (18 gauge) or thicker multi-strand wire. These wires will be used to fabricate the roof rail air bag deployment harness.
48. Strip 13 mm (0.5 in) of insulation from both ends of the wires.
49. Twist together one end from each of the wires in order to short the wires.
50. Twist together one connector wire lead to one deployment wire.
51. Secure and insulate the connection using electrical tape.
52. Twist together and tape the remaining connector wire lead to the remaining deployment wire.
53. Connect the deployment harness to the roof rail air bag yellow connector.
54. Route the deployment harness out of the passenger side of the vehicle.
55. Completely cover the windshield and the front door window openings with a drop cloth.
56. Stretch to the full length all of the deployment harness wires on the right side of the vehicle.
57. Deploy each deployment loop one at a time.
58. Place a power source, 12 V minimum/2A minimum, such as a vehicle battery, near the shorted end of the harnesses.
59. Separate one set of wires and touch the wire ends to the power source in order to deploy the selected air bag.
60. Disconnect the deployment harness from the power source and twist the wire ends together.
61. Continue the same process with the remaining deployment harnesses.

62. Disconnect all harnesses from the vehicle.
63. Discard the harnesses.
64. Scrap the vehicle in the same manner as a non-SIR equipped vehicle.
65. If one or all of the air bags did not deploy, remove the undeployed air bags from the vehicle.

PRETENSIONER HANDLING AND SCRAPPING

Scrapping Procedure

During the course of a vehicles useful life, certain situations may arise which will necessitate the disposal of a live (undeployed) pretensioner. The following information covers the proper procedures for the disposing of a live (undeployed) pretensioner. Deploy the pretensioner before disposal. Do not dispose of a live (undeployed) pretensioner through normal disposal channels until the pretensioner has been deployed. The following information covers the proper procedures for the disposing of a live (undeployed) pretensioner.

- After replacement of a pretensioner under warranty. The pretensioner may need to be returned undeployed to the original manufacturer of pretensioner.
- If the vehicle is the subject of a Product Liability report related to the SIR system and is subject to a Preliminary Investigation (GM-1241). Do not alter the SIR system in any manner.
- If the vehicle is involved in a campaign affecting the pretensioners. Follow the instructions in the Campaign Service Bulletin for proper SIR handling procedures.

Deployment Procedures

NOTE: Some countries, states or localities may not allow service deployment of air bags without special permission or training. Local laws regarding deploying and scrapping of air bags/devices with pyrotechnics must be followed.

The pretensioner can be deployed inside or outside of the vehicle. The method used depends upon the final disposition of the vehicle. Review the following procedures in order to determine which will work best in a given situation.

Deployment Inside the Vehicle

Refer to **Inflatable Restraint Module Handling and Scrapping** for deploying the pretensioner inside vehicle under Vehicle Scrapping Procedure.

Deployment Outside Vehicle for Seat Belt Pretensioners

Deploy the seat belt pretensioners outside of the vehicle when the vehicle will be returned to service. Situations that require deployment outside of the vehicle include the following:

- Using the SIR diagnostics, you determine that the seat belt pretensioner is malfunctioning.
- The pretensioner pigtail (if equipped) is damaged.
- The pretensioner connector is damaged.

- The pretensioner connector terminal is damaged.

Deployment and disposal of a malfunctioning seat belt pretensioner is subject to any required retention period.

WARNING: In order to prevent accidental deployment of the pretensioner which could cause personal injury, do not dispose of an undeployed pretensioner as normal shop waste. The undeployed pretensioner contains substances that could cause severe illness or personal injury if the sealed container is damaged during disposal. Use the following deployment procedures to safely dispose of an undeployed pretensioner. Failure to dispose of a pretensioner as instructed may be a violation of federal, state, or local laws.

WARNING: When you are deploying a pretensioner for disposal, perform the deployment procedures in the order listed. Failure to follow the procedures in the order listed may result in personal injury.

Special Tools

- **EL-39401-B** SIR Deployment Fixture
- **EL-38826** SIR Deployment Harness

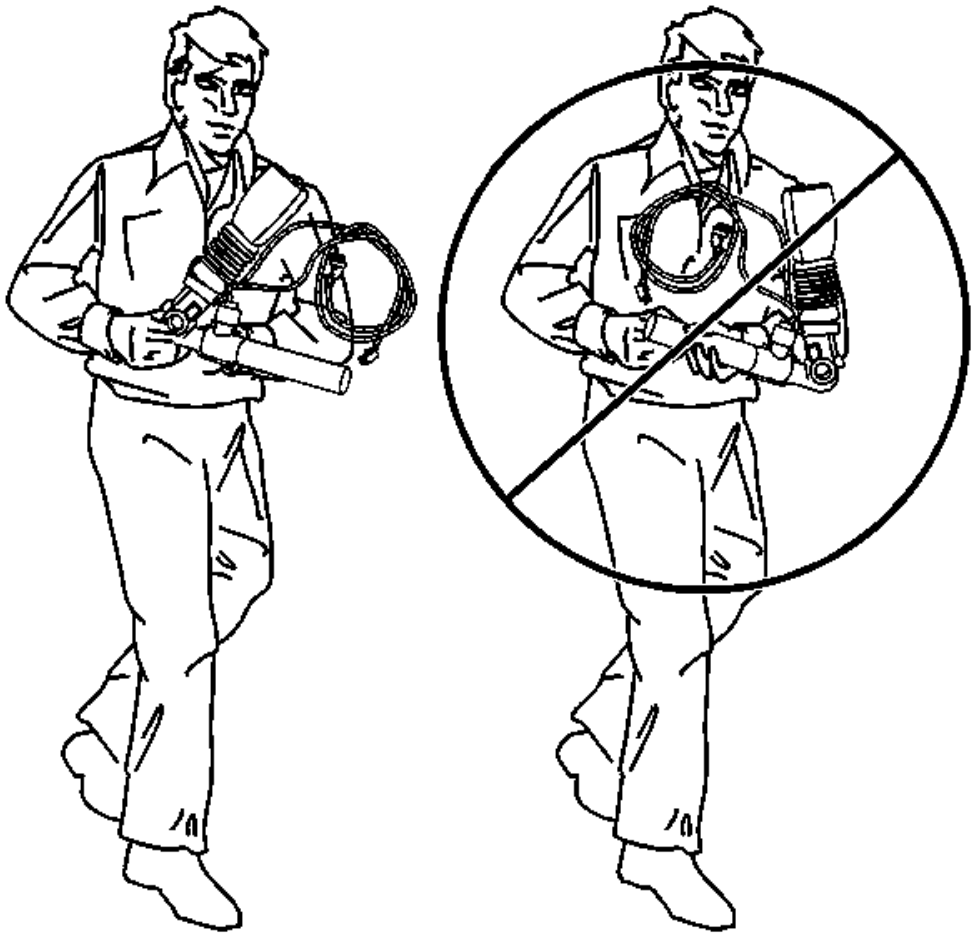

Fig. 42: Proper Pretensioner Carrying
Courtesy of GENERAL MOTORS COMPANY

1. Turn the ignition switch to the OFF position.
2. Remove the ignition key.
3. Put on safety glasses.
4. Remove the seat belt pretensioner from the vehicle.
5. When carrying a pretensioner to the deployment area keep the open end of pretensioner pointed away from the body.

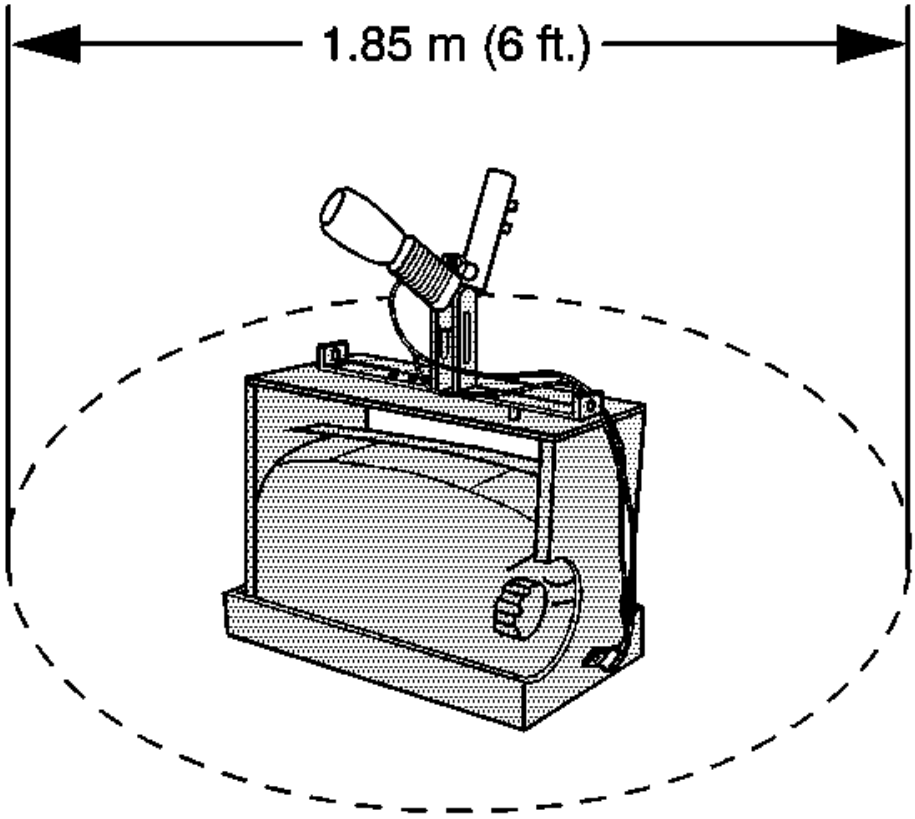

Fig. 43: Pretensioner Deployment Area
Courtesy of GENERAL MOTORS COMPANY

6. Clear a space on the ground about 1.85 M (6 ft) in diameter for deployment of the pretensioner. If possible, use a paved, outdoor location free of activity. Otherwise, use a space free of activity on the shop floor. Make sure you have sufficient ventilation.
7. Make sure no loose or flammable objects are in the area.
8. Place the **EL-39401-B** SIR deployment fixture in the center of the cleared area.
9. Fill the fixture plastic reservoir with water or sand.

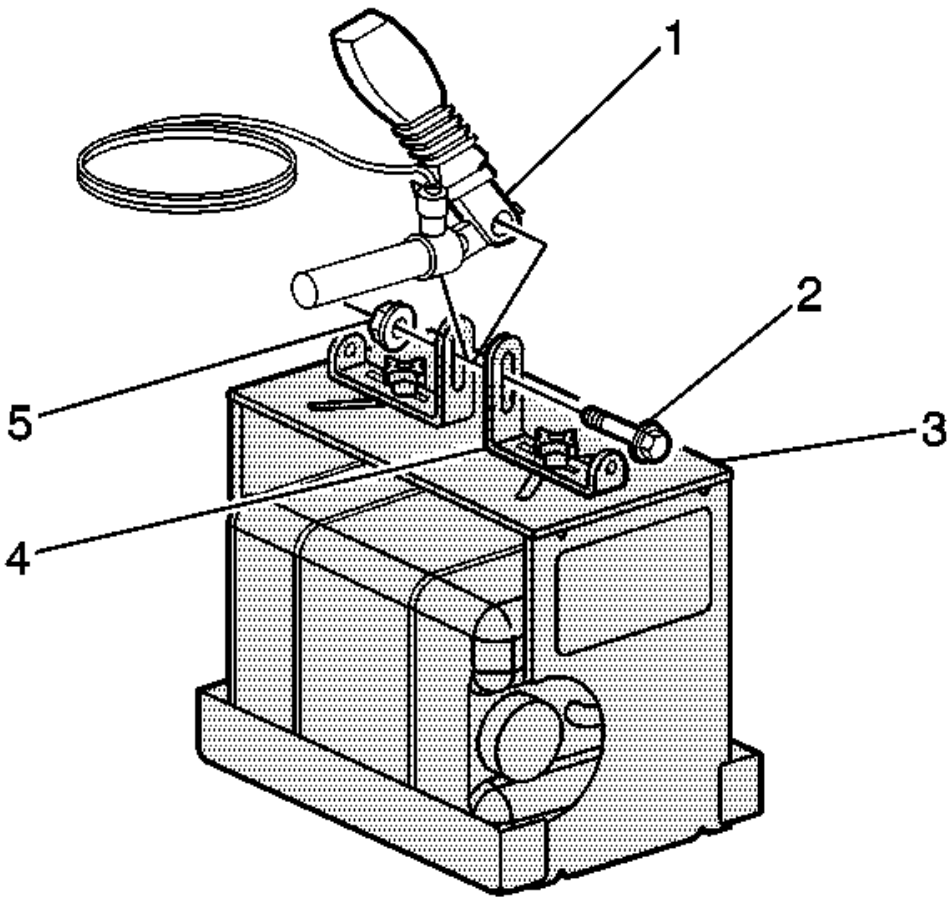

Fig. 44: Mounting Pretensioner In SIR Deployment Fixture
Courtesy of GENERAL MOTORS COMPANY

10. Mount the pretensioner (1) in the SIR deployment fixture (3) with the open end facing up using the following mounting method.
    1. Adjust and secure the EL-39401-B arms (4) to the deployment fixture (3).
    2. To mount, use the proper size bolt (2) and nut (5) with washers in order to secure the pretensioner (1) to the deployment fixture brackets (4).
    3. Securely tighten all fasteners prior to deployment.

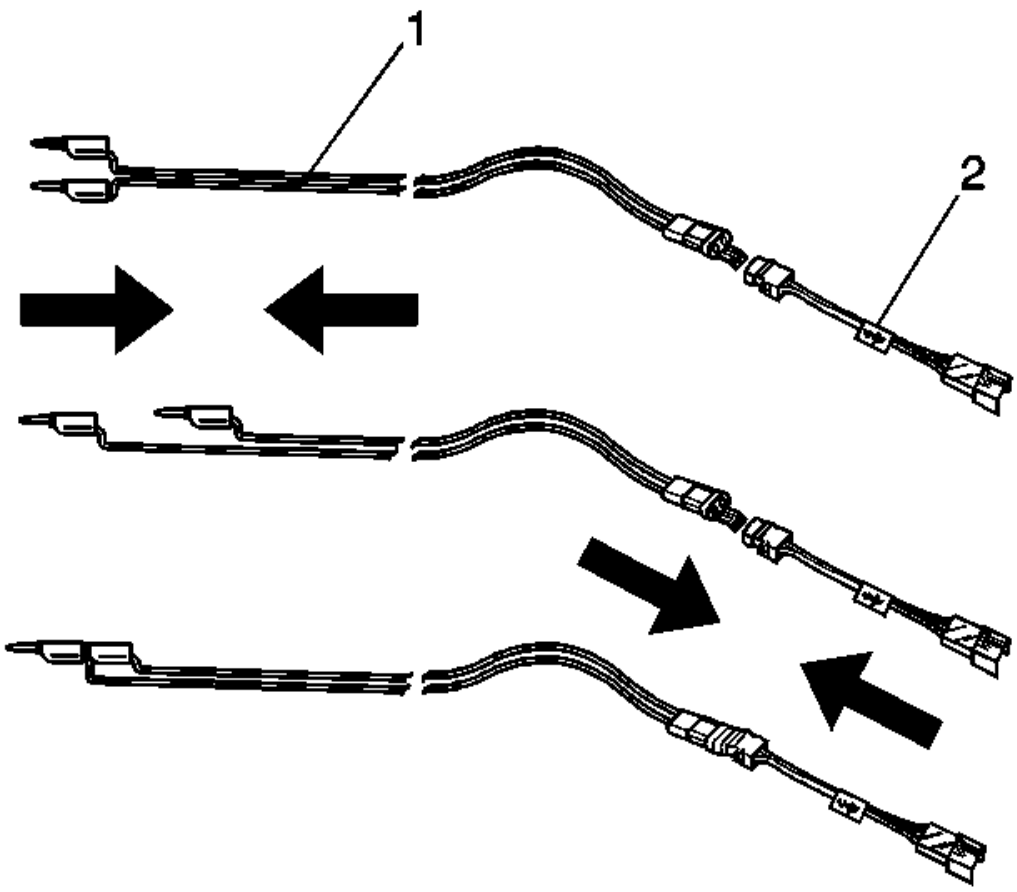

Fig. 45: Identifying SIR Deployment Harness & Adapter
Courtesy of GENERAL MOTORS COMPANY

11. Inspect the **EL-38826** SIR deployment harness and the appropriate pigtail adapter for damage. Replace as needed.
12. Short the 2 SIR deployment harness (1) leads together using one banana plug seated into the other.
13. Connect the appropriate pigtail adapter (2) to the SIR deployment harness (1).

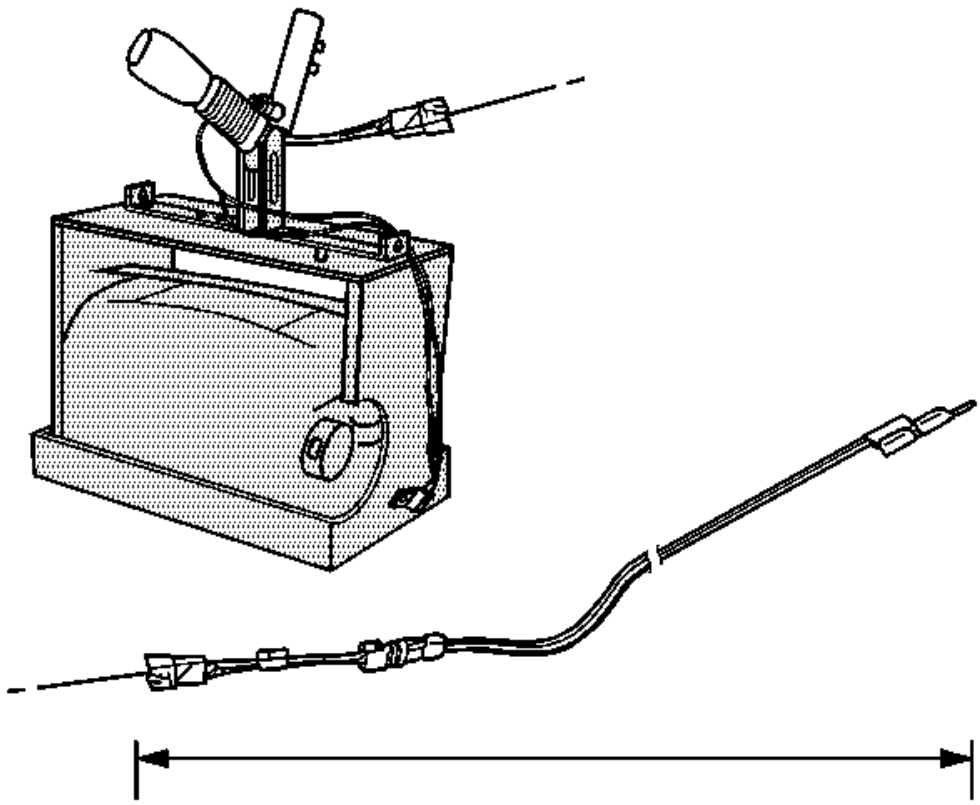

Fig. 46: Extending SIR Deployment Harness & Adapter
Courtesy of GENERAL MOTORS COMPANY

14. Extend the SIR deployment harness and adapter to full length from the deployment fixture.

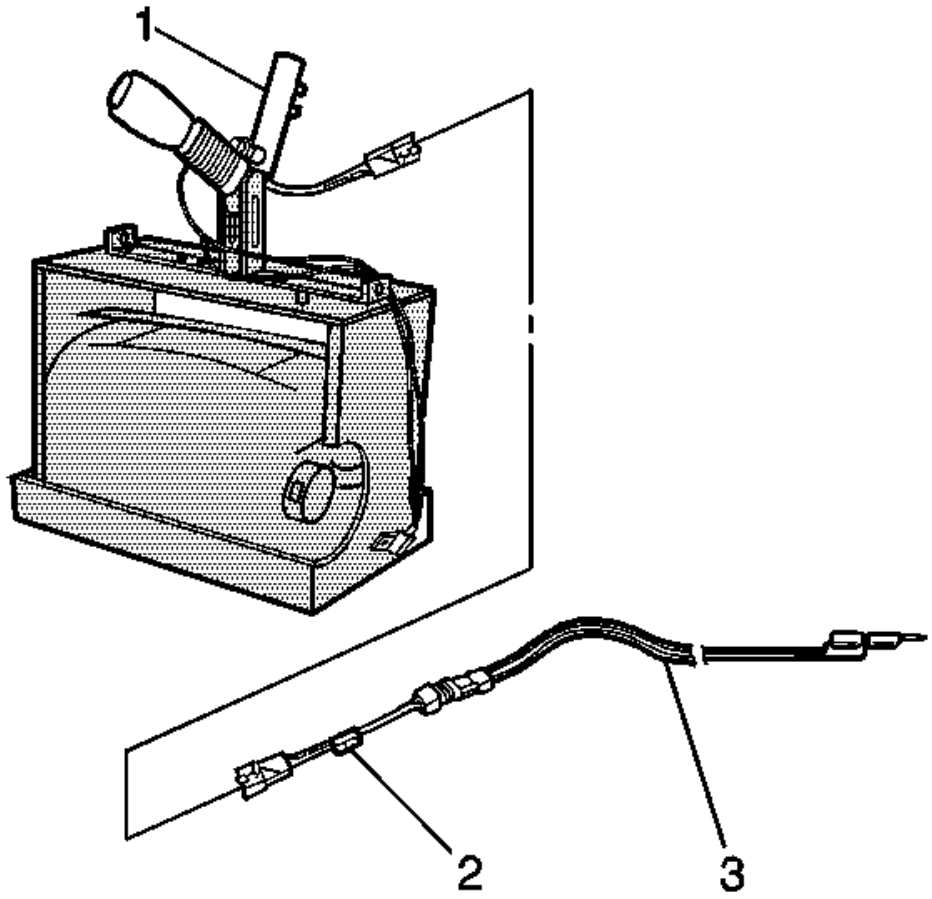

Fig. 47: Connecting Pretensioner To Adapter
Courtesy of GENERAL MOTORS COMPANY

15. Connect the pretensioner (1) to the adapter (2) on the deployment harness (3).

NOTE: The rapid gas expansion involved with deploying a pretensioner is very loud. Notify all the people in the immediate area that you intend to deploy the seat belt pretensioner.

16. Clear the area of people.

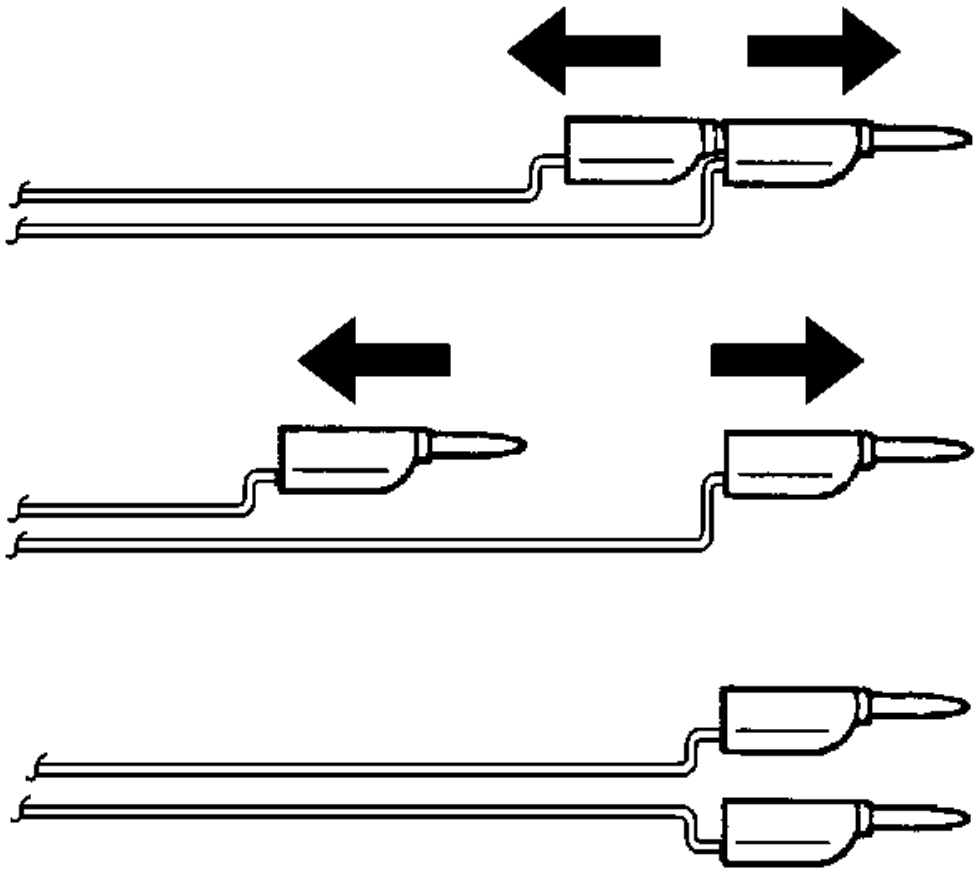

Fig. 48: Separating Banana Plugs
Courtesy of GENERAL MOTORS COMPANY

WARNING: When you are deploying a pretensioner for disposal, perform the deployment procedures in the order listed. Failure to follow the procedures in the order listed may result in personal injury.

17. Separate the 2 banana plugs on the SIR deployment harness.

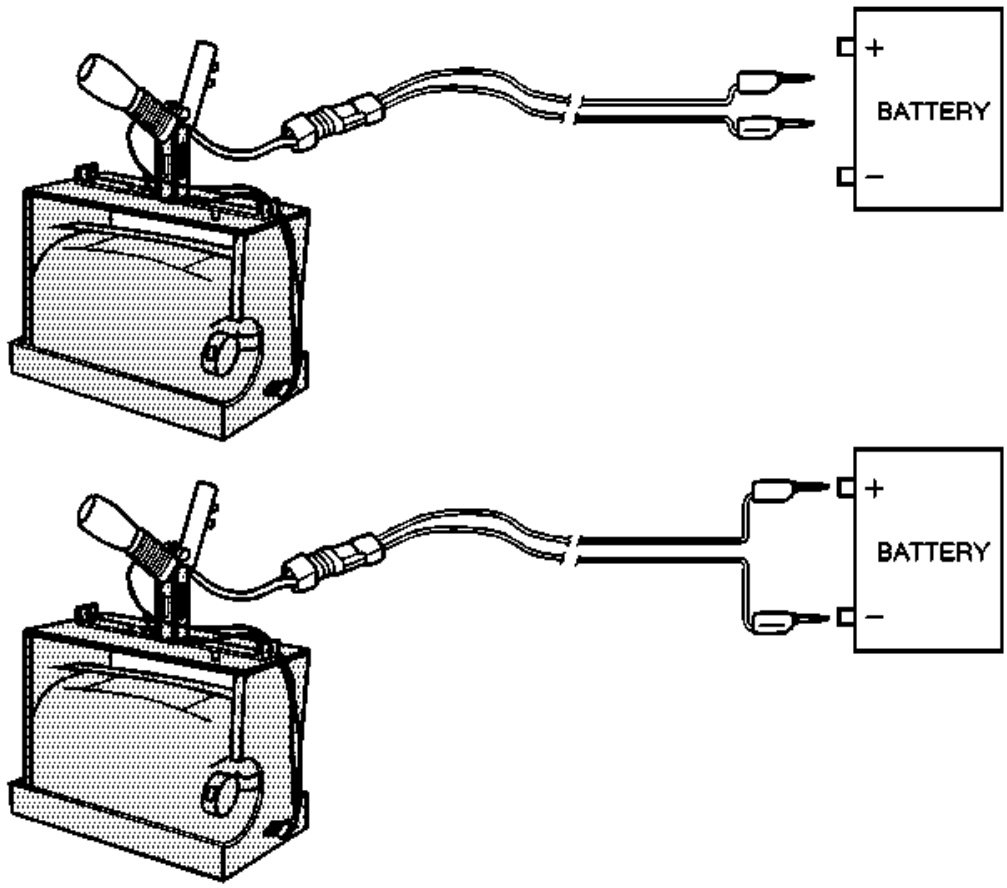

Fig. 49: Deploying Pretensioner
Courtesy of GENERAL MOTORS COMPANY

NOTE: When the seat belt pretensioner deploys, the deployment fixture may jump about 30 cm (1 ft) vertically. This is a normal reaction of the seat belt pretensioner due to the force of the rapid expansion of gas inside the pretensioner.

18. Place a 12 V minimum/2 A minimum power source (i.e., vehicle battery) near the shorted end of the harness.
19. Connect the SIR deployment harness wires to the power source. Pretensioner deployment will occur when contact is made.
20. Disconnect the SIR deployment harness from the power source after the pretensioner deploys.

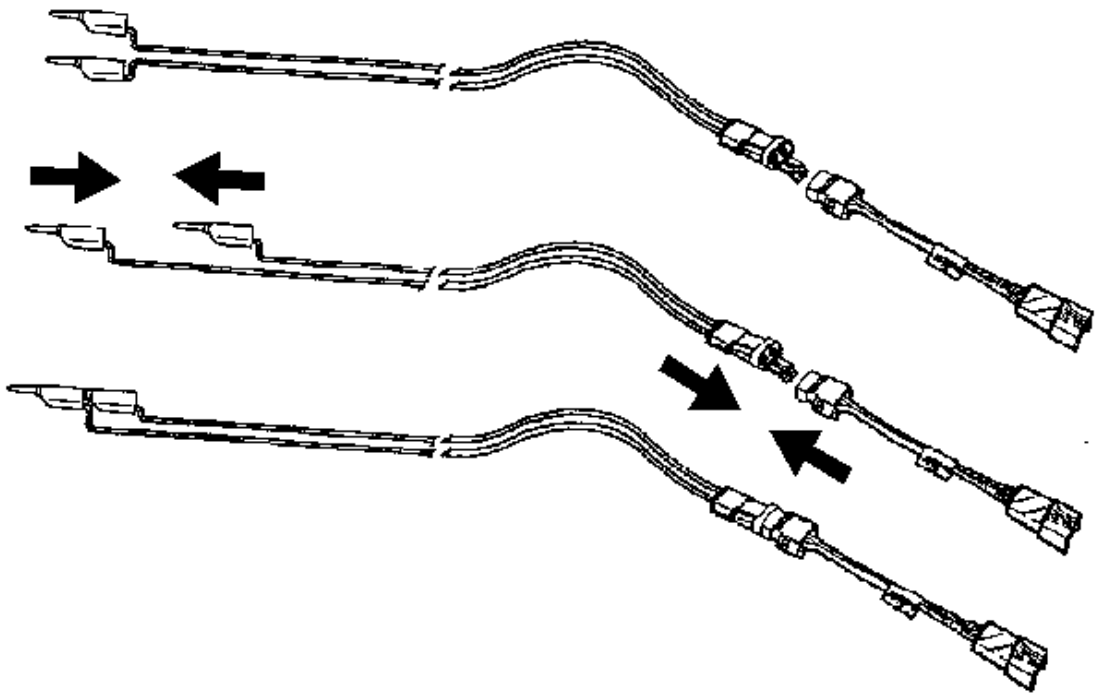

Fig. 50: View Of Deployment Harness Leads
Courtesy of GENERAL MOTORS COMPANY

21. Seat one banana plug into the other in order to short the deployment harness leads.
22. If the pretensioner did not deploy, disconnect the adapter and discontinue the procedure. Contact the Technical Assistance Group. Otherwise, proceed to the following steps.
23. Put on a pair of shop gloves.
24. Disconnect the pigtail adapter from the pretensioner as soon as possible.
25. Inspect the pigtail adapter and the SIR deployment harness. Replace as needed.
26. Dispose of the deployed pretensioner through normal refuse channels.
27. Wash hands with a mild soap.

DESCRIPTION AND OPERATION

SUPPLEMENTAL INFLATABLE RESTRAINT SYSTEM DESCRIPTION AND OPERATION

SIR System Overview

The supplemental inflatable restraint (SIR) system supplements the protection offered by the seat belts. The SIR system contains an Inflatable Restraint Sensing and Diagnostic Module (SDM), air bags, seat belt pretensioners (anchor and retractor), and impact sensors. The Inflatable Restraint Sensing and Diagnostic Module determines the severity of a collision with the assistance of side impact sensors located at strategic points on the vehicle. When the Inflatable Restraint Sensing and Diagnostic Module detects a collision, the Inflatable Restraint Sensing and Diagnostic Module will process the information provided by the sensors to further support air bag or pretensioner deployment. The Inflatable Restraint Sensing and Diagnostic Module will deploy the air bags and pretensioners if it detects a collision of sufficient force. If the force of the impact is not sufficient to warrant air bag deployment, the Inflatable Restraint Sensing and Diagnostic Module may still deploy the seat belt pretensioners. The Inflatable Restraint Sensing and Diagnostic Module contains a sensing device that converts vehicle velocity changes to an electrical signal. The Inflatable Restraint Sensing and Diagnostic Module compares these signals to values stored in memory. If the signals exceed a stored value, the Inflatable Restraint Sensing and Diagnostic Module will determine the severity of the impact and either cause current to flow through the frontal deployment loops deploying the frontal air bags and pretensioners, or it will deploy the pretensioners only. The Inflatable Restraint Sensing and Diagnostic Module continuously monitors the deployment loops for malfunctions and illuminates the AIR BAG indicator if a fault is detected. The Inflatable Restraint Sensing and Diagnostic Module performs continuous diagnostic monitoring of the SIR system electrical components. Upon detection of a circuit malfunction, the Inflatable Restraint Sensing and Diagnostic Module will set a DTC and inform the driver by illuminating the AIR BAG indicator. The steering column and knee bolsters are designed to absorb energy and compress during frontal collisions in order to limit leg movement and decrease the chance of injury to the driver and passenger.

AIR BAG Indicator (Driver)

The AIR BAG indicator, located in the instrument cluster, is used to notify the driver of SIR system malfunctions and to verify that the Inflatable Restraint Sensing and Diagnostic Module (SDM) is communicating with the instrument cluster. When the ignition is turned ON, the Inflatable Restraint Sensing and Diagnostic Module is supplied with ignition positive voltage. The instrument cluster will momentarily turn on the AIR BAG indicator. While the indicator is on, the Inflatable Restraint Sensing and Diagnostic Module conducts tests on all SIR system components and circuits. If no malfunctions are detected the Inflatable Restraint Sensing and Diagnostic Module will communicate with the instrument cluster through the serial data circuit and command the AIR BAG indicator OFF. The Inflatable Restraint Sensing and Diagnostic Module provides continuous monitoring of the air bag circuits by conducting a sequence of checks. If a malfunction is detected the Inflatable Restraint Sensing and Diagnostic Module will store a diagnostic trouble code (DTC) and command the instrument cluster to illuminate the AIR BAG indicator via serial data. The presence of a SIR system malfunction could result in non-deployment of the air bags or deployment in conditions less severe than intended. The AIR BAG indicator will remain ON until the malfunction has been repaired.

Inflatable Restraint Sensing and Diagnostic Module (SDM)

The Inflatable Restraint Sensing and Diagnostic Module (SDM) is a microprocessor and the control center for the supplemental inflatable restraint (SIR) system. The Inflatable Restraint Sensing and Diagnostic Module contains internal sensors along with external impact sensors, mounted at strategic locations on the vehicle. In the event of a collision, the Inflatable Restraint Sensing and Diagnostic Module compares the signals from the

internal and external impact sensors to a value stored in memory. When the generated signals exceed the stored value, the Inflatable Restraint Sensing and Diagnostic Module will cause current to flow through the appropriate deployment loops to deploy the air bags. The Inflatable Restraint Sensing and Diagnostic Module records the SIR system status when a deployment occurs and illuminates the AIR BAG indicator located in the instrument cluster. The Inflatable Restraint Sensing and Diagnostic Module performs continuous diagnostic monitoring of the SIR system electrical components and circuitry when the ignition is turned ON. If the Inflatable Restraint Sensing and Diagnostic Module detects a malfunction, a DTC will be stored and the Inflatable Restraint Sensing and Diagnostic Module will request the instrument cluster to illuminate the AIR BAG indicator, notifying the driver that a malfunction exists. In the event that ignition positive voltage is lost during a collision, the Inflatable Restraint Sensing and Diagnostic Module maintains a 23-volt loop reserve for deployment of the air bags. It is important when disabling the SIR system for servicing or rescue operations to allow the 23-volt loop reserve to dissipate, which could take up to 1 minute.

Air Bags

This vehicle contains 10 air bags. The 10 air bags are located in the steering wheel, instrument panel (passenger side), driver side (B-pillar), passenger side (B-pillar), driver side (C-pillar), passenger side (C-pillar), driver side knee, passenger side knee, left roof rail, and right roof rail. To view the locations of the air bags refer to **SIR Identification Views**. Air bags contain a housing, inflatable air bag, an initiating device, canister of gas generating material and, in some cases, stored compressed gas. The deployment loops supply current through the inflator modules to deploy the air bags. The instrument panel passenger air bag has two stages of deployment, which varies the amount of restraint to the occupant according to the collision severity. For moderate frontal collisions the air bags deploy at less than full deployment which consists of stage 1 of the air bag. For more severe frontal collisions a full deployment is initiated which consists of stage 1 and stage 2 of the air bag. The current passing through the air bag, ignites the material in the canister producing a rapid generation of gas and is some cases, the release of compressed gas. The gas produced from this reaction rapidly inflates the air bag. Once the air bag is inflated it quickly deflates through the air bag vent holes and/or the bag fabric. Each air bag is equipped with a shorting bar located in the connectors of the module. The shorting bar shorts the air bag deployment loop circuitry to prevent unwanted deployment of the air bag when it is disconnected.

Seat Belt Pretensioners (Anchor and Retractor)

The seat belt pretensioners (driver and passenger) consist of a housing, seat belt retractor (located in the B-pillar), seat belt anchor (located on the floor), seat belt webbing, an initiator, and a canister of gas generating materials. To view the locations of the seat belt pretentioners refer to **SIR Identification Views**. The initiator is part of the seat belt pretensioner deployment loop. When the vehicle is involved in a collision of sufficient force, the Inflatable Restraint Sensing and Diagnostic Module causes current to flow through the seat belt deployment loops to the initiator. Current passing through the initiator ignites the material in the canister producing a rapid generation of gas. The gas produced from this reaction deploys the seat belt pretensioners which removes all of the slack in the seat belts. Depending on the severity of the collision, the seat belt pretensioners may deploy without the frontal air bags deploying, or they will deploy immediately before the frontal air bags deploy. Each seat belt pretensioner is equipped with a shorting bar that is located in the connector of the seat belt pretensioner. The shorting bar shorts the seat belt pretensioner circuitry to prevent unwanted deployment of the seat belt pretensioner when the connector is disconnected.

Impact Sensors

This vehicle contains 6 impact sensors. The 6 impact sensors are located in the front of the vehicle (2), 2 in the

B-pillars (left and right), and 2 in the C-Pillars (left and right). To view the locations of the impact sensors refer to **SIR Identification Views**. The impact sensors contain a sensing device which monitors vehicle acceleration and velocity changes to detect side collisions that are severe enough to warrant air bag deployment. The impact sensors are not part of the deployment loop, but instead provide input to the Inflatable Restraint Sensing and Diagnostic Module. The Inflatable Restraint Sensing and Diagnostic Module contains a microprocessor that performs calculations using the measured accelerations and compares these calculations to a value stored in memory. When the generated calculations exceed the stored value, the Inflatable Restraint Sensing and Diagnostic Module will cause current to flow through the deployment loops deploying the appropriate impact module air bags.

Passenger Presence Detection System and Air Bag Indicator (Passenger)

NOTE: The passenger presence system (PPS) is a calibrated unit. When replacing the assembly all parts in the service kit must remain together. Do not mix any of the old parts with the new parts. After repairing or replacing the PPS, the preload test must be performed in order to function properly.

The Passenger Presence System (PPS) is used to monitor the type of occupant that is sitting in the front passenger seat and communicate the status to the Inflatable Restraint Sensing and Diagnostic Module (SDM). The Inflatable Restraint Sensing and Diagnostic Module then uses this information to determine whether to enable or suppress the passenger instrument panel air bag. The Passenger Presence System consists of an electronic control module, a sensor mat in the seat, a harness, and PASSENGER AIR BAG ON/OFF indicators. The Passenger Presence System transmits and receives a low-level electric field. The measured capacitance value of this field is used to determine the type of occupant sitting in the front passenger seat. If the measured capacitance is less than a calibrated value, then the Passenger Presence System module will send a serial data signal to the Inflatable Restraint Sensing and Diagnostic Module to disable the passenger instrument panel air bag. If the measured capacitance is greater than a calibrated value, then the passenger presence module will send a serial data signal to the Inflatable Restraint Sensing and Diagnostic Module to enable the passenger instrument panel air bag. The Inflatable Restraint Sensing and Diagnostic Module will notify the customer of the enable/disable status by illuminating one of the PASSENGER AIR BAG ON/OFF indicator. The passenger presence module monitors itself for faults and will displays diagnostic trouble codes (DTCs) on the scan tool. When a fault is detected, the passenger presence module sends out a message to the Inflatable Restraint Sensing and Diagnostic Module. The Inflatable Restraint Sensing and Diagnostic Module responds by sending a command message to the Instrument Cluster to illuminate the AIR BAG indicator.

Seat Belt Indicators

The seat belt indicators are controlled through the Inflatable Restraint Sensing and Diagnostic Module (SDM). For further information on seat belt indicators refer to **Seat Belt System Description and Operation** .

SPECIAL TOOLS AND EQUIPMENT

SPECIAL TOOLS

Illustration	Tool Number/ Description
	EL 38826

	J 38826 KM 799-3 SIR Deployment Harness
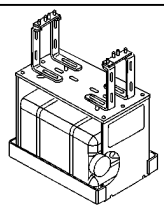	EL 39401-B J 39401-B SIR Deployment Fixture

2013 STEERING

Power Steering - Cruze

SPECIFICATIONS

FASTENER TIGHTENING SPECIFICATIONS

Fastener Tightening Specifications

Application	Specification	
	Metric	English
Intermediate Steering Shaft Bolt	34	25 lb ft
Power Steering Assist Motor Bolt	8 (1)	71 lb in (1)
Stabilizer Shaft Link Nut (1)	65	48 lb ft
Steering Gear Bolt	110 + 150 degrees to 165 degrees (1)	81 lb ft + 150 degrees to 165 degrees (1)
Steering Gear Valve Solenoid Bolt	8	71 lb in
Steering Linkage Inner Tie Rod	105	77 lb ft
Steering Linkage Inner Tie Rod Nut	60	44 lb ft
Steering Linkage Outer Tie Rod Nut	35 (1)	26 lb ft (1)
Steering Wheel Bolt	30	23 lb ft
1 = Use NEW Fastener.		

SCHEMATIC WIRING DIAGRAMS

POWER STEERING WIRING SCHEMATICS

NJ1

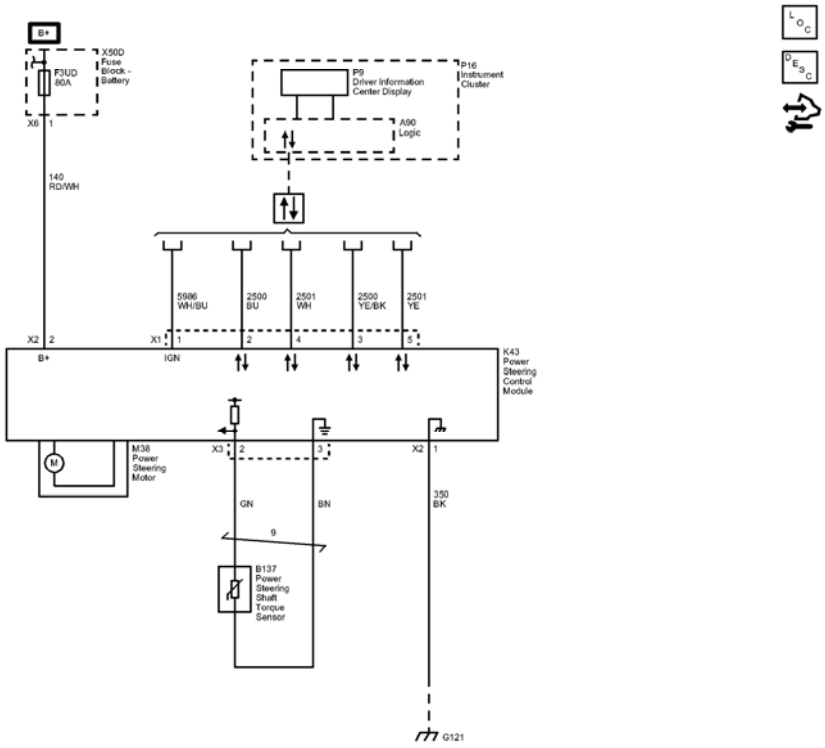

Fig. 1: Power Steering (NJ1) Wiring Schematics
Courtesy of GENERAL MOTORS COMPANY

Callout	Component Name
140	Battery Positive Voltage
140 RD/WH	140 RD/WH
CAV_2	2
CONN_X2	X2
CAV_1	1
CONN_X6	X6
SD	Serial Data
Data_Communication_Schematics_REF	Data Communication Schematics
5986	Serial Data Communication Enable
5986_WH/BU	5986 WH/BU
CAV_1	1
CONN_X1	X1
2500	High Speed GMLAN Serial Data (+) (1)
2500_BU	2500 BU

CAV_2	2
2501	High Speed GMLAN Serial Data (-) (1)
2501 WH	2501 WH
CAV_4	4
2500_YE/BK	2500 YE/BK
CAV_3	3
2501_YE	2501 YE
CAV_5	5
_GN	GN
CAV_2	2
CONN_X3	X3
_BN	BN
CAV_3	3
350	Ground
350_BK	350 BK
CAV_1	1
CONN_X2	X2
G121	G121
F3UD	F3UD 80A
TWIST 9	9
X50D	
K43	
M38	
B137	(NJ1)
P16	
A90	Logic
P9	

DIAGNOSTIC INFORMATION AND PROCEDURES

DIAGNOSTIC CODE INDEX

DIAGNOSTIC CODE INDEX

DTC	Description
DTC C005B (NJ1)	DTC C005B 00 Power Steering Softstops Learn
DTC C0176	DTC C0176 54 Control Module Temperature Sensor High Temperature
DTC C044A (NJ1)	DTC C044A 71 Steering System Engine Speed Signal Circuit Invalid Data
DTC C0456 (NJ1)	DTC C0456 4B Steering Position Sensor Calibration not Learned

DTC C0460 (NJ1)	DTC C0460 00 Steering Wheel Angle Sensor Malfunction DTC C0460 4B Steering Wheel Angle Sensor Calibration Not Learned
DTC C0475 (NJ1)	DTC C0475 00 Electric Steering Motor Circuit Malfunction DTC C0475 59 Electric Steering Motor Circuit Protection Time-Out
DTC C047A (NJ1)	DTC C047A Electric Steering Motor Position Sensor Circuit Malfunction
DTC C0544 (NJ1)	DTC C0544 5A Steering Wheel Angle Sensor Signal Not Plausible
DTC C0545 (NJ1)	DTC C0545 Steering Wheel Torque Sensor Malfunction
DTC C055C (NJ1)	DTC C055C 00 Steering Gear Performance Malfunction DTC C055C 64 Steering Gear Performance Slip Detected
DTC C0565 (NJ1)	DTC C0565 5A Vehicle Identification Number Not Plausible
DTC C0569 (NJ1)	DTC C0569 3A System Configuration Incorrect Component Installed
DTC C056E (NJ1)	DTC C056E 41 Electronic Control Unit Hardware Not Programmed DTC C056E 4B Electronic Control Unit Hardware Calibration Not Learned
DTC C0710 (NJ1)	DTC C0710 71 Steering Position Signal Invalid Data

DTC C005B (NJ1)

Diagnostic Instructions

- Perform the **Diagnostic System Check - Vehicle** prior to using this diagnostic procedure.
- Review **Strategy Based Diagnosis** for an overview of the diagnostic approach.
- **Diagnostic Procedure Instructions** provides an overview of each diagnostic category.

DTC Descriptor

DTC C005B 00

Power Steering Softstops Learn

Circuit/System Description

If the power steering power pack is replaced, the calibration needs to be learned to the new power steering

power pack. The power steering control module will set a DTC, if the required parameters are not learned.

Conditions for Running the DTC

Ignition Switch in OFF, ACCESSORY or ON position, power steering control module in communication mode.

Conditions for Setting the DTC

The soft endstop is not learned by the new power steering control module.

Action Taken When the DTC Sets

DTC C005B is stored in memory.

Conditions for Clearing the DTC

The software endstops need to be learned to the new power steering control module using a scan tool, performing the Configuration/Reset functions Power Steering Softstops Reset and Power Steering Softstops Learn.

Reference Information

Schematic Reference

Power Steering Schematics

Connector End View Reference

COMPONENT CONNECTOR END VIEWS - INDEX

Description and Operation

Power Steering System Description and Operation (Hydraulic Power Steering), **Power Steering System Description and Operation (Electronic Power Steering)**

Electrical Information Reference

- **Circuit Testing**
- **Connector Repairs**
- **Testing for Intermittent Conditions and Poor Connections**
- **Wiring Repairs**

Scan Tool Reference

Control Module References for scan tool information.

Circuit/System Verification

1. Ignition ON.
2. Verify DTC C005B is not set.
    - **If DTC C005B is set**

      Program the K43 Power Steering Control Module.

    - **If DTC C005B is not set**
3. All OK.

Repair Instructions

Perform the **Diagnostic Repair Verification** after completing the repair.

- **Steering Gear Replacement**
- **Power Steering Assist Motor Replacement**
- **Control Module References** for Power Steering Control Module programming and setup.

DTC C0176

Diagnostic Instructions

- Perform the **Diagnostic System Check - Vehicle** prior to using this diagnostic procedure.
- Review **Strategy Based Diagnosis** for an overview of the diagnostic approach.
- **Diagnostic Procedure Instructions** provides an overview of each diagnostic category.

DTC Descriptor

DTC C0176 54

Control Module Temperature Sensor High Temperature

Circuit/System Description

The power steering control module monitors the temperature of the Power Steering System. The power steering control module uses voltage, current levels and input from an internal temperature sensor to calculate an estimated system temperature. If the power steering control module detects a high system temperature event is occurring, the amount of assist is decreased to reduce system temperature, in effort to prevent thermal damage to the power steering components.

Conditions for Running the DTC

- Ignition ON, engine Running.
- Power steering system voltage is 9-16 volts.
- Repetitive steering input applied.

Conditions for Setting the DTC

The power steering control module detects a high system temperature.

Action Taken When the DTC Sets

- DTC C0176 54 is stored in memory.
- Steering assist is reduced.

Conditions for Clearing the DTC

- A current DTC will clear on the next malfunction-free ignition cycle.
- A history DTC will clear after 40 consecutive malfunction-free ignition cycles.

Diagnostic Aids

- DTC C0176 54 does not indicate that a malfunction has occurred. Rather that the power steering control module had to limit current to the power steering motor to avoid thermal damage to the power steering system components. Discuss with the customer about driving conditions when the steering assist was reduced.
- Ensure that no steering components down stream of the power steering column assembly, such as ball joints, tie rod ends, universal joints, or the steering gear assembly, are mechanically binding.

Reference Information

Schematic Reference

Power Steering Schematics

Connector End View Reference

COMPONENT CONNECTOR END VIEWS - INDEX

Description and Operation

Power Steering System Description and Operation (Hydraulic Power Steering), **Power Steering System Description and Operation (Electronic Power Steering)**

Electrical Information Reference

- **Circuit Testing**
- **Connector Repairs**
- **Testing for Intermittent Conditions and Poor Connections**
- **Wiring Repairs**

Scan Tool Reference

Control Module References for scan tool information

Circuit/System Verification

1. Verify that the DTC sets outside of the conditions for running and setting. Since most occurrences of this DTC are caused by excessive driver inputs, review with the customer the conditions under which the DTC set. Operate the vehicle within the conditions that the customer experienced, avoiding excessive inputs, and verify the DTC does not reset.
   - **If the DTC did not set outside of the conditions for running and setting**
   1. Ignition ON.
   2. Verify that no steering components down stream of the power steering column assembly are mechanically binding. Refer to **Steering Effort Hard or Too Easy in One or Both Directions**
      - If steering components are mechanically binding, replace the mechanically binding steering components.
      - If no steering components are mechanically binding
   3. Replace the Steering Gear.
   - **If the DTC set outside of the conditions for running and setting**
2. All OK. The power steering is operating as designed.

Repair Instructions

Perform the **Diagnostic Repair Verification** after completing the repair.

- **Steering Gear Replacement**
- **Control Module References** for power steering control module replacement, programming and setup.

DTC C044A (NJ1)

Diagnostic Instructions

- Perform the **Diagnostic System Check - Vehicle** prior to using this diagnostic procedure.
- Review **Strategy Based Diagnosis** for an overview of the diagnostic approach.
- **Diagnostic Procedure Instructions** provides an overview of each diagnostic category.

DTC Descriptor

DTC C044A 71

Steering System Engine Speed Signal Circuit Invalid Data

Circuit/System Description

The power steering control module receives the engine speed signal from the engine control module.

Conditions for Running the DTC

The ignition is ON.

Conditions for Setting the DTC

The power steering control module detects a invalid engine speed signal on the CAN Bus.

Action Taken When the DTC Sets

- DTC C044A is stored in memory.
- The driver information center displays the SERVICE POWER STEERING warning message.

Conditions for Clearing the DTC

- A current DTC will clear on the next malfunction-free ignition cycle.
- A history DTC will clear after 40 consecutive malfunction-free ignition cycles.

Reference Information

Schematic Reference

Power Steering Schematics

Connector End View Reference

COMPONENT CONNECTOR END VIEWS - INDEX

Description and Operation

Power Steering System Description and Operation (Hydraulic Power Steering), **Power Steering System Description and Operation (Electronic Power Steering)**

Electrical Information Reference

- **Circuit Testing**
- **Connector Repairs**
- **Testing for Intermittent Conditions and Poor Connections**
- **Wiring Repairs**

Scan Tool Reference

Control Module References for scan tool information

Circuit/System Verification

Verify that DTC C044A 71 is not set.

- If the DTC is set, replace the K43 Power Steering Control Module.

Repair Instructions

Perform the **Diagnostic Repair Verification** after completing the diagnostic procedure.

- **Steering Gear Replacement**
- **Power Steering Assist Motor Replacement** for power steering control module replacement
- **Control Module References** for power steering control module replacement, programming and setup

DTC C0456 (NJ1)

Diagnostic Instructions

- Perform the **Diagnostic System Check - Vehicle** prior to using this diagnostic procedure.
- Review **Strategy Based Diagnosis** for an overview of the diagnostic approach.
- **Diagnostic Procedure Instructions** provides an overview of each diagnostic category.

DTC Descriptor

DTC C0456 4B

Steering Position Sensor Calibration not Learned

Circuit/System Description

If the power steering control module is replaced, the calibration needs to be learned to the new power steering control module using a scan tool.

Conditions for Running the DTC

The ignition is ON.

Conditions for Setting the DTC

The calibration is not learned to the new power steering control module.

Action Taken When the DTC Sets

- DTC C0456 is stored in memory.
- The driver information center displays the SERVICE POWER STEERING warning message.
- No steering assist.

Conditions for Clearing the DTC

The scan tool function Steering Angle Sensor Centering procedure must be completed successfully.

Reference Information

Schematic Reference

Power Steering Schematics

Connector End View Reference

COMPONENT CONNECTOR END VIEWS - INDEX

Description and Operation

Power Steering System Description and Operation (Hydraulic Power Steering), **Power Steering System Description and Operation (Electronic Power Steering)**

Electrical Information Reference

- **Circuit Testing**
- **Connector Repairs**
- **Testing for Intermittent Conditions and Poor Connections**
- **Wiring Repairs**

Scan Tool Reference

Control Module References for scan tool information

Circuit/System Verification

1. With a scan tool, verify that DTC C0456 4B is not set.
    - If the DTC is set, calibrate the steering position sensor and verify the DTC does not reset. Refer to **Power Steering Control Module Calibration**.
2. If the DTC resets, replace the steering gear.

Repair Instructions

Perform the **Diagnostic Repair Verification** after completing the diagnostic procedure.

- **Steering Gear Replacement**
- **Power Steering Assist Motor Replacement** for power steering control module replacement
- **Control Module References** for power steering control module programming and setup

DTC C0460 (NJ1)

Diagnostic Instructions

- Perform the **Diagnostic System Check - Vehicle** prior to using this diagnostic procedure.

- Review **Strategy Based Diagnosis** for an overview of the diagnostic approach.
- **Diagnostic Procedure Instructions** provides an overview of each diagnostic category.

DTC Descriptor

DTC C0460 00

Steering Wheel Angle Sensor Malfunction

DTC C0460 4B

Steering Wheel Angle Sensor Calibration Not Learned

Diagnostic Fault Information

Circuit	Short to Ground	Open/High Resistance	Short to Voltage	Signal Performance
Ignition circuit	U0126, C0710 71	U0126, C0710 71	-	C0710 5A
Ground	-	U0126, C0710 71	-	-

Circuit/System Description

The steering wheel angle sensor receives a 12 V reference from the electronic brake control module. The electronic brake control module receives serial data message inputs from the steering angle sensor identifying the position and direction of the steering wheel rotation. The module utilizes this signal to calculate the driver intended driving direction.

Conditions for Running the DTC

The condition for running the DTC will not occur until the initialization phase has been completed. The initialization of the electronic brake control module occurs when the following conditions have been met:

- Ignition voltage is greater than 8 V.
- The initialization happens once each ignition cycle when the vehicle speed is greater than 20 km/h (12 MPH) and the vehicle is driven in a straight line without the brake pedal being applied.

Conditions for Setting the DTC

DTC C0460 00

- Steering angle signal is not valid.
- Steering angle signal line is open.
- Angle signal cycle time is out of range.
- Angle signal duty is out of range.

DTC C0460 4B

Steering sensor zero position is not set.

Action Taken When the DTC Sets

- DTC C0460 is stored in memory.
- No steering assist.

Conditions for Clearing the DTC

A current DTC will clear on the next malfunction-free ignition cycle.

Reference Information

Schematic Reference

Power Steering Schematics

Connector End View Reference

COMPONENT CONNECTOR END VIEWS - INDEX

Description and Operation

Power Steering System Description and Operation (Hydraulic Power Steering), **Power Steering System Description and Operation (Electronic Power Steering)**

Electrical Information Reference

- **Circuit Testing**
- **Connector Repairs**
- **Testing for Intermittent Conditions and Poor Connections**
- **Wiring Repairs**

Scan Tool Reference

Control Module References for scan tool information.

Circuit/System Verification

1. Ignition ON.
2. Verify the scan tool Steering Wheel Angle parameter value constant change from -550 to +550° as the steering wheel is turned through its entire range from left to right.
    - **If the parameter does not change**

Refer to Circuit/System Testing Below.

- **If the parameter changes**

3. All OK.

DTC C0460 4B

1. Ignition ON.
2. Verify that DTC C0460 4B is not set.
   - **If DTC C0460 4B is set**

     Perform the **Steering Angle Sensor Centering** .

   - **If DTC C0460 4B is not set**
3. Ignition OFF and all vehicle systems OFF. It may take up to 2 min for all vehicle systems to power down. Disconnect the harness connector at the B99 Steering Wheel Angle Sensor.
4. Test for less than 10 ohms between the ground circuit terminal 6 and ground.
   - **If 10 ohms or greater**
   1. Ignition OFF.
   2. Test for less than 2 ohms in the ground circuit end to end.
      - If 2 ohms or greater, repair the open/high resistance in the circuit.
      - If less than 2 ohms, repair the open/high resistance in the ground connection.
      - **If less than 10 ohms**
5. Ignition ON.
6. Verify that a test lamp illuminates between the ignition circuit terminal 5 and ground.
   - **If the test lamp does not illuminate**
   1. Ignition OFF, disconnect the harness connector at the K17 Electronic Brake Control Module.
   2. Test for infinite resistance between the ignition circuit and ground.
      - If less than infinite resistance, repair the short to ground on the circuit.
      - If infinite resistance.
   3. Test for less than 2 ohms in the ignition circuit end to end.
      - If 2 ohms or greater, repair the open/high resistance in the circuit.
      - If less than 2 ohms, replace the K17 Electronic Brake Control Module.
   - **If the test lamp illuminates**
7. Replace the B99 Steering Wheel Angle Sensor and verify the DTC does not reset.
8. Verify the DTC does not set while operating the vehicle under the Conditions for Running the DTC.
   - **If the DTC sets**

     Replace the module that the DTC sets.

   - **If DTC does not set**

9. All OK.

Repair Instructions

Perform the **Diagnostic Repair Verification** after completing the repair.

- **Power Steering Assist Motor Replacement**
- **Control Module References** for Control Module replacement, programming and setup.

DTC C0475 (NJ1)

Diagnostic Instructions

- Perform the **Diagnostic System Check - Vehicle** prior to using this diagnostic procedure.
- Review **Strategy Based Diagnosis** for an overview of the diagnostic approach.
- **Diagnostic Procedure Instructions** provides an overview of each diagnostic category.

DTC Descriptors

DTC C0475 00

Electric Steering Motor Circuit Malfunction

DTC C0475 59

Electric Steering Motor Circuit Protection Time-Out

Circuit/System Description

C0475 00

The power steering control module continuously monitors the voltage and current levels being commanded to the 3-phase steering assist motor. The power steering control module compares the desired and actual current levels to detect malfunctions in the internal power steering assist motor circuits.

C0475 59

The power steering control module continuously monitors the thermal cycle counter of the steering gear. If the thermal cycle counter exceeds the maximum allowable limit, the steering gear has reached the end of its predetermined lifecycle and must be replaced.

Conditions for Running the DTC

The ignition is ON.

Conditions for Setting the DTC

C0475 00

The power steering control module detects a short to ground, short to voltage, or an open/high resistance on any of the internal power steering assist motor circuits.

C0475 59

The power steering control module detects the thermal cycle counter has exceeded the maximum allowable limit indicating that the whole steering gear system must be replaced.

Action Taken When the DTC Sets

- The DTC is stored in memory.
- The driver information center displays the SERVICE POWER STEERING warning message.
- No steering assist.

Conditions for Clearing the DTC

C0475 00

- A current DTC will clear on the next malfunction free ignition cycle.
- A history DTC will clear after 40 consecutive malfunction free ignition cycles.

C0475 59

This DTC cannot be cleared. The power steering system must be replaced.

Reference Information

Schematic Reference

Power Steering Schematics

Connector End View Reference

COMPONENT CONNECTOR END VIEWS - INDEX

Description and Operation

Power Steering System Description and Operation (Hydraulic Power Steering), **Power Steering System Description and Operation (Electronic Power Steering)**

Electrical Information Reference

- **Circuit Testing**
- **Connector Repairs**

- **Testing for Intermittent Conditions and Poor Connections**
- **Wiring Repairs**

Scan Tool Reference

Control Module References for scan tool information

Circuit/System Testing

1. Verify that DTC C0475 is not set.
   - **If the DTC is set**

     Replace the K43 Power Steering Control Module.

   - **If the DTC is not set**
2. All OK.

Repair Instructions

Perform the **Diagnostic Repair Verification** after completing the repair.

- **Steering Gear Replacement**
- **Control Module References** for power steering control module replacement, programming and setup.

DTC C047A (NJ1)

Diagnostic Instructions

- Perform the **Diagnostic System Check - Vehicle** prior to using this diagnostic procedure.
- Review **Strategy Based Diagnosis** for an overview of the diagnostic approach.
- **Diagnostic Procedure Instructions** provides an overview of each diagnostic category.

DTC Descriptor

DTC C047A

Electric Steering Motor Position Sensor Circuit Malfunction

Circuit/System Description

The power steering control module continuously monitors the motor position sensor voltage signals. The voltage signals of the motor position sensor and the digital torque sensor index current signal are both processed by the power steering control module to detect and calculate the steering wheel angle.

Conditions for Running the DTC

The ignition is ON.

Conditions for Setting the DTC

The power steering control module detects a short to ground, short to voltage, or an open/high resistance on any of the internal motor position sensor circuits.

Action Taken When the DTC Sets

- No steering assist.
- The driver information center displays the SERVICE POWER STEERING warning message.

Conditions for Clearing the DTC

- A current DTC will clear on the next malfunction-free ignition cycle.
- A history DTC will clear after 40 consecutive malfunction-free ignition cycles.

Reference Information

Schematic Reference

Power Steering Schematics

Connector End View Reference

COMPONENT CONNECTOR END VIEWS - INDEX

Description and Operation

Power Steering System Description and Operation (Hydraulic Power Steering), **Power Steering System Description and Operation (Electronic Power Steering)**

Electrical Information Reference

- **Circuit Testing**
- **Connector Repairs**
- **Testing for Intermittent Conditions and Poor Connections**
- **Wiring Repairs**

Scan Tool Reference

Control Module References for scan tool information

Circuit/System Verification

1. Ignition ON.

2. Verify that DTC C047A is not set.
    - **If the DTC is set**
    1. Perform the **Steering Angle Sensor Centering**
    2. Verify the DTC does not reset.
        - If the DTC resets, replace the K43 Power Steering Control Module.
        - If the DTC does not reset
    3. All OK.
    - **If the DTC is not set**
3. All OK.

Repair Instructions

Perform the **Diagnostic Repair Verification** after completing the repair.

- **Steering Gear Replacement**
- **Control Module References** for power steering control module replacement, programming and setup.

DTC C0544 (NJ1)

Diagnostic Instructions

- Perform the **Diagnostic System Check - Vehicle** prior to using this diagnostic procedure.
- Review **Strategy Based Diagnosis** for an overview of the diagnostic approach.
- **Diagnostic Procedure Instructions** provides an overview of each diagnostic category.

DTC Descriptor

DTC C0544 5A

Steering Wheel Angle Sensor Signal Not Plausible

Circuit/System Description

The power steering control module continuously monitors the steering wheel angle sensor. The steering wheel angle sensor indicates the direction in which the driver intends to go.

The power steering control module has a center detection algorithm that compares the reading of the steering angle sensor to the direction based on other vehicle sensors that the vehicle is travelling to determine if the steering angle reading is plausible.

Conditions for Running the DTC

Ignition ON.

Conditions for Setting the DTC

The power steering control module detects a not plausible signal from the steering wheel angle sensor.

The power steering control module detected that the steering angle sensor reading and the direction of the vehicle exceeds 329 degrees.

Action Taken When the DTC Sets

- DTC C0544 is stored in memory.
- The driver information center displays the SERVICE POWER STEERING warning message.

Conditions for Clearing the DTC

A history DTC will clear after 40 consecutive malfunction free ignition cycles.

Reference Information

Schematic Reference

Power Steering Schematics

Connector End View Reference

COMPONENT CONNECTOR END VIEWS - INDEX

Description and Operation

Power Steering System Description and Operation (Hydraulic Power Steering), **Power Steering System Description and Operation (Electronic Power Steering)**

Electrical Information Reference

- **Circuit Testing**
- **Connector Repairs**
- **Testing for Intermittent Conditions and Poor Connections**
- **Wiring Repairs**

Scan Tool Reference

Control Module References for scan tool information.

Circuit/System Verification

1. Ignition ON.
2. Verify that no other DTCs are set except for C0544.
    - **If any other DTCs are set**

Refer to **Diagnostic Trouble Code (DTC) List - Vehicle**

- **If no other DTCs are set**

NOTE: Wheel misalignment can cause incorrect Steering Wheel Angle parameter reading.

3. With a scan tool, verify that the Steering Wheel Angle parameter is zero degrees or near zero degrees with the front tire/wheels in the straight ahead position.
   - **If the Steering Wheel Angle parameter is not zero degrees or near zero degrees**
   1. Perform the Power Steering Control Module Calibration. Refer to **Power Steering Control Module Calibration**
   2. Verify that DTC C0544 is not set.
      - If the DTC is set, replace the K43 power steering control module.
      - If the DTC is not set
   3. All OK.
   - **If the Steering Wheel Angle parameter is zero degrees or near zero degrees**
4. All OK.

Repair Instructions

Perform the **Diagnostic Repair Verification** after completing the repair.

- **Power Steering Assist Motor Replacement** for power steering control module replacement
- **Control Module References** for power steering control module replacement, programming and setup.

DTC C0545 (NJ1)

Diagnostic Instructions

- Perform the **Diagnostic System Check - Vehicle** prior to using this diagnostic procedure.
- Review **Strategy Based Diagnosis** for an overview of the diagnostic approach.
- **Diagnostic Procedure Instructions** provides an overview of each diagnostic category.

DTC Descriptor

DTC C0545

Steering Wheel Torque Sensor Malfunction

Circuit/System Description

The power steering control module continuously monitors the digital torque sensor's torque and index current signals. As the steering wheel is turned and torsional twist is applied to the steering shaft, the steering input and output shafts are monitored via the torque signal circuit and then processed by the power steering control

module to calculate the steering torque.

Conditions for Running the DTC

The ignition is ON.

Conditions for Setting the DTC

The power steering control module detects a short to ground, short to voltage, or an open/high resistance on any of the torque sensor circuits.

Action Taken When the DTC Sets

- DTC C0545 is stored in memory.
- The driver information center displays the SERVICE POWER STEERING warning message.
- No steering assist.

Conditions for Clearing the DTC

- A current DTC will clear on the next malfunction-free ignition cycle.
- A history DTC will clear after 40 consecutive malfunction-free ignition cycles.

Reference Information

Schematic Reference

Power Steering Schematics

Connector End View Reference

COMPONENT CONNECTOR END VIEWS - INDEX

Description and Operation

Power Steering System Description and Operation (Hydraulic Power Steering), **Power Steering System Description and Operation (Electronic Power Steering)**

Electrical Information Reference

- **Circuit Testing**
- **Connector Repairs**
- **Testing for Intermittent Conditions and Poor Connections**
- **Wiring Repairs**

Scan Tool Reference

Control Module References for scan tool information

Circuit/System Verification

1. Ignition ON.
2. Verify that DTC C0545 is not set.
   - **If the DTC is set**

     Replace the steering gear containing the torque sensor.

   - **If the DTC is not set**
3. All OK.

Repair Instructions

Perform the **Diagnostic Repair Verification** after completing the repair.

- **Steering Gear Replacement**
- **Control Module References** for power steering control module replacement, programming and setup.

DTC C055C (NJ1)

Diagnostic Instructions

- Perform the **Diagnostic System Check - Vehicle** prior to using this diagnostic procedure.
- Review **Strategy Based Diagnosis** for an overview of the diagnostic approach.
- **Diagnostic Procedure Instructions** provides an overview of each diagnostic category.

DTC Descriptor

DTC C055C 00

Steering Gear Performance Malfunction

DTC C055C 64

Steering Gear Performance Slip Detected

Circuit/System Description

The power steering control module continuously verifies the mechanical friction of the steering gear. If the friction is too high the clutch between motor and rack slips and the internal angle is not longer valid.

Conditions for Running the DTC

Ignition ON.

Conditions for Setting the DTC

The DTC is set when the mechanical friction of the steering gear is too high.

Action Taken When the DTC Sets

- DTC C055C is stored in memory.
- No steering assist.

Conditions for Clearing the DTC

A history DTC will clear after 40 consecutive malfunction free ignition cycles.

Diagnostic Aids

Ensure that no steering components down stream of the power steering column assembly, such as ball joints, tie rod ends, universal joints, or the steering gear assembly, are mechanically binding.

Reference Information

Schematic Reference

Power Steering Schematics

Connector End View Reference

COMPONENT CONNECTOR END VIEWS - INDEX

Description and Operation

Power Steering System Description and Operation (Hydraulic Power Steering), **Power Steering System Description and Operation (Electronic Power Steering)**

Electrical Information Reference

- **Circuit Testing**
- **Connector Repairs**
- **Testing for Intermittent Conditions and Poor Connections**
- **Wiring Repairs**

Scan Tool Reference

Control Module References for scan tool information.

Circuit/System Verification

1. Ignition ON.

2. Verify that DTC C055C is not set.
    - **If the DTC is set**
    1. Verify that no steering components down stream of the power steering column assembly are mechanically binding. Refer to **Steering Effort Hard or Too Easy in One or Both Directions**
    - If steering components are mechanically binding, replace the mechanically binding steering components.
    - If no steering components are mechanically binding, replace the Steering Gear.
    - **If the DTC is not set**
3. All OK.

Repair Instructions

Perform the **Diagnostic Repair Verification** after completing the repair.

- **Steering Gear Replacement**
- **Control Module References** for Power Steering Control Module replacement, programming and setup.

DTC C0565 (NJ1)

Diagnostic Instructions

- Perform the **Diagnostic System Check - Vehicle** prior to using this diagnostic procedure.
- Review **Strategy Based Diagnosis** for an overview of the diagnostic approach.
- **Diagnostic Procedure Instructions** provides an overview of each diagnostic category.

DTC Descriptor

DTC C0565 5A

Vehicle Identification Number Not Plausible

Circuit/System Description

The vehicle identification number (VIN) is programmed into the power steering control module during initial programming of the module.

Conditions for Running the DTC

Ignition ON

Conditions for Setting the DTC

The power steering control module is not properly programmed.

Action Taken When the DTC Sets

- DTC C0565 is stored in memory.
- The driver information center displays the SERVICE POWER STEERING warning message.

Conditions for Clearing the DTC

- A current DTC will clear on the next malfunction-free ignition cycle.
- A history DTC will clear after 40 consecutive malfunction-free ignition cycles.

Diagnostic Aids

A newly replaced power steering control module can set one or more DTC on its initial ignition ON cycle.

Reference Information

Schematic Reference

Power Steering Schematics

Connector End View Reference

COMPONENT CONNECTOR END VIEWS - INDEX

Description and Operation

Power Steering System Description and Operation (Hydraulic Power Steering), **Power Steering System Description and Operation (Electronic Power Steering)**

Electrical Information Reference

- **Circuit Testing**
- **Connector Repairs**
- **Testing for Intermittent Conditions and Poor Connections**
- **Wiring Repairs**

Scan Tool Reference

Control Module References for scan tool information

Circuit/System Verification

1. Verify that DTC C0565 is not present.
    - **If the DTC is present**
    1. Program the K43 Power Steering Control Module
    2. Verify the DTC does not reset.
        - If the DTC resets, replace the K43 Power Steering Control Module.

- If the DTC does not reset

3. All OK.
   - **If the DTC is not present**

2. All OK.

Repair Instructions

Perform the **Diagnostic Repair Verification** after completing the repair.

- **Steering Gear Replacement**
- **Control Module References** for power steering control module replacement, programming and setup.

DTC C0569 (NJ1)

Diagnostic Instructions

- Perform the **Diagnostic System Check - Vehicle** prior to using this diagnostic procedure.
- Review **Strategy Based Diagnosis** for an overview of the diagnostic approach.
- **Diagnostic Procedure Instructions** provides an overview of each diagnostic category.

DTC Descriptor

DTC C0569 3A

System Configuration Incorrect Component Installed

Circuit/System Description

The power steering control module continuously monitors the thermal cycle counter of the steering gear. If the power steering control module is replaced, the thermal cycle counter value needs to be transferred from the existing power steering control module over to the new power steering control module using the SPS Electric Power Steering Setup Procedure.

Conditions for Running the DTC

The ignition is ON.

Conditions for Setting the DTC

The thermal cycle counter value does not meet the system requirement.

Action Taken When the DTC Sets

- DTC C0569 is stored in memory.
- The driver information center displays the SERVICE POWER STEERING warning message.
- No Steering assist.

Conditions for Clearing the DTC

- A current DTC will clear on the next malfunction free ignition cycle.
- A history DTC will clear after 40 consecutive malfunction free ignition cycles.

Reference Information

Schematic Reference

Power Steering Schematics

Connector End View Reference

COMPONENT CONNECTOR END VIEWS - INDEX

Description and Operation

Power Steering System Description and Operation (Hydraulic Power Steering), **Power Steering System Description and Operation (Electronic Power Steering)**

Electrical Information Reference

- **Circuit Testing**
- **Connector Repairs**
- **Testing for Intermittent Conditions and Poor Connections**
- **Wiring Repairs**

Scan Tool Reference

Control Module References for scan tool information

Circuit/System Verification

1. Ignition ON.
2. Verify that DTC C0569 3A is not set.
    - **If the DTC is present**
    1. Program the K43 Power Steering Control Module
    2. Verify the DTC does not reset.
        - If the DTC resets, replace the K43 Power Steering Control Module.
        - If the DTC does not reset
    3. All OK.
    - **If the DTC is not present**
3. All OK.

Repair Instructions

Perform the **Diagnostic Repair Verification** after completing the repair.

- **Steering Gear Replacement**
- **Control Module References** for power steering control module replacement, programming and setup.

DTC C056E (NJ1)

Diagnostic Instructions

- Perform the **Diagnostic System Check - Vehicle** prior to using this diagnostic procedure.
- Review **Strategy Based Diagnosis** for an overview of the diagnostic approach.
- **Diagnostic Procedure Instructions** provide an overview of each diagnostic category.

DTC Descriptors

DTC C056E 41

Electronic Control Unit Hardware Not Programmed

DTC C056E 4B

Electronic Control Unit Hardware Calibration Not Learned

Circuit/System Description

After replacement of the power steering control module, the power steering control module must be configured with the proper tuning profile using the service programming system (SPS).

After replacement of the power steering control module, power steering motor, or steering gear, the steering position/torque sensor calibration procedure must be performed.

Conditions for Running the DTC

Ignition ON.

Conditions for Setting the DTC

DTC C056E 41

This DTC will set if the operational software or calibration code (tuning parameter value) does not save in Flash.

DTC C056E 4B

This DTC will set if the power steering control module, motor or torque sensor has not been calibrated using the

steering position / torque sensor calibration procedure.

Actions Taken When DTC Sets

- DTC is stored in memory.
- Steering assist is set to a default level.

Conditions for Clearing the DTC

DTC C056E 41

A current or history DTC will clear after the power steering control module has been configured with the proper tuning profile.

DTC C056E 4B

A current or history DTC will clear after the steering position/torque sensor calibration procedure has been performed.

Reference Information

Schematic Reference

Power Steering Schematics

Connector End View Reference

COMPONENT CONNECTOR END VIEWS - INDEX

Description and Operation

Power Steering System Description and Operation (Hydraulic Power Steering), **Power Steering System Description and Operation (Electronic Power Steering)**

Electrical Information Reference

- **Circuit Testing**
- **Connector Repairs**
- **Testing for Intermittent Conditions and Poor Connections**
- **Wiring Repairs**

Scan Tool Reference

Control Module References for scan tool information

Circuit/System Verification

DTC C056E 41

1. Ignition ON.
2. Verify that DTC C056E 41 is not set.
    - **If the DTC C056E 41 is set**
    1. Program the K43 Power Steering Control Module.
    2. Verify the DTC does not set.
        - If the DTC sets, replace the Steering Gear.
        - If the DTC does not set
    3. All OK.
    - **If the DTC C056E 41 is not set**
3. All OK.

DTC C056E 4B

1. Ignition ON.
2. Verify that DTC C056E 4B is not set.
    - **If the DTC C056E 4B is set**
    1. Calibrate the K43 Power Steering Control Module.
    2. Verify the DTC does not set.
        - If the DTC sets, replace the Steering Gear.
        - If the DTC does not set
    3. All OK.
    - **If the DTC C056E 4B is not set**
3. All OK.

Repair Instructions

Perform the **Diagnostic Repair Verification** after completing the repair.

- **Steering Gear Replacement**
- **Control Module References** for Power Steering Control Module replacement, programming and setup.

DTC C0710 (NJ1)

Diagnostic Instructions

- Perform the **Diagnostic System Check - Vehicle** prior to using this diagnostic procedure.
- Review **Strategy Based Diagnosis** for an overview of the diagnostic approach.
- **Diagnostic Procedure Instructions** provides an overview of each diagnostic category.

DTC Descriptor

DTC C0710 71

Steering Position Signal Invalid Data

Diagnostic Fault Information

Circuit	Short to Ground	Open/High Resistance	Short to Voltage	Signal Performance
CAN Bus High Serial Data	U0073, U0100, U0101, U0125, U0126, U0140	U0073, U0100, U0101, U0125, U0126, U0140	U0073, U0100, U0101, U0125, U0126, U0140	C0710 5A, C0710 71
CAN Bus Low Serial Data	U0073, U0100, U0101, U0125, U0126, U0140	U0073, U0100, U0101, U0125, U0126, U0140	U0073, U0100, U0101, U0125, U0126, U0140	C0710 5A, C0710 71

Circuit/System Description

The power steering control module monitors the steering angle sensor signal via the GMLAN serial data circuit. The power steering control module utilizes this signal to determine a center point for Active Return and Soft End Stops. Upon detecting an invalid steering angle sensor signal, the power steering control module will disable Active Return and Soft End Stops, then set a DTC.

NOTE: **To most drivers the loss of Active Return and Soft End Stops may not be noticeable as there is no visual indicator activated on the instrument cluster or driver information display.**

There is no diagnosable cause with the power steering control module when this DTC is set, DO NOT REPLACE POWER STEERING CONTROL MODULE OR STEERING GEAR DUE TO THIS DTC.

For diagnosis of an invalid steering angle sensor signal, refer to **DTC C0710** also diagnosis in Antilock Brake System.

Conditions for Running the DTC

Ignition ON

Conditions for Setting the DTC

The power steering control module has received on of the following serial data messages listed below from the external steering angle sensor.

- Steering angle range is exceeded
- Steering angle sensor is not calibrated
- Steering angle sensor is initialized
- Steering angle sensor message: Roll Counter is INVALID
- Steering angle sensor message: Present Bit is FALSE (not common)
- Steering angle sensor message: Error Flag is set to TRUE

Action Taken When the DTC Sets

- The electronic brake control module disables the stability control for the duration of the ignition cycle.
- Active Return and Software End Stops are deactivated.

Conditions for Clearing the DTC

- A current DTC clears when the diagnostic runs and passes.
- When the steering angle sensor signal becomes valid, the fault will set to History and can be cleared with a scan tool.

Diagnostic Aids

The car should not pull in either direction causing the steering wheel to be OFF center while driving straight ahead on a level surface.

Reference Information

Schematic Reference

Antilock Brake System Schematics

Connector End View Reference

COMPONENT CONNECTOR END VIEWS - INDEX

Description and Operation

ABS Description and Operation

Electrical Information Reference

- **Circuit Testing**
- **Connector Repairs**
- **Testing for Intermittent Conditions and Poor Connections**
- **Wiring Repairs**

Scan Tool Reference

Control Module References for scan tool information

Circuit/System Verification

1. Ignition ON.
2. With a scan tool, verify that DTC C0710 71 is not set.
   - **If DTC C0710 71 is set**

     Refer to **DTC C0710** in Antilock Brake System Diagnostic Information and Procedures.

   - **If DTC C0710 71 is not set**
3. All OK.

SYMPTOMS - POWER STEERING SYSTEM

Review the system description and operation in order to familiarize yourself with the system functions. Refer to **Power Steering System Description and Operation (Hydraulic Power Steering)**, **Power Steering System Description and Operation (Electronic Power Steering)**.

Visual/Physical Inspection

- Inspect for aftermarket devices which could affect the operation of the power steering system.
- Inspect the easily accessible or visible system components for obvious damage or conditions which could cause the symptom.

Refer to a symptom diagnostic procedure from the following list in order to diagnose the symptom:

- **Whine or Growl Noise from the Power Steering System**
- **Increase in Effort While Turning Steering Wheel**
- **Poor Return of Steering Wheel**
- **Steering Wheel Surges/Jerks While Turning**
- **Steering Wheel Kickback**
- **Steering Effort Hard or Too Easy in One or Both Directions**

WHINE OR GROWL NOISE FROM THE POWER STEERING SYSTEM

Whine or Growl Noise from the Power Steering System

Step	Action	Yes	No
1	Did you review the Power Steering System Description and Operation and perform the necessary inspections?	Go to **Step 2**	Go to **Symptoms - Power Steering System**
2	Verify that a whine or growl noise is present. Is the steering gear quiet?	System OK	Go to **Step 3**

3	Perform the Diagnostic System Check - Vehicle. Refer to **Diagnostic System Check - Vehicle** Are any codes present?	Go to **Diagnostic Trouble Code (DTC) List - Vehicle**	Go to **Step 4**
4	Inspect the power steering gear fasteners for looseness. Is the steering gear loose?	Go to **Step 13**	Go to **Step 5**
5	Inspect the power steering gear for loose or worn bushings. Are the steering gear bushings loose or worn?	Go to **Step 14**	Go to **Step 6**
6	Verify that steering column dash outer seal is in position. Is the steering column dash outer seal damaged or out of position?	Go to **Step 15**	Go to **Step 7**
7	Verify that steering column dash inner seal is in position. Is the steering column dash inner seal damaged or out of position?	Go to **Step 16**	Go to **Step 8**
8	Inspect the power steering motor for a whine or growl noise using the **CH-39570** chassis ear. Is the noise present at the power steering motor?	Go to **Step 19**	Go to **Step 9**
9	Inspect the power steering gear for a whine or growl noise using the **CH-39570** chassis ear. Is the noise present at the power steering gear?	Go to **Step 20**	Go to **Step 10**
10	Disconnect the outer tie rods, refer to **Steering Linkage Outer Tie Rod Replacement**, and individually turn the steering knuckle assembly right to left. Is a whine or growl noise present?	Go to **Step 11**	Go to **Step 12**
11	Disconnect the lower ball joint from the steering knuckle, refer to **Lower Control Arm Replacement** , and rotate the steering knuckle and strut. Is a whine or growl noise present?	Go to **Step 17**	Go to **Step 18**
	NOTE: **Position the wheels straight ahead. Do NOT rotate the steering wheel more than one complete revolution from center for this procedure.**		

12	Disconnect the intermediate shaft from the steering column, refer to **Intermediate Steering Shaft Replacement** . 1. Note the position of the steering wheel and rotate the steering wheel ONE revolution in both directions. 2. Rotate the steering wheel back to the original position. Is a whine or growl noise present?	Go to **Symptoms - Power Steering System**	Go to **Step 20**
13	Replace the power steering gear fasteners. Refer to **Steering Gear Replacement**. Did you complete the repair?	Go to **Step 21**	-
14	Replace the power steering gear bushings. Refer to **Steering Gear Bushing Replacement**. Did you complete the repair?	Go to **Step 21**	-
15	Reposition or replace the steering column dash outer seal. Did you complete the repair?	Go to **Step 21**	-
16	Reposition or replace the steering column dash inner seal. Did you complete the repair?	Go to **Step 21**	-
17	Replace the strut top mount. Refer to **Strut, Strut Component, or Spring Replacement** . Did you complete the repair?	Go to **Step 21**	-
18	Replace the front lower control arm. Refer to **Lower Control Arm Replacement** . Did you complete the repair?	Go to **Step 21**	-
19	Replace the electronic power steering assist motor control. Refer to **Power Steering Assist Motor Replacement**. Did you complete the repair?	Go to **Step 21**	-
20	Replace the power steering gear. Refer to **Steering Gear Replacement**. Did you complete the repair?	Go to **Step 21**	-
21	Operate the system in order to verify the repair. Did you correct the condition?	System OK	Go to **Step 2**

INCREASE IN EFFORT WHILE TURNING STEERING WHEEL

Increase in Effort While Turning Steering Wheel

Step	Action	Yes	No
1	Did you review the Power Steering System Description and Operation and perform the necessary inspections?	Go to **Step 2**	Go to **Power Steering System Description and Operation (Hydraulic Power Steering)**, **Power Steering System Description and Operation (Electronic Power Steering)**
2	Verify that there is an increase in effort while turning is present. Does the system operate normally?	System OK	Go to **Step 3**
3	Check for the following conditions: • Incorrect tire inflation-Refer to **Vehicle Certification, Tire Placard, Anti-Theft, and Service Parts ID Label** . • Improper tire size Did you find and correct the condition?	Go to **Step 10**	Go to **Step 4**
4	1. Raise and support the vehicle. Refer to **Lifting and Jacking the Vehicle** . 2. Check for a binding or worn steering linkage outer tie rod. Is the tie rod binding or worn?	Go to **Step 7**	Go to **Step 5**
5	Check for a worn or binding intermediate steering shaft. Is the intermediate steering shaft worn or binding?	Go to **Step 8**	Go to **Step 6**
6	Check for a worn or binding steering gear. Is the steering gear worn or binding?	Go to **Step 9**	System OK
7	Replace the steering linkage outer tie rod. Refer to **Steering Linkage Outer Tie Rod Replacement**. Did you complete the repair?	Go to **Step 10**	-
8	Replace the intermediate steering shaft. Refer to **Intermediate Steering Shaft Replacement** . Did you complete the repair?	Go to **Step 10**	-
	Replace the steering gear. Refer to **Steering**		

9	**Gear Replacement**. Did you complete the repair?	Go to **Step 10**	-
10	Operate the system in order to verify the repair. Did you correct the condition?	System OK	Go to **Step 3**

POOR RETURN OF STEERING WHEEL

Poor Return of Steering Wheel

Step	Action	Yes	No
DEFINITION: After completing a turn, extra steering input is required for the steering wheel to return to center.			
1	Did you review the General Description and perform the necessary inspections?	Go to **Step 2**	Go to **Power Steering System Description and Operation (Hydraulic Power Steering)**, **Power Steering System Description and Operation (Electronic Power Steering)**
2	Verify that poor return of the steering wheel is present. Does the system operate normally?	System OK	Go to **Step 3**
3	1. Raise and support the vehicle. Refer to **Lifting and Jacking the Vehicle** . 2. Lubricate the tie rod ends and ball joints, if applicable. 3. Inspect the suspension system for worn or damaged components. 4. Repair as necessary. Did you find and correct the condition?	Go to **Step 12**	Go to **Step 4**
4	1. Rotate the steering wheel ONE revolution in both directions. 2. Rotate the steering wheel back to the original position. Was the steering wheel abnormally difficult to rotate in either direction?	Go to **Step 5**	Go to **Step 10**
	NOTE: **Position the wheels straight ahead. Do NOT rotate the steering wheel more than one complete revolution from center.**		

5	1. Disconnect the intermediate shaft from the steering column. 2. Note the position of the steering wheel and rotate the steering wheel ONE revolution in both directions. 3. Rotate the steering wheel back to the original position. Was the steering wheel abnormally difficult to rotate in either direction?	Go to **Step 11**	Go to **Step 6**
6	Inspect the intermediate shaft for stiff or loose joints. Repair or replace as necessary. Did you find and complete the repair?	Go to **Step 12**	Go to **Step 7**
7	1. Remove the front tire and wheel assemblies. Refer to **Tire and Wheel Removal and Installation** . 2. Disconnect both outer tie rod ends from the steering knuckles. 3. Use your hands in order to move the tie rod end studs. 4. If abnormally difficult to move, replace the tie rod end. Did you find and complete the repair?	Go to **Step 12**	Go to **Step 8**
8	1. Use your hands to rotate the steering knuckle inboard and outboard in order to inspect for a binding strut bearings, ball joints, or axle. 2. Repair or replace any abnormally stiff or loose components. Did you find and complete the repair?	Go to **Step 12**	Go to **Step 9**
9	Inspect for binding in the steering gear. If a binding is present repair or replace the steering gear. Did you find and complete the repair?	Go to **Step 12**	Go to **Step 10**
10	Inspect the wheel alignment and adjust as necessary. Refer to **Wheel Alignment Measurement** . Did you find and complete the repair?	Go to **Step 12**	-
11	Inspect the steering column for a binding. If a binding is present, repair or replace the steering column as necessary. Did you find and complete the repair?	Go to **Step 12**	-

12	Operate the system in order to verify the repair. Did you correct the condition?	System OK	-

STEERING WHEEL SURGES/JERKS WHILE TURNING

Steering Wheel Surges/Jerks While Turning

Step	Action	Yes	No
1	Did you review the **Symptoms - Power Steering System** and perform the necessary inspections?	Go to **Step 2**	Go to **Symptoms - Power Steering System**
2	Verify that the steering wheel surges or jerks while turning. Does the steering wheel surge or jerk while turning?	Go to **Step 3**	System OK
3	Inspect the front suspension for worn or binding components. Did you find and correct the condition?	Go to **Step 15**	Go to **Step 4**
4	1. Raise and support the vehicle. Refer to **Lifting and Jacking the Vehicle** . 2. Inspect the steering linkage outer tie rod for wear or a binding condition. Is the steering linkage outer tie rod worn or binding?	Go to **Step 10**	Go to **Step 5**
5	Inspect the intermediate shaft for wear or a binding condition. Is the intermediate shaft worn or binding?	Go to **Step 11**	Go to **Step 6**
6	Inspect the steering gear for wear or a binding condition. Is the steering gear worn or binding?	Go to **Step 12**	Go to **Step 7**
7	Inspect the steering column for wear or a binding condition. Is the steering column worn or binding?	Go to **Step 13**	Go to **Step 8**
8	Inspect the power steering assist motor for an indication of excessive heat. Does the power steering assist motor appear to be overheated?	Go to **Step 9**	Go to **Step 14**
9	**NOTE:** **Do not perform excessive parking lot maneuvers during testing. Excessive parking lot maneuvers can cause the power steering motor to heat up.**		

	Allow the power steering motor to cool and retest the system.Did you correct the condition?	Go to **Step 15**	Go to **Step 14**
10	Replace the steering linkage outer tie rod. Refer to **Steering Linkage Outer Tie Rod Replacement**. Did you complete the repair?	Go to **Step 15**	System OK
11	Replace the intermediate shaft. Refer to **Intermediate Steering Shaft Replacement** . Did you complete the repair?	Go to **Step 15**	-
12	Replace the steering gear. Refer to **Steering Gear Replacement**. Did you complete the repair?	Go to **Step 15**	-
13	Replace the steering column. Refer to **Steering Column Replacement** . Did you complete the repair?	Go to **Step 15**	-
14	Replace the power steering assist motor. Refer to **Power Steering Assist Motor Replacement**. Did you complete the repair?	Go to **Step 15**	-
15	Operate the system in order to verify the repair. Did you correct the condition?	System OK	Go to **Step 3**

STEERING WHEEL KICKBACK

Steering Wheel Kickback

Condition	Action
The steering column mounting bolts are loose.	Tighten the pivot bolt and the mounting bolts to specification. Refer to **Fastener Tightening Specifications**
The steering gear is loosely mounted.	Tighten the steering gear mounting bolts to specification. Refer to **Fastener Tightening Specifications**
The tie rod ends are loose or damaged.	If necessary, inspect for damage and replace the tie rod ends. Refer to **Steering Linkage Outer Tie Rod Replacement**.

STEERING EFFORT HARD OR TOO EASY IN ONE OR BOTH DIRECTIONS

Steering Effort Hard or Too Easy in One or Both Directions

Condition	Action
The battery power is low.	Confirm proper battery voltage.
The intermediate shaft dash seal is binding.	Adjust the dash seal, or replace the intermediate shaft

	assembly if necessary.
The intermediate shaft joints are loose or worn.	Inspect the joints and the pinch bolts for damage, and replace the intermediate shaft if necessary. Refer to **Intermediate Steering Shaft Replacement** .
The steering gear is binding.	If necessary, inspect and replace the steering gear. Refer to **Steering Gear Replacement**.
The upper steering shaft is bent.	If necessary, replace the steering column. Refer to **Steering Column Replacement** .
The assist mechanism hub gear is misaligned or damaged.	Replace the steering column. Refer to **Steering Column Replacement** .
The sensor wire is damaged.	Replace the steering column. Refer to **Steering Column Replacement** .
The controller is malfunctioning.	Confirm the DTC. If necessary, replace the motor/module assembly. Refer to **Power Steering Assist Motor Replacement**.
The motor shaft is binding.	Confirm the DTC. If necessary, replace the motor/module assembly. Refer to **Power Steering Assist Motor Replacement**.

REPAIR INSTRUCTIONS

STEERING LINKAGE INNER TIE ROD INSPECTION

Special Tools

GE-8001 Dial Indicator Set

For equivalent regional tools, refer to **Special Tools**.

NOTE: This inspection procedure does not supersede local government required inspections that have more stringent requirements.

1. Turn the ignition key to the ON position with the engine OFF.

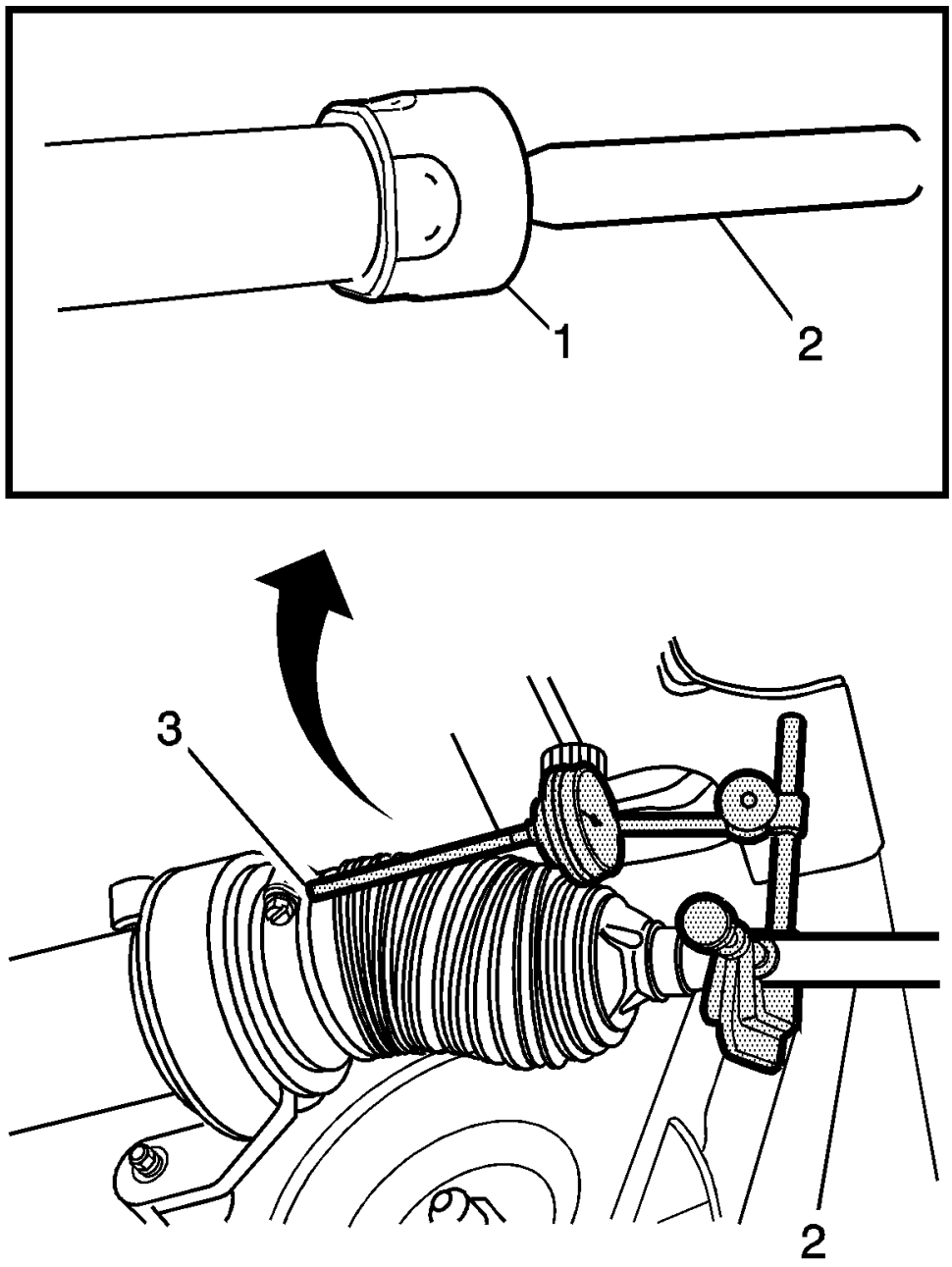

Fig. 2: Measuring Lash Between Inner Tie Rod & Steering Gear Housing
Courtesy of GENERAL MOTORS COMPANY

2. With the aid of an assistant, turn the steering wheel to the full stop position and hold the steering wheel in

that position until the test is complete. Part of the steering linkage inner tie rod (2) being tested should be inside the steering gear housing. The inner tie rod housing (1) being tested should be inside the steering gear housing and seated against the steering stop.

3. Raise and support the vehicle. Refer to **Lifting and Jacking the Vehicle** .
4. If there is not a good location for the **GE-8001** dial indicator pointer at the steering gear housing, install a large worm gear hose clamp (3) to the steering gear housing over the larger steering gear boot clamp and align the clamp so that the screw can be a location for the **GE-8001** dial indicator pointer.
5. Install the **GE-8001** dial indicator between the inner tie rod and the steering gear housing or the worm gear clamp in such a way as to measure the lash between the inner tie rod and the steering gear housing. The lash between the inner tie rod and the steering gear housing is equal to the lash between the inner tie rod and the inner tie rod housing because the inner tie rod housing is inside the steering gear housing during this procedure.

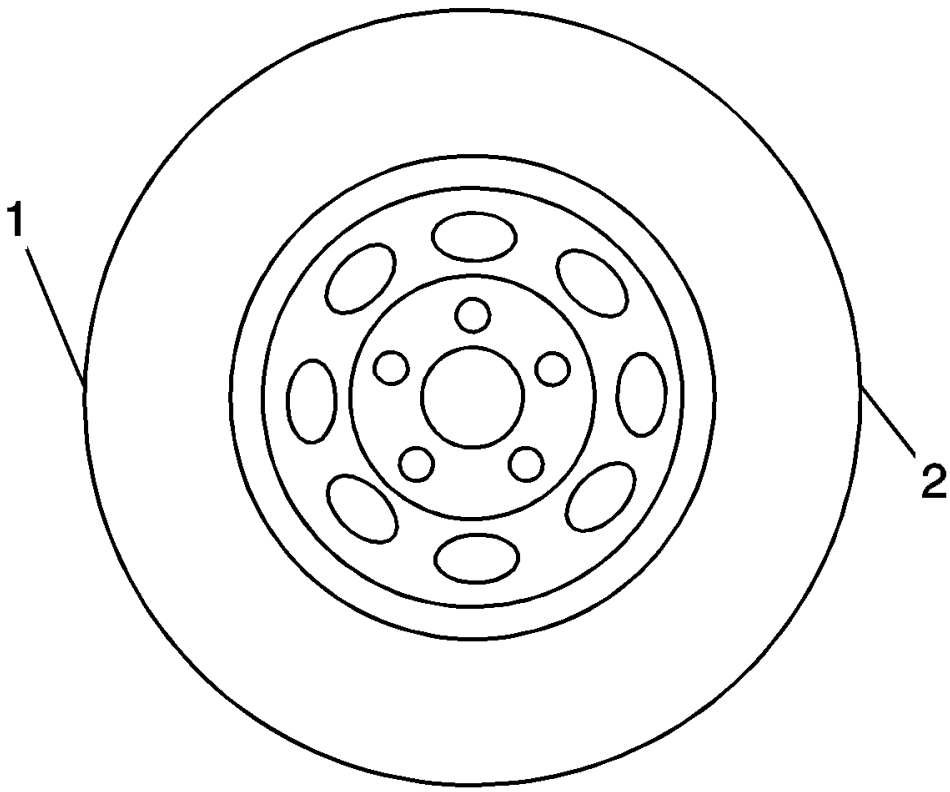

Fig. 3: Identifying Tire Grasping Positions
Courtesy of GENERAL MOTORS COMPANY

NOTE: Only move the tire enough to feel any lash between the inner tie rod and the inner tie rod housing without moving the steering gear rack.

6. Grasping the tire at the 3 o'clock (2) and 9 o'clock (1) positions, gently push in on one side of the tire in order to remove any lash.
7. Zero the **GE-8001** dial indicator.
8. On the same side of the tire previously pushed in, gently pull out and measure the lash.
9. Record the measurement shown on the **GE-8001** dial indicator.
10. If the measured value exceeds 0.5 mm (0.02 in), replace the inner tie rod. Refer to **Steering Linkage Inner Tie Rod Replacement**.
11. Repeat the procedure for the other side.

STEERING LINKAGE OUTER TIE ROD INSPECTION

Special Tools

GE-8001 Dial Indicator Set

For equivalent regional tools, refer to **Special Tools**.

NOTE: This inspection procedure does not supersede local government required inspections that have more stringent requirements.

1. Inspect the outer tie rod seal. If the outer tie rod seal is torn, replace the outer tie rod. Refer to **Steering Linkage Outer Tie Rod Replacement**.
2. Raise the side of the vehicle being inspected with a floor jack while maintaining contact between the opposite wheel and the shop floor. Support the lower control arm with a floor jack stand as far outboard as possible and remove the floor jack. Refer to **Lifting and Jacking the Vehicle** .

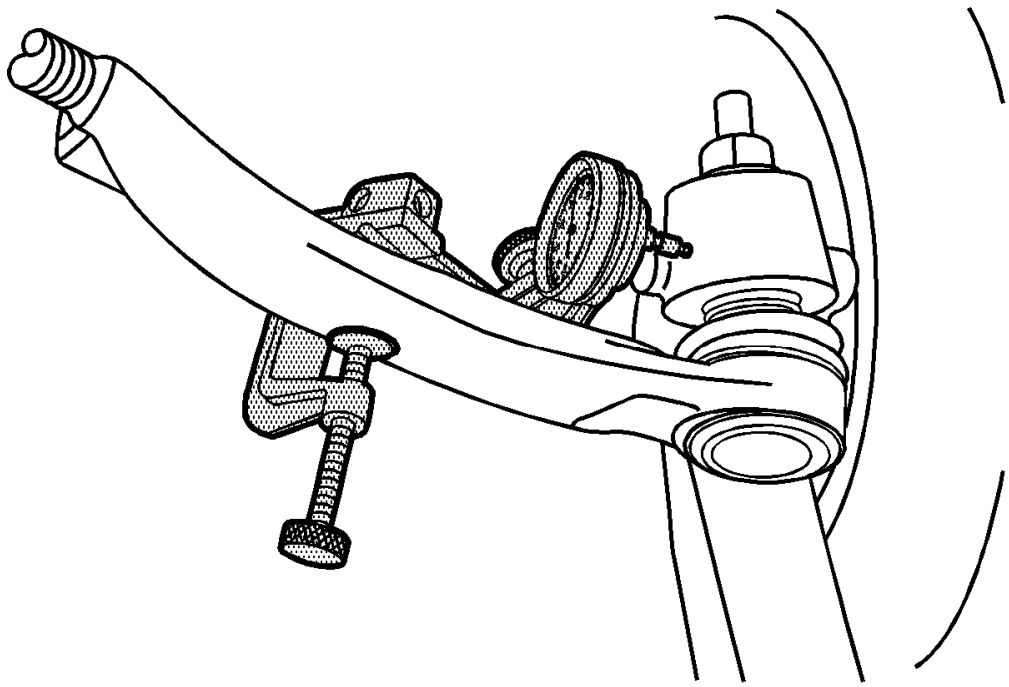

Fig. 4: Measuring Outer Tie Rod Lash
Courtesy of GENERAL MOTORS COMPANY

3. Install the **GE-8001** dial indicator between the outer tie rod and the steering knuckle as shown in the graphic. Note that the tire and wheel assembly is shown removed only for clarification of the **GE-8001** dial indicator position.

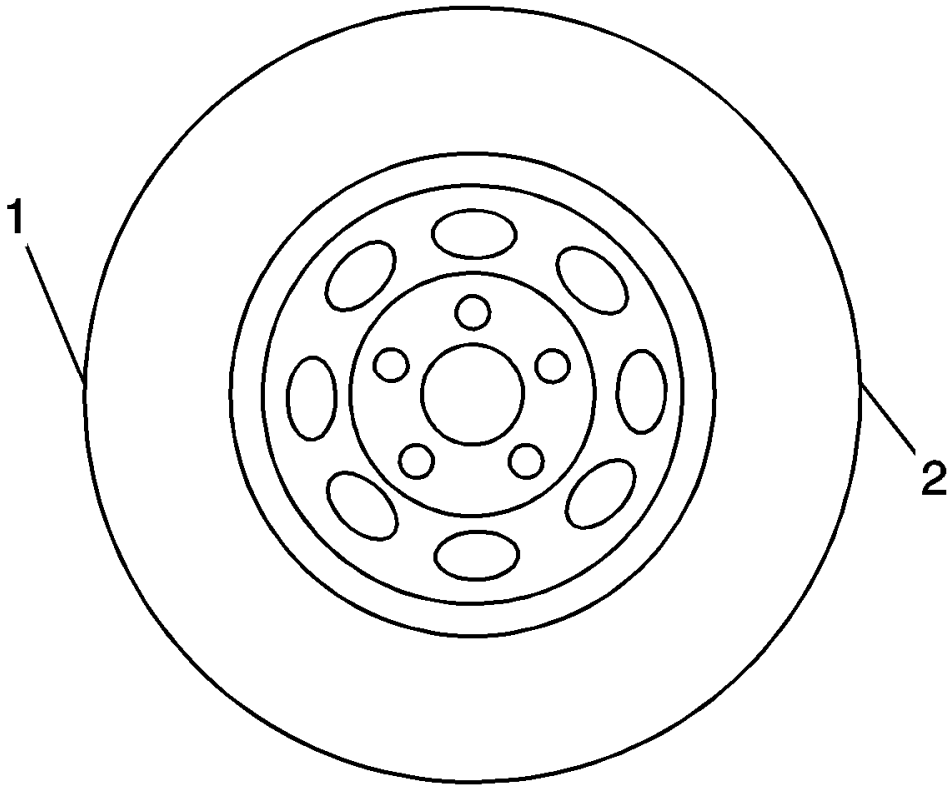

Fig. 5: Identifying Tire Grasping Positions
Courtesy of GENERAL MOTORS COMPANY

4. Grasping the tire at the 3 o'clock (2) and 9 o'clock (1) positions, gently push in on one side of the tire to remove any lash.
5. Zero the **GE-8001** dial indicator.
6. On the same side of the tire previously pushed inwards, gently pull outwards and measure the lash.
7. Record the measurement shown on the **GE-8001** dial indicator.
8. If the measured value exceeds 0.5 mm (0.02 in), replace the outer tie rod. Refer to **Steering Linkage Outer Tie Rod Replacement**.
9. Repeat the procedure for the other side.

STEERING LINKAGE OUTER TIE ROD REPLACEMENT

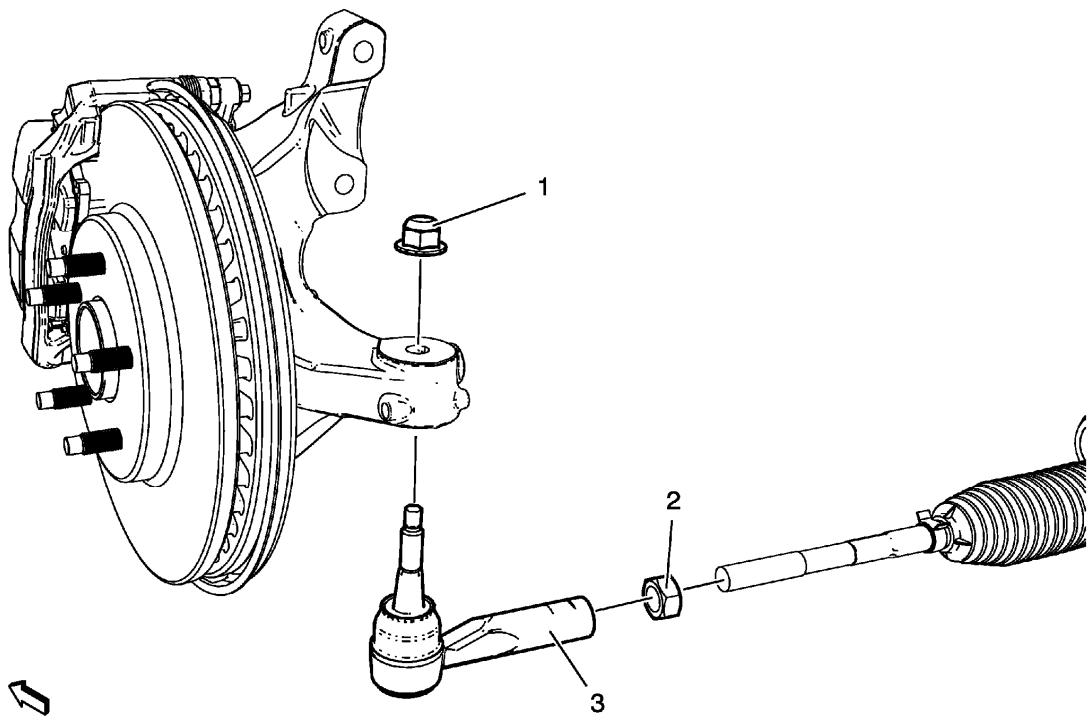

Fig. 6: Steering Linkage Outer Tie Rod And Nuts
Courtesy of GENERAL MOTORS COMPANY

Steering Linkage Outer Tie Rod Replacement

Callout	Component Name
Preliminary Procedures 1. Raise and support the vehicle. Refer to **Lifting and Jacking the Vehicle** . 2. Remove the front tire and wheel assembly. Refer to **Tire and Wheel Removal and Installation** .	
1	Steering Linkage Outer Tie Rod Nut **WARNING:** **Refer to Torque-to-Yield Fastener Warning .** **CAUTION:** **Refer to Fastener Caution .** **Procedure** Install NEW steering linkage outer tie rod nut. Do NOT reuse old nut. **Tighten** 35 N.m (26 lb ft)
	Steering Linkage Inner Tie Rod Nut

2	**Procedure** 1. Use paint in order to place match marks on the steering linkage inner tie rod nut and on the steering linkage inner tie rod. 2. During the installation, align the match marks. 3. Do not tighten the nut during the installation. Tighten the nut after adjusting the front toe. Refer to **Wheel Alignment - Steering Wheel Angle and/or Front Toe Adjustment** .
3	Steering Linkage Outer Tie Rod **CAUTION:** **Do not free the ball stud by using a pickle fork or a wedge-type tool. Damage to the seal or bushing may result.** **Procedure** 1. Use the **CH-24319-B** puller in order to separate the steering linkage outer tie rod from the steering knuckle. 2. Inspect the steering linkage inner tie rod for bent or damaged threads. 3. Clean the tapered surface of the steering knuckle. 4. After the installation, measure and adjust the front toe. Refer to **Wheel Alignment - Steering Wheel Angle and/or Front Toe Adjustment** . 5. Center the steering angle sensor. Refer to **Steering Angle Sensor Centering** . **Special Tools** **CH-24319-B** Steering Linkage and Tie Rod Puller For equivalent regional tools, refer to **Special Tools**.

STEERING GEAR BOOT REPLACEMENT

Special Tools

CH-22610 Keystone Clamp Pliers

For equivalent regional tools, refer to **Special Tools**.

Removal Procedure

1. Raise and support the vehicle. Refer to **Lifting and Jacking the Vehicle** .
2. Remove the steering linkage outer tie rod. Refer to **Steering Linkage Outer Tie Rod Replacement**.
3. Remove the steering linkage inner tie rod nut.

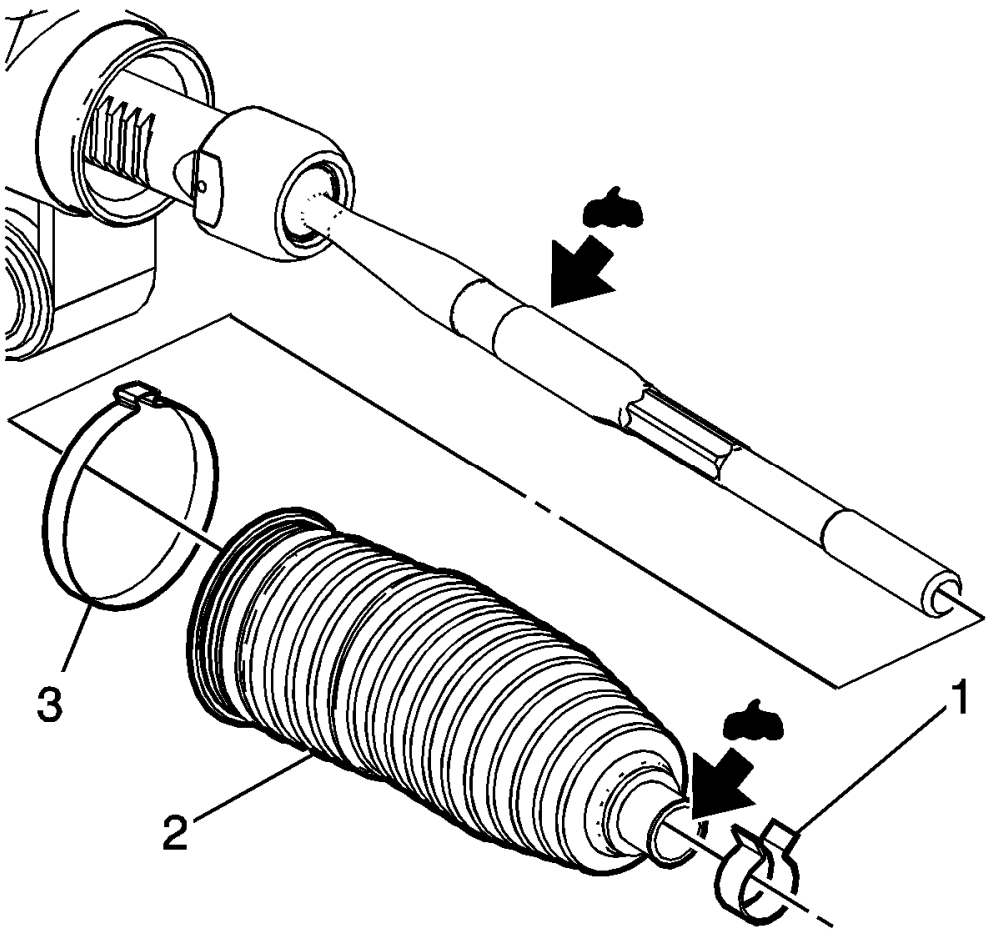

Fig. 7: Steering Gear Boot Components
Courtesy of GENERAL MOTORS COMPANY

4. Remove the outer boot clamp (1).

   Discard the clamp.

5. Cut the inner boot clamp (3).

   Discard the clamp.

6. Remove the steering gear boot (2).
7. Clean the steering linkage inner tie rod and the steering gear boot contact area of any lubricant or debris.

Installation Procedure

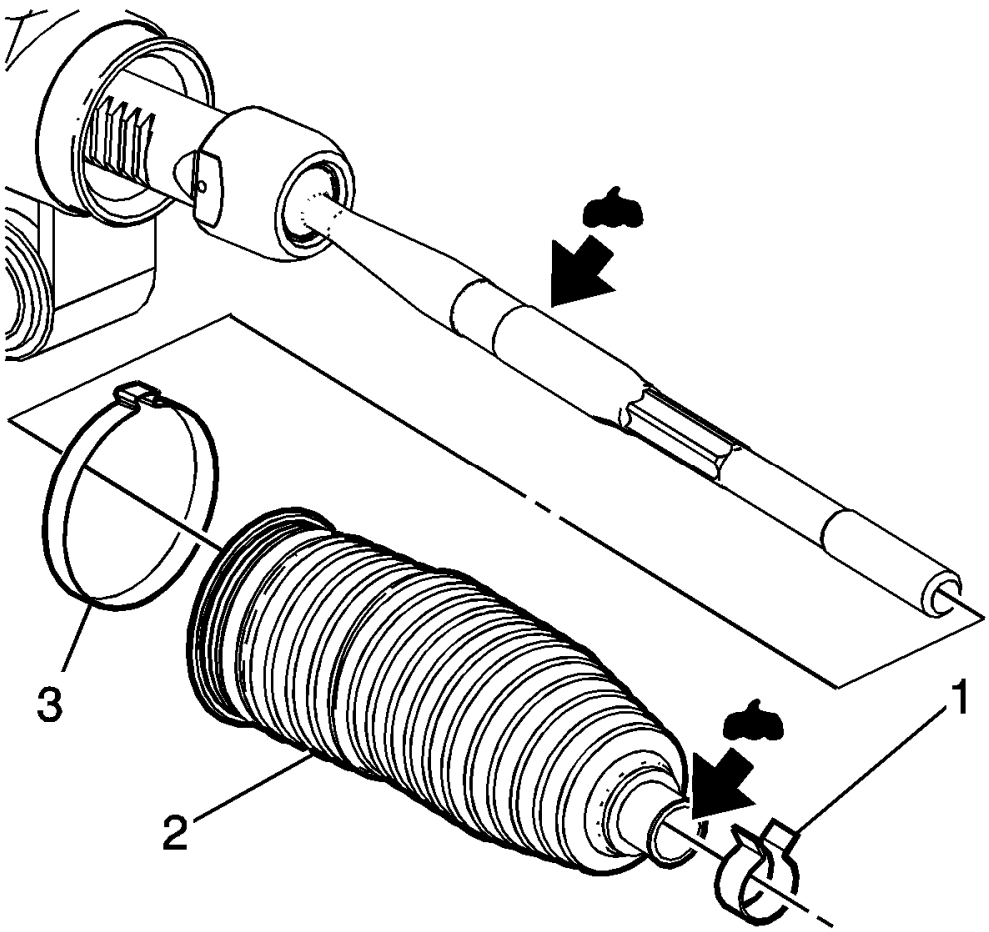

Fig. 8: Steering Gear Boot Components
Courtesy of GENERAL MOTORS COMPANY

NOTE: The steering linkage inner tie rod and the steering gear boot must be free of moisture and debris.

1. Apply lubricant to both ends of the steering gear boot (2).

NOTE: Ensure the larger end of the steering gear boot is firmly seated in the correct location on the steering gear.

2. Install the steering gear boot with the NEW inner boot clamp (3) loosely attached.

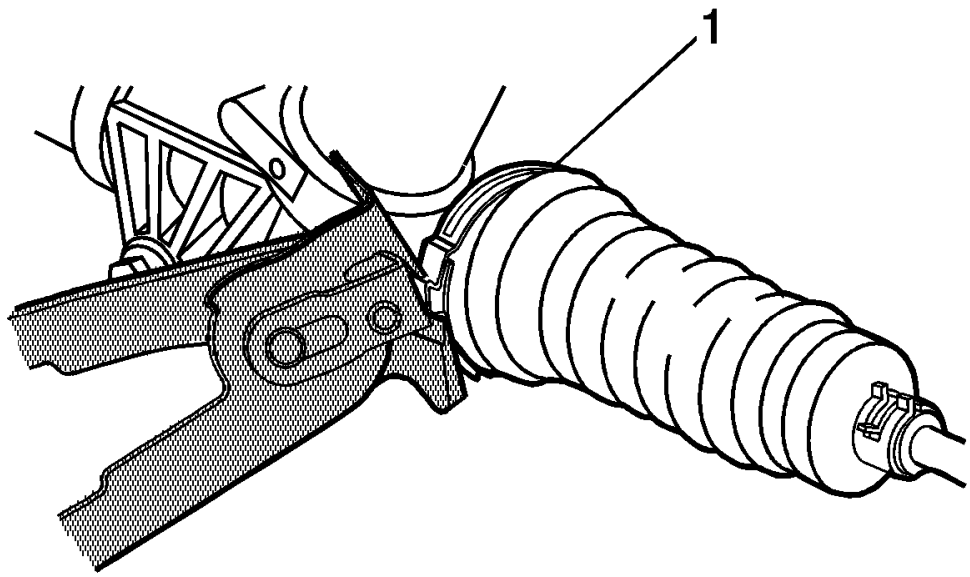

Fig. 9: Larger Steering Gear Boot Clamp
Courtesy of GENERAL MOTORS COMPANY

3. Use the **CH-22610** pliers in order to install the NEW inner boot clamp (1).

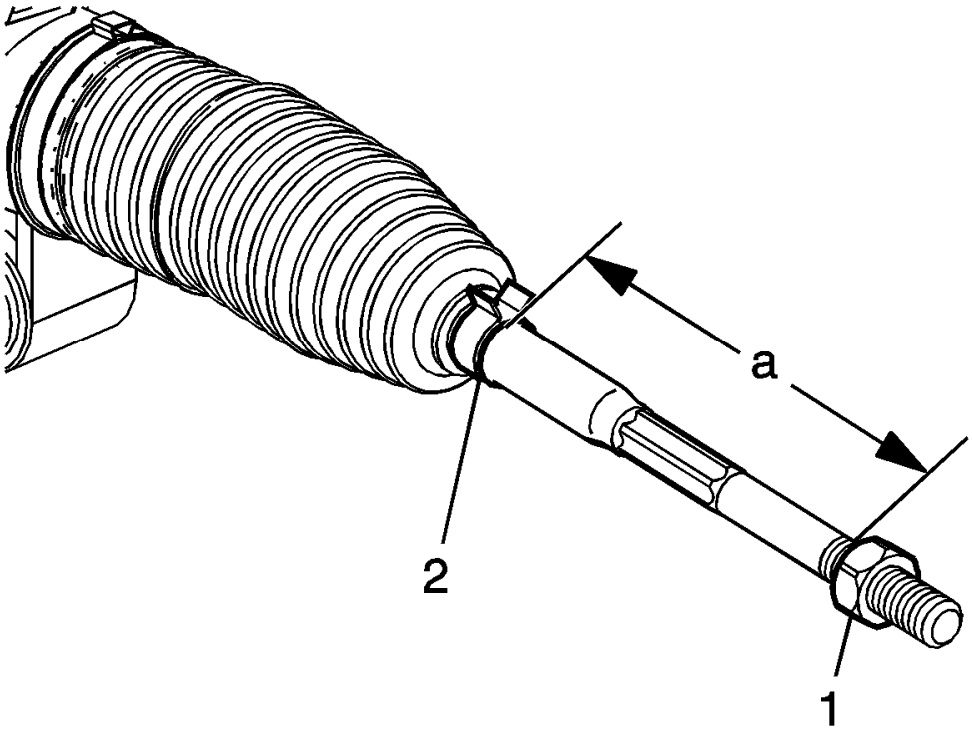

Fig. 10: Identifying Distance Between Inner Tie Rod Nut & Outer Boot Clamp
Courtesy of GENERAL MOTORS COMPANY

NOTE: Ensure the small end of the steering gear boot is firmly seated in the correct location on the steering linkage inner tie rod.

4. Install the NEW outer boot clamp (2).
5. Install the steering linkage inner tie rod nut (1).
6. Install the steering linkage outer tie rod. Refer to **Steering Linkage Outer Tie Rod Replacement**.
7. Measure and adjust the front toe. Refer to **Wheel Alignment - Steering Wheel Angle and/or Front Toe Adjustment** .
8. Lower the vehicle.

STEERING GEAR REPLACEMENT

Special Tools

EN-45059 Angle Meter

For equivalent regional tools, refer to **Special Tools**.

Removal Procedure

1. Disconnect the battery. Refer to **Battery Negative Cable Disconnection and Connection** .

CAUTION: With wheels of the vehicle facing straight ahead, secure the steering wheel utilizing steering column anti-rotation pin, steering column lock, or a strap to prevent rotation. Locking of the steering column will prevent damage and a possible malfunction of the SIR system. The steering wheel must be secured in position before disconnecting the following components:

- **The steering column**
- **The intermediate shaft(s)**
- **The steering gear**

After disconnecting these components, do not rotate the steering wheel or move the front tires and wheels. Failure to follow this procedure may cause the SIR coil assembly to become un-centered and cause possible damage to the SIR coil. If you think the SIR coil has become un-centered, refer to your specific SIR coil's centering procedure to re-center SIR Coil.

2. Turn the front wheels to the straight forward position and secure the steering wheel from moving.
3. Disconnect the intermediate steering shaft from the steering gear. Refer to **Intermediate Steering Shaft Replacement** .
4. Raise and support the vehicle. Refer to **Lifting and Jacking the Vehicle** .
5. Perform the following steps in order to gain access to the steering gear. Refer to **Drivetrain and Front Suspension Frame Replacement** .
    1. Remove the front tire and wheel assemblies.
    2. Remove the exhaust front pipe.
    3. Remove the front compartment splash shield.
    4. Remove the engine shield, if equipped.
    5. Remove the front compartment insulator, if equipped.
    6. Disconnect the 2 steering linkage outer tie rods from the 2 steering knuckles.
    7. Disconnect the 2 stabilizer shaft links.
    8. Remove the transmission mount bracket bolts.
    9. Support the drivetrain and front suspension frame.
    10. Remove the rear frame bolts.
    11. Remove the frame reinforcement bolts and the frame reinforcements.
    12. Lower the drivetrain and front suspension frame 55 mm (2 in).

CAUTION: Electrostatic discharge (ESD) can damage many solid-state electrical components. ESD susceptible components may or may not be labeled with the ESD symbol. Handle all electrical components carefully. Use the following precautions in order to avoid ESD damage:

- **Touch a metal ground point in order to remove your body's static charge before servicing any electronic component; especially after sliding across the vehicle seat.**
- **Do not touch exposed terminals. Terminals may connect to circuits susceptible the ESD damage.**
- **Do not allow tools to contact exposed terminals when servicing connectors.**
- **Do not remove components from their protective packaging until required to do so.**
- **Avoid the following actions unless required by the diagnostic procedure:**
  - **Jumpering or grounding of the components or connectors.**
  - **Connecting test equipment probes to components or connectors. Connect the ground lead first when using test probes.**
- **Ground the protective packaging of any component before opening. Do not rest solid-state components on metal workbenches, or on top of TVs, radios, or other electrical devices.**

NOTE: Connector latches are difficult to access

6. Disconnect the electrical connectors. Refer to **FEP Connectors (Steering Gear)** .

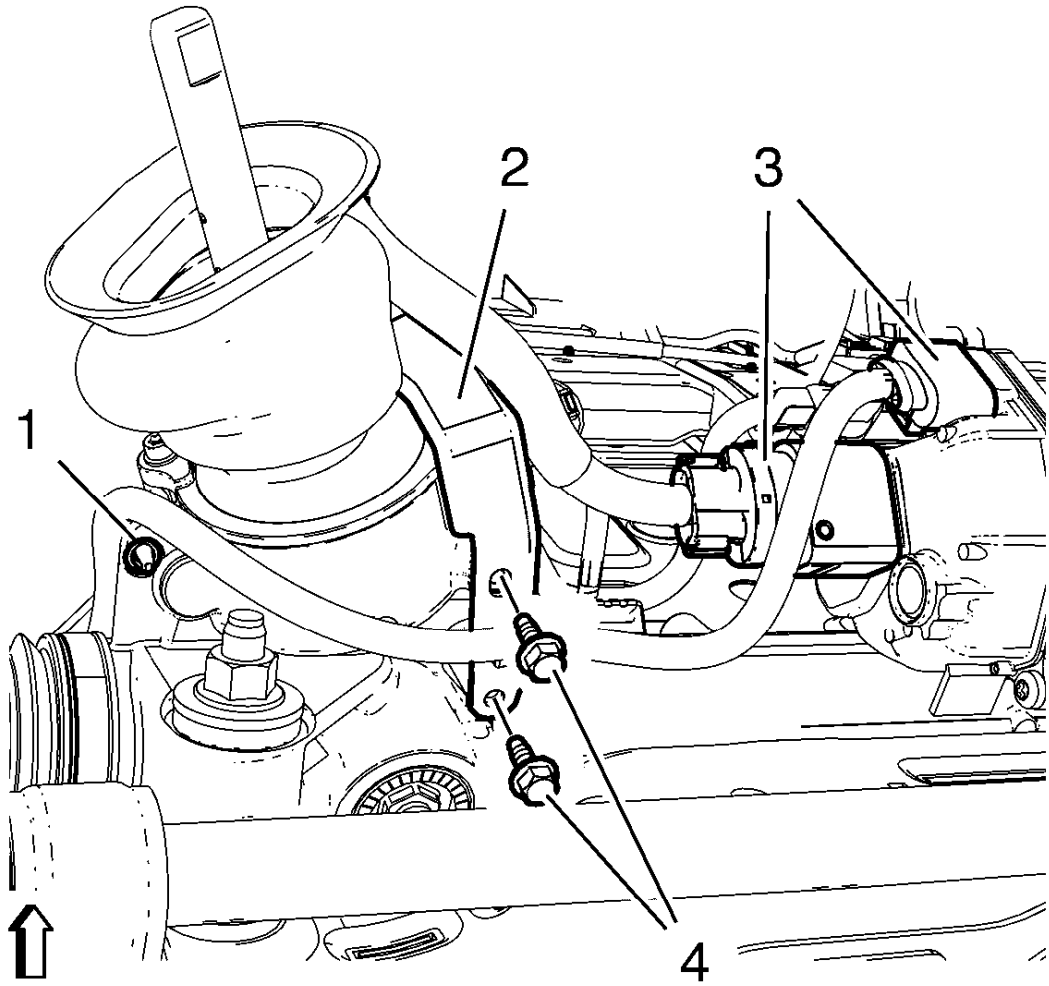

Fig. 11: Transmission Wiring Harness, Plugs, Bracket & Bolts
Courtesy of GENERAL MOTORS COMPANY

7. Use a suitable tool in order to carefully disconnect the 2 wiring harness plugs (3) from the steering gear.
8. Remove the 2 wiring harness bracket bolts (4).
9. Remove the bracket (2).
10. Disconnect the wiring harness retainer (1) from the steering gear.

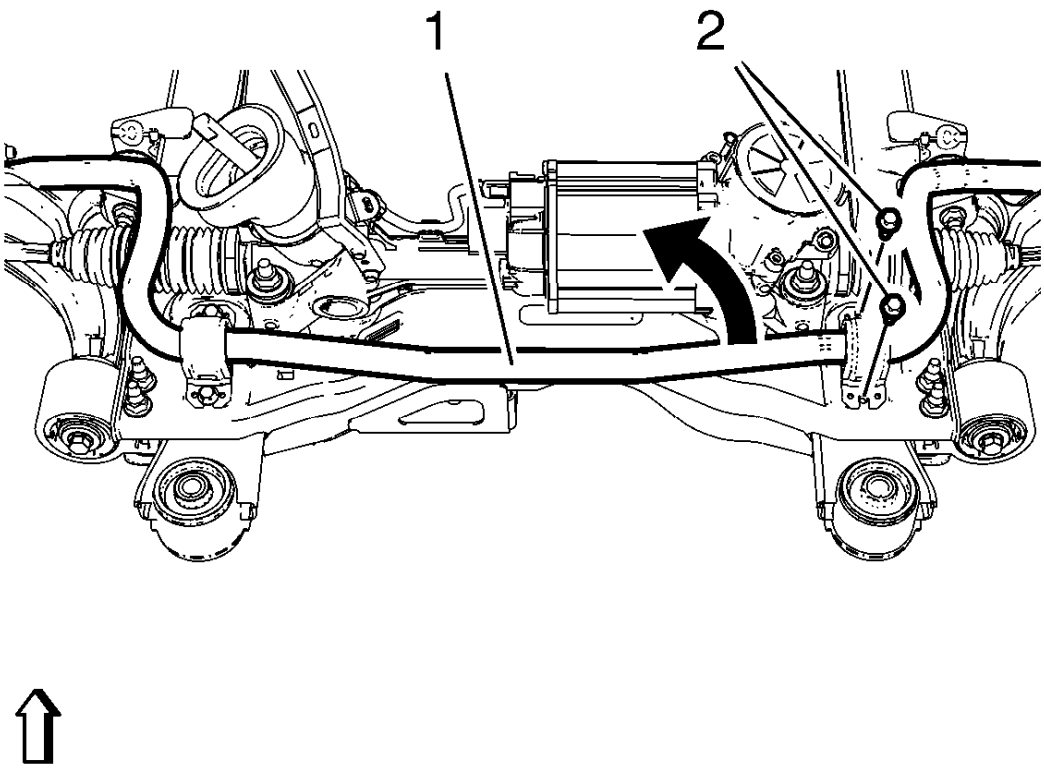

Fig. 12: Stabilizer Shaft And Insulator Clamp Bolts
Courtesy of GENERAL MOTORS COMPANY

11. Remove and DISCARD the 2 right stabilizer shaft insulator clamp bolts (2).
12. Reposition the stabilizer shaft (1) in order to gain clearance for the steering gear.

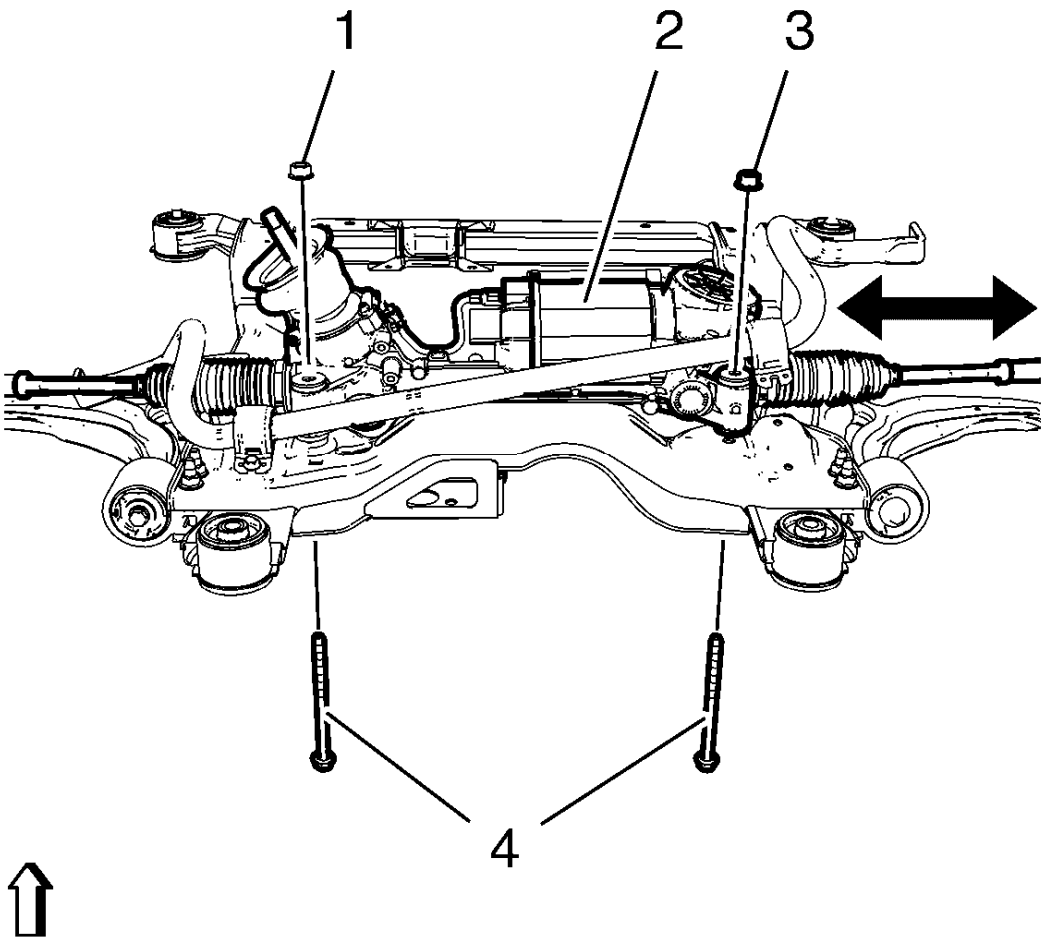

Fig. 13: Steering Gear, Bolts And Nuts
Courtesy of GENERAL MOTORS COMPANY

13. Remove and DISCARD the 2 steering gear bolts (4) and the nuts (1, 3) from front suspension frame.
14. Carefully remove the steering gear (2) through the right front wheel house.

Installation Procedure

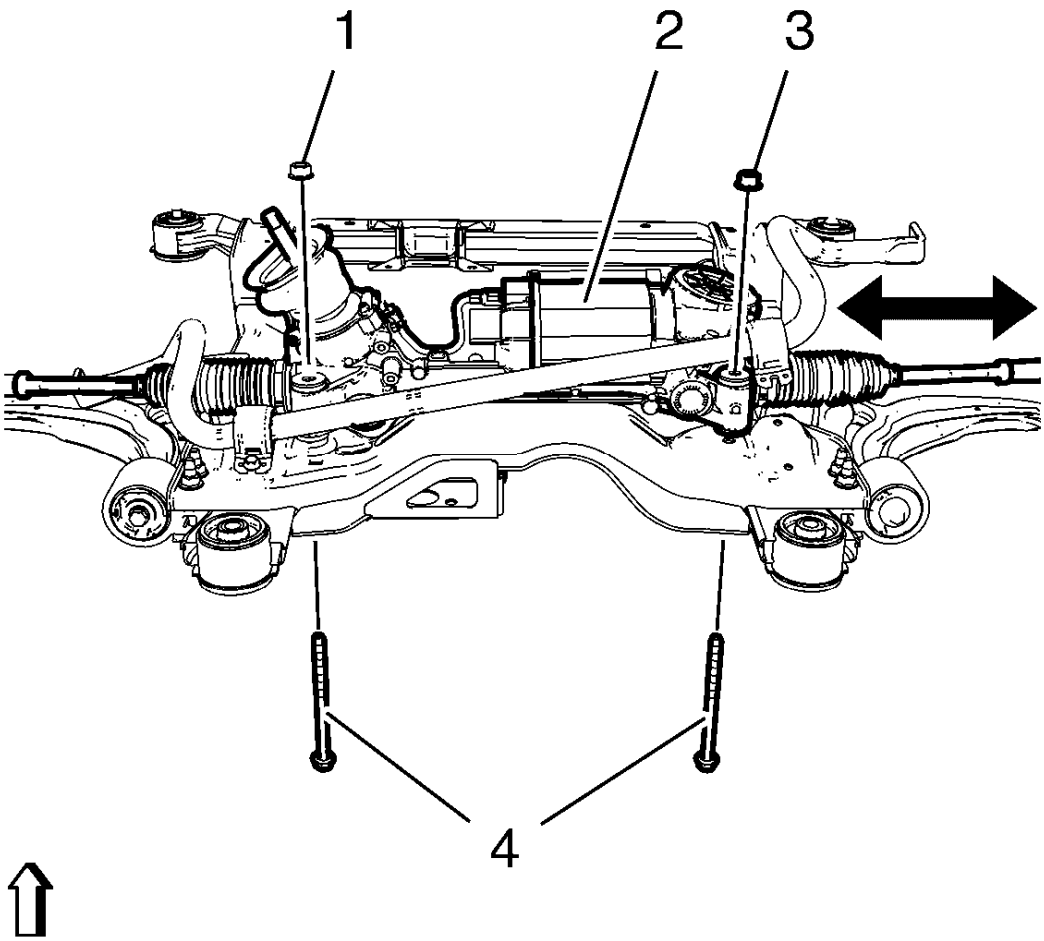

Fig. 14: Steering Gear, Bolts And Nuts
Courtesy of GENERAL MOTORS COMPANY

CAUTION: Ensure that the steering column dash seal is installed properly onto steering gear rack pinion housing. The sealing lip MUST rest on lower steering column cover surface evenly. To ease installation of the seal, apply liquid soap to the sealing lip. After installation, verify that the seal lip does not protrude into the vehicle's interior. Improper installation could result in poor sealing performance and water intrusion into the vehicle.

NOTE: Ensure the wiring routing is correct.

1. Carefully install the steering gear (2) through the right front wheel house and position the steering gear on the frame.

WARNING: Refer to Torque-to-Yield Fastener Warning .

CAUTION: Refer to Fastener Caution .

2. Install the 2 NEW steering gear bolts (4) and the 2 NEW nuts (1, 3) and tighten to 110 N.m (81 lb ft).
3. Use the **EN-45059** sensor in order to tighten the steering gear bolts and nuts an additional 150 degrees to 160 degrees.

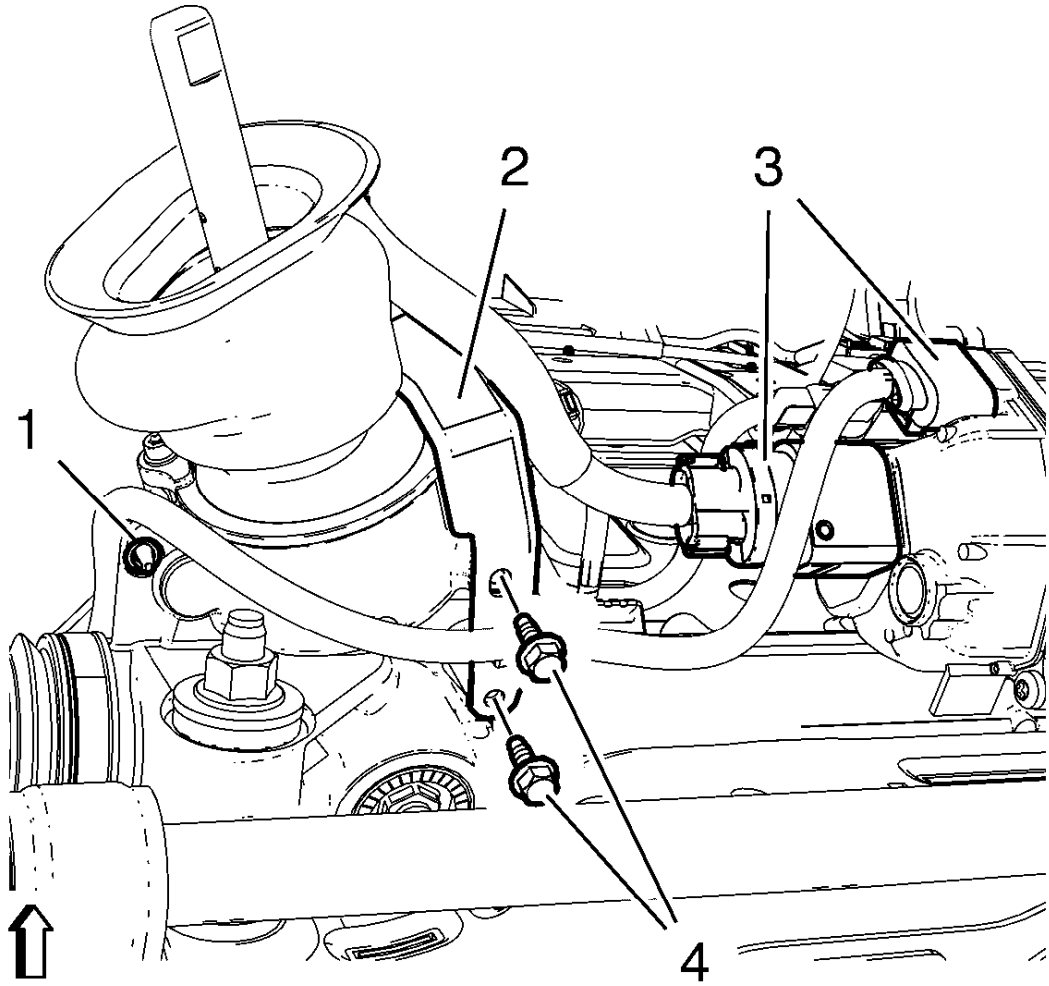

Fig. 15: Transmission Wiring Harness, Plugs, Bracket & Bolts
Courtesy of GENERAL MOTORS COMPANY

4. Install the wiring harness bracket (2).
5. Install the 2 wiring harness bracket bolts (4) and tighten to 9 N.m (80 lb in).
6. Connect the wiring harness retainer (1) to steering gear.

7. Connect the 2 wiring harness plugs (3) to the steering gear.

NOTE: Connector latches are difficult to access

8. Connect the electrical connectors. Refer to **FEP Connectors (Steering Gear)** .

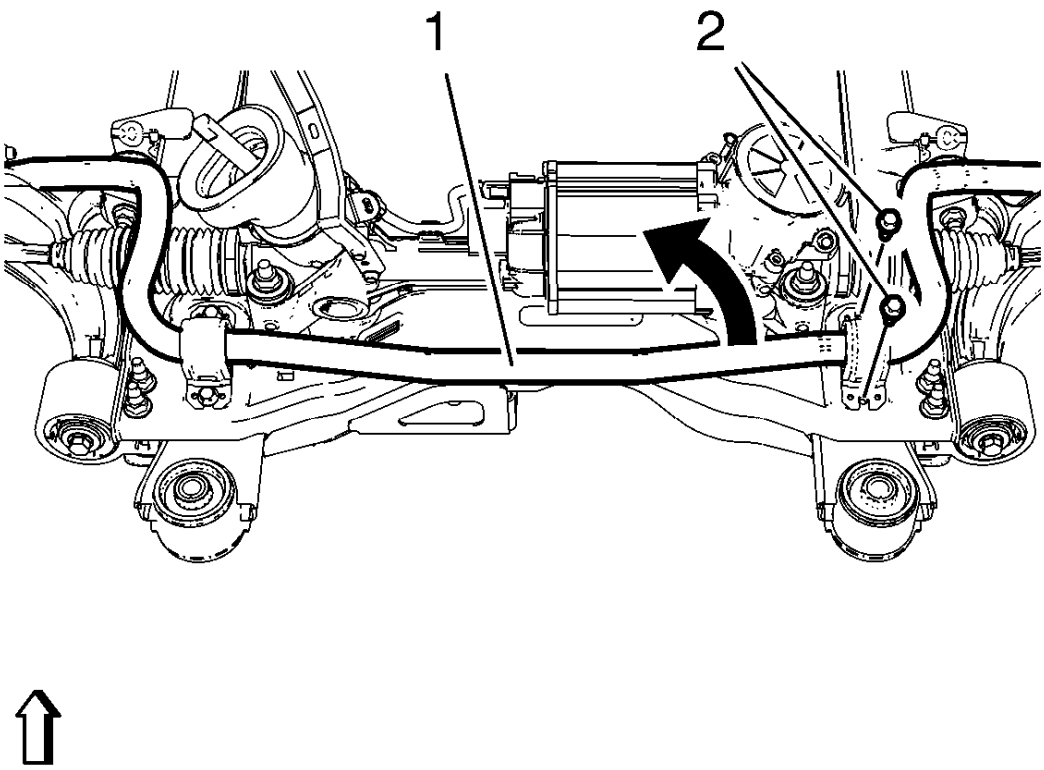

Fig. 16: Stabilizer Shaft And Insulator Clamp Bolts
Courtesy of GENERAL MOTORS COMPANY

9. Position the stabilizer shaft (1) and the bracket onto the suspension frame.
10. Install the NEW right stabilizer shaft insulator clamp bolts (2) and tighten to 22 N.m (16 lb ft).
11. Use the **EN-45059** sensor in order to tighten the NEW right stabilizer shaft insulator clamp bolts an additional 30 degrees.
12. Perform the following steps. Refer to **Drivetrain and Front Suspension Frame Replacement** .
    1. Position the drivetrain and front suspension frame in the vehicle.

2. Install the frame reinforcements and the frame reinforcement bolts.
3. Install the rear frame bolts.
4. Install the transmission mount bracket bolts.
5. Connect the 2 stabilizer shaft links.
6. Connect the 2 steering linkage outer tie rods to the 2 steering knuckles.
7. Install the front compartment insulator, if equipped.
8. Install the engine shield, if equipped.
9. Install the front compartment splash shield.
10. Install the exhaust front pipe.
11. Install the front tire and wheel assemblies.

13. Lower the vehicle.
14. Connect the intermediate steering shaft to the steering gear. Refer to **Intermediate Steering Shaft Replacement** .
15. Connect the battery. Refer to **Battery Negative Cable Disconnection and Connection** .
16. Measure and adjust the front toe. Refer to **Wheel Alignment - Steering Wheel Angle and/or Front Toe Adjustment** .

NOTE: Capturing data from the original power steering assist motor is not necessary when replacing an entire steering gear assembly. New software will be downloaded after gear replacement.

17. Program the power steering control module. Refer to **Power Steering Control Module Programming and Setup** .
18. Center the steering angle sensor and learn the software end stops. Refer to **Power Steering Control Module Calibration**.

STEERING GEAR BUSHING REPLACEMENT

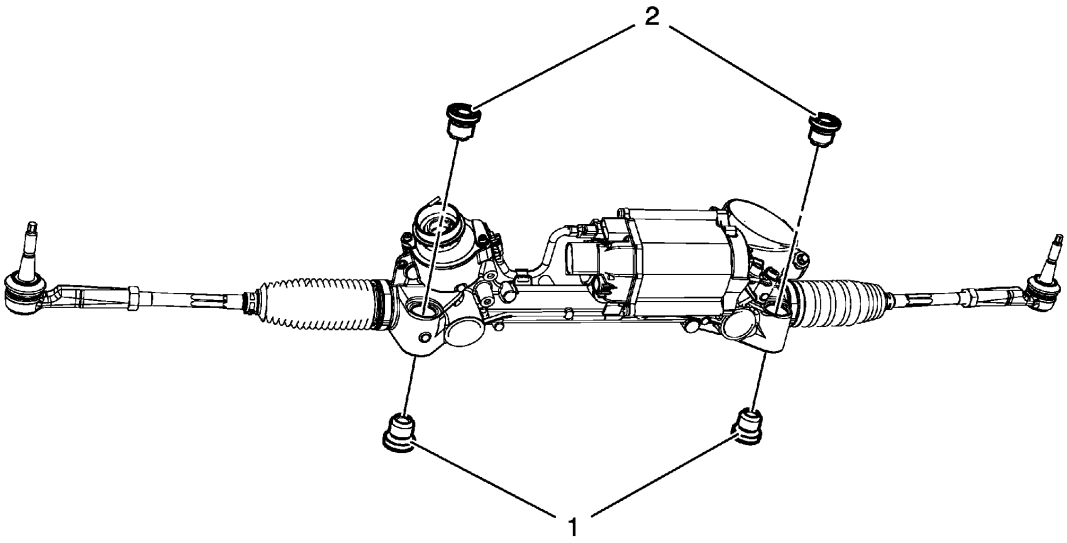

Fig. 17: Upper & Lower Steering Gear Bushings
Courtesy of GENERAL MOTORS COMPANY

Steering Gear Bushing Replacement

Callout	Component Name
Preliminary Procedures Remove electronic power steering gear. Refer to **Steering Gear Replacement**.	
1	Lower Steering Gear Bushing **Procedure** 1. Have an assistant hold the steering gear in place. 2. Remove and DISCARD bushing using suitable pliers. 3. Lubricate new bushing with a mild soap to assure easy installation.
2	Upper Steering Gear Bushing **Procedure** 1. Remove and DISCARD bushing using a suitable punch and a soft rubber mallet. 2. Remove old bushing from backside. 3. Lubricate new bushing with a mild soap to assure easy installation.

STEERING LINKAGE INNER TIE ROD REPLACEMENT

Removal Procedure

1. Raise and support the vehicle. Refer to **Lifting and Jacking the Vehicle** .
2. Remove the steering gear boot. Refer to **Steering Gear Boot Replacement**.
3. Turn the steering wheel in order to position the steering gear rack so that only 2 rack teeth and the flat surface of the rack are visible outside the steering gear housing.

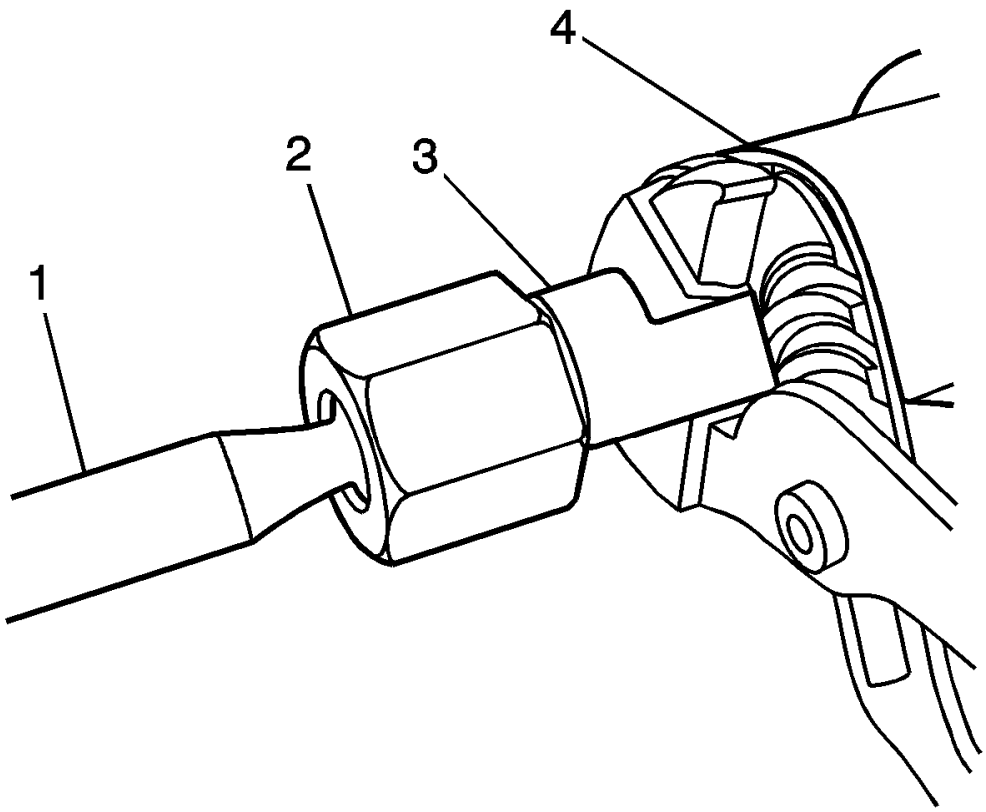

Fig. 18: Steering Linkage Inner Tie Rod
Courtesy of GENERAL MOTORS COMPANY

4. Place a soft jaw pipe wrench or soft jaw pliers on the flat surface of the steering gear rack (3) between the steering gear housing (4) and the inner tie rod housing (2).
5. Place a crows foot wrench on the flats of the inner tie rod housing.

CAUTION: Do not change the steering gear preload adjustment before moving the inner tie rod from the steering gear. Changing the steering gear

preload adjustment before moving the inner tie rod could result in damage to the pinion and the steering gear.

6. Rotate the steering linkage inner tie rod housing counterclockwise while holding the steering gear rack stationary until the steering linkage inner tie rod separates from the steering gear rack.

Installation Procedure

1. Install the steering linkage inner tie rod to the steering gear rack.

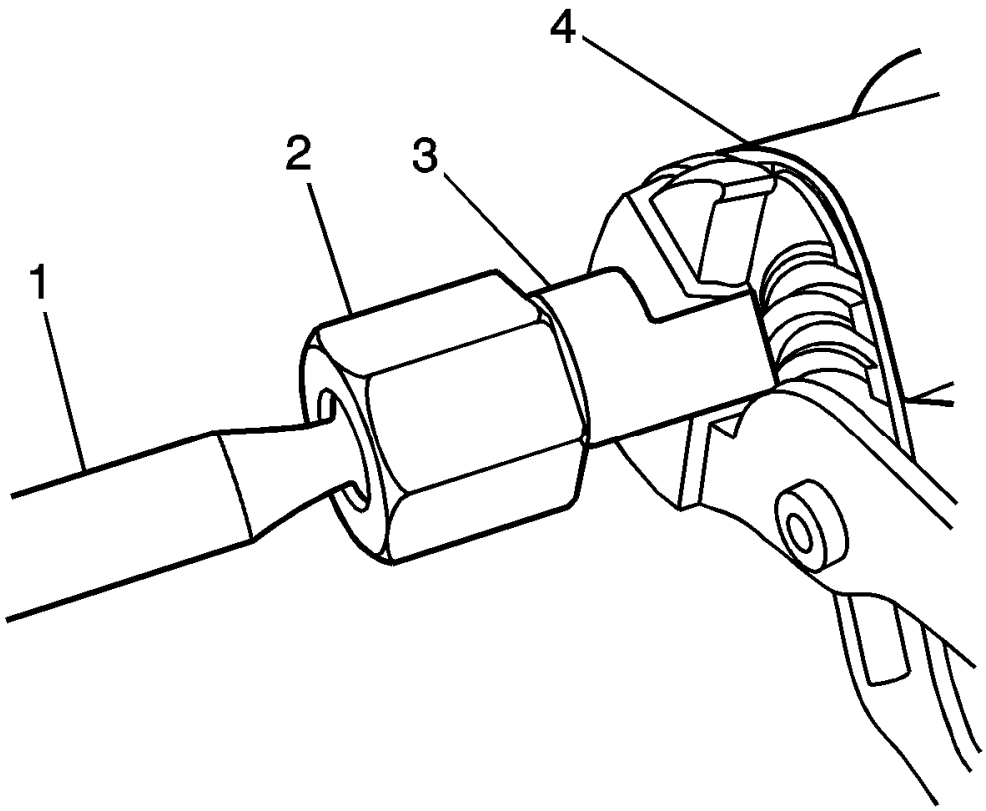

Fig. 19: Steering Linkage Inner Tie Rod
Courtesy of GENERAL MOTORS COMPANY

2. Place a soft jaw pipe wrench or soft jaw pliers on the flat surface of the steering gear rack (3) between the steering gear housing (4) and the inner tie rod housing (2).

CAUTION: Refer to Fastener Caution .

3. Place a torque wrench with a crows foot wrench attachment on the flats of the inner tie rod housing and tighten to 105 N.m (77 lb ft).
4. Install the steering gear boot. Refer to **Steering Gear Boot Replacement**.
5. Lower the vehicle.

POWER STEERING ASSIST MOTOR REPLACEMENT

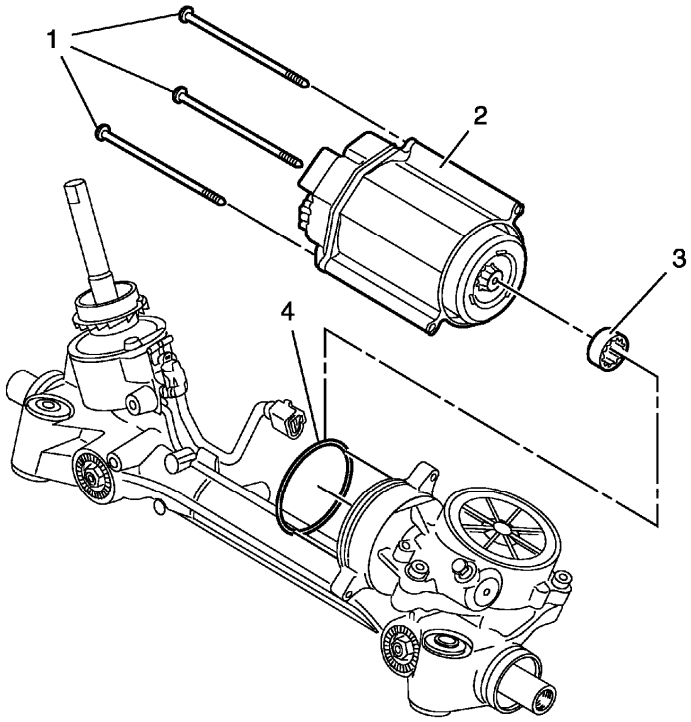

Fig. 20: Power Steering Assist Motor Components
Courtesy of GENERAL MOTORS COMPANY

Power Steering Assist Motor Replacement

Callout	Component Name
CAUTION: **Electrostatic discharge (ESD) can damage many solid-state electrical components. ESD susceptible components may or may not be labeled with the ESD symbol. Handle all electrical components carefully. Use the following precautions in order to avoid ESD damage:** • **Touch a metal ground point in order to remove your body's static charge before servicing any electronic component; especially after sliding across the vehicle seat.** • **Do not touch exposed terminals. Terminals may connect to circuits susceptible the ESD damage.** • **Do not allow tools to contact exposed terminals when servicing connectors.** • **Do not remove components from their protective packaging until required to do so.** • **Avoid the following actions unless required by the diagnostic procedure:**	

- **Jumpering or grounding of the components or connectors.**
- **Connecting test equipment probes to components or connectors. Connect the ground lead first when using test probes.**

- **Ground the protective packaging of any component before opening. Do not rest solid-state components on metal workbenches, or on top of TVs, radios, or other electrical devices.**

Preliminary Procedures

1. Capture the data from the old power steering assist motor. Refer to **Power Steering Control Module Programming and Setup** .
2. Disconnect all electrical connectors and components from engine compartment as needed.
3. Carefully disconnect electrical connectors of the electric power steering. Refer to **FEP Connectors (Steering Gear)** .

1	Power Steering Assist Motor Bolt (Qty: 3) **CAUTION:** **Refer to Fastener Caution .** **CAUTION:** **Refer to Torque-to-Yield Fastener Caution .** **Procedure** 1. Remove the 2 upper bolts from engine compartment. 2. Remove the lowest bolt from below. Refer to **Lifting and Jacking the Vehicle** . 3. Install NEW bolts, do NOT reuse old bolts. **Tighten** 8 (71 lb in)
2	Power Steering Assist Motor **Procedure** 1. Transfer the data from the old assist motor to the new power steering assist motor. Refer to **Power Steering Control Module Programming and Setup** . 2. Calibrate the steering angle sensor and learn the softend stops. Refer to **Power Steering Control Module Calibration**.
3	Power Steering Assist Motor Drive Boot **Procedure**

	1. DISCARD drive boot and use NEW ONLY. 2. Install the drive boot to the assist motor armature. 3. Align the drive boot on the assist motor armature to the steering gear.
4	Power Steering Assist Motor Housing O-ring **Procedure** 1. DISCARD O-ring and use NEW ONLY. 2. Lubricate O-ring. 3. Place O-ring correctly in groove on motor housing.

POWER STEERING CONTROL MODULE CALIBRATION

Steering Angle Sensor Centering and Software Endstop Learning

WARNING: An inaccurate or not centered steering angle sensor could limit the operation of the electric power steering (EPS) and result in personal injury.

Centering of the steering angle sensor and software endstop learning might be required after certain service procedures are performed. Some of these procedures are as follows:

- Steering angle sensor replacement
- Steering gear replacement
- Power steering assist motor replacement
- Steering column replacement
- Steering linkage inner tie rod replacement
- Steering linkage outer tie rod replacement

NOTE: It is necessary to perform the steering angle sensor centering BEFORE the software endstop learning.

Steering Angle Sensor Centering

For electronic power steering equipped vehicles WITH electronic stability control program and EXTERNAL Steering Angle Sensor, refer to **Steering Angle Sensor Centering** .

The centering procedure of the internal steering angle sensor (w/o electronic stability program) can be completed with the following steps:

Conditions: Front axle measured and set, engine running, vehicle speed 0 km/h (0 MPH), internal steering angle sensor is activated.

1. Using the steering wheel, align the front wheels in the center forward position.

2. Using a scan tool, perform the Configuration/Reset Functions, Steering Wheel Angle Sensor Centering procedure.
3. Steer from the center position slowly 90° to the left.
4. Steer slowly back to the center position and then slowly 90° to the right.
5. Steer slowly back to the center position.
6. Perform the steering movements again.
7. Centering procedure is completed.

Software Endstop Learning

The software endstop learning procedure can be completed with the following steps:

Conditions: Front axle measured and set, vehicle speed 0 km/h (0 MPH), internal steering angle sensor is calibrated or external steering angle sensor sends a valid CAN signal.

1. Using a scan tool, perform the Configuration/Reset Functions, Power Steering Softstops Reset procedure and follow the on-screen instructions.
2. Using a scan tool, perform the Configuration/Reset Functions, Power Steering Softstops Learn procedure and follow the on-screen instructions.
3. Software endstop learning procedure is completed.

DESCRIPTION AND OPERATION

POWER STEERING SYSTEM DESCRIPTION AND OPERATION (HYDRAULIC POWER STEERING)

The hydraulic power steering pump is a constant displacement vane-type pump that provides hydraulic pressure and flow for the power steering gear. The hydraulic power steering pumps are either belt-driven or direct-drive, cam-driven.

The power steering fluid reservoir holds the power steering fluid and may be integral with the power steering pump or remotely located. The following locations are typical locations for the remote reservoir:

- Mounted to the front of the dash panel
- Mounted to the inner fender
- Mounted to a bracket on the engine

The 2 basic types of power steering gears are listed below:

- A recirculating ball system
- A rack and pinion system

In the recirculating ball system, a worm gear converts steering wheel movement to movement of a sector shaft. A pitman arm attached to the bottom of the sector shaft actually moves one tie rod and an intermediate rod

move the other tie rod.

In the rack and pinion system, the rack and the pinion are the 2 components that convert steering wheel rotation to lateral movement. The steering shaft is attached to the pinion in the steering gear. The pinion rotates with the steering wheel. Gear teeth on the pinion mesh with the gear teeth on the rack. The rotating pinion moves the rack from side to side. The lateral action of the rack pushes and pulls the tie rods in order to change the direction of the vehicle's front wheels.

The power steering pressure hose connects the power steering pump union fitting to the power steering gear and allows pressurized power steering fluid to flow from the pump to the gear.

The power steering return hose returns fluid from the power steering gear back to the power steering fluid reservoir. The power steering return line may contain an integral fin-type or line-type power steering fluid cooler.

In a typical power steering system, a pump generates hydraulic pressure, causing fluid to flow, via the pressure hose, to the steering gear valve assembly. The steering gear valve assembly regulates the incoming fluid to the right and left chambers in order to assist in right and left turns.

Turning the steering wheel activates the valve assembly, which applies greater fluid pressure and flow to one side of the steering gear piston, and lower pressure and flow to the other side of the piston. The pressure assists the movement of the gear piston. Tie rods transfer this force to the front wheels, which turn the vehicle right or left.

POWER STEERING SYSTEM DESCRIPTION AND OPERATION (ELECTRONIC POWER STEERING)

The power steering system consists of the following components:

- The power steering control module
- The power steering motor
- The power steering motor rotational sensor
- The torque sensor
- The steering gear (rack and dual pinion)

The rack and dual pinion electric power steering system reduces the amount of effort needed to steer the vehicle utilizing the power steering control module to control the power steering motor to maneuver the steering gear. The power steering control module also uses a combination of the torque sensor, motor rotational sensor, battery voltage circuit and GMLAN serial data circuit to perform the system functions. The power steering control module monitors vehicle speed and engine speed from the engine control module via the GMLAN serial data circuit to determine the amount of steering assist needed to steer the vehicle. At low speeds more assist is provided for easy turning during parking maneuvers. At higher speeds less assist is provided for improved road feel and directional stability.

The power steering control module uses a combination of the torque sensor, motor rotational sensor, vehicle speed, and calculated system temperature inputs to determine the amount of assist needed. The power steering control module continuously monitors the digital torque sensor's torque and index current signals. As the

steering wheel is turned and torsional twist is applied to the steering shaft, the steering input and output shafts are monitored via the torque signal circuit and then processed by the power steering control module to calculate the steering torque. The voltage signals of the motor position sensor and the digital torque sensor's index current signal are both processed by the power steering control module to detect and calculate the steering wheel angle.

The power steering control module responds to the change in the digital torque sensor signals as well as the motor rotational sensor's voltage signals by commanding current to the power steering motor. The power steering control module controls the pulse width modulated motor drive circuit to drive the 3-phase motor. The power steering control module and motor assembly is attached to the base of the steering gear housing and assists the steering gear pinion to maneuver the rack from left to right according to turning the steering wheel.

The power steering control module has the ability to calculate an internal system temperature to protect the power steering system from damage caused by high temperature. To reduce a high system temperature, the power steering control module will reduce the amount of current commanded to the power steering motor, which reduces the amount of steering assist. The power steering control module has the ability to detect malfunctions within the electric power steering system. Any malfunction detected that disables steering assist will cause the SERVICE POWER STEERING message to be displayed on the driver information center.

SPECIAL TOOLS AND EQUIPMENT

SPECIAL TOOLS

Illustration	Tool Number/ Description
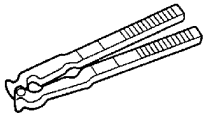	CH-22610 J-22610 Keystone Clamp Pliers
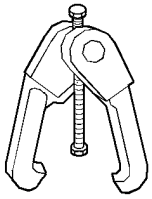	CH-24319-B J-24319-B Steering Linkage and Tie Rod Puller
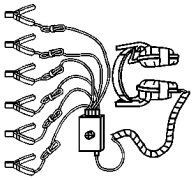	CH-39570 J-39570 Chassis Ear
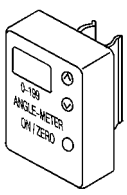	EN-45059 J-45059 Angle Meter

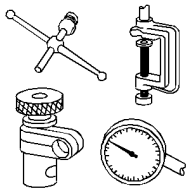	GE-8001 J-8001 Dial Indicator Set

2013 STEERING

Steering Wheel and Column - Cruze

SPECIFICATIONS

FASTENER TIGHTENING SPECIFICATIONS

Fastener Tightening Specifications

Application	Specification	
	Metric	English
Intermediate Steering Shaft Bolt	34	25 lb ft
Steering Column Nut	22 + 45 degrees (1)	16 lb ft + 45 degrees (1)
Steering Wheel Bolt	30	22 lb ft
1 = Use NEW fastener.		

ADHESIVES, FLUIDS, LUBRICANTS, AND SEALERS

Adhesives, Fluids, Lubricants, and Sealers

Application	Type of Material	GM Part Number	
		United States	Canada
Intermediate Steering Shaft Lower Bolt Thread Locking Adhesive	Medium Strength Threadlocker - Blue Loctite® 242	12345382	10953489
Intermediate Steering Shaft Upper Bolt Thread Locking Adhesive	Medium Strength Threadlocker - Blue Loctite® 242	12345382	10953489
Steering Wheel Bolt Thread Locking Adhesive	Medium Strength Threadlocker - Blue Loctite® 242	12345382	10953489

SCHEMATIC WIRING DIAGRAMS

COLUMN LOCK WIRING SCHEMATICS

ULS Wiring Schematics

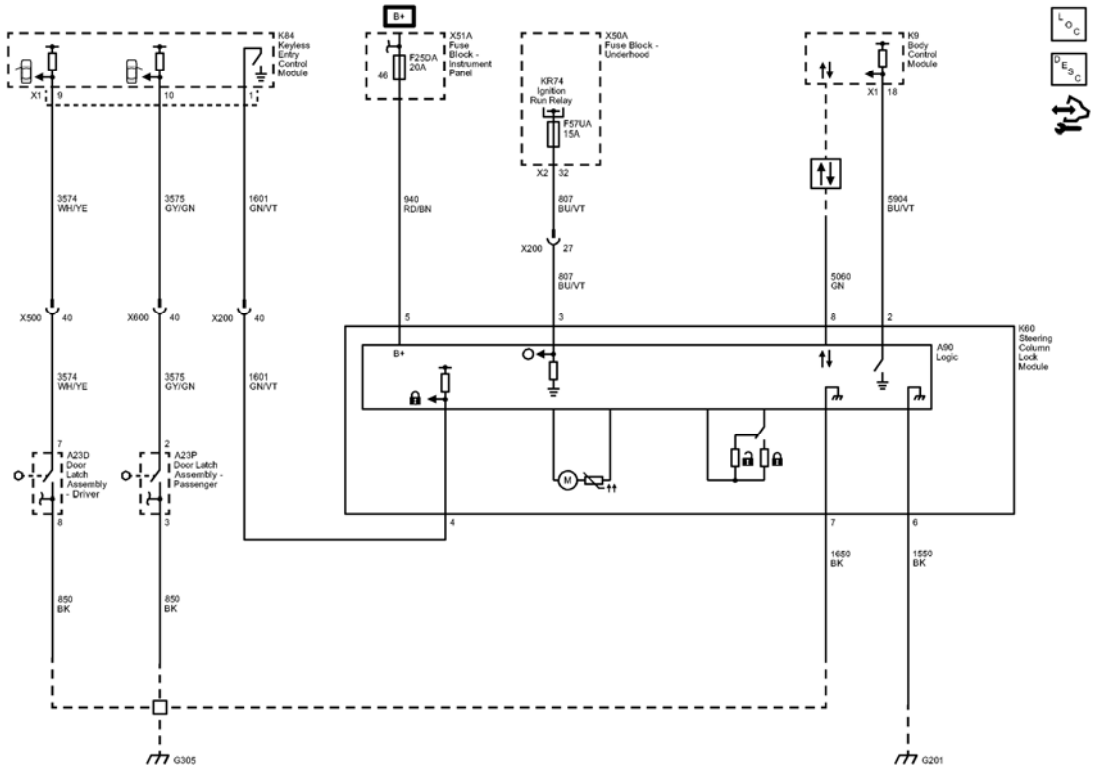

Fig. 1: Column Lock Wiring Schematics
Courtesy of GENERAL MOTORS COMPANY

Callout	Component Name
3574	Driver Door Open Switch Signal
3574_WH/YE	3574 WH/YE
CAV_7	7
CAV_9	9
CONN_X1	X1
3575	Co_Driver Door Open Switch Signal
3575_GY/GN	3575 GY/GN
CAV_2	2
CAV_10	10
1601	Steering Column Lock Signal
1601_GN/VT	1601 GN/VT
CAV_4	4
CAV_1	1
940_RD/BN	940 RD/BN
CAV_5	5

807	OFF /Accessory Voltage
807_BU/VT	807 BU/VT
CAV_3	3
CAV_32	32
CONN_X2	X2
5060	Low Speed GMLAN Serial Data
5060_GN	5060 GN
CAV_8	8
5904	Steering Column Lock Status Signal
5904 BU/VT	5904 BU/VT
CAV_2	2
CAV 18	18
CONN_X1	X1
850	Ground
850_BK	850 BK
CAV_8	8
850_BK	850 BK
CAV_3	3
1650	Ground
1650_BK	1650 BK
CAV_7	7
1550	Ground
1550_BK	1550 BK
CAV_6	6
3574_WH/YE	3574 WH/YE
3575_GY/GN	3575 GY/GN
1601 GN/VT	1601 GN/VT
807_BU/VT	807 BU/VT
CAV_40	40
CAV_40	40
CAV_40	40
CAV_27	27
Data_Communication_Schematics_REF	Data Communication Schematics
CAV 46	46
X500	X500
X600	X600
X200	X200
X200	X200
F25DA	F25DA 20A

F57UA	F57UA 15A
K9	
X50A	
X51A	
A90	Logic
A23P	
A23D	
K60	(ULS)
KR74	
K84	(ATH)

DIAGNOSTIC INFORMATION AND PROCEDURES

SYMPTOMS - STEERING WHEEL AND COLUMN

NOTE: Review the system operation in order to familiarize yourself with the system functions.

Refer to **Steering Wheel and Column Description and Operation**.

Symptoms List

Refer to a symptom diagnostic procedure from the following list in order to diagnose the symptom:

- **High Telescoping Effort**
- **Looseness in Steering Column**
- **Noise in Steering Column**
- **Steering Column Tilt Function Inoperative**

STEERING COLUMN TILT FUNCTION INOPERATIVE

Steering Column Tilt Function Inoperative

Step	Action	Yes	No
1	Did you review the Steering Wheel and Column Description and Operation and perform the necessary inspections?	Go to **Step 2**	Go to **Symptoms - Steering Wheel and Column**
2	Verify that the steering column tilt function is inoperative. Does the steering column tilt function operate normally?	System OK	Go to **Step 3**
	If equipped, verify that the following components are not seized or corroded: • Tilt pivot pins		

3	• Tilt head lock shoes Are the components seized or corroded?	Go to **Step 7**	Go to **Step 4**
4	Inspect the tilt pivot pins for binding. Are the tilt pivot pins binding?	Go to **Step 8**	Go to **Step 5**
5	Inspect for a weak or broken steering column tilt spring. Is the steering column tilt spring weak or broken?	Go to **Step 9**	Go to **Step 6**
6	Inspect the steering column wiring harness routing for tightness. Was the steering column wiring harness routed correctly?	Go to **Step 11**	Go to **Step 10**
7	Replace the steering column. Refer to **Steering Column Replacement**. Did you complete the repair?	Go to **Step 11**	-
8	If serviceable, replace the pivot pins. If not serviceable replace the steering column. Refer to **Steering Column Replacement**. Did you complete the repair?	Go to **Step 11**	-
9	If serviceable, replace the tilt spring. Did you complete the repair?	Go to **Step 11**	-
10	Route the steering column wiring harness to the correct location. Did you correctly route the wiring harness?	Go to **Step 11**	-
11	Operate the steering column tilt function in order to verify the repair. Did you correct the condition?	System OK	Go to **Step 3**

HIGH TELESCOPING EFFORT

High Telescoping Effort

Condition	Action
The steering shaft assembly is bent or damaged.	If necessary, replace the steering column. Refer to **Steering Column Replacement**.

NOISE IN STEERING COLUMN

Noise in Steering Column

Step	Action	Yes	No
1	Did you review the Steering Wheel and Column Description and perform the		Go to **Steering Wheel and Column Description and**

	necessary inspections?	Go to **Step 2**	**Operation**
2	Verify that noise is present in the steering column during operation. Is noise present in the steering column during operation?	Go to **Step 3**	System OK
3	Inspect the steering column mounting features for the following conditions: • Steering column mounting fasteners for looseness • Steering column mounting features are sheared Are the steering column mounting features loose?	Go to **Step 8**	Go to **Step 4**
4	Inspect the SIR/SRS coil for noise. Is the SIR/SRS coil noisy?	Go to **Step 09**	Go to **Step 5**
5	Inspect the lock plate retaining ring for correct installation. Is the lock plate retaining ring installed incorrectly?	Go to **Step 10**	Go to **Step 6**
6	Inspect the steering column upper and lower bearings for the following conditions: • Damage • Lubrication • Wear • Proper seating Are the bearings in need of repair or replacement?	Go to **Step 11**	Go to **Step 7**
7	**NOTE:** **This is best evaluated while driving the vehicle, turning the steering and applying the brake pedal.** Inspect the intermediate steering shaft for noise.Is the intermediate steering shaft noisy?	Go to **Step 12**	Go to **Step 13**
	NOTE: **If the steering column mounting is damaged or sheared, the steering column will need to be replaced. Refer to Steering**		

	Column Replacement.		
8	Tighten the steering column mounting fastener to specifications. Refer to **Fastener Tightening Specifications**.Did you complete the repair?	Go to **Step 13**	-
9	Replace the SIR/SRS coil. Refer to **Airbag Steering Wheel Module Replacement** . Did you complete the repair?	Go to **Step 13**	-
10	Install the lock plate retaining ring correctly. Did you complete the repair?	Go to **Step 13**	-
11	**NOTE:** **If the steering column upper and/or lower bearings are not serviceable, the steering column will need to be replaced. Refer to Steering Column Replacement.** Replace the upper and/or lower bearing, if serviceable.Did you complete the repair?	Go to **Step 13**	-
12	Replace the appropriate intermediate steering shaft component. Refer to **Intermediate Steering Shaft Replacement**. Did you complete the repair?	Go to **Step 13**	-
13	Operate the system in order to verify the repair. Did you correct the condition?	System OK	Go to **Step 3**

LOOSENESS IN STEERING COLUMN

Looseness in Steering Column

Step	Action	Yes	No
1	Did you review the Steering Wheel and Column Description and Operation and perform the necessary inspections?	Go to **Step 2**	Go to **Steering Wheel and Column Description and Operation**
2	Verify that the steering column is loose. Is the steering column loose?	Go to **Step 3**	System OK
3	Inspect the steering column mounting features for the following conditions. • Steering column mounting fasteners for looseness • Steering column mounting features are sheared		

	Are the steering column mounting features loose?	Go to **Step 5**	Go to **Step 4**
4	Inspect the upper and/or lower bearings for looseness. Are any of the bearings worn or loose?	Go to **Step 6**	Go to **Step 7**
5	**NOTE:** **If the steering column mounting feature is damaged or sheared, the steering column will need to be replaced. Refer to Steering Column Replacement.** Tighten the steering column mounting fasteners to specifications. Refer to **Fastener Tightening Specifications**.Did you complete the repair?	Go to **Step 7**	-
6	**NOTE:** **If the steering column upper and/or lower bearings are not serviceable, the steering will need to be replaced. Refer to Steering Column Replacement.** Replace the upper and/or lower bearings, if serviceable.Did you complete the repair?	Go to **Step 7**	-
7	Operate the steering column in order to verify the repair. Did you correct the condition?	System OK	Go to **Step 3**

REPAIR INSTRUCTIONS

INTERMEDIATE STEERING SHAFT REPLACEMENT

Removal Procedure

CAUTION: With wheels of the vehicle facing straight ahead, secure the steering wheel utilizing steering column anti-rotation pin, steering column lock, or a strap to prevent rotation. Locking of the steering column will prevent damage and a possible malfunction of the SIR system. The steering wheel must be secured in position before disconnecting the following components:

- **The steering column**
- **The intermediate shaft(s)**
- **The steering gear**

After disconnecting these components, do not rotate the steering wheel or move the front tires and wheels. Failure to follow this procedure may cause the SIR coil assembly to become un-centered and cause possible

damage to the SIR coil. If you think the SIR coil has become un-centered, refer to your specific SIR coil's centering procedure to re-center SIR Coil.

1. Disable the supplemental inflatable restraint system. Refer to **SIR Disabling and Enabling** .
2. Turn the steering wheel to the straight forward position and support it from movement.

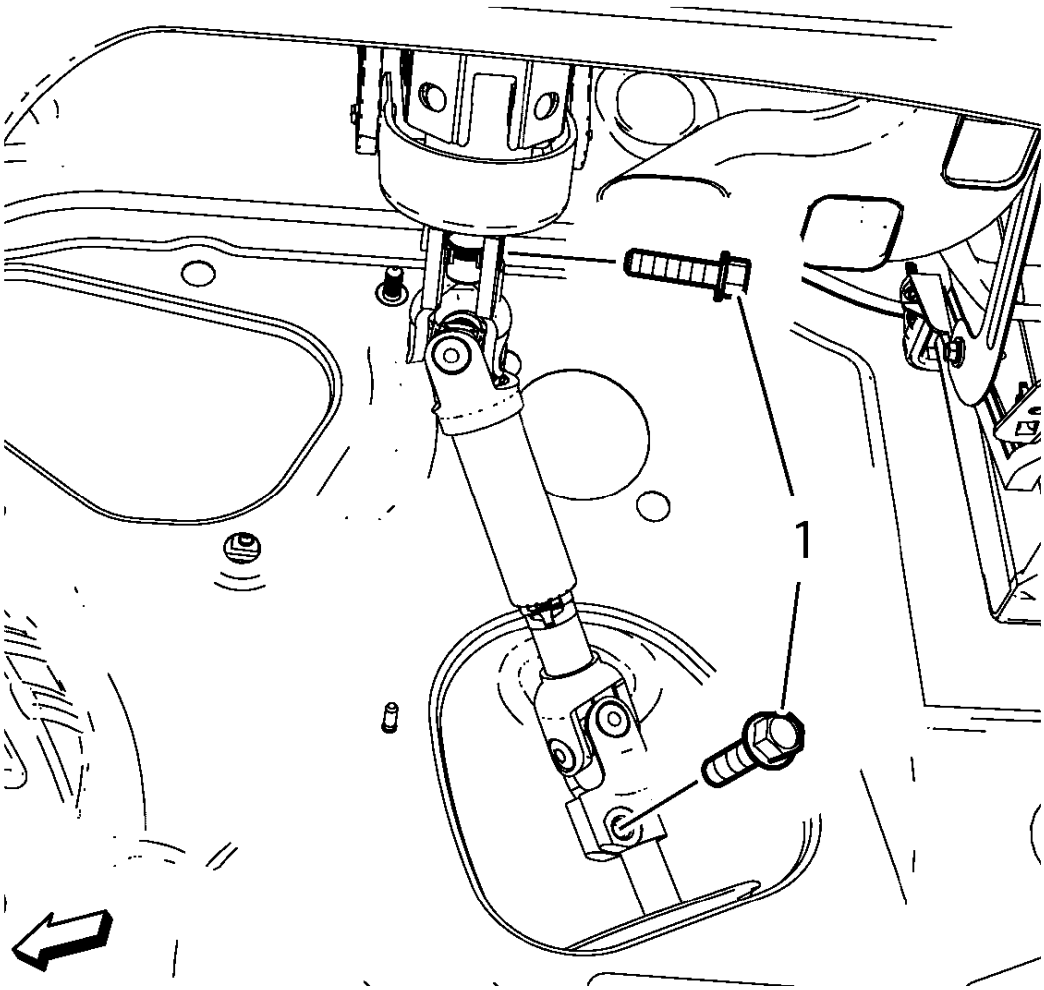

Fig. 2: Lower Steering Intermediate Shaft Bolts
Courtesy of GENERAL MOTORS COMPANY

3. Remove the upper and lower intermediate steering shaft bolts (1).

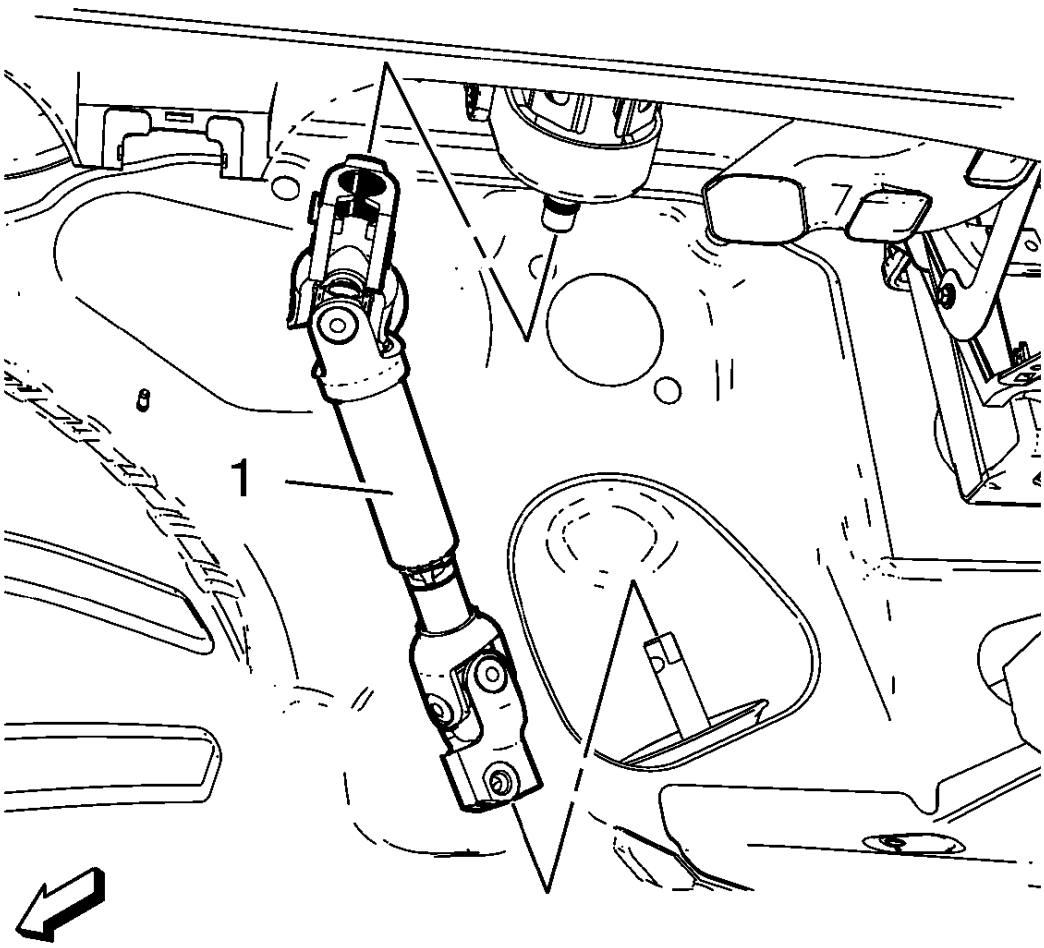

Fig. 3: View Of Intermediate Steering Shaft
Courtesy of GENERAL MOTORS COMPANY

4. Remove the intermediate steering shaft (1).

Installation Procedure

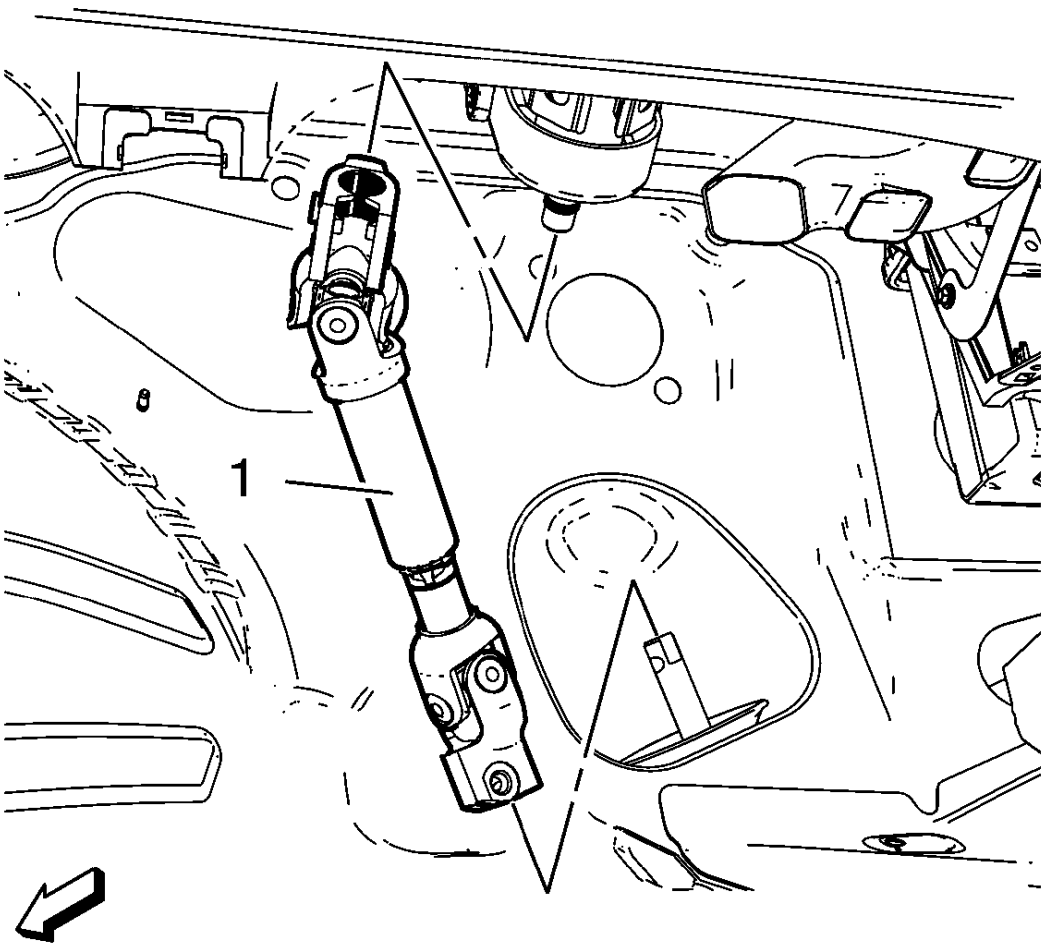

Fig. 4: View Of Intermediate Steering Shaft
Courtesy of GENERAL MOTORS COMPANY

1. Install the intermediate steering shaft (1).

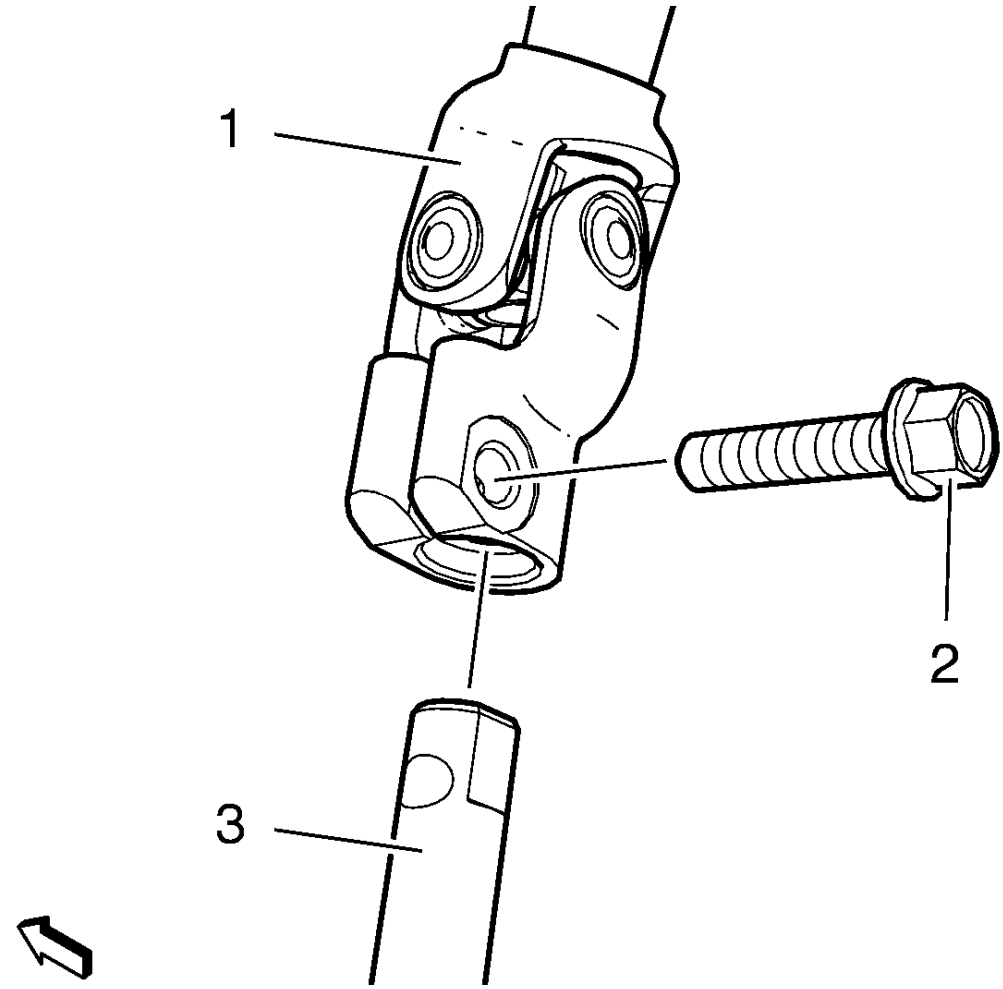

Fig. 5: Universal Joint, Steering Gear Pinion And Lower Bolt
Courtesy of GENERAL MOTORS COMPANY

2. Push the upper universal joint onto the steering column carefully.
3. Push down the lower universal joint onto the steering gear pinion.
4. Insert the lower bolt (2) with thread lock compound. Refer to **Adhesives, Fluids, Lubricants, and Sealers**.

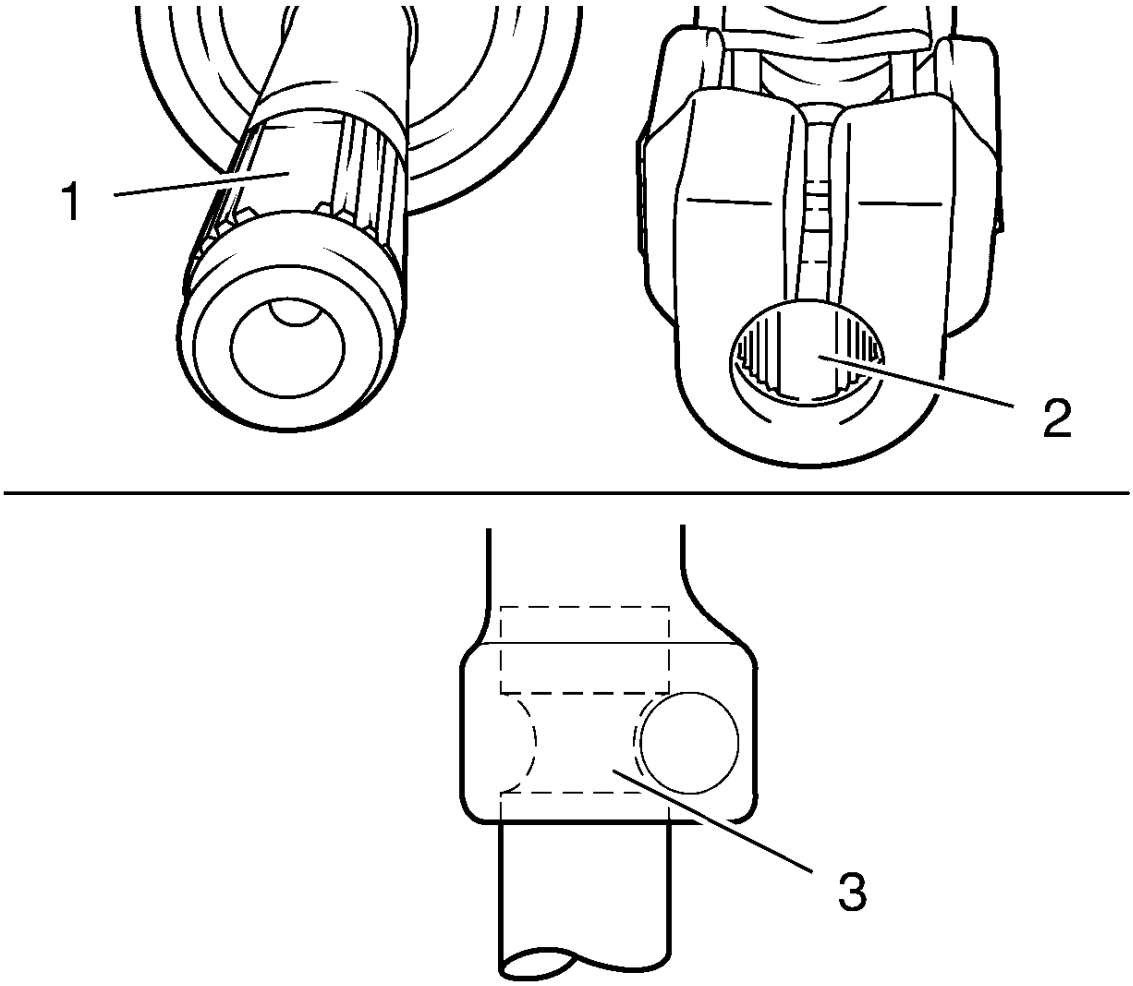

Fig. 6: Universal Joint And Steering Pinion Attachment Points
Courtesy of GENERAL MOTORS COMPANY

NOTE: **The recess (2) of the fine toothing in the universal joint have to align precisely with the recess (1) of the fine toothing on the steering pinion. The bore in the universal joint has to align with the groove on the steering pinion (3).**

5. Push the universal joint onto the steering pinion carefully as described in the above note.

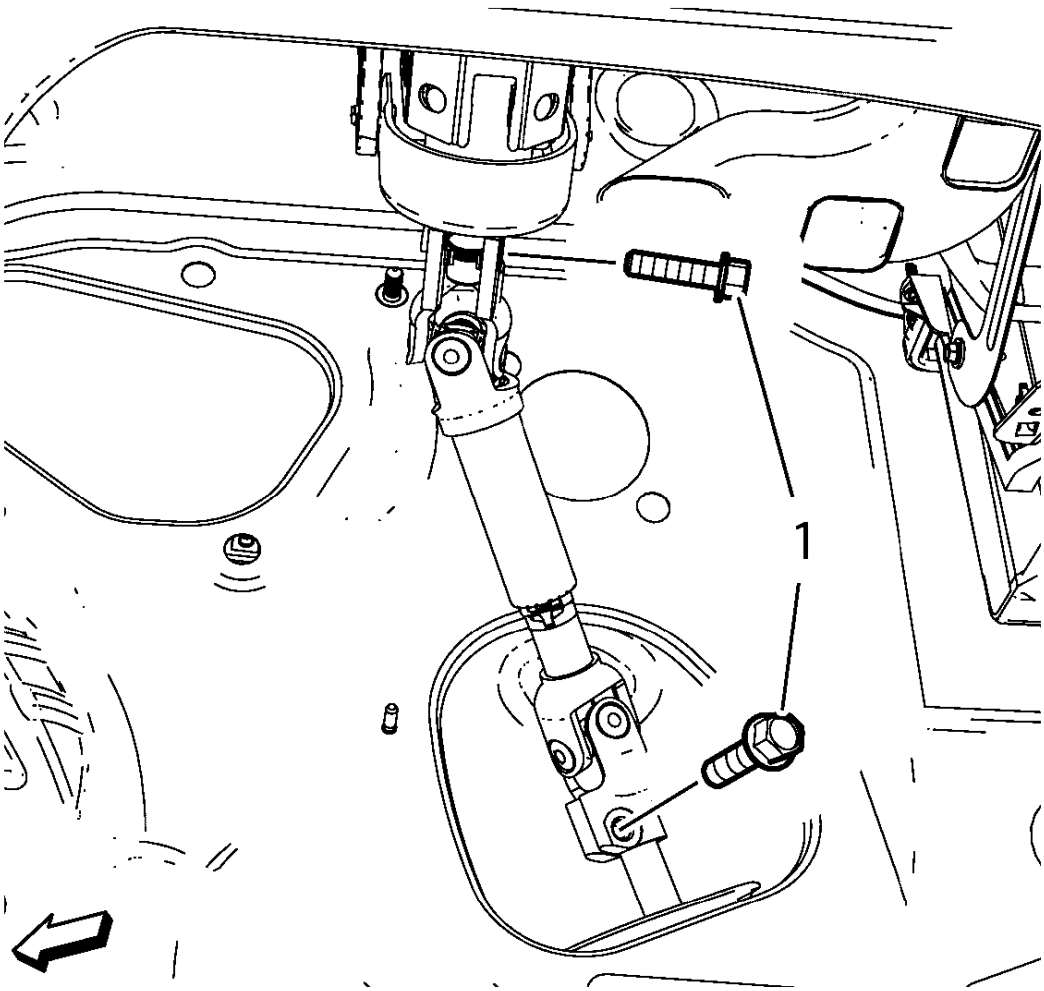

Fig. 7: Lower Steering Intermediate Shaft Bolts
Courtesy of GENERAL MOTORS COMPANY

6. Apply thread lock adhesive to upper shaft bolt. Refer to **Adhesives, Fluids, Lubricants, and Sealers**.

CAUTION: Refer to Fastener Caution .

7. Install the upper and lower intermediate steering shaft bolts (1) and tighten to 34 N.m (25 lb ft).
8. Center the steering angle sensor. Refer to **Steering Angle Sensor Centering** .

STEERING COLUMN UPPER TRIM COVER REPLACEMENT

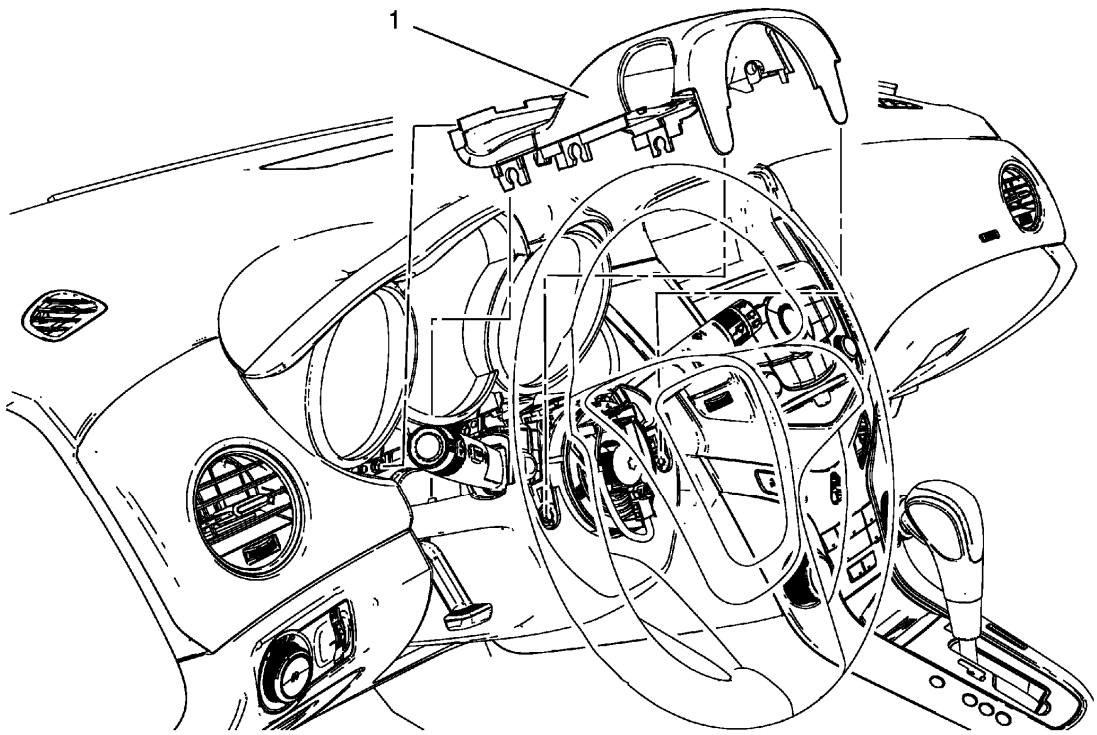

Fig. 8: View Of Steering Column Upper Trim Cover
Courtesy of GENERAL MOTORS COMPANY

Steering Column Upper Trim Cover Replacement

Callout	Component Name
Preliminary Procedures Disable the SIR system. Refer to **SIR Disabling and Enabling** .	
1	Steering Column Upper Trim Cover **Procedure** 1. Unclip the steering column upper trim cover from the steering column lower trim cover. 2. Disengage the steering column upper trim cover flexible part from instrument cluster. 3. Carefully pull plastic part rearward from instrument cluster.

STEERING COLUMN LOWER TRIM COVER REPLACEMENT

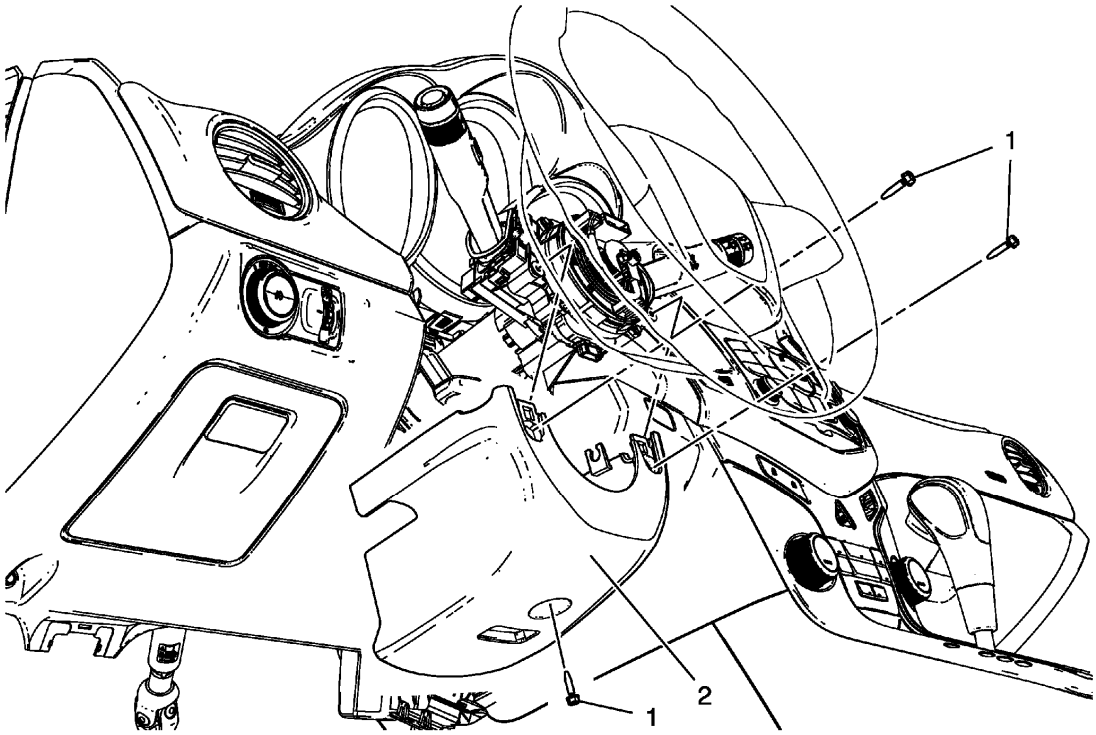

Fig. 9: View Of Steering Column Lower Trim Cover And Bolts
Courtesy of GENERAL MOTORS COMPANY

Steering Column Lower Trim Cover Replacement

Callout	Component Name
Preliminary Procedure Remove the steering column upper trim cover. Refer to **Steering Column Upper Trim Cover Replacement**.	
1	Steering Column Lower Trim Cover Bolt (Qty: 3) **CAUTION:** **Refer to Fastener Caution .** **Tighten** 2.5 N.m (22 lb in)
2	Steering Column Lower Trim Cover **Procedure** Turn the steering wheel until the bolts are reachable.

TURN SIGNAL SWITCH REPLACEMENT

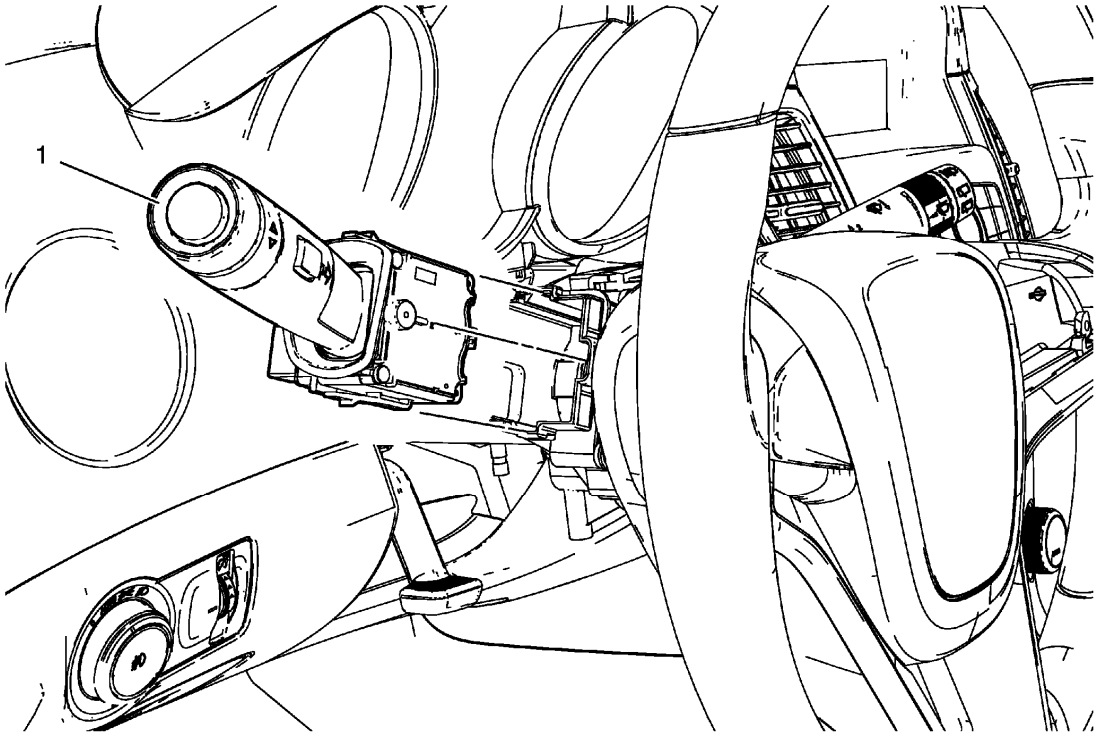

Fig. 10: View Of Turn Signal Switch
Courtesy of GENERAL MOTORS COMPANY

Turn Signal Switch Replacement

Callout	Component Name
Preliminary Procedure Remove the steering column lower trim cover. Refer to **Steering Column Lower Trim Cover Replacement**.	
1	Turn Signal Switch **Procedure** 1. Disconnect any electrical connectors as needed. 2. Release the plastic retaining tabs to release the turn signal switch from switch bracket.

TURN SIGNAL SWITCH BRACKET REPLACEMENT

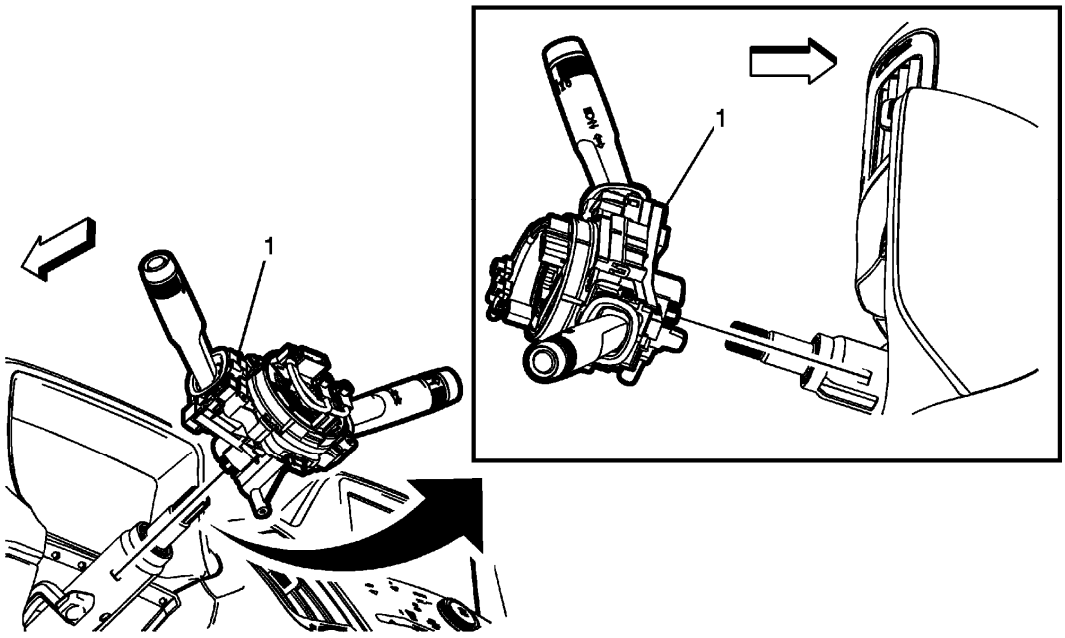

Fig. 11: Turn Signal Switch Bracket
Courtesy of GENERAL MOTORS COMPANY

Turn Signal Switch Bracket Replacement

Callout	Component Name
Preliminary Procedures 1. Remove the steering wheel. Refer to **Steering Wheel Replacement**. 2. Remove the upper trim cover and the lower trim cover from the steering column. Refer to **Steering Column Lower Trim Cover Replacement**.	
1	Turn Signal Switch Bracket **Procedure** 1. Disconnect any electrical connectors as necessary. 2. Release the 2 tabs in order to release the turn signal switch bracket from the steering column. 3. Transfer any parts as necessary. Refer to the following procedures: • **Turn Signal Switch Replacement** • **Windshield Wiper and Washer Switch Replacement** • **Steering Wheel Airbag Coil Replacement** • **Steering Angle Sensor Replacement**

STEERING WHEEL REPLACEMENT

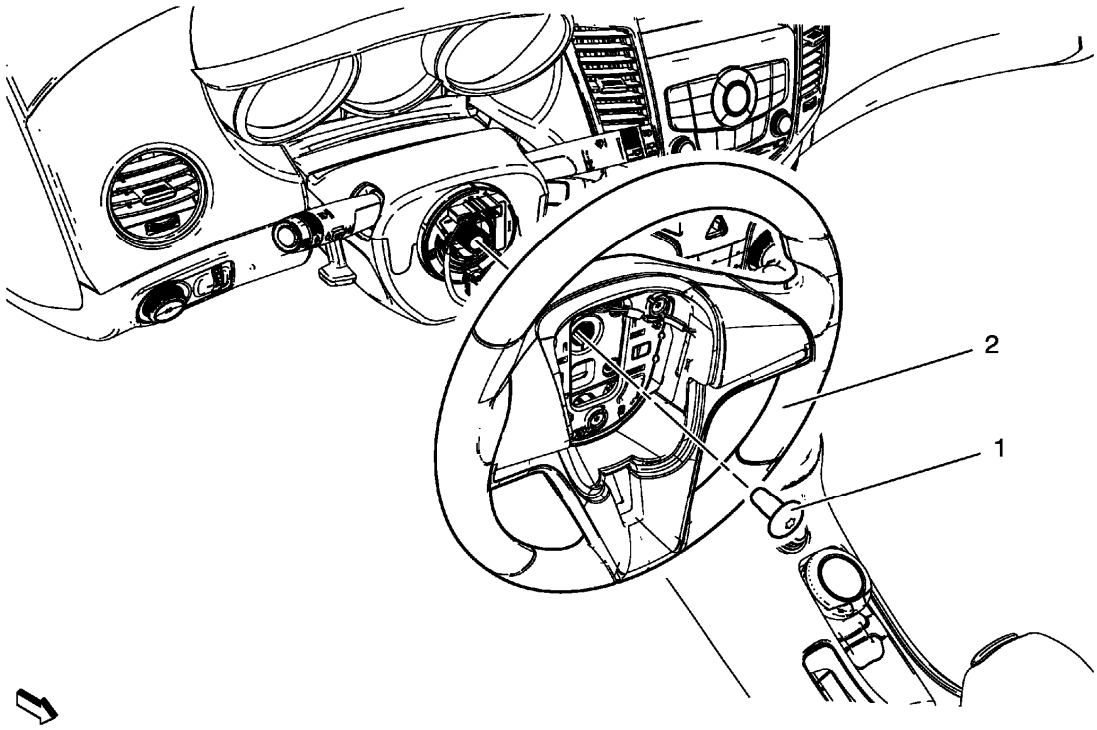

Fig. 12: View Of Steering Wheel And Bolt
Courtesy of GENERAL MOTORS COMPANY

Steering Wheel Replacement

Callout	Component Name
Prelimary Procedure Remove the inflatable restraint steering wheel module. Refer to **Airbag Steering Wheel Module Replacement** .	
1	Steering Wheel Bolt **CAUTION:** **Refer to Fastener Caution .** **Procedure** 1. Clean thread of the bolt. 2. Apply locking compound to the thread. Refer to **Adhesives, Fluids, Lubricants, and Sealers** **Tighten** 30 N.m (23 lb ft)
	Steering Wheel **Procedure**

2	1. Disconnect electrical connectors as needed. 2. Remove the steering wheel carefully.

STEERING WHEEL SPOKE LOWER COVER REPLACEMENT

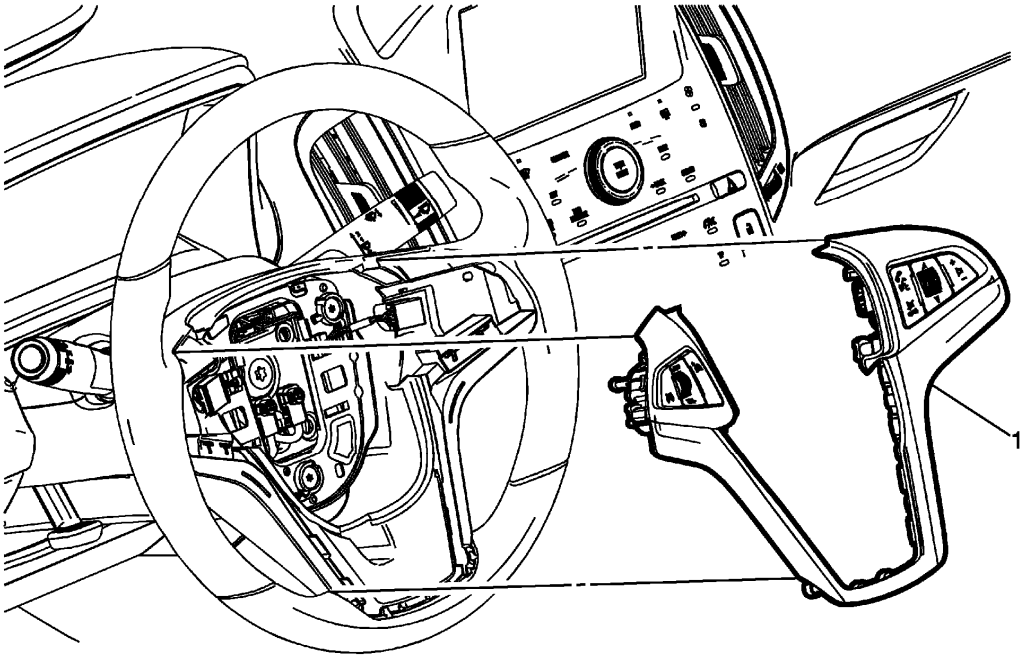

Fig. 13: Steering Wheel Spoke Lower Cover
Courtesy of GENERAL MOTORS COMPANY

Steering Wheel Spoke Lower Cover Replacement

Callout	Component Name
Preliminary Procedure Remove the steering wheel inflatable restraint module. Refer to **Airbag Steering Wheel Module Replacement** .	
1	Steering Wheel Lower Cover **Procedure** 1. Use a trim tool in order to remove the steering wheel lower cover and the components covering the spokes of the steering wheel. 2. Disconnect any electrical connectors as necessary. 3. Transfer any parts as necessary. Refer to **Cruise Control Switch Replacement** , and to **Radio Control Switch Replacement - Steering Wheel** as necessary.

STEERING COLUMN REPLACEMENT

Special Tools

EN-45059 Angle Meter

For equivalent regional tools, refer to **Special Tools**.

CAUTION: With wheels of the vehicle facing straight ahead, secure the steering wheel utilizing steering column anti-rotation pin, steering column lock, or a strap to prevent rotation. Locking of the steering column will prevent damage and a possible malfunction of the SIR system. The steering wheel must be secured in position before disconnecting the following components:

- **The steering column**
- **The steering shaft coupling**
- **The intermediate shaft(s)**

After disconnecting these components, do not rotate the steering wheel or move the front tires and wheels. Failure to follow this procedure may cause the SIR coil assembly to become un-centered and cause possible damage to the SIR coil. If you think the SIR coil has became un-centered, refer to your specific SIR coil's centering procedure to re-center SIR Coil.

CAUTION: Once the steering column is removed from the car, the column is extremely susceptible to damage. Dropping the column on its end could collapse the steering shaft or loosen the plastic injections which maintain column rigidity. Leaning on the column could cause the jacket to bend or deform. Any of the above damage could impair the column's collapsible design. If it is necessary to remove the steering wheel, use only the specified steering wheel puller. Under no conditions should the end of the shaft be hammered upon as hammering could loosen plastic injections which maintain column rigidity.

Removal Procedure

1. If equipped, remove the inflatable restraint instrument panel lower module. Refer to **Instrument Panel Lower Airbag Replacement - Driver Side** .
2. Remove the intermediate steering shaft. Refer to **Intermediate Steering Shaft Replacement**.
3. Remove the turn signal switch bracket. Refer to **Turn Signal Switch Bracket Replacement**
4. If equipped, remove the ignition and start switch housing. Refer to **Ignition and Start Switch Housing Replacement**
5. Disconnect electrical connectors as needed.

NOTE: Install tie straps between the tilt lever bracket and the base of the steering

column to prevent the steering column jacket from pulling apart. The tilt lever MUST be in the LOCK (FULL UP) position during the steering column removal and installation to ensure that the tilt lever bracket remains rigid. Also install tie straps around the tilt lever and the steering column jacket to keep the tilt lever in the LOCK position. Do not bend the steering column energy absorbing straps located on the upper steering column mounting bracket.

6. Install tie straps as described above.

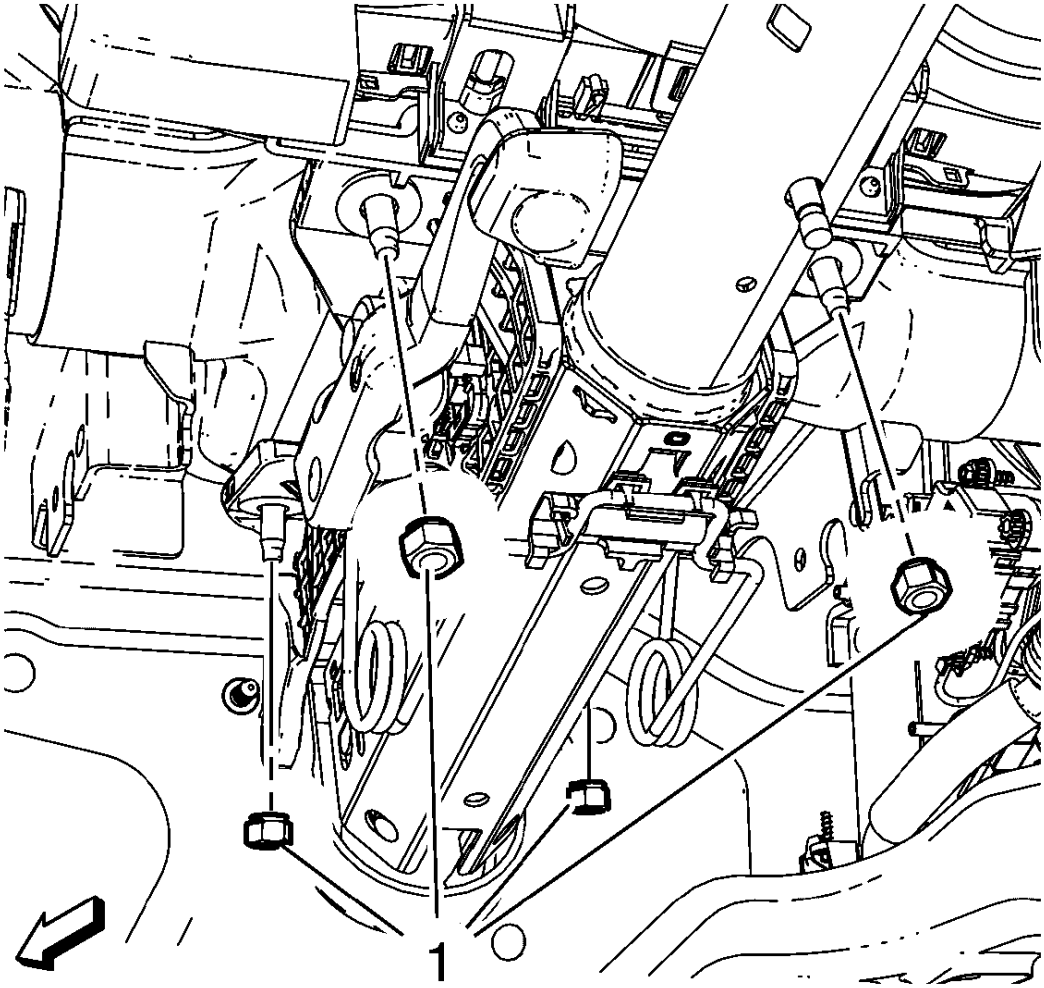

Fig. 14: Steering Column Nuts
Courtesy of GENERAL MOTORS COMPANY

7. Remove and DISCARD the 4 steering column nuts (1).

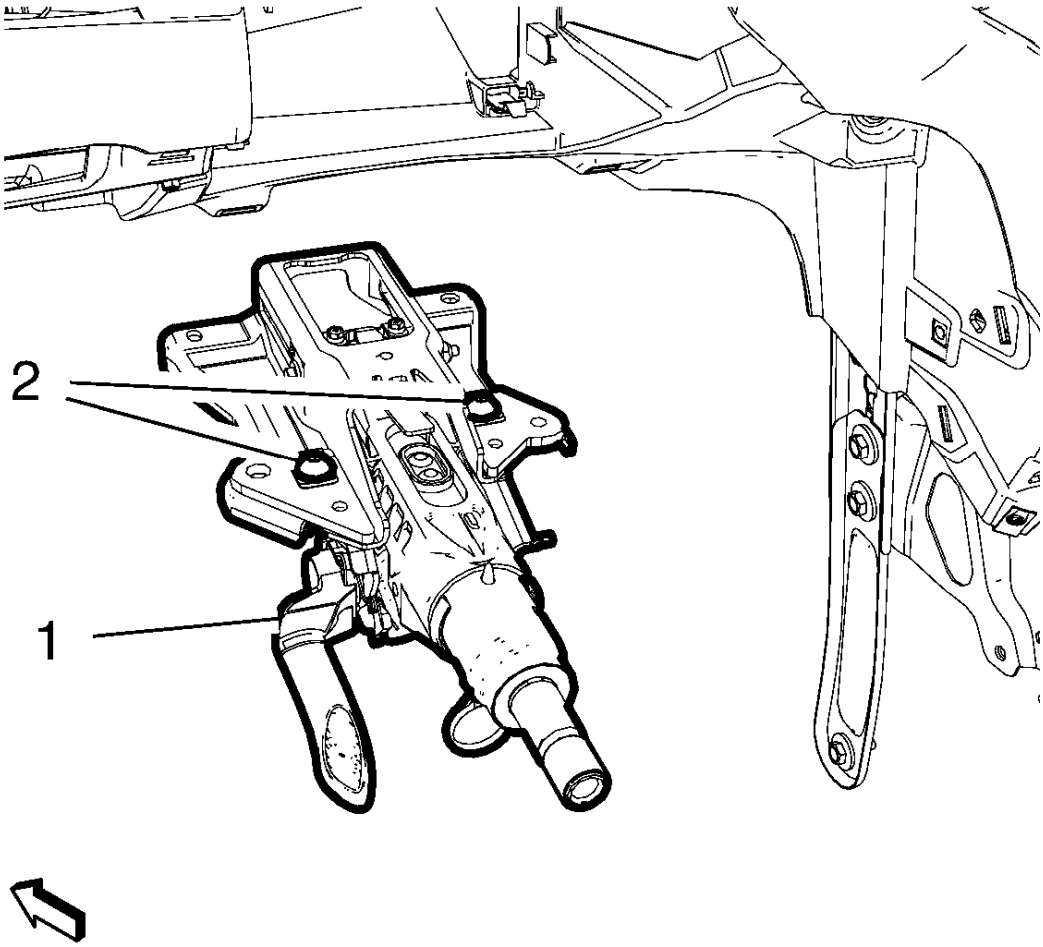

Fig. 15: Steering Column Tie Strap Bolts
Courtesy of GENERAL MOTORS COMPANY

WARNING: The steering column tie strap bolts are torque sensitive and tightened during vehicle production. Do not loosen or tighten the tie strap bolts during service because damage to the steering column may result. A damaged steering column might lead to a vehicle malfunction and personal injury or death if the vehicle is in a crash.

8. Remove the steering column (1). The steering column tie strap bolts (2) may never be touched as mentioned in the danger above.

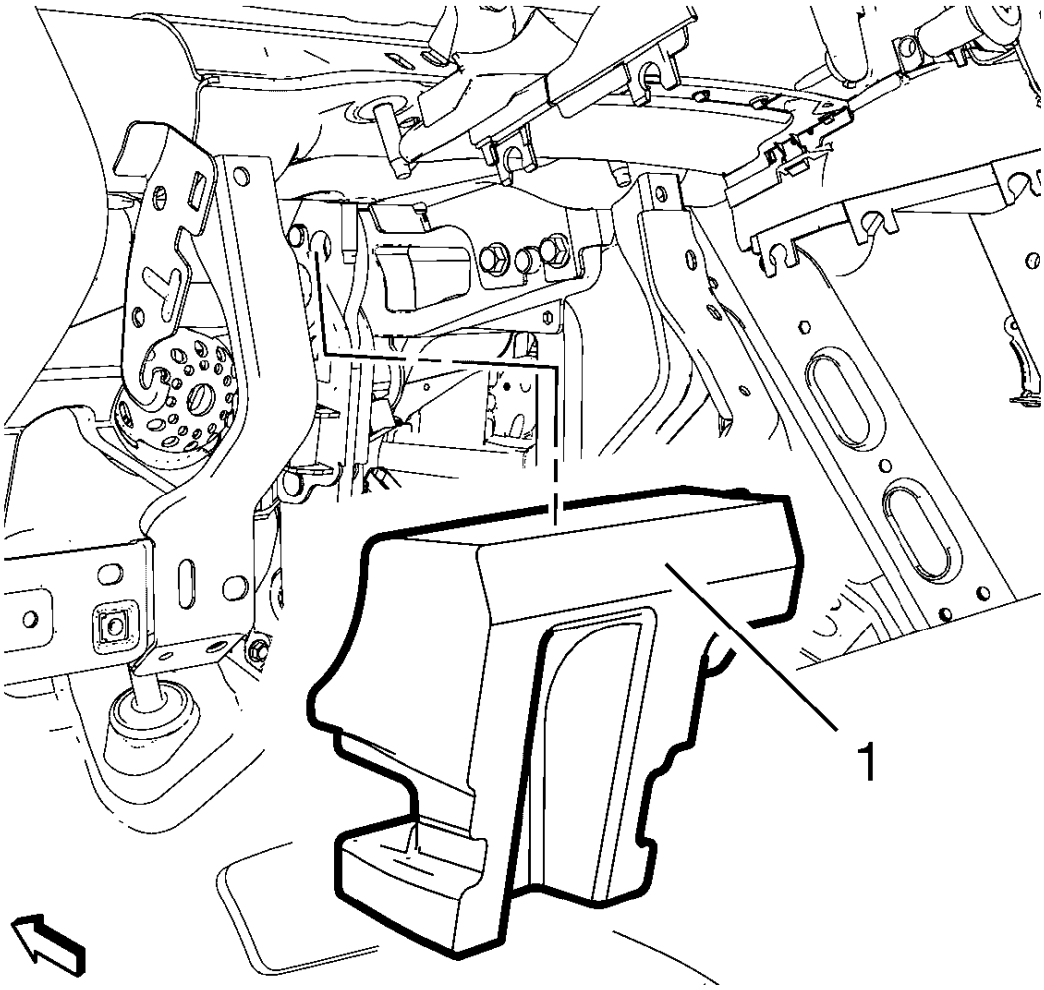

Fig. 16: Steering Column Insulator
Courtesy of GENERAL MOTORS COMPANY

9. Remove the steering column (1) insulator if necessary.

Installation Procedure

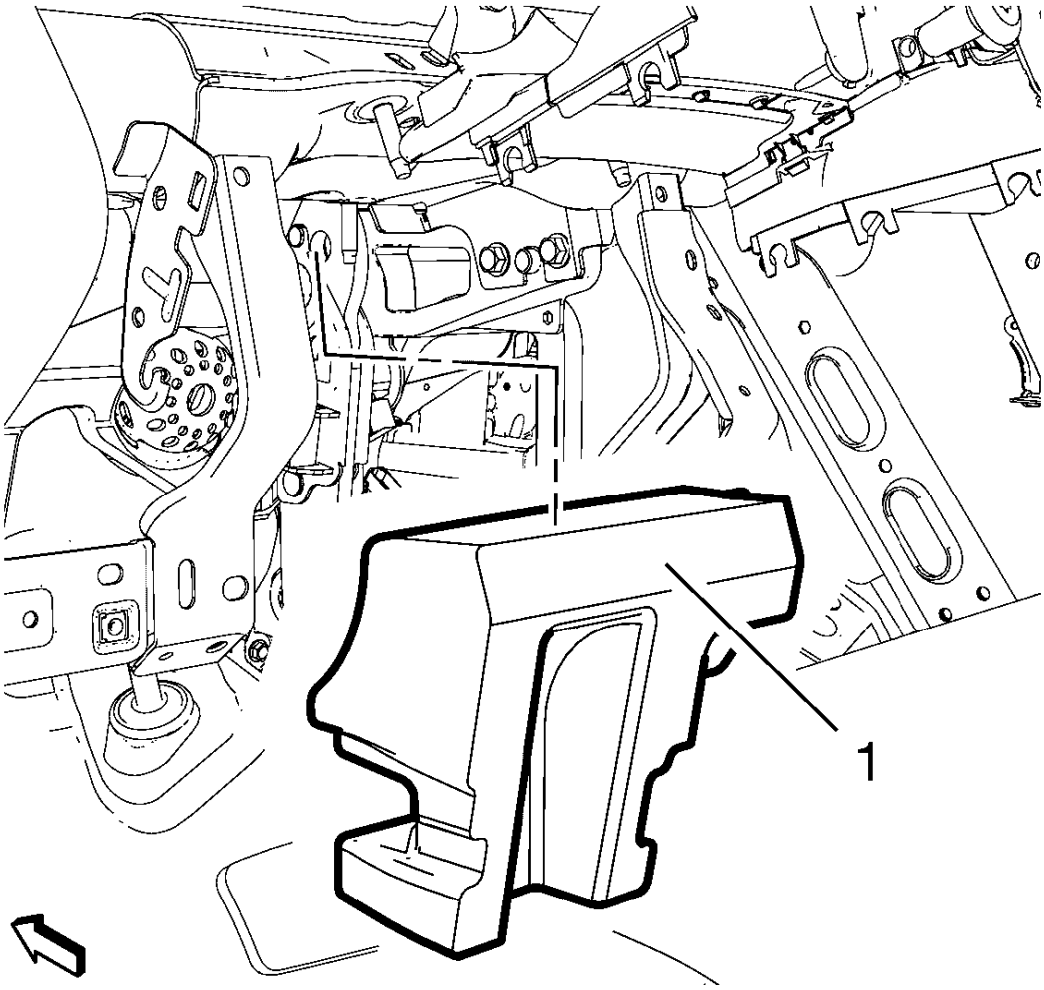

Fig. 17: Steering Column Insulator
Courtesy of GENERAL MOTORS COMPANY

1. Install the steering column (1) insulator if necessary.

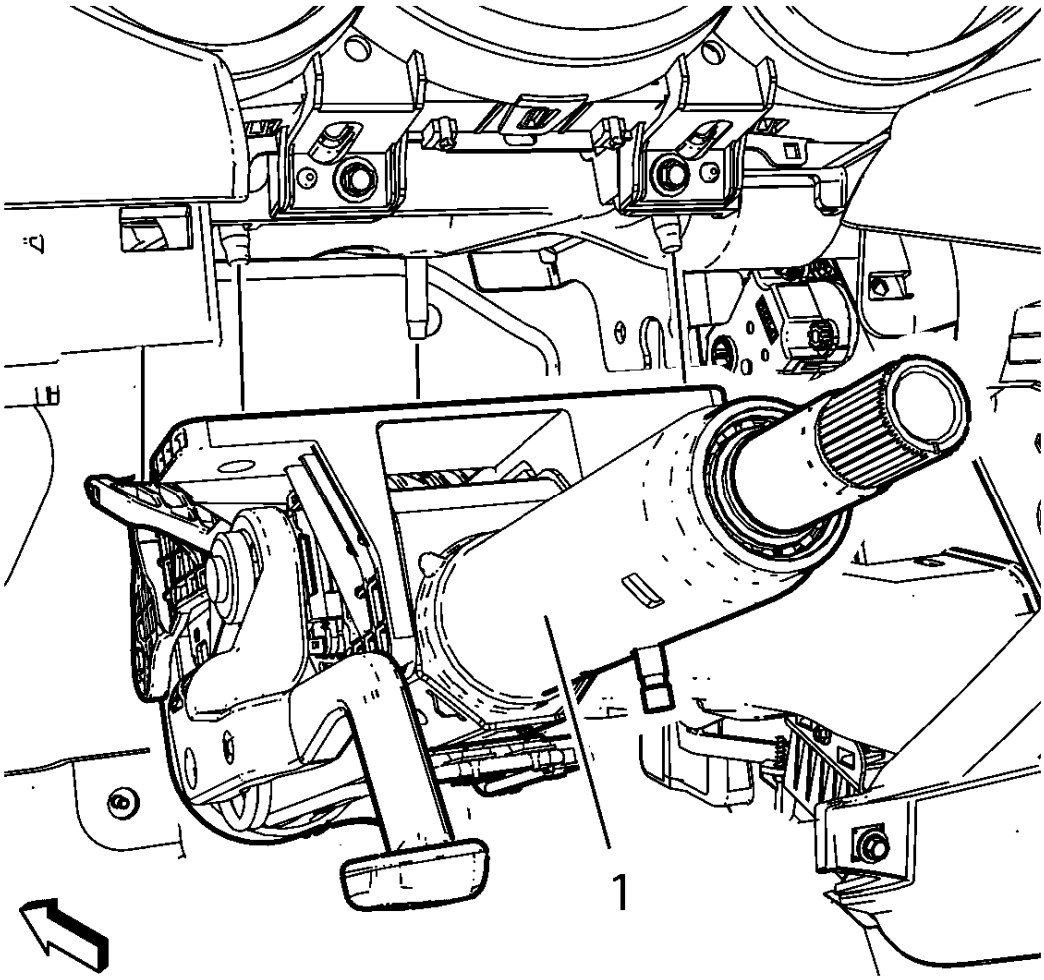

Fig. 18: View Of Steering Column
Courtesy of GENERAL MOTORS COMPANY

NOTE:

- **Start all nuts by hand before finalizing any torques.**
- **Do not bend the steering column energy absorbing straps located on the upper steering column mounting bracket during installation.**

2. Install the steering column (1).

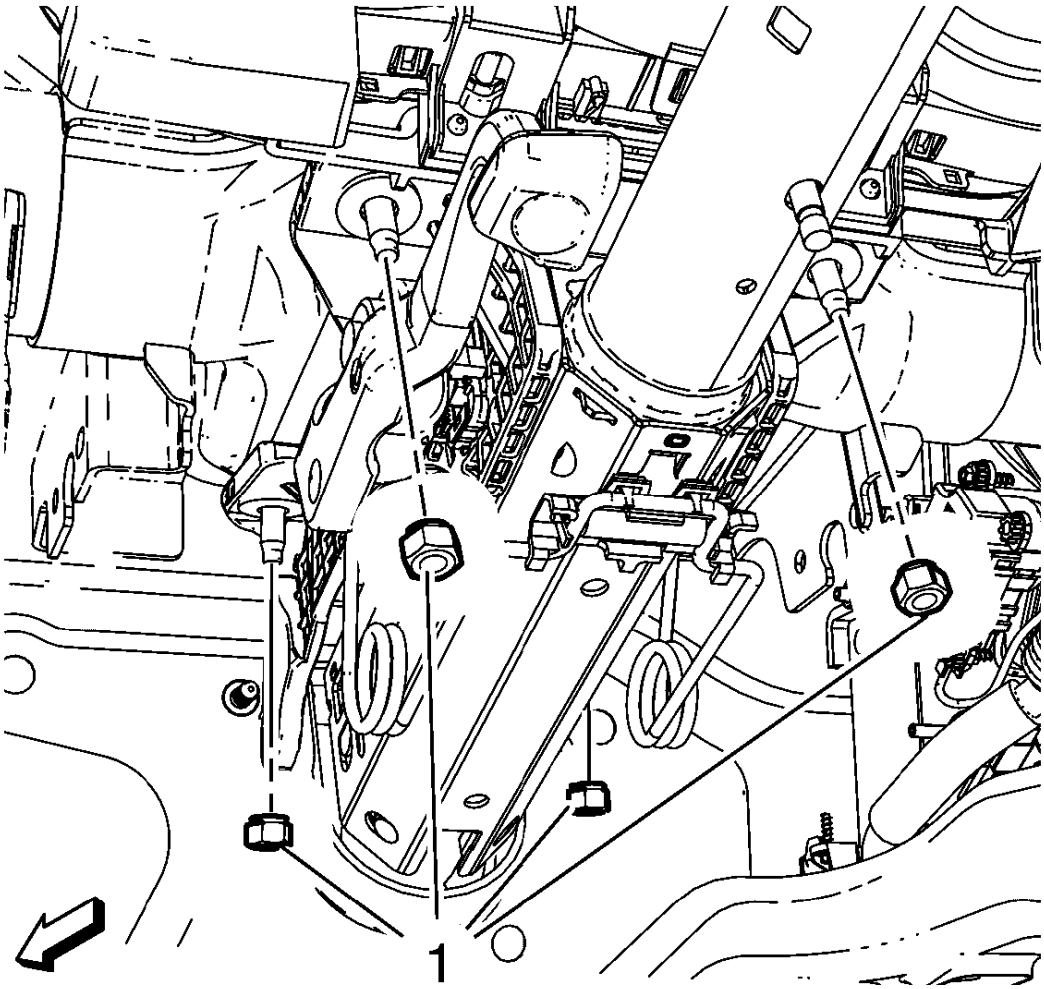

Fig. 19: Steering Column Nuts
Courtesy of GENERAL MOTORS COMPANY

WARNING: Refer to Torque-to-Yield Fastener Warning .

CAUTION: Refer to Fastener Caution .

3. Install the 4 NEW steering column nuts (1) and tighten a first pass to 22 N.m (16 lb ft).
4. Tighten the 4 NEW steering column nuts a final pass to an additional 45 degrees, using the **EN-45059** meter.

WARNING: In order to ensure the intended function of the steering column in a vehicle during a crash and in order to avoid personal injury to the

driver, perform the following:

- **Tighten the steering column lower fasteners before you tighten the steering column upper fasteners. Failure to do this can damage the steering column.**
- **Tighten the steering column fasteners to the specified torque. Overtightening the upper steering column fasteners could affect the steering column collapse.**

5. Remove the tie straps.
6. Connect any electrical connectors as needed.
7. If equipped, install the ignition and start switch housing. Refer to **Ignition and Start Switch Housing Replacement**
8. Install the turn signal switch bracket. Refer to **Turn Signal Switch Bracket Replacement**
9. Install the intermediate steering shaft. Refer to **Intermediate Steering Shaft Replacement**.
10. If equipped, install the inflatable restraint instrument panel lower module. Refer to **Instrument Panel Lower Airbag Replacement - Driver Side** .
11. Calibrate the steering angle sensor. Refer to **Power Steering Control Module Calibration** .

STEERING COLUMN DASH INNER SEAL REPLACEMENT

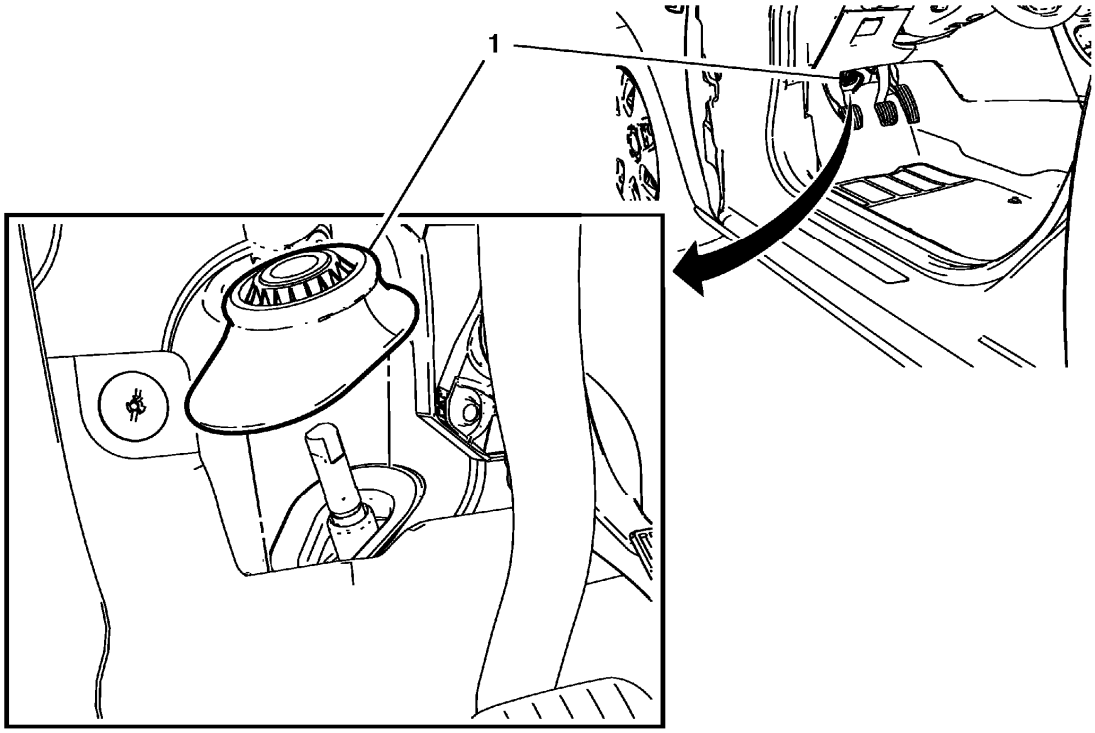

Fig. 20: Steering Column Dash Inner Seal
Courtesy of GENERAL MOTORS COMPANY

Steering Column Dash Inner Seal Replacement

Callout	Component Name
Preliminary Procedure Disconnect the intermediate steering shaft from the steering gear. Refer to **Intermediate Steering Shaft Replacement**.	
1	Steering Column Dash Inner Seal **Procedure** Position the steering column dash inner seal over the steering gear and on the dash panel. Check for proper installation.

STEERING COLUMN DASH OUTER SEAL REPLACEMENT

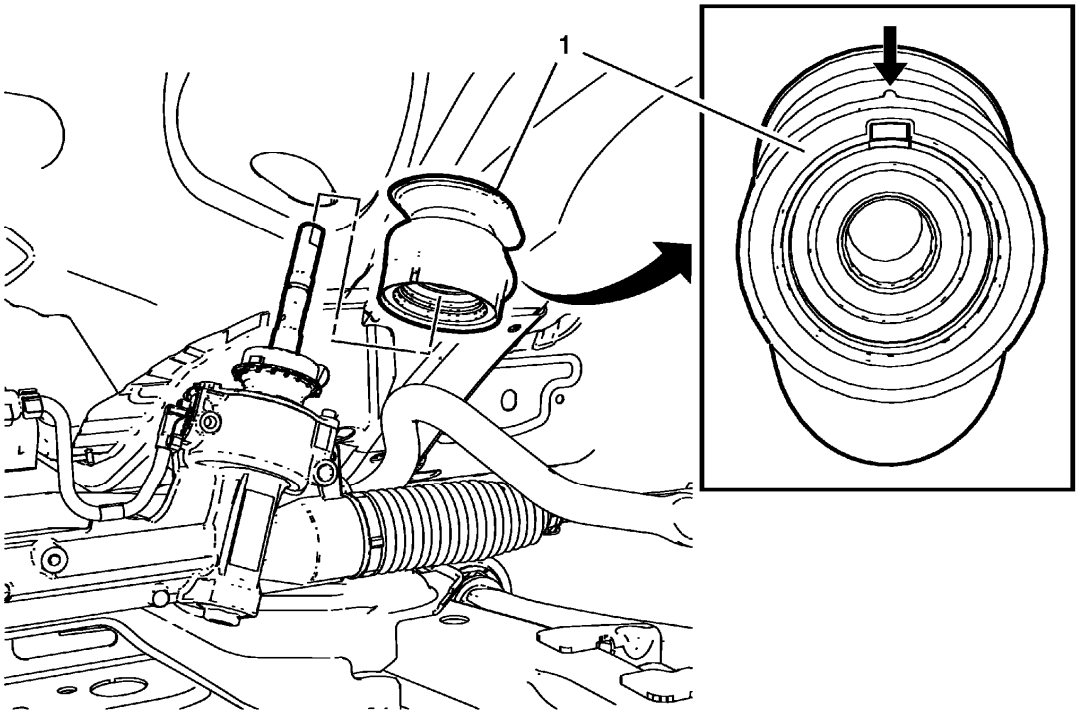

Fig. 21: Steering Column Dash Outer Seal
Courtesy of GENERAL MOTORS COMPANY

Steering Column Dash Outer Seal Replacement

Callout	Component Name
Preliminary Procedures 1. Remove the steering column dash inner seal. Refer to **Steering Column Dash Inner Seal Replacement**. 2. Lower the front suspension frame and steering gear as needed to provide the clearance necessary to remove the steering column dash outer seal. Refer to **Steering Gear Replacement** .	
	Steering Column Dash Outer Seal

1	**CAUTION:** **Ensure that the steering column dash seal is installed properly onto steering gear rack pinion housing. The sealing lip MUST rest on lower steering column cover surface evenly. To ease installation of the seal, apply liquid soap to the sealing lip. After installation, verify that the seal lip does not protrude into the vehicle's interior. Improper installation could result in poor sealing performance and water intrusion into the vehicle.** **Procedure** To ensure a proper re-installation, align the nose on steering column dash outer seal and the nose on the steering gear.

DESCRIPTION AND OPERATION

STEERING WHEEL AND COLUMN DESCRIPTION AND OPERATION

The steering wheel and column has 4 primary functions:

- Vehicle steering
- Vehicle security
- Driver convenience
- Driver safety

Vehicle Steering

The steering wheel is the first link between the driver and the vehicle. The steering wheel is fastened to a steering shaft within the column. At the lower end of the column, the intermediate shaft connects the column to the steering gear.

Vehicle Security, Found on Some Vehicle Models

Theft deterrent components are mounted and designed into the steering column. The following components allow the column to be locked in order to minimize theft:

- The ignition switch-location varies
- The steering column lock-content varies
- The ignition cylinder-location varies
- The theft deterrent module-location varies

Driver Convenience

The steering wheel and column may also have driver controls attached for convenience and comfort. The following controls may be mounted on or near the steering wheel or column.

- The turn signal switch
- The hazard switch
- The headlamp dimmer switch
- The wiper/washer switch
- The horn pad/cruise control switch
- The redundant radio/entertainment system controls
- The manual/power tilt or tilt/telescoping functions
- The power pedal adjustment control switch
- The navigation
- The HVAC controls

Driver Safety

The steering wheel and column has safety features to protect the driver. The following components may be mounted on or near the steering column:

Energy-Absorbing Steering Column

The energy-absorbing steering column compresses in the event of a front-end collision, which reduces the chance of injury to the driver. The energy-absorbing feature, collapsible steering shaft, and break away mounting features help reduce the injury in the event of an accident. In addition to these features, the following driver safety features may be on the steering column:

SIR Coil and Module

For additional information on the operation of the SIR coil and module, refer to **Supplemental Inflatable Restraint System Description and Operation** .

Steering Wheel Angle Sensor or Steering Wheel Position Sensor

The steering wheel position sensor is located somewhere along the steering shaft assembly. The sensor measures the position of the steering wheel and the speed at which it is rotated. A signal representing this measurement is provided to the vehicle stability enhancement system (VSES) module. The VSES module uses this signal, along with several others representing different vehicle conditions, to monitor the driving behavior of the vehicle and ensure that it stays in control. If the VSES module determines that the vehicle is out of control it provides signals to the powertrain control module (PCM) and the ABS module. These output signals are used to modulate the transmission torque and brake pressure of each of the vehicles wheels in order to regain control of the vehicle.

SPECIAL TOOLS AND EQUIPMENT

SPECIAL TOOLS

Illustration	Tool Number/Description

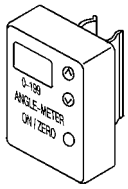	EN-45059 J 45059 KM-470-B Angle Meter

2013 SUSPENSION

Front Suspension - Cruze

SPECIFICATIONS

FASTENER TIGHTENING SPECIFICATIONS

Fastener Tightening Specifications

Application	Specification	
	Metric	English
Control Arm to Steering Knuckle Bolt and Nut		
• First Pass:	50 N.m (1)	37 lb ft (1)
• Second Pass: Loosen the Nut	120 degrees	
• Third Pass:	50 N.m	37 lb ft
• Final Pass:	35 degrees	
Control Arm to Subframe Bolt - Front	70 N.m + 75-90 degrees (1)	52 lb ft + 75-90 degrees (1)
Control Arm to Subframe Bolt - Rear	70 N.m + 75-90 degrees (1)	52 lb ft + 75-90 degrees (1)
Front Bearing to Steering Knuckle Bolt	90 N.m + 60-75 degrees (1)	66 lb ft + 60-75 degrees (1)
Front Stabilizer Shaft Insulator Clamp Bolt	22 N.m + 30 degrees (1)	16 lb ft + 30 degrees (1)
Front Suspension Strut Lower Bolt and Nut	90 N.m + 60 degrees (1)	66 lb ft + 60 degrees (1)
Front Suspension Strut Mount Nut	65 N.m	48 lb ft
Front Suspension Support Bolt	60 N.m + 35 degrees (1)	45 lb ft + 35 degrees (1)
Rear Control Arm Bushing to Control Arm	55 N.m + 45-60 degrees (1)	41 lb ft + 45-60 degrees (1)
Stabilizer Shaft Link to Strut Nut	65 N.m (1)	48 lb ft (1)
Steering Gear Outer Tie Rod to Steering Knuckle Nut	35 N.m	26 lb ft
Steering Knuckle to Strut	90 N.m + 60-75 degrees (1)	66 lb ft + 60-75 degrees (1)
Strut Shaft Nut	70 N.m	52 lb ft
1 = Use NEW Fastener.		

COMPONENT LOCATOR

FRONT SUSPENSION COMPONENTS

Front Suspension Components

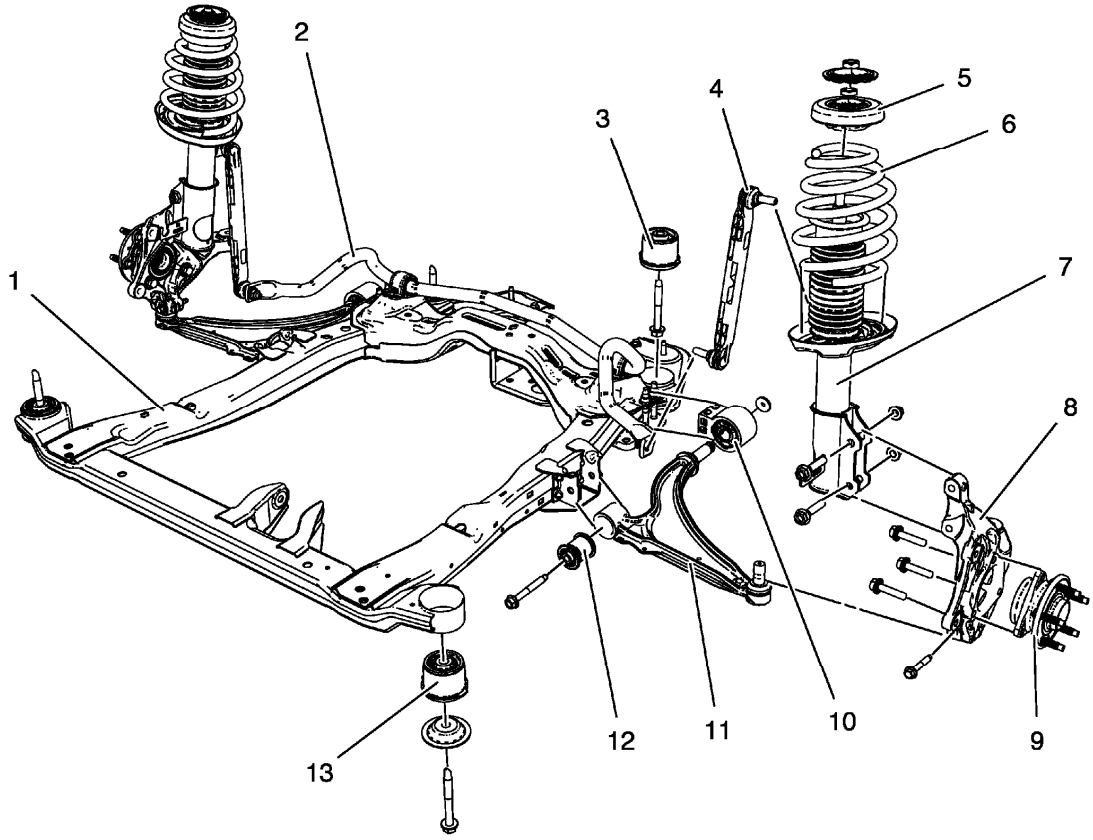

Fig. 1: Identifying Front Suspension Components
Courtesy of GENERAL MOTORS COMPANY

Callout	Component Name
1	Drivetrain and Front Suspension Frame
2	Front Stabilizer Shaft
3	Drivetrain and Front Suspension Frame Rear Insulator
4	Front Stabilizer Shaft Link
5	Front Suspension Strut Insulator Assembly
6	Front Spring
7	Shock Absorber Assembly
8	Steering Knuckle
9	Front Wheel Bearing/Hub Assembly
10	Front Lower Control Arm Rear Bushing
11	Front Lower Control Arm
12	Front Lower Control Arm Bushing

13	Drivetrain and Front Suspension Frame Rear Insulator

REPAIR INSTRUCTIONS

STABILIZER SHAFT REPLACEMENT

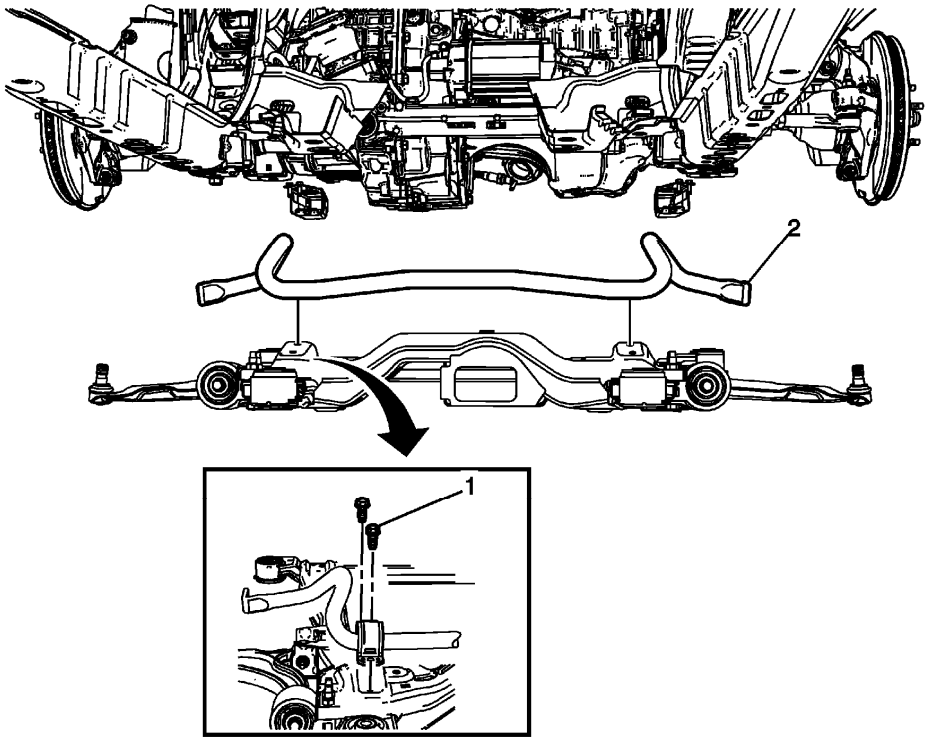

Fig. 2: Stabilizer Shaft
Courtesy of GENERAL MOTORS COMPANY

Stabilizer Shaft Replacement

Callout	Component Name
Preliminary Procedure 1. Raise and support the vehicle. Refer to **Lifting and Jacking the Vehicle** . 2. Remove the stabilizer shaft link from the stabilizer shaft. Refer to **Stabilizer Shaft Link Replacement**.	
	Front Stabilizer Shaft Insulator Clamp Bolt (Qty: 2) **WARNING:** **This component is equipped with torque-to-yield fasteners. Install a NEW torque-to-yield fastener when installing this component. Failure to replace the torque-to-yield fastener could cause bodily injury and damage to the vehicle or component.**

1	**CAUTION:** **This vehicle is equipped with torque-to-yield or single use fasteners. Install a NEW torque-to-yield or single use fastener when installing this component. Failure to replace the torque-to-yield or single use fastener could cause damage to the vehicle or component.** **CAUTION:** **Refer to Fastener Caution .** **Procedure** 1. Lower the Drivetrain and Front Suspension Frame Assembly. Refer to **Drivetrain and Front Suspension Frame Replacement** . 2. Lower the front suspension frame assembly enough to gain access to the stabilizer shaft insulator bolts. **Tighten** 1. First Pass: 22 N.m (16 lb ft). 2. Final Pass: plus 40 degrees.
2	Front Stabilizer Shaft **TIP:** The stabilizer shaft insulator and the clamps are serviced with the stabilizer shaft. They are Not service separately.

STABILIZER SHAFT LINK REPLACEMENT

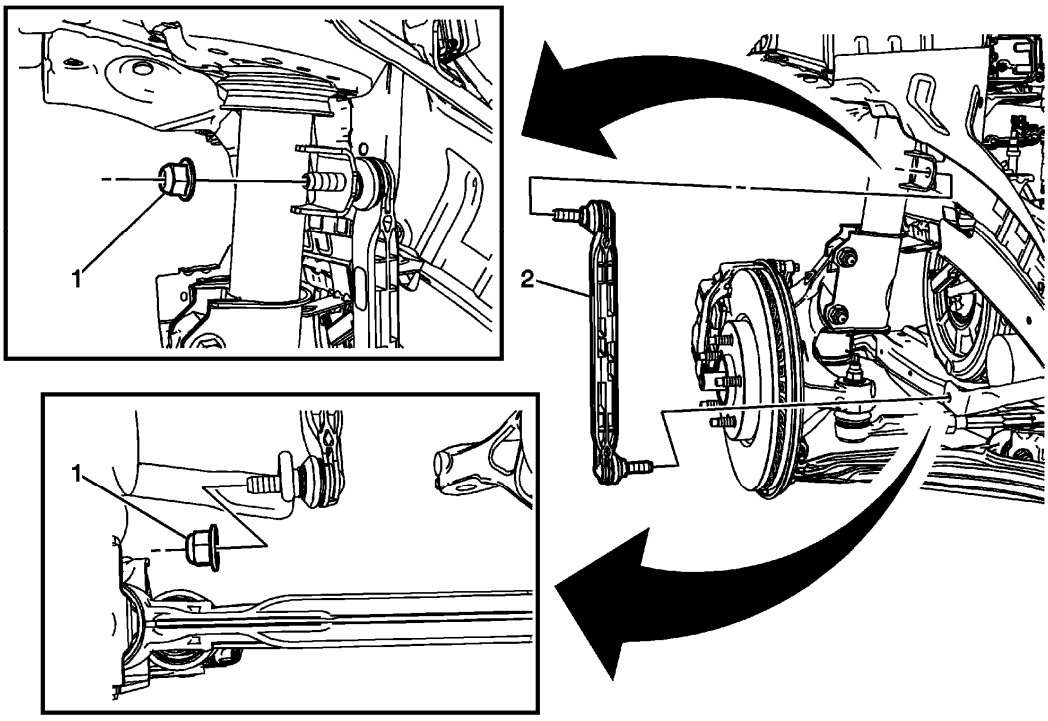

Fig. 3: Identifying Front Stabilizer Shaft Link And Front Stabilizer Shaft Nuts
Courtesy of GENERAL MOTORS COMPANY

Stabilizer Shaft Link Replacement

Callout	Component Name
Preliminary Procedure 1. Raise and support the vehicle. Refer to **Lifting and Jacking the Vehicle** . 2. Remove the tire and wheel assembly. Refer to **Tire and Wheel Removal and Installation** .	
1	Front Stabilizer Shaft Nut (Qty: 2) **CAUTION:** **Refer to Fastener Caution .** **CAUTION:** **This vehicle is equipped with torque-to-yield or single use fasteners. Install a NEW torque-to-yield or single use fastener when installing this component. Failure to replace the torque-to-yield or single use fastener could cause damage to the vehicle or component.** **Procedure** 1. Using the proper size allen wrench, hold the stabilizer shaft link ball stud while removing the stabilizer shaft nut.

	2. Remove and discard the nut. DO NOT re-use the nut, replace with NEW only. **Tighten** 65 N.m (48 lb ft)
2	Front Stabilizer Shaft Link

FRONT WHEEL BEARING AND HUB REPLACEMENT

Special Tools

EN-45059 Torque Angle Sensor Kit

For equivalent regional tools, refer to **Special Tools**.

Removal Procedure

1. Raise and support the vehicle. Refer to **Lifting and Jacking the Vehicle** .
2. Remove the brake rotor. Refer to **Front Brake Rotor Replacement (J60)** , **Front Brake Rotor Replacement (J67)** .

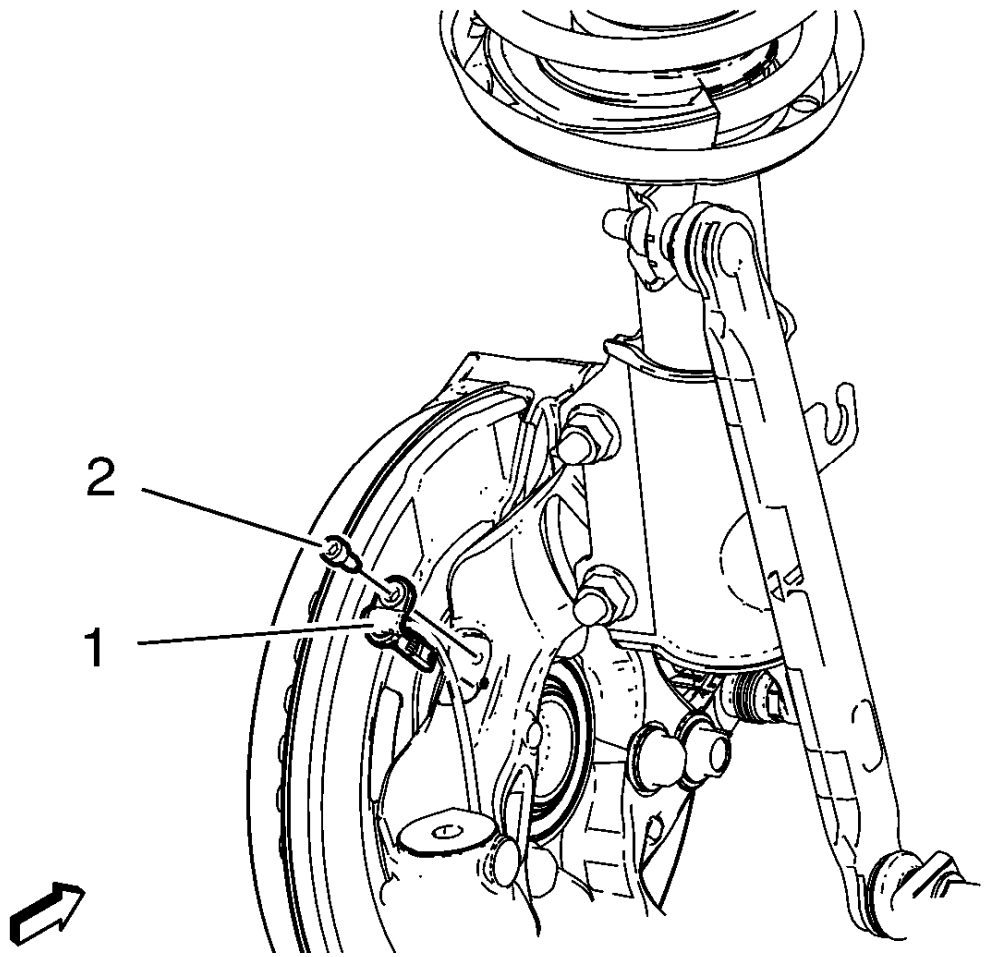

Fig. 4: Wheel Speed Sensor And Wheel Speed Sensor Screw
Courtesy of GENERAL MOTORS COMPANY

3. Remove the wheel speed sensor screw (2).
4. Remove the wheel speed sensor (1) from the steering knuckle.
5. Remove the wheel drive shaft from the front wheel bearing/hub. Refer to **Front Wheel Drive Shaft Replacement - Left Side** , and/or **Front Wheel Drive Shaft Replacement - Right Side** .

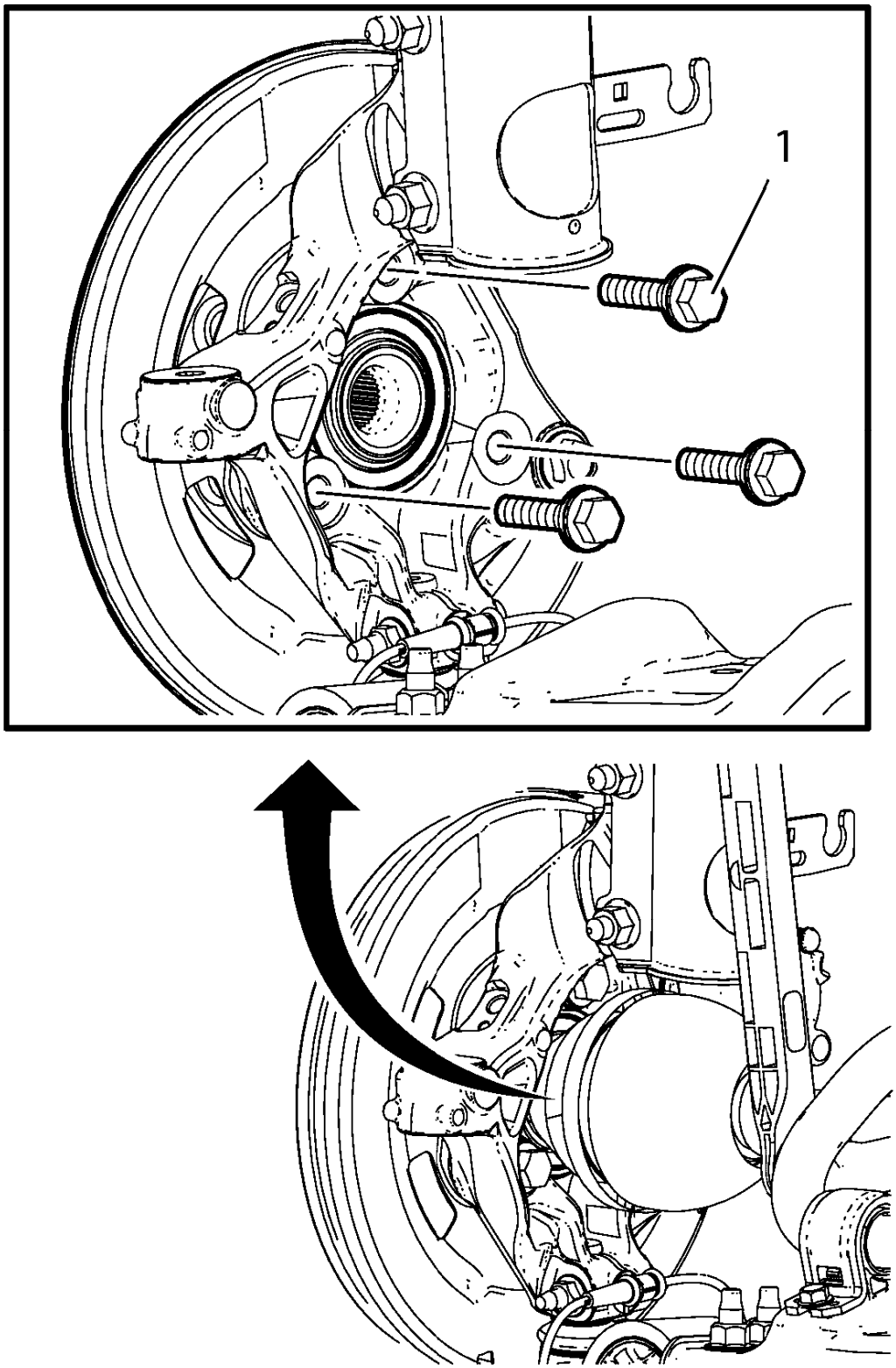

Fig. 5: Identifying Front Wheel Bearing/Hub Bolts

Courtesy of GENERAL MOTORS COMPANY

6. Remove and DISCARD the front wheel bearing/hub bolts (1).

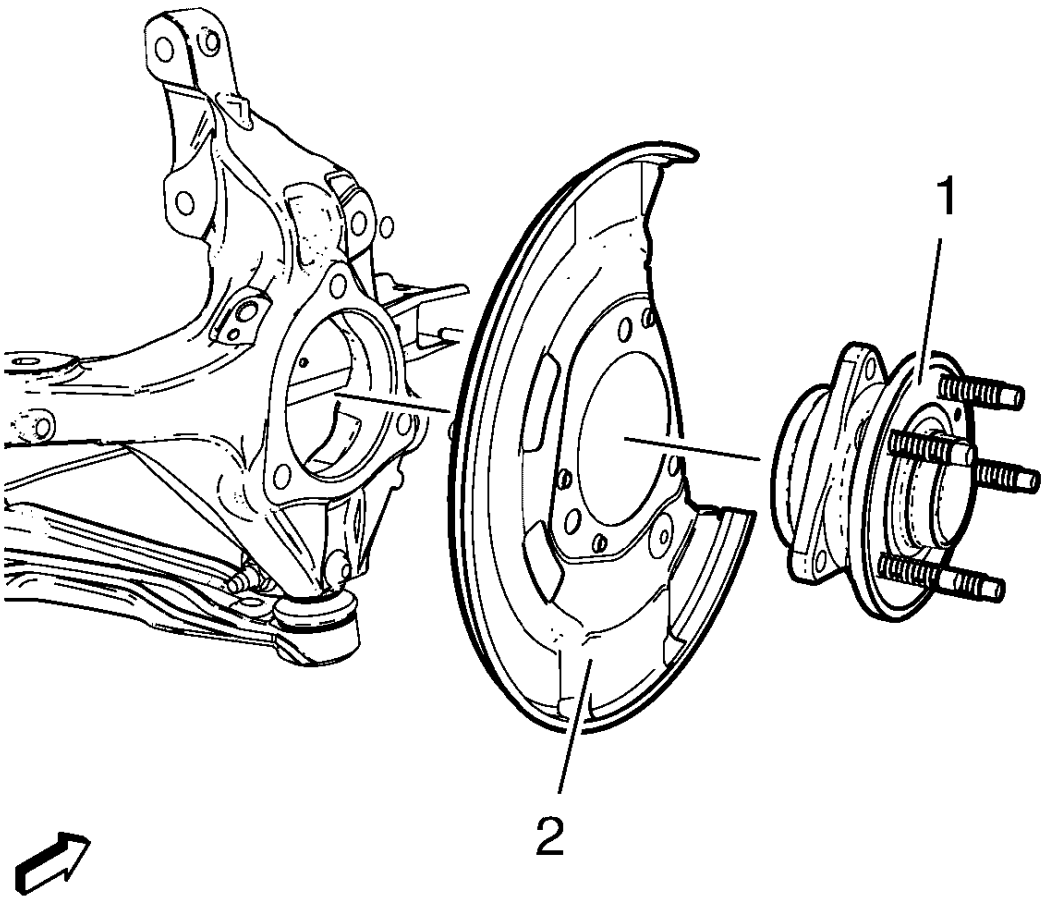

Fig. 6: Wheel Bearing/Hub, Front Brake Shield And Steering Knuckle
Courtesy of GENERAL MOTORS COMPANY

7. Remove the front wheel bearing/hub (1) and front brake shield (2) from the steering knuckle.

Installation Procedure

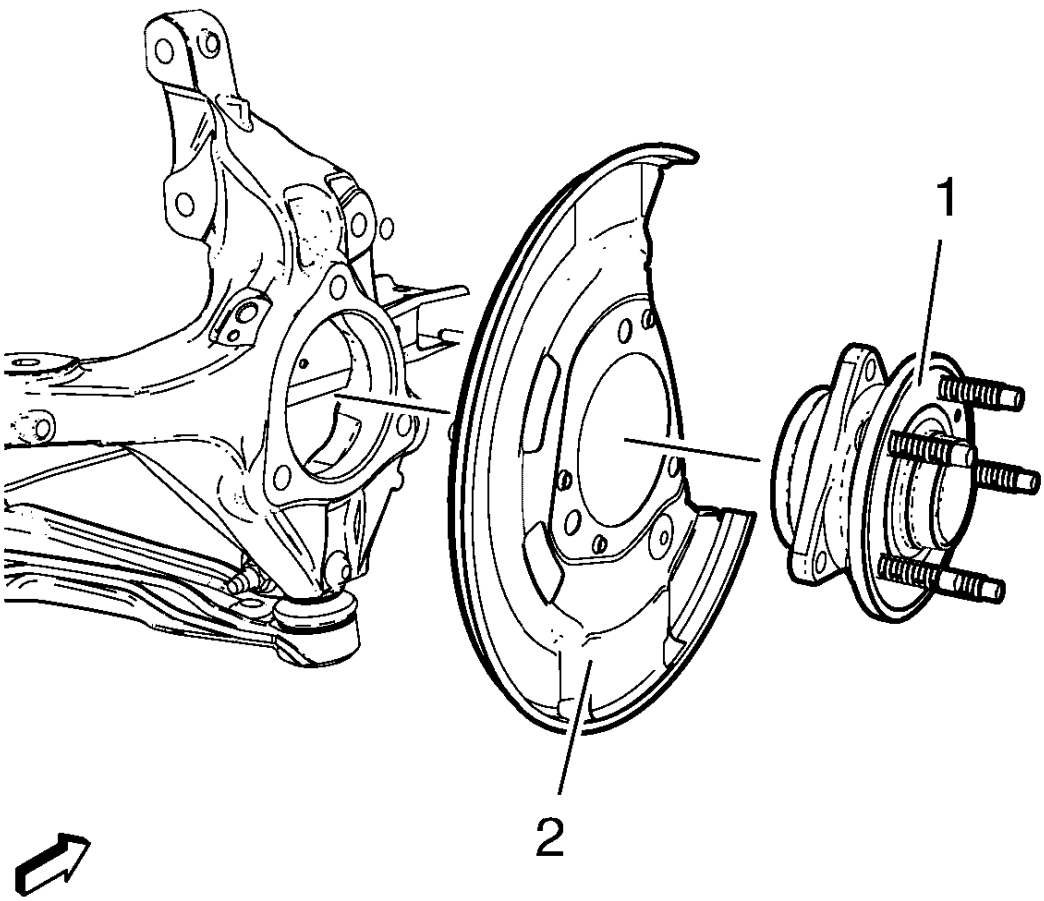

Fig. 7: Wheel Bearing/Hub, Front Brake Shield And Steering Knuckle
Courtesy of GENERAL MOTORS COMPANY

1. Position the front brake shield (2) and front wheel bearing/hub (1) assembly in the steering knuckle.

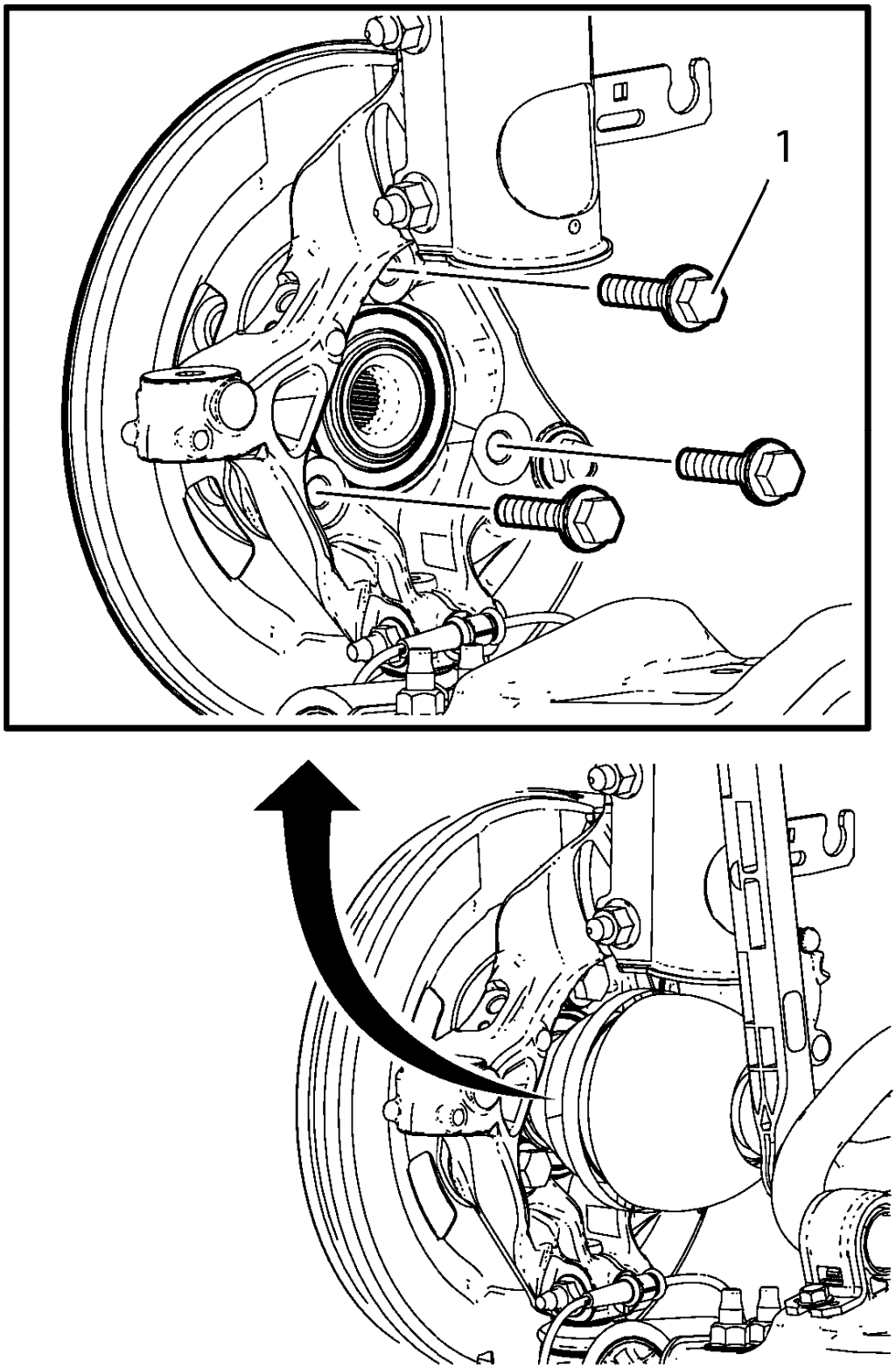

Fig. 8: Identifying Front Wheel Bearing/Hub Bolts

Courtesy of GENERAL MOTORS COMPANY

WARNING: Refer to Torque-to-Yield Fastener Warning .

CAUTION: Refer to Fastener Caution .

2. Install the NEW front wheel bearing/hub bolts (1).
3. Tighten the bearing/hub bolts (1) in 3 passes. Use the **EN-45059** angle meter.
   - First pass to 90 N.m (66 lb ft)
   - Second pass to 60°
   - Third pass to 15°
4. Install the wheel drive shaft at the front wheel bearing/hub. Refer to **Front Wheel Drive Shaft Replacement - Left Side** , or **Front Wheel Drive Shaft Replacement - Right Side** .

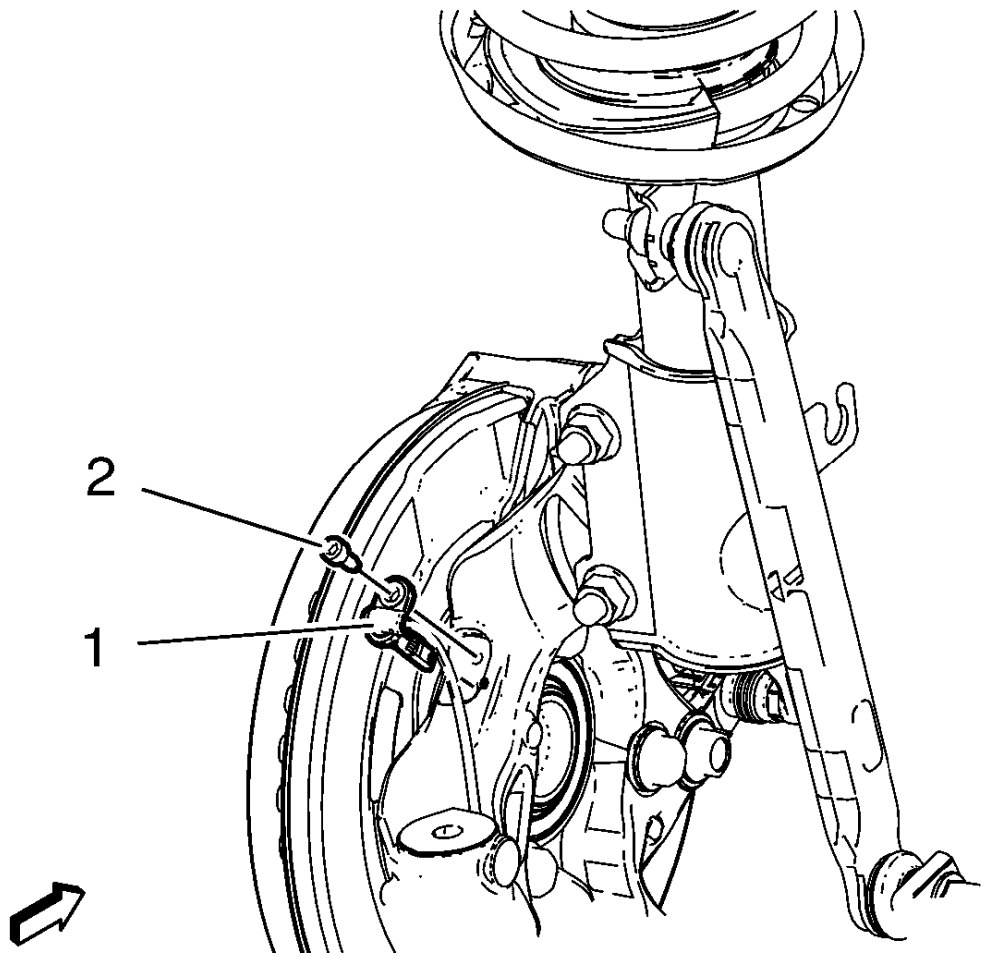

Fig. 9: Wheel Speed Sensor And Wheel Speed Sensor Screw
Courtesy of GENERAL MOTORS COMPANY

5. Install the wheel speed sensor (1) to the steering knuckle.
6. Install the wheel speed sensor screw (2) and tighten to 6 N.m (53 lb in).
7. Install the brake rotor. Refer to **Front Brake Rotor Replacement (J60)** , **Front Brake Rotor Replacement (J67)** .
8. Lower the vehicle.

STEERING KNUCKLE REPLACEMENT

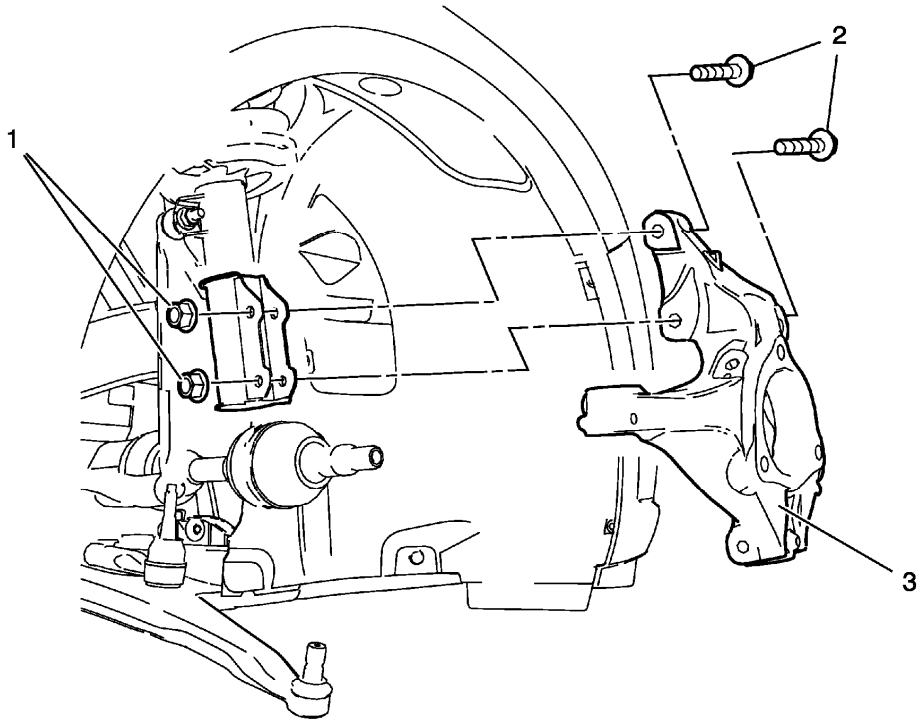

Fig. 10: View Of Steering Knuckle, Nuts And Bolts
Courtesy of GENERAL MOTORS COMPANY

Steering Knuckle Replacement

Callout	Component Name
Preliminary Procedures 1. Raise and support the vehicle. Refer to **Lifting and Jacking the Vehicle** . 2. Remove the wheel bearing and hub assembly. Refer to **Front Wheel Bearing and Hub Replacement**. 3. Separate the outer tie rod end from the knuckle. Refer to **Steering Linkage Outer Tie Rod Replacement** . 4. Separate control arm ball joint from steering knuckle. Refer to **Lower Control Arm Replacement**.	
1	Steering Knuckle Bolt (Qty: 2)
2	Steering Knuckle Nut (Qty: 2) **WARNING:** **Refer to Torque-to-Yield Fastener Warning .** **CAUTION:** **Refer to Fastener Caution .** **Procedure**

	1. Install NEW nuts. Do NOT reuse old nuts. 2. Use **EN-45059** angle meter to apply torque. **Tighten** 90 N.m (66 lb ft) + 60-70 degrees **Special Tools** **EN-45059** Torque Angle Sensor Kit For equivalent regional tools, refer to **Special Tools**.
3	Steering Knuckle

LOWER CONTROL ARM REPLACEMENT

Special Tools

EN-45059 Torque Angle Sensor Kit

For equivalent regional tools, refer to **Special Tools**.

Removal Procedure

1. Raise and support the vehicle. Refer to **Lifting and Jacking the Vehicle** .
2. Remove the tire and wheel. Refer to **Tire and Wheel Removal and Installation** .
3. Remove the front compartment insulator. Refer to **Front Compartment Insulator Replacement**
4. Remove wheel speed sensor wiring harness from control arm and steering knuckle.

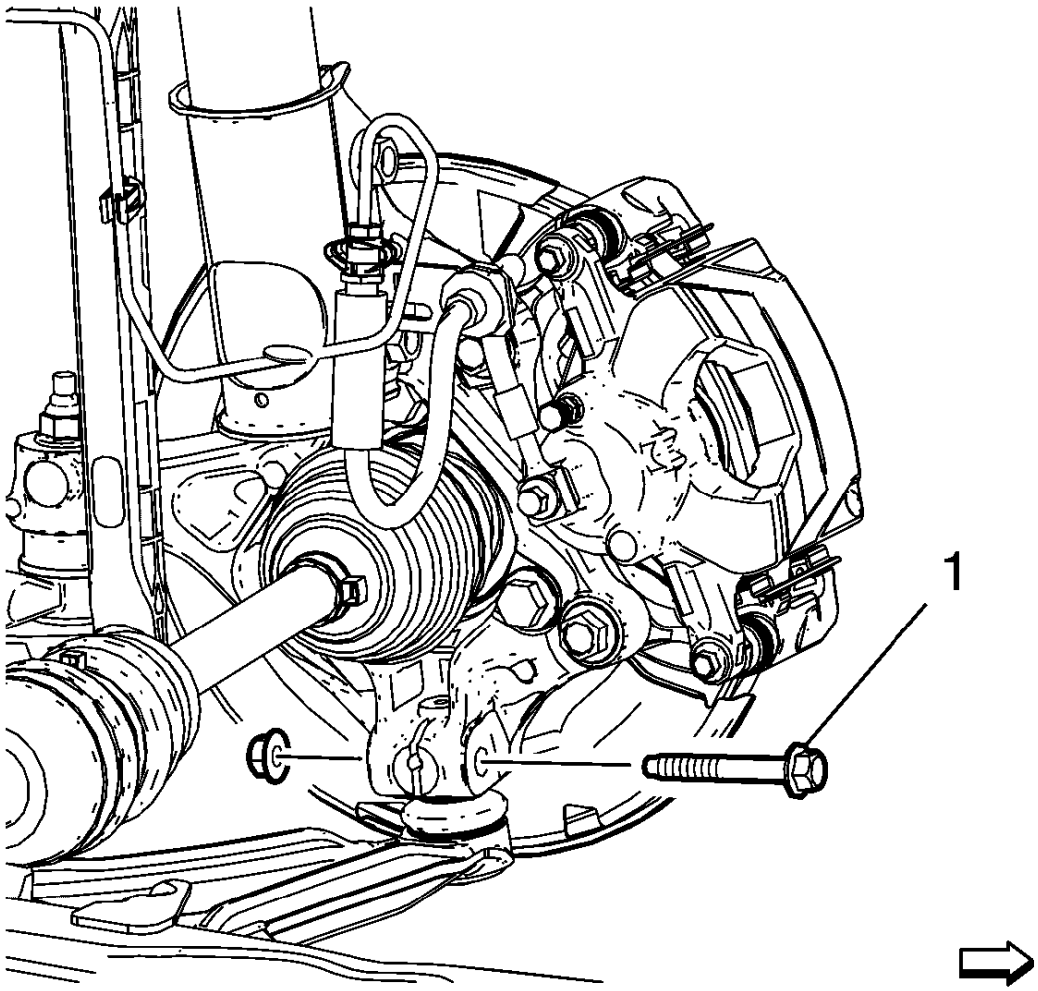

Fig. 11: Lower Ball Joint-To-Knuckle Nut And Bolt
Courtesy of GENERAL MOTORS COMPANY

5. Remove the lower ball joint to knuckle nut and bolt (1). DISCARD the nut and bolt (1).

CAUTION: Do not pry in such a way that the ball joint seal is contacted. Damage to the seal may result.

6. Separate the lower control arm from the knuckle.

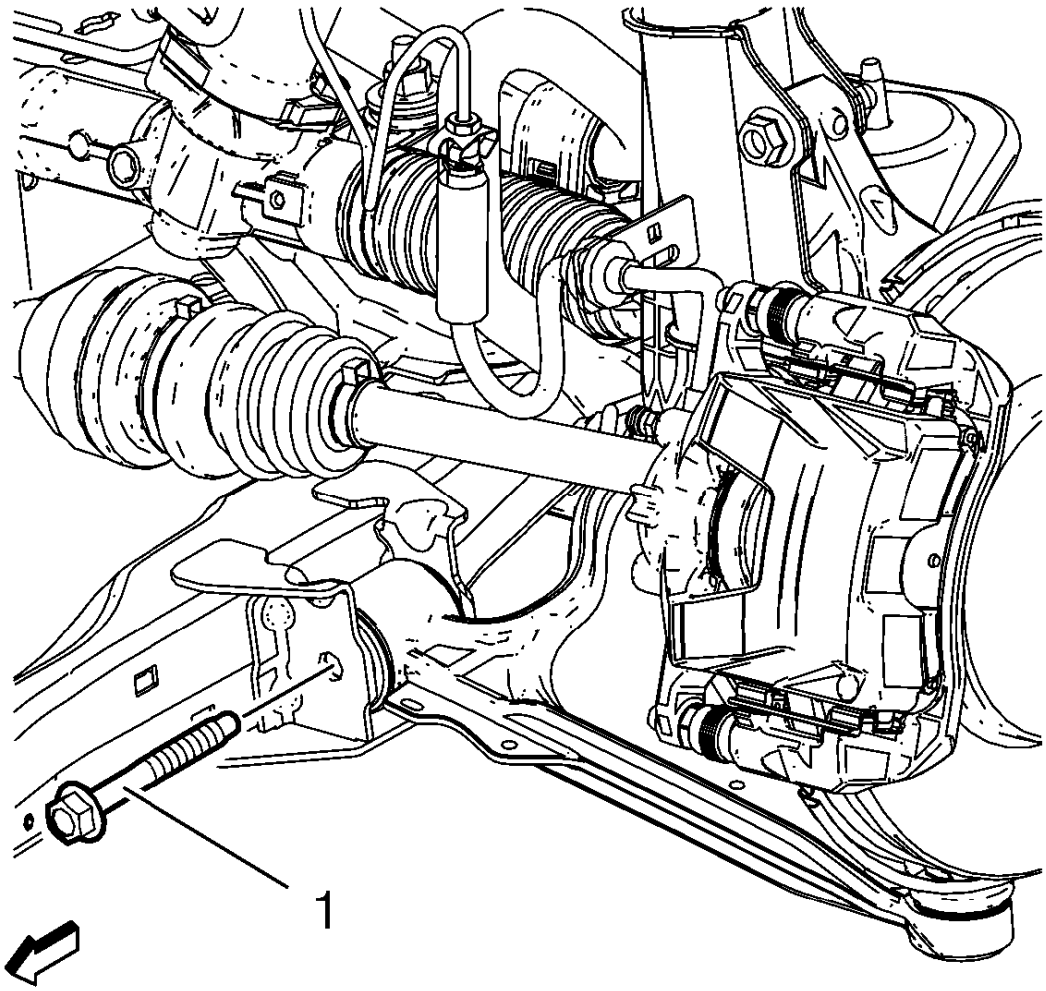

Fig. 12: Identifying Front Lower Control Arm Nut And Bolt
Courtesy of GENERAL MOTORS COMPANY

7. Remove the front lower control arm nut and bolt (1). DISCARD the bolt (1).

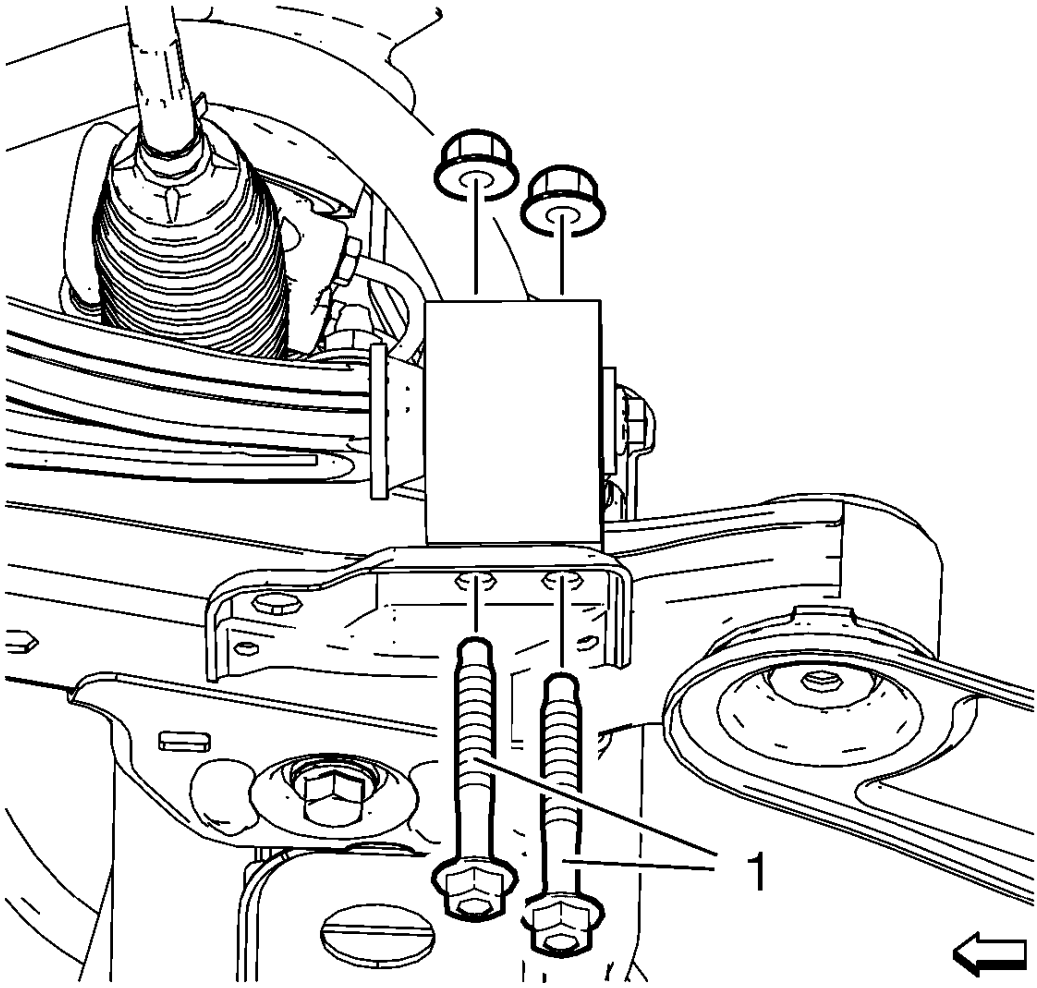

Fig. 13: Rear Lower Control Arm Bushing Nuts And Bolts
Courtesy of GENERAL MOTORS COMPANY

8. Remove the rear lower control arm bushing nuts and bolts (1). DISCARD the bolts (1).

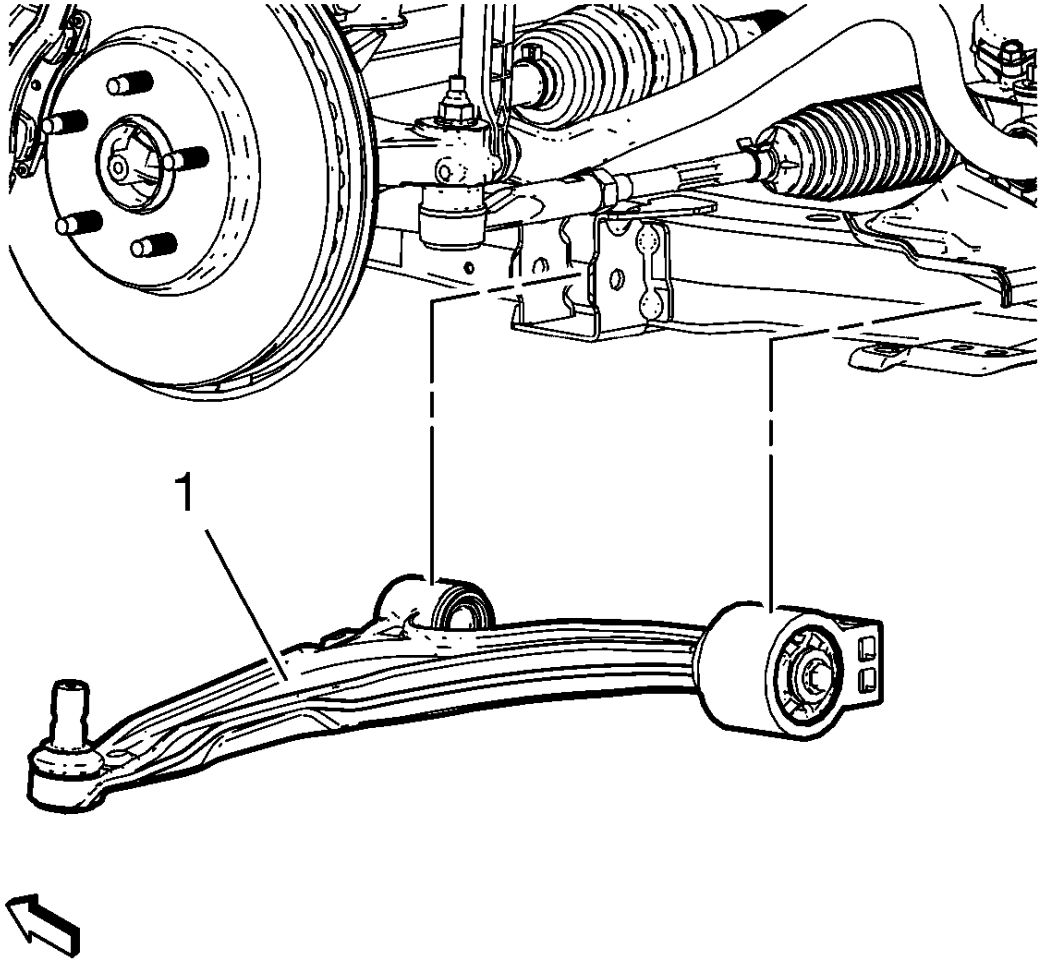

Fig. 14: View Of Lower Control Arm
Courtesy of GENERAL MOTORS COMPANY

9. Remove the lower control (1) arm from the front frame.

Installation Procedure

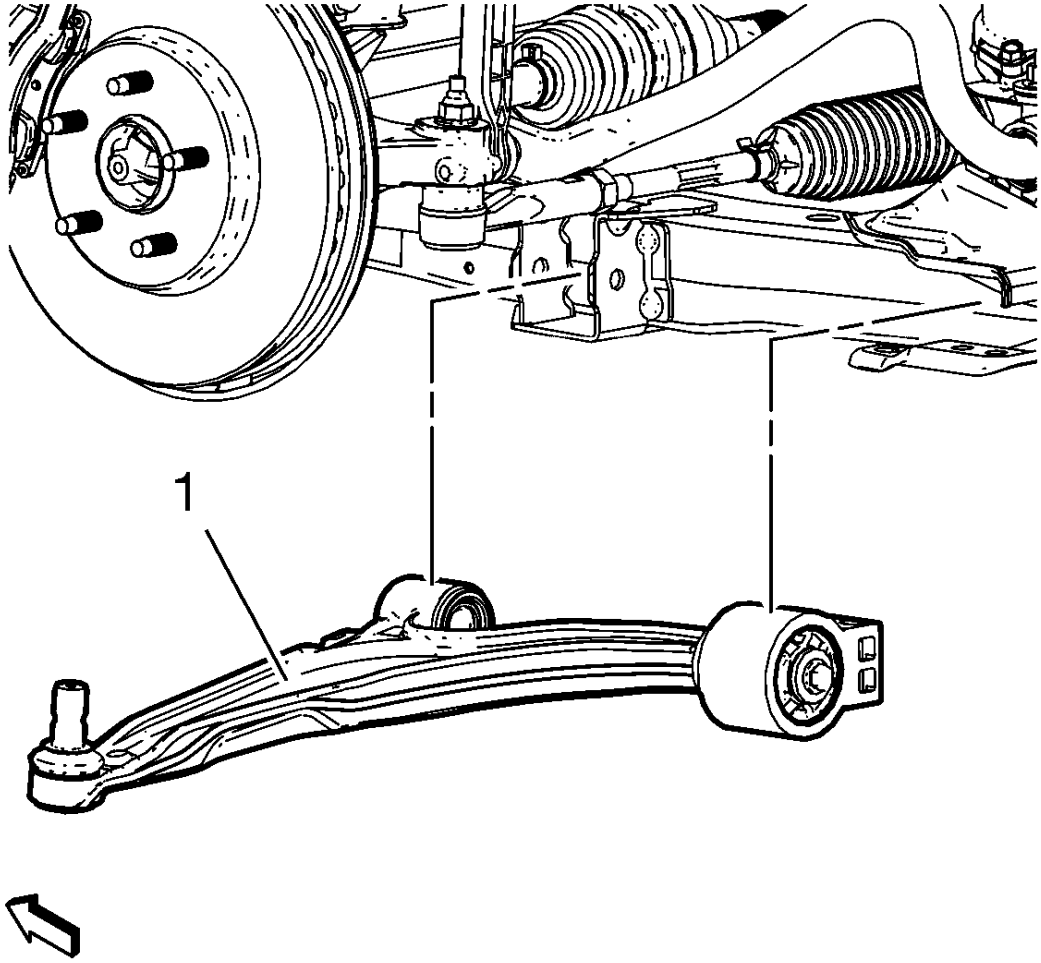

Fig. 15: View Of Lower Control Arm
Courtesy of GENERAL MOTORS COMPANY

1. Position the lower control arm (1) in the cradle.

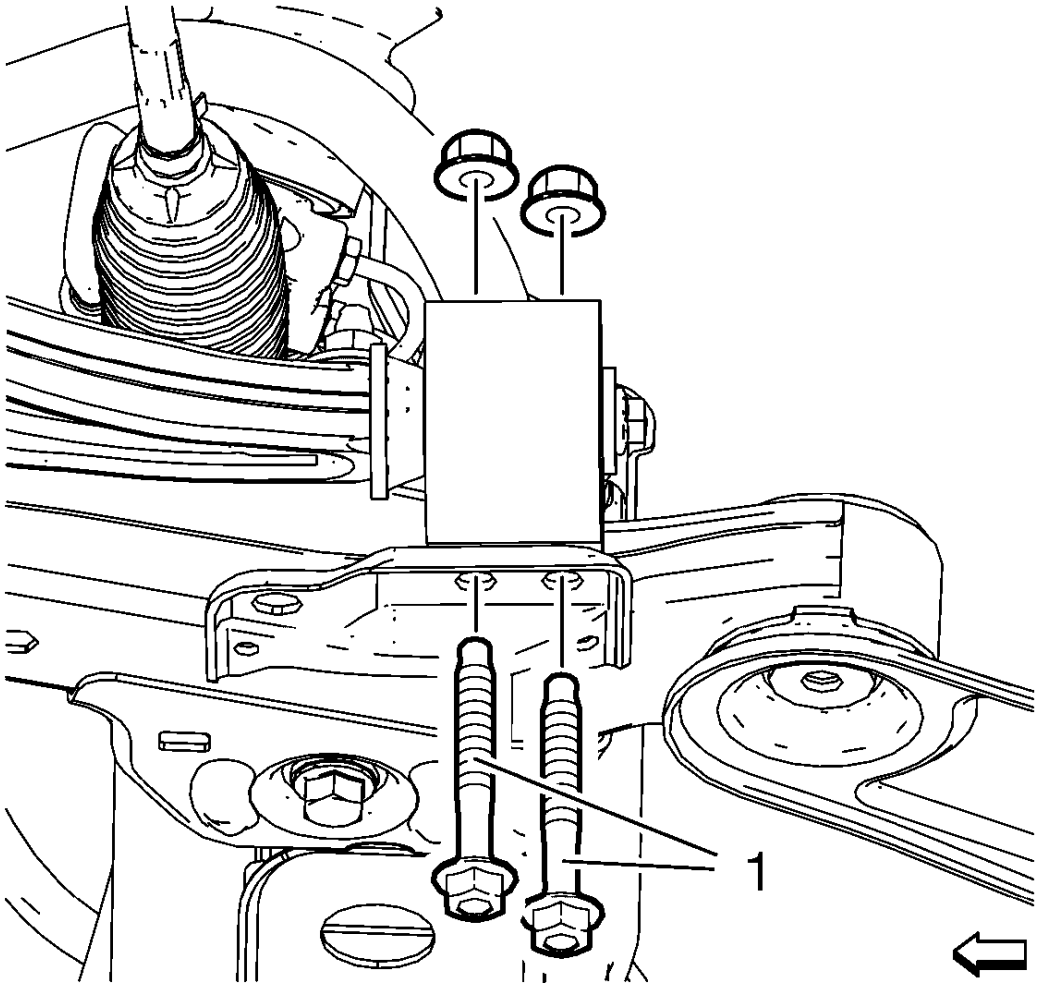

Fig. 16: Rear Lower Control Arm Bushing Nuts And Bolts
Courtesy of GENERAL MOTORS COMPANY

2. Install and hand tighten the rear lower control arm bushing nuts and NEW bolts (1).

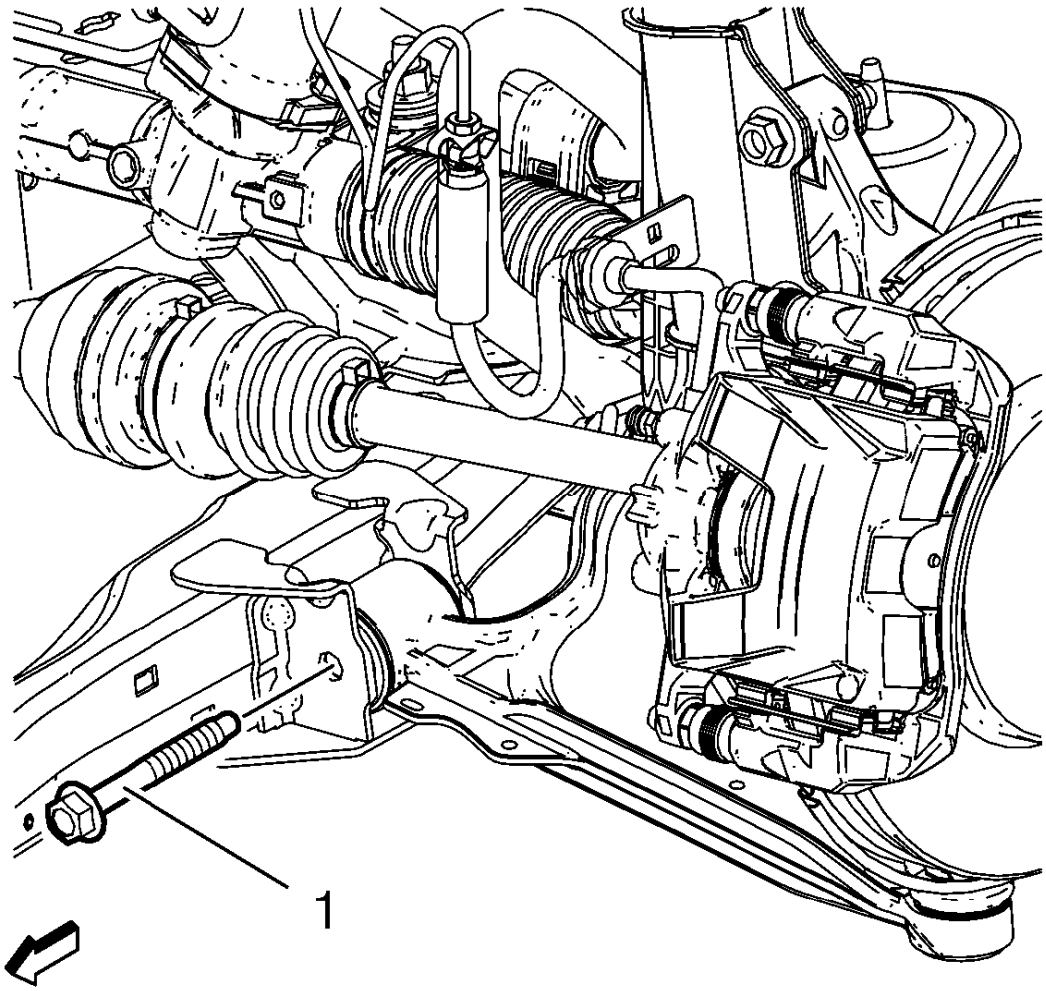

Fig. 17: Identifying Front Lower Control Arm Nut And Bolt
Courtesy of GENERAL MOTORS COMPANY

3. Install and hand tighten the front lower control arm nut and NEW bolt (1).

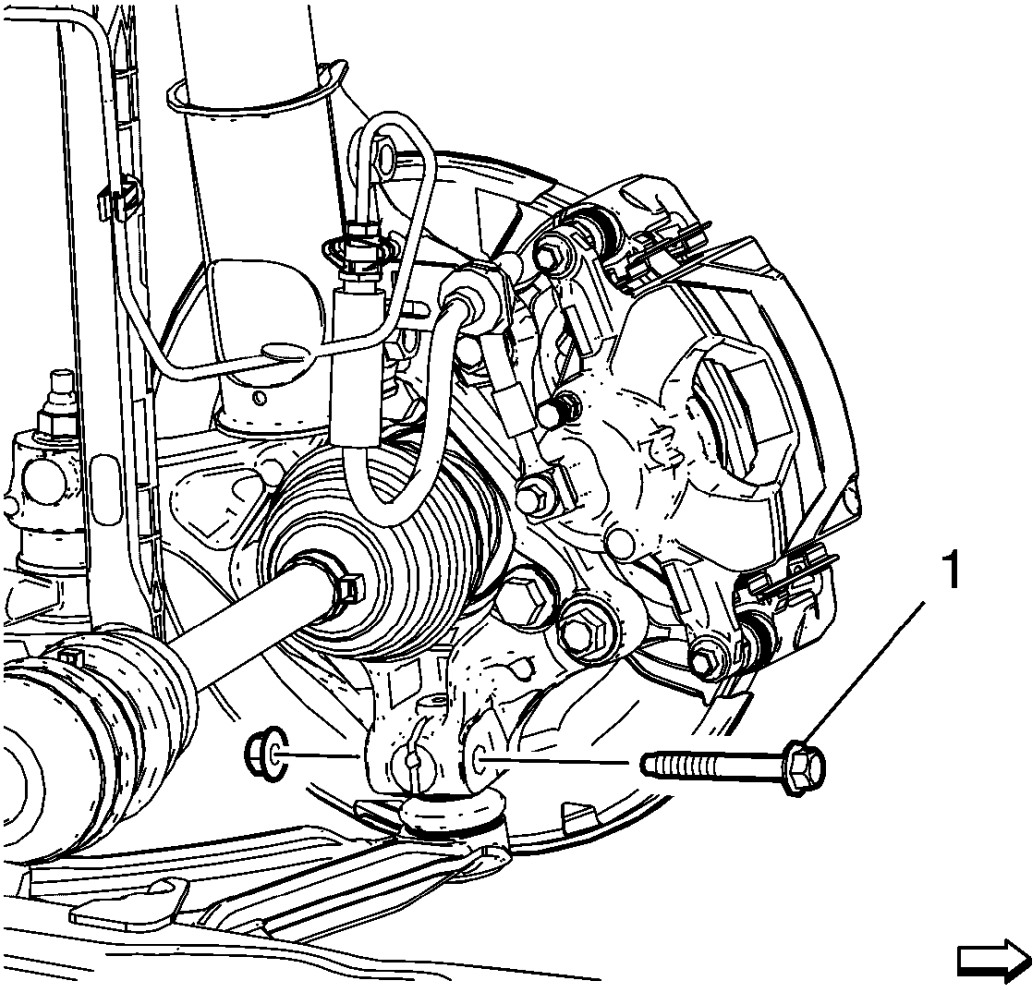

Fig. 18: Lower Ball Joint-To-Knuckle Nut And Bolt
Courtesy of GENERAL MOTORS COMPANY

WARNING: Refer to Torque-to-Yield Fastener Warning .

CAUTION: Refer to Fastener Caution .

4. Support the lower control arm with a hydraulic jack and lift the control arm to Z-Height. Refer to **Trim Height Inspection** .
5. Tighten the front lower control arm bolt to 70 N.m (52 lb ft) +75-90 degrees, using **EN-45059** kit.
6. Tighten the rear bushing to frame bolts to 70 N.m (52 lb ft) +90 degrees, using **EN-45059** kit.
7. Remove the hydraulic jack.
8. Install the NEW ball joint to knuckle bolt (1) and nut.

9. Using the **EN-45059** kit, tighten the nut.
    - First Pass: 50 N.m (37 lb ft)
    - Second Pass: Loosen the nut 120 degrees
    - Third Pass: 50 N.m (37 lb ft)
    - Final Pass: Additional 35 degrees

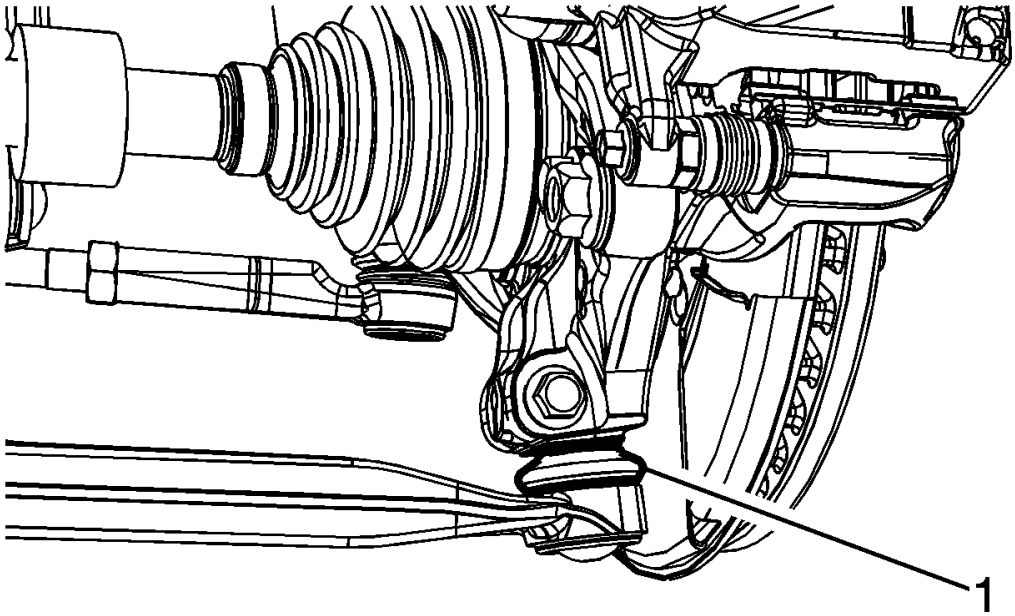

Fig. 19: View Of Ball Joint Boot
Courtesy of GENERAL MOTORS COMPANY

10. Ensure that the ball joint boot (1) is properly seated between the lower control arm and the knuckle.
11. Install the front compartment insulator. Refer to **Front Compartment Insulator Replacement**
12. Install the tire and wheel. Refer to **Tire and Wheel Removal and Installation** .
13. Lower the vehicle.

FRONT LOWER CONTROL ARM BUSHING REPLACEMENT

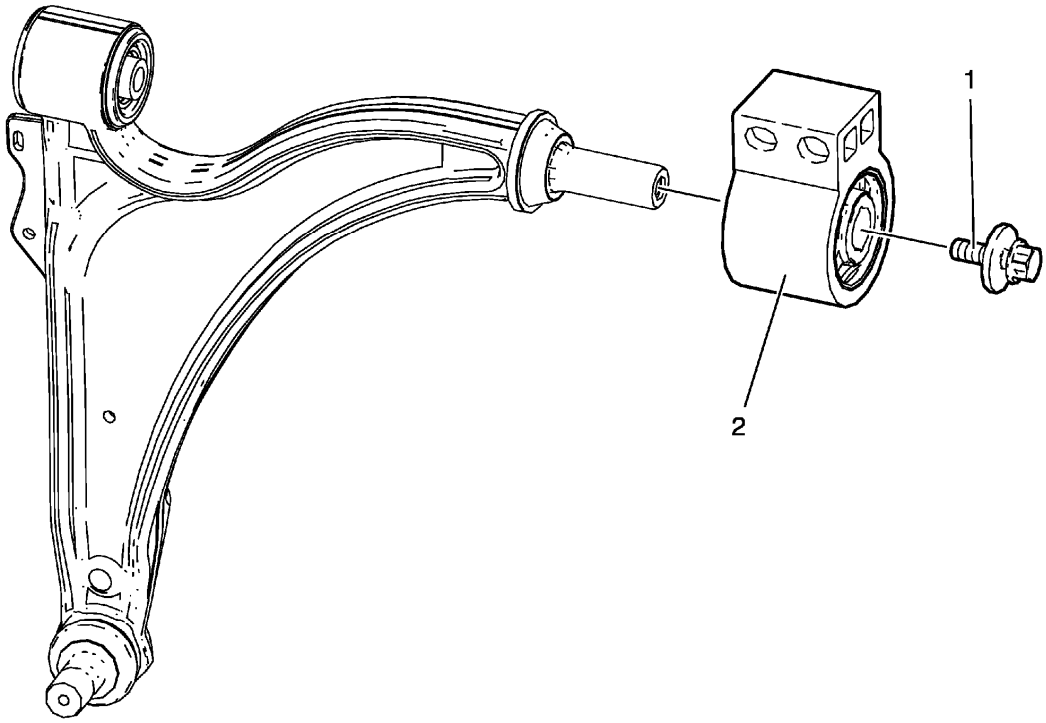

Fig. 20: Lower Control Arm Rear Bushing And Bolt
Courtesy of GENERAL MOTORS COMPANY

Front Lower Control Arm Bushing Replacement

Callout	Component Name
Preliminary Procedures 1. Raise and support the vehicle. Refer to **Lifting and Jacking the Vehicle** . 2. Remove the tire and wheel. Refer to **Tire and Wheel Removal and Installation** . 3. Remove the front compartment insulator. Refer to **Front Compartment Insulator Replacement** 4. Remove the lower control arm. Refer to **Lower Control Arm Replacement**.	
1	Lower Control Arm Rear Bushing Bolt
	Lower Control Arm Rear Bushing **WARNING:** **Refer to Torque-to-Yield Fastener Warning .** **CAUTION:** **Refer to Fastener Caution .** **Procedure** 1. Install and hand tighten the NEW bushing bolt. Do NOT reuse old bolt.

2	2. Install lower control arm to the vehicle. Refer to **Lower Control Arm Replacement** 3. Support the lower control arm with a hydraulic jack and lift the control arm into the neutral position. 4. Tighten lower control arm bushing bolt. **Tighten** 55 N.m (41 lb ft) + 45 - 60° **Special Tools** **EN-45059** Torque Angle Sensor Kit For equivalent regional tools. Refer to **Special Tools**.

WHEEL STUD REPLACEMENT

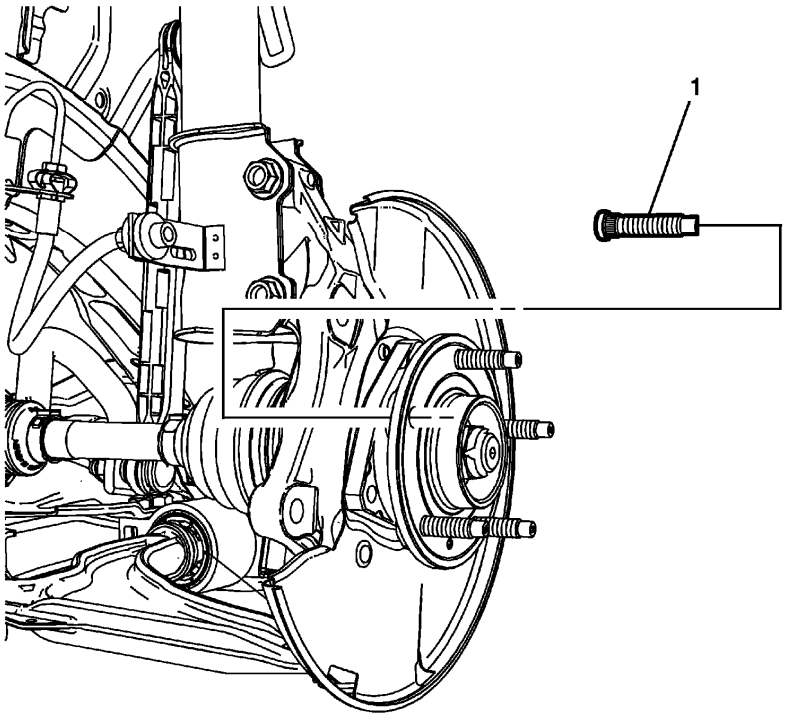

Fig. 21: Wheel Studs
Courtesy of GENERAL MOTORS COMPANY

Wheel Stud Replacement

Callout	Component Name
Preliminary Procedure 1. Raise and support the vehicle. Refer to **Lifting and Jacking the Vehicle** . 2. Remove the tire and wheel assembly. Refer to **Tire and Wheel Removal and Installation** .	

3. Remove the front wheel bearing assembly. **Front Wheel Bearing and Hub Replacement**.	
1	Wheel Stud (Qty: 5) **Procedure** 1. Rotate the wheel bearing so that the wheel stud to be removed is located where there is a relief in the wheel bearing casting. 2. Using the **CH 43631** remover, remove and discard the wheel stud from the wheel bearing. Replace with NEW only. 3. When installing the wheel stud, use the proper amount of washers to allow the wheel stud to be fully seated against the wheel bearing flange. 4. Use a wheel nut with the flat side of the wheel nut facing the washers to fully seat the wheel stud. **Special Tools** **CH 43631** Ball Joint Remover For equivalent regional tools, refer to **Special Tools**

STRUT ASSEMBLY REMOVAL AND INSTALLATION

Special Tools

- **CH-49375** Wrench
- **EN-45059** Angle Meter

For equivalent regional tools, refer to **Special Tools**.

Removal Procedure

1. Raise and support the vehicle. Refer to **Lifting and Jacking the Vehicle** .
2. Remove the tire and wheel assembly. Refer to **Tire and Wheel Removal and Installation** .

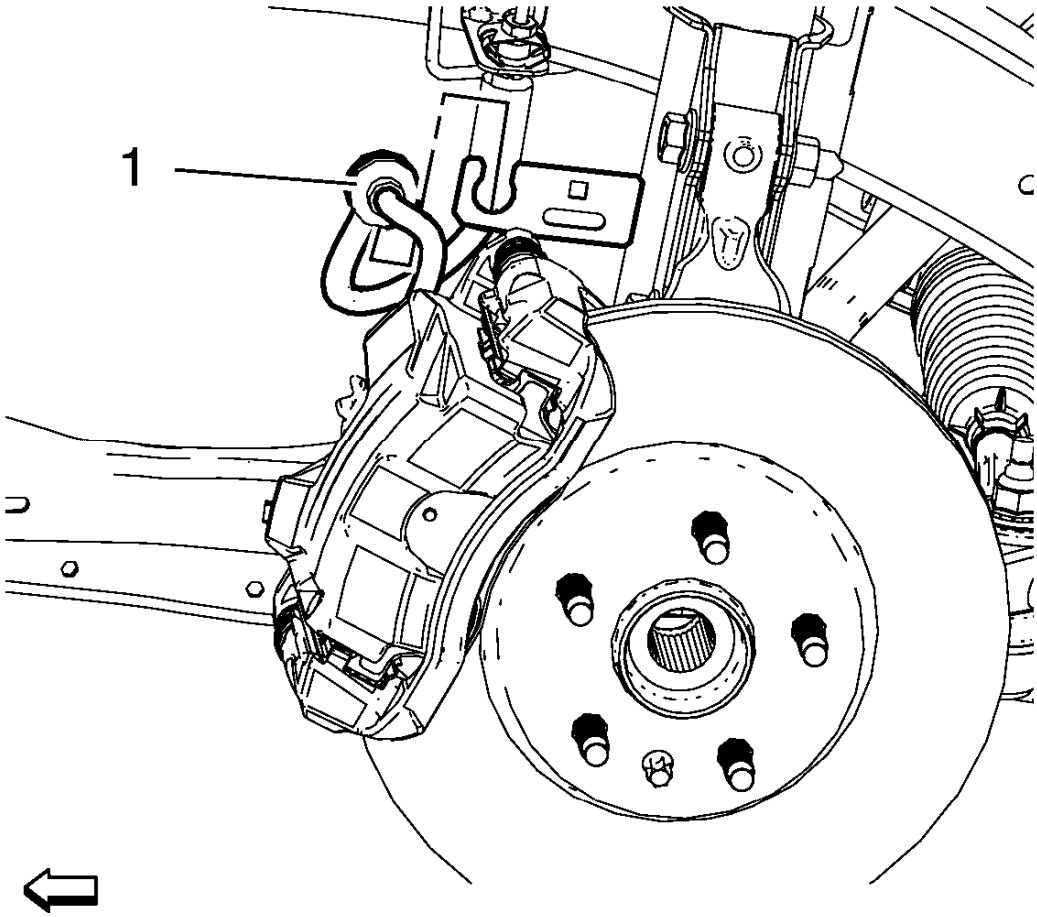

Fig. 22: Identifying Brake Hose
Courtesy of GENERAL MOTORS COMPANY

3. Separate the brake hose (1) from the shock absorber.

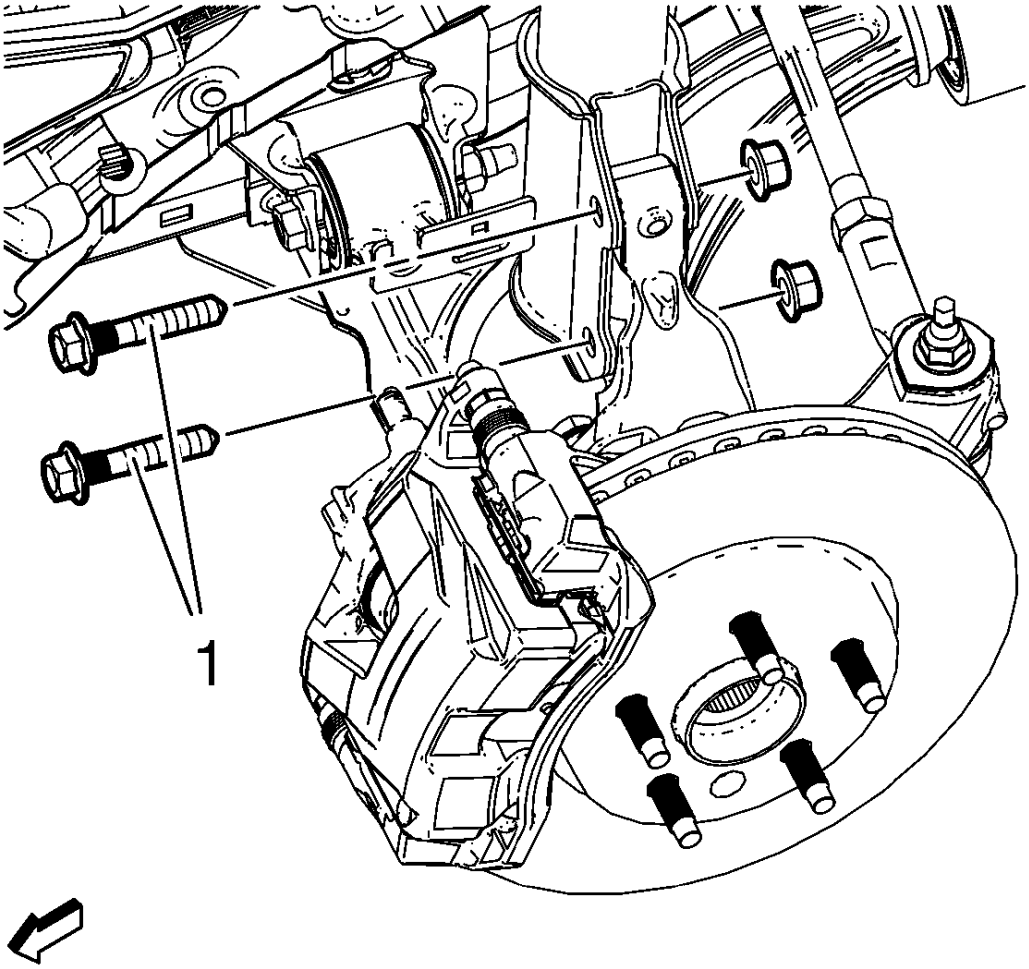

Fig. 23: Steering Knuckle And Bolts
Courtesy of GENERAL MOTORS COMPANY

4. Remove and DISCARD the steering knuckle nuts and bolts (1).

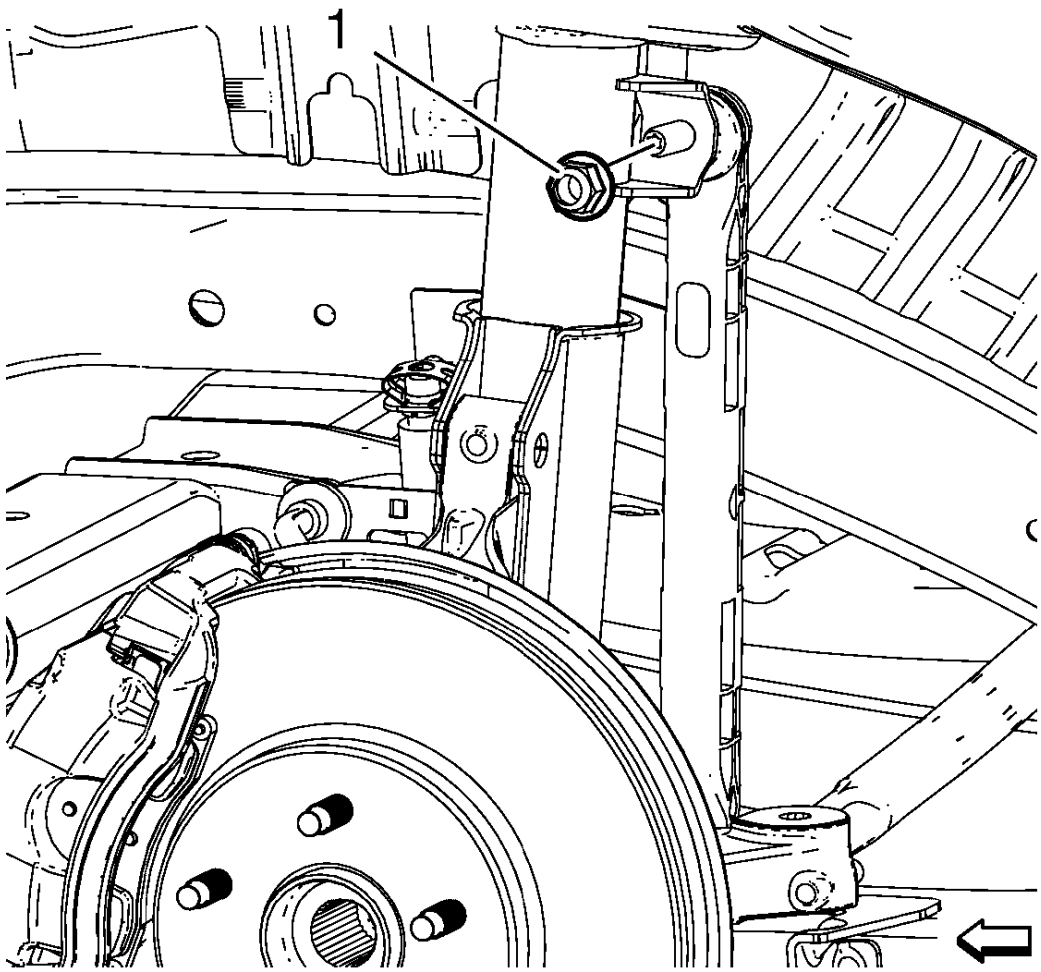

Fig. 24: View Of Stabilizer Shaft Link Nut
Courtesy of GENERAL MOTORS COMPANY

5. Remove and DISCARD the stabilizer shaft link nut (1) from the front strut.
6. Lower the vehicle.

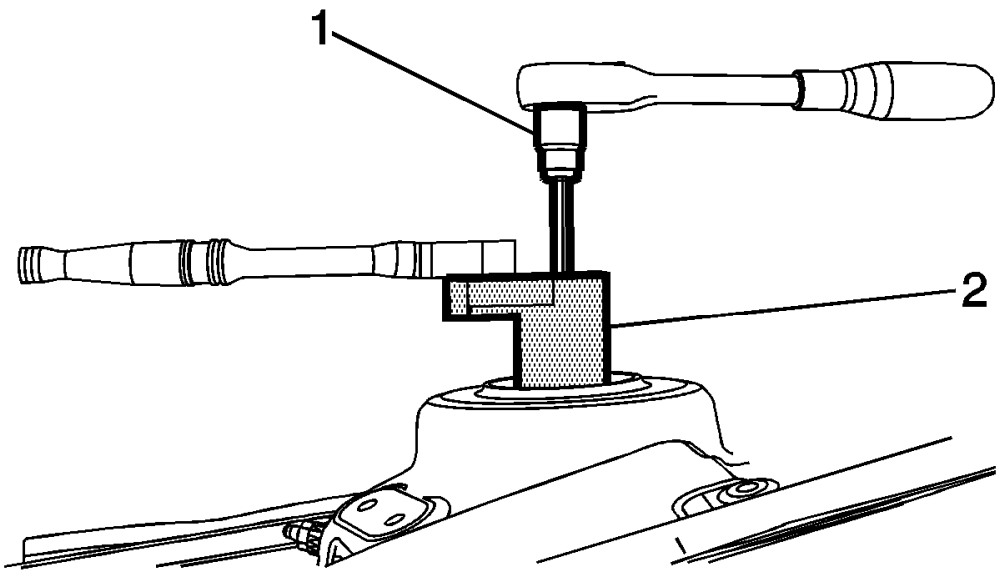

Fig. 25: Special Tool And Torx(R) Bit
Courtesy of GENERAL MOTORS COMPANY

7. Remove the upper strut mount nut (1), use the **CH-49375** wrench.
8. Remove the strut mounting plate (2).
9. Separate the front strut from the knuckle.
10. Remove the front strut assembly from the vehicle.
11. For servicing the individual strut components, refer to **Strut, Strut Component, or Spring Replacement**.

Installation Procedure

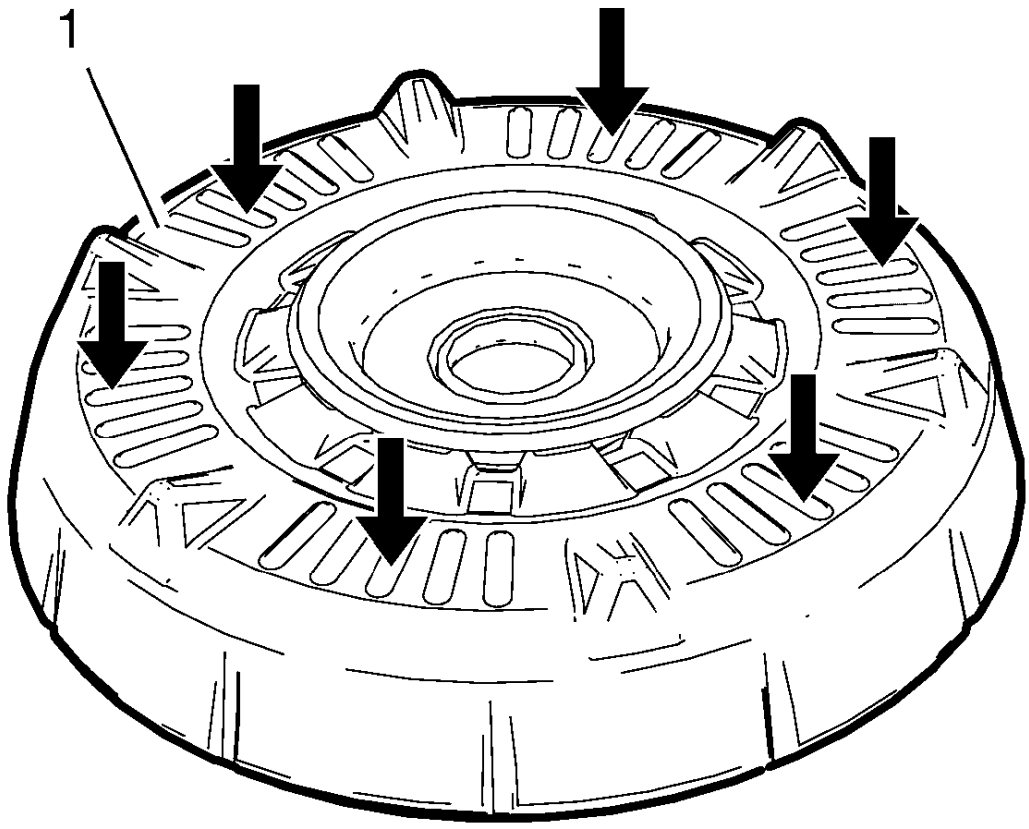

Fig. 26: Upper Strut Mount
Courtesy of GENERAL MOTORS COMPANY

1. Lightly apply rubber lubricant to the upper strut mount using rubber lubricant GM P/N 12345884 (Canadian P/N 5728223) to ease installation and for proper seating of mount.
2. Install the front strut assembly.

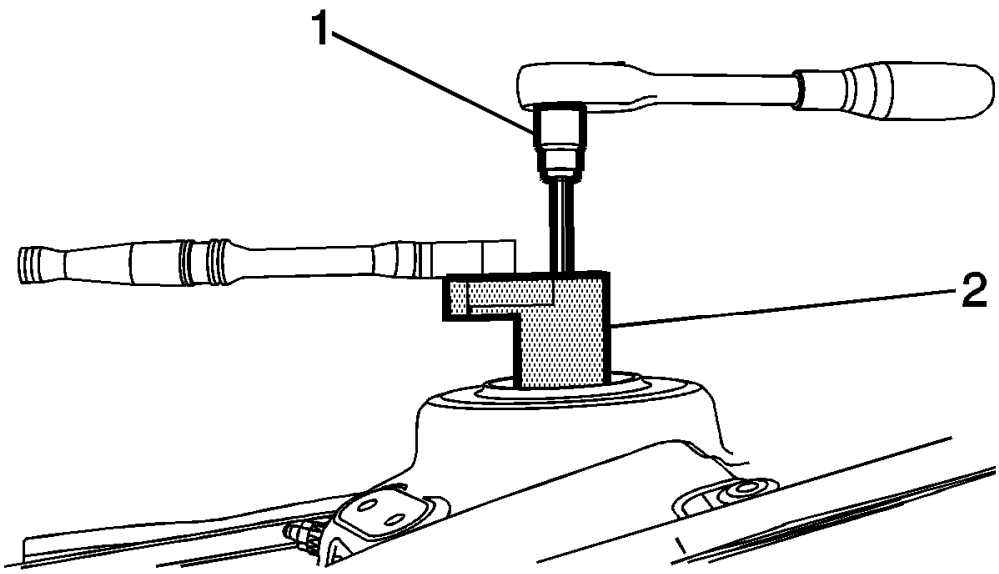

Fig. 27: Special Tool And Torx(R) Bit
Courtesy of GENERAL MOTORS COMPANY

CAUTION: Refer to Fastener Caution .

3. Install the strut mounting plate (2).
4. Install the upper strut mount nut (1).
5. Tighten the nut (1) to 65 N.m (48 lb ft), using the **CH-49375** wrench.

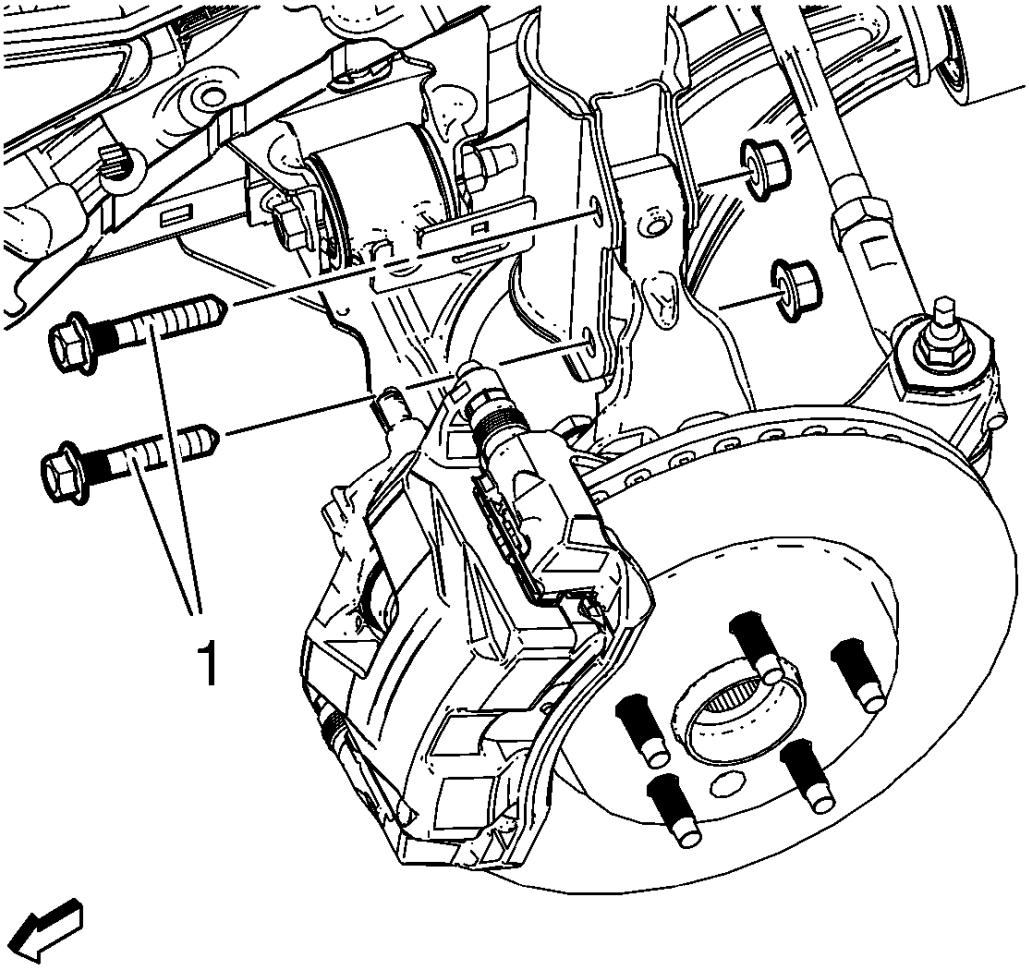

Fig. 28: Steering Knuckle And Bolts
Courtesy of GENERAL MOTORS COMPANY

6. Insert the front strut in the knuckle.

WARNING: Refer to Torque-to-Yield Fastener Warning .

7. Tighten the NEW steering knuckle nuts and bolts (1) a first pass to 90 N.m (66 lb ft).
8. Tighten the NEW steering knuckle nuts and bolts a final pass to an additional 60 - 70 degrees, using the **EN-45059** meter.

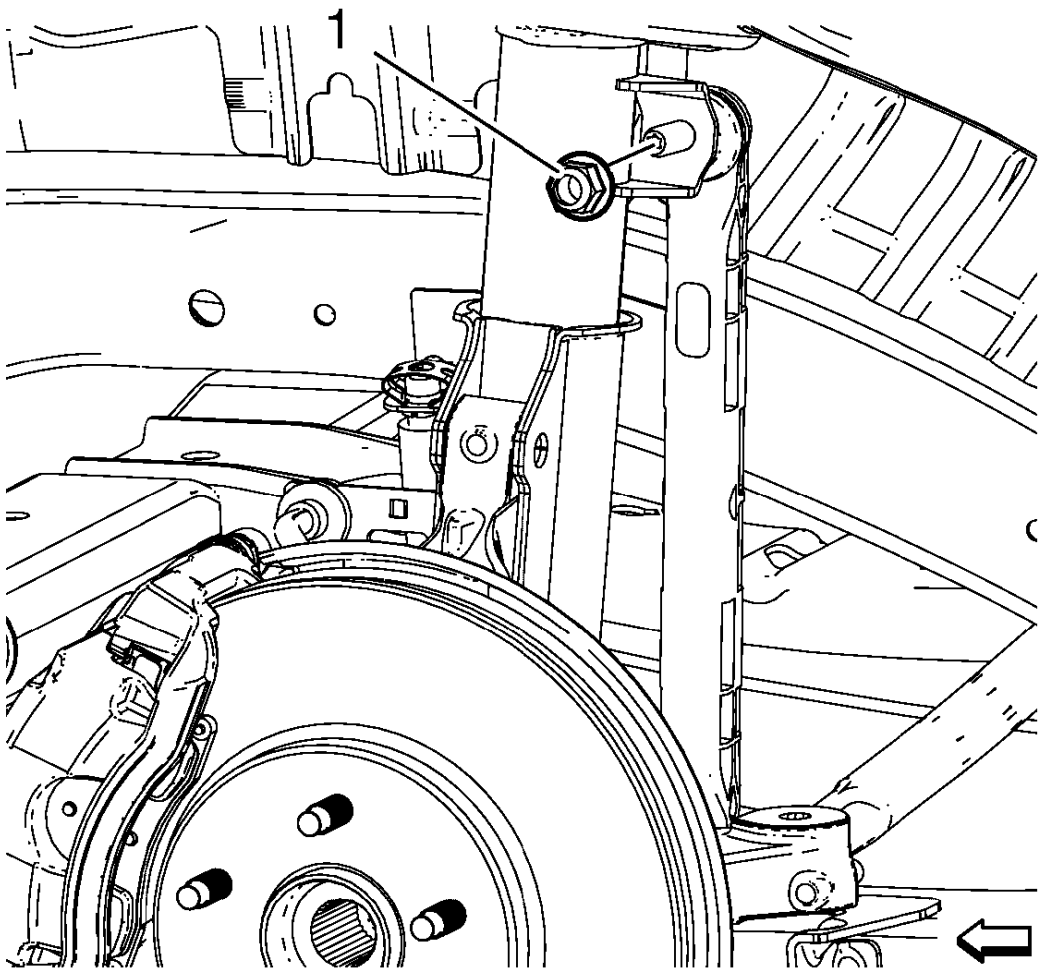

Fig. 29: View Of Stabilizer Shaft Link Nut
Courtesy of GENERAL MOTORS COMPANY

9. Install a NEW stabilizer shaft link nut (1) and tighten to 65 N.m (48 lb ft).

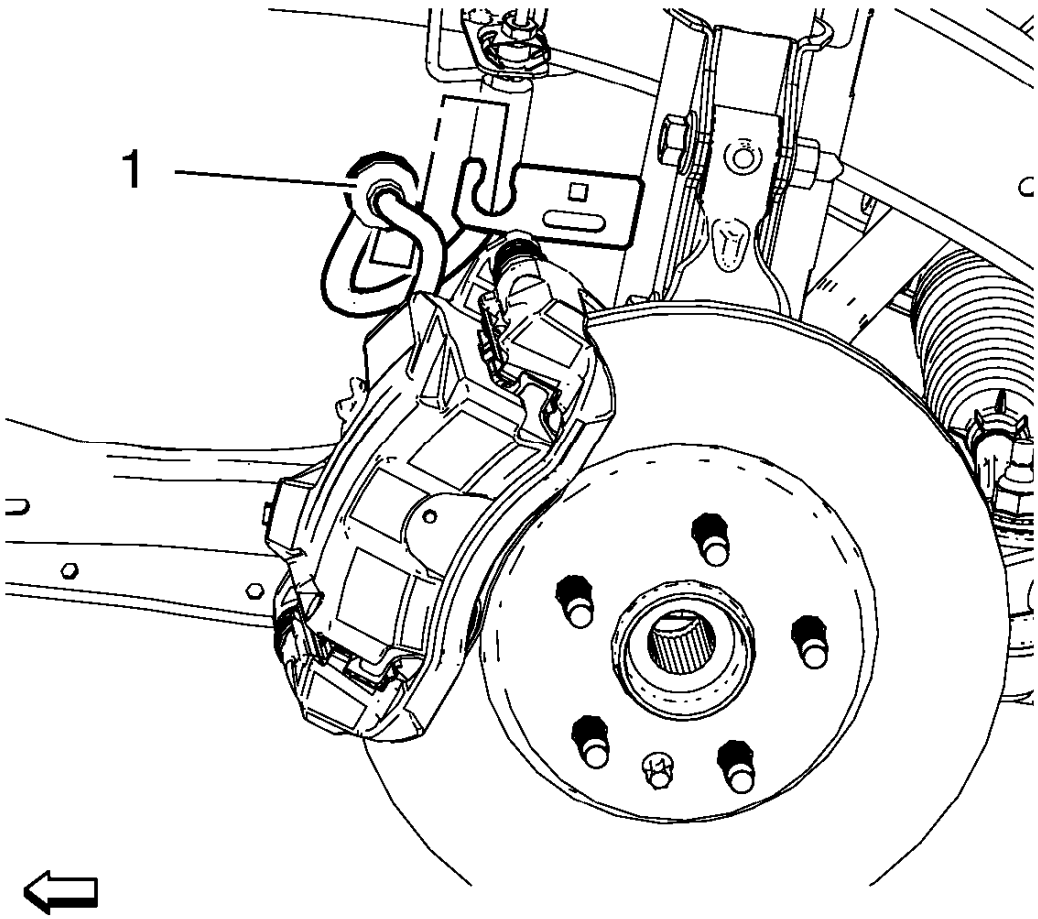

Fig. 30: Identifying Brake Hose
Courtesy of GENERAL MOTORS COMPANY

10. Install the brake hose (1) to the strut.
11. Install the front tire and wheel assembly. Refer to **Tire and Wheel Removal and Installation** .
12. Lower the vehicle.
13. Check the front camber alignment specifications. Refer to **Front Camber Adjustment** .

SHOCK ABSORBER DISPOSAL

WARNING: Use the proper eye protection when drilling to prevent metal chips from causing physical injury.

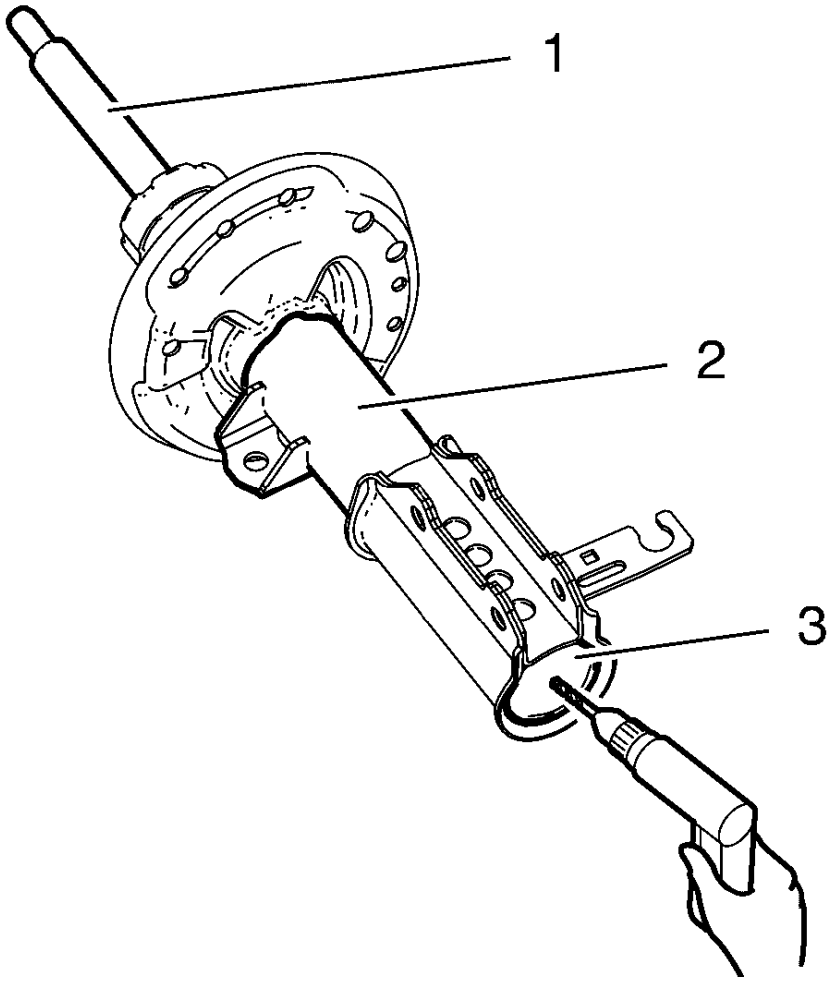

Fig. 31: Shock Absorber Components
Courtesy of GENERAL MOTORS COMPANY

1. Clamp the strut in a vise horizontally with the rod (1) completely extended.
2. Drill a hole in the strut at the center of the end cap (3) using a 5 mm (3/16 in) drill bit. Gas or a gas/oil mixture will exhaust when the drill bit penetrates the strut. Use shop towels in order to contain the escaping oil.
3. Remove the strut from the vise.
4. Hold the strut over a drain pan vertically with the hole down.
5. Move the rod (1) in and out of the tube (2) to completely drain the oil from the strut.

STRUT, STRUT COMPONENT, OR SPRING REPLACEMENT

Special Tools

- **CH 6066** Strut Spring Compressor

- **CH 35669** Wrench

For equivalent regional tools, refer to **Special Tools**.

Disassembly Procedure

1. Remove the front suspension strut from the vehicle. Refer to **Strut Assembly Removal and Installation**.

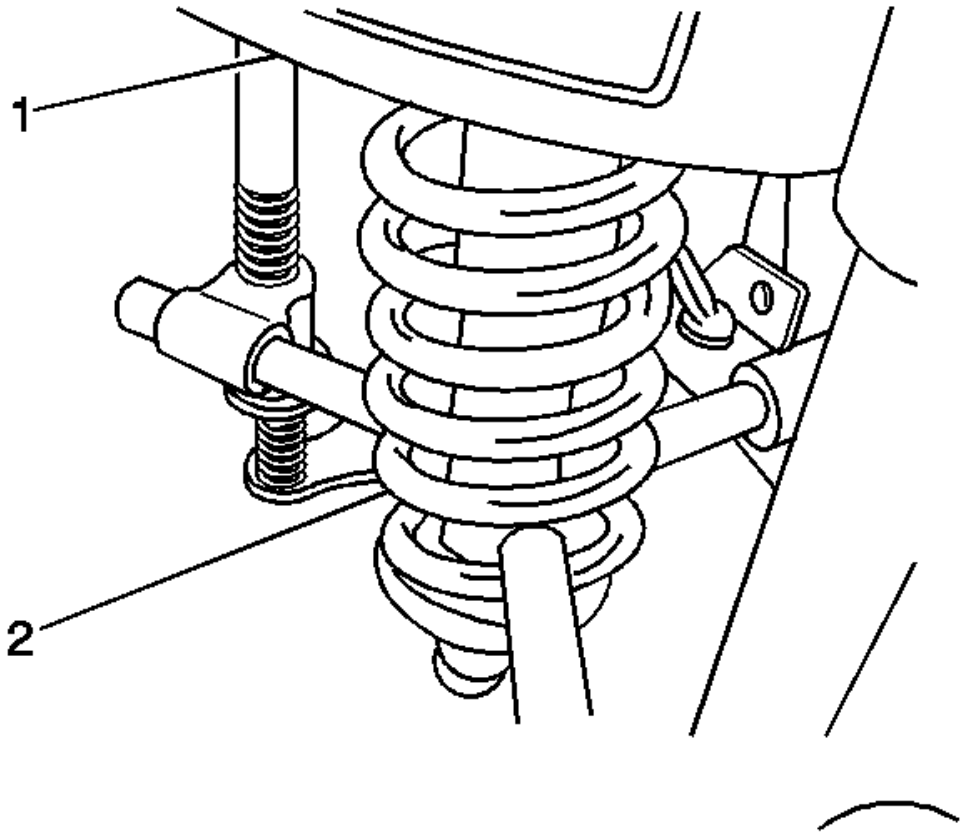

Fig. 32: Strut And Strut Spring Compressor
Courtesy of GENERAL MOTORS COMPANY

2. Install the front suspension strut in the **CH 6066** compressor (1).

NOTE: The spring is compressed when the strut moves freely.

3. Using the **CH 6066** compressor (1), compress the front spring (2).

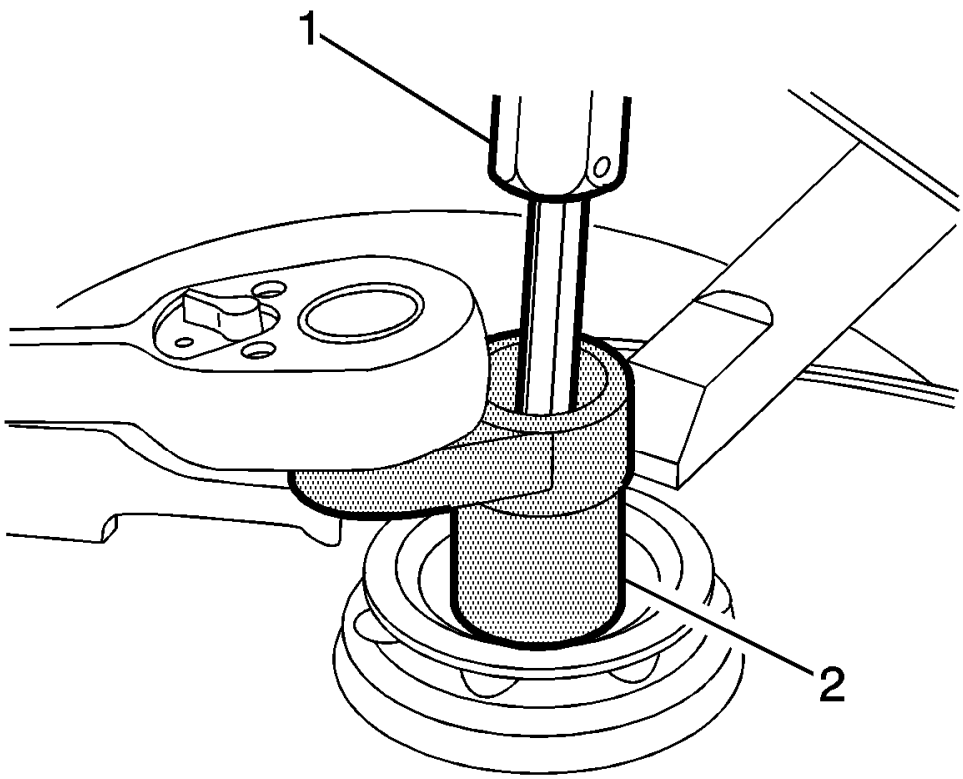

Fig. 33: View Of TORX(R) Bit And Special Wrench
Courtesy of GENERAL MOTORS COMPANY

4. Using a TORX® bit (1) and the **CH 35669** wrench (2), remove the front suspension strut nut.

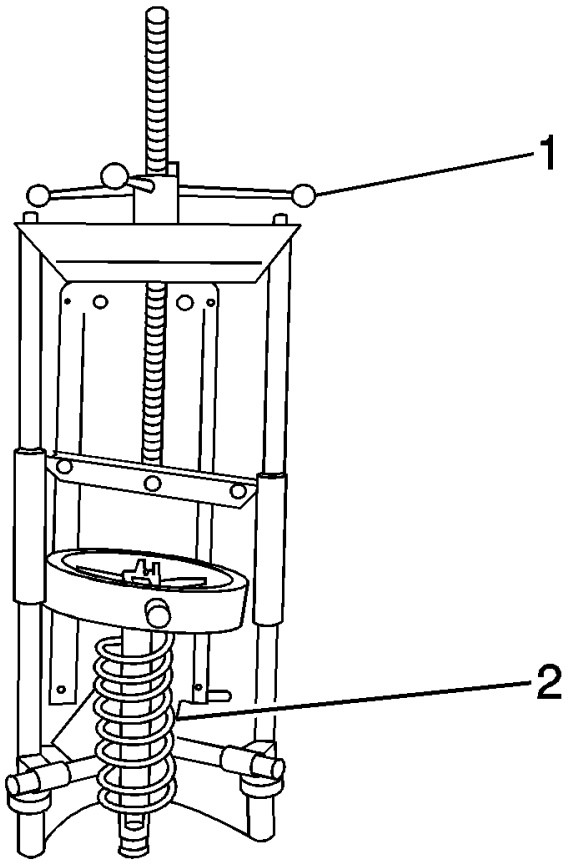

Fig. 34: View Of Compressor Forcing Screw & Coil Spring
Courtesy of GENERAL MOTORS COMPANY

5. Remove the front suspension strut mount and the front spring (2) from the **CH 6066** compressor (1).

Assembly Procedure

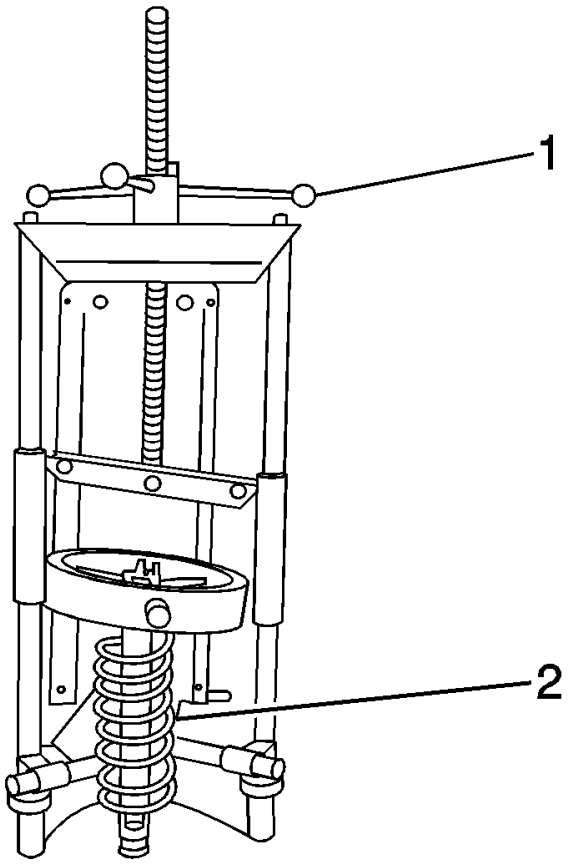

Fig. 35: View Of Compressor Forcing Screw & Coil Spring
Courtesy of GENERAL MOTORS COMPANY

1. Install the front spring (2) and front suspension strut mount in the **CH 6066** compressor (1).
2. Using the **CH 6066** compressor (1), compress the front spring (2).
3. Hand tighten the front suspension strut nut.

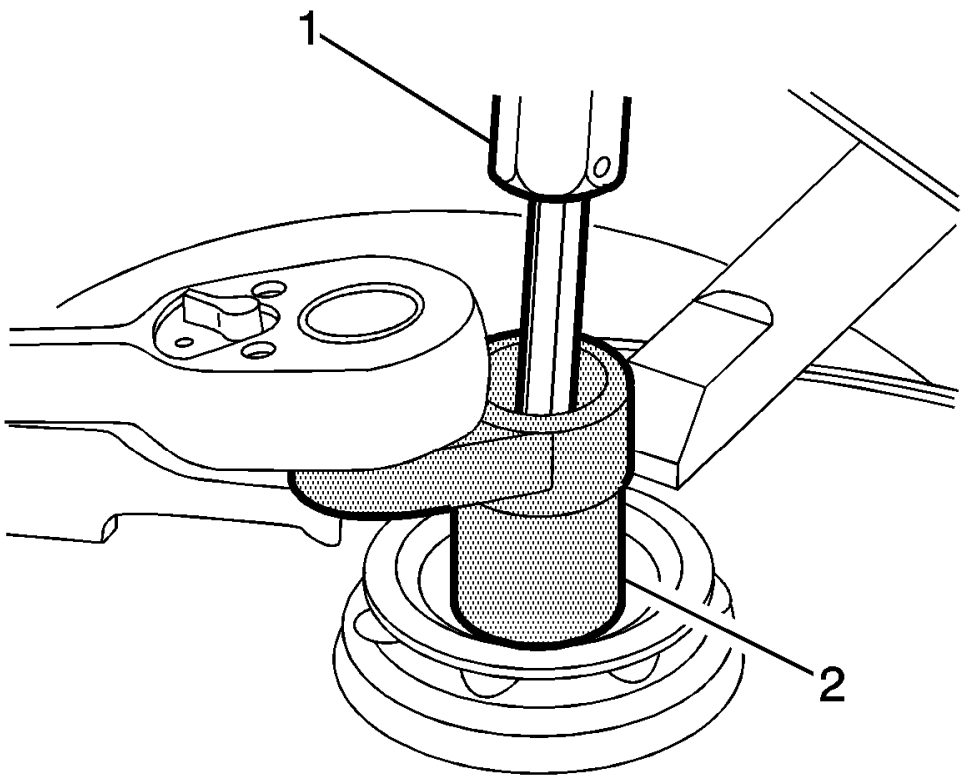

Fig. 36: View Of TORX(R) Bit And Special Wrench
Courtesy of GENERAL MOTORS COMPANY

CAUTION: Refer to Fastener Caution .

NOTE: Use the proper size TORX® bit to hold the strut shaft.

4. Using the **CH 35669** wrench (2) and the TORX® bit (1), tighten the front suspension strut nut to 70 N.m (52 lb ft).
5. Remove the front suspension strut from the **CH 6066** compressor (1).
6. Install the front suspension strut on the vehicle. Refer to **Strut Assembly Removal and Installation**.

DESCRIPTION AND OPERATION

FRONT SUSPENSION DESCRIPTION AND OPERATION

The front suspension has 2 primary purposes:

- Isolate the driver from irregularities in the road surface.
- Define the ride and handling characteristics of the vehicle.

The front suspension absorbs the impact of the tires travelling over irregular road surfaces and dissipates this energy throughout the suspension system. This process isolates the vehicle occupants from the road surface. The rate at which the suspension dissipates the energy and the amount of energy that is absorbed is how the suspension defines the vehicles ride characteristics. Ride characteristics are designed into the suspension system and are not adjustable. The ride characteristics are mentioned in this description in order to aid in the understanding of the functions of the suspension system. The suspension system must allow for the vertical movement of the tire and wheel assembly as the vehicle travels over irregular road surfaces while maintaining the tire's horizontal relationship to the road.

This requires that the steering knuckle be suspended between a lower control arm and a strut assembly. The lower control arm attaches from the steering knuckle at the outermost point of the control arm. The attachment is through a ball and socket type joint. The innermost end of the control arm attached at 2 points to the vehicle frame through semi-rigid bushings. The upper portion of the steering knuckle is attached to a strut assembly. The strut assembly then connects to the vehicle body by way of an upper bearing. The steering knuckle is allowed to travel up and down independent of the vehicle body structure and frame.

This up and down motion of the steering knuckle as the vehicle travels over bumps is absorbed predominantly by the coil spring. This spring is retained under tension over the strut assembly. A strut is used in conjunction with this system in order to dampen out the oscillations of the coil spring. A strut is a basic hydraulic cylinder. The strut is filled with oil and has a moveable shaft that connects to a piston inside the strut. Valves inside the shock absorber offer resistance to oil flow and consequently inhibit rapid movement of the piston and shaft. Each end of the shock absorber is connected in such a fashion to utilize this recoil action of a spring alone. Each end of the strut is designed as the connection point of the suspension system to the vehicle and acts as the coil spring seat. This allows the strut to utilize the dampening action to reduce the recoil of a spring alone. The lower control arm is allowed to pivot at the vehicle frame in a vertical fashion. The ball joint allows the steering knuckle to maintain the perpendicular relationship to the road surface.

Front suspensions systems utilize a stabilizer shaft. The stabilizer bar connects between the left and right lower control arm assemblies through the stabilizer link and stabilizer shaft insulators. This bar controls the amount of independent movement of the suspension when the vehicle turns. Limiting the independent movement defines the vehicles handling characteristics on turns.

SPECIAL TOOLS AND EQUIPMENT

SPECIAL TOOLS

Illustration	Tool Number/Description
	CH-43631 Ball Joint Remover

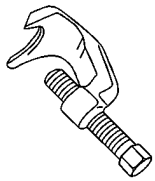	
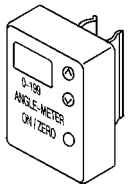	EN-45059 J-45059 Angle Meter
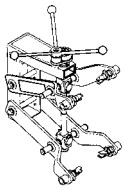	CH-48845 J-45400 Spring Compressor
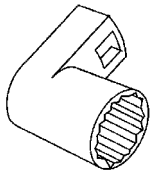	CH-49375 J-35669 Wrench
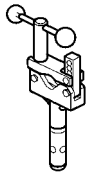	CH-6066 Strut Spring Compressor

2013 SUSPENSION

Rear Suspension - Cruze

SPECIFICATIONS

FASTENER TIGHTENING SPECIFICATIONS

Fastener Tightening Specifications

Application	Specification	
	Metric	English
Axle Bushing Through Bolts And Nuts	70 + 130 degrees (1)	52 lb ft + 130 degrees (1)
Exhaust Front Pipe to Exhaust Muffler Flange Nut	17	13 lb ft
Equalizer Beam Link Bolt	160	118 lb ft
Equalizer Beam Support Bolt	90 + 45 degrees - 60 degrees (1)	66 lb ft + 45 degrees - 60 degrees (1)
Equalizer Beam Link Bolt and Nut	40 + 45 degrees (1)	30 lb ft + 45 degrees (1)
Equalizer Beam Center Link Bolt and Nut	70 +120 degrees - 135 degrees (1)	52 lb ft +120 degrees - 135 degrees (1)
Rear Parking Brake Cable Bracket Bolts	10	89 lb ft
Rear Suspension Trailing Arm Nut	70 + 120 degrees (1)	52 lb ft + 120 degrees (1)
Shock Absorber Bolt Upper	100	74 lb ft
Shock Bolt Lower	150 + 60 degrees (1)	111 lb ft + 60 degrees (1)
Wheel Bearing/Hub Assembly Mounting Bolts	50 + 40 degrees (1)	37 lb ft + 40 degrees (1)
Wheel Speed Sensor Bolt	6	53 lb in
1 = Use NEW Fastener.		

COMPONENT LOCATOR

REAR SUSPENSION COMPONENTS

Rear Axle without Watt Linkage

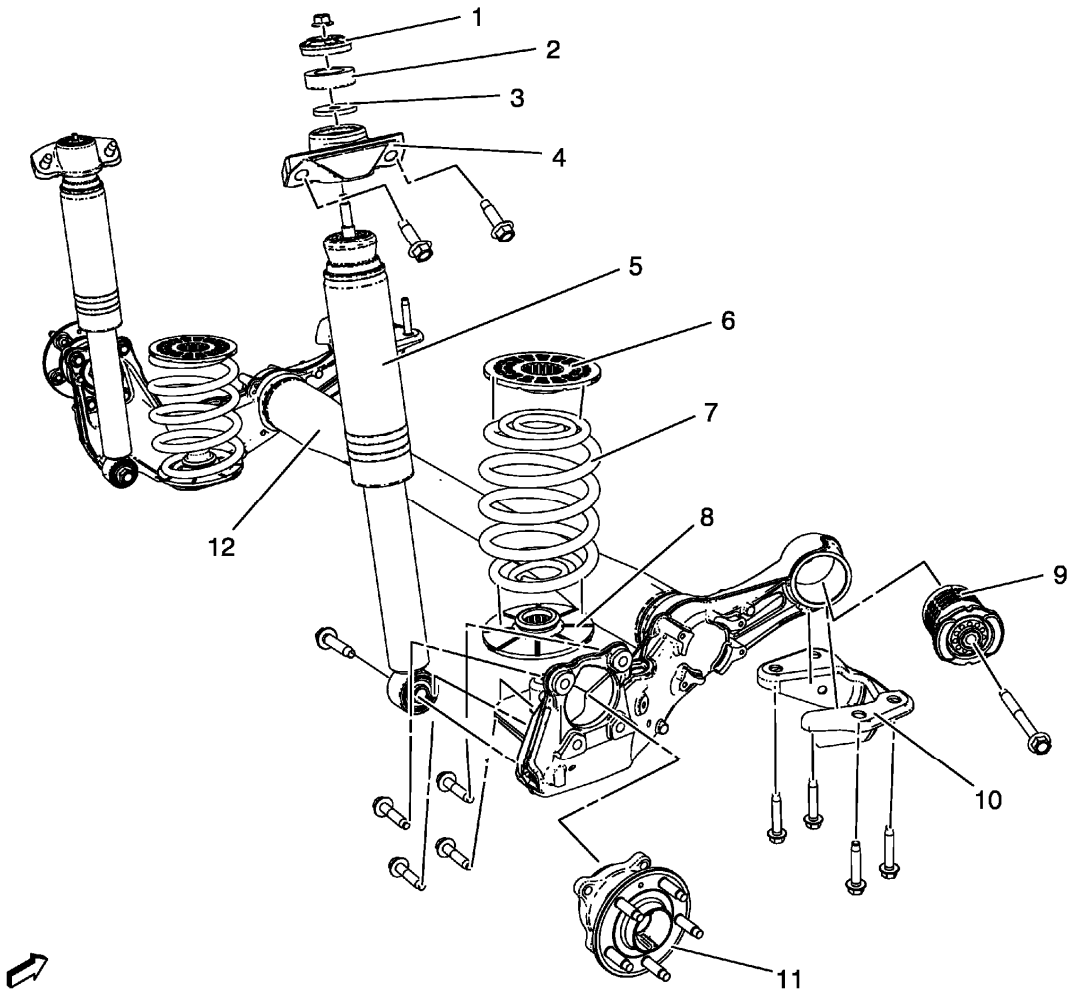

Fig. 1: Locating Rear Suspension System Components Without Watt Linkage
Courtesy of GENERAL MOTORS COMPANY

Callout	Component Name
1	Rear Shock Absorber Upper Mount
2	Rear Shock Absorber Upper Mount
3	Rear Shock Absorber Upper Mount
4	Rear Shock Absorber Upper Mount
5	Shock Absorber Assembly
6	Upper Dumping Ring
7	Rear Spring
8	Lower Dumping Ring
9	Rear Axle Bushing
10	Rear Axle Bracket
11	Rear Wheel Bearing
12	Rear Axle

Rear Axle with Watt Linkage

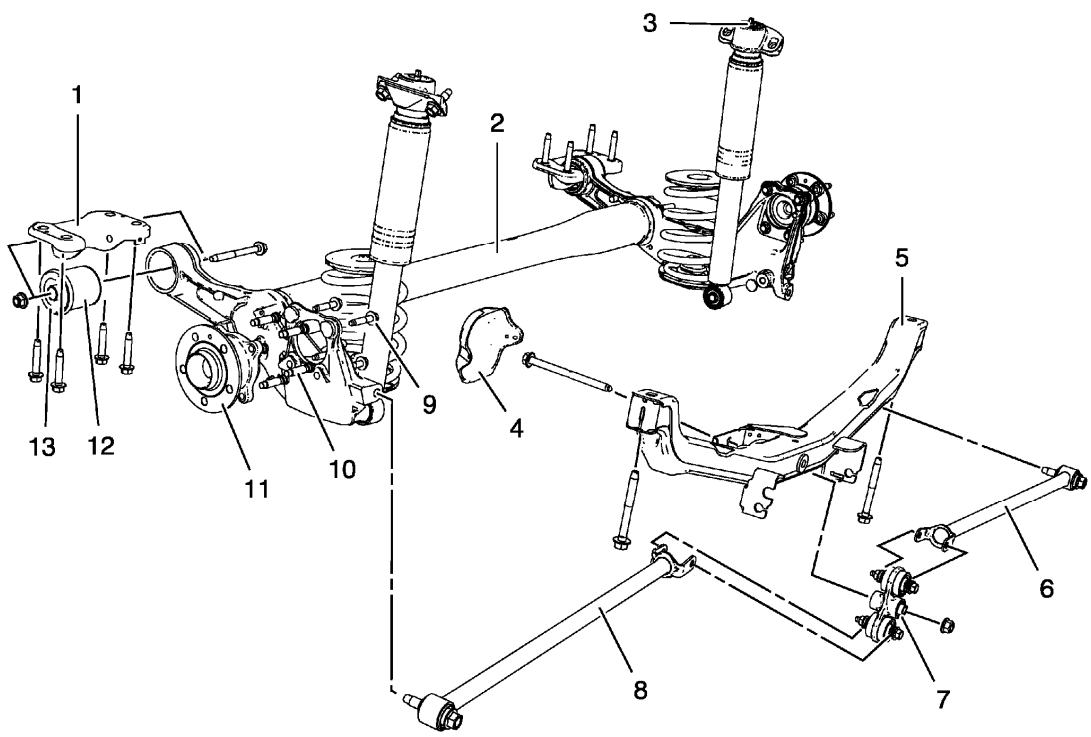

Fig. 2: Rear Suspension System Components With Watt Linkage
Courtesy of GENERAL MOTORS COMPANY

Callout	Component Name
1	Rear Axle Bracket
2	Rear Axle
3	Rear Shock Absorber
4	Equalizer Beam Heat Shield
5	Equalizer Beam Support
6	Right Equalizer Beam Link
7	Center Equalizer Beam Link
8	Left Equalizer Beam Link
9	Wheel Hub and Bearing Assembly Bolt
10	Wheel Stud
11	Wheel Hub and Bearing Assembly
12	Rear Axle Bushing
13	Rear Axle Bushing Alignment Mark

REPAIR INSTRUCTIONS

REAR WHEEL BEARING AND HUB REPLACEMENT (DISC BRAKE)

Special Tools

EN-45059 Angle Meter

For equivalent regional tools, refer to **Special Tools**.

Removal Procedure

1. Raise and suitably support the vehicle. Refer to **Lifting and Jacking the Vehicle** .
2. Remove the tire and wheel assembly. Refer to **Tire and Wheel Removal and Installation** .
3. Without disconnecting the hydraulic brake flex hose, remove and support the rear brake caliper and bracket as an assembly, and remove the rear brake rotor. Refer to **Rear Brake Rotor Replacement** .

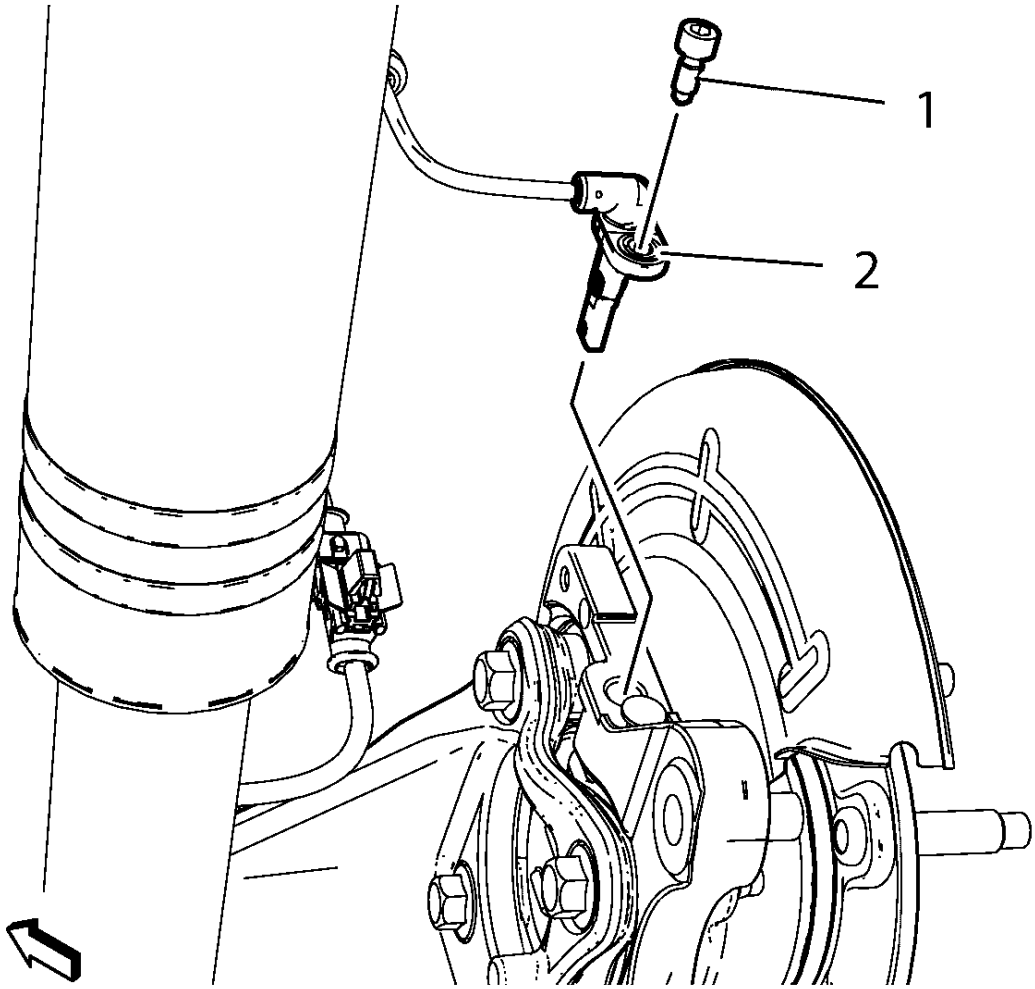

Fig. 3: Wheel Speed Sensor And Wheel Speed Sensor Mounting Bolt
Courtesy of GENERAL MOTORS COMPANY

CAUTION: Support the brake caliper with heavy mechanic wire, or equivalent,

whenever it is separated from its mount and the hydraulic flexible brake hose is still connected. Failure to support the caliper in this manner will cause the flexible brake hose to bear the weight of the caliper, which may cause damage to the brake hose and in turn may cause a brake fluid leak.

4. Remove the wheel speed sensor bolt (1).
5. Remove the wheel speed sensor (2).

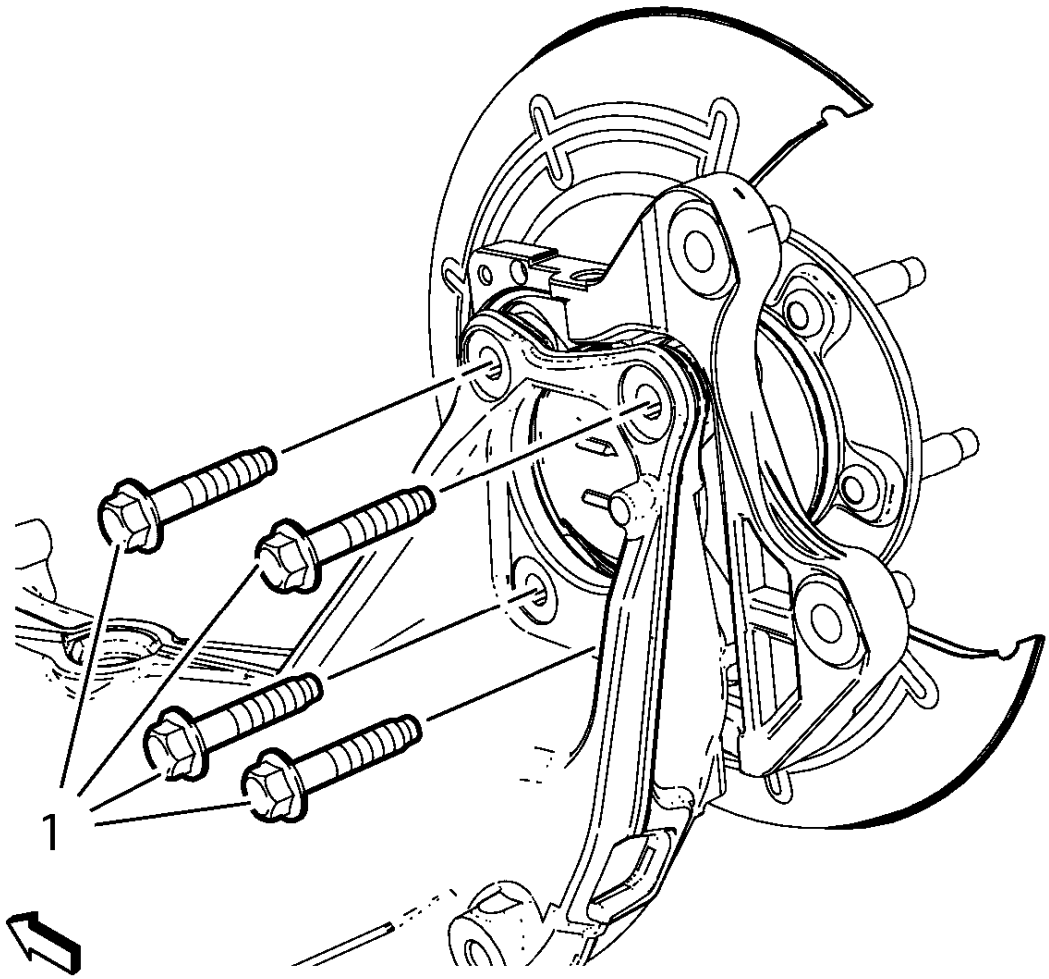

Fig. 4: Wheel Bearing/Hub Mounting Bolts
Courtesy of GENERAL MOTORS COMPANY

6. Remove and DISCARD the 4 wheel bearing/hub mounting bolts (1).

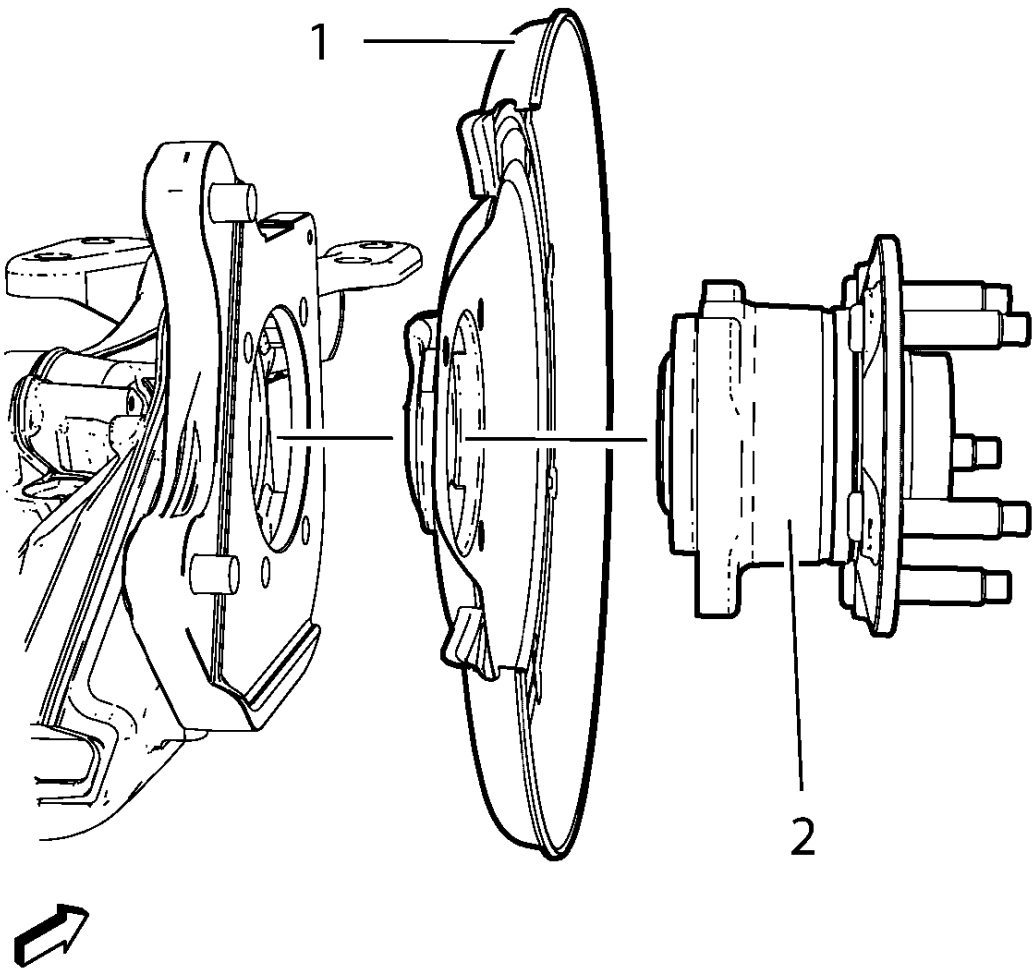

Fig. 5: Wheel Bearing/Hub, Rear Brake Shield And Steering Knuckle
Courtesy of GENERAL MOTORS COMPANY

7. Remove the wheel bearing/hub assembly (2) and rear brake shield (1) from the rear axle.

Installation Procedure

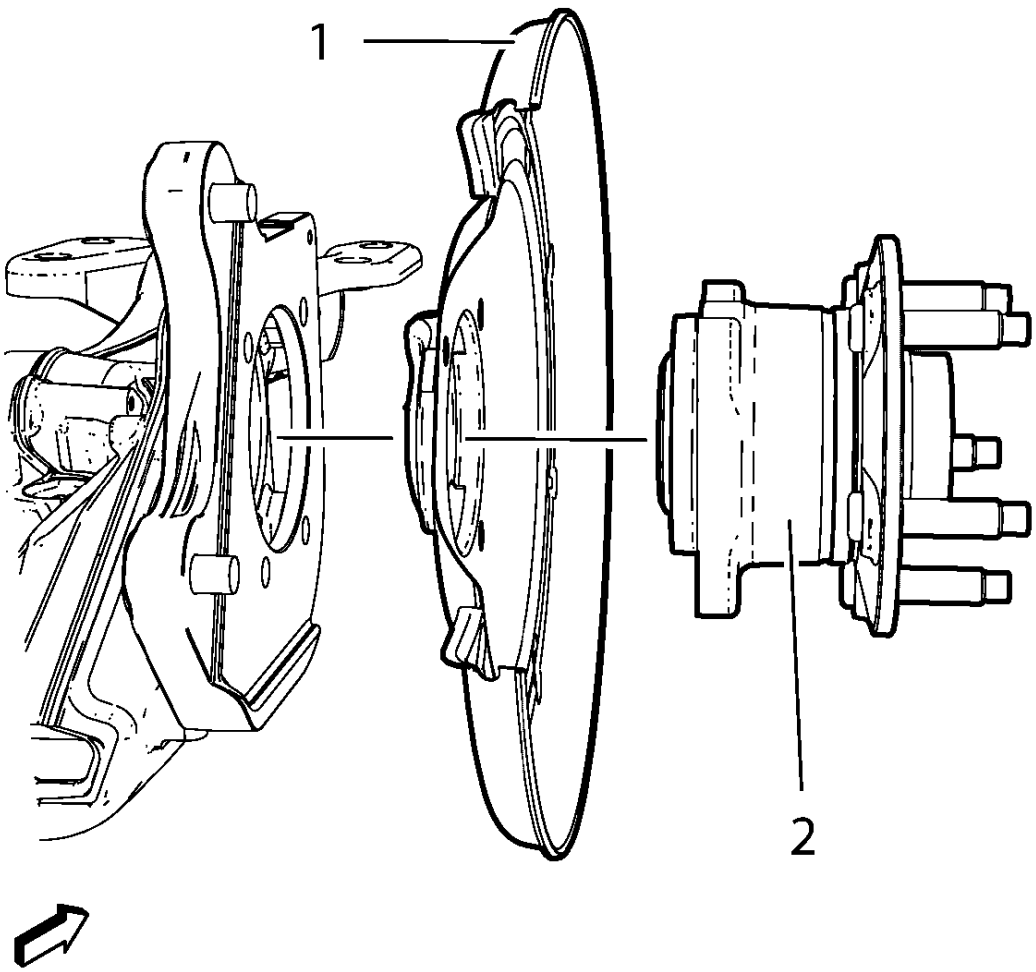

Fig. 6: Wheel Bearing/Hub, Rear Brake Shield And Steering Knuckle
Courtesy of GENERAL MOTORS COMPANY

1. Position the rear brake shield (1) and wheel bearing/hub assembly (2) in the rear axle.

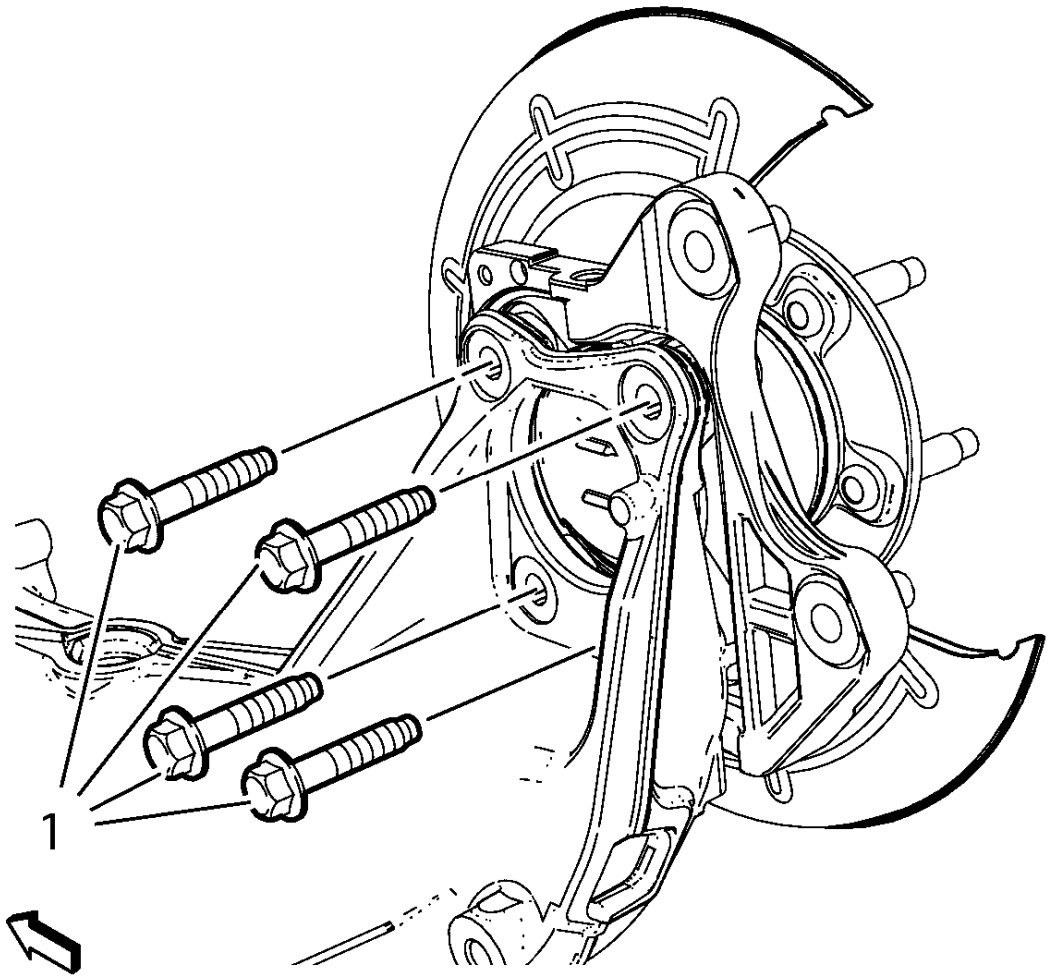

Fig. 7: Wheel Bearing/Hub Mounting Bolts
Courtesy of GENERAL MOTORS COMPANY

CAUTION: Refer to Fastener Caution .

2. Install the 4 NEW wheel bearing/hub mounting bolts (1) and tighten a first pass to 50 N.m (37 lb ft). Tighten the bolts evenly, in a cross-pattern.

WARNING: Refer to Torque-to-Yield Fastener Warning .

3. Tighten the 4 NEW wheel bearing/hub mounting bolts a final pass to an additional 40 degrees, using the **EN-45059** meter.

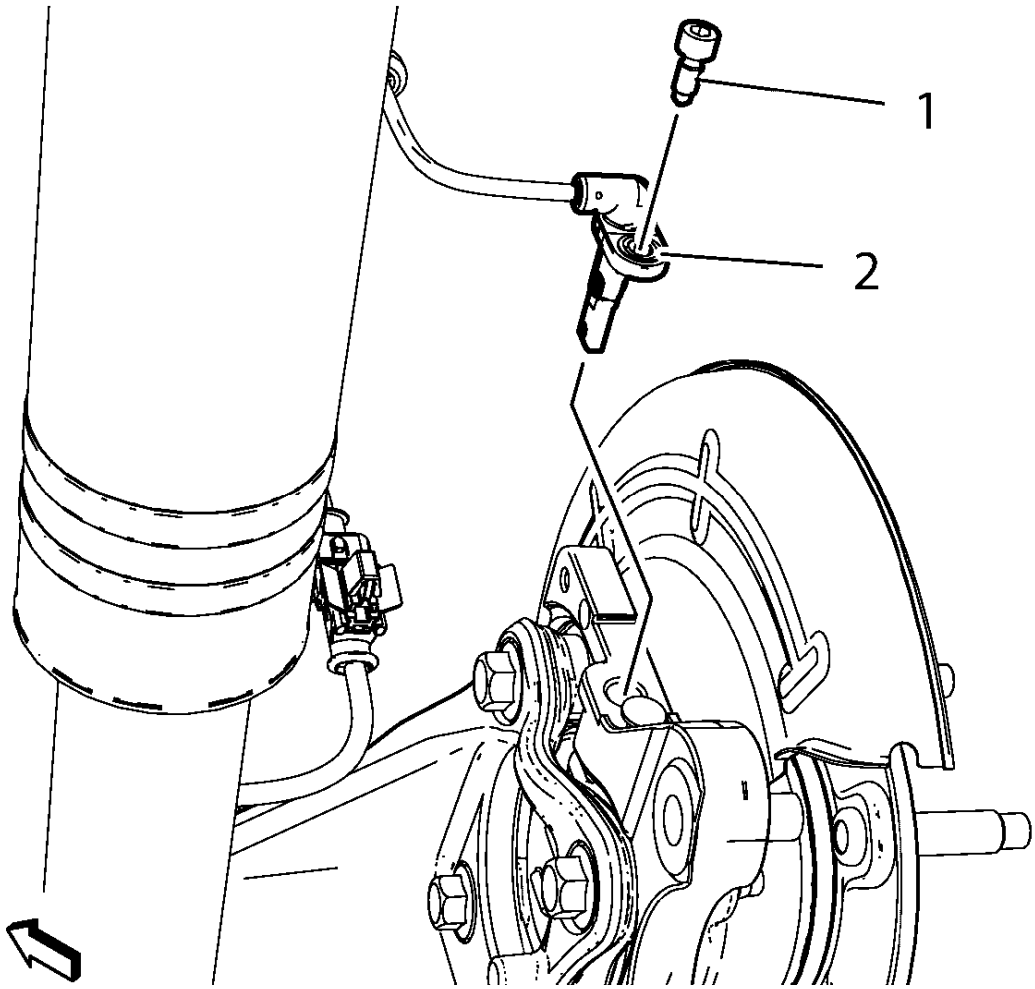

Fig. 8: Wheel Speed Sensor And Wheel Speed Sensor Mounting Bolt
Courtesy of GENERAL MOTORS COMPANY

4. Install the wheel speed sensor (2).
5. Install the wheel speed sensor bolt (1) and tighten to 6 N.m (53 lb in).
6. Install the brake rotor, and install the brake caliper and bracket as an assembly. Refer to **Rear Brake Rotor Replacement** .
7. Install the tire and wheel assembly. Refer to **Tire and Wheel Removal and Installation** .
8. Lower the vehicle.

REAR WHEEL BEARING AND HUB REPLACEMENT (DRUM BRAKE)

Special Tools

EN 45059 Torque Angle Sensor Kit

For equivalent regional tools, refer to **Special Tools**.

Removal Procedure

1. Raise and suitably support the vehicle. Refer to **Lifting and Jacking the Vehicle** .
2. Remove the tire and wheel assembly. Refer to **Tire and Wheel Removal and Installation** .
3. Remove the brake drum. Refer to **Brake Drum Replacement** .

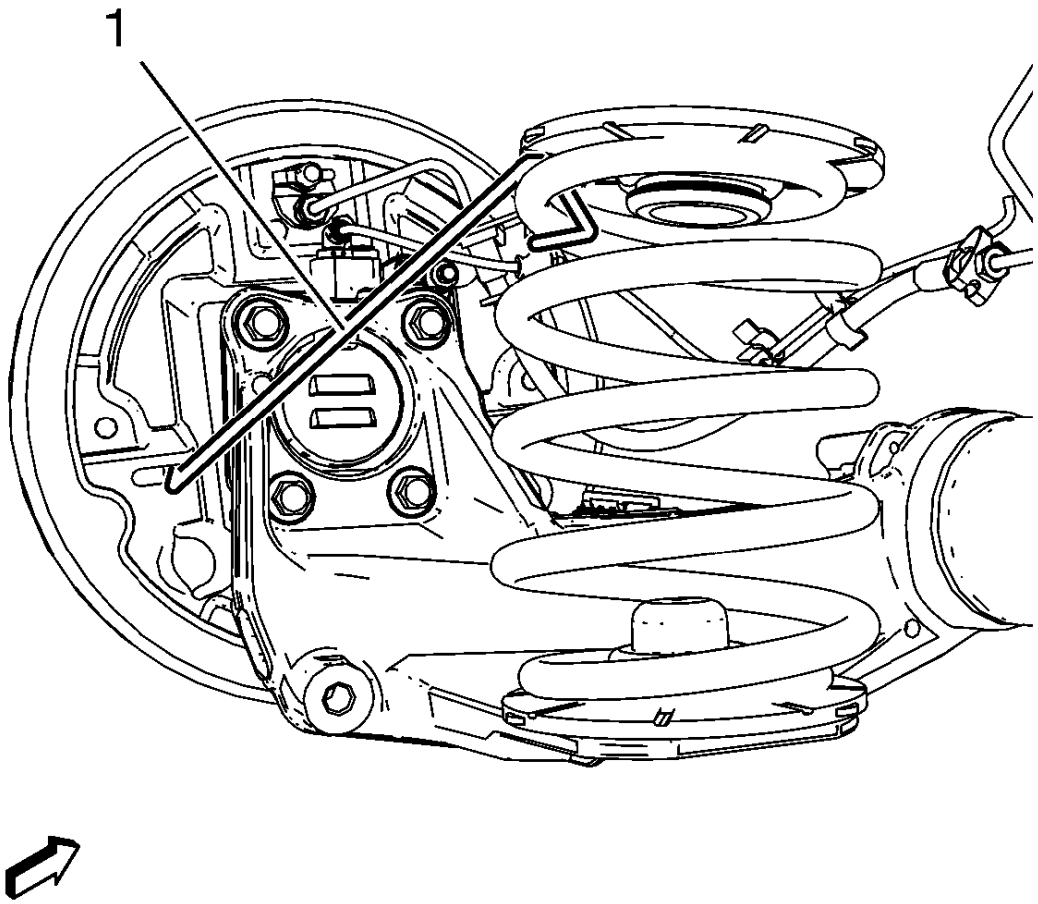

Fig. 9: Supporting Brake Backing Plate
Courtesy of GENERAL MOTORS COMPANY

4. Remove the plug from the drum brake actuator access hole in the backing plate. Using the access hole, install a heavy mechanic wire (1) in order to support the brake backing plate.

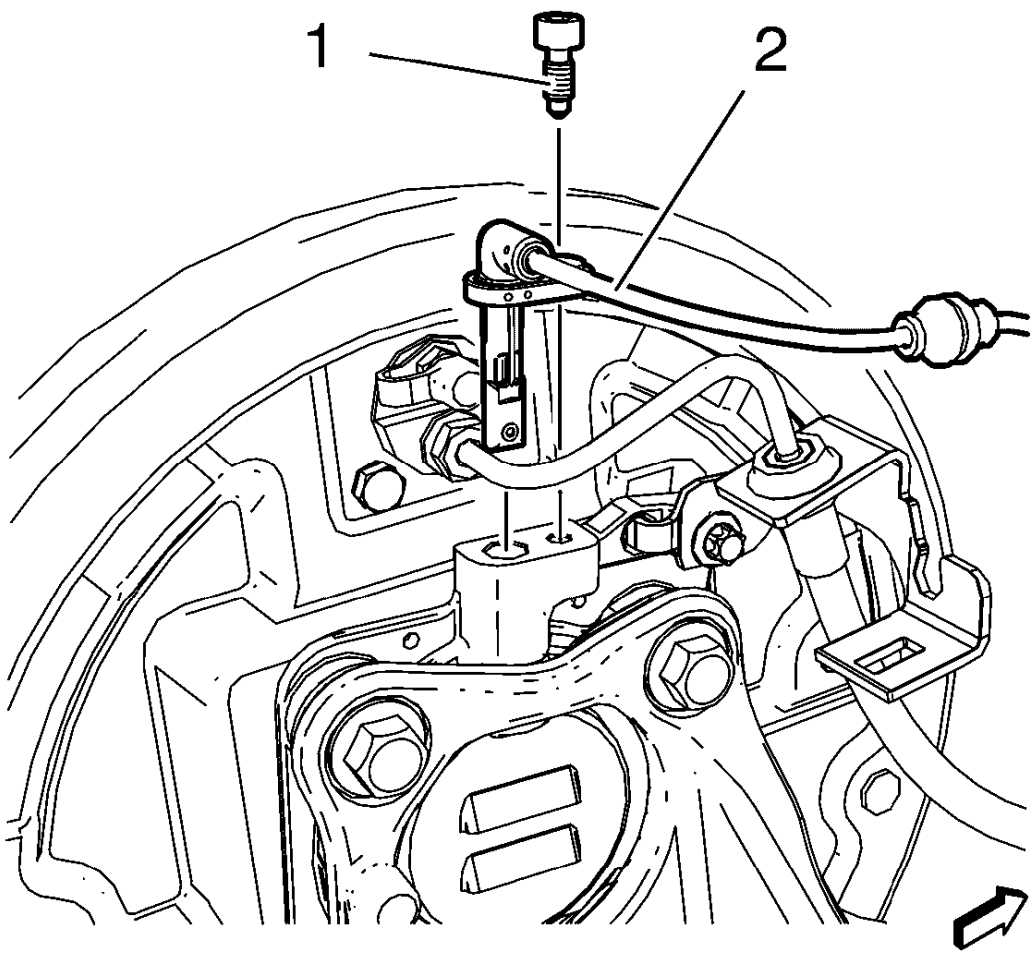

Fig. 10: Wheel Speed Sensor And Bolt
Courtesy of GENERAL MOTORS COMPANY

5. Remove the wheel speed sensor bolt (1).
6. Remove the wheel speed sensor (2).

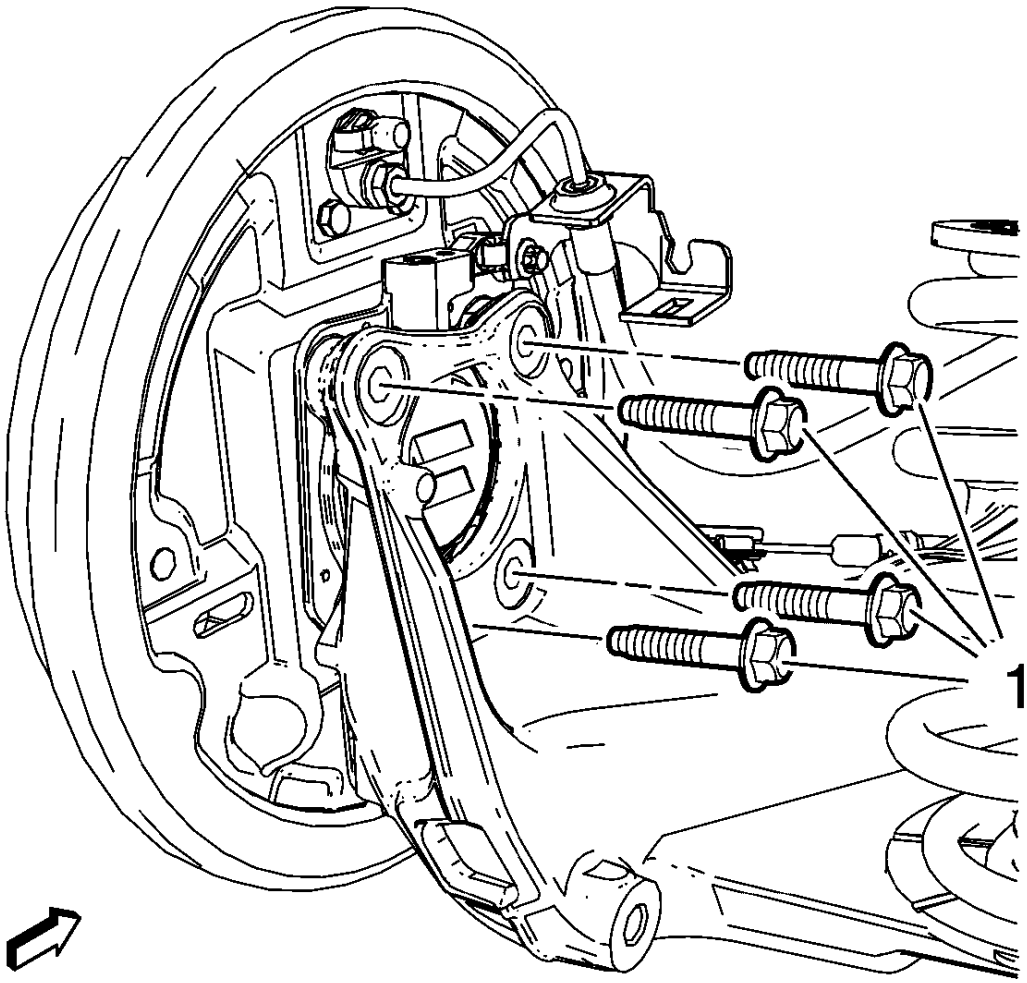

Fig. 11: Wheel Bearing/Hub Mounting Bolts
Courtesy of GENERAL MOTORS COMPANY

7. Remove and DISCARD the wheel bearing/hub mounting bolts (1).

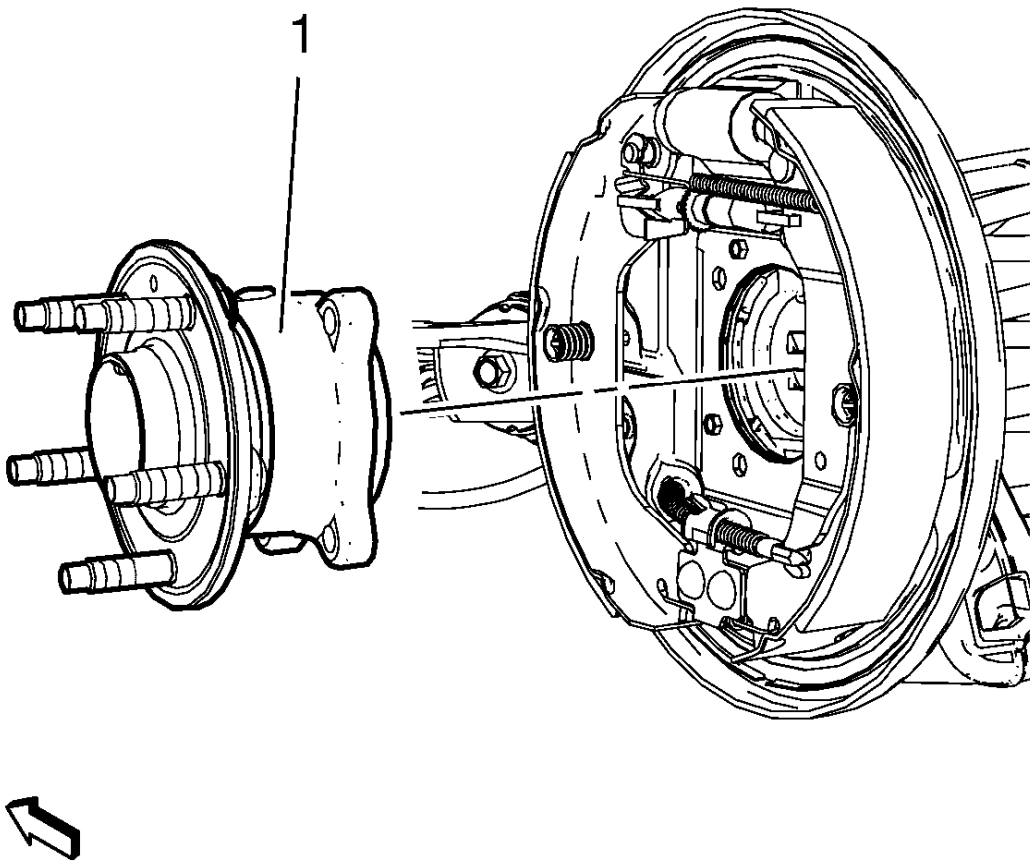

Fig. 12: Wheel Bearing/Hub Assembly
Courtesy of GENERAL MOTORS COMPANY

8. Remove the wheel bearing/hub assembly (1) from the rear axle assembly and brake backing plate.

Installation Procedure

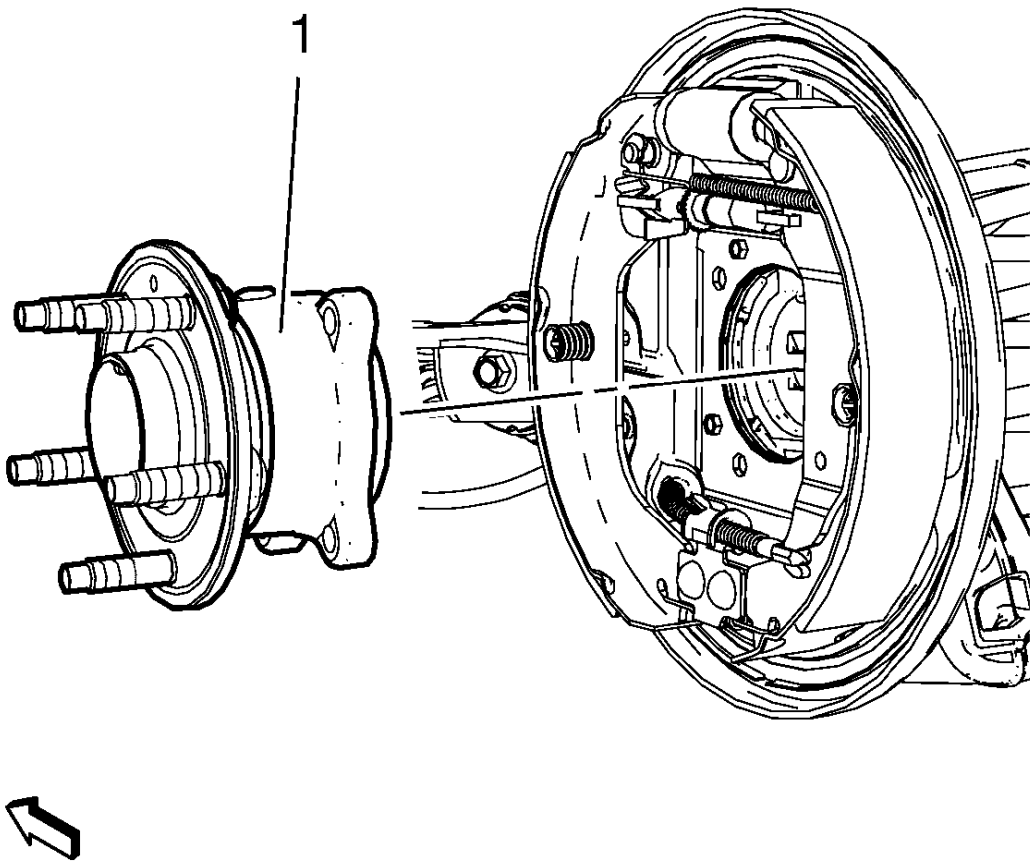

Fig. 13: Wheel Bearing/Hub Assembly
Courtesy of GENERAL MOTORS COMPANY

1. Install the wheel bearing/hub assembly (1) to the brake backing plate and the rear axle assembly.

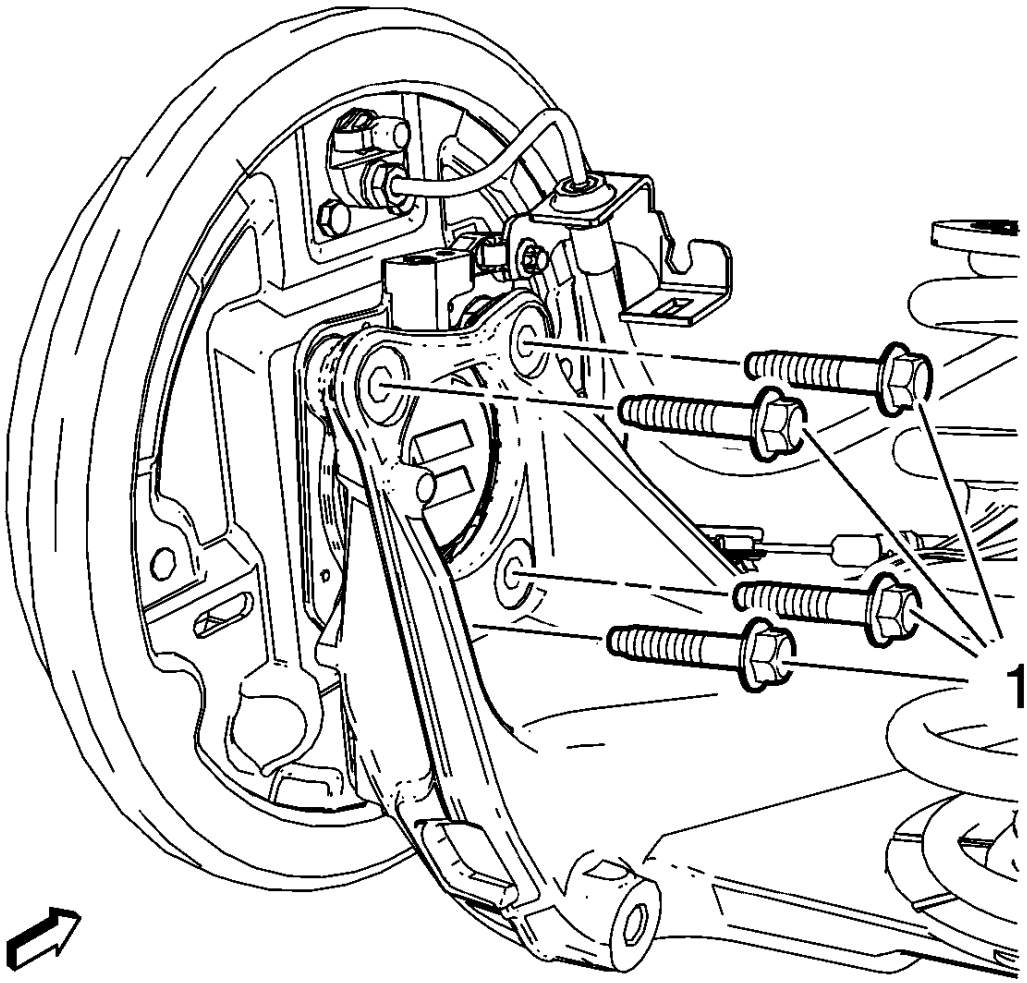

Fig. 14: Wheel Bearing/Hub Mounting Bolts
Courtesy of GENERAL MOTORS COMPANY

CAUTION: Refer to Fastener Caution .

CAUTION: Refer to Torque-to-Yield Fastener Caution .

NOTE: Tighten the bolts evenly, in a cross-pattern.

2. Install the NEW wheel bearing/hub mounting bolts (1) and tighten to 50 N.m (37 lb ft) + 40°, using the EN 45059 kit.

   Tighten the bolts evenly, in a cross-pattern.

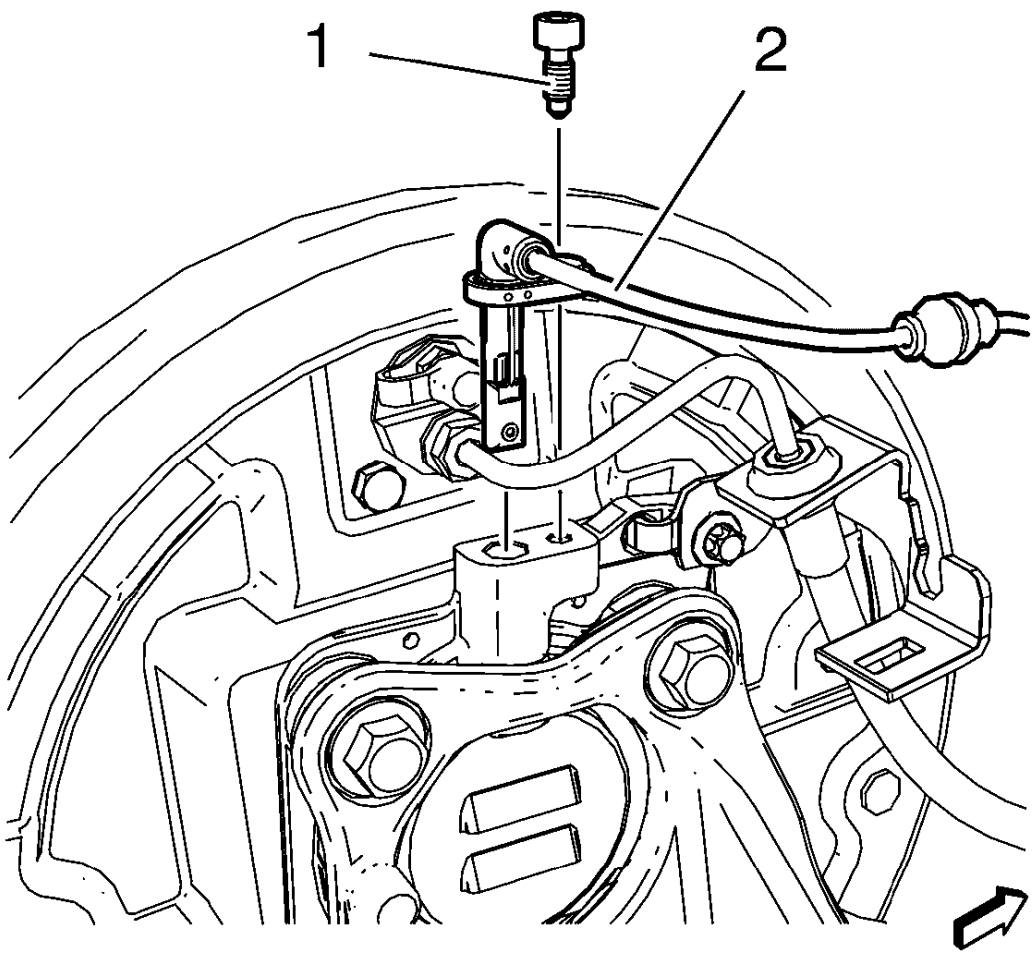

Fig. 15: Wheel Speed Sensor And Bolt
Courtesy of GENERAL MOTORS COMPANY

3. Install the wheel speed sensor (2).
4. Install the wheel speed sensor bolt (1) and tighten to 6 N.m (54 lb in).

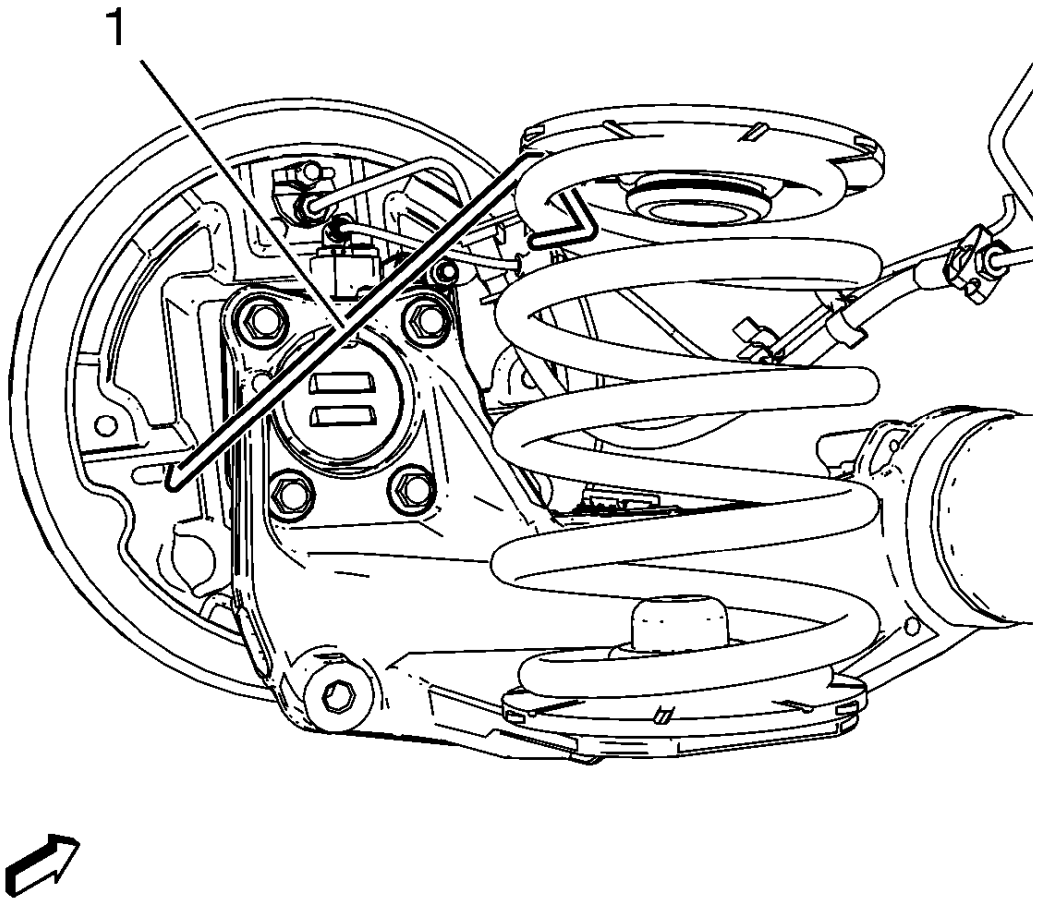

Fig. 16: Supporting Brake Backing Plate
Courtesy of GENERAL MOTORS COMPANY

5. Remove the mechanic wire (1) supporting the brake backing plate.
6. Install the plug to the drum brake actuator access hole in the backing plate.
7. Install the brake drum. Refer to **Brake Drum Replacement** .
8. Install the tire and wheel assembly. Refer to **Tire and Wheel Removal and Installation** .
9. Remove the support and lower the vehicle.

EQUALIZER BEAM SUPPORT REPLACEMENT

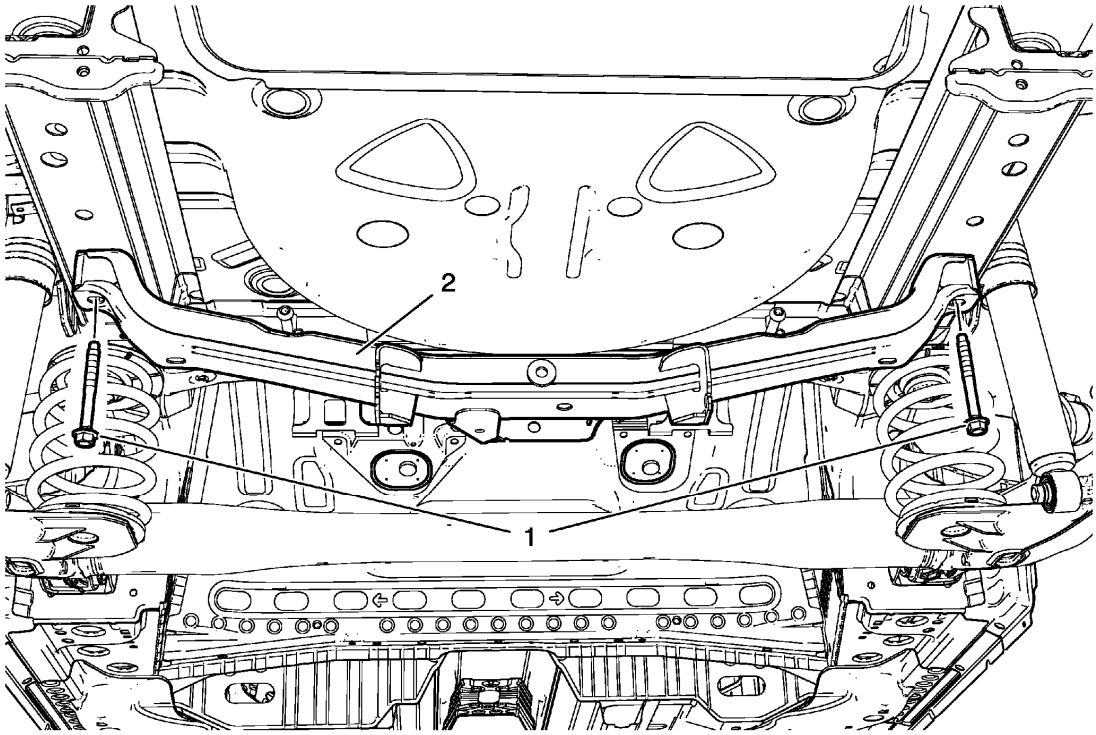

Fig. 17: Equalizer Beam Support And Bolts
Courtesy of GENERAL MOTORS COMPANY

Equalizer Beam Support Replacement

Callout	Component Name
Preliminary Procedures 1. Raise and support the vehicle. Refer to **Lifting and Jacking the Vehicle** . 2. Remove the tire and wheel assemblies. Refer to **Tire and Wheel Removal and Installation** . 3. For vehicles with electric parking brake, remove parking brake cable from support. Refer to **Parking Brake Cable Replacement (Mechanical Parking Brake)** . 4. Remove the equalizing beam center link. Refer to **Equalizer Beam Center Link Replacement**.	
1	Equalizer Beam Support Bolts (Qty: 2) **WARNING:** **Refer to Torque-to-Yield Fastener Warning .** **CAUTION:** **Refer to Fastener Caution .** **Procedure** Install NEW equalizer beam support bolts. Do NOT reuse old bolts. **Tighten**

	90 (66 lb ft) + 45-60 degrees
2	Equalizer Beam Support

EQUALIZER BEAM LINK REPLACEMENT - LEFT SIDE

Special Tools

EN-45059 Angle Sensor Kit

For equivalent regional tools. Refer to **Special Tools**.

Removal Procedure

1. Raise and support the vehicle. Refer to **Lifting and Jacking the Vehicle** .
2. Remove the tire and wheel assemblies. Refer to **Tire and Wheel Removal and Installation** .

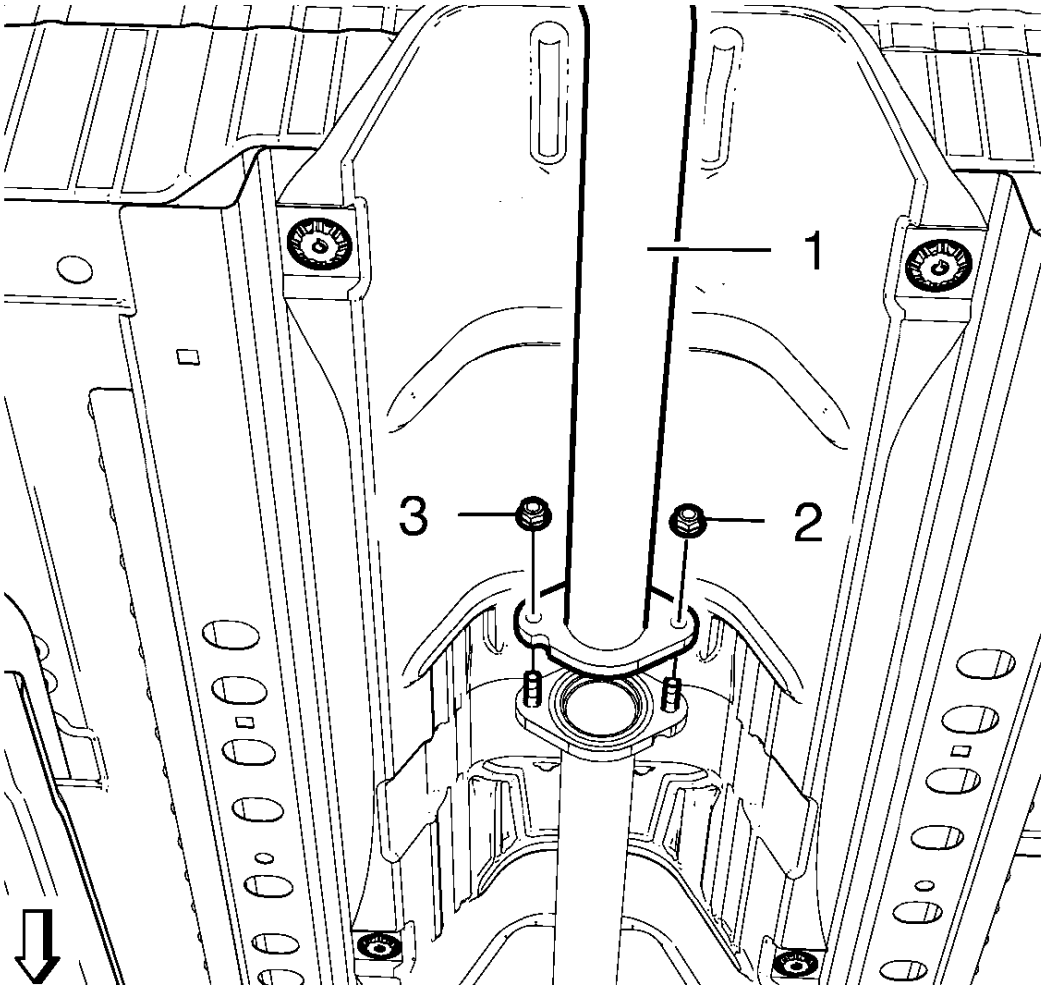

Fig. 18: Rear Exhaust Pipe

Courtesy of GENERAL MOTORS COMPANY

3. Remove and DISCARD exhaust front pipe to exhaust rear muffler nuts (2, 3).
4. Remove rear exhaust pipe (1) from flange.
5. DISCARD flange gasket.

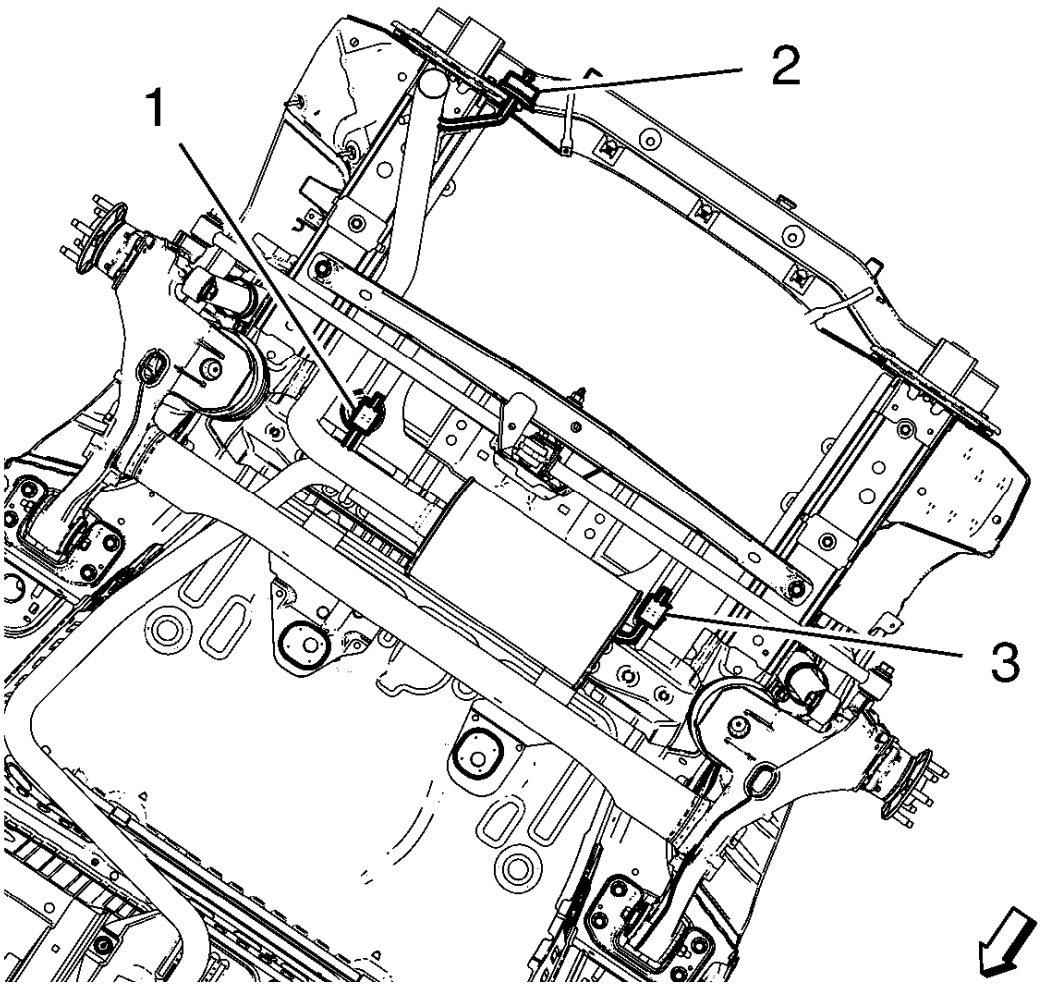

Fig. 19: Suspension Points
Courtesy of GENERAL MOTORS COMPANY

NOTE: There may be additional attachment points, depending on the powertrain in the vehicle.

6. Loosen rear exhaust muffler from suspension points (1, 2, 3).

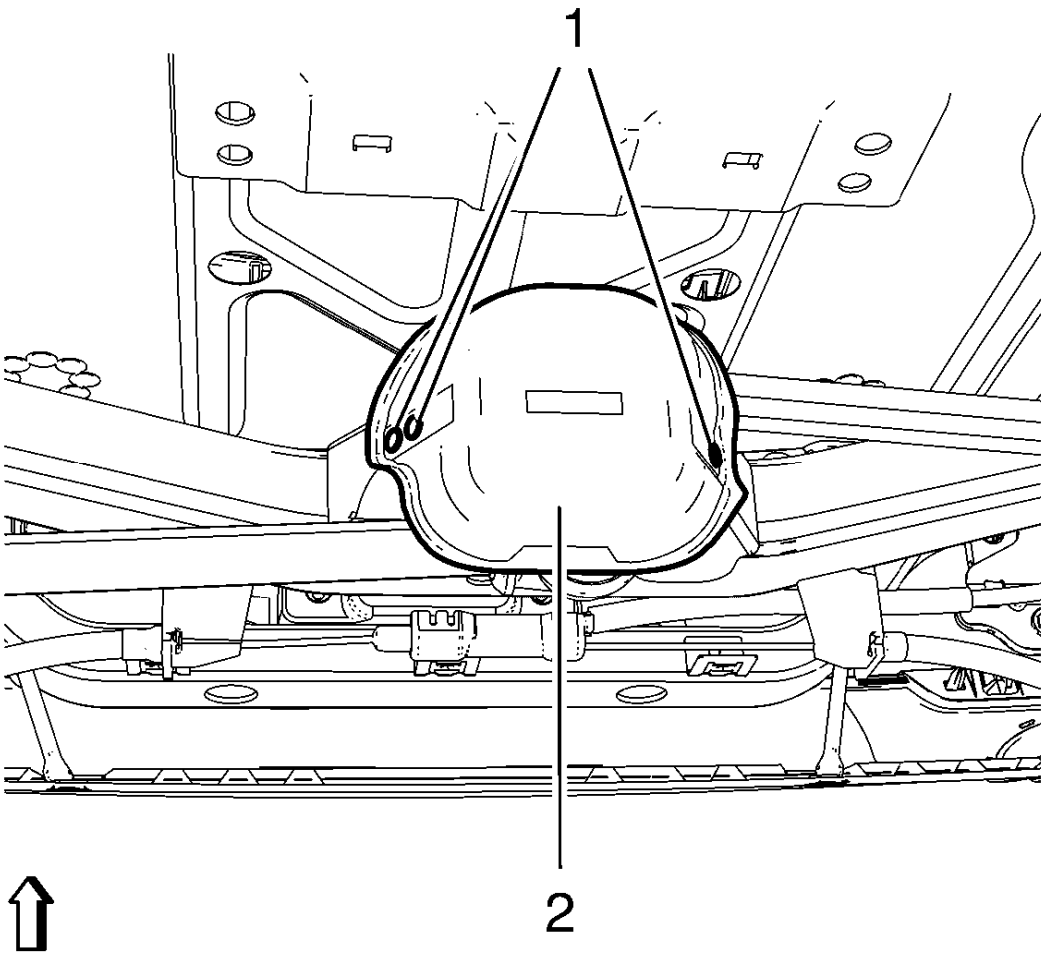

Fig. 20: Identifying Equalizer Beam Center Link Heat Shield And Rivets
Courtesy of GENERAL MOTORS COMPANY

7. Remove 3 rivets (1) from equalizer beam center link heat shield (2).

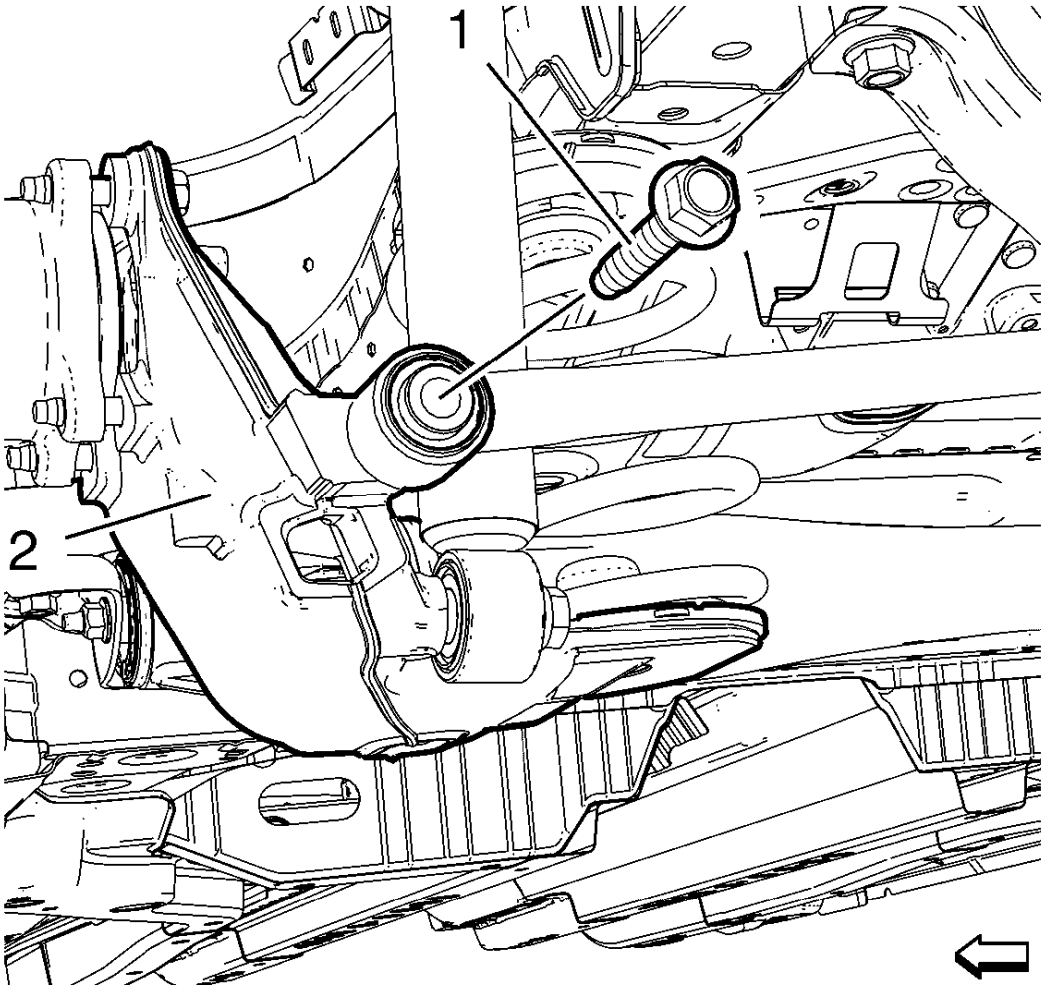

Fig. 21: Rear Axle And Equalizer Beam Link Bolt
Courtesy of GENERAL MOTORS COMPANY

8. Remove the equalizer beam link bolt (1) from the rear axle (2).

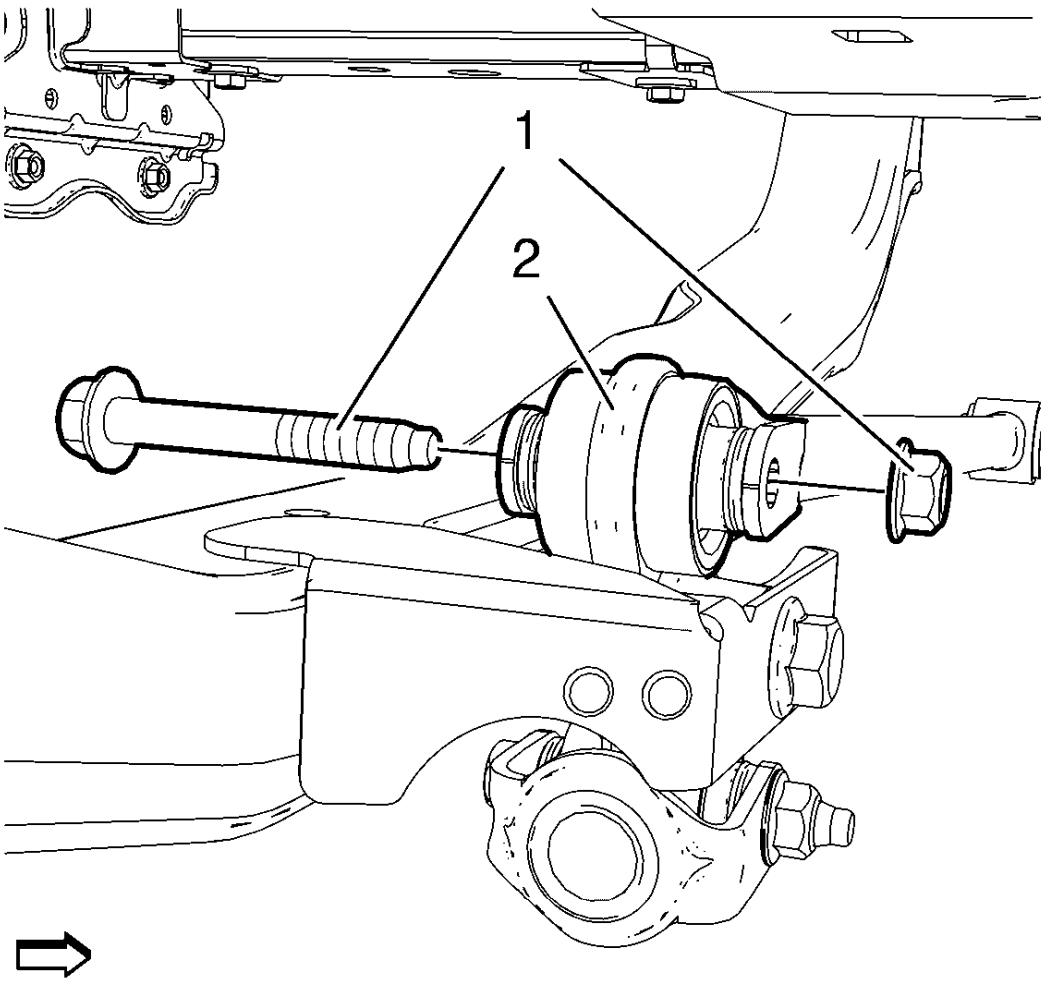

Fig. 22: Identifying Equalizer Beam Center Link
Courtesy of GENERAL MOTORS COMPANY

9. Remove and discard the equalizer beam link bolt and nut (1) from equalizer beam center link (2).
10. Remove equalizer beam link from the vehicle.

Installation Procedure

1. Insert equalizer beam link to the vehicle.

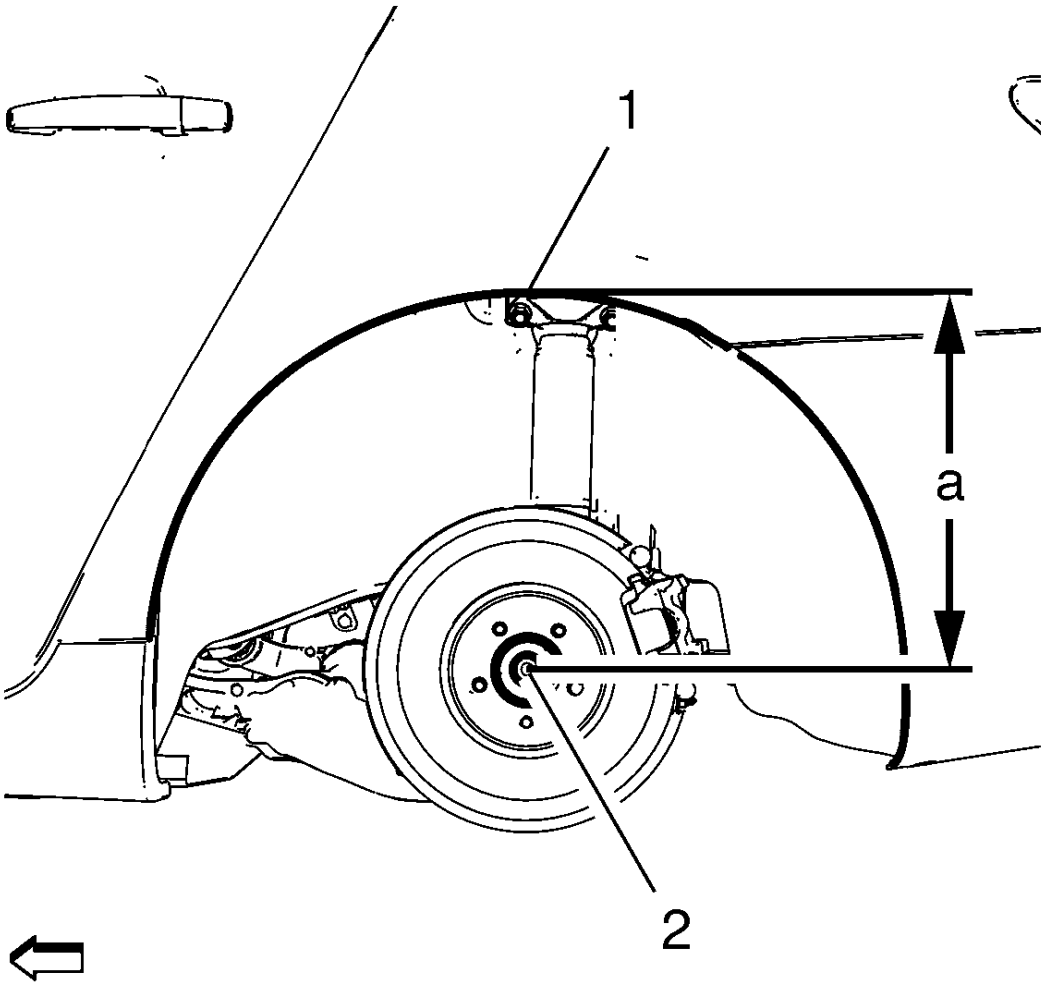

Fig. 23: Measuring Vertical Distance Between Center Of Wheel Hub And Top Of Wheel Opening
Courtesy of GENERAL MOTORS COMPANY

NOTE: Following step must be proceed in order to achieve correct rear axle joints alignment.

2. Using the lift table, raise the axle to the proper trim height specification by measuring the vertical distance (a) between the center of the wheel hub (2) and top of the wheel opening (1).

Specification

Dimension (a): 385 mm (15.16 in)

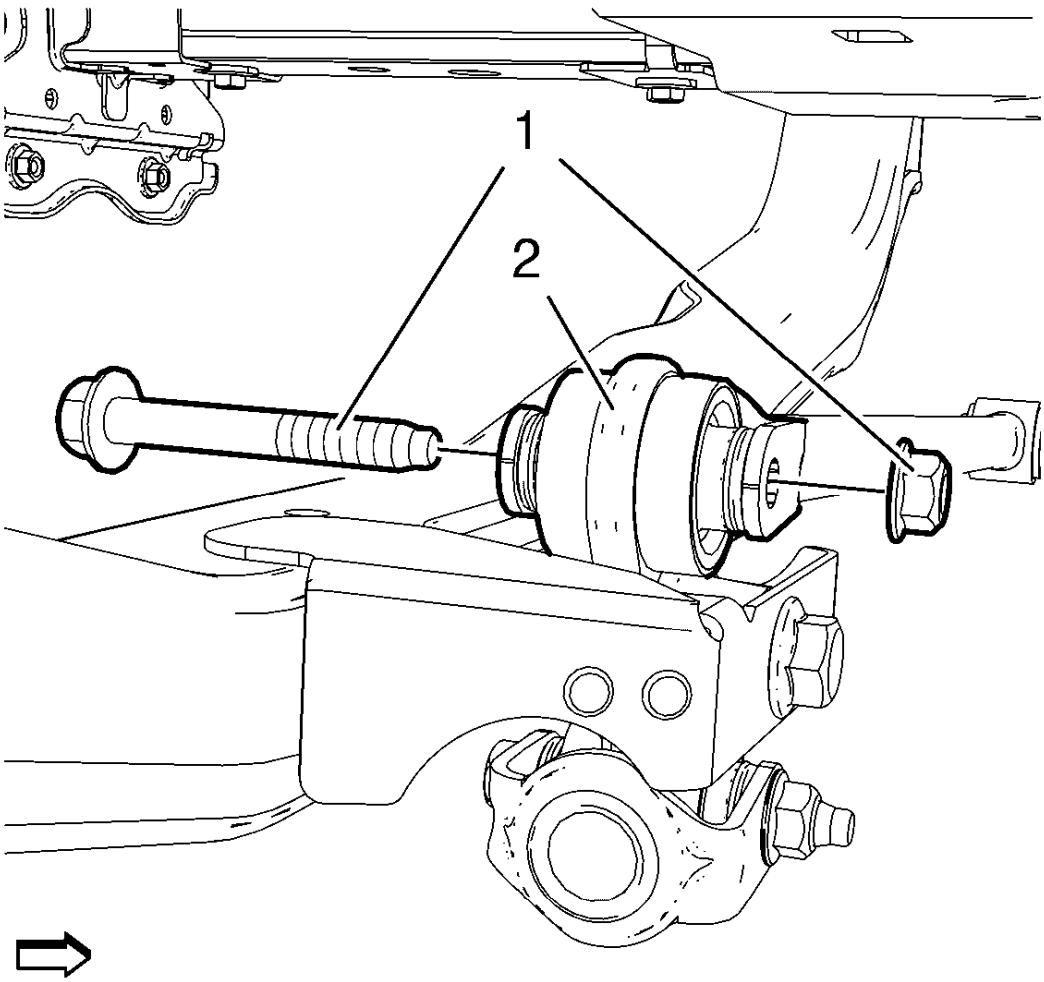

Fig. 24: Identifying Equalizer Beam Center Link
Courtesy of GENERAL MOTORS COMPANY

WARNING: Refer to Torque-to-Yield Fastener Warning .

CAUTION: Refer to Fastener Caution .

3. Install the NEW equalizer beam link bolt and nut (1) to equalizer beam center link (2) and tighten to 40 N.m (30 lb ft) + 60°, using the **EN-45059** angle meter.

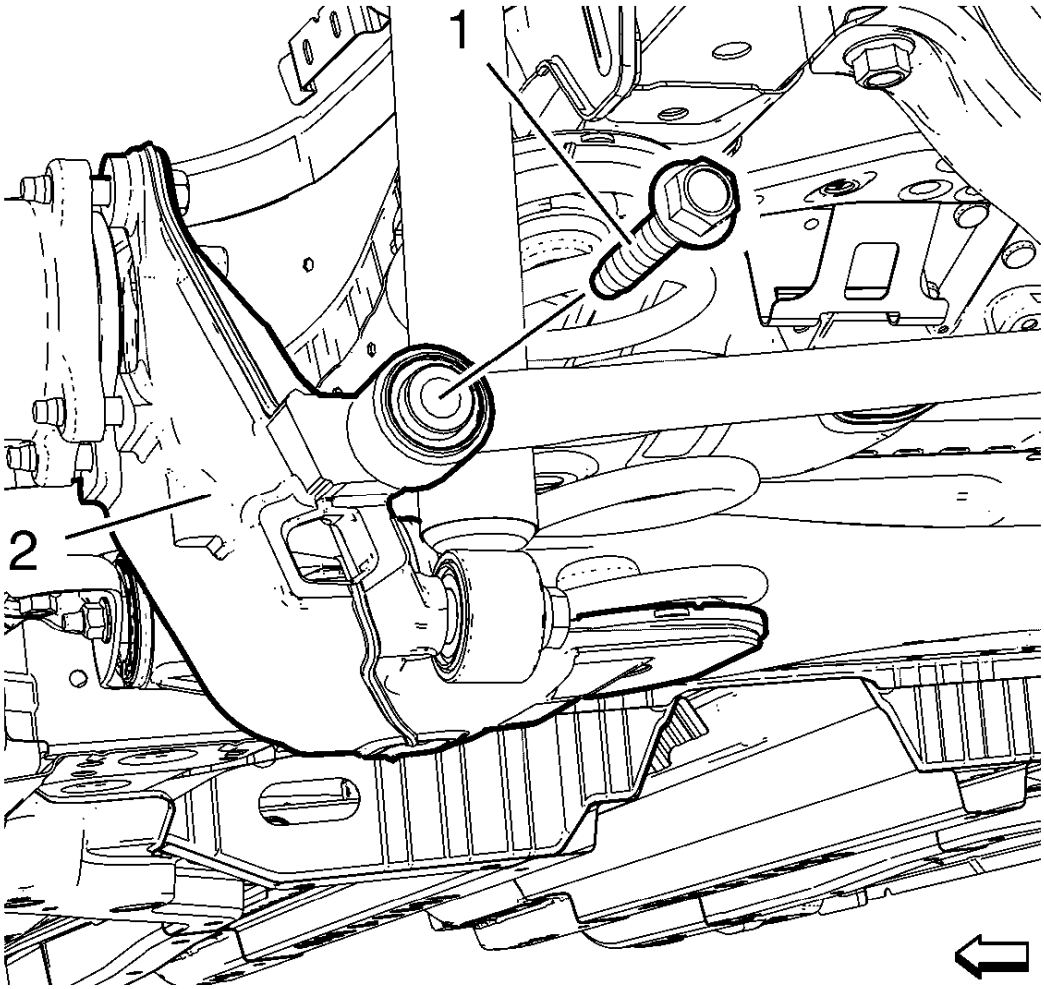

Fig. 25: Rear Axle And Equalizer Beam Link Bolt
Courtesy of GENERAL MOTORS COMPANY

4. Instal the equalizer beam link bolt (1) to the rear axle (2) and tighten to 160 N.m (118 lb ft).
5. Install the tire and wheel assemblies. Refer to **Tire and Wheel Removal and Installation** .

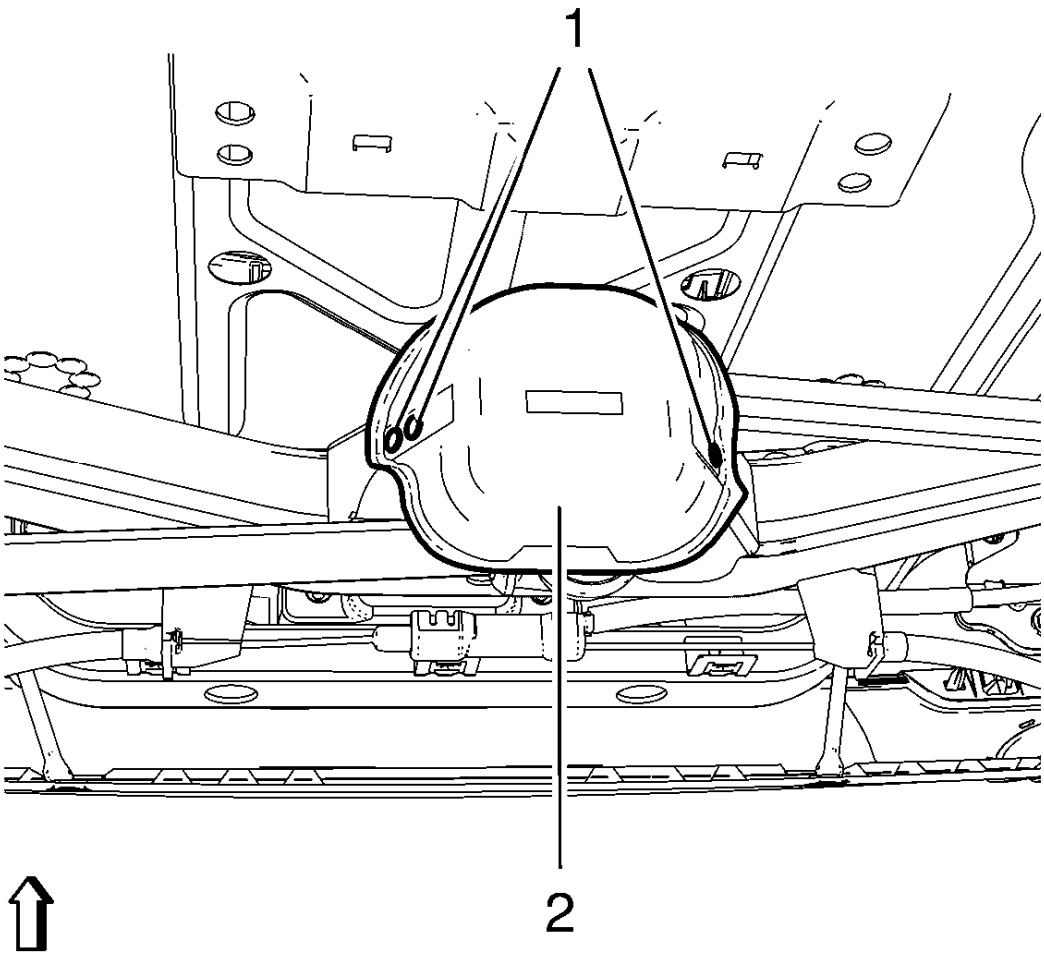

Fig. 26: Identifying Equalizer Beam Center Link Heat Shield And Rivets
Courtesy of GENERAL MOTORS COMPANY

6. Install 3 rivets (1) to equalizer beam center link heat shield (2).

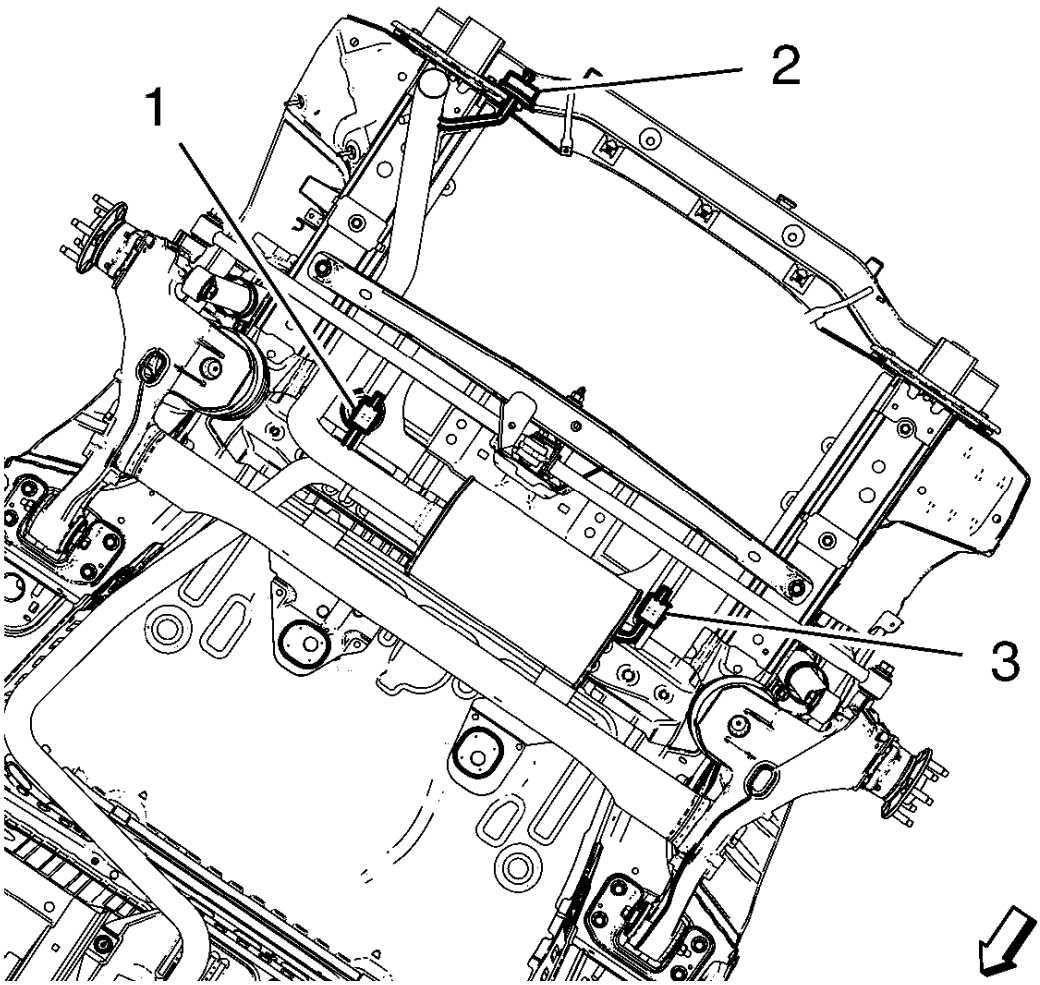

Fig. 27: Suspension Points
Courtesy of GENERAL MOTORS COMPANY

NOTE: There may be additional attachment points, depending on the powertrain in the vehicle.

7. Install rear exhaust muffler to suspension points (1, 2, 3).

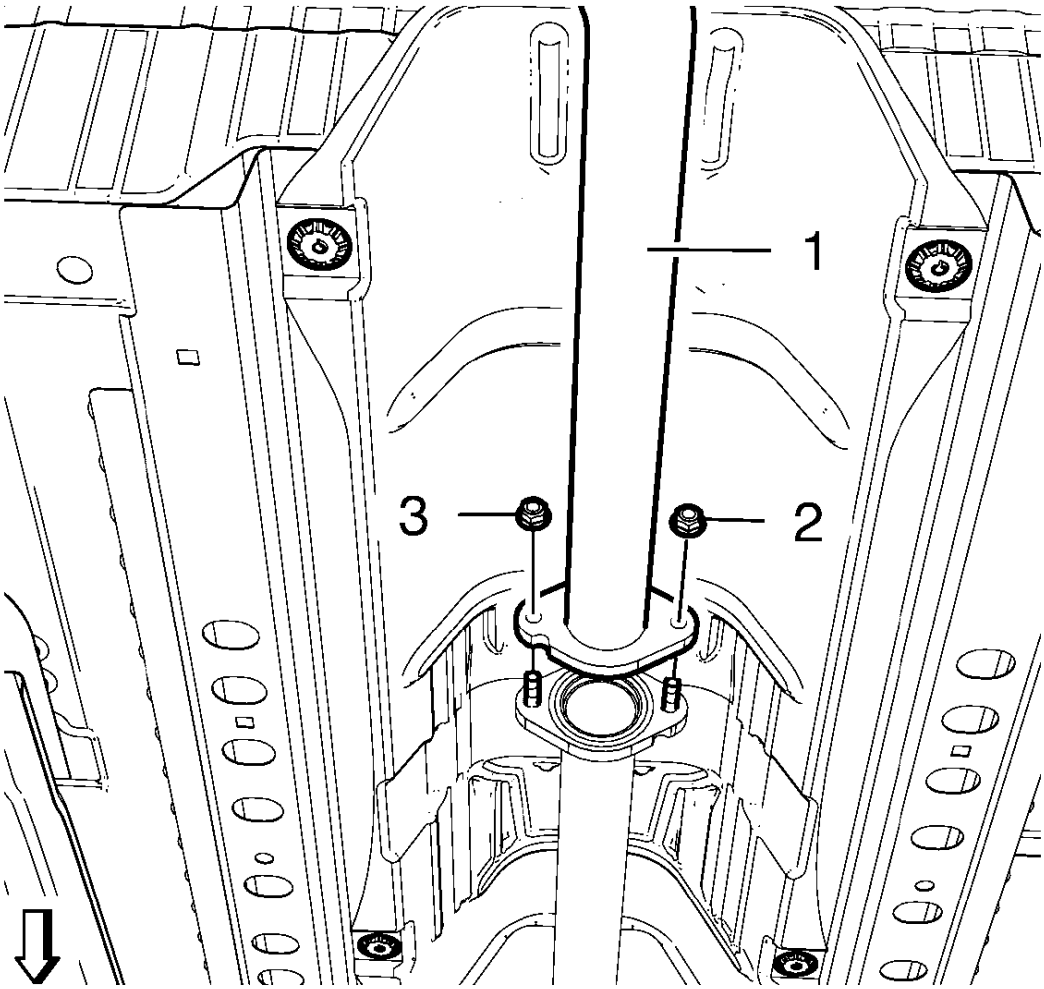

Fig. 28: Rear Exhaust Pipe
Courtesy of GENERAL MOTORS COMPANY

8. Install NEW flange gasket.
9. Install rear exhaust pipe (1) to flange.

CAUTION: Refer to Torque-to-Yield Fastener Caution

10. Install NEW exhaust front pipe to exhaust rear muffler nuts (2, 3) and tighten to 17 N.m (13 lb ft).
11. Lower the vehicle.

EQUALIZER BEAM LINK REPLACEMENT - RIGHT SIDE

Special Tools

EN-45059 Angle Sensor Kit

For equivalent regional tools. Refer to **Special Tools**.

Removal Procedure

1. Raise and support the vehicle. Refer to **Lifting and Jacking the Vehicle** .
2. Remove the tire and wheel assemblies. Refer to **Tire and Wheel Removal and Installation** .

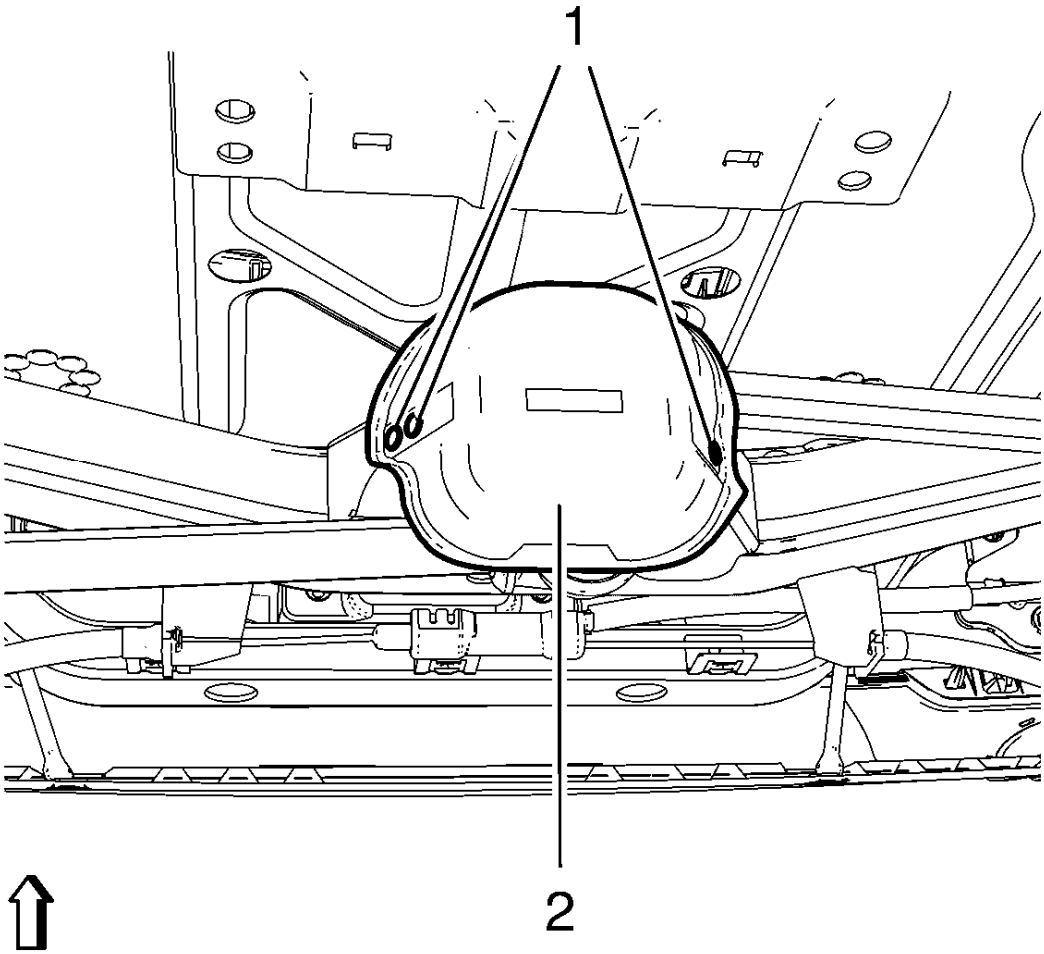

Fig. 29: Identifying Equalizer Beam Center Link Heat Shield And Rivets
Courtesy of GENERAL MOTORS COMPANY

3. Remove 3 rivets (1) from equalizer beam center link heat shield (2).

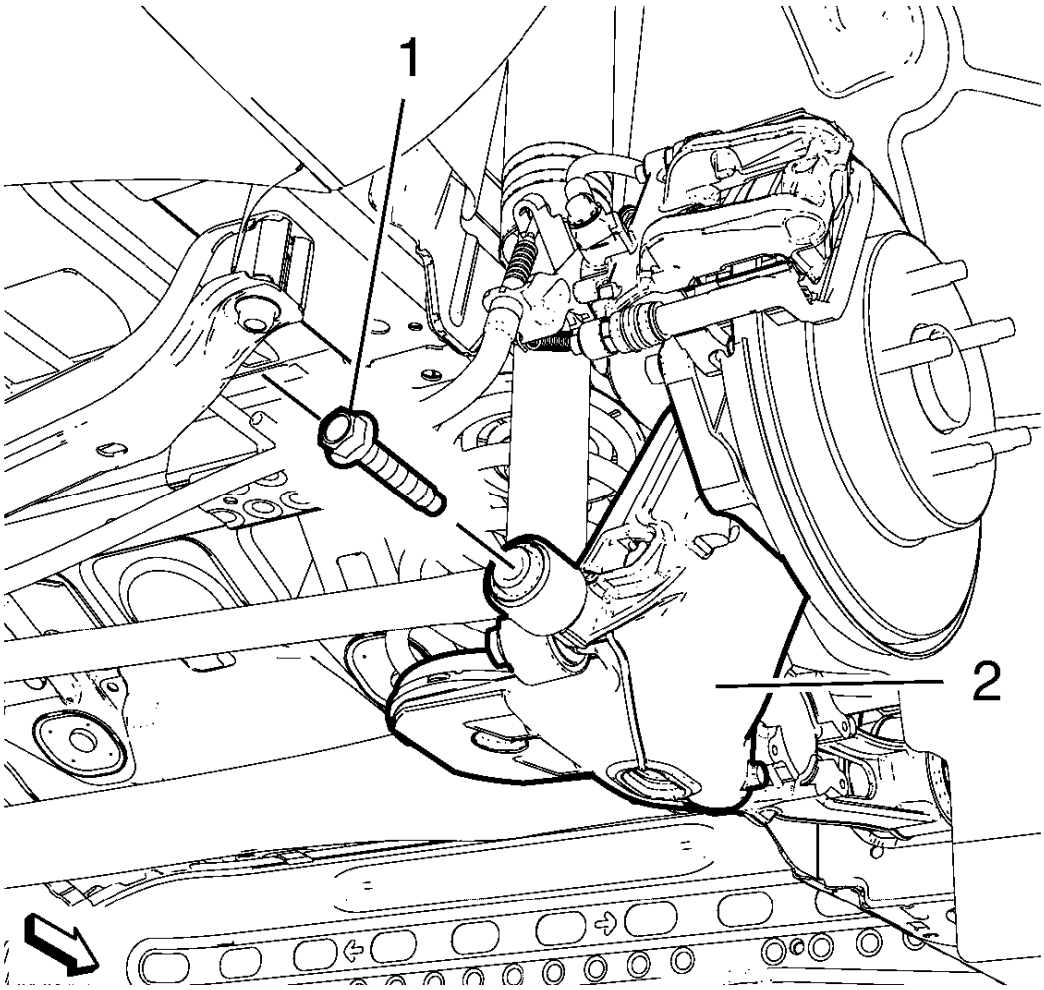

Fig. 30: Rear Axle And Equalizer Beam Link Bolt
Courtesy of GENERAL MOTORS COMPANY

4. Remove the equalizer beam link bolt (1) from the rear axle (2).

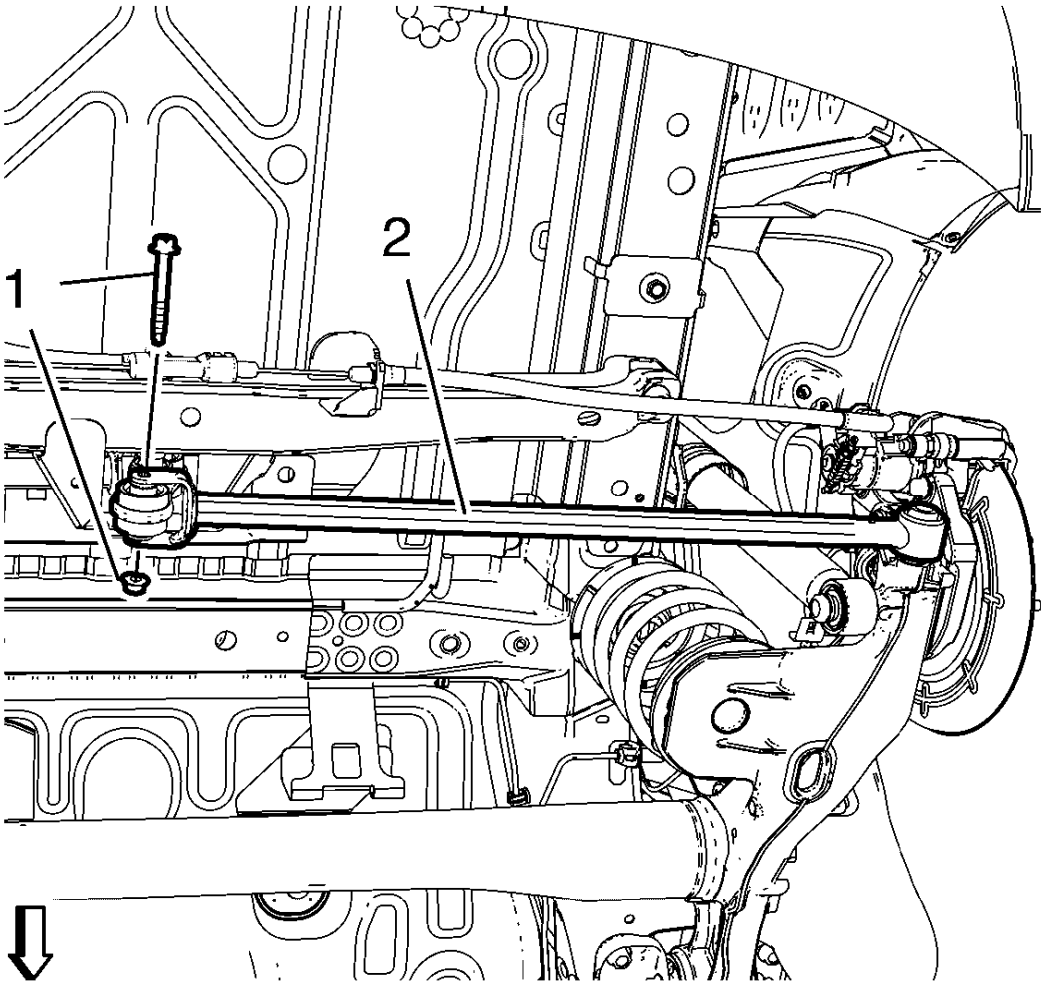

Fig. 31: Identifying Equalizer Beam Center Link
Courtesy of GENERAL MOTORS COMPANY

5. Remove and DISCARD the equalizer beam link bolt and nut (1) from equalizer beam center link (2).
6. Remove the equalizer beam link from the vehicle.

Installation Procedure

1. Insert equalizer beam link to the vehicle.

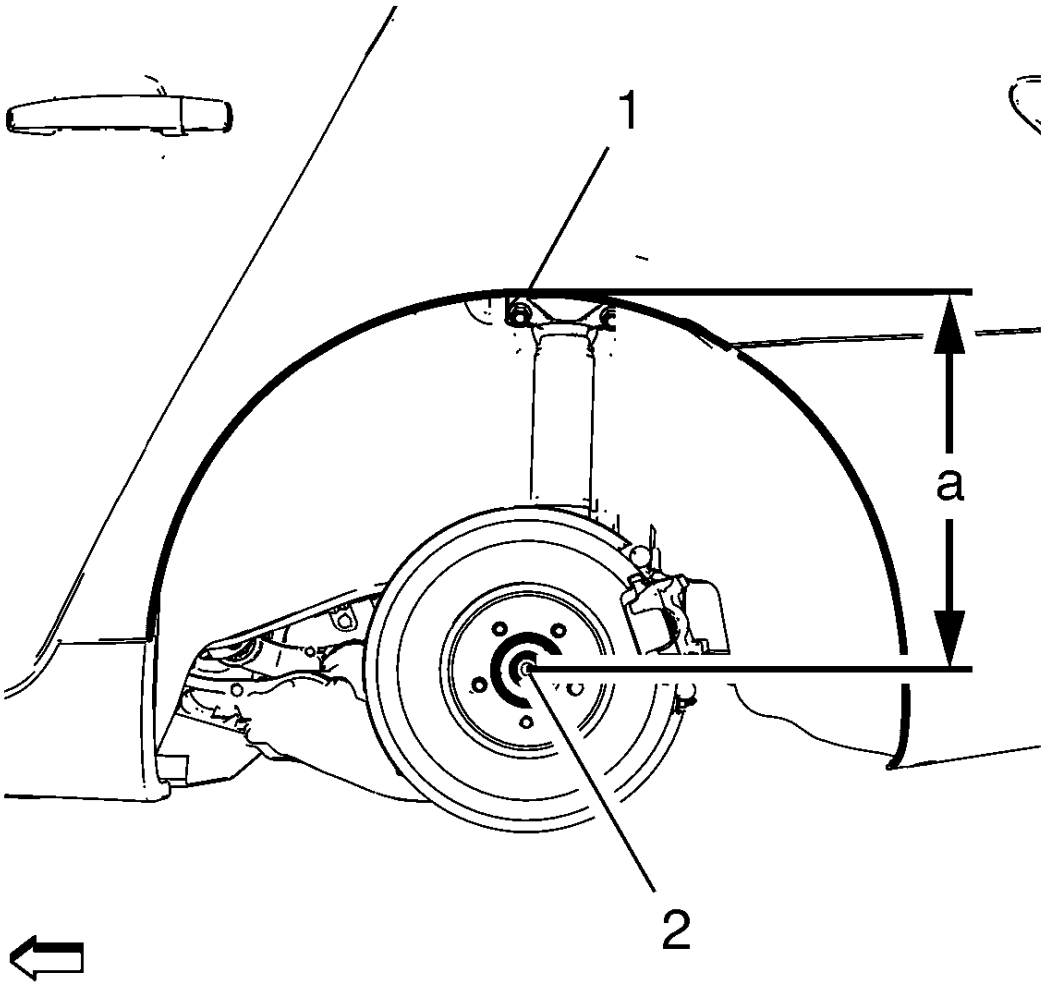

Fig. 32: Measuring Vertical Distance Between Center Of Wheel Hub And Top Of Wheel Opening
Courtesy of GENERAL MOTORS COMPANY

NOTE: Following step must be proceed in order to achieve correct rear axle joints alignment.

2. Using the lift table, raise the axle to the proper trim height specification by measuring the vertical distance (a) between the center of the wheel hub (2) and top of the wheel opening (1).

Specification

Dimension (a): 385 mm (15.16 in)

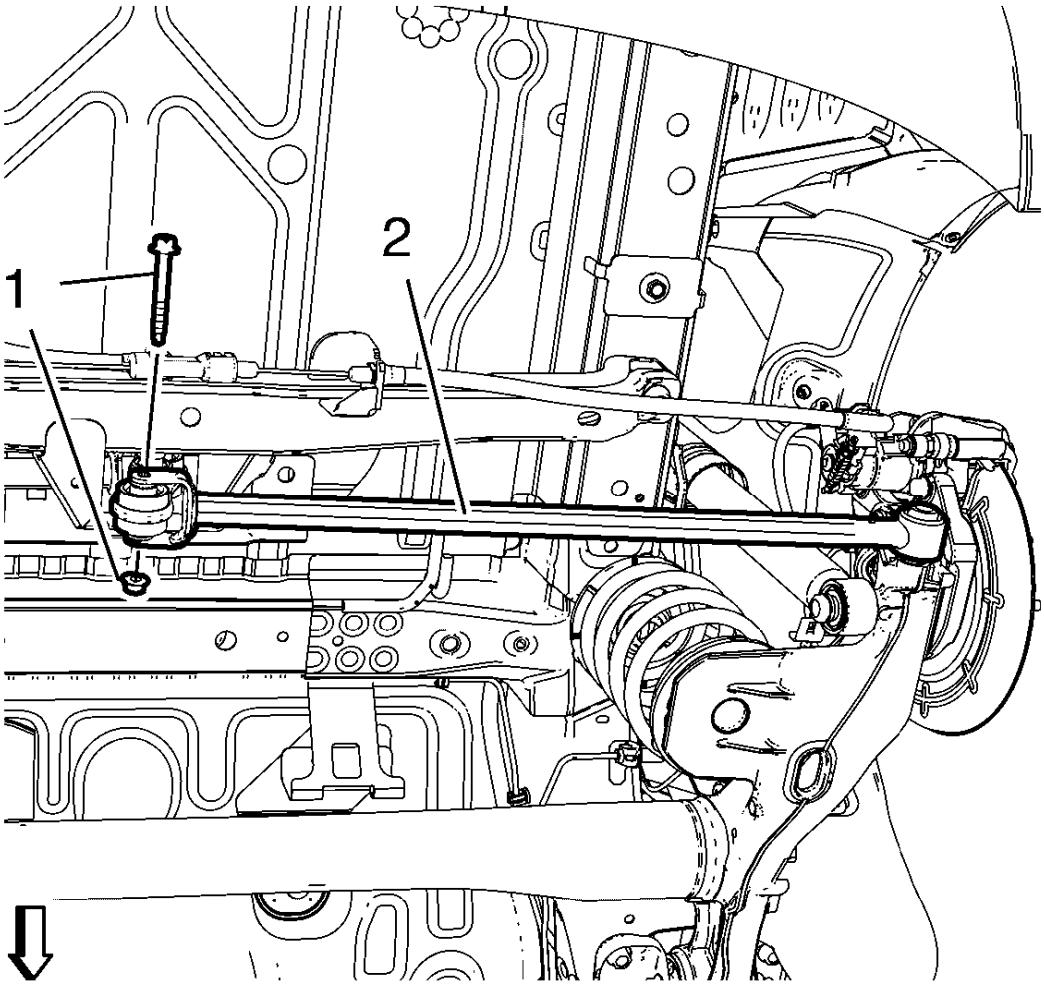

Fig. 33: Identifying Equalizer Beam Center Link
Courtesy of GENERAL MOTORS COMPANY

WARNING: Refer to Torque-to-Yield Fastener Warning .

CAUTION: Refer to Fastener Caution .

3. Install the NEW equalizer beam link bolt and nut (1) to equalizer beam center link (2) and tighten to 40 N.m (30 lb ft) + 60°, using the **EN-45059** angle meter.

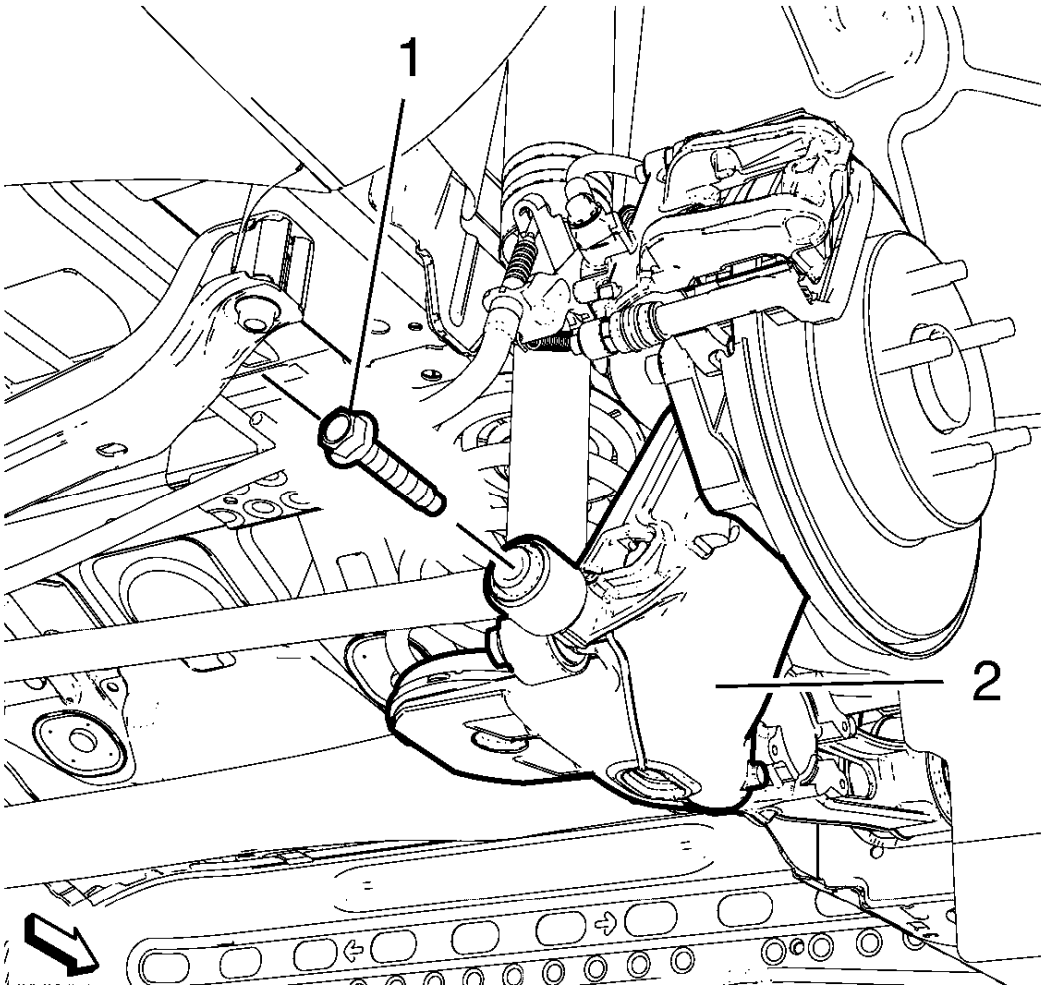

Fig. 34: Rear Axle And Equalizer Beam Link Bolt
Courtesy of GENERAL MOTORS COMPANY

4. Install and hand tighten the equalizer beam link bolt (1) to the rear axle (2) and tighten to 160 N.m (118 lb ft).
5. Install the tire and wheel assemblies. Refer to **Tire and Wheel Removal and Installation** .
6. Lower the vehicle to ground.

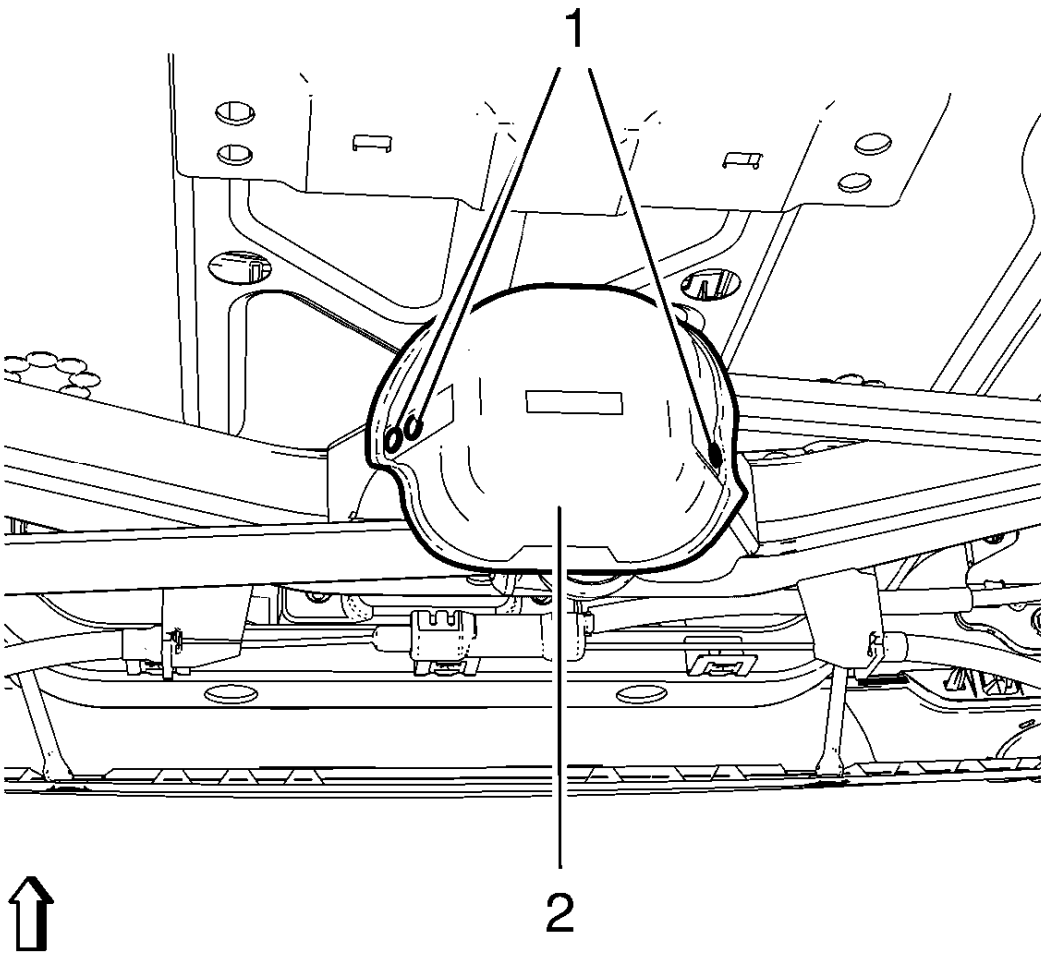

Fig. 35: Identifying Equalizer Beam Center Link Heat Shield And Rivets
Courtesy of GENERAL MOTORS COMPANY

7. Install 3 rivets (1) to equalizer beam center link heat shield (2).
8. Lower the vehicle.

EQUALIZER BEAM CENTER LINK REPLACEMENT

Special Tools

EN-45059 Angle Meter

For equivalent regional tools, refer to **Special Tools**.

Removal Procedure

1. Raise and support the vehicle. Refer to **Lifting and Jacking the Vehicle** .

2. Remove the tire and wheel assemblies. Refer to **Tire and Wheel Removal and Installation** .

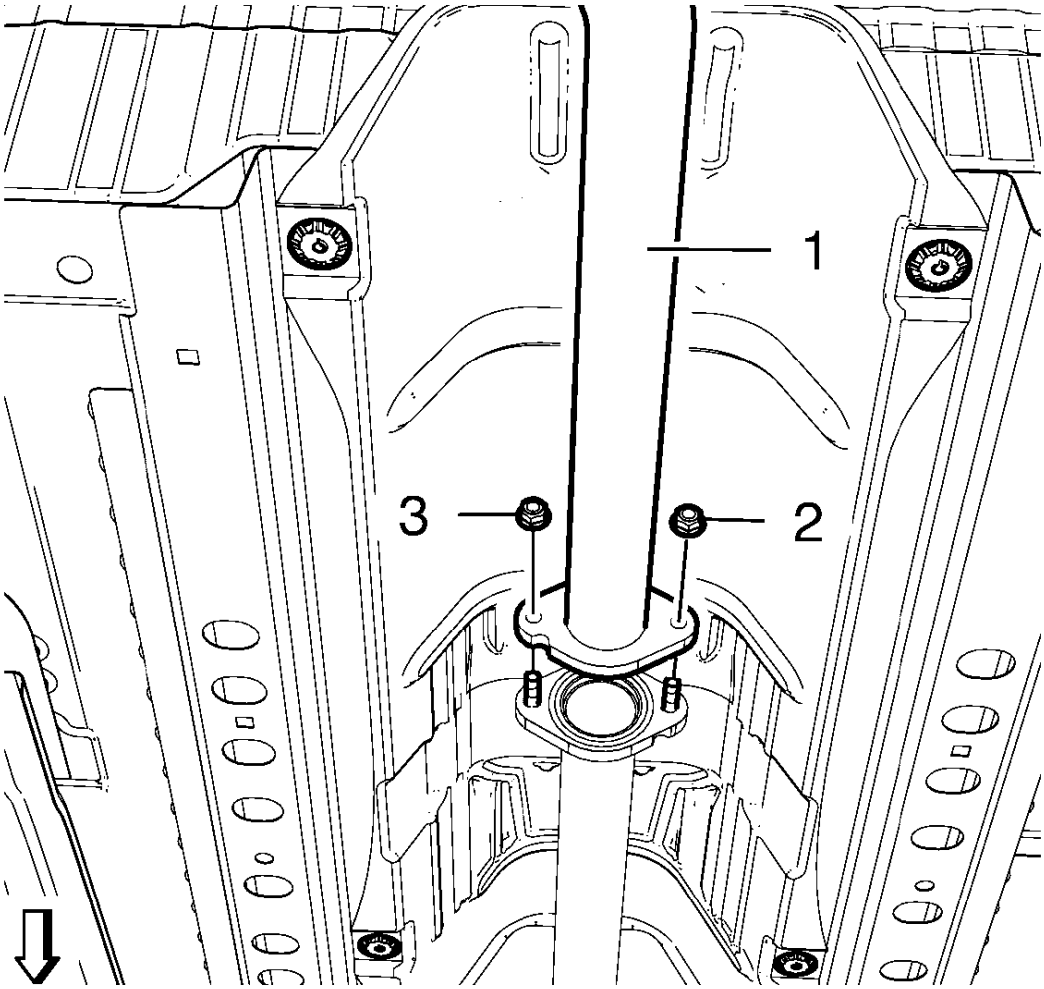

Fig. 36: Rear Exhaust Pipe
Courtesy of GENERAL MOTORS COMPANY

3. Remove and DISCARD the exhaust front pipe to exhaust rear muffler nuts (2, 3).
4. Remove the rear exhaust pipe (1) from the flange.
5. DISCARD the flange gasket.

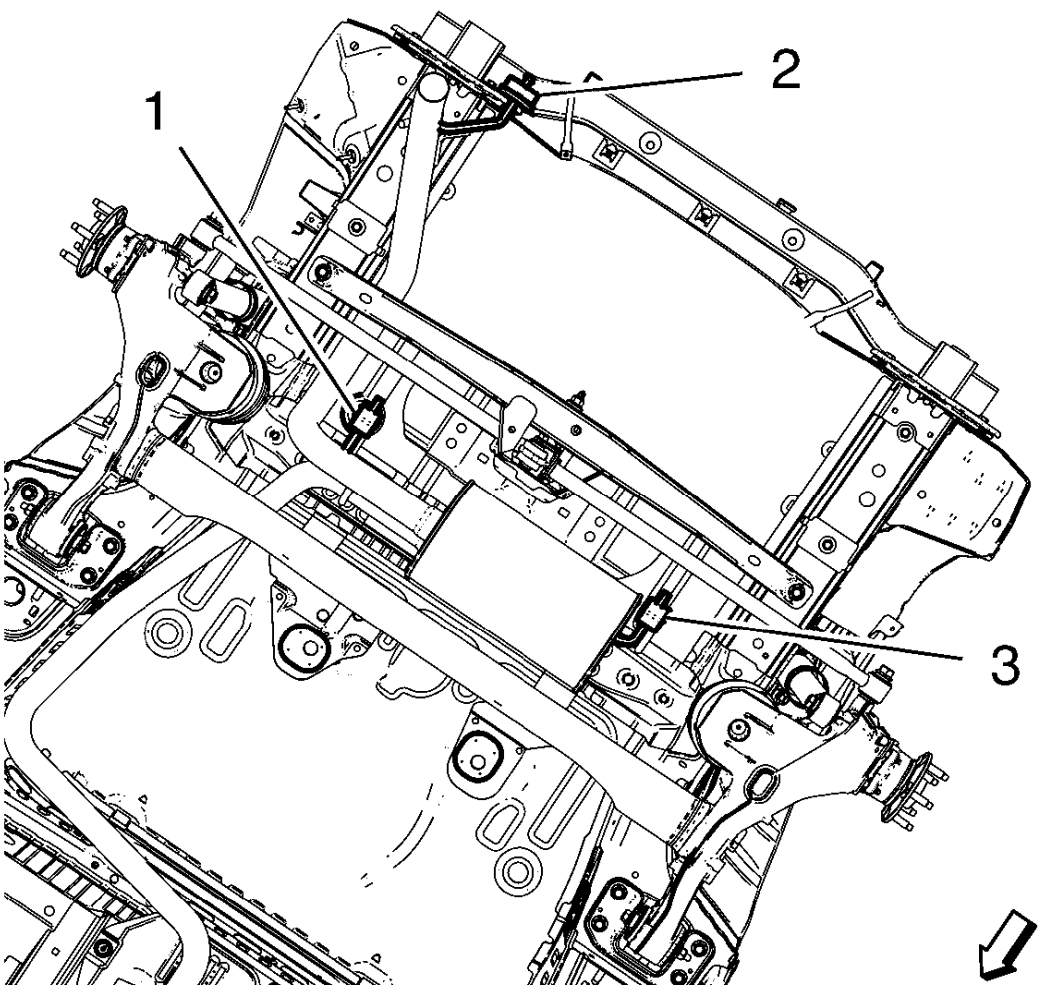

Fig. 37: Suspension Points
Courtesy of GENERAL MOTORS COMPANY

NOTE: There may be additional attachment points, depending on the powertrain in the vehicle.

6. Loosen the rear exhaust muffler from the suspension points (1, 2, 3).
7. Lower and support the exhaust as required.

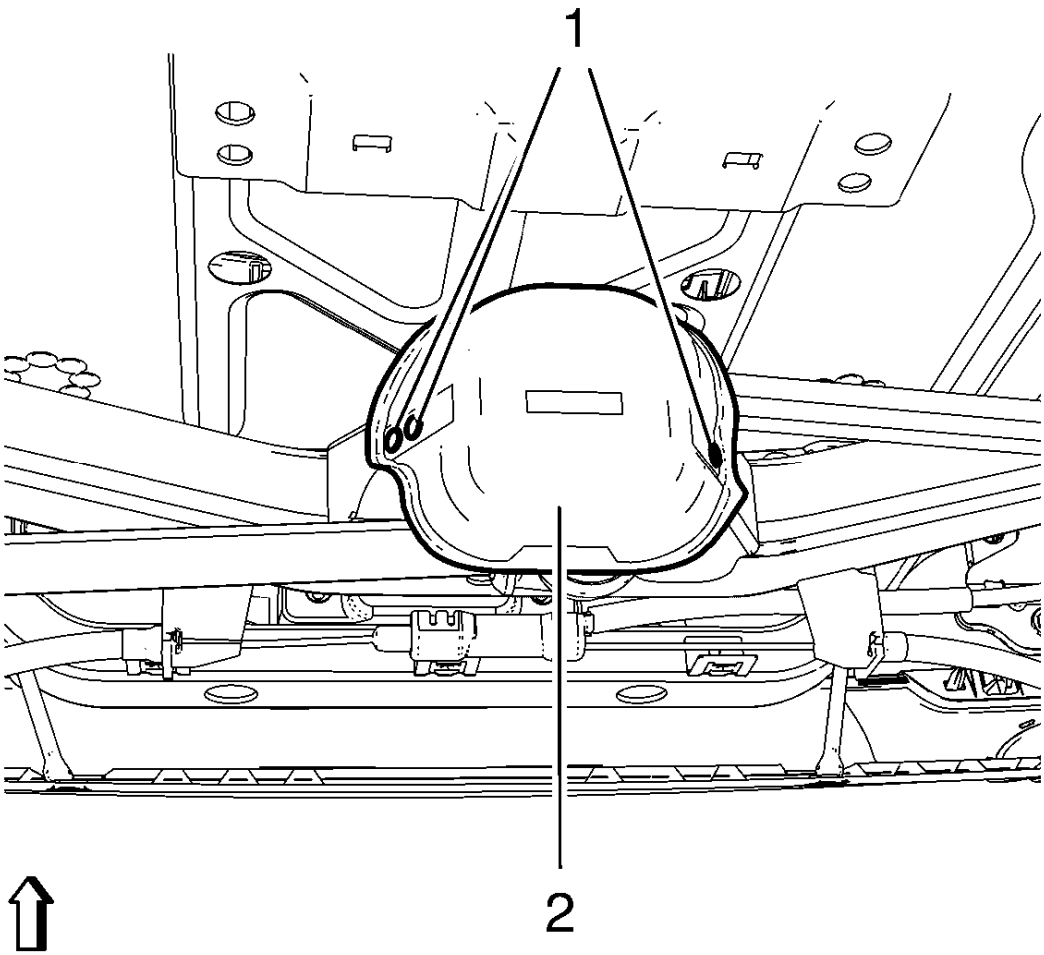

Fig. 38: Identifying Equalizer Beam Center Link Heat Shield And Rivets
Courtesy of GENERAL MOTORS COMPANY

8. Remove the 3 rivets (1) from the equalizer beam center link heat shield (2).

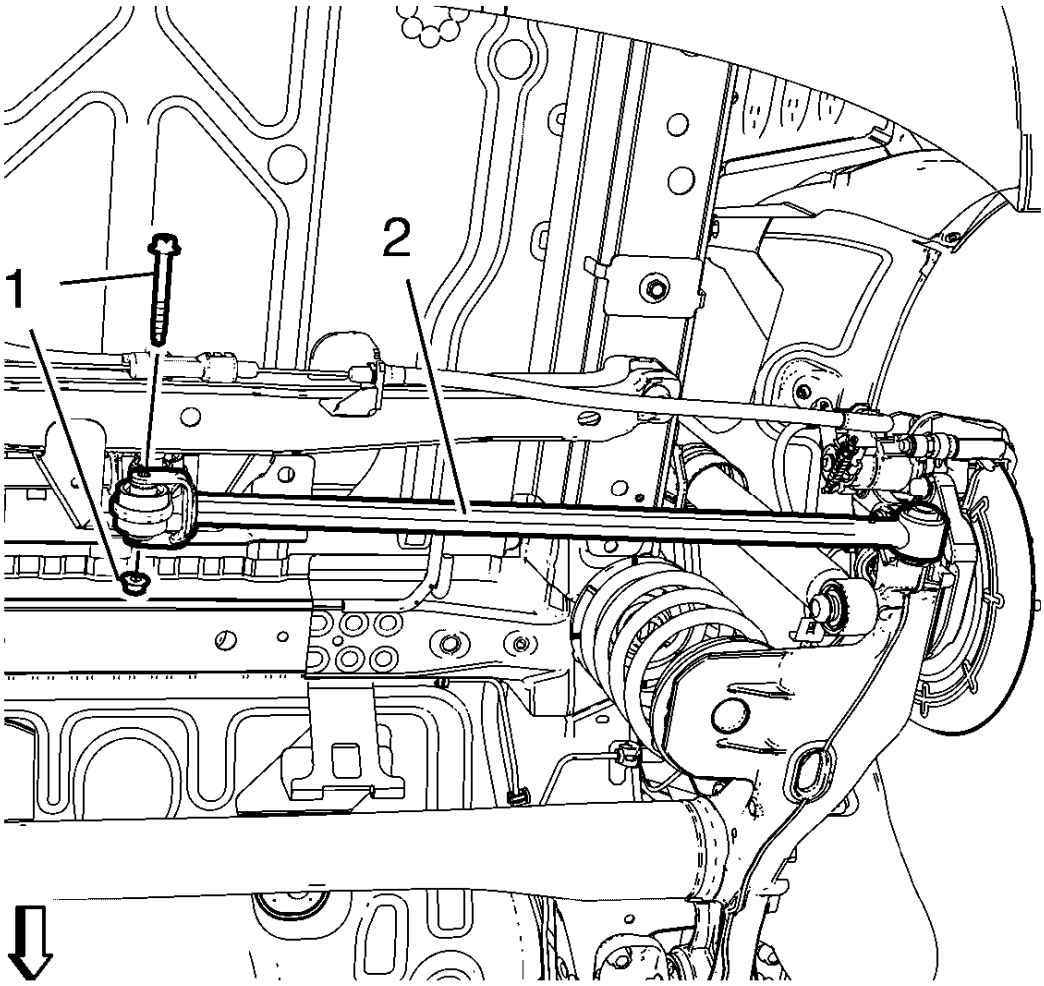

Fig. 39: Identifying Equalizer Beam Center Link
Courtesy of GENERAL MOTORS COMPANY

9. Remove and DISCARD the right equalizer beam link inner bolt and nut (1) from the equalizer beam center link (2).
10. Lower and support the equalizer beam link as required.

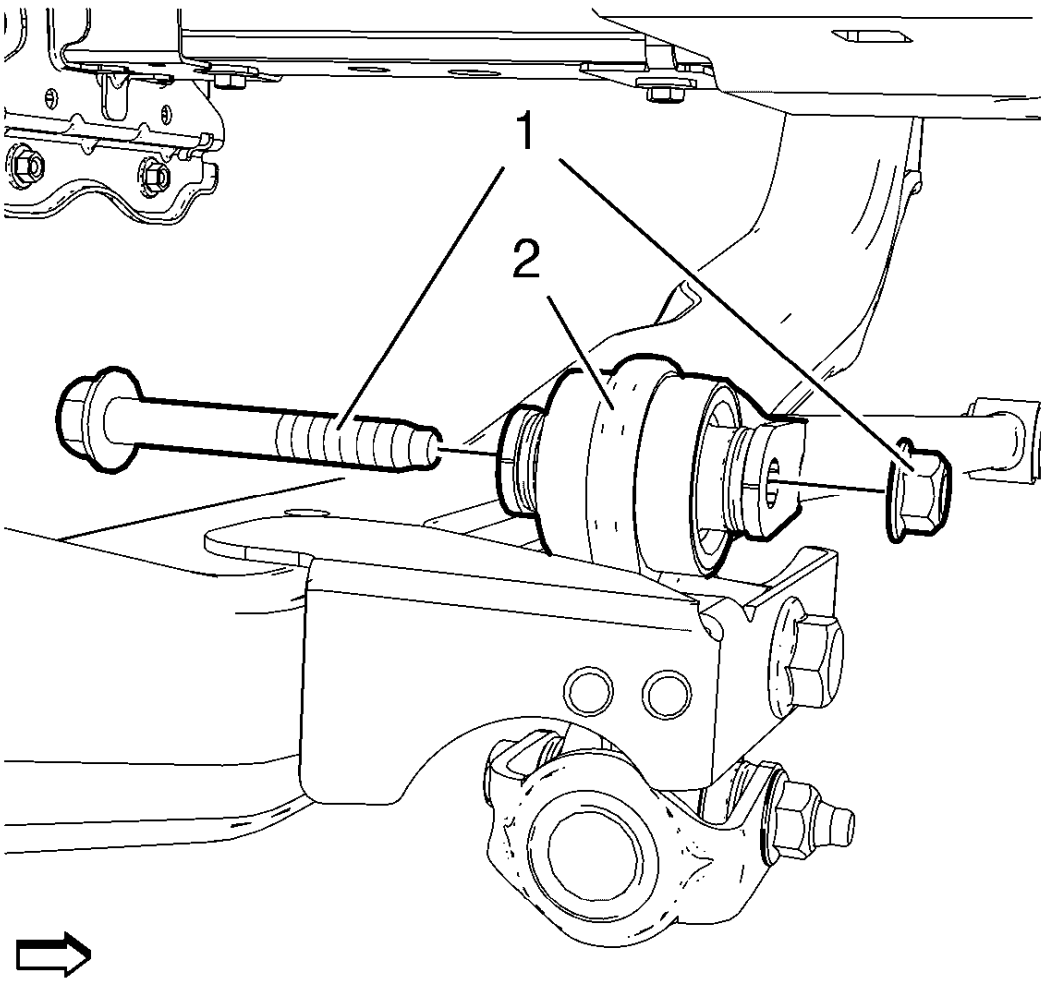

Fig. 40: Identifying Equalizer Beam Center Link
Courtesy of GENERAL MOTORS COMPANY

11. Remove and DISCARD the left equalizer beam link inner bolt and nut (1) from the equalizer beam center link (2).
12. Lower and support the equalizer beam link as required.

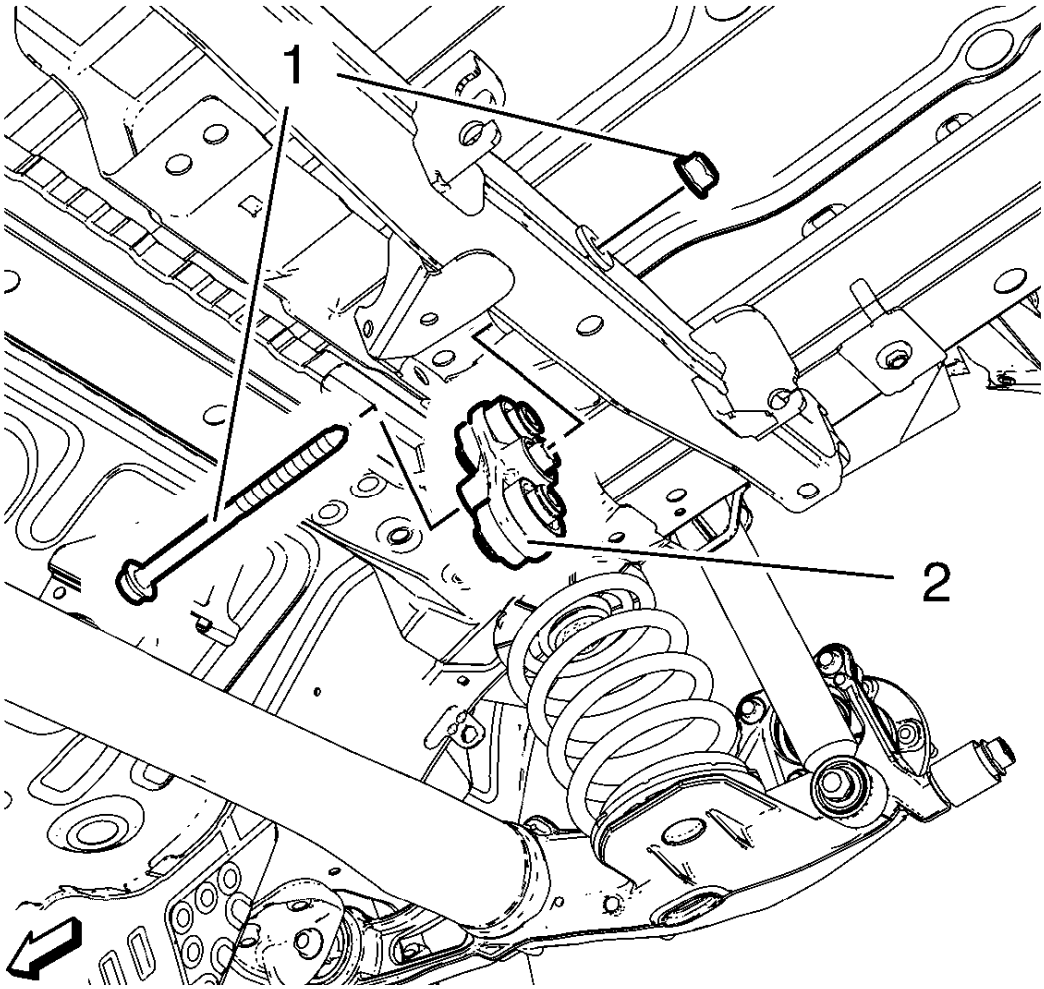

Fig. 41: Identifying Equalizer Beam Center Link
Courtesy of GENERAL MOTORS COMPANY

NOTE: Remember the correct installation position.

13. Push down rear muffler and remove and discard the equalizer beam center link bolt and nut (1) from the equalizer beam center link (2).
14. Remove the equalizer beam center link (2) from the vehicle.

Installation Procedure

1. Install the equalizer beam center link to the vehicle.

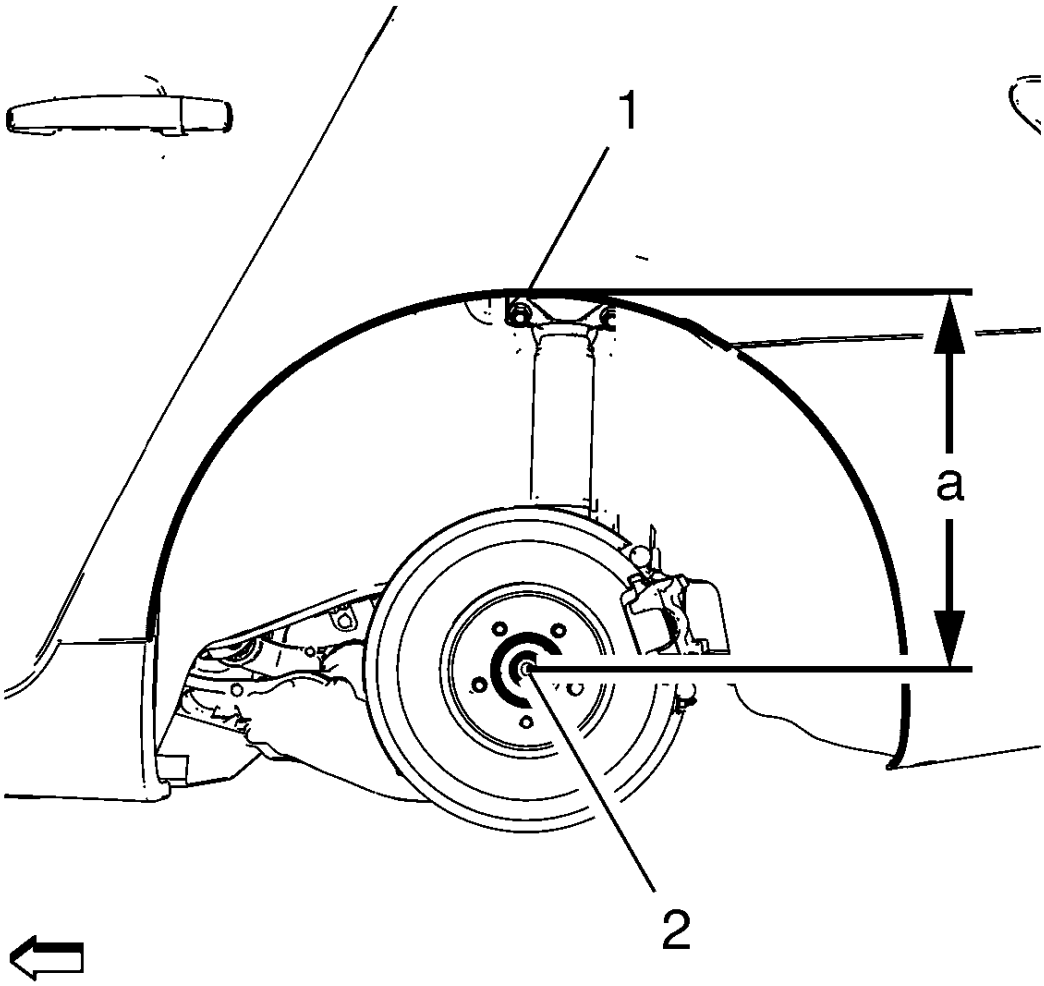

Fig. 42: Measuring Vertical Distance Between Center Of Wheel Hub And Top Of Wheel Opening
Courtesy of GENERAL MOTORS COMPANY

2. Using the lift table, raise the axle to the proper trim height specification by measuring the vertical distance (a) between the center of the wheel hub (2) and top of the wheel opening (1).

Specification

Dimension (a): 385 mm (15.16 in)

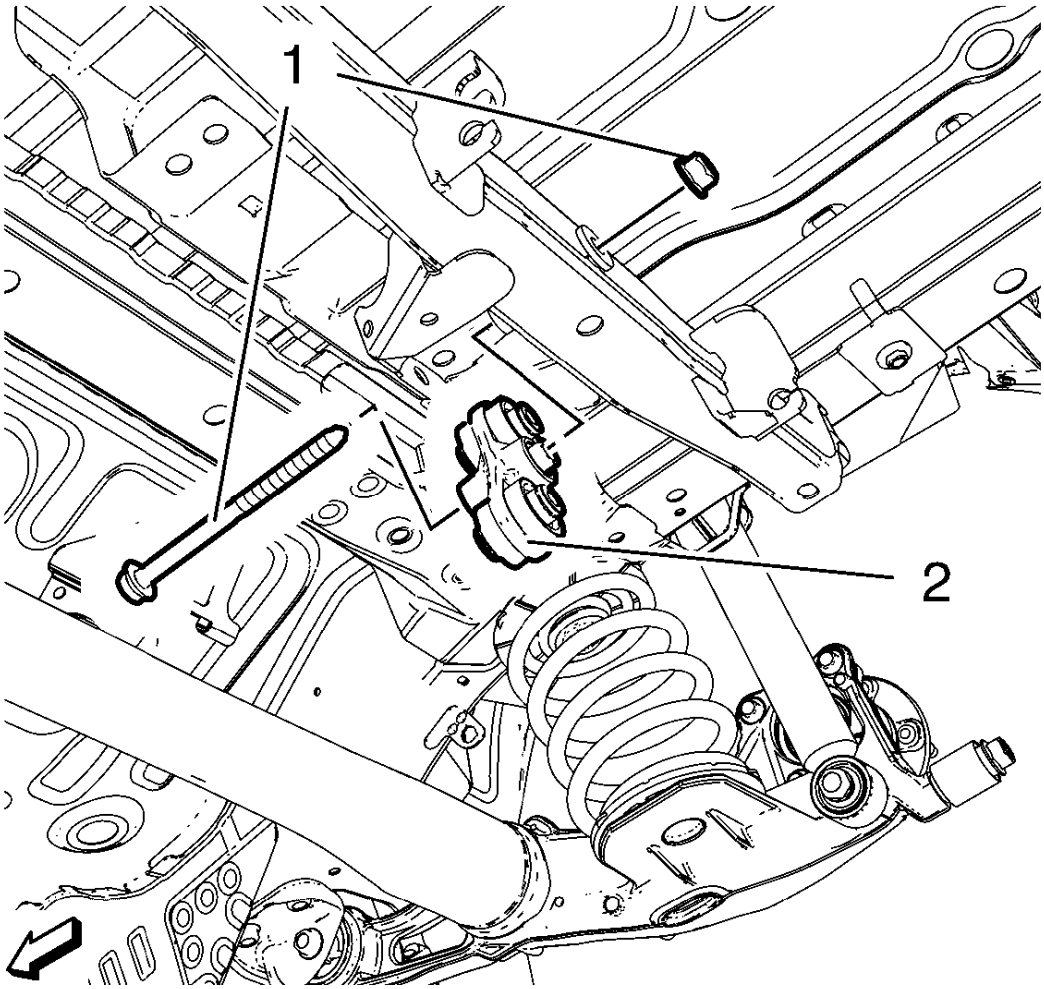

Fig. 43: Identifying Equalizer Beam Center Link
Courtesy of GENERAL MOTORS COMPANY

CAUTION: Refer to Fastener Caution .

NOTE: Remember the correct installation position from the removal.

3. Push down rear muffler and install the NEW equalizer beam center link bolt and nut (1) to equalizer beam center link (2) and tighten a first pass to 70 (52 lb ft).

WARNING: Refer to Torque-to-Yield Fastener Warning .

4. Tighten the NEW equalizer beam center link bolt and nut a final pass to an additional 120 - 135 degrees, using the **EN-45059** meter.

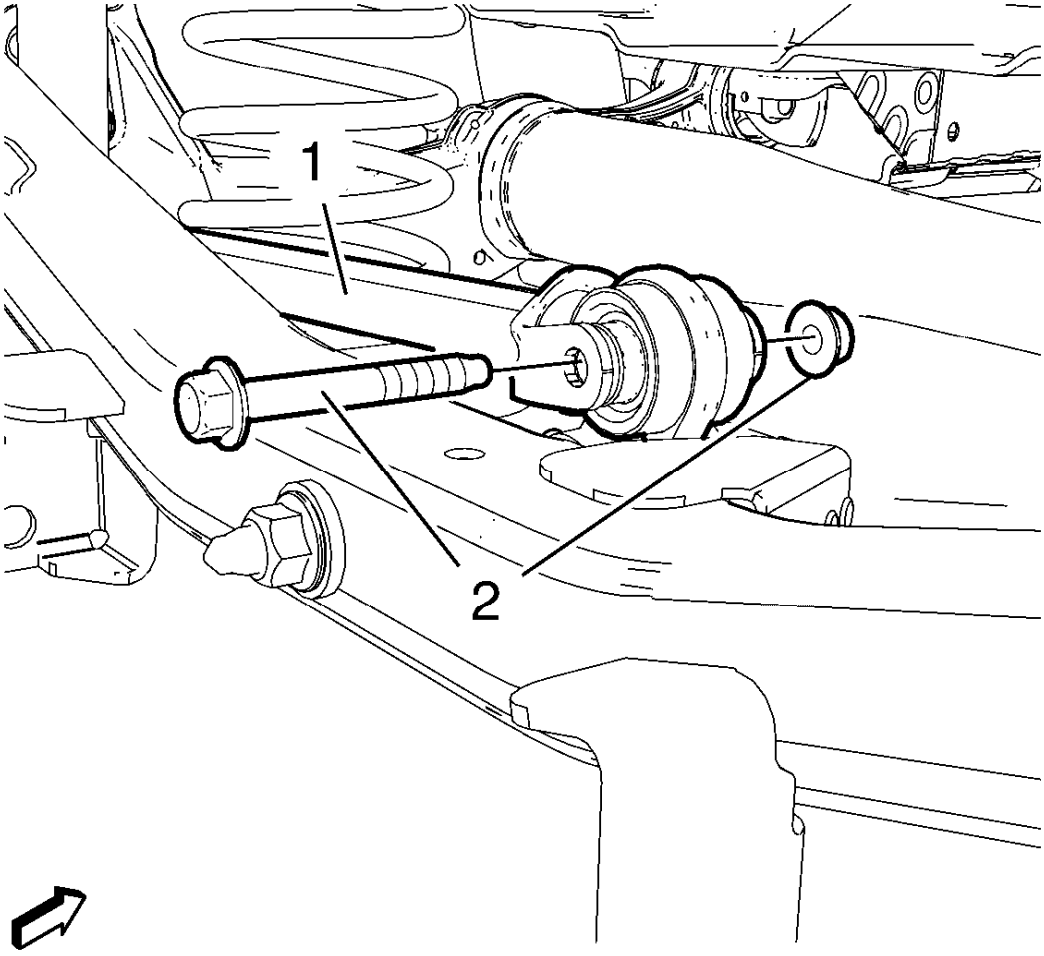

Fig. 44: Identifying Equalizer Beam Link
Courtesy of GENERAL MOTORS COMPANY

5. Remove the support from equalizer beam link.

WARNING: Refer to Torque-to-Yield Fastener Warning .

6. Install the left NEW left equalizer beam link inner bolt and nut (2) to the equalizer beam center link (1) and tighten a first pass to 40 (30 lb ft).
7. Tighten the NEW left equalizer beam link inner bolt and nut a final pass to an additional 60 degrees, using the **EN-45059** meter.

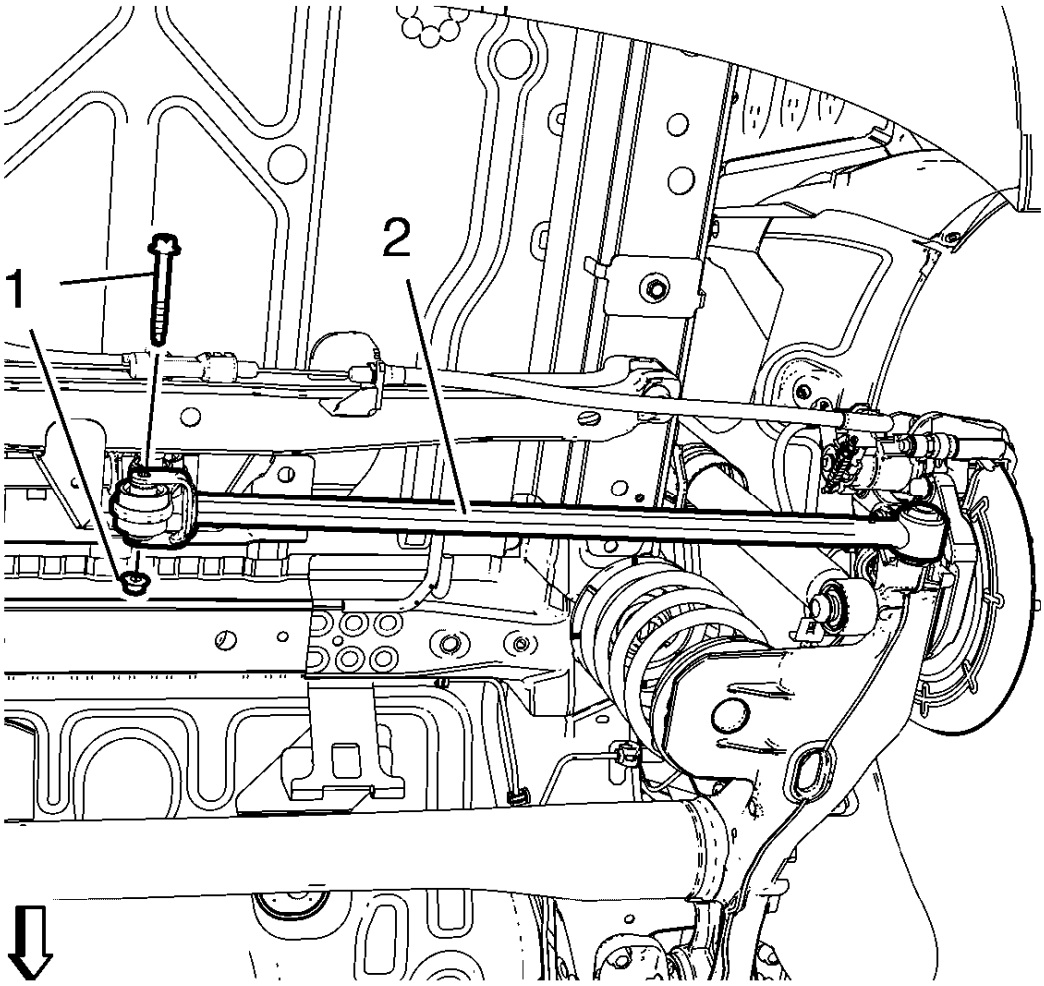

Fig. 45: Identifying Equalizer Beam Center Link
Courtesy of GENERAL MOTORS COMPANY

8. Remove the support from equalizer beam link.
9. Install the NEW right equalizer beam link inner bolt and nut (2) to the equalizer beam center link (1) and tighten a first pass to 40 (30 lb ft).

WARNING: Refer to Torque-to-Yield Fastener Warning .

10. Tighten the NEW right equalizer beam link inner bolt and nut a final pass to an additional 60 degrees, using the **EN-45059** meter.

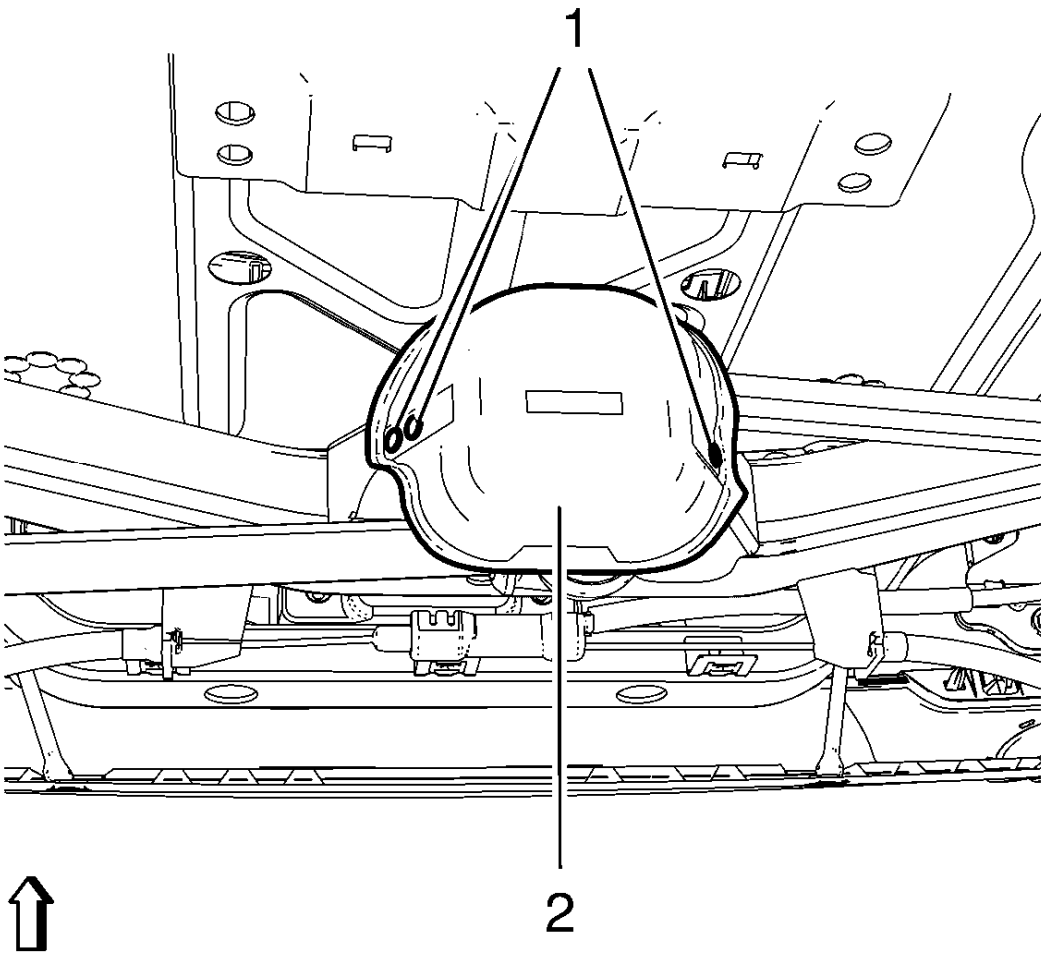

Fig. 46: Identifying Equalizer Beam Center Link Heat Shield And Rivets
Courtesy of GENERAL MOTORS COMPANY

11. Install the 3 rivets (1) to equalizer beam center link heat shield (2).

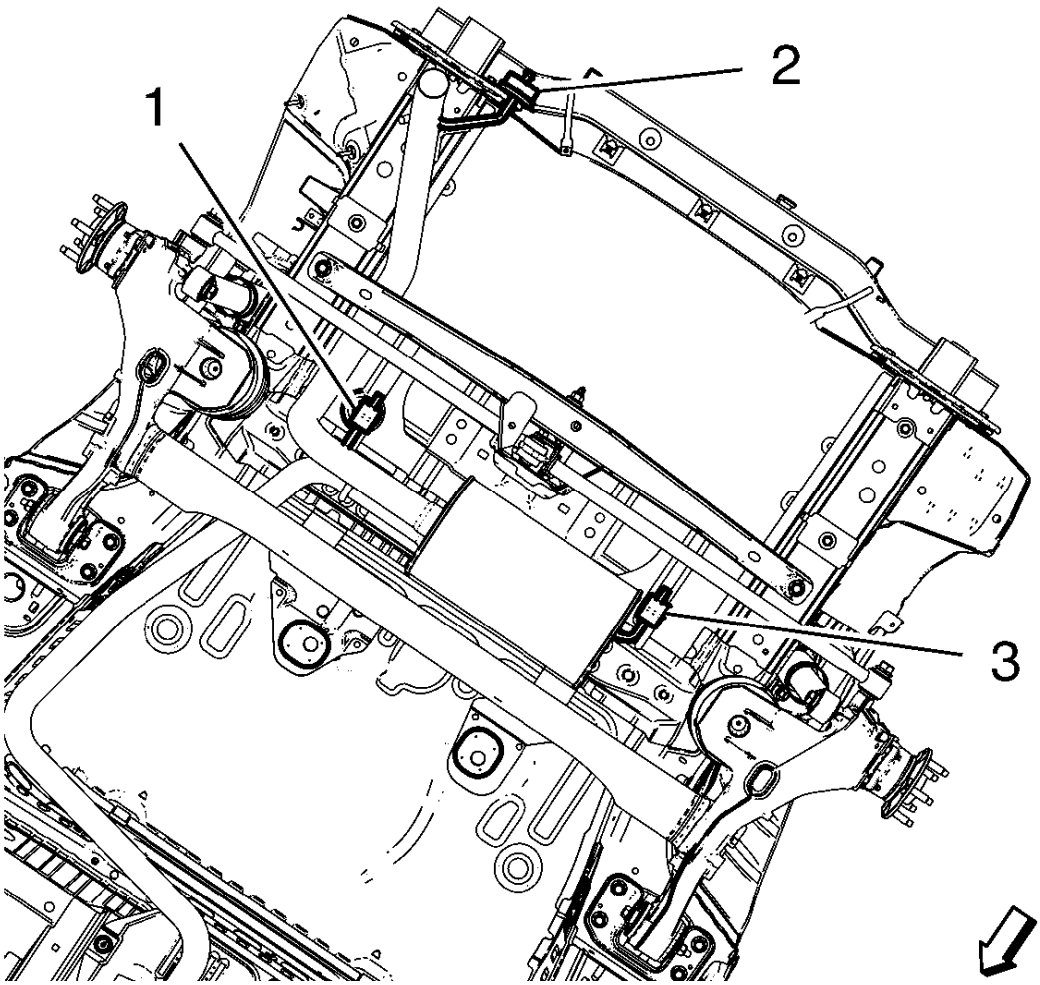

Fig. 47: Suspension Points
Courtesy of GENERAL MOTORS COMPANY

NOTE: There may be additional attachment points, depending on the powertrain in the vehicle.

12. Install the rear exhaust muffler to the suspension points (1, 2, 3).

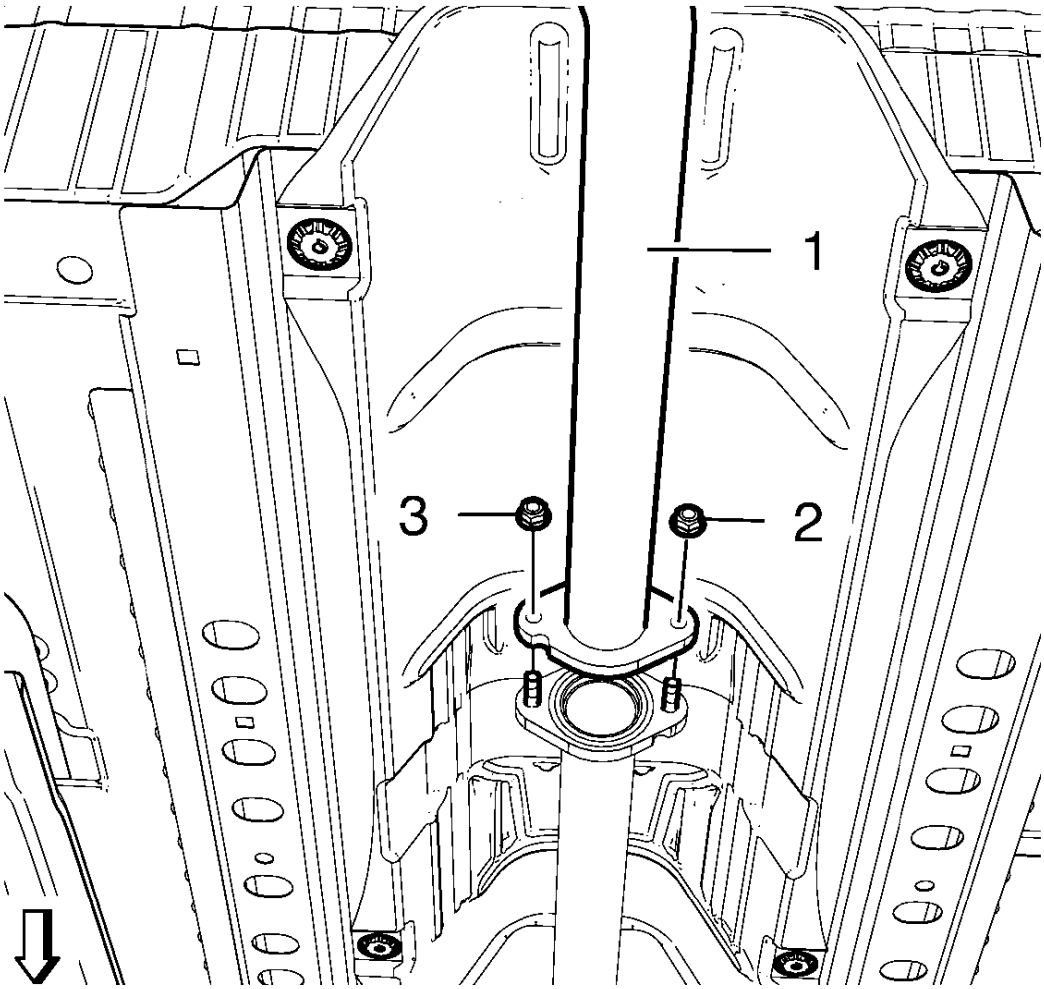

Fig. 48: Rear Exhaust Pipe
Courtesy of GENERAL MOTORS COMPANY

13. Install the NEW flange gasket.
14. Install the rear exhaust pipe (1) to the flange.
15. Install NEW exhaust front pipe to exhaust rear muffler nuts (2, 3) and tighten to 17 (13 lb ft).
16. Install the tire and wheel assemblies. Refer to **Tire and Wheel Removal and Installation** .
17. Lower the vehicle.

EQUALIZER BEAM CENTER LINK HEAT SHIELD REPLACEMENT

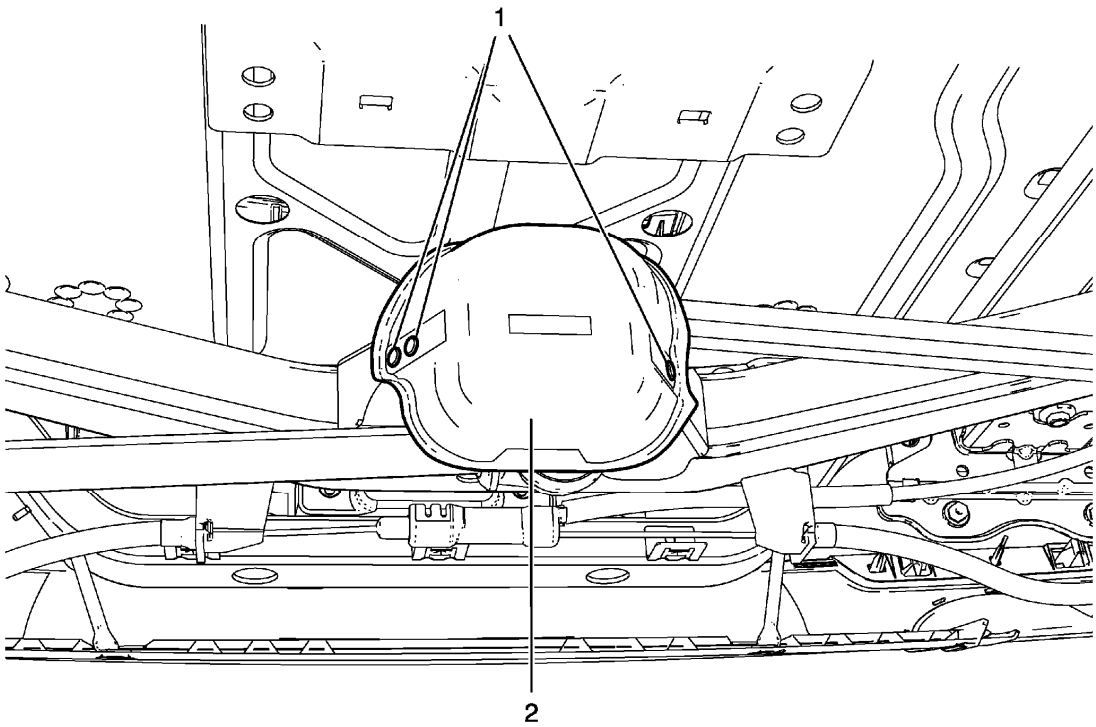

Fig. 49: Identifying Equalizer Beam Center Link Heat Shield
Courtesy of GENERAL MOTORS COMPANY

Equalizer Beam Center Link Heat Shield Replacement

Callout	Component Name
Preliminary Procedure Raise and support the vehicle. Refer to **Lifting and Jacking the Vehicle** .	
1	Equalizer Beam Center Link Heat Shield Rivet (Qty: 3). **CAUTION:** **Refer to Fastener Caution .** **Procedure** Drill out the rivets with suitable drill to remove the heat shield.
2	Equalizer Beam Center Link Heat Shield

REAR AXLE BUSHING REPLACEMENT

Special Tools

- **CH-906-42** Adapter
- **CH-49459** Adapter
- **CH-50342** Threaded Rod

For equivalent regional tools. Refer to **Special Tools**.

Removal Procedure

WARNING: Use of eye goggles is necessary to prevent personal injury.

1. Remove the rear axle. Refer to **Rear Axle Replacement (Compound Crank)**, **Rear Axle Replacement (Watt Linkage)**.
2. With the aid of second mechanic, place rear axle onto work bench.

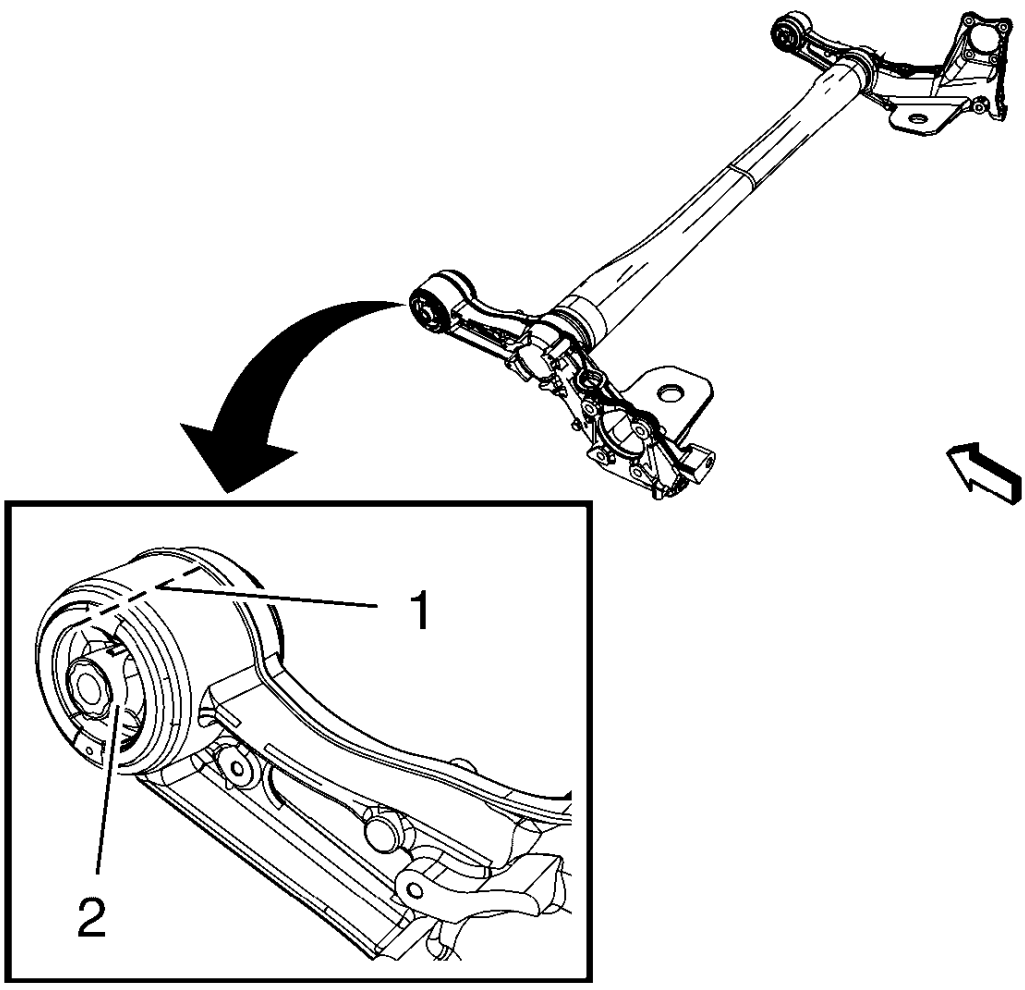

Fig. 50: Installation Position For Rear Axle Bushing
Courtesy of GENERAL MOTORS COMPANY

3. Mark installation position (1) for rear axle bushing (2) on rear axle using a permanent marker.

Use upper gap of bushing for alignment.

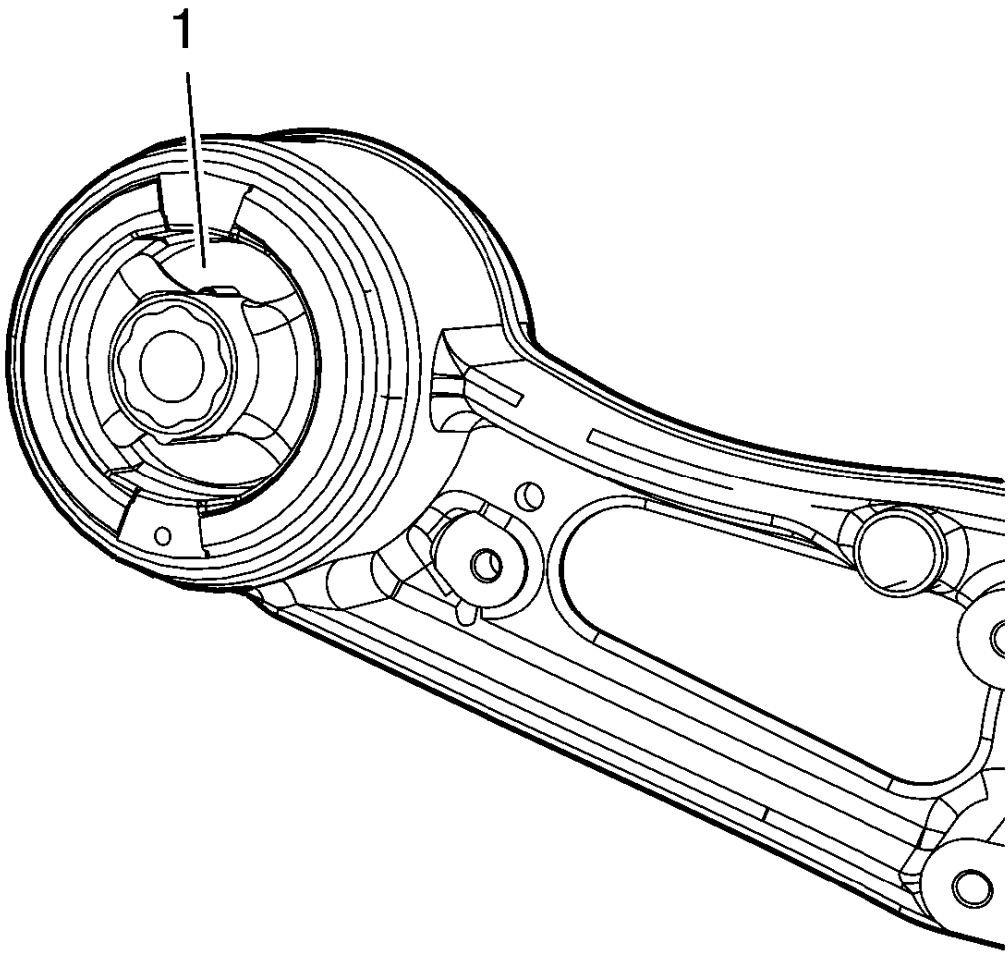

Fig. 51: Rubber Bushing
Courtesy of GENERAL MOTORS COMPANY

4. Drill 8 holes through the rubber bushing (1) with a 10 mm (0.4 in) drill bit.

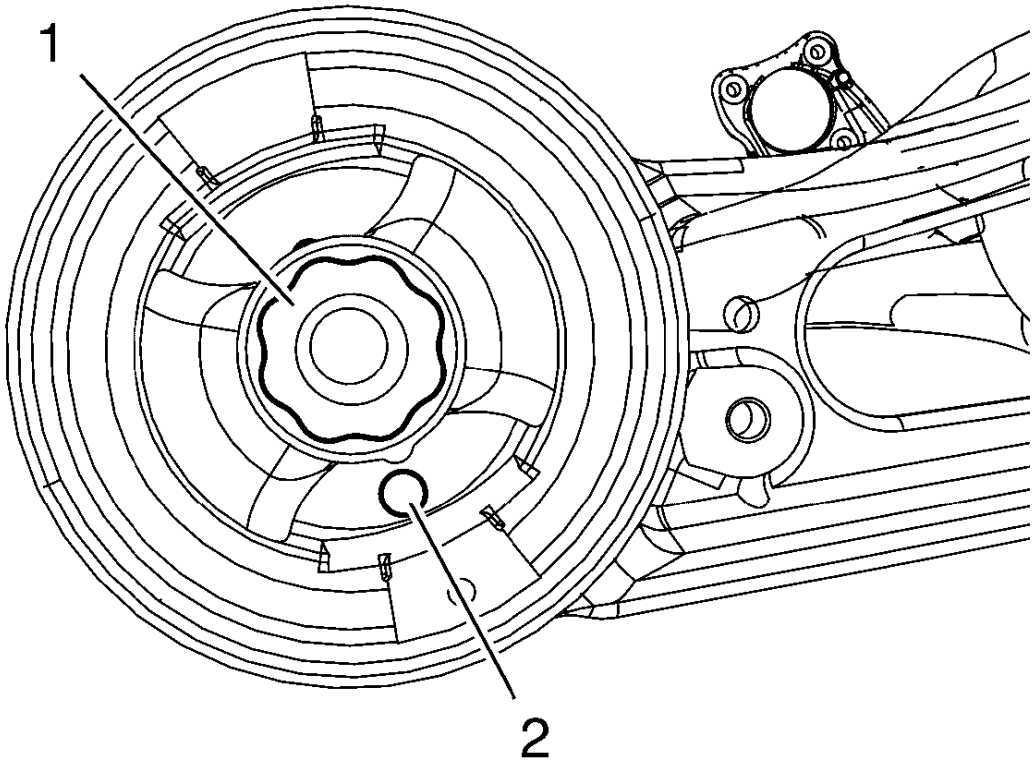

Fig. 52: Identifying Bushing Core And Lowest Hole
Courtesy of GENERAL MOTORS COMPANY

5. Carefully cut around the bushing core (1) using a jigsaw or similar tool. Use the lowest hole (2) to insert saw.
6. Remove the bushing core from the bushing.

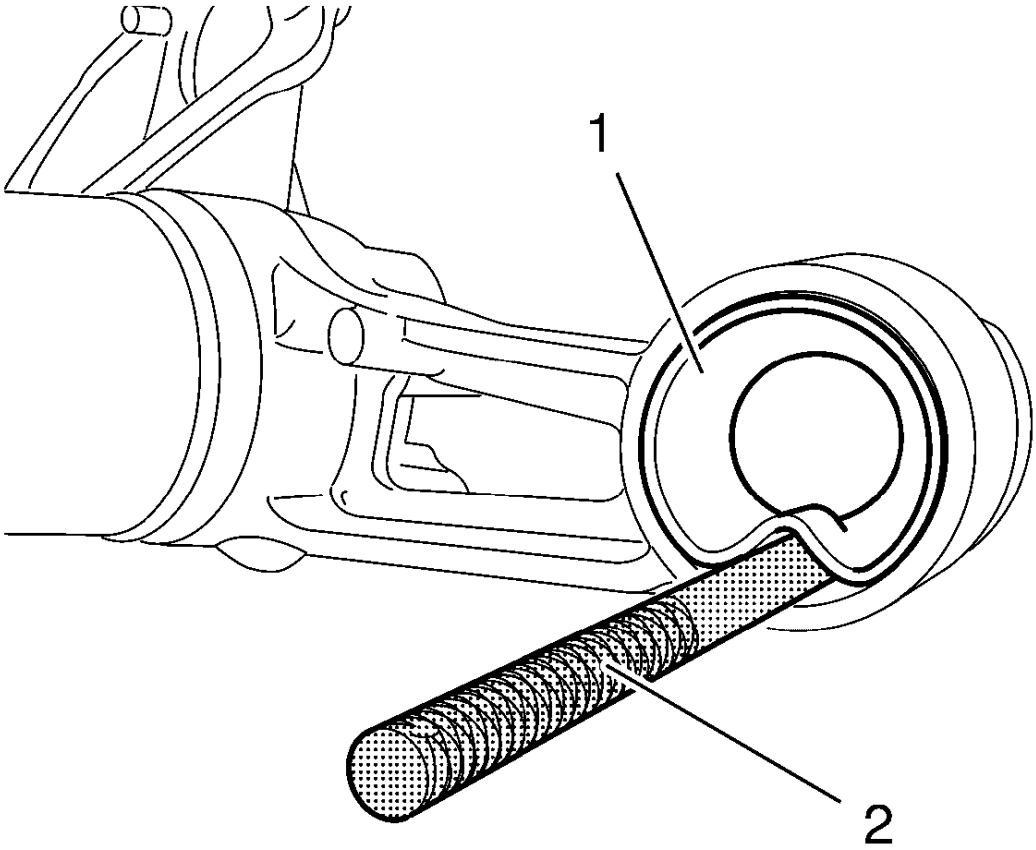

Fig. 53: Identifying Bushing And Suitable Tool
Courtesy of GENERAL MOTORS COMPANY

7. Remove bushing (1), using a suitable tool (2) and a hammer.

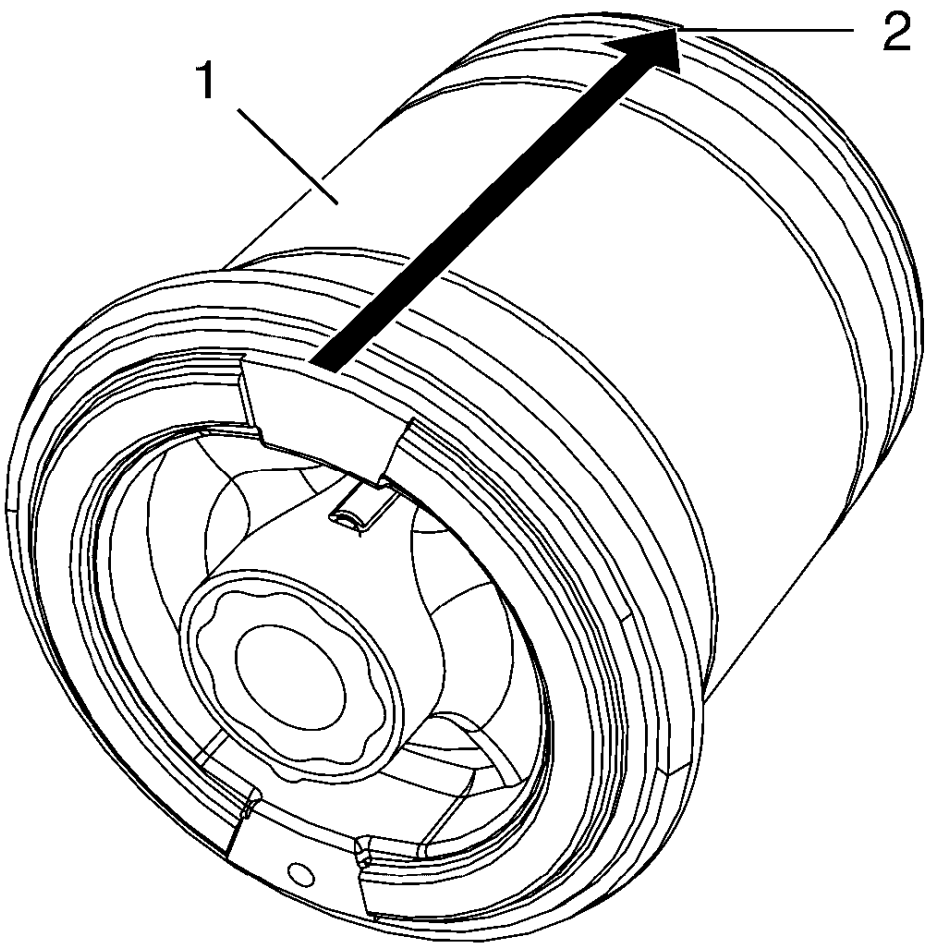

Fig. 54: Installation Position Of New Rear Axle Bushing
Courtesy of GENERAL MOTORS COMPANY

8. Mark installation position (2) of NEW rear axle bushing (1) as shown in graphic above.

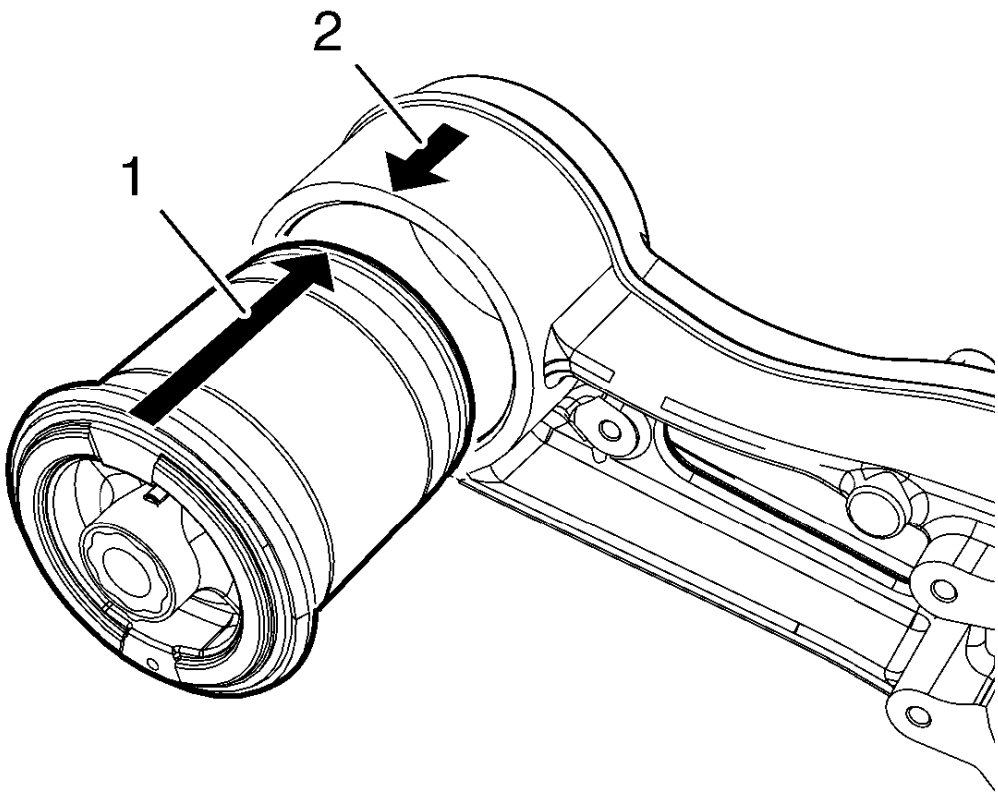

Fig. 55: Aligning Bushing Marking To Rear Axle Marking
Courtesy of GENERAL MOTORS COMPANY

9. Align bushing marking (1) to rear axle marking (2).
10. Install the following components to rear axle bushing and rear axle:
    - **CH-49459** adapter
    - **CH-50342** threaded rod
    - NEW rear axle bushing
    - **CH-906-42** adapter
11. Remove ALL special tools.
12. Install rear axle. Refer to **Rear Axle Replacement (Compound Crank)**, **Rear Axle Replacement (Watt Linkage)**.

REAR AXLE BRACKET REPLACEMENT

Special Tools

EN-45059 Torque Angle Sensor Kit

For equivalent regional tools. Refer to **Special Tools**

Removal Procedure

WARNING: Use of eye goggles is necessary to prevent personal injury.

1. Raise and suitably support the vehicle. Refer to **Lifting and Jacking the Vehicle** .

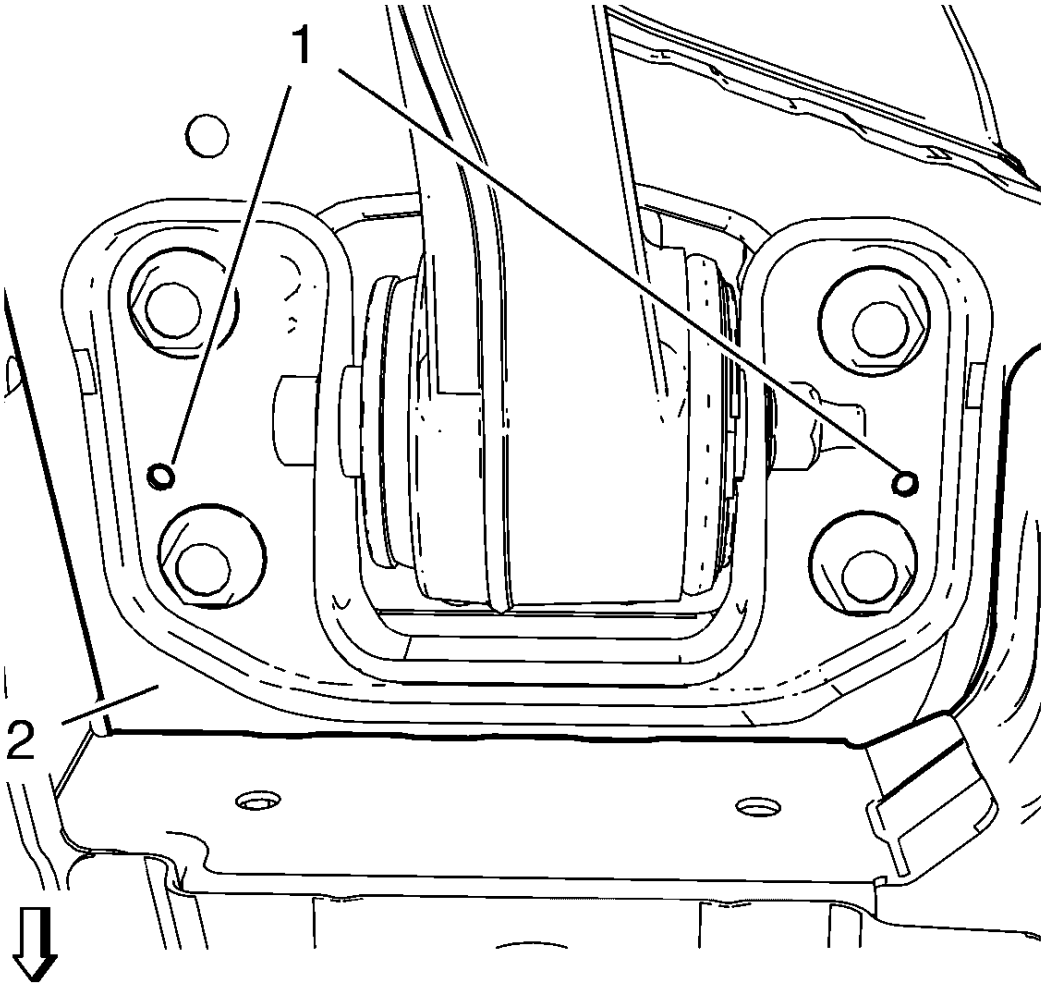

Fig. 56: Identifying Drill Holes And Underbody
Courtesy of GENERAL MOTORS COMPANY

2. Using a drill 6 mm (0.2 in) drill bit, drill 2 holes (1) through the rear axle bracket and into the underbody (2). These holes (1) will be used by guide pins to properly align the rear axle bracket to the underbody (2).

3. Support the rear axle with a hydraulic lift table.

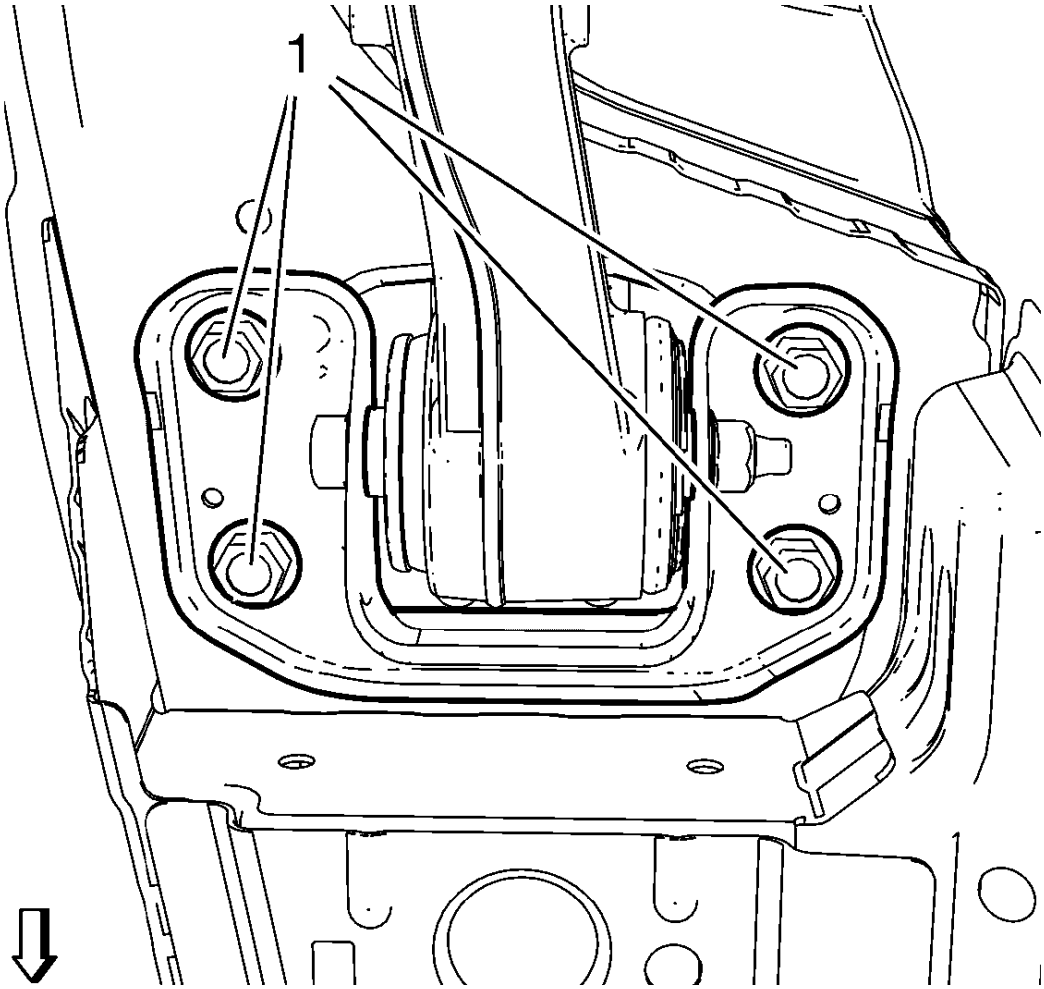

Fig. 57: Rear Axle Bracket Bolts
Courtesy of GENERAL MOTORS COMPANY

NOTE: Service one side at a time, the other side must be installed

4. Remove and DISCARD 4 rear axle bracket bolts (1).

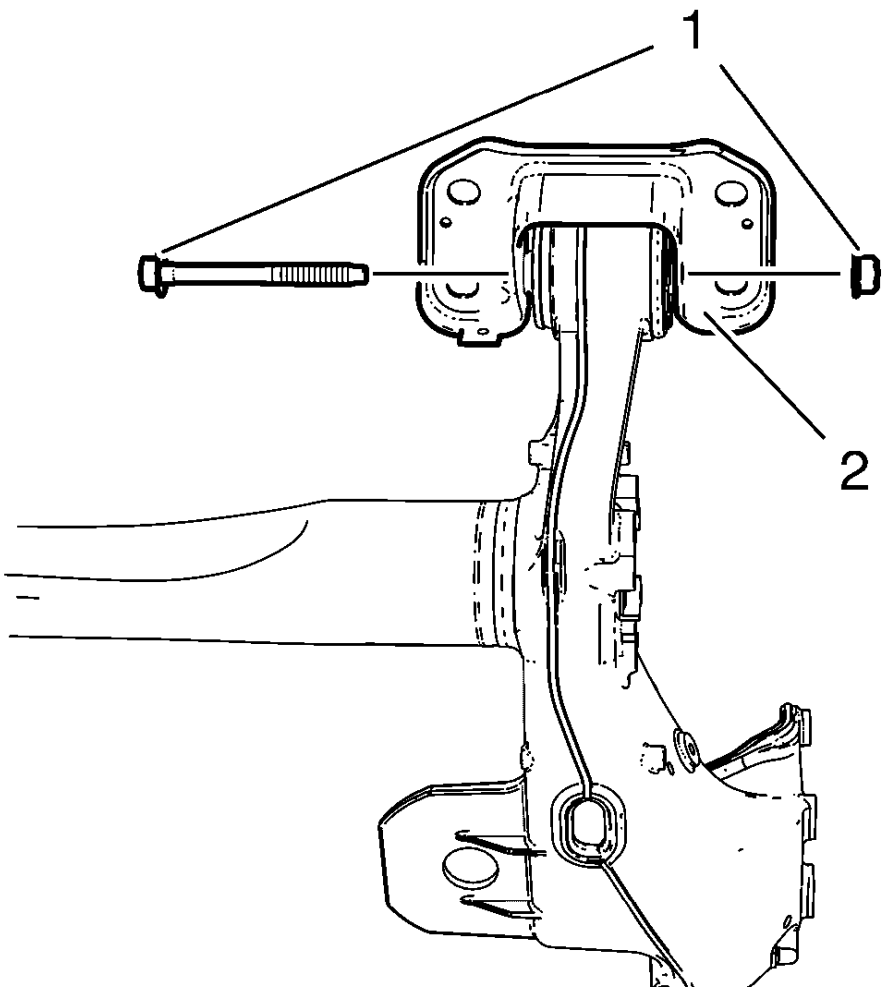

Fig. 58: Rear Axle, Bolts And Nuts
Courtesy of GENERAL MOTORS COMPANY

5. Remove and DISCARD the rear axle bushing bolts and nuts (1) from the rear axle (2).

Installation Procedure

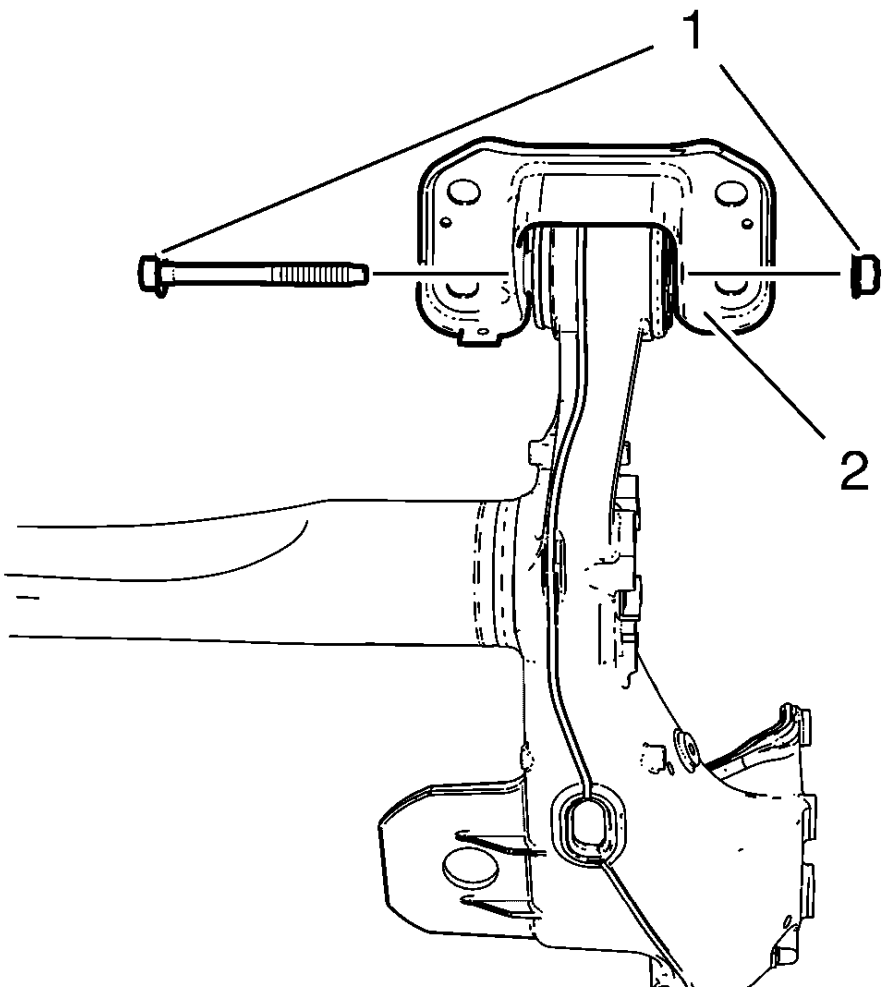

Fig. 59: Rear Axle, Bolts And Nuts
Courtesy of GENERAL MOTORS COMPANY

NOTE: The axle bushing bolts (1) and nuts must be tightened with the axle at the correct trim height.

1. Loosely install the NEW rear axle bushing bolts and nuts (1) to the rear axle (2).

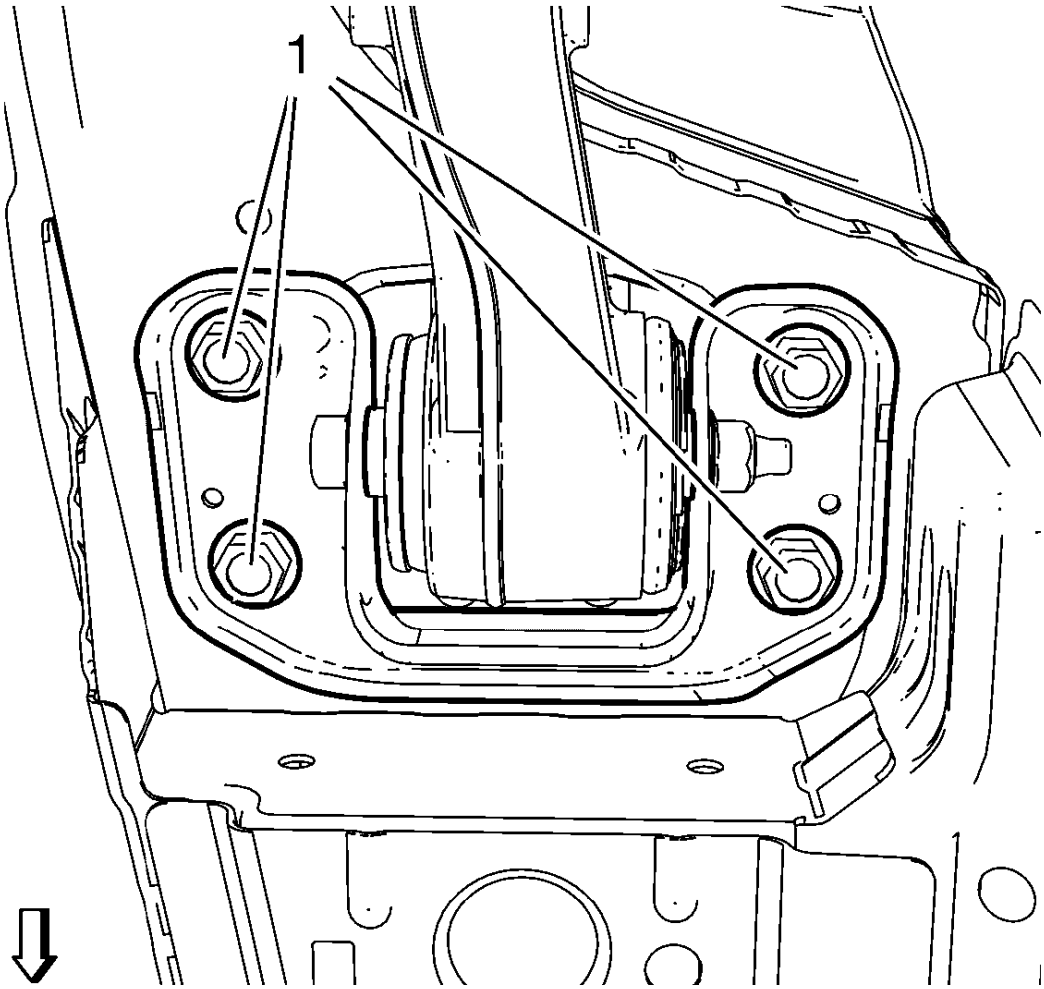

Fig. 60: Rear Axle Bracket Bolts
Courtesy of GENERAL MOTORS COMPANY

2. Loosely install the 4 NEW axle bracket bolts (1).
3. Apply anti-corrosion treatment to the guide pin holes in the underbody and rear axle bracket.

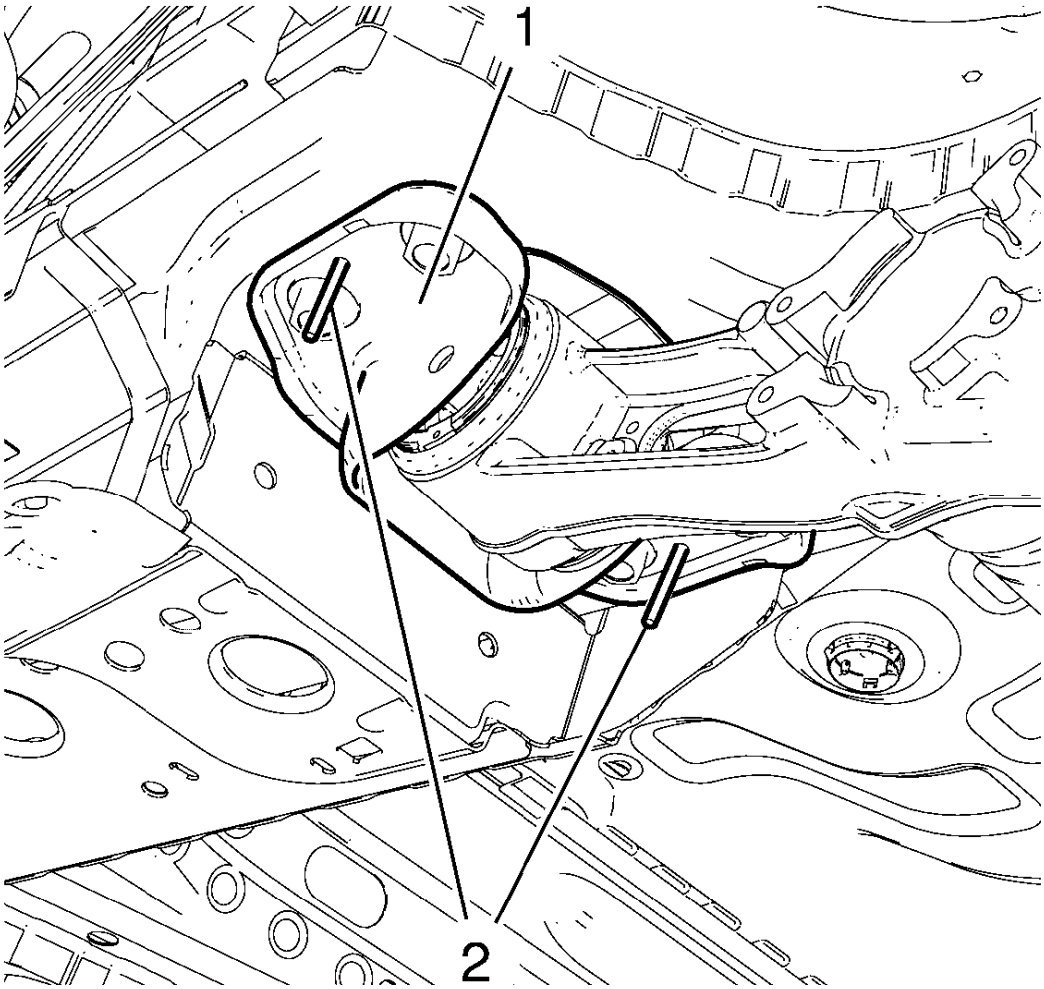

Fig. 61: Rear Axle Bracket And Drill Bits
Courtesy of GENERAL MOTORS COMPANY

4. Using 6 mm (0.2 in) drill bits (2) as guide pins, align the rear axle bracket (1) to the underbody.

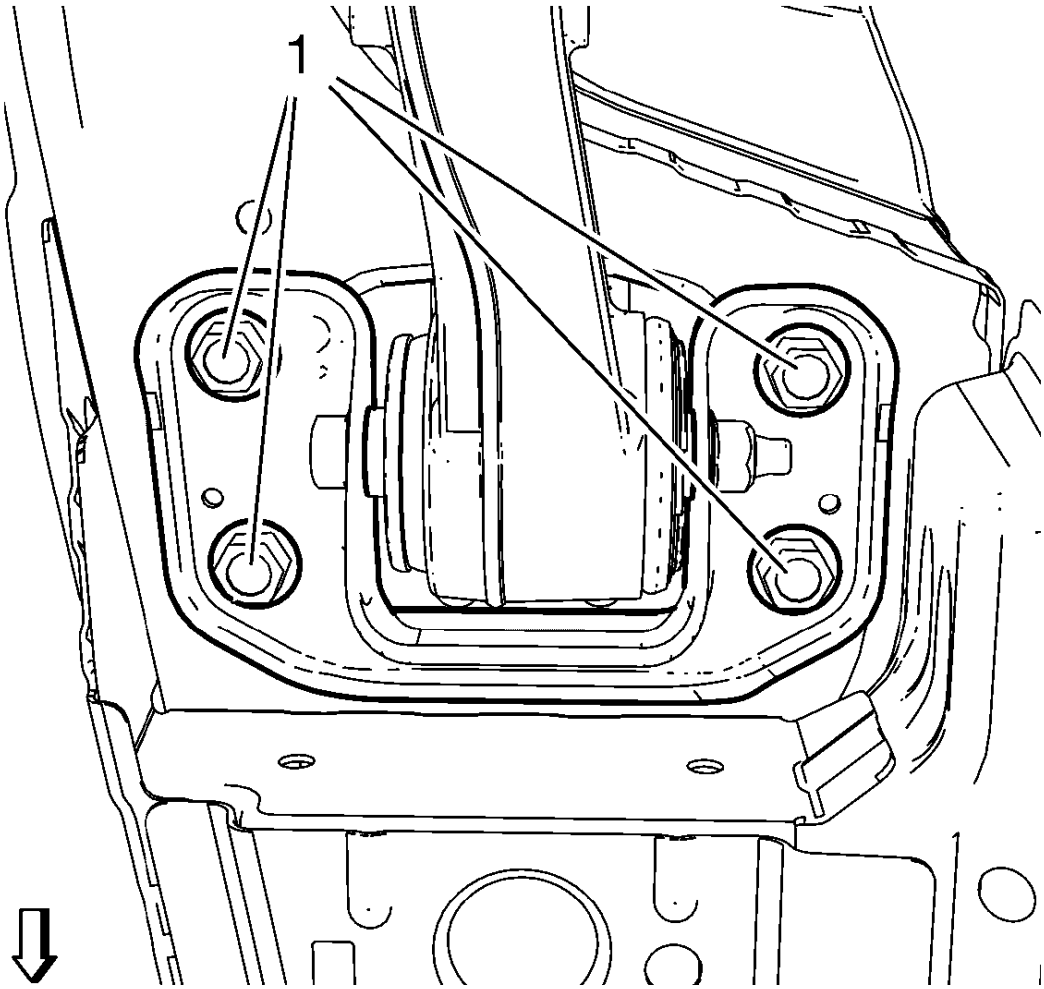

Fig. 62: Rear Axle Bracket Bolts
Courtesy of GENERAL MOTORS COMPANY

WARNING: Refer to Torque-to-Yield Fastener Warning .

CAUTION: Refer to Fastener Caution .

5. Tighten the axle bracket bolts (1) to 90 N.m (66 lb ft) + 45°, using **EN-45059** angle meter.

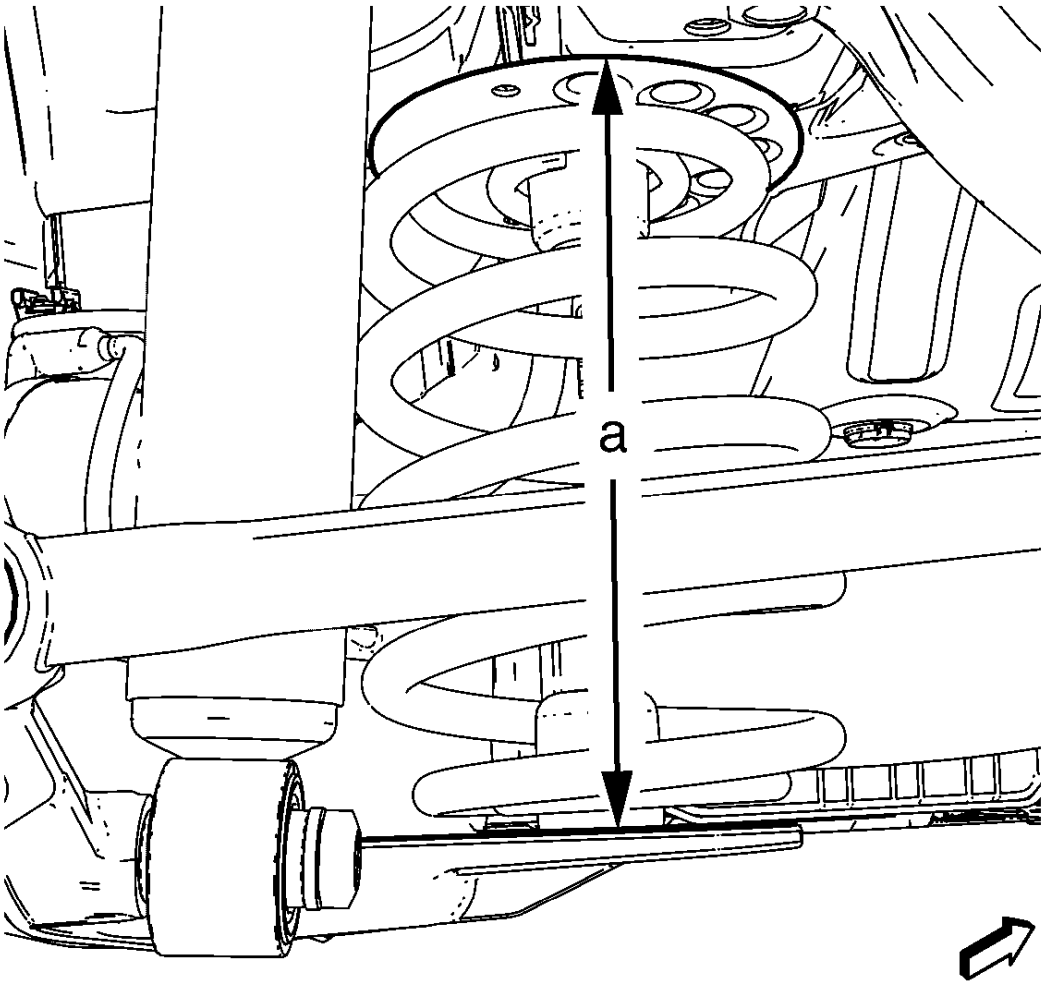

Fig. 63: Trim Height Specification
Courtesy of GENERAL MOTORS COMPANY

6. Using the lift table, raise the axle to the proper trim height specification by measuring the vertical distance between the bottom edge of the upper spring seat and the bottom of the notch in the lower spring seat.

Trim Height Specification

Dimension (a): 217 mm (8.54 in)

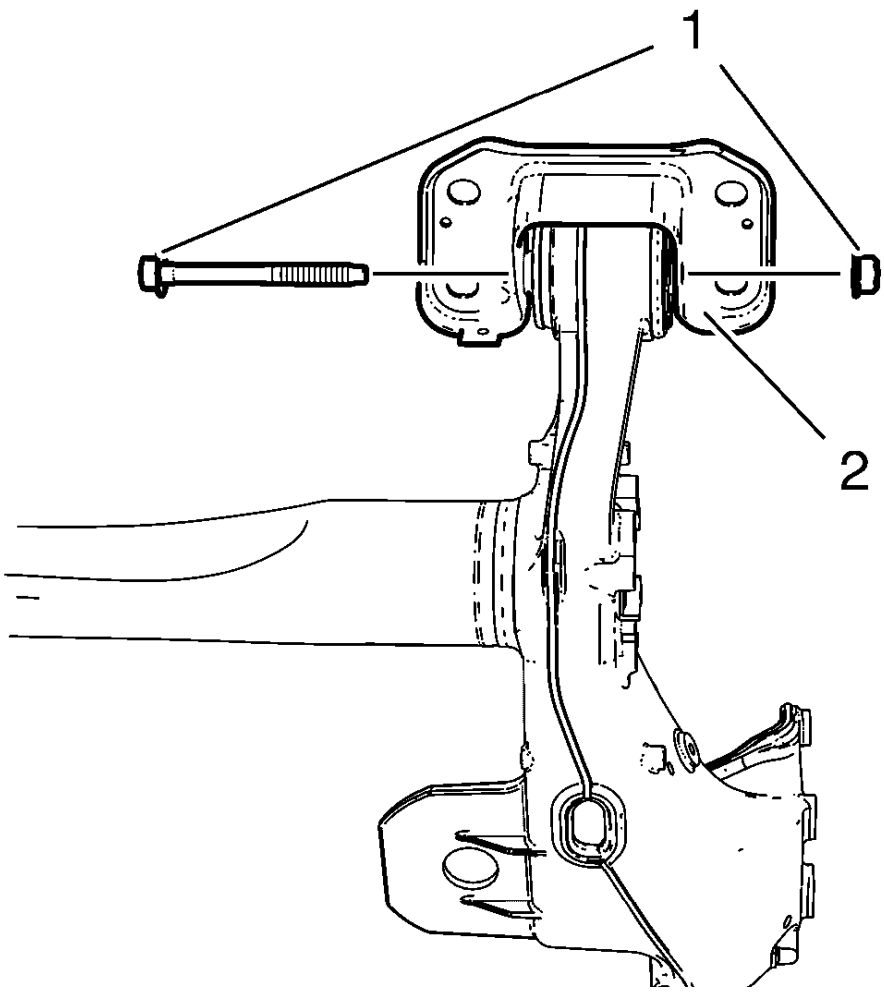

Fig. 64: Rear Axle, Bolts And Nuts
Courtesy of GENERAL MOTORS COMPANY

7. Tighten the axle bushing through bolts (1) and nuts and tighten to 70 N.m (52 lb ft) + 120°, using **EN-45059** angle meter.
8. Remove the hydraulic lift table from the rear axle.
9. Lower the vehicle.

SHOCK ABSORBER REPLACEMENT

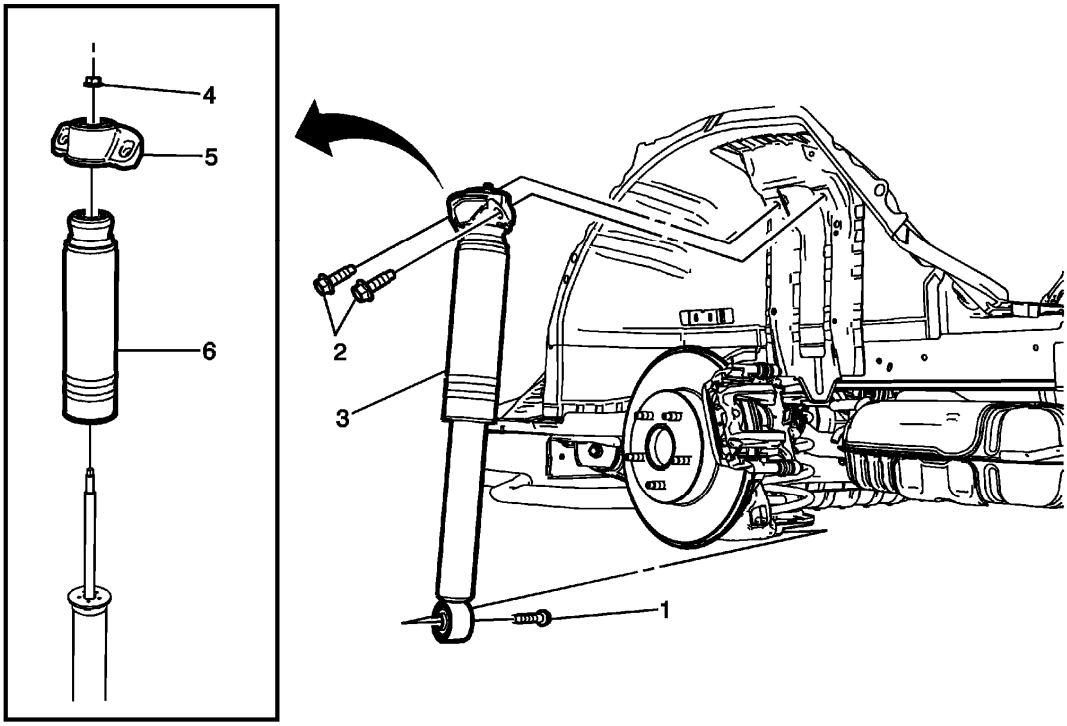

Fig. 65: Shock Absorber Components
Courtesy of GENERAL MOTORS COMPANY

Shock Absorber Replacement

Callout	Component Name
Preliminary Procedures 1. Raise and support the vehicle. Refer to **Lifting and Jacking the Vehicle** . 2. Remove the tire and wheel assembly. Refer to **Tire and Wheel Removal and Installation** .	
1	Rear Shock Absorber Bolt. **WARNING:** **Refer to Torque-to-Yield Fastener Warning .** **CAUTION:** **Refer to Fastener Caution .** **Procedure** 1. Support the rear axle with a suitable jack stand. 2. Install NEW bolt. Do NOT reuse old bolt. 3. Support the front of the vehicle and raise the rear axle to proper r-height. Refer to **Trim Height Specifications** . 4. Use **EN-45059** angle meter for additional tightening.

	Tighten 1. First Pass: 150 N.m (111 lb ft) 2. Final Pass: additional 60 - 70 degrees. **Special Tools** **EN-45059** Angle Meter For equivalent regional tools, refer to **Special Tools**.
2	Rear Shock Absorber Bolt (Qty: 2) **Tighten** 100 N.m (74 lb ft)
3	Rear Shock Absorber
4	Rear Shock Absorber Nut **Procedure** Use the **CH-51095** wrench to tighten the rear shock absorber nut. **Tighten** 20 N.m (15 lb ft) **Special Tools** **CH-51095** Wrench For equivalent regional tools, refer to **Special Tools**.
5	Rear Shock Absorber Upper Mount
6	Rear Shock Absorber Bumper Upper

SHOCK ABSORBER DISPOSAL

WARNING: Gas charged shock absorbers contain high pressure gas. Do not remove the snap ring from inside the top of the tube. If the snap ring is removed, the contents of the shock absorber will come out with extreme force which may result in personal injury.

WARNING: To prevent personal injury, wear safety glasses when centerpunching and drilling the shock absorber. Use care not to puncture the shock absorber tube with the centerpunch.

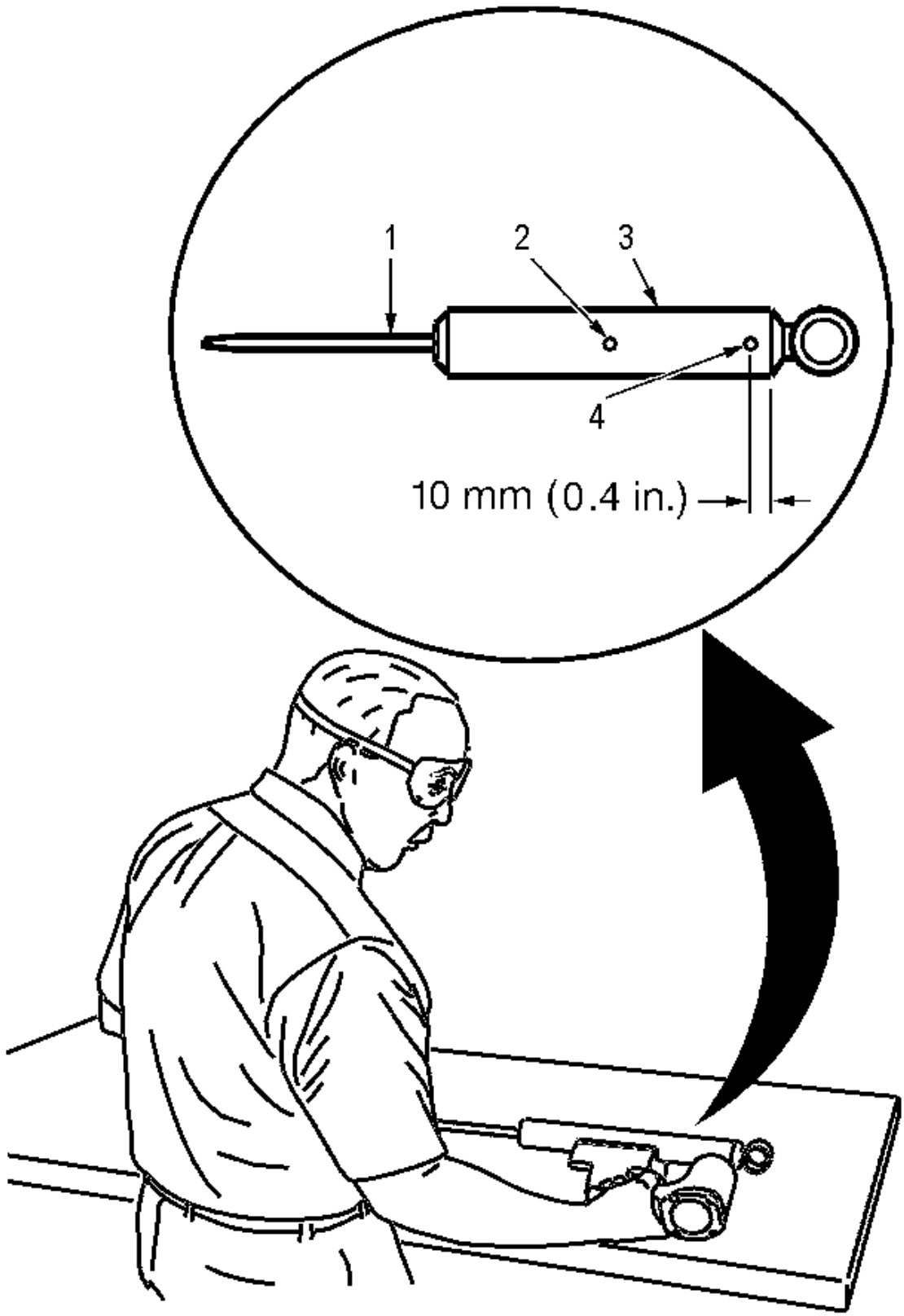

Fig. 66: Drilling Hole In Shock Absorber At Centerpunched Locations

Courtesy of GENERAL MOTORS COMPANY

1. Make an indentation 10 mm (0.4 in) from the bottom (4) of the tube (3) using a centerpunch.
2. Clamp the shock absorber in a vise horizontally with the shock absorber rod (1) completely extended.
3. Drill a hole in the shock absorber at the centerpunch (4) using a 5 mm (3/16 in) drill bit. Gas or a gas/oil mixture will exhaust when the drill bit penetrates the shock absorber. Use shop towels in order to contain the escaping oil.
4. Make an indentation in the middle (2) of the tube (3) with a centerpunch.
5. Drill a second hole in the shock absorber at the centerpunch (2) using a 5 mm (3/16 in) drill bit. Oil will exhaust when the drill bit penetrates the shock absorber. Use shop towels in order to contain the escaping oil.
6. Remove the shock absorber from the vise. Hold the shock absorber over a drain pan horizontally with the holes down. Move the rod (1) in and out of the tube (3) to completely drain the oil from the shock absorber.

REAR SPRING INSULATOR REPLACEMENT

Removal Procedure

1. Raise and suitably support the vehicle. Refer to **Lifting and Jacking the Vehicle** .
2. Support the rear axle with a tall jack stand near the shock absorber.
3. If the springs are being removed to service other components and the spring tags are missing, mark the position of the rear spring to ensure proper installation.
4. Remove the lower shock absorber bolts. Refer to **Shock Absorber Replacement**.
5. Using the tall jack stands, slowly lower the rear axle in order to remove tension from the rear springs.

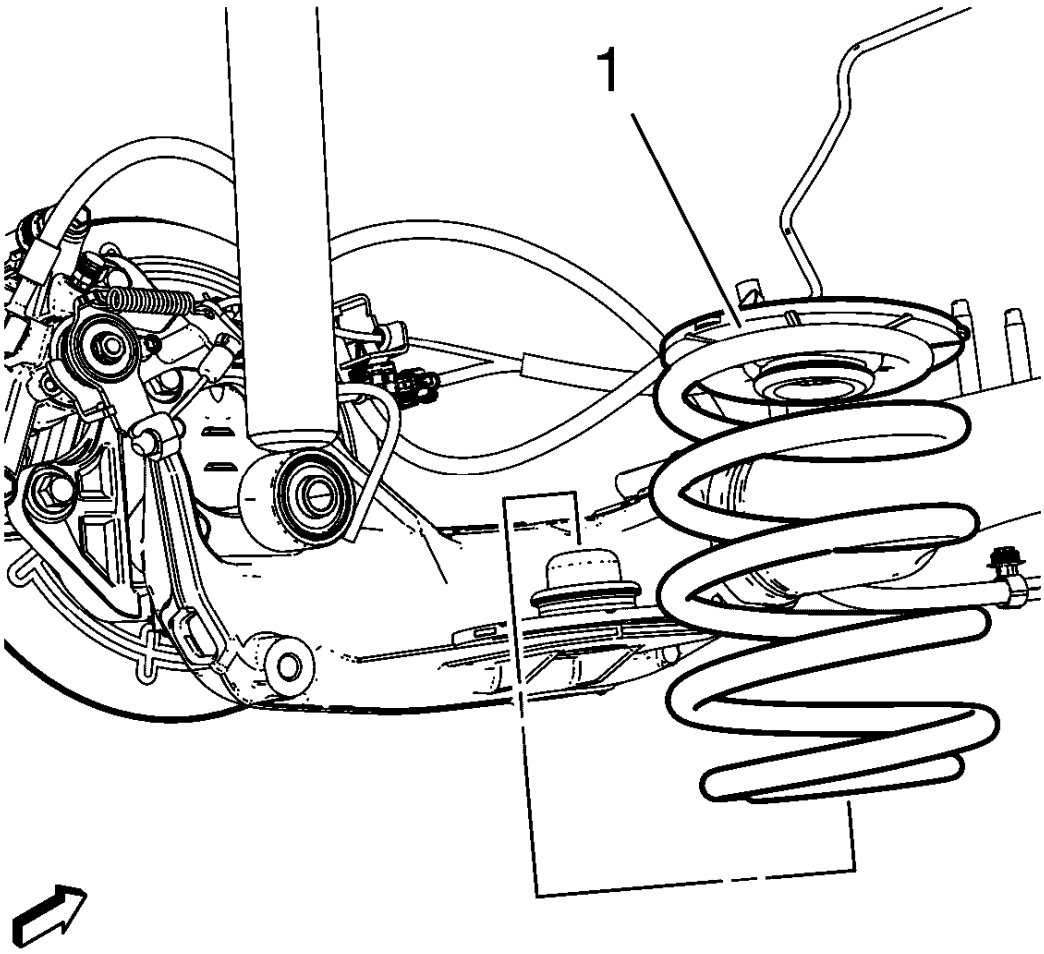

Fig. 67: Rear Coil Spring
Courtesy of GENERAL MOTORS COMPANY

6. Remove the spring (1).

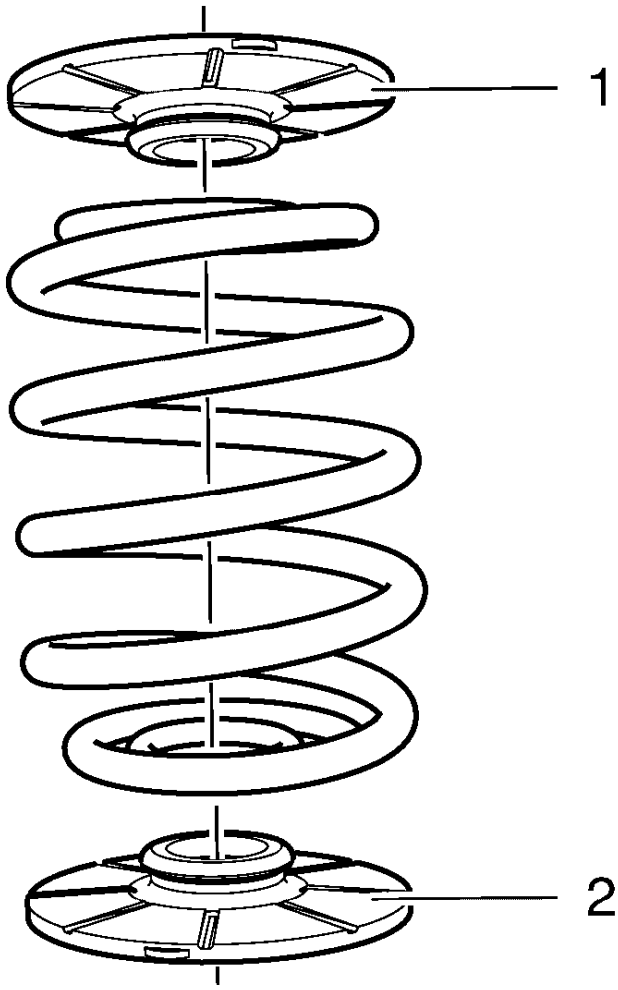

Fig. 68: Lower And Upper Rear Spring Insulators
Courtesy of GENERAL MOTORS COMPANY

7. Remove the lower and upper rear spring insulators (1, 2).

Installation Procedure

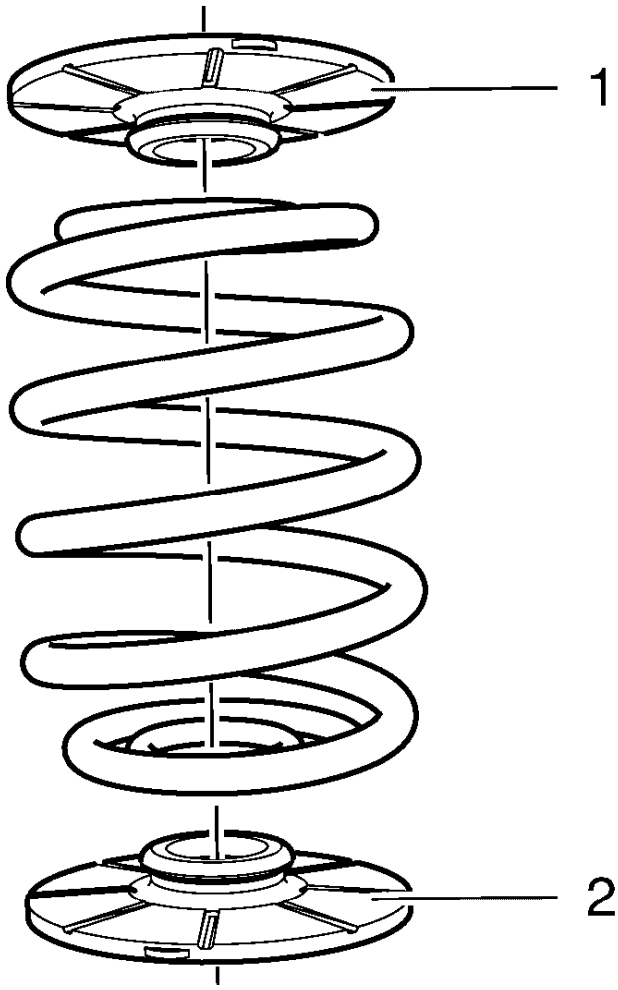

Fig. 69: Lower And Upper Rear Spring Insulators
Courtesy of GENERAL MOTORS COMPANY

1. Install the lower and upper rear spring insulators (1, 2).

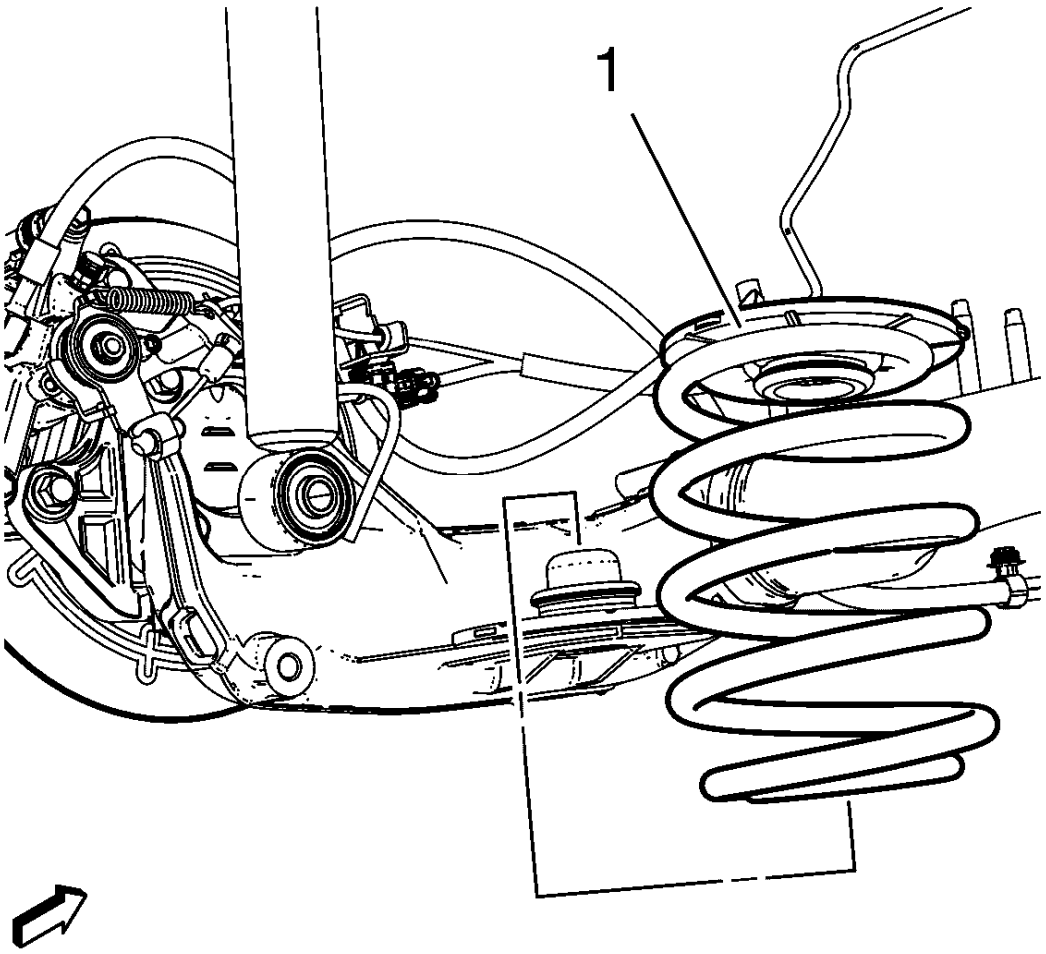

Fig. 70: Rear Coil Spring
Courtesy of GENERAL MOTORS COMPANY

NOTE: **If the spring is equipped with tags, ensure that the tags are at the upper rear portion of the spring. If marks were made during removal, ensure the marks are properly aligned.**

2. Install the spring (1) making sure the lower coil is seated into the lower spring seat.
3. Using the jack stands, raise the rear axle in order to compress the rear springs.
4. Install the lower shock absorber bolts. Refer to **Shock Absorber Replacement**.
5. Lower the vehicle.

REAR SPRING REPLACEMENT

Removal Procedure

1. Raise and suitably support the vehicle. Refer to **Lifting and Jacking the Vehicle** .
2. Support the rear axle with a tall jack stand near the shock absorber.
3. If the springs are being removed to service other components and the spring tags are missing, mark the position of the rear spring to ensure proper installation.
4. Remove the lower shock absorber bolts. Refer to **Shock Absorber Replacement**.
5. Using the tall jack stands, slowly lower the rear axle in order to remove tension from the rear springs.

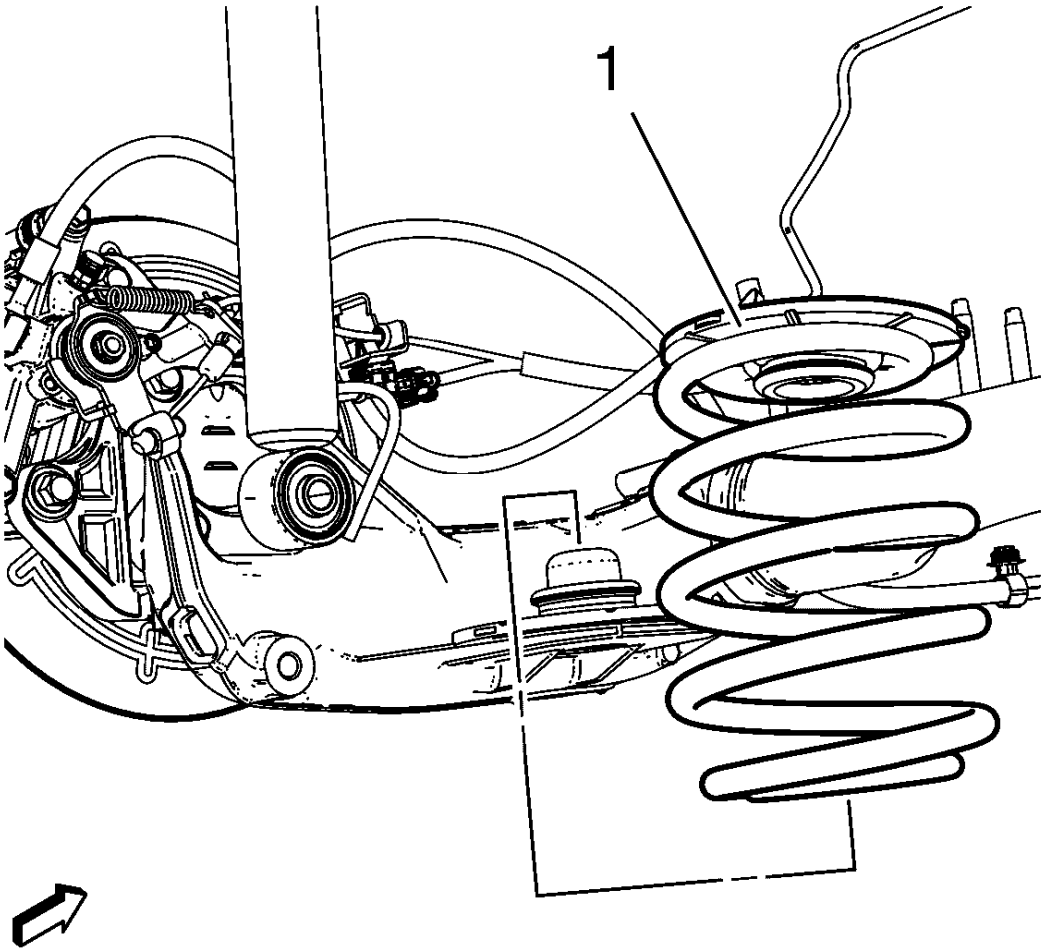

Fig. 71: Rear Coil Spring
Courtesy of GENERAL MOTORS COMPANY

6. Remove the spring (1).

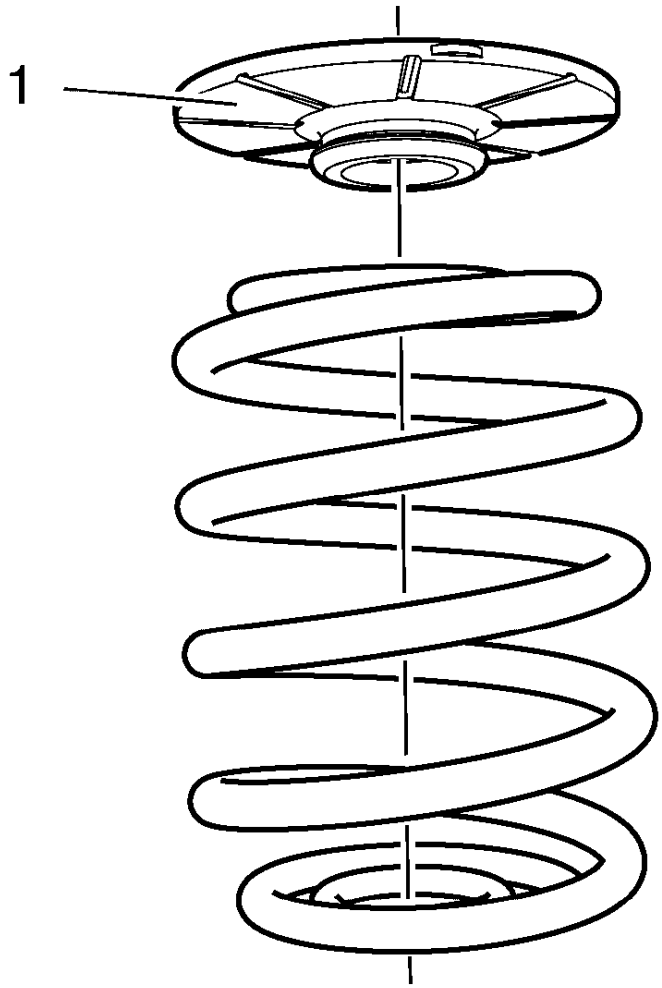

Fig. 72: Spring Seat/Jounce Bumper
Courtesy of GENERAL MOTORS COMPANY

7. Remove the upper spring seat/jounce bumper (1) from the spring, while leaving the lower spring seat on the axle.

Installation Procedure

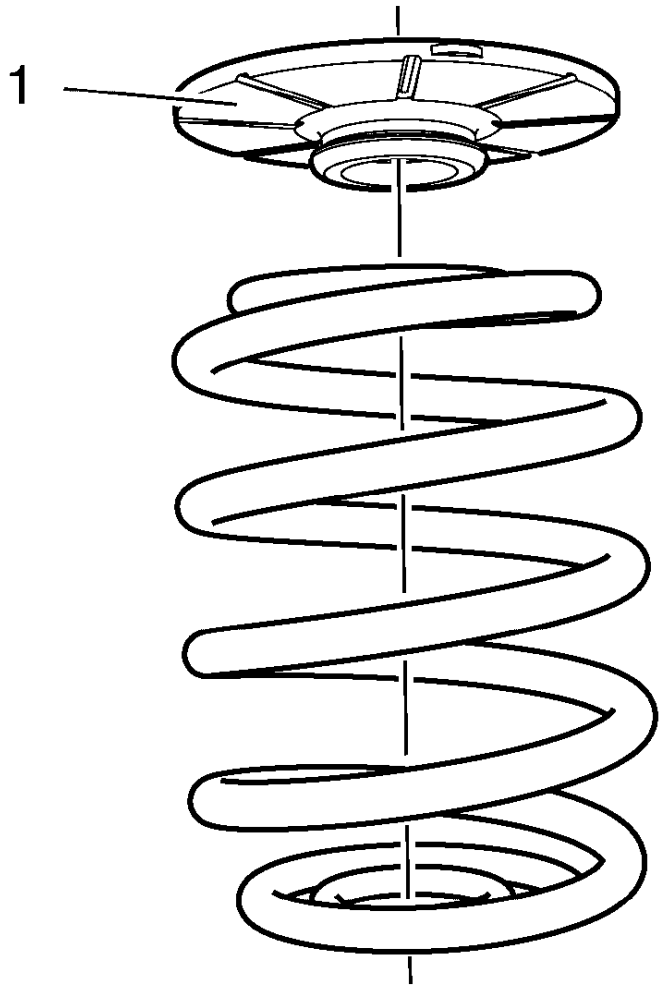

Fig. 73: Spring Seat/Jounce Bumper
Courtesy of GENERAL MOTORS COMPANY

1. Install the upper spring seat/jounce bumper (1) on the spring.

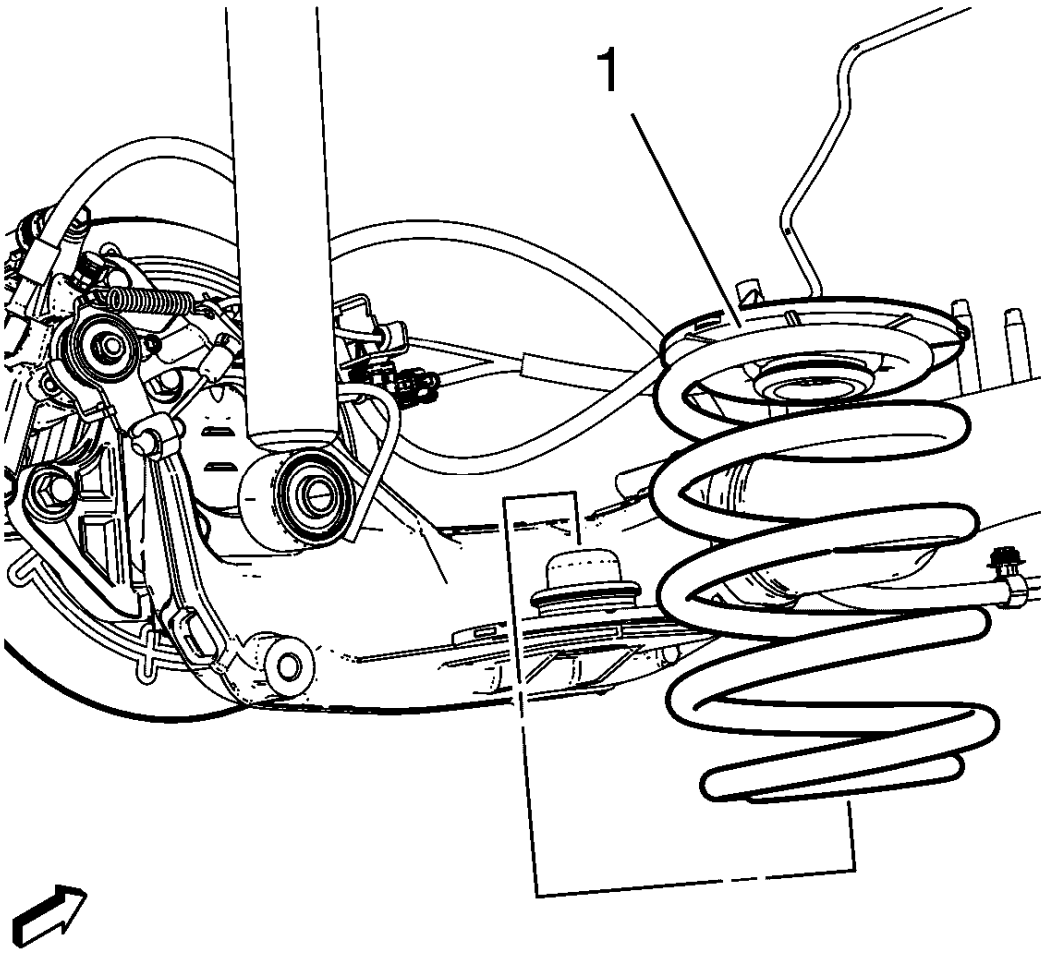

Fig. 74: Rear Coil Spring
Courtesy of GENERAL MOTORS COMPANY

NOTE: **If the spring is equipped with tags, ensure that the tags are at the upper rear portion of the spring. If marks were made during removal, ensure the marks are properly aligned.**

2. Install the spring (1) making sure the lower coil is seated into the lower spring seat.
3. Using the jack stands, raise the rear axle in order to compress the rear springs.
4. Install the lower shock absorber bolts. Refer to **Shock Absorber Replacement**.
5. Lower the vehicle.

REAR AXLE REPLACEMENT (COMPOUND CRANK)

Special Tools

EN-45059 Angle Meter

For equivalent regional tools, refer to **Special Tools**.

Removal Procedure

1. Raise and suitably support the vehicle. Refer to **Lifting and Jacking the Vehicle** .
2. Remove the tire and wheel assembly. Refer to **Tire and Wheel Removal and Installation** .

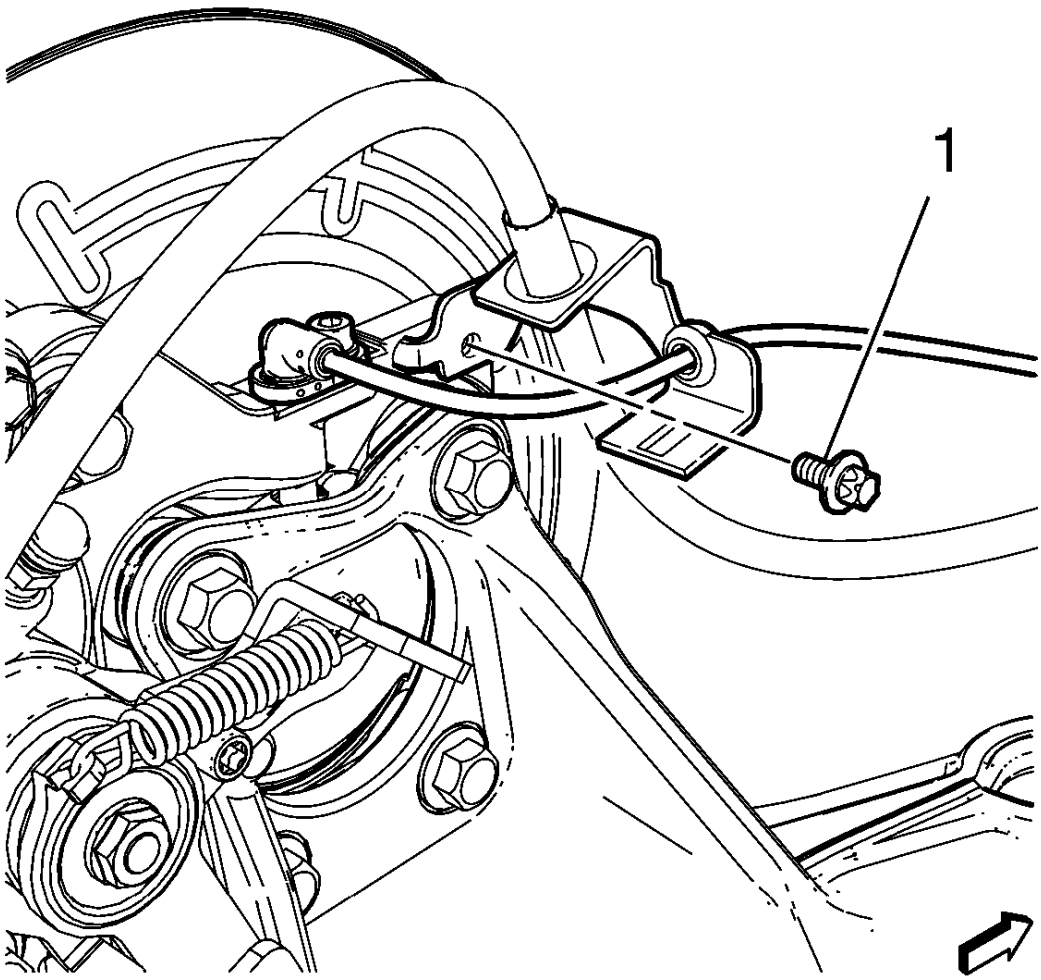

Fig. 75: Identifying Brake Hose Bolts
Courtesy of GENERAL MOTORS COMPANY

3. Remove the both brake hose bolts (1) attaching the hose to the rear brake caliper bracket.

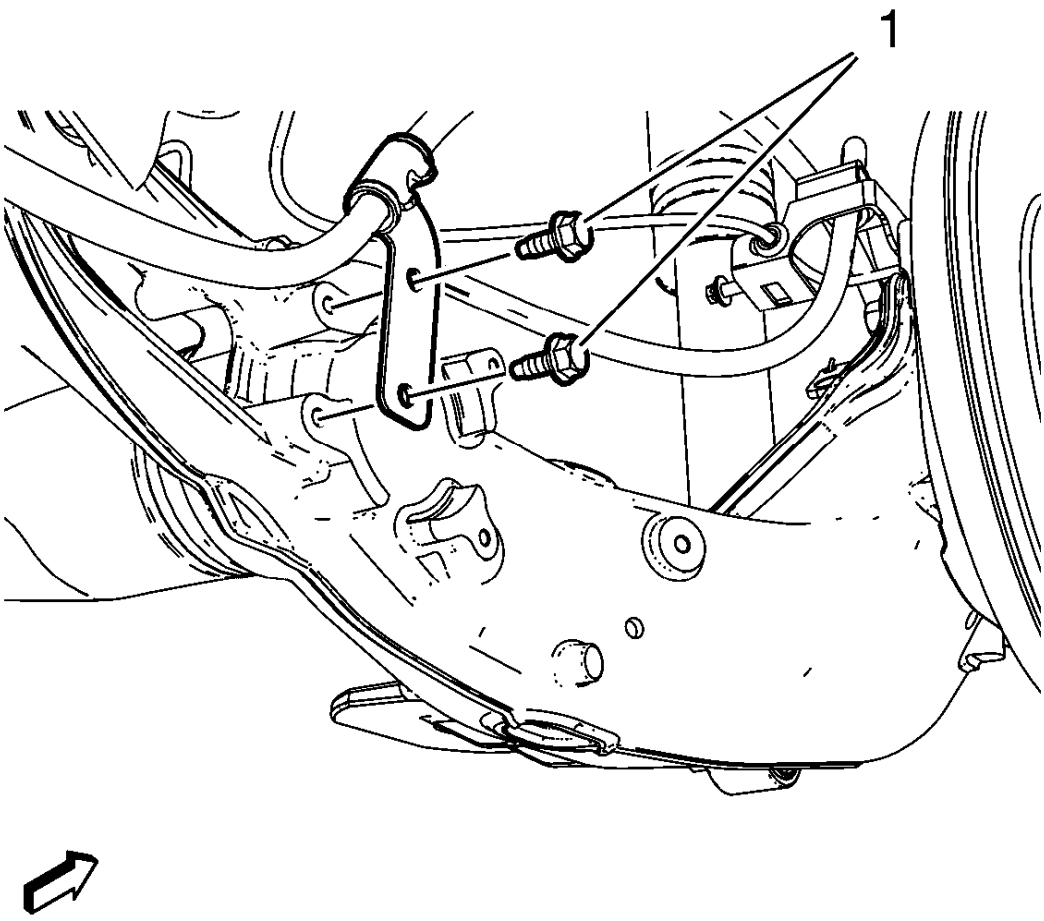

Fig. 76: Parking Brake Cable Bracket Bolts
Courtesy of GENERAL MOTORS COMPANY

4. Remove the rear parking brake cable bracket bolts (1) from the rear axle.

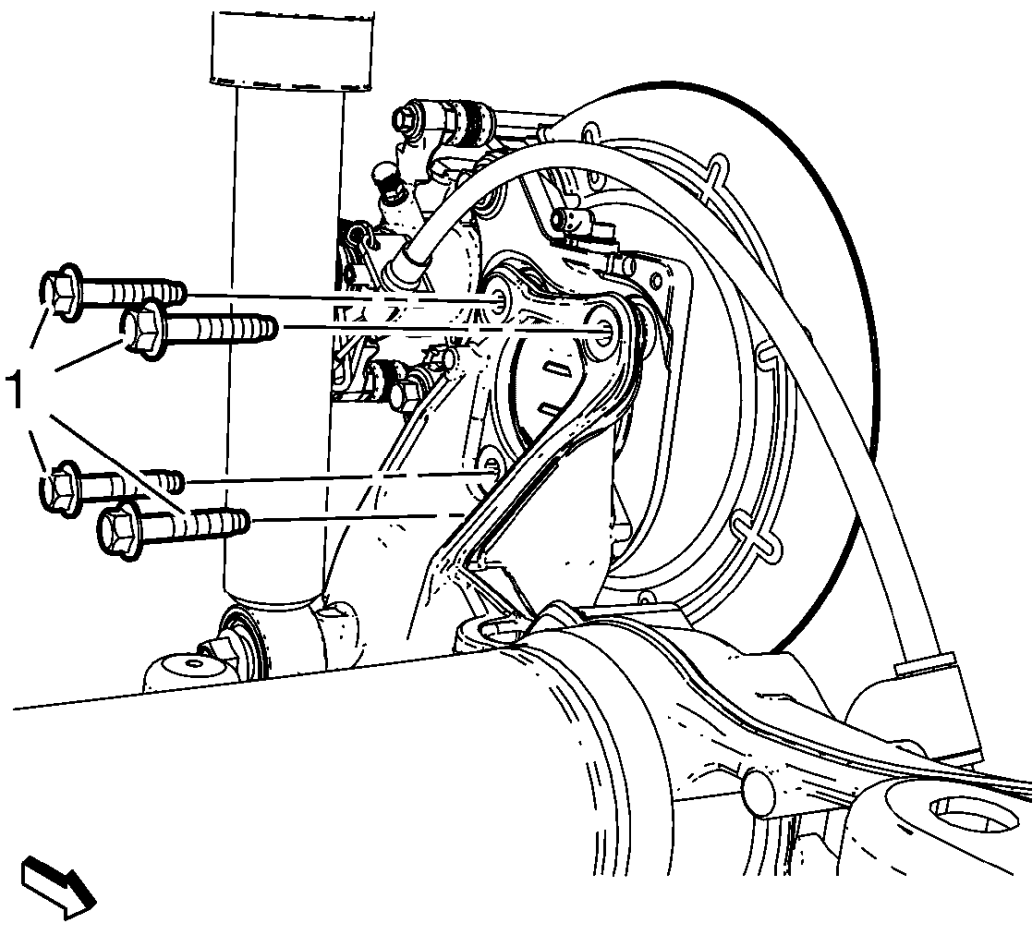

Fig. 77: Wheel Bearing/Hub Mounting Bolts
Courtesy of GENERAL MOTORS COMPANY

5. Remove and DISCARD the wheel bearing/hub mounting bolts (1).

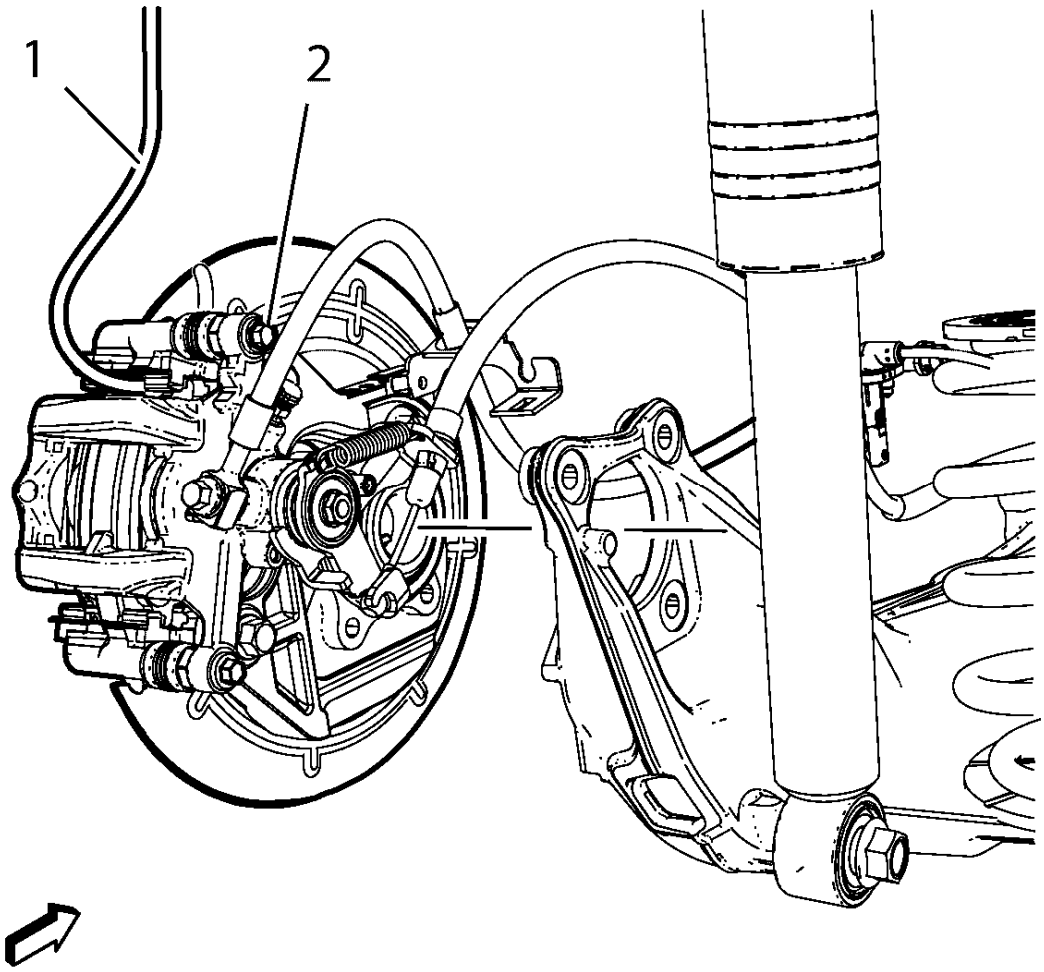

Fig. 78: Identifying Heavy Mechanics Wire And Brake Assembly
Courtesy of GENERAL MOTORS COMPANY

CAUTION: Support the brake caliper with heavy mechanic wire, or equivalent, whenever it is separated from its mount and the hydraulic flexible brake hose is still connected. Failure to support the caliper in this manner will cause the flexible brake hose to bear the weight of the caliper, which may cause damage to the brake hose and in turn may cause a brake fluid leak.

6. Without disconnecting the hydraulic brake flexible hose, remove the wheel bearing/hub and the brake assembly (2) upward and secure the wheel bearing/hub and the brake assembly with heavy mechanics wire (1), or equivalent.
7. Support the rear axle with a hydraulic lift table.
8. Remove the lower shock bolts. Refer to **Shock Absorber Replacement**.
9. Lower the hydraulic lift table and remove the rear coil springs. Refer to **Rear Spring Replacement**.

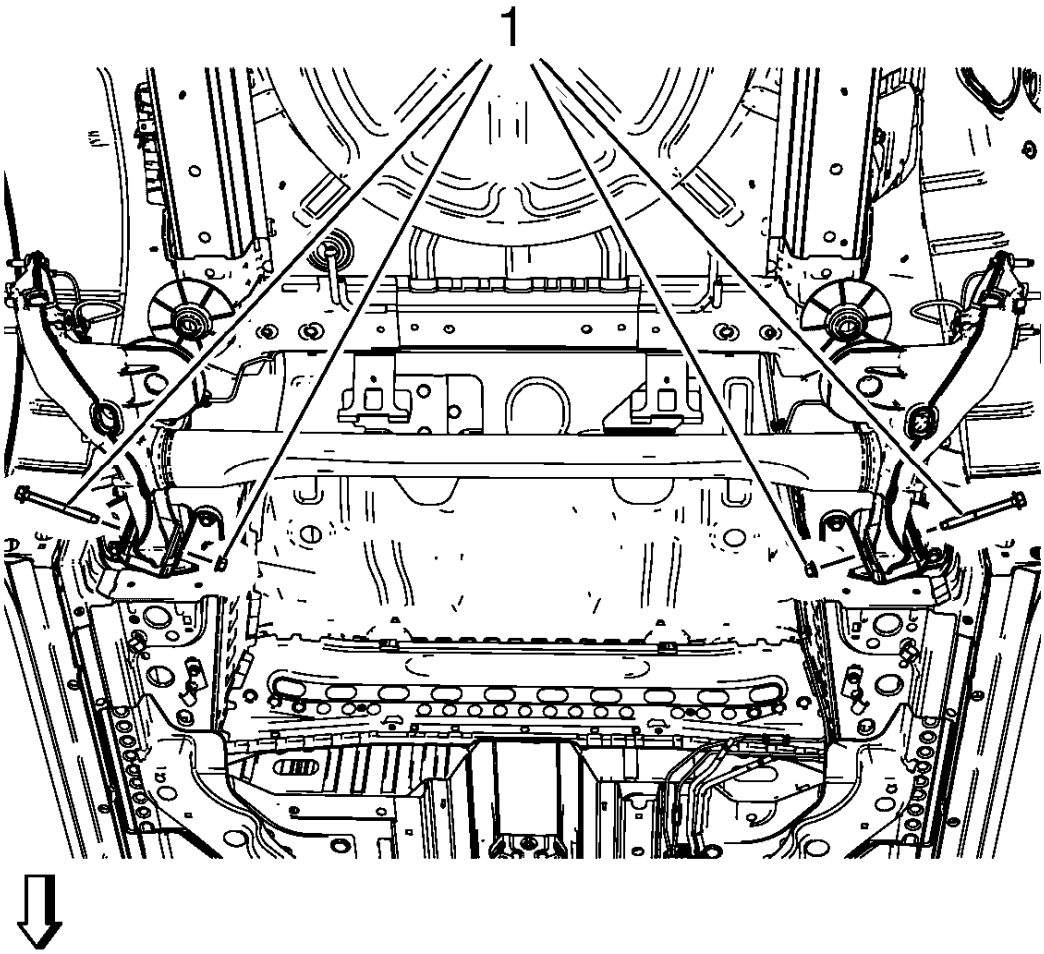

Fig. 79: Rear Axle Bushing Bolts And Nuts
Courtesy of GENERAL MOTORS COMPANY

10. Remove and DISCARD both rear axle bushing bolts (1) and nuts.

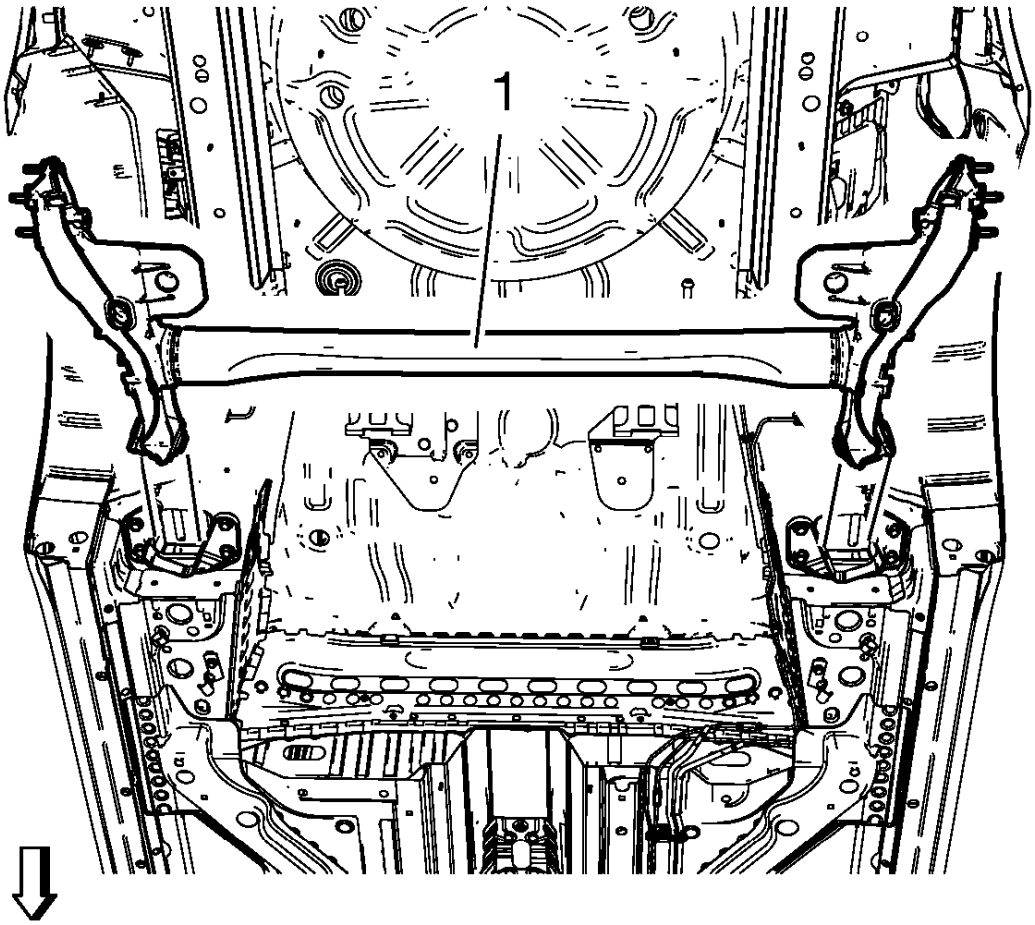

Fig. 80: Rear Axle
Courtesy of GENERAL MOTORS COMPANY

11. Use the hydraulic lift table to lower the rear axle (1) from the vehicle.

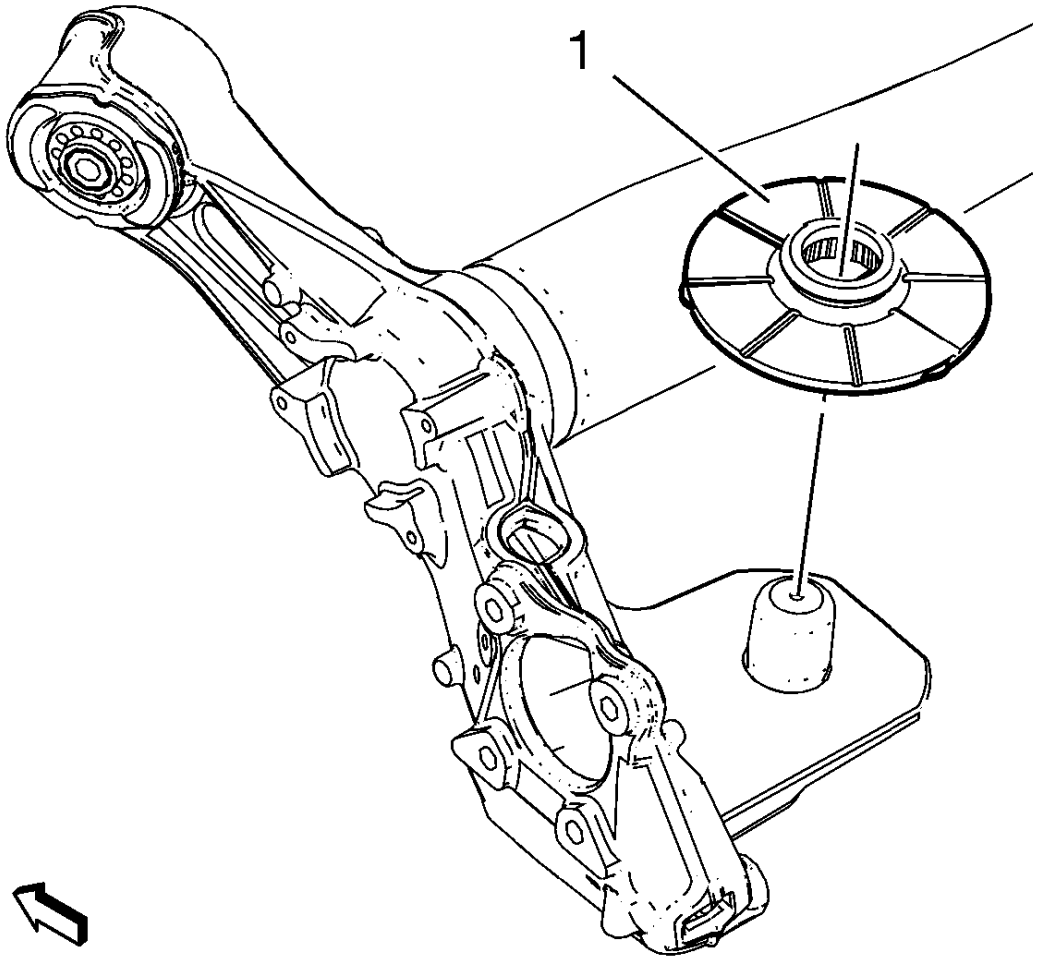

Fig. 81: Identifying Coil Spring Lower Seat Insulators
Courtesy of GENERAL MOTORS COMPANY

12. Remove the rear coil spring lower seat insulators (1) from the axle.

Installation Procedure

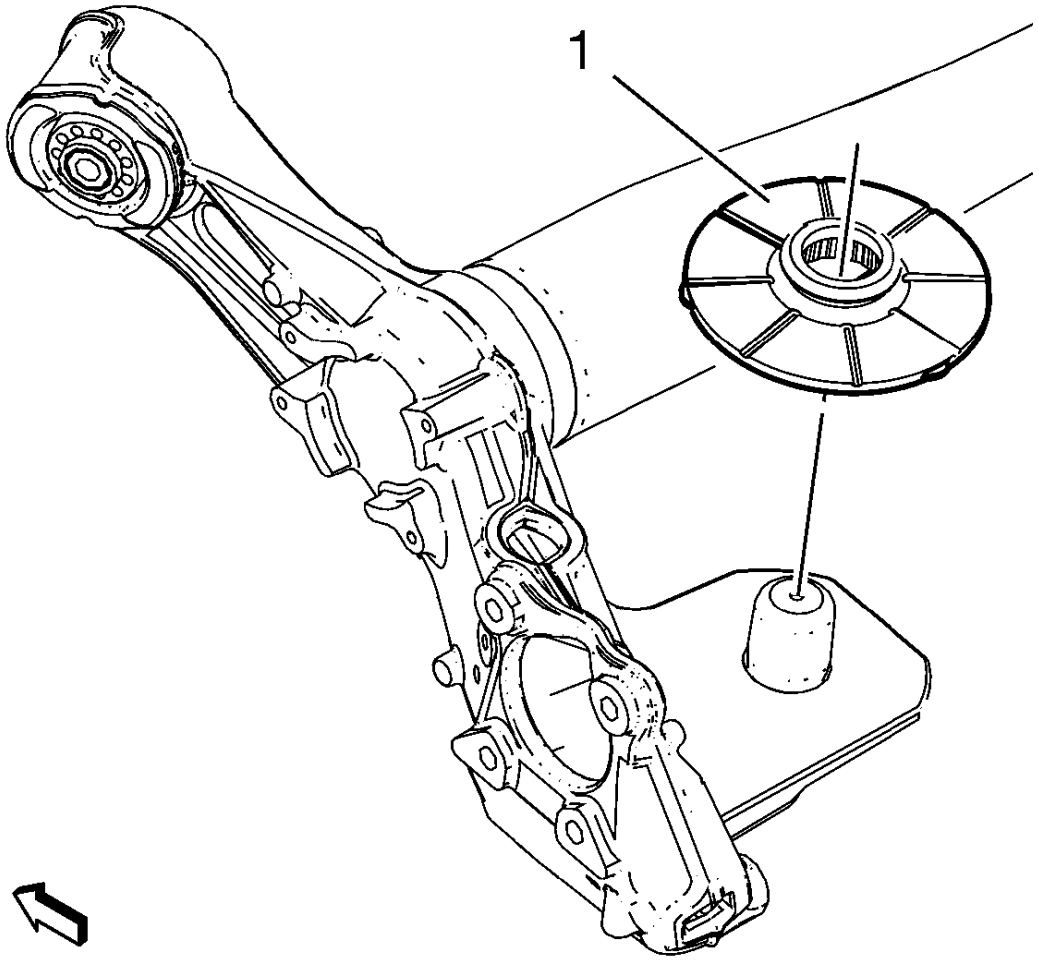

Fig. 82: Identifying Coil Spring Lower Seat Insulators
Courtesy of GENERAL MOTORS COMPANY

1. Install the rear coil spring lower seat insulators (1) to the axle.

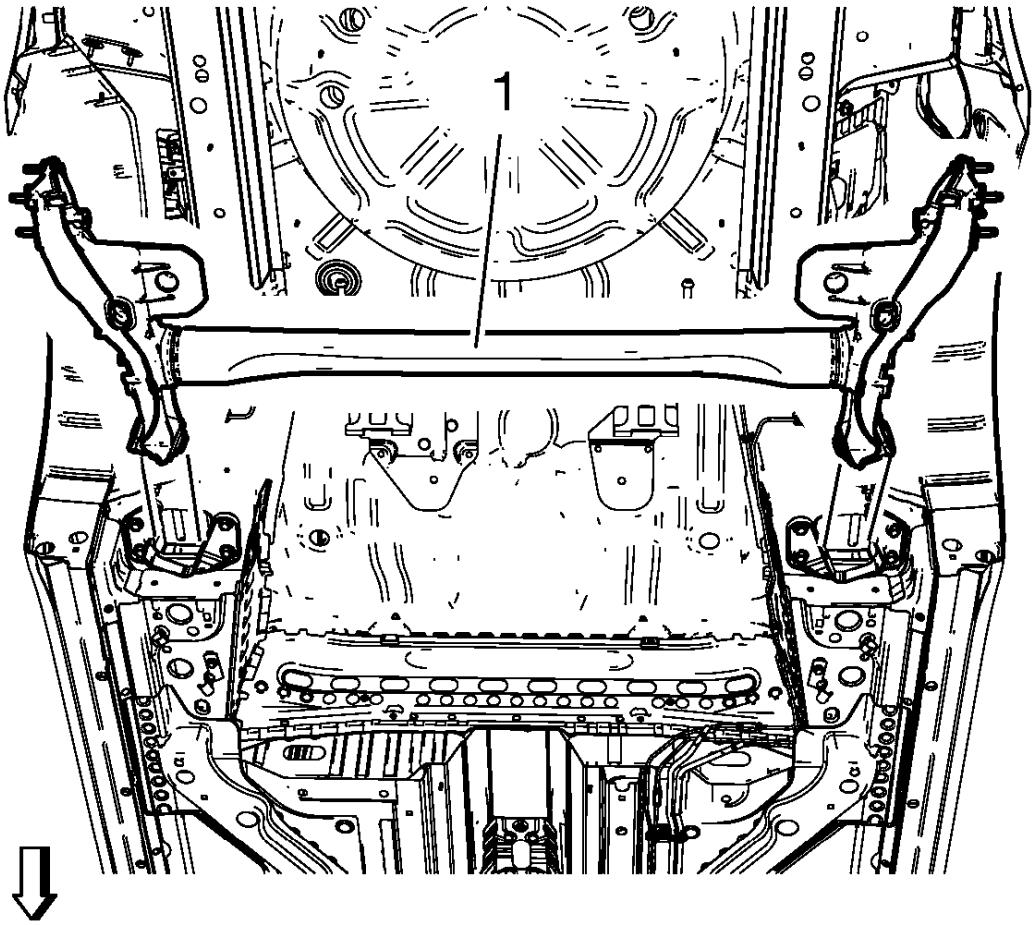

Fig. 83: Rear Axle
Courtesy of GENERAL MOTORS COMPANY

2. Raise the axle (1) into position.

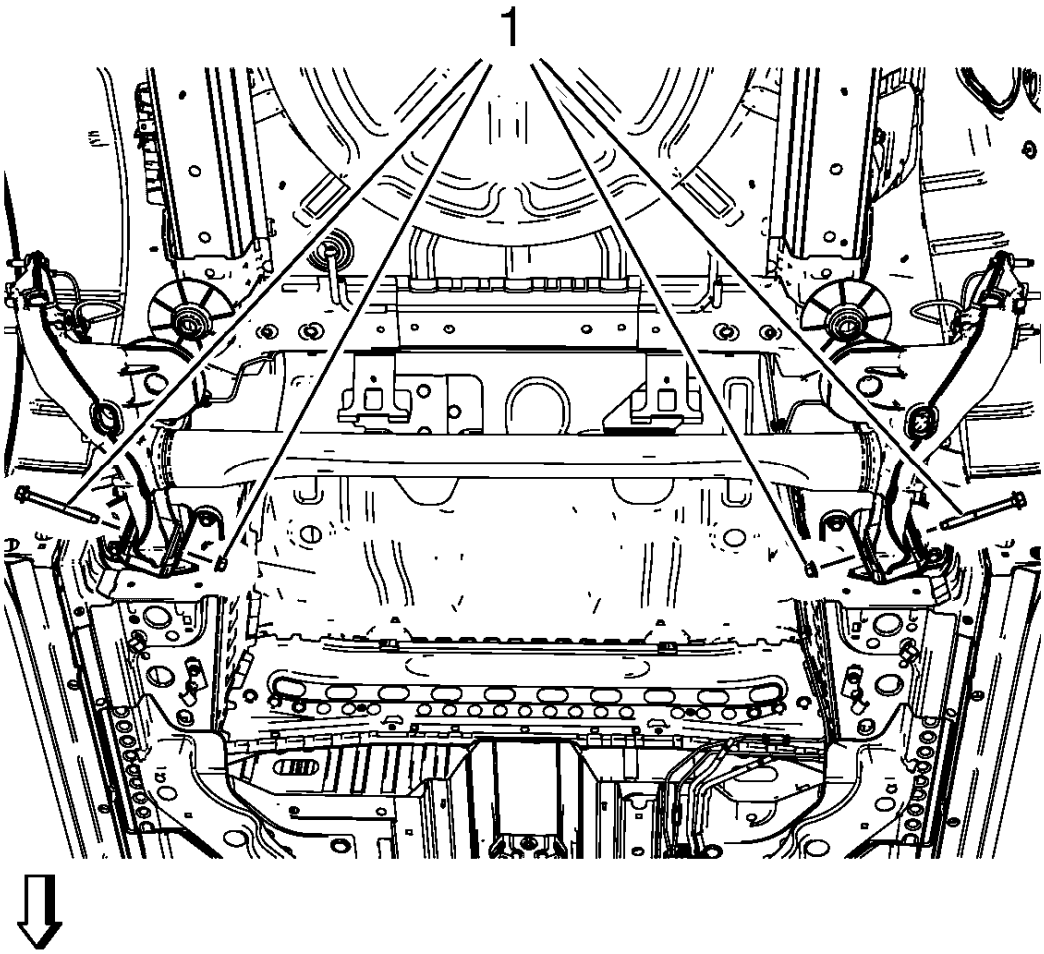

Fig. 84: Rear Axle Bushing Bolts And Nuts
Courtesy of GENERAL MOTORS COMPANY

3. Loosely install the both axle bushing bolts (1) and nuts.

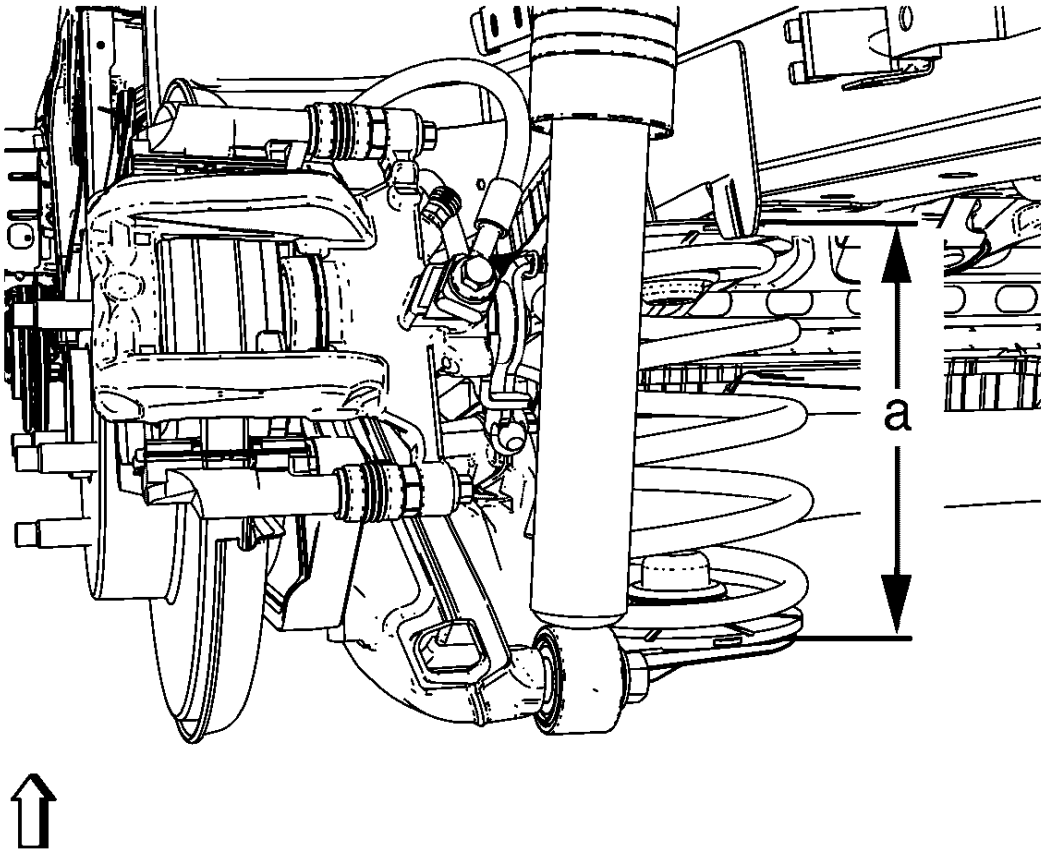

Fig. 85: Raising Axle To Proper Trim Height
Courtesy of GENERAL MOTORS COMPANY

NOTE: The axle bushing bolts and nuts must be tightened with the axle at the correct trim height.

4. Using the lift table, raise the axle to the proper trim height specification by measuring the vertical distance between the bottom edge of the upper spring seat and the bottom of the notch in the lower spring seat specification:

Specification

Dimension (a): 224 mm (8.82 in)

CAUTION: Refer to Fastener Caution .

5. Tighten the NEW axle bushing through the bolts and the NEW nuts and tighten a first pass to 70 N.m (52 lb ft).

CAUTION: Refer to Torque-to-Yield Fastener Caution .

6. Tighten the axle bushing though bolts and the nuts a final pass to an additional 120 - 135 degrees, using the **EN-45059** meter.
7. Install the rear coil springs. Refer to **Rear Spring Replacement**.
8. Install the lower shock bolts. Refer to **Shock Absorber Replacement**.
9. Remove the hydraulic lift table from the rear axle.
10. Install the wheel bearing/hub and the brake assembly.

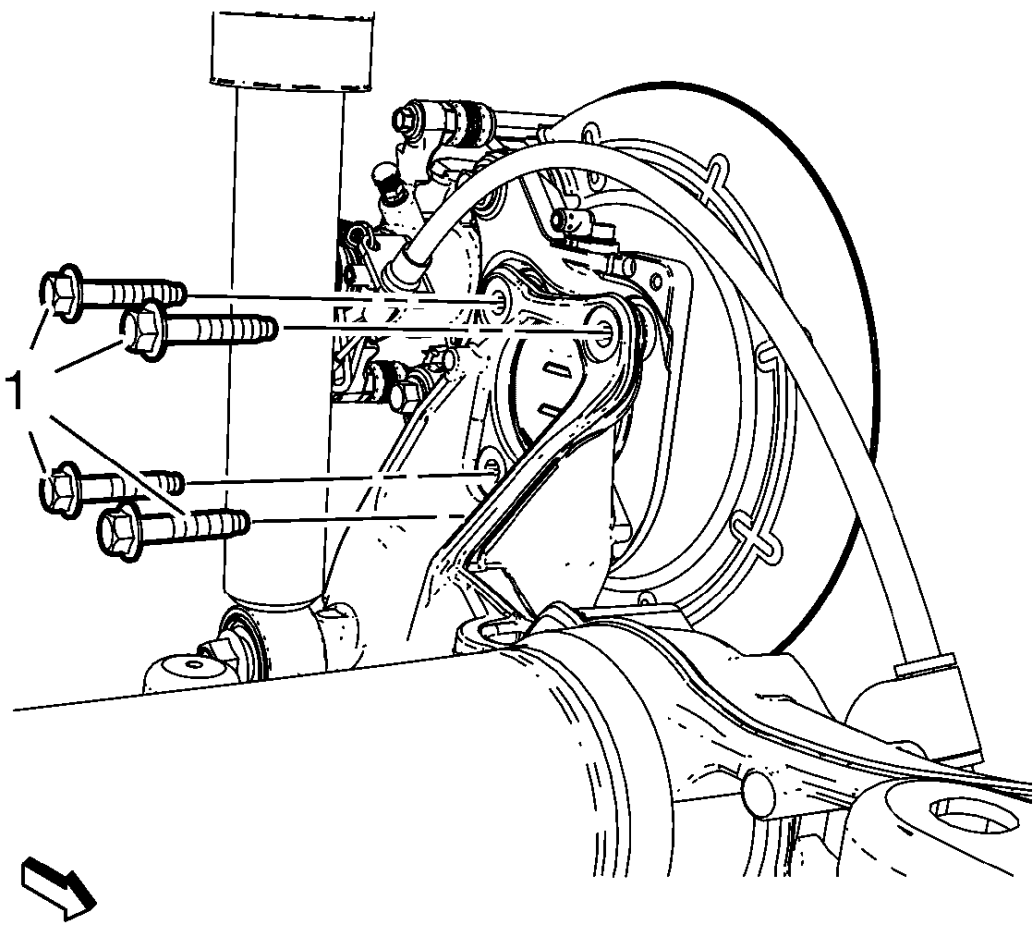

Fig. 86: Wheel Bearing/Hub Mounting Bolts
Courtesy of GENERAL MOTORS COMPANY

11. Install the NEW wheel bearing/hub mounting bolts (1) and tighten a first pass to 50 N.m (37 lb ft).

CAUTION: Refer to Torque-to-Yield Fastener Caution .

12. Install the wheel bearing/hub mounting bolts a final pass to an additional 45 - 60 degrees, using the **EN-45059** meter.

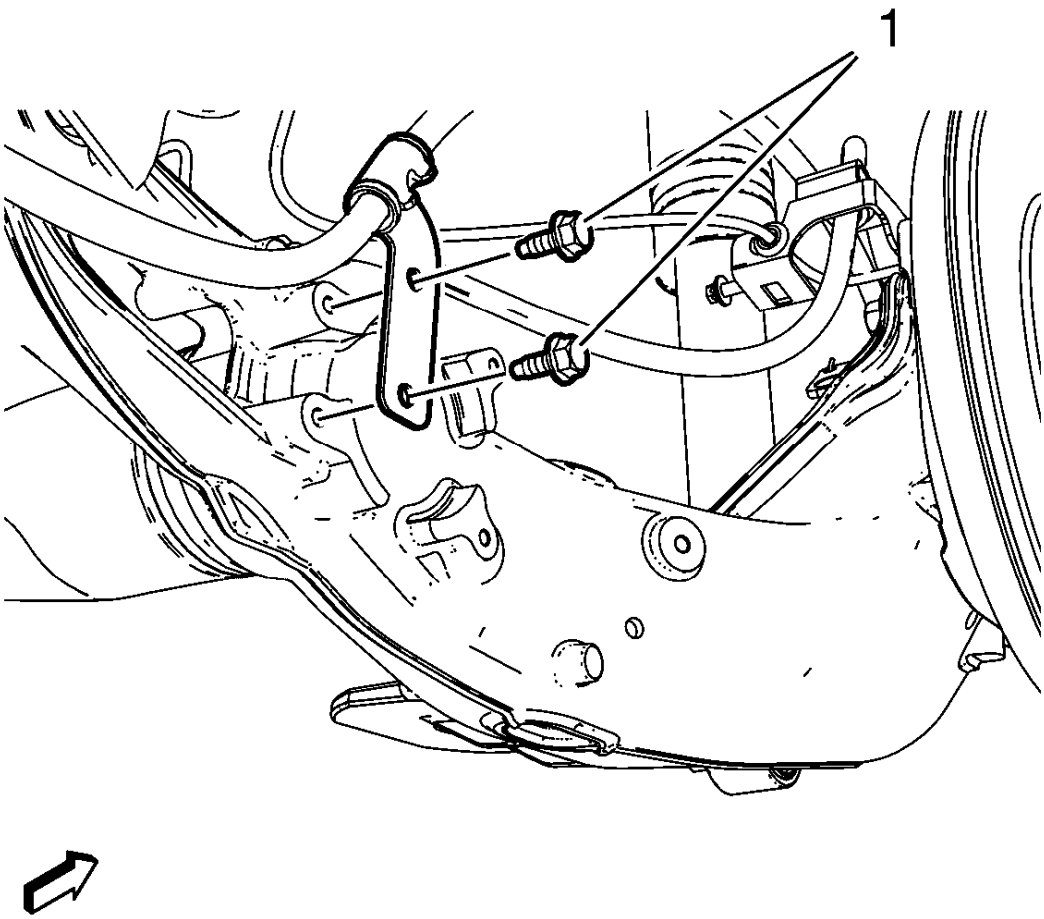

Fig. 87: Parking Brake Cable Bracket Bolts
Courtesy of GENERAL MOTORS COMPANY

13. Install the rear parking brake cable bracket bolts (1) at the rear axle and tighten to 22 N.m (16 lb ft).

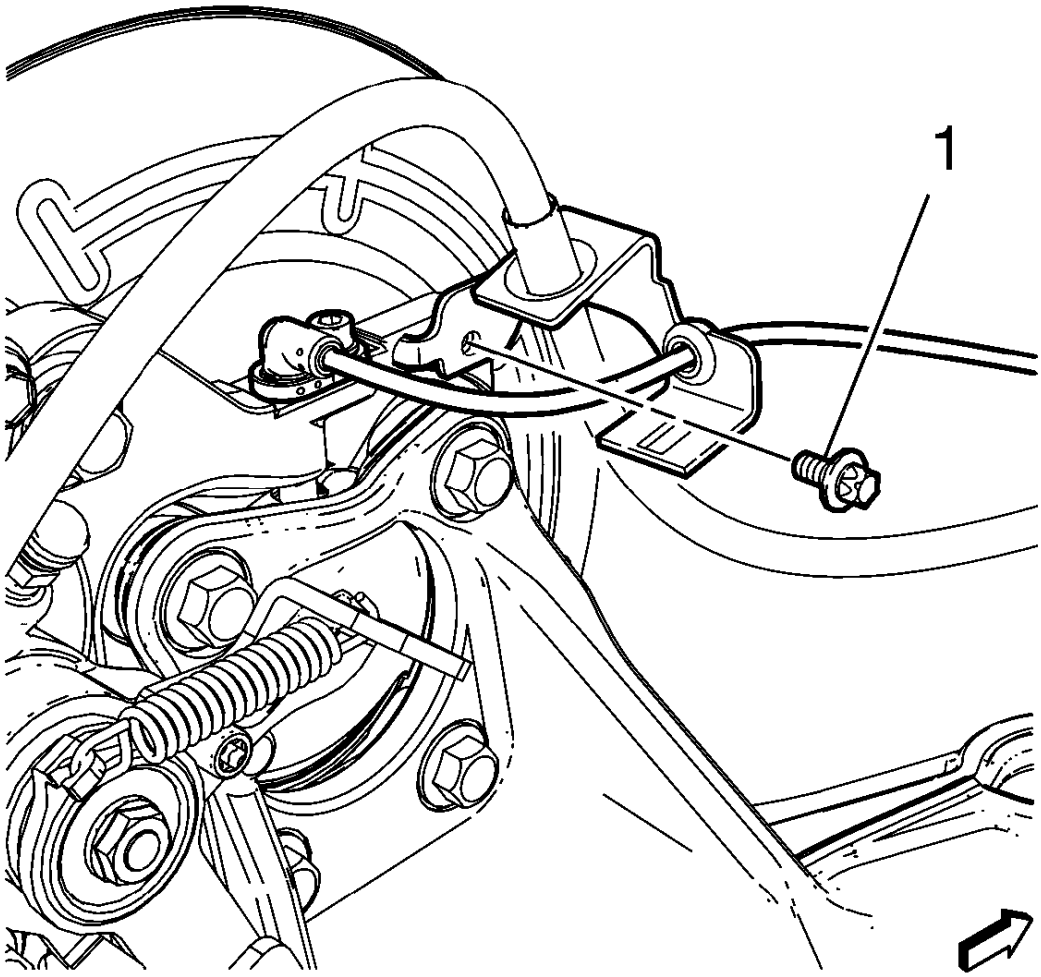

Fig. 88: Identifying Brake Hose Bolts
Courtesy of GENERAL MOTORS COMPANY

14. Install the both brake hose bolts (1) attaching the hose to the rear brake caliper bracket.
15. Install the tire and wheel assembly. Refer to **Tire and Wheel Removal and Installation** .
16. Remove the support and lower the vehicle.

REAR AXLE REPLACEMENT (WATT LINKAGE)

Special Tools

EN-45059 Angle Meter

For equivalent regional tools. Refer to **Special Tools**.

Removal Procedure

1. Raise and suitably support the vehicle. Refer to **Lifting and Jacking the Vehicle** .
2. Remove the tire and wheel assembly. Refer to **Tire and Wheel Removal and Installation** .

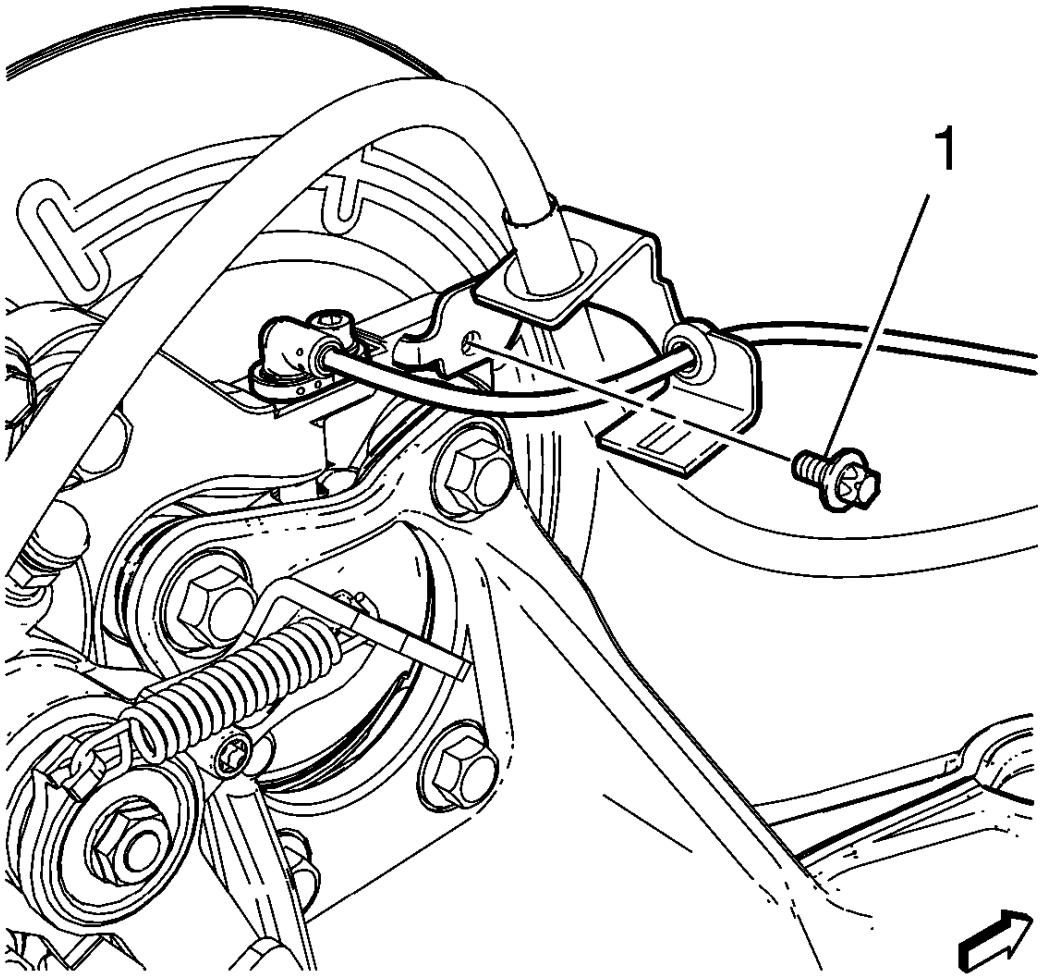

Fig. 89: Identifying Brake Hose Bolts
Courtesy of GENERAL MOTORS COMPANY

3. Remove both brake hose bolts (1) attaching the hose to the rear brake caliper bracket.

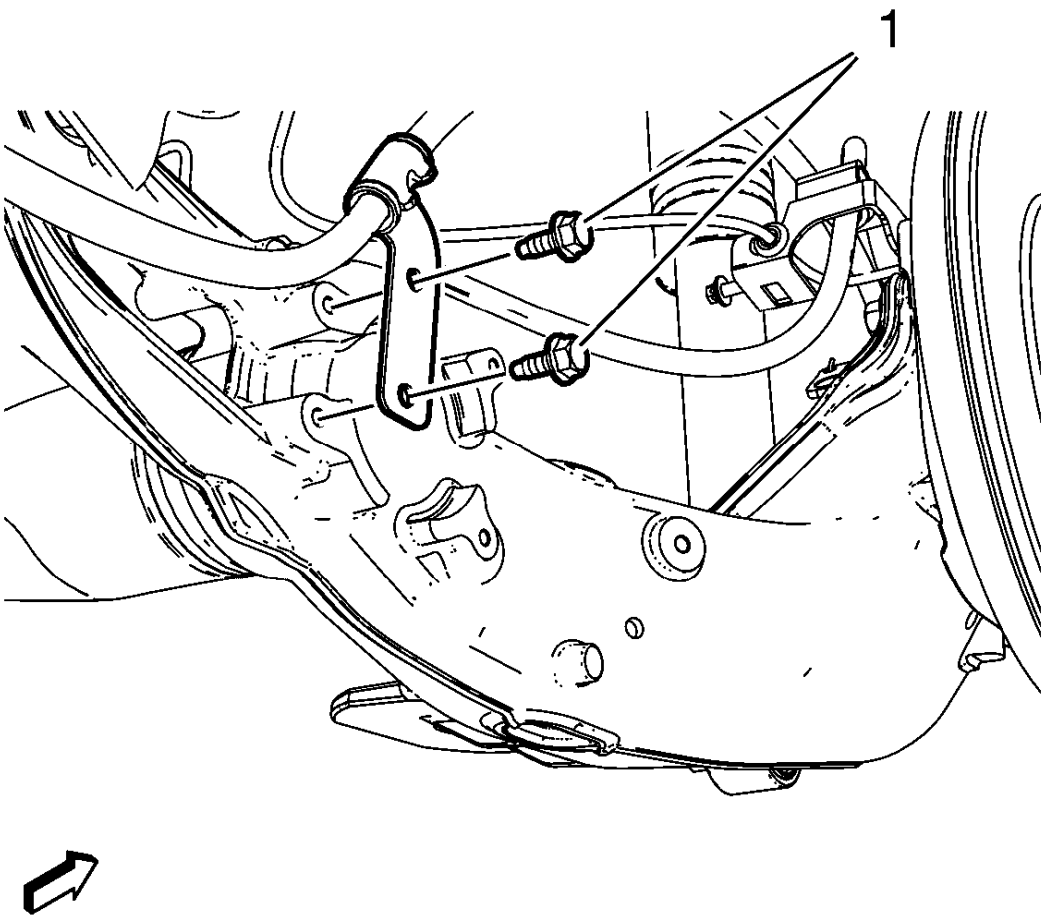

Fig. 90: Parking Brake Cable Bracket Bolts
Courtesy of GENERAL MOTORS COMPANY

4. Remove rear parking brake cable bracket bolts (1) from the rear axle.

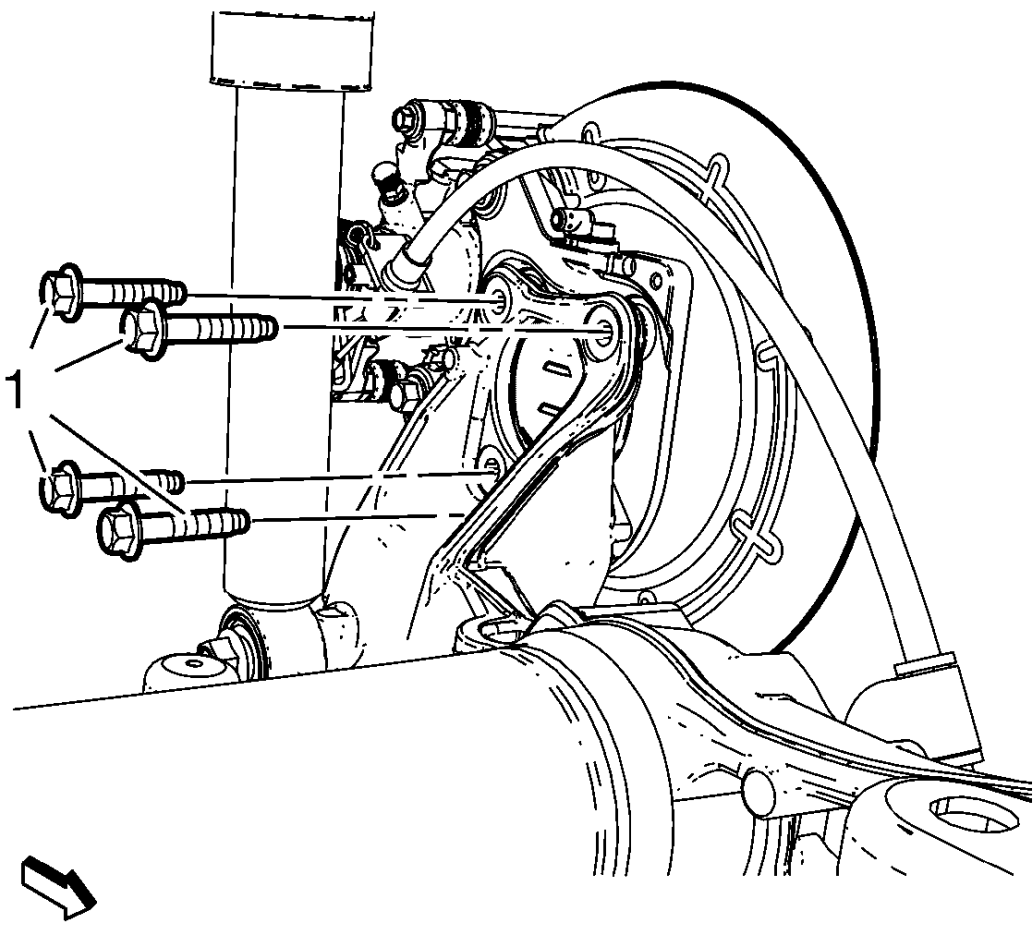

Fig. 91: Wheel Bearing/Hub Mounting Bolts
Courtesy of GENERAL MOTORS COMPANY

5. Remove and DISCARD the wheel bearing/hub mounting bolts (1).

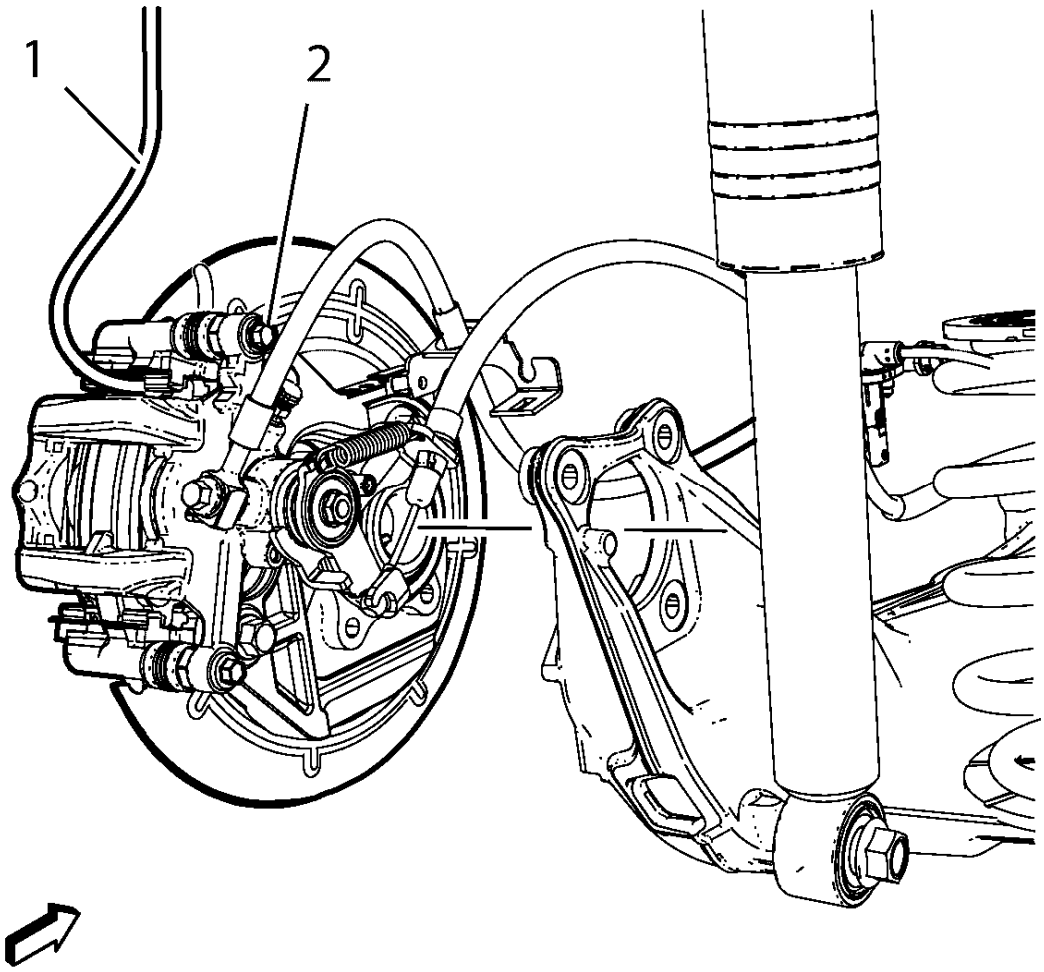

Fig. 92: Identifying Heavy Mechanics Wire And Brake Assembly
Courtesy of GENERAL MOTORS COMPANY

CAUTION: Support the brake caliper with heavy mechanic wire, or equivalent, whenever it is separated from its mount and the hydraulic flexible brake hose is still connected. Failure to support the caliper in this manner will cause the flexible brake hose to bear the weight of the caliper, which may cause damage to the brake hose and in turn may cause a brake fluid leak.

6. Without disconnecting the hydraulic brake flexible hose, remove wheel bearing/hub and brake assembly (2) upward and secure the wheel bearing/hub and brake assembly with heavy mechanics wire (1), or equivalent.

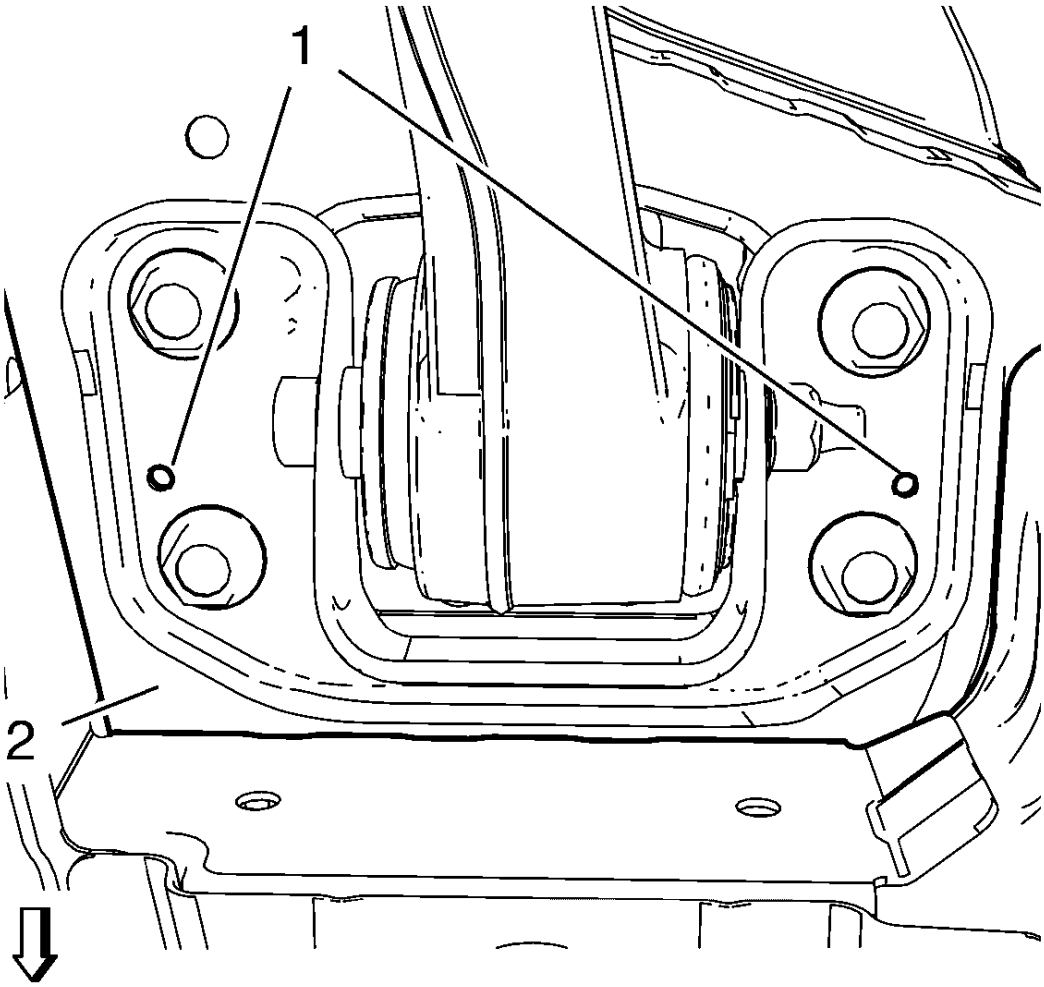

Fig. 93: Identifying Drill Holes And Underbody
Courtesy of GENERAL MOTORS COMPANY

7. Using a 6 mm (0.2 in) drill bit, drill 2 holes (1) through the right rear axle bracket and into the underbody. Repeat this step for the left rear axle bracket. These holes (1) will be used by guide pins to properly align the rear axle brackets to the underbody (2).
8. Support the rear axle with a hydraulic lift table.
9. Remove the lower shock absorber bolts. Refer to **Shock Absorber Replacement**.

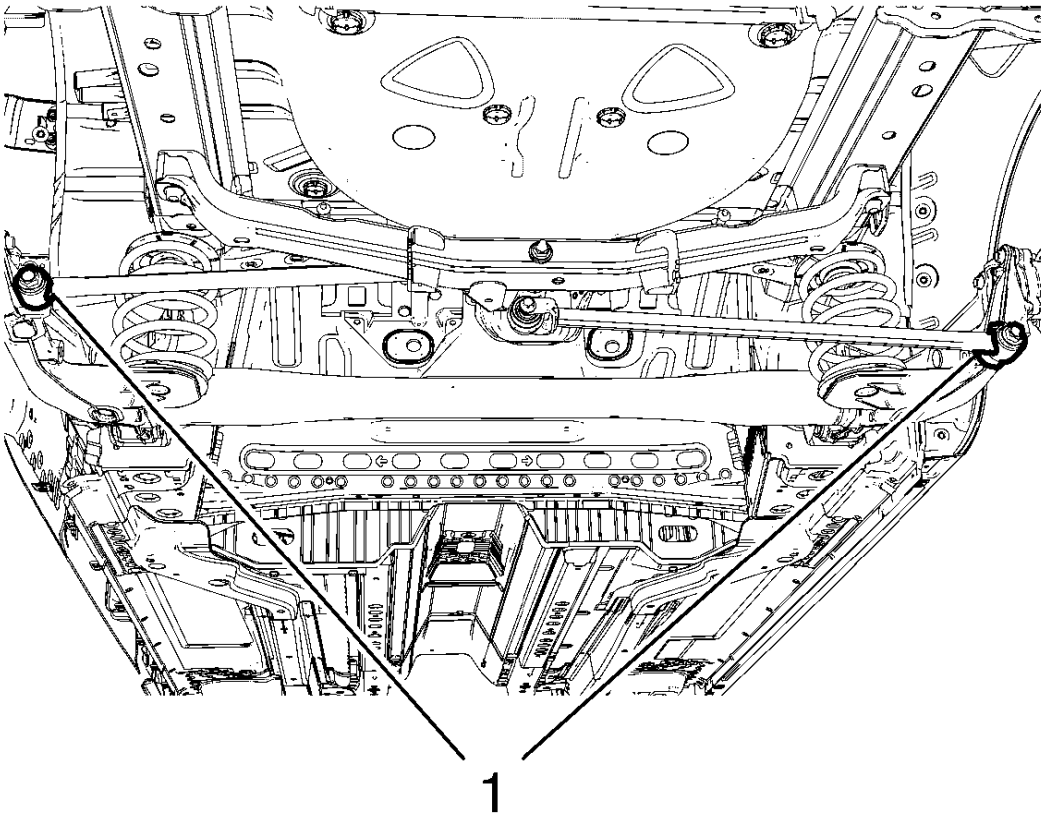

Fig. 94: Identifying Equalizer Beam Link Bolts
Courtesy of GENERAL MOTORS COMPANY

10. Remove and DISCARD the equalizer beam link bolts (1), if equipped.
11. Lower the hydraulic lift table and remove the rear coil springs. Refer to **Rear Spring Replacement**.

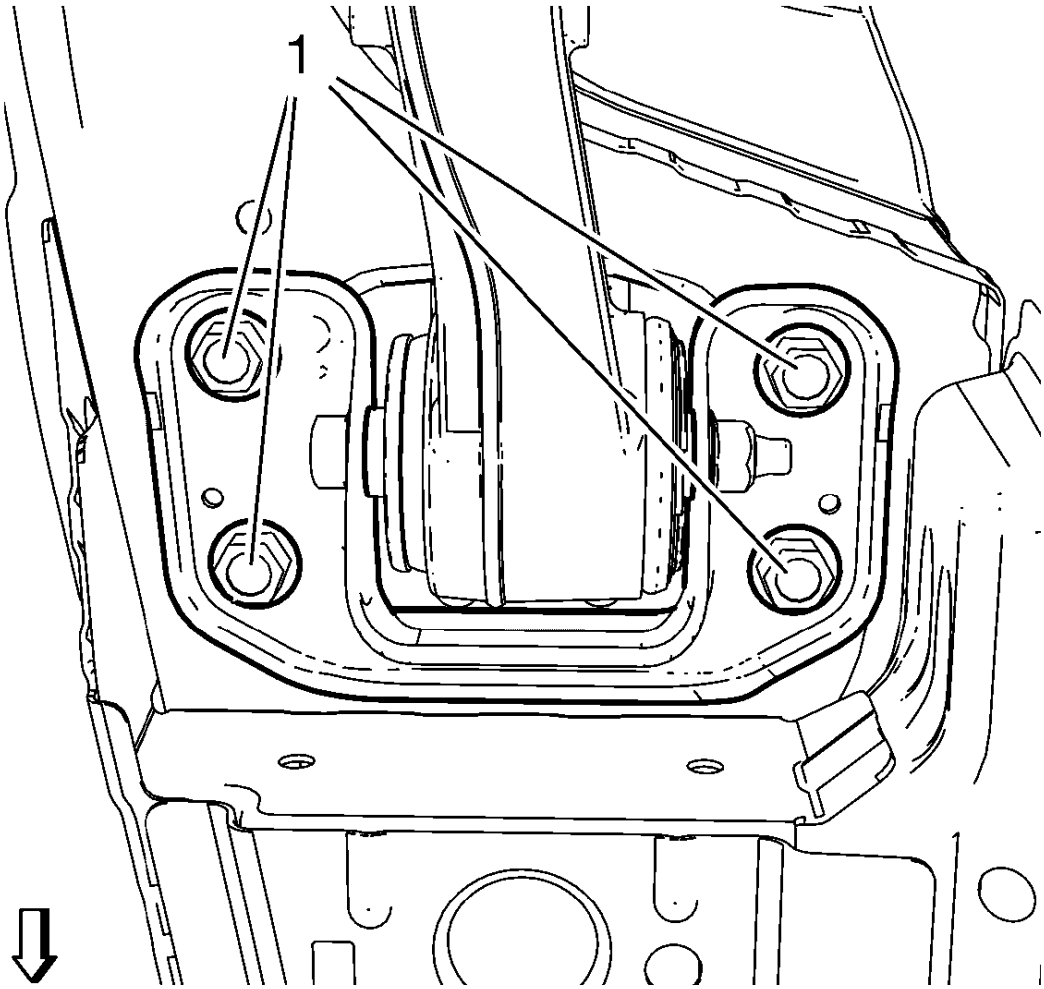

Fig. 95: Rear Axle Bracket Bolts
Courtesy of GENERAL MOTORS COMPANY

12. Remove and DISCARD the 8 rear axle bracket bolts (1) from the right and left rear axle brackets.

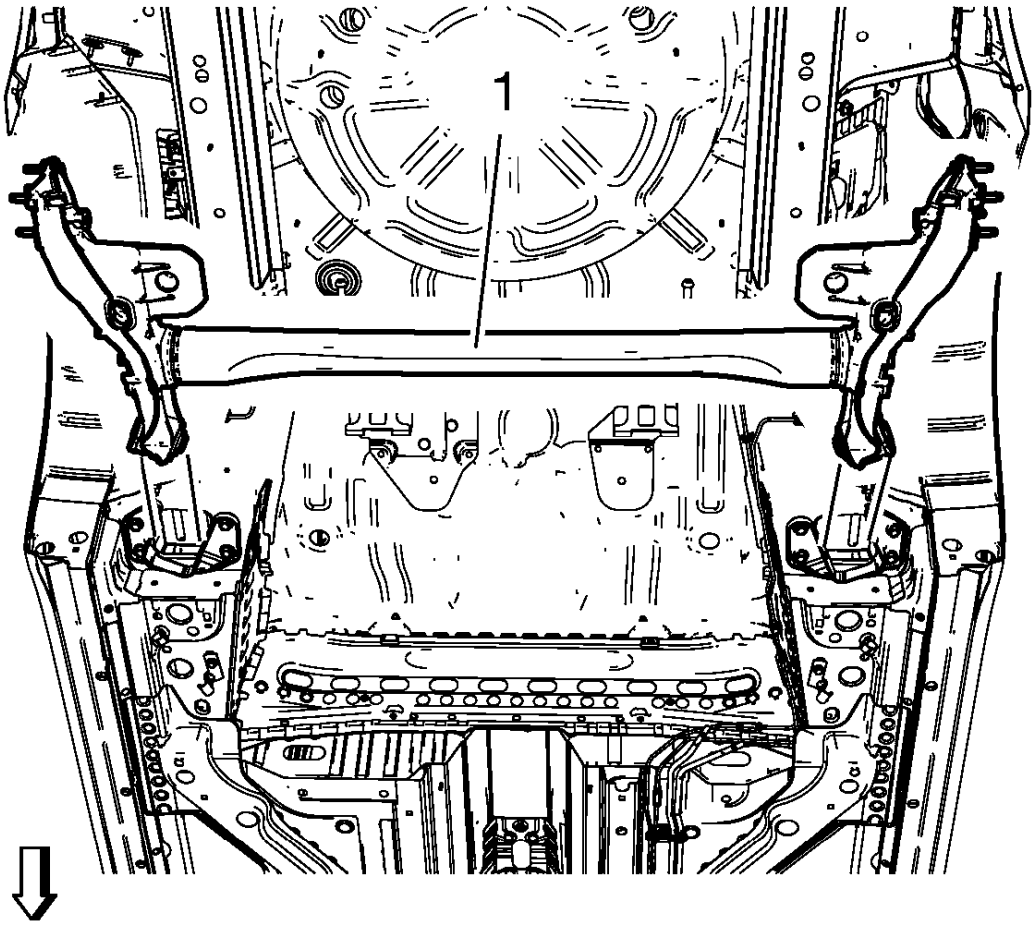

Fig. 96: Rear Axle
Courtesy of GENERAL MOTORS COMPANY

13. Use the hydraulic lift table to lower the rear axle (1) from the vehicle.

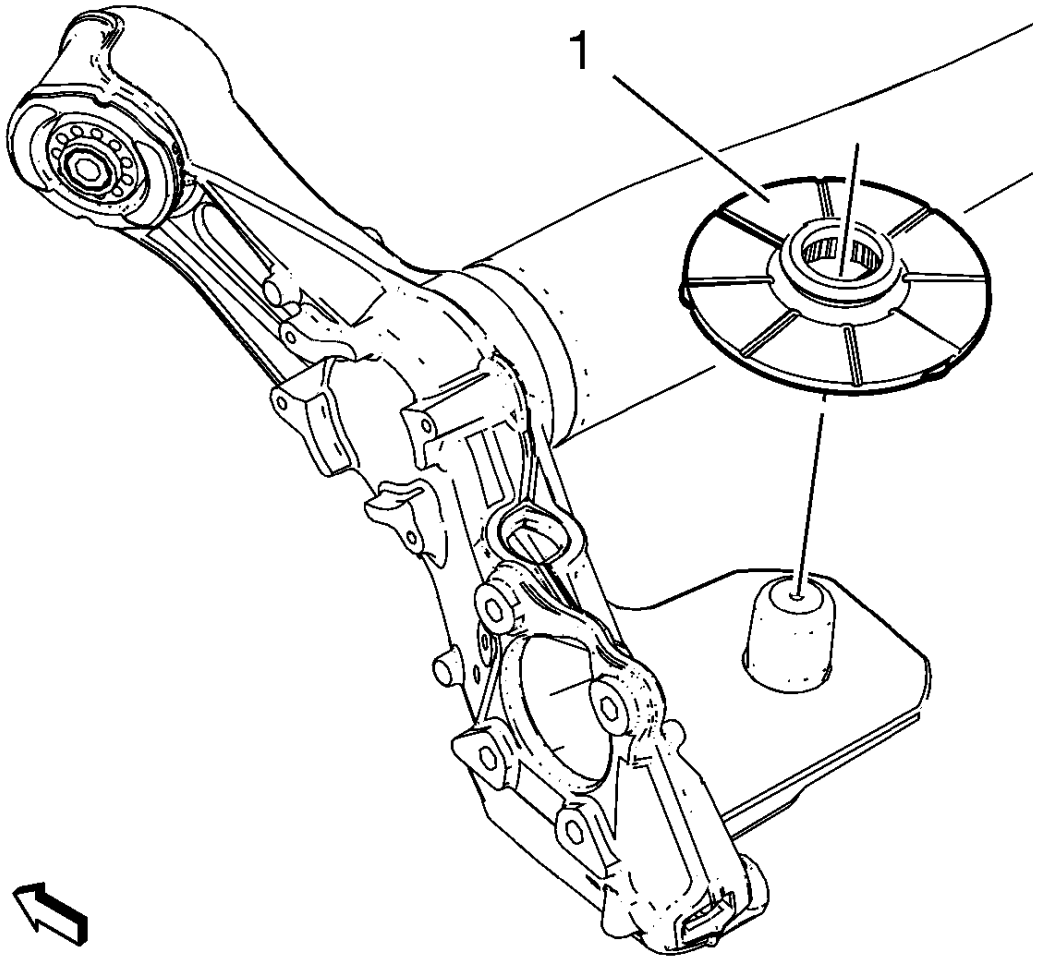

Fig. 97: Identifying Coil Spring Lower Seat Insulators
Courtesy of GENERAL MOTORS COMPANY

14. Remove the rear coil spring lower seat insulators (1) from the axle.

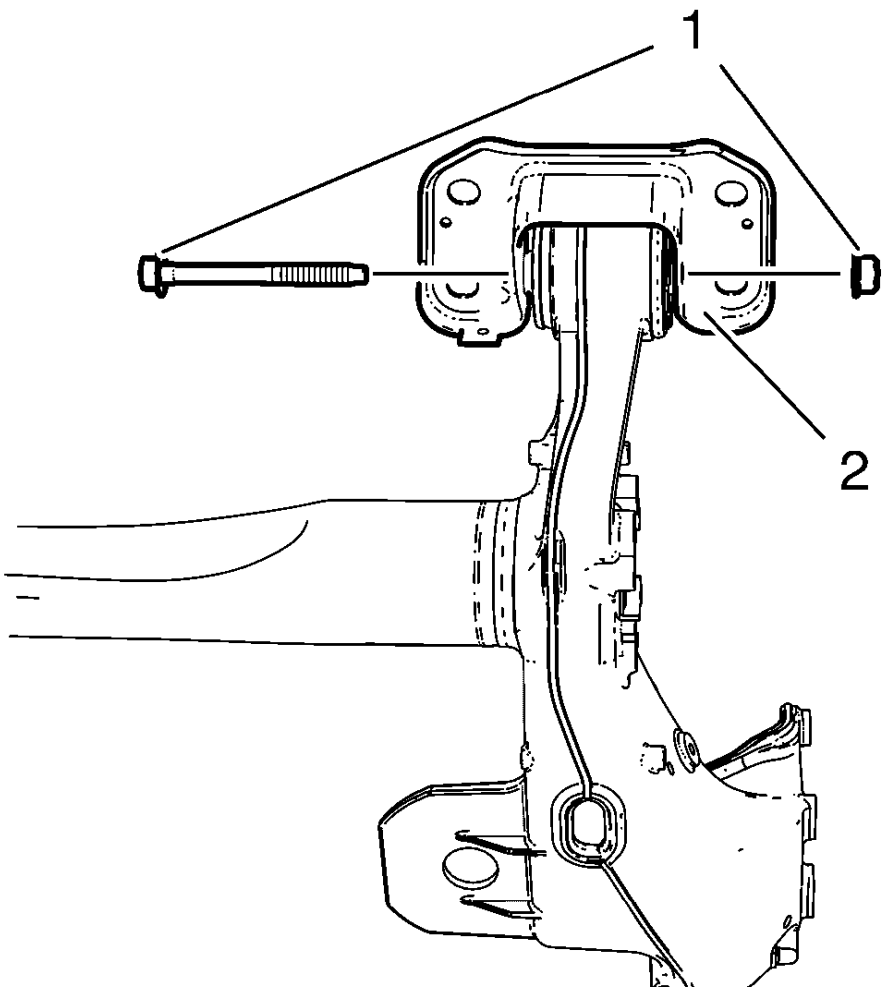

Fig. 98: Rear Axle, Bolts And Nuts
Courtesy of GENERAL MOTORS COMPANY

15. Remove and DISCARD the rear axle bushing bolts and nuts (1) from the rear axle (2).

Installation Procedure

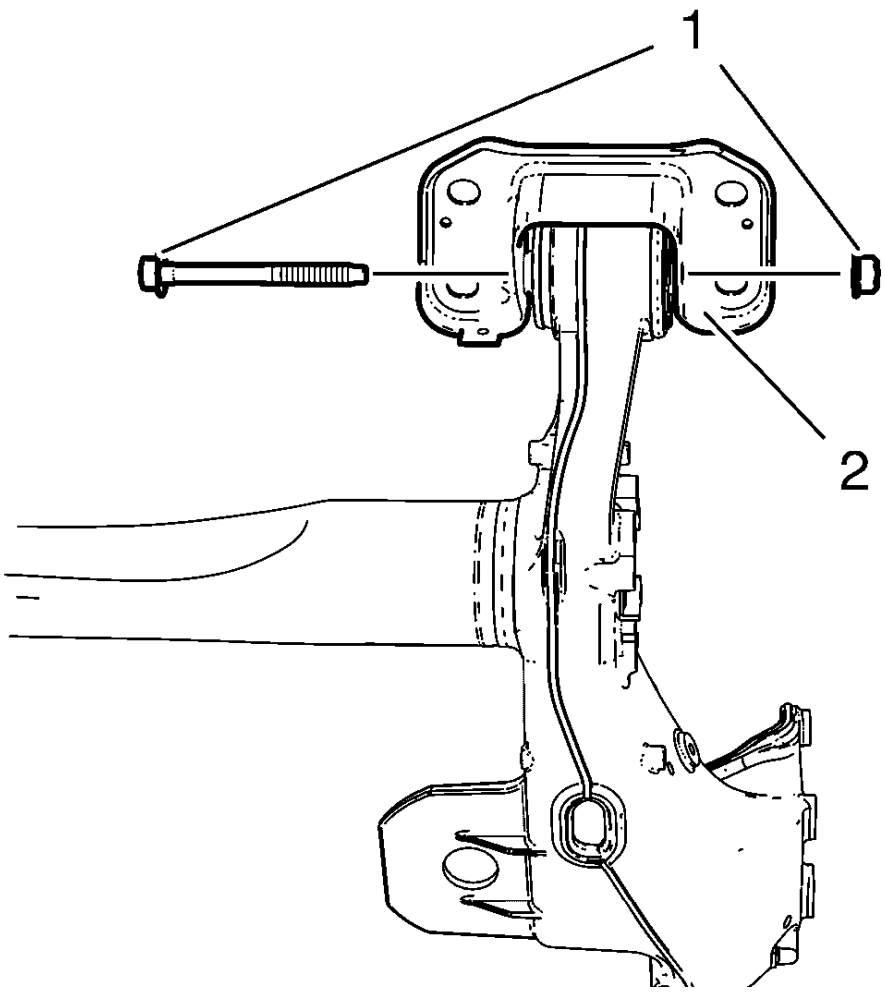

Fig. 99: Rear Axle, Bolts And Nuts
Courtesy of GENERAL MOTORS COMPANY

NOTE: The axle bushing bolts (1) and nut connection must be tightened with the axle at the correct trim height.

1. Loosely install the NEW rear axle bushing bolts and nuts (1) to the rear axle (2).

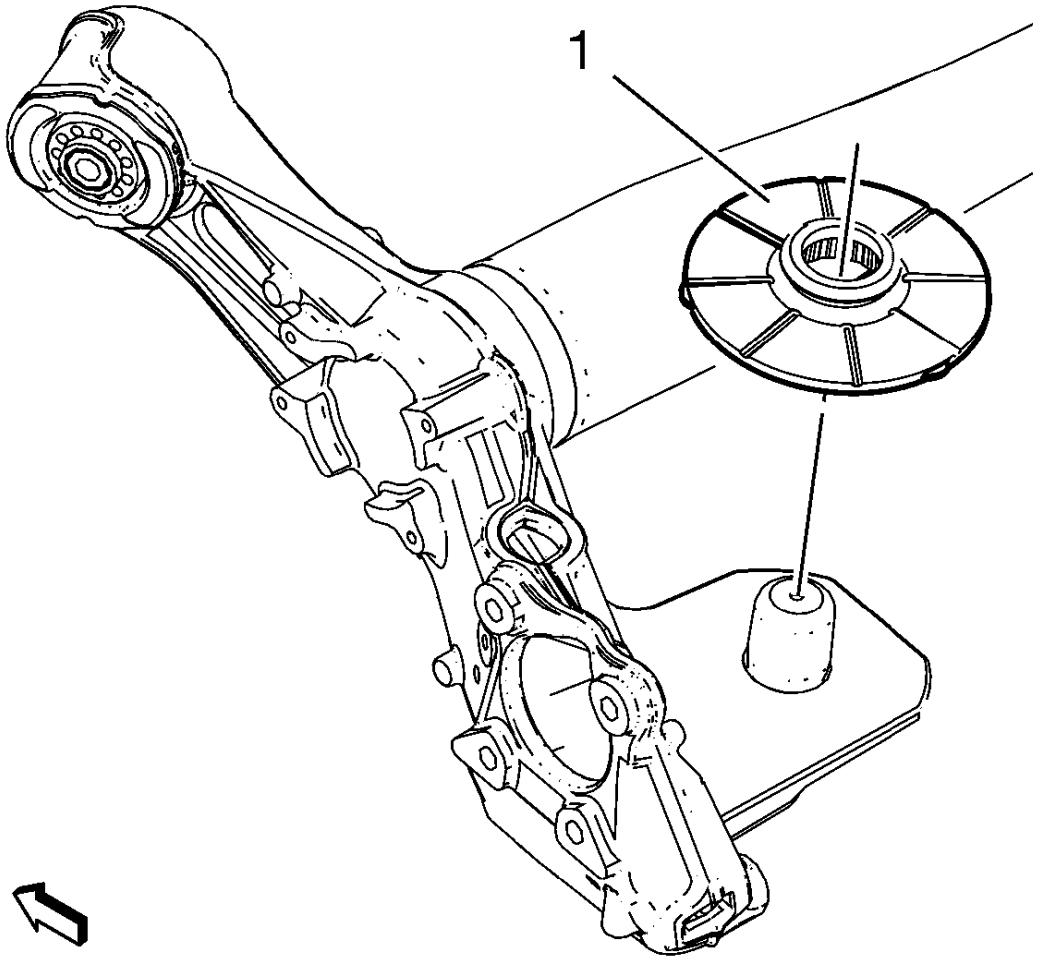

Fig. 100: Identifying Coil Spring Lower Seat Insulators
Courtesy of GENERAL MOTORS COMPANY

2. Install the rear coil spring lower seat insulators (1) to the axle.

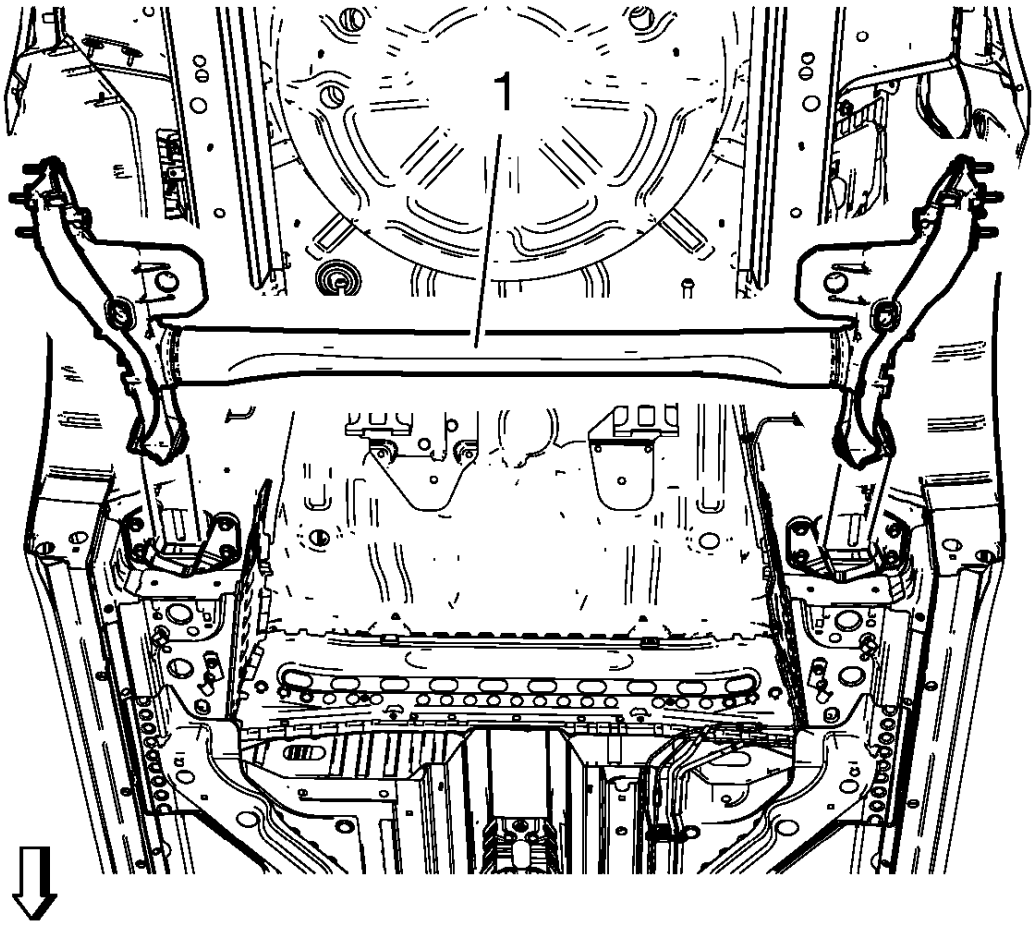

Fig. 101: Rear Axle
Courtesy of GENERAL MOTORS COMPANY

3. Raise the axle (1) into position.

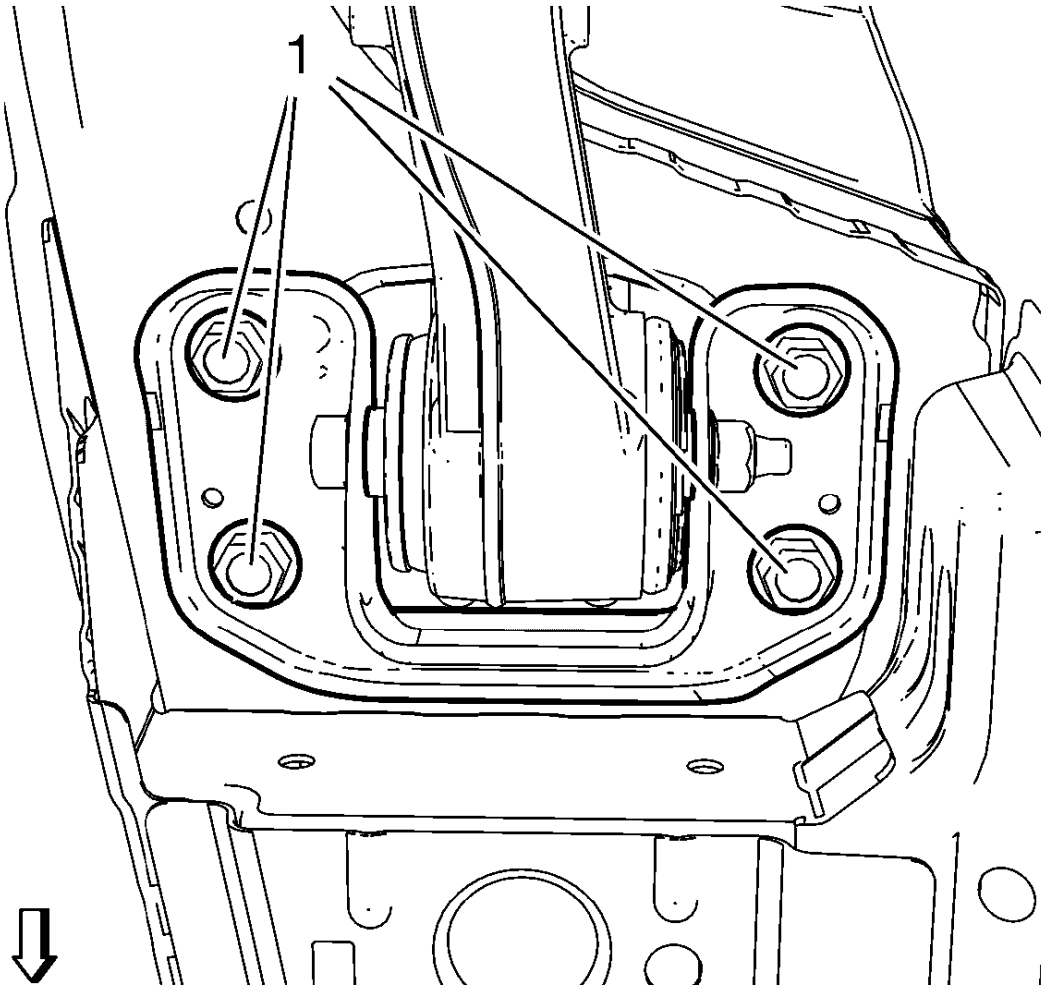

Fig. 102: Rear Axle Bracket Bolts
Courtesy of GENERAL MOTORS COMPANY

4. Loosely install the NEW axle bracket bolts (1) to the right and left rear axle brackets.
5. Apply anti-corrosion treatment to the guide pin holes in the underbody and rear axle brackets.

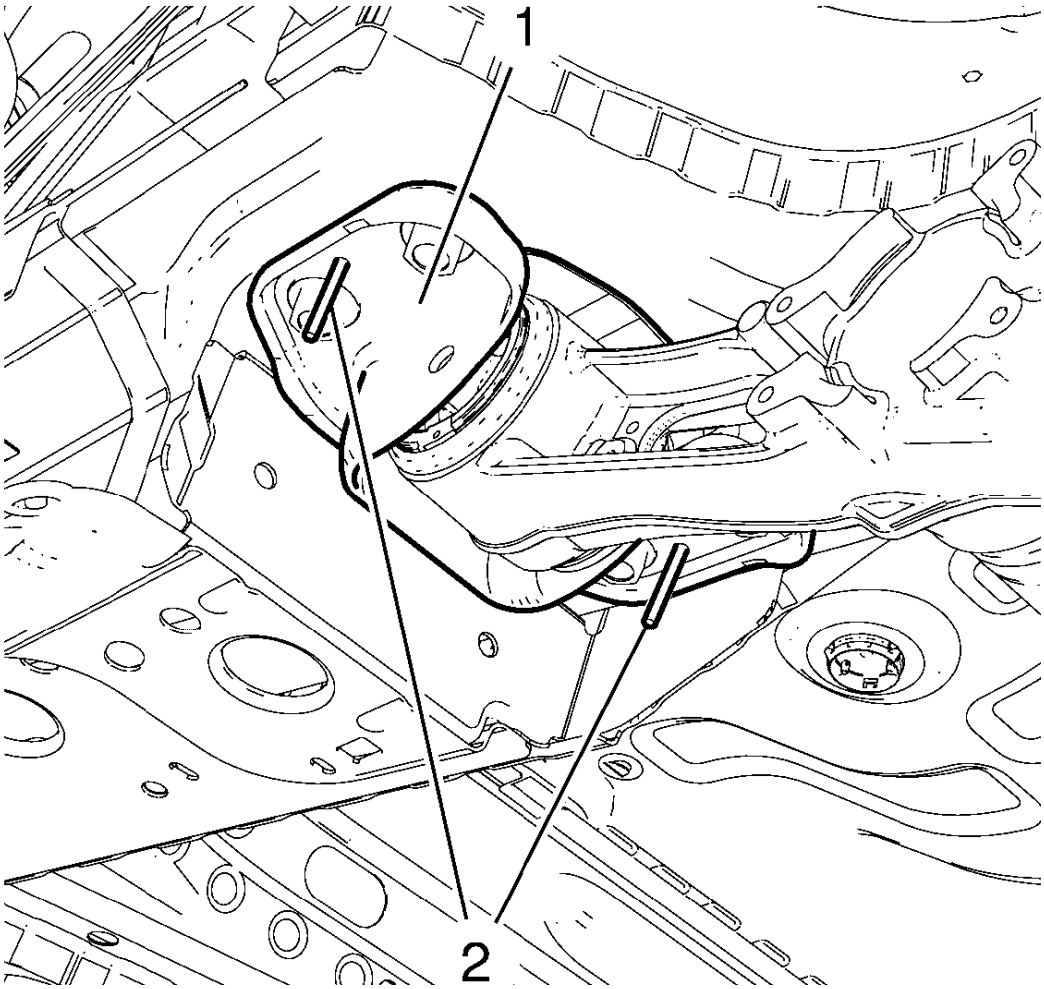

Fig. 103: Rear Axle Bracket And Drill Bits
Courtesy of GENERAL MOTORS COMPANY

6. Using 6 mm (0.2 in) drill bits (2) as guide pins, align the right and left rear axle brackets to the underbody (1).

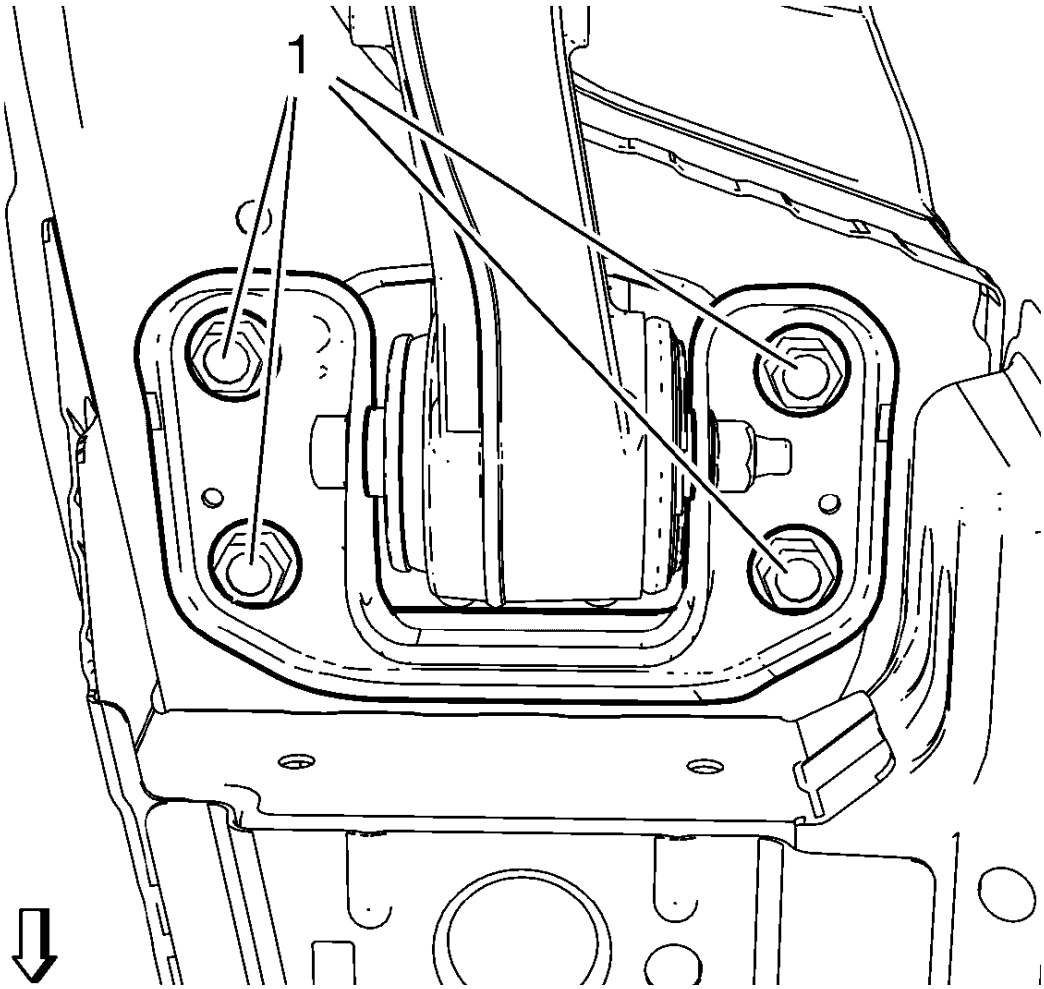

Fig. 104: Rear Axle Bracket Bolts
Courtesy of GENERAL MOTORS COMPANY

CAUTION: Refer to Fastener Caution .

7. Install the NEW axle bracket bolts (1) and tighten a first pass to 90 N.m (66 lb ft).

WARNING: Refer to Torque-to-Yield Fastener Warning .

8. Tighten the NEW axle bracket bolts a final pass to an additional 45 degrees, using the **EN-45059** meter.

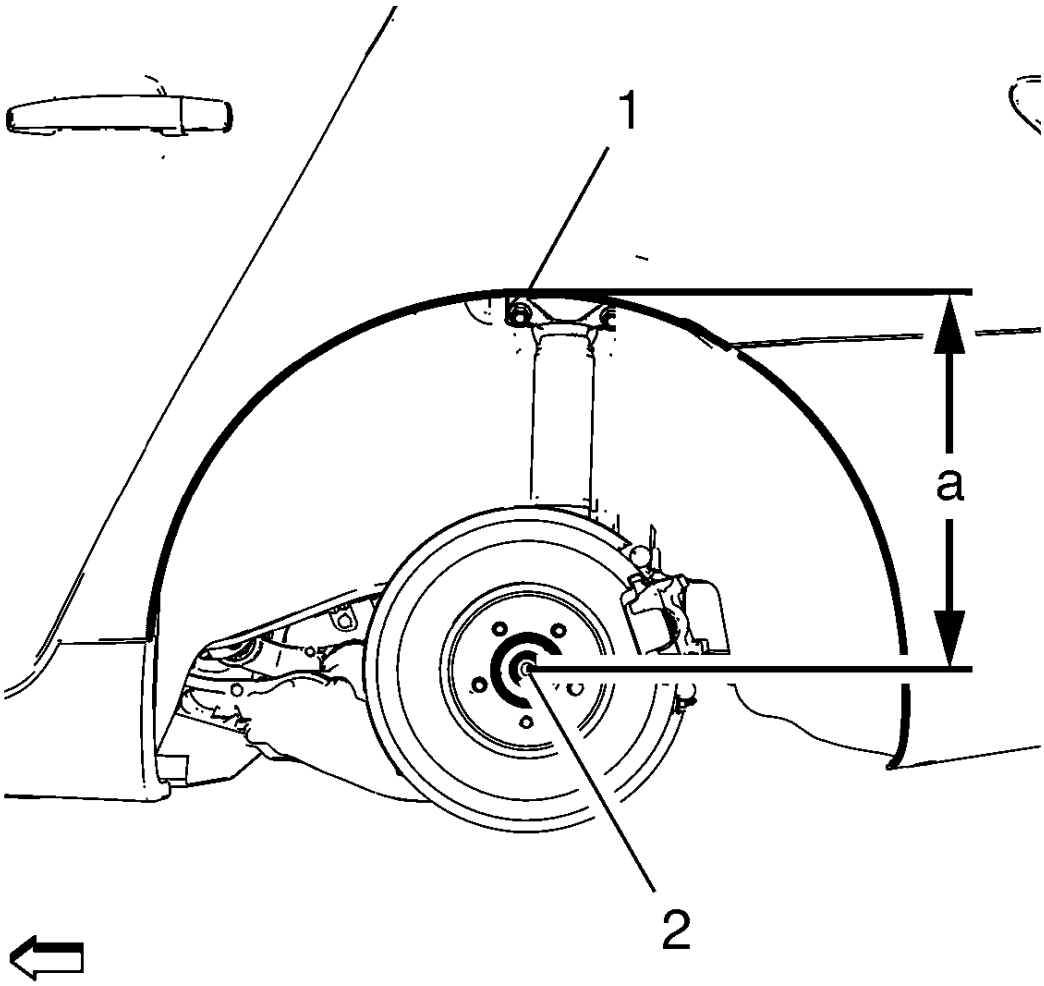

Fig. 105: Measuring Vertical Distance Between Center Of Wheel Hub And Top Of Wheel Opening
Courtesy of GENERAL MOTORS COMPANY

9. Using the lift table, raise the axle to the proper trim height specification by measuring the vertical distance (a) between the center of the wheel hub (2) and top of the wheel opening (1).

Trim Height Specification

Dimension (a): 385 mm (15.16 in)

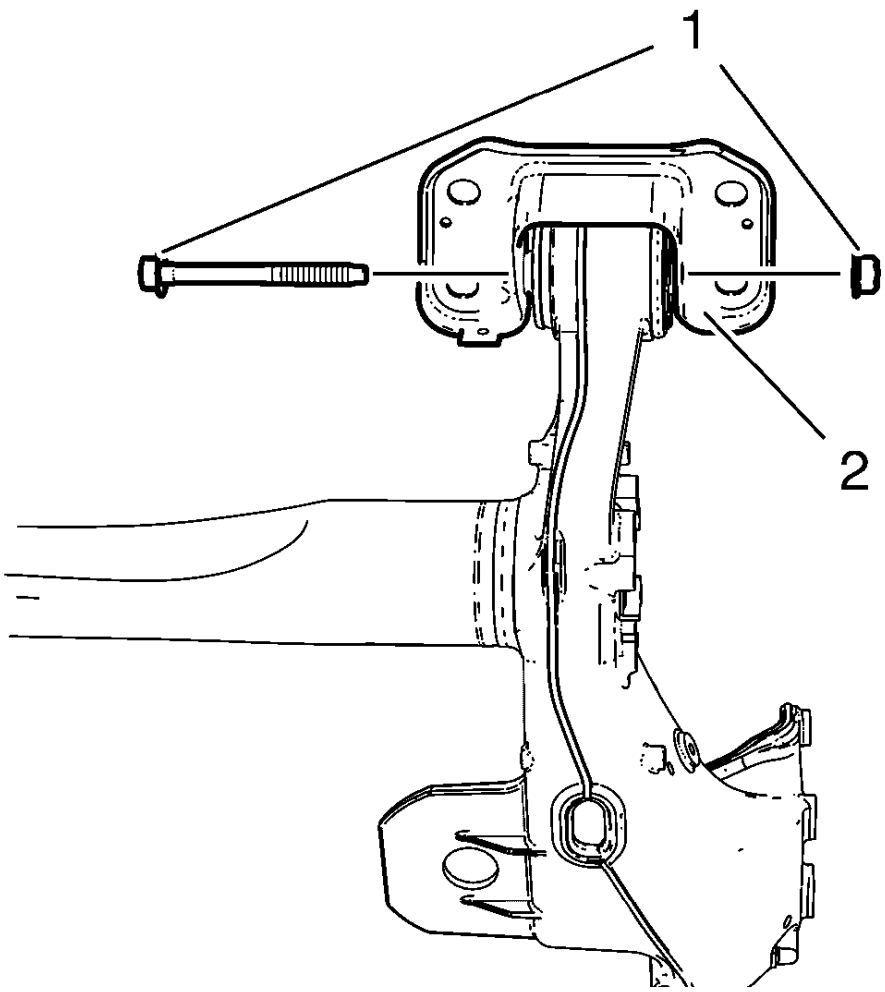

Fig. 106: Rear Axle, Bolts And Nuts
Courtesy of GENERAL MOTORS COMPANY

10. Install the NEW axle bushing through bolts and nuts (1) and tighten a first pass to 70 N.m (52 lb ft).

WARNING: Refer to Torque-to-Yield Fastener Warning .

11. Tighten the NEW axle bushing through bolts and nuts a final pass to an additional 120 degrees, using the **EN-45059** meter.
12. Install the rear coil springs. Refer to **Rear Spring Replacement**.
13. Install the lower shock absorber bolts. Refer to **Shock Absorber Replacement**.

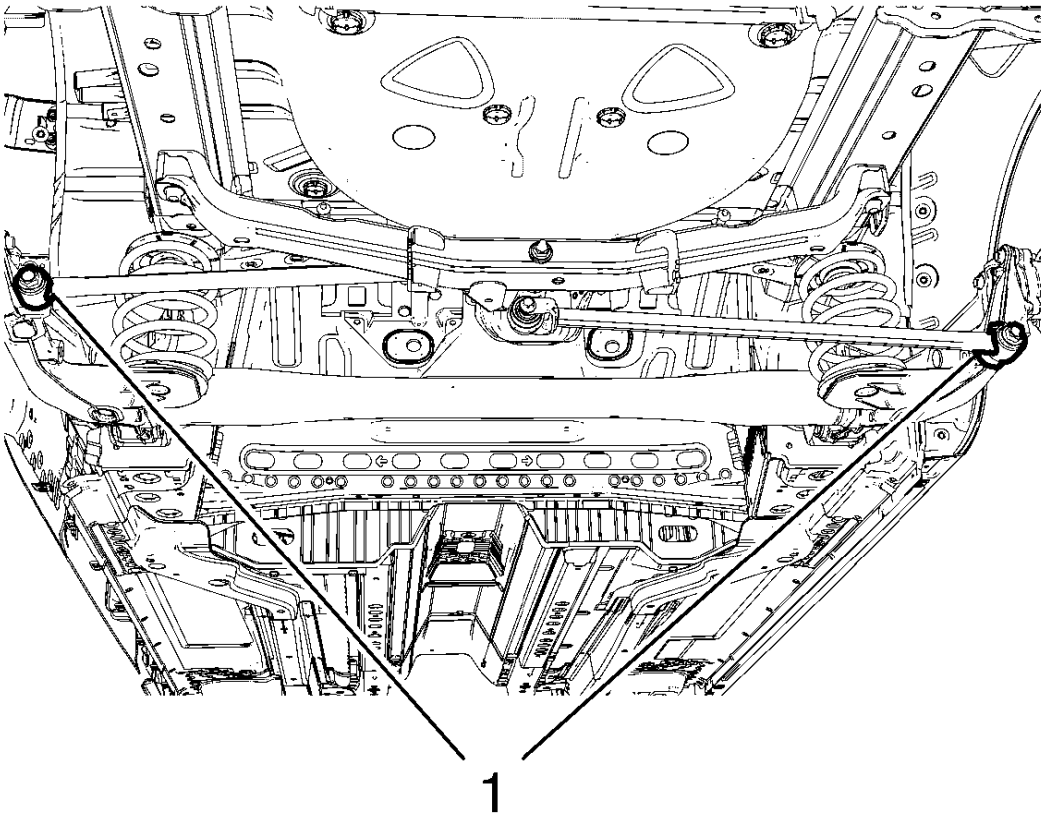

Fig. 107: Identifying Equalizer Beam Link Bolts
Courtesy of GENERAL MOTORS COMPANY

14. Install the equalizer beam link bolts (1) and tighten to 160 N.m (118 lb ft), if equipped.
15. Remove the hydraulic lift table from the rear axle.
16. Install the wheel bearing/hub and brake assembly.

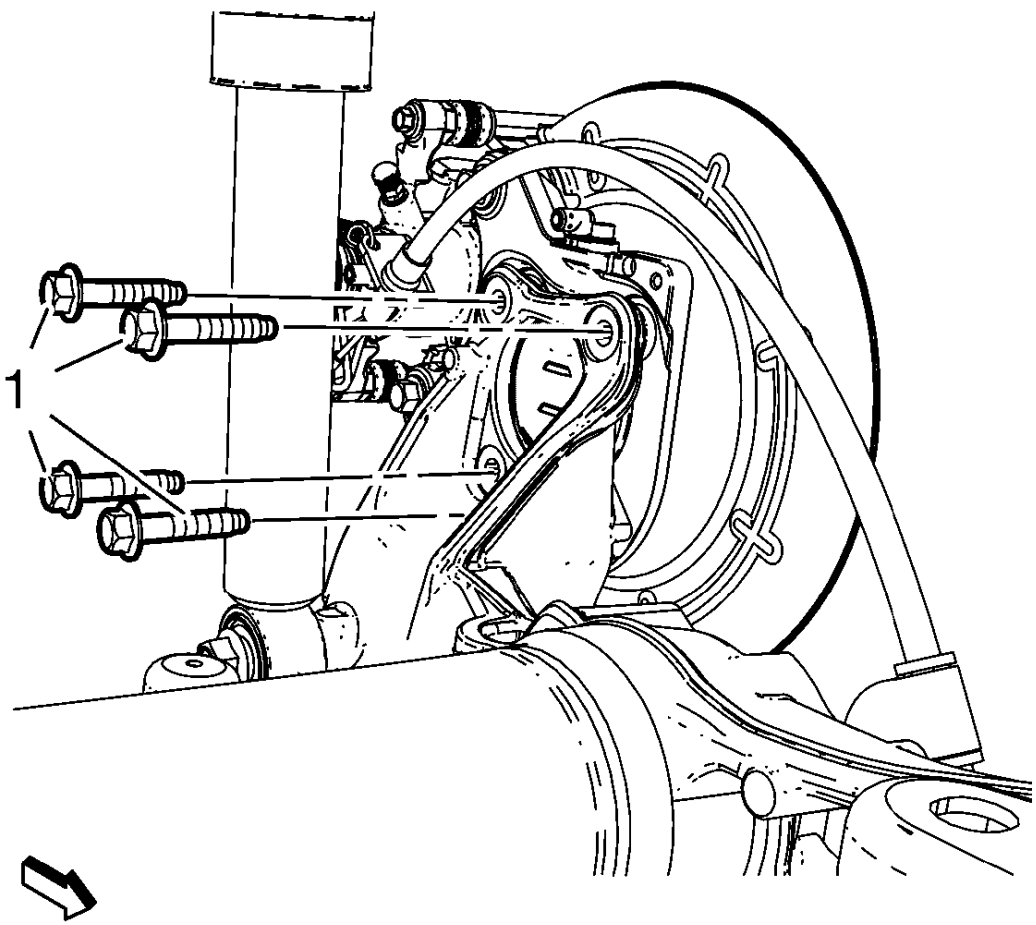

Fig. 108: Wheel Bearing/Hub Mounting Bolts
Courtesy of GENERAL MOTORS COMPANY

17. Install the NEW wheel bearing/hub mounting bolts (1) and tighten to 50 N.m (37 lb ft).

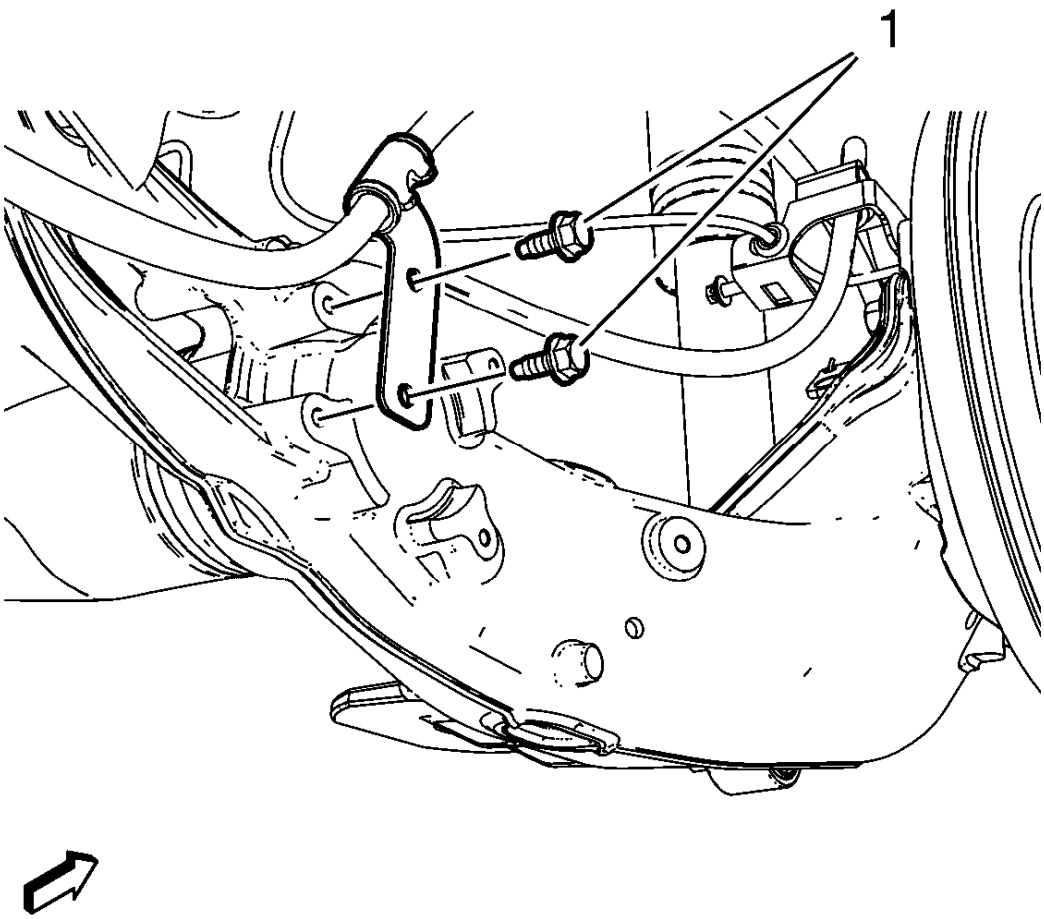

Fig. 109: Parking Brake Cable Bracket Bolts
Courtesy of GENERAL MOTORS COMPANY

18. Install rear parking brake cable bracket bolts (1) at the rear axle and tighten to 10 N.m (89 lb in).

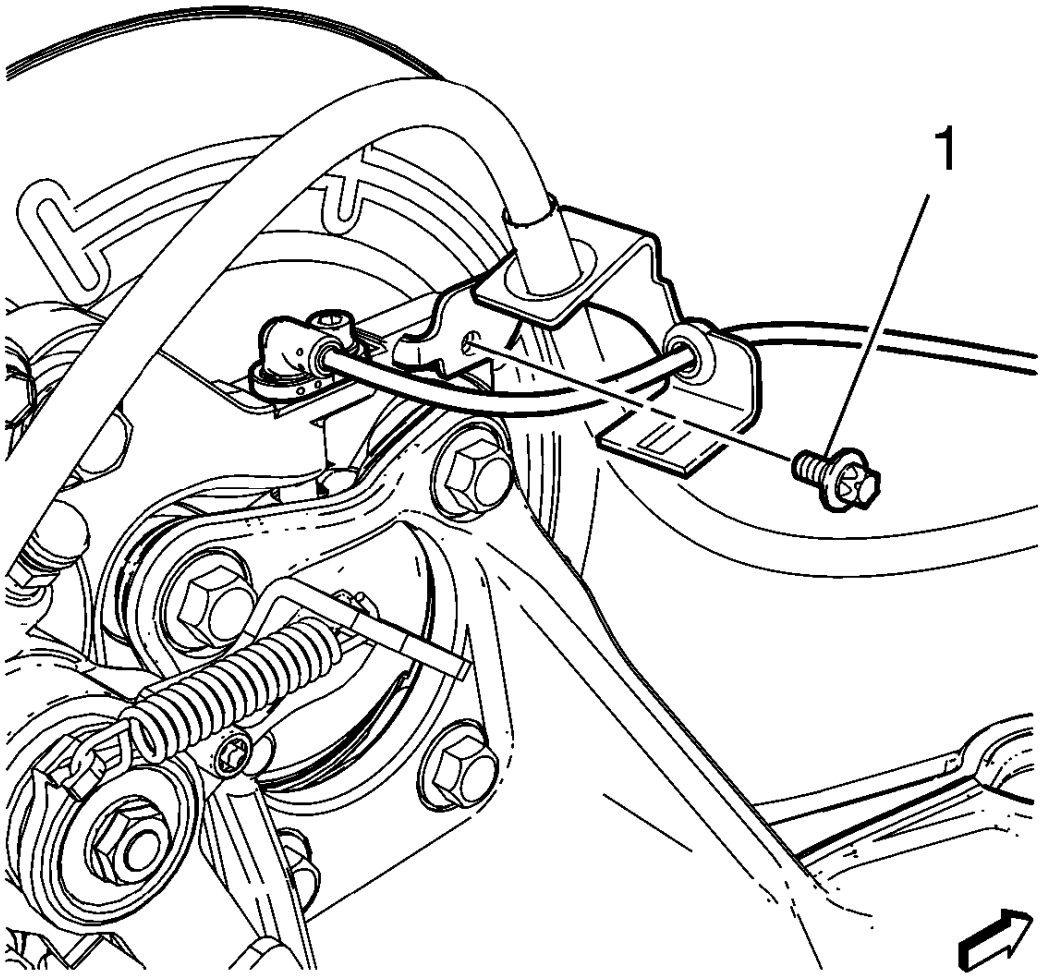

Fig. 110: Identifying Brake Hose Bolts
Courtesy of GENERAL MOTORS COMPANY

19. Install both brake hose bolts (1) attaching the hose to the rear brake caliper bracket and tighten.
20. Install the tire and wheel assembly. Refer to **Tire and Wheel Removal and Installation** .
21. Remove the support and lower the vehicle.

WHEEL STUD REPLACEMENT

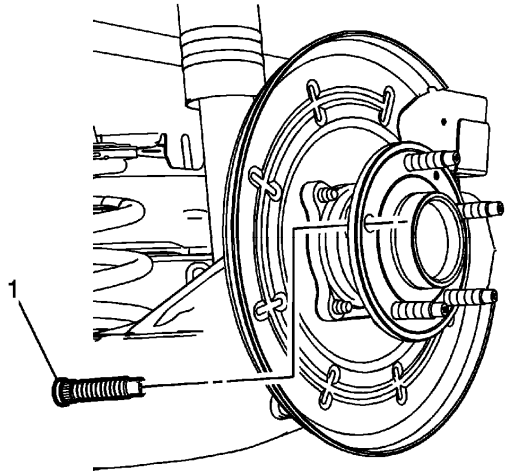

Fig. 111: Wheel Stud
Courtesy of GENERAL MOTORS COMPANY

Wheel Stud Replacement

Callout	Component Name
Preliminary Procedure 1. Raise and support the vehicle. Refer to **Lifting and Jacking the Vehicle** . 2. Remove the tire and wheel assembly. Refer to **Tire and Wheel Removal and Installation** . 3. Remove the rear brake rotor, if equipped or remove the brake drum, if equipped. Refer to **Rear Brake Rotor Replacement** , or **Brake Drum Replacement** .	
1	Wheel Stud (Qty: 5) **Procedure** 1. Rotate the wheel hub to gain enough worker area to remove the wheel stud. 2. Using the **CH 43631** remover, remove and discard the wheel stud from the wheel hub. Replace with new only. 3. When installing the wheel stud, use the proper amount of washers to allow the wheel stud to be fully seated against the wheel hub flange. 4. Use a wheel nut with the flat side of the wheel nut facing the washers to fully seat the wheel stud. **Special Tools** **CH 43631** Ball Joint Remover For equivalent regional tools, refer to **Special Tools**.

DESCRIPTION AND OPERATION

REAR SUSPENSION DESCRIPTION AND OPERATION (COMPOUND CRANK)

This vehicle has a semi-independent twist-beam rear suspension system consisting of the following components:

- An axle with integral trailing arms
- A V shaped twisting cross beam
- Two coil springs
- Two shock absorbers

Axle Assembly

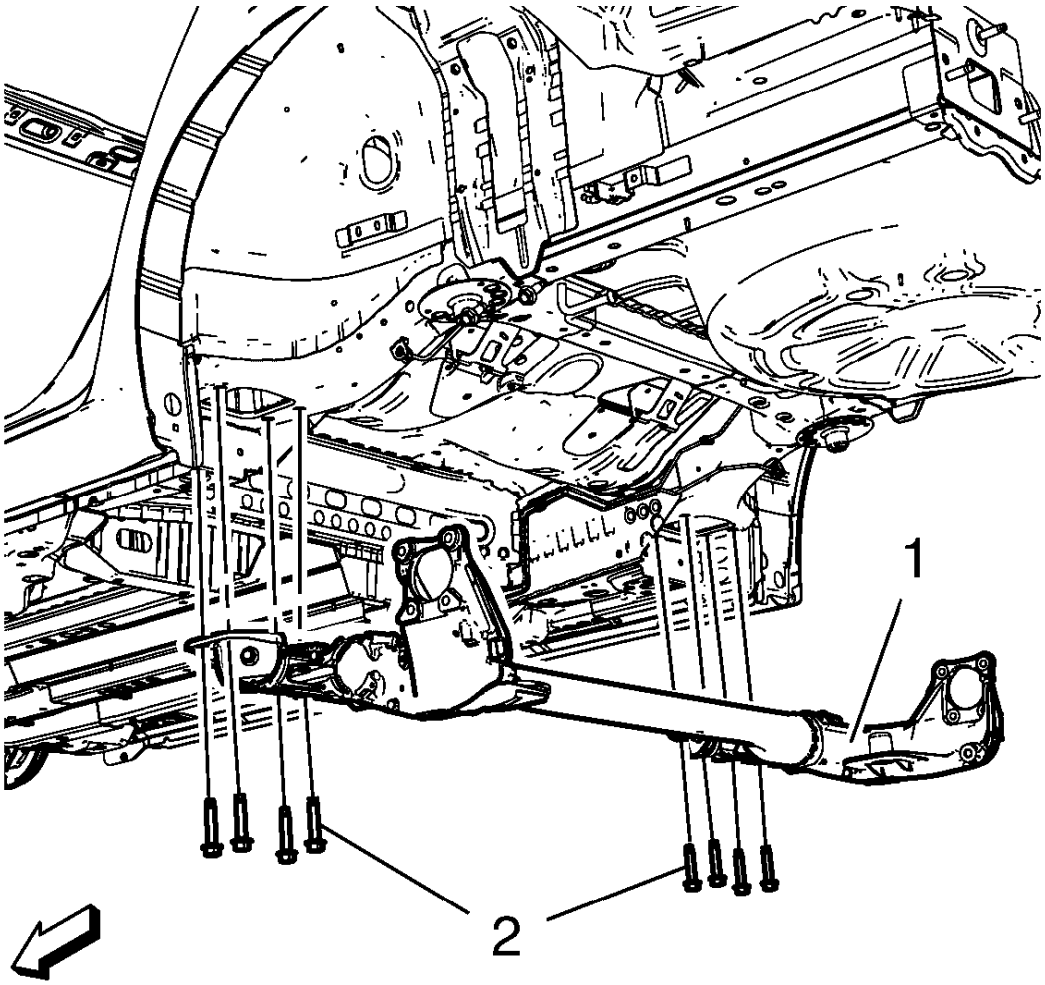

Fig. 112: Rear Axle Assembly, Bushings And Bolts
Courtesy of GENERAL MOTORS COMPANY

The axle assembly (1) attaches to the underbody through a rubber bushing and bracket located at the front of each integral trailing arm. The brackets are attached to the underbody side rails with bolts (2). The axle structure

itself maintains the geometrical relationship of the wheels relative to the centerline of the body.

REAR SUSPENSION DESCRIPTION AND OPERATION (WATT LINKAGE)

This vehicle has a semi-independent twist-beam rear suspension system consisting of the following components:

- An axle with integral trailing arms
- A "V" shaped twisting cross beam
- Two coil springs
- Two shock absorbers
- Two equalizer beam links
- An equalizer center beam link
- An equalizer beam support

Axle Assembly

The axle assembly attaches to the underbody through a rubber bushing and bracket located at the front of each integral trailing arm. The brackets are bolted to the underbody side rails. The axle structure itself maintains the geometrical relationship of the wheels relative to the centerline of the body.

Watt Linkage

The watt linkage is used in the rear axle of the suspension as a performance improvement. This method is intended to prevent relative sideways motion between the axle and body of the vehicle. Watt's linkage approximates a vertical straight line motion more closely, and does so while locating the centre of the axle rather than toward one side of the vehicle, as more commonly used when fitting a long Panhard rod.

It consists of two horizontal equalizer beam links of equal length mounted at each side of the chassis. In between these two links, a short center link is connected. The center of this center link - the point which is constrained in a straight line motion - is mounted to the center of the equalizer beam support. All pivoting points are free to rotate in a vertical plane. Watt's linkage can also be used to prevent axle movement in the longitudinal direction of the vehicle.

SPECIAL TOOLS AND EQUIPMENT

SPECIAL TOOLS

Illustration	Tool Number / Description
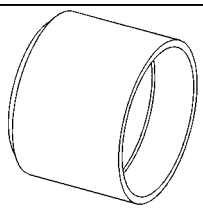	CH-906-42 KM-906-42 Adapter

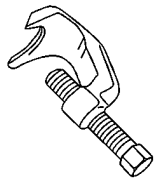	CH 43631 J-43461 Ball Joint Remover
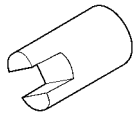	CH-49459 Adapter
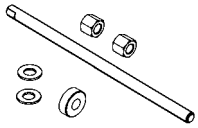	CH-50342 Threaded Rod
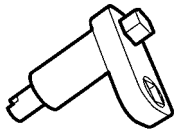	CH-51095 Wrench
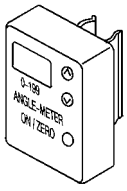	EN-45059 J-45059 Torque Angle Sensor Kit

2013 SUSPENSION

Suspension General Diagnosis - Cruze

SPECIFICATIONS

TRIM HEIGHT SPECIFICATIONS

Trim Height Specifications

Model (See SPID Label)	Option	Tire Size		Z ± 10 mm (0.4 in)	D ± 10 mm (0.4 in)	P ± 12 mm (0.5 in)	R ± 12 mm (0.5 in)
		Front	Rear				
1PJ69	QYW without XJ2	P215/60R16	P215/60R16	13 mm (0.51 in)	241 mm (9.49 in)	707 mm (27.8 in)	715 mm (28.1 in)
1PL69	QYF without XJ2	P225/50R17	P225/50R17	13 mm (0.51 in)	241 mm (9.49 in)	706 mm (27.8 in)	713 mm (28.1 in)
1PL69	QYF with XJ2	P225/50R17	P225/50R17	12 mm (0.47 in)	238 mm (9.37 in)	705 mm (27.8 in)	710 mm (28.0 in)
1PL69	QOI without XJ2	P225/45R18	P225/45R18	13 mm (0.51 in)	241 mm (9.49 in)	709 mm (27.9 in)	716 mm (28.2 in)
1PL69	QOI with XJ2	P225/45R18	P225/45R18	12 mm (0.47 in)	238 mm (9.37 in)	708 mm (27.9 in)	713 mm (28.1 in)

DIAGNOSTIC INFORMATION AND PROCEDURES

SYMPTOMS - SUSPENSION GENERAL DIAGNOSIS

NOTE: The following step must be completed before using the symptom tables.

Review the system description and operation in order to familiarize yourself with the system functions. Refer to the appropriate description and operation:

- **Front Suspension Description and Operation** for the front suspension
- **Rear Suspension Description and Operation (Compound Crank)** , **Rear Suspension Description and Operation (Watt Linkage)** for the rear suspension
- **General Description** for tires and wheels

Visual/Physical Inspection

- Inspect for aftermarket devices which could affect the operation of any of the suspension subsystems.
- Inspect the easily accessible or visible system components for obvious damage or conditions which could cause the symptom.
- Inspect for proper tire size and inflation pressure. Refer to **Vehicle Certification, Tire Placard, Anti-Theft, and Service Parts ID Label** .

Symptom List

Refer to a symptom diagnostic procedure from the following list in order to diagnose the symptom:

- **Ride Diagnosis**
- **Body Leans or Sways in Corners**
- **Vehicle Leads/Pulls**
- **Suspension Bottoms**
- **Torque Steer**
- **Memory Steer**

RIDE DIAGNOSIS

Ride Diagnosis

Step	Action	Yes	No
1	Did you review the General Description and perform the necessary inspections?	Go to **Step 2**	Go to **Symptoms - Suspension General Diagnosis**
2	**IMPORTANT:** **Verify the vehicle suspension package RPO.** Verify that the ride is too soft or too hard.Does the vehicle ride normally?	System OK	Go to **Step 3**
3	Check the tire inflation and adjust to specifications. Refer to **Vehicle Certification, Tire Placard, Anti-Theft, and Service Parts ID Label** . Did you adjust the tire pressure?	Go to **Step 6**	Go to **Step 4**
4	Inspect the vehicle trim height. Refer to **Trim Height Inspection**. Did you find and correct the condition?	Go to **Step 6**	Go to **Step 5**
5	Inspect the following suspension components for wear or damage: • Shock Absorbers-Refer to **Suspension Strut and Shock Absorber Testing - On Vehicle**. • Springs Did you find and correct the condition?	Go to **Step 6**	-
6	Drive the vehicle in order to verify the repair. Did you correct the condition?	System OK	Go to **Step 3**

VEHICLE LEADS/PULLS

Vehicle Leads/Pulls

Step	Action	Values	Yes	No
DEFINITION: At a constant highway speed on a typical straight road, lead/pull is the amount of effort required at the steering wheel to maintain the vehicle straight path.				
1	Did you review the General Description and perform the visual/physical inspections?	-	Go to **Step 2**	Go to **Symptoms - Suspension General Diagnosis**
2	Road test the vehicle in order to verify the complaint. Does the vehicle operate normally?	-	System OK	Go to **Step 3**
3	With the vehicle on a flat surface and the wheels facing straight ahead, verify that the Steering Angle Sensor is centered. If the steering wheel angle sensor is out of specification, refer to **Steering Angle Sensor Centering** . Did you find and correct the condition?	0±5°	Go to **Step 10**	Go to **Step 4**
4	Inspect the tire/wheel assemblies for the following: • Correct tire pressure-Refer to the tire placard. • Correct tire size-Refer to the tire placard. • Abnormal tire wear or damage Did you find and correct the condition?	-	Go to **Step 10**	Go to **Step 4**
5	Perform the **Radial Tire Lead/Pull Correction** . Did you find and correct the condition?	-	Go to **Step 10**	Go to **Step 6**
6	Inspect and correct/adjust the suspension and steering systems for the following: • Vehicle trim height-Refer to **Trim Height Specifications**. • Excessively worn, loose, or damaged components Did you find and correct the condition?	-	Go to **Step 10**	Go to **Step 7**
	Inspect the brake system for brake drag. With the vehicle suspended on a hoist,			

7	brake drag can be identified by rotating each wheel several times and observing whether more force is needed to rotate the left wheel or the right wheel. Did you find and correct the condition?	-	Go to **Step 10**	Go to **Step 8**
8	Inspect the wheel alignment and adjust as necessary. Refer to **Wheel Alignment Measurement** . Did you correct the condition?	-	Go to **Step 10**	Go to **Step 9**
9	Inspect the steering gear for unequal effort. The vehicle must be suspended on a hoist, the engine running, and the transmission in park or neutral. Grasp the tire assembly and manually simulate a turn from the left of center and the right of center observing whether more force is needed to turn to the left or to the right. If this condition exists, replace the steering gear. Did you correct the condition?	-	System OK	Go to **Step 4**
10	Operate the vehicle in order to verify the repair. Did you correct the condition?	-	System OK	Go to **Step 4**

BODY LEANS OR SWAYS IN CORNERS

Body Leans or Sways in Corners

Step	Action	Yes	No
1	Did you review the General Description and perform the necessary inspections?	Go to **Step 2**	Go to **Symptoms - Suspension General Diagnosis**
2	Verify the vehicle leans or sways in corners. Does the vehicle operate normally?	System OK	Go to **Step 3**
3	Inspect the following components for wear or damage: • Rear Coil Springs • Front Coil Springs Are the components worn or damaged?	Go to **Step 5**	Go to **Step 4**
4	1. Inspect the stabilizer shaft link for wear or damage. 2. Repair as necessary.		

	Did you find and correct the condition?	Go to **Step 6**	Go to **Step 2**
5	Replace the springs as necessary. Did you complete the repair?	Go to **Step 6**	-
6	Operate the vehicle in order to verify the repair. Did you correct the condition?	System OK	Go to **Step 3**

SUSPENSION BOTTOMS

Suspension Bottoms

Step	Action	Yes	No
DEFINITION: A loud bang or thump that can usually be felt and/or heard when the vehicle is driven over bumps. This condition is commonly noticed when the vehicle trim height is too low.			
1	Did you review the General Description and perform the necessary inspections?	Go to **Step 2**	Go to **Symptoms - Suspension General Diagnosis**
2	Verify that the suspension bottoms. Does the vehicle operate normally?	System OK	Go to **Step 3**
3	Inspect for vehicle overloading and correct the overloading condition as necessary. Refer to **Vehicle Certification, Tire Placard, Anti-Theft, and Service Parts ID Label** for specifications. Did you find and correct the condition?	Go to **Step 6**	Go to **Step 4**
4	Inspect the following components: • Inspect the shock absorbers. Refer to **Suspension Strut and Shock Absorber Testing - On Vehicle**. • Inspect for damaged coil springs, torsion bar or leaf springs and replace as necessary. Did you find and correct the condition?	Go to **Step 6**	Go to **Step 5**
5	Inspect the vehicle trim height. Refer to **Trim Height Inspection**. Did you complete the trim height inspection procedure?	Go to **Step 6**	-
6	Operate the vehicle in order to verify the repair. Did you correct the condition?	System OK	Go to **Step 3**

TORQUE STEER

Torque Steer

Step	Action	Yes	No
DEFINITION: On a dry, smooth, flat road, the vehicle has a left or right steering force only during acceleration.			
1	Did you review the General Description and perform the necessary inspections?	Go to **Step 2**	Go to **Symptoms - Suspension General Diagnosis**
2	1. Drive the vehicle on a straight, smooth, flat road. 2. Press the accelerator and determine if any additional steering input is required to maintain a straight ahead direction. 3. Repeat this test with the vehicle traveling in the opposite direction in order to eliminate crosswind effects. Lead/pull caused by unlevel roads and crosswinds are considered normal. Does the vehicle exhibit torque steer when the accelerator is pressed?	Go to **Step 3**	System OK
3	1. Drive the vehicle on a straight, smooth, flat road at 64-97 km/h (40-60 mph). 2. Remove your foot from the accelerator. 3. Shift the transmission into NEUTRAL in order to allow the vehicle to coast. 4. Is any additional steering input required to maintain a straight ahead direction. 5. Repeat this test with the vehicle traveling in the opposite direction in order to eliminate crosswind effects. Lead/pull caused by unlevel roads and crosswinds are considered normal. Does the vehicle direction change when the steering wheel is momentarily released?	Go to **Vehicle Leads/Pulls**	Go to **Step 4**
	Inspect the front suspension and		

4	powertrain mounts for worn or damaged components and repair as necessary. Did you find and correct the condition?	Go to **Step 6**	Go to **Step 5**
5	Inspect the vehicle trim height. Refer to **Trim Height Inspection**. Did you find and correct the condition?	Go to **Step 6**	-
6	Operate the vehicle in order to verify the repair. Did you correct the condition?	System OK	-

MEMORY STEER

Memory Steer

Step	Action	Yes	No
DEFINITION: A lead or pull in the direction the driver previously turned the vehicle. Additionally, after turning in the opposite direction, the vehicle will want to lead or pull in that direction.			
1	Did you review the General Description and perform the necessary inspections?	Go to **Step 2**	Go to **Symptoms - Suspension General Diagnosis**
2	Verify that memory steer is present. Does the system operate normally?	System OK	Go to **Step 3**
3	1. Raise and support the vehicle. Refer to **Lifting and Jacking the Vehicle** . 2. Lubricate the tie rod ends and the ball joints if applicable. 3. Inspect the suspension system for worn or damaged components. 4. Repair as necessary. Did you find and correct the condition?	Go to **Step 7**	Go to **Step 4**
4	Inspect for binding strut bearings. 1. Disconnect the strut from the steering knuckle. 2. If the strut is abnormally difficult to rotate, repair or replace the upper bearing mount. Did you find and complete the repair?	Go to **Step 7**	Go to **Step 5**
5	Inspect for binding in the lower ball joints. If joint is binding, replace the joint. Did you find and complete the repair?	Go to **Step 7**	Go to **Step 6**
	Inspect the wheel alignment and adjust as		

6	necessary. Refer to **Wheel Alignment Measurement** . Did you complete the wheel alignment?	Go to **Step 7**	-
7	Operate the vehicle in order to verify the repair. Did you correct the condition?	System OK	-

NOISE DIAGNOSIS - FRONT SUSPENSION

Noise Diagnosis - Front Suspension

Step	Action	Yes	No
DEFINITION: Any noise emitted from the front of the vehicle that is induced by VEHICLE SPEED or DRIVING TERRAIN as related to the front suspension. **Special Tools** **CH-39570** Chassis Ear For equivalent regional tools, refer to **Special Tools**.			
1	Did you review the General Description and perform the necessary Inspections?	Go to **Step 2**	Go to **Symptoms - Suspension General Diagnosis**
2	Attempt to duplicate the condition. Road test the vehicle. Did you duplicate the condition?	Go to **Step 3**	System OK
3	Is the noise reactive to vehicle load or speed?	Go to **Step 4**	Go to **Step 7**
4	Inspect the tires for the following condition: • Proper tire inflation and adjust as necessary - Refer to **Vehicle Certification, Tire Placard, Anti-Theft, and Service Parts ID Label** . • Unusual tire wear - Refer to **Vibration Analysis - Tire and Wheel** . • Inspect the wheel nuts for looseness and tighten as necessary - Refer to **Fastener Tightening Specifications** . Did you find and correct the condition?	Go to **Step 14**	Go to **Step 5**
5	Inspect the front wheel bearings. Refer to **Wheel Bearings Diagnosis**. Did you find and correct the condition?	Go to **Step 14**	Go to **Step 6**
6	Inspect for front axle or transaxle noises. Refer to **Symptoms - Automatic Transmission** . Did you find and correct the condition?	Go to **Step 14**	Go to **Step 7**
7	Bounce the front of the vehicle in order to duplicate the noise.		

	Did you duplicate the noise?	Go to **Step 8**	Go to **Step 9**
8	1. Raise and support the vehicle. Refer to **Lifting and Jacking the Vehicle** . 2. Inspect the front suspension components for looseness. Refer to **Fastener Tightening Specifications** . 3. Inspect the front suspension components for damage and repair as necessary. Did you find and correct the condition?	Go to **Step 14**	Go to **Step 9**
9	1. Bounce the front of the vehicle in order to locate the source of the noise, preferably by using the **CH-39570** chassis ear or equivalent. 2. If necessary, road test the vehicle. 3. Repair or replace any defect components as necessary. Did you find and correct the condition?	Go to **Step 14**	Go to **Step 10**
10	Inspect the ball joints and steering components for the following conditions. • Lack of lubrication where applicable • Looseness in the ball joints - Refer to **Ball Joint Inspection**. • Looseness in the tie rods - Refer to **Steering Linkage Outer Tie Rod Replacement** . Did you find and correct the condition?	Go to **Step 14**	Go to **Step 11**
11	Inspect for damaged shock absorbers. Refer to **Suspension Strut and Shock Absorber Testing - On Vehicle**. Did you find and correct the condition?	Go to **Step 14**	Go to **Step 12**
12	Inspect the front stabilizer shaft and stabilizer shaft links for damage and repair as necessary. Refer to **Stabilizer Shaft Replacement** , or **Stabilizer Shaft Link Replacement** . Did you find and correct the condition?	Go to **Step 14**	Go to **Step 13**
13	Inspect for control arm damage and repair as necessary. Refer to **Lower Control Arm Replacement** . Did you find and correct the condition?	Go to **Step 14**	-

14	Operate the system in order to verify the repair. Did you correct the condition?	System OK	Go to **Step 2**

NOISE DIAGNOSIS - REAR SUSPENSION

Noise Diagnosis - Rear Suspension

Step	Action	Yes	No
DEFINITION: Any noise emitted from the rear of the vehicle that is induced by VEHICLE SPEED or DRIVING TERRAIN as related to the rear suspension. **Special Tools** **CH-39570** Chassis Ear For equivalent regional tools, refer to **Special Tools**.			
1	Did you review the General Description and perform the necessary inspections?	Go to **Step 2**	Go to **Symptoms - Suspension General Diagnosis**
2	Attempt to duplicate the condition. Road test the vehicle. Did you duplicate the condition?	Go to **Step 3**	System OK
3	Is the noise reactive to vehicle load or speed?	Go to **Step 4**	Go to **Step 6**
4	Perform the following inspections: • Inspect and adjust the tire inflation. Refer to **Vehicle Certification, Tire Placard, Anti-Theft, and Service Parts ID Label** . • Inspect for unusual tire wear. Refer to **Vibration Analysis - Tire and Wheel** . • Inspect the wheel nuts for looseness. Refer to **Fastener Tightening Specifications** . Did you find and correct the condition?	Go to **Step 10**	Go to **Step 5**
5	Inspect the rear wheel bearings. Refer to **Wheel Bearings Diagnosis**. Did you find and correct the condition?	Go to **Step 10**	Go to **Step 6**
6	Bounce the rear of the vehicle in order to duplicate the noise. Did you duplicate the noise?	Go to **Step 7**	Go to **Step 9**
7	1. Raise the vehicle. Refer to **Lifting and Jacking the Vehicle** . 2. Inspect the rear suspension components for looseness. Refer to **Fastener Tightening Specifications** . 3. Inspect the rear suspension components for damage and repair as necessary.		

	Did you find and correct the condition?	Go to **Step 10**	Go to **Step 8**
8	Inspect the rear shock absorber. Refer to **Suspension Strut and Shock Absorber Testing - On Vehicle**. Did you find and correct the condition?	Go to **Step 10**	Go to **Step 9**
9	1. Install the **CH-39570** chassis ear or equivalent. 2. Bounce the rear of the vehicle, using the **CH-39570** chassis ear or equivalent, in order to locate the source of the noise. If necessary, road test the vehicle. 3. Repair or replace any defective component as necessary. Did you find and correct the condition?	Go to **Step 10**	System OK
10	Operate the system in order to verify the repair. Did you correct the condition?	System OK	Go to **Step 3**

BALL JOINT INSPECTION

1. Raise and support the vehicle. Refer to **Lifting and Jacking the Vehicle** .
2. Clean and inspect the ball joint seal for cuts or tears. If the ball joint seal is damaged, replace the lower control arm. Refer to **Lower Control Arm Replacement** .

SUSPENSION STRUT AND SHOCK ABSORBER TESTING - ON VEHICLE

Suspension Strut and Shock Absorber Testing - On Vehicle

Step	Action	Yes	No
1	Did you review the General Description and perform the necessary inspections?	Go to **Step 2**	Go to **Symptoms - Suspension General Diagnosis**
2	Verify that the customer's concern is present. Does the vehicle operate normally?	System OK	Go to **Step 3**
3	**NOTE:** **A light film of oil on the top portion of the shock reservoir is normal.** Inspect each strut or shock absorber for external fluid leakage.Is a strut or shock absorber leaking?	Go to **Step 5**	Go to **Step 4**
	1. Use your hands in order to lift up and push down each corner of the vehicle 3 times. 2. Remove your hands from the vehicle.		

4	3. Locate a shock or strut that exceeds 2 cycles. Did you locate shock or strut that exceeds 2 cycles?	Go to **Step 5**	Go to **Step 6**
5	**NOTE:** **Inspect the vehicle trim height in order to correct any possible causes of shock/strut failures. Refer to Trim Height Inspection.** Replace the strut or shock absorber. Refer to **Strut, Strut Component, or Spring Replacement** , or **Shock Absorber Replacement** .Did you complete the repair?	Go to **Step 6**	-
6	Operate the vehicle in order to verify the repair. Did you correct the condition?	System OK	Go to **Step 3**

WHEEL BEARINGS DIAGNOSIS

Wheel Bearings Diagnosis

Step	Action	Values	Yes	No
1	Did you review the General Description and perform the necessary inspections?	-	Go to **Step 2**	Go to **Symptoms - Suspension General Diagnosis**
2	Road test the vehicle in order to verify the customer's complaint. Does the vehicle operate normally?	-	System OK	Go to **Step 3**
3	1. Raise and support the vehicle. Refer to **Lifting and Jacking the Vehicle** . 2. Inspect for tire or wheel damage. Did you find and correct the condition?	-	Go to **Step 6**	Go to **Step 4**
4	Road test the vehicle to verify the location of the wheel bearing noise. Did you locate the source of the wheel bearing noise?	-	Go to **Step 5**	Go to **Step 2**
	Replace the wheel bearing. Refer to **Front Wheel Bearing and Hub Replacement** , or **Rear**			

5	**Wheel Bearing and Hub Replacement (Drum Brake)** , **Rear Wheel Bearing and Hub Replacement (Disc Brake)** . Did this complete the repair?	-	Go to **Step 6**	-
6	Road test the vehicle to verify the repair. Does the vehicle operate normally?	-	System OK	Go to **Step 3**

TRIM HEIGHT INSPECTION

Trim Height Measurement

Trim height is a predetermined measurement relating to vehicle ride height. Incorrect trim heights can cause the vehicle to bottom out over bumps, damage to the suspension components and symptoms similar to wheel alignment problems. Check the trim heights when diagnosing suspension concerns and before checking the wheel alignment.

Perform the following before measuring the trim heights:

- Set the tire pressure to the specifications shown on the certification label. Refer to **Vehicle Certification, Tire Placard, Anti-Theft, and Service Parts ID Label** .

NOTE: One U.S. gallon of gasoline weighs approximately 6.5 lbs. One liter of gasoline weighs approximately 0.78 kg.

- Check the fuel level. Add additional weight if necessary to simulate a full tank.
- Make sure the passenger and rear compartments are empty, except tor the spare tire.
- Make sure the vehicle is on a flat and level surface, such as an alignment rack.
- Check that all the vehicle doors are securely closed.
- Check that the vehicle hood and rear deck lid are securely closed.
- Make sure the vehicle is free of ice, snow and mud accumulation.
- Check for installed after market accessories or modifications that could affect trim height measurement:
  - Larger or smaller than production wheels and tires.
  - Lifting or lowering kits
  - Wheel opening flares or ground affects

Measuring the P and R Dimension

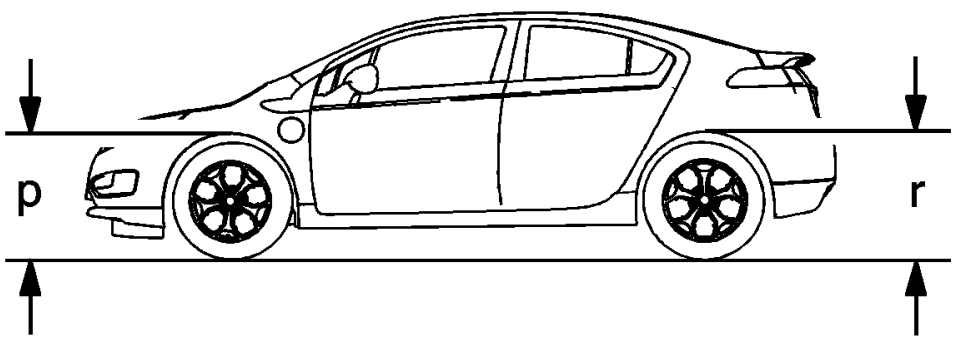

Fig. 1: Measuring P And R Dimension
Courtesy of GENERAL MOTORS COMPANY

Measurement Definitions

P Height: The vertical distance from the ground to the top of the wheel opening through the centerline of the front wheel.

R Height: The vertical distance from the ground to the top of the wheel opening through the centerline of the rear wheel.

Use the following procedures to measure the P and R dimensions:

NOTE:

- **Measure from the center of the wheel well opening to the ground.**
- **The left and right P and R height differences should be no more than 10 mm (0.39 in).**

1. Push the front bumper down a minimum of 25 mm (1 in), and release. Perform this step three times.

2. Measure and record the trim height per the "Measurement Definitions" above.
3. Lift the bumper up a minimum of 25 mm (1 in), and release. Perform this step three times.
4. Measure and record the trim height per the "Measurement Definitions" above.
5. The true P height measurement is the average of the measurements taken in step 2 and 4. Refer to **Trim Height Specifications**.
6. Repeat the above steps at the rear of the vehicle for the R heights.
7. If the P and R heights are outside of the specifications, measure the Z and D heights.

Measuring the Z Dimension

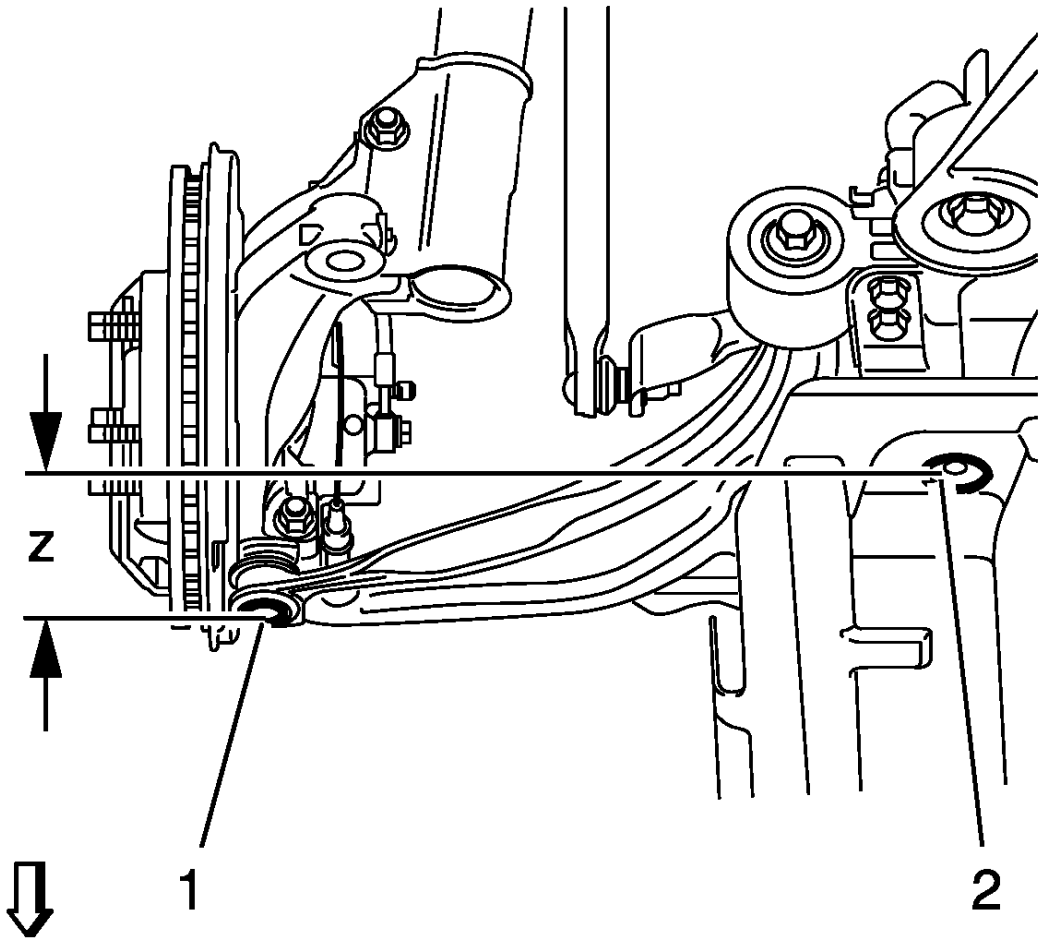

Fig. 2: Measuring Z Dimension
Courtesy of GENERAL MOTORS COMPANY

Measurement Definitions

The Z Height: The vertical distance from the cradle side rail bottom surface (2) accessed through hole in the

engine shield to the center of the ball joint cup (1).

Use the following procedures to measure the Z dimensions:

NOTE: The left and right Z height differences should be no more than 10 mm (0.39 in).

1. Push the front bumper down a minimum of 25 mm (1 in). Perform this step three times.
2. Measure and record the trim height per the "Measurement Definitions" above.
3. Lift the front bumper a minimum of 25 mm (1 in). Perform this step three times.
4. Measure and record the trim height per the "Measurement Definitions" above.
5. The true Z height dimension is the average of the measurements taken in steps 2 and 4. Refer to **Trim Height Specifications**.
6. If these measurements are out of specifications, inspect for the following conditions:
   - Worn or damaged suspension components
   - Collision damage

D Height Measurement

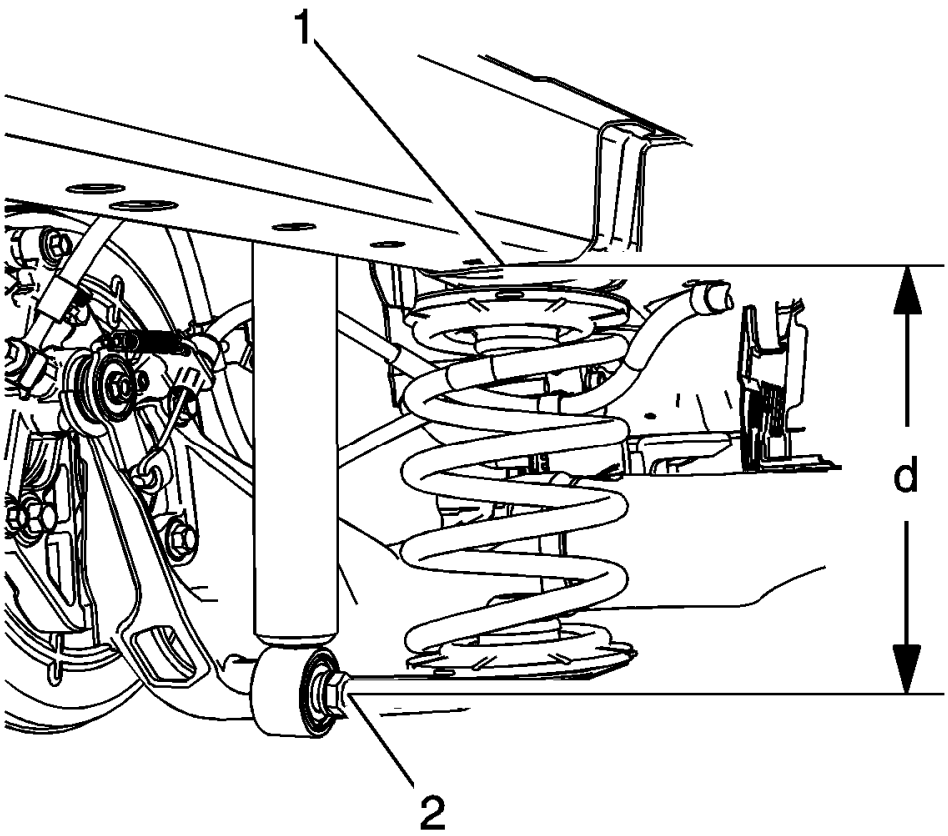

Fig. 3: Measuring D Height
Courtesy of GENERAL MOTORS COMPANY

Measurement Definitions

The D Height: The vertical distance from the bottom surface of the body side rail (1) to the center of the lower shock attaching bolt head (2).

Use the following procedure to check the D dimension:

NOTE: The left and right D height difference should be no more than 10 mm (0.39 in).

1. Push the rear bumper down a minimum of 25 mm (1 in). Perform this step three times.
2. Measure and record the trim height per the "Measurement Definitions" above.
3. Lift the rear bumper up a minimum of 25 mm (1 in), and release. Perform this step three times.
4. Measure and record the trim height per the "Measurement Definitions" above.
5. The true D height is the average of the measurements taken in steps 2 and 4. Refer to **Trim Height**

Specifications.

6. If these measurements are out of specifications, inspect for the following conditions:
    - Worn or damaged suspension components
    - Collision damage

SPECIAL TOOLS AND EQUIPMENT

SPECIAL TOOLS

Illustration	Tool Number/ Description
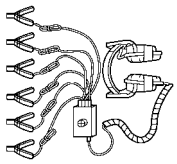	CH-39570 J 39570 Chassis Ear

2013 SUSPENSION

Tire Pressure Monitoring - Cruze

SPECIFICATIONS

FASTENER TIGHTENING SPECIFICATIONS

Fastener Tightening Specifications

Application	Specification	
	Metric	English
Tire Pressure Sensor Screw	1.3	11.5 lb in

DIAGNOSTIC INFORMATION AND PROCEDURES

DIAGNOSTIC CODE INDEX

DIAGNOSTIC CODE INDEX

DTC	Description
DTC C0569	DTC C0569 00 System Configuration Malfunction
DTC C0750, C0755, C0760, or C0765	DTC C0750 03 Left Front Tire Pressure Sensor Low Voltage DTC C0750 29 Left Front Tire Pressure Sensor Too Few Pulses DTC C0750 39 Left Front Tire Pressure Sensor Internal Malfunction DTC C0755 03 Right Front Tire Pressure Sensor Low Voltage DTC C0755 29 Right Front Tire Pressure Sensor Too Few Pulses DTC C0755 39 Right Front Tire Pressure Sensor Internal Malfunction DTC C0760 03 Left Rear Tire Pressure Sensor Low Voltage DTC C0760 29 Left Rear Tire Pressure Sensor Too Few Pulses DTC C0760 39 Left Rear Tire Pressure Sensor Internal Malfunction DTC C0765 03 Right Rear Tire Pressure Sensor Low Voltage DTC C0765 29 Right Rear Tire Pressure Sensor Too Few Pulses DTC C0765 39 Right Rear Tire Pressure Sensor Internal Malfunction
DTC C0775	DTC C0775 00 Tire Pressure Monitoring System Sensors Malfunction

DTC C0569

Diagnostic Instructions

- Perform the **Diagnostic System Check - Vehicle** prior to using this diagnostic procedure.
- Review **Strategy Based Diagnosis** for an overview of the diagnostic approach.
- **Diagnostic Procedure Instructions** provides an overview of each diagnostic category.

DTC Descriptor

DTC C0569 00

System Configuration Malfunction

Circuit/System Description

If the tire type and pressure information is not entered during the body control module (BCM) setup, the tire pressure monitor system indicator icon on the instrument cluster will flash for 1 min and then remain illuminated after the ignition is cycled ON and the instrument cluster bulb check is complete. If equipped, the driver information center will also display a service tire monitor type message. Under these circumstances, DTC C0569 will be set and the tire type and pressure information will need to be entered for the system to function correctly.

Conditions for Running the DTC

Ignition ON.

Conditions for Setting the DTC

The tire type and pressure information is not entered into the BCM during programming and setup.

Action Taken When the DTC Sets

- The tire pressure monitor system indicator icon on the instrument cluster flashes for 1 min and then remains illuminated after the ignition switch is cycled ON and the instrument cluster bulb check is complete.
- If equipped, the driver information center displays a service tire monitor type message.

Conditions for Clearing the DTC

A current DTC will clear when the BCM has undergone the tire type and pressure selection setup procedure and one ignition cycle has occurred.

Diagnostic Aids

A newly replaced BCM will set DTC C0569 after programming on it's initial ignition ON cycle if the module setup information has not been entered.

Reference Information

Description and Operation

Tire Pressure Monitor Description and Operation

Scan Tool Reference

Control Module References for scan tool information

Circuit/System Verification

1. Ignition ON.
2. Enter the tire type and pressure information into the K9 Body Control Module with a scan tool. Refer to **Vehicle Certification, Tire Placard, Anti-Theft, and Service Parts ID Label** .
3. Ignition OFF, then Ignition ON.
4. Verify DTC C0569 is not set.
   - **If the DTC is set**

     Replace the K9 Body Control Module.

   - **If the DTC is not set.**
5. All OK.

Repair Instructions

Perform the **Diagnostic Repair Verification** after completing the repair.

Control Module References for BCM replacement, programming, and setup.

DTC C0750, C0755, C0760, OR C0765

Diagnostic Instructions

- Perform the **Diagnostic System Check - Vehicle** prior to using this diagnostic procedure.
- Review **Strategy Based Diagnosis** for an overview of the diagnostic approach.
- **Diagnostic Procedure Instructions** provides an overview of each diagnostic category.

DTC Descriptor

DTC C0750 03

Left Front Tire Pressure Sensor Low Voltage

DTC C0750 29

Left Front Tire Pressure Sensor Too Few Pulses

DTC C0750 39

Left Front Tire Pressure Sensor Internal Malfunction

DTC C0755 03

Right Front Tire Pressure Sensor Low Voltage

DTC C0755 29

Right Front Tire Pressure Sensor Too Few Pulses

DTC C0755 39

Right Front Tire Pressure Sensor Internal Malfunction

DTC C0760 03

Left Rear Tire Pressure Sensor Low Voltage

DTC C0760 29

Left Rear Tire Pressure Sensor Too Few Pulses

DTC C0760 39

Left Rear Tire Pressure Sensor Internal Malfunction

DTC C0765 03

Right Rear Tire Pressure Sensor Low Voltage

DTC C0765 29

Right Rear Tire Pressure Sensor Too Few Pulses

DTC C0765 39

Right Rear Tire Pressure Sensor Internal Malfunction

Circuit/System Description

The tire pressure monitor system has a radio frequency (RF) transmitting pressure sensor in each wheel/tire assembly. As vehicle speed increases, centrifugal force closes the sensors internal roll switch, which puts the sensor into Drive mode. The body control module (BCM) receives and translates the data contained in the tire

pressure sensor RF transmissions into sensor presence, sensor mode, and tire pressure. Once vehicle speed is greater than 40 km/h (25 MPH), the BCM waits for the first sensor to go into Drive mode, then checks if all sensors have gone into Drive mode. If one or more sensors does not go into these modes, or does not transmit at all, the BCM will set DTC C0750, C0755, C0760, or C0765 respectively.

Conditions for Running the DTC

Vehicle speed is greater than 40 km/h (25 MPH).

Conditions for Setting the DTC

- A sensor does not transmit or transmits invalid data to the BCM.
- A sensor low battery condition.

Action Taken When the DTC Sets

- The tire pressure monitor system indicator icon on the instrument cluster flashes for 1 min and then remains illuminated after the ignition switch is cycled ON and the instrument cluster bulb check is complete.
- If equipped, the driver information center displays a service tire monitor type message.

Conditions for Clearing the DTC

A current DTC will clear when the malfunction is no longer present and one ignition cycle occurs.

Diagnostic Aids

- Some aftermarket wheel valve stem holes are located further from the wheel rim than original equipment wheels. When using the tire pressure monitor special tool to activate a sensor, ensure the tool is placed along the tire sidewall and no further than 15 cm (6 in) from the sensor and the antenna is aiming upward.
- Aftermarket wheel valve system locations can cause a sensor to not function correctly.
- A sensor may have been damaged due to a previous wheel/tire service or flat tire event.
- The use of other than GM approved tire sealants can obstruct the sensor pressure sensing port and cause inaccurate tire pressure readings. If this condition is verified, remove the sealer from the tire and replace the sensor. Refer to **Tire Pressure Indicator Sensor Replacement**.
- Occasionally sensor transmissions are not received by the BCM due to vehicle level radio frequency interference from items such as but not limited to aftermarket ignition systems, DVD players, CB radios, or metallic type window tinting.
- The sensor activation procedure may have to be repeated up to 3 times before determining a sensor is malfunctioning. In the event a particular sensor information is displayed on the special tool upon activation but the horn does not chirp, it may be necessary to rotate the wheel valve stem to a different position due to the RF signal being blocked by another component.
- Occasionally sensors can become mislocated due to previous tire rotations where the sensor learn procedure was not performed. Always learn the sensors to ensure the DTC set is for that actual physical corner of the vehicle. Refer to **Tire Pressure Indicator Sensor Learn**.
- A sensor low battery condition will set a sensor DTC but will not illuminate the low tire pressure

indicator or display a message on the driver information center, if equipped. The sensor battery condition can be verified in the scan tool BCM data list. If a sensor low battery condition is indicated on the scan tool, the sensor will need to be replaced. Refer to **Tire Pressure Indicator Sensor Replacement**.

Reference Information

Description and Operation

Tire Pressure Monitor Description and Operation

Scan Tool Reference

Control Module References for scan tool information

Circuit/System Verification

1. Verify there are no communication DTCs set along with DTC C0750, C0755, C0760, and C0765.
   - **If a communication DTC is set**

     Refer to **Diagnostic Trouble Code (DTC) List - Vehicle** .

   - **If a communication DTC is not set**
2. Perform the **Tire Pressure Indicator Sensor Learn**.
3. Verify the scan tool Tire Pressure Sensor Mode parameters change to Drive while driving the vehicle above 40 km/h (25 mph) for greater than 2 min.
   - **If a Tire Pressure Sensor Mode parameter does not change to Drive**
     1. Replace the appropriate B2 Tire Pressure Sensor.
     2. Perform the **Tire Pressure Indicator Sensor Learn**.
   - **If the Tire Pressure Sensor Mode parameter changes to Drive**
4. All OK.

Repair Instructions

Perform the **Diagnostic Repair Verification** after completing the repair.

- **Tire Pressure Indicator Sensor Replacement**
- **Tire Pressure Indicator Sensor Learn**

DTC C0775

Diagnostic Instructions

- Perform the **Diagnostic System Check - Vehicle** prior to using this diagnostic procedure.
- Review **Strategy Based Diagnosis** for an overview of the diagnostic approach.
- **Diagnostic Procedure Instructions** provides an overview of each diagnostic category.

DTC Descriptor

DTC C0775 00

Tire Pressure Monitoring System Sensors Malfunction

Circuit/System Description

If the body control module (BCM) has been reprogrammed or replaced and the tire pressure sensor learn procedure has not been performed, the tire pressure monitor system indicator icon on the instrument cluster will flash for 1 min and then remain illuminated after the power switch is cycled ON and the instrument cluster bulb check is complete. If equipped, the driver information center will also display a service tire monitor type message. Under these circumstances, DTC C0775 will be set in the BCM and the tire pressure sensor learn procedure will need to be performed for the system to function correctly.

Conditions for Running the DTC

Vehicle ON or Vehicle in Service Mode.

Conditions for Setting the DTC

The body control module (BCM) has not learned tire pressure sensor ID and location information from the tire pressure sensors.

Action Taken When the DTC Sets

- The tire pressure monitor system indicator icon on the instrument cluster will flash for 1 min and then remain illuminated after the power switch is cycled ON and the instrument cluster bulb check is complete.
- If equipped, the driver information center displays a service tire monitor type warning message.

Conditions for Clearing the DTC

A current DTC will clear when the BCM has received tire pressure sensor ID and location information from the tire pressure indicator module and at least 1 power switch cycle has occurred.

Reference Information

Description and Operation

Tire Pressure Monitor Description and Operation

Scan Tool Reference

Control Module References for scan tool information

Circuit/System Verification

1. Perform the **Tire Pressure Indicator Sensor Learn**.
2. Verify DTC C0775 is not set.
   - **If the DTC is set**

     Replace the K9 Body Control Module.

   - **If the DTC is not set**
3. All OK.

Repair Instructions

Perform the **Diagnostic Repair Verification** after completing the repair.

Control Module References for BCM replacement, programming, and setup.

SYMPTOMS - TIRE PRESSURE MONITORING

1. Perform the **Diagnostic System Check - Vehicle** , before using the Symptom Tables in order to verify that all of the following are true:
   - There are no DTCs set.
   - The control modules can communicate via the serial data link.
2. Review the system operation in order to familiarize yourself with the system functions. Refer to **Tire Pressure Monitor Description and Operation**.

Visual/Physical Inspection

- Inspect for aftermarket devices which could affect the operation of the Tire Pressure Monitoring (TPM) System. Refer to **Checking Aftermarket Accessories** .
- Inspect the easily accessible or visible system components for obvious damage or conditions which could cause the symptom.

Intermittent

Faulty electrical connections or wiring may be the cause of intermittent conditions. Refer to **Testing for Intermittent Conditions and Poor Connections** .

Symptom List

Refer to **Low Tire Pressure Indicator Malfunction** in order to diagnose the symptom.

LOW TIRE PRESSURE INDICATOR MALFUNCTION

Diagnostic Instructions

- Perform the **Diagnostic System Check - Vehicle** prior to using this diagnostic procedure.

- Review **Strategy Based Diagnosis** for an overview of the diagnostic approach.
- **Diagnostic Procedure Instructions** provides an overview of each diagnostic category.

Circuit/System Description

The tire pressure monitor system has a radio frequency transmitting pressure sensor in each wheel/tire assembly. As vehicle speed increases, centrifugal force closes the sensors internal roll switch, which puts the sensor into Drive mode. The sensors send the tire pressure data to the body control module (BCM). The BCM translates the data contained in the tire pressure sensor radio frequency transmissions into sensor presence, sensor mode, and tire pressure. Once vehicle speed is greater than 40 km/h (25 MPH), the BCM waits for the sensors to go into Drive mode.

Each sensor has its own unique identification (ID) code, which it transmits as part of each RF message, that must be learned into the BCM memory. Once all 4 IDs have been learned and vehicle speed is greater than 40 km/h (25 mph), the BCM continuously compares IDs and pressure data in the received transmissions to the learned IDs and pressures to determine if all 4 sensors are present and if one or more tires are low. If the BCM detects a low tire pressure condition or a malfunction in the system, it will send a serial data message to the instrument cluster requesting the appropriate tire pressure monitor indicator illumination and also to display the appropriate data message on the driver information center, if equipped.

Diagnostic Aids

- If unsure about the condition, cycle the ignition and observe the tire pressure monitor indicator icon. If the tire pressure monitor indicator icon is continuously illuminated after the instrument cluster bulb check is completed, a low tire pressure condition is present. Check the tires for damage or leaks and inflate to the tire placard specifications. Refer to **Vehicle Certification, Tire Placard, Anti-Theft, and Service Parts ID Label** . If the tire pressure monitor indicator icon flashes for 1 min after the instrument cluster bulb check is completed and then remains illuminated, a tire pressure monitor system DTC is set. Perform the **Diagnostic System Check - Vehicle** to proceed with the proper diagnosis.
- Temperature can greatly effect tire pressures. Low tire pressure on a cold morning may cause the tire pressure monitor indicator icon to turn ON. The air pressure in the tire increases as the ambient temperature rises or as the tire warms up while the vehicle is driven. The pressure may increase enough to exceed the predetermined low pressure threshold which will turn OFF the tire pressure monitor indicator icon.
- Some aftermarket wheel valve stem holes are located further from the wheel rim than original equipment wheels. When using the tire pressure monitor special tool to activate a sensor, ensure the tool antenna is no further than 15 cm (6 in) from the sensor and is aiming upward.
- Aftermarket wheel value stem locations can cause a sensor to not function correctly.
- A sensor may have been damaged due to a previous wheel/tire service or flat tire event.
- The use of other than GM approved tire sealants can obstruct the sensor pressure sensing port and cause inaccurate tire pressure readings. If this condition is verified, remove the sealer from the tire and replace the sensor. Refer to **Tire Pressure Indicator Sensor Replacement**.
- The sensor activation procedure may have to be repeated up to 3 times before determining a sensor is malfunctioning. In the event a particular sensor's information is displayed on the special tool upon activation but the horn does not chirp, it may be necessary to rotate the wheel valve stem to a different position due to the RF signal is being blocked by another component.

- Occasionally sensor transmissions are not received by the BCM due to vehicle level RF interference from items such as but not limited to aftermarket ignition systems, DVD players, CB radios, or metallic type window tinting.

Reference Information

Description and Operation

Tire Pressure Monitor Description and Operation

Scan Tool Reference

Control Module References for scan tool information

Circuit/System Verification

NOTE: **Low tire pressure in one or more tires is indicated by a continuously illuminated tire pressure monitor indicator icon after the instrument cluster bulb check is completed. If equipped with a driver information center, a check tire pressure type message will also be displayed.**

When a tire pressure monitor DTC is set, the tire pressure monitor indicator icon will flash for 1 min after the instrument cluster bulb check is completed and then remains illuminated. If equipped with a driver information center, a service tire monitor type message will also be displayed.

1. Adjust all tire pressures to the correct pressure. Refer to **Vehicle Certification, Tire Placard, Anti-Theft, and Service Parts ID Label** .
2. Drive the vehicle over 40 km/h (25 mph) for greater than 2 min.
3. Verify the low tire pressure indicator is OFF.
    - **If the low tire pressure indicator is ON**
    1. Perform the **Tire Pressure Indicator Sensor Learn**.
    2. Record all 4 Tire Pressure Parameters values from the scan tool.
    3. Check and record the tire pressures with a known accurate hand held tire pressure gauge.
    4. Verify that the scan tool Tire Pressure parameters do not differ more than 27.6 kPa (4 psi) from the actual tire pressure readings.
        - If the scan tool Tire Pressure parameters differ more than 27.6 kPa (4 psi), replace the appropriate B2 Tire Pressure Sensor then perform the **Tire Pressure Indicator Sensor Learn**.
        - If the scan tool Tire Pressure parameters do not differ more than 27.6 kPa (4 psi)
    5. Verify the BCM Tire Type and Pressure selections are setup correctly with a scan tool. Refer to the **Vehicle Certification, Tire Placard, Anti-Theft, and Service Parts ID Label** .
        - If the BCM Tire Type and Pressure selections are incorrect, input the proper placard values for the vehicle with the scan tool then drive the vehicle over 40 km/h (25 mph) for greater

than 2 min.
    - If the BCM Tire Type and Pressure selections are correct
6. Ignition ON.
7. Verify the low tire pressure monitor indicator icon turns ON and OFF when commanding All Indicators ON and OFF with a scan tool.
    - If the low tire pressure monitor icon does not turn ON and OFF, replace the P16 Instrument Cluster.
    - If the low tire pressure monitor icon turns ON and OFF
8. All OK
    - **If the tire pressure indicator is OFF**
4. All OK

Repair Instructions

Perform the **Diagnostic Repair Verification** after completing the repair.

- **Tire Pressure Indicator Sensor Replacement**
- **Tire Pressure Indicator Sensor Learn**
- **Control Module References** for instrument cluster or BCM replacement, programming, and setup.

REPAIR INSTRUCTIONS

TIRE PRESSURE INDICATOR SENSOR REPLACEMENT

Removal Procedure

1. Raise the vehicle on a suitable support. Refer to **Lifting and Jacking the Vehicle** .
2. Remove the tire/wheel assembly from the vehicle. Refer to **Tire and Wheel Removal and Installation** .
3. Dismount the tire from the rim. Refer to **Tire Dismounting and Mounting** .

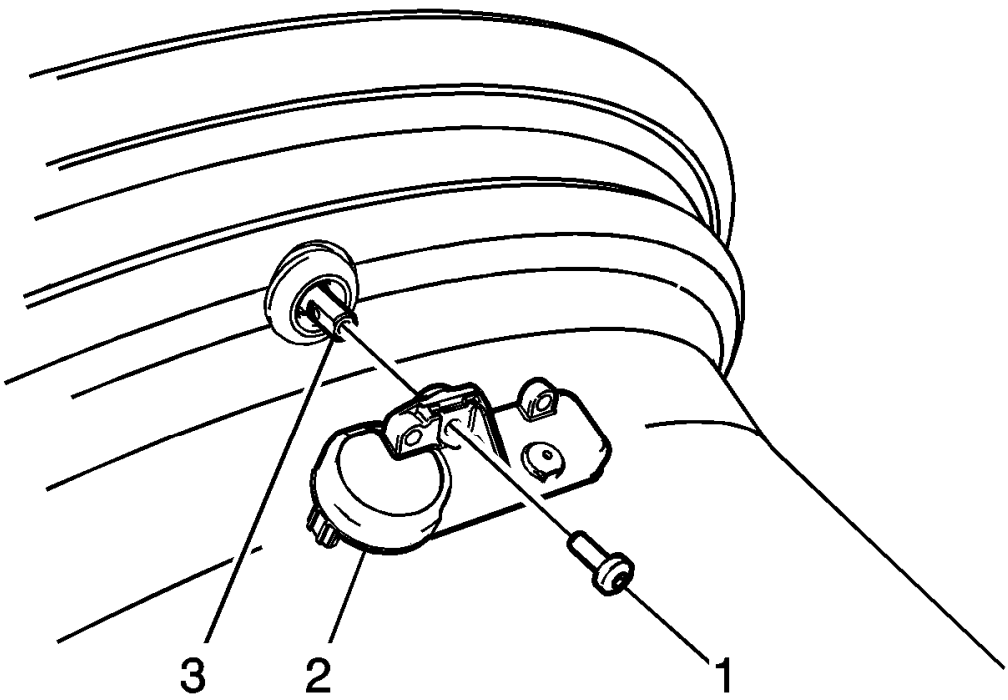

Fig. 1: View Of Tire Pressure Indicator Sensor
Courtesy of GENERAL MOTORS COMPANY

NOTE: When servicing the tire pressure sensor always use a new Schrader® tire pressure monitoring (TPM) sensor and a new TORX screw during installation.

4. Remove the TORX screw (1) from the tire pressure sensor (2) and pull it straight off the tire pressure valve stem (3).

CAUTION: Do not scratch or damage the clear coating on aluminum wheels with the tire changing equipment. Scratching the clear coating could cause the aluminum wheel to corrode and the clear coating to peel from the wheel.

5. Remove the tire pressure valve stem by pulling it through the rim.

Installation Procedure

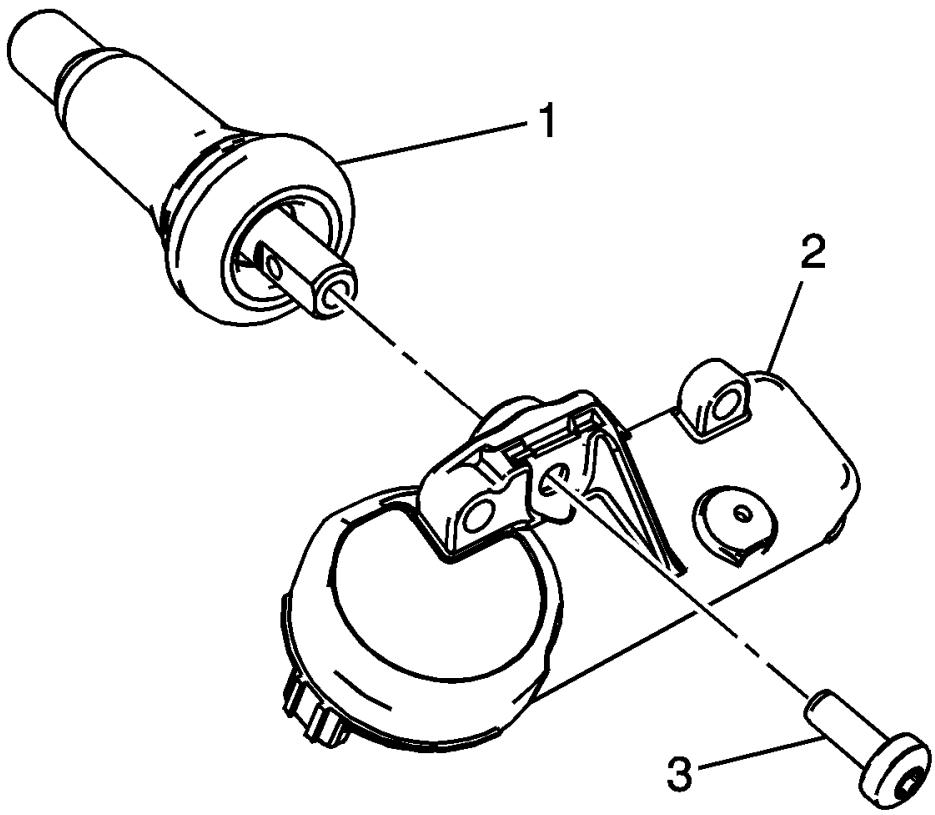

Fig. 2: View Of Tire Pressure Indicator Sensor
Courtesy of GENERAL MOTORS COMPANY

CAUTION: Refer to Fastener Caution .

NOTE:

- **Ensure the flat of the valve, lines up with the flats of the snap in the enclosure.**
- **TPM valves and TORX screws are single use items.**

1. Assemble the tire pressure sensor (2) to the valve stem and install the new TORX screw (3), tighten to 1.3 N.m (11.5 lb in).

NOTE: Use an approved tire mounting lubricant. DO NOT use silicon or corrosive base compounds to lubricate the tire bead and the wheel rim. A corrosive type compound can cause tire or rim deterioration.

2. Apply tire soap to the rubber portion of the valve stem (1).

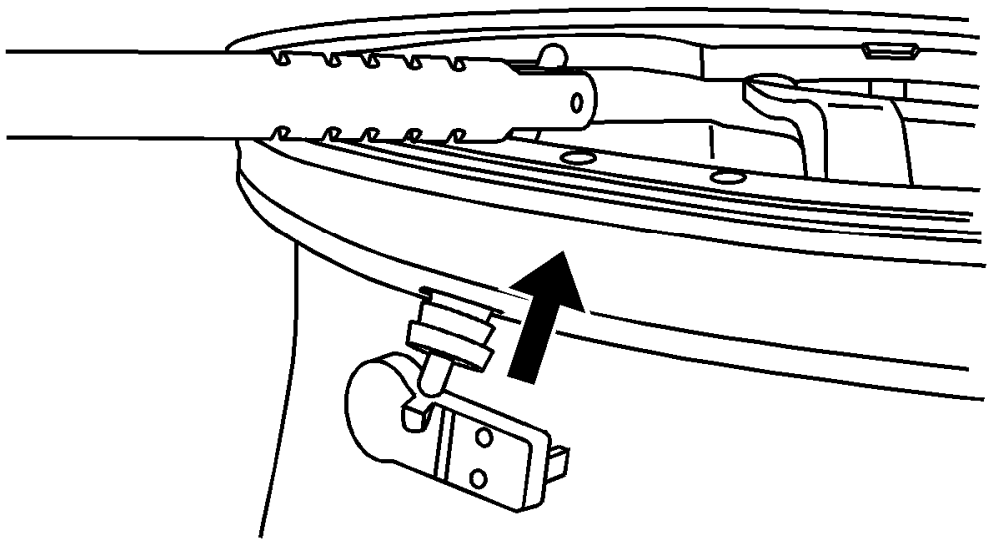

Fig. 3: View Of Tire Valve Stem Mounting Tool
Courtesy of GENERAL MOTORS COMPANY

3. Using a tire valve stem mounting tool, pull the valve stem through in a direction parallel to the valve hole on the rim.

NOTE: Snap Fit TPM sensors are shipped in the OFF mode. The sensor will exit its OFF state when the tire is inflated.

4. Mount the tire to the rim. Refer to **Tire Dismounting and Mounting** .
5. Install the tire/wheel assembly on the vehicle. Refer to **Tire and Wheel Removal and Installation** .
6. Lower the vehicle.
7. Learn the tire pressure sensors. Refer to **Tire Pressure Indicator Sensor Learn**.

TIRE PRESSURE INDICATOR SENSOR LEARN

Special Tools

- **EL-46079** Tire Pressure Monitor Diagnostic Tool
- **EL-50448** Tire Pressure Monitor Sensor Activation Tool

For equivalent regional tools, refer to **Special Tools**.

Learn Mode Description

The tire pressure monitor system uses the instrument cluster, body control module (BCM), 4 radio frequency transmitting pressure sensors, and the serial data circuit to perform the tire pressure monitor learn mode functions. The sensor learn procedure must be performed after every tire rotation, BCM replacement, or sensor replacement. Once the Learn mode has been enabled, each of the sensors unique identification codes can be learned into the BCM memory. When a sensor ID has been learned, the BCM sounds a horn chirp indicating the sensor has transmitted its ID and the BCM has received and learned it. The BCM must learn the sensor IDs in the proper sequence to determine correct sensor location. The first learned ID is assigned to the left front location, the second to right front, the third to right rear and the fourth to left rear. The turn signals will individually illuminate indicating which location is to be learned in the proper sequence.

Sensor Functions Using EL-46079, EL-50448, or Equivalent

Each sensor has an internal low frequency coil. When the tire pressure monitor special tool is used in activate mode, it produces a low frequency transmission that activates the sensor. The sensor responds to a low frequency activation by transmitting in Learn Mode-Remotely Triggered. When the BCM receives a learn mode transmission while in Learn mode, it will assign that sensors ID to the location on the vehicle relative to the order in which it was learned.

Learn Mode Cancellation

The Learn mode will cancel if the ignition is cycled to OFF or if more than 2 minutes has elapsed for any sensor that has not been learned. If the relearn mode is cancelled before the first sensor is learned, the original sensor IDs will be maintained. If the relearn mode is canceled after the first sensor is learned, the following will occur:

- All stored sensor IDs will be invalidated in the BCM memory.
- If equipped, the driver information center will display dashes instead of tire pressures.
- DTC C0775 will be set.

These conditions will now require the Learn procedure to be repeated for the system to function properly.

Tire Pressure Monitor Learn Procedure

NOTE: In the event when a particular sensor is activated and the horn does not chirp, it may be necessary to rotate the wheel valve stem to a different position due to the sensor signal is being blocked by another component.

1. Apply park brake (manual transmission only).

2. Ignition ON, using a scan tool or driver information center buttons (refer to owners manual), initiate the Tire Pressure Sensors Learn mode. A double horn chirp will sound indicating the Learn mode has been enabled. The left front turn signal will also be illuminated.
3. Starting with the left front tire, active the sensor by holding the antenna of the tire pressure monitor special tool aimed upward against the tire sidewall close to the wheel rim at the valve stem location. Press and release the activate button. Ensure that the transmit indicator on the special tool indicates that the sensor activation signal is being transmitted. Wait for a horn chirp. If the horn does not chirp, repeat the sensor activation sequence with the tool. Once the horn chirp has sounded, the sensor information is learned and the turn signal in the next location to be learned will illuminate.
4. After the horn chirp has sounded and the right front turn signal is illuminated, repeat step 3 for the remaining 3 sensors in the following order:
    1. Right front
    2. Right rear
    3. Left rear
5. When the left rear sensor has been learned and a double horn chirp has sounded, the learn process is complete and the BCM exits the Learn mode.

DESCRIPTION AND OPERATION

TIRE PRESSURE MONITOR DESCRIPTION AND OPERATION

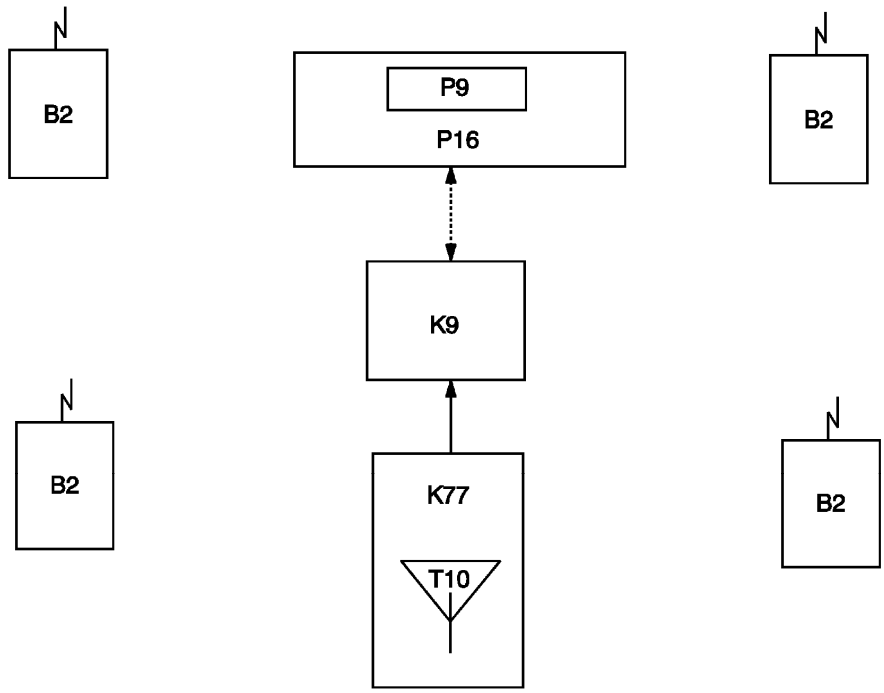

Fig. 4: Tire Pressure Monitor Operation Graph
Courtesy of GENERAL MOTORS COMPANY

Solid Line - Hard Wire I/O Dash Line - Serial Data	
B2	Tire Pressure Sensor
K9	Body Control Module (BCM)
K77	Remote Control Door Lock Receiver
P9	Driver Information Center Display
P16	Instrument Cluster
T10	Keyless Entry Antenna

Special Tools

- **EL-46079/J-46079** Tire Pressure Monitor Diagnostic Tool
- **EL-50448** Tire Pressure Monitor Sensor Activation Tool

For equivalent regional tools, refer to **Special Tools**.

The tire pressure monitor system warns the driver when a significant loss, or gain of tire pressure occurs in any of the 4 tires and allows the driver to display the individual tire pressures and their locations on the driver information center.

The system uses the body control module (BCM), driver information center, instrument cluster, a radio frequency (RF) transmitting pressure sensor in each wheel/tire assembly, and the serial data circuit to perform the system functions. Each sensor has an internal power supply with an approximate 10 year service life.

When the vehicle is stationary, the sensor's internal accelerometer is inactive, which puts the sensors into a Stationary state. In this state the sensors sample tire pressure once every 30 seconds and do not transmit at all if the tire pressure does not change. As vehicle speed increases, centrifugal force activates the sensors internal accelerometer causing the sensors to go into Wake and then Drive mode. In Drive mode, the sensors sample tire pressure once every 30 seconds and transmit in Drive mode once every 60 seconds. The BCM receives and translates the data contained in each sensors RF transmission into sensor presence, sensor mode, and tire pressure. The BCM sends the tire pressure and tire location data to the driver information center via the serial data circuit where they are displayed.

The sensors continuously compare their last pressure sample to their current pressure sample and will transmit in Learn Mode-Pressure Triggered if a 8.3 kPa (1.2 psi) change in tire pressure has been detected in either a Stationary or Drive state. When the tire pressure monitor system detects a significant loss, or gain of tire pressure, the tire pressure monitor indicator icon is illuminated on the instrument cluster and if equipped, a check tire pressure type message is displayed on the driver information center. Both the indicator icon and driver information center message can be cleared by adjusting the tire pressures to the recommended pressures and driving the vehicle above 40 km/h (25 mph) for at least 2 minutes.

If power is disconnected from the BCM or if the vehicle battery is disconnected, each tire pressure monitor sensor ID is retained but all of the tire pressure information is lost. Under these circumstances the BCM cannot assume that the tire pressures were maintained over an unknown period of time. If equipped, the driver information center will display all dashes and the scan tool will indicate a default tire pressure value of 1020 kPa (148 psi) for each tire. Driving the vehicle above 40 km/h (25 mph) for at least 2 minutes will activate the

sensors causing the driver information center to display the current tire pressures. The **EL-46079/J-46079** tire pressure monitor diagnostic tool, **EL-50448** tire pressure monitor sensor activation tool, or equivalent may also be used to activate the sensors as well.

The BCM has the ability to detect malfunctions within the tire pressure monitor system. In the event a DTC is set, the tire pressure monitor indicator icon on the instrument cluster will flash for 1 minute and then remain illuminated after the ignition is turned ON and the instrument cluster bulb check has been completed. Any malfunction detected will cause the driver information center to display a service tire monitor system type message. For more information on other functions of the BCM, refer to **Keyless Entry System Description and Operation (without BTM)** , **Keyless Entry System Description and Operation (with BTM)** .

SPECIAL TOOLS AND EQUIPMENT

SPECIAL TOOLS

Illustration	Tool Number/Description
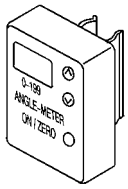	EL 46079 Tire Pressure Monitor Diagnostic Tool
	EL 50448 Tire Pressure Monitor Sensor Activation Tool

2013 SUSPENSION

Tires and Wheels - Cruze

SPECIFICATIONS

FASTENER TIGHTENING SPECIFICATIONS

Fastener Tightening Specifications

Application	Specification	
	Metric	English
Wheel Nuts	140 N.m	103 lb ft

ADHESIVES, FLUIDS, LUBRICANTS, AND SEALERS

Adhesives, Fluids, Lubricants, and Sealers

Application	Type of Material	GM Part Number	Canadian Part Number
Aluminum Wheels	Adhesive/Sealant	12378478	88900041
Wheels	Mounting Lubricant	12345884	5728223

DIAGNOSTIC INFORMATION AND PROCEDURES

TIRE DIAGNOSIS - IRREGULAR OR PREMATURE WEAR

Tire Wear

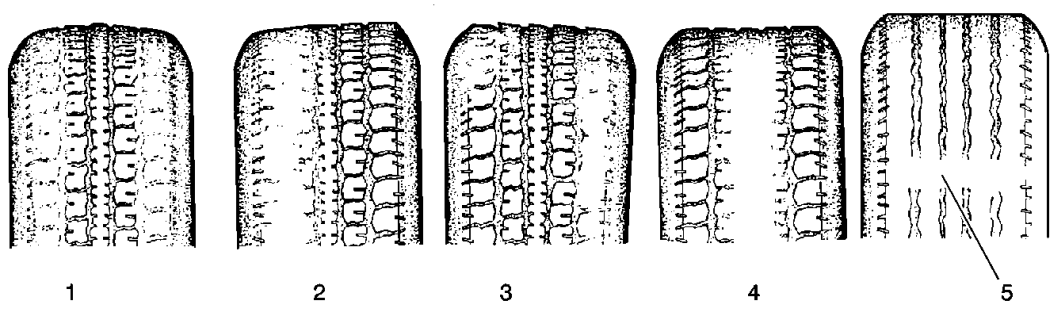

Fig. 1: Identifying Types Of Tire Wear
Courtesy of GENERAL MOTORS COMPANY

Callout	Component Name
1	Under-Inflation, Hard Cornering, Lack of Regular Rotation

2	Incorrect Wheel Alignment, Hard Cornering, Lack of Regular Rotation
3	Incorrect Wheel Alignment
4	Over-Inflation, Heavy Acceleration, Lack of Regular Rotation
5	Normal Wear to the Wear Indicator

Inspection Procedure

1. Inspect the front tire wear.
2. Inspect the rear tire wear.
3. Rotate the tires if any of the following conditions exist:
    - The amount of time or mileage since the last tire rotation matches the maintenance schedule.
    - The outer tread blocks are worn more than the middle tread blocks (1).
    - The outer tread blocks are worn more than the inner tread blocks (2).
    - The middle tread blocks are worn more than the outer tread blocks (4).
4. Measure the wheel alignment if any of the following conditions exist:
    - The tread blocks have feathered edges (3).
    - The outer tread blocks are worn more than the inner tread blocks (2).
    - The inner tread blocks are worn more than the outer tread blocks (2).
5. Inspect the struts or the shock absorbers if the tire tread exhibits a cupped appearance (3).

TIRE DIAGNOSIS - WADDLE COMPLAINT

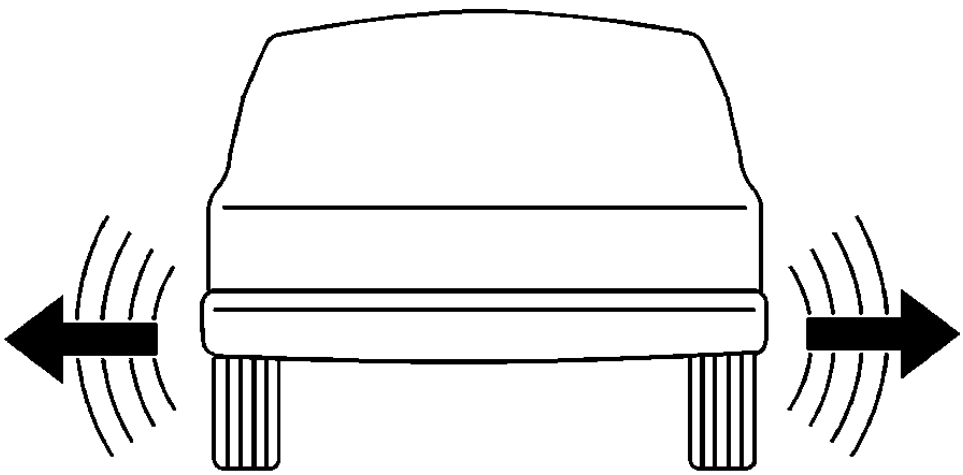

Fig. 2: Identifying Tire Wobble/Waddle
Courtesy of GENERAL MOTORS COMPANY

Tire waddle is a side to side movement at the front of the vehicle and/or the rear of the vehicle. Tire waddle can be caused by the following conditions:

- A steel belt not being straight within the tire
- Excessive lateral runout of the tire
- Excessive lateral runout of the wheel

The tire waddle is most noticeable at a low speed of about 8-48 km/h (5-30 mph). Tire waddle may appear as ride roughness at 80-113 km/h (50-70 mph). Tire waddle may appear as a vibration at 80-113 km/h (50-70 mph).

Inspection Procedure

1. Raise and support the vehicle with safety stands. Refer to **Lifting and Jacking the Vehicle** .

WARNING: Wear gloves when inspecting the tires in order to prevent personal injury from steel belts sticking through the tire.

2. Perform the following preliminary inspection:
    1. Mark the tire with a crayon in order to note the start and the stop position.
    2. Rotate each tire and wheel by hand.
    3. Inspect the tire for bulges or bent wheels. Replace as necessary.
3. Use tire substitution in order to identify the faulty tire. Perform the following steps for a tire substitution check:
    1. Use a comparable tire in order to replace each tire, one at a time.
    2. Test drive the vehicle.
    3. If the problem is tire or wheel related, you will eliminate the problem when you remove the faulty tire from the vehicle.

WHEEL MOUNTING SURFACE CHECK

Replace any wheels that are bent or dented, or have excessive lateral or radial runout. Wheels with runout greater than specified may cause objectionable vibrations.

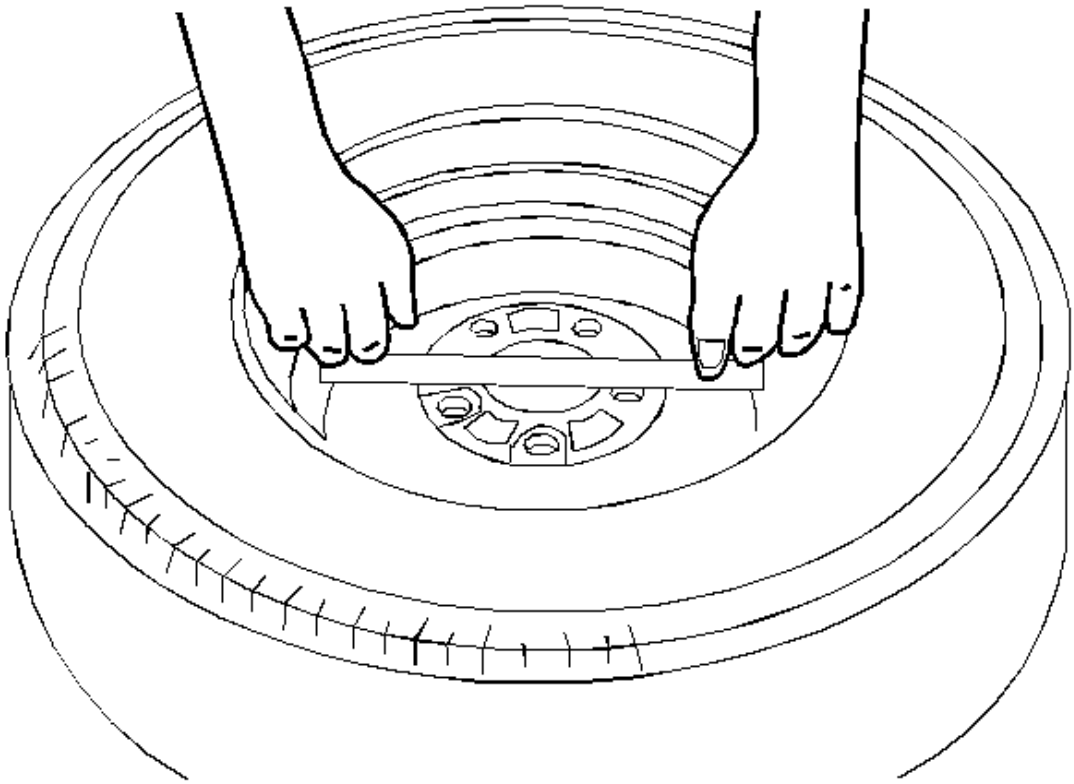

Fig. 3: Checking Wheel Mounting Surface
Courtesy of GENERAL MOTORS COMPANY

1. Thoroughly clean the wheel mounting surface with a clean shop towel and denatured alcohol, or equivalent.
2. Use a straight edge 203-229 mm (8-9 in) long. Place the straight edge on the wheel inboard mounting surface. Try to rock the straight edge up and down within the mounting surface.
3. For aluminum flat-mount wheels, repeat the procedure in step 2 on at least 3-4 different positions on the inboard mounting surface.

   If you can rock the straight edge, the mounting surface is bent and you must replace the wheel.

4. Inspect the mounting wheel/nut holes for damage caused from over-torquing the wheel/nuts. Inspect for collapsed wheel/nut bosses. Inspect for cracked wheel bosses.

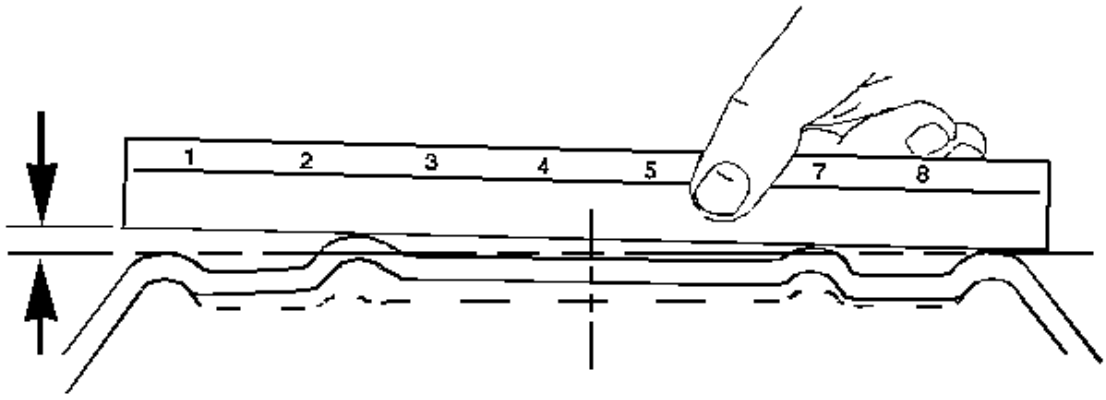

Fig. 4: Inspecting Wheel Inboard Mounting Surface
Courtesy of GENERAL MOTORS COMPANY

5. For steel wheels, repeat the procedure in step 2 on at least 3-4 different positions on the inboard mounting surface.
    - The outer mounting ring is designed to be raised slightly above the inner mounting ring.
    - If you can rock the straight edge, the mounting surface is bent and you must replace the wheel.

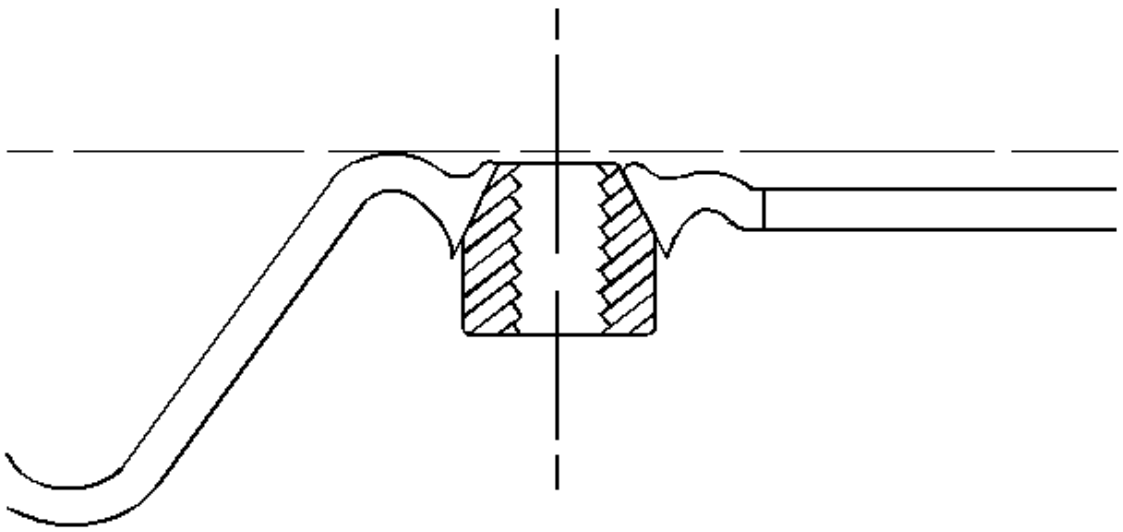

Fig. 5: Mounting Wheel/Nut Holes
Courtesy of GENERAL MOTORS COMPANY

6. Inspect the mounting wheel/nut holes for damage caused from over-torquing the wheel/nuts. Inspect for collapsed wheel/nut bosses. Inspect for cracked wheel bosses.

CAUTION: The use of non-GM original equipment wheels may cause:

- **Damage to the wheel bearing, the wheel fasteners and the wheel**
- **Tire damage caused by the modified clearance to the adjacent vehicle components**
- **Adverse vehicle steering stability caused by the modified scrub radius**
- **Damage to the vehicle caused by the modified ground clearance**
- **Speedometer and odometer inaccuracy**

NOTE:

- **Replacement wheels must be equivalent to the original equipment wheels in the following ways:**
  - **The load capacity**
  - **The wheel diameter**
  - **The rim width**
  - **The wheel offset**
  - **The mounting configuration**
- **A wheel of the incorrect size or type may affect the following conditions:**
  - **Wheel and hub-bearing life**
  - **Brake cooling**
  - **Speedometer/odometer calibration**
  - **Vehicle ground clearance**
  - **Tire clearance to the body and the chassis**

7. Replace the wheel if the wheel is bent.
8. Replace the wheel if the wheel/nut boss area is cracked.

Identify steel wheels with a 2 or 3-letter code stamped into the rim near the valve stem. Aluminum wheels have the code, the part number, and the manufacturer identification cast into the back side of the wheel.

RADIAL TIRE LEAD/PULL CORRECTION

Radial Tire Lead/Pull Correction

Step	Action	Yes	No
DEFINITION: Lead/pull is the deviation of the vehicle from a straight path on a level road with no pressure on the steering wheel.			
1	Did you perform the Vehicle Leads/Pull diagnostic table?	Go to **Step 2**	Go to **Vehicle Leads/Pulls**
2	Road test the vehicle to verify the complaint. Select a smooth level surface to perform the test. Does the condition exist?	Go to **Step 3**	System OK
3	1. Cross-switch the front tire/wheel assemblies. Refer to **Tire and Wheel Removal and Installation**. 2. Road test the vehicle on a smooth level surface. Does the vehicle still lead/pull?	Go to **Step 4**	System OK
4	Does the vehicle lead/pull in the		Go to **Wheel Alignment**

	opposite direction?	Go to **Step 5**	**Measurement**
5	1. Cross-switch the left front tire/wheel assembly with the left rear tire/wheel assembly. Refer to **Tire and Wheel Removal and Installation**. 2. Road test the vehicle on a smooth level surface. Does the vehicle still lead/pull?	Go to **Step 6**	Go to **Step 7**
6	1. Cross-switch the right front tire/wheel assembly with the right rear tire/wheel assembly. Refer to **Tire and Wheel Removal and Installation**. 2. Road test the vehicle on a smooth level surface. Does the vehicle still lead/pull?	Go to **Wheel Alignment Measurement**	Go to **Step 8**
7	Replace the left rear tire. Refer to **Tire Dismounting and Mounting**. Is the repair complete?	Go to **Step 9**	-
8	Replace the right rear tire. Refer to **Tire Dismounting and Mounting**. Is the repair complete?	Go to **Step 9**	-
9	Verify proper vehicle operation. Does the original condition still exist?	Go to **Step 1**	System OK

REPAIR INSTRUCTIONS

ALUMINUM WHEEL REFINISHING

Aluminum Wheel Refinishing Guidelines

WARNING: To avoid personal injury when exposed to plastic media blast, hand and/or lathe sanding dust, primer, color coat, and clearcoat, you must work in a properly ventilated area, wearing an approved respirator, eye protection, earplugs and protective gloves and clothing.

Evaluating Damage

NOTE:

- **Inspect the wheel for corrosion, scrapes, gouges, etc. Damage MUST NOT be deeper than what can be sanded or polished off.**

- **Inspect the wheel for cracks. If cracks are found, discard the wheel.**
- **ALL wheels with bent rim flanges must not be repaired or refinished.**
- **The re-machining and the re-clear coating of aluminum wheels is not recommended in the dealer environment due to concerns of repair durability.**
- **Do not use any re-machining process that removes aluminum. This could affect the dimensions and function of the wheel.**

Aluminum Wheel Refinishing General Recommendations/Options

- Painted aluminum wheels use a primer, color coat, and clearcoat procedure. If the paint is damaged, refinishing is possible. As with polished wheels, all original coatings must be removed first. Media blasting is recommended. (See option number 1).
- If the clearcoat is damaged, it is possible to refinish with clearcoat only, however, the required refinishing process cannot be performed in the dealer environment. Refer to Refinishers Responsibility (Repair option number 2).
- Re-plating of chrome-plated aluminum wheels is not recommended.

Repair Option Number 1

Material Required/Information Resources

- The Paint Manufacturer's Color Book
- Refer to the latest GM Approved Refinish Materials Booklet (GM 4901 MD-2005) for specific products for aluminum refinishing.
- To access the booklet, go to www.gmgoodwrench.com. Click on GM Collision Parts. Click on GM Technical Repair Information, select Paint Shop.
- A Color Compatibility chart is also at this site defining what colors are used on what models.

NOTE: Chemical strippers are not recommended.

- Refer to specific Paint Manufacturers for refinish procedures and process pertaining to "Aluminum Refinishing".

The procedure requires the wheel surface to be plastic media blasted to remove old paint or clearcoat.

General Color Selection

- If the wheels being painted were previously clearcoated aluminum, and a painted aluminum look is desired, using Corsican Silver WAEQ9283 for a fine "aluminum-like" look, or Sparkle Silver WA9967 for a very bright look. Body color is another option to the customer that may also be used.
- Some specific colors may be recommended on certain models.
- If painting wheels that were previously clearcoated aluminum, it is recommended that all 4 wheels and their center caps be refinished to maintain color uniformity.

General Refinishing Procedures - Removal

1. Remove the wheels from the vehicle. The tires may remain mounted on the wheels.
2. Remove the balance weights and mark their locations on the tire.
3. Remove excess grease, etc. from the wheels with wax and grease remover.
4. Have the wheels plastic media blasted to remove the clearcoat.

NOTE: MASK OFF ALL MOUNTING SURFACES, whenever a wheel is refinished. The mounting surface and the wheel nut contact surfaces must not be painted or clearcoated. Coating these surfaces could affect the wheel nut torque.

5. Clean and mask and paint the wheels.

General Refinishing Procedures - Installation

1. Unmask the wheels.
2. Clean all wheel mounting surface of any corrosion, overspray, or dirt.

NOTE: When re-balancing a tire on an aluminum wheel, coated balance weights must be used in order to reduce the chance of future cosmetic damage.

3. Install NEW coated balance weights at marked locations.

NOTE: Use a torque stick on an impact wrench, or a torque wrench to consistently and uniformly fasten the wheel to the specified torque for the vehicle. The star pattern must be followed.

4. Install wheels on vehicle.

Repair Option Number 2 - Outside Companies

- Some outside companies are offering wheel refinishing services. One such company, Transwheel Corporation (800-892-3733), provides this service with GM guidelines. Other companies may also exist.
- Any process that re-machines or otherwise remanufactures the wheel should not be used.
- The wheel ID must be recorded and follow the wheel throughout the process to assure that the same wheel is returned. The refinisher must permanently ID stamp the wheel and warrant the painted/clearcoated surfaces for a minimum of one year or the remainder of the new vehicle warranty, whichever is longer.
- Paint and/or clearcoat must not be present on the following surfaces, the nut chamfers, the wheel mounting surfaces and the wheel pilot hole.
- A refinishers responsibility includes inspecting for cracks using the Zyglo system or the equivalent. Any cracked wheels must not be refinished. No welding, hammering or reforming of any kind is allowed. A plastic media blast may be used for clean up of the wheel. Hand and/or lathe sanding of the machined surface and the wheel window is allowed. Material removal, though, must be kept to a minimum.

TIRE AND WHEEL REMOVAL AND INSTALLATION

Removal Procedure

1. Raise and suitably support the vehicle. Refer to **Lifting and Jacking the Vehicle** .

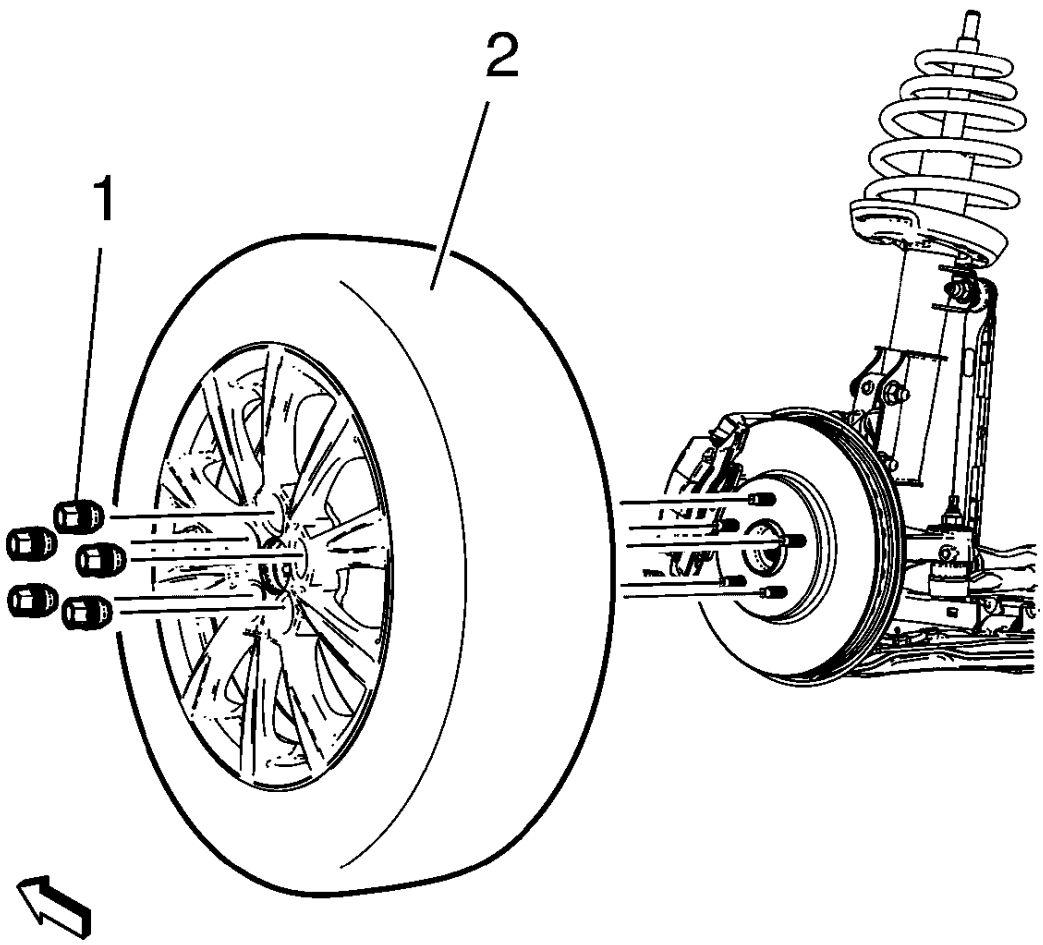

Fig. 6: Wheel And Nuts
Courtesy of GENERAL MOTORS COMPANY

2. Remove the wheel center cap.
3. Mark the relationship of the wheel (2) to the hub.
4. Remove the wheel nuts (1).

WARNING: If penetrating oil gets on the vertical surfaces between the wheel and the rotor or drum it could cause the wheel to work loose as the vehicle is driven, resulting in loss of control and an injury accident.

CAUTION: Removing the wheel may be difficult because of foreign materials or a tight fit between the wheel and the hub/rotor. Slightly tap the tire side wall with a rubber mallet in order to remove the wheel. Failure to follow these instructions may result in damage to the wheel.

5. Remove the tire and wheel assembly (2) from the vehicle.

Installation Procedure

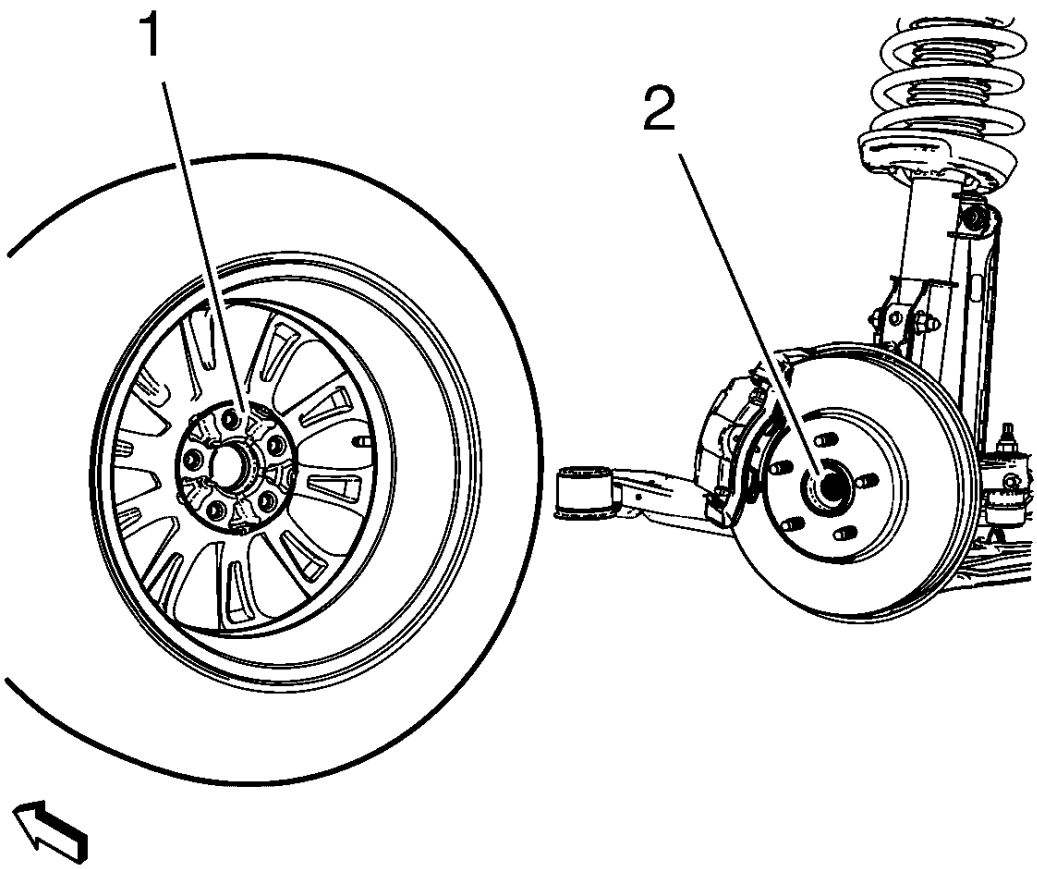

Fig. 7: Wheel And Hub
Courtesy of GENERAL MOTORS COMPANY

WARNING: Before installing the wheels, remove any buildup of corrosion on the wheel mounting surface and brake drum or disc mounting surface. Installing wheels with poor metal-to-metal contact at the mounting surfaces can cause wheel nuts to loosen. This can cause a wheel to come off when the vehicle is moving, causing loss of control and

possibly personal injury.

WARNING: Never grease or lubricate wheel nuts, studs and mounting surfaces. Wheel nuts, studs, and mounting surfaces must be clean and dry. Tightening the lubricated parts can cause damage to the wheel studs. This can cause a wheel to come off when the vehicle is moving, causing loss of control and possibly personal injury.

1. Remove any corrosion or foreign material from the wheel (1) and the hub (2) mounting surfaces.
2. Clean the threads on the wheel studs and wheel nuts.

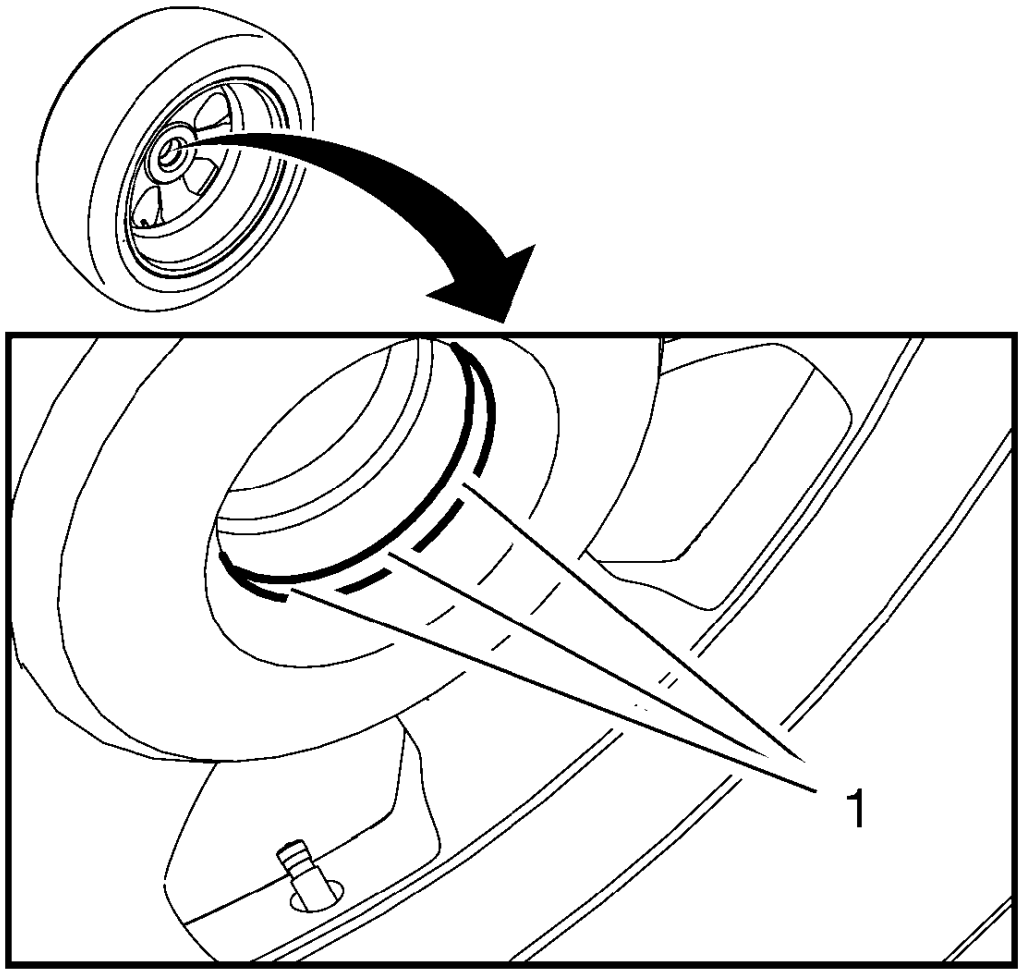

Fig. 8: Rim Inner Center Seat
Courtesy of GENERAL MOTORS COMPANY

NOTE: The disc wheels are aligned to the front wheel hubs by using the center hole or the wheel studs.

3. In order to prevent seizing up the centering seat to the wheel, lightly grease the inner center seat (1) of the rim with bearing grease before fitting.
4. Install the tire and wheel assembly. Align the locating mark of the wheel to the hub.

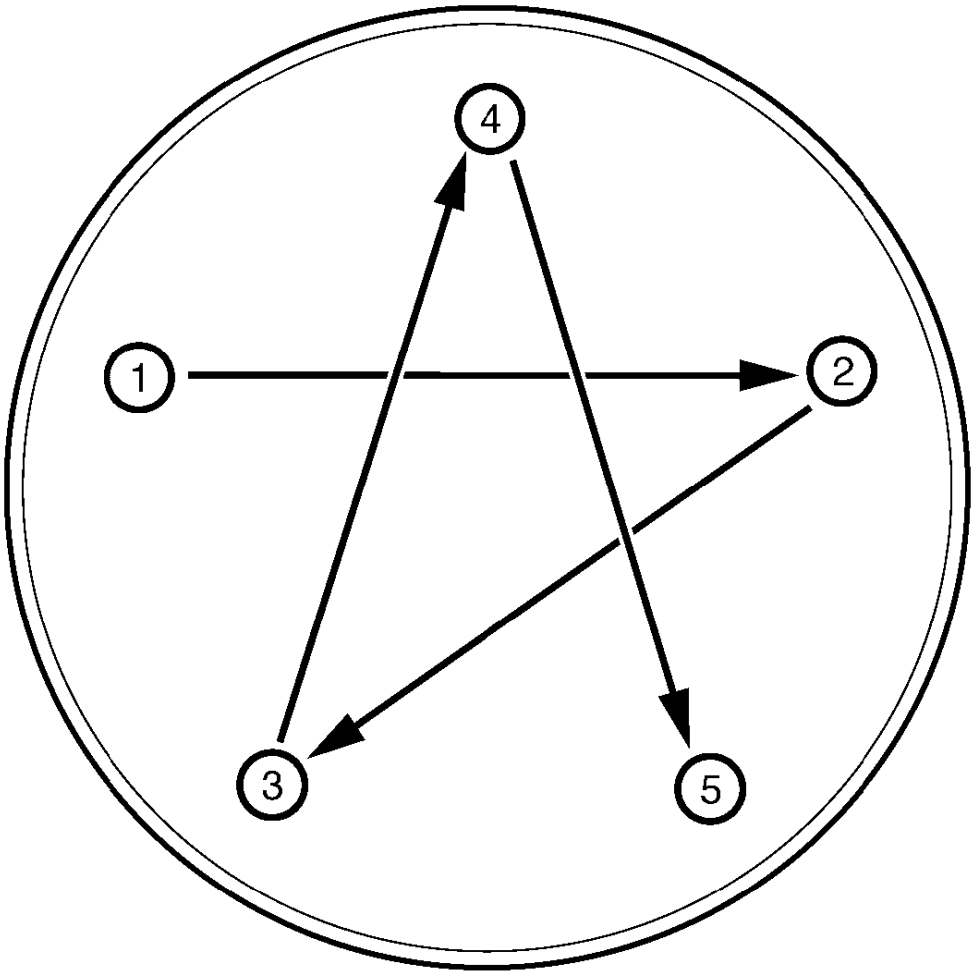

Fig. 9: Wheel Nut Tightening Sequence
Courtesy of GENERAL MOTORS COMPANY

5. Install the wheel nuts.

CAUTION: Refer to Fastener Caution .

NOTE: Tighten the nuts evenly and alternately in the sequence shown, in order to avoid excessive runout.

6. Tighten the wheel nuts in the sequence shown tighten the nuts in sequence to 140 N.m (103 lb ft).

7. Install the wheel center cap.
8. Lower the vehicle.

TIRE REPAIR

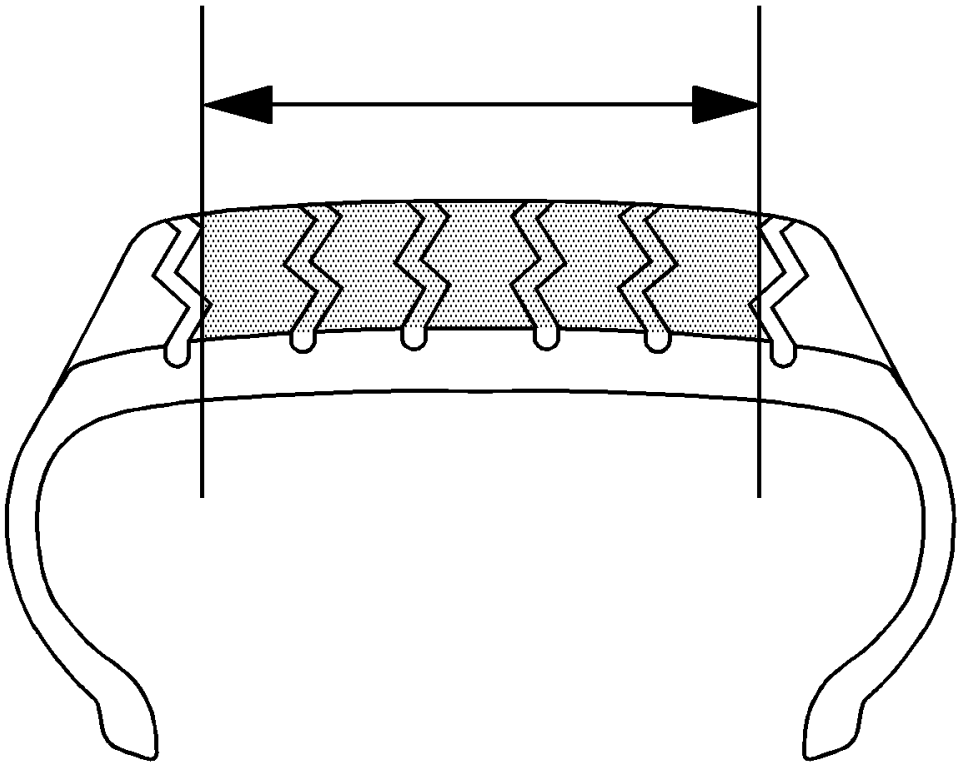

Fig. 10: Identifying Repairable Area On A Radial Tire
Courtesy of GENERAL MOTORS COMPANY

WARNING:

- **Tire changing can be dangerous and should be done by trained professionals using proper tools and procedures. Always read and understand any manufacturer's warnings contained in their customers literature or molded into the tire sidewall.**
- **Serious eye and ear injury may result from not wearing adequate eye and ear protection while repairing tires.**
- **NEVER inflate beyond 275 kPa (40 pounds) pressure to seat beads.**
- **NEVER stand, lean or reach over the assembly during inflation.**

NOTE: **Repairable area on a radial tire.**

- **NEVER repair tires worn to the tread indicators 1.59 mm (2/32 in) remaining depth.**
- **NEVER repair tires with a tread puncture larger than 6.35 mm (1/4 in).**
- **NEVER substitute an inner tube for a permissible or non-permissible repair.**
- **NEVER perform an outside-in tire repair (plug only, on the wheel).**
- **Every tire must be removed from the wheel for proper inspection and repair.**
- **Regardless of the type of repair used, the repair must seal the inner liner and fill the injury.**
- **Consult with repair material supplier/manufacturer for repair unit application procedures and repair tools/repair material recommendations.**

Three basic steps for tire puncture repair:

1. Remove the tire from the wheel for inspection and repair.
2. Fill the injury (puncture) to keep moisture out.
3. Seal the inner liner with a repair unit to prevent air loss.

External Inspection

1. Prior to demounting, inspect the tire surface, the valve and the wheel for the source of the leak by using a water and soap solution. Mark the injured area and totally deflate the tire by removing the valve core.
2. Demount the tire from the wheel and place the tire on a well-lighted spreader.

Internal Inspection

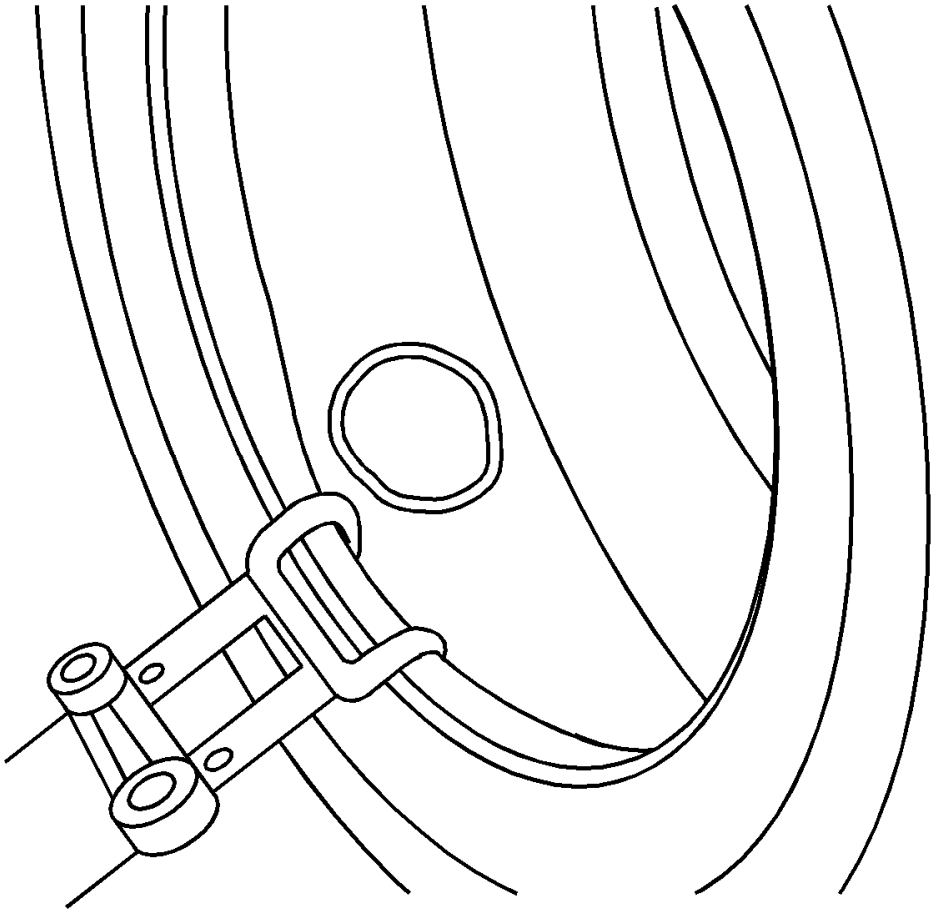

Fig. 11: Marking Tire Puncture Location
Courtesy of GENERAL MOTORS COMPANY

1. Spread the beads and mark the puncture with a tire crayon.
2. Inspect the inner tire for any signs of internal damage.
3. Remove the puncturing object, noting the direction of the penetration.
4. Probe the injury with a blunt awl in order to determine the extent and direction of the injury.
5. Remove any loose foreign material from the injury.
6. Punctures exceeding 6.35 mm (1/4 in) should not be repaired.

Cleaning

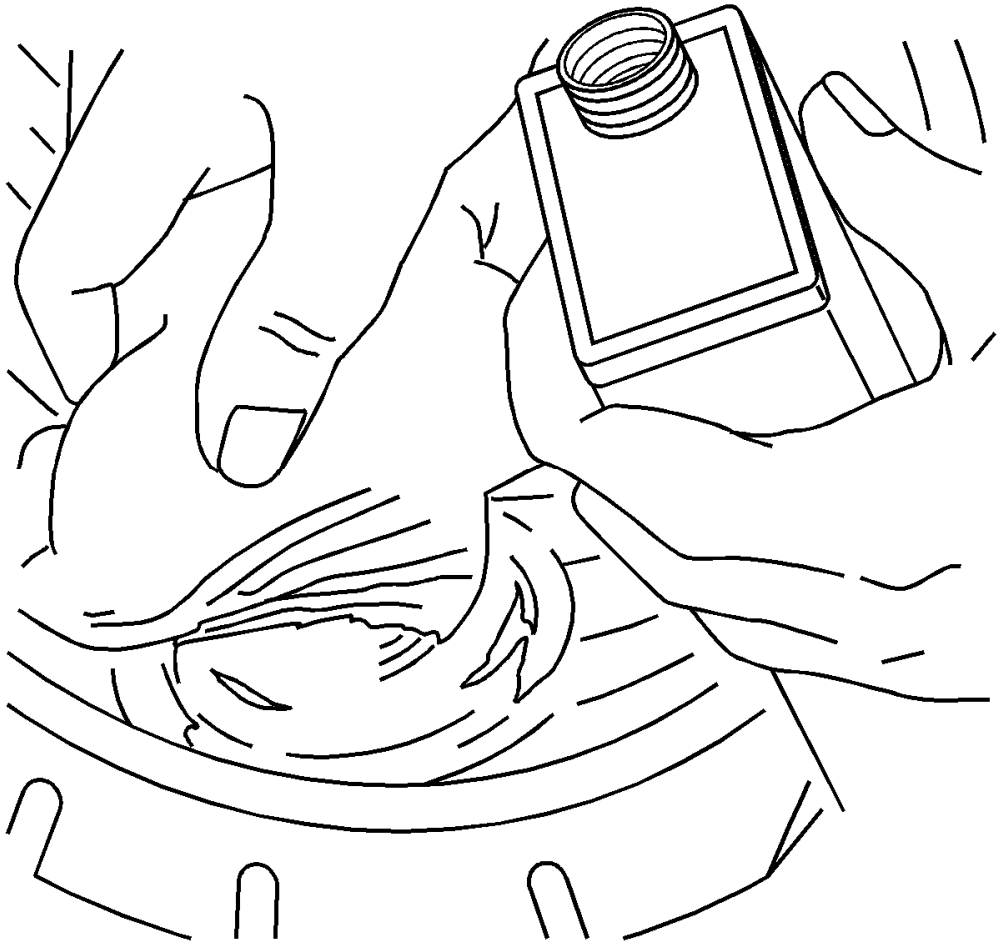

Fig. 12: Cleaning Repair Area
Courtesy of GENERAL MOTORS COMPANY

1. Clean the area around the puncture thoroughly with a proper liner cleaner, clean cloth and a scraper. This step serves to remove dirt and mold lubricants to insure proper adhesion and non-contamination of the buffing tool.
2. Refer to information on the product or manufacturer's Material Safety Data Sheet and follow guidelines for handling and disposal.

Clean the Injury Channel

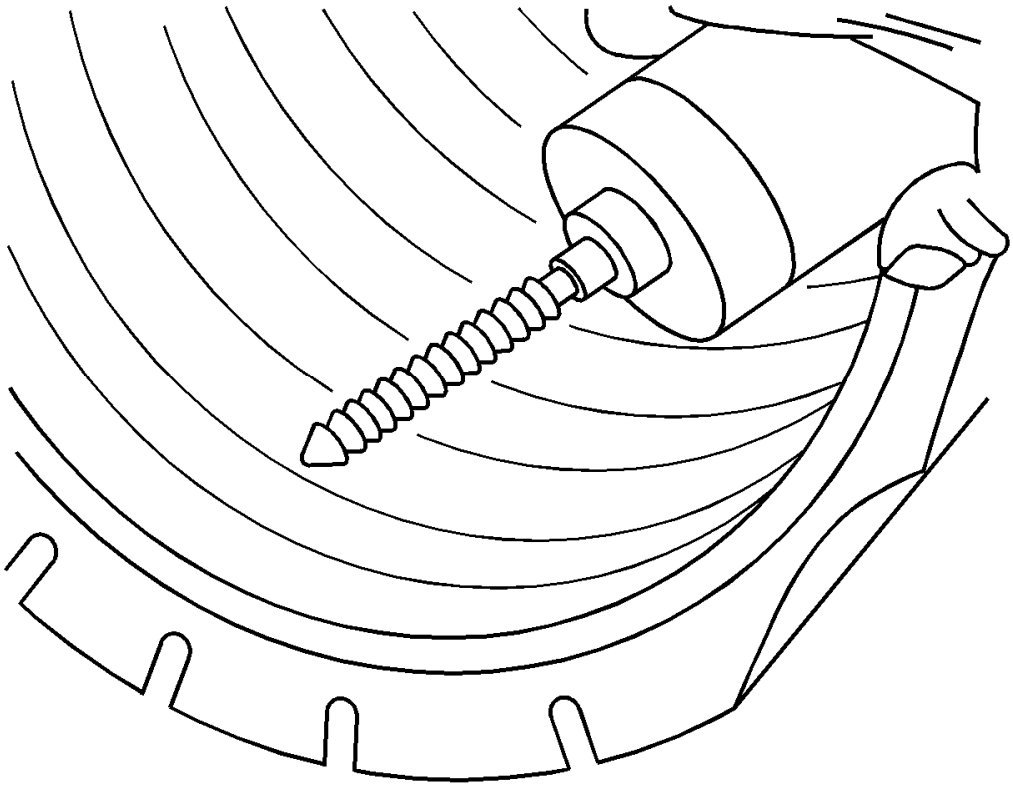

Fig. 13: Reaming Puncture Channel
Courtesy of GENERAL MOTORS COMPANY

1. Use a proper hand reamer, carbide cutter or drill bit to ream the puncture channel from the inside of the tire in order to clean the injury.
2. Remove steel wires protruding above the liner surface to prevent damage to the repair unit.
3. Consult your repair material supplier for recommended reaming tool(s).

Fill the Injury

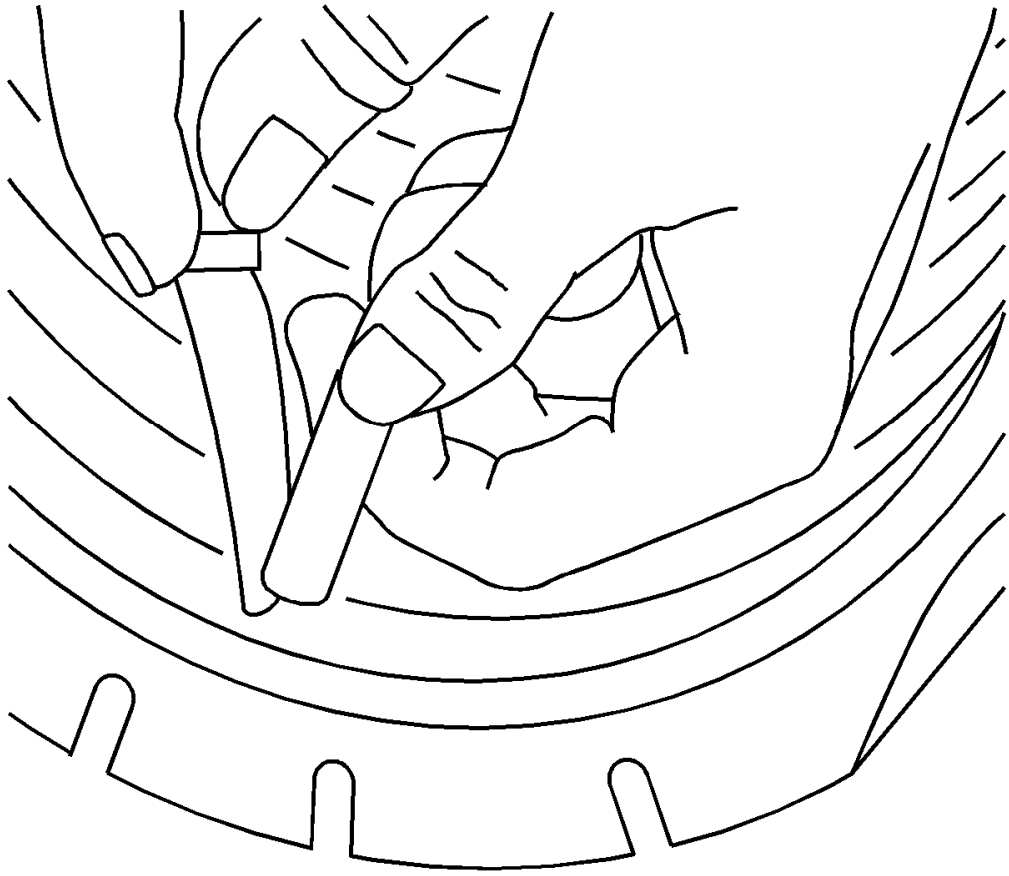

Fig. 14: Filling Injury Location
Courtesy of GENERAL MOTORS COMPANY

1. It is necessary to fill the injury channel to provide back up for the repair unit and to prevent moisture from entering the tire fabric and steel wires.
2. For combination repair/plug units skip this step. Cement the injured channel and fill the injury from the inside of the tire with the repair plug per repair material manufacturer's recommendations. Without stretching the plug, cut the plug off just above the inside tire surface.
3. Consult your repair material supplier for proper repair material selection.

Repair Unit Selection

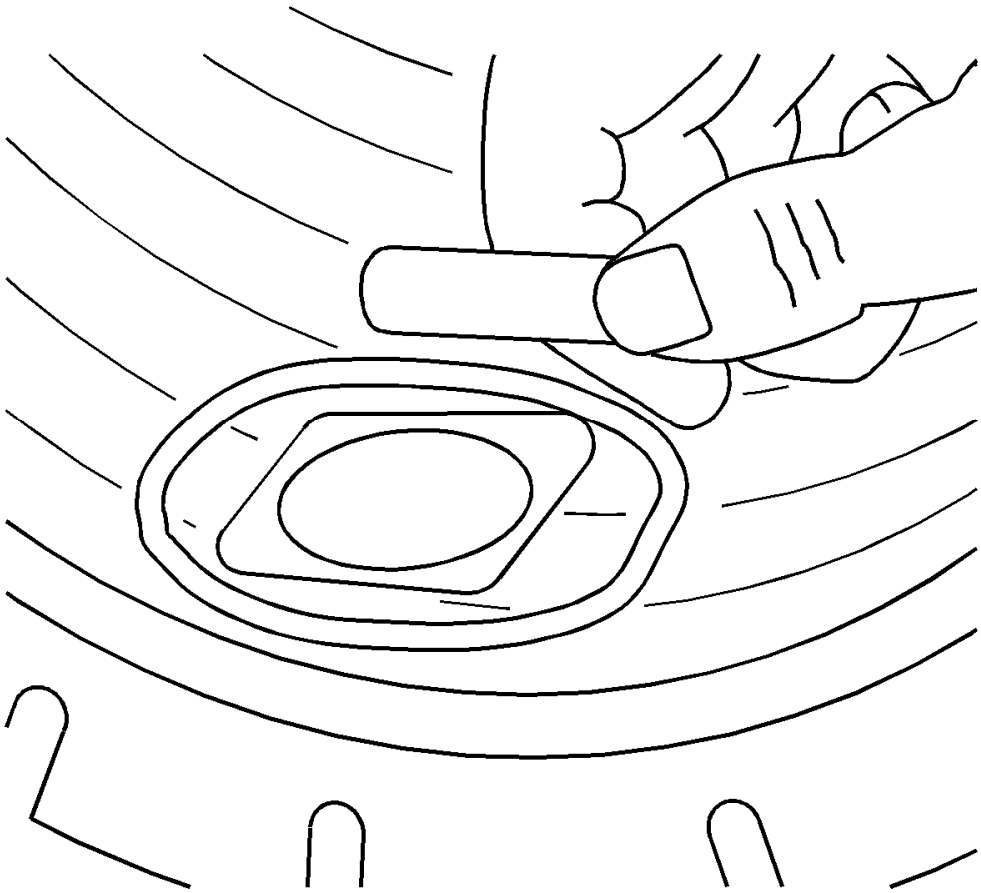

Fig. 15: Outlining Tire Injury Area
Courtesy of GENERAL MOTORS COMPANY

NOTE: Do not install the repair unit in this step.

1. Center the repair unit over the injury as a reference and outline an area larger than the unit so that buffing will not remove the crayon marks.
2. Remove the repair unit.
3. DO NOT overlap previous or multiple repair units.
4. Consult your repair material supplier for proper repair unit selection.

Buffing

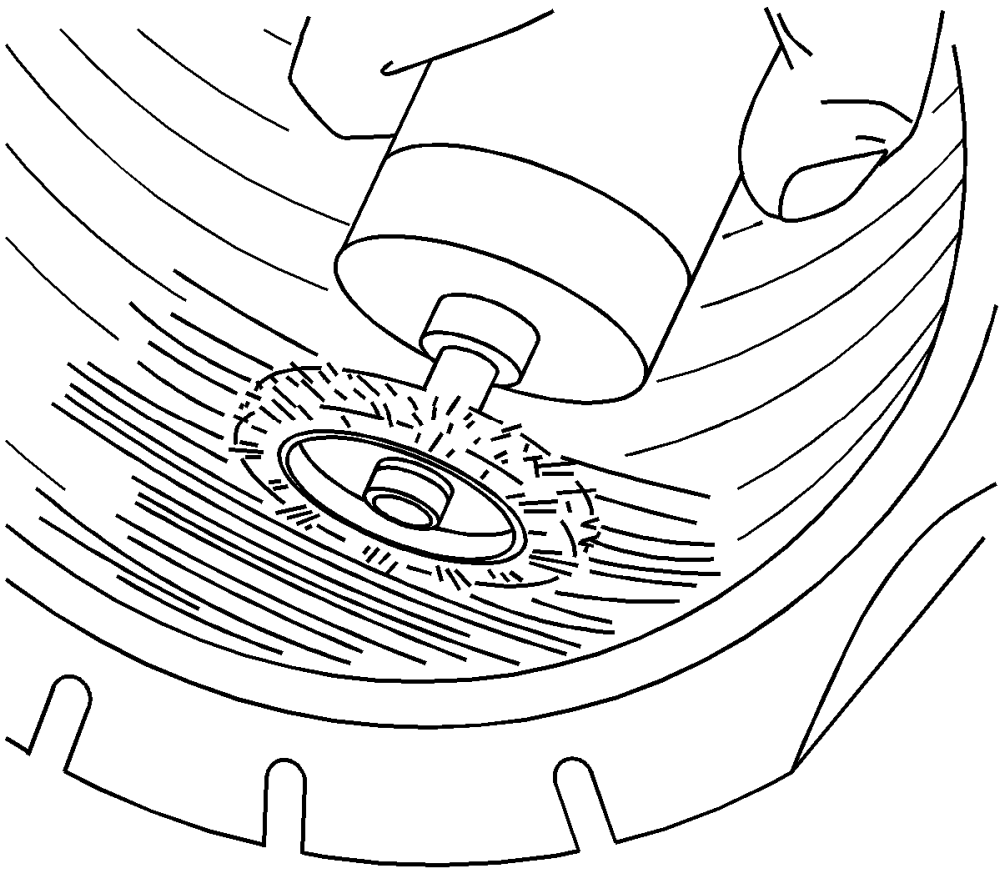

Fig. 16: Buffing Within Marked Area
Courtesy of GENERAL MOTORS COMPANY

1. To prevent contamination and preserve the outline, buff within the marked area thoroughly and evenly with a low speed buffing tool using a fine wire brush or gritted rasp.
2. Buff to a smooth velvet surface (RMA #1 or #2 buffed texture).
3. Use caution not to gouge the inner liner or expose casing fabric.
4. Remove any buffing dust with a vacuum cleaner.
5. Consult your repair material supplier for a proper buffing tool.

Cementing

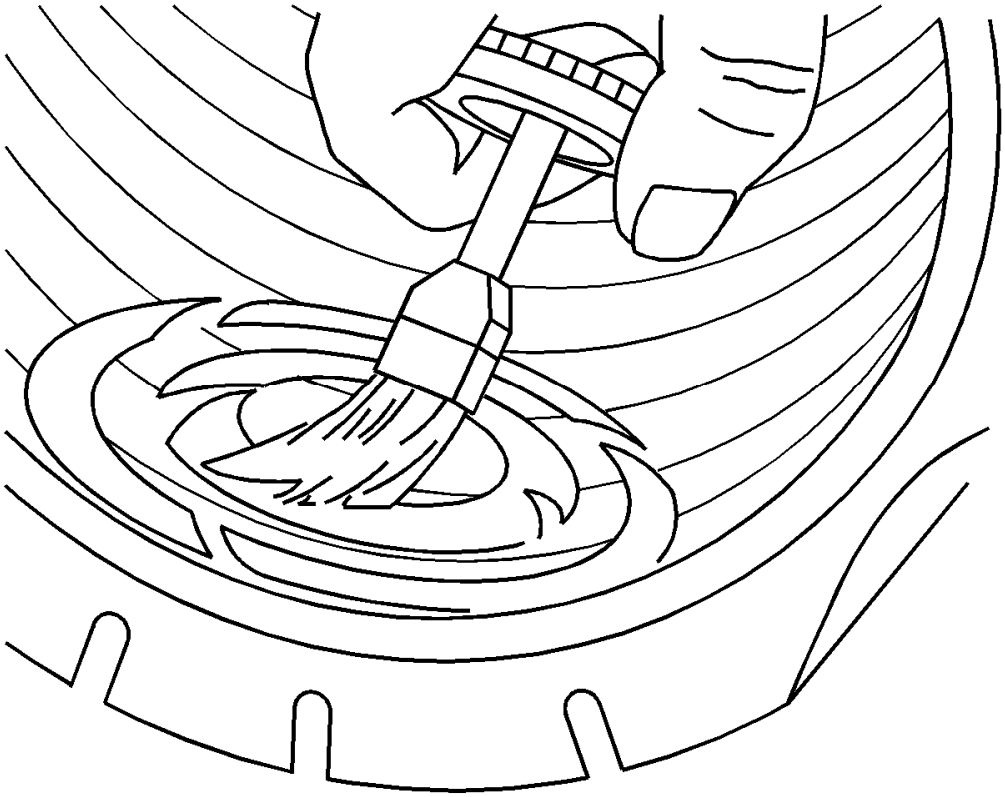

Fig. 17: Applying Chemical Cement
Courtesy of GENERAL MOTORS COMPANY

Apply chemical cement according to the repair material manufacturer's procedures.

Repair Unit Application

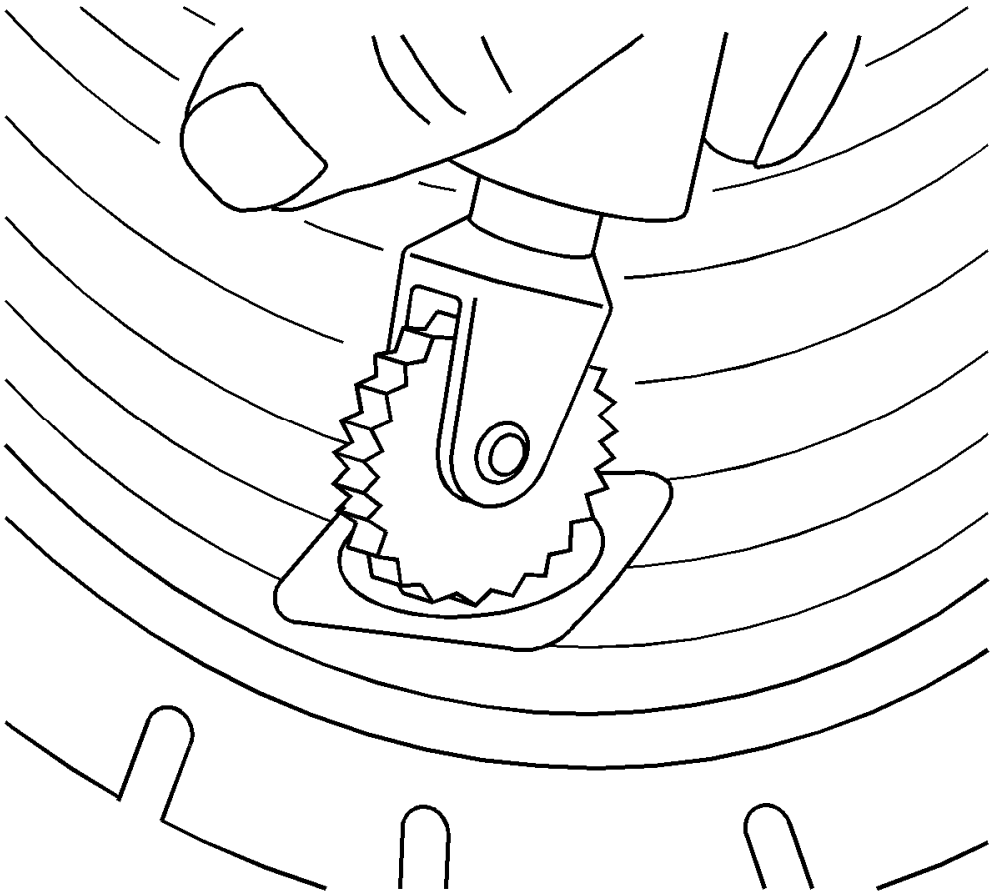

Fig. 18: Installing Repair Unit
Courtesy of GENERAL MOTORS COMPANY

The tire must be in the relaxed position when the repair unit is installed. Do not spread the beads excessively.

Two-Piece Plug and Repair Units

1. If applicable, install the repair unit so that the alignment is correct.
2. Center the repair unit over the injury and stitch down thoroughly with the stitching tool, working from the center out.

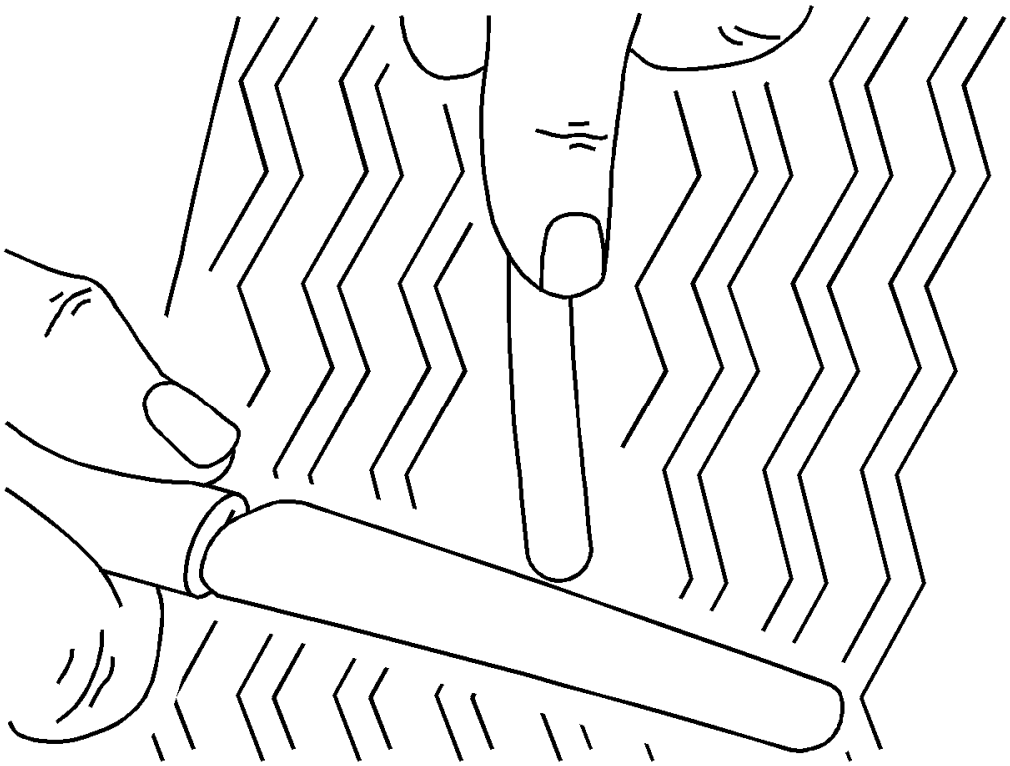

Fig. 19: Cutting Plug Material
Courtesy of GENERAL MOTORS COMPANY

3. Being careful not to stretch the plug material, cut the plug flush with the outer tread.

Combination Repair/Plug Units

1. Pull the plug through the injury until the repair just reaches the liner. Stitch down thoroughly.
2. Follow the repair material manufacturer's recommendations for further installation instructions.

   Consult your repair material supplier for the proper stitching tool.

Safety Cage

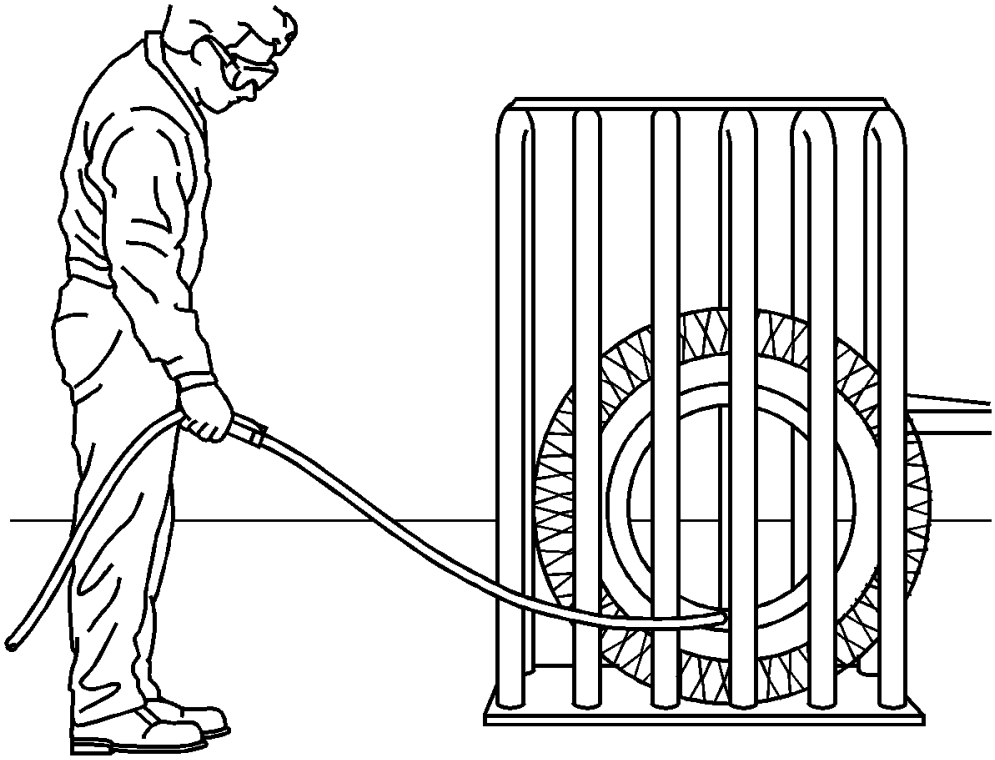

Fig. 20: Identifying Safety Cage
Courtesy of GENERAL MOTORS COMPANY

Some run flat tires may require more than 275 kPa (40 psi) to seat the bead. In such a case, a tire safety cage must be used. Consult the tire manufacturer for its individual repair policy.

Final Inspection

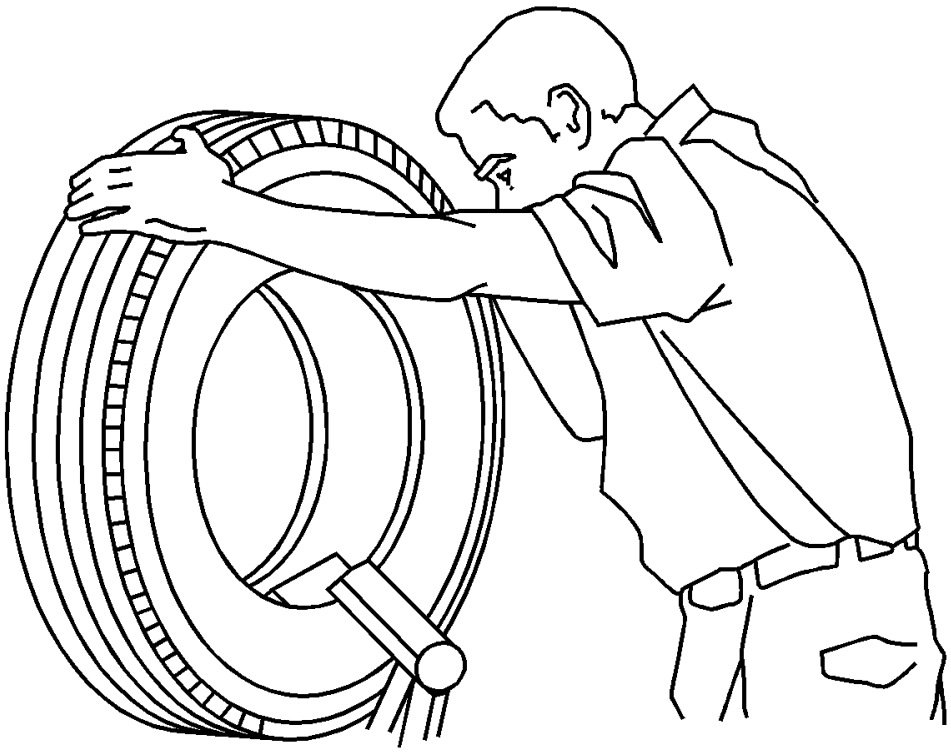

Fig. 21: Performing Final Inspection
Courtesy of GENERAL MOTORS COMPANY

1. After remounting and inflating the tire, check both beads, the repair and the valve with a water and soap solution in order to detect leaks.
2. If the tire continues to lose air, the tire must be demounted and reinspected.
3. Balance the tire and wheel assembly. Refer to **Tire and Wheel Assembly Balancing - Off Vehicle** .

For additional tire puncture repair information, contact:

Rubber Manufacturers Association (RMA)

1400 K Street, N.W., Suite 900

Washington

DC

20005-2403

Telephone: 202-682-4800

E-mail: info@rma.org

Website: www.rma.org

TIRE VALVE STEM REPLACEMENT (WITH TIRE PRESSURE MONITORING SYSTEM (SNAP IN STYLE))

Removal Procedure

1. Raise the vehicle on a suitable support. Refer to **Lifting and Jacking the Vehicle** .
2. Remove the tire/wheel assembly from the vehicle. Refer to **Tire and Wheel Removal and Installation**.
3. Dismount the tire from the rim. Refer to **Tire Dismounting and Mounting**.

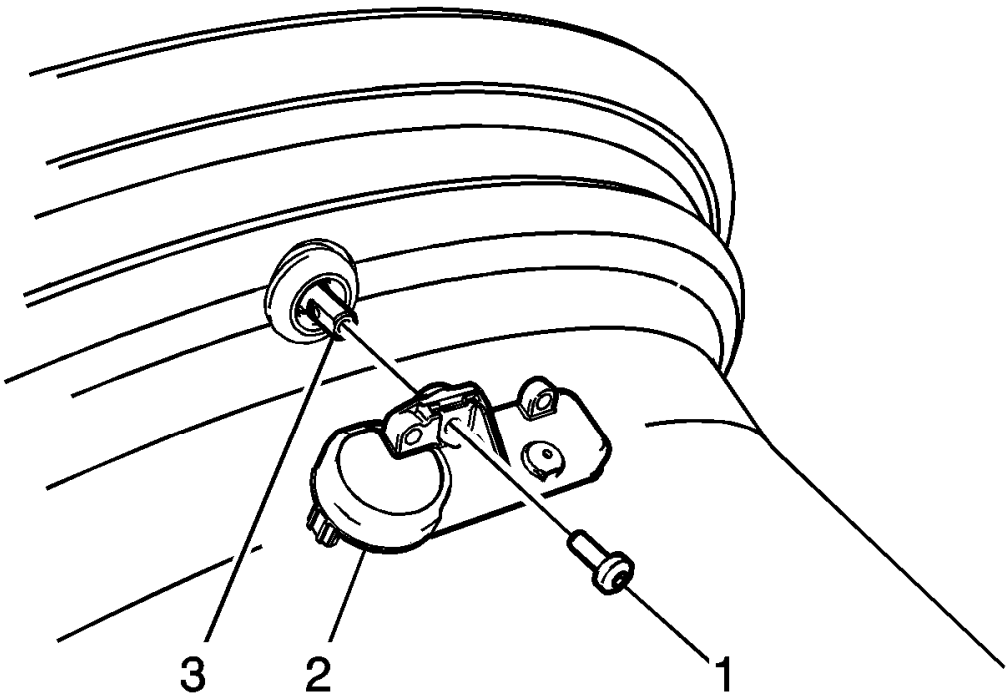

Fig. 22: View Of Tire Pressure Indicator Sensor
Courtesy of GENERAL MOTORS COMPANY

NOTE: When servicing the tire valve always use a new TORX screw during installation.

4. Remove the TORX screw (1) from the tire pressure monitoring (TPM) sensor (2) and pull it straight off the tire pressure valve stem (3).

CAUTION: Do not scratch or damage the clear coating on aluminum wheels with the tire changing equipment. Scratching the clear coating could cause the aluminum wheel to corrode and the clear coating to peel from the wheel.

5. Remove the tire pressure valve stem by pulling it through the rim.

Installation Procedure

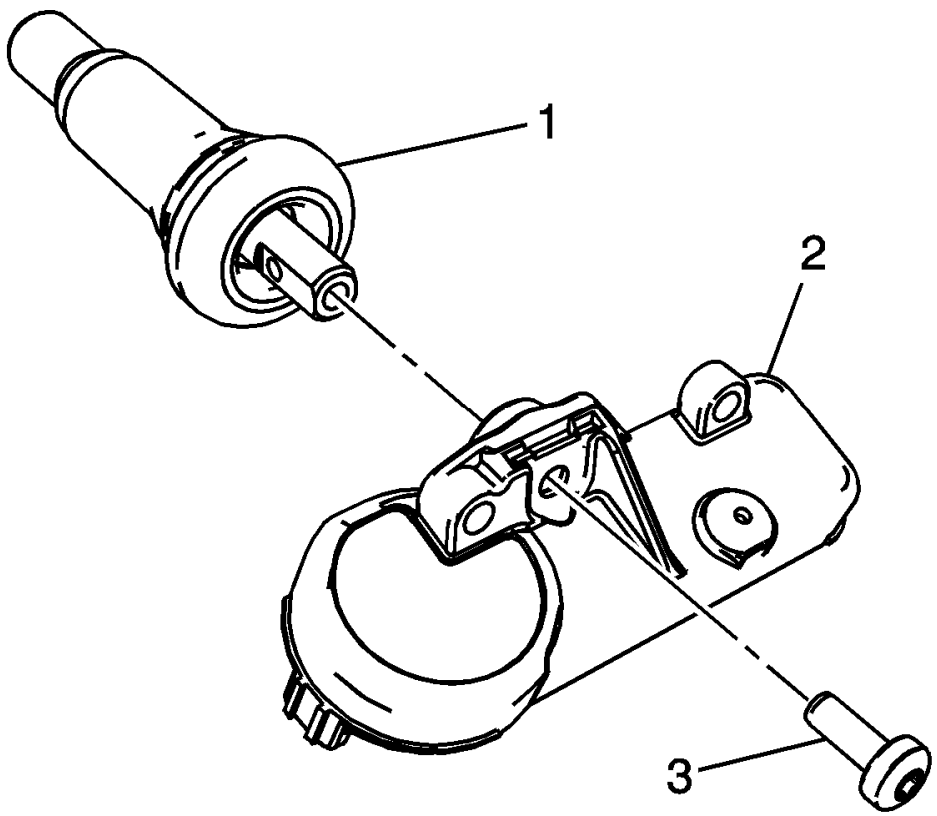

Fig. 23: View Of Tire Pressure Indicator Sensor
Courtesy of GENERAL MOTORS COMPANY

CAUTION: Refer to Fastener Caution .

NOTE:

- **Ensure the flat of the valve, lines up with the flats of the snap in the enclosure.**
- **TPM valves and TORX screws are single use items.**

1. Assemble the tire pressure sensor (2) to the valve stem and install the new TORX screw (3), tighten to 1.3 N.m (11.5 lb in).

NOTE: Use an approved tire mounting lubricant. DO NOT use silicon or corrosive base compounds to lubricate the tire bead and the wheel rim. A corrosive type compound can cause tire or rim deterioration.

2. Apply tire soap to the rubber portion of the valve stem (1).

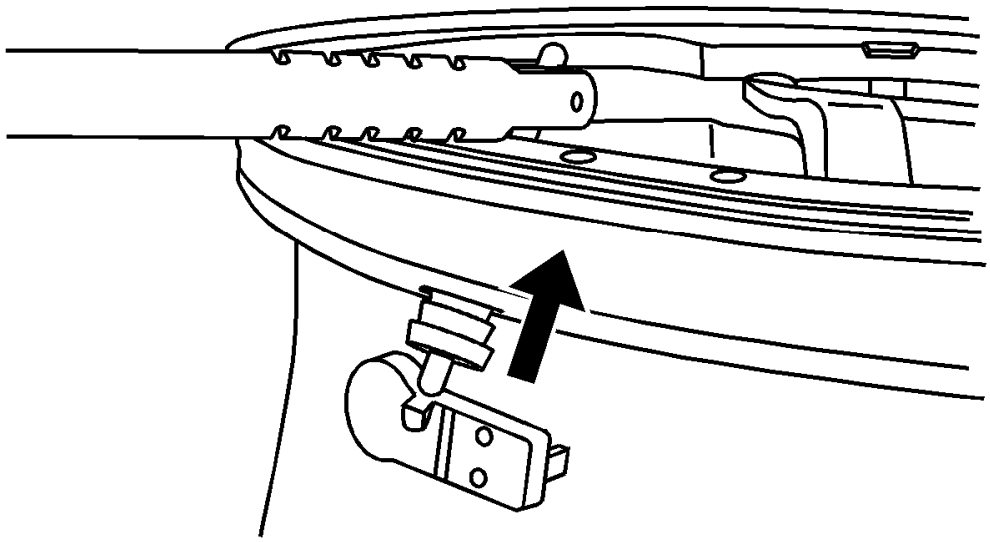

Fig. 24: View Of Tire Valve Stem Mounting Tool
Courtesy of GENERAL MOTORS COMPANY

3. Using a tire valve stem mounting tool, pull the valve stem through in a direction parallel to the valve hole on the rim.
4. Mount the tire to the rim. Refer to **Tire Dismounting and Mounting**.
5. Install the tire/wheel assembly on the vehicle. Refer to **Tire and Wheel Removal and Installation**.
6. Lower the vehicle.

TIRE DISMOUNTING AND MOUNTING

CAUTION: Use a tire changing machine in order to dismount tires. Do not use hand tools or tire irons alone in order to remove the tire from the wheel. Damage to the tire beads or the wheel rim could result.

CAUTION: Do not scratch or damage the clear coating on aluminum wheels with the tire changing equipment. Scratching the clear coating could cause the aluminum wheel to corrode and the clear coating to peel from the wheel.

CAUTION: Damage to either the tire bead or the wheel mounting holes can result from the use of improper wheel attachment or tire mounting procedures. It takes up to 70 seconds for all of the air to completely exhaust from a large tire. Failure to follow the proper procedures could cause the tire changer to put enough force on the tire to bend the wheel at the mounting surface. Such damage may result in vibration and/or shimmy, and under severe usage lead to wheel cracking.

1. Remove the valve core from the valve stem.
2. Deflate the tire completely.

NOTE: Rim-clamp European-type tire changers are recommended.

3. Use the tire changer in order to remove the tire from the wheel. Follow steps 4-7 to remove the tire from the wheel.

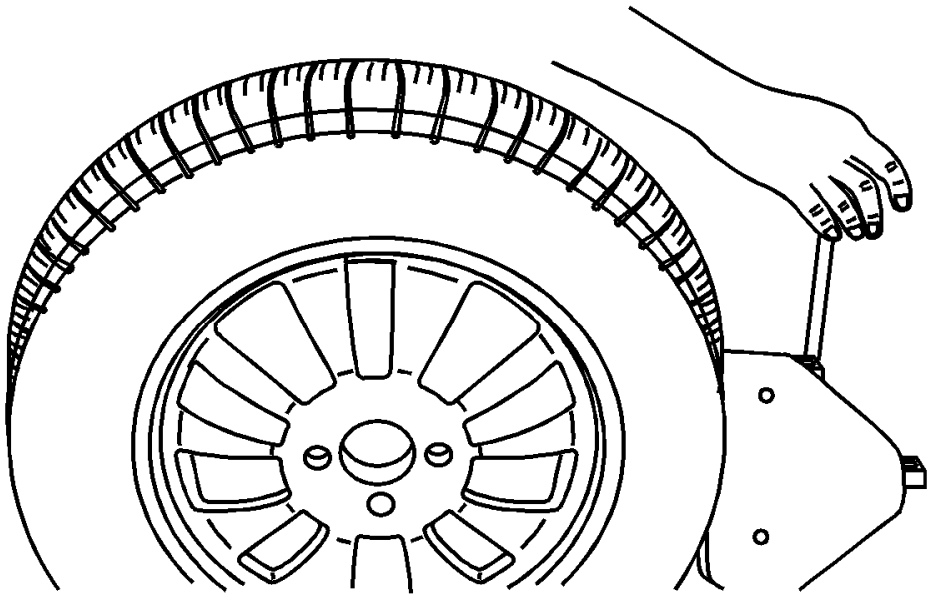

Fig. 25: Using Tire Changer to Remove Tire
Courtesy of GENERAL MOTORS COMPANY

4. When separating the tire bead from the wheel, position the bead breaking fixture 90, 180 and 270 degrees from the valve stem.

CAUTION: Failure to position valve stem in proper position while dismounting and mounting the tire may result in the TPM sensor to become damaged.

5. Position the wheel and tire so the valve stem is at the 7 o'clock position relative to the head. The tire iron or pry bar can be inserted when prying the outer tire bead up and over the mounting/dismounting head.

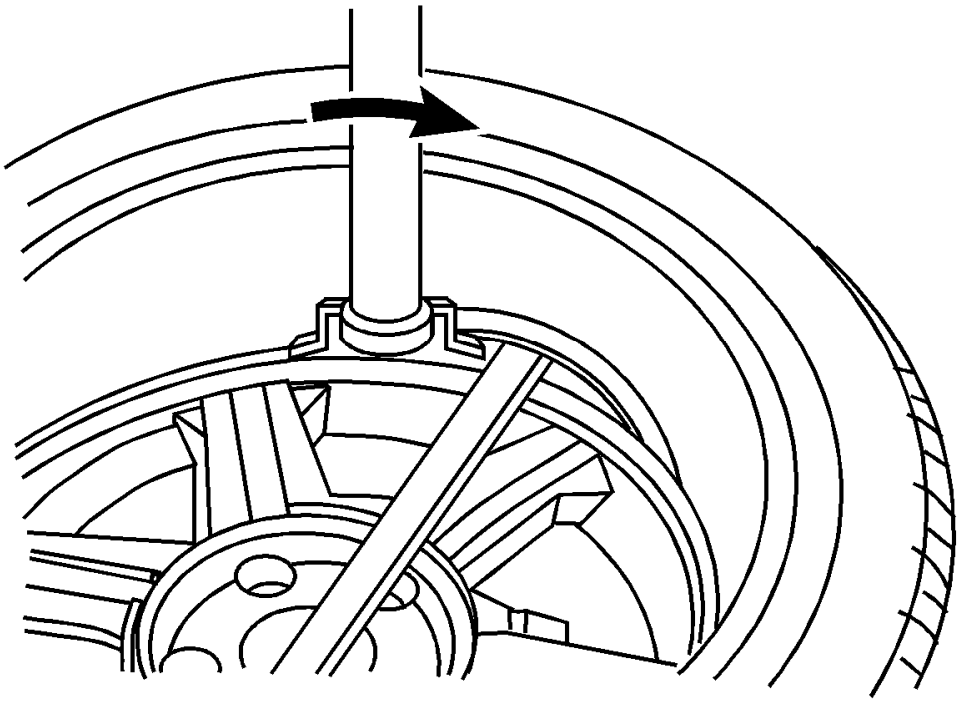

Fig. 26: Separating Tire Bead from Wheel
Courtesy of GENERAL MOTORS COMPANY

6. Position the wheel and tire so the valve stem is again at the 7 o'clock position relative to the head. The tire iron or pry bar can be inserted when prying the inner tire bead up and over the mounting/dismounting head.
7. Remove all residual liquid sealant from the inside of the tire and wheel surfaces. If any tire sealant is noted upon tire dismounting on vehicles equipped with TPM, replace the tire pressure sensor. Refer to **Tire Pressure Indicator Sensor Replacement** .
8. Use a wire brush or coarse steel wool in order to remove any rubber, light rust or corrosion from the wheel bead seats.

CAUTION: When mounting the tires, use an approved tire mounting lubricant. DO NOT use silicon or corrosive base compounds to lubricate the tire bead and the wheel rim. A silicon base compound can cause the tire to slip on the rim. A corrosive type compound can cause tire or rim deterioration.

9. Apply mounting lubricant to the tire bead and the wheel rim. Refer to **Adhesives, Fluids, Lubricants, and Sealers**.

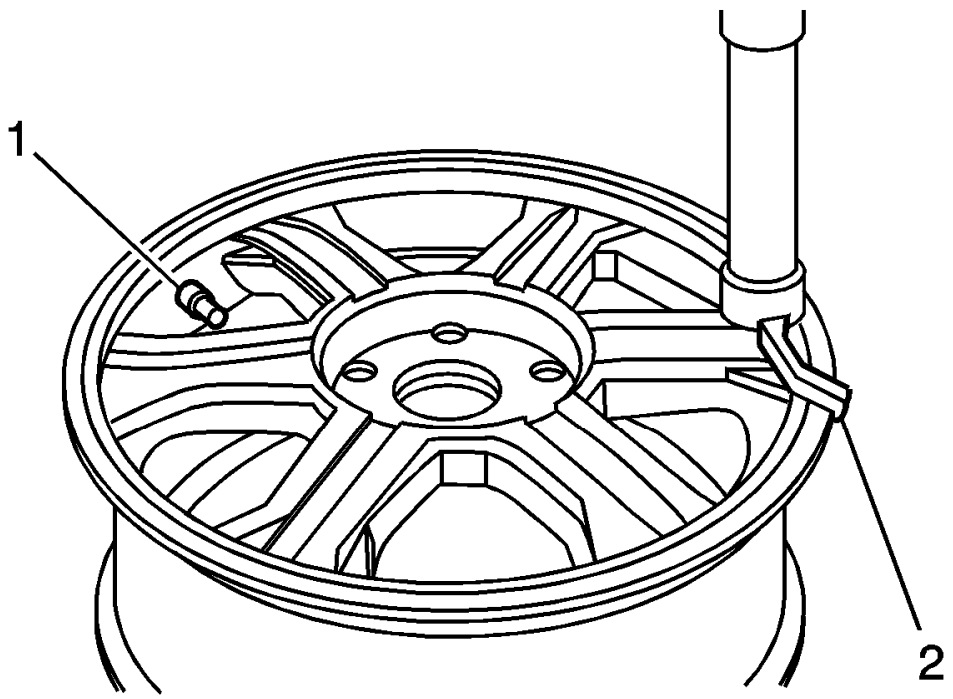

Fig. 27: Position Rim So Valve Stem Is At 7 O'clock Position Relative To Head
Courtesy of GENERAL MOTORS COMPANY

10. Position the rim so the valve stem (1) is at the 7 o'clock position relative to the head (2). This will protect the sensor when the bottom bead seats.

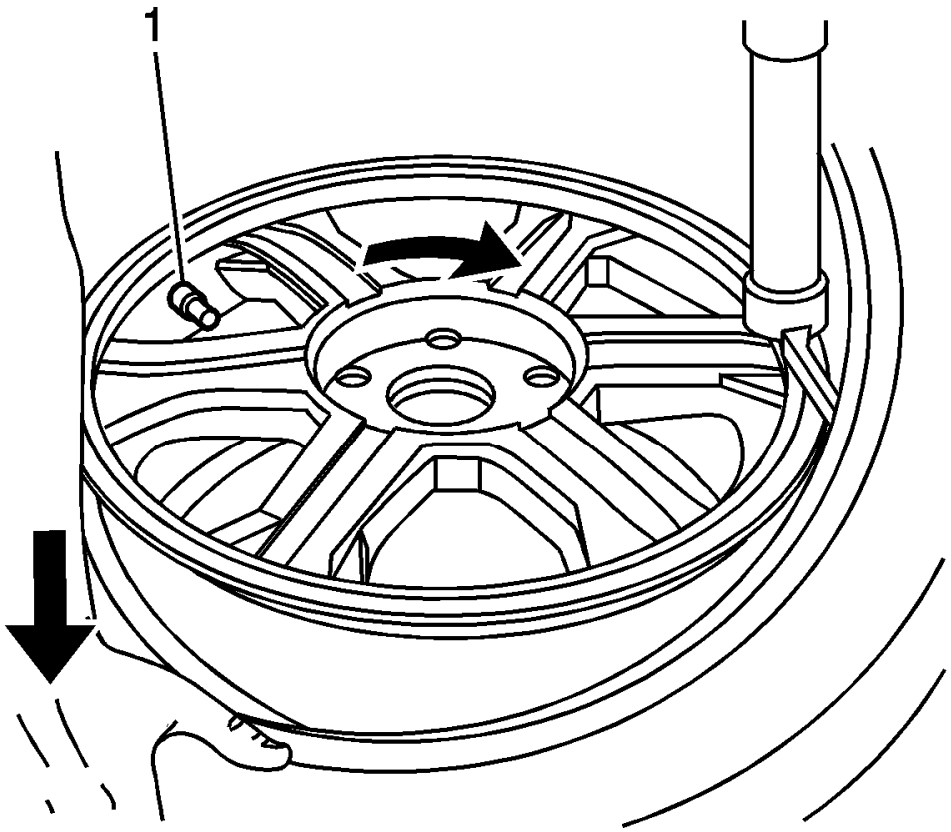

Fig. 28: Ensure Valve Stem Is At 7 O'clock Position
Courtesy of GENERAL MOTORS COMPANY

11. Using the tire machine, rotate the tire/wheel assembly clockwise when transferring the tire bead to the inside of the wheel rim. Ensure that the valve stem (1) is at the 7 o'clock position.

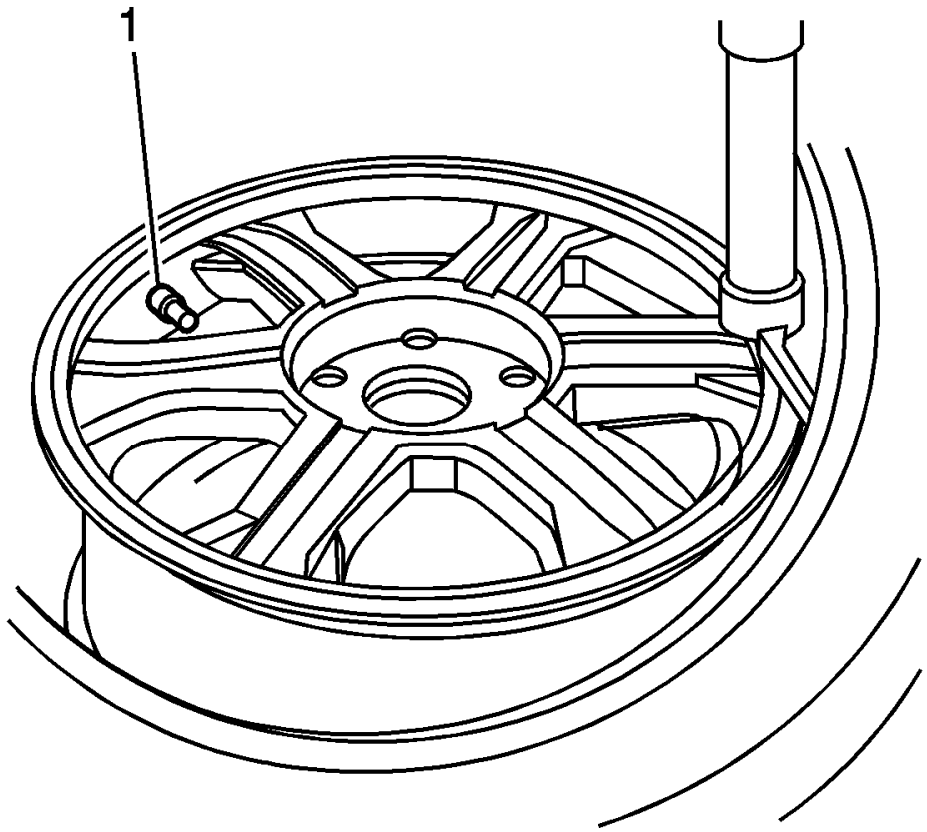

Fig. 29: Reposition Wheel And Tire So Valve Stem Is At 7 O'clock Position Relative To Head
Courtesy of GENERAL MOTORS COMPANY

12. After the bottom bead is on the wheel, reposition the wheel and tire so that the valve stem (1) is at the 7 o'clock position relative to the head. This will protect the sensor while mounting the tire bead to the outside of the wheel.

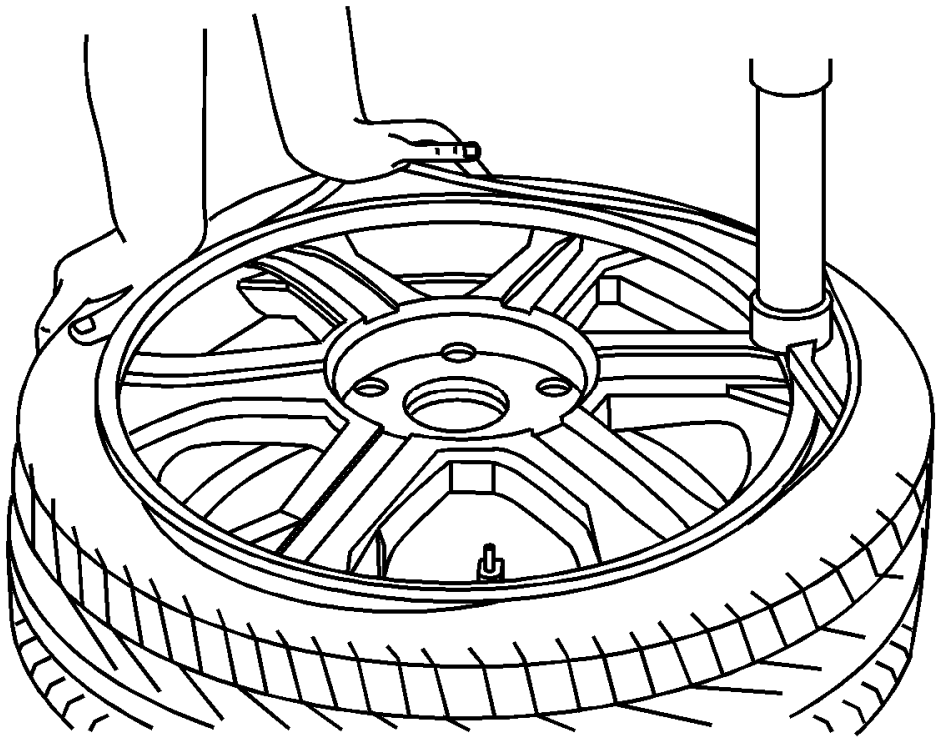

Fig. 30: Transferring Tire Bead
Courtesy of GENERAL MOTORS COMPANY

13. Use the tire changer in order to install the tire to the wheel.

WARNING: To avoid serious personal injury, do not stand over tire when inflating. The bead may break when the bead snaps over the safety hump. Do not exceed 275 kPa (40 psi) pressure when inflating any tire if beads are not seated. If 275 kPa (40 psi) pressure will not seat the beads, deflate, relubricate the beads and reinflate. Overinflation may cause the bead to break and cause serious personal injury.

14. Inflate the tire until it passes the bead humps. Be sure that the valve core is not installed at this time.
15. Install the valve core to the valve core stem.
16. Inflate the tire to the proper air pressure.
17. Ensure that the locating rings are visible on both sides of the tire in order to verify that the tire bead is fully seated on the wheel.

TIRE ROTATION

Rotate the tire and wheel assemblies at frequent intervals to equalize wear. Refer to **Maintenance Schedule** . In addition to scheduled rotation, rotate the tire and wheel assembly whenever uneven tire wear is noticed.

Radial tires tend to wear faster in the shoulder area, particularly in front positions. Radial tires in non-drive locations may develop an irregular wear pattern that may increase tire noise. This makes regular rotation especially necessary.

Refer to **Tire and Wheel Removal and Installation**.

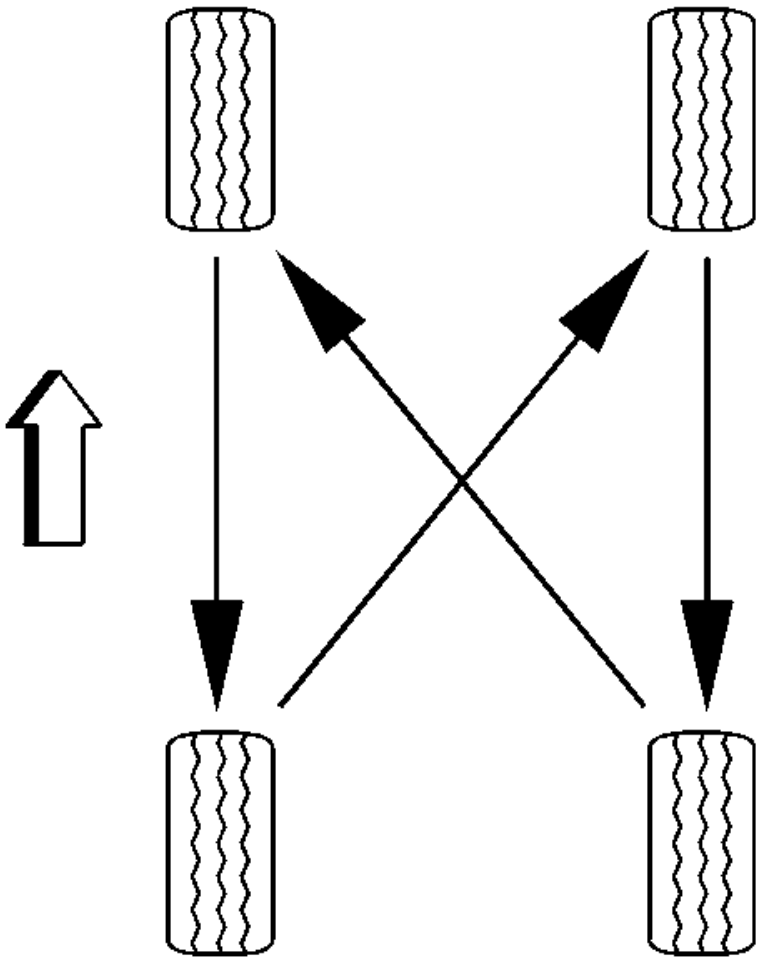

Fig. 31: Identifying Tire Rotation Pattern
Courtesy of GENERAL MOTORS COMPANY

Always use a 4-wheel rotation. After rotation, check the wheel nuts for specified torque. Then set the tire pressure.

DESCRIPTION AND OPERATION

GENERAL DESCRIPTION

The factory installed tires are designed to operate satisfactorily with loads up to and including the full rated load capacity when these tires are inflated to the recommended pressures.

The following factors have an important influence on tire life:

- Correct tire pressures
- Correct wheel alignment
- Proper driving techniques
- Tire rotation

The following factors increase tire wear:

- Heavy cornering
- Excessively rapid acceleration
- Heavy braking

P-METRIC SIZED TIRES DESCRIPTION

The tire sidewall has a coded marking system, which provides information about the tire.

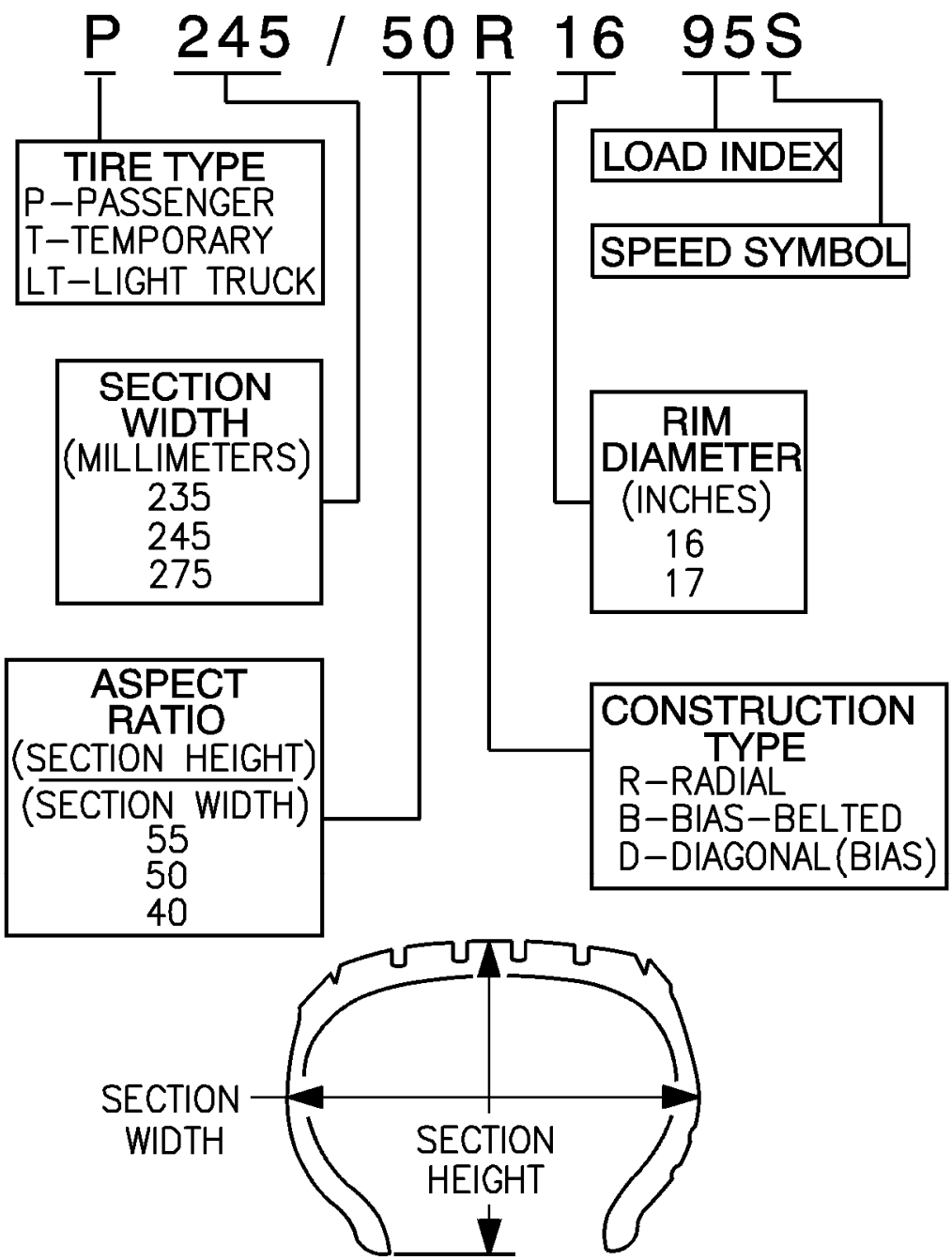

Fig. 32: Identifying P-Metric Sized Tire Marking
Courtesy of GENERAL MOTORS COMPANY

P-Metric Sized Tires Description

Tire Marking Example:		
P 245 50 R 16 95 S		
P	Passenger Vehicle Designation	
245	Section Width in mm (245 mm)	
50	Aspect Ratio % (Section Height to Section Width) (50 = 50%)	
R	tire Construction (R = Radial)	
16	Rim Diameter in inches (16 = 16")	
C	**NOTE:** **Some European and Japanese light truck tires use C instead of LT for the same purpose.** Service Application Code(C or LT = Light Truck or Multi-purpose Passenger Vehicle)	
95	Max Load Index	91 = 615 kg
		92 = 630 kg
		93 = 650 kg
		94 = 670 kg
		95 = 690 kg
		96 = 710 kg
		97 = 730 kg
		99 = 775 kg
		104 = 900 kg
		106 = 950 kg
S	Speed Rating	R = 170 km/h
		S = 180 km/h
		H = 210 km/h
		V = 240 km/h
		W = 270 km/h

REPLACEMENT WHEELS DESCRIPTION

Replace the wheel if any of the following conditions exist:

- The wheel exhibits excessive runout.
- The wheel is bent.
- The wheel is cracked.
- The wheel is severely rusted.
- The wheel is severely corroded.

NOTE: Air leaks caused by porosity on aluminum wheels are repairable.

- The wheel leaks air.

WARNING: If you are replacing the wheel(s), the wheel stud(s), the wheel nut(s) or the wheel bolt(s), install only new GM original equipment parts. Installation of used parts or non-GM original equipment parts may cause the wheel to loosen, loss of tire air pressure, poor vehicle handling and loss of vehicle control resulting in personal injury.

CAUTION: The use of non-GM original equipment wheels may cause:

- **Damage to the wheel bearing, the wheel fasteners and the wheel**
- **Tire damage caused by the modified clearance to the adjacent vehicle components**
- **Adverse vehicle steering stability caused by the modified scrub radius**
- **Damage to the vehicle caused by the modified ground clearance**
- **Speedometer and odometer inaccuracy**

Replace the wheel, the wheel studs and the wheel/nuts, or the wheel bolts if applicable, if any of the following conditions exist:

- The wheel has elongated bolt holes.
- The wheel/nuts, or bolts if applicable, loosen repeatedly.

Steel wheel identification is stamped into the wheel near the valve stem.

Aluminum wheel identification is cast into the inboard side of the wheel.

TIRE INFLATION DESCRIPTION

This vehicle has been engineered to operate up to the stated load capacity with wheel and tire assemblies of the type, size, construction, and configuration as originally installed. Maintenance of the tire inflation pressures is critical to the continued satisfactory performance, handling, and operating economy of the vehicle. Operation with incorrectly or improperly inflated tires can adversely affect vehicle performance and may contribute to the following:

- Reduced fuel economy
- Tire overloading
- Shortened tire life
- Excessive tire wear
- Uneven tire wear
- Vehicle handling concerns

Inspect the tire pressures when the vehicle has not been driven for at least 3 hours or not more than 1.6 km (1 mi) and when the tires are cool to the touch.

Tire inflation pressures should be inspected monthly and before an extended trip and adjusted to meet the specifications listed for the particular vehicle. Replace any missing or damaged tire valve stem extensions and/or caps to prevent the intrusion of water and contaminates.

One pound per square inch (psi) equals 6.9 kilopascals (kPa). The following table illustrates the conversion of kilopascals to pounds per square inch:

Inflation Pressure Conversion (Kilopascals to PSI)

kPa	psi	kPa	psi
140	20	215	31
145	21	220	32
155	22	230	33
160	23	235	34
165	24	240	35
170	25	250	36
180	26	275	40
185	27	310	45
190	28	345	50
200	29	380	55
205	30	415	60
Conversion: 6.9 kPa = 1 psi			

For the correct inflation pressures refer to the vehicle's Tire Placard.

Tires inflated to a higher than recommended pressure can contribute to the following conditions:

- A hard ride
- Tire bruising
- Rapid tread wear at the center of the tire

Tires inflated to a lower than recommended pressure can contribute to the following conditions:

- Tire squeal on turns
- Hard steering
- Rapid and/or uneven wear on the outer edges of the tread
- Tire rim bruises and tire rim rupture
- Tire cord breakage
- High tire temperatures
- Sluggish vehicle handling
- Higher fuel consumption

Unequal pressure on the same axle can cause the following conditions:

- Uneven braking action
- Steering lead
- Imprecise vehicle handling

TREAD WEAR INDICATORS DESCRIPTION

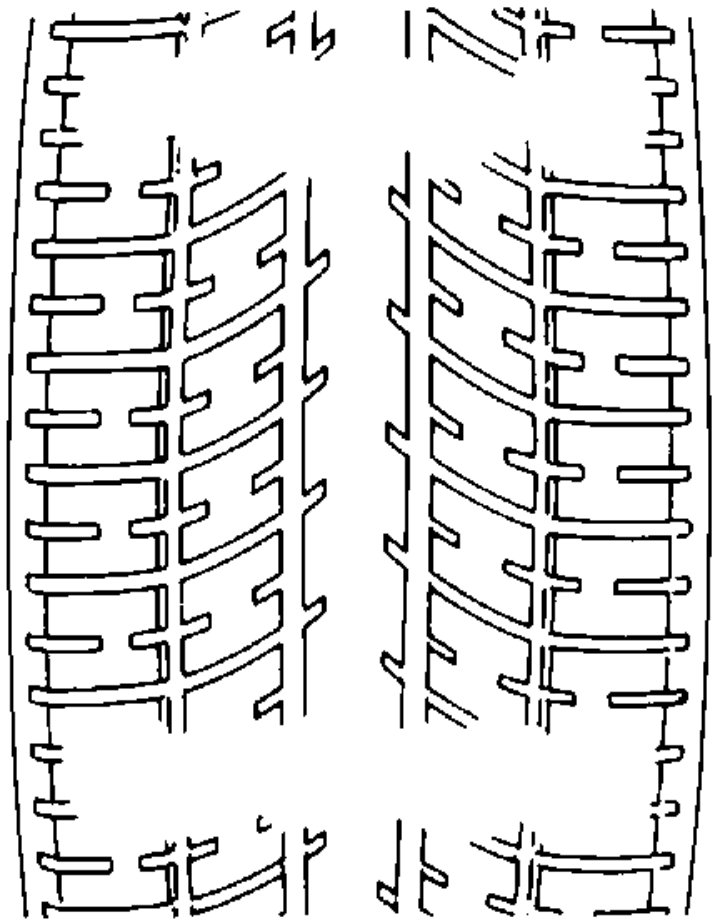

Fig. 33: View Of Tread Wear Indicators
Courtesy of GENERAL MOTORS COMPANY

The original equipment tires have tread wear indicators that show when you should replace the tires.

The location of these indicators are at 60 degree intervals around the outer diameter of the tire. The indicators appear as a 6 mm (0.25 in) wide band when the tire tread depth becomes 1.6 mm (2/32 in).

2013 SUSPENSION

Wheel Alignment - Cruze

SPECIFICATIONS

WHEEL ALIGNMENT SPECIFICATIONS

Alignment Condition: Full tank of fuel, no passengers and placed on flat level surface.

Wheel Alignment Specifications

RPO Restriction	Wheels	Caster		Cross Caster	Camber		Cross Camber	Total Toe	Steering Wheel Angle	Thrust Angle
		Left	Right	(Left - Right)	Left	Right	(Left - Right)	(Left + Right)		(Left - Right)/2
-	Front	4.50° ± 0.75°	4.50° ± 0.75°	0.0° ± 0.75°	-0.50° ± 0.75°	-0.50° ± 0.75°	0.0° ± 0.75°	0.2° ± 0.2°	0.0° ± 3.5°	-
	Rear	-	-	-	-1.45° ± 0.75°	-1.45° ± 0.75°	-0.0° ± 0.6°	0.15° ± 0.4°	-	0.0° ± 0.3°
XJ2	Front	4.50° ± 0.75°	4.50° ± 0.75°	0.0° ± 0.75°	-0.50° ± 0.75°	-0.50° ± 0.75°	0.0° ± 0.75°	0.08° ± 0.2°	0.0° ± 3.5°	-
	Rear	-	-	-	-1.45° ± 0.75°	-1.45° ± 0.75°	-0.0° ± 0.6°	0.15° ± 0.4°	-	0.0° ± 0.3°
IK9	Front	4.50° ± 0.75°	4.50° ± 0.75°	0.0° ± 0.75°	-0.6° ± 0.75°	-0.6° ± 0.75°	0.0° ± 0.75°	0.08° ± 0.2°	0.0° ± 3.5°	-
	Rear	-	-	-	-1.45° ± 0.75°	-1.45° ± 0.75°	-0.0° ± 0.6°	0.15° ± 0.4°	-	0.0° ± 0.3°

FASTENER TIGHTENING SPECIFICATIONS

Fastener Tightening Specifications

Application	Specification	
	Metric	English
Steering Linkage Inner Tie Rod Nut	60 N.m	44 lb ft

REPAIR INSTRUCTIONS

WHEEL ALIGNMENT MEASUREMENT

Steering and vibration complaints are not always the result of improper alignment. One possible cause is wheel and tire imbalance. Another possibility is tire lead due to worn or improperly manufactured tires. Lead/pull is defined as follows: At a constant highway speed on a typical straight road, lead/pull is the amount of effort required at the steering wheel to maintain the vehicle's straight path. Lead is the vehicle deviation from a straight path on a level road without pressure on the steering wheel. Refer to **Radial Tire Lead/Pull Correction** in order to determine if the vehicle has a tire lead problem.

Before performing any adjustment affecting wheel alignment, perform the following inspections in order to ensure correct alignment readings:

- Inspect for visible damage to the suspension components and replace as necessary.
- Inspect the tires for the proper inflation and irregular tire wear. Refer to **Vehicle Certification, Tire Placard, Anti-Theft, and Service Parts ID Label** , and **Tire Diagnosis - Irregular or Premature Wear** .
- Inspect the runout of the wheels and the tires. Refer to **Tire and Wheel Runout Specifications** .
- Inspect the wheel bearings for backlash and excessive play. Refer to **Wheel Bearings Diagnosis** .
- Inspect the ball joints for looseness or wear.
- Inspect the tie rod ends for looseness or wear.
- Inspect the control arms and stabilizer shaft for looseness or wear.
- Inspect the steering gear for looseness at the frame. Refer to **Fastener Tightening Specifications** .
- Inspect the struts/shock absorbers for wear, leaks, and any noticeable noises. Refer to **Suspension Strut and Shock Absorber Testing - On Vehicle** .
- Inspect the vehicle trim height. Refer to **Trim Height Inspection** .
- Inspect the steering wheel for excessive drag or poor return due to stiff or rusted linkage or suspension components.
- Inspect the fuel level. The fuel tank should be full or the vehicle should have a compensating load added.

Give consideration to excess loads, such as tool boxes, sample cases, etc. If normally carried in the vehicle, these items should remain in the vehicle during alignment adjustments. Give consideration also to the condition of the equipment being used for the alignment. Follow the equipment manufacturer's instructions.

Satisfactory vehicle operation may occur over a wide range of alignment settings. However, if the setting exceeds the service allowable specifications, correct the alignment to the service preferred specifications. Refer to **Wheel Alignment Specifications**.

Perform the following steps in order to measure the front and rear alignment angles:

1. Install the alignment equipment according to the manufacturer's instructions.

NOTE:

- **Record the "Before" and "After" alignment measurements.**
- **When performing adjustments to vehicles requiring a 4-wheel alignment, set the rear toe adjustment first in order to obtain proper front alignment angles.**

2. Jounce the front and the rear bumpers 3 times prior to checking the wheel alignment.

FRONT CAMBER ADJUSTMENT

1. Before performing any adjustment affecting the wheel alignment, refer to **Wheel Alignment Measurement**.
2. Loosen both strut to knuckle nuts just enough to allow for movement.

NOTE: If there is no adjustment for the camber, proceed to step 4.

3. Adjust the camber to specification by moving the top of the wheel in or out. Refer to **Wheel Alignment Specifications**.
4. Remove the strut assembly from the vehicle. Refer to **Strut Assembly Removal and Installation** .
5. Install the strut assembly in a soft jawed vise.

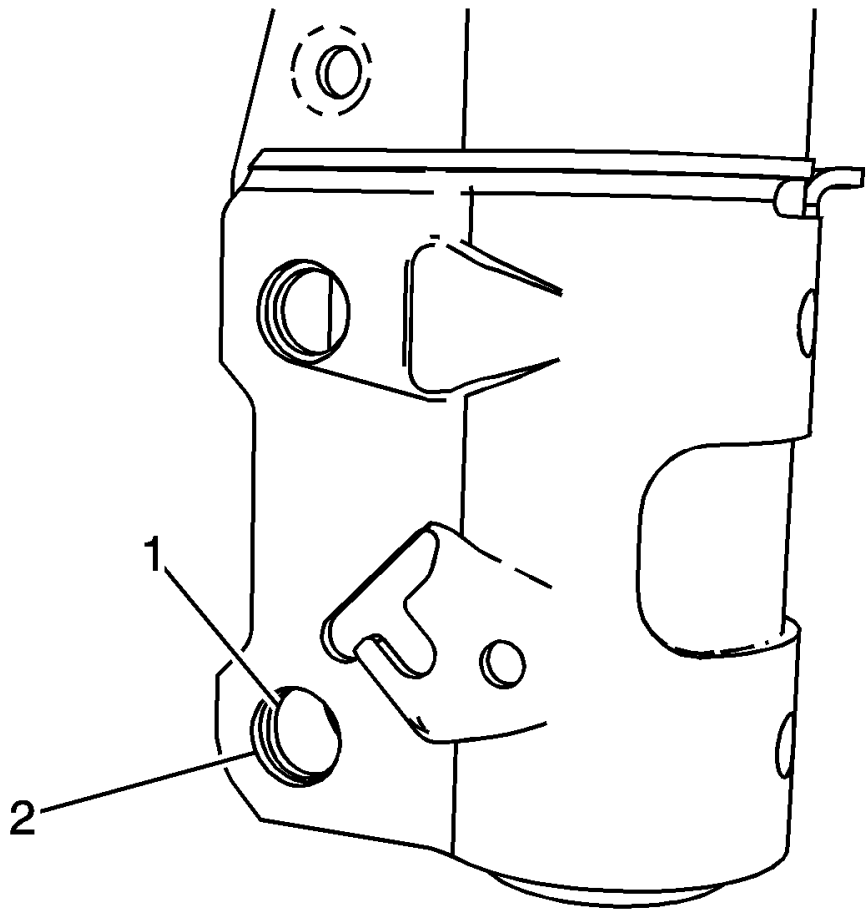

Fig. 1: Identifying Inner & Outer Holes
Courtesy of GENERAL MOTORS COMPANY

NOTE: The inner hole should NOT be enlarged beyond that of the outer hole.

6. Using the appropriate tool, enlarge the inner hole (1) to match the outer hole (2).
7. Install the strut assembly. Refer to **Strut Assembly Removal and Installation** .

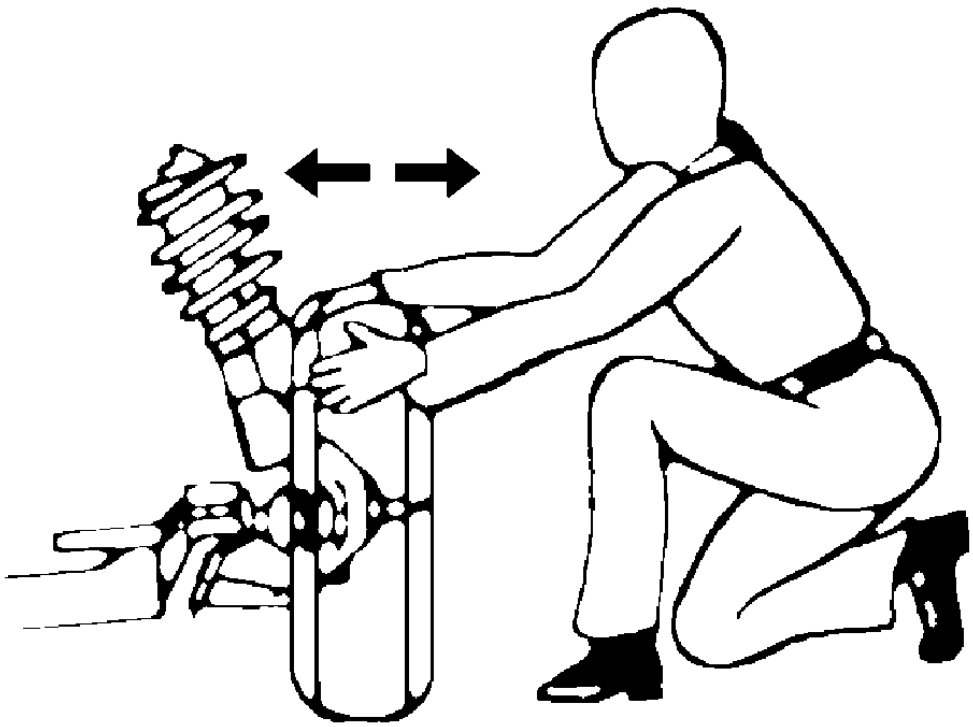

Fig. 2: Adjusting Front Camber
Courtesy of GENERAL MOTORS COMPANY

NOTE: If there is no adjustment for the camber, proceed to step 4.

8. Adjust the camber to specification by moving the top of the wheel in or out. Refer to **Wheel Alignment Specifications**.

WHEEL ALIGNMENT - STEERING WHEEL ANGLE AND/OR FRONT TOE ADJUSTMENT

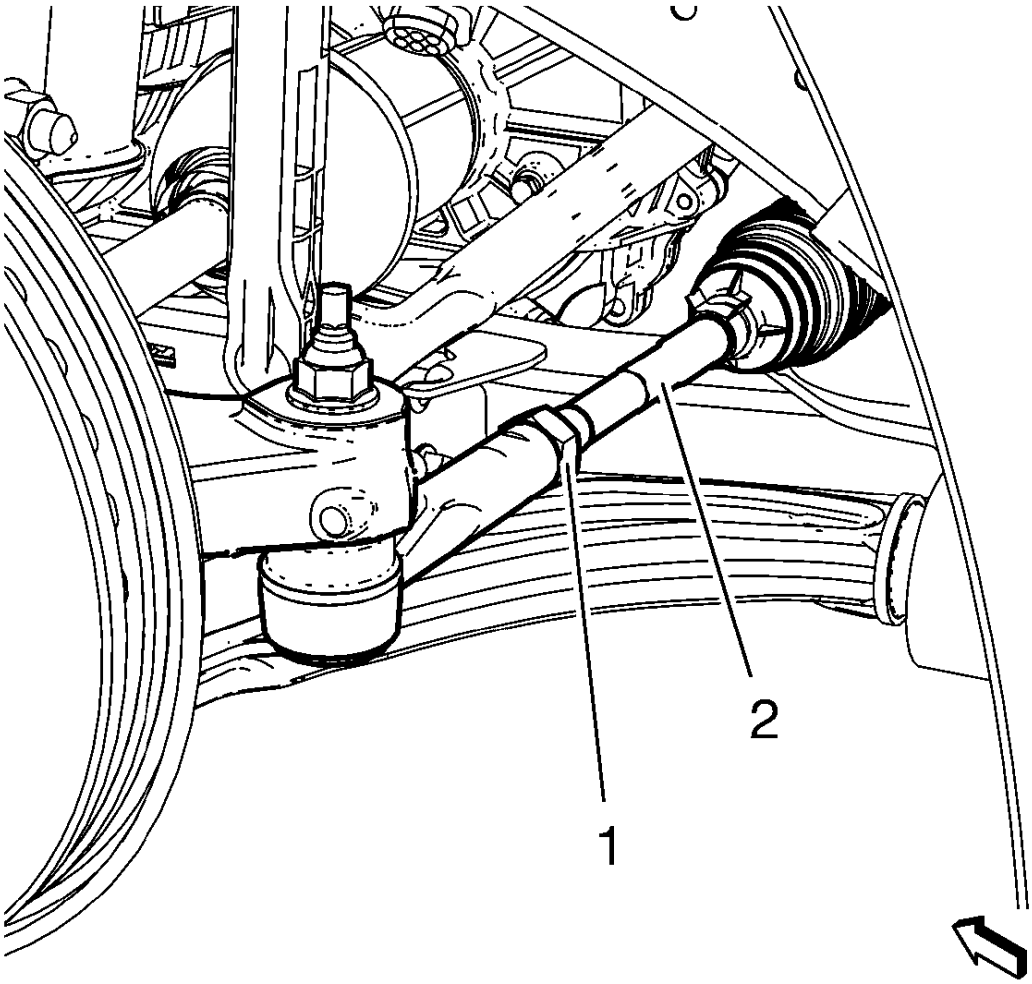

Fig. 3: Inner Tie Rod And Jam Nut
Courtesy of GENERAL MOTORS COMPANY

1. Ensure that the steering wheel is set in a straight ahead position.
2. Loosen the tie rod jam nut (1).
3. Adjust the toe to specification by turning the inner tie rod (2). Refer to **Wheel Alignment Specifications**.

CAUTION: Refer to Fastener Caution .

4. Tighten the tie rod jam nut (1) to 60 N.m (44 lb ft).

DESCRIPTION AND OPERATION

CAMBER DESCRIPTION

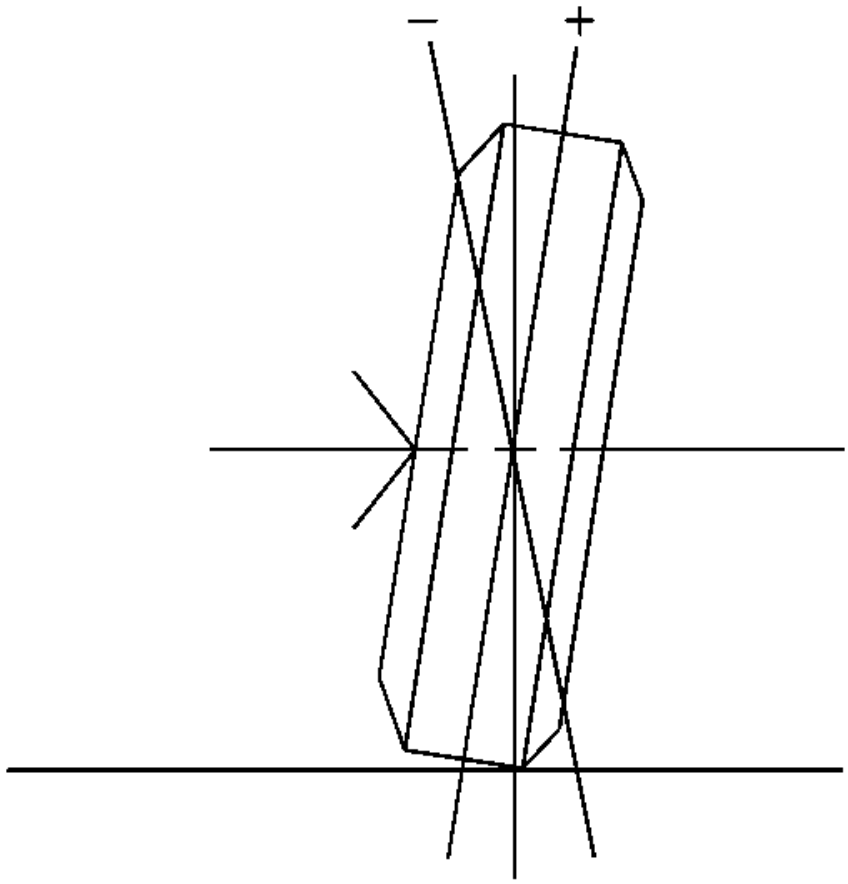

Fig. 4: Illustrating Camber Angle
Courtesy of GENERAL MOTORS COMPANY

Camber is the tilting of the wheels from the vertical when viewed from the front of the vehicle. When the wheels tilt outward at the top, the camber is positive (+). When the wheel tilts inward at the top, the camber is negative (-). The amount of tilt is measured in degrees from the vertical. Camber settings influence the directional control and the tire wear.

Too much positive camber will result in premature wear on the outside of the tire and cause excessive wear on the suspension parts.

Too much negative camber will result in premature wear on the inside of the tire and cause excessive wear on the suspension parts.

Unequal side-to-side camber of 1 degree or more will cause the vehicle to pull or lead to the side with the most positive camber.

Cross Camber is the difference between the left camber value and the right camber value.

Cross Camber = L camber - R camber

LEAD/PULL DESCRIPTION

At a constant highway speed on a typical straight road, lead/pull is the amount of effort required at the steering wheel to maintain the vehicle's straight path.

NOTE: Vehicles will tend to lead/pull in the direction of the road slope as part of normal operation.

Lead/pull is usually caused by the following factors:

- Road slope
- Variability in tire construction
- Wheel alignment (front cross caster and camber)
- Unbalanced steering gear
- Electronic power steering (EPS) steering position and torque sensors not calibrated correctly, if equipped

MEMORY STEER DESCRIPTION

Memory steer is when the vehicle wants to lead or pull in the direction the driver previously turned the vehicle. Additionally, after turning in the opposite direction, the vehicle will want to lead or pull in that direction.

SCRUB RADIUS DESCRIPTION

Ideally, the scrub radius is as small as possible. Normally, the SAI angle and the centerline of the tire and the wheel intersect below the road surface, causing a positive scrub radius. With struts, the SAI angle is much larger than the long arm/short arm type of suspension. This allows the SAI angle to intersect the camber angle above the road surface, forming a negative scrub radius. The smaller the scrub radius, the better the directional stability. Installing aftermarket wheels that have additional offset will dramatically increase the scrub radius. The newly installed wheels may cause the centerline of the tires to move further away from the spindle. This will increase the scrub radius.

A large amount of scrub radius can cause severe shimmy after hitting a bump. Four-wheel drive vehicles with large tires use a steering damper to compensate for an increased scrub radius. Scrub radius is not directly measurable by the conventional methods. Scrub radius is projected geometrically by engineers during the design phase of the suspension.

THRUST ANGLES DESCRIPTION

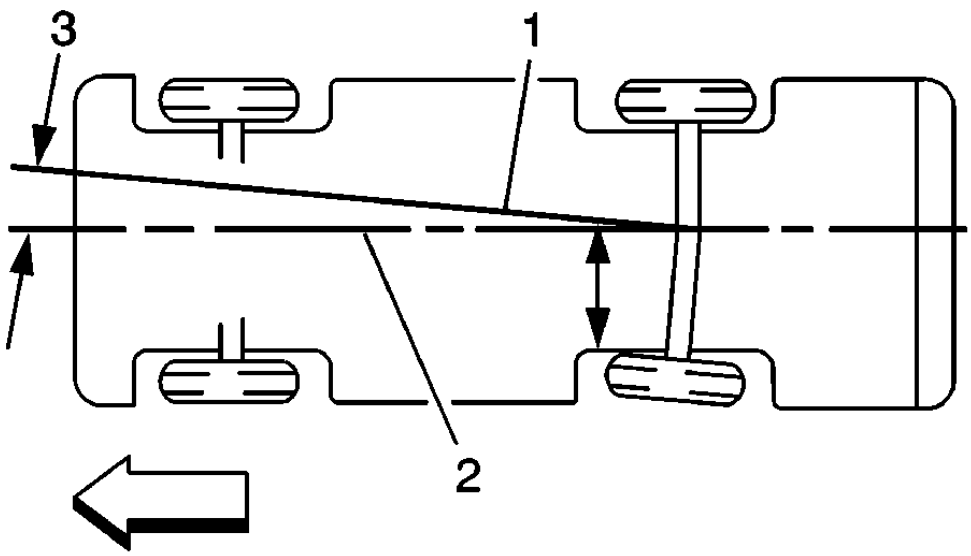

Fig. 5: Illustrating Thrust Angles
Courtesy of GENERAL MOTORS COMPANY

The front wheels aim or steer the vehicle. The rear wheels control tracking. This tracking action relates to the thrust angle (3). The thrust angle is the path that the rear wheels take. Ideally, the thrust angle is geometrically aligned with the body centerline (2).

In the illustration, toe-in is shown on the left rear wheel, moving the thrust line (1) off center. The resulting deviation from the centerline is the thrust angle.

If the thrust angle is not set properly the vehicle may "dog track", the steering wheel may not be centered or it could be perceived as a bent axle. Thrust angle can be checked during a wheel alignment.

Positive thrust angle means the thrust line is pointing to the right hand side (RHS) of the vehicle.

Negative thrust angle means the thrust line is pointing to the left hand side (LHS) of the vehicle.

If the thrust angle is out of specification, moving the axle to body relationship will change the thrust angle

reading.

If the vehicle is out in the Positive (+) direction-moving the RHS forward and/or LHS rearward will move the thrust angle towards zero degrees.

If the vehicle is out in the Negative (-) direction-moving the RHS rearward and/or LHS forward will move the thrust angle towards zero degrees.

TOE DESCRIPTION

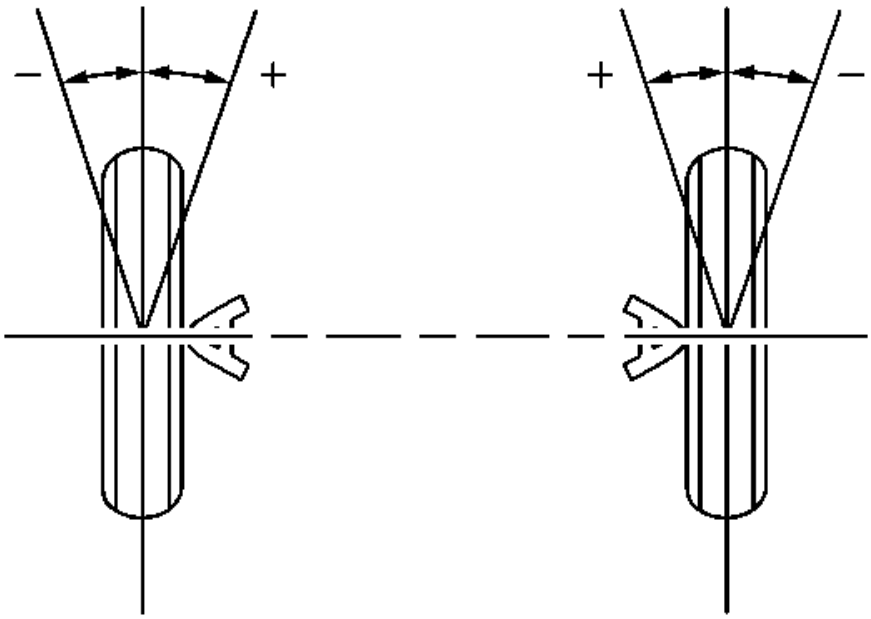

Fig. 6: Illustrating Toe Angle
Courtesy of GENERAL MOTORS COMPANY

Toe is a measurement of how much the front and/or rear wheels are turned in or out from a straight-ahead position. When the wheels are turned in, toe is positive (+). When the wheels are turned out, toe is negative (-). The actual amount of toe is normally only a fraction of a degree. The purpose of toe is to ensure that the wheels roll parallel.

Toe also offsets the small deflections of the wheel support system that occur when the vehicle is rolling forward. In other words, with the vehicle standing still and the wheels set with toe-in, the wheels tend to roll parallel on the road when the vehicle is moving.

Improper toe adjustment will cause premature tire wear and cause steering instability.

TORQUE STEER DESCRIPTION

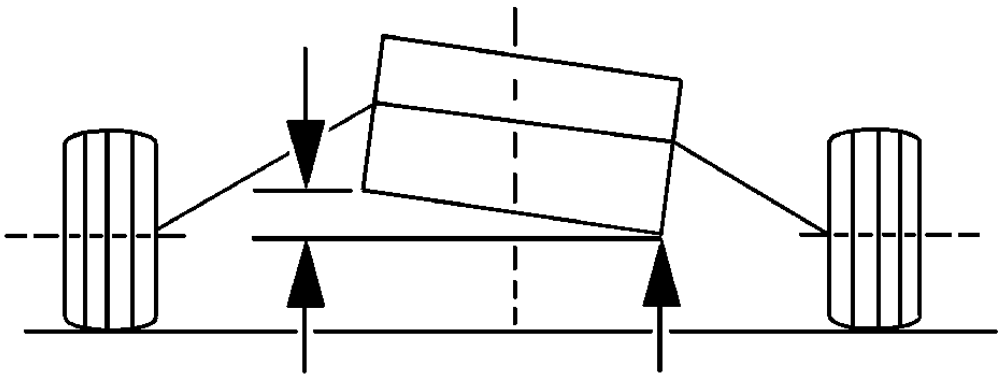

Fig. 7: Identifying Torque Steer
Courtesy of GENERAL MOTORS COMPANY

A vehicle pulls or leads in one direction during hard acceleration. A vehicle pulls or leads in the other direction during deceleration.

The following factors may cause torque steer to be more apparent on a particular vehicle:

- A slightly smaller diameter tire on the right front increases a right torque lead. Inspect the front tires for differences in the brand, the construction, or the size. If the tires appear to be similar, change the front

tires from side-to-side and retest the vehicle. Tire and wheel assemblies have the most significant effect on torque steer correction.

- A large difference in the right and left front tire pressure
- Left-to-right differences in the front view axle angle may cause significant steering pull in a vehicle. The pull will be to the side with the most downward sloping axle from the differential to the wheels. Axles typically slope downward from the differential. The slope of the transaxle pan to level ground may be used as an indication of bias axle angles. The side with the higher transaxle pan (shown on the left side of the illustration) has the most downward sloping axle angle.

WANDER DESCRIPTION

Wander is the undesired drifting or deviation of a vehicle to either side from a straight path with hand pressure on the steering wheel. Wander is a symptom of the vehicle's sensitivity to external disturbances, such as road crown and crosswind, and accentuated by poor on-center steering feel.

2013 TRANSMISSION

Automatic Transmission - 6T30/6T40 - Component Locator - Cruze

COMPONENT LOCATOR

DISASSEMBLED VIEWS

Case and Associated Parts

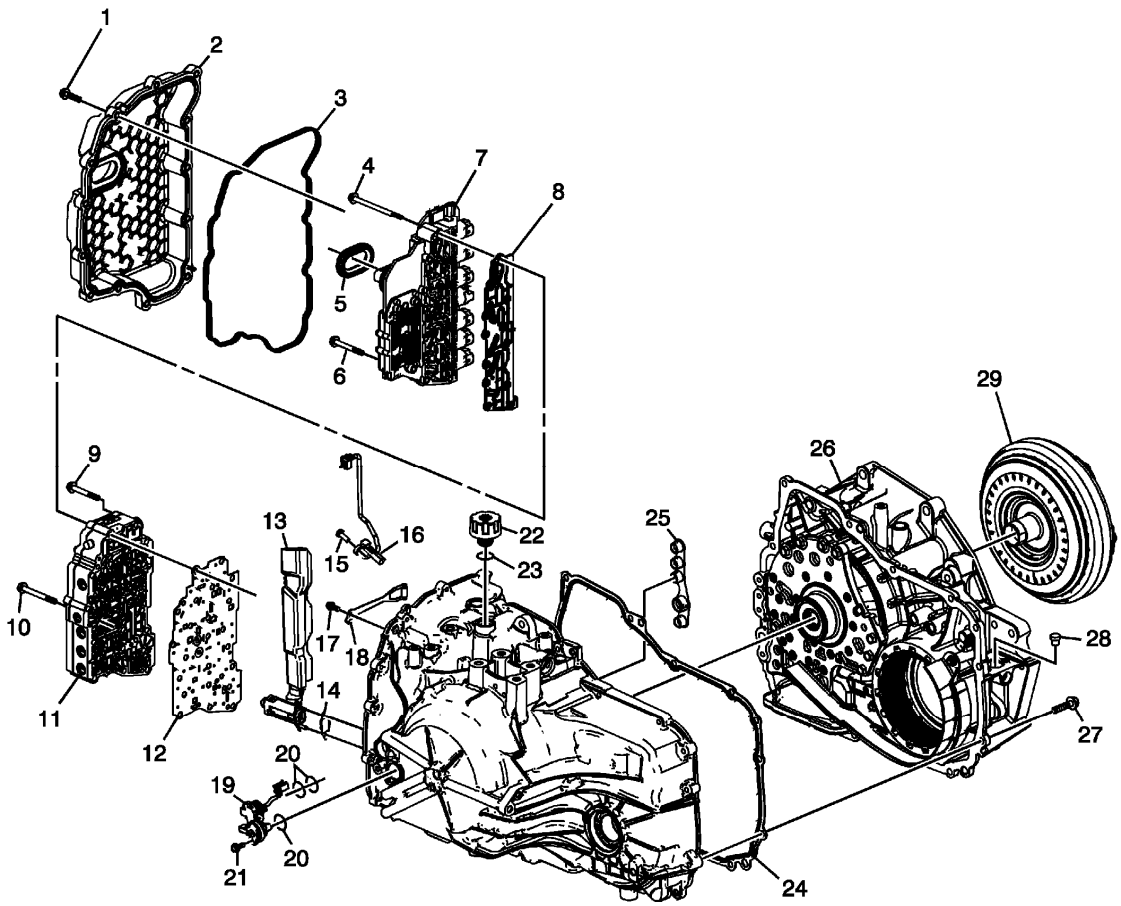

Fig. 1: Disassembled View Of Case & Associated Parts
Courtesy of GENERAL MOTORS COMPANY

Callout	Component Name
1	Control Valve Body Cover Bolt
2	Control Valve Body Cover Assembly
3	Control Valve Body Cover Gasket
4	Control Valve Body Bolt

5	Control Valve Body Cover Hole Seal
6	Control Solenoid Valve Heat Sink Bolt
7	Control Solenoid (w/Body and TCM) Valve Assembly
8	Control Valve Body Filter Plate Assembly
9	Control Valve Body Bolt
10	Control Valve Body Bolt
11	Control Valve Body Assembly
12	Control Valve Body Spacer Plate Assembly
13	A/Trans Fluid Level Control Valve
14	A/Trans Fluid Level Control Valve Gasket
15	A/Trans Output Speed Sensor Bolt
16	A/Trans Output Speed Sensor Assembly
17	Manual Shaft Detent Spring Bolt
18	Manual Shaft Detent Lever Spring Assembly
19	A/Trans Input Speed Sensor Assembly
20	A/Trans Input Speed Sensor Assembly O-Ring Seal
21	A/Trans Input Speed Sensor Bolt
22	Fill Cap
23	Fill Cap Seal
24	Torque Converter Housing Gasket
25	A/Trans Fluid Pump Seal Assembly
26	Torque Converter with Fluid Pump Housing Assembly
27	Torque Converter and Differential Housing Bolt
28	A/Trans Fluid Fill Tube Plug Assembly
29	Torque Converter Assembly

Transmission Case Assembly - 6T30 - Gen 1

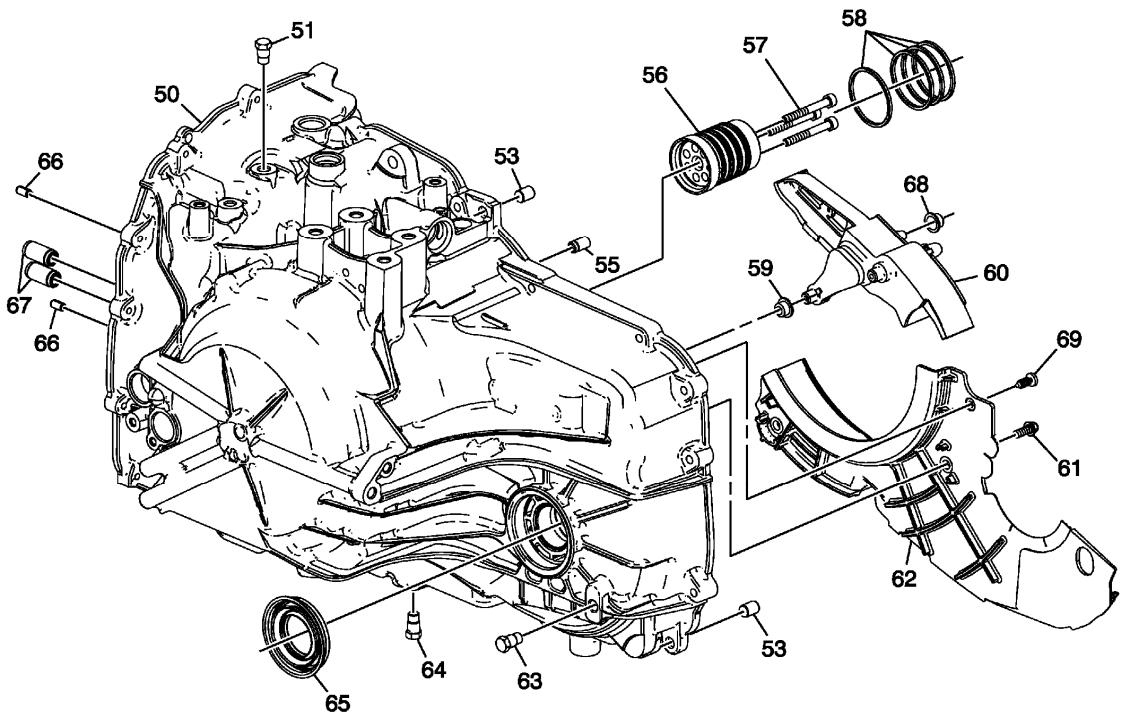

Fig. 2: Transmission Case Assembly -- 6T30 -- Gen 1
Courtesy of GENERAL MOTORS COMPANY

Callout	Component Name
50	A/Trans Case Assembly
51	A/Trans Fluid Pressure Test Hole Plug
53	Transmission Case Cover Locator Pin
55	A/Trans Fluid Check Ball
56	Input Shaft Support
57	Input Shaft Support Bolt
58	3-5-Reverse and 4-5-6 Clutch Fluid Seal Ring
59	Drive Link Lube Fluid Seal
60	Drive Link Lube Scoop
61	Front Differential Carrier Baffle Bolt
62	Front Differential Carrier Baffle
63	Oil Level Plug
64	Drain Plug
65	Drive Shaft Oil Seal Assembly
66	Control Valve Body Locator Pin
67	1-2-3-4 and Low Reverse Clutch Fluid Passage Seal
68	Drive Link Lube Fluid Seal
69	Baffle Retainer

Transmission Case Assembly - 6T30 - Gen 2

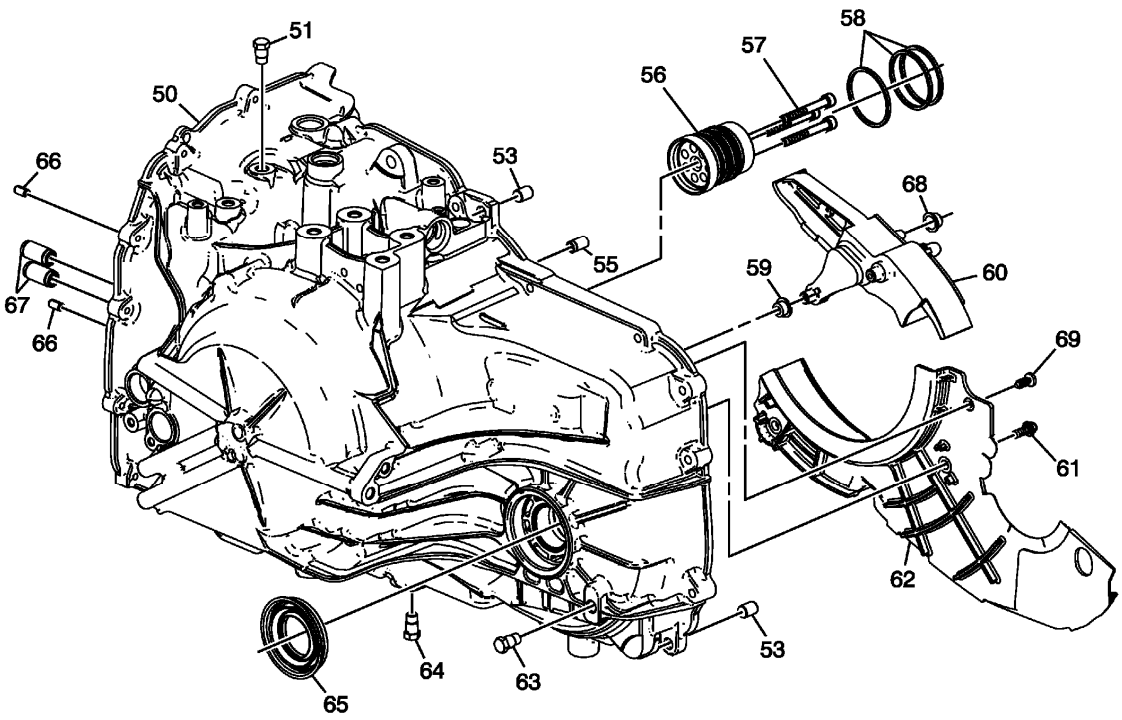

Fig. 3: Transmission Case Assembly -- 6T30 -- Gen 2
Courtesy of GENERAL MOTORS COMPANY

Callout	Component Name
50	A/Trans Case Assembly
51	A/Trans Fluid Pressure Test Hole Plug
53	Transmission Case Cover Locator Pin
55	A/Trans Fluid Check Ball
56	Input Shaft Support
57	Input Shaft Support Bolt
58	3-5-Reverse and 4-5-6 Clutch Fluid Seal Ring
59	Drive Link Lube Fluid Seal
60	Drive Link Lube Scoop
61	Front Differential Carrier Baffle Bolt
62	Front Differential Carrier Baffle
63	Oil Level Plug
64	Drain Plug
65	Drive Shaft Oil Seal Assembly
66	Control Valve Body Locator Pin
67	1-2-3-4 and Low Reverse Clutch Fluid Passage Seal
68	Drive Link Lube Fluid Seal
69	Baffle Retainer

Transmission Case Assembly - 6T40/6T45/6T50 - Gen 1

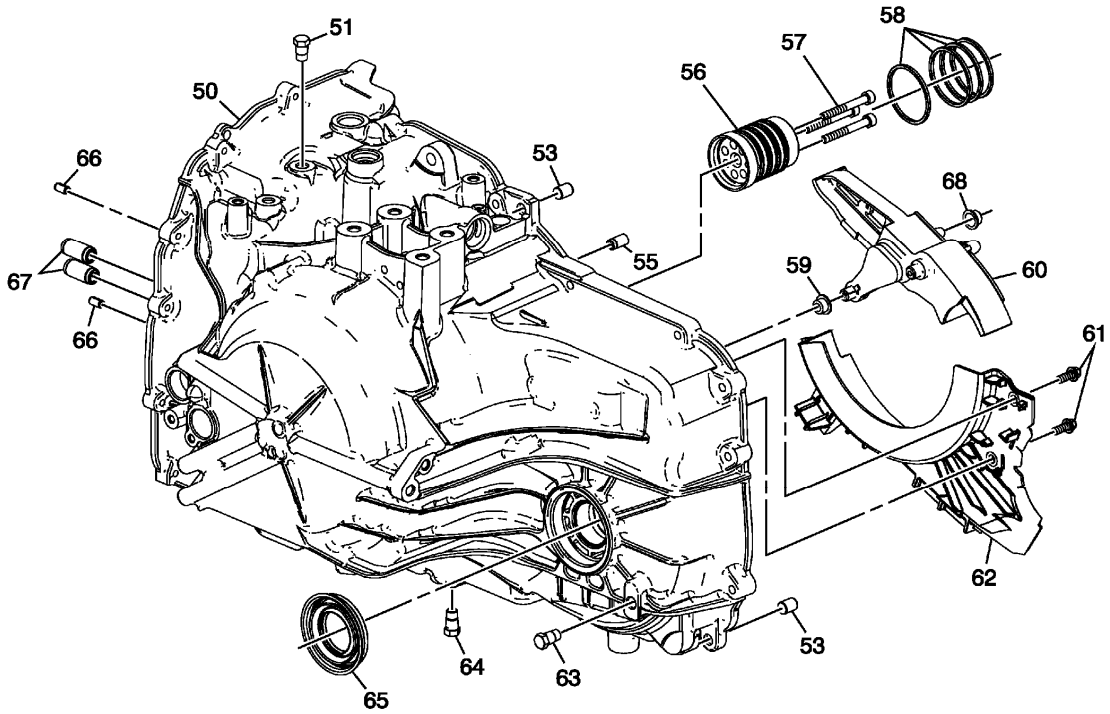

Fig. 4: View Of Transmission Case Assembly
Courtesy of GENERAL MOTORS COMPANY

Callout	Component Name
50	A/Trans Case Assembly
51	A/Trans Fluid Pressure Test Hole Plug
53	Transmission Case Cover Locator Pin
55	A/Trans Fluid Check Ball
56	Input Shaft Support
57	Input Shaft Support Bolt
58	3-5-Reverse and 4-5-6 Clutch Fluid Seal Ring
59	Drive Link Lube Fluid Seal
60	Drive Link Lube Scoop
61	Front Differential Carrier Baffle Bolt
62	Front Differential Carrier Baffle
63	Oil Level Plug
64	Drain Plug
65	Drive Shaft Oil Seal Assembly
66	Control Valve Body Locator Pin
67	1-2-3-4 and Low Reverse Clutch Fluid Passage Seal
68	Drive Link Lube Fluid Seal

Transmission Case Assembly - 6T40/6T45/6T50 - Gen 2

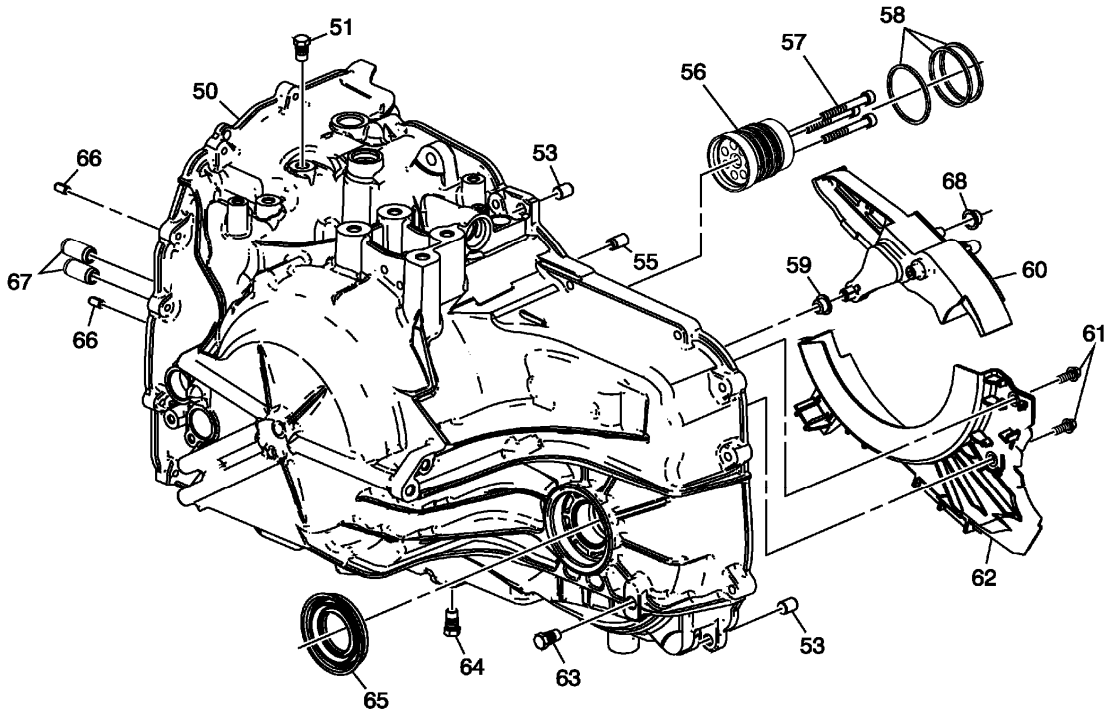

Fig. 5: Transmission Case Assembly -- 6T45/6T50 -- Gen 2
Courtesy of GENERAL MOTORS COMPANY

Callout	Component Name
50	A/Trans Case Assembly
51	A/Trans Fluid Pressure Test Hole Plug
53	Transmission Case Cover Locator Pin
55	A/Trans Fluid Check Ball
56	Input Shaft Support
57	Input Shaft Support Bolt
58	3-5-Reverse and 4-5-6 Clutch Fluid Seal Ring (Qty: 3)
59	Drive Link Lube Fluid Seal
60	Drive Link Lube Scoop
61	Front Differential Carrier Baffle Bolt
62	Front Differential Carrier Baffle
63	Oil Level Plug
64	Drain Plug
65	Drive Shaft Oil Seal Assembly
66	Control Valve Body Locator Pin
67	1-2-3-4 and Low Reverse Clutch Fluid Passage Seal
68	Drive Link Lube Fluid Seal

Torque Converter and Fluid Pump Housing Assembly- 6T30

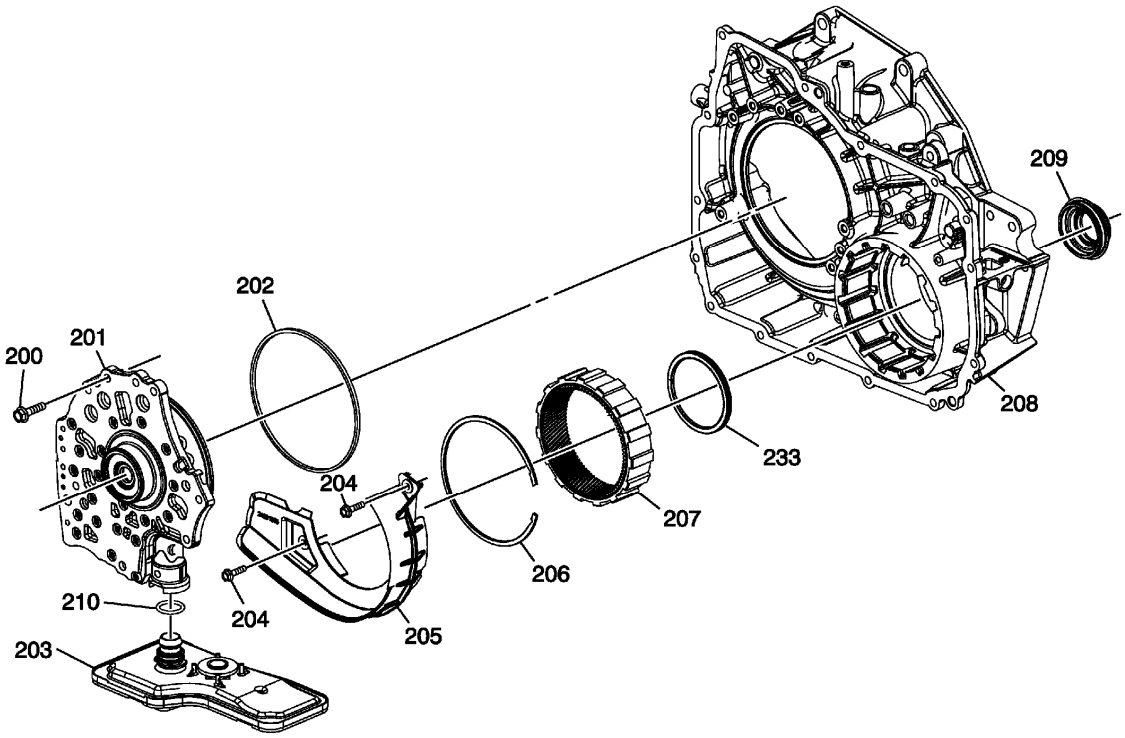

Fig. 6: Torque Converter and Fluid Pump Housing Assembly -- 6T30
Courtesy of GENERAL MOTORS COMPANY

Callout	Component Name
200	A/Trans Fluid Pump Bolt
201	A/Trans Fluid Pump Assembly
202	Torque Converter and Differential Housing Seal
203	A/Trans Fluid Filter Assembly
204	Front Differential Carrier Baffle Bolt
205	Front Differential Carrier Baffle
206	Front Differential Ring Gear Retainer
207	Front Differential Ring Gear
208	Torque Converter and Differential Housing
209	Front Wheel Drive Shaft Oil Seal Assembly
210	A/Trans Fluid Filter Seal
233	Front Differential Carrier Bearing Assembly

Torque Converter and Fluid Pump Housing Assembly- 6T40/6T45/6T50

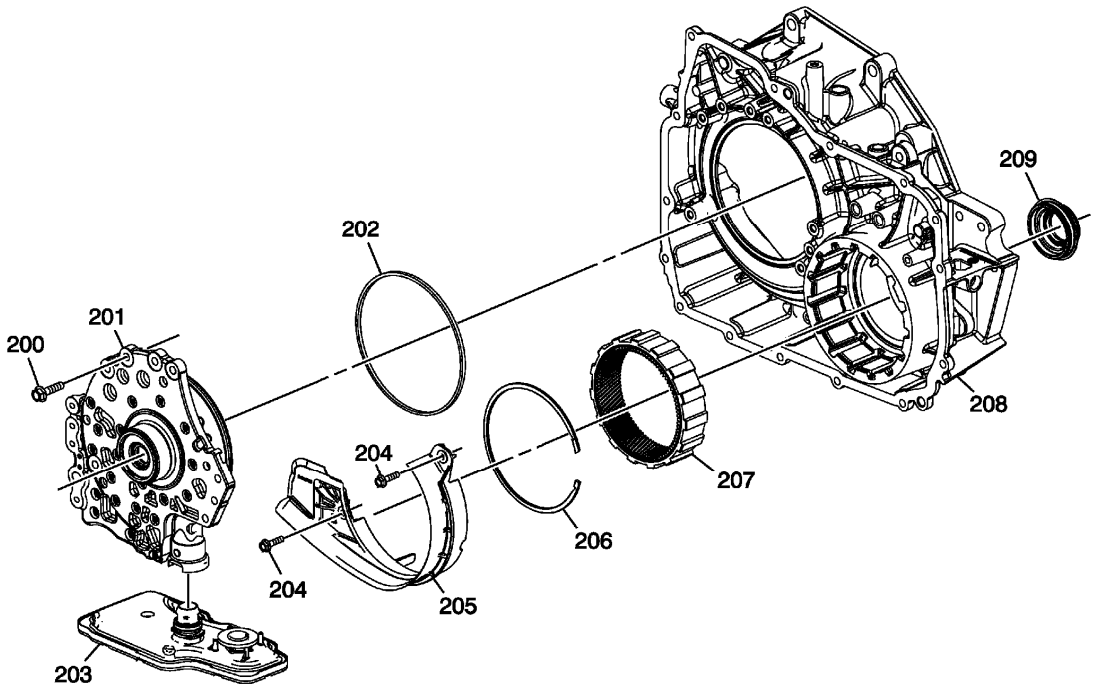

Fig. 7: Torque Converter and Fluid Pump Housing Assembly -- 6T45/6T50
Courtesy of GENERAL MOTORS COMPANY

Callout	Component Name
200	A/Trans Fluid Pump Bolt
201	A/Trans Fluid Pump Assembly
202	Torque Converter and Differential Housing Seal
203	A/Trans Fluid Filter Assembly
204	Front Differential Carrier Baffle Bolt
205	Front Differential Carrier Baffle
206	Front Differential Ring Gear Retainer
207	Front Differential Ring Gear
208	Torque Converter and Differential Housing
209	Front Wheel Drive Shaft Oil Seal Assembly

Drive Link Assembly

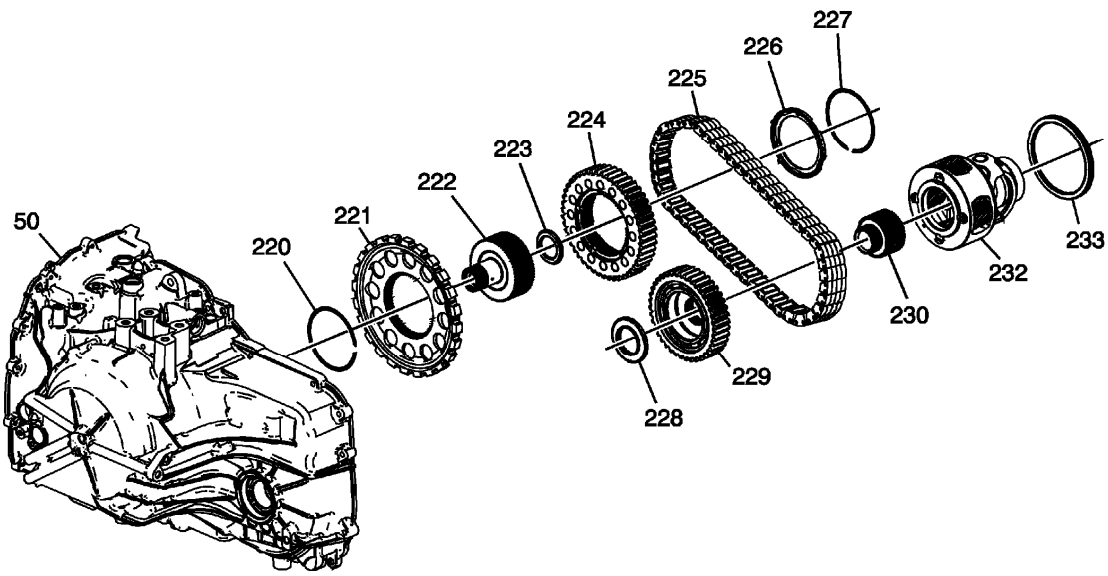

Fig. 8: Disassembled View Of Drive Link Assembly
Courtesy of GENERAL MOTORS COMPANY

Callout	Component Name
50	A/Trans Case
220	Park Gear Retainer Ring
221	Park Gear
222	Output Carrier Transfer Drive Gear Hub
223	Drive Sprocket Bearing Assembly
224	Drive Sprocket
225	Drive Link Assembly
226	Drive Sprocket Thrust Washer
227	Drive Sprocket Retainer Ring
228	Driven Sprocket Bearing Assembly
229	Driven Sprocket
230	Final Drive Sun Gear
232	Differential Carrier Assembly
233	Front Differential Carrier Bearing Assembly

Oil Pump Assembly- 6T30

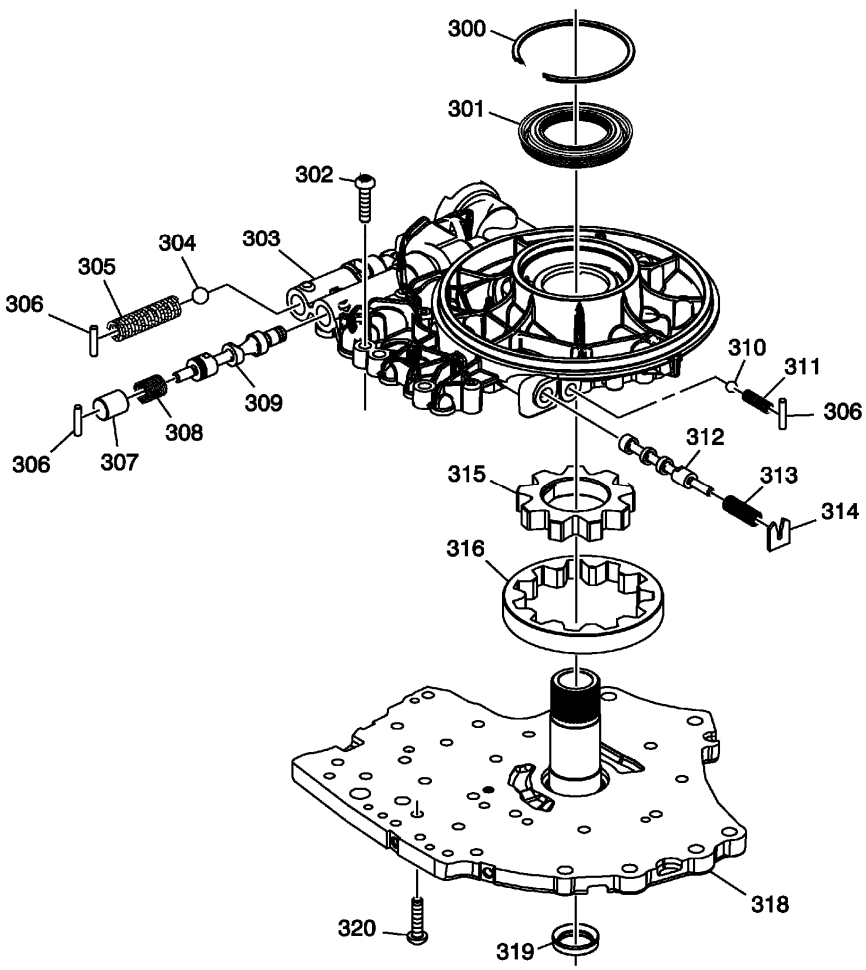

Fig. 9: Oil Pump Assembly -- 6T30
Courtesy of GENERAL MOTORS COMPANY

Callout	Component Name
300	Torque Converter Fluid Seal Retainer
301	Torque Converter Fluid Seal Assembly
302	A/Trans Fluid Pump Cover Bolt
303	A/Trans Fluid Pump Body
304	Pump Blowoff Ball Valve
305	Pump Blowoff Valve Spring
306	Pressure Regulator Valve Bore Plug Retainer
307	Pressure Regulator Valve Bore Plug
308	Pressure Regulator Valve Spring
309	Pressure Regulator Valve
310	Torque Converter Clutch Blowoff Ball Valve
311	Torque Converter Clutch Blowoff Ball Valve Spring
312	Torque Converter Clutch Control Valve

313	Torque Converter Clutch Control Valve Spring
314	Torque Converter Clutch Control Valve Spring Retainer
315	A/Trans Fluid Pump Drive Gear
316	A/Trans Fluid Pump Driven Gear
318	A/Trans Fluid Pump Cover Assembly
319	Torque Converter Fluid Seal Assembly
320	A/Trans Fluid Pump Cover Bolt

Oil Pump Assembly- 6T40/6T45/6T50- Gen 1

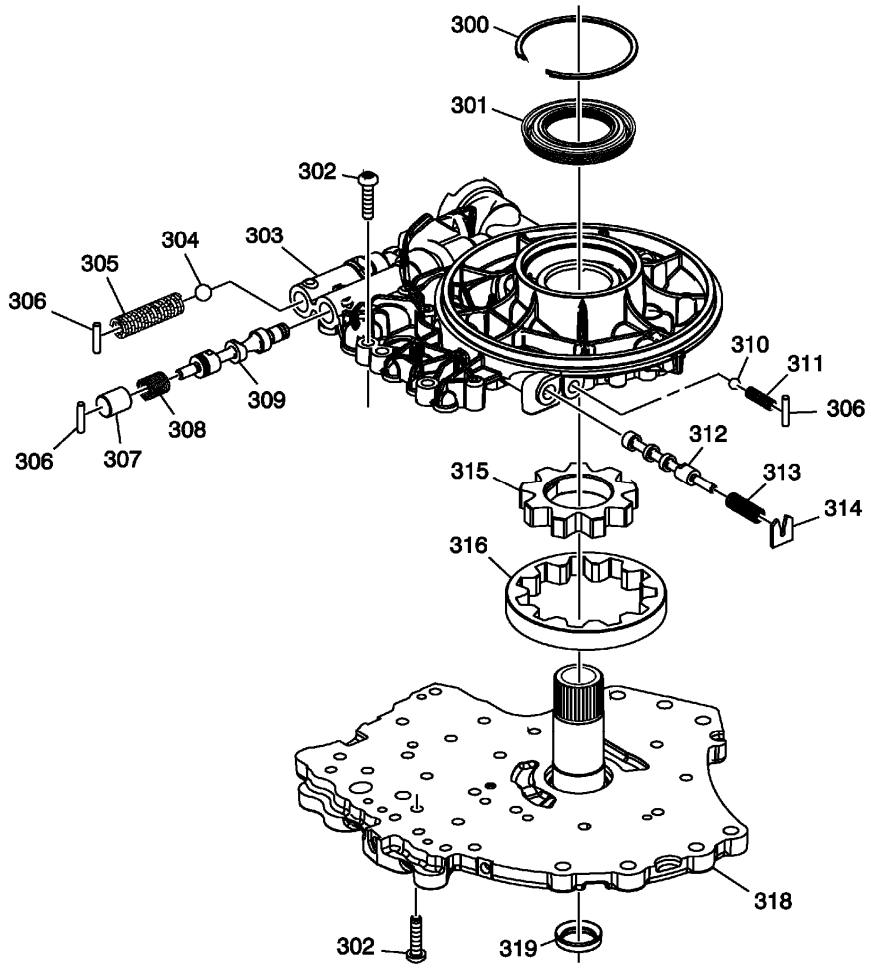

Fig. 10: Disassembled View Of Oil Pump Assembly
Courtesy of GENERAL MOTORS COMPANY

Callout	Component Name
300	Torque Converter Fluid Seal Retainer
301	Torque Converter Fluid Seal Assembly
302	A/Trans Fluid Pump Cover Bolt

303	A/Trans Fluid Pump Body
304	Pump Blowoff Ball Valve
305	Pump Blowoff Valve Spring
306	Pressure Regulator Valve Bore Plug Retainer
307	Pressure Regulator Valve Bore Plug
308	Pressure Regulator Valve Spring
309	Pressure Regulator Valve
310	Torque Converter Clutch Blowoff Ball Valve
311	Torque Converter Clutch Blowoff Ball Valve Spring
312	Torque Converter Clutch Control Valve
313	Torque Converter Clutch Control Valve Spring
314	Torque Converter Clutch Control Valve Spring Retainer
315	A/Trans Fluid Pump Drive Gear
316	A/Trans Fluid Pump Driven Gear
318	A/Trans Fluid Pump Cover Assembly
319	Torque Converter Fluid Seal Assembly

Oil Pump Assembly- 6T40/6T45/6T50- Gen 2

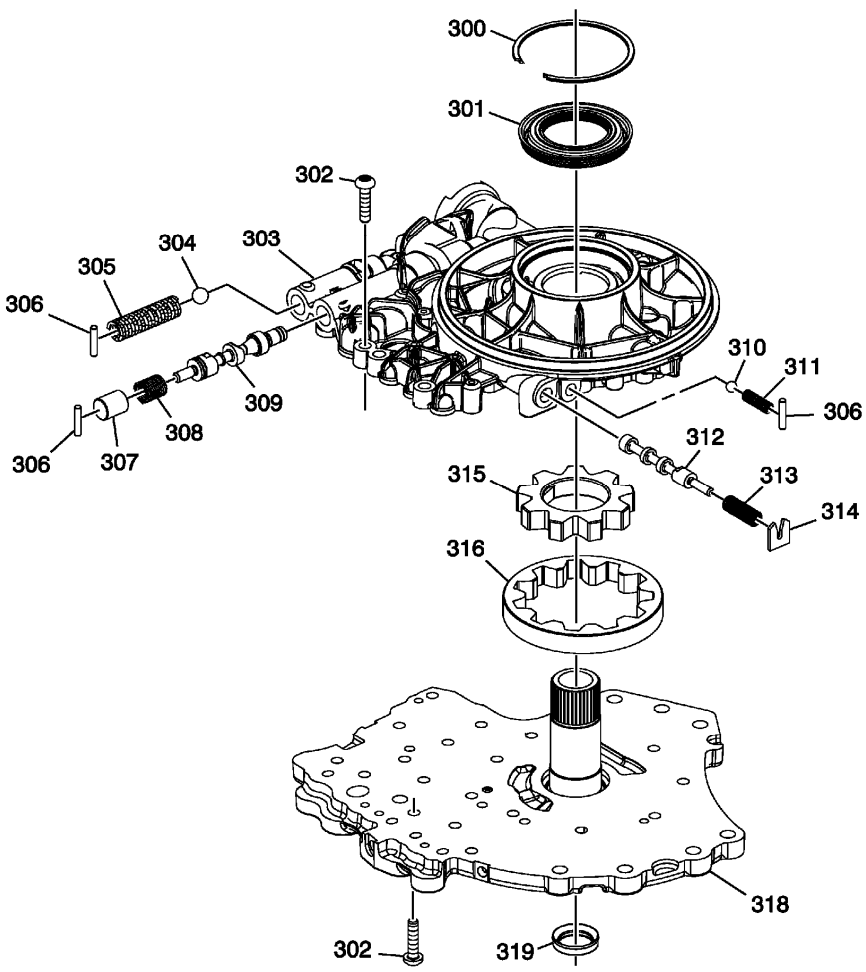

Fig. 11: Oil Pump Assembly -- 6T45/6T50 -- Gen 2
Courtesy of GENERAL MOTORS COMPANY

Callout	Component Name
300	Torque Converter Fluid Seal Retainer
301	Torque Converter Fluid Seal Assembly
302	A/Trans Fluid Pump Cover Bolt
303	A/Trans Fluid Pump Body
304	Pump Blowoff Ball Valve
305	Pump Blowoff Valve Spring
306	Pressure Regulator Valve Bore Plug Retainer
307	Pressure Regulator Valve Bore Plug
308	Pressure Regulator Valve Spring
309	Pressure Regulator Valve
310	Torque Converter Clutch Blowoff Ball Valve
311	Torque Converter Clutch Blowoff Ball Valve Spring
312	Torque Converter Clutch Control Valve

313	Torque Converter Clutch Control Valve Spring
314	Torque Converter Clutch Control Valve Spring Retainer
315	A/Trans Fluid Pump Drive Gear
316	A/Trans Fluid Pump Driven Gear
318	A/Trans Fluid Pump Cover Assembly
319	Torque Converter Fluid Seal Assembly

Auxiliary Fluid Pump and Hybrid Components - Hybrid Models

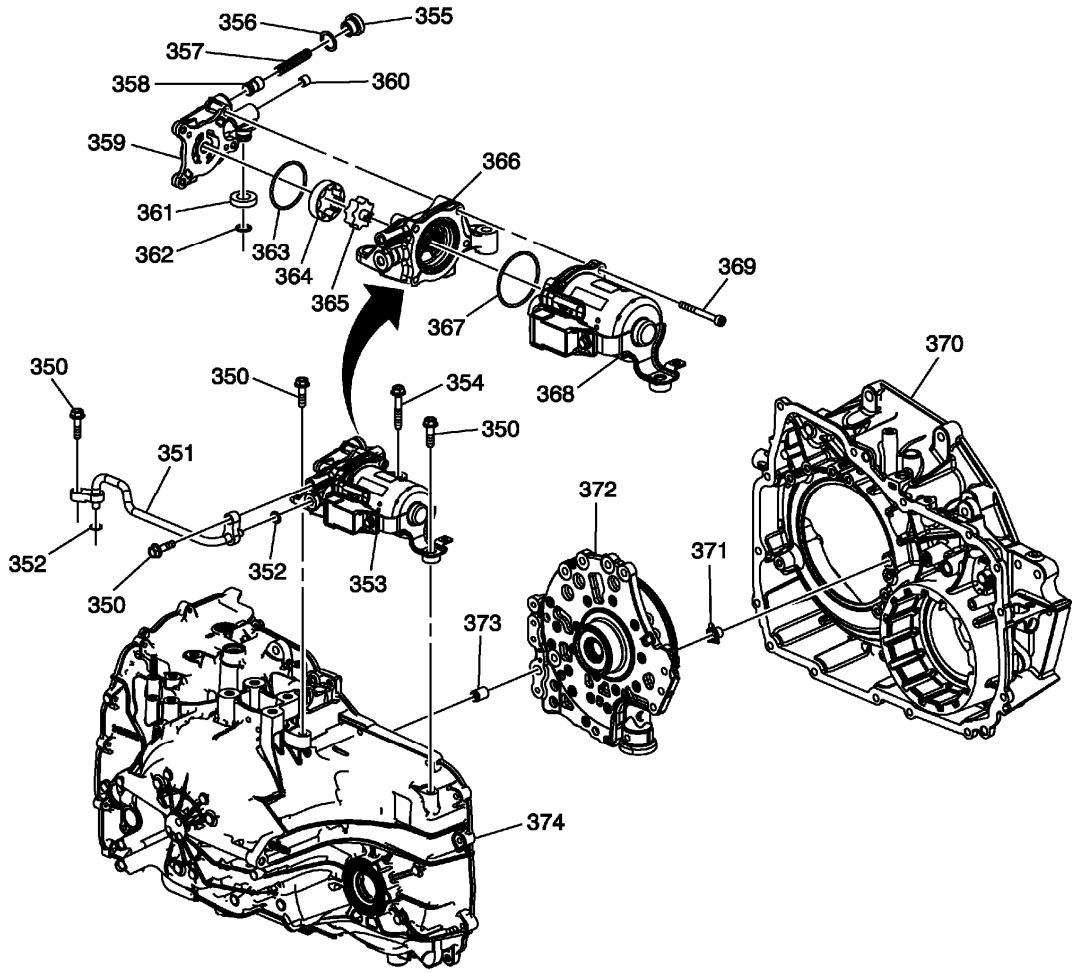

Fig. 12: Auxiliary Fluid Pump and Hybrid Components -- Hybrid Models
Courtesy of GENERAL MOTORS COMPANY

Callout	Component Name
350	A/Trans Auxiliary Fluid Pump Outlet Bolt (Qty: 4)
351	A/Trans Auxiliary Fluid Pump Outlet Pipe Assembly
352	A/Trans Auxiliary Fluid Pump Outlet Pipe Seal Assembly
353	A/Trans Auxiliary Fluid Pump Assembly

354	A/Trans Auxiliary Fluid Pump Bolt
355	Pressure Regulator Valve Spring Retainer
356	Pressure Regulator Valve Spring Spacer
357	Pressure Regulator Valve Spring
358	Pressure Regulator Valve
359	A/Trans Auxiliary Fluid Pump Cover
360	A/Trans Auxiliary Fluid Pump Cover Hole Plug
361	A/Trans Auxiliary Fluid Pump Gasket
362	A/Trans Auxiliary Fluid Pump Seal
363	A/Trans Auxiliary Fluid Pump Cover Seal
364	A/Trans Auxiliary Fluid Pump Outer Rotor
365	A/Trans Auxiliary Fluid Pump Inner Rotor
366	A/Trans Auxiliary Fluid Pump Body
367	A/Trans Auxiliary Fluid Pump Motor Cover Seal - O-ring
368	A/Trans Auxiliary Fluid Pump Motor Assembly
369	A/Trans Auxiliary Fluid Pump (Pump to Motor) Bolt (Qty: 4)
370	Torque Converter and Differential Housing
371	A/Trans Auxiliary Fluid Inlet Pump Seal
372	A/Trans Fluid Pump Assembly
373	A/Trans Fluid Trough Check Ball
374	A/Trans Case

Control Valve Body Assembly (1 of 2 - Gen 1)

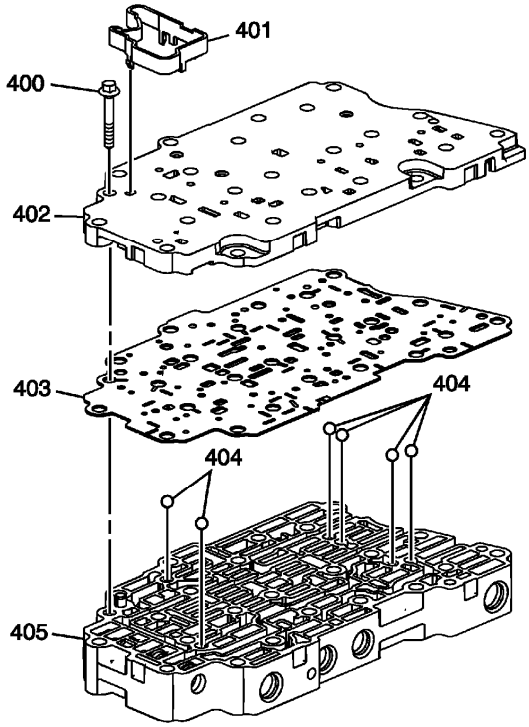

Fig. 13: View Of Control Valve Body Assembly (1 Of 2)
Courtesy of GENERAL MOTORS COMPANY

Callout	Component Name
400	Control Valve Body Bolt
401	Control Solenoid Valve Support
402	Valve Channel Plate
403	Channel Plate to Valve Body Spacer Plate Assembly
404	Control Valve Body Ball Check Valve
405	Control Valve Body Assembly

Control Valve Body Assembly (2 of 2 - Gen 1)

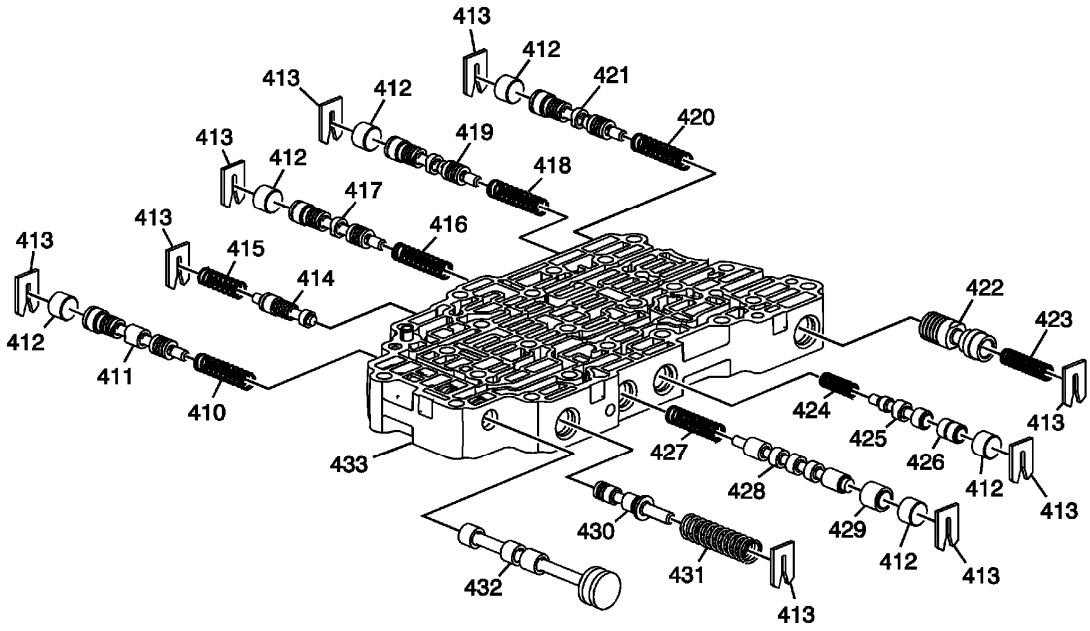

Fig. 14: View Of Control Valve Body Assembly (2 Of 2)
Courtesy of GENERAL MOTORS COMPANY

Callout	Component Name
410	Reverse and 4-5-6 Clutch Regulator Valve Spring
411	Reverse and 4-5-6 Clutch Regulator Valve
412	Clutch Valve Bore Plug
413	Valve Spring Retainer
414	1-2-3-4 Clutch Boost Valve
415	1-2-3-4 Clutch Boost Valve Spring
416	1-2-3-4 Clutch Regulator Valve Spring

417	1-2-3-4 Clutch Regulator Valve
418	2-6 Clutch Regulator Valve Spring
419	2-6 Clutch Regulator Valve
420	3-5-Reverse Clutch Regulator Valve Spring
421	3-5-Reverse Clutch Regulator Valve
422	Clutch Piston Dam Feed Regulator Valve
423	Clutch Piston Dam Feed Regulator Valve Spring
424	Torque Converter Clutch Regulator Apply Valve Spring
425	Torque Converter Clutch Regulator Apply Valve
426	Torque Converter Clutch Regulator Apply Shuttle Valve
427	Clutch Select Valve Spring
428	Clutch Select Valve
429	Default Override Shuttle Valve
430	Actuator Feed Limit Valve
431	Actuator Feed Limit Valve Spring
432	Manual Valve
433	Control Valve Body Assembly

Control Valve Body Assembly (1 of 2 - Gen 2)

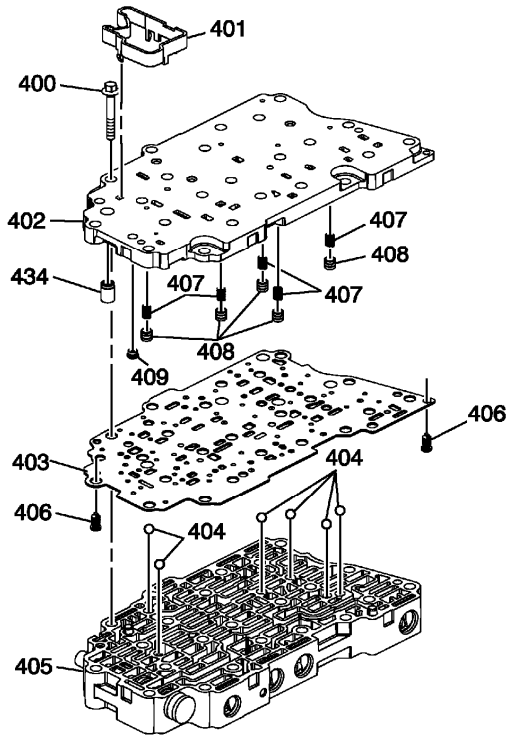

Fig. 15: Control Valve Body Assembly (1 of 2 -- Gen 2)
Courtesy of GENERAL MOTORS COMPANY

Callout	Component Name

400	Control Valve Body Bolt
401	Control Solenoid Valve Support
402	Valve Channel Plate
403	Channel Plate to Valve Body Spacer Plate Assembly
404	Control Valve Body Ball Check Valve (Qty:6)
405	Control Valve Body Assembly
406	Control Valve Body Spacer Plate Retainer (Qty: 2)
407	Actuator Feed Accumulator Spring (Qty: 5)
408	Actuator Feed Accumulator Piston (Qty: 5)
409	Variable Hi and 2-3-4 Clutch Housing Valve Ball
434	Control Valve Channel Plate Ball Spring Assembly

Control Valve Body Assembly (2 of 2 - Gen 2)

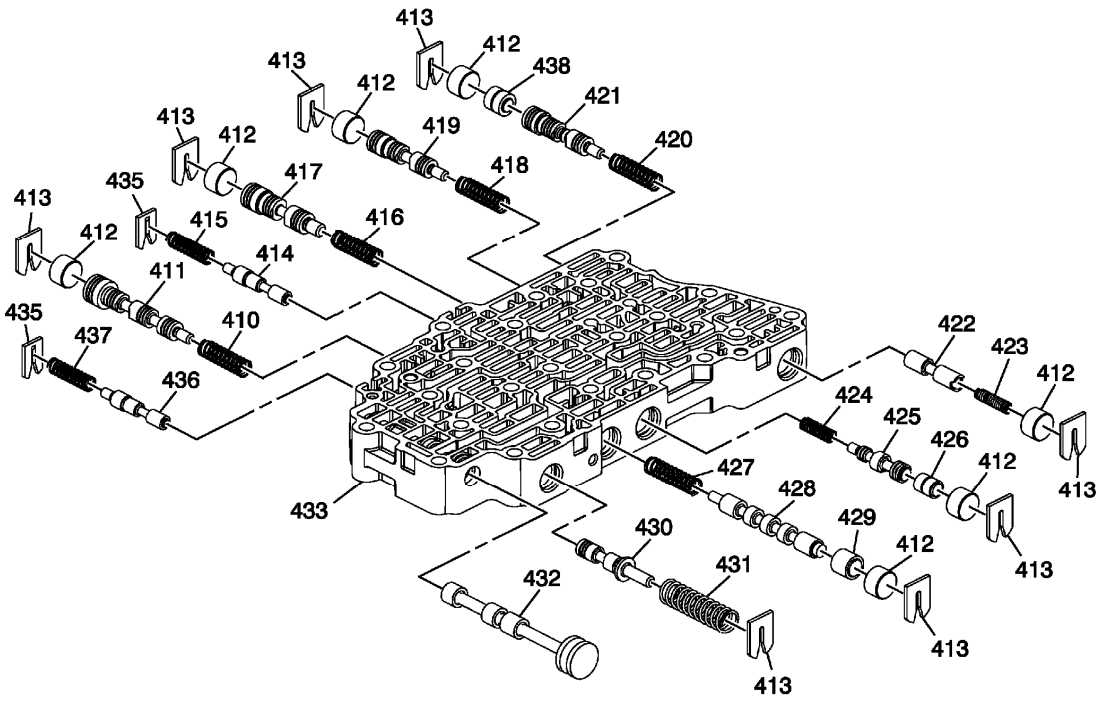

Fig. 16: Control Valve Body Assembly (2 of 2 -- Gen 2)
Courtesy of GENERAL MOTORS COMPANY

Callout	Component Name
410	Low-Reverse and 4-5-6 Clutch Regulator Valve Spring
411	Low-Reverse and 4-5-6 Clutch Regulator Valve
412	Clutch Valve Bore Plug
413	Valve Spring Retainer
414	1-2-3-4 Clutch Boost Valve
415	1-2-3-4 Clutch Boost Valve Spring

416	1-2-3-4 Clutch Regulator Valve Spring
417	1-2-3-4 Clutch Regulator Valve
418	2-6 Clutch Regulator Valve Spring
419	2-6 Clutch Regulator Valve
420	3-5-Reverse Clutch Regulator Valve Spring
421	3-5-Reverse Clutch Regulator Valve
422	Default Override Valve
423	Defualt Override Valve Spring
424	Torque Converter Clutch Regulator Apply Valve Spring
425	Torque Converter Clutch Regulator Apply Valve
426	Torque Converter Clutch Regulator Apply Shuttle Valve
427	Clutch Select Valve Spring
428	Clutch Select Valve
429	Clutch Select (Shuttle) Valve
430	Actuator Feed Limit Valve
431	Actuator Feed Limit Valve Spring
432	Manual Valve
433	Control Valve Body Assembly
435	Control Valve Body Bore Plug Retainer
436	Low-Reverse and 4-5-6 Clutch Boost Valve
437	Low-Reverse and 4-5-6 Clutch Boost Valve Spring
438	3-5 Reverse Clutch Regulator (Shuttle) Valve

3-5 Reverse Clutch Assembly - Gen 1

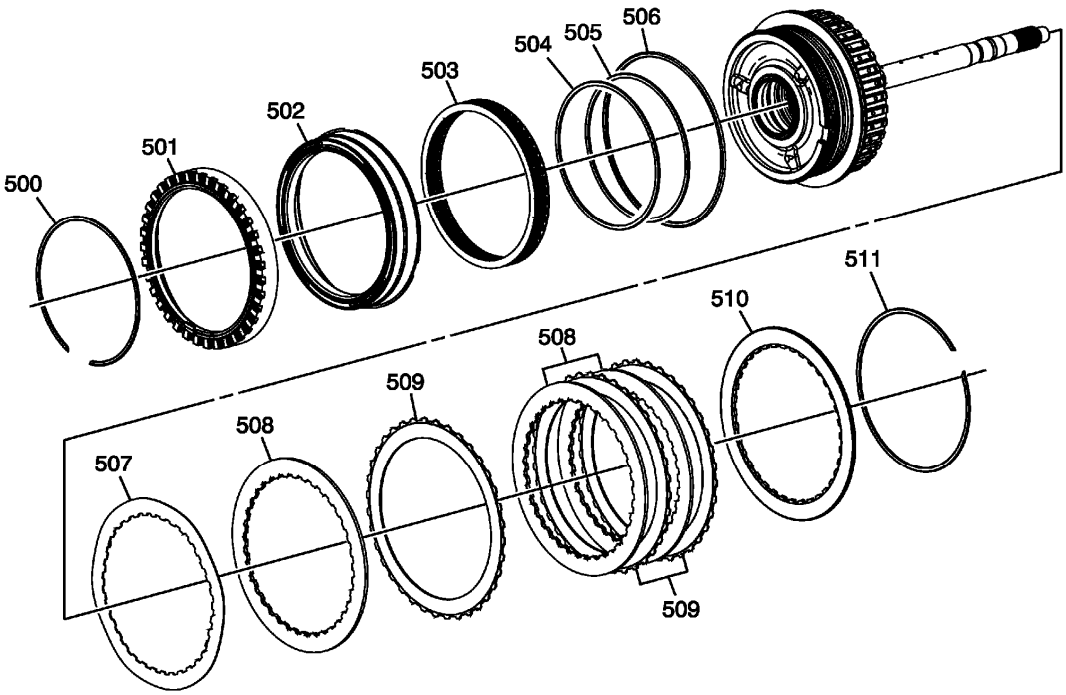

Fig. 17: View Of 3-5 Reverse Clutch Assembly
Courtesy of GENERAL MOTORS COMPANY

Callout	Component Name
500	A/Trans Input Shaft Speed Sensor Reluctor Wheel Retainer Ring
501	A/Trans Input Shaft Speed Sensor Reluctor Wheel
502	3-5-Reverse Clutch Piston
503	3-5-Reverse Clutch Piston Return Spring Assembly
504	3-5-Reverse Clutch Piston Inner Seal
505	3-5-Reverse Clutch Piston Inner Seal
506	3-5-Reverse Clutch Piston Dam Seal
507	3-5-Reverse Clutch Apply Plate
508	3-5-Reverse Clutch Plate
509	3-5-Reverse Clutch (w/Friction Material) Plate Assembly
510	3-5-Reverse Clutch Backing Plate
511	3-5-Reverse Clutch Backing Plate Retainer Ring

3-5 Reverse Clutch Assembly - Gen 2

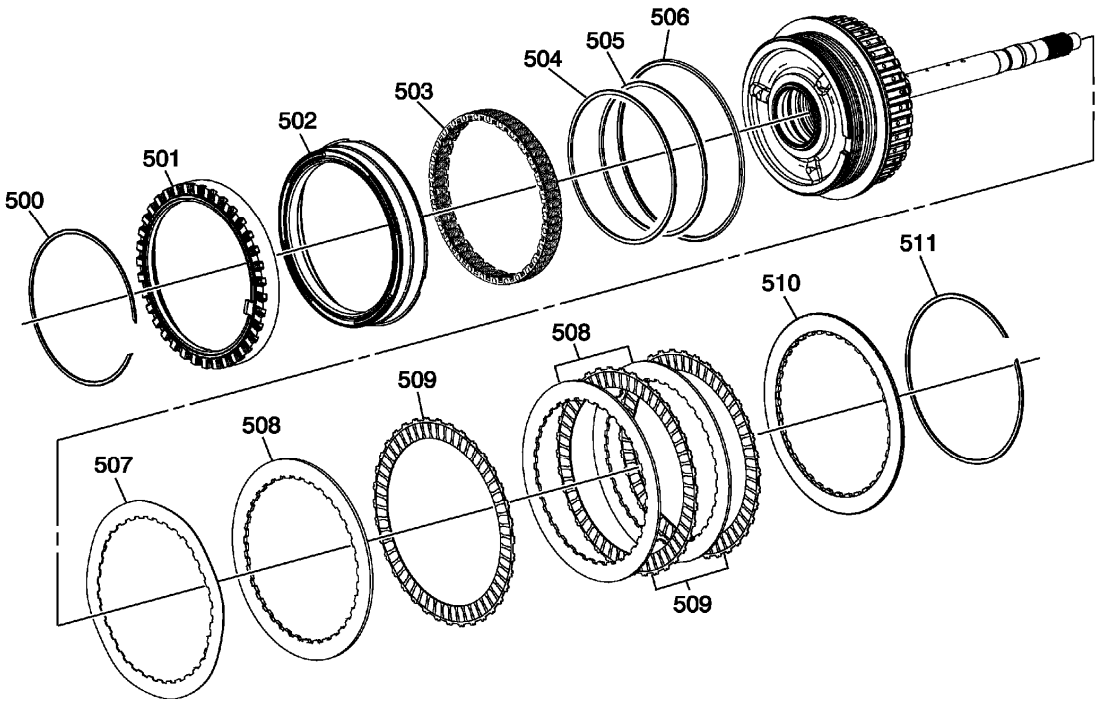

Fig. 18: 3-5 Reverse Clutch Assembly - Gen 2
Courtesy of GENERAL MOTORS COMPANY

Callout	Component Name
500	A/Trans Input Shaft Speed Sensor Reluctor Wheel Retainer Ring
501	A/Trans Input Shaft Speed Sensor Reluctor Wheel
502	3-5-Reverse Clutch Piston
503	3-5-Reverse Clutch Piston Return Spring Assembly
504	3-5-Reverse Clutch Piston Inner Seal
505	3-5-Reverse Clutch Piston Inner Seal
506	3-5-Reverse Clutch Piston Dam Seal
507	3-5-Reverse Clutch Apply Plate
508	3-5-Reverse Clutch Plate
509	3-5-Reverse Clutch (w/Friction Material) Plate Assembly
510	3-5-Reverse Clutch Backing Plate
511	3-5-Reverse Clutch Backing Plate Retainer Ring

4-5-6 Clutch Assembly - Gen 1

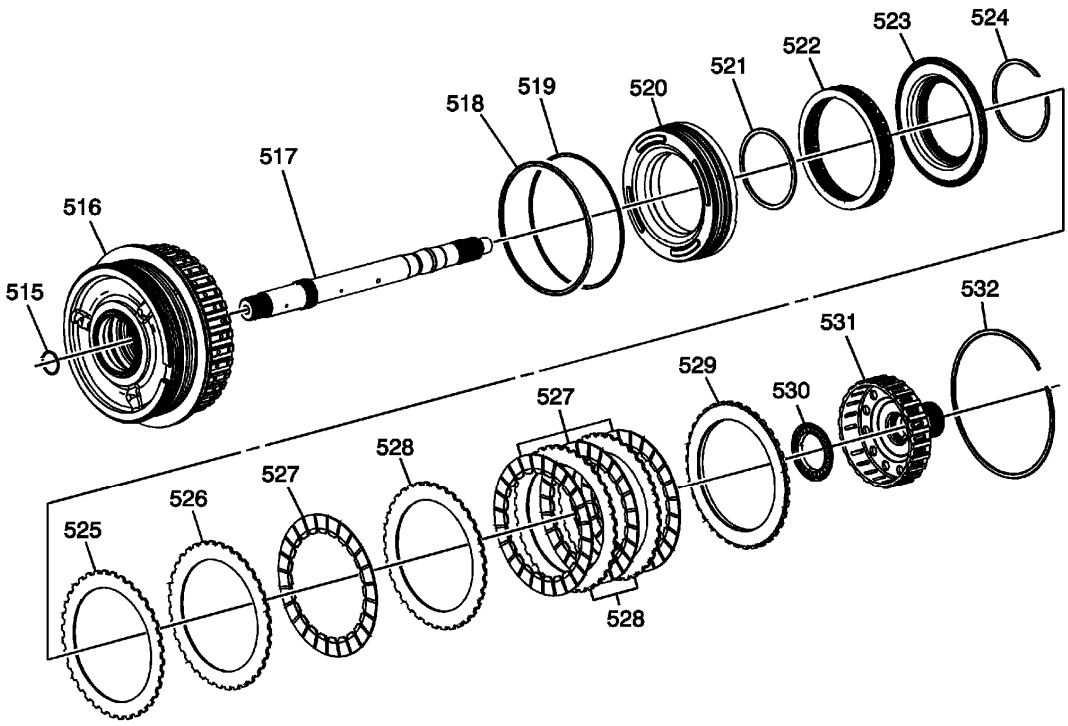

Fig. 19: View Of 4-5-6 Clutch Assembly
Courtesy of GENERAL MOTORS COMPANY

Callout	Component Name
515	Turbine Shaft Retainer Ring
516	3-5-Reverse and 4-5-6 Clutch Housing Assembly
517	Turbine Shaft
518	4-5-6 Clutch Piston Outer Seal
519	4-5-6 Clutch Piston Outer Seal
520	4-5-6 Clutch Piston
521	4-5-6 Clutch Piston Inner Seal
522	4-5-6 Clutch Piston Return Spring Assembly
523	4-5-6 Clutch Piston Fluid Dam Assembly
524	4-5-6 Clutch Piston Fluid Dam Retainer Ring
525	4-5-6 Clutch (Waved) Plate
526	4-5-6 Clutch Apply Plate
527	4-5-6 Clutch (w/Friction Material) Plate Assembly
528	4-5-6 Clutch Plate
529	4-5-6 Clutch Backing Plate
530	Reaction Carrier Hub Thrust Bearing Assembly
531	Reaction Carrier Hub Assembly
532	4-5-6 Clutch Backing Plate Retainer Ring

4-5-6 Clutch Assembly - Gen 2

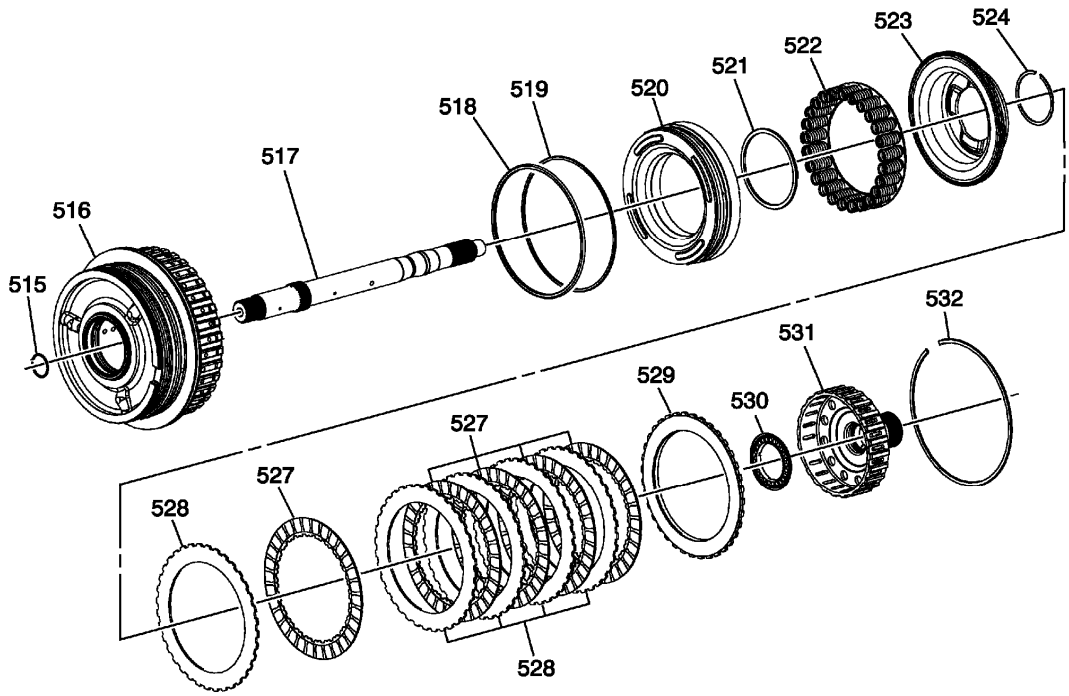

Fig. 20: 4-5-6 Clutch Assembly
Courtesy of GENERAL MOTORS COMPANY

Callout	Component Name
515	Turbine Shaft Retainer Ring
516	3-5-Reverse and 4-5-6 Clutch Housing Assembly
517	Turbine Shaft
518	4-5-6 Clutch Piston Outer Seal
519	4-5-6 Clutch Piston Outer Seal
520	4-5-6 Clutch Piston
521	4-5-6 Clutch Piston Inner Seal
522	4-5-6 Clutch Piston Return Spring Assembly
523	4-5-6 Clutch Piston Fluid Dam Assembly
524	4-5-6 Clutch Piston Fluid Dam Retainer Ring
527	4-5-6 Clutch (w/Friction Material) Plate Assembly Gen 1 (Qty: 4), Gen 2 (Qty: 5)
528	4-5-6 Clutch Plate - Gen 1 (Qty: 3), Gen 2 (Qty: 5)
529	4-5-6 Clutch Backing Plate
530	Reaction Carrier Hub Thrust Bearing Assembly
531	Reaction Carrier Hub Assembly
532	4-5-6 Clutch Backing Plate Retainer Ring

2-6, Low and Reverse and 1-2-3-4 Clutch Plate Assemblies - Gen 1

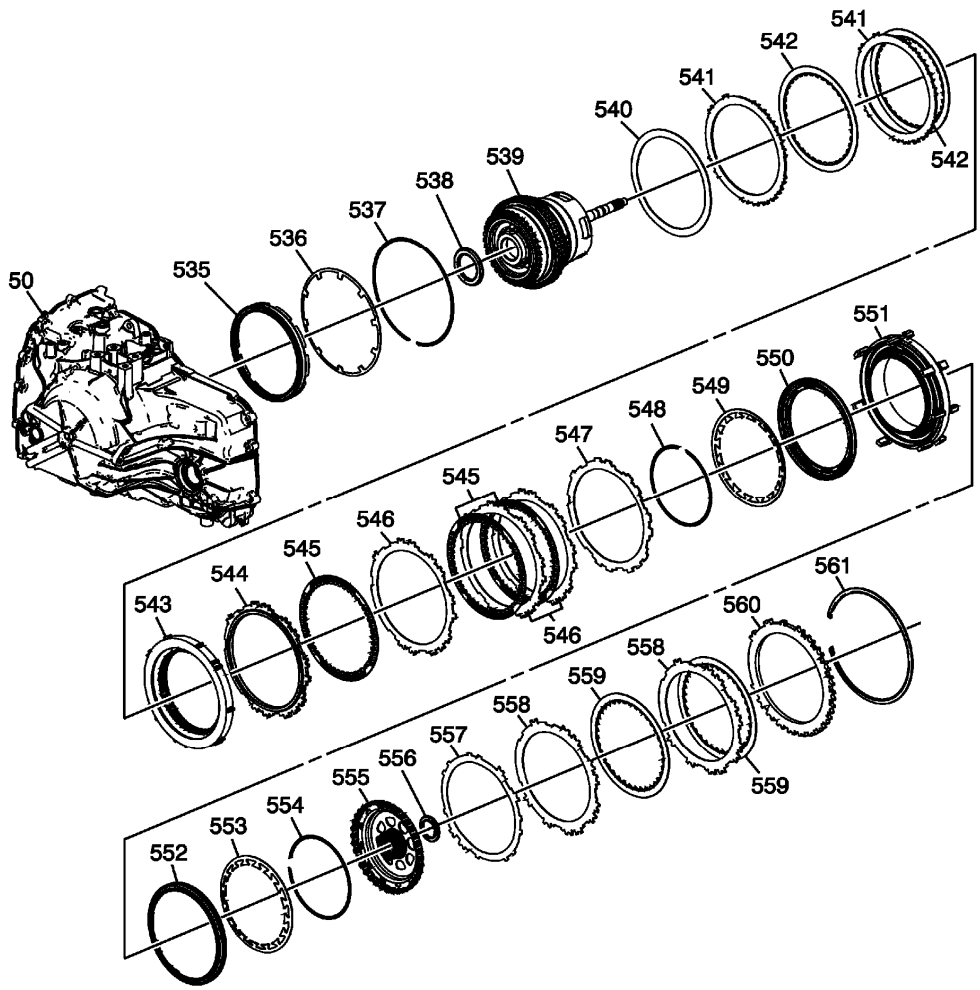

Fig. 21: Disassembled View Of 2-6, Low 7 Reverse & 1-2-3-4 Clutch Plate Assemblies
Courtesy of GENERAL MOTORS COMPANY

Callout	Component Name
50	A/Trans Case
535	2-6 Clutch Piston Assembly
536	2-6 Clutch Spring
537	2-6 Clutch Spring Retainer Ring
538	3-5-Reverse and 4-5-6 Clutch Housing Thrust Bearing
539	3-5-Reverse and 4-5-6 Clutch Housing Assembly
540	2-6 Clutch Apply (Waved) Plate
541	2-6 Clutch Plate
542	2-6 Clutch (w/Friction Material) Plate Assembly
543	Low and Reverse Clutch Assembly
544	Low and Reverse Clutch Backing Plate
545	Low and Reverse Clutch (w/Friction Material) Plate Assembly
546	Low and Reverse Clutch Plate

547	Low and Reverse Clutch Apply (Waved) Plate
548	Low and Reverse Clutch Spring Retainer
549	Low and Reverse Clutch Spring
550	Low and Reverse Clutch Piston
551	Low and Reverse and 1-2-3-4 Clutch Housing
552	1-2-3-4 Clutch Piston
553	1-2-3-4 Clutch Spring
554	1-2-3-4 Clutch Piston Retainer
555	Output Sun Gear Assembly
556	Output Sun Thrust Bearing Assembly
557	1-2-3-4 Clutch (Waved) Plate
558	1-2-3-4 Clutch Plate
559	1-2-3-4 Clutch (w/Friction Material) Plate Assembly
560	1-2-3-4 Clutch Backing Plate
561	1-2-3-4 Clutch Backing Plate Retainer Ring

2-6, Low and Reverse and 1-2-3-4 Clutch Plate Assemblies - Gen 2

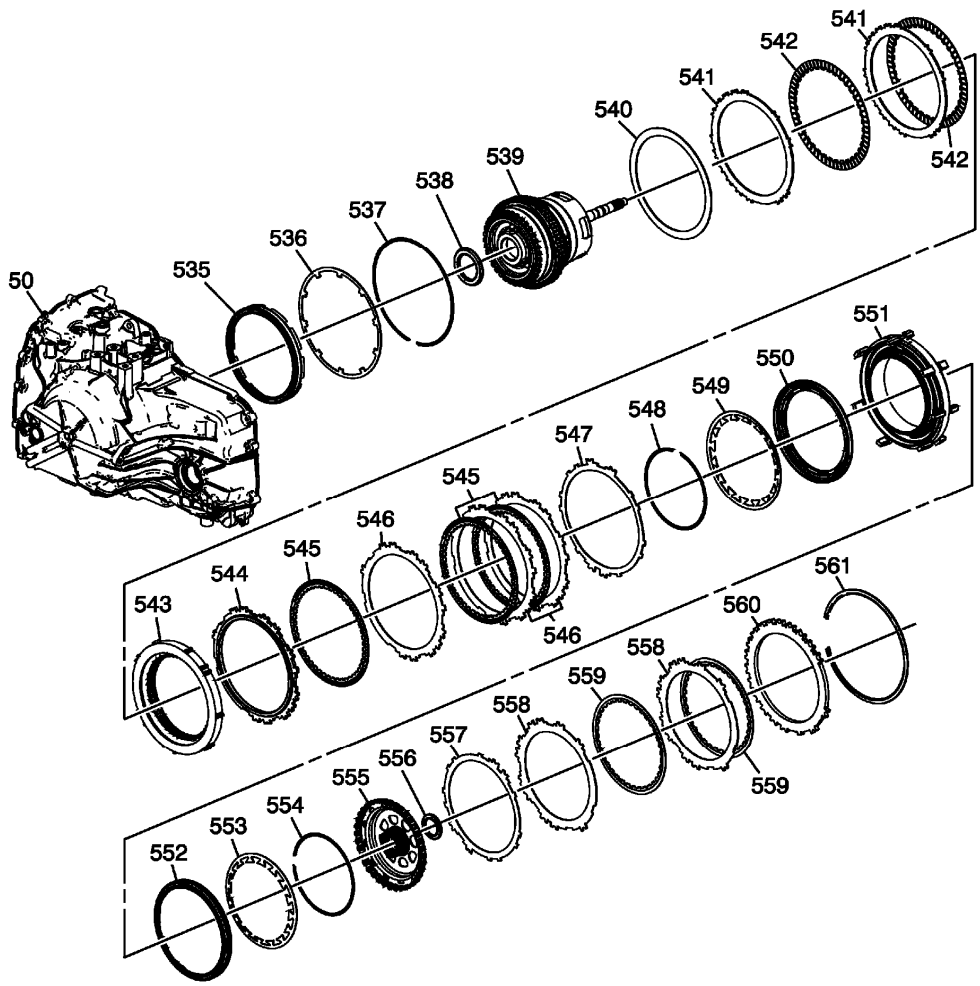

Fig. 22: 2-6, Low And Reverse And 1-2--3-4 Clutch Plate Assemblies - Gen 2
Courtesy of GENERAL MOTORS COMPANY

Callout	Component Name
50	A/Trans Case
535	2-6 Clutch Piston Assembly
536	2-6 Clutch Spring
537	2-6 Clutch Spring Retainer Ring
538	3-5-Reverse and 4-5-6 Clutch Housing Thrust Bearing
539	3-5-Reverse and 4-5-6 Clutch Housing Assembly
540	2-6 Clutch Apply (Waved) Plate
541	2-6 Clutch Plate (Qty: 2)
542	2-6 Clutch (w/Friction Material) Plate Assembly (Qty: 2) - Model Dependent
543	Low and Reverse Clutch Assembly
544	Low and Reverse Clutch Backing Plate
545	Low and Reverse Clutch (w/Friction Material) Plate Assembly (Qty:

	3)
546	Low and Reverse Clutch Plate (Qty: 3)
547	Low and Reverse Clutch Apply (Waved) Plate
548	Low and Reverse Clutch Spring Retainer
549	Low and Reverse Clutch Spring
550	Low and Reverse Clutch Piston
551	Low and Reverse and 1-2-3-4 Clutch Housing
552	1-2-3-4 Clutch Piston
553	1-2-3-4 Clutch Spring
554	1-2-3-4 Clutch Piston Retainer
555	Output Sun Gear Assembly
556	Output Sun Thrust Bearing Assembly
557	1-2-3-4 Clutch (Waved) Plate
558	1-2-3-4 Clutch Plate (Qty: 2)
559	1-2-3-4 Clutch (w/Friction Material) Plate Assembly (Qty: 2)
560	1-2-3-4 Clutch Backing Plate
561	1-2-3-4 Clutch Backing Plate Retainer Ring

Input, Output and Reaction Gearsets- 6T30/6T40

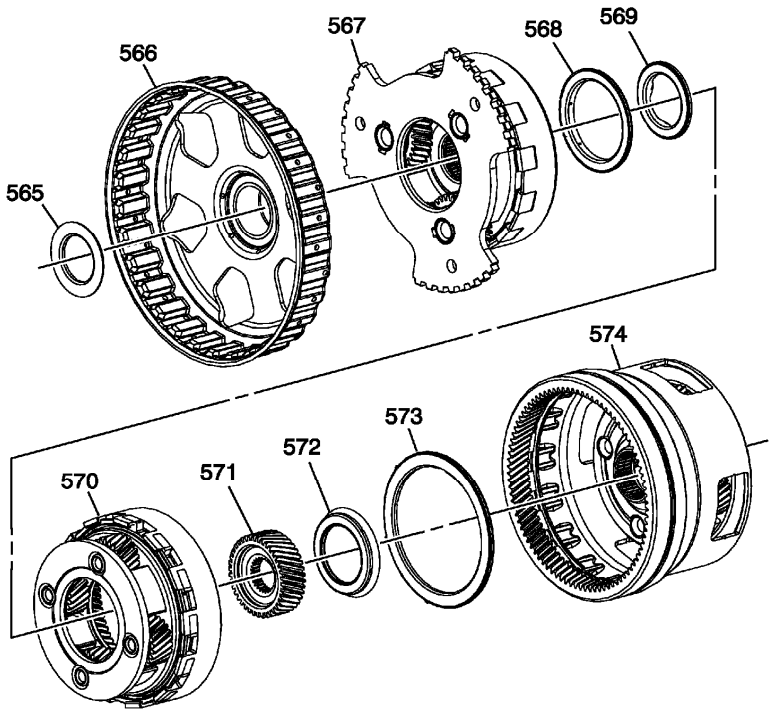

Fig. 23: Input, Output and Reaction Gearsets -- 6T30/6T40
Courtesy of GENERAL MOTORS COMPANY

Callout	Component Name

565	Reaction Sun Gear Thrust Bearing Assembly
566	Reaction Sun Gear Assembly
567	Reaction Carrier Assembly
568	Input Carrier Thrust Bearing Assembly
569	Input Sun Gear Thrust Bearing Assembly
570	Input Carrier Assembly
571	Input Sun Gear
572	Input Sun Gear Thrust Bearing Assembly
573	Output Carrier Thrust Bearing Assembly
574	Output Carrier Assembly

Input, Output and Reaction Gearsets- 6T45/6T50

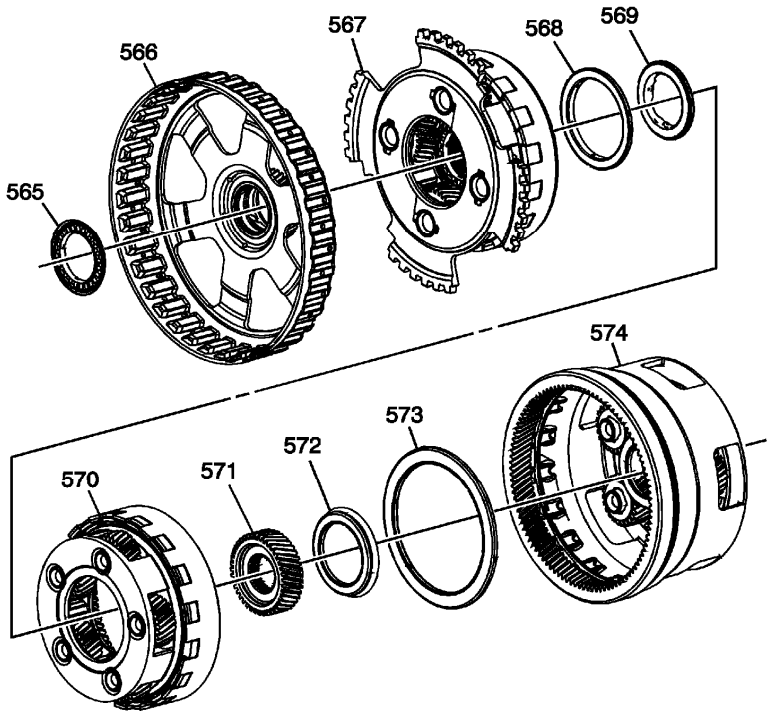

Fig. 24: View Of Input, Output & Reaction Gearsets
Courtesy of GENERAL MOTORS COMPANY

Callout	Component Name
565	Reaction Sun Gear Thrust Bearing Assembly
566	Reaction Sun Gear Assembly
567	Reaction Carrier Assembly
568	Input Carrier Thrust Bearing Assembly
569	Input Sun Gear Thrust Bearing Assembly
570	Input Carrier Assembly
571	Input Sun Gear

572	Input Sun Gear Thrust Bearing Assembly
573	Output Carrier Thrust Bearing Assembly
574	Output Carrier Assembly

Front Differential Carrier Assembly (2 Pinion)

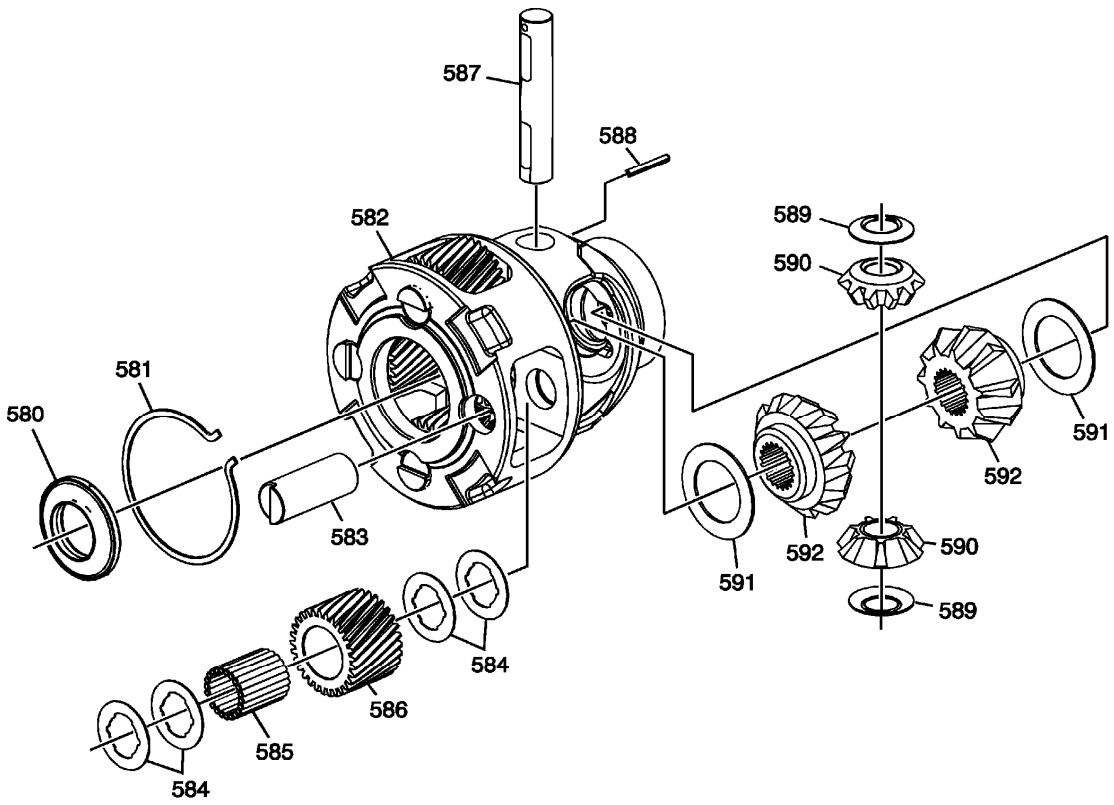

Fig. 25: Disassembled View Of Front Differential Carrier Assembly
Courtesy of GENERAL MOTORS COMPANY

Callout	Component Name
580	Differential Sun Gear to Differential Housing Bearing Assembly
581	Final Drive Retainer
582	Differential Carrier Assembly
583	Final Drive Pinion Pin
584	Final Drive Inner and Outer Washer
585	Final Drive Roller
586	Pinion Final Drive Gear

587	Front Differential Pinion Gear Shaft
588	Front Differential Pinion Gear Shaft Pin
589	Front Differential Pinion Gear Thrust Washer
590	Front Differential Pinion Gear
591	Front Differential Side Gear Thrust Washer
592	Front Differential Side Gear

Front Differential Carrier Assembly (4 Pinion)

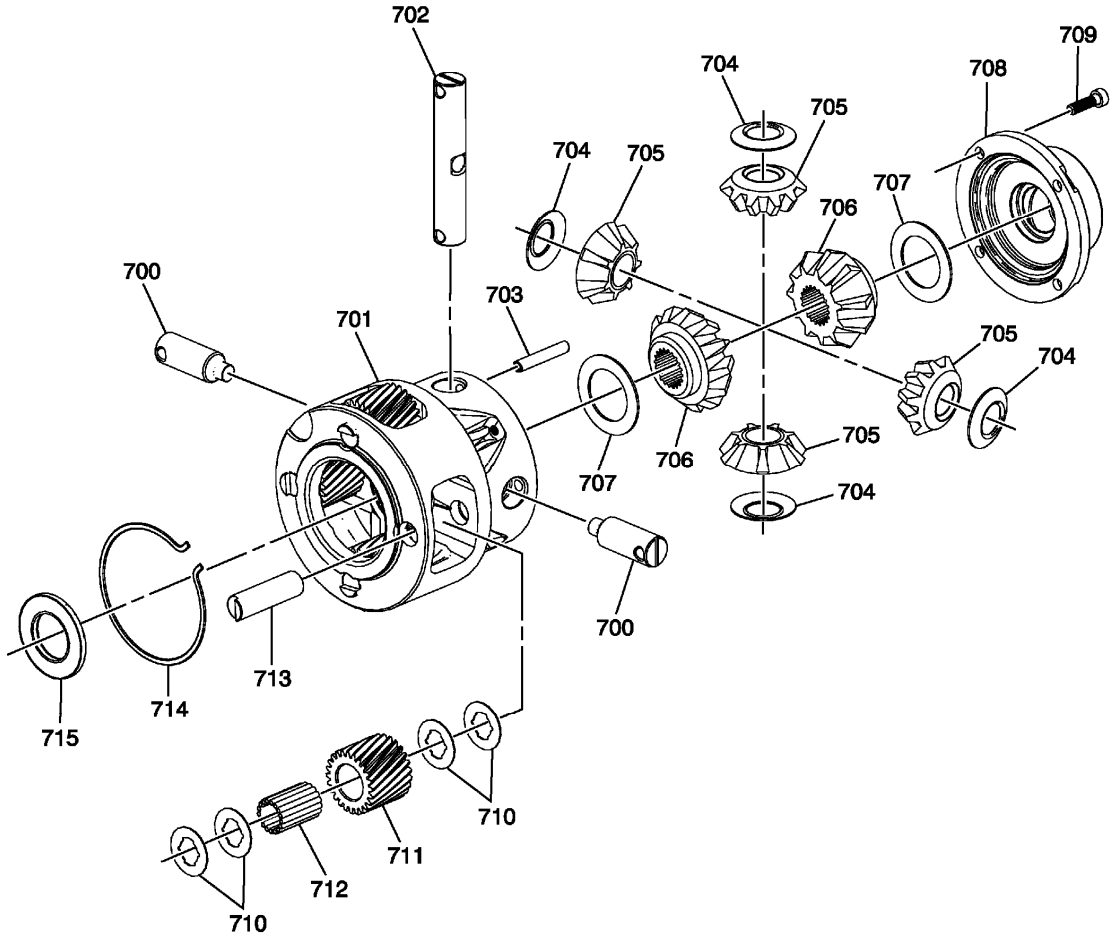

Fig. 26: Front Differential Carrier Assembly Components (4 Pinion)
Courtesy of GENERAL MOTORS COMPANY

Callout	Component Name
700	Front Differential Pinion Gear Shaft
701	Differential Carrier Assembly
702	Front Differential Pinion Gear Shaft
703	Front Differential Pinion Gear Shaft
704	Front Differential Pinion Thrust Washer

705	Front Differential Pinion Gear
706	Front Differential Side Gear
707	Front Differential Side Gear Thrust Washer
708	Front Differential Carrier Cover
709	Front Differential Carrier Cover Bolts
710	Front Differential Pinion Gear Shaft Washer
711	Front Differential Drive Pinion Gear
712	Front Differential Carrier Pinion Gear Bearing Rollers
713	Front Differential Pinion Gear Shaft Pin
714	Front Differential Pinion Gear Shaft Retainer
715	Front Differential Bearing

Park System Components

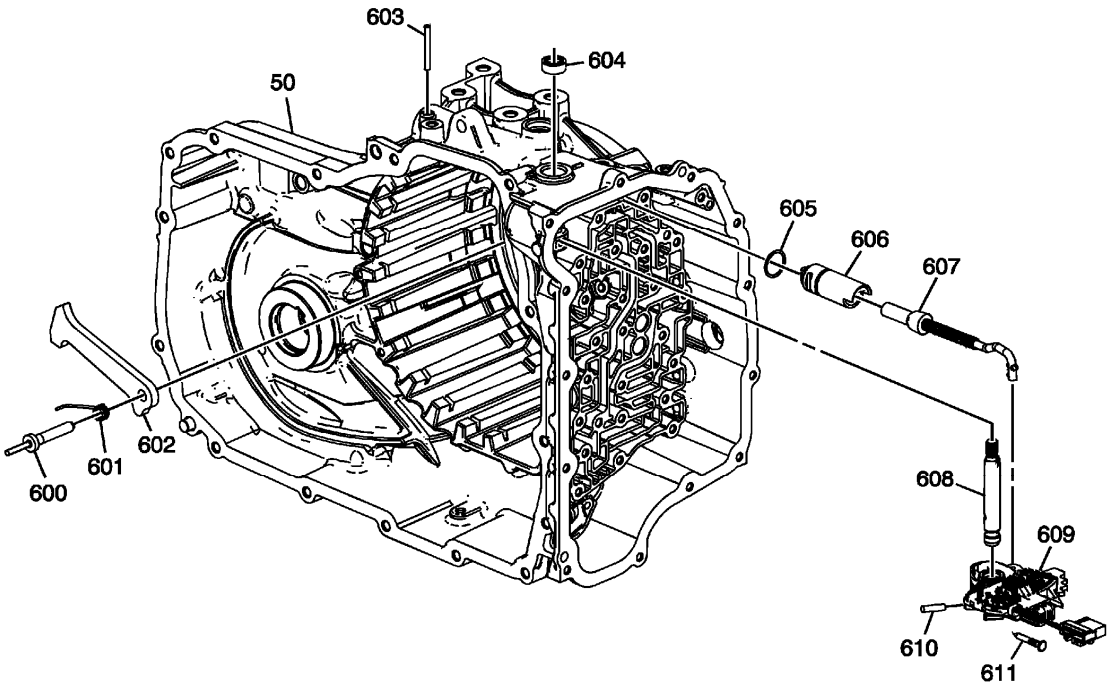

Fig. 27: View Of Park System Components
Courtesy of GENERAL MOTORS COMPANY

Callout	Component Name
50	A/Trans Case
600	Park Pawl Shaft
601	Park Pawl Spring
602	Park Pawl
603	Park Pawl Actuator Guide Pin
604	Manual Shift Shaft Seal

605	Park Pawl Actuator Guide Seal
606	Park Pawl Actuator Guide
607	Park Pawl Actuator Assembly
608	Manual Shift Detent Lever Shaft
609	Manual Shift Detent (w/Shaft Position Switch) Lever Assembly
610	Manual Shift Detent Lever Pin
611	Manual Shift Shaft Pin

COMPONENT LOCATION

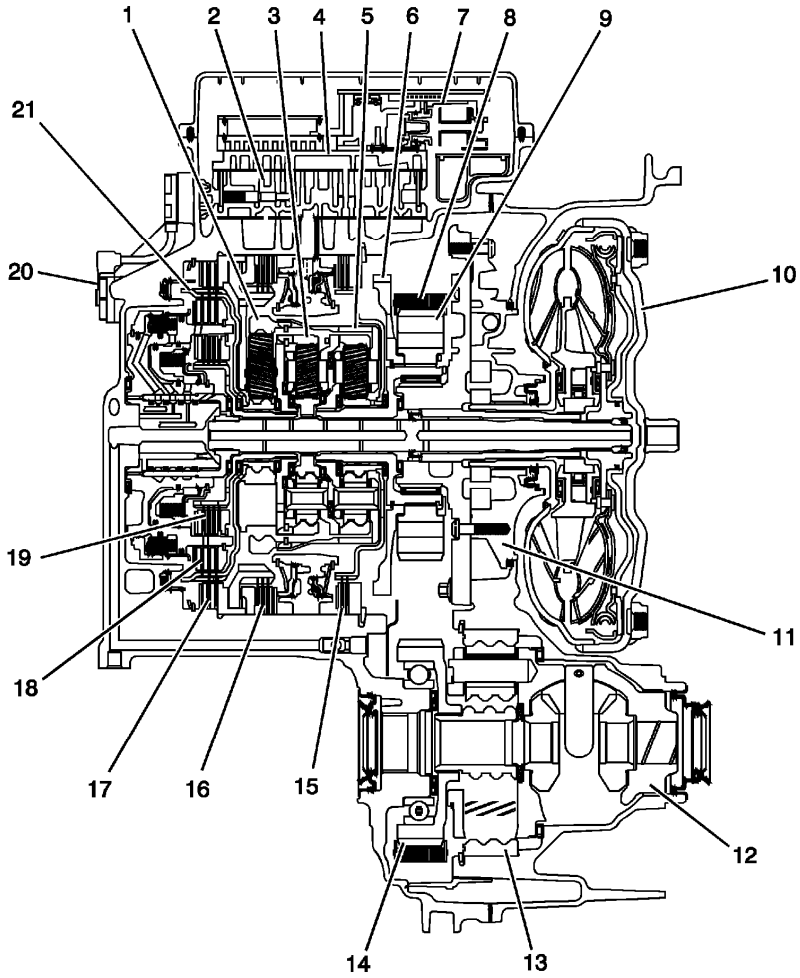

Fig. 28: Identifying Component Location
Courtesy of GENERAL MOTORS COMPANY

Callout	Component Name
1	Reaction Carrier Assembly
2	Control Valve Body Assembly
3	Input Carrier Assembly

4	Valve Channel Plate
5	Output Carrier Assembly
6	Park Gear
7	Control Solenoid (w/Body and TCM) Valve Assembly
8	Drive Link Assembly
9	Drive Sprocket
10	Torque Converter Assembly
11	A/Trans Fluid Pump Assembly
12	Differential Carrier Assembly
13	Front Differential Ring Gear
14	Driven Sprocket
15	1-2-3-4 Clutch Assembly
16	Low and Reverse Clutch Assembly
17	2-6 Clutch Assembly
18	3-5 Reverse Clutch Assembly
19	4-5-6 Clutch Assembly
20	A/Trans Input Speed Sensor Assembly
21	Reaction Sun Gear Assembly

BUSHING, BEARING, AND WASHER LOCATIONS (GEN 1)

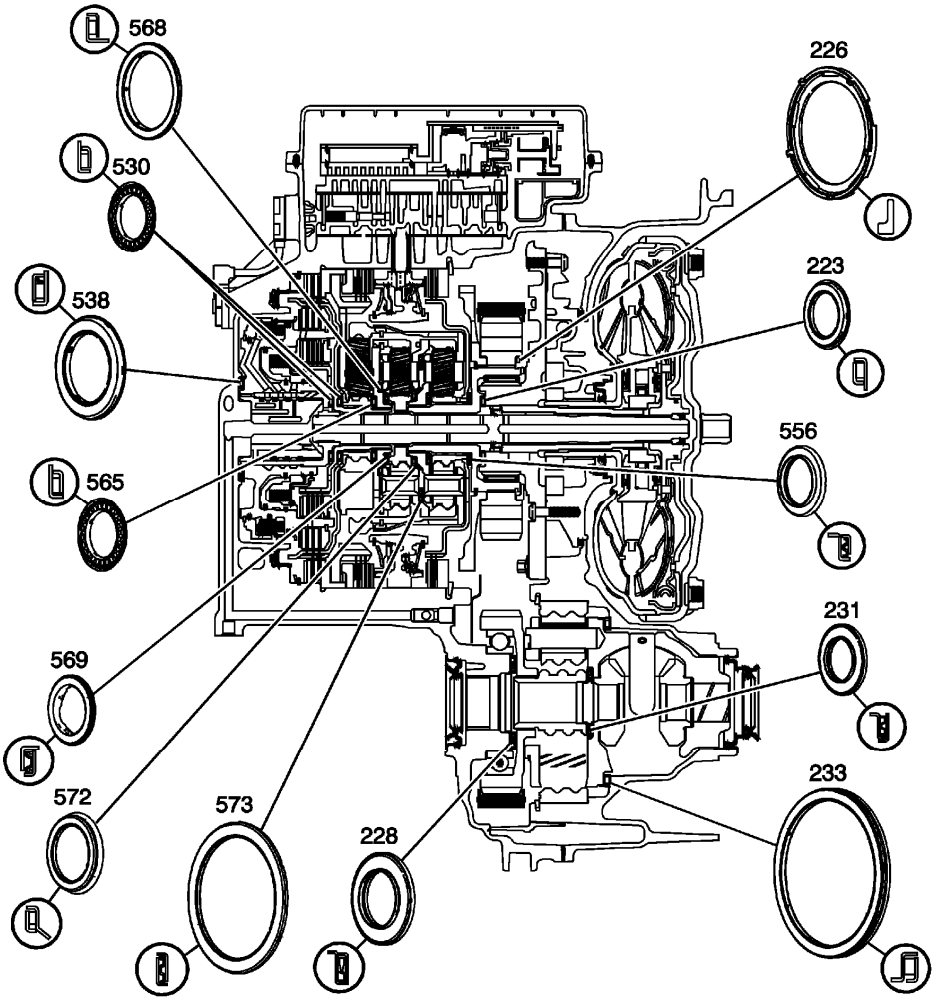

Fig. 29: Locating Bushings, Bearings & Washers
Courtesy of GENERAL MOTORS COMPANY

Callout	Component Name
223	Drive Spocket Bearing Assembly
226	Drive Sprocket Thrust Washer
228	Drive Sprocket Bearing Assembly
231	Differential Sun Gear to Differential Housing Bearing Assembly
233	Front Differential Carrier Bearing Assembly
530	Reaction Carrier Hub Thrust Bearing Assembly
538	3-5-Reverse and 4-5-6 Clutch Housing Thrust Bearing
556	Output Sun Thrust Bearing Assembly
565	Reaction Sun Gear Thrust Bearing Assembly
568	Input Carrier Thrust Bearing Assembly
569	Input Sun Gear Thrust Bearing Assembly
572	Input Sun Gear Thrust Bearing Assembly
573	Output Carrier Thrust Bearing Assembly

BUSHING, BEARING, AND WASHER LOCATIONS (GEN 2/HYBRID)

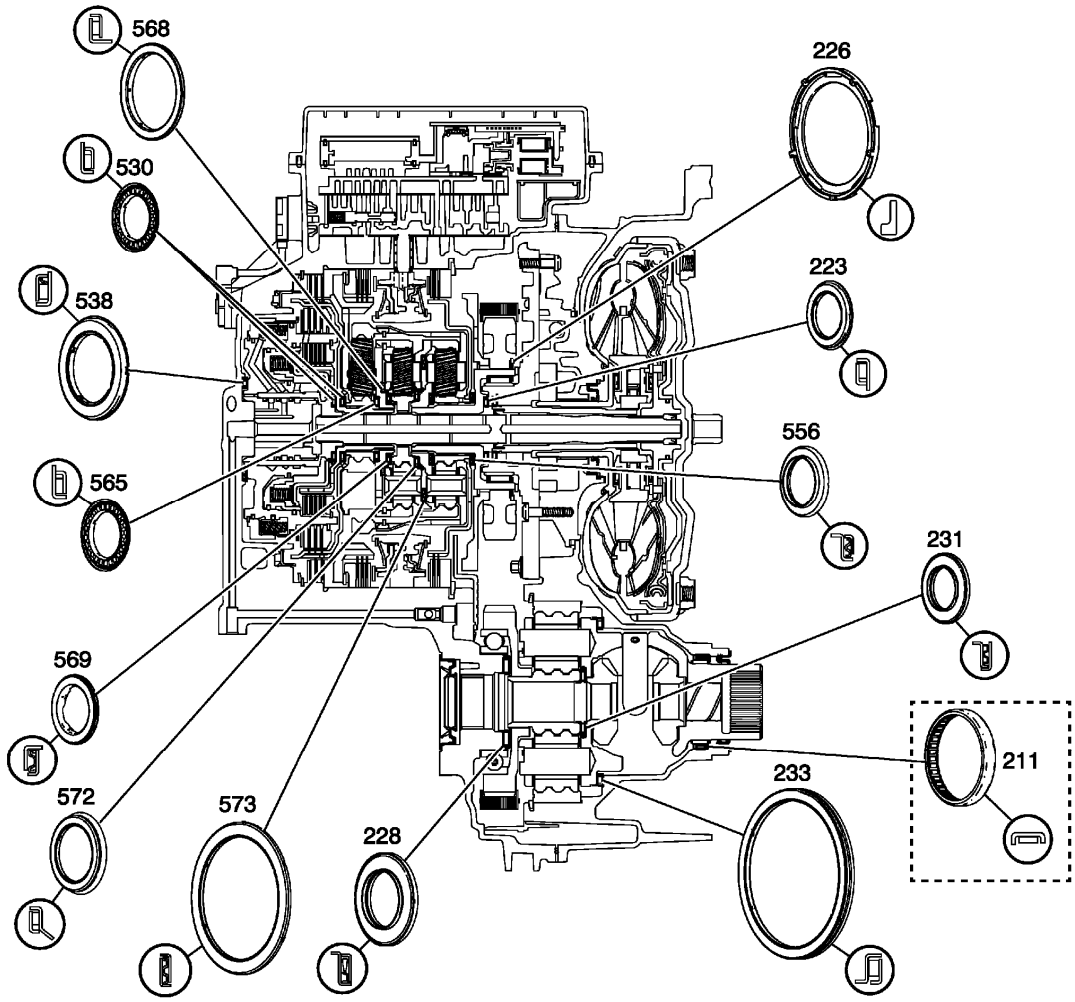

Fig. 30: Bushing, Bearing, and Washer Locations (Gen 2/Hybrid)
Courtesy of GENERAL MOTORS COMPANY

Callout	Component Name
211	Front Differential Carrier Bearing Assembly - AWD Models
223	Drive Spocket Bearing Assembly
226	Drive Sprocket Thrust Washer
228	Drive Sprocket Bearing Assembly
231	Differential Sun Gear to Differential Housing Bearing Assembly
233	Front Differential Carrier Bearing Assembly
530	Reaction Carrier Hub Thrust Bearing Assembly
538	3-5-Reverse and 4-5-6 Clutch Housing Thrust Bearing
556	Output Sun Thrust Bearing Assembly
565	Reaction Sun Gear Thrust Bearing Assembly
568	Input Carrier Thrust Bearing Assembly

569	Input Sun Gear Thrust Bearing Assembly
572	Input Sun Gear Thrust Bearing Assembly
573	Output Carrier Thrust Bearing Assembly

SEAL LOCATIONS (GEN 1)

Seal Locations (1 of 2)

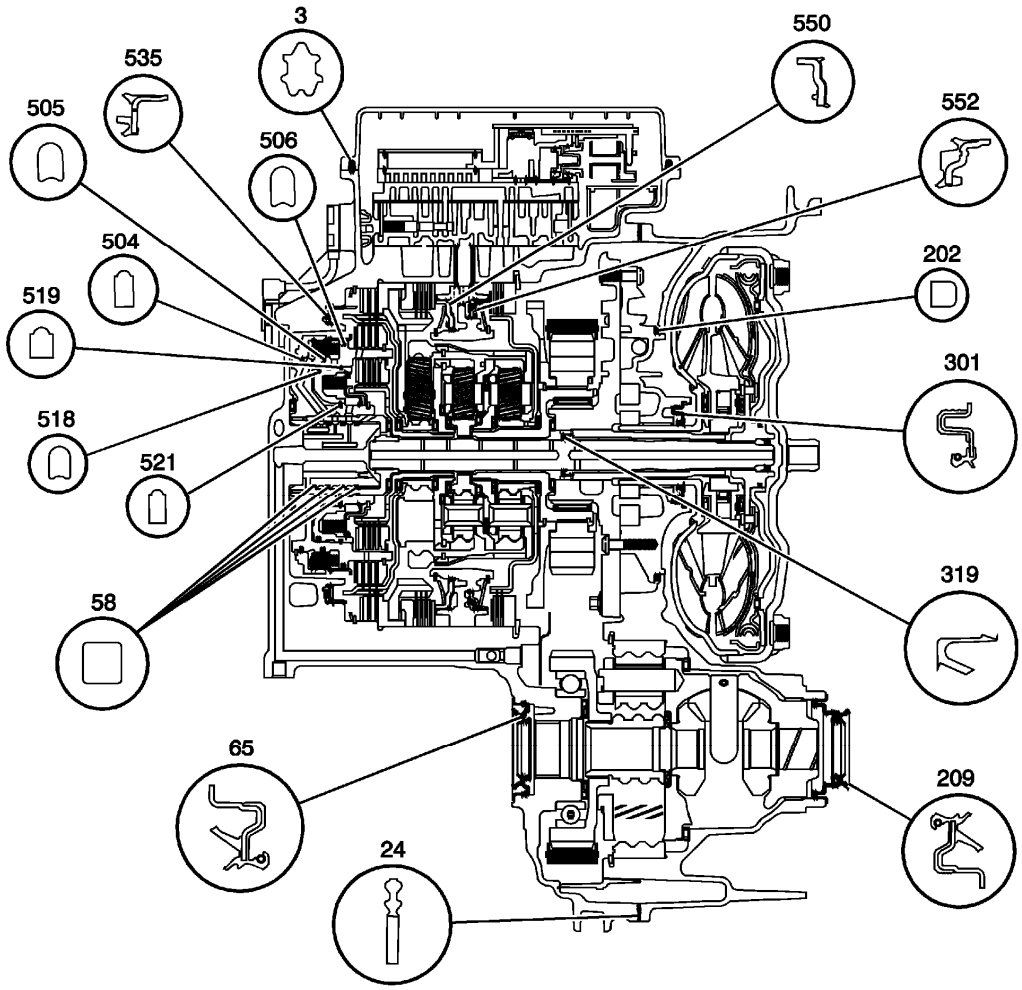

Fig. 31: Identifying Seal Locations (1 Of 2)
Courtesy of GENERAL MOTORS COMPANY

Callout	Component Name
3	Control Valve Body Cover Gasket
24	Torque Converter Housing Gasket
58	3-5-Reverse and 4-5-6 Clutch Fluid Seal Ring
65	Drive Shaft Oil Seal Assembly
202	Torque Converter and Differential Housing Seal
209	Front Wheel Drive Shaft Oil Seal Assembly

301	Torque Converter Fluid Seal Assembly
319	Torque Converter Fluid Seal Assembly
504	3-5-Reverse Clutch Piston Inner Seal
505	3-5-Reverse Clutch Piston Inner Seal
506	3-5-Reverse Clutch Piston Dam Seal
518	4-5-6 Clutch Piston Outer Seal
519	4-5-6 Clutch Piston Outer Seal
521	4-5-6 Clutch Piston Inner Seal
535	2-6 Clutch Piston Assembly
550	Low and Reverse Clutch Piston
552	1-2-3-4 Clutch Piston

Seal Locations (2 of 2)

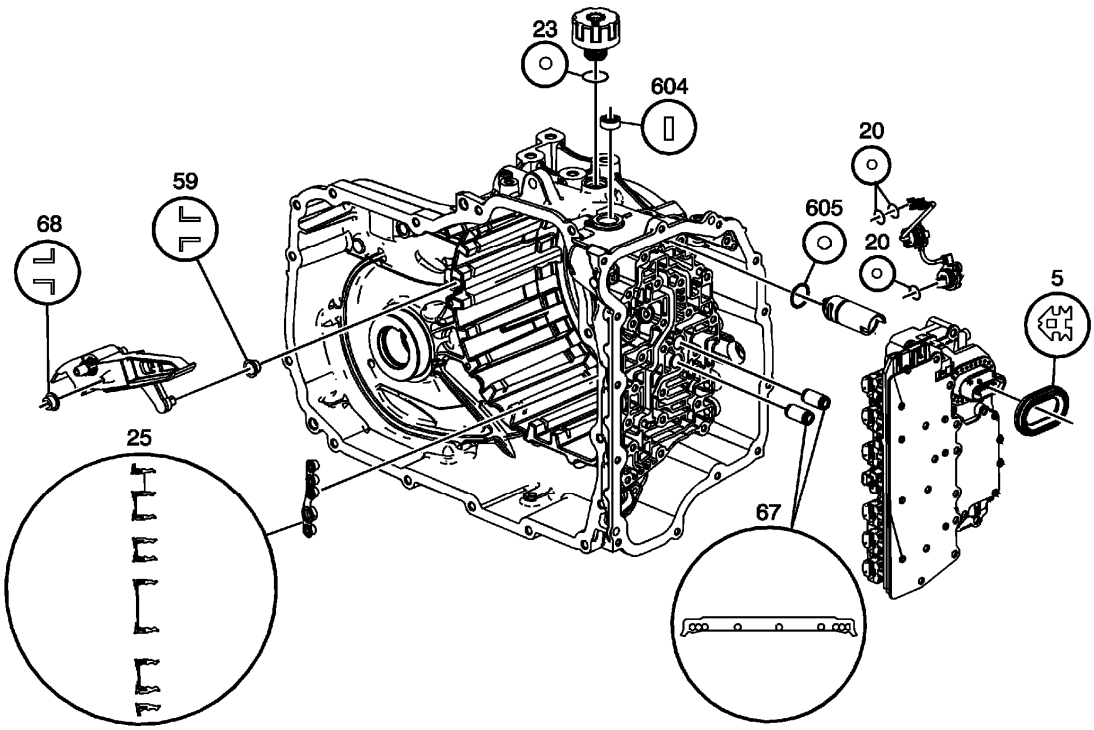

Fig. 32: Identifying Seal Locations (2 Of 2)
Courtesy of GENERAL MOTORS COMPANY

Callout	Component Name
5	Control Valve Body Cover Hole Seal
20	A/Trans Input Speed Sensor Assembly O-Ring Seal
23	Fill Cap Seal
25	A/Trans Fluid Pump Seal Assembly
59	Drive Link Lube Fluid Seal
67	1-2-3-4 and Low Reverse Clutch Fluid Passage

68	Drive Link Lube Fluid Seal
604	Manual Shift Shaft Seal
605	Park Pawl Actuator Guide Seal

SEAL LOCATIONS (GEN 2/HYBRID)

Seal Locations (1 of 2)

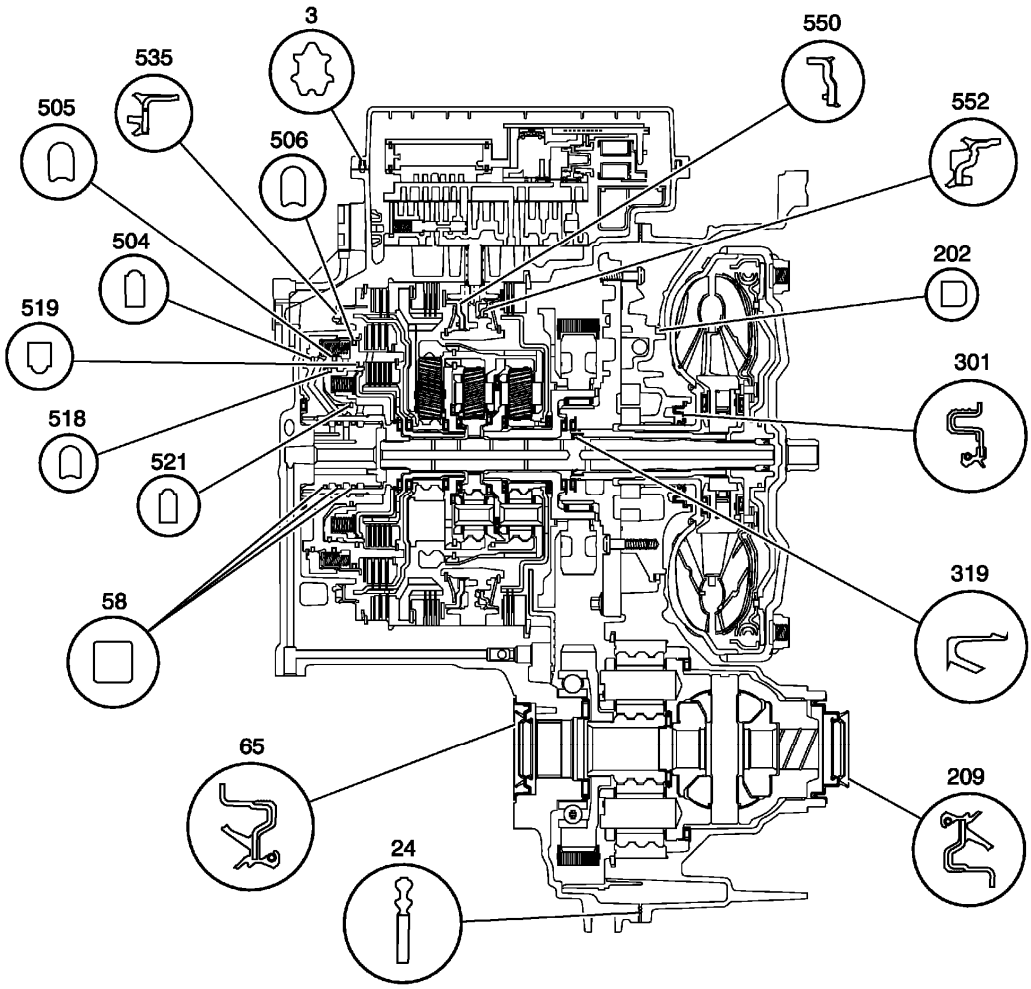

Fig. 33: Seal Locations (Gen 2/Hybrid)
Courtesy of GENERAL MOTORS COMPANY

Callout	Component Name
3	Control Valve Body Cover Gasket
24	Torque Converter Housing Gasket
58	3-5-Reverse and 4-5-6 Clutch Fluid Seal Ring (Qty: 3)
65	Drive Shaft Oil Seal Assembly
202	Torque Converter and Differential Housing Seal
209	Front Wheel Drive Shaft Oil Seal Assembly

301	Torque Converter Fluid Seal Assembly
319	Torque Converter Fluid Seal Assembly
504	3-5-Reverse Clutch Piston Inner Seal
505	3-5-Reverse Clutch Piston Inner Seal
506	3-5-Reverse Clutch Piston Dam Seal
518	4-5-6 Clutch Piston Outer Seal
519	4-5-6 Clutch Piston Outer Seal
521	4-5-6 Clutch Piston Inner Seal
535	2-6 Clutch Piston Assembly
550	Low and Reverse Clutch Piston
552	1-2-3-4 Clutch Piston

Seal Locations (2 of 2)

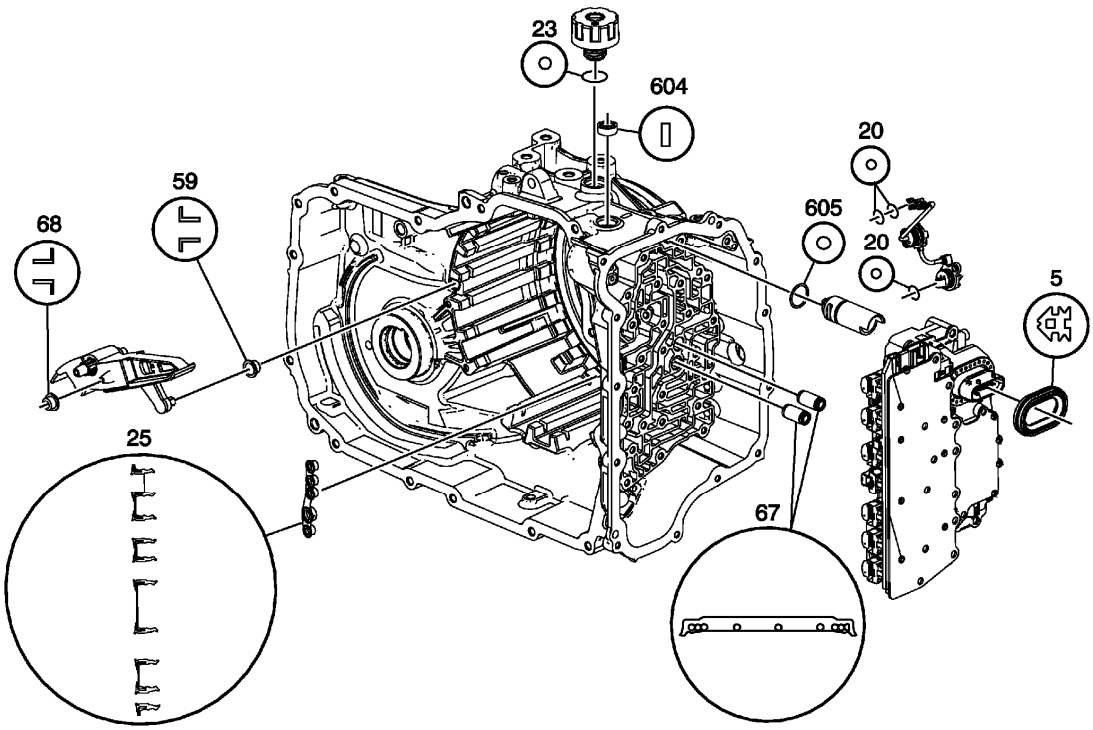

Fig. 34: Seal Locations (Gen 2/Hybrid)
Courtesy of GENERAL MOTORS COMPANY

Callout	Component Name
5	Control Valve Body Cover Hole Seal
20	A/Trans Input Speed Sensor Assembly O-Ring Seal
23	Fill Cap Seal
25	A/Trans Fluid Pump Seal Assembly
59	Drive Link Lube Fluid Seal
67	1-2-3-4 and Low Reverse Clutch Fluid Passage

68	Drive Link Lube Fluid Seal
604	Manual Shift Shaft Seal
605	Park Pawl Actuator Guide Seal

Auxiliary Fluid Pump and Hybrid Seals - Hybrid Models

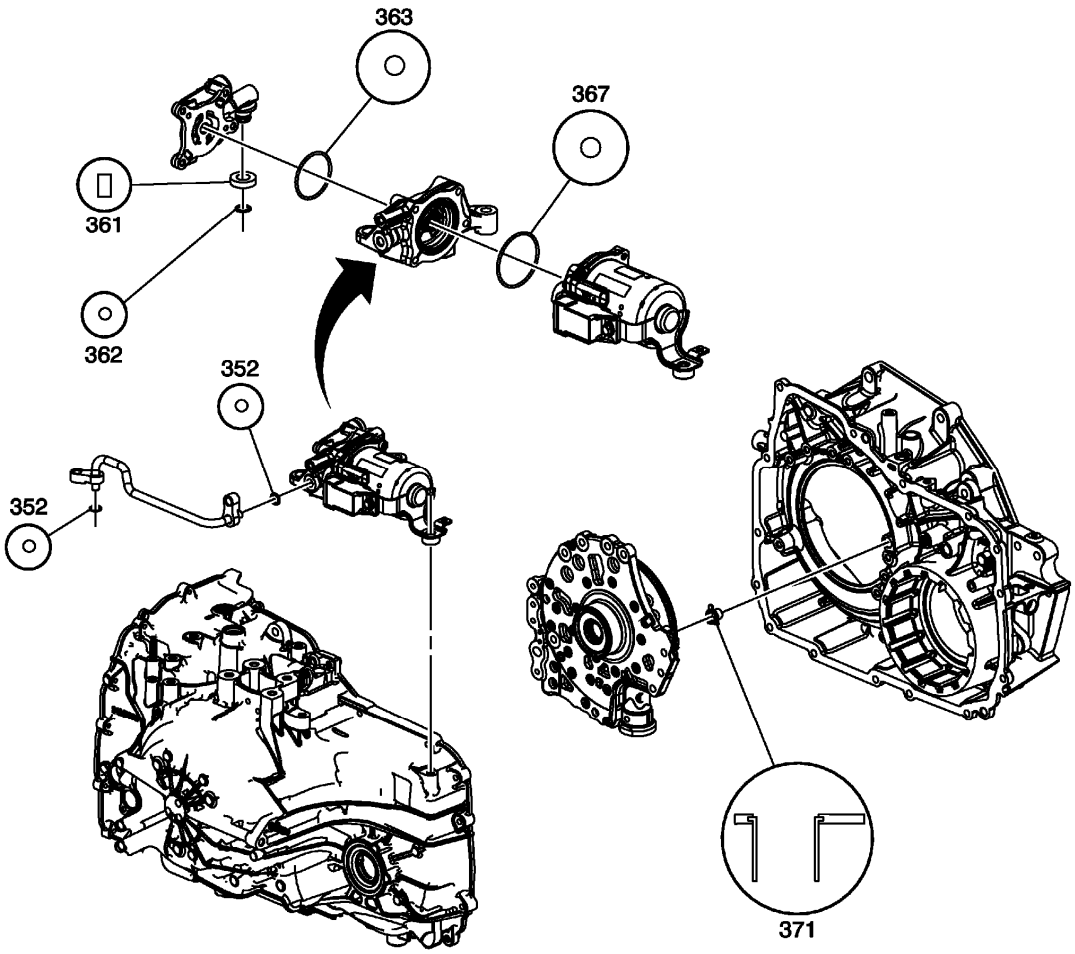

Fig. 35: Auxiliary Fluid Pump and Hybrid Seals -- Hybrid Models
Courtesy of GENERAL MOTORS COMPANY

Callout	Component Name
352	A/Trans Auxiliary Fluid Pump Outlet Pipe Seal Assembly
361	A/Trans Auxiliary Fluid Pump Gasket
362	A/Trans Auxiliary Fluid Pump Seal
363	A/Trans Auxiliary Fluid Pump Cover Seal
367	A/Trans Auxiliary Fluid Pump Motor Cover Seal - O-ring
371	A/Trans Auxiliary Fluid Inlet Pump Seal

BALL CHECK VALVE LOCATIONS (GEN 1)

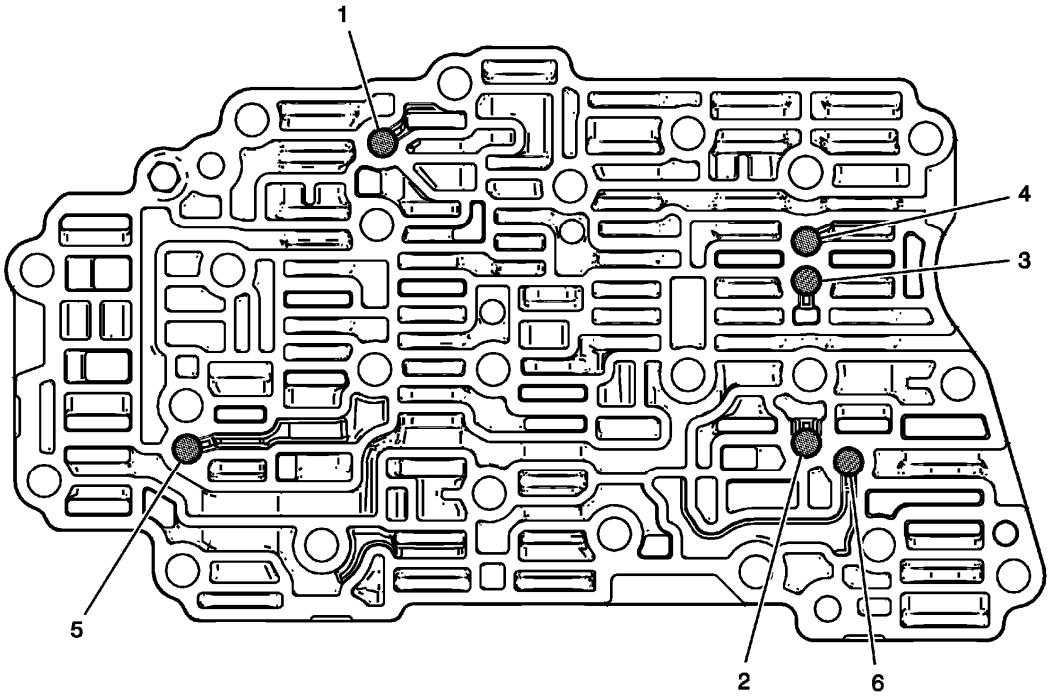

Fig. 36: Identifying Ball Check Valve Locations
Courtesy of GENERAL MOTORS COMPANY

Ball Check Valve Locations (Gen 1)

I.D.	Input Oil	Input Oil	Output Oil
1	PS4	456 CL FD	CSV2 Latch
2	35 Rev FD/Drive 1-6	Drive 1-6	35 Rev FD
3	35 Rev FD	-	35 Rev FD
4	Comp FD	35 Rev FD	35 Rev CL FD/Exh BF
5	Act FD LM	-	R1/456 CL FD
6	Act FD LM	-	35 Rev CL

BALL CHECK VALVE LOCATIONS (GEN 2/HYBRID)

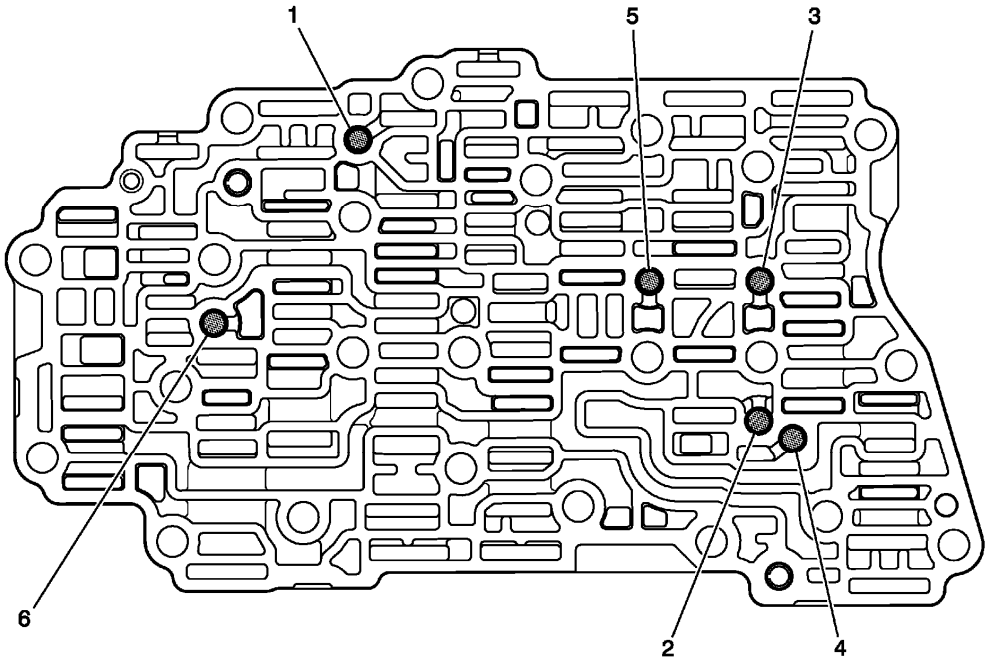

Fig. 37: Ball Check Valve Locations (Gen 2/Hybrid)
Courtesy of GENERAL MOTORS COMPANY

Ball Check Valve Locations (Gen 2/Hybrid)

I.D.	Input Oil	Input Oil	Output Oil
1	Latch	456 CL	Latch
2	35 Rev CL FD	Drive 1-6	35 Rev CL FD/Drive 1-6
3	35 Rev CL FD/Drive 1-6	-	35 Rev CL FD/Drive 1-6
4	Act FD LM	-	35 Rev CL
5	Drive	-	Drive
6	Line	Auxiliary Line	Line

2013 TRANSMISSION

Automatic Transmission - 6T30/6T40 - Description and Operation - Cruze

DESCRIPTION AND OPERATION

DEFINITIONS AND ABBREVIATIONS

Throttle Positions

Engine Braking

A condition where the engine is used to slow the vehicle by manually downshifting during a zero throttle coastdown.

Full Throttle Downshift

A quick apply of the accelerator pedal to its full travel, forcing a downshift.

Heavy Throttle

Approximately 3/4 of accelerator pedal travel, 75 percent throttle position.

Light Throttle

Approximately 1/4 of accelerator pedal travel, 25 percent throttle position.

Medium Throttle

Approximately 1/2 of accelerator pedal travel, 50 percent throttle position.

Minimum Throttle

The least amount of throttle opening required for an upshift.

Wide Open Throttle (WOT)

Full travel of the accelerator pedal, 100 percent throttle position.

Zero Throttle Coastdown

A full release of the accelerator pedal while the vehicle is in motion and in drive range.

Shift Condition Definitions

Bump

A sudden and forceful apply of a clutch or a band.

Chuggle

A bucking or jerking. This condition may be most noticeable when the converter clutch is engaged. It is similar to the feel of towing a trailer.

Delayed

A condition where a shift is expected but does not occur for a period of time. This could be described as a clutch or band engagement that does not occur as quickly as expected during a part throttle or wide open throttle apply of the accelerator, or during manual downshifting to a lower range. This term is also defined as LATE or EXTENDED.

Double Bump - Double Feel

Two sudden and forceful applies of a clutch or a band.

Early

A condition where the shift occurs before the car has reached proper speed. This condition tends to labor the engine after the upshift.

End Bump

A firmer feel at the end of a shift than at the start of the shift. This is also defined as END FEEL or SLIP BUMP.

Firm

A noticeably quick apply of a clutch or band that is considered normal with a medium to heavy throttle. This apply should not be confused with HARSH or ROUGH.

Flare

A quick increase in engine RPM along with a momentary loss of torque. This most generally occurs during a shift. This condition is also defined as SLIPPING.

Harsh - Rough

A more noticeable apply of a clutch or band than FIRM. This condition is considered undesirable at any throttle position.

Hunting

A repeating quick series of upshifts and downshifts that causes a noticeable change in engine RPM, such as a 4-3-4 shift pattern. This condition is also defined as BUSYNESS.

Initial Feel

A distinctly firmer feel at the start of a shift than at the finish of the shift.

Late

A shift that occurs when the engine RPM is higher than normal for a given amount of throttle.

Shudder

A repeating jerking condition similar to CHUGGLE but more severe and rapid. This condition may be most noticeable during certain ranges of vehicle speed.

Slipping

A noticeable increase in engine RPM without a vehicle speed increase. A slip usually occurs during or after initial clutch or band apply.

Soft

A slow, almost unnoticeable clutch or band apply with very little shift feel.

Surge

A repeating engine related condition of acceleration and deceleration that is less intense than CHUGGLE.

Tie-Up

A condition where two opposing clutch and/or bands are attempting to apply at the same time causing the engine to labor with a noticeable loss of engine RPM.

Noise Conditions

Drive Link Noise

A whine or growl that increases or fades with vehicle speed, and is most noticeable under a light throttle acceleration. It may also be noticeable in PARK or NEUTRAL operating ranges with the vehicle stationary.

Final Drive Noise

A hum related to vehicle speed which is most noticeable under a light throttle acceleration.

Planetary Gear Noise

A whine related to vehicle speed, which is most noticeable in FIRST gear, SECOND gear, FOURTH gear or REVERSE. The condition may become less noticeable, or go away, after an upshift.

Pump Noise

A high pitched whine that increases in intensity with engine RPM. This condition may also be noticeable in all operating ranges with the vehicle stationary or moving.

Torque Converter Noise

A whine usually noticed when a vehicle is stopped, and the transmission is in DRIVE or REVERSE. The noise will increase with engine RPM.

Driver Shift Control

Driver shift control (DSC) allows the driver to change gears similar to a manual transmission. Refer to the vehicle owner's manual for specific DSC operating instructions.

Transmission Abbreviations

A/C

Air Conditioning

AC

Alternating Current

AT

Automatic Transmission

CC

Climate Control

DC

Direct Current

DIC

Driver Information Center

DLC

Diagnostic Link Connector

DMM

Digital Multimeter

DSC

Driver Shift Control

DTC

Diagnostic Trouble Code

EBTCM

Electronic Brake/Traction Control Module

ECCC

Electronically-Controlled Capacity Clutch

ECT

Engine Coolant Temperature

EMI

Electromagnetic Interference

IAT

Intake Air Temperature

IGN

Ignition

IMS

Internal Mode Switch

ISS

Input Speed Sensor

MAP

Manifold Absolute Pressure

MIL

Malfunction Indicator Lamp

NC

Normally Closed

NO

Normally Open

OBD

On Board Diagnostic

OSS

Output Speed Sensor

PC

Pressure Control

PCM

Powertrain Control Module

PCS

Pressure Control Solenoid

PS

Pressure Switch

PWM

Pulse Width Modulation

RPM

Revolutions Per Minute

SS

Shift Solenoid

STL

Service Transmission Lamp

TAP

Transmission Adaptive Pressure

TCC

Torque Converter Clutch

TFP

Transmission Fluid Pressure

TFT

Transmission Fluid Temperature

TP

Throttle Position

VSS

Vehicle Speed Sensor

WOT

Wide Open Throttle

TRANSMISSION IDENTIFICATION INFORMATION

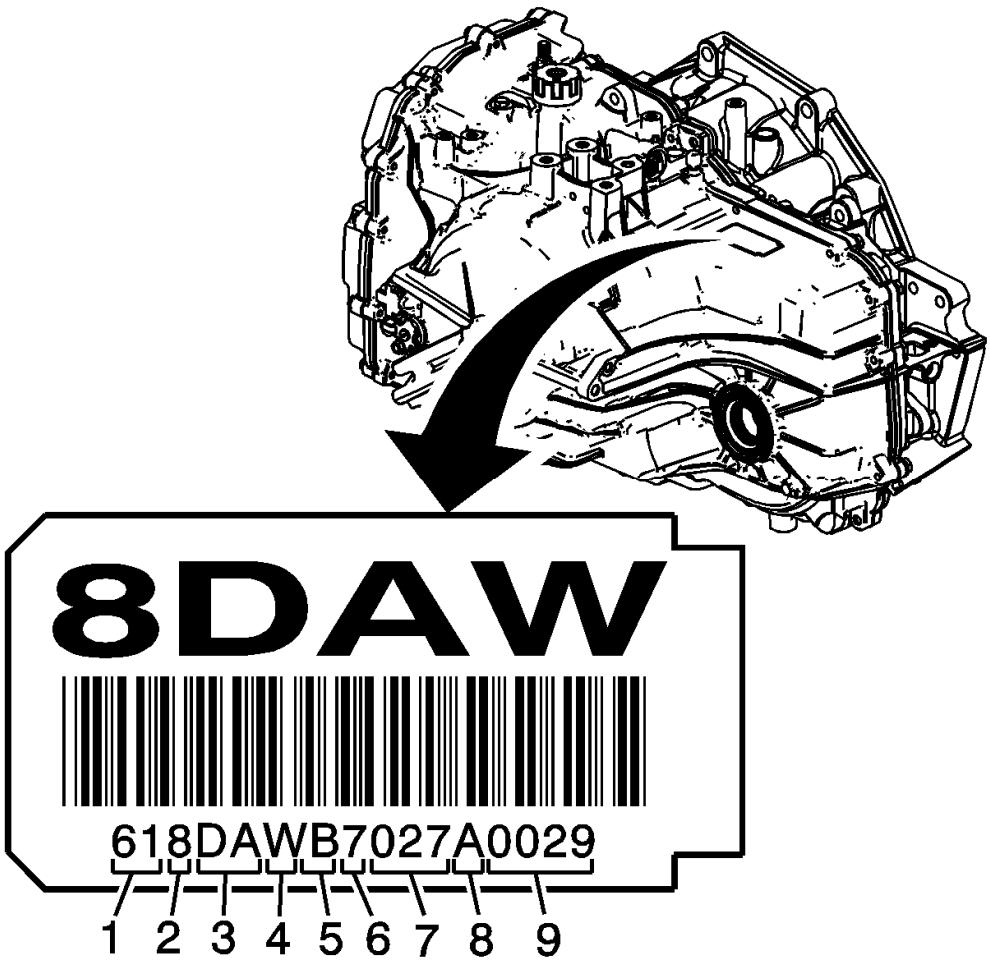

Fig. 1: Identifying Transmission Identification Information Plate
Courtesy of GENERAL MOTORS COMPANY

Callout	Component Name
1	Code for Automatic Transmission
2	Model Year
3	Model for Transmission
4	Transmission Family
5	Source Code for Plant
6	Calender Year
7	Julian Date
8	Shift/Line (A/B)
9	Numeric sequence starting at 0001 @ 12:01 AM each day

Source Code for Plant

- 4 - Ramos Arizpe, Mexico

- H - N.mpsilanti, Michigan
- J - Windsor, Ontario
- S - Strasbourg, France
- W - Warren, Michigan
- Y - Toledo, Ohio
- R - Boryeong, Korea
- M - N.man Tai, Shan Dong, China
- P - San Luis Potosi, Mexico

TRANSMISSION GENERAL DESCRIPTION

The Hydra-matic 6T30/40/45/50 is a fully automatic, 6-speed, front-wheel drive, electronic-controlled transmission. It consists primarily of a 4-element torque converter, a compound planetary gear set, friction and mechanical clutch assemblies, and a hydraulic pressurization and control system. There are 3 variants of the transmission, based on torque capacity. Architecture is common between the variants, and component differences are primarily related to size.

The 4-element torque converter contains a pump, a turbine, a pressure plate splined to the turbine, and a stator assembly. The torque converter acts as a fluid coupling to smoothly transmit power from the engine to the transmission. It also hydraulically provides additional torque multiplication when required. The pressure plate, when applied, provides a mechanical direct drive coupling of the engine to the transmission.

The planetary gear sets provide the 6 forward gear ratios and reverse. Changing gear ratios is fully automatic and is accomplished through the use of a transmission control module (TCM) located inside the transmission. The TCM receives and monitors various electronic sensor inputs and uses this information to shift the transmission at the optimum time.

The TCM commands shift solenoids and variable bleed pressure control solenoids to control shift timing and feel. The TCM also controls the apply and release of the torque converter clutch which allows the engine to deliver the maximum fuel efficiency without sacrificing vehicle performance. All the solenoids, including the TCM, are packaged into a self-contained control solenoid valve assembly.

The hydraulic system primarily consists of a gear-type pump, a control valve body assembly and case. The pump maintains the working pressures needed to stroke the clutch pistons that apply or release the friction components. These friction components, when applied or released, support the automatic shifting qualities of the transmission.

The friction components used in this transmission consist of 5 multiple disc clutches. The multiple disc clutches combine with one way clutch to deliver 7 different gear ratios, 6 forward and one reverse, through the gear sets. The gear sets then transfer torque through the transfer drive gear, transfer driven gear and differential assembly.

The transmission may be operated in any of the following gear ranges:

PARK (P)

This position locks the front wheels and prevents the vehicle from rolling either forward or backward. PARK is the best position to use when starting the vehicle. Because the transmission utilizes a shift lock control system, it is necessary to fully depress the brake pedal before shifting out of PARK. For safety reasons, use the parking brake in addition to the PARK position.

REVERSE (R)

This position allows the vehicle to be operated in a rearward direction.

NEUTRAL (N)

This position allows the engine to be started and operated while driving the vehicle. If necessary, you may select this position in order to restart the engine with the vehicle moving. This position should also be used when towing the vehicle.

DRIVE (D)

Drive range should be used for all normal driving conditions for maximum efficiency and fuel economy. Drive range allows the transmission to operate in each of the 6 forward gear ratios. Downshifts to a lower gear, or higher gear ratio, are available for safe passing by depressing the accelerator or by manually selecting a lower gear in the manual mode range.

Driver Shift Control (DSC) or Electronic Range Selection (ERS)

This position (M-Manual / L-Low) allows the driver to utilize the DSC/ERS system. When the shift selector lever is moved to this position, the driver may select upshifts or downshifts by using the paddle switches located on the steering wheel/shifter. An upshift is requested by pushing either + button. Refer to the vehicle owner's manual for more specific DSC/ERS information.

TRANSMISSION COMPONENT AND SYSTEM DESCRIPTION

The mechanical components of the 6T30/40/45/50 are as follows:

- A torque converter with an electronically controlled capacity clutch (ECCC)
- Gear-type fluid pump assembly
- 1-2-3-4 and low and reverse clutch housing assembly
- 4-5-6 and 3-5 reverse clutch housing assembly
- 2-6 clutch assembly
- Low and reverse clutch (one way clutch) assembly
- Control valve body assembly
- Drive sprocket, driven sprocket and link assembly
- Front differential carrier assembly
- Input Carrier Assembly
- Reaction Carrier Assembly
- Output Carrier Assembly

The electrical components of the 6T30/40/45 are as follows:

- Output speed sensor assembly
- Input speed sensor assembly
- Manual shift shaft with internal mode switch
- Control solenoid valve assembly, which contains the following components:
  - Transmission control module (TCM)
  - 5 variable bleed line pressure control (PC) solenoids
  - Transmission fluid pressure (TFP) switch assembly
  - Torque converter clutch (TCC) pressure control solenoid
  - shift solenoid
  - Transmission fluid temperature sensor

For more information, refer to **Electronic Component Description**.

TRANSMISSION ADAPTIVE FUNCTIONS

The 6T30/40/45/50 transmission utilizes a line pressure control system during upshifts to compensate for the normal wear of transmission components. As the apply components within the transmission wear or change over time, shift time (the time required to apply a clutch) increase or decreases. In order to compensate for these changes, the transmission control module (TCM) adjusts the pressure commands to the various PC solenoids, to maintain the originally calibrated shift timing. The automatic adjusting process is referred to as "adaptive learning" and it is used to ensure consistent shift feel plus increase transmission durability. The TCM monitors the A/T input speed sensor (ISS) and the A/T output speed sensor (OSS) during commanded shifts to determine if a shift is occurring too fast (harsh) or too slow (soft) and adjusts the corresponding pressure control (PC) solenoid signal to maintain the set shift feel.

The purpose of the adapt function is to automatically compensate the shift quality for the various vehicle shift control systems. The adapt function is a continuous process that will help to maintain optimal shift quality throughout the life of the vehicle.

TRANSMISSION INDICATORS AND MESSAGES

The following transmission-related indicators and messages may be displayed on the Instrument Panel Cluster (IPC). For a complete listing and description of all vehicle indicators and messages, refer to **Indicator/Warning Message Description and Operation** .

"TRANSMISSION HOT IDLE ENGINE"

This message is displayed when the TCM detects a transmission fluid temperature (TFT) equal to or greater than 132°C (270°F) for 5 seconds.

"SERVICE TRANSMISSION"

This message displays when there is a problem with the transmission.

ELECTRONIC COMPONENT DESCRIPTION

Control Solenoid Valve Assembly

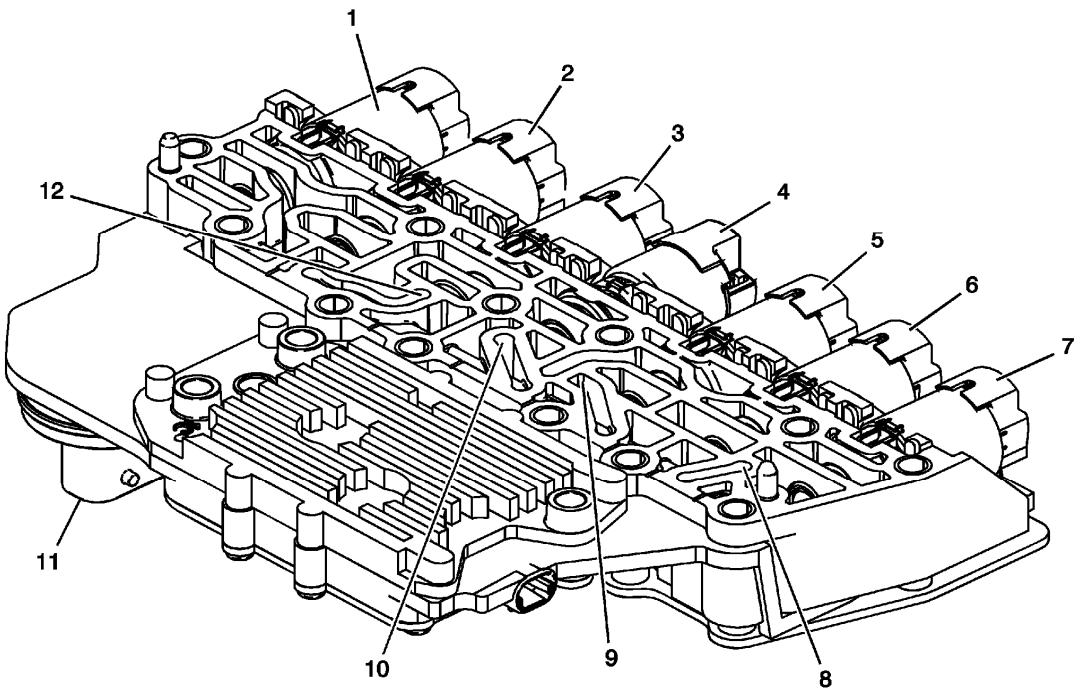

Fig. 2: View Of Control Solenoid (W/Body & TCM) Valve Assembly
Courtesy of GENERAL MOTORS COMPANY

Callout	Component Name
1	Pressure Control Solenoid 3 (R-1/4-5-6)
2	(GEN 1) Pressure Control Solenoid 2 (3-5-R)
2	(GEN 2) Pressure Control Solenoid 5 (1-2-3-4)
3	Torque Converter Clutch (TCC) Pressure Control Solenoid
4	Shift Solenoid 1 (On/Off)
5	(GEN 1) Pressure Control Solenoid 5 (1-2-3-4)
5	(GEN 2) Pressure Control Solenoid 2 (3-5-R)
6	Pressure Control Solenoid 4 (2-6)
7	Line Pressure Control Solenoid
8	(GEN 1) Transmission Fluid Pressure (TFP) Switch 1 (3-5-R)
9	(GEN 1) Transmission Fluid Pressure (TFP) Switch 3 (2-6)
10	(GEN 1) Transmission Fluid Pressure (TFP) Switch 4 (1-2-3-4)
11	Pass Through Connector
12	(GEN 1) Transmission Fluid Pressure (TFP) Switch 5 (4-5-6/R-1)

Manual Shift Detent Lever with Shaft Position Switch Assembly

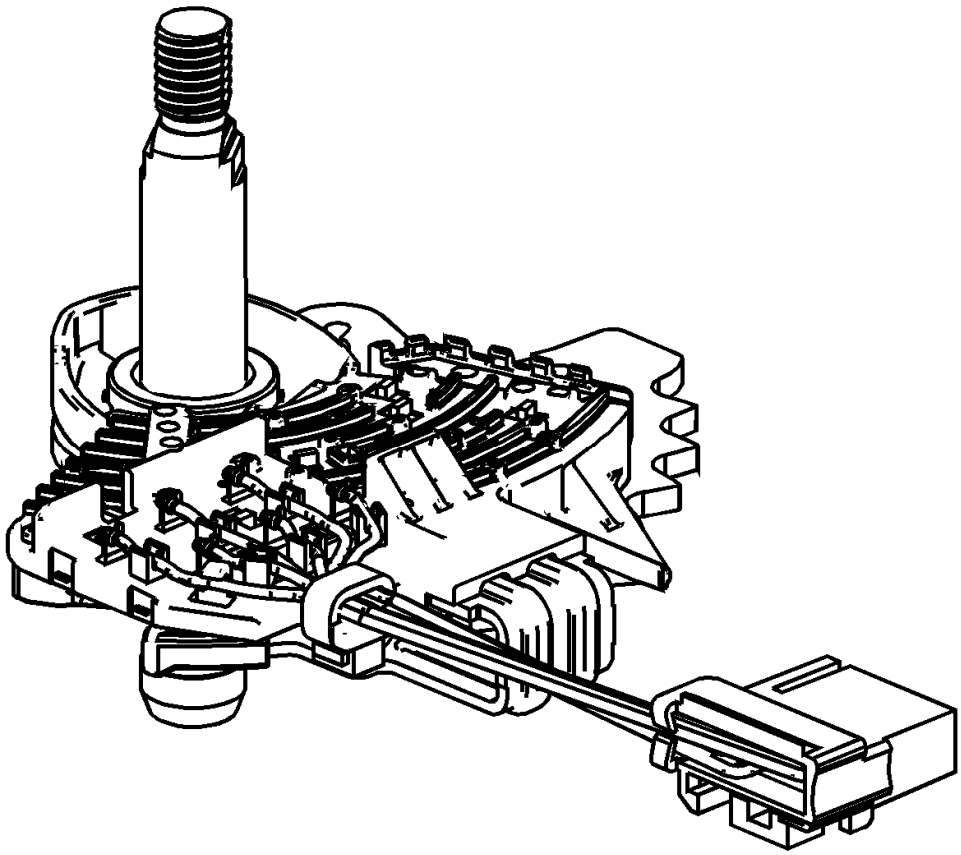

Fig. 3: View Of Manual Shift Detent Lever W/ Shaft Position Switch Assembly
Courtesy of GENERAL MOTORS COMPANY

The transmission shaft position switch assembly is a sliding contact switch attached to the manual shaft detent lever assembly inside the transmission case. The five inputs to the TCM from the transmission manual shift shaft switch assembly indicate the transmission gear selector lever position. This information is used for engine controls as well as determining the transmission shift patterns. The state of each input is available for display on the scan tool. The five input parameters represented are Signal A, Signal B, Signal C, Signal P (Parity) and Signal N (P/N Start).

Input Speed Sensor (ISS)

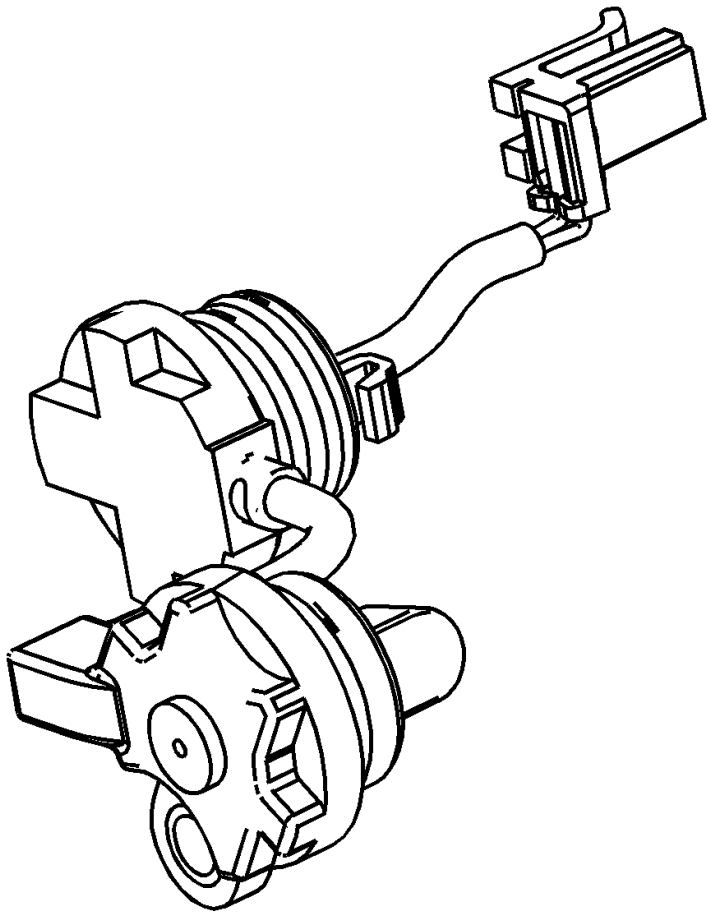

Fig. 4: View Of Input Speed Sensor (ISS)
Courtesy of GENERAL MOTORS COMPANY

The input speed sensor (ISS) is a hall-effect type sensor. The ISS mounts to the transmission case assembly and connects to the control solenoid (w/body and TCM) valve assembly through a wire harness and connector. The sensor faces the 3-5-R clutch piston housing machined teeth surface. The sensor receives 8.3-9.3 volts on the ISS/OSS Supply Voltage circuit from the TCM. As the 3-5-R/4-5-6 clutch piston housing rotates, the sensor produces a signal frequency based on the machined surface of the 3-5-R/4-5-6 clutch piston housing. This signal is transmitted through the ISS signal circuit to the control solenoid (w/body and TCM) valve assembly. The TCM uses the ISS signal to determine line pressure, transmission shift patterns, torque converter clutch (TCC) slip speed and gear ratio.

Output Speed Sensor (OSS)

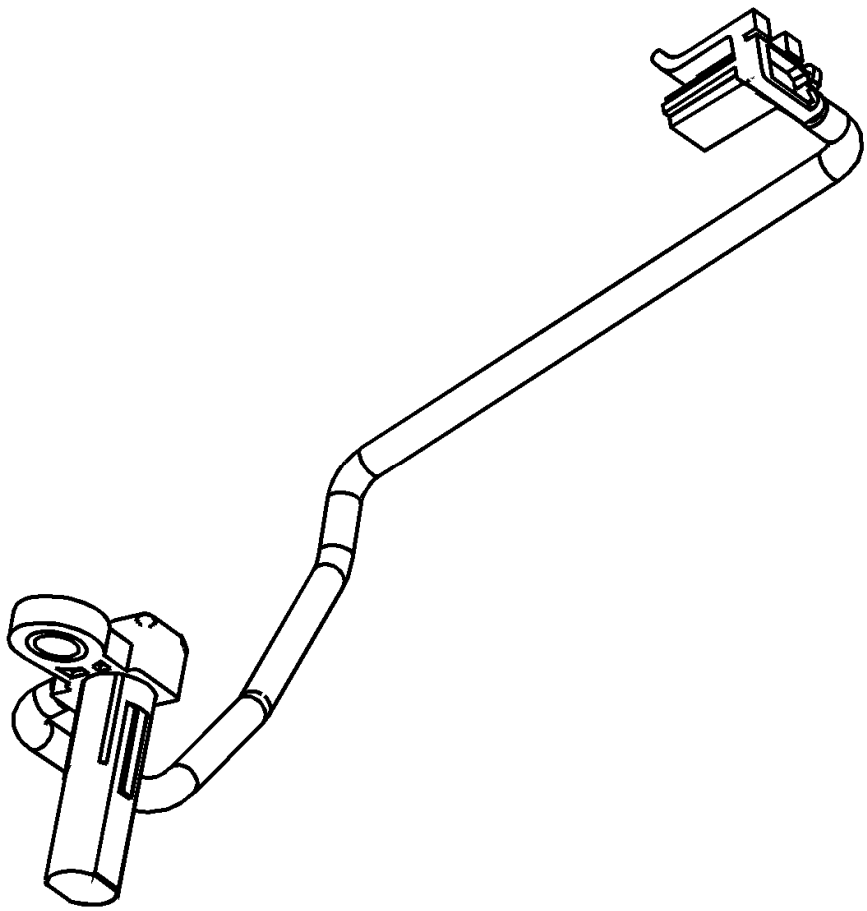

Fig. 5: View Of Output Speed Sensor (OSS)
Courtesy of GENERAL MOTORS COMPANY

The output speed sensor (OSS) is a hall-effect type sensor. The OSS mounts to the transmission case below the control valve body assembly and connects to the control solenoid (w/body and TCM) valve assembly through a wire harness and connector. The sensor faces the Park gear machined teeth surface. The sensor receives 8.3-9.3 volts on the ISS/OSS supply voltage circuit from the TCM. As the front differential transfer drive gear assembly rotates, the sensor produces a signal frequency based on the machined surface of the Park gear. This signal is transmitted through the OSS signal circuit to the TCM. The TCM uses the OSS signal to determine line pressure, transmission shift patterns, torque converter clutch (TCC) slip speed and gear ratio.

NEUTRAL IDLE DESCRIPTION AND OPERATION

Neutral Idle can only be commanded ON when the transmission is operating in **Drive Range, First Gear Engine Braking (Gen 1)**, **Drive Range, First Gear Engine Braking (Gen 2/Hybrid)**. When the service brakes are applied and the vehicle speed, throttle position, and transmission temperature are within the calibration defined limits, the TCM commands Neutral Idle ON. The low and reverse clutch remains applied. The TCM reduces the pressure command to the 1234 PC Solenoid 5, which reduces the fluid pressure to the 1-2-3-4 clutch, allowing the clutch to slip. The resulting slip on the 1-2-3-4 clutch reduces the difference between

the torque converter input speed and torque converter turbine speed, or torque converter clutch (TCC) slip speed. The reduced TCC slip speed reduces the engine load. This results in lower fuel consumption while Neutral Idle is commanded ON.

NON-SHIFTING CLUTCH FUNCTION VERIFICATION DESCRIPTION

The 6T30/40/45/50 transmission uses a pressure control system to apply and release clutches during shifts. The transmission control module (TCM) controls pressure commands to the pressure control solenoids.

As normal wear of the transmission clutches occur, the TCM performs a clutch function verification. The TCM momentarily commands a clutch on at a low pressure. The clutch function verification is conducted on smooth roads when the transmission is not shifting and engine torque is consistent and positive.

When a clutch function verification is occurring, a slight bump or drag may be detected momentarily. The clutch function verification will occur a few times over several minutes and will not repeat again for a thousand or more miles. This is a normal condition and no repair attempts should be performed.

The clutch function verification will be performed sooner for a particular clutch if the TCM detects it is producing frequent poor shift control.

PARK - ENGINE RUNNING (GEN 1)

When the gear selector lever is in the Park (P) position, fluid is drawn into the pump through the transmission fluid filter assembly. Line pressure is then directed to the following valves:

Fluid Pressure Directed in Preparation for a Shift

Manual Valve

Mechanically controlled by the gear selector lever, the manual valve is in the Park (P) position and prevents line pressure from the pressure regulator valve from entering the reverse and drive fluid circuits.

Actuator Feed Limit Valve

Line pressure is regulated through the valve into the actuator feed limit circuit. Actuator feed limit fluid passes through orifice #10 to a differential area to move the valve against actuator feed limit valve spring pressure. Actuator feed limit fluid is routed to the pressure control solenoids, the shift solenoid, and to the #5 and #6 ball check valves.

Compensator Feed Regulator Valve

Line pressure is regulated through the valve into the compensator feed fluid circuit. Compensator feed fluid pressure is routed through orifice #30 to the 3-5-reverse clutch regulator valve, and also fills the 3-5-reverse clutch and 4-5-6 clutch piston dam areas.

3-5-Reverse Clutch Regulator Valve

35 reverse clutch feed/compensator feed fluid is routed through the valve into the 35 reverse clutch fluid circuit.

35 reverse clutch fluid passes through orifice #6 to assist spring pressure in keeping the valve open. 35 reverse clutch fluid is routed to the 3-5-reverse clutch, and through orifice #33 to the #6 ball check valve.

3-5-Reverse Clutch Assembly

35 reverse clutch fluid fills the 3-5-reverse clutch piston apply cavity in preparation for a shift to Reverse range. However, in Park range, 35 reverse clutch pressure is limited to compensator feed pressure of 9 PSI and is not strong enough to apply the clutch.

TCC Regulated Apply Valve

Shift solenoid fluid is routed to the TCC regulated apply valve and moves the valve against TCC regulated apply valve spring force.

Low and Reverse Clutch Applies

R1/456 Pressure Control (PC) Solenoid 3

The R1/456 PC solenoid is energized (ON) allowing actuator feed limit fluid to enter the PCS R1/456 clutch fluid circuit. PCS R1/456 clutch fluid is then routed through orifice #11 to the R1/4-5-6 clutch regulator valve.

R1/4-5-6 Clutch Regulator Valve

PCS R1/456 clutch fluid at the R1/4-5-6 clutch regulator valve, opposes R1/4-5-6 clutch regulator spring force and R1/456 clutch feed fluid pressure to regulate line pressure into the R1/456 clutch feed circuit. R1/456 clutch feed fluid is routed to the clutch select valve and through orifice #34 to the #5 ball check valve.

Shift Solenoid

The shift solenoid is energized (ON) allowing actuator feed limit fluid to enter the shift solenoid circuit. Shift solenoid fluid is routed to the clutch select valve through orifice #13, and to the TCC regulated apply valve through orifice #14.

Clutch Select Valve

Shift solenoid fluid is routed to the clutch select valve and moves the valve against clutch select valve spring force. This allows R1/456 clutch feed fluid to pass through the valve and enter the R1 circuit. R1 fluid is then routed through orifice #38 to the low and reverse clutch assembly in preparation for a shift into low or reverse gear.

Low and Reverse Clutch

R1/456 fluid enters the transmission case assembly and moves the low and reverse clutch piston against spring force to apply the low and reverse clutch plates. In Park range, the low and reverse has no effect. However, when Reverse or a forward range is selected, only one apply device has to be energized, which helps create a smooth starting motion.

#5 Ball Check Valve

R1/456 clutch feed fluid unseats the #5 ball check valve, allowing excess pressure to pass into the actuator feed limit circuit. This helps to control clutch apply fluid pressure and clutch apply feel.

Park- Engine Running

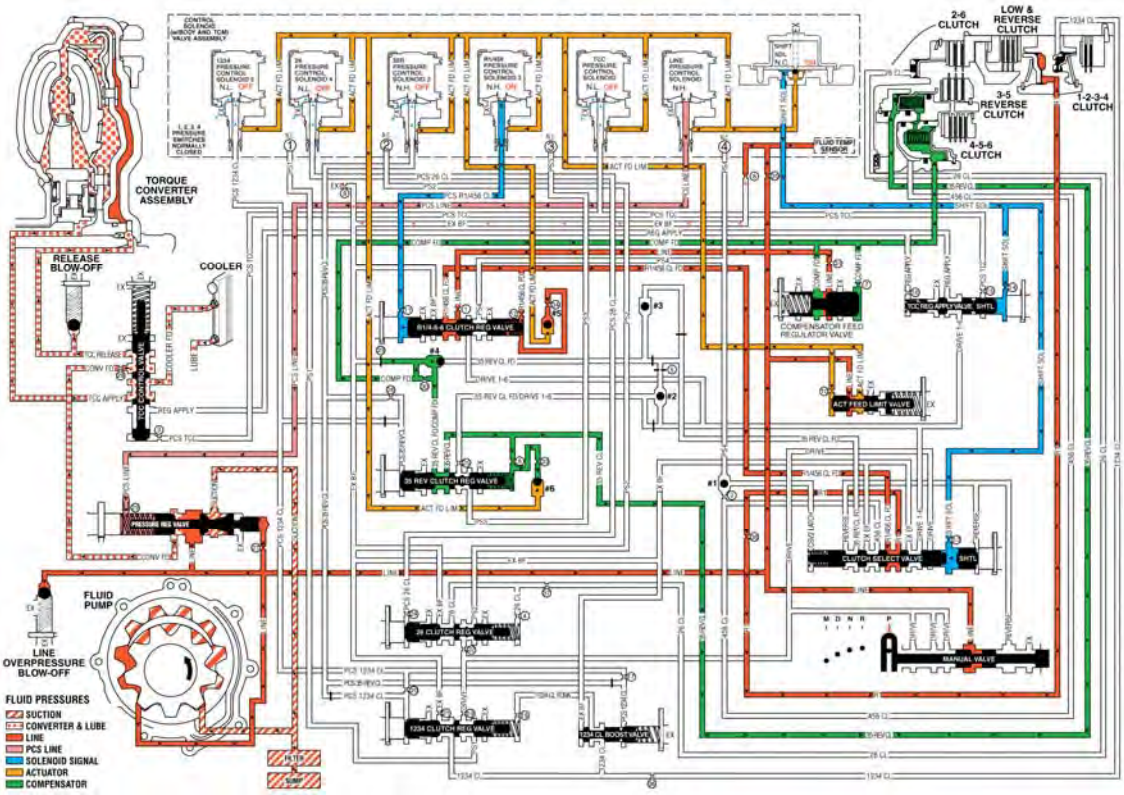

Fig. 6: Park - Engine Running Fluid Flow Diagram
Courtesy of GENERAL MOTORS COMPANY

PARK - ENGINE RUNNING (GEN 2/HYBRID)

When the gear selector lever is in the Park (P) position, fluid is drawn into the pump through the transmission fluid filter assembly. Line pressure is then directed to the following valves:

Fluid Pressure Directed in Preparation for a Shift

Manual Valve

Mechanically controlled by the gear selector lever, the manual valve is in the Park (P) position and prevents line pressure from the pressure regulator valve from entering the reverse and drive fluid circuits.

Actuator Feed Limit Valve

Line pressure is regulated through the valve into the actuator feed limit circuit. Actuator feed limit fluid passes through orifice #10 to a differential area to move the valve against actuator feed limit valve spring pressure. Actuator feed limit fluid is routed to the pressure control solenoids, the shift solenoid, and to the #4 ball check

valve.

TCC Regulated Apply Valve

Shift solenoid fluid is routed to the TCC regulated apply valve and moves the valve against TCC regulated apply valve spring force.

Default Override Valve

Shift solenoid fluid is routed to the default override valve and moves the valve against default override valve spring force.

Low and Reverse Clutch Applies

R1/456 Pressure Control (PC) Solenoid

The R1/456 PC solenoid is energized (ON) allowing actuator feed limit fluid to enter the PCS R1/456 clutch fluid circuit. PCS R1/456 clutch fluid is then routed through orifice #11 to the R1/4-5-6 clutch regulator valve, and through orifice #34 to the R1/4-5-6 clutch boost valve.

R1/4-5-6 Clutch Regulator Valve

PCS R1/456 clutch fluid at the R1/4-5-6 clutch regulator valve, opposes R1/4-5-6 clutch regulator spring force and orificed R1/456 clutch feedback fluid pressure to regulate line pressure into the R1/456 clutch feed circuit. R1/456 clutch feed fluid is routed to the R1/4-5-6 clutch boost valve and to the clutch select valve.

R1/4-5-6 Clutch Boost Valve

PCS R1/456 clutch fluid pressure acts on a differential area, moving the R1/4-5-6 clutch boost valve against R1/4-5-6 clutch boost valve spring force, to regulate R1/456 clutch feed fluid into the R1/456 clutch feedback circuit. As PCS R1/456 clutch fluid pressure is increased to a given value, the R1/4-5-6 clutch boost valve opens the R1/456 clutch feedback circuit to exhaust backfill. This results in the R1/4-5-6 clutch regulator valve moving to the full feed position, sending full R1/456 clutch feed pressure (full line pressure) to the low and reverse clutch.

Shift Solenoid

The shift solenoid is energized (ON) allowing actuator feed limit fluid to enter the shift solenoid circuit. Shift solenoid fluid is routed to the clutch select valve through orifice #13, to the TCC regulated apply valve through orifice #14, and through orifice #44 to the default override valve.

Clutch Select Valve

Shift solenoid fluid is routed to the clutch select valve and moves the valve against clutch select valve spring force. This allows R1/456 clutch feed fluid to pass through the valve and enter the R1 circuit. R1 fluid is then routed through orifice #42 to the low and reverse clutch assembly in preparation for a shift into low or reverse gear.

Low and Reverse Clutch

R1/456 fluid enters the transmission case assembly and moves the low and reverse clutch piston against spring force to apply the low and reverse clutch plates. In Park range, the low and reverse clutch has no effect. However, when Reverse or a forward range is selected, only one apply device has to be energized, which helps create a smooth starting motion.

Accumulator

PCS R1/456 clutch fluid is also routed to an accumulator valve. The accumulator valve is used to dampen any pressure irregularities occurring in the PCS R1/456 clutch fluid circuit. This helps to control clutch apply fluid pressure and clutch apply feel.

Park - Engine Running - Gen 2/Hybrid

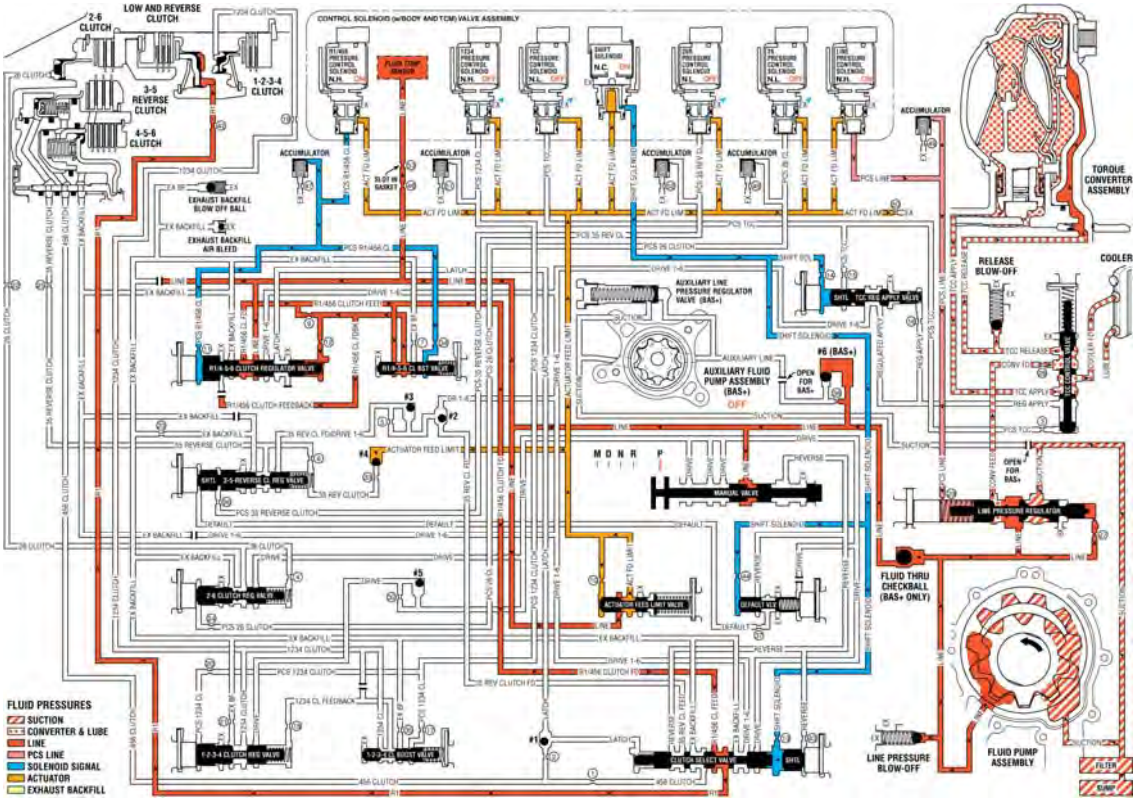

Fig. 7: Park -- Engine Running -- Gen 2/Hybrid Fluid Flow Diagram
Courtesy of GENERAL MOTORS COMPANY

REVERSE (GEN 1)

When the gear selector lever is moved to the Reverse (R) position (from the Park position) the normally-high 35R pressure control solenoid 2 is commanded ON and the following changes occur in the transmission's hydraulic and electrical systems:

3-5-Reverse Clutch Applies

Manual Valve

With the manual valve in the reverse position, line pressure is directed into the reverse fluid circuit and routed to the clutch select valve.

Clutch Select Valve

Reverse fluid is routed to a differential area of the default override shuttle valve and assists shift solenoid fluid, present at the valve from Park position, in holding the clutch select valve against clutch select valve spring force. Reverse fluid passes through the clutch select valve into the 35 reverse clutch feed circuit and is routed to the #2 ball check valve. R1/456 clutch feed fluid, present at the valve from Park position, continues to pass through the valve into the R1 circuit in order to keep the low and reverse clutch applied.

#2 Ball Check Valve

3-5 reverse fluid passes through orifice #5, seats the #2 ball check valve against the drive 1-6 fluid passage, and enters the 35 reverse/drive 1-6 circuit. 35 reverse/drive 1-6 fluid is routed through orifice #25 to the 3-5-reverse clutch regulator valve.

35R Pressure Control (PC) Solenoid 2

The 35R PC solenoid 2 is energized (ON), allowing actuator feed limit fluid to enter the PCS 35 reverse clutch circuit. PCS 35 reverse clutch fluid is then routed through orifice #26 to the 3-5-reverse clutch regulator valve.

3-5-Reverse Clutch Regulator Valve

PCS 35 reverse clutch fluid, at the 3-5-reverse clutch regulator valve, opposes 3-5-reverse clutch regulator valve spring force and orificed 35 reverse clutch feedback fluid pressure to regulate 35 reverse clutch feed/drive 1-6 pressure into the 35 reverse clutch circuit. 35 reverse clutch fluid is then routed to the 3-5-reverse clutch, and through orifice #33 to the #6 ball check valve.

3-5-Reverse Clutch

35 reverse clutch fluid enters the 3-5-reverse and 4-5-6 clutch housing assembly to move the 3-5 reverse clutch piston against spring force and compensator feed fluid pressure to apply the 3-5-reverse clutch plates.

#6 Ball Check Valve

35 reverse clutch feed fluid unseats the #6 ball check valve, allowing excess pressure to pass into the actuator feed limit circuit. This helps to control clutch apply fluid pressure and clutch apply feel.

Reverse

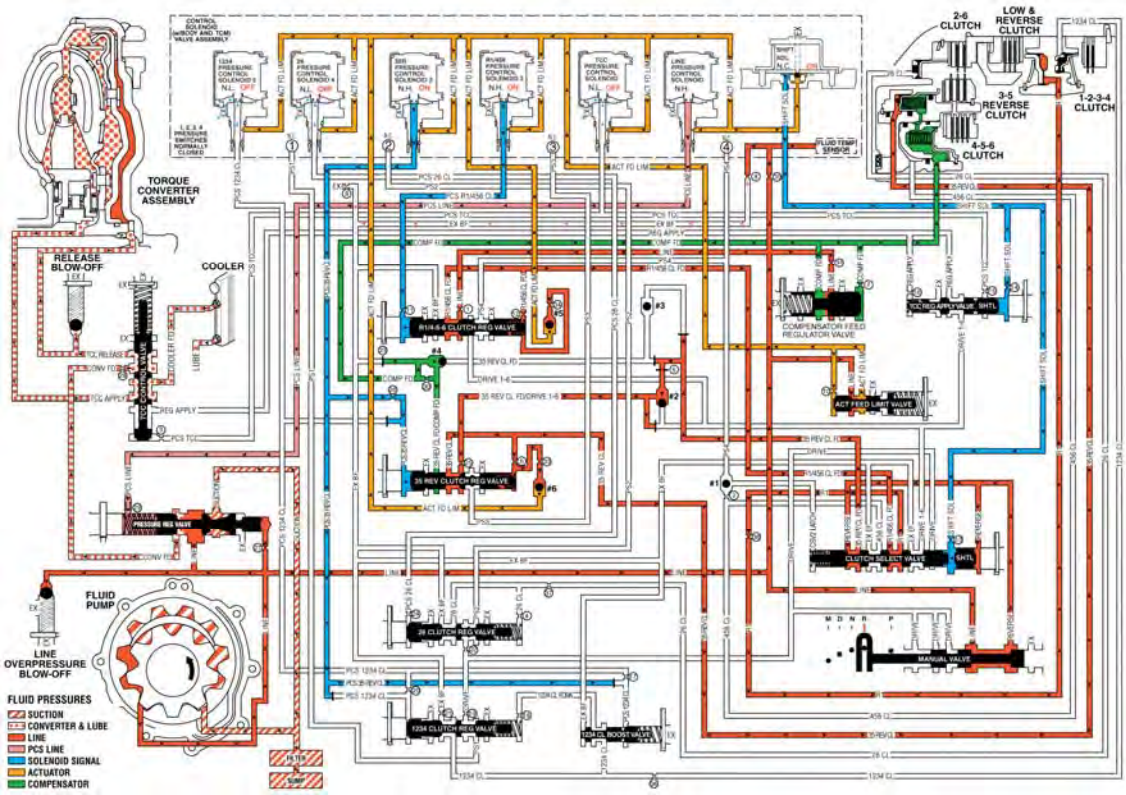

Fig. 8: Reverse Fluid Flow Diagram
Courtesy of GENERAL MOTORS COMPANY

REVERSE (GEN 2/HYBRID)

When the gear selector lever is moved to the Reverse (R) position (from the Park position) the normally-low 35R pressure control solenoid is commanded ON and the following changes occur in the transmission's hydraulic and electrical systems:

3-5-Reverse Clutch Applies

Manual Valve

With the manual valve in the reverse position, line pressure is directed into the reverse fluid circuit. Reverse fluid is then routed to the clutch select valve and to the default override valve.

Clutch Select Valve

Reverse fluid is routed to a differential area of the clutch select shuttle valve and assists shift solenoid fluid, present at the valve from Park position, in holding the clutch select valve against clutch select valve spring force. Reverse fluid passes through the clutch select valve into the 35 reverse clutch feed circuit and is routed to the #2 ball check valve. R1/456 clutch feed fluid, present at the valve from Park position, continues to pass through the valve into the R1 circuit in order to keep the low and reverse clutch applied.

#2 Ball Check Valve

3-5 reverse fluid seats the #2 ball check valve against the drive 1-6 fluid passage, and enters the 35 reverse/drive 1-6 circuit. 35 reverse/drive 1-6 fluid is routed to the #3 ball check valve.

#3 Ball Check Valve

35 reverse/drive 1-6 fluid unseats the #3 ball check valve and is routed to the 3-5-reverse clutch regulator valve.

35R Pressure Control (PC) Solenoid

The 35R PC solenoid is energized (ON), allowing actuator feed limit fluid to enter the PCS 35 reverse clutch fluid circuit. PCS 35 reverse clutch fluid is then routed through orifice #26 to the 3-5-reverse clutch regulator valve.

3-5-Reverse Clutch Regulator Valve

PCS 35 reverse clutch fluid, at the 3-5-reverse clutch regulator valve, opposes 3-5-reverse clutch regulator valve spring force and orificed 35 reverse clutch feedback fluid pressure to regulate 35 reverse clutch feed/drive 1-6 pressure into the 35 reverse clutch circuit. 35 reverse clutch fluid is then routed through orifice #25 to the 3-5-reverse clutch, and through orifice #33 to the #4 ball check valve.

3-5-Reverse Clutch

35 reverse clutch fluid enters the 3-5-reverse and 4-5-6 clutch housing assembly to move the 3-5-reverse clutch piston against spring force to apply the 3-5-reverse clutch plates.

#4 Ball Check Valve

35 reverse clutch feed fluid unseats the #4 ball check valve, allowing excess pressure to pass into the actuator feed limit circuit. This helps to control clutch apply fluid pressure and clutch apply feel.

Accumulator

PCS 35 reverse clutch fluid is also routed to an accumulator valve. The accumulator valve is used to dampen any pressure irregularities occurring in the PCS 35 reverse clutch fluid circuit. This helps to control clutch apply fluid pressure and clutch apply feel.

Fluid Pressure Directed in Preparation for a Possible Default Action

Reverse fluid is directed to the default override valve in preparation for Reverse (R) range operation in the event of a transmission default action. If a transmission electrical component malfunction occurs, all solenoids will default to their normal state. The shift solenoid will default to its normally-closed state (OFF), and shift solenoid fluid will exhaust, allowing default override valve spring force to move the default override valve to the released position. With the default override valve in the released position, reverse fluid pressure passes through the valve into the default circuit and is routed to the 3-5-reverse clutch regulator shuttle valve. Default fluid pressure replaces exhausting PCS 35 reverse clutch fluid pressure to keep the 3-5-reverse clutch regulator valve in the applied position, and allow continued Reverse (R) range operation. Refer to Drive Range- Fourth Gear Default for a complete description of the default actions that occur during an electrical component malfunction.

Reverse - Gen 2/Hybrid

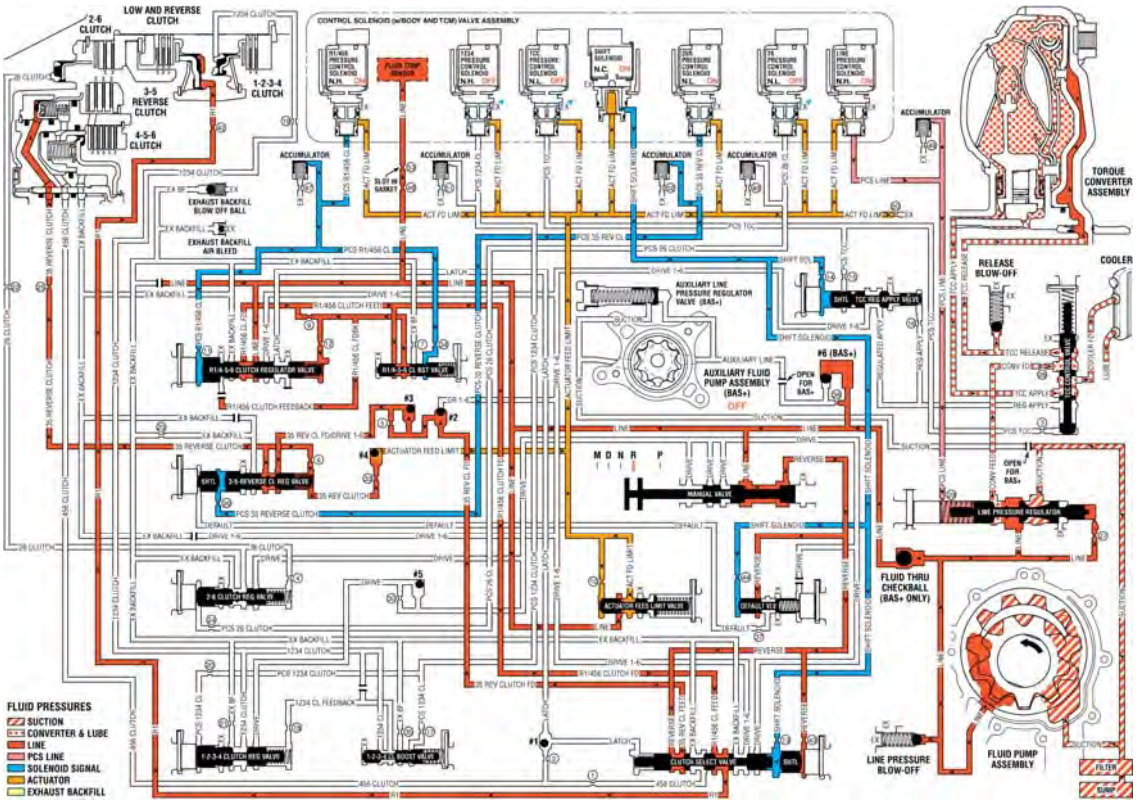

Fig. 9: Reverse -- Gen 2/Hybrid Fluid Flow Diagram
Courtesy of GENERAL MOTORS COMPANY

NEUTRAL - ENGINE RUNNING (GEN 1)

When the gear selector is moved to the Neutral (N) position, the hydraulic and electrical system operation is identical to Park (P) range. However, if Neutral is selected after the vehicle was operating in Reverse (R), the normally-high 35R pressure control solenoid 2 is commanded OFF and the following changes would occur in the hydraulic system.

3-5 Reverse Clutch Releases

Manual Valve

The manual valve is moved to the Neutral position and blocks line pressure from entering the reverse fluid circuit. Reverse fluid, from the 3-5-reverse clutch regulator valve and the clutch select valve, is opened to an exhaust passage at the manual valve.

35R Pressure Control Solenoid 2

The 35R PC solenoid 2 is commanded OFF allowing PCS 35 reverse clutch fluid from the 3-5-reverse clutch regulator valve to exhaust.

3-5-Reverse Clutch Regulator Valve

PCS 35 reverse clutch fluid exhausts, allowing 3-5-reverse clutch regulator valve spring force to move the 3-5-reverse clutch regulator valve to the released position. This allows 35 reverse clutch fluid pressure to exhaust into the compensator feed circuit in order to assist the 3-5-reverse clutch piston spring to quickly release the 3-5-reverse clutch.

3-5-Reverse Clutch

3-5-reverse clutch spring force, assisted by compensator feed pressure, moves the 3-5-reverse clutch piston to release the 3-5-reverse clutch plates and force 35 reverse clutch fluid to exhaust from the 3-5-reverse and 4-5-6 clutch housing assembly. The exhausting 35 reverse clutch fluid pressure is routed to the 3-5-reverse clutch regulator valve where it enters the 35 reverse clutch feed/compensator feed circuit.

Clutch Select Valve

When reverse fluid exhausts from the default override shuttle valve, shift solenoid fluid continues to hold the clutch select valve against clutch select valve spring force allowing 35 reverse clutch feed fluid to exhaust into the reverse circuit.

Neutral- Engine Running

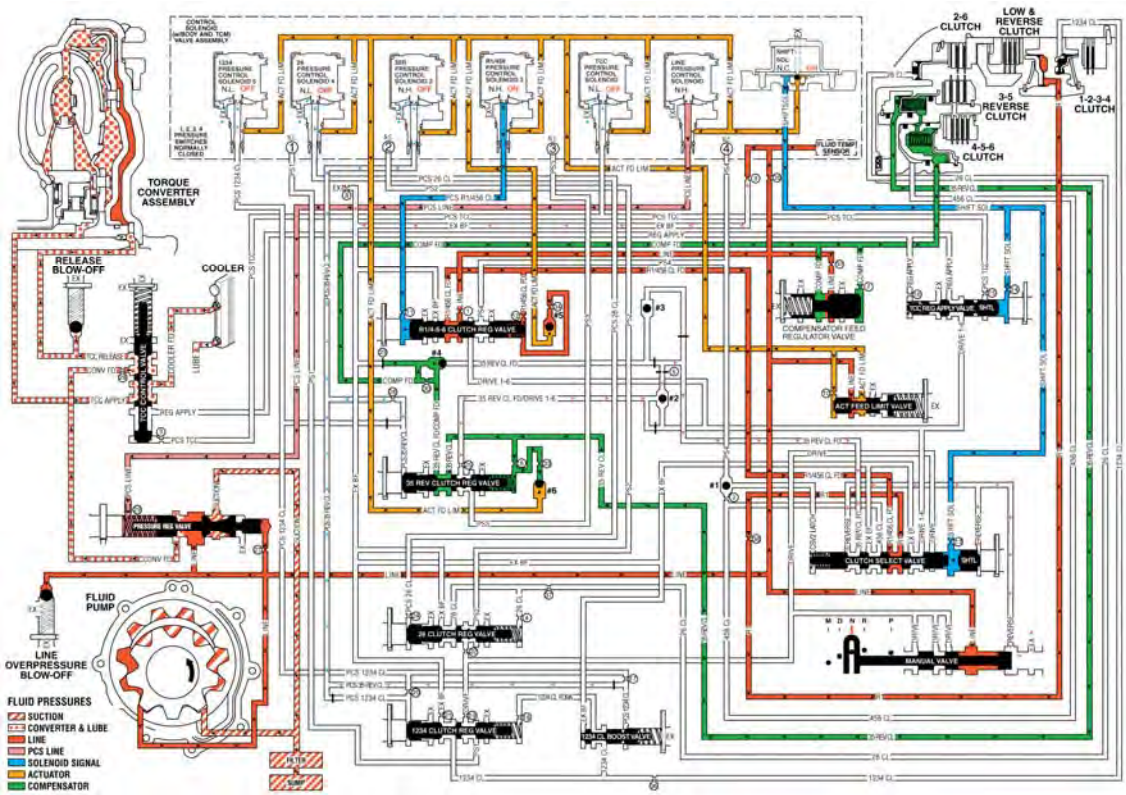

Fig. 10: Neutral - Engine Running Fluid Flow Diagram
Courtesy of GENERAL MOTORS COMPANY

NEUTRAL - ENGINE RUNNING (GEN 2/HYBRID)

When the gear selector is moved to the Neutral (N) position, the hydraulic and electrical system operation is identical to Park (P) range. However, if Neutral is selected after the vehicle was operating in Reverse (R), the normally-low 35R pressure control solenoid is commanded OFF and the following changes would occur in the hydraulic system.

3-5 Reverse Clutch Releases

Manual Valve

The manual valve is moved to the Neutral position and blocks line pressure from entering the reverse fluid circuit. Reverse fluid, from the 3-5-reverse clutch regulator valve, the clutch select valve, and the default override valve is opened to an exhaust passage at the manual valve.

35R Pressure Control Solenoid

The 35R PC solenoid is commanded OFF allowing PCS 35 reverse clutch fluid from the 3-5-reverse clutch regulator valve to exhaust.

3-5-Reverse Clutch Regulator Valve

PCS 35 reverse clutch fluid exhausts, allowing 3-5-reverse clutch regulator valve spring force to move the 3-5-reverse clutch regulator valve to the released position. This allows exhausting 35 reverse clutch fluid pressure to pass into the exhaust backfill circuit in order to assist the 3-5-reverse clutch piston spring to quickly release the 3-5-reverse clutch.

3-5-Reverse Clutch

3-5-reverse clutch spring force, assisted by exhaust backfill pressure, moves the 3-5-reverse clutch piston to release the 3-5-reverse clutch plates and force 35 reverse clutch fluid to exhaust from the 3-5-reverse and 4-5-6 clutch housing assembly. The exhausting 35 reverse clutch fluid pressure is routed to the 3-5-reverse clutch regulator valve where it enters the exhaust backfill circuit.

Clutch Select Valve

When reverse fluid exhausts from the clutch select shuttle valve, shift solenoid fluid continues to hold the clutch select valve against clutch select valve spring force allowing 35 reverse clutch feed fluid to exhaust into the reverse circuit.

Neutral - Engine Running - Gen 2/Hybrid

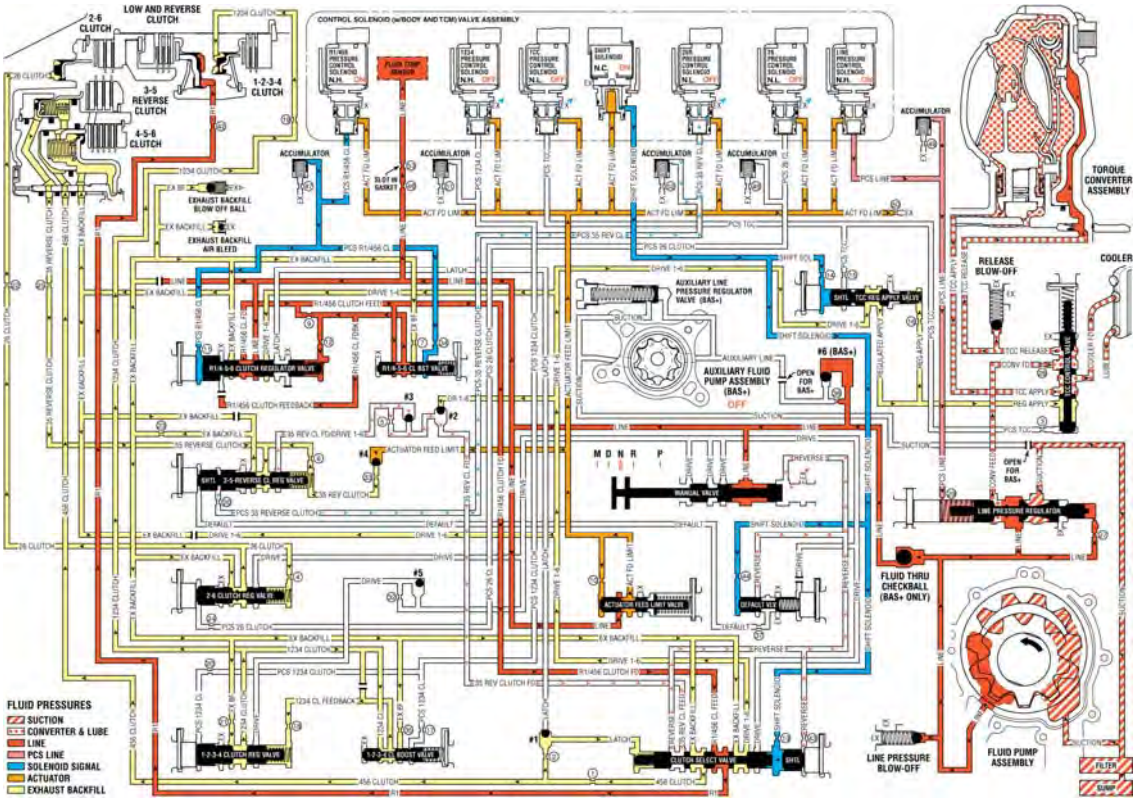

Fig. 11: Neutral -- Engine Running Fluid Flow Diagram
Courtesy of GENERAL MOTORS COMPANY

DRIVE RANGE, FIRST GEAR ENGINE BRAKING (GEN 1)

When the gear selector lever is moved to the Drive (D) range from the Neutral (N) position, the transmission will provide engine braking. In this operating range, the normally-low 1234 pressure control solenoid 5 is commanded ON and, in the engine braking mode, the following changes occur within the hydraulic circuits.

1-2-3-4 Clutch Applies

Manual Valve

The manual valve is moved to the Drive (D) position and allows line fluid pressure to enter the drive fluid circuit. Drive fluid is then routed to the clutch select valve, the 1-2- 3-4 clutch regulator valve through orifice #19 and to the 2-6 clutch regulator valve through orifice #22.

1234 Pressure Control (PC) Solenoid 5

The 1234 PC solenoid 5 is commanded ON allowing actuator feed limit to enter the PCS 1234 clutch fluid circuit. PCS 1234 clutch fluid is then routed through orifice #20 to the 1-2-3-4 clutch regulator valve, and through orifice #17 to the 1-2-3-4 clutch boost valve.

1-2-3-4 Clutch Regulator Valve

PCS 1234 clutch fluid, at the 1-2-3-4 clutch regulator valve, opposes 1-2-3-4 clutch regulator valve spring force and 1234 clutch feedback fluid pressure to regulate drive fluid pressure into the 1234 clutch fluid circuit. The 1234 clutch fluid is then routed to the 1234 clutch boost valve and through orifice #36 to the 1-2-3-4 clutch.

1-2-3-4 Clutch Boost Valve

PCS 1234 clutch fluid pressure acts on a differential area, moving the 1234 clutch boost valve against 1234 clutch boost valve spring force, to regulate 1234 clutch fluid into the 1234 clutch feedback circuit. As PCS 1234 clutch fluid pressure is increased to a given value, the 1234 clutch boost valve opens the 1234 clutch feedback circuit to exhaust. This results in the 1234 clutch regulator valve moving to the full feed position, sending full 1234 clutch feed pressure (full line pressure) to the 1-2-3-4 clutch.

1-2-3-4 Clutch

The 1234 clutch fluid enters the transmission case assembly and moves the 1234 clutch piston against spring force to apply the 1-2-3-4 clutch plates.

2-6 Clutch Regulator Valve

Drive fluid passes through the 2-6 clutch regulator valve into the PS2 circuit.

#2 Pressure Switch

PS2 fluid is routed to the normally-closed #2 pressure switch and opens the switch.

Low and Reverse Clutch Remains Applied to Provide Engine Braking

Clutch Select Valve

Shift solenoid fluid, present at the valve from Park position, continues to hold the clutch select valve against clutch select valve spring force. R1/456 clutch feed fluid, also present at the valve from Park position, continues to pass into the R1 circuit to feed the low and reverse clutch. Drive fluid is present at the valve in preparation for a change of gears.

Low and Reverse Clutch

The low and reverse clutch remains applied until just before the 1-2 shift in order to provide engine braking.

Drive Range, First Gear Engine Braking

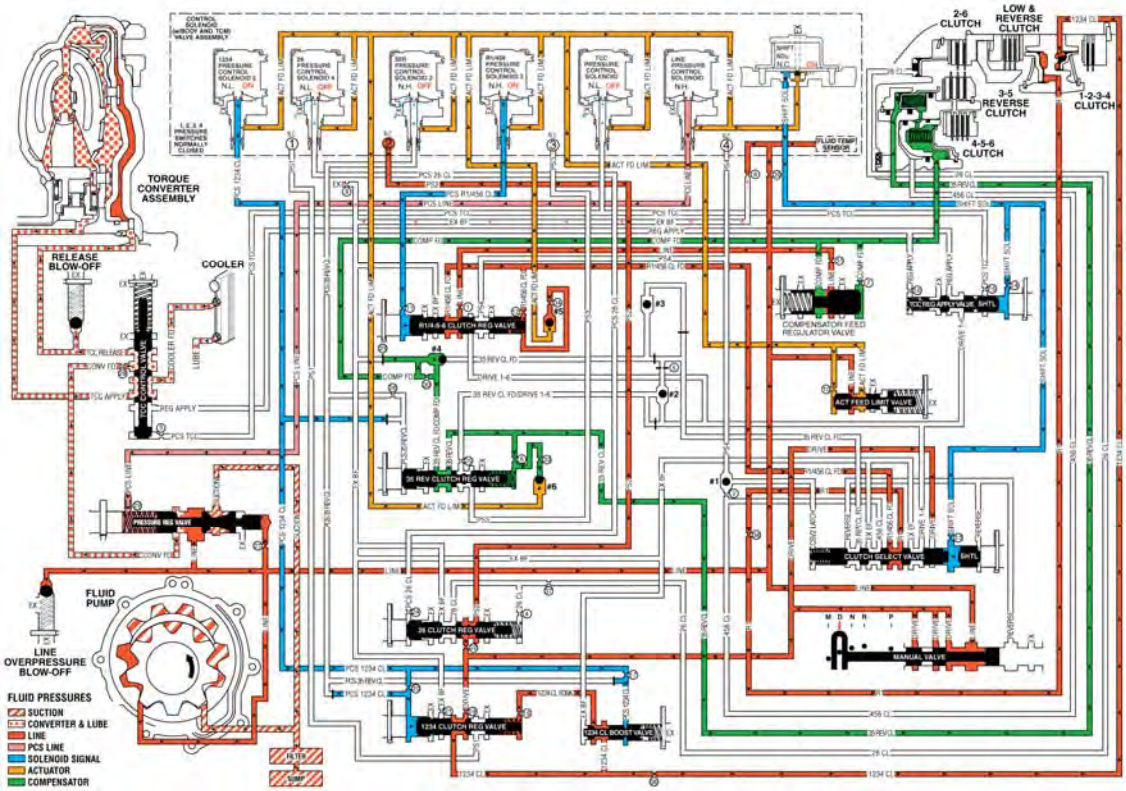

Fig. 12: Drive Range, First Gear Engine Braking Fluid Flow Diagram
Courtesy of GENERAL MOTORS COMPANY

DRIVE RANGE, FIRST GEAR ENGINE BRAKING (GEN 2/HYBRID)

Note: Some models of the 6T30/40/45/50 automatic transmission are equipped with an electric auxiliary fluid pump for use in hybrid vehicles (BAS+). Hybrid vehicles do not require internal combustion engine (ICE) operation at all times. After a successful engine start, the hybrid powertrain control module (HPCM) may turn OFF the engine (Auto Stop) when not required for the current vehicle conditions. The engine will remain OFF while in Auto Stop mode, until such time that vehicle conditions require the engine to run. During Auto Stop mode the main fluid pump is no longer driven by the engine, and the auxiliary fluid pump is commanded ON to provide hydraulic fluid pressure to operate the transmission. This functional description of Drive Range- First Gear (Engine Braking), and its accompanying hydraulic circuit, is written for a non-hybrid transmission. For a hybrid (BAS+) transmission, the description and illustration are the same, with the exception that, when the engine is OFF, the main fluid pump is not operating and the auxiliary fluid pump is ON.

When the gear selector lever is moved to the Drive (D) range from the Neutral (N) position, the transmission will provide engine braking. In this operating range, the normally-high 1234 pressure control solenoid is commanded ON and, in the engine braking mode, the following changes occur within the hydraulic circuits.

1-2-3-4 Clutch Applies

Manual Valve

The manual valve is moved to the Drive (D) position and allows line fluid pressure to enter the drive fluid

circuit. Drive fluid is then routed to the clutch select valve, the #5 ball check valve, and to the 2-6 clutch regulator valve.

#5 Ball Check Valve

Drive fluid unseats the #5 ball check valve and is routed to the 1-2-3-4 clutch regulator valve.

1234 Pressure Control (PC) Solenoid

The 1234 PC solenoid is commanded ON allowing actuator feed limit fluid to enter the PCS 1234 clutch fluid circuit. PCS 1234 clutch fluid is then routed through orifice #20 to the 1-2-3-4 clutch regulator valve, and through orifice #17 to the 1-2-3-4 clutch boost valve.

1-2-3-4 Clutch Regulator Valve

PCS 1234 clutch fluid, at the 1-2-3-4 clutch regulator valve, opposes 1-2-3-4 clutch regulator valve spring force and 1234 clutch feedback fluid pressure to regulate drive fluid pressure into the 1234 clutch fluid circuit. The 1234 clutch fluid is then routed to the 1-2-3-4 clutch boost valve and through orifice #19 to the 1-2-3-4 clutch.

1-2-3-4 Clutch Boost Valve

PCS 1234 clutch fluid pressure acts on a differential area, moving the 1-2-3-4 clutch boost valve against 1-2-3-4 clutch boost valve spring force, to regulate 1234 clutch fluid into the 1234 clutch feedback circuit. As PCS 1234 clutch fluid pressure is increased to a given value, the 1-2-3-4 clutch boost valve opens the 1234 clutch feedback circuit to exhaust backfill. This results in the 1-2-3-4 clutch regulator valve moving to the full feed position, sending full 1234 clutch feed pressure (full line pressure) to the 1-2-3-4 clutch.

1-2-3-4 Clutch

The 1234 clutch fluid enters the transmission case assembly and moves the 1-2-3-4 clutch piston against spring force to apply the 1-2-3-4 clutch plates.

Accumulator

PCS 1234 clutch fluid is also routed to an accumulator valve. The accumulator valve is used to dampen any pressure irregularities occurring in the PCS 1234 clutch fluid circuit. This helps to control clutch apply fluid pressure and clutch apply feel.

Low and Reverse Clutch Remains Applied to Provide Engine Braking

Clutch Select Valve

Shift solenoid fluid, present at the valve from Park position, continues to hold the clutch select valve against clutch select valve spring force. R1/456 clutch feed fluid, also present at the valve from Park position, continues to pass into the R1 circuit to feed the low and reverse clutch. Drive fluid is present at the valve in preparation for a change of gears.

Low and Reverse Clutch

The low and reverse clutch remains applied until just before the 1-2 shift in order to provide engine braking.

Drive Range, First Gear Engine Braking - Gen 2/Hybrid

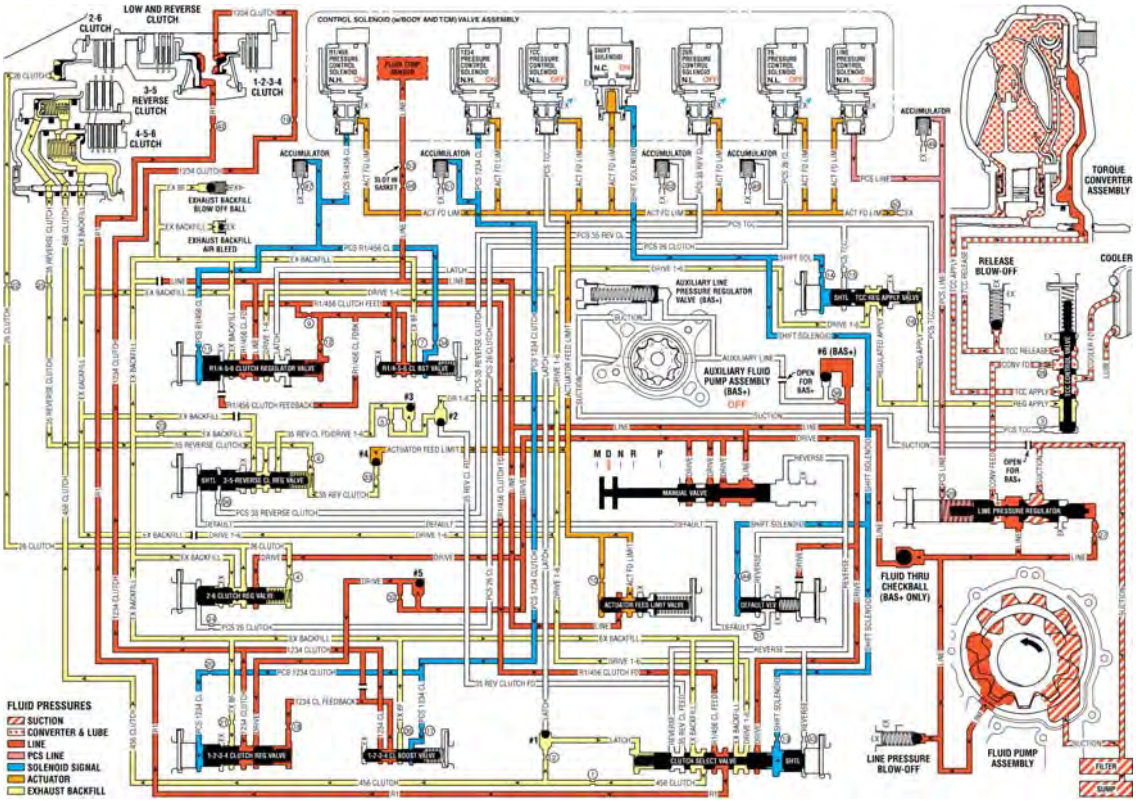

Fig. 13: Drive Range, First Gear Engine Braking Fluid Flow Diagram
Courtesy of GENERAL MOTORS COMPANY

DRIVE RANGE, FIRST GEAR (GEN 1)

As the vehicle speed increases, the transmission control module (TCM) receives input signals from the automatic transmission input and output speed sensors, throttle position sensor and other vehicle sensors to determine the precise moment to deenergize or "turn OFF" the shift solenoid, and to command OFF the normally-high R1/456 pressure control solenoid 3.

Low & Reverse Clutch Releases

Shift Solenoid

The shift solenoid is "commanded OFF" allowing shift solenoid fluid pressure to exhaust from the clutch select valve and the TCC regulator apply valve.

Clutch Select Valve

Shift solenoid fluid is exhausted from the clutch select valve and clutch select valve spring force moves the valve to the released position. This allows R1 fluid pressure to pass through the valve into the exhaust backfill

circuit where it exhausts. Drive fluid from the manual valve passes through the clutch select valve and enters the drive 1-6 fluid circuit. Drive 1-6 fluid is routed to the R1/456 clutch regulator valve, the 35 reverse clutch regulator valve, and the TCC regulator valve.

Low and Reverse Clutch

Low and reverse clutch spring force moves the low and reverse clutch piston to release the low and reverse clutch plates and force R1 fluid to exhaust from the case assembly. The exhausting R1 fluid is routed to the clutch select valve where it enters the exhaust backfill circuit.

Fluid Pressure Directed in Preparation for a Shift

R1/456 Pressure Control (PC) Solenoid 3

The R1/456 PC solenoid 3 is commanded OFF allowing PCS R1/456 clutch fluid to exhaust from the R1/456 clutch regulator valve.

R1/456 Clutch Regulator Valve

R1/456 clutch regulator valve spring force moves the valve to the released position, allowing R1/456 clutch feed fluid to enter the exhaust backfill circuit, and drive 1-6 fluid to enter the PS4 fluid circuit. PS4 fluid is then routed to the normally-closed #4 pressure switch and opens the switch. PS4 fluid is also routed to the #1 ball check valve and flows into the CSV2 latch fluid circuit.

#1 Ball Check Valve

PS4 fluid pressure seats the #1 ball check valve against the 456 clutch fluid circuit. PS4 fluid is then directed into the CSV2 latch circuit and routed to the clutch select valve. CSV2 latch fluid combines with clutch select valve spring force and holds the valve in this position during all six forward gear ranges.

#2 Ball Check Valve

Drive 1-6 fluid pressure seats the #2 ball check valve against the 35 reverse clutch feed fluid passage, and is directed into the 35 reverse clutch feed/drive 1-6 circuit. 35 reverse clutch feed/drive 1-6 fluid is routed through orifice #25 to the 35 Reverse clutch regulator valve.

3-5-Reverse Clutch Regulator Valve

35 reverse clutch feed/drive 1-6 fluid passes through the 3- 5-reverse clutch regulator valve into the PS3 fluid circuit. PS3 fluid is then routed to the normally-closed #3 pressure switch and opens the switch.

Fluid Pressure Directed in Preparation for Torque Converter Clutch (TCC) Apply

TCC Regulator Apply Valve

Drive 1-6 fluid is routed to the TCC regulator apply valve in preparation for TCC apply.

Drive Range, First Gear

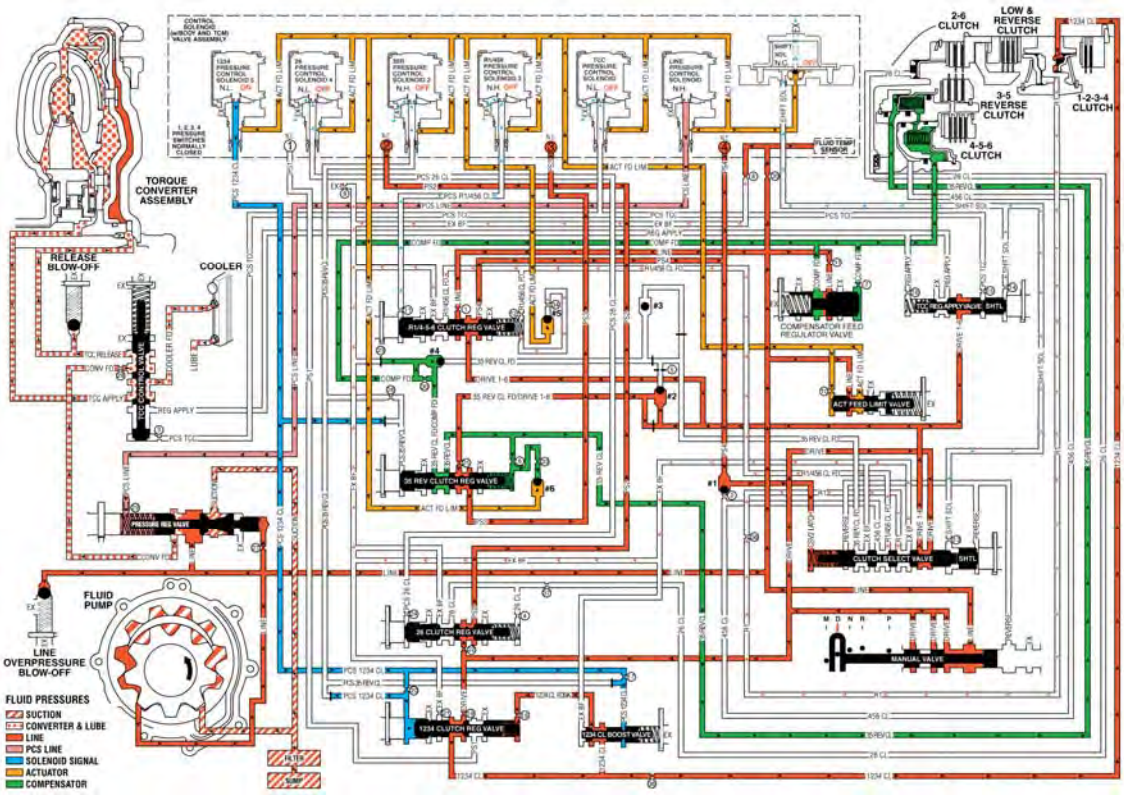

Fig. 14: Drive Range, First Gear Fluid Flow Diagram
Courtesy of GENERAL MOTORS COMPANY

DRIVE RANGE, FIRST GEAR (GEN 2/HYBRID)

As the vehicle speed increases, the transmission control module (TCM) receives input signals from the automatic transmission input and output speed sensors, throttle position sensor and other vehicle sensors to determine the precise moment to de-energize or "turn OFF" the shift solenoid, and to command OFF the normally-high R1/456 pressure control solenoid.

Low & Reverse Clutch Releases

Shift Solenoid

The shift solenoid is commanded OFF allowing shift solenoid fluid pressure to exhaust from the clutch select valve, the default override valve, and the TCC regulator apply valve.

Clutch Select Valve

Shift solenoid fluid is exhausted from the clutch select valve and clutch select valve spring force moves the valve to the released position. This allows R1 fluid pressure to pass through the valve into the exhaust backfill circuit. Drive fluid from the manual valve passes through the clutch select valve and enters the drive 1-6 fluid circuit. Drive 1-6 fluid is routed to the R1/4-5-6 clutch regulator valve, the 3-5-reverse clutch regulator valve, and the TCC regulator apply valve.

Low and Reverse Clutch

Low and reverse clutch spring force moves the low and reverse clutch piston to release the low and reverse clutch plates and force R1 fluid to exhaust from the case assembly. The exhausting R1 fluid is routed to the clutch select valve where it enters the exhaust backfill circuit.

Fluid Pressure Directed in Preparation for a Shift

R1/456 Pressure Control (PC) Solenoid

The R1/456 PC solenoid is commanded OFF allowing PCS R1/456 clutch fluid to exhaust from the R1/4-5-6 clutch regulator valve and the R1/4-5-6 clutch boost valve.

R1/4-5-6 Clutch Regulator Valve

R1/4-5-6 clutch regulator valve spring force moves the valve to the released position, allowing R1/456 clutch feed fluid to enter the exhaust backfill circuit, and drive 1-6 fluid to enter the latch fluid circuit. Latch fluid is routed to the #1 ball check valve.

#1 Ball Check Valve

Latch fluid pressure seats the #1 ball check valve against the 456 clutch fluid circuit. Latch fluid is then directed to the clutch select valve. Latch fluid combines with clutch select valve spring force and holds the valve in this position during all six forward gear ranges.

#2 Ball Check Valve

Drive 1-6 fluid pressure seats the #2 ball check valve against the 35 reverse clutch feed fluid passage, and is directed into the 35 reverse clutch feed/drive 1-6 circuit. 35 reverse clutch feed/drive 1-6 fluid is routed to the #3 ball check valve.

#3 Ball Check Valve

35 reverse clutch feed/drive 1-6 fluid pressure unseats the #3 ball check valve and is directed to the 3-5-reverse clutch regulator valve.

Fluid Pressure Directed in Preparation for Torque Converter Clutch (TCC) Apply

TCC Regulator Apply Valve

Drive 1-6 fluid is routed to the TCC regulator apply valve in preparation for TCC apply.

Drive Range, First Gear - Gen 2/Hybrid

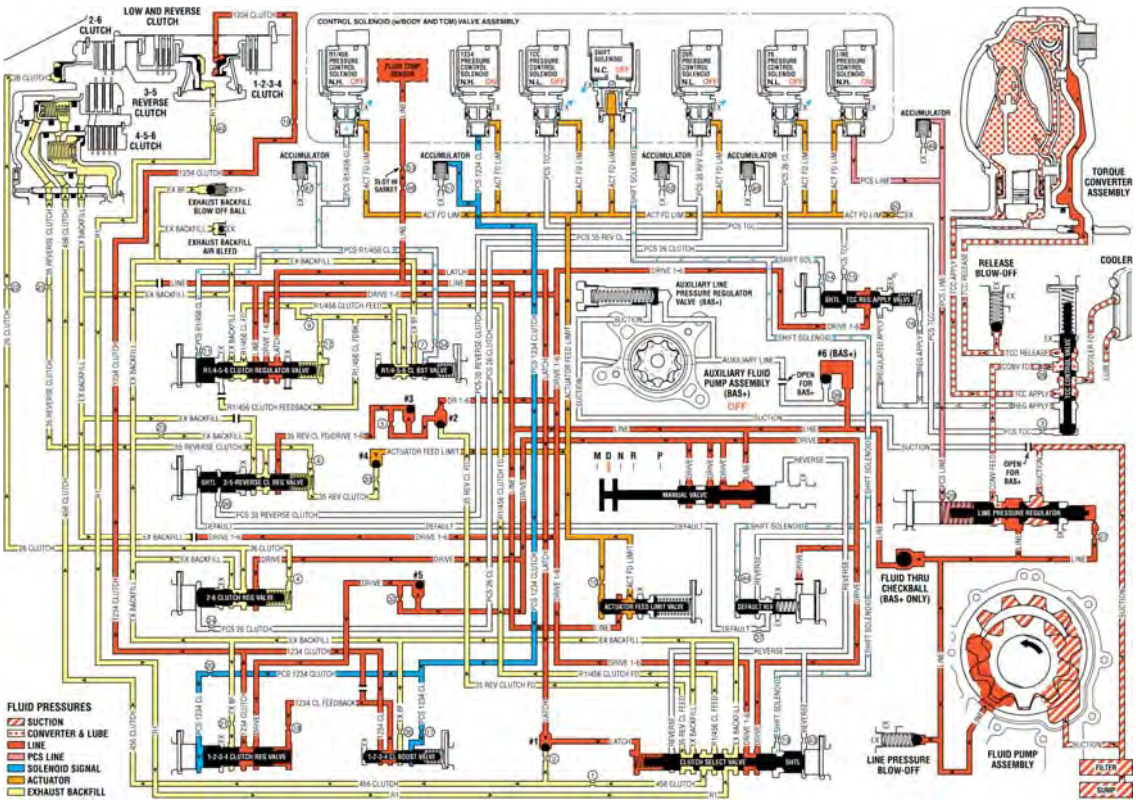

Fig. 15: Drive Range, First Gear -- Gen 2/Hybrid Fluid Flow Diagram
Courtesy of GENERAL MOTORS COMPANY

DRIVE RANGE, SECOND GEAR (GEN 1)

As vehicle speed increases and operating conditions become appropriate, the transmission control module (TCM) processes input signals from the automatic transmission input and output speed sensors, the throttle position sensor and other vehicle sensors to determine the precise moment to command ON the normally-low 2-6 pressure control solenoid 4 and shift the transmission into Second gear. The manual valve remains in the Drive (D) position and line pressure continues to feed the drive fluid circuit.

2-6 Clutch Applies

26 Pressure Control (PC) Solenoid 4

The 26 PC solenoid 4 is commanded ON, allowing actuator feed limit fluid to enter the PCS 26 clutch fluid circuit. PCS 26 clutch fluid is then routed through orifice #24 to the 2-6 clutch regulator valve.

2-6 Clutch Regulator Valve

PCS 26 clutch fluid, at the 2-6 clutch regulator valve, opposes 2-6 clutch regulator valve spring force and orificed 26 clutch fluid pressure to regulate drive fluid pressure into the 26 clutch circuit. 26 clutch fluid is then routed through orifice #37 to the 2-6 clutch assembly in the transmission case, and through orifice #4 to the spring end of the 2-6 clutch regulator valve. With the 2-6 clutch regulator valve in this position, PS2 fluid is allowed to exhaust and the normally-closed PS2 switch closes.

2-6 Clutch

The 26 clutch fluid from the 2-6 clutch regulator valve is routed through the transmission case to the 2-6 clutch piston assembly. The 26 clutch fluid pressure moves the piston against 2-6 clutch spring force to apply the 2-6 clutch plates.

Drive Range, Second Gear

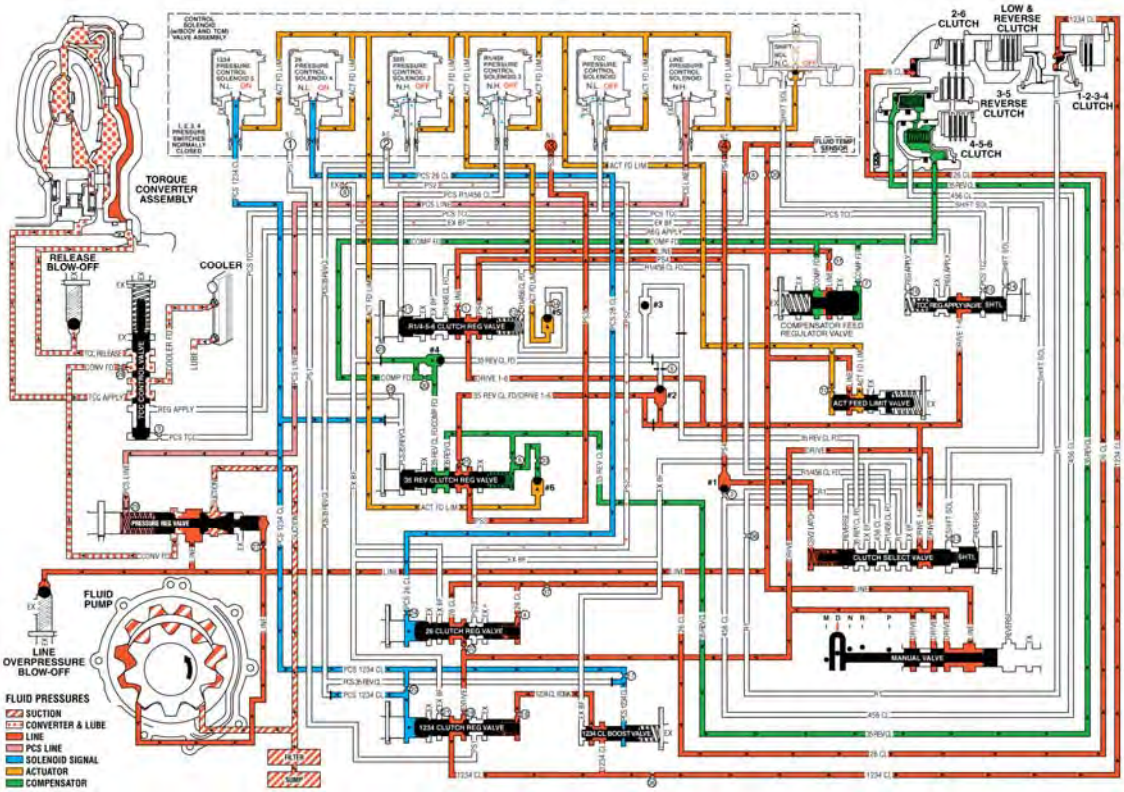

Fig. 16: Drive Range, Second Gear Fluid Flow Diagram
Courtesy of GENERAL MOTORS COMPANY

DRIVE RANGE, SECOND GEAR (GEN 2/HYBRID)

As vehicle speed increases and operating conditions become appropriate, the transmission control module (TCM) processes input signals from the automatic transmission input and output speed sensors, the throttle position sensor and other vehicle sensors to determine the precise moment to command ON the normally-low 26 pressure control solenoid and shift the transmission into Second gear. The manual valve remains in the Drive (D) position and line pressure continues to feed the drive fluid circuit.

2-6 Clutch Applies

26 Pressure Control (PC) Solenoid

The 26 PC solenoid is commanded ON, allowing actuator feed limit fluid to enter the PCS 26 clutch fluid circuit. PCS 26 clutch fluid is then routed through orifice #24 to the 2-6 clutch regulator valve.

2-6 Clutch Regulator Valve

PCS 26 clutch fluid, at the 2-6 clutch regulator valve, opposes 2-6 clutch regulator valve spring force and orificed 26 clutch fluid pressure to regulate drive fluid pressure into the 26 clutch circuit. 26 clutch fluid is then routed through orifice #22 to the 2-6 clutch assembly in the transmission case, and through orifice #4 to the spring end of the 2-6 clutch regulator valve.

2-6 Clutch

The 26 clutch fluid from the 2-6 clutch regulator valve is routed through the transmission case to the 2-6 clutch piston assembly. The 26 clutch fluid pressure moves the piston against 2-6 clutch spring force to apply the 2-6 clutch plates.

Accumulator

PCS 26 clutch fluid is also routed to an accumulator valve. The accumulator valve is used to dampen any pressure irregularities occurring in the PCS 26 clutch fluid circuit. This helps to control clutch apply fluid pressure and clutch apply feel.

Drive Range, Second Gear - Gen 2/Hybrid

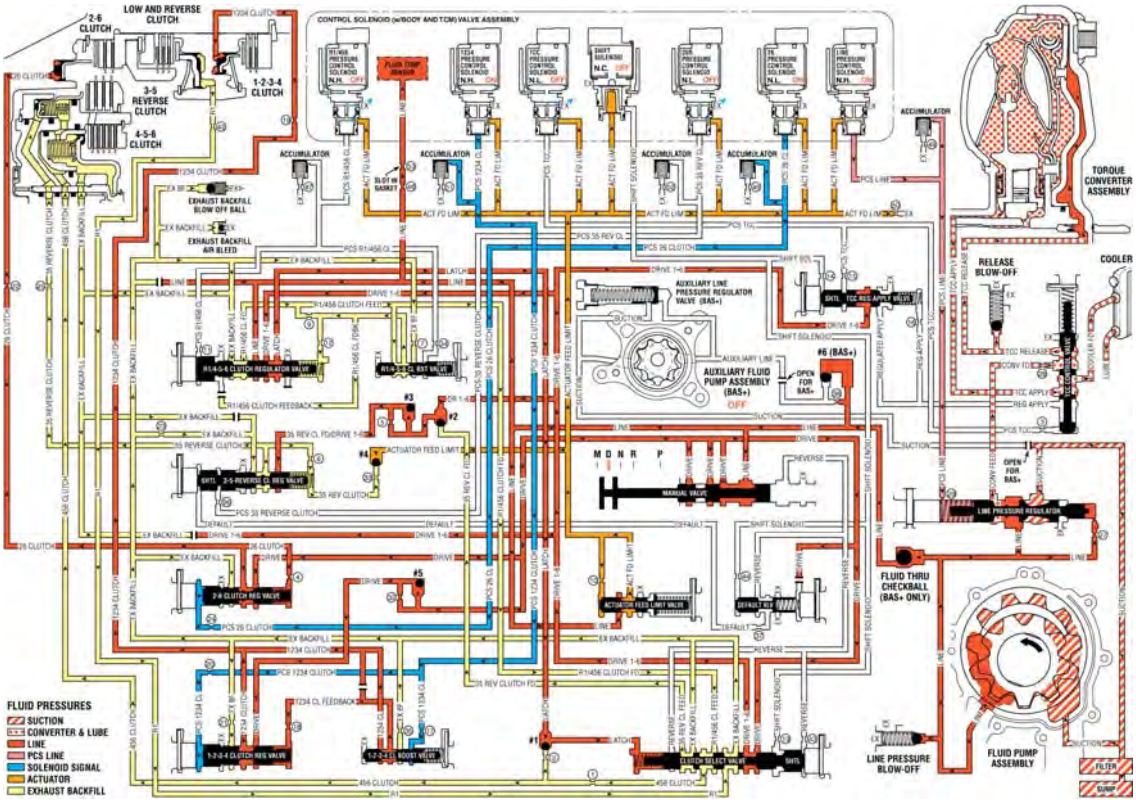

Fig. 17: Drive Range, Second Gear -- Gen 2/Hybrid Fluid Flow Diagram
Courtesy of GENERAL MOTORS COMPANY

DRIVE RANGE, THIRD GEAR (GEN 1)

As vehicle speed increases and operating conditions become appropriate, the transmission control module (TCM) processes input signals from the automatic transmission input and output speed sensors, the throttle position sensor and other vehicle sensors to determine the precise moment to command OFF the normally-low 26 pressure control solenoid 4. At the same time the 35R pressure control solenoid 2 is also commanded ON to regulate 3-5 clutch apply, and the transmission shifts into Third gear. The manual valve remains in the Drive (D) position and line pressure continues to feed the drive fluid circuit.

3-5-Reverse Clutch Applies

35R Pressure Control (PC) Solenoid 2

The 35R PC solenoid 2 is commanded ON, allowing actuator feed limit fluid to enter the PCS 35 reverse clutch fluid circuit. PCS 35 reverse clutch fluid is routed through orifice #26 to the 3-5-reverse clutch regulator valve.

3-5-Reverse Clutch Regulator Valve

PCS 35 reverse clutch fluid, at the 3-5-reverse clutch regulator valve, opposes 3-5-reverse clutch regulator valve spring force and 35 reverse clutch feedback fluid pressure to regulate 35 reverse clutch feed/drive 1-6 pressure into the 35 reverse clutch circuit. The 35 reverse clutch fluid is then routed to the 3-5-reverse clutch assembly, through orifice #6 to the spring end of the 3-5-reverse clutch regulator valve and through orifice #33 to the #6 ball check valve. When the 3-5-reverse clutch regulator valve is in this position, PS3 fluid exhausts through the valve allowing the normally-closed #3 pressure switch to close.

3-5-Reverse Clutch

35 reverse clutch fluid enters the 3-5-reverse and 4-5-6 clutch housing assembly to move the 3-5 reverse clutch piston against spring force and compensator feed fluid pressure to apply the 3-5-reverse clutch plates.

#6 Ball Check Valve

#6 Ball Check Valve 35 reverse clutch feed fluid unseats the #6 ball check valve, allowing excess pressure to pass into the actuator feed limit circuit. This helps to control clutch apply fluid pressure and clutch apply feel.

2-6 Clutch Releases

26 Pressure Control (PC) Solenoid 4

The 26 PC solenoid 4 is commanded OFF, allowing PCS 26 clutch fluid to exhaust from the 2-6 clutch regulator valve.

2-6 Clutch Regulator Valve

2-6 clutch regulator valve spring force moves the valve to the released position, allowing 26 clutch fluid from the 2-6 clutch to pass through the valve and enter the exhaust backfill fluid circuit. With the 2-6 clutch regulator valve in this position, drive fluid passes through the valve into the PS2 circuit. PS2 fluid is routed to the normally-closed #2 pressure switch and opens the switch.

2-6 Clutch

2-6 clutch spring force moves the 2-6 clutch piston to release the 2-6 clutch plates and force 26 clutch fluid to exhaust from the transmission case assembly. The exhausting 26 clutch fluid pressure is routed to the 2-6 clutch regulator valve where it enters the exhaust backfill fluid circuit.

Drive Range, Third Gear

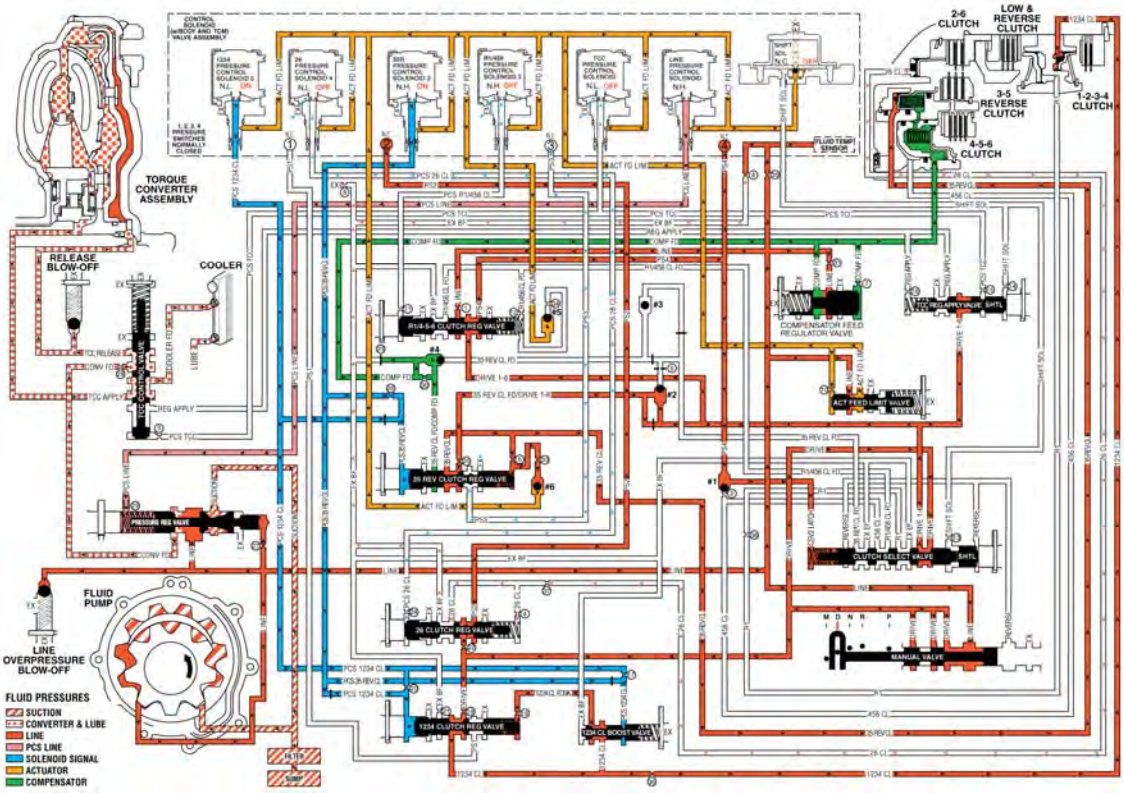

Fig. 18: Drive Range, Third Gear Fluid Flow Diagram
Courtesy of GENERAL MOTORS COMPANY

DRIVE RANGE, THIRD GEAR (GEN 2/HYBRID)

As vehicle speed increases and operating conditions become appropriate, the transmission control module (TCM) processes input signals from the automatic transmission input and output speed sensors, the throttle position sensor and other vehicle sensors to determine the precise moment to command OFF the normally-low 26 pressure control solenoid. At the same time the 35R pressure control solenoid is also commanded ON to regulate 3-5 clutch apply, and the transmission shifts into Third gear. The manual valve remains in the Drive (D) position and line pressure continues to feed the drive fluid circuit.

3-5-Reverse Clutch Applies

35R Pressure Control (PC) Solenoid

The 35R PC solenoid is commanded ON, allowing actuator feed limit fluid to enter the PCS 35 reverse clutch fluid circuit. PCS 35 reverse clutch fluid is routed through orifice #26 to the 3-5-reverse clutch regulator valve.

3-5-Reverse Clutch Regulator Valve

PCS 35 reverse clutch fluid, at the 3-5-reverse clutch regulator valve, opposes 3-5-reverse clutch regulator valve spring force and 35 reverse clutch feedback fluid pressure to regulate 35 reverse clutch feed/drive 1-6 pressure into the 35 reverse clutch circuit. The 35 reverse clutch fluid is then routed through orifice #25 to the 3-5-reverse clutch assembly, through orifice #6 to the spring end of the 3-5-reverse clutch regulator valve and through orifice #33 to the #4 ball check valve.

3-5-Reverse Clutch

35 reverse clutch fluid enters the 3-5-reverse and 4-5-6 clutch housing assembly to move the 3-5-reverse clutch piston against spring force and exhaust backfill fluid pressure to apply the 3-5-reverse clutch plates.

#4 Ball Check Valve

35 reverse clutch feed fluid unseats the #4 ball check valve, allowing excess pressure to pass into the actuator feed limit circuit. This helps to control clutch apply fluid pressure and clutch apply feel.

Accumulator

PCS 35 reverse clutch fluid is also routed to an accumulator valve. The accumulator valve is used to dampen any pressure irregularities occurring in the PCS 35 reverse clutch fluid circuit. This helps to control clutch apply fluid pressure and clutch apply feel.

2-6 Clutch Releases

26 Pressure Control (PC) Solenoid

The 26 PC solenoid is commanded OFF, allowing PCS 26 clutch fluid to exhaust from the 2-6 clutch regulator valve.

2-6 Clutch Regulator Valve

2-6 clutch regulator valve spring force moves the valve to the released position, allowing 26 clutch fluid from the 2-6 clutch to pass through the valve and enter the exhaust backfill fluid circuit.

2-6 Clutch

2-6 clutch spring force moves the 2-6 clutch piston to release the 2-6 clutch plates and force 26 clutch fluid to exhaust from the transmission case assembly. The exhausting 26 clutch fluid pressure is routed to the 2-6 clutch regulator valve where it enters the exhaust backfill fluid circuit.

Drive Range, Third Gear - Gen 2/Hybrid

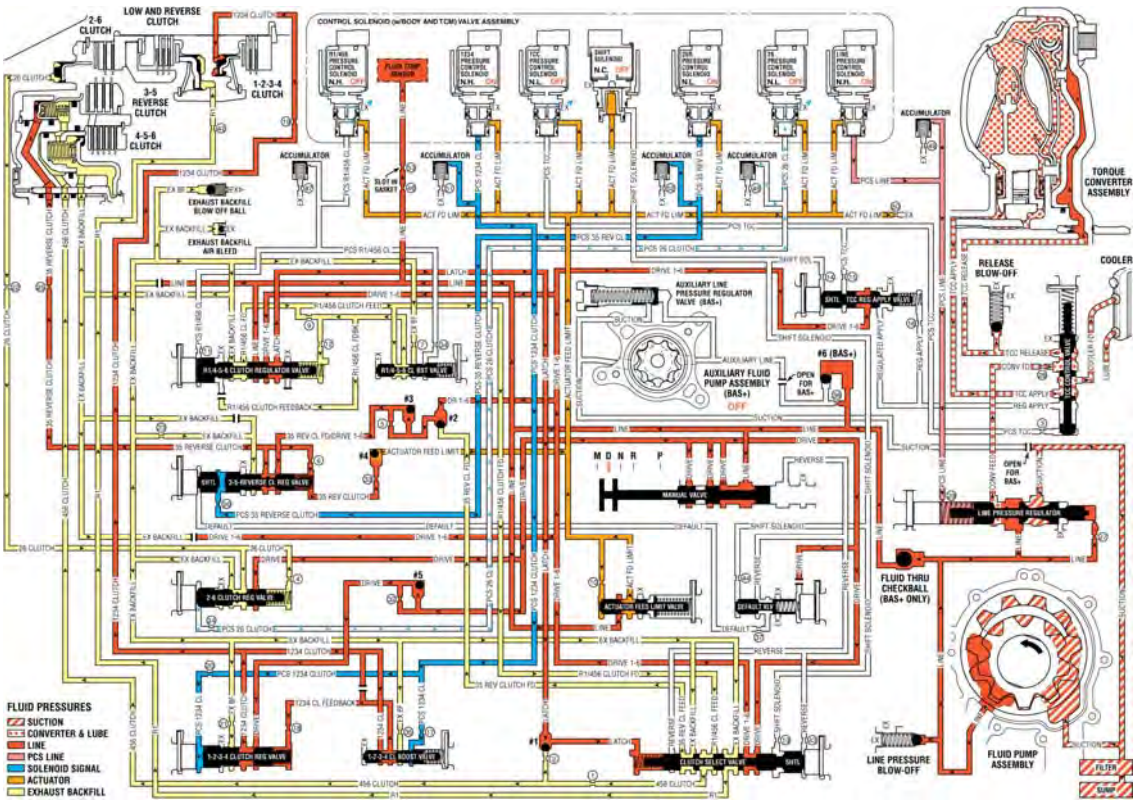

Fig. 19: Drive Range, Third Gear -- Gen 2/Hybrid Fluid Flow Diagram
Courtesy of GENERAL MOTORS COMPANY

DRIVE RANGE - FOURTH GEAR (GEN 1)

As vehicle speed increases, the transmission control module (TCM) processes input signals from the automatic transmission input and output speed sensors, the throttle position sensor and other vehicle sensors to determine the precise moment to command OFF the normally-high 35R pressure control solenoid 2. At the same time, the normally-low R1/456 pressure control solenoid 3 is commanded ON to regulate 4-5-6 clutch apply and the transmission shifts into Fourth gear.

4-5-6 Clutch Applies

R1/456 Pressure Control (PC) Solenoid 3

The R1/456 PC solenoid 3 is commanded ON allowing actuator feed limit fluid to enter the PCS R1/456 clutch fluid circuit. PCS R1/456 clutch fluid is routed through orifice #11 to the R1/456 clutch regulator valve.

R1/4-5-6 Clutch Regulator Valve

PCS R1/456 clutch fluid, at the R1/4-5-6 clutch regulator valve, opposes R1/4-5-6 clutch regulator valve spring force and orificed R1/456 clutch feed fluid pressure to regulate line pressure into the R1/456 clutch feed circuit. R1/456 clutch feed fluid is then routed to the clutch select valve, through orifice #12 to the spring end of the R1/4-5-6 clutch regulator valve, and through orifice #34 to ball check valve #5. When the R1/4-5-6 clutch regulator valve is in this position, PS4 fluid exhausts through the valve allowing the normally-closed #4

pressure switch to close.

Clutch Select Valve

R1/456 clutch feed fluid passes through the clutch select valve and enters the 456 clutch circuit. 456 clutch fluid is routed to the 4-5-6 clutch assembly, and through orifice #2 to the #1 ball check valve.

#1 Ball Check Valve

Orificed 456 clutch fluid pressure seats the #1 ball check valve against the exhausting PS4 fluid passage. 456 clutch fluid is then directed into the CSV2 latch circuit to replace the exhausting PS4 pressure and is routed to the clutch select valve. CSV2 latch fluid combines with clutch select valve spring force and holds the valve in this position during all six forward gear ranges.

4-5-6 Clutch

456 clutch fluid enters the 3-5-reverse and 4-5-6 clutch housing assembly, and moves the 4-5-6 clutch piston against spring force and compensator feed pressure to apply the 4- 5-6 clutch plates.

#5 Ball Check Valve

R1/456 clutch feed fluid unseats the #5 ball check valve, allowing excess pressure to pass into the actuator feed limit circuit. This helps to control clutch apply fluid pressure and clutch apply feel.

3-5-Reverse Clutch Releases

35R Pressure Control (PC) Solenoid 2

The 35R PC solenoid 2 is commanded OFF allowing PCS 35 reverse clutch fluid from the 3-5-reverse clutch regulator valve to exhaust.

3-5-Reverse Clutch Regulator Valve

PCS 35 reverse clutch fluid exhausts, allowing 3-5-reverse clutch regulator valve spring force to move the 3-5-reverse clutch regulator valve to the released position. This allows 35 reverse clutch fluid pressure to exhaust into the compensator feed circuit in order to assist the 3-5-reverse clutch piston spring to quickly release the 3-5-reverse clutch. With the 3-5-reverse clutch regulator valve in this position, orificed (#25) 35 reverse clutch feed/drive 1-6 fluid passes through the valve into the PS3 circuit. PS3 fluid is routed to the normally-closed #3 pressure switch and opens the switch.

3-5-Reverse Clutch

3-5-reverse clutch spring force, assisted by compensator feed pressure, moves the 3-5-reverse clutch piston to release the 3-5-reverse clutch plates and force 35 reverse clutch fluid to exhaust from the 3-5-reverse and 4-5-6 clutch housing assembly. The exhausting 35 reverse clutch fluid pressure is routed to the 3-5-reverse clutch regulator valve where it enters the 35 reverse clutch feed/compensator feed circuit.

Torque Converter Clutch (TCC) Applies

Torque Converter Clutch (TCC) Pressure Control (PC) Solenoid

The TCC PC solenoid is commanded ON, allowing actuator feed limit fluid to enter the PCS TCC fluid circuit. PCS TCC fluid is routed through orifice #15 to the TCC regulator apply valve and through orifice #3 to the TCC control valve.

TCC Regulator Apply Valve

PCS TCC fluid, at the TCC regulator apply valve, opposes TCC regulator apply valve spring force and orificed regulated apply fluid pressure to regulate drive 1-6 fluid into the regulated apply circuit. Regulated apply fluid is routed to the TCC control valve and through orifice #16 to the spring end of the TCC regulator apply valve.

TCC Control Valve

PCS TCC fluid moves the TCC control valve against TCC control valve spring force, allowing regulated apply fluid to pass through the valve into the TCC apply fluid circuit and apply the torque converter clutch. Converter feed fluid passes through orifice #28 to the TCC control valve, replacing TCC apply fluid, to supply the cooler feed circuit. TCC release fluid passes through the TCC control valve and is exhausted.

Drive Range, Fourth Gear

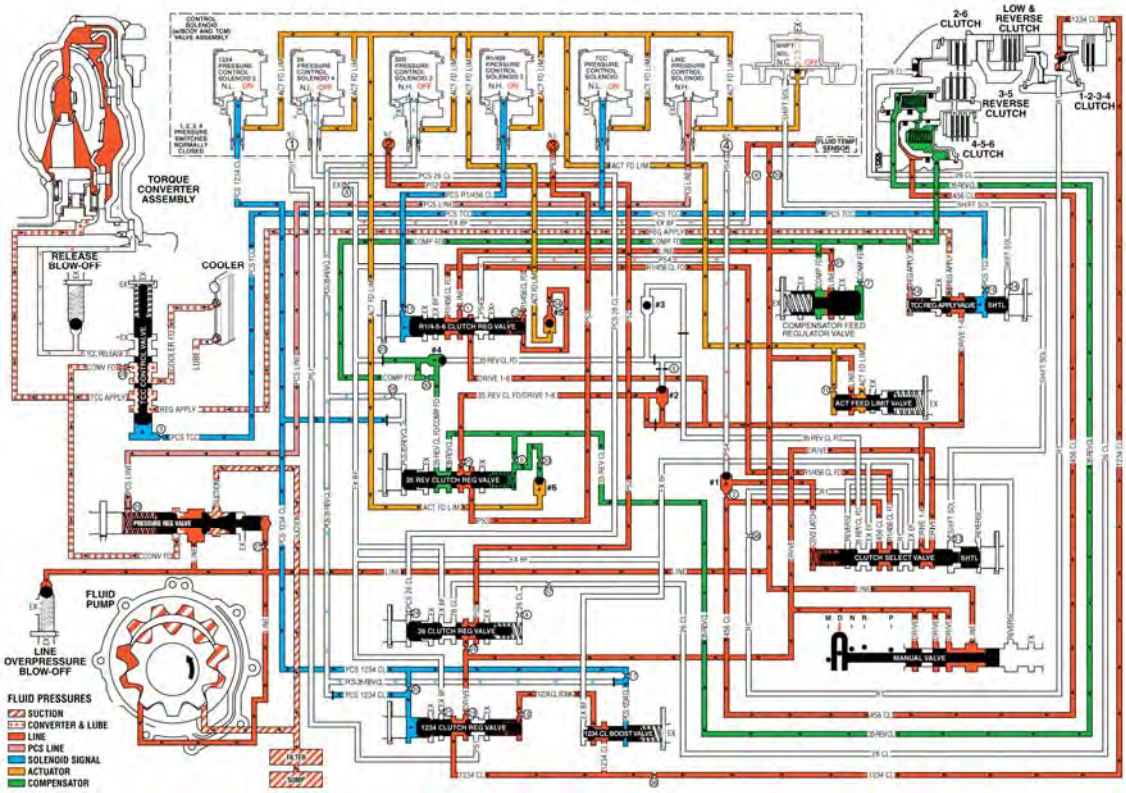

Fig. 20: Drive Range, Fourth Gear Fluid Flow Diagram
Courtesy of GENERAL MOTORS COMPANY

DRIVE RANGE - FOURTH GEAR (GEN 2/HYBRID)

As vehicle speed increases, the transmission control module (TCM) processes input signals from the automatic transmission input and output speed sensors, the throttle position sensor and other vehicle sensors to determine the precise moment to command OFF the normally-low 35R pressure control solenoid. At the same time, the normally-high R1/456 pressure control solenoid is commanded ON to regulate 4-5-6 clutch apply and the transmission shifts into Fourth gear.

4-5-6 Clutch Applies

R1/456 Pressure Control (PC) Solenoid

The R1/456 PC solenoid is commanded ON allowing actuator feed limit fluid to enter the PCS R1/456 clutch fluid circuit. PCS R1/456 clutch fluid is routed through orifice #11 to the R1/4-5-6 clutch regulator valve, and through orifice #34 to the R1/4-5-6 clutch boost valve.

R1/4-5-6 Clutch Regulator Valve

PCS R1/456 clutch fluid, at the R1/4-5-6 clutch regulator valve, opposes R1/4-5-6 clutch regulator valve spring force and orificed R1/456 clutch feed fluid pressure to regulate line pressure into the R1/456 clutch feed circuit. R1/456 clutch feed fluid is then routed to the clutch select valve, the R1/4-5-6 clutch boost valve, and through orifices #9 and #12 to the spring end of the R1/4-5-6 clutch regulator valve. When the R1/4-5-6 clutch regulator valve is in this position, latch fluid exhausts through the valve allowing 456 clutch fluid to shuttle the #1 ball check valve.

R1/4-5-6 Clutch Boost Valve

PCS R1/456 clutch fluid pressure acts on a differential area, moving the R1/4-5-6 clutch boost valve against R1/4-5-6 clutch boost valve spring force, to regulate R1/456 feed clutch fluid into the R1/456 clutch feedback circuit. As PCS R1/456 clutch fluid pressure is increased to a given value, the R1/4-5-6 clutch boost valve opens the R1/456 clutch feedback circuit to exhaust backfill. This results in the R1/4-5-6 clutch regulator valve moving to the full feed position, sending full R1/456 clutch feed pressure (full line pressure) to the 4-5-6 clutch.

#1 Ball Check Valve

Orificed 456 clutch fluid pressure seats the #1 ball check valve against the exhausting latch fluid passage. 456 clutch fluid is then directed into the latch circuit to replace the exhausting latch pressure and is routed to the clutch select valve. Latch fluid combines with clutch select valve spring force and holds the valve in this position during all six forward gear ranges.

Clutch Select Valve

R1/456 clutch feed fluid passes through the clutch select valve and enters the 456 clutch circuit. 456 clutch fluid is routed to the 4-5-6 clutch assembly, and through orifice #2 to the #1 ball check valve.

4-5-6 Clutch

456 clutch fluid enters the 3-5-reverse and 4-5-6 clutch housing assembly, and moves the 4-5-6 clutch piston against spring force and exhaust backfill pressure to apply the 4-5-6 clutch plates.

Accumulator

PCS R1/456 clutch fluid is also routed to an accumulator valve. The accumulator valve is used to dampen any pressure irregularities occurring in the PCS R1/456 clutch fluid circuit. This helps to control clutch apply fluid pressure and clutch apply feel.

3-5-Reverse Clutch Releases

35R Pressure Control (PC) Solenoid

The 35R PC solenoid is commanded OFF allowing PCS 35 reverse clutch fluid from the 3-5-reverse clutch regulator valve to exhaust.

3-5-Reverse Clutch Regulator Valve

PCS 35 reverse clutch fluid exhausts, allowing 3-5-reverse clutch regulator valve spring force to move the 3-5-reverse clutch regulator valve to the released position. This allows exhausting 35 reverse clutch fluid pressure to pass into the exhaust backfill circuit in order to assist the 3-5-reverse clutch piston spring to quickly release the 3-5-reverse clutch.

3-5-Reverse Clutch

3-5-reverse clutch spring force, assisted by exhaust backfill pressure, moves the 3-5-reverse clutch piston to release the 3-5-reverse clutch plates and force 35 reverse clutch fluid to exhaust from the 3-5-reverse and 4-5-6 clutch housing assembly. The exhausting 35 reverse clutch fluid pressure is routed to the 3-5-reverse clutch regulator valve where it enters the exhaust backfill feed circuit.

Torque Converter Clutch (TCC) Applies

Torque Converter Clutch (TCC) Pressure Control (PC) Solenoid

The TCC PC solenoid is commanded ON, allowing actuator feed limit fluid to enter the PCS TCC fluid circuit. PCS TCC fluid is routed through orifice #15 to the TCC regulator apply valve and through orifice #3 to the TCC control valve.

TCC Regulator Apply Valve

PCS TCC fluid, at the TCC regulator apply valve, opposes TCC regulator apply valve spring force and orificed regulated apply fluid pressure to regulate drive 1-6 fluid into the regulated apply circuit. Regulated apply fluid is routed to the TCC control valve and through orifice #16 to the spring end of the TCC regulator apply valve.

TCC Control Valve

PCS TCC fluid moves the TCC control valve against TCC control valve spring force, allowing regulated apply fluid to pass through the valve into the TCC apply fluid circuit and apply the torque converter clutch. Converter feed fluid passes through orifice #28 to the TCC control valve, replacing TCC apply fluid, to supply the cooler feed circuit. TCC release fluid passes through the TCC control valve and is exhausted.

Drive Range, Fourth Gear - Gen 2/Hybrid

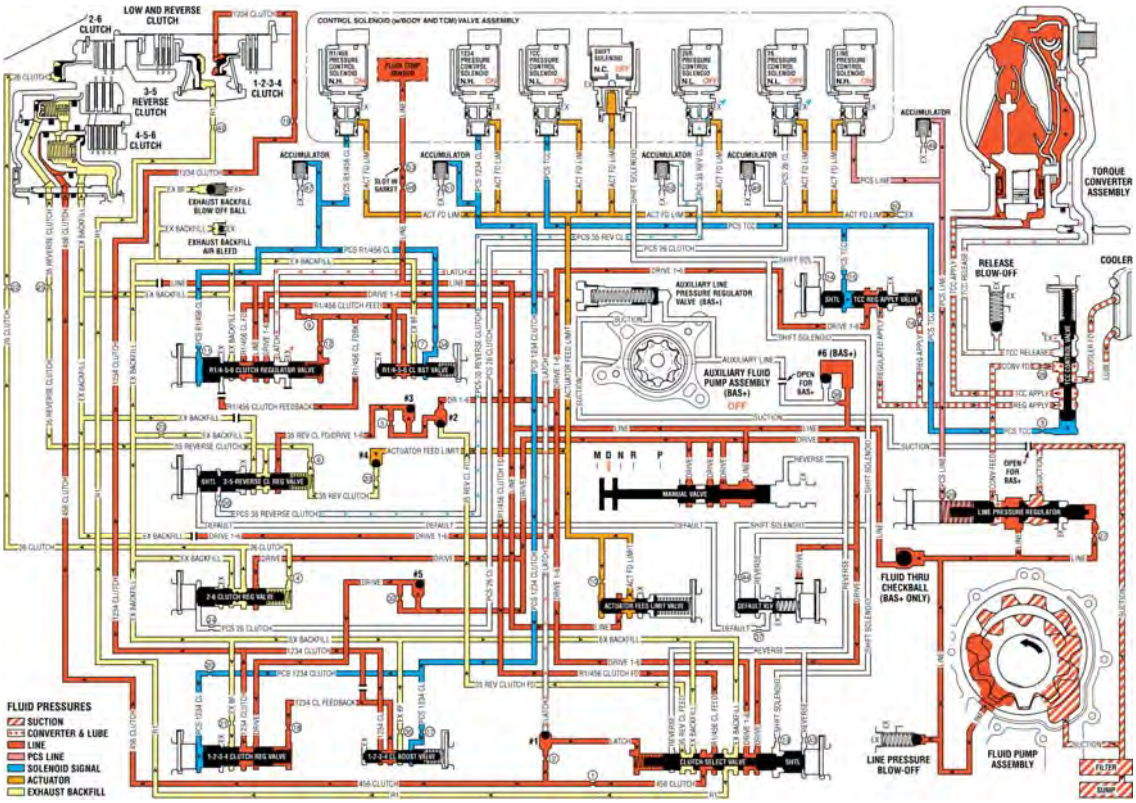

Fig. 21: Drive Range, Fourth Gear -- Gen 2/Hybrid Fluid Flow Diagram
Courtesy of GENERAL MOTORS COMPANY

DRIVE RANGE - FOURTH GEAR DEFAULT (GEN 2/HYBRID)

If the transmission encounters an electrical component malfunction, the transmission will default to Fourth gear. All solenoids will default to their normal state. If the torque converter clutch is applied, it will release. The transmission will remain in Drive Range- Fourth Gear Default until the condition is corrected. Reverse (R) range can also still be selected. This default action enables the vehicle to be safely driven to a service center.

1-2-3-4 Clutch Applies or Remains Applied

1234 Pressure Control (PC) Solenoid

The 1234 PC solenoid defaults to its normally-high state (ON), allowing actuator feed limit fluid to enter the PCS 1234 clutch fluid circuit. PCS 1234 clutch fluid is routed through orifice #20 to the 1-2-3-4 clutch regulator valve, and through orifice #17 to the 1-2-3-4 clutch boost valve. If the transmission is operating in Fifth or Sixth gear when an electrical malfunction occurs, the 1-2-3-4 clutch will apply. If the transmission is operating in First, Second, Third or Fourth gear when the electrical malfunction occurs, the 1-2-3-4 clutch remains applied.

1-2-3-4 Clutch Boost Valve

PCS 1234 clutch fluid pressure acts on a differential area, moving the 1-2-3-4 clutch boost valve against 1-2-3-4 clutch boost valve spring force, to block 1234 clutch fluid from entering the 1234 clutch feedback circuit, and opening the 1234 clutch feedback circuit to exhaust backfill. This results in the 1-2-3-4 clutch regulator valve moving to the full feed position, sending full 1234 clutch feed pressure (full line pressure) to the 1-2-3-4 clutch.

1-2-3-4 Clutch Regulator Valve

PCS 1234 clutch fluid moves the 1-2-3-4 clutch regulator valve, against 1-2-3-4 clutch regulator valve spring force, to the applied position. This allows drive fluid pressure to pass through the valve into the 1234 clutch fluid circuit. The 1234 clutch fluid is then routed to the 1-2-3-4 clutch boost valve and through orifice #19 to the 1-2-3-4 clutch.

1-2-3-4 Clutch

1234 clutch fluid enters the transmission case assembly and moves the 1-2-3-4 clutch piston against spring force to apply the 1-2-3-4 clutch plates.

Accumulator

PCS 1234 clutch fluid is also routed to an accumulator valve. The accumulator valve is used to dampen any pressure irregularities occurring in the PCS 1234 clutch fluid circuit. This helps to control clutch apply fluid pressure and clutch apply feel.

4-5-6 Clutch Applies or Remains Applied

R1/456 Pressure Control (PC) Solenoid

The R1/456 PC solenoid defaults to its normally-high state (ON), allowing actuator feed limit fluid to enter the PCS R1/456 clutch fluid circuit. PCS R1/456 clutch fluid is routed through orifice #11 to the R1/4-5-6 clutch regulator valve, and through orifice #34 to the R1/4-5-6 clutch boost valve. If the transmission is operating in First, Second or Third gear when an electrical malfunction occurs, the 4-5-6 clutch will apply. If the transmission is operating in Fourth, Fifth or Sixth gear when the electrical malfunction occurs, the 4-5-6 clutch remains applied.

R1/4-5-6 Clutch Boost Valve

PCS R1/456 clutch fluid pressure acts on a differential area, moving the R1/4-5-6 clutch boost valve against R1/4-5-6 clutch boost valve spring force, to block R1/456 clutch feed fluid from entering the R1/456 clutch feedback circuit, and opening the R1/456 clutch feedback circuit to exhaust backfill. This results in the R1/4-5-6 clutch regulator valve moving to the full feed position, sending full R1/456 clutch feed pressure (full line pressure) to the 4-5-6 clutch.

R1/4-5-6 Clutch Regulator Valve

PCS R1/456 clutch fluid moves the R1/4-5-6 clutch regulator valve, against R1/4-5-6 clutch regulator valve spring force, to the applied position. This allows line fluid pressure to pass through the valve into the R1/456 clutch feed circuit. R1/456 clutch feed fluid is then routed to the clutch select valve, the R1/4-5-6 clutch boost valve, and through orifices #9 and #12 to the spring end of the R1/4-5-6 clutch regulator valve. When the R1/4-

5-6 clutch regulator valve is in this position, latch fluid exhausts through the valve allowing 456 clutch fluid to shuttle the #1 ball check valve.

#1 Ball Check Valve

Orificed 456 clutch fluid pressure seats the #1 ball check valve against the exhausting latch fluid passage. 456 clutch fluid is then directed into the latch circuit to replace the exhausting latch pressure and is routed to the clutch select valve. Latch fluid combines with clutch select valve spring force and holds the valve in this position during all six forward gear ranges.

Clutch Select Valve

R1/456 clutch feed fluid passes through the clutch select valve and enters the 456 clutch circuit. 456 clutch fluid is routed to the 4-5-6 clutch assembly, and through orifice #2 to the #1 ball check valve.

4-5-6 Clutch

456 clutch fluid enters the 3-5-reverse and 4-5-6 clutch housing assembly, and moves the 4-5-6 clutch piston against spring force and exhaust backfill pressure to apply the 4-5-6 clutch plates.

Accumulator

PCS R1/456 clutch fluid is also routed to an accumulator valve. The accumulator valve is used to dampen any pressure irregularities occurring in the PCS R1/456 clutch fluid circuit. This helps to control clutch apply fluid pressure and clutch apply feel.

3-5-Reverse Clutch Releases

35R Pressure Control (PC) Solenoid

If the transmission is in Third or Fifth gear when an electrical condition commands a protection mode, the 35R PC solenoid defaults to its normally-low state (OFF), allowing PCS 35R clutch fluid pressure to exhaust and the 3-5-reverse clutch to release. See Drive Range- Fourth Gear for a complete description of 3-5-reverse clutch release.

2-6 Clutch Releases

26 Pressure Control (PC) Solenoid

If the transmission is in Second or Sixth gear when an electrical condition commands a protection mode, the 26 PC solenoid defaults to its normally-low state (OFF), allowing PCS 26 clutch fluid pressure to exhaust and the 2-6 clutch to release. See Drive Range- Third Gear for a complete description of 2-6 clutch release.

Torque Converter Clutch (TCC) Releases

Torque Converter Clutch (TCC) Pressure Control (PC) Solenoid

If the TCC is applied when an electrical condition commands a protection mode, the TCC PC solenoid defaults

to its normally-low state (OFF), allowing PCS TCC fluid to exhaust and the TCC to release. See Drive Range-Sixth Gear for a complete description of TCC release.

Drive Range, Fourth Gear Default - Gen 2/Hybrid

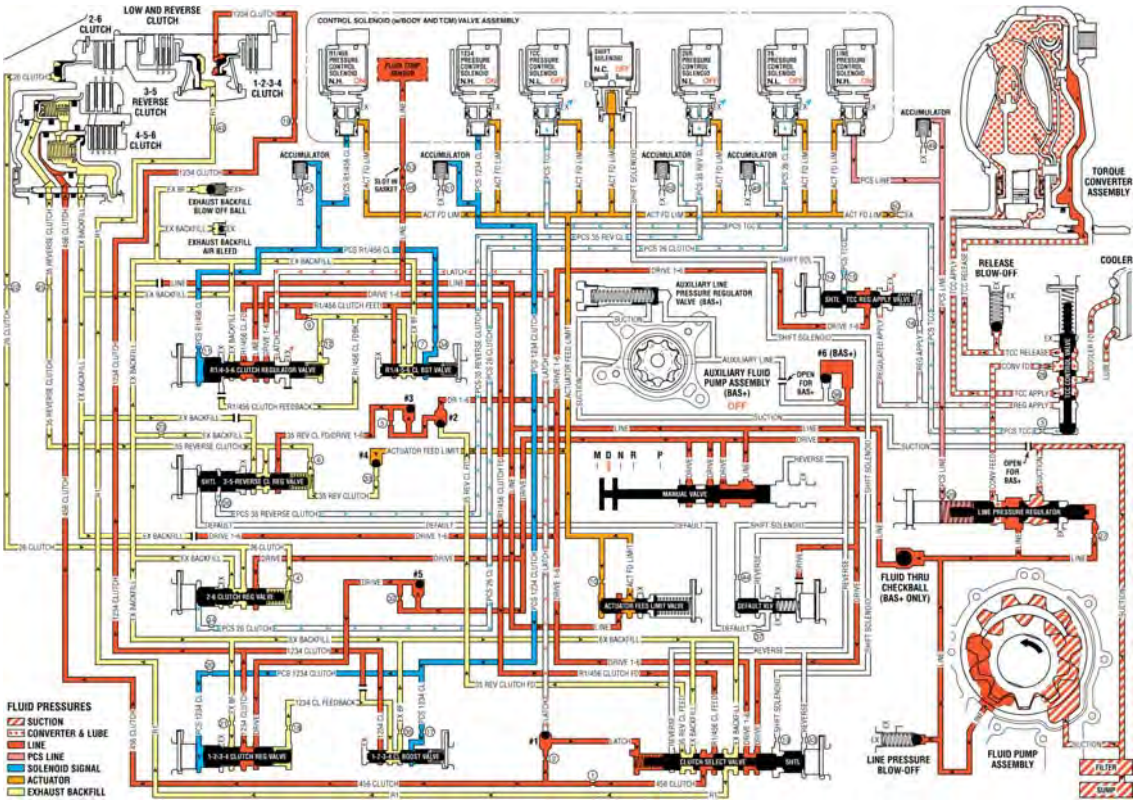

Fig. 22: Drive Range, Fourth Gear Default -- Gen 2/Hybrid Fluid Flow Diagram
Courtesy of GENERAL MOTORS COMPANY

DRIVE RANGE, FIFTH GEAR (GEN 1)

As vehicle speed increases, the transmission control module (TCM) processes input signals from the automatic transmission input and output speed sensors, the throttle position sensor and other vehicle sensors to determine the precise moment to command ON the normally-high 35R pressure control solenoid 2. At the same time, the normally-low 1234 pressure control solenoid 5 is commanded OFF and the transmission shifts into Fifth gear.

3-5-Reverse Clutch Applies

35R Pressure Control (PC) Solenoid 2

The 35R PC solenoid 2 is commanded ON, allowing actuator feed limit fluid to enter the PCS 35 reverse clutch fluid circuit. PCS 35 reverse clutch fluid is routed through orifice #26 to the 3-5-reverse clutch regulator valve.

3-5-Reverse Clutch Regulator Valve

PCS 35 reverse clutch fluid, at the 3-5-reverse clutch regulator valve, opposes 3-5-reverse clutch regulator valve

spring force and 35 reverse clutch feedback fluid pressure to regulate 35 reverse clutch feed/drive 1-6 pressure into the 35 reverse clutch circuit. The 35 reverse clutch fluid is then routed to the 3-5-reverse clutch assembly, through orifice #6 to the spring end of the 3-5-reverse clutch regulator valve and through orifice #33 to the #6 ball check valve. When the 3-5-reverse clutch regulator valve is in this position, PS3 fluid exhausts through the valve allowing the normally-closed #3 pressure switch to close.

3-5-Reverse Clutch

35 reverse clutch fluid enters the 3-5-reverse and 4-5-6 clutch housing assembly to move the 3-5 reverse clutch piston against spring force and compensator feed fluid pressure to apply the 3-5-reverse clutch plates.

#6 Ball Check Valve

35 reverse clutch feed fluid unseats the #6 ball check valve, allowing excess pressure to pass into the actuator feed limit circuit. This helps to control clutch apply fluid pressure and clutch apply feel.

1-2-3-4 Clutch Releases

1234 Pressure Control (PC) Solenoid 5

The 1234 PC solenoid 5 is commanded OFF, allowing PCS 1234 clutch fluid to exhaust from the 1-2-3-4 clutch regulator valve and the 1-2-3-4 clutch boost valve.

1-2-3-4 Clutch Regulator Valve

1-2-3-4 clutch regulator valve spring force moves the valve to the released position, allowing 1234 clutch fluid pressure from the 1-2-3-4 clutch to pass through the valve and enter the exhaust backfill circuit. The exhausting 1234 clutch fluid pressure is routed through orifice #21 in order to help control the release of the 1-2-3-4 clutch. With the 1-2-3-4 clutch regulator valve in this position, drive fluid passes through the valve into the PS1 circuit. PS1 fluid is routed to the #1 pressure switch and opens the normally-closed switch.

1-2-3-4 Clutch Boost Valve

1-2-3-4 clutch boost valve spring force moves the 1-2-3-4 clutch boost valve to the released position, allowing 1234 clutch feedback fluid pressure to exhaust from the 1-2-3-4 clutch regulator valve into the 1234 clutch circuit.

1-2-3-4 Clutch

1-2-3-4 clutch spring force moves the 1-2-3-4 clutch piston to release the 1-2-3-4 clutch plates and force 1234 clutch fluid to exhaust from the transmission case assembly. The exhausting 1234 clutch fluid is routed to the 1-2-3-4 clutch regulator valve where it enters the exhaust backfill circuit.

Drive Range, Fifth Gear

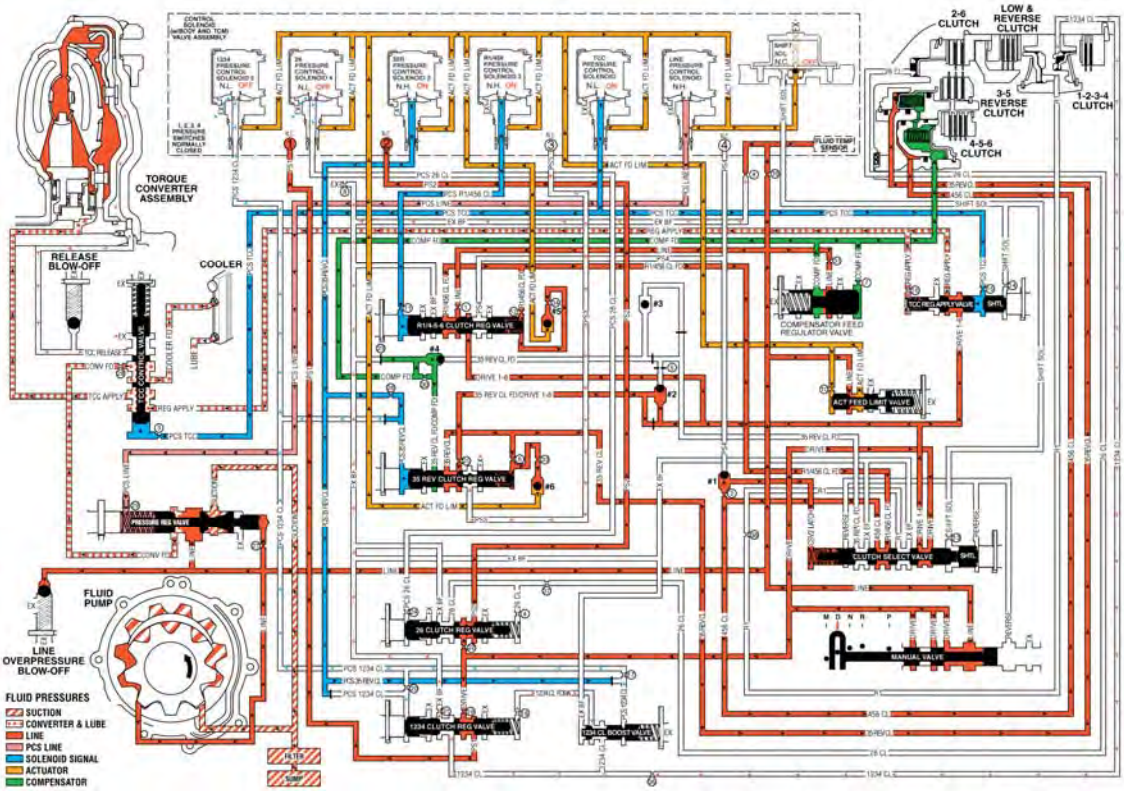

Fig. 23: Drive Range, Fifth Gear Fluid Flow Diagram
Courtesy of GENERAL MOTORS COMPANY

DRIVE RANGE, FIFTH GEAR (GEN 2/HYBRID)

As vehicle speed increases, the transmission control module (TCM) processes input signals from the automatic transmission input and output speed sensors, the throttle position sensor and other vehicle sensors to determine the precise moment to command ON the normally-low 35R pressure control solenoid. At the same time, the normally-high 1234 pressure control solenoid is commanded OFF and the transmission shifts into Fifth gear.

3-5-Reverse Clutch Applies

35R Pressure Control (PC) Solenoid

The 35R PC solenoid is commanded ON, allowing actuator feed limit fluid to enter the PCS 35 reverse clutch fluid circuit. PCS 35 reverse clutch fluid is routed through orifice #26 to the 3-5-reverse clutch regulator valve.

3-5-Reverse Clutch Regulator Valve

PCS 35 reverse clutch fluid, at the 3-5-reverse clutch regulator valve, opposes 3-5-reverse clutch regulator valve spring force and 35 reverse clutch feedback fluid pressure to regulate 35 reverse clutch feed/drive 1-6 pressure into the 35 reverse clutch circuit. The 35 reverse clutch fluid is then routed through orifice #25 to the 3-5-reverse clutch assembly, through orifice #6 to the spring end of the 3-5-reverse clutch regulator valve and through orifice #33 to the #4 ball check valve.

3-5-Reverse Clutch

35 reverse clutch fluid enters the 3-5-reverse and 4-5-6 clutch housing assembly to move the 3-5-reverse clutch piston against spring force and exhaust backfill fluid pressure to apply the 3-5-reverse clutch plates.

#4 Ball Check Valve

35 reverse clutch feed fluid unseats the #4 ball check valve, allowing excess pressure to pass into the actuator feed limit circuit. This helps to control clutch apply fluid pressure and clutch apply feel.

Accumulator

PCS 35 reverse clutch fluid is also routed to an accumulator valve. The accumulator valve is used to dampen any pressure irregularities occurring in the PCS 35 reverse clutch fluid circuit. This helps to control clutch apply fluid pressure and clutch apply feel.

1-2-3-4 Clutch Releases

1234 Pressure Control (PC) Solenoid

The 1234 PC solenoid is commanded OFF, allowing PCS 1234 clutch fluid to exhaust from the 1-2-3-4 clutch regulator valve and the 1-2-3-4 clutch boost valve.

1-2-3-4 Clutch Regulator Valve

1-2-3-4 clutch regulator valve spring force moves the valve to the released position, allowing 1234 clutch fluid pressure from the 1-2-3-4 clutch to pass through the valve and enter the exhaust backfill circuit. The exhausting 1234 clutch fluid pressure is routed through orifice #21 in order to help control the release of the 1-2-3-4 clutch.

1-2-3-4 Clutch Boost Valve

1-2-3-4 clutch boost valve spring force moves the 1-2-3-4 clutch boost valve to the released position, allowing 1234 clutch feedback fluid pressure to exhaust from the 1-2-3-4 clutch regulator valve into the 1234 clutch circuit.

1-2-3-4 Clutch

1-2-3-4 clutch spring force moves the 1-2-3-4 clutch piston to release the 1-2-3-4 clutch plates and force 1234 clutch fluid to exhaust from the transmission case assembly. The exhausting 1234 clutch fluid is routed to the 1-2-3-4 clutch regulator valve where it enters the exhaust backfill circuit.

Drive Range, Fifth Gear - Gen 2/Hybrid

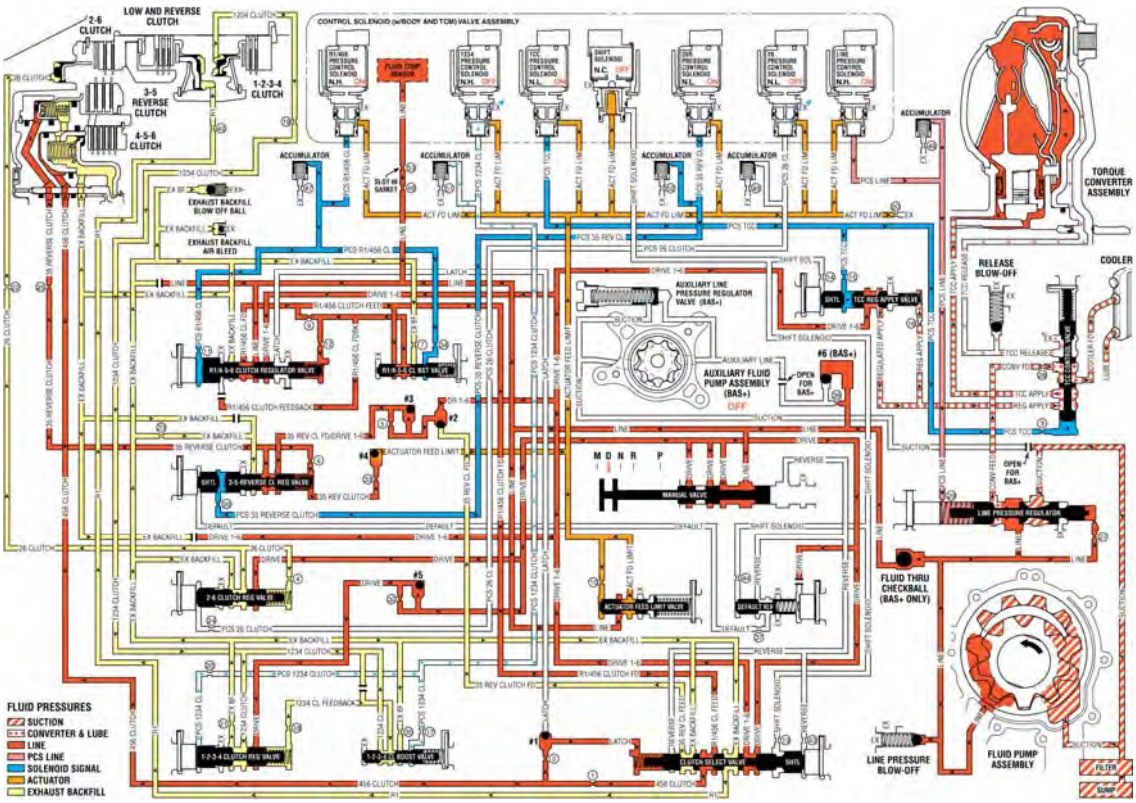

Fig. 24: Drive Range, Fifth Gear -- Gen 2/Hybrid Fluid Flow Diagram
Courtesy of GENERAL MOTORS COMPANY

DRIVE RANGE, FIFTH GEAR DEFAULT (GEN 1)

If the transmission encounters an electrical component malfunction, the transmission will default to Fifth gear. All solenoids will default to their normal state. If the torque converter clutch is applied, it will release. The transmission will remain in Drive Range- Fifth Gear Default until the condition is corrected. Reverse (R) range can also still be selected. This default action enables the vehicle to be safely driven to a service center.

3-5 Reverse Clutch Applies or Remains Applied

35R Pressure Control (PC) Solenoid 2

The 35R PC solenoid 2 defaults to its normally-high state (ON), allowing actuator feed limit fluid to enter the PCS 35 reverse clutch fluid circuit. PCS 35 reverse clutch fluid is routed through orifice #26 to the 3-5-reverse clutch regulator valve. If the transmission is operating in First, Second, Fourth or Sixth gear when an electrical malfunction occurs, the 3-5-reverse clutch will apply. If the transmission is operating in Third or Fifth gear when the electrical malfunction occurs, the 3-5-reverse clutch remains applied.

3-5-Reverse Clutch Regulator Valve

PCS 35 reverse clutch fluid, at the 3-5-reverse clutch regulator valve, opposes 3-5-reverse clutch regulator valve spring force and 35 reverse clutch feedback fluid pressure to regulate 35 reverse clutch feed/drive 1-6 pressure into the 35 reverse clutch circuit. The 35 reverse clutch fluid is then routed to the 3-5-reverse clutch assembly,

through orifice #6 to the spring end of the 3-5-reverse clutch regulator valve and through orifice #33 to the #6 ball check valve. When the 3-5-reverse clutch regulator valve is in this position, PS3 fluid exhausts through the valve allowing the normally-closed #3 pressure switch to close.

3-5-Reverse Clutch

35 reverse clutch fluid enters the 3-5-reverse and 4-5-6 clutch housing assembly to move the 3-5 reverse clutch piston against spring force and compensator feed fluid pressure to apply the 3-5-reverse clutch plates.

#6 Ball Check Valve

35 reverse clutch feed fluid unseats the #6 ball check valve, allowing excess pressure to pass into the actuator feed limit circuit. This helps to control clutch apply fluid pressure and clutch apply feel.

4-5-6 Clutch Applies or Remains Applied

R1/456 Pressure Control (PC) Solenoid 3

The R1/456 PC solenoid 3 defaults to its normally-high state (ON), allowing actuator feed limit fluid to enter the PCS R1/456 clutch fluid circuit. PCS R1/456 clutch fluid is routed through orifice #11 to the R1/456 clutch regulator valve. If the transmission is operating in First, Second or Third gear when an electrical malfunction occurs, the 4-5-6 clutch will apply. If the transmission is operating in Fourth, Fifth or Sixth gear when the electrical malfunction occurs, the 4-5-6 clutch remains applied.

R1/4-5-6 Clutch Regulator Valve

PCS R1/456 clutch fluid, at the R1/4-5-6 clutch regulator valve, opposes R1/4-5-6 clutch regulator valve spring force and orificed R1/456 clutch feed fluid pressure to regulate line pressure into the R1/456 clutch feed circuit. R1/456 clutch feed fluid is then routed to the clutch select valve, through orifice #12 to the spring end of the R1/4-5-6 clutch regulator valve, and through orifice #34 to ball check valve #5. When the R1/4-5-6 clutch regulator valve is in this position, PS4 fluid exhausts through the valve allowing the normally-closed #4 pressure switch to close.

Clutch Select Valve

R1/456 clutch feed fluid passes through the clutch select valve and enters the 456 clutch circuit. 456 clutch fluid is routed to the 4-5-6 clutch assembly, and through orifice #2 to the #1 ball check valve.

#1 Ball Check Valve

Orificed 456 clutch fluid pressure seats the #1 ball check valve against the exhausting PS4 fluid passage. 456 clutch fluid is then directed into the CSV2 latch circuit to replace the exhausting PS4 pressure and is routed to the clutch select valve. CSV2 latch fluid combines with clutch select valve spring force and holds the valve in this position during all six forward gear ranges.

4-5-6 Clutch

456 clutch fluid enters the 3-5-reverse and 4-5-6 clutch housing assembly, and moves the 4-5-6 clutch piston

against spring force and compensator feed pressure to apply the 4-5-6 clutch plates.

#5 Ball Check Valve

R1/456 clutch feed fluid unseats the #5 ball check valve, allowing excess pressure to pass into the actuator feed limit circuit. This helps to control clutch apply fluid pressure and clutch apply feel.

1-2-3-4 Clutch Releases

1234 Pressure Control (PC) Solenoid 5

If the transmission is in First, Second, Third or Fourth gear when an electrical condition commands a protection mode, the 1234 PC solenoid 5 defaults to its normally-low state (OFF), allowing PCS 1234 clutch fluid pressure to exhaust and the 1-2-3-4 clutch to release.

2-6 Clutch Releases

26 Pressure Control (PC) Solenoid 4

If the transmission is in Second or Sixth gear when an electrical condition commands a protection mode, the 26 PC solenoid 4 defaults to its normally-low state (OFF), allowing PCS 26 clutch fluid pressure to exhaust and the 2-6 clutch to release.

Torque Converter Clutch (TCC) Releases

Torque Converter Clutch (TCC) Pressure Control (PC) Solenoid

If the TCC is applied when an electrical condition commands a protection mode, the TCC PC solenoid defaults to its normally-low state (OFF), allowing PCS TCC fluid to exhaust and the TCC to release.

Drive Range- Fourth Gear Default (Some Models)

The transmission default gear may be Fourth, rather than Fifth gear, depending on engine size and effective final drive ratio. If the transmission encounters an electrical component malfunction, the transmission will default to Fourth gear. All solenoids will default to their normal state. If the torque converter clutch is applied, it will release. The transmission will remain in Drive Range- Fourth Gear Default until the condition has been corrected. Reverse (R) range can also still be selected. This default action enables the vehicle to be safely driven to a service center.

Drive Range, Fifth Gear Default

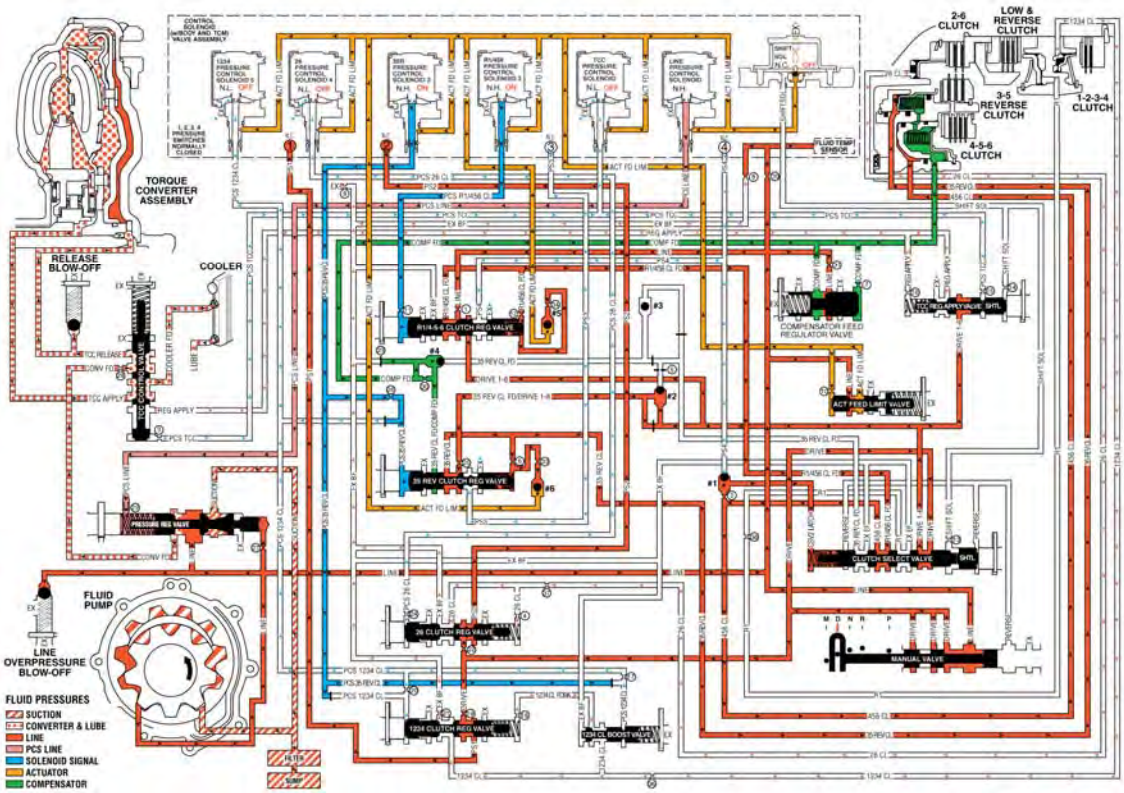

Fig. 25: Drive Range, Fifth Gear Default Fluid Flow Diagram
Courtesy of GENERAL MOTORS COMPANY

DRIVE RANGE, SIXTH GEAR (GEN 1)

As vehicle speed increases, the transmission control module (TCM) processes input signals from the automatic transmission input and output speed sensors, the throttle position sensor and other vehicle sensors to determine the precise moment to command ON the normally-low 26 pressure control solenoid 4. At the same time, the normally-high 35R pressure control solenoid 2 is commanded OFF and the transmission shifts into Sixth gear.

2-6 Clutch Applies

26 Pressure Control (PC) Solenoid 4

The 26 PC solenoid 4 is commanded ON, allowing actuator feed limit fluid to enter the PCS 26 clutch fluid circuit. PCS 26 clutch fluid is then routed through orifice #24 to the 2-6 clutch regulator valve.

2-6 Clutch Regulator Valve

PCS 26 clutch fluid, at the 2-6 clutch regulator valve, opposes 2-6 clutch regulator valve spring force and orificed 26 clutch fluid pressure to regulate drive fluid pressure into the 26 clutch circuit. 26 clutch fluid is then routed through orifice #37 to the 2-6 clutch assembly in the transmission case, and through orifice #4 to the spring end of the 2-6 clutch regulator valve. With the 2-6 clutch regulator valve in this position, PS2 fluid is allowed to exhaust and the normally-closed PS2 switch closes.

2-6 Clutch

The 26 clutch fluid from the 2-6 clutch regulator valve is routed through the transmission case to the 2-6 clutch piston assembly. The 26 clutch fluid pressure moves the piston against 2-6 clutch spring force to apply the 2-6 clutch plates.

3-5 Reverse Clutch Releases

35R Pressure Control (PC) Solenoid 2

The 35R PC solenoid 2 is commanded OFF allowing PCS 35 reverse clutch fluid from the 3-5-reverse clutch regulator valve to exhaust.

3-5-Reverse Clutch Regulator Valve

PCS 35 reverse clutch fluid exhausts, allowing 3-5-reverse clutch regulator valve spring force to move the 3-5-reverse clutch regulator valve to the released position. This allows 35 reverse clutch fluid pressure to exhaust into the compensator feed circuit in order to assist the 3-5-reverse clutch piston spring to quickly release the 3-5-reverse clutch. With the 3-5-reverse clutch regulator valve in this position, orificed (#25) 35 reverse clutch feed/drive 1-6 fluid passes through the valve into the PS3 circuit. PS3 fluid is routed to the normally-closed #3 pressure switch and opens the switch.

3-5-Reverse Clutch

3-5-reverse clutch spring force, assisted by compensator feed pressure, moves the 3-5-reverse clutch piston to release the 3-5- reverse clutch plates and force 35 reverse clutch fluid to exhaust from the 3-5-reverse and 4-5-6 clutch housing assembly. The exhausting 35 reverse clutch fluid pressure is routed to the 3-5- reverse clutch regulator valve where it enters the 35 reverse clutch feed/compensator feed circuit.

Drive Range, Sixth Gear

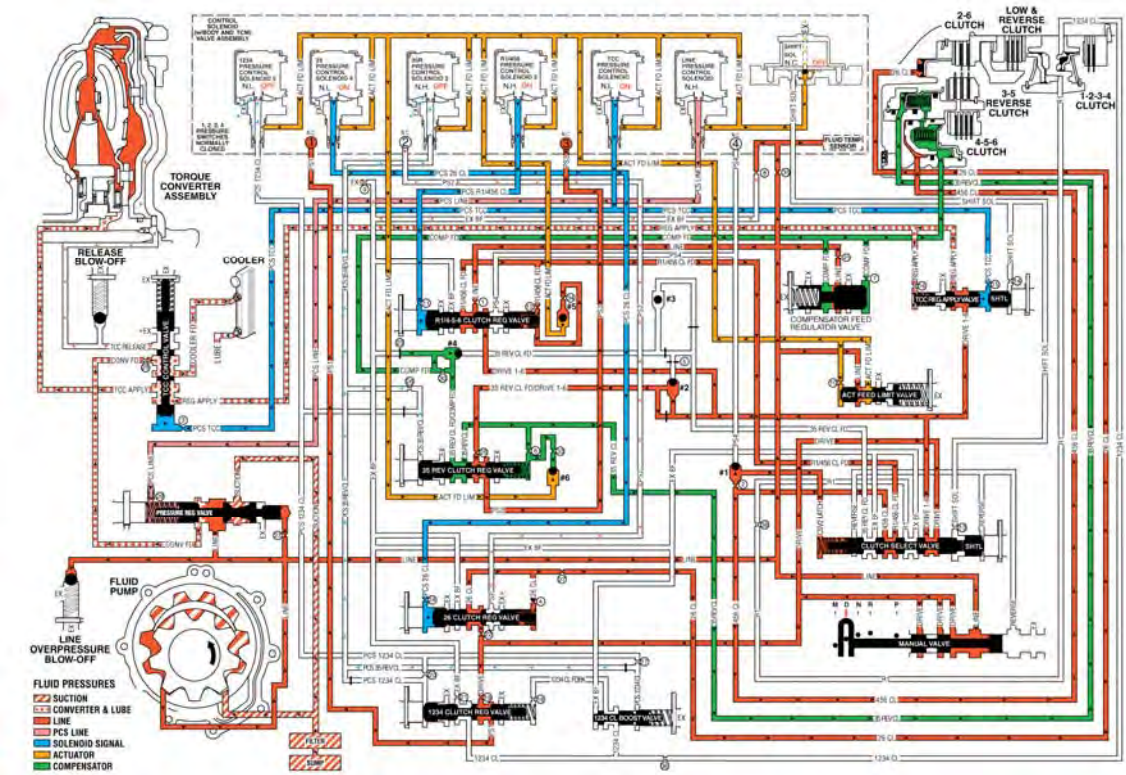

Fig. 26: Drive Range, Sixth Gear Fluid Flow Diagram
Courtesy of GENERAL MOTORS COMPANY

DRIVE RANGE, SIXTH GEAR (GEN 2/HYBRID)

As vehicle speed increases, the transmission control module (TCM) processes input signals from the automatic transmission input and output speed sensors, the throttle position sensor and other vehicle sensors to determine the precise moment to command ON the normally-low 26 pressure control solenoid. At the same time, the normally-low 35R pressure control solenoid is commanded OFF and the transmission shifts into Sixth gear.

2-6 Clutch Applies

26 Pressure Control (PC) Solenoid

The 26 PC solenoid is commanded ON, allowing actuator feed limit fluid to enter the PCS 26 clutch fluid circuit. PCS 26 clutch fluid is then routed through orifice #24 to the 2-6 clutch regulator valve.

2-6 Clutch Regulator Valve

PCS 26 clutch fluid, at the 2-6 clutch regulator valve, opposes 2-6 clutch regulator valve spring force and orificed 26 clutch fluid pressure to regulate drive fluid pressure into the 26 clutch circuit. 26 clutch fluid is then routed through orifice #22 to the 2-6 clutch assembly in the transmission case, and through orifice #4 to the spring end of the 2-6 clutch regulator valve.

2-6 Clutch

The 26 clutch fluid from the 2-6 clutch regulator valve is routed through the transmission case to the 2-6 clutch piston assembly. The 26 clutch fluid pressure moves the piston against 2-6 clutch spring force to apply the 2-6 clutch plates.

Accumulator

PCS 26 clutch fluid is also routed to an accumulator valve. The accumulator valve is used to dampen any pressure irregularities occurring in the PCS 26 clutch fluid circuit. This helps to control clutch apply fluid pressure and clutch apply feel.

3-5 Reverse Clutch Releases

35R Pressure Control (PC) Solenoid

The 35R PC solenoid is commanded OFF allowing PCS 35 reverse clutch fluid from the 3-5-reverse clutch regulator valve to exhaust.

3-5-Reverse Clutch Regulator Valve

PCS 35 reverse clutch fluid exhausts, allowing 3-5-reverse clutch regulator valve spring force to move the 3-5-reverse clutch regulator valve to the released position. This allows exhausting 35 reverse clutch fluid pressure to pass into the exhaust backfill circuit in order to assist the 3-5-reverse clutch piston spring to quickly release the 3-5-reverse clutch.

3-5-Reverse Clutch

3-5-reverse clutch spring force, assisted by exhaust backfill pressure, moves the 3-5-reverse clutch piston to release the 3-5-reverse clutch plates and force 35 reverse clutch fluid to exhaust from the 3-5-reverse and 4-5-6 clutch housing assembly. The exhausting 35 reverse clutch fluid pressure is routed to the 3-5-reverse clutch regulator valve where it enters the exhaust backfill circuit.

Drive Range, Sixth Gear - Gen 2/Hybrid

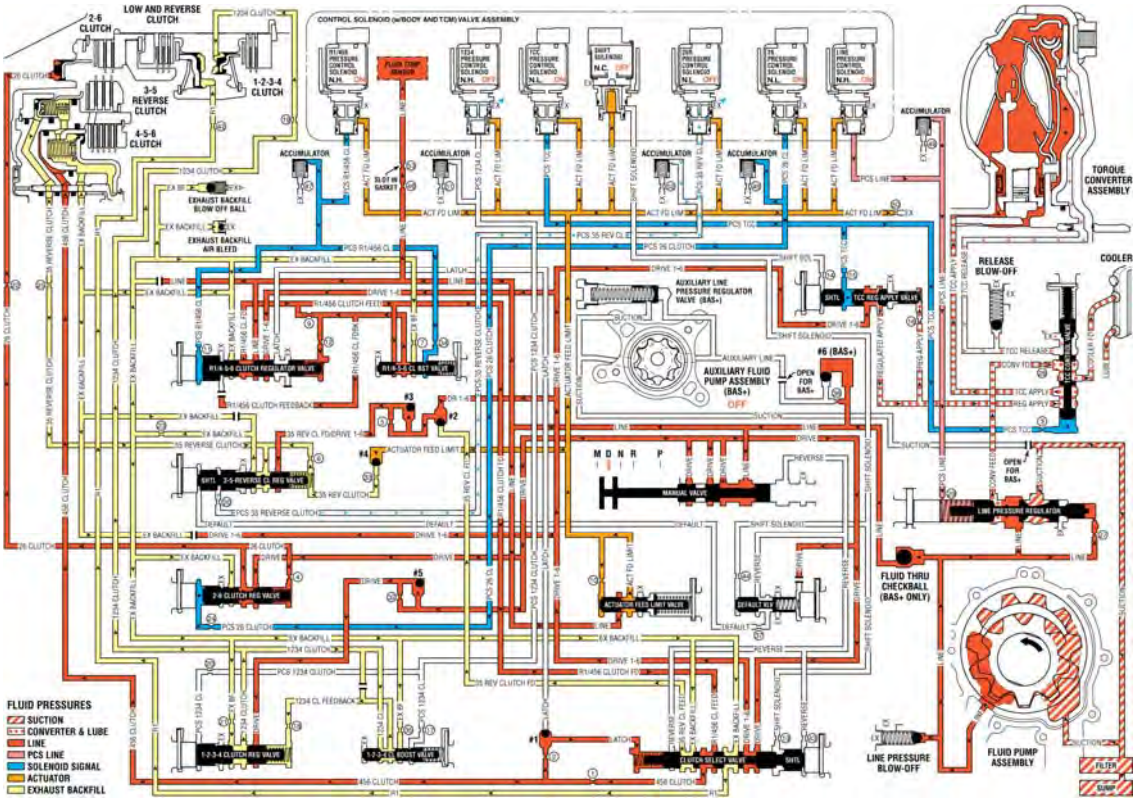

Fig. 27: Drive Range, Sixth Gear -- Gen 2/Hybrid Fluid Flow Diagram
Courtesy of GENERAL MOTORS COMPANY

FLUID PASSAGES (GEN 1)

Case - Control Valve Body Side (Left)

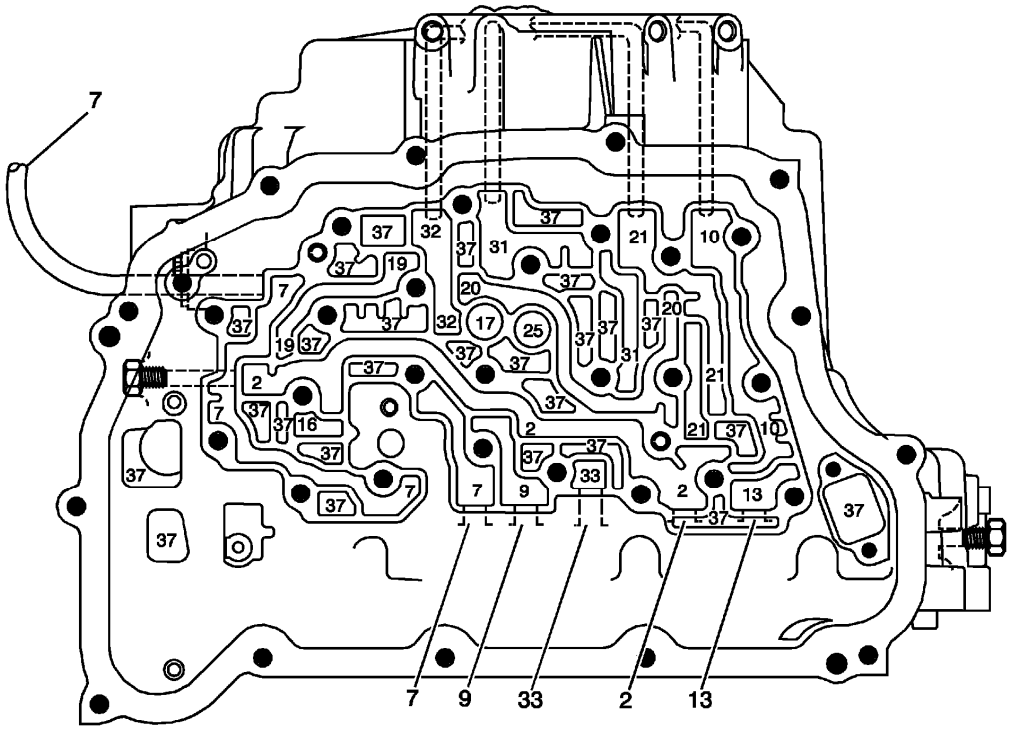

Fig. 28: Identifying Fluid Passages Case - Control Valve Body Side (Left)
Courtesy of GENERAL MOTORS COMPANY

Callout	Component Name
2	Line
7	Cooler Feed
9	Regulated Apply
10	Compensator Feed
13	PCS Line
16	R1/456 Clutch Feed
17	R1
19	Reverse
20	35 Reverse Clutch Feed
21	35 Reverse Clutch
25	1234 Clutch
31	26 Clutch
32	456 Clutch
33	PCS TCC
37	Void

Case - Pump Side (Back)

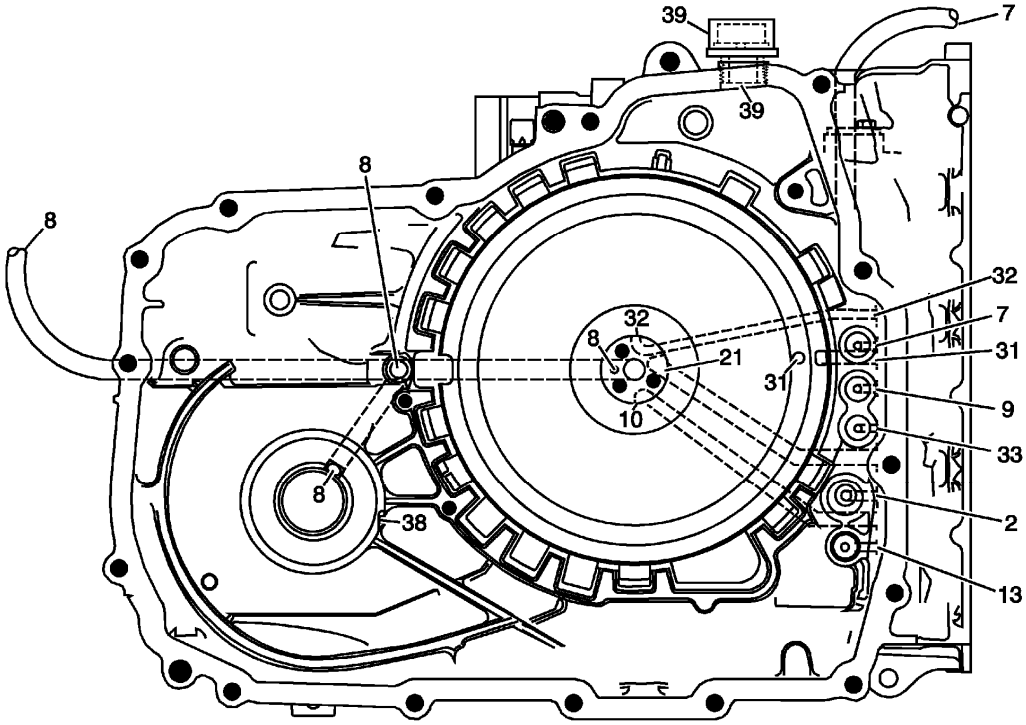

Fig. 29: Identifying Case Fluid Passages - Pump Side (Back)
Courtesy of GENERAL MOTORS COMPANY

Callout	Component Name
2	Line
7	Cooler Feed
8	Lube
9	Regulated Apply
10	Compensator Feed
13	PCS Line
21	35 Reverse Clutch
31	26 Clutch
32	456 Clutch
33	PCS TCC
38	Seal Drainback
39	Vent

Control Valve Body - Case Side (Left)

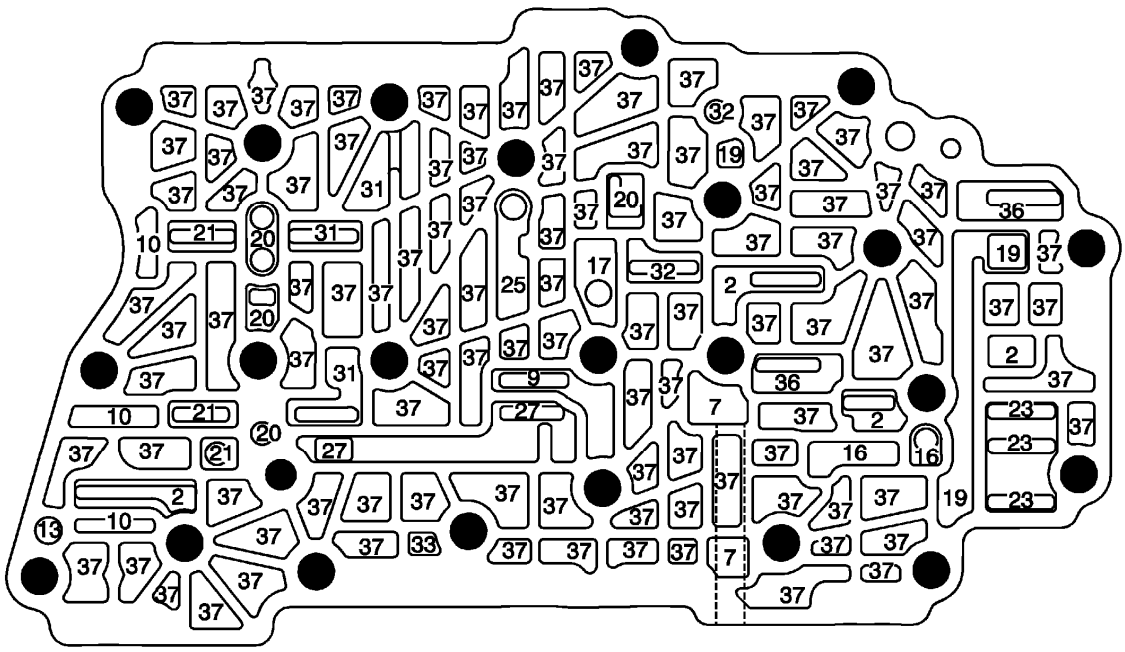

Fig. 30: Identifying Control Valve Body Fluid Passages - Case Side (Left)
Courtesy of GENERAL MOTORS COMPANY

Callout	Component Name
2	Line
7	Cooler Feed
9	Regulated Apply
10	Compensator Feed
13	PCS Line
16	R1/456 Clutch Feed
17	R1
19	Reverse
20	35 Reverse Clutch Feed
21	35 Reverse Clutch
23	Drive
25	1234 Clutch
27	Drive 1-6
31	26 Clutch
32	456 Clutch
33	PCS TCC
36	Exhaust
37	Void

Control Valve Body - Channel Plate Side (Right - No Valves)

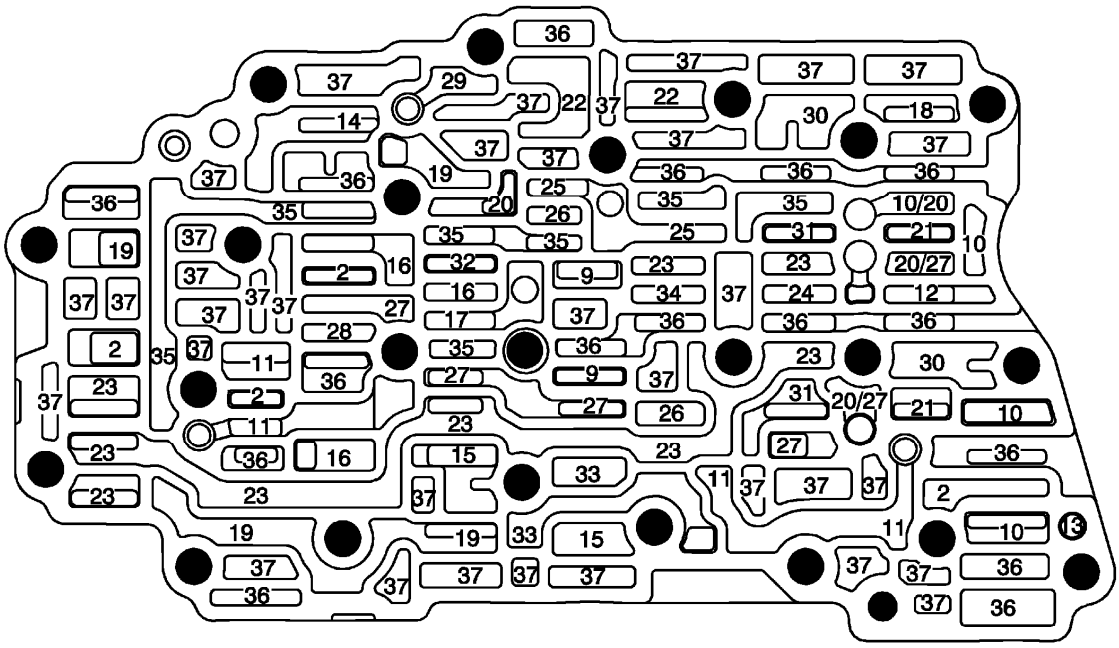

Fig. 31: Identifying Control Valve Body Fluid Passages - Channel Plate Side (Right - No Valves)
Courtesy of GENERAL MOTORS COMPANY

Callout	Component Name
2	Line
9	Regulated Apply
10	Compensator Feed
11	Actuator Feed Limit
12	PS3
13	PCS Line
14	PCS R1/456 Clutch
15	Shift Solenoid
16	R1/456 Clutch Feed
17	R1
18	PCS 35 Reverse Clutch
19	Reverse
20	35 Reverse Clutch Feed
21	35 Reverse Clutch
22	PCS 1234 Clutch
23	Drive
24	PS2
25	1234 Clutch
26	1234 Clutch Feedback

27	Drive 1-6
28	PS4
29	CSV2 Latch
30	PCS 26 Clutch
31	26 Clutch
32	456 Clutch
33	PCS TCC
34	PS1
35	Exhaust Backfill
36	Exhaust
37	Void

Pump Body - Pump Cover Side (Front)

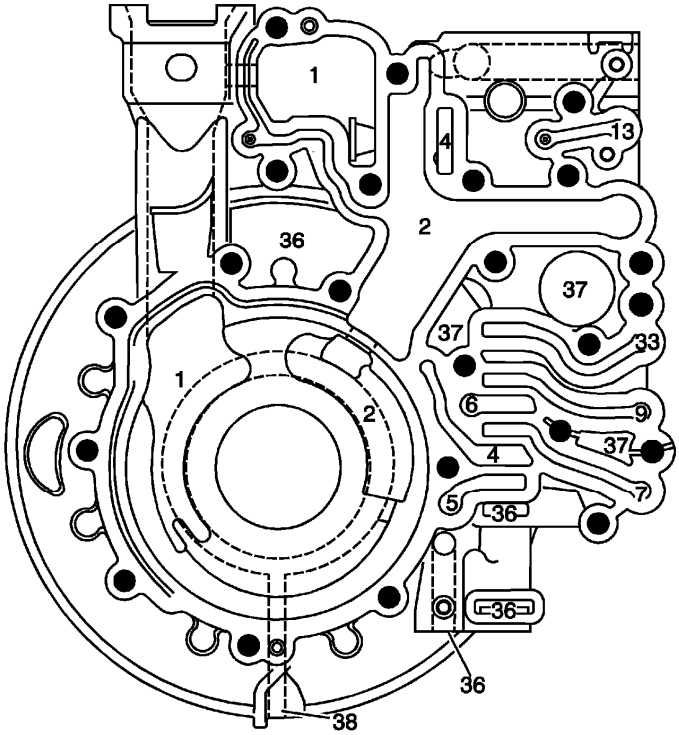

Fig. 32: Identifying Pump Body Fluid Passages - Pump Cover Side (Front)
Courtesy of GENERAL MOTORS COMPANY

Callout	Component Name
1	Suction
2	Line
4	Converter Feed
5	TCC Released
6	TCC Apply
7	Cooler Feed

9	Regulated Apply
13	PCS Line
33	PCS TCC
36	Exhaust
37	Void
38	Seal Drainback

Pump Cover - Pump Body Side (Back)

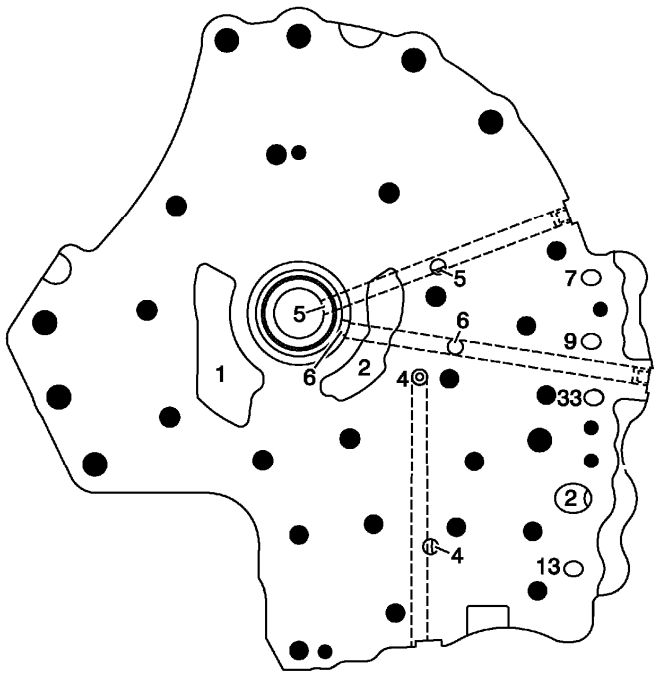

Fig. 33: Identifying Pump Cover Fluid Passages - Pump Body Side (Back)
Courtesy of GENERAL MOTORS COMPANY

Callout	Component Name
1	Suction
2	Line
4	Converter Feed
5	TCC Released
6	TCC Apply
7	Cooler Feed
9	Regulated Apply
13	PCS Line
33	PCS TCC

Spacer Plate (12) - Case Side (Left)

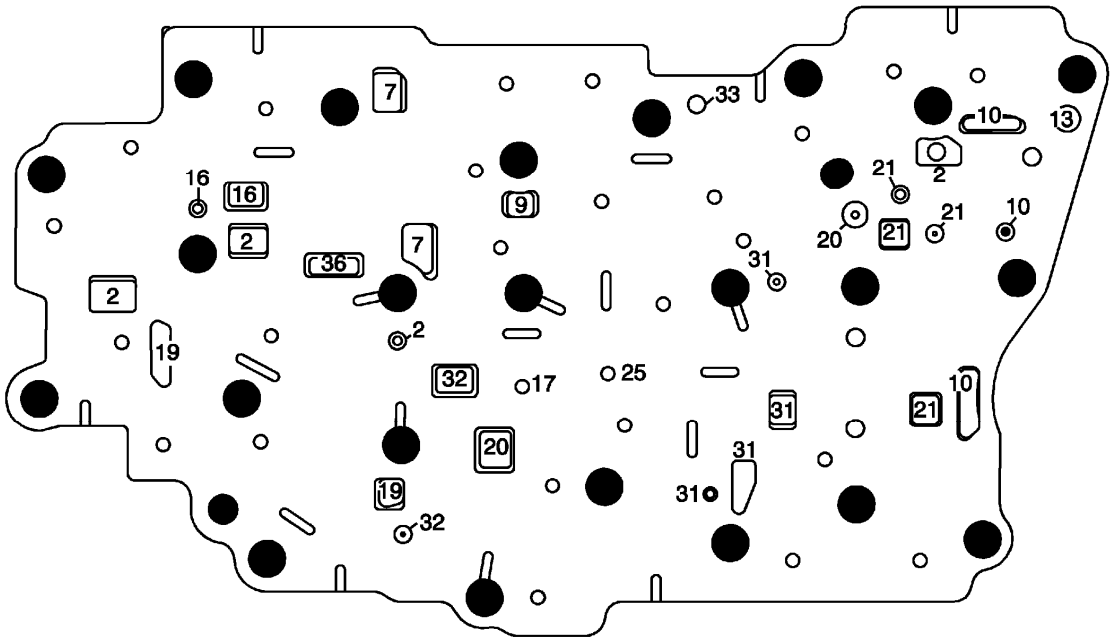

Fig. 34: Identifying Spacer Plate Fluid Passages - Case Side (Left)
Courtesy of GENERAL MOTORS COMPANY

Callout	Component Name
2	Line
7	Cooler Feed
9	Regulated Apply
10	Compensator Feed
13	PCS Line
16	R1/456 Clutch Feed
17	R1
19	Reverse
20	35 Reverse Clutch Feed
21	35 Reverse Clutch
25	1234 Clutch
31	26 Clutch
32	456 Clutch
33	PCS TCC
36	Exhaust

Spacer Plate (402) - Channel Plate Side (Right)

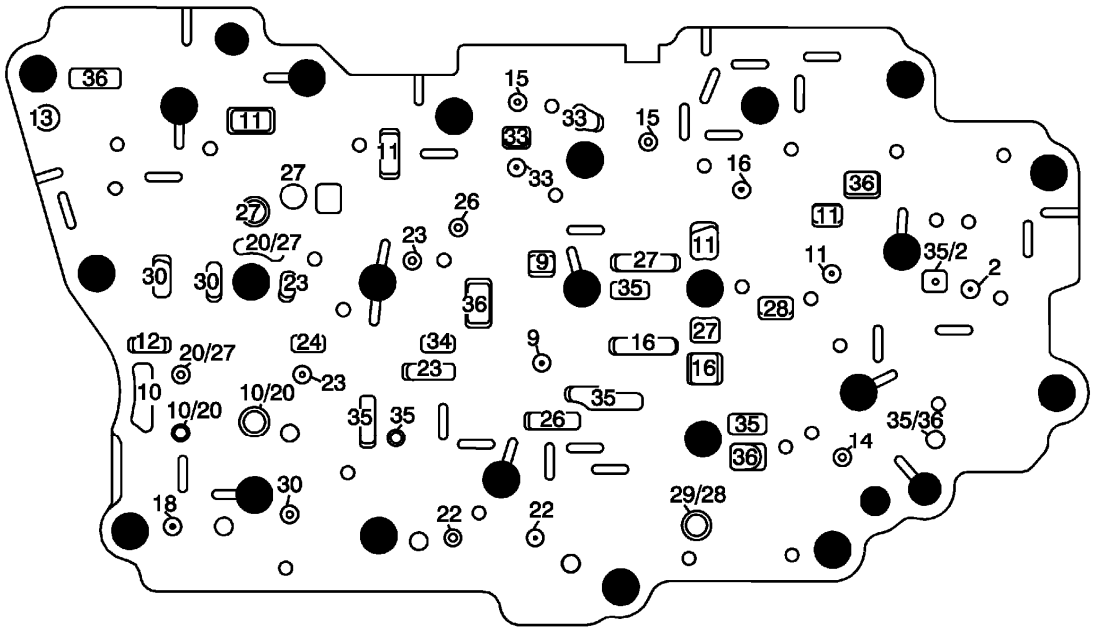

Fig. 35: Identifying Spacer Plate Fluid Passages - Channel Plate Side (Right)
Courtesy of GENERAL MOTORS COMPANY

Callout	Component Name
2	Line
9	Regulated Apply
10	Compensator Feed
11	Actuator Feed Limit
12	PS3
13	PCS Line
14	PCS R1/456 Clutch
15	Shift Solenoid
16	R1/456 Clutch Feed
18	PCS 35 Reverse Clutch
20	35 Reverse Clutch Feed
22	PCS 1234 Clutch
23	Drive
24	PS2
26	1234 Clutch Feedback
27	Drive 1-6
28	PS4
29	CSV2 Latch
30	PCS 26 Clutch

33	PCS TCC
34	PS1
35	Exhaust Backfill
36	Exhaust

Torque Converter Clutch Housing - Pump Side (Front)

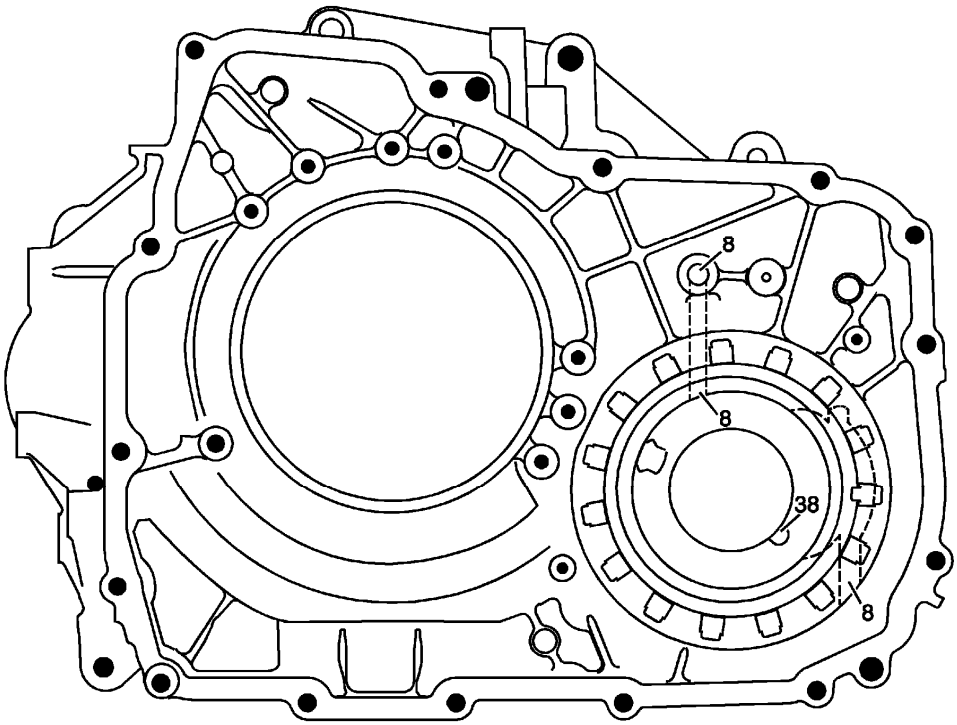

Fig. 36: Identifying Torque Converter Clutch Housing Fluid Passages - Pump Side (Front)
Courtesy of GENERAL MOTORS COMPANY

Callout	Component Name
8	Lube
38	Seal Drainback

Control Solenoid Valve Assembly with Filter Plate - Channel Plate Side (Front)

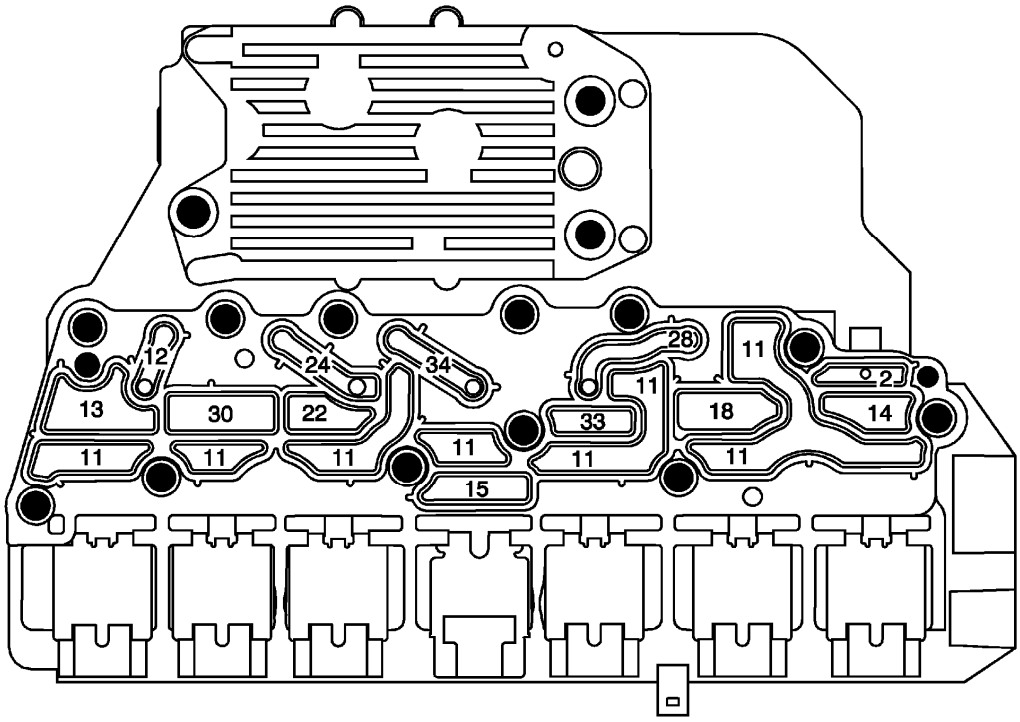

Fig. 37: Identifying Control Solenoid Valve Assembly With Filter Plate Fluid Passages - Channel Plate Side (Front)
Courtesy of GENERAL MOTORS COMPANY

Callout	Component Name
2	Line
11	Actuator Feed Limit
12	PS3
13	PCS Line
14	PCS R1/456 Clutch
15	Shift Solenoid
18	PCS 35 Reverse Clutch
22	PCS 1234 Clutch
24	PS2
28	PS4
30	PCS 26 Clutch
33	PCS TCC
34	PS1

Channel Plate - Control Solenoid Valve Assembly Side (Right)

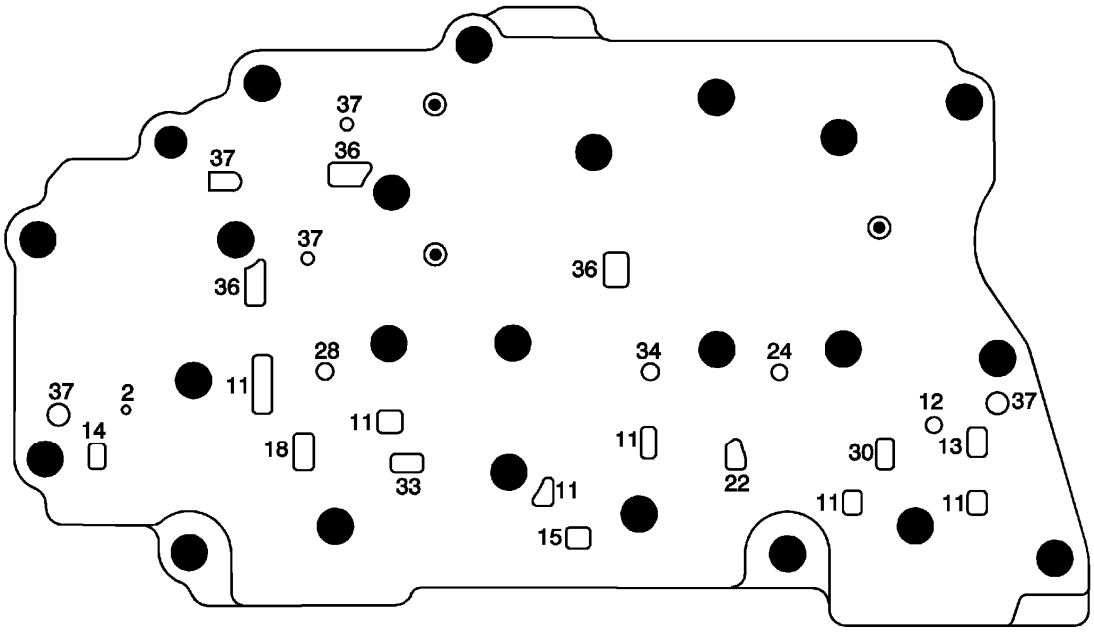

Fig. 38: Identifying Channel Plate - Control Solenoid Valve Assembly Side Fluid Passages (Right)
Courtesy of GENERAL MOTORS COMPANY

Callout	Component Name
2	Line
11	Actuator Feed Limit
12	PS3
13	PCS Line
14	PCS R1/456 Clutch
15	Shift Solenoid
18	PCS 35 Reverse Clutch
22	PCS 1234 Clutch
24	PS2
28	PS4
30	PCS 26 Clutch
33	PCS TCC
34	PS1
36	Exhaust
37	Void

Channel Plate - Control Valve Body Side (Left)

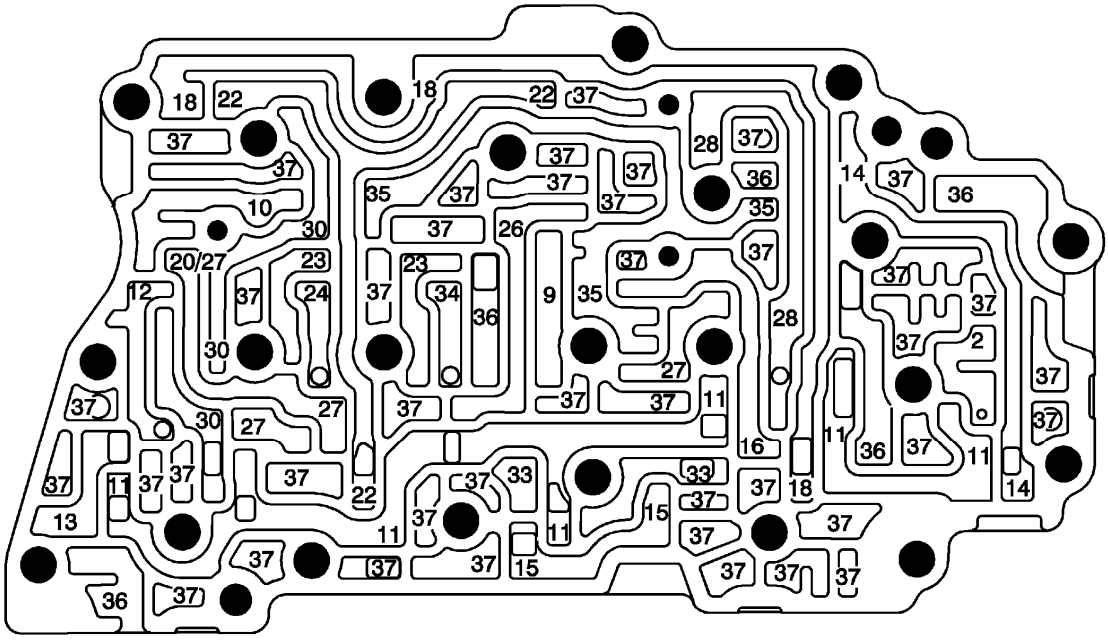

Fig. 39: Identifying Channel Plate - Control Valve Body Side Fluid Passages (Left)
Courtesy of GENERAL MOTORS COMPANY

Callout	Component Name
2	Line
9	Regulated Apply
10	Compensator Feed
11	Actuator Feed Limit
12	PS3
13	PCS Line
14	PCS R1/456 Clutch
15	Solenoid
16	R1/456 Clutch Feed
18	PCS 35 Reverse Clutch
20	35 Reverse Clutch Feed
22	PCS 1234 Clutch
23	Drive
24	PS2
26	1234 Clutch Feedback
27	Drive 1-6
28	PS4
30	PCS 26 Clutch
33	PCS TCC

34	PS1
35	Exhaust Backfill
36	Exhaust
37	Void

FLUID PASSAGES (GEN 2/HYBRID)

Torque Converter and Differential Housing - Case Side

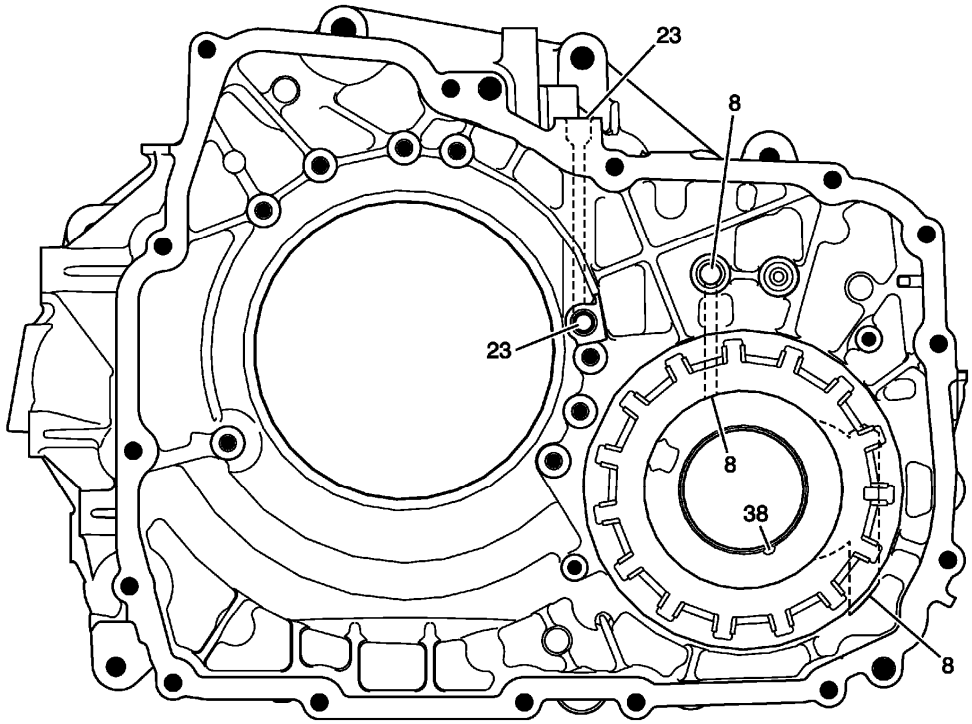

Fig. 40: Torque Converter and Differential Housing -- Case Side
Courtesy of GENERAL MOTORS COMPANY

Callout	Component Name
8	Lube
23	Auxiliary Suction (BAS+ Only)
38	Seal Drainback

Fluid Pump Body - Fluid Pump Cover Side

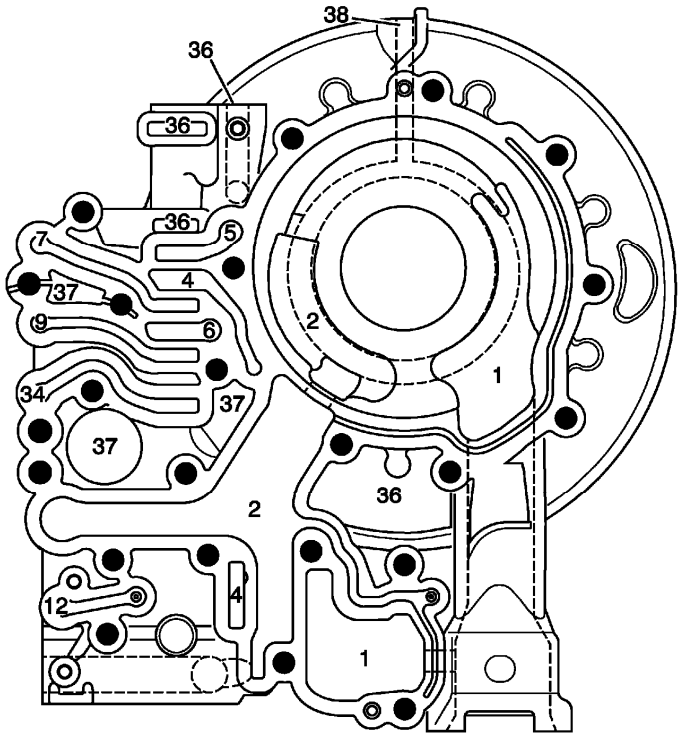

Fig. 41: Fluid Pump Body -- Fluid Pump Cover Side
Courtesy of GENERAL MOTORS COMPANY

Callout	Component Name
1	Suction
2	Line
4	Converter Feed
5	TCC Release
6	TCC Apply
7	Cooler Feed
9	Regulated Apply
12	PCS Line
34	PCS TCC
36	Exhaust
37	Void
38	Seal Drainback

Fluid Pump Cover - Fluid Pump Body Side

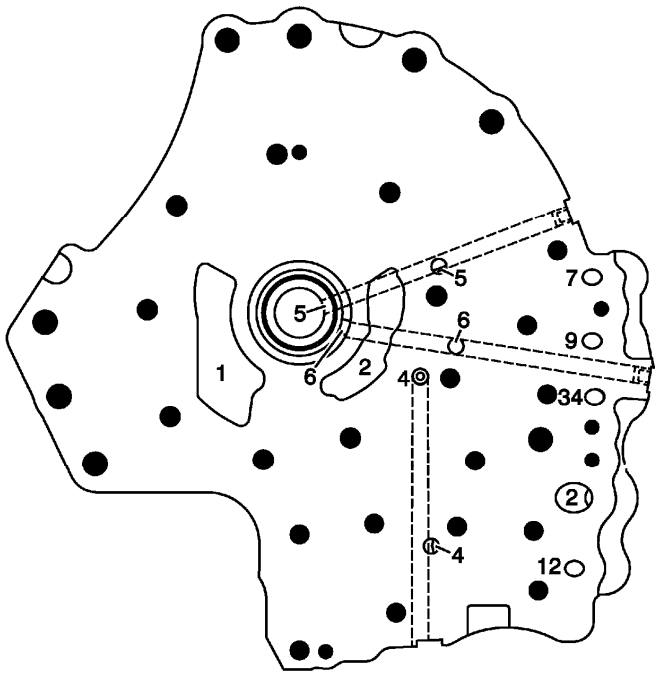

Fig. 42: Fluid Pump Cover -- Fluid Pump Body Side
Courtesy of GENERAL MOTORS COMPANY

Callout	Component Name
1	Suction
2	Line
4	Converter Feed
5	TCC Release
6	TCC Apply
7	Cooler Feed
9	Regulated Apply
12	PCS Line
34	PCS TCC

Case - Torque Converter and Differential Housing Side

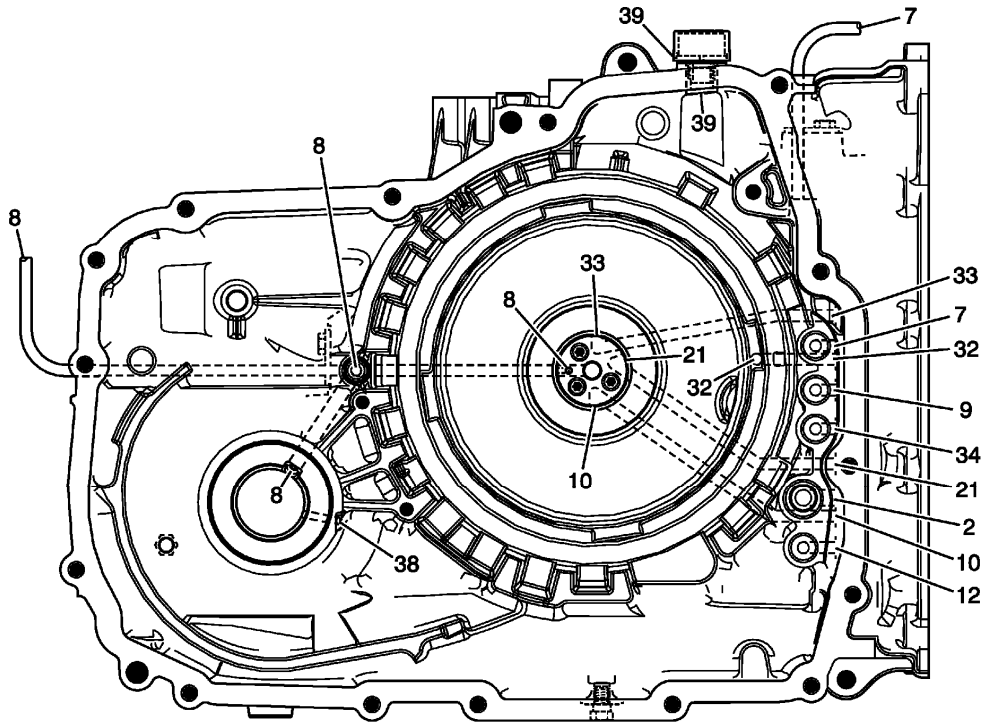

Fig. 43: Case -- Torque Converter and Differential Housing Side
Courtesy of GENERAL MOTORS COMPANY

Callout	Component Name
2	Line
7	Cooler Feed
8	Lube
9	Regulated Apply
10	Exhaust Backfill
12	PCS Line
21	35 Reverse Clutch
32	26 Clutch
33	456 Clutch
34	PCS TCC
38	Seal Drainback
39	Vent

Case - Control Valve Body Side

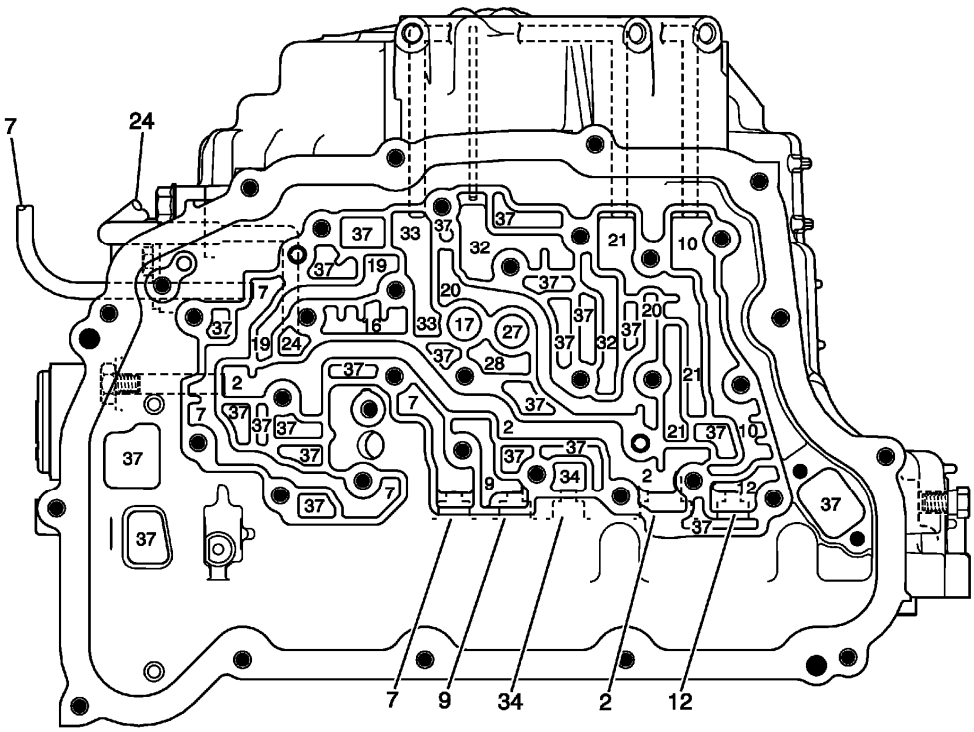

Fig. 44: Case -- Control Valve Body Side Components Name
Courtesy of GENERAL MOTORS COMPANY

Callout	Component Name
2	Line
7	Cooler Feed
9	Regulated Apply
10	Exhaust Backfill
12	PCS Line
16	R1/456 Clutch Feedback
17	R1
19	Reverse
20	35 Reverse Clutch Feed
21	35 Reverse Clutch
24	Auxiliary Line (BAS+ Only)
27	1234 Clutch
28	1234 Clutch Feedback
32	26 Clutch
33	456 Clutch
34	PCS TCC
37	Void

Control Valve Body Spacer Plate Assembly - Case Side

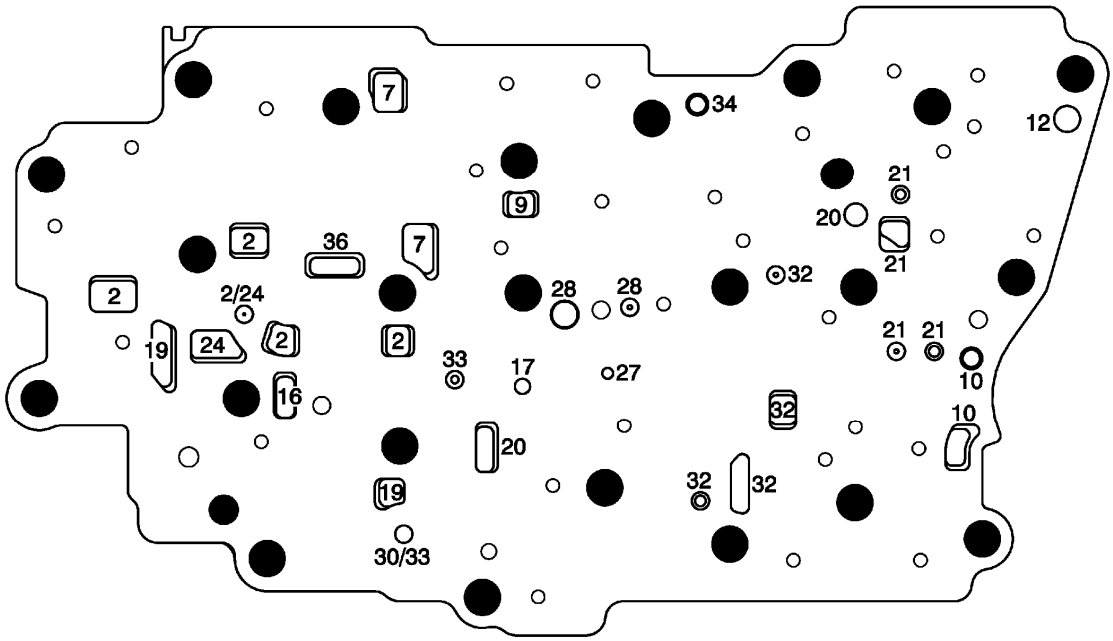

Fig. 45: Control Valve Body Spacer Plate Assembly -- Case Side
Courtesy of GENERAL MOTORS COMPANY

Callout	Component Name
2	Line
7	Cooler Feed
9	Regulated Apply
10	Exhaust Backfill
12	PCS Line
16	R1/456 Clutch Feedback
17	R1
19	Reverse
20	35 Reverse Clutch Feed
21	35 Reverse Clutch
24	Auxiliary Line (BAS+ Only)
27	1234 Clutch
28	1234 Clutch Feedback
30	Latch
32	26 Clutch
33	456 Clutch
34	PCS TCC
36	Exhaust

Control Valve Body - Case Side

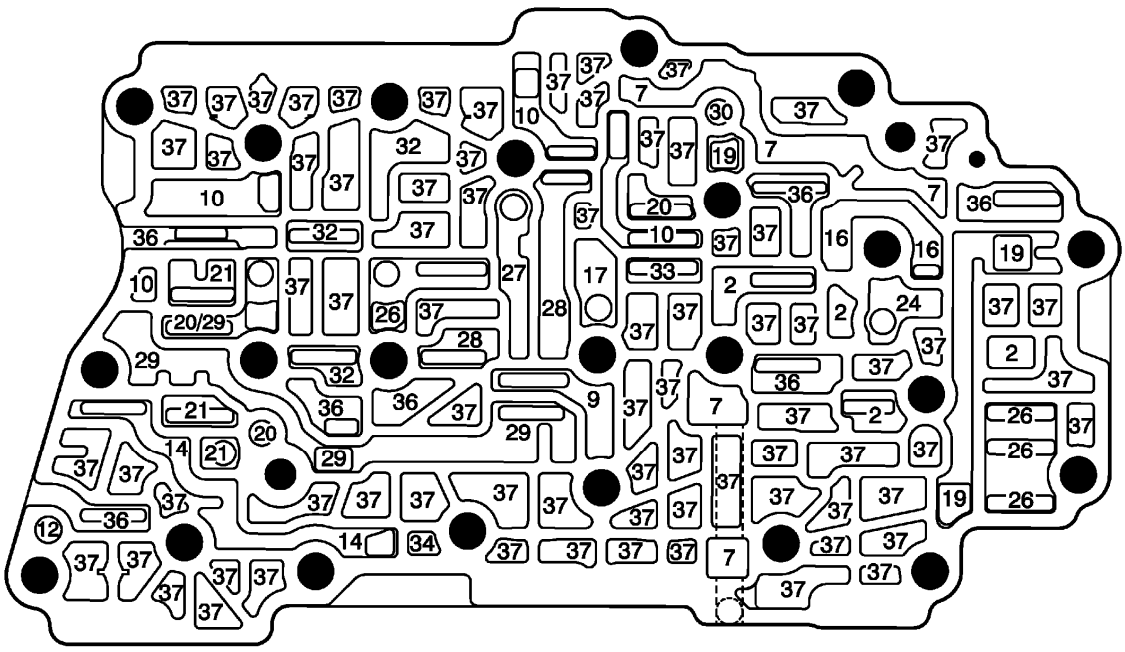

Fig. 46: Control Valve Body -- Case Side
Courtesy of GENERAL MOTORS COMPANY

Callout	Component Name
2	Line
7	Cooler Feed
9	Regulated Apply
10	Exhaust Backfill
12	PCS Line
14	Shift Solenoid
16	R1/456 Clutch Feedback
17	R1
19	Reverse
20	35 Reverse Clutch Feed
21	35 Reverse Clutch
24	Auxiliary Line (BAS+ Only)
26	Drive
27	1234 Clutch
28	1234 Clutch Feedback
29	Drive 1-6
30	Latch
32	26 Clutch
33	456 Clutch

34	PCS TCC
36	Exhaust
37	Void

Control Valve Body - Channel Plate Side

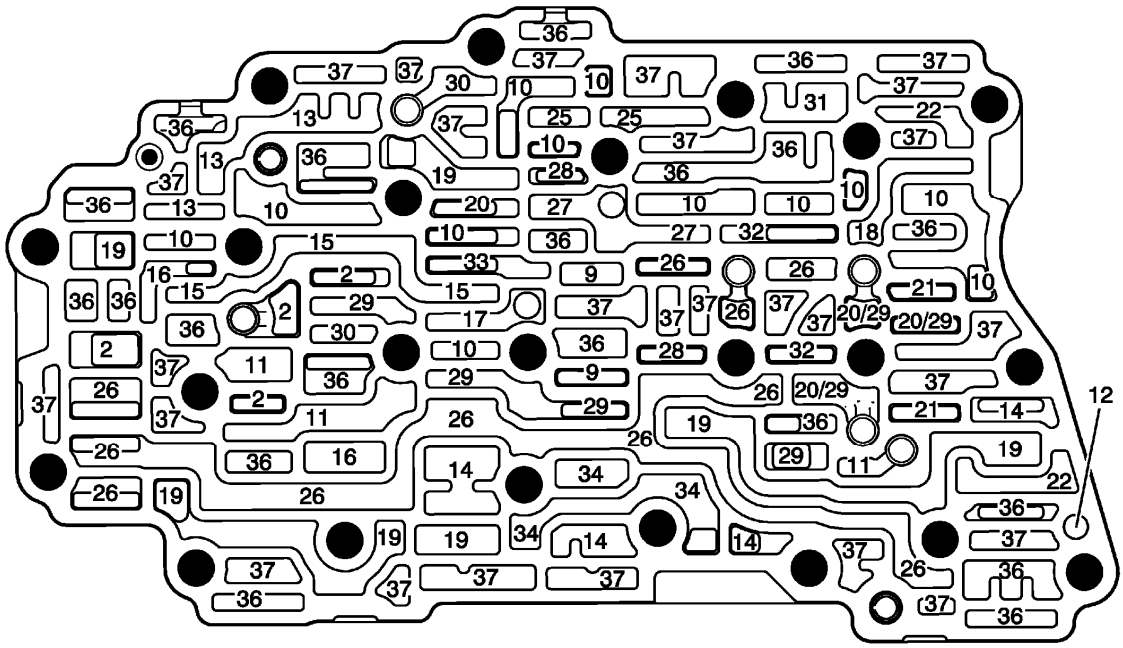

Fig. 47: Control Valve Body -- Channel Plate Side
Courtesy of GENERAL MOTORS COMPANY

Callout	Component Name
2	Line
9	Regulated Apply
10	Exhaust Backfill
11	Actuator Feed Limit
12	PCS Line
13	PCS R1/456 Clutch
14	Shift Solenoid
15	R1/456 Clutch Feed
16	R1/456 Clutch Feedback
17	R1
18	PCS 35 Reverse Clutch
19	Reverse
20	35 Reverse Clutch Feed
21	35 Reverse Clutch

22	Default
25	PCS 1234 Clutch
26	Drive
27	1234 Clutch
28	1234 Clutch Feedback
29	Drive 1-6
30	Latch
31	PCS 26 Clutch
32	26 Clutch
33	456 Clutch
34	PCS TCC
36	Exhaust
37	Void

Channel Plate to Valve Body Spacer Plate Assembly - Channel Plate Side

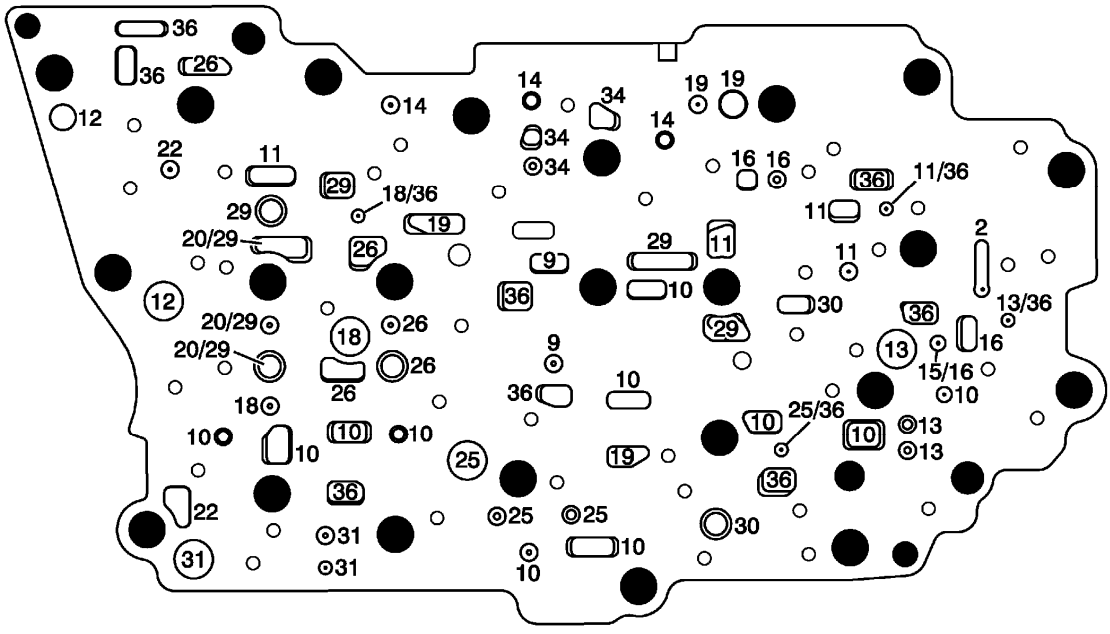

Fig. 48: Channel Plate to Valve Body Spacer Plate Assembly -- Channel Plate Side
Courtesy of GENERAL MOTORS COMPANY

Callout	Component Name
2	Line
9	Regulated Apply
10	Exhaust Backfill
11	Actuator Feed Limit

12	PCS Line
13	PCS R1/456 Clutch
14	Shift Solenoid
15	R1/456 Clutch Feed
16	R1/456 Clutch Feedback
18	PCS 35 Reverse Clutch
19	Reverse
20	35 Reverse Clutch Feed
22	Default
25	PCS 1234 Clutch
26	Drive
29	Drive 1-6
30	Latch
31	PCS 26 Clutch
34	PCS TCC
36	Exhaust

Channel Plate - Control Valve Body Side

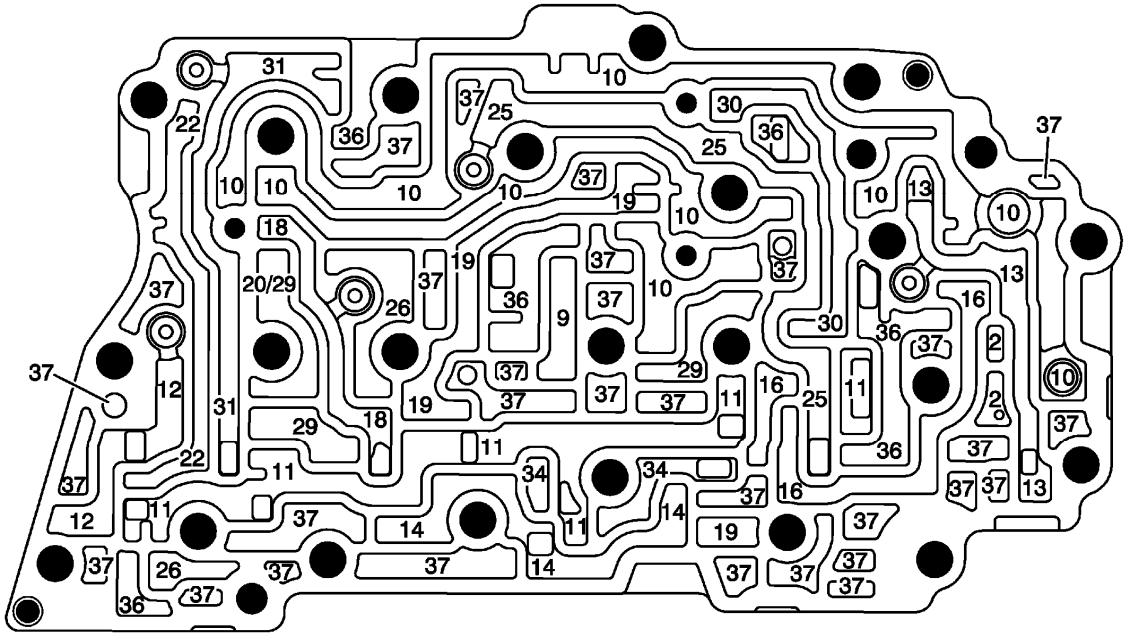

Fig. 49: Channel Plate -- Control Valve Body Side
Courtesy of GENERAL MOTORS COMPANY

Callout	Component Name
2	Line

9	Regulated Apply
10	Exhaust Backfill
11	Actuator Feed Limit
12	PCS Line
13	PCS R1/456 Clutch
14	Shift Solenoid
16	R1/456 Clutch Feedback
18	PCS 35 Reverse Clutch
19	Reverse
20	35 Reverse Clutch Feed
22	Default
25	PCS 1234 Clutch
26	Drive
29	Drive 1-6
30	Latch
31	PCS 26 Clutch
34	PCS TCC
36	Exhaust
37	Void

Channel Plate - Control Solenoid (w/Body and TCM) Valve Assembly Side

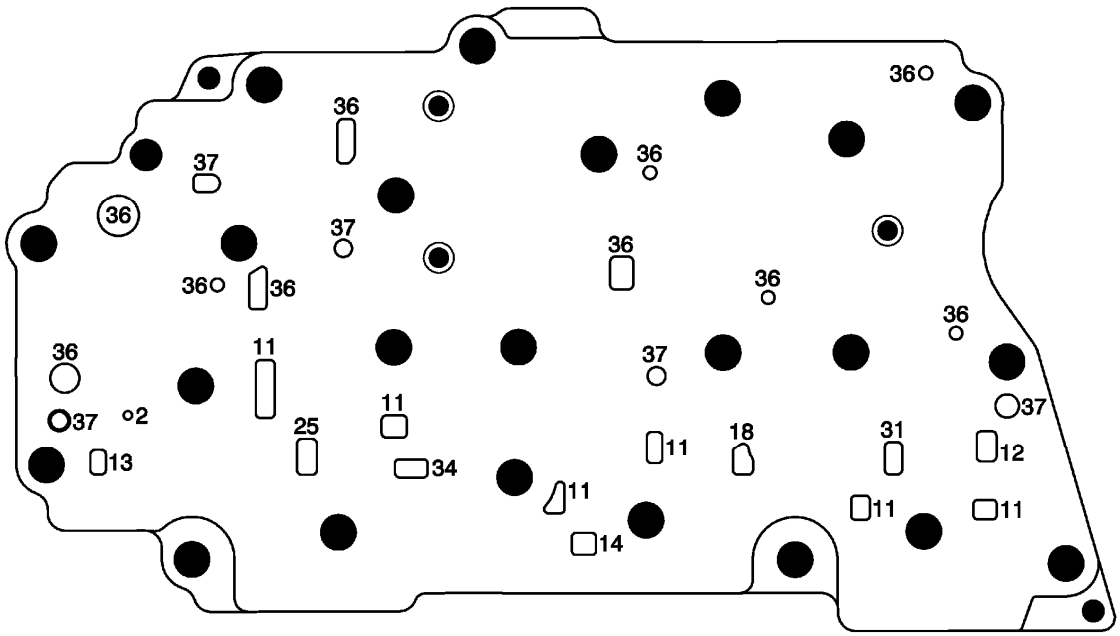

Fig. 50: Channel Plate -- Control Solenoid (w/Body and TCM) Valve Assembly Side
Courtesy of GENERAL MOTORS COMPANY

Callout	Component Name
2	Line
11	Actuator Feed Limit
12	PCS Line
13	PCS R1/456 Clutch
14	Shift Solenoid
18	PCS 35 Reverse Clutch
25	PCS 1234 Clutch
31	PCS 26 Clutch
34	PCS TCC
36	Exhaust
37	Void

Control Solenoid (w/Body and TCM) Valve Assembly - Channel Plate Side

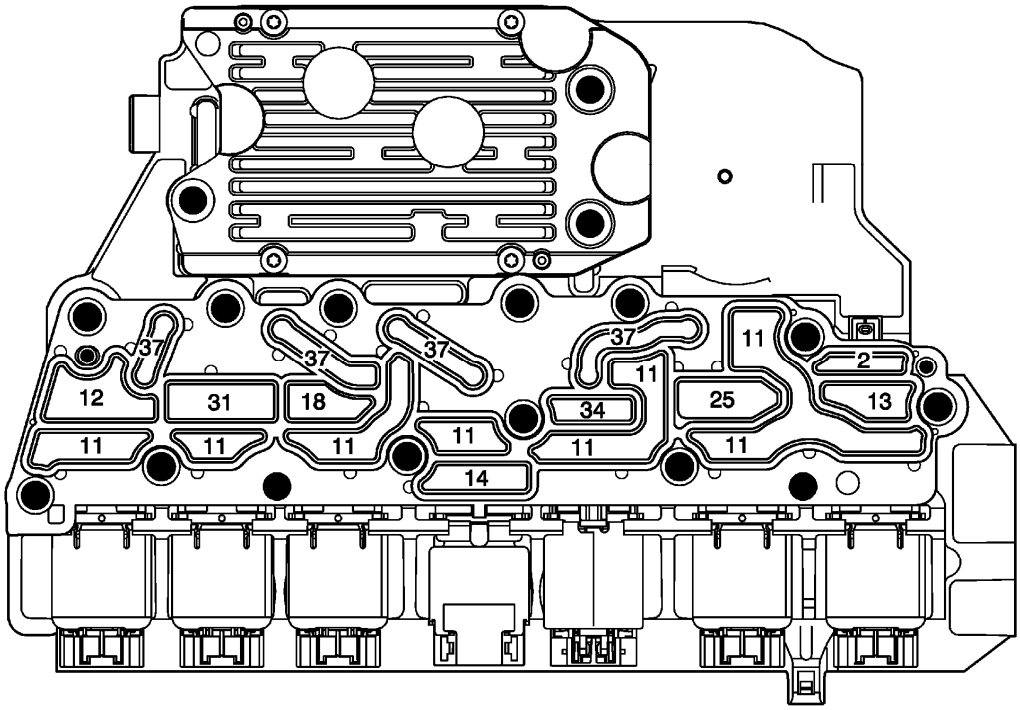

Fig. 51: Control Solenoid (w/Body and TCM) Valve Assembly -- Channel Plate Side
Courtesy of GENERAL MOTORS COMPANY

Callout	Component Name
2	Line
11	Actuator Feed Limit
12	PCS Line
13	PCS R1/456 Clutch

14	Shift Solenoid
18	PCS 35 Reverse Clutch
25	PCS 1234 Clutch
31	PCS 26 Clutch
34	PCS TCC
37	Void

2013 TRANSMISSION

Automatic Transmission - 6T30/6T40 - Diagnostic Information and Procedures - Cruze

DIAGNOSTIC INFORMATION AND PROCEDURES

DTC P057B-P057D

Diagnostic Instructions

- Perform the **Diagnostic System Check - Vehicle** prior to using this diagnostic procedure.
- Review **Strategy Based Diagnosis** for an overview of the diagnostic approach.
- **Diagnostic Procedure Instructions** provides an overview of each diagnostic category.

DTC Descriptors

DTC P057B

Brake Pedal Position Sensor Performance

DTC P057C

Brake Pedal Position Sensor Circuit Low Voltage

DTC P057D

Brake Pedal Position Sensor Circuit High Voltage

Diagnostic Fault Information

Circuit	Short to Ground	Open/High Resistance	Short to Voltage	Signal Performance
Signal	P057C	P057C	P057D	P057B
5 V Reference	P057C P0651	P057C	P0651	-
Low Reference	-	P057D	P057D	-

Typical Scan Tool Data

Brake Pedal Position Sensor

Circuit	Short to Ground	Open	Short to Voltage
Operating Conditions: Ignition ON. **Brake Pedal Position Sensor Parameter Normal Range:** 0.25-4.75 V			
5 V Reference	0 V	0 V	-
Signal	0 V	0 V	5 V

Low Reference	-	5 V	-

Circuit/System Description

The brake pedal position (BPP) sensor is part of the engine brake pedal override feature. The engine control module (ECM) continuously monitors the vehicle speed and the position of the brake pedal. These two main inputs, along with other ECM inputs are used to determine if the vehicle is decelerating at the proper speed and rate with the brake pedal applied. When the engine brake pedal override system is active, the ECM reduces engine torque to assist in reducing vehicle speed.

The BPP sensor is a three wire sensor, and is part of a dual brake position sensor. The ECM supplies a 5 V reference circuit, low reference circuit, and signal circuit to the BPP sensor. The BPP sensor sends a voltage signal to the ECM on the signal circuit. The voltage on the signal circuit will vary from a voltage greater than 0.25 V when the brake pedal is released to a voltage less than 4.75 V when the brake pedal is fully applied.

The ECM continually sends the brake pedal position status message to the transmission control module (TCM). In some applications, the TCM will command neutral when the brake pedal is applied with the vehicle stopped, engine at idle and the gear selector in Drive. This lowers the engine load and reduces fuel consumption.

Conditions for Running the DTC

- Ignition voltage is greater than 10 V.
- DTC runs continuously when above condition is met.

Conditions for Setting the DTC

P057B

ECM detects the BPP sensor signal is stuck in a range.

P057C

ECM detects the BPP sensor voltage is less than 0.25 V for 1 s.

P057D

ECM detects the BPP sensor voltage is greater than 4.75 V for 1 s.

Action Taken When the DTC Sets

- P057B, P057C, and P057D are Type A DTCs.
- Engine torque is reduced to 50% of available engine torque during brake torque management.
- Brake torque management is active at 25 kPa (3.7 PSI) of brake apply pressure.

Conditions for Clearing the DTC

P057B, P057C, and P057D are Type A DTCs

Reference Information

Schematic Reference

- **Automatic Transmission Controls Schematics**
- **Exterior Lights Schematics**

Connector End View Reference

- **COMPONENT CONNECTOR END VIEWS - INDEX**
- **INLINE HARNESS CONNECTOR END VIEWS - INDEX**

Description and Operation

- **Transmission General Description**
- **Transmission Component and System Description**
- **Electronic Component Description**

Electrical Information Reference

- **Circuit Testing**
- **Connector Repairs**
- **Testing for Intermittent Conditions and Poor Connections**
- **Wiring Repairs**

DTC Type Reference

Powertrain Diagnostic Trouble Code (DTC) Type Definitions

Scan Tool Reference

Control Module References for scan tool information

Circuit/System Verification

1. Verify DTC P0641, P0651, P0697, or P06A3 is not set.
   - **If any of the DTCs are set**

     Refer to **Diagnostic Trouble Code (DTC) List - Vehicle** .

   - **If none of the DTCs are set**
2. Ignition ON, transmission in Park, and service brake pedal released.
3. Verify the scan tool Brake Pedal Position Sensor parameter in the ECM Automatic Transmission Data list displays greater than 0.25 V.
   - **If 0.25 V or less**

Refer to Circuit/System Testing below.

- **If greater than 0.25 V**

4. Verify the scan tool Brake Pedal Position Sensor parameter voltage changes as the brake pedal is applied and displays less than 4.75 V when the brake pedal is fully applied.
   - **If the voltage does not change, or 4.75 V or greater**

     Refer to Circuit/System Testing below.

   - **If the voltage changes and less than 4.75 V**
5. Verify the scan tool Brake Pedal Position Sensor Learned Home Position parameter is within 0.1 V of the Brake Pedal Position Sensor parameter when the brake pedal is fully released.
   - **If difference is greater than 0.1 V**

     Perform the **Brake Pedal Position Sensor Learn**.

   - **If difference is 0.1 V or less**
6. Verify the Brake Pedal Position Sensor parameter transitions smoothly without any spikes or dropouts when slowly applying and releasing the brake pedal.
   - **If parameter does not transition smoothly or has spikes or dropouts**

     Refer to Circuit/System Testing below.

   - **If parameter transitions smoothly and there are no spikes or dropouts**
7. Operate the vehicle within the Conditions for Running the DTC. You may also operate the vehicle within the conditions that you observed from the Freeze Frame/Failure Records data.
8. Verify the DTC does not set.
   - **If the DTC sets**

     Refer to Circuit/System Testing below.

   - **If the DTC does not set**
9. All OK.

Circuit/System Testing

NOTE: You must perform the Circuit/System Verification first.

1. Ignition OFF and all vehicle systems OFF, disconnect the harness connector at the B22 Brake Pedal Position Sensor. It may take up to 2 minutes for all vehicle systems to power down.

NOTE: All terminal references are for the vehicle harness brake pedal position sensor connector.

2. Test for less than 10 ohms between the low reference circuit terminal 6 and ground.
    - **If 10 ohms or greater**
    1. Disconnect the harness connector at the K20 Engine Control Module.
    2. Test for less than 2 ohms in the low reference circuit end to end.
        - If 2 ohms or greater, repair the open/high resistance in the circuit.
        - If less than 2 ohms, replace the K20 Engine Control Module.
    - **If less than 10 ohms**
3. Ignition ON.
4. Test for 4.8-5.2 V between the 5 V reference circuit terminal 5 and ground.
    - **If less than 4.8 V**
    1. Ignition OFF, disconnect the harness connector at the K20 Engine Control Module.
    2. Test for infinite resistance between the 5 V reference circuit and ground.
        - If less than infinite resistance, repair the short to ground on the circuit.
        - If infinite resistance.
    3. Test for less than 2 ohms in the 5 V reference circuit end to end.
        - If 2 ohms or greater, repair the open/high resistance in the circuit.
        - If less than 2 ohms, replace the K20 Engine Control Module.
    - **If greater than 5.2 V**
    1. Ignition OFF, disconnect the harness connector at the K20 Engine Control Module, ignition ON.
    2. Test for less than 1 V between the 5 V reference circuit and ground.
        - If 1 V or greater, repair the short to voltage on the circuit.
        - If less than 1 V, replace the K20 Engine Control Module.
    - **If between 4.8-5.2 V**
5. Verify the scan tool Brake Pedal Position Sensor parameter is less than 0.25 V.
    - **If 0.25 V or greater**
    1. Ignition OFF, disconnect the harness connector at the K20 Engine Control Module, ignition ON.
    2. Test for less than 0.25 V between the signal circuit terminal 4 and ground.
        - If 0.25 V or greater, repair the short to voltage on the circuit.
        - If less than 0.25 V, replace the K20 Engine Control Module.
    - **If less than 0.25 V**
6. Install a 3 A fused jumper wire between the signal circuit terminal 4 and the 5 V reference circuit terminal 5.
7. Verify the scan tool Brake Pedal Position Sensor parameter is greater than 4.8 V.
    - **If 4.8 V or less**
    1. Ignition OFF, remove the jumper wire, and disconnect the harness connector at the K20 Engine Control Module.
    2. Test for infinite resistance between the signal circuit terminal 4 and ground.
        - If less than infinite resistance, repair the short to ground on the circuit.

- If infinite resistance.

3. Test for less than 2 ohms in the signal circuit end to end.
   - If 2 ohms or greater, repair the open/high resistance in the circuit.
   - If less than 2 ohms, replace the K20 Engine Control Module.
   - **If greater than 4.8 V**
8. Replace the B22 Brake Pedal Position Sensor.

Repair Instructions

Perform the **Diagnostic Repair Verification** after completing the repair.

- **Brake Pedal Position Sensor Replacement**
- Perform the **Brake Pedal Position Sensor Learn** following the replacement of the ECM or BPP sensor, or any repair that effects the BPP sensor alignment.
- **Control Module References** for Engine Control Module replacement, programming and setup.

DTC P057C OR P057D

Diagnostic Instructions

- Perform the **Diagnostic System Check - Vehicle** prior to using this diagnostic procedure.
- Review **Strategy Based Diagnosis** for an overview of the diagnostic approach.
- **Diagnostic Procedure Instructions** provides an overview of each diagnostic category.

DTC Descriptors

DTC P057C

Brake Pedal Position Sensor Circuit Low Voltage

DTC P057D

Brake Pedal Position Sensor Circuit High Voltage

Diagnostic Fault Information

Circuit	Short to Ground	Open/High Resistance	Short to Voltage	Signal Performance
Signal	P057C	P057C	P057D	-
5 V Reference	P057C P0651	P057C	P0651	-
Low Reference	-	P057D	P057D	-

Typical Scan Tool Data

Brake Pedal Position Sensor

Circuit	Short to Ground	Open	Short to Voltage
Operating Conditions: Ignition ON. **Brake Pedal Position Sensor Parameter Normal Range:** 0.25-4.75 V			
5 V Reference	0 V	0 V	-
Signal	0 V	0 V	5 V
Low Reference	-	5 V	-

Circuit/System Description

The brake pedal position (BPP) sensor is part of the engine brake pedal override feature. The engine control module (ECM) continuously monitors the vehicle speed and the position of the brake pedal. These two main inputs, along with other ECM inputs are used to determine if the vehicle is decelerating at the proper speed and rate with the brake pedal applied. When the engine brake pedal override system is active, the ECM reduces engine torque to assist in reducing vehicle speed.

The BPP sensor is a six wire sensor, and is part of a dual brake position sensor. One BPP Sensor is used for the stop lamps and the other BPP Sensor is used for the engine brake pedal override feature. The BPP Sensor for engine brake pedal override communicates with the ECM. The ECM supplies a 5 V reference circuit, low reference circuit, and signal circuit to the BPP sensor. The BPP sensor sends a voltage signal to the ECM on the signal circuit. The voltage on the signal circuit will vary from a voltage greater than 0.25 V when the brake pedal is released to a voltage less than 4.75 V when the brake pedal is fully applied.

For information on the Stop Lamps side of the BPP Sensor, refer to **Exterior Lighting Systems Description and Operation** .

Conditions for Running the DTC

- Ignition voltage is greater than 10 V.
- DTC runs continuously when above condition is met.

Conditions for Setting the DTC

P057C

BPP sensor voltage is less than 0.25 V for 1 s.

P057D

BPP sensor voltage is greater than 4.75 V for 1 s.

Action Taken When the DTC Sets

- P057C and P057D are Type A DTCs.
- Engine torque is reduced to 50% of available engine torque during brake torque management.
- Brake torque management is active at 25 kPa (3.7 PSI) of brake apply pressure.

Conditions for Clearing the DTC

P057C and P057D are type A DTCs.

Reference Information

Schematic Reference

- **Exterior Lights Schematics**

Connector End View Reference

- **COMPONENT CONNECTOR END VIEWS - INDEX**
- **INLINE HARNESS CONNECTOR END VIEWS - INDEX**

Electrical Information Reference

- **Circuit Testing**
- **Connector Repairs**
- **Testing for Intermittent Conditions and Poor Connections**
- **Wiring Repairs**

DTC Type Reference

Powertrain Diagnostic Trouble Code (DTC) Type Definitions

Scan Tool Reference

Control Module References for scan tool information

Circuit/System Verification

1. Verify DTC P0641, P0651, P0697, or P06A3 is not set.
   - **If any of the DTCs are set**

     Refer to **Diagnostic Trouble Code (DTC) List - Vehicle** .

   - **If none of the DTCs are set**
2. Ignition ON, transmission in Park, and service brake pedal released.
3. Verify the scan tool Brake Pedal Position Sensor parameter in the ECM displays greater than 0.25 V.
   - **If 0.25 V or less**

     Refer to Circuit/System Testing below.

   - **If greater than 0.25 V**

4. Verify the scan tool Brake Pedal Position Sensor parameter voltage changes as the brake pedal is applied and displays less than 4.75 V when the brake pedal is fully applied.
   - **If the voltage does not change, or is greater than 4.74 V**

     Refer to Circuit/System Testing below.

   - **If the voltage changes and less than 4.75 V**
5. Verify the scan tool Brake Pedal Position Sensor Learned Release Position parameter is within 0.1 V of the Brake Pedal Position Sensor parameter when the brake pedal is fully released.
   - **If difference is greater than 0.1 V**

     Perform the **Brake Pedal Position Sensor Learn**.

   - **If difference is 0.1 V or less**
6. Verify the Brake Pedal Position Sensor parameter transitions smoothly without any spikes or dropouts when slowly applying and releasing the brake pedal.
   - **If parameter does not transition smoothly or has spikes or dropouts**

     Refer to Circuit/System Testing below.

   - **If parameter transitions smoothly and there are no spikes or dropouts**
7. Operate the vehicle within the Conditions for Running the DTC. You may also operate the vehicle within the conditions that you observed from the Freeze Frame/Failure Records data.
8. Verify the DTC does not set.
   - **If the DTC sets**

     Refer to Circuit/System Testing below.

   - **If the DTC does not set**
9. All OK.

Circuit/System Testing

NOTE: You must perform the Circuit/System Verification first.

1. Ignition OFF and all vehicle systems OFF, disconnect the harness connector at the B22 Brake Pedal Position Sensor. It may take up to 2 minutes for all vehicle systems to power down.

NOTE: All terminal references are for the vehicle harness brake pedal position sensor connector.

2. Test for less than 10 ohms between the low reference circuit terminal 6 and ground.
   - **If 10 ohms or greater**
   1. Disconnect the harness connector at the K20 Engine Control Module.

2. Test for less than 2 ohms in the low reference circuit end to end.
    - If 2 ohms or greater, repair the open/high resistance in the circuit.
    - If less than 2 ohms, replace the K20 Engine Control Module.
- **If less than 10 ohms**

3. Ignition ON.
4. Test for 4.8-5.2 V between the 5 V reference circuit terminal 5 and ground.
    - **If less than 4.8 V**
    1. Ignition OFF, disconnect the harness connector at the K20 Engine Control Module.
    2. Test for infinite resistance between the 5 V reference circuit and ground.
        - If less than infinite resistance, repair the short to ground on the circuit.
        - If infinite resistance.
    3. Test for less than 2 ohms in the 5 V reference circuit end to end.
        - If 2 ohms or greater, repair the open/high resistance in the circuit.
        - If less than 2 ohms, replace the K20 Engine Control Module.
    - **If greater than 5.2 V**
    1. Ignition OFF, disconnect the harness connector at the K20 Engine Control Module, ignition ON.
    2. Test for less than 1 V between the 5 V reference circuit and ground.
        - If 1 V or greater, repair the short to voltage on the circuit.
        - If less than 1 V, replace the K20 Engine Control Module.
    - **If between 4.8-5.2 V**
5. Verify the scan tool Brake Pedal Position Sensor parameter is less than 0.25 V.
    - **If 0.25 V or greater**
    1. Ignition OFF, disconnect the harness connector at the K20 Engine Control Module, ignition ON.
    2. Test for less than 0.25 V between the signal circuit terminal 4 and ground.
        - If 0.25 V or greater, repair the short to voltage on the circuit.
        - If less than 0.25 V, replace the K20 Engine Control Module.
    - **If less than 0.25 V**
6. Install a 3 A fused jumper wire between the signal circuit terminal 4 and the 5 V reference circuit terminal 5.
7. Verify the scan tool Brake Pedal Position Sensor parameter is greater than 4.8 V.
    - **If 4.8 V or less**
    1. Ignition OFF, remove the jumper wire, and disconnect the harness connector at the K20 Engine Control Module.
    2. Test for infinite resistance between the signal circuit terminal 4 and ground.
        - If less than infinite resistance, repair the short to ground on the circuit.
        - If infinite resistance.
    3. Test for less than 2 ohms in the signal circuit end to end.
        - If 2 ohms or greater, repair the open/high resistance in the circuit.

- If less than 2 ohms, replace the K20 Engine Control Module.
- **If greater than 4.8 V**

8. Replace the B22 Brake Pedal Position Sensor.

Repair Instructions

Perform the **Diagnostic Repair Verification** after completing the repair.

- **Brake Pedal Position Sensor Replacement**
- Perform the **Brake Pedal Position Sensor Learn** following the replacement of the ECM or BPP sensor, or any repair that effects the BPP sensor alignment.
- **Control Module References** for Engine Control Module replacement, programming and setup.

DTC P0601, P0603, P0604, OR P062F

Diagnostic Instructions

- Perform the **Diagnostic System Check - Vehicle** prior to using this diagnostic procedure.
- Review **Strategy Based Diagnosis** for an overview of the diagnostic approach.
- **Diagnostic Procedure Instructions** provides an overview of each diagnostic category.

DTC Descriptors

NOTE: DTCs P0601, P0603, P0604 or P062F could set in other control modules. Verify the DTCs are set in the transmission control module (TCM).

DTC P0601

Control Module Read Only Memory Performance

DTC P0603

Control Module Long Term Memory Reset

DTC P0604

Control Module Random Access Memory Performance

DTC P062F

Control Module Long Term Memory Performance

Circuit/System Description

This is an internal fault detection of the control solenoid valve assembly. This fault is handled inside the control

solenoid valve assembly and no external circuits are involved.

Conditions for Running the DTC

P0601 or P0604

Runs continuously when TCM is powered up.

P0603

One time at TCM power up.

P062F

One time at TCM power down.

Conditions for Setting the DTC

P0601

TCM has detected a read only memory (ROM) checksum error 5 times.

P0603

TCM has detected a non-volatile memory checksum error at TCM powerup.

P0604

TCM has detected a random access memory (RAM) test error 5 times.

P062F

TCM has detected a non-volatile memory error during power-down.

Action Taken When the DTC Sets

- P0601, P0603, P0604, and P062F are Type A DTCs.
- TCM commands maximum line pressure.
- TCM forces the torque converter clutch (TCC) OFF.
- TCM inhibits TCC engagement.
- TCM freezes transmission adaptive functions.
- TCM commands the high side driver OFF.
- TCM defaults the transmission to 4th gear and reverse.
- Torque management is enabled.
- TCM inhibits neutral idle.

- TCM inhibits Tap Up/Down function.
- TCM inhibits manual shifting of forward gears.

Conditions for Clearing the DTC

P0601, P0603, P0604, and P062F are Type A DTCs.

Reference Information

Schematic Reference

Automatic Transmission Controls Schematics

Connector End View Reference

- **COMPONENT CONNECTOR END VIEWS - INDEX**
- **INLINE HARNESS CONNECTOR END VIEWS - INDEX**

Description and Operation

- **Electronic Component Description**
- **Transmission Component and System Description**
- **Transmission General Description**

Electrical Information Reference

- **Circuit Testing**
- **Connector Repairs**
- **Testing for Intermittent Conditions and Poor Connections**
- **Wiring Repairs**

DTC Type Reference

Powertrain Diagnostic Trouble Code (DTC) Type Definitions

Scan Tool Reference

Control Module References for scan tool information

Circuit/System Verification

CAUTION: Before programming a control module, the following must be observed, or control module damage may occur:

- **The TIS terminal, MDI, and/or scan tool must have the latest**

software.

- **The vehicle battery must be fully charged. The battery voltage should be between 12-14 volts.**
- **The TIS terminal, MDI, and/or scan tool connections must be secure.**
- **A battery charger must NOT be connected to the battery when programming a control module.**

1. Ignition OFF and all vehicle systems OFF. It may take up to 2 minutes for all vehicle systems to power down.
2. Ignition ON.
3. Verify that DTC P0601, P0603, P0604, or P062F is not set.
   - **If any of the DTCs are set**

     Replace the Q8 Control Solenoid Valve Assembly.

   - **If none of the DTCs are set**
4. Operate the vehicle within the Conditions for Running the DTC. You may also operate the vehicle within the conditions that you observed from the Freeze Frame/Failure Records data.
5. Verify the DTC does not set.
   - **If the DTC sets**

     Replace the Q8 Control Solenoid Valve Assembly.

   - **If the DTC does not set**
6. All OK.

Repair Instructions

Perform the **Diagnostic Repair Verification** after completing the repair.

- Perform the **Transmission Adaptive Values Learn** following all transmission repairs.
- **Control Module References** for Control Solenoid Valve Assembly replacement, programming and setup

DTC P0634

Diagnostic Instructions

- Perform the **Diagnostic System Check - Vehicle** prior to using this diagnostic procedure.
- Review **Strategy Based Diagnosis** for an overview of the diagnostic approach.
- **Diagnostic Procedure Instructions** provides an overview of each diagnostic category.

DTC Descriptor

DTC P0634

Control Module Overtemperature

Circuit/System Description

The transmission control module (TCM) temperature sensor is located inside of the control solenoid valve assembly which has no serviceable components. The TCM monitors the TCM temperature sensor for over temperature protection.

Conditions for Running the DTC

- DTC P0634 is not set.
- TCM temperature is between 0-240°C (32-464°F) for 0.25 s.
- Ignition voltage is 9-32 V.
- DTC runs continuously when above conditions are met.

Conditions for Setting the DTC

Condition 1

TCM has detected an internal temperature condition of 144°C (291°F) or greater for 5 s.

Condition 2

Ignition voltage is 18 V or greater and the TCM temperature is 50°C (122°F) or greater for 2 s.

Action Taken When the DTC Sets

- P0634 is a Type A DTC.
- TCM limits the transmission to 4th gear and reverse.
- TCM inhibits Tap Up/Down function.
- TCM inhibits manual shifting of forward gears.
- TCM enables torque management.
- TCM shuts down.
- TCM commands maximum line pressure.

Conditions for Clearing the DTC

P0634 is a Type A DTC.

Diagnostic Aids

During a road test, the TCM temperature should steadily increase to a normal operating temperature, and then stabilize.

Reference Information

Schematic Reference

Automatic Transmission Controls Schematics

Connector End View Reference

- **COMPONENT CONNECTOR END VIEWS - INDEX**
- **INLINE HARNESS CONNECTOR END VIEWS - INDEX**

Description and Operation

- **Electronic Component Description**
- **Transmission Component and System Description**
- **Transmission General Description**

Electrical Information Reference

- **Circuit Testing**
- **Connector Repairs**
- **Testing for Intermittent Conditions and Poor Connections**
- **Wiring Repairs**

DTC Type Reference

Powertrain Diagnostic Trouble Code (DTC) Type Definitions

Scan Tool Reference

Control Module References for scan tool information

Circuit/System Verification

1. Ignition ON.
2. Verify the scan tool Engine Coolant Temperature parameter was less than 125°C (257°F) when DTC set by reviewing the scan tool Freeze Frame/Failure Records.
    - **If 125°C (257°F) or greater**

      Refer to **Engine Overheating** .

    - **If less than 125°C (257°F)**
3. Verify the transmission fluid level and condition is correct. Refer to **Transmission Fluid Level and Condition Check**.
    - **If the transmission fluid level and condition is not correct**

Repair as necessary.

- **If the transmission fluid level and condition is correct**

4. Clear the TCM DTCs with a scan tool.
5. Operate the vehicle until normal engine temperature is reached.
6. Verify the scan tool Transmission Fluid Temperature parameter is less than 140°C (284°F).
   - **If 140°C (284°F) or greater**
   1. Ignition OFF.
   2. Verify the conditions listed below do not exist:
      - Obstructions to the airflow to the radiator or transmission
      - Radiator damage
      - Transmission cooler damage
      - Transmission cooler pipe kinked or damaged
        - If a condition exists, repair or replace as necessary.
        - If none of the conditions exist, refer to **Transmission Fluid Cooler Flushing and Flow Test**.
   - **If less than 140°C (284°F)**
7. Operate the vehicle within the Conditions for Running the DTC. You may also operate the vehicle within the conditions that you observed from the Freeze Frame/Failure Records data.
8. Verify the DTC does not set.
   - **If the DTC sets**

     Replace the Q8 Control Solenoid Valve Assembly.

   - **If the DTC does not set**
9. All OK.

Repair Instructions

Perform the **Diagnostic Repair Verification** after completing the repair.

- Perform the **Transmission Adaptive Values Learn** following all transmission repairs.
- **Transmission Fluid Cooler Hose/Pipe Quick-Connect Fitting Disconnection and Connection**
- **Transmission Fluid Cooler Inlet Pipe Replacement (1.4L LUV)**
- **Transmission Fluid Cooler Outlet Pipe Replacement (1.4L LUV)**
- **Control Module References** for Control Solenoid Valve Assembly replacement, programming and setup

DTC P0658 OR P0659

Diagnostic Instructions

- Perform the **Diagnostic System Check - Vehicle** prior to using this diagnostic procedure.

- Review **Strategy Based Diagnosis** for an overview of the diagnostic approach.
- **Diagnostic Procedure Instructions** provides an overview of each diagnostic category.

DTC Descriptors

DTC P0658

Actuator High Control Circuit Group 1 Low Voltage

DTC P0659

Actuator High Control Circuit Group 1 High Voltage

Circuit/System Description

The transmission control module (TCM) high side driver 1 is located inside the control solenoid valve assembly which has no serviceable components. The high side driver 1 provides power to the TCM pressure control solenoids and shift solenoids.

Conditions for Running the DTC

P0658

- DTC P0658 is not set.
- High side driver 1 is enabled.
- Runs continuously when above conditions are met.

P0659

- DTC P0659 is not set.
- Runs one time when ignition transitions from OFF to ON.

Conditions for Setting the DTC

P0658

TCM detects an internal open or short to ground in the high side driver 1 circuit for 1 s.

P0659

TCM detects an internal short to voltage on the high side driver 1 circuit for 1 s.

Action Taken When the DTC Sets

P0658

- P0658 is a Type A DTC.
- TCM turns the high side driver OFF.
- TCM commands all solenoids OFF.
- TCM commands the TCC OFF.
- TCM commands maximum line pressure.
- TCM freezes transmission adaptive functions.
- TCM inhibits neutral idle.
- TCM inhibits the Tap Up/Tap Down function.
- TCM inhibits manual shifting of forward gears.
- TCM defaults the transmission to 4th gear and reverse.
- TCM enables torque management.

P0659

P0659 is a Type C DTC.

Conditions for Clearing the DTC

- P0658 is a Type A DTC.
- P0659 is a Type C DTC.

Reference Information

Schematic Reference

Automatic Transmission Controls Schematics

Connector End View Reference

- **COMPONENT CONNECTOR END VIEWS - INDEX**
- **INLINE HARNESS CONNECTOR END VIEWS - INDEX**

Description and Operation

- **Electronic Component Description**
- **Transmission Component and System Description**
- **Transmission General Description**

Electrical Information Reference

- **Circuit Testing**
- **Connector Repairs**
- **Testing for Intermittent Conditions and Poor Connections**

- **Wiring Repairs**

DTC Type Reference

Powertrain Diagnostic Trouble Code (DTC) Type Definitions

Scan Tool Reference

Control Module References for scan tool information

Special Tools

DT-48616-10 Adapter Harness

For equivalent regional tools, refer to **Special Tools** .

Circuit/System Verification

1. Ignition ON.
2. Verify the scan tool High Side Driver 1 parameter displays ON.
   - **If ON is not displayed**

     Refer to Circuit/System Testing below.

   - **If ON is displayed**
3. Engine Running and the gear selector lever in the Park position.
4. Verify the scan tool parameters listed below do not display Malfunction:
   - High Side Driver 1 Circuit Low Voltage Test Status
   - High Side Driver 1 Circuit Open Test Status
   - High Side Driver 1 Circuit High Voltage Test Status
   - **If Malfunction is displayed**

     Refer to Circuit/System Testing below.

   - **If Malfunction is not displayed**
5. Operate the vehicle within the Conditions for Running the DTC. You may also operate the vehicle within the conditions that you observed from the Freeze Frame/Failure Records data.
6. Verify the DTC does not set.
   - **If the DTC sets**

     Refer to Circuit/System Testing below.

   - **If the DTC does not set**
7. All OK.

Circuit/System Testing

NOTE: You must perform the Circuit/System Verification first.

1. Ignition OFF, remove the Q8 Control Solenoid Valve Assembly.
2. Verify the Q8 Control Solenoid Valve Assembly is not contaminated with any debris. Refer to **Control Solenoid Valve and Transmission Control Module Assembly Inspection (Gen 2 with 1.4L (LUV) 1.8L (LUW, LWE))**.
   - **If contaminated**

     Repair as necessary.

   - **If not contaminated**
3. Verify the resistance is within the specified range for each solenoid listed in the **Control Solenoid Valve and Transmission Control Module Assembly Inspection (Gen 2 with 1.4L (LUV) 1.8L (LUW, LWE))**.
   - **If the resistance is not within range**

     Replace the Q8 Control Solenoid Valve Assembly.

   - **If the resistance is within range**
4. Place the Q8 Control Solenoid Valve Assembly on a clean work surface near the transmission assembly.
5. Connect the **DT-48616-10** adapter harness between the vehicle harness connector, and the Q8 Control Solenoid Valve Assembly connector. Ignition ON.
6. Verify the scan tool parameters listed below do not display Malfunction:
   - High Side Driver 1 Circuit Low Voltage Test Status
   - High Side Driver 1 Circuit Open Test Status
   - High Side Driver 1 Circuit High Voltage Test Status
   - **If Malfunction is displayed**

     Replace the Q8 Control Solenoid Valve Assembly.

   - **If Malfunction is not displayed**
7. All OK.

Repair Instructions

Perform the **Diagnostic Repair Verification** after completing the repair.

- Perform the **Transmission Adaptive Values Learn** following all transmission repairs.
- **Control Module References** for Control Solenoid Valve Assembly replacement, programming and setup.

DTC P0667, P0668, OR P0669

Diagnostic Instructions

- Perform the **Diagnostic System Check - Vehicle** prior to using this diagnostic procedure.
- Review **Strategy Based Diagnosis** for an overview of the diagnostic approach.
- **Diagnostic Procedure Instructions** provides an overview of each diagnostic category.

DTC Descriptors

DTC P0667

Control Module Temperature Sensor Performance

DTC P0668

Control Module Temperature Sensor Circuit Low Voltage

DTC P0669

Control Module Temperature Sensor Circuit High Voltage

Circuit/System Description

The transmission control module (TCM) temperature sensor is located inside of the Control Solenoid Valve Assembly which has no serviceable components. The TCM temperature sensor provides the temperature of the TCM. This temperature reading is used in various shifting and diagnostic routines in the TCM software. This fault is handled inside the TCM and no external circuits are involved.

Conditions for Running the DTC

P0667

- DTC P0101, P0102, P0103, P0106, P0107, P0108, P0171, P0172, P0174, P0175, P0201, P0202, P0203, P0204, P0205, P0206, P0207, P0208, P0300, P0301, P0302, P0303, P0304, P0305, P0306, P0307, P0308, P0401, P042E, P0658, P0667, P0668, P0669, P06AD, P06AE, P0712, P0713, P0716, P0717, P0722, P0723, P0962, P0963, P0966, P0967, P0970, P0971, P215C, P2720, P2721, P2729, or P2730 is not set.
- Engine torque signal is valid.
- Ignition voltage is 9-32 V.
- Engine speed is 400-7, 500 RPM for 5 s.
- Throttle position signal is valid.
- Runs continuously when above conditions are met.

P0668

- DTC P0668 is not set.
- Ignition voltage is 9-32 V.

- Engine speed is 400-7, 500 RPM for 5 s.
- Runs continuously when above conditions are met.

P0669

- DTC P0669, P0716, P0717, P0722, or P0723 is not set.
- Ignition voltage is 9-32 V.
- Engine speed is 400-7, 500 RPM for 5 s.
- Runs continuously when above conditions are met.

Conditions for Setting the DTC

P0667

- TCM detects a 20-50°C (36-90°F) or greater difference between the transmission fluid temperature and TCM substrate temperature, which depends on the average of the transmission fluid temperature, TCM substrate temperature, and TCM power up temperature.
- TCM detects a 8-10°C (14-18°F) or greater difference between the TCM power up temperature and TCM substrate temperature, which depends on the average of the transmission fluid temperature, TCM substrate temperature, and TCM power up temperature.
- Above conditions have to be met for 5 min within a 6 min period.

P0668

TCM internal temperature is 254°C (489°F) or greater for 1 min.

P0669

TCM internal temperature is -254°C (-425°F) or less for 1 min.

Action Taken When the DTC Sets

- P0667, P0668, and P0669 are Type B DTCs.
- TCM defaults the TCM substrate temperature to a calculated temperature based on the TCM power up temperature.

Conditions for Clearing the DTC

P0667, P0668, and P0669 are Type B DTCs.

Diagnostic Aids

The TCM temperature sensor is located inside of the Control Solenoid Valve Assembly and its output should resemble that of the transmission fluid temperature sensor output. During a road test, the TCM temperature should steadily increase to a normal operating temperature, and then stabilize.

Reference Information

Schematic Reference

Automatic Transmission Controls Schematics

Connector End View Reference

- **COMPONENT CONNECTOR END VIEWS - INDEX**
- **INLINE HARNESS CONNECTOR END VIEWS - INDEX**

Description and Operation

- **Electronic Component Description**
- **Transmission Component and System Description**
- **Transmission General Description**

Electrical Information Reference

- **Circuit Testing**
- **Connector Repairs**
- **Testing for Intermittent Conditions and Poor Connections**
- **Wiring Repairs**

DTC Type Reference

Powertrain Diagnostic Trouble Code (DTC) Type Definitions

Scan Tool Reference

Control Module References for scan tool information

Circuit/System Verification

1. Ignition ON.
2. Verify the scan tool TCM Temperature parameter is between -254 and +254°C (-425 and +489°F).
    - **If not between -254 and +254°C (-425 and +489°F)**

      Replace the Q8 Control Solenoid Valve Assembly.

    - **If between -254 and +254°C (-425 and +489°F)**
3. Verify the scan tool TCM Temperature parameter increases greater than 2°C (3.6°F) after operating the vehicle at 64 km/h (40 mph) for 10 min.
    - **If the temperature does not increase greater than 2°C (3.6°F)**

Replace the Q8 Control Solenoid Valve Assembly.

- **If the temperature increases greater than 2°C (3.6°F)**

4. Verify the scan tool Transmission Fluid Temperature and TCM Temperature parameters are within 20°C (36°F) of each other.
   - **If the temperatures are not within 20°C (36°F)**

     Replace the Q8 Control Solenoid Valve Assembly.

   - **If the temperatures are within 20°C (36°F)**
5. Operate the vehicle within the Conditions for Running the DTC. You may also operate the vehicle within the conditions that you observed from the Freeze Frame/Failure Records data.
6. Verify the DTC does not set.
   - **If the DTC sets**

     Replace the Q8 Control Solenoid Valve Assembly.

   - **If the DTC does not set**
7. All OK.

Repair Instructions

Perform the **Diagnostic Repair Verification** after completing the repair.

- Perform the **Transmission Adaptive Values Learn** following all transmission repairs.
- **Control Module References** for Control Solenoid Valve Assembly replacement, programming and setup.

DTC P06AC, P06AD, OR P06AE

Diagnostic Instructions

- Perform the **Diagnostic System Check - Vehicle** prior to using this diagnostic procedure.
- Review **Strategy Based Diagnosis** for an overview of the diagnostic approach.
- **Diagnostic Procedure Instructions** provides an overview of each diagnostic category.

DTC Descriptors

DTC P06AC

Control Module Power Up Temperature Sensor Performance

DTC P06AD

Control Module Power Up Temperature Sensor Circuit Low Voltage

DTC P06AE

Control Module Power Up Temperature Sensor Circuit High Voltage

Circuit/System Description

The transmission control module (TCM) power up temperature sensor is located inside of the Control Solenoid Valve Assembly which has no serviceable components. The TCM power up temperature sensor provides the temperature of the TCM when the TCM power is on. This temperature reading is used in various shifting and diagnostic routines in the TCM software. This fault is handled inside the TCM and no external circuits are involved.

Conditions for Running the DTC

P06AC

- DTC P0101, P0102, P0103, P0106, P0107, P0108, P0171, P0172, P0174, P0175, P0201, P0202, P0203, P0204, P0205, P0206, P0207, P0208, P0300, P0301, P0302, P0303, P0304, P0305, P0306, P0307, P0308, P0401, P042E, P0658, P0668, P0669, P06AC, P06AD, P06AE, P0712, P0713, P0716, P0717, P0722, P0723, P0962, P0963, P0966, P0967, P0970, P0971, P215C, P2720, P2721, P2729, or P2730 is not set.
- Throttle position signal is valid.
- Engine speed is 400-7, 500 RPM for 5 s.
- Ignition voltage is 9-32 V.
- Engine torque signal is valid.
- DTC runs continuously when the above conditions are met.

P06AD

- DTC P06AD, P0716, P0717, P0722, or P0723 is not set.
- Engine speed is 400-7, 500 RPM for 5 s.
- Ignition voltage is 9-32 V.
- DTC runs continuously when the above conditions are met.

P06AE

- DTC P06AE is not set.
- Engine speed is 400-7, 500 RPM for 5 s.
- Ignition voltage is 9-32 V.
- DTC runs continuously when the above conditions are met.

Conditions for Setting the DTC

P06AC

- TCM detects a 20-50°C (36-90°F), or greater difference between the transmission fluid temperature and TCM power up temperature, which depends on the average of transmission fluid temperature, TCM substrate temperature, and TCM power up temperature.
- TCM detects an 8-10°C (14-18°F), or greater difference between the TCM substrate temperature and TCM power up temperature, which depends on the average of the transmission fluid temperature, TCM substrate temperature, and TCM power up temperature.
- Above conditions have to be met for 5 min within a 6 min period.

P06AD

TCM power up temperature is -254°C (-425°F) or less for 1 min.

P06AE

TCM power up temperature is 254°C (489°F) or greater for 1 min.

Action Taken When the DTC Sets

- P06AC, P06AD, and P06AE are Type B DTCs.
- TCM defaults the TCM power up temperature to a calculated temperature based on the TCM substrate temperature.

Conditions for Clearing the DTC

P06AC, P06AD, and P06AE are Type B DTCs.

Reference Information

Schematic Reference

Automatic Transmission Controls Schematics

Connector End View Reference

- **COMPONENT CONNECTOR END VIEWS - INDEX**
- **INLINE HARNESS CONNECTOR END VIEWS - INDEX**

Description and Operation

- **Electronic Component Description**
- **Transmission Component and System Description**
- **Transmission General Description**

Electrical Information Reference

- **Circuit Testing**

- **Connector Repairs**
- **Testing for Intermittent Conditions and Poor Connections**
- **Wiring Repairs**

DTC Type Reference

Powertrain Diagnostic Trouble Code (DTC) Type Definitions

Scan Tool Reference

Control Module References for scan tool information

Circuit/System Verification

1. Ignition ON, clear the DTCs with a scan tool.
2. Operate the vehicle at 64 km/h (40 mph) for 10 min.
3. Verify DTC P06AC, P06AD, or P06AE is not set.
   - **If any of the DTCs are set**

     Replace the Q8 Control Solenoid Valve Assembly.

   - **If none of the DTCs are set**
4. Operate the vehicle within the Conditions for Running the DTC. You may also operate the vehicle within the conditions that you observed from the Freeze Frame/Failure Records data.
5. Verify the DTC does not set.
   - **If the DTC sets**

     Replace the Q8 Control Solenoid Valve Assembly.

   - **If the DTC does not set**
6. All OK.

Repair Instructions

Perform the **Diagnostic Repair Verification** after completing the repair.

- Perform the **Transmission Adaptive Values Learn** following all transmission repairs.
- **Control Module References** for Control Solenoid Valve Assembly replacement, programming and setup.

DTC P0711-P0713

Diagnostic Instructions

- Perform the **Diagnostic System Check - Vehicle** prior to using this diagnostic procedure.

- Review **Strategy Based Diagnosis** for an overview of the diagnostic approach.
- **Diagnostic Procedure Instructions** provides an overview of each diagnostic category.

DTC Descriptors

DTC P0711

Transmission Fluid Temperature Sensor Performance

DTC P0712

Transmission Fluid Temperature Sensor Circuit Low Voltage

DTC P0713

Transmission Fluid Temperature Sensor Circuit High Voltage

Circuit/System Description

The transmission fluid temperature sensor is located inside of the transmission Control Solenoid Valve Assembly which has no serviceable components. The transmission fluid temperature sensor provides transmission fluid temperature to the transmission control module (TCM). This fault is handled inside the TCM and no external circuits are involved.

Conditions for Running the DTC

P0711

- DTC P0101, P0102, P0103, P0106, P0107, P0108, P0171, P0172, P0174, P0175, P0201, P0202, P0203, P0204, P0205, P0206, P0207, P0208, P0300, P0301, P0302, P0303, P0304, P0305, P0306, P0307, P0308, P0401, P042E, P0658, P0668, P0669, P06AD, P06AE, P0711, P0712, P0713, P0716, P0717, P0722, P0723, P0962, P0963, P0966, P0967, P0970, P0971, P215C, P2720, P2721, P2729, or P2730 is not set.
- Engine speed is 400-7, 500 RPM for 5 s.
- Ignition voltage is 9-32 V.
- Accelerator position signal is valid.
- Engine torque signal is valid.
- Brake torque is not active.
- DTC runs continuously when above conditions are met.

P0712

- DTC P0712, P0716, P0717, P0722, or P0723 is not set.
- Engine speed is 400-7, 500 RPM for 5 s.
- Ignition voltage is 9-32 V.

- DTC runs continuously when above conditions are met.

P0713

- DTC P0713, P0716, P0717, P0722, or P0723 is not set.
- Engine speed is 400-7, 500 RPM for 5 s.
- Ignition voltage is 9-32 V.
- DTC runs continuously when above conditions are met.

Conditions for Setting the DTC

P0711

- TCM detects a 20-50°C (36-90°F) or greater difference between the transmission fluid temperature and the TCM substrate temperature, which depends on the average of the transmission fluid temperature, TCM substrate temperature, and TCM power up temperature.
- TCM detects a 20-50°C (36-90°F) or greater difference between the transmission fluid temperature and the TCM power up temperature, which depends on the average of the transmission fluid temperature, TCM substrate temperature, and TCM power up temperature.
- Above conditions have to be met for 5 min within a 6 min period.

P0712

Transmission fluid temperature is 254°C (489°F) or greater for 1 min.

P0713

Transmission fluid temperature is -254°C (-425°F) or less for 1 min.

Action Taken When the DTC Sets

- P0711, P0712, and P0713 are Type B DTCs.
- TCM defaults to a calculated transmission fluid temperature based on the TCM temperature.

Conditions for Clearing the DTC

P0711, P0712, and P0713 are Type B DTCs.

Diagnostics Aids

The TCM temperature sensor is located inside of the Control Solenoid Valve Assembly and its output should resemble that of the transmission fluid temperature sensor's output. During a road test, the transmission fluid temperature should steadily increase to a normal operating temperature, and then stabilize.

Reference Information

Schematic Reference

Automatic Transmission Controls Schematics

Connector End View Reference

- **COMPONENT CONNECTOR END VIEWS - INDEX**
- **INLINE HARNESS CONNECTOR END VIEWS - INDEX**

Description and Operation

- **Electronic Component Description**
- **Transmission Component and System Description**
- **Transmission General Description**

Electrical Information Reference

- **Circuit Testing**
- **Connector Repairs**
- **Testing for Intermittent Conditions and Poor Connections**
- **Wiring Repairs**

DTC Type Reference

Powertrain Diagnostic Trouble Code (DTC) Type Definitions

Scan Tool Reference

Control Module References for scan tool information

Circuit/System Verification

1. Engine idling at the normal operating temperature.
2. Verify the scan tool Transmission Fluid Temperature parameter is between -254 and +254°C (-425 and +489°F).
   - **If not between -254 and +254°C (-425 and +489°F)**

     Replace the Q8 Control Solenoid Valve Assembly.

   - **If between -254 and +254°C (-425 and +489°F)**
3. Verify the scan tool Transmission Fluid Temperature parameter increases greater than 2°C (3.6°F) after operating the vehicle at 64 km/h (40 mph) for 10 min.
   - **If the temperature does not increase greater than 2°C (3.6°F)**

     Replace the Q8 Control Solenoid Valve Assembly.

- **If the temperature increases greater than 2°C (3.6°F)**

4. Verify the scan tool Transmission Fluid Temperature and the TCM Temperature parameters are within 20°C (36°F).
   - **If the temperatures are not within 20°C (36°F)**

     Replace the Q8 Control Solenoid Valve Assembly.

   - **If the temperatures are within 20°C (36°F)**
5. Operate the vehicle within the Conditions for Running the DTC. You may also operate the vehicle within the conditions that you observed from the Freeze Frame/Failure Records data.
6. Verify the DTC does not set.
   - **If the DTC sets**

     Replace the Q8 Control Solenoid Valve Assembly.

   - **If the DTC does not set**
7. All OK.

Repair Instructions

Perform the **Diagnostic Repair Verification** after completing the repair.

- Perform the **Transmission Adaptive Values Learn** following all transmission repairs.
- **Control Module References** for Control Solenoid Valve Assembly replacement, programming and setup

DTC P0716, P0717, P07BF, OR P07C0

Diagnostic Instructions

- Perform the **Diagnostic System Check - Vehicle** prior to using this diagnostic procedure.
- Review **Strategy Based Diagnosis** for an overview of the diagnostic approach.
- **Diagnostic Procedure Instructions** provides an overview of each diagnostic category.

DTC Descriptors

DTC P0716

Input Speed Sensor Performance

DTC P0717

Input Speed Sensor Circuit No Signal

DTC P07BF

Input Speed Sensor Circuit Low Voltage

DTC P07C0

Input Speed Sensor Circuit High Voltage

Diagnostic Fault Information

Circuit	Short to Ground	Open/High Resistance	Short to Voltage	Signal Performance
12 V	P0716, P0717, P07BF	P0716, P0717, P07BF	-	P0716
Signal	P0716, P0717	P0716, P0717, P07BF	P0716, P0717, P07C0	P0716

Typical Scan Tool Data

Transmission ISS

Circuit	Short to Ground	Open	Short to Voltage
Operating Conditions: Engine running, normal operating temperature, transmission in PARK **Parameter Normal Range:** 500-5, 800 RPM			
12 V	0 RPM	0 RPM	-
Signal	0 RPM	0 RPM	0 RPM

ISS/OSS Supply Voltage

Circuit	Short to Ground	Open	Short to Voltage
Operating Conditions: Key ON, Engine OFF or Engine running, normal operating temperature **Parameter Normal Range:** OK			
Signal	OK	OK	OK
12 V	Out of Range	OK	OK

Circuit/System Description

The input shaft speed (ISS) sensor is a hall-effect type sensor. The ISS sensor mounts to the inside of the automatic transmission case assembly and connects to the control solenoid valve assembly through a 2-wire harness and connector. The sensor faces a reluctor wheel, which is attached to the 4-5-6 clutch and 3-5-R clutch housing assembly. The sensor receives battery voltage on the ISS sensor Supply Voltage circuit from the transmission control module (TCM). As the 4-5-6 clutch and 3-5-R clutch housing rotates, the sensor produces a signal frequency based on the teeth of the reluctor wheel. This signal is transmitted through the ISS sensor signal circuit to the TCM. The TCM uses the ISS sensor signal to calculate input shaft speed to determine commanded line pressure, transmission shift patterns, torque converter clutch (TCC) slip speed and gear ratio.

Conditions for Running the DTC

P0716

- DTC P0101, P0102, P0103, P0121, P0122, P0123, P0716, P0717, P0752, P0973, or P0974 is not set.
- Vehicle speed is 10 km/h (6 mph) or greater.
- Engine speed is 400-7, 500 RPM for 5 s.
- Ignition voltage is 9-32 V.
- Engine torque signal is valid.
- Throttle position signal is valid.
- DTC runs continuously when above conditions are met.

P0717

- DTC P0717, P0722, or P0723 is not set.
- Engine speed is 400-7, 500 RPM for 5 s.
- Ignition voltage is 9-32 V.
- Vehicle speed is 16 km/h (10 mph) or greater.
- Engine torque is 50 N.m (37 lb ft) or greater.
- DTC runs continuously when above conditions are met.

P07BF or P07C0

- Ignition voltage is 9-32 V.
- DTC runs continuously when above condition is met.

Conditions for Setting the DTC

P0716

TCM detects the transmission input shaft speed signal dropped greater than 1, 350 RPM for 1 s.

P0717 - Condition 1

TCM detects the transmission input shaft speed signal is less than 33 RPM for 5 s.

P0717 - Condition 2

The TCM detects that P0722 set and the Transmission input speed is less than 1, 000 RPM for 5 s.

P07BF

Transmission ISS sensor analog signal voltage is 0.25 V or less for 4 s.

P07C0

Transmission ISS sensor analog signal voltage is 4.75 volts or greater for 4 s.

Action Taken When the DTC Sets

- P0716, P0717, P07BF, and P07C0 are Type A DTCs.
- TCM freezes transmission adaptive functions.
- TCM forces TCC OFF.
- TCM inhibits Tap-Up/Tap-Down functions.
- TCM inhibits manual up, manual down shifts with the shift selector.
- TCM commands maximum line pressure.
- TCM enables torque management.
- TCM limits the transmission to reverse and 4th gear.
- TCM commands the high side driver off - P0716 only.

Conditions for Clearing the DTC

P0716, P0717, P07BF, and P07C0 are Type A DTCs.

Diagnostic Aids

- Inspect the ISS sensor harness and connector for metallic debris and the reluctor wheel for damage or misalignment.
- If the scan tool ISS/OSS Supply Voltage indicates out of range, the fault could also be caused by the transmission output shaft speed sensor.

Reference Information

Schematic Reference

Automatic Transmission Controls Schematics

Connector End View Reference

- **COMPONENT CONNECTOR END VIEWS - INDEX**
- **INLINE HARNESS CONNECTOR END VIEWS - INDEX**

Description and Operation

- **Electronic Component Description**
- **Transmission Component and System Description**
- **Transmission General Description**

Electrical Information Reference

- **Circuit Testing**
- **Connector Repairs**

- **Testing for Intermittent Conditions and Poor Connections**
- **Wiring Repairs**

DTC Type Reference

Powertrain Diagnostic Trouble Code (DTC) Type Definitions

Scan Tool Reference

Control Module References for scan tool information

Special Tools

DT-48616-10 Adapter Harness

For equivalent regional tools, refer to **Special Tools** .

Circuit/System Verification

1. Ignition ON.
2. Verify the scan tool ISS/OSS Supply Voltage parameter displays OK.
   - **If OK is not displayed**

     Refer to Circuit/System Testing below.

   - **If OK is displayed**
3. Engine idling, transmission in Park.
4. Verify the scan tool Transmission ISS parameter changes without spikes or dropouts, while varying the engine speed.
   - **If the Transmission ISS does not change with engine speed or has spikes or dropouts**

     Refer to Circuit/System Testing below.

   - **If the Transmission ISS changes with engine speed and there are no spikes or dropouts**
5. Operate the vehicle within the Conditions for Running the DTC. You may also operate the vehicle within the conditions that you observed from the Freeze Frame/Failure Records data.
6. Verify the DTC does not set.
   - **If the DTC sets**

     Refer to Circuit/System Testing below.

   - **If the DTC does not set**
7. All OK.

Circuit/System Testing

NOTE: You must perform the Circuit/System Verification first.

1. Ignition OFF, remove the Q8 Control Solenoid Valve Assembly.
2. Place the Q8 Control Solenoid Valve Assembly on a clean work surface near the transmission assembly.
3. Connect the **DT-48616-10** adapter harness between the vehicle harness connector and the Q8 Control Solenoid Valve Assembly connector. Ignition ON.
4. Test for 11-13 V between the ISS 12 V circuit terminal B on the Q8 Control Solenoid Valve Assembly X3 connector and ground.
   - **If not between 11-13 V**

     Replace the Q8 Control Solenoid Valve Assembly.

   - **If between 11-13 V**
5. Verify the scan tool Transmission ISS parameter is between 495-505 RPM when performing the input shaft speed test. Refer to **Control Solenoid Valve and Transmission Control Module Assembly Input Shaft Speed/Output Shaft Speed Input Test**.
   - **If not between 495-505 RPM**

     Replace the Q8 Control Solenoid Valve Assembly.

   - **If between 495-505 RPM**
6. Verify there is no damage to the reluctor, which is attached to the 4-5-6 clutch and 3-5-R clutch housing assembly, or misalignment between the B14C Transmission Input Shaft Speed Sensor and reluctor.
   - **If the reluctor is damaged or misaligned**

     Repair or replace as necessary.

   - **If the reluctor is not damaged or misaligned**
7. Replace the B14C Transmission Input Shaft Speed Sensor.

Repair Instructions

Perform the **Diagnostic Repair Verification** after completing the repair.

- Perform the **Transmission Adaptive Values Learn** following all transmission repairs.
- **Input and Output Speed Sensor Installation**
- **Input and Output Speed Sensor Removal**
- **Control Module References** for Control Solenoid Valve Assembly replacement, programming and setup.

DTC P071D

Diagnostic Instructions

- Perform the **Diagnostic System Check - Vehicle** prior to using this diagnostic procedure.
- Review **Strategy Based Diagnosis** for an overview of the diagnostic approach.
- **Diagnostic Procedure Instructions** provides an overview of each diagnostic category.

DTC Descriptor

DTC P071D

Transmission Sport Mode Switch Circuit

Diagnostic Fault Information

Circuit	Short to Ground	Open/High Resistance	Short to Voltage	Signal Performance
Trans Mode Switch B Signal	P071D	-	-	P071D

Circuit/System Description

The engine control module (ECM) supplies 5 V reference voltage, through the 5 V reference voltage circuit, to the fuel economy mode switch. The 5 V reference voltage causes current to flow through a series of resistors in the switch to the switch ground circuit. The ECM also supplies a signal circuit to detect voltage within the resistor network. When the fuel economy mode switch button is momentarily pressed, the switch contacts allow the current to by-pass one of the resistors. The ECM detects the resulting change in voltage drop as a fuel economy mode request and sends a GMLAN message to the transmission control module (TCM) indicating the request. When the TCM receives the request, and if operating conditions are correct, the transmission shift points are modified to optimize fuel efficiency. The TCM sends a confirmation message to the ECM and the instrument panel cluster (IPC) also receives the fuel economy mode request message from the TCM and illuminates the fuel economy mode indicator lamp.

Conditions for Running the DTC

- Engine speed is 500-7, 500 RPM for 5 s.
- Ignition voltage is between 9-18 V.

Conditions for Setting the DTC

TCM detects that the Economy Mode Switch has been continuously activated for 10 min.

Action Taken When the DTC Sets

- DTC P071D is a type C DTC.
- TCM inhibits the sport mode shift pattern.
- TCM inhibits Tap Up/Down function.
- TCM inhibits manual shifting of forward gears.

Conditions for Clearing the DTC

DTC P071D is a Type C DTC.

Diagnostic Aids

Diagnose all communication and body DTCs first.

Reference Information

Schematic Reference

Automatic Transmission Controls Schematics

Connector End View Reference

- **COMPONENT CONNECTOR END VIEWS - INDEX**
- **INLINE HARNESS CONNECTOR END VIEWS - INDEX**

Description and Operation

- **Transmission General Description**
- **Transmission Component and System Description**
- **Electronic Component Description**

Electrical Information Reference

- **Circuit Testing**
- **Connector Repairs**
- **Testing for Intermittent Conditions and Poor Connections**
- **Wiring Repairs**

DTC Type Reference

Powertrain Diagnostic Trouble Code (DTC) Type Definitions

Scan Tool Reference

Control Module References for scan tool information

Circuit/System Verification

1. Ignition ON.
2. Verify the Fuel Economy Mode parameter changes between Active and Inactive each time the S112 fuel economy mode switch is depressed.
    - **If Inactive or Active is not displayed**

Refer to Circuit/System Testing below.

- **If Inactive or Active is displayed**

3. Operate the vehicle within the Conditions for Running the DTC. You may also operate the vehicle within the conditions that you observed from the Freeze Frame/Failure Records data.
4. Verify the DTC does not set.
   - **If the DTC sets**

     Refer to Circuit/System Testing below.

   - **If the DTC does not set**
5. All OK.

Circuit/System Testing

NOTE: You must perform the Circuit/System Verification before proceeding with Circuit/System Testing.

1. Ignition OFF, disconnect the harness connector at the S112 fuel economy mode switch.
2. Test for less than 10 ohms between the ground circuit terminal 1 of the harness connector and ground.
   - **If 10 ohms or greater**

     Test for less than 2 ohms in the ground circuit, end to end.

   - If 2 ohms or greater, repair the open/high resistance in the ground circuit.
   - If less than 2 ohms, repair the open/high resistance in the ground connection.
   - **If less than 10 ohms**
3. Ignition ON.
4. Test for 4.8-5.2 V between the 5 V reference circuit terminal 3 of the harness connector and ground.
   - **If less than 4.8 volts**
   1. Ignition OFF, remove the harness connector at the ECM.
   2. Test for infinite resistance between the 5 V reference circuit terminal 3 of the harness connector and ground.
      - If less than infinite resistance, repair the short to ground in the circuit.
      - If infinite resistance.
   3. Test for less than 2 ohms in the 5 V reference circuit, end to end.
      - If 2 ohms or greater, repair the open/high resistance in the 5 V reference circuit.
      - If less than 2 ohms, replace the K20 engine control module.
   - **If greater than 5.2 V**
   1. Ignition OFF, disconnect the harness connector at the ECM, ignition ON.
   2. Test for less than 1 V between 5 V reference circuit terminal 3 and ground.

- If 1 V or greater, repair the short to voltage on the circuit.
- If less than 1 V, replace the K20 engine control module.

- **If between 4.8-5.2 volts**

5. Verify the scan tool Fuel Economy Mode Switch parameter displays Circuit Low Voltage.
   - **If the Fuel Economy Mode Switch parameter does not display Circuit Low Voltage**
   1. Ignition OFF, disconnect the harness connector at the K20 engine control module, ignition ON.
   2. Test for less than 1 V between the fuel economy signal circuit terminal 4 and ground.
      - If 1 V or greater, repair the short to voltage on the circuit.
      - If less than 1 V, replace the K20 engine control module.
   - **If the Fuel Economy Mode Switch parameter displays Circuit Low Voltage**
6. Connect a 3 A fused jumper wire between 5 V reference circuit terminal 3 of the harness connector and signal circuit terminal 4 of the harness connector.
7. Verify the scan tool Fuel Economy Mode Switch parameter displays Circuit High Voltage.
   - **If the Fuel Economy Mode Switch parameter does not display Circuit High Voltage**
   1. Ignition OFF, remove the connector at the K20 engine control module.
   2. Test for infinite resistance between signal circuit terminal 4 and ground.
      - If less than infinite resistance, repair the short to ground in the signal circuit.
      - If infinite resistance.
   3. Test for less than 2 ohms in the fuel economy mode signal circuit, end to end.
      - If 2 ohms or greater, repair the open/high resistance in the signal circuit.
      - If less than 2 ohms, replace the K20 engine control module.
   - **If the Fuel Economy Mode Switch parameter displays Circuit High Voltage**
8. Ignition OFF.
9. Test for 266-294 ohms between the 5 V reference voltage circuit terminal 3 and the signal circuit terminal 4 on the S112 fuel economy mode switch.
   - **If not between 266-294 ohms**

     Replace the S112 fuel economy mode switch.

   - **If between 266-294 ohms**
10. Test for 927-1024 ohms between signal circuit terminal 4 and low reference circuit terminal 1 on the S112 fuel economy mode switch.
    - **If not between 927-1024 ohms**

      Replace the S112 fuel economy mode switch.

    - **If between 927-1024 ohms**
11. Test for 220-244 ohms between terminal 4 and terminal 1 on the S112 fuel economy mode switch, with the switch pressed.
    - **If not between 220-244 ohms**

Replace the S112 fuel economy mode switch.

- **If between 220-244 ohms**

12. Replace the K20 Engine Control Module.

Repair Instructions

Perform the **Diagnostic Repair Verification** after completing the repair.

Control Module References for Control Solenoid Valve Assembly or Engine Control Module replacement, programming and setup.

DTC P0722, P0723, P077C, OR P077D

Diagnostic Instructions

- Perform the **Diagnostic System Check - Vehicle** prior to using this diagnostic procedure.
- Review **Strategy Based Diagnosis** for an overview of the diagnostic approach.
- **Diagnostic Procedure Instructions** provides an overview of each diagnostic category.

DTC Descriptors

DTC P0722

Output Speed Sensor Circuit No Signal

DTC P0723

Output Speed Sensor Circuit Intermittent

DTC P077C

Output Speed Sensor Circuit Low Voltage

DTC P077D

Output Speed Sensor Circuit High Voltage

Diagnostic Fault Information

Circuit	Short to Ground	Open/High Resistance	Short to Voltage	Signal Performance
Signal	P0722, P0723, P077C	P0722, P0723, P077C	P0722, P0723, P077D	P0723
12 V	P0722, P0723, P077C	P0722, P0723, P077C	-	P0723

Typical Scan Tool Data

Transmission OSS

Circuit	Short to Ground	Open	Short to Voltage
Operating Conditions: Drive vehicle, normal operating temperature **Parameter Normal Range:** 0-7, 000 RPM			
12 V	0 RPM	0 RPM	0-7000 RPM
Signal	0 RPM	0 RPM	0 RPM

ISS/OSS Supply Voltage

Circuit	Short to Ground	Open	Short to Voltage
Operating Conditions: Key ON, Engine OFF or Engine running, normal operating temperature **Parameter Normal Range:** OK			
Output Speed Sensor Signal	OK	OK	OK
Output Speed Sensor Supply Voltage	Out of Range	OK	Out of Range

Circuit/System Description

The output shaft speed (OSS) sensor is a hall-effect type sensor. The OSS sensor mounts to the automatic transmission case assembly and connects to the control solenoid valve assembly through a 2-wire harness and connector. The sensor faces the park gear teeth. The sensor receives battery voltage on the OSS sensor supply voltage circuit from the transmission control module (TCM). As the output shaft rotates, the sensor produces a signal frequency based on the park gear teeth. This signal is transmitted through the OSS sensor signal circuit to the TCM. The TCM uses the OSS sensor signal to calculate output shaft speed to determine commanded line pressure, transmission shift patterns, vehicle speed and gear ratio.

Conditions for Running the DTC

P0722

- DTC P0101, P0102, P0103, P0121, P0122, P0123, P0716, P0717, P0722, or P0723 is not set.
- Ignition voltage is 9-32 V.
- Engine speed is 400-7, 500 RPM for 5 s.
- Engine torque signal is valid.
- Throttle position signal is valid.
- Transmission input speed is between 1, 000-8, 191 RPM.
- Calculated throttle position is 8% or greater.
- Engine torque is 30 N.m (22 lb ft) or greater.
- Transmission fluid temperature is -40°C (-40°F) or greater.
- DTC runs continuously when the above conditions are met.

P0723

- DTC P0101, P0102, P0103, P0121, P0122, P0123, P0723, P0973, P0974, P0976, or P0977 is not set.

- Ignition voltage is 9-32 V.
- Greater than 5 s since last transmission upshift or downshift.
- Engine speed is 400-7, 500 RPM for 5 s.
- DTC runs continuously when the above conditions are met.

P077C

- DTC P077D is not set.
- Ignition voltage is 9-32 V.
- DTC runs continuously when the above conditions are met.

P077D

- DTC P077C is not set.
- Ignition voltage is 9-32 V.
- DTC runs continuously when the above conditions are met.

Conditions for Setting the DTC

P0722

Transmission output speed is 35 RPM or less for 5 s.

P0723

- Transmission output speed is 105 RPM or greater.
- TCM detects the transmission output shaft speed dropped greater than 1, 000 RPM for 3 s.

P077C

Transmission OSS sensor analog signal voltage is 0.25 V or less for 4 s.

P077D

Transmission OSS sensor analog signal voltage is 4.75 V or greater for 4 s.

Action Taken When the DTC Sets

P0722

- P0722 is a Type A DTC.
- TCM freezes transmission adaptive functions.
- TCM commands maximum line pressure.
- TCM forces the torque converter clutch (TCC) OFF.

- TCM Enables torque management.
- TCM limits the transmission to reverse and 2nd gear.
- TCM inhibits neutral idle.
- TCM inhibits auto grade braking.
- TCM inhibits Tap-Up/Tap-Down functions.
- TCM inhibits manual up, manual down shifts with the shift selector.
- TCM commands 2nd gear when in a forward range and the output speed is less than 700 RPM, or neutral if the output speed is 700 RPM or greater.

P0723, P077C or P077D

- P0723, P077C, and P077D are Type A DTCs.
- TCM freezes transmission adaptive functions.
- TCM forces TCC OFF.
- TCM commands the high side driver OFF.
- TCM commands maximum line pressure.
- TCM enables torque management.
- TCM limits the transmission to reverse and 4th gear.
- TCM inhibits neutral idle.
- TCM inhibits Tap-Up/Tap-Down functions.
- TCM inhibits manual up, manual down shifts with the shift selector.
- TCM inhibits auto grade braking.

Conditions for Clearing the DIC/DTC

P0722, P0723, P077C, and P077D are Type A DTCs.

Diagnostic Aids

- Inspect the OSS senor, harness, and connector for metallic debris.
- Proper torque of the OSS sensor mounting bolt is critical to proper OSS sensor operation.
- If the scan tool ISS/OSS Supply Voltage indicates out of range, the fault could also be caused by the transmission input shaft speed sensor.

Reference Information

Schematic Reference

Automatic Transmission Controls Schematics

Connector End View Reference

- **COMPONENT CONNECTOR END VIEWS - INDEX**

- **INLINE HARNESS CONNECTOR END VIEWS - INDEX**

Description and Operation

- **Electronic Component Description**
- **Transmission Component and System Description**
- **Transmission General Description**

Electrical Information Reference

- **Circuit Testing**
- **Connector Repairs**
- **Testing for Intermittent Conditions and Poor Connections**
- **Wiring Repairs**

DTC Type Reference

Powertrain Diagnostic Trouble Code (DTC) Type Definitions

Scan Tool Reference

Control Module References for scan tool information

Special Tools

DT-48616-10 Adapter Harness

For equivalent regional tools, refer to **Special Tools** .

Circuit/System Verification

1. Ignition ON.
2. Verify the scan tool ISS/OSS Supply Voltage parameter displays OK.
    - **If OK is not displayed**

      Refer to Circuit/System Testing below.

    - **If OK is displayed**
3. Verify the scan tool Transmission OSS parameter changes with vehicle speed or does not drop out, while operating the vehicle at 16-32 km/h (10-20 mph).
    - **If the Transmission OSS does not vary with vehicle speed or drops out**

      Refer to Circuit/System Testing below.

    - **If the Transmission OSS varies with vehicle speed and does not drop out**

4. Operate the vehicle within the Conditions for Running the DTC. You may also operate the vehicle within the conditions that you observed from the Freeze Frame/Failure Records data.
5. Verify the DTC does not set.
   - **If the DTC sets**

     Refer to Circuit/System Testing below.

   - **If the DTC does not set**
6. All OK.

Circuit/System Testing

NOTE: You must perform the Circuit/System Verification first.

1. Ignition OFF, remove the Q8 Control Solenoid Valve Assembly.
2. Connect the **DT-48616-10** adapter harness between the vehicle harness connector and the Q8 Control Solenoid Valve Assembly connector.
3. Ignition ON.
4. Test for 11-13 V between the OSS sensor voltage circuit terminal B at the Q8 Control Solenoid Valve Assembly X4 connector and ground.
   - **If not between 11-13 V**

     Replace the Q8 Control Solenoid Valve Assembly.

   - **If between 11-13 V**
5. Verify the scan tool Transmission OSS parameter is between 745-825 RPM when performing the output shaft speed test. Refer to **Control Solenoid Valve and Transmission Control Module Assembly Input Shaft Speed/Output Shaft Speed Input Test**.
   - **If not between 745-825 RPM**

     Replace the Q8 Control Solenoid Valve Assembly.

   - **If between 745-825 RPM**
6. Verify there is no damage to the park gear, or misalignment between the B14A Transmission Output Shaft Speed Sensor and the park gear.
   - **If the park gear is damaged or misaligned**

     Repair or replace as necessary.

   - **If the park gear is not damaged or misaligned**
7. Replace the B14A Transmission Output Shaft Speed Sensor.

Repair Instructions

Perform the **Diagnostic Repair Verification** after completing the repair.

- Perform the **Transmission Adaptive Values Learn** following all transmission repairs.
- **Input and Output Speed Sensor Installation** .
- **Input and Output Speed Sensor Removal** .
- **Control Module References** for Control Solenoid Valve Assembly replacement, programming and setup.

DTC P0741 OR P0742 (GEN 2 WITH 1.4L (LUV) 1.8L (LUW, LWE))

Diagnostic Instructions

- Perform the **Diagnostic System Check - Vehicle** prior to using this diagnostic procedure.
- Review **Strategy Based Diagnosis** for an overview of the diagnostic approach.
- **Diagnostic Procedure Instructions** provides an overview of each diagnostic category.

DTC Descriptors

DTC P0741

Torque Converter Clutch (TCC) System Stuck Off

DTC P0742

Torque Converter Clutch (TCC) System Stuck On

Circuit/System Description

The torque converter clutch (TCC) pressure control solenoid is part of the control solenoid valve assembly which has no serviceable components. The TCC pressure control solenoid is a normally low pressure control solenoid. The TCC pressure control solenoid regulates transmission fluid pressure to the TCC regulator valve in the lower valve body and the TCC control valve in the fluid pump assembly. When vehicle operating conditions are appropriate to apply the torque converter clutch, the transmission control module (TCM) will increase TCC pressure control solenoid current flow thereby increasing pressure to move the TCC control valve into the apply position. When the TCC is fully applied, the engine is coupled directly to the transmission. TCC release is accomplished by the TCM decreasing current flow, dropping the apply pressure thereby allowing the TCC control valve to move to the release position. The TCM calculates torque converter slip speed based on the speed signal from the input shaft speed (ISS) sensor and engine RPM provided by the engine control module (ECM).

Conditions for Running the DTC

P0741

- DTC P0101, P0102, P0103, P0106, P0107, P0108, P0171, P0172, P0174, P0175, P0201, P0202, P0203, P0204, P0205, P0206, P0207, P0208, P0300, P0301, P0302, P0303, P0304, P0305, P0306, P0307, P0308, P0401, P042E, P0716, P0717, P0722, P0723, P0741, P0742, P2763, or P2764 is not set.

- Engine speed is 400-7, 500 RPM or greater for 5 s.
- Ignition voltage is 9-32 V.
- Transmission fluid temperature is between -6.7 to +130°C (+20 to +266°F).
- Throttle position is 8% or greater.
- Engine torque is 50 N.m (36 lb ft) or greater.
- Engine torque signal is valid.
- Throttle position signal is valid.
- TCM detects the transmission gear ratios listed below for the commanded gear when TCC is commanded ON:
  - 2nd gear ratio is between 2.75-3.17.
  - 3rd gear ratio is between 1.78-2.04.
  - 4th gear ratio is between 1.35-1.55.
  - 5th gear ratio is between 0.93-1.07.
  - 6th gear ratio is between 0.70-0.80.
- DTC runs continuously when the above conditions are met.

P0742

- DTC P0101, P0102, P0103, P0106, P0107, P0108, P0171, P0172, P0174, P0175, P0201, P0202, P0203, P0204, P0205, P0206, P0207, P0208, P0300, P0301, P0302, P0303, P0304, P0305, P0306, P0307, P0308, P0401, P042E, P0716, P0717, P0722, P0723, P0741, P0742, P2763, or P2764 is not set.
- Engine speed is 400-7, 500 RPM for 5 s.
- Ignition voltage is 9-32 V.
- Transmission fluid temperature is between 15-130°C (59-266°F).
- Calculated throttle position was 10% or greater and has not dropped below 2%.
- Engine torque signal is valid.
- Throttle position signal is valid.
- Engine torque is 60 N.m (44 lb ft) or greater.
- Vehicle speed greater than 1 km/h (0.6 mph).
- TCC is commanded OFF.
- Engine torque signal is valid.
- Throttle position signal is valid.
- DTC runs continuously when the above conditions are met.

Conditions for Setting the DTC

P0741

- TCC pressure command is 500 kPa (73 PSI) or greater for 2 s.
- TCM detects TCC slip is 130 RPM or greater for 5 s.

- The above conditions must occur 2 times.

P0742

TCM detects the TCC slip is between -50 and +13 RPM for 1 s when TCC is commanded OFF. This condition must occur 8 times.

Action Taken When the DTC Sets

P0741

- P0741 is a Type B DTC.
- TCM inhibits 6th gear.
- TCM initiates Hot Mode shift pattern.
- TCM commands the TCC OFF.

P0742

- P0742 is a Type A DTC.
- TCM initiates Hot Mode shift pattern.
- TCM freezes transmission adaptive functions.
- TCM commands the TCC ON.
- TCM inhibits neutral idle.

Conditions for Clearing the DIC/DTC

- P0741 is a Type B DTC.
- P0742 is a Type A DTC.

Reference Information

Schematic Reference

Automatic Transmission Controls Schematics

Connector End View Reference

- **COMPONENT CONNECTOR END VIEWS - INDEX**
- **INLINE HARNESS CONNECTOR END VIEWS - INDEX**

Description and Operation

- **Electronic Component Description**
- **Transmission Component and System Description**

- **Transmission General Description**

Electrical Information Reference

- **Circuit Testing**
- **Connector Repairs**
- **Testing for Intermittent Conditions and Poor Connections**
- **Wiring Repairs**

DTC Type Reference

Powertrain Diagnostic Trouble Code (DTC) Type Definitions

Scan Tool Reference

Control Module References for scan tool information

Special Tools

DT-48616 Solenoid Assembly Test Kit & Adapter Harness

For equivalent regional tools, refer to **Special Tools** .

Circuit/System Verification

1. Ignition ON, engine OFF.
2. Verify DTC P0716, P0717, P07BF, or P07C0 was not set by reviewing the scan tool TCM Failure Records.
   - **If any of the DTCs were set**

     Refer to **DTC P0716, P0717, P07BF, or P07C0**.

   - **If none of the DTCs were set**
3. Engine idling, transmission in Park, with parking brake applied and drive wheels chocked.
4. Verify the transmission fluid level and condition is correct. Refer to **Transmission Fluid Level and Condition Check**.
   - **If the transmission fluid level and condition is not correct**

     Repair as necessary.

   - **If the transmission fluid level and condition is correct**
5. Ignition ON, clear the TCM DTCs with a scan tool.
6. Verify DTC P0741 or P0742 does not set while performing a road test. Refer to **Road Test**.
   - **If DTC P0741 or P0742 sets**

Refer to Circuit/System Testing below.

- **If DTC P0741 or P0742 does not set**

7. Operate the vehicle within the Conditions for Running the DTC. You may also operate the vehicle within the conditions that you observed from the Freeze Frame/Failure Records data.
8. Verify the DTC does not set.
   - **If the DTC sets**

     Refer to Circuit/System Testing below.

   - **If the DTC does not set**
9. All OK.

Circuit/System Testing

1. Engine idling at the normal operating temperature.
2. Verify the transmission line pressures are within the specified range. Refer to **Line Pressure Check**, and **Solenoid Valve Pressure (Gen 1)** , **Solenoid Valve Pressure (Gen 2)** .
   - **If the pressures are not within range**

     Refer to **Fluid Pressure High or Low**.

   - **If the pressures are within range**
3. Ignition OFF, remove the Q8 Control Solenoid Valve Assembly.
4. Verify the pressure changes for all solenoids when performing the solenoid test. Refer to **Control Solenoid Valve and Transmission Control Module Assembly Solenoid Performance Test**.
   - **If the pressure does not change**

     Replace the Q8 Control Solenoid Valve Assembly.

   - **If the pressure changes**
5. Verify the mechanical conditions listed below do not exist. Repair or replace as necessary.

P0741 Upper Valve Body

Release exhaust port/orifice plugged or blocked.

P0741 or P0742 - Upper Valve Body

Torque converter clutch regulator valve stuck/sticking - debris, binding, damaged valve, or scored bore.

P0741 - Channel Plate and Spacer Plate

Oil channels or orifices blocked by debris.

P0741 or P0742 - Fluid Pump Assembly

Torque converter clutch control valve stuck/sticking - debris, binding, damaged valve, or scored bore.

P0741 - Torque Converter

- Torque converter clutch delamination or material worn off.
- Converter bolts too long damaging the clutch apply surface.
- Damaged seal.

P0741 - Support

Damaged seal.

P0741 or P0742 - A/Trans Case Cover (403)

- Pressure release blow-off not seating/sealing.
- Damaged spring.

P0741 - Turbine Shaft O-ring Seal

Cut or damaged.

P0741 or P0742 - Q8 Control Solenoid Valve Assembly

- Torque converter clutch pressure control solenoid stuck OFF or leaking.
- Torque converter clutch pressure control solenoid stuck ON.
- Control signal fluid supply leak due to valve body filter plate assembly cracked, or damaged gasket seal.

Repair Instructions

Perform the **Diagnostic Repair Verification** after completing the repair.

- Perform the **Transmission Adaptive Values Learn** following all transmission repairs.
- **Control Valve Body Assembly Removal**
- **Control Module References** for Control Solenoid Valve Assembly replacement, programming and setup.

DTC P0751 OR P0752 (GEN 2 WITH 1.4L (LUV) 1.8L (LUW, LWE))

Diagnostic Instructions

- Perform the **Diagnostic System Check - Vehicle** prior to using this diagnostic procedure.
- Review **Strategy Based Diagnosis** for an overview of the diagnostic approach.
- **Diagnostic Procedure Instructions** provides an overview of each diagnostic category.

DTC Descriptors

DTC P0751

Shift Solenoid Valve 1 Performance - Stuck Off

DTC P0752

Shift Solenoid Valve 1 Performance - Stuck On

Circuit/System Description

Shift solenoid valve 1 is part of the control solenoid valve assembly, which has no serviceable components. The solenoid operates by the transmission control module (TCM) turning the low side driver ON or OFF. When the shift solenoid valve 1 is commanded OFF, the plunger forces the metering ball against the actuator feed limit seat, blocking the flow and any existing pressure is exhausted through the exhaust port. When the shift solenoid valve 1 is commanded ON, the internal plunger moves, allowing the metering valve to move away from the actuator feed limit seat and against the exhaust seat, creating signal fluid pressure. The signal fluid pressure acts against the clutch select valve 2 to overcome the valve spring force, moving the valve to the apply position. Fluid pressure from the R1/4-5-6 regulator valve flows through clutch select valve 2 and is directed to either the low and reverse clutch or the 4-5-6 clutch, depending on the position of clutch select valve 2.

Conditions for Running the DTC

- DTC P0101, P0102, P0103, P0106, P0107, P0108, P0171, P0172, P0174, P0175, P0201, P0202, P0203, P0204, P0205, P0206, P0207, P0208, P0300, P0301, P0302, P0303, P0304, P0305, P0306, P0307, P0308, P0401, P042E, P0716, P0717, P0722, P0723, or P182E is not set.
- Transmission fluid temperature is -6.6°C (20°F) or greater.
- Engine speed is between 400-7, 500 RPM for 5 s.
- Output shaft speed is 100 RPM or greater, or the throttle position is 0.5% or greater.
- Ignition voltage is 9-32 V.
- Shift is complete.
- Engine torque signal is valid.
- Throttle position signal is valid.
- High-Side driver is enabled.
- DTC runs continuously when above conditions are met.

Conditions for Setting the DTC

P0751

- Commanded gear is 1st.
- TCM detects gear ratio 1.37-1.52.
- Gearbox slip is 400 RPM or greater for 2 s.
- Conditions listed above have to occur 8 times.

P0752

- Commanded gear is 3rd.
- Transmission has achieved 1st or 2nd.
- Gear slip is 400 RPM or greater for 1.5 s.
- TCM commands 4th gear if above conditions exist and detects a gear ratio of 4.35-4.81 for 1.5 s.
- Conditions listed above have to occur 5 times.

Action Taken When the DTC Sets

P0751

- P0751 is a type B DTC.
- TCM inhibits 1st gear.
- TCM inhibits Neutral idle.

P0752

- P0752 is a type A DTC.
- TCM limits the transmission to 2nd range and reverse.
- TCM inhibits Tap Up/Down function.
- TCM inhibits manual shifting of forward gears.
- TCM inhibits auto grade braking.
- TCM disables neutral idle.
- TCM freezes adapts.
- TCM commands maximum line pressure.
- TCM commands 2nd gear if transmission is in a forward range and the output speed is less than 1350 RPM, or neutral if the output speed is 1350 RPM or greater.

Conditions for Clearing the DTC

- P0751 is a type B DTC.
- P0752 is a type A DTC.

Reference Information

Schematic Reference

Automatic Transmission Controls Schematics

Connector End View Reference

- **COMPONENT CONNECTOR END VIEWS - INDEX**

- **INLINE HARNESS CONNECTOR END VIEWS - INDEX**

Description and Operation

- **Drive Range, First Gear Engine Braking (Gen 1)** , **Drive Range, First Gear Engine Braking (Gen 2/Hybrid)**
- **Drive Range, Third Gear (Gen 1)** , **Drive Range, Third Gear (Gen 2/Hybrid)**
- **Electronic Component Description**
- **Transmission Component and System Description**
- **Transmission General Description**

DTC Type Reference

Powertrain Diagnostic Trouble Code (DTC) Type Definitions

Scan Tool Reference

Control Module References for scan tool information

Circuit/System Verification

NOTE: If other DTCs are set, diagnose those DTCs first.

1. Ignition ON, engine OFF.
2. Verify no other TCM DTCs are set using a scan tool.
   - **If another DTC is set**

     Refer to **Diagnostic Trouble Code (DTC) List - Vehicle** .

   - **If no other DTCs are set**
3. Engine idling at the normal operating temperature, transmission in Park, with parking brake applied and drive wheels chocked.
4. Verify the transmission fluid level and condition is correct. Refer to **Transmission Fluid Level and Condition Check**.
   - **If the transmission fluid level and condition is not correct**

     Repair as necessary.

   - **If the transmission fluid level and condition is correct**
5. Ignition ON, clear the TCM DTCs with a scan tool.
6. From a stop, accelerate to 72 km/h (45 mph) with the calculated throttle position greater than 15%. Perform this test 8 times.
7. Verify DTC P0751 or P0752 did not set.

- **If DTC P0751 or P0752 sets**

  Refer to Circuit/System Testing below.

- **If DTC P0751 or P0752 does not set**

8. Operate the vehicle within the Conditions for Running the DTC. You may also operate the vehicle within the conditions that you observed from the Freeze Frame/Failure Records data.
9. Verify the DTC does not set.
   - **If the DTC sets**

     Refer to Circuit/System Testing below.

   - **If the DTC does not set**
10. All OK.

Circuit/System Testing

WARNING: Refer to Parking Brake and Drive Wheels Warning .

NOTE: You must perform the Circuit/System Verification first.

1. Engine idling at the normal operating temperature.
2. Verify the transmission line pressures are within the specified range. Refer to **Line Pressure Check**, and **Solenoid Valve Pressure (Gen 1)** , **Solenoid Valve Pressure (Gen 2)** .
   - **If the pressures are not within range**

     Refer to **Fluid Pressure High or Low**.

   - **If the pressures are within range**
3. Ignition OFF, remove the Q8 Control Solenoid Valve Assembly.
4. Verify the pressure changes for all solenoids when performing the solenoid test. Refer to **Control Solenoid Valve and Transmission Control Module Assembly Solenoid Performance Test**.
   - **If the pressure does not change**

     Replace the Q8 Control Solenoid Valve Assembly.

   - **If the pressure changes**
5. Verify the mechanical conditions listed below do not exist. Repair or replace as necessary.

P0751 - Control Valve Body

- Clutch select valve bore plug undersized. Plug should be a valve fit in the bore.

- Check ball #1 missing, damaged/malformed.
- Seat for check ball #1 damaged or leaking.

P0751 or P0752 - Control Valve Body

- Clutch select valve stuck from debris, sediment, binding, or a scored bore.
- Low and reverse and 4-5-6 clutch regulator valve stuck or sticking from debris, sediment, binding, or a scored bore.

P0751 or P0752 - Channel Plate and Spacer Plate

Oil channels or orifices blocked by debris.

P0751 or P0752 - Q8 Control Solenoid Valve Assembly

- Not pressurizing due to shift solenoid valve 1 being stuck OFF or leaking.
- Pressure not exhausting due to shift solenoid valve 1 being stuck ON.
- Control signal fluid supply leak due to valve body filter plate assembly cracked, blocked, or damaged gasket seal.

P0752 Output Carrier Assembly

Output carrier pinion pins too high or too low.

Repair Instructions

Perform the **Diagnostic Repair Verification** after completing the repair.

- Perform the **Transmission Adaptive Values Learn** following all transmission repairs.
- **Control Module References** for Control Solenoid Valve Assembly replacement, programming and setup.

DTC P0776 OR P0777 (GEN 2 WITH 1.4L (LUV) 1.8L (LUW, LWE))

Diagnostic Instructions

- Perform the **Diagnostic System Check - Vehicle** prior to using this diagnostic procedure.
- Review **Strategy Based Diagnosis** for an overview of the diagnostic approach.
- **Diagnostic Procedure Instructions** provides an overview of each diagnostic category.

DTC Descriptors

DTC P0776

Pressure Control Solenoid Valve 2 Stuck Off

DTC P0777

Pressure Control Solenoid Valve 2 Stuck On

Circuit/System Description

Pressure control solenoid valve 2 is part of the control solenoid valve assembly, which has no serviceable components. Pressure control solenoid valve 2 regulates transmission fluid pressure to the 3-5-R regulator valve, which controls pressure to the 3-5-R clutch. The transmission control module (TCM) calculates gear ratio based on the speed signals from the input shaft speed (ISS) sensor and the output shaft speed (OSS) sensor. The TCM compares the expected transmission gear ratio to the calculated gear ratio for each commanded gear.

Conditions for Running the DTC

P0776

- DTC P0101, P0102, P0103, P0106, P0107, P0108, P0171, P0172, P0174, P0175, P0201, P0202, P0203, P0204, P0205, P0206, P0207, P0208, P0300, P0301, P0302, P0303, P0304, P0305, P0306, P0307, P0308, P0401, P042E, P0716, P0717, P0722, P0723, or P182E is not set.
- Engine speed is 400-7, 500 RPM for 5 s.
- Ignition voltage is 9-32 V.
- Transmission fluid temperature is -6.7°C (20°F) or greater.
- Transmission output speed is 100 RPM or greater, or the throttle position is 0.5% or greater.
- Throttle position signal is valid.
- High side driver is enabled.
- Commanded range is reverse, 3rd gear or 5th gear.
- DTC runs continuously when the above conditions are met.

P0777

- DTC P0101, P0102, P0103, P0106, P0107, P0108, P0171, P0172, P0174, P0175, P0201, P0202, P0203, P0204, P0205, P0206, P0207, P0208, P0300, P0301, P0302, P0303, P0304, P0305, P0306, P0307, P0308, P0401, P042E, P0716, P0717, P0722, P0723, or P182E is not set.
- Engine speed is 400-7, 500 RPM for 5 s.
- Ignition voltage is 9-32 V.
- Transmission fluid temperature is -6.7°C (20°F) or greater.
- Transmission output shaft speed is 100 RPM or greater, or the throttle position is 0.5% or greater.
- Throttle position signal is valid.
- High side driver is enabled.
- Throttle position is 10% or greater and the engine torque is 45 N.m (33 lb ft) or greater.
- DTC runs continuously during shift when the 3-5-R clutch is commanded OFF, until commanded range is attained.

Conditions for Setting the DTC

P0776 - Condition 1

- Commanded gear is 3rd.
- Gearbox slip of 400 RPM or greater is detected for 2.5 s.
- TCM commands 4th gear if the above conditions exist and detects a gear ratio of 1.37-1.52 for 3 s.
- Conditions listed above have to occur 2 times.

P0776 - Condition 2

- Commanded gear is 5th.
- Gearbox slip of 400 RPM or greater is detected for 3 s.
- TCM commands 6th gear if the above conditions exist and detects 6th gear ratio for 3.5 s.
- Conditions listed above have to occur 3 times.

P0777

- The TCM detects an incorrect off-going clutch gear ratio, or tie-up, when the 3-5-R clutch is commanded OFF for 1 s.
- The transmission input shaft speed is 400 RPM or less from the anticipated input shaft speed.
- The conditions listed above must occur 3 times.

Action Taken When the DTC Sets

P0776

- P0776 is a Type A DTC.
- TCM commands maximum line pressure.
- TCM freezes transmission adaptive functions.
- TCM inhibits TAP Up/TAP Down function.
- TCM inhibits manual shifting of forward gears.
- TCM inhibits powertrain braking.
- TCM inhibits auto grade braking.
- TCM inhibits neutral idle.
- TCM commands 2nd gear if the transmission is in a forward gear and the output speed is less than 700 RPM.
- TCM commands neutral if the output speed is 700 RPM or greater.

P0777

- P0777 is a Type A DTC.
- TCM commands maximum line pressure.
- TCM limits the transmission to reverse and 3rd gear.

- TCM freezes transmission adaptive functions.
- TCM inhibits TAP Up/TAP Down function.
- TCM inhibits manual shifting of forward gears.
- TCM inhibits neutral idle.
- TCM inhibits powertrain braking.
- TCM inhibits auto grade braking.

Conditions for Clearing the DTC

P0776 and P0777 are Type A DTCs.

Diagnostic Aids

Before performing a road test, configure and setup the scan tool for snapshot mode. This will allow you to display, monitor, and verify multiple transmission data parameters at one time, after the road test.

Reference Information

Schematic Reference

Automatic Transmission Controls Schematics

Connector End View Reference

- **COMPONENT CONNECTOR END VIEWS - INDEX**
- **INLINE HARNESS CONNECTOR END VIEWS - INDEX**

Description and Operation

- **Drive Range, Third Gear (Gen 1)** , **Drive Range, Third Gear (Gen 2/Hybrid)**
- **Drive Range - Fourth Gear (Gen 1)** , **Drive Range - Fourth Gear (Gen 2/Hybrid)**
- **Drive Range, Fifth Gear (Gen 2/Hybrid)** , **Drive Range, Fifth Gear (Gen 1)**
- **Electronic Component Description**
- **Transmission Component and System Description**
- **Transmission General Description**

DTC Type Reference

Powertrain Diagnostic Trouble Code (DTC) Type Definitions

Scan Tool Reference

Control Module References for scan tool information

Circuit/System Verification

WARNING: Refer to Parking Brake and Drive Wheels Warning .

NOTE: If other DTCs are set, diagnose those DTCs first.

1. Ignition ON.
2. Verify DTC P0716, P0717, P0722, P0723, P077C, P077D, P07BF, or P07C0 was not set by reviewing the scan tool Freeze Frame/Failure Records data.
   - **If any of the DTCs were set**

     Refer to **Diagnostic Trouble Code (DTC) List - Vehicle** .

   - **If none of the DTCs were set**
3. Engine idling, transmission in Park, with parking brake applied and drive wheels chocked.
4. Verify the transmission fluid level and condition is correct. Refer to **Transmission Fluid Level and Condition Check**.
   - **If the transmission fluid level and condition is not correct**

     Repair as necessary.

   - **If the transmission fluid level and condition is correct**
5. Ignition ON, clear the TCM DTCs with a scan tool.
6. Verify DTC P0776 or P0777 does not set while performing a road test. Refer to **Road Test**.
   - **If DTC P0776 or P0777 sets**

     Refer to Circuit/System Testing below.

   - **If DTC P0776 or P0777 does not set**
7. Operate the vehicle within the Conditions for Running the DTC. You may also operate the vehicle within the conditions that you observed from the Freeze Frame/Failure Records data.
8. Verify the DTC does not set.
   - **If the DTC sets**

     Refer to Circuit/System Testing below.

   - **If the DTC does not set**
9. All OK.

Circuit/System Testing

NOTE: You must perform the Circuit/System Verification first.

1. Engine idling at the normal operating temperature.

2. Verify the transmission line pressures are within the specified range. Refer to **Line Pressure Check**, and **Solenoid Valve Pressure (Gen 1)** , **Solenoid Valve Pressure (Gen 2)** .
    - **If the pressures are not within range**

      Refer to **Fluid Pressure High or Low**.

    - **If the pressures are within range**
3. Ignition OFF, remove the Q8 Control Solenoid Valve Assembly.
4. Verify the pressure changes for all solenoids when performing the solenoid test. Refer to **Control Solenoid Valve and Transmission Control Module Assembly Solenoid Performance Test**.
    - **If the pressure does not change**

      Replace the Q8 Control Solenoid Valve Assembly.

    - **If the pressure changes**
5. Verify the mechanical conditions listed below do not exist. Repair or replace as necessary.

DTC P0776 or P0777 - Control Valve Body Assembly

- Actuator feed limit circuit supply fluid to solenoids restricted or not available - debris or sediment blockage.
- 3-5-R Regulator Valve stuck/sticking - debris, binding, damaged valve, or scored bore.
- Control valve body ball check valve not seating correctly - debris.

DTC P0776 - 3-5-R and 4-5-6 Clutch Housing Assembly

3-5-R clutch backing plate retaining ring not seated, causing clutch pack over-travel.

DTC P0776 or P0777 - Torque Converter (w/Fluid Pump) Housing Assembly

Fluid pump housing/gear damaged/scored.

DTC P0776 - Channel Plate and Spacer Plate

Oil channels or orifices blocked by debris.

DTC P0776 or P0777 - Q8 Control Solenoid Valve Assembly

- Clutch Pressure Control Solenoid 2 stuck ON/OFF.
- O-ring seals leaking.
- Valve body filter plate assembly cracked, blocked, or damaged gasket seal.

Repair Instructions

Perform the **Diagnostic Repair Verification** after completing the repair.

- Perform the **Transmission Adaptive Values Learn** following all transmission repairs.
- **Control Module References** for Control Solenoid Valve Assembly replacement, programming and setup

DTC P0796 OR P0797 (GEN 2 WITH 1.4L (LUV) 1.8L (LUW, LWE))

Diagnostic Instructions

- Perform the **Diagnostic System Check - Vehicle** prior to using this diagnostic procedure.
- Review **Strategy Based Diagnosis** for an overview of the diagnostic approach.
- **Diagnostic Procedure Instructions** provides an overview of each diagnostic category.

DTC Descriptors

DTC P0796

Pressure Control Solenoid Valve 3 Stuck Off

DTC P0797

Pressure Control Solenoid Valve 3 Stuck On

Circuit/System Description

Pressure control solenoid 3 is part of the control solenoid valve assembly, which has no serviceable components. Pressure control solenoid 3 regulates transmission fluid pressure to the R1/4-5-6 regulator valve which controls pressure to the reverse and low clutch and the 4-5-6 clutch. The transmission control module (TCM) calculates gear ratio based on the speed signals from the automatic transmission input shaft speed (ISS) sensor and the output shaft speed (OSS) sensor. The TCM compares the expected transmission gear ratio to the calculated gear ratio for each commanded gear.

Conditions for Running the DTC

P0796

- DTC P0101, P0102, P0103, P0106, P0107, P0108, P0171, P0172, P0174, P0175, P0201, P0202, P0203, P0204, P0205, P0206, P0207, P0208, P0300, P0301, P0302, P0303, P0304, P0305, P0306, P0307, P0308, P0401, P042E, P0716, P0717, P0722, P0723, or P182E is not set.
- Engine speed is 400-7, 500 RPM for 5 s.
- Transmission output speed is 100 RPM or greater or the throttle position is 0.5% or greater.
- Ignition voltage is 9-32 V.
- Transmission fluid temperature is -6.7°C (20°F) or greater.
- High side driver is enabled.
- Throttle position signal is valid.

P0797

- DTC P0101, P0102, P0103, P0106, P0107, P0108, P0171, P0172, P0174, P0175, P0201, P0202, P0203, P0204, P0205, P0206, P0207, P0208, P0300, P0301, P0302, P0303, P0304, P0305, P0306, P0307, P0308, P0401, P042E, P0716, P0717, P0722, P0723, or P182E is not set.
- Engine speed is 400-7, 500 RPM for 5 s.
- Transmission output speed is 100 RPM or greater or the throttle position is 0.5% or greater.
- Throttle position signal is valid.
- Ignition voltage is 9-32 V.
- Transmission fluid temperature is -6.7°C (20°F) or greater.
- High side driver is enabled.
- The throttle position is 10% or greater and the engine torque is 45 N.m (33 lb ft) or greater if attained gear is 1st free wheel.
- DTC runs continuously during shift when the 4-5-6 clutch is commanded OFF, until commanded range is attained.

Conditions for Setting the DTC

P0796

The TCM detects an incorrect gear ratio when the 4-5-6 clutch is commanded ON. This condition must occur 3 times.

P0797

The TCM detects an incorrect gear ratio change when the 4-5-6 clutch is commanded OFF during a shift. This must occur 3 times.

Action Taken When the DTC Sets

- P0796 and P0797 are Type A DTCs.
- TCM commands maximum line pressure.
- TCM freezes transmission adaptive functions.
- TCM inhibits TAP Up/TAP Down functions.
- TCM inhibits manual up, manual down shifts with the shift selector.
- TCM inhibits powertrain braking.
- TCM inhibits neutral idle.
- TCM inhibits auto grade braking.
- TCM limits the transmission to reverse and 3rd gear - DTC P0796 only.
- TCM limits the transmission to reverse and 4th gear - DTC P0797 only.

Conditions for Clearing the DIC/DTC

P0796 and P0797 are Type A DTCs.

Diagnostic Aids

Before performing a road test, configure and setup the scan tool for snapshot mode. This allows you to monitor, display, and verify multiple transmission data parameters at one time, after the road test.

Reference Information

Schematic Reference

Automatic Transmission Controls Schematics

Connector End View Reference

- **COMPONENT CONNECTOR END VIEWS - INDEX**
- **INLINE HARNESS CONNECTOR END VIEWS - INDEX**

Description and Operation

- **Drive Range - Fourth Gear (Gen 1)** , **Drive Range - Fourth Gear (Gen 2/Hybrid)**
- **Drive Range, Fifth Gear (Gen 2/Hybrid)** , **Drive Range, Fifth Gear (Gen 1)**
- **Drive Range, Sixth Gear (Gen 1)** , **Drive Range, Sixth Gear (Gen 2/Hybrid)**
- **Electronic Component Description**
- **Transmission Component and System Description**
- **Transmission General Description**

Electrical Information Reference

- **Circuit Testing**
- **Connector Repairs**
- **Testing for Intermittent Conditions and Poor Connections**
- **Wiring Repairs**

DTC Type Reference

Powertrain Diagnostic Trouble Code (DTC) Type Definitions

Scan Tool Reference

Control Module References for scan tool information

Circuit/System Verification

WARNING: Refer to Parking Brake and Drive Wheels Warning .

1. Ignition ON.
2. Verify DTC P0716, P0717, P0722, P0723, P077C, P077D, P07BF, or P07C0 was not set by reviewing the scan tool Freeze Frame/Failure Records data.
   - **If any of the DTCs were set**

     Refer to **Diagnostic Trouble Code (DTC) List - Vehicle** .

   - **If none of the DTCs were set**
3. Engine idling, transmission in Park, with parking brake applied and drive wheels chocked.
4. Verify the transmission fluid level and condition is correct. Refer to **Transmission Fluid Level and Condition Check**.
   - **If the transmission fluid level and condition is not correct**

     Repair as necessary.

   - **If the transmission fluid level and condition is correct**
5. Ignition ON, clear the TCM DTCs with a scan tool.
6. Verify DTC P0796 or P0797 does not set while performing a road test. Refer to **Road Test**.
   - **If DTC P0796 or P0797 sets**

     Refer to Circuit/System Testing below.

   - **If DTC P0796 or P0797 does not set**
7. Operate the vehicle within the Conditions for Running the DTC. You may also operate the vehicle within the conditions that you observed from the Freeze Frame/Failure Records data.
8. Verify the DTC does not set.
   - **If the DTC sets**

     Refer to Circuit/System Testing below.

   - **If the DTC does not set**
9. All OK.

Circuit/System Testing

NOTE: You must perform the Circuit/System Verification first.

1. Engine idling at the normal operating temperature.
2. Verify the transmission line pressures are within the specified range. Refer to **Line Pressure Check**, and **Solenoid Valve Pressure (Gen 1)** , **Solenoid Valve Pressure (Gen 2)** .
   - **If the pressures are not within range**

     Refer to **Fluid Pressure High or Low**.

- **If the pressures are within range**

3. Ignition OFF, remove the Q8 Control Solenoid Valve Assembly.
4. Verify the pressure changes for all solenoids when performing the solenoid test. Refer to **Control Solenoid Valve and Transmission Control Module Assembly Solenoid Performance Test**.
   - **If the pressure does not change**

     Replace the Q8 Control Solenoid Valve Assembly.

   - **If the pressure changes**
5. Verify the mechanical conditions listed below do not exist. Repair or replace as necessary.

P0796 or P0797 - Control Valve Body Assembly

4-5-6 Regulator Valve stuck/sticking - debris, binding, damaged valve, or scored bore.

P0796 - Transmission Cooling/Lubrication

- Restriction/leak in OAC, oil to air, cooler/radiator.
- Restricted/leaking/kinked/damaged transmission oil cooler lines.
- Restriction/leak in transmission fluid pump assembly.

P0796 - Automatic Transmission Fluid Filter Assembly

Oil filter or filter seal loose or damaged.

P0796 - Input Shaft Support

Input shaft tower seals damaged or leaking.

P0796 - 4-5-6 Clutch Housing Assembly

4-5-6 Clutch Piston Assembly damaged/leaking.

P0796 - Torque Converter (w/Fluid Pump) Housing Assembly

- Fluid pump housing vanes/rotor/slide damaged/scored.
- Fluid pump or torque converter overstressed due to high temperature.

P0796 - 4-5-6 Reaction Carrier Hub Assembly

4-5-6 Reaction Carrier Hub/Shaft - broken hub weld.

P0796 - 3-5-R and 4-5-6 Clutch Housing Assembly

4-5-6 Clutch Backing Plate Retaining Ring not seated/oriented, causing clutch pack/piston overtravel.

P0796 Output Carrier Assembly

Output carrier pinion pins too high or too low.

P0796 or P0797 - Q8 Control Solenoid Valve Assembly

- Clutch Pressure Control Solenoid 3 stuck ON/OFF.
- O-ring seals leaking.
- Valve body filter plate assembly cracked, blocked, or damaged gasket seal.

Repair Instructions

Perform the **Diagnostic Repair Verification** after completing the repair.

- Perform the **Transmission Adaptive Values Learn** following all transmission repairs.
- **Control Module References** for Control Solenoid Valve Assembly replacement, programming and setup.

DTC P0815, P0816, OR P0826

Diagnostic Instructions

- Perform the **Diagnostic System Check - Vehicle** prior to using this diagnostic procedure.
- Review **Strategy Based Diagnosis** for an overview of the diagnostic approach.
- **Diagnostic Procedure Instructions** provides an overview of each diagnostic category.

DTC Descriptors

DTC P0815

Upshift Switch Circuit

DTC P0816

Downshift Switch Circuit

DTC P0826

Up and Down Shift Switch Circuit

Diagnostic Fault Information

Circuit	Short to Ground	Open/High Resistance	Short to Voltage	Signal Performance
Signal	P0826	P0826	P0826	-

Typical Scan Tool Data

Driver Shift Request

Circuit	Short to Ground	Open	Short to Voltage
Signal	Invalid	None	Invalid/None
Ground	-	None	-

Circuit/System Description

When the shift lever is moved left of the D position, the transmission will enter sport mode. With the shift lever in this position, the transmission will enter manual mode if the gear shift lever is pressed forward or rearward. This allows the operator to select an upshift by pressing the gear shift lever forward, and downshift by pressing the gear shift lever rearward. The body control module (BCM) supplies an ignition circuit and a signal circuit to the shift controller. The shift controller has Hall-effect switches connected to a resistor array. When the lever is left of the D position, a voltage drop occurs across the resistor network. When the gear shift lever is pressed forward or rearward, a corresponding voltage drop occurs across the resistor network. This voltage drop is monitored by the BCM. The BCM will send the request to the transmission control module to perform the upshift or downshift. The TCM will not allow a downshift if the engine would be compromised by overspeeding.

Conditions for Running the DTC

P0815 or P0816

- DTC P0815, P0816, P0826, P1761, P182E, P1876, P1877, or P1915 is not set.
- Engine speed is 400-7, 500 RPM for 5 s.
- Ignition voltage is 9-32 V.
- Time since the last gear range change is 1 s or greater.
- DTC runs continuously when the above conditions are met.

P0826

- DTC P0826 or P1761 is not set.
- Engine speed is 400-7, 500 RPM for 5 s.
- Ignition voltage is 9-32 V.
- DTC runs continuously when the above conditions are met.

Conditions for Setting the DTC

P0815 - Condition 1

Transmission control module (TCM) detects an upshift request for 1 s with the shift lever in Park or Neutral.

P0815 - Condition 2

TCM detects an upshift request for 10 min with the shift lever in a forward range.

P0816 - Condition 1

TCM detects a downshift request for 1 s with the shift lever in Park or Neutral.

P0816 - Condition 2

TCM detects a downshift request for 10 min with the shift lever in a forward range.

P0826

TCM detects an invalid voltage on the Tap Up/Down signal circuit for 1 min.

Action Taken When the DTC Sets

- P0815, P0816, and P0826 are Type C DTCs.
- TCM inhibits Tap Up/Down function.

Conditions for Clearing the DTC

P0815, P0816, and P0826 are Type C DTCs.

Diagnostic Aids

A high resistance in the signal circuit may not set a DTC. Symptoms could include an inoperative manual mode Tap Up/Down, or a Tap Down shift when the Tap/Up button is pressed.

If battery positive voltage is not present at the shift selector lever, it will not cause a DTC to set, but will result in an inoperative manual mode Tap Up/Down.

Reference Information

Schematic Reference

Automatic Transmission Controls Schematics

Connector End View Reference

- **COMPONENT CONNECTOR END VIEWS - INDEX**
- **INLINE HARNESS CONNECTOR END VIEWS - INDEX**

Description and Operation

- **Transmission General Description**
- **Transmission Component and System Description**
- **Electronic Component Description**

Electrical Information Reference

- **Circuit Testing**
- **Connector Repairs**
- **Testing for Intermittent Conditions and Poor Connections**
- **Wiring Repairs**

DTC Type Reference

Powertrain Diagnostic Trouble Code (DTC) Type Definitions

Scan Tool Reference

Control Module References for scan tool information

Circuit/System Verification

WARNING: Refer to Parking Brake and Drive Wheels Warning .

NOTE: The engine may have to be started to move the shift lever out of the Park position. Once out of the Park position, the engine can be turned OFF.

1. Verify DTC P182E or P1915 was not set by reviewing the scan tool Freeze Frame/Failure Records.
   - **If DTC P182E or P1915 was set**

     Refer to **DTC P182E or P1915**.

   - **If DTC P182E or P1915 was not set**
2. Ignition ON, engine OFF.
3. Verify the scan Driver Shift Control Mode parameter displays Inactive with the shift lever in the Park, Reverse, Neutral and Drive positions, and Active when the shift lever is left of the Drive position.
   - **If the parameter does not display the correct values**

     Refer to Circuit/System Testing below.

   - **If the parameter displays the correct value**
4. Shift lever left of the D position.
5. Verify the scan tool Driver Shift Request parameter changes from None to Upshift when the shift lever is pressed forward, and from None to Downshift when the gear shift lever is pressed rearward.
   - **If the parameter does not display the correct values**

     Refer to Circuit/System Testing below.

- **If the parameter displays the correct value**

6. Operate the vehicle within the Conditions for Running the DTC. You may also operate the vehicle within the conditions that you observed from the Freeze Frame/Failure Records data.
7. Verify the DTC does not set.
   - **If the DTC sets**

     Refer to Circuit/System Testing below.

   - **If the DTC does not set**
8. All OK.

Circuit/System Testing

NOTE: You must perform the Circuit/System Verification first.

1. Ignition OFF, disconnect the harness connector from the S3 Transmission Shift Lever.
2. Test for less than 10 ohms between the vehicle harness connector ground circuit terminal 2 and ground.
   - **If 10 ohms or greater**

     Test for less than 2 ohms in the ground circuit end to end.

   - If 2 ohms or greater, repair the open/high resistance in the circuit.
   - If less than 2 ohms, repair the open/high resistance in the ground connection.
   - **If less than 10 ohms**
3. Ignition ON.
4. Test for 11-13 V at the vehicle harness connector between signal circuit terminal 3 and ground.
   - **If not between 11-13 V**
     1. Ignition OFF, disconnect the connector at the BCM.
     2. Test for infinite resistance between the signal circuit and ground.
        - If less than infinite resistance, repair the short to ground in the circuit.
        - If infinite resistance.
     3. Test for less than 2 ohms in the signal circuit end to end.
        - If 2 ohms or greater, repair the open/high resistance in the circuit.
        - If less than 2 ohms, replace the BCM.
   - **If between 11-13 V**
5. Ignition OFF, connect the harness connector at the S3 Transmission Shift Lever, ignition ON.
6. Test for voltage between the S3 Transmission Shift Lever connector signal circuit terminal 3 and ground, by back probing the connector, for the conditions listed below.
   - 2.0-4.6 V - Shift lever left of D, pressed forward
   - 5.1-7.3 V - Shift lever left of D, pressed rearward
   - 8.0-10.6 V - Shift lever left of D

- 11-13 V - Shift lever in D
  - **If voltage values are not correct**

    Replace the S3 Transmission Shift Lever.

  - **If voltage values are correct**

7. Replace the K9 Body Control Module.

Repair Instructions

Perform the **Diagnostic Repair Verification** after completing the diagnostic repair.

- **Transmission Control Replacement** for Transmission Shift Lever replacement.
- **Control Module References** for BCM replacement, programming and setup.

DTC P0850-P0852

Diagnostic Instructions

- Perform the **Diagnostic System Check - Vehicle** prior to using this diagnostic procedure.
- Review **Strategy Based Diagnosis** for an overview of the diagnostic approach.
- **Diagnostic Procedure Instructions** provides an overview of each diagnostic category.

DTC Descriptors

DTC P0850

Park/Neutral Position Switch Circuit

DTC P0851

Park/Neutral Position Switch Circuit Low Voltage

DTC P0852

Park/Neutral Position Switch Circuit High Voltage

Diagnostic Fault Information

Circuit	Short to Ground	Open/High Resistance	Short to Voltage	Signal Performance
Signal	P0850, P0851	P0850, P0852	P0850, P0852	-

Typical Scan Tool Data

Park/Neutral Position Switch

Circuit	Short to Ground	Open/High Resistance	Short to Voltage
Operating Conditions: Engine running, transmission in park at normal operating temperature **Parameter Normal Range:** Park/Neutral			
Signal	Park/Neutral	In-Gear	In-Gear

Circuit/System Description

The transmission manual shift shaft switch assembly, also known as the internal mode switch (IMS), is a sliding contact switch attached to the manual shift shaft inside the transmission case. The park/neutral position switch is integrated into the IMS and connects to the transmission control module (TCM) lead-frame through a short wire harness. The park/neutral signal circuit uses the TCM as a pass-through connector only. The TCM provides the low reference circuit to the PNP switch.

The Park/Neutral Signal is sent from the park/neutral switch directly to the Engine Control Module (ECM) and is used for engine start enable.

Conditions for Running the DTC

- Ignition voltage is between 8-18 V.
- Engine speed is 1000 RPM or greater.

Conditions for Setting the DTC

P0850 and P0851

- ECM detects the Park/Neutral switch signal equals 0 volts (Park/Neutral) when the IMS reports a Drive range.
- Throttle position is 10 percent or greater.
- Engine torque is 75 (55 lb ft) or greater.
- Vehicle speed is 10 km/h (6 mph) or greater.
- Above conditions must be met for.2 seconds.

P0852

ECM detects the Park/Neutral switch signal equals 12 volts (In-Gear) when the IMS reports a Park/Neutral range for 0.2 second.

Action Taken When the DTC Sets

- DTCs P0850, P0851, and P0852 are Type C DTCs.
- ECM uses IMS position, which is determined by the transmission control module and broadcast over GMLAN, for engine start-up.

Conditions for Clearing the DTC

DTCs P0850, P0851, and P0852 are Type C DTCs.

Reference Information

Schematic Reference

Automatic Transmission Controls Schematics

Connector End View Reference

- **COMPONENT CONNECTOR END VIEWS - INDEX**
- **INLINE HARNESS CONNECTOR END VIEWS - INDEX**

Description and Operation

- **Transmission General Description**
- **Electronic Component Description**
- **Transmission Component and System Description**

Electrical Information Reference

- **Circuit Testing**
- **Connector Repairs**
- **Testing for Intermittent Conditions and Poor Connections**
- **Wiring Repairs**

DTC Type Reference

Powertrain Diagnostic Trouble Code (DTC) Type Definitions

Scan Tool Reference

Control Module References for scan tool information

Special Tools

DT-48616-10 Adapter Harness

For equivalent regional tools, refer to **Special Tools** .

Circuit/System Verification

1. Ignition ON.
2. Verify that DTC P182E or P1915 is not set.
    - **If any of the DTCs are set**

      Refer to **DTC P182E or P1915**.

- **If none of the DTCs are set**

3. Verify the range selector lever cable is adjusted properly. Refer to **Range Selector Lever Cable Adjustment** .
   - **If the cable adjustment is not OK**

     Adjust, repair or replace as necessary.

   - **If the cable adjustment is OK**
4. Ignition ON.
5. Verify the scan tool transmission control module Internal Mode Switch parameter matches the gear shift lever position while slowly moving the gear shift lever from Park through all gear ranges.
   - **If any gear shift lever position does not match**

     Refer to **DTC P182E or P1915**.

   - **If all gear positions match**
6. Verify the scan tool engine control module Park/Neutral Position Switch parameter displays Park/Neutral when in Park or Neutral and In-Gear when in Reverse or Drive.
   - **If Park/Neutral or In Gear is not displayed**

     Refer to Circuit/System Testing below.

   - **If Park/Neutral and In Gear is displayed**
7. Operate the vehicle within the Conditions for Running the DTC. You may also operate the vehicle within the conditions that you observed from the Freeze Frame/Failure Records data.
8. Verify the DTC does not set.
   - **If a DTC sets**

     Refer to Circuit/System Testing below.

   - **If a DTC does not set**
9. All OK

Circuit/System Testing

NOTE: You must perform the Circuit/System Verification first.

1. Ignition OFF, disconnect the X1 Q8 Control Solenoid Valve Assembly harness connector at the automatic transmission.
2. Install the **DT-48616-10** adapter harness to the vehicle harness connector.

NOTE: All testing in steps 3 through 5 will be performed at the DT-48616-10 adapter harness connector.

3. Test for less than 5 ohms between the ground circuit terminal 2 and ground.
    - **If 5 ohms or greater**
    1. Ignition OFF.
    2. Test for less than 2 ohms in the ground circuit end to end.
        - If 2 ohms or greater, repair the open/high resistance in the circuit.
        - If less than 2 ohms, repair the open/high resistance in the ground connection.
    - **If less than 5 ohms**
4. Ignition ON.
5. Test for 11-13 V between signal circuit terminal 3 and ground.
    - **If not between 11-13 V**
    1. Ignition OFF, remove the harness connector at the K20 Engine Control Module.
    2. Test for infinite resistance between signal circuit terminal 3 and ground.
        - If less than infinite resistance, repair the short to ground in the circuit.
        - If infinite resistance.
    3. Test for less than 2 ohms in the signal circuit end to end.
        - If 2 ohms or greater, repair the open/high resistance in the circuit.
        - If less than 2 ohms, replace the K20 Engine Control Module.
    - **If between 11-13 V**
6. Ignition OFF, disconnect the **DT-48616-10** adapter harness from the vehicle wire harness.
7. Remove the transmission control valve body cover.
8. Connect the vehicle harness connector to the Q8 Control Solenoid Valve Assembly.
9. Disconnect the B15 Transmission Internal Mode Switch electrical connector from the Q8 Control Solenoid Valve Assembly.
10. Ignition ON.
11. Verify the scan tool ECM Park/Neutral Position Switch parameter displays In Gear.
    - **If In Gear is not displayed**
    1. Ignition OFF, disconnect the X1 harness connector at the Q8 Control Solenoid Valve Assembly.
    2. Install the **DT-48616-10** adapter harness to the Q8 Control Solenoid Valve Assembly X1 connector.
    3. Test for infinite resistance between the **DT-48616-10** adapter harness connector terminals 2 and 3.
        - If less than infinite resistance, replace the Q8 Control Solenoid Valve Assembly.
        - If infinite resistance, replace the K20 Engine Control Module.
        - **If In Gear is displayed**
12. Connect a 3A fused jumper between the Q8 Control Solenoid Valve Assembly connector signal circuit terminal A and ground.
13. Verify the scan tool engine control module Park/Neutral Position Switch parameter displays Park/Neutral.
    - **If Park/Neutral is not displayed**
    1. Ignition OFF, disconnect the X1 harness connector at the Q8 Control Solenoid Valve Assembly.

2. Install the **DT-48616-10** adapter harness to the Q8 Control Solenoid Valve Assembly X1 connector.
3. Test for less than 2 ohms between adapter harness connector terminal 3 and the Q8 Control Solenoid Valve Assembly connector signal circuit terminal A.
    - If 2 ohms or greater, replace the Q8 Control Solenoid Valve Assembly.
    - If less than 2 ohms, replace the K20 Engine Control Module.

- **If Park/Neutral is displayed**

14. Replace the B15 Transmission Internal Mode Switch.

Repair Instructions

Perform the **Diagnostic Repair Verification** after completing the repair.

- Perform the **Transmission Adaptive Values Learn** following all transmission repairs.
- **Range Selector Lever Cable Adjustment**
- **Control Valve Body Cover Replacement (1.8L LWE and LUW)** , **Control Valve Body Cover Replacement (1.4L LUV)**
- **Manual Shift Detent Lever with Shaft Position Switch Assembly Replacement**
- **Control Valve Body Cover Replacement (1.8L LWE and LUW)** , **Control Valve Body Cover Replacement (1.4L LUV)**
- **Control Module References** for ECM or control solenoid valve assembly replacement, programming and setup

DTC P0961-P0963

Diagnostic Instructions

- Perform the **Diagnostic System Check - Vehicle** prior to using this diagnostic procedure.
- Review **Strategy Based Diagnosis** for an overview of the diagnostic approach.
- **Diagnostic Procedure Instructions** provides an overview of each diagnostic category.

DTC Descriptors

DTC P0961

Line Pressure Control Solenoid Valve Performance

DTC P0962

Line Pressure Control Solenoid Valve Control Circuit Low Voltage

DTC P0963

Line Pressure Control Solenoid Valve Control Circuit High Voltage

Circuit/System Description

The line pressure control solenoid is part of the control solenoid valve assembly which has no serviceable components. The normally high line pressure control solenoid regulates and directs the line pressure control solenoid oil pressure to the pressure regulator valve. Increasing line pressure control solenoid pressure increases transmission line pressure. The transmission control module (TCM) varies the current to the line pressure control solenoid by controlling the amount of time the low side driver is ON and OFF. Decreasing the ON time, decreases the current to the line pressure control solenoid, which increases line pressure control solenoid oil pressure by closing OFF the solenoid exhaust port. Increasing the current to the line pressure control solenoid decreases line pressure control oil pressure by opening the solenoid exhaust port. Line pressure control solenoid power is supplied by the TCM through a high side driver. The high side driver protects the circuit and components from excessive current flow. If excessive current flow is detected, the high side driver will turn OFF. When the fault is corrected, the high side driver will reset.

Conditions for Running the DTC

- Engine speed is 400-7, 500 RPM for 5 s.
- Ignition voltage is 9-32 V.
- Runs continuously when above conditions are met.

Conditions for Setting the DTC

P0961

TCM detects an internal electrical malfunction of the line pressure control solenoid circuit where the measured line pressure control solenoid current does not equal the commanded line pressure control solenoid current for 5 s.

P0962

TCM detects a short to ground on the line pressure control solenoid control circuit for 2 s.

P0963

TCM detects an open circuit or short to voltage on the line pressure control solenoid control circuit for 5 s.

Action Taken When the DTC Sets

P0961 or P0963

- P0961 and P0963 are Type B DTCs.
- TCM freezes transmission adaptive functions.
- TCM commands maximum line pressure.

P0962

- P0962 is a Type A DTC.

- TCM limits the transmission to 4th gear and reverse.
- TCM inhibits the torque converter clutch (TCC).
- TCM commands maximum line pressure.
- TCM freezes transmission adaptive functions.
- TCM turns the high side driver OFF.
- TCM inhibits neutral idle.
- TCM inhibits Tap Up/Down function.
- TCM inhibits manual shifting of forward gears.
- TCM enables torque management.

Conditions for Clearing the DTC

- P0961 and P0963 are Type B DTCs.
- P0962 is a Type A DTC.

Reference Information

Schematic Reference

Automatic Transmission Controls Schematics

Connector End View Reference

- **COMPONENT CONNECTOR END VIEWS - INDEX**
- **INLINE HARNESS CONNECTOR END VIEWS - INDEX**

Description and Operation

- **Electronic Component Description**
- **Transmission Component and System Description**
- **Transmission General Description**

Electrical Information Reference

- **Circuit Testing**
- **Connector Repairs**
- **Testing for Intermittent Conditions and Poor Connections**
- **Wiring Repairs**

DTC Type Reference

Powertrain Diagnostic Trouble Code (DTC) Type Definitions

Scan Tool Reference

Control Module References for scan tool information

Special Tools

DT-48616-10 Adapter Harness

For equivalent regional tools, refer to **Special Tools** .

Circuit/System Verification

WARNING: Refer to Parking Brake and Drive Wheels Warning .

1. Engine idling, transmission in Park, with service brake applied. Move the S3 Transmission Shift Lever into each gear position for 2-3 s and back into the Park position.
2. Verify the scan tool parameters listed below do not display Malfunction:
   - Line Pressure Control Solenoid Valve Performance Test Status
   - Line Pressure Control Solenoid Valve Control Circuit Low Voltage Test Status
   - Line Pressure Control Solenoid Valve Control Circuit High Voltage Test Status
   - **If Malfunction is displayed**

     Refer to Circuit/System Testing below.

   - **If Malfunction is not displayed**
3. Operate the vehicle within the Conditions for Running the DTC. You may also operate the vehicle within the conditions that you observed from the Freeze Frame/Failure Records.
4. Verify the DTC does not set.
   - **If the DTC sets**

     Refer to Circuit/System Testing below.

   - **If the DTC does not set**
5. All OK.

Circuit/System Testing

NOTE: You must perform the Circuit/System Verification first.

1. Ignition OFF, remove the Q8 Control Solenoid Valve Assembly.
2. Verify the Q8 Control Solenoid Valve Assembly is not contaminated with any debris and clean as necessary. Refer to **Control Solenoid Valve and Transmission Control Module Assembly Inspection (Gen 2 with 1.4L (LUV) 1.8L (LUW, LWE))**.

- **If contaminated**

  Repair as necessary.

- **If not contaminated**

3. Verify the resistance is within the specified range for each solenoid listed in the **Control Solenoid Valve and Transmission Control Module Assembly Inspection (Gen 2 with 1.4L (LUV) 1.8L (LUW, LWE))**.
   - **If the resistance is not within range**

     Replace the Q8 Control Solenoid Valve Assembly.

   - **If the resistance is within range**
4. Place the Q8 Control Solenoid Valve Assembly on a clean work surface near the transmission assembly.
5. Connect the **DT-48616-10** adapter harness between the vehicle harness connector and the Q8 Control Solenoid Valve Assembly connector. Ignition ON.
6. Verify the scan tool parameters listed below do not display Malfunction:
   - Line Pressure Control Solenoid Valve Performance Test Status
   - Line Pressure Control Solenoid Valve Control Circuit Low Voltage Test Status
   - Line Pressure Control Solenoid Valve Control Circuit High Voltage Test Status
   - **If Malfunction is displayed**

     Replace the Q8 Control Solenoid Valve Assembly.

   - **If Malfunction is not displayed**
7. All OK.

Repair Instructions

Perform the **Diagnostic Repair Verification** after completing the repair.

- Perform the **Transmission Adaptive Values Learn** following all transmission repairs.
- **Control Module References** for Control Solenoid Valve Assembly replacement, programming and setup

DTC P0965-P0967

Diagnostic Instructions

- Perform the **Diagnostic System Check - Vehicle** prior to using this diagnostic procedure.
- Review **Strategy Based Diagnosis** for an overview of the diagnostic approach.
- **Diagnostic Procedure Instructions** provides an overview of each diagnostic category.

DTC Descriptors

DTC P0965

Pressure Control Solenoid Valve 2 Performance

DTC P0966

Pressure Control Solenoid Valve 2 Control Circuit Low Voltage

DTC P0967

Pressure Control Solenoid Valve 2 Control Circuit High Voltage

Circuit/System Description

Pressure control solenoid 2 is part of the control solenoid valve assembly which has no serviceable components. The normally low pressure control solenoid 2 regulates and directs the pressure control solenoid 2 oil pressure to the 3-5 reverse clutch regulator valve. Increasing pressure control solenoid 2 pressure increases pressure to the 3-5 reverse clutch. The transmission control module (TCM) varies the current to the pressure control solenoid 2 by controlling the amount of time the low side driver is ON and OFF. Increasing the current to the pressure control solenoid 2 increases pressure control solenoid 2 oil pressure by closing OFF the solenoid exhaust port. Decreasing the current to the pressure control solenoid 2 decreases clutch pressure control solenoid 2 oil pressure by opening the solenoid exhaust port. Power to pressure control solenoid 2 is supplied by the TCM through a high side driver. The high side driver protects the circuit and components from excessive current flow. If excessive current flow is detected, the high side driver will turn OFF. When the fault is corrected, the high side driver will reset.

Conditions for Running the DTC

- Engine speed is 400-7, 500 RPM for 5 s.
- Ignition voltage is 9-32 V.
- Runs continuously when above conditions are met.

Conditions for Setting the DTC

P0965

TCM detects an internal electrical performance malfunction of the pressure control solenoid 2 control circuit where the measured pressure control solenoid 2 current does not equal the commanded pressure control solenoid 2 current for 5 s.

P0966

TCM detects a short to ground on the pressure control solenoid 2 control circuit for 1 s.

P0967

TCM detects an open or short to voltage on the pressure control solenoid 2 control circuit for 1 s.

Action Taken When the DTC Sets

P0965

- P0965 is a Type C DTC.
- TCM freezes transmission adaptive functions on the 3-5 Reverse clutch.

P0966 or P0967

- P0966 and P0967 are Type A DTCs.
- TCM limits the transmission to 4th gear and reverse.
- TCM commands maximum line pressure.
- TCM freezes transmission adaptive functions.
- TCM forces the torque converter clutch (TCC) OFF.
- TCM forces the high side driver OFF.
- TCM inhibits Tap Up/Down function.
- TCM inhibits manual shifting of forward gears.
- TCM enables torque management.

Conditions for Clearing the DTC

- P0965 is a Type C DTC.
- P0966 and P0967 are Type A DTCs.

Reference Information

Schematic Reference

Automatic Transmission Controls Schematics

Connector End View Reference

- **COMPONENT CONNECTOR END VIEWS - INDEX**
- **INLINE HARNESS CONNECTOR END VIEWS - INDEX**

Description and Operation

- **Electronic Component Description**
- **Transmission Component and System Description**
- **Transmission General Description**

Electrical Information Reference

- **Circuit Testing**

- **Connector Repairs**
- **Testing for Intermittent Conditions and Poor Connections**
- **Wiring Repairs**

DTC Type Reference

Powertrain Diagnostic Trouble Code (DTC) Type Definitions

Scan Tool Reference

Control Module References for scan tool information

Special Tools

DT-48616-10 Adapter Harness

For equivalent regional tools, refer to **Special Tools** .

Circuit/System Verification

1. Operate the vehicle in second gear long enough to ensure at least a 3°C (5°F) rise in TCM temperature, then operate the vehicle with the transmission in Park for 5 s.
2. Operate the vehicle in drive range. Allow the transmission to shift through all forward gear ranges.
3. Verify the scan tool parameters listed below do not display Malfunction:
   - Pressure Control Solenoid Valve 2 Performance Test Status
   - Pressure Control Solenoid Valve 2 Control Circuit Low Voltage Test Status
   - Pressure Control Solenoid Valve 2 Control Circuit High Voltage Test Status
   - **If Malfunction is displayed**

     Refer to Circuit/System Testing below.

   - **If Malfunction is not displayed**
4. Operate the vehicle within the Conditions for Running the DTC. You may also operate the vehicle within the conditions that you observed from the Freeze Frame/Failure Records data.
5. Verify the DTC does not set.
   - **If the DTC sets**

     Refer to Circuit/System Testing below.

   - **If the DTC does not set**
6. All OK.

Circuit/System Testing

NOTE: You must perform the Circuit/System Verification first.

1. Ignition OFF, remove the Q8 Control Solenoid Valve Assembly.
2. Verify the Q8 Control Solenoid Valve Assembly is not contaminated with any debris and clean as necessary. Refer to **Control Solenoid Valve and Transmission Control Module Assembly Inspection (Gen 2 with 1.4L (LUV) 1.8L (LUW, LWE))**.
   - **If contaminated**

     Repair as necessary.

   - **If not contaminated**
3. Verify the resistance is within the specified range for each solenoid listed in the **Control Solenoid Valve and Transmission Control Module Assembly Inspection (Gen 2 with 1.4L (LUV) 1.8L (LUW, LWE))**.
   - **If the resistance is not within range**

     Replace the Q8 Control Solenoid Valve Assembly.

   - **If the resistance is within range**
4. Place the Q8 Control Solenoid Valve Assembly on a clean work surface near the transmission assembly.
5. Connect the **DT-48616-10** adapter harness between the vehicle harness connector and the Q8 Control Solenoid Valve Assembly connector. Ignition ON.
6. Verify the scan tool parameters listed below do not display Malfunction:
   - Pressure Control Solenoid Valve 2 Performance Test Status
   - Pressure Control Solenoid Valve 2 Control Circuit Low Voltage Test Status
   - Pressure Control Solenoid Valve 2 Control Circuit High Voltage Test Status
   - **If Malfunction is displayed**

     Replace the Q8 Control Solenoid Valve Assembly.

   - **If Malfunction is not displayed**
7. All OK.

Repair Instructions

Perform the **Diagnostic Repair Verification** after completing the repair.

- Perform the **Transmission Adaptive Values Learn** following all transmission repairs.
- **Control Module References** for Control Solenoid Valve Assembly replacement, programming and setup.

DTC P0969-P0971

Diagnostic Instructions

- Perform the **Diagnostic System Check - Vehicle** prior to using this diagnostic procedure.
- Review **Strategy Based Diagnosis** for an overview of the diagnostic approach.
- **Diagnostic Procedure Instructions** provides an overview of each diagnostic category.

DTC Descriptors

DTC P0969

Pressure Control Solenoid Valve 3 Performance

DTC P0970

Pressure Control Solenoid Valve 3 Control Circuit Low Voltage

DTC P0971

Pressure Control Solenoid Valve 3 Control Circuit High Voltage

Circuit/System Description

Pressure control solenoid 3 is part of the control solenoid valve assembly which has no serviceable components. The normally high pressure control solenoid 3 regulates and directs oil pressure to the R1/4-5-6 regulator valve. Increasing pressure control solenoid 3 pressure increases pressure to the low and reverse clutch or 4-5-6 clutch, depending on the position of the clutch select valve. The transmission control module (TCM) varies current to pressure control Solenoid 3 by controlling the time the low side driver is ON and OFF. Decreasing the current to pressure control solenoid 3 increases oil pressure by closing off the solenoid exhaust port. Increasing the current to the pressure control solenoid 3 decreases oil pressure by opening the exhaust port. Power is supplied to the pressure control solenoid 3 by the TCM through a high side driver. The high side driver protects the circuit and components from excessive current flow. If excessive current flow is detected, the high side driver will turn OFF. When the fault is corrected, the high side driver will reset.

Conditions for Running the DTC

- Engine speed is 400-7, 500 RPM for 5 s.
- Ignition voltage is 9-32 V.
- Runs continuously when above conditions are met.

Conditions for Setting the DTC

P0969

TCM detects an internal electrical performance malfunction of the pressure control solenoid 3 control circuit where the measured pressure control solenoid 3 currents does not equal the commanded clutch pressure control solenoid 3 current for 5 s.

P0970

TCM detects a short to ground on the pressure control solenoid 3 control circuit for 1 s.

P0971

TCM detects an open or short to voltage on the pressure control solenoid 3 control circuit for 1 s.

Action Taken When the DTC Sets

P0969

- P0969 is a Type C DTC.
- TCM freezes transmission adaptive functions on the low and reverse clutch and the 4-5-6 clutch.

P0970 or P0971

- P0970 and P0971 are Type A DTCs.
- TCM limits the transmission to 4th gear and reverse.
- TCM commands maximum line pressure.
- TCM freezes transmission adaptive functions.
- TCM enables torque management.
- TCM inhibits Tap Up/Down function.
- TCM inhibits manual shifting of forward gears.
- TCM inhibits auto grade braking.
- TCM forces the high side driver OFF - P0970 only.
- TCM forces the torque converter clutch (TCC) OFF - P0970 only.

Conditions for Clearing the DTC

- P0969 is a Type C DTC.
- P0970 and P0971 are Type A DTCs.

Reference Information

Schematic Reference

Automatic Transmission Controls Schematics

Connector End View Reference

- **COMPONENT CONNECTOR END VIEWS - INDEX**
- **INLINE HARNESS CONNECTOR END VIEWS - INDEX**

Description and Operation

- **Electronic Component Description**
- **Transmission Component and System Description**
- **Transmission General Description**

Electrical Information Reference

- **Circuit Testing**
- **Connector Repairs**
- **Testing for Intermittent Conditions and Poor Connections**
- **Wiring Repairs**

DTC Type Reference

Powertrain Diagnostic Trouble Code (DTC) Type Definitions

Scan Tool Reference

Control Module References for scan tool information

Special Tools

DT-48616-10 Adapter Harness

For equivalent regional tools, refer to **Special Tools** .

Circuit/System Verification

1. Operate the vehicle in second gear long enough to ensure at least a 3°C (5°F) rise in TCM temperature, then operate the vehicle with the transmission in Park for 5 s.
2. Operate the vehicle in drive range. Allow the transmission to shift through all forward gear ranges.
3. Verify the scan tool parameters listed below do not display Malfunction:
   - Pressure Control Solenoid Valve 3 Performance Test Status
   - Pressure Control Solenoid Valve 3 Control Circuit Low Voltage Test Status
   - Pressure Control Solenoid Valve 3 Control Circuit High Voltage Test Status
   - **If Malfunction is displayed**

     Refer to Circuit/System Testing below.

   - **If Malfunction is not displayed**
4. Operate the vehicle within the Conditions for Running the DTC. You may also operate the vehicle within the conditions that you observed from the Freeze Frame/Failure Records data.
5. Verify the DTC does not set.
   - **If the DTC sets**

Refer to Circuit/System Testing below.

- **If the DTC does not set**

6. All OK.

Circuit/System Testing

NOTE: You must perform the Circuit/System Verification first.

1. Ignition OFF, remove the Q8 Control Solenoid Valve Assembly.
2. Verify the Q8 Control Solenoid Valve Assembly is not contaminated with any debris and clean as necessary. Refer to **Control Solenoid Valve and Transmission Control Module Assembly Inspection (Gen 2 with 1.4L (LUV) 1.8L (LUW, LWE))**.
   - **If contaminated**

     Repair as necessary.

   - **If not contaminated**
3. Verify the resistance is within the specified range for each solenoid listed in the **Control Solenoid Valve and Transmission Control Module Assembly Inspection (Gen 2 with 1.4L (LUV) 1.8L (LUW, LWE))**.
   - **If the resistance is not within range**

     Replace the Q8 Control Solenoid Valve Assembly.

   - **If the resistance is within range**
4. Place the Q8 Control Solenoid Valve Assembly on a clean work surface near the transmission assembly.
5. Connect the **DT-48616-10** adapter harness between the vehicle harness connector and the Q8 Control Solenoid Valve Assembly connector. Ignition ON.
6. Verify the scan tool parameters listed below do not display Malfunction:
   - Pressure Control Solenoid Valve 2 Performance Test Status
   - Pressure Control Solenoid Valve 2 Control Circuit Low Voltage Test Status
   - Pressure Control Solenoid Valve 2 Control Circuit High Voltage Test Status
   - **If Malfunction is displayed**

     Replace the Q8 Control Solenoid Valve Assembly.

   - **If Malfunction is not displayed**
7. All OK.

Repair Instructions

Perform the **Diagnostic Repair Verification** after completing the repair.

- Perform the **Transmission Adaptive Values Learn** following all transmission repairs.
- **Control Module References** for Control Solenoid Valve Assembly replacement, programming and setup.

DTC P0973 OR P0974

Diagnostic Instructions

- Perform the **Diagnostic System Check - Vehicle** prior to using this diagnostic procedure.
- Review **Strategy Based Diagnosis** for an overview of the diagnostic approach.
- **Diagnostic Procedure Instructions** provides an overview of each diagnostic category.

DTC Descriptors

DTC P0973

Shift Solenoid Valve 1 Control Circuit Low Voltage

DTC P0974

Shift Solenoid Valve 1 Control Circuit High Voltage

Circuit/System Description

The shift solenoid valve 1 is part of the control solenoid valve assembly which has no serviceable components. Shift solenoid valve 1 is a normally closed ON/OFF solenoid and is controlled by the transmission control module (TCM) through a low side driver. When the shift solenoid valve 1 is energized (ON), fluid pressure is directed to the clutch select valve. Power to shift solenoid 1 is supplied by the TCM through a high side driver. The high side driver protects the circuit and components from excessive current flow. If excessive current flow is detected, the high side driver will turn OFF. When the fault is corrected, the high side driver will reset.

Conditions for Running the DTC

- Engine speed is 400-7500 RPM for 5 s.
- Ignition voltage is 9-32 V.

Conditions for Setting the DTC

P0973

TCM detects a short to ground on the shift solenoid valve 1 control circuit for 2 s.

P0974

TCM detects an open or short to voltage on the shift solenoid valve 1 control circuit for 2 s.

Action Taken When the DTC Sets

P0973

- DTC P0973 is a Type A DTC.
- TCM freezes transmission adaptive functions.
- TCM commands maximum line pressure.
- TCM limits the transmission to neutral or 2nd gear and reverse.
- TCM inhibits neutral idle.
- TCM inhibits auto grade braking.
- TCM inhibits the Tap Up/Tap Down function.
- TCM inhibits manual shifting of forward gears.

P0974

- DTC P0974 is a Type B DTC.
- TCM inhibits 1st gear.
- TCM inhibits neutral idle.

Conditions for Clearing the DIC/DTC

- DTC P0973 is a Type A DTC.
- DTC P0974 is a Type B DTC.

Reference Information

Schematic Reference

Automatic Transmission Controls Schematics

Connector End View Reference

- **COMPONENT CONNECTOR END VIEWS - INDEX**
- **INLINE HARNESS CONNECTOR END VIEWS - INDEX**

Description and Operation

- **Electronic Component Description**
- **Transmission Component and System Description**
- **Transmission General Description**

Electrical Information Reference

- **Circuit Testing**
- **Connector Repairs**
- **Testing for Intermittent Conditions and Poor Connections**

- **Wiring Repairs**

DTC Type Reference

Powertrain Diagnostic Trouble Code (DTC) Type Definitions

Scan Tool Reference

Control Module References for scan tool information

Special Tools

DT-48616-10 Adapter Harness

For equivalent regional tools, refer to **Special Tools** .

Circuit/System Verification

1. Operate the vehicle in 2nd gear long enough to ensure at least a 3°C (5°F) rise in TCM temperature.
2. Place the gear selector in Reverse for 5 seconds and then idle vehicle for 5 s.
3. Verify the scan tool parameters listed below do not display Malfunction:
   - Shift Solenoid Valve 1 Control Circuit Low Voltage Test Status
   - Shift Solenoid Valve 1 Control Circuit Open Test Status
   - Shift Solenoid Valve 1 Control Circuit High Voltage Test Status
   - **If Malfunction is displayed**

     Refer to Circuit/System Testing below.

   - **If Malfunction is not displayed**
4. Operate the vehicle within the Conditions for Running the DTC. You may also operate the vehicle within the conditions that you observed from the Freeze Frame/Failure Records data.
5. Verify the DTC does not set.
   - **If the DTC sets**

     Refer to Circuit/System Testing below.

   - **If the DTC does not set**
6. All OK.

Circuit/System Testing

NOTE: You must perform the Circuit/System Verification first.

1. Ignition OFF, remove the Q8 Control Solenoid Valve Assembly.

2. Verify the Q8 Control Solenoid Valve Assembly is not contaminated with any debris and clean as necessary. Refer to **Control Solenoid Valve and Transmission Control Module Assembly Inspection (Gen 2 with 1.4L (LUV) 1.8L (LUW, LWE))**.
    - **If contaminated**

      Repair as necessary.

    - **If not contaminated**
3. Verify the resistance is within the specified range for each solenoid listed in the **Control Solenoid Valve and Transmission Control Module Assembly Inspection (Gen 2 with 1.4L (LUV) 1.8L (LUW, LWE))**.
    - **If the resistance is not within range**

      Replace the Q8 Control Solenoid Valve Assembly.

    - **If the resistance is within range**
4. Place the Q8 Control Solenoid Valve Assembly on a clean work surface near the transmission assembly.
5. Connect the **DT-48616-10** adapter harness between the vehicle harness connector and the Q8 Control Solenoid Valve Assembly connector. Ignition ON.
6. Verify the scan tool parameters listed below do not display Malfunction:
    - Shift Solenoid Valve 1 Control Circuit Low Voltage Test
    - Shift Solenoid Valve 1 Control Circuit Open Test
    - Shift Solenoid Valve 1 Control Circuit High Voltage Test
    - **If Malfunction is displayed**

      Replace the Q8 Control Solenoid Valve Assembly.

    - **If Malfunction is not displayed**
7. All OK.

Repair Instructions

Perform the **Diagnostic Repair Verification** after completing the repair.

- Perform the **Transmission Adaptive Values Learn** following all transmission repairs.
- **Control Module References** for Control Solenoid Valve Assembly replacement, programming and setup

DTC P1761

Diagnostic Instructions

- Perform the **Diagnostic System Check - Vehicle** prior to using this diagnostic procedure.
- Review **Strategy Based Diagnosis** for an overview of the diagnostic approach.
- **Diagnostic Procedure Instructions** provides an overview of each diagnostic category.

DTC Descriptor

DTC P1761

Up and Down Shift Switch Signal Message Counter Incorrect

Circuit/System Description

When the shift lever is moved left of the D position, the transmission will enter sport mode. With the shift lever in this position, the transmission will enter manual mode if the gear shift lever is pressed forward or rearward. This allows the operator to select an upshift by pressing the gear shift lever forward, and downshift by pressing the gear shift lever rearward. The body control module (BCM) supplies battery voltage, ground, and a signal circuit to the shift controller. The shift controller has Hall-effect switches connected to a resistor array. When the lever is left of the D position, a voltage drop occurs across the resistor network. When the gear shift lever is pressed forward or rearward, a corresponding voltage drop occurs across the resistor network. This voltage drop is monitored by the BCM. The BCM will send the request to the transmission control module (TCM) to perform the upshift or downshift. The TCM is constantly monitoring the serial data sent from the BCM for the correct number and sequence of counts for Tap Up and Tap Down function.

Conditions for Running the DTC

- Engine speed is 400-7, 500 RPM for 5 s.
- Runs continuously when above condition is met.

Conditions for Setting the DTC

TCM detects the internal rolling count value does not match the expected BCM count, 3 times within 10 s.

Action Taken When the DTC Sets

- P1761 is a Type C DTC.
- TCM inhibits the Tap Up Tap Down function.
- TCM inhibits manual shifting of forward gears.

Conditions for Clearing the DTC

P1761 is a Type C DTC.

Reference Information

Schematic Reference

- **Automatic Transmission Controls Schematics**
- **Data Communication Schematics**
- **Body Control System Schematics**

Connector End View Reference

- **COMPONENT CONNECTOR END VIEWS - INDEX**
- **INLINE HARNESS CONNECTOR END VIEWS - INDEX**

Description and Operation

- **Transmission General Description**
- **Transmission Component and System Description**
- **Electronic Component Description**

Electrical Information Reference

- **Circuit Testing**
- **Connector Repairs**
- **Testing for Intermittent Conditions and Poor Connections**
- **Wiring Repairs**

DTC Type Reference

Powertrain Diagnostic Trouble Code (DTC) Type Definitions

Scan Tool Reference

Control Module References for scan tool information

Circuit/System Verification

NOTE:

- **DTC P1761 is an informational DTC.**
- **Diagnose all other body control module DTCs prior to DTC P1761.**

1. Verify there are no other body control module or communication DTCs set.
   - **If a DTC is set**

     Refer to **Diagnostic Trouble Code (DTC) List - Vehicle** .

   - **If a DTC is not set**
2. Complete the diagnosis by looking for a GMLAN circuit fault. Refer to **Scan Tool Does Not Communicate with High Speed GMLAN Device** .
   - **If a GMLAN circuit fault is found**

     Repair as necessary.

   - **If a GMLAN circuit fault is not found**
3. All OK.

Repair Instructions

Perform the **Diagnostic Repair Verification** after completing the repair.

- Perform the **Transmission Adaptive Values Learn** following all transmission repairs.
- **Control Module References** for BCM and Control Solenoid Valve Assembly replacement, programming and setup.

DTC P182E OR P1915

Diagnostic Instructions

- Perform the **Diagnostic System Check - Vehicle** prior to using this diagnostic procedure.
- Review **Strategy Based Diagnosis** for an overview of the diagnostic approach.
- **Diagnostic Procedure Instructions** provides an overview of each diagnostic category.

DTC Descriptors

DTC P182E

Internal Mode Switch Indicates Invalid Range

DTC P1915

Internal Mode Switch Does Not Indicate Park/Neutral During Start

Diagnostic Fault Information

Circuit	Short to Ground	Open/High Resistance	Short to Voltage	Signal Performance
Signal A	P182E	P1915	P1915	P182E, P1915
Signal B	P1915	P182E	P182E	P182E, P1915
Signal C	P1915	P182E	P182E	P182E, P1915
Signal P	P182E	P1915	P1915	P182E, P1915
Low Reference	-	P182E	P182E	P182E, P1915

Typical Scan Tool Data

Internal Mode Switch A/B/C/P

Circuit	Short to Ground	Open	Short to Voltage
Operating Conditions: Ignition ON, range selector in Park **Parameter Normal Range** Low High High Low			
Signal A	Low	High	High
Signal B	Low	High	High
Signal C	Low	High	High

Signal P	Low	High	High
High = 12 volts Low = 0 volts			

Circuit/System Description

The manual shift detent lever with shaft position switch assembly, also known as the transmission internal mode switch assembly, is a sliding contact switch attached to the manual shift detent lever shaft inside the transmission. The 4 inputs to the transmission control module (TCM) from the switch indicate the position selected by the transmission manual shaft. The input voltage at the TCM is high when the switch is open and low when the switch is closed to ground. The state of each input is displayed on the scan tool TCM Internal Mode Switch A/B/C/P parameter. The internal mode switch input parameters represented are transmission range Signal A, Signal B, Signal C, and Signal P.

The park/neutral position switch is integrated into the transmission internal mode switch. The circuit uses the TCM as a pass-through connector only.

The park/neutral signal is sent from the park/neutral switch directly to the engine control module (ECM) and is used for engine start enable.

Conditions for Running the DTC

P182E

- DTC P0101, P0102, P0103, P0106, P0107, P0108, P0171, P0172, P0174, P0175, P0201, P0202, P0203, P0204, P0205, P0206, P0207, P0208, P0300, P0301, P0302, P0303, P0304, P0305, P0306, P0307, P0308, P0401, P042E, P0722, or P0723 is not set.
- Engine speed is 400-7, 500 RPM for 5 s.
- Ignition voltage is 9-32 V.
- Engine torque signal is valid.
- DTC runs continuously when the above conditions are met.

P1915

- DTC P0722, P0723, or P1915 is not set.
- Transmission output shaft speed is 90 RPM or less.
- Ignition voltage is 6-32 V.
- DTC runs when conditions above are met during engine start sequence.

Conditions for Setting the DTC

P182E

Internal mode switch does not indicate a valid Park, Reverse, Neutral, or Drive Range position for 7 s.

P1915

Internal mode switch does not indicate Park or Neutral during the following sequence:

- Engine speed is less than 50 RPM for greater than 0.10 s.
- Engine speed is 50-480 RPM for greater than 0.07 s.
- Engine speed is greater than 500 RPM and the transmission input speed is greater than 100 RPM for greater than 1.25 s.

Action Taken When the DTC Sets

- P182E and P1915 are Type A DTCs.
- TCM commands maximum line pressure.
- TCM turns OFF all solenoids.
- TCM freezes transmission adaptive functions.
- TCM limits the transmission to reverse and 4th gear.
- TCM forces the torque converter clutch (TCC) OFF.
- TCM inhibits the Tap Up/Tap Down function.
- TCM inhibits neutral idle.
- TCM inhibits auto grade braking.
- TCM inhibits manual shifting of forward gears.
- TCM turns the high side driver OFF.
- TCM enables torque management.

Conditions for Clearing the DTC

P182E and P1915 are Type A DTCs.

Reference Information

Schematic Reference

Automatic Transmission Controls Schematics

Connector End View Reference

- **COMPONENT CONNECTOR END VIEWS - INDEX**
- **INLINE HARNESS CONNECTOR END VIEWS - INDEX**

Description and Operation

- **Transmission General Description**
- **Transmission Component and System Description**

- **Electronic Component Description**

Electrical Information Reference

- **Circuit Testing**
- **Connector Repairs**
- **Testing for Intermittent Conditions and Poor Connections**
- **Wiring Repairs**

DTC Type Reference

Powertrain Diagnostic Trouble Code (DTC) Type Definitions

Scan Tool Reference

Control Module References for scan tool information

Special Tools

DT-48616-10 Adapter Harness

For equivalent regional tools, refer to **Special Tools** .

Circuit/System Verification

1. Verify the range selector lever cable is adjusted properly. Refer to **Range Selector Lever Cable Adjustment** .
    - **If cable adjustment is not OK**

      Repair as necessary.

    - **If cable adjustment is OK**
2. Ignition ON.
3. Verify the scan tool TCM Internal Mode Switch A/B/C/P parameter matches the **Transmission Internal Mode Switch Logic** table for each transmission shift lever position.
    - **If the parameter does not match**

      Refer to Circuit/System Testing below.

    - **If the parameter matches**
4. Verify the scan tool engine control module Park/Neutral Position Switch parameter displays Park/Neutral with the gear shift lever in Park or Neutral and In Gear in Reverse or Drive.
    - **If Park/Neutral or In Gear is not displayed**

      Refer to Circuit/System Testing below.

- **If Park/Neutral and In Gear is displayed**

5. Operate the vehicle within the Conditions for Running the DTC. You may also operate the vehicle within the conditions that you observed from the Freeze Frame/Failure Records data.
6. Verify the DTC does not set.
   - **If the DTC sets**

     Refer to Circuit/System Testing below.

   - **If the DTC does not set**
7. All OK.

Circuit/System Testing

NOTE: You must perform Circuit/System Verification first.

1. Ignition OFF, remove the control valve body cover.
2. Connect the vehicle harness connector to the Q8 Control Solenoid Valve Assembly.
3. Disconnect the B15 Transmission Internal Mode Switch connector at the Q8 Control Solenoid Valve Assembly.
4. Ignition ON.
5. Verify the scan tool engine control module Park/Neutral Position Switch parameter displays In Gear.
   - **If In Gear is not displayed**
   1. Ignition OFF, disconnect the vehicle harness X1 connector at the Q8 Control Solenoid Valve Assembly.
   2. Install the **DT-48616-10** adapter harness to the X1 connector at the Q8 Control Solenoid Valve Assembly.
   3. Test for infinite resistance between the **DT-48616-10** adapter harness connector terminals 2 and 3.
      - If less than infinite resistance, replace the Q8 Control Solenoid Valve Assembly.
      - If infinite resistance.
   4. Disconnect the harness connector at the K20 Engine Control Module.
   5. Test for infinite resistance between the signal circuit and ground at the vehicle harness K20 Engine Control Module connector.
      - If less than infinite resistance, repair the short to ground on the circuit.
      - If infinite resistance, replace the K20 Engine Control Module.
   - **If In Gear is displayed**
6. Verify the scan tool transmission control module Internal Mode Switch A/B/C/P parameter displays High High High High.
   - **If High High High High is not displayed**

     Replace the Q8 Control Solenoid Valve Assembly.

- **If High High High High is displayed**

7. Install a 3 A fused jumper wire between the low reference circuit terminal F and each signal circuit listed below one at a time at the Q8 Control Solenoid Valve Assembly.
   - Signal A - terminal B
   - Signal B - terminal C
   - Signal C - terminal D
   - Signal P - terminal E
8. Verify the scan tool transmission control module A/B/C/P parameter displays 1 Low and 3 High when a signal circuit is grounded.
   - **If 1 Low and 3 High is not displayed**

     Replace the Q8 Control Solenoid Valve Assembly.

   - **If 1 Low and 3 High is displayed**
9. Connect a 3-amp fused jumper wire between terminal A and terminal F.
10. Verify the ECM Park/Neutral Position Switch parameter displays Park/Neutral.
    - **If Park/Neutral is not displayed**
    1. Ignition OFF, remove the jumper wire and disconnect the X1 connector at the Q8 Control Solenoid Valve Assembly.
    2. Install the **DT-48616-10** adapter harness to the X1 connector at the Q8 Control Solenoid Valve Assembly.
    3. Test for less than 2 ohms between the adapter harness terminal 2 and the X2 connector terminal F at the Q8 Control Solenoid Valve Assembly.
       - If greater than 2 ohms, replace the Q8 Control Solenoid Valve Assembly.
       - If less than 2 ohms.
    4. Disconnect the connector at the K20 Engine Control Module.
    5. Test for less than 2 ohms in the vehicle harness park/neutral signal circuit, end to end.
    - If 2 ohms or greater, repair the open/high resistance in the circuit.
    - If less than 2 ohms, replace the K20 Engine Control Module.
    - **If Park/Neutral is displayed**
11. Replace the B15 Transmission Internal Mode Switch.

Repair Instructions

Perform the **Diagnostic Repair Verification** after completing the repair.

- Perform the **Transmission Adaptive Values Learn** following all transmission repairs.
- **Range Selector Lever Cable Adjustment**
- **Control Valve Body Cover Replacement (1.8L LWE and LUW)** , **Control Valve Body Cover Replacement (1.4L LUV)**
- **Manual Shift Detent Lever with Shaft Position Switch Assembly Replacement**

- **Control Module References** for Control Solenoid Valve Assembly or Engine Control Module replacement, programming and setup.

DTC P1876

Diagnostic Instructions

- Perform the **Diagnostic System Check - Vehicle** prior to using this diagnostic procedure.
- Review **Strategy Based Diagnosis** for an overview of the diagnostic approach.
- **Diagnostic Procedure Instructions** provides an overview of each diagnostic category.

DTC Descriptor

DTC P1876

Up and Down Shift Enable Switch Circuit Low Voltage

Diagnostic Fault Information

Circuit	Short to Ground	Open/High Resistance	Short to Voltage	Signal Performance
Signal	P0826, P1876	-	P0826	-

Typical Scan Tool Data

Driver Shift Request

Circuit	Short to Ground	Open	Short to Voltage
Signal	Invalid	None	Invalid/None
Ground	-	None	-

Circuit/System Description

When the shift lever is moved left of the D position, the transmission will enter sport mode. With the shift lever in this position, the transmission will enter manual mode if the gear shift lever is pressed forward or rearward. This allows the operator to select an upshift by pressing the gear shift lever forward, and downshift by pressing the gear shift lever rearward. The body control module (BCM) supplies a signal circuit to the shift controller. The shift controller has Hall-effect switches connected to a resistor array. When the lever is left of the D position, a voltage drop occurs across the resistor network. When the gear shift lever is pressed forward or rearward, a corresponding voltage drop occurs across the resistor network. This voltage drop is monitored by the BCM. The BCM will send the request to the transmission control module (TCM) to perform the upshift or downshift. The TCM will not allow shifting to the next higher gear if the vehicle speed or engine RPM is too low. The transmission will not allow shifting to the next lower gear if the vehicle speed or engine RPM is too high.

Conditions for Running the DTC

- DTC P0815, P0816, P0826, P1761, P1825, P1876, P1877, P1915, or U0100 is not set.
- Engine speed is greater than 400-7, 500 RPM for 5 s.
- Ignition voltage is 9-32 V.
- DTC runs continuously when above conditions are met.

Conditions for Setting the DTC

Transmission control module (TCM) detects a TAP Enable Switch request for 3 s when the shift lever is in Park, Reverse, or Neutral, a total of 5 times.

Action Taken When the DTC Sets

- P1876 is a Type C DTC.
- TCM inhibits Tap-Up/Tap-Down functions.
- TCM inhibits manual up, manual down shifts with the shift selector.

Conditions for Clearing the DIC/DTC

P1876 is a Type C DTC.

Diagnostic Aids

A high resistance in the signal circuit may not set a DTC. Symptoms could include an inoperative manual mode Tap Up/Down, or a Tap Down shift when the Tap/Up button is pressed.

If battery positive voltage is not present at the shift selector lever, it will not cause a DTC to set, but will result in an inoperative manual mode Tap Up/Down.

Reference Information

Schematic Reference

Automatic Transmission Controls Schematics

Connector End View Reference

- **COMPONENT CONNECTOR END VIEWS - INDEX**
- **INLINE HARNESS CONNECTOR END VIEWS - INDEX**

Description and Operation

- **Transmission General Description**
- **Electronic Component Description**

Electrical Information Reference

- **Circuit Testing**
- **Connector Repairs**
- **Testing for Intermittent Conditions and Poor Connections**
- **Wiring Repairs**

DTC Type Reference

Powertrain Diagnostic Trouble Code (DTC) Type Definitions

Scan Tool Reference

Control Module References for scan tool information

Circuit/System Verification

WARNING: Refer to Parking Brake and Drive Wheels Warning .

NOTE: The engine may have to be started to move the shift lever out of the Park position. Once out of the Park position, the engine can be turned OFF.

1. Verify DTC P182E or P1915 was not set by reviewing the scan tool Freeze Frame/Failure Records.
   - **If DTC P182E or P1915 was set**

     Refer to **DTC P182E or P1915**.

   - **If DTC P182E or P1915 was not set**
2. Ignition ON.
3. Verify the gear shift lever position matches the scan tool TCM Internal Mode Switch parameter while slowly moving the S3 Transmission Shift Lever from Park through all ranges.
   - **If the parameter does not display the correct values**

     Refer to **Range Selector Lever Cable Adjustment** .

   - **If the parameter displays the correct values**
4. Verify the Driver Shift Control Mode parameter displays Inactive with the S3 Transmission Shift Lever in the P (Park), R (Reverse), N (Neutral), and D (Drive) positions.
   - **If Inactive is not displayed**

     Refer to Circuit/System Testing below.

   - **If Inactive is displayed**
5. Shift lever left of the D position.

6. Verify the scan tool Driver Shift Request parameter changes from None to Upshift when the shift lever is pressed forward, and from None to Downshift when the gear shift lever is pressed rearward.
   - **If the parameter does not display the correct values**

     Refer to Circuit/System Testing below.

   - **If the parameter displays the correct values**
7. Operate the vehicle within the Conditions for Running the DTC. You may also operate the vehicle within the conditions that you observed from the Freeze Frame/Failure Records data.
8. Verify the DTC does not set.
   - **If the DTC sets**

     Refer to Circuit/System Testing below.

   - **If the DTC does not set**
9. All OK.

Circuit/System Testing

NOTE: You must perform Circuit/System Verification first.

1. Ignition OFF, disconnect the harness connector from the S3 Transmission Shift Lever.
2. Test for less than 10 ohms between the vehicle harness connector terminal 2 and ground.
   - **If 10 ohms or greater**
   1. Ignition OFF.
   2. Test for less than 2 ohms in the ground circuit end to end.
      - If 2 ohms or greater, repair the open/high resistance in the circuit
      - If less than 2 ohms, repair the open/high resistance in the ground connection.
   - **If less than 10 ohms**
3. Ignition ON.
4. Test for 11-13 V at the vehicle harness connector between signal circuit terminal 3 and ground.
   - **If not between 11-13 V**
   1. Ignition OFF, disconnect the connector at the BCM.
   2. Test for infinite resistance between the signal circuit and ground.
      - If less than infinite resistance, repair the short to ground in the circuit.
      - If infinite resistance.
   3. Test for less than 2 ohms in the signal circuit end to end.
      - If 2 ohms or greater, repair the open/high resistance in the circuit.
      - If less than 2 ohms, replace the BCM.
   - **If between 11-13 V**
5. Ignition OFF, connect the harness connector at the S3 Transmission Shift Lever, ignition ON.

6. Test for voltage between the S3 Transmission Shift Lever connector signal circuit terminal 3 and ground, by back probing the connector, for the conditions listed below.
   - 2.0-4.6 V - Shift lever left of D, pressed forward
   - 5.1-7.3 V - Shift lever left of D, pressed rearward
   - 8.0-10.6 V - Shift lever left of D
   - 11-13 V - Shift lever in D
   - **If voltage values are not correct**

     Replace the S3 Transmission Shift Lever.

   - **If voltage values are correct**
7. Replace the K9 Body Control Module.

Repair Instructions

Perform the **Diagnostic Repair Verification** after completing the repair.

- **Transmission Control Replacement** for Transmission Shift Lever replacement
- **Control Module References** for BCM or Control Solenoid Valve Assembly replacement, programming and setup

DTC P2714 OR P2715 (GEN 2 WITH 1.4L (LUV) 1.8L (LUW, LWE))

Diagnostic Instructions

- Perform the **Diagnostic System Check - Vehicle** prior to using this diagnostic procedure.
- Review **Strategy Based Diagnosis** for an overview of the diagnostic approach.
- **Diagnostic Procedure Instructions** provides an overview of each diagnostic category.

DTC Descriptors

DTC P2714

Pressure Control Solenoid Valve 4 Stuck Off

DTC P2715

Pressure Control Solenoid Valve 4 Stuck On

Circuit/System Description

Pressure control solenoid 4 is part of the control solenoid valve assembly which has no serviceable components. Pressure control solenoid 4 regulates transmission fluid pressure to the 2-6 regulator valve which controls pressure to the 2-6 clutch. The transmission control module (TCM) calculates gear ratio based on the speed signals from the input shaft speed (ISS) sensor and the output shaft speed (OSS) sensor. The TCM compares the

expected transmission gear ratio to the calculated gear ratio for each commanded gear.

Conditions for Running the DTC

P2714

- DTC P0101, P0102, P0103, P0106, P0107, P0108, P0171, P0172, P0174, P0175, P0201, P0202, P0203, P0204, P0205, P0206, P0207, P0208, P0300, P0301, P0302, P0303, P0304, P0305, P0306, P0307, P0308, P0401, P042E, P0716, P0717, P0722, P0723, or P182E is not set.
- High side driver is enabled.
- Throttle position signal is valid.
- Ignition voltage is 9-32 V.
- Transmission fluid temperature is -6.6°C (20°F) or greater.
- Engine speed is 400-7, 500 RPM for 5 s.
- Pressure control solenoid 4 is commanded ON, applying the 2-6 clutch.
- Output speed is 100 RPM or greater, or the throttle position is greater than 0.5%.
- Runs continuously when above conditions are met.

P2715

- DTC P0101, P0102, P0103, P0106, P0107, P0108, P0171, P0172, P0174, P0175, P0201, P0202, P0203, P0204, P0205, P0206, P0207, P0208, P0300, P0301, P0302, P0303, P0304, P0305, P0306, P0307, P0308, P0401, P042E, P0716, P0717, P0722, P0723, or P182E is not set.
- Ignition voltage is 9-32 V.
- Transmission output shaft speed is 100 RPM or greater, or throttle position is 0.5% or greater.
- Pressure control solenoid 4 is commanded OFF, releasing the 2-6 clutch.
- Transmission fluid temperature is -6.6°C (20°F) or greater.
- Engine speed is 400-7, 500 RPM for 5 s.
- Engine torque is 45 N.m (33 lb ft) or greater.
- The attained range is not 1st gear.
- High side driver is enabled.
- Runs continuously when above conditions are met.

Conditions for Setting the DTC

P2714

TCM detects an incorrect on-coming clutch gear ratio, or shift flare. This condition must occur 3 times.

P2715

TCM detects an incorrect off-going clutch gear ratio, or shift tie-up. This condition must occur 3 times.

Action Taken When the DTC Sets

P2714

- P2714 is a Type A DTC.
- TCM commands maximum line pressure.
- TCM freezes transmission adaptive functions.
- TCM inhibits the Tap Up/Tap Down function.
- TCM inhibits manual shifting of forward gears.
- TCM limits the transmission to reverse and 3rd gear.
- TCM inhibits powertrain braking.
- TCM inhibits neutral idle.
- TCM inhibits auto grade braking.

P2715

- P2715 is a Type A DTC.
- TCM commands maximum line pressure.
- TCM freezes transmission adaptive functions.
- TCM inhibits the Tap Up/Tap Down function.
- TCM inhibits manual shifting of forward gears.
- TCM inhibits powertrain braking.
- TCM inhibits auto grade braking.
- TCM inhibits neutral idle.
- TCM commands 2nd gear if the output speed is less than 700 RPM.
- TCM commands neutral if the output speed is 700 RPM or greater.

Conditions for Clearing the DTC

P2714 and P2715 are Type A DTCs.

Reference Information

Schematic Reference

Automatic Transmission Controls Schematics

Connector End View Reference

- **COMPONENT CONNECTOR END VIEWS - INDEX**
- **INLINE HARNESS CONNECTOR END VIEWS - INDEX**

Description and Operation

- **Drive Range, Second Gear (Gen 1)** , **Drive Range, Second Gear (Gen 2/Hybrid)**
- **Drive Range, Sixth Gear (Gen 1)** , **Drive Range, Sixth Gear (Gen 2/Hybrid)**
- **Electronic Component Description**
- **Transmission Component and System Description**
- **Transmission General Description**

Electrical Information Reference

- **Circuit Testing**
- **Connector Repairs**
- **Testing for Intermittent Conditions and Poor Connections**
- **Wiring Repairs**

DTC Type Reference

Powertrain Diagnostic Trouble Code (DTC) Type Definitions

Scan Tool Reference

Control Module References for scan tool information

Special Tools

DT-48616 Solenoid Assembly Test Kit & Adapter Harness

For equivalent regional tools, refer to **Special Tools** .

Circuit/System Verification

WARNING: Refer to Parking Brake and Drive Wheels Warning .

NOTE: If other DTCs are set, diagnose those DTCs first.

1. Ignition ON.
2. Verify DTC P0716, P0717, P0722, P0723, P077C, P077D, P07BF, or P07C0 was not set by reviewing the scan tool Freeze Frame/Failure Records data.
   - **If any of the DTCs were set**

     Refer to **Diagnostic Trouble Code (DTC) List - Vehicle** .

   - **If none of the DTCs were set**
3. Engine idling, transmission in Park, with parking brake applied and drive wheels chocked.

4. Verify the transmission fluid level and condition is correct. Refer to **Transmission Fluid Level and Condition Check**.
   - **If the transmission fluid level and condition is not correct**

     Repair as necessary.

   - **If the transmission fluid level and condition is correct**
5. Ignition ON, clear the TCM DTCs with a scan tool.
6. Verify DTC P2714 or P2715 does not set while performing a road test. Refer to **Road Test**.
   - **If DTC P2714 or P2715 sets**

     Refer to Circuit/System Testing below.

   - **If DTC P2714 or P2715 does not set**
7. Operate the vehicle within the Conditions for Running the DTC. You may also operate the vehicle within the conditions that you observed from the Freeze Frame/Failure Records data.
8. Verify the DTC does not set.
   - **If the DTC sets**

     Refer to Circuit/System Testing below.

   - **If the DTC does not set**
9. All OK.

Circuit/System Testing

NOTE: You must perform the Circuit/System Verification first.

1. Engine idling at the normal operating temperature.
2. Verify the transmission line pressures are within the specified range. Refer to **Line Pressure Check**, and **Solenoid Valve Pressure (Gen 1)** , **Solenoid Valve Pressure (Gen 2)** .
   - **If the pressures are not within range**

     Refer to **Fluid Pressure High or Low**.

   - **If the pressures are within range**
3. Ignition OFF, remove the Q8 Control Solenoid Valve Assembly.
4. Verify the pressure changes for all solenoids when performing the solenoid test. Refer **Control Solenoid Valve and Transmission Control Module Assembly Solenoid Performance Test**.
   - **If the pressure does not change**

     Replace the Q8 Control Solenoid Valve Assembly.

- **If the pressure changes**

5. Verify the conditions listed below do not exist. Repair or replace as necessary.

P2714 Channel Plate and Spacer Plate

Oil channels or orifices blocked by debris.

P2714 or P2715 Control Valve Body Assembly

2-6 clutch regulator valve stuck/sticking, debris, binding, damaged valve, or scored bore.

P2714 Automatic Transmission Fluid Filter Assembly

Oil filter or filter seal loose or damaged.

P2714 Torque Converter (w/fluid pump) Housing Assembly

Fluid pump housing/gear damaged/scored.

P2714 Trans case and 1-2-3-4 clutch backing plate retainer ring

1-2-3-4 clutch backing plate retaining ring not seated/oriented correctly at trans case groove.

P2714 or P2715 Transmission case, 2-6 clutch piston, spring retaining ring, reaction sun gear

- 2-6 clutch return spring retaining ring not seated in groove
- 2-6 clutch piston assembly - seal damaged or leaking
- 2-6 clutch plates worn or damaged
- 2-6 clutch plates will not slide over the reaction sun gear shell freely

P2714 or P2715 Q8 Control Solenoid Valve Assembly

- Pressure Control Solenoid Valve 4 Stuck ON/OFF.
- Control signal fluid supply leak - valve body filter plate assembly cracked or damaged gasket seal.
- O-ring seals leaking.

Repair Instructions

Perform the **Diagnostic Repair Verification** after completing the repair.

- Perform the **Transmission Adaptive Values Learn** following all transmission repairs.
- **Control Module References** for Control Solenoid Valve Assembly replacement, programming and setup.

DTC P2719-P2721

Diagnostic Instructions

- Perform the **Diagnostic System Check - Vehicle** prior to using this diagnostic procedure.
- Review **Strategy Based Diagnosis** for an overview of the diagnostic approach.
- **Diagnostic Procedure Instructions** provides an overview of each diagnostic category.

DTC Descriptors

DTC P2719

Pressure Control Solenoid Valve 4 Performance

DTC P2720

Pressure Control Solenoid Valve 4 Control Circuit Low Voltage

DTC P2721

Pressure Control Solenoid Valve 4 Control Circuit High Voltage

Circuit/System Description

Pressure control solenoid 4 is part of the control solenoid valve assembly which has no serviceable components. The normally low pressure control solenoid 4 regulates and directs oil pressure to the 2-6 clutch regulator valve. Increasing pressure control solenoid 4 pressure increases pressure to the 2-6 clutch. The transmission control module (TCM) varies current to the pressure control solenoid 4 by controlling the amount of time the low side driver is ON and OFF. Increasing the ON time increases current to the clutch PC solenoid 4. Increasing current to pressure control solenoid 4 increases oil pressure by closing off the solenoid exhaust port. Decreasing the current to the pressure control solenoid 4 decreases oil pressure by opening the exhaust port. Pressure control solenoid 4 power is supplied by the TCM through a high side driver. The high side driver protects the circuit and components from excessive current flow. If excessive current flow is detected, the high side driver will turn OFF. When the fault is corrected, the high side driver will reset.

Conditions for Running the DTC

- Engine speed is 400-7, 500 RPM for 5 s.
- Ignition voltage is 9-32 V.
- DTC runs continuously when above conditions are met.

Conditions for Setting the DTC

P2719

TCM detects an internal electrical performance malfunction on the clutch pressure solenoid 4 control circuit where the measured clutch pressure control solenoid 4 current does not equal the commanded clutch pressure control solenoid 4 current for 5 s.

P2720

TCM detects a short to ground on the clutch pressure control solenoid 4 control circuit for 1 s.

P2721

TCM detects an open or short to voltage on the clutch pressure control solenoid 4 control circuit for 1 s.

Action Taken When the DTC Sets

P2719

- P2719 is a Type C DTC.
- TCM freezes transmission adaptive functions on the 2-6 clutch.

P2720

- P2720 is a Type A DTC.
- TCM limits the transmission to 2nd gear and reverse.
- TCM commands maximum line pressure.
- TCM freezes transmission adaptive functions.
- TCM inhibits neutral idle.
- TCM inhibits auto grade braking.
- TCM inhibits Tap Up/Tap Down function.
- TCM inhibits manual up, manual down shifts with the shift selector.
- TCM commands 2nd gear if the transmission is in a forward gear and the output speed is less than 700 RPM, or neutral if the output speed is 700 RPM or greater.

P2721

- P2721 is a Type A DTC.
- TCM limits the transmission to 3rd gear and reverse.
- TCM commands maximum line pressure.
- TCM freezes transmission adaptive functions.
- TCM inhibits neutral idle.
- TCM inhibits Tap Up/Tap Down function.
- TCM inhibits manual shifting of forward gears.

Conditions for Clearing the DTC

- P2719 is a Type C DTC.
- P2720 and P2721 are Type A DTCs.

Reference Information

Schematic Reference

Automatic Transmission Controls Schematics

Connector End View Reference

- **COMPONENT CONNECTOR END VIEWS - INDEX**
- **INLINE HARNESS CONNECTOR END VIEWS - INDEX**

Description and Operation

- **Electronic Component Description**
- **Transmission Component and System Description**
- **Transmission General Description**

Electrical Information Reference

- **Circuit Testing**
- **Connector Repairs**
- **Testing for Intermittent Conditions and Poor Connections**
- **Wiring Repairs**

DTC Type Reference

Powertrain Diagnostic Trouble Code (DTC) Type Definitions

Scan Tool Reference

Control Module References for scan tool information

Special Tools

DT-48616-10 Adapter Harness

For equivalent regional tools, refer to **Special Tools** .

Circuit/System Verification

1. Operate the vehicle in second gear long enough to ensure at least a 3°C (5°F) rise in TCM temperature.
2. Operate the vehicle in drive range. Allow the transmission to shift through all forward gear ranges.
3. Ignition ON.
4. Verify the scan tool parameters listed below do not display Malfunction:
    - Pressure Control Solenoid Valve 4 Performance Test Status

- Pressure Control Solenoid Valve 4 Control Circuit Low Voltage Test Status
- Pressure Control Solenoid Valve 4 Control Circuit High Voltage Test Status
  - **If Malfunction is displayed**

    Refer to Circuit/System Testing below.

  - **If Malfunction is not displayed**

5. Operate the vehicle within the Conditions for Running the DTC. You may also operate the vehicle within the conditions that you observed from the Freeze Frame/Failure Records data.
6. Verify the DTC does not set.
   - **If the DTC sets**

     Refer to Circuit/System Testing below.

   - **If the DTC does not set**
7. All OK.

Circuit/System Testing

NOTE: You must perform the Circuit/System Verification first.

1. Ignition OFF, remove the Q8 Control Solenoid Valve Assembly.
2. Verify the Q8 Control Solenoid Valve Assembly is not contaminated with any debris and clean as necessary. Refer to **Control Solenoid Valve and Transmission Control Module Assembly Inspection (Gen 2 with 1.4L (LUV) 1.8L (LUW, LWE))**.
   - **If contaminated**

     Repair as necessary.

   - **If not contaminated**
3. Verify the resistance is within the specified range for each solenoid listed in the **Control Solenoid Valve and Transmission Control Module Assembly Inspection (Gen 2 with 1.4L (LUV) 1.8L (LUW, LWE))**.
   - **If the resistance is not within range**

     Replace the Q8 Control Solenoid Valve Assembly.

   - **If the resistance is within range**
4. Place the Q8 Control Solenoid Valve Assembly on a clean work surface near the transmission assembly.
5. Connect the **DT-48616-10** adapter harness between the vehicle harness connector and the Q8 Control Solenoid Valve Assembly connector. Ignition ON.
6. Verify the scan tool parameters listed below do not display Malfunction:
   - Pressure Control Solenoid Valve 2 Performance Test Status

- Pressure Control Solenoid Valve 2 Control Circuit Low Voltage Test Status
- Pressure Control Solenoid Valve 2 Control Circuit High Voltage Test Status
- **If Malfunction is displayed**

  Replace the Q8 Control Solenoid Valve Assembly.

- **If Malfunction is not displayed**

7. All OK.

Repair Instructions

Perform the **Diagnostic Repair Verification** after completing the repair.

- Perform the **Transmission Adaptive Values Learn** following all transmission repairs.
- **Control Module References** for Control Solenoid Valve Assembly replacement, programming and setup.

DTC P2723 OR P2724 (GEN 2 WITH 1.4L (LUV) 1.8L (LUW, LWE))

Diagnostic Instructions

- Perform the **Diagnostic System Check - Vehicle** prior to using this diagnostic procedure.
- Review **Strategy Based Diagnosis** for an overview of the diagnostic approach.
- **Diagnostic Procedure Instructions** provides an overview of each diagnostic category.

DTC Descriptors

DTC P2723

Pressure Control Solenoid Valve 5 Stuck Off

DTC P2724

Pressure Control Solenoid Valve 5 Stuck On

Circuit/System Description

Pressure control solenoid 5 is part of the control solenoid valve assembly, which has no serviceable components. The pressure control solenoid 5 regulates transmission fluid pressure to the 1-2-3-4 regulator valve which controls pressure to the 1-2-3-4 clutch. The transmission control module (TCM) calculates gear ratio based on the speed signals from the input shaft speed (ISS) sensor and the output shaft speed (OSS) sensor. The TCM compares the expected transmission gear ratio to the calculated gear ratio for each commanded gear.

Conditions for Running the DTC

- DTC P0101, P0102, P0103, P0106, P0107, P0108, P0171, P0172, P0174, P0175, P0201, P0202, P0203,

P0204, P0205, P0206, P0207, P0208, P0300, P0301, P0302, P0303, P0304, P0305, P0306, P0307, P0308, P0401, P042E, P0716, P0717, P0722, P0723, or P182E is not set.

- Ignition voltage is 9-32 V.
- Throttle position signal is valid.
- Engine speed is 400-7, 500 RPM for 5 s.
- High side driver is enabled.
- Transmission fluid temperature is -6.6°C (20°F) or greater.
- Transmission output speed is 100 RPM or greater or the throttle position is 0.5% or greater.
- DTC runs continuously when above conditions are met.

Conditions for Setting the DTC

P2723

TCM detects an incorrect on-coming clutch gear ratio, or shift flare when the 1-2-3-4 clutch is commanded ON. This condition must occur 3 times.

P2724

TCM detects an incorrect off-going clutch gear ratio, or shift tie-up when the 1-2-3-4 clutch is commanded OFF. This condition must occur 3 times.

Action Taken When the DTC Sets

- P2723 and P2724 are Type A DTCs.
- TCM freezes transmission adaptive functions.
- TCM commands maximum line pressure.
- TCM inhibits Tap Up/Tap Down.
- TCM inhibits Manual Up/Manual Down with the gear selector.
- Torque management is enabled.
- TCM inhibits powertrain braking.
- TCM inhibits neutral idle.
- TCM inhibits auto grade braking.
- TCM limits the transmission to reverse and 5th range - P2723 only.
- TCM limits the transmission to reverse and 3rd range - P2724 only.

Conditions for Clearing the DIC/DTC

P2723 and P2724 are Type A DTCs.

Diagnostic Aids

Before performing a road test, configure and setup the scan tool for snapshot mode. This will allow you to

display, monitor, and verify multiple transmission data parameters at one time, after the road test.

Reference Information

Schematic Reference

Automatic Transmission Controls Schematics

Connector End View Reference

- **COMPONENT CONNECTOR END VIEWS - INDEX**
- **INLINE HARNESS CONNECTOR END VIEWS - INDEX**

Description and Operation

- **Drive Range, First Gear (Gen 1)** , **Drive Range, First Gear (Gen 2/Hybrid)**
- **Drive Range, Second Gear (Gen 1)** , **Drive Range, Second Gear (Gen 2/Hybrid)**
- **Drive Range, Third Gear (Gen 1)** , **Drive Range, Third Gear (Gen 2/Hybrid)**
- **Drive Range - Fourth Gear (Gen 1)** , **Drive Range - Fourth Gear (Gen 2/Hybrid)**
- **Electronic Component Description**
- **Transmission Component and System Description**
- **Transmission General Description**

Electrical Information Reference

- **Circuit Testing**
- **Connector Repairs**
- **Testing for Intermittent Conditions and Poor Connections**
- **Wiring Repairs**

DTC Type Reference

Powertrain Diagnostic Trouble Code (DTC) Type Definitions

Scan Tool Reference

Control Module References for scan tool information

Circuit/System Verification

WARNING: Refer to Parking Brake and Drive Wheels Warning .

NOTE: If other DTCs are set, diagnose those DTCs first.

1. Engine idling, transmission in Park, with parking brake applied and drive wheels chocked.
2. Verify the transmission fluid level and condition is correct. Refer to **Transmission Fluid Level and Condition Check**.
   - **If the transmission fluid level and condition is not correct**

     Repair as necessary.

   - **If the transmission fluid level and condition is correct**
3. Ignition ON, clear the TCM DTCs with a scan tool.
4. Verify DTC P2723 or P2724 does not set while performing a road test. Refer to **Road Test**.
   - **If DTC P2723 or P2724 sets**

     Refer to Circuit/System Testing below.

   - **If DTC P2723 or P2724 does not set**
5. Operate the vehicle within the Conditions for Running the DTC. You may also operate the vehicle within the conditions that you observed from the Freeze Frame/Failure Records data.
6. Verify the DTC does not set.
   - **If the DTC sets**

     Refer to Circuit/System Testing below.

   - **If the DTC does not set**
7. All OK.

Circuit/System Testing

NOTE: You must perform the Circuit/System Verification first.

1. Engine idling at the normal operating temperature.
2. Verify the transmission line pressures are within the specified range. Refer to **Line Pressure Check**, and **Solenoid Valve Pressure (Gen 1)** , **Solenoid Valve Pressure (Gen 2)** .
   - **If the pressures are not within range**

     Refer to **Fluid Pressure High or Low**.

   - **If the pressures are within range**
3. Ignition OFF, remove the Q8 Control Solenoid Valve Assembly.
4. Verify the pressure changes for all solenoids when performing the solenoid test. Refer to **Control Solenoid Valve and Transmission Control Module Assembly Solenoid Performance Test**.
   - **If the pressure does not change**

     Replace the Q8 Control Solenoid Valve Assembly.

- **If the pressure changes**

5. Verify the mechanical conditions listed below do not exist. Repair or replace as necessary.

P2723 or P2724 - Control Valve Body Assembly

1-2-3-4 clutch regulator valve stuck/sticking - debris, binding, damaged valve, or scored bore.

P2723 - Automatic Transmission Fluid Filter Assembly

Oil filter or filter seal loose or damaged.

P2723 - Torque Converter (w/Fluid Pump) Housing Assembly

- Fluid pump housing/gear damaged/scored.
- Fluid pump or torque converter overstressed due to high temperatures.

P2723 - Trans Case and 1-2-3-4 Clutch Backing Plate Retaining Ring

1-2-3-4 clutch backing plate retaining ring not seated/oriented, causing clutch pack/piston over travel.

P2723 - Output Sun Gear Assembly

Housing/hub weld cracked/leaking.

P2723 - Lo and Reverse and 1-2-3-4 Clutch Housing Assembly

1-2-3-4 clutch piston cracked/damaged/leaking.

P2723 - Channel Plate and Spacer Plate

Oil channels or orifices blocked by debris.

P2723 or P2724 - Q8 Control Solenoid Valve Assembly

- Pressure Control Solenoid Valve 5 Stuck ON/OFF.
- O-ring seals leaking.
- Valve body filter plate assembly cracked, blocked, or damage gasket seal.

Repair Instructions

Perform the **Diagnostic Repair Verification** after completing the repair.

- Perform the **Transmission Adaptive Values Learn** following all transmission repairs.
- **Control Module References** for Control Solenoid Valve Assembly replacement, programming and setup.

DTC P2728-P2730

Diagnostic Instructions

- Perform the **Diagnostic System Check - Vehicle** prior to using this diagnostic procedure.
- Review **Strategy Based Diagnosis** for an overview of the diagnostic approach.
- **Diagnostic Procedure Instructions** provides an overview of each diagnostic category.

DTC Descriptors

DTC P2728

Pressure Control Solenoid Valve 5 Performance

DTC P2729

Pressure Control Solenoid Valve 5 Control Circuit Low Voltage

DTC P2730

Pressure Control Solenoid Valve 5 Control Circuit High Voltage

Circuit/System Description

Pressure control solenoid 5 is part of the control solenoid valve assembly which has no serviceable components. The normally high pressure control solenoid 5 regulates and directs oil pressure to the 1-2-3-4 clutch regulator valve. Increasing pressure control solenoid 5 pressure increases pressure to the 1-2-3-4 clutch. The transmission control module (TCM) varies the current to the pressure control solenoid 5 by controlling the amount of time the low side driver is ON and OFF. Increasing the current to pressure control solenoid 5 decreases pressure control solenoid 5 oil pressure by opening the solenoid exhaust port. Decreasing the current to pressure control solenoid 5 increases pressure control solenoid 5 oil pressure by closing OFF the solenoid exhaust port. Pressure control solenoid 5 power is supplied by the TCM through a high side driver. The high side driver protects the circuit and components from excessive current flow. If excessive current flow is detected, the high side driver will turn OFF. When the fault is corrected, the high side driver will reset.

Conditions for Running the DTC

- Engine speed is 400-7, 500 RPM for 5 s.
- Ignition voltage is 9-32 V.
- DTC runs continuously when above conditions are met.

Conditions for Setting the DTC

P2728

TCM detects an internal electrical performance malfunction of the pressure control solenoid 5 control circuit where the measured clutch pressure control solenoid 5 current does not equal the commanded clutch pressure

control solenoid 5 current for 5 s.

P2729

TCM detects a short to ground on the clutch pressure control solenoid 5 control circuit for 1 s.

P2730

TCM detects an open or short to voltage on the clutch pressure control solenoid 5 control circuit for 1 s.

Action Taken When the DTC Sets

P2728

- P2728 is a Type C DTC.
- TCM freezes transmission adaptive functions on the 1-2-3-4 clutch.

P2729

- P2729 is a Type A DTC.
- TCM commands the high side driver OFF.
- TCM forces the torque converter clutch OFF.
- TCM limits the transmission to 4th gear and reverse.
- TCM commands maximum line pressure.
- TCM freezes transmission adaptive functions.
- TCM inhibits Tap Up/Tap Down.
- TCM inhibits manual up, manual down with the shift selector.
- TCM inhibits neutral idle.
- TCM inhibits powertrain braking.

P2730

- P2730 is a Type A DTC.
- TCM limits the transmission to reverse and 4th gear.
- TCM inhibits powertrain braking.
- TCM inhibits neutral idle.
- TCM inhibits Tap Up/Tap Down function.
- TCM inhibits manual shifting of forward gears.
- TCM commands maximum line pressure.
- TCM freezes transmission adaptive functions.

Conditions for Clearing the DTC

- P2728 is a Type C DTC.
- P2729 and P2730 are Type A DTCs.

Reference Information

Schematic Reference

Automatic Transmission Controls Schematics

Connector End View Reference

- **COMPONENT CONNECTOR END VIEWS - INDEX**
- **INLINE HARNESS CONNECTOR END VIEWS - INDEX**

Description and Operation

- **Transmission General Description**
- **Transmission Component and System Description**
- **Electronic Component Description**

Electrical Information Reference

- **Circuit Testing**
- **Connector Repairs**
- **Testing for Intermittent Conditions and Poor Connections**
- **Wiring Repairs**

DTC Type Reference

Powertrain Diagnostic Trouble Code (DTC) Type Definitions

Scan Tool Reference

Control Module References for scan tool information

Special Tools

DT-48616-10 Adapter Harness

For equivalent regional tools, refer to **Special Tools** .

Circuit/System Verification

1. Operate the vehicle in second gear long enough to ensure at least a 3°C (5°F) rise in TCM temperature.
2. Operate the vehicle in drive range. Allow the transmission to shift through all forward gear ranges.

3. Verify the scan tool parameters listed below do not display Malfunction:
   - Pressure Control Solenoid Valve 5 Performance Test Status
   - Pressure Control Solenoid Valve 5 Control Circuit Low Voltage Test Status
   - Pressure Control Solenoid Valve 5 Control Circuit High Voltage Test Status
   - **If Malfunction is displayed**

     Refer to Circuit/System Testing below.

   - **If Malfunction is not displayed**
4. Operate the vehicle within the Conditions for Running the DTC. You may also operate the vehicle within the conditions that you observed from the Freeze Frame/Failure Records data.
5. Verify the DTC does not set.
   - **If the DTC sets**

     Refer to Circuit/System Testing below.

   - **If the DTC does not set**
6. All OK.

Circuit/System Testing

NOTE: You must perform the Circuit/System Verification first.

1. Ignition OFF, remove the Q8 Control Solenoid Valve Assembly.
2. Verify the Q8 Control Solenoid Valve Assembly is not contaminated with any debris and clean as necessary. Refer to **Control Solenoid Valve and Transmission Control Module Assembly Inspection (Gen 2 with 1.4L (LUV) 1.8L (LUW, LWE))**.
   - **If contaminated**

     Repair as necessary.

   - **If not contaminated**
3. Verify the resistance is within the specified range for each solenoid listed in the **Control Solenoid Valve and Transmission Control Module Assembly Inspection (Gen 2 with 1.4L (LUV) 1.8L (LUW, LWE))**.
   - **If the resistance is not within range**

     Replace the Q8 Control Solenoid Valve Assembly.

   - **If the resistance is within range**
4. Place the Q8 Control Solenoid Valve Assembly on a clean work surface near the transmission assembly.
5. Connect the **DT-48616-10** adapter harness between the vehicle harness connector and the Q8 Control Solenoid Valve Assembly connector. Ignition ON.

6. Verify the scan tool parameters listed below do not display Malfunction:
   - Pressure Control Solenoid Valve 5 Performance Test Status
   - Pressure Control Solenoid Valve 5 Control Circuit Low Voltage Test Status
   - Pressure Control Solenoid Valve 5 Control Circuit High Voltage Test Status
   - **If Malfunction is displayed**

     Replace the Q8 Control Solenoid Valve Assembly.

   - **If Malfunction is not displayed**
7. All OK.

Repair Instructions

Perform the **Diagnostic Repair Verification** after completing the repair.

- Perform the **Transmission Adaptive Values Learn** following all transmission repairs.
- **Control Module References** for Control Solenoid Valve Assembly replacement, programming and setup.

DTC P2762, P2763, OR P2764

Diagnostic Instructions

- Perform the **Diagnostic System Check - Vehicle** prior to using this diagnostic procedure.
- Review **Strategy Based Diagnosis** for an overview of the diagnostic approach.
- **Diagnostic Procedure Instructions** provides an overview of each diagnostic category.

DTC Descriptors

DTC P2762

Torque Converter Clutch (TCC) Pressure Control Solenoid Valve Performance

DTC P2763

Torque Converter Clutch (TCC) Pressure Control Solenoid Valve Control Circuit High Voltage

DTC P2764

Torque Converter Clutch (TCC) Pressure Control Solenoid Valve Control Circuit Low Voltage

Circuit/System Description

The torque converter clutch (TCC) pressure control solenoid is part of the control solenoid valve assembly which has no serviceable components. The normally low TCC pressure control solenoid regulates oil pressure

to the TCC regulator valve and TCC control valve. Increasing TCC pressure control solenoid oil pressure increases oil pressure to the torque converter to apply the clutch. The transmission control module (TCM) varies the current to the TCC pressure control solenoid by controlling the amount of time the low side driver is ON and OFF. Increasing current to the TCC pressure control solenoid increases oil pressure by closing OFF the solenoid exhaust port. Decreasing current to the TCC pressure control solenoid decreases oil pressure by opening up the solenoid exhaust port. TCC pressure control solenoid power is supplied by the TCM through a high side driver. The high side driver protects the circuit and components from excessive current flow. If excessive current flow is detected, the high side driver will turn OFF. When the fault is corrected, the high side driver will reset.

Conditions for Running the DTC

P2762

- P2762 is not set.
- Engine speed is 400-7, 500 RPM for 5 s.
- Ignition voltage is 9-32 V.
- DTC runs continuously when above conditions are met.

P2763 or P2764

- P0658 or P0659 is not set.
- Engine speed is 400-7, 500 RPM for 5 s.
- Ignition voltage is 9-32 V.
- High side driver is enabled.
- DTC runs continuously when above conditions are met.

Conditions for Setting the DTC

P2762

TCM detects an internal electrical performance malfunction on the TCC pressure control solenoid control circuit where the measured TCC pressure control solenoid current does not equal the commanded TCC pressure control solenoid current for 5 s.

P2763

TCM detects an open/high resistance or short to voltage on the TCC pressure control solenoid control circuit for 5 s.

P2764

TCM detects a short to ground on the TCC pressure control solenoid control circuit for 5 s.

Action Taken When the DTC Sets

P2762

P2762 is a Type C DTC.

P2763

- P2763 is a Type B DTC.
- TCM inhibits 6th gear.
- TCM forces TCC OFF.
- TCM changes to a Hot Mode shift pattern.

P2764

- P2764 is a Type A DTC.
- TCM inhibits TCC.
- TCM commands maximum line pressure.
- TCM freezes transmission adaptive functions.
- TCM defaults the transmission to 4th gear and reverse.
- TCM inhibits neutral idle.
- TCM inhibits Tap Up/Down function.
- TCM inhibits manual shifting of forward gears.
- TCM forces the high side driver OFF.
- TCM enables torque management.
- TCM inhibits auto grade braking.
- TCM inhibits powertrain braking.

Conditions for Clearing the DIC/DTC

- P2762 is a Type C DTC.
- P2763 is a Type B DTC.
- P2764 is a Type A DTC.

Reference Information

Schematic Reference

Automatic Transmission Controls Schematics

Connector End View Reference

- **COMPONENT CONNECTOR END VIEWS - INDEX**
- **INLINE HARNESS CONNECTOR END VIEWS - INDEX**

Description and Operation

- **Electronic Component Description**
- **Transmission Component and System Description**
- **Transmission General Description**

Electrical Information Reference

- **Circuit Testing**
- **Connector Repairs**
- **Testing for Intermittent Conditions and Poor Connections**
- **Wiring Repairs**

DTC Type Reference

Powertrain Diagnostic Trouble Code (DTC) Type Definitions

Scan Tool Reference

Control Module References for scan tool information

Special Tools

DT-48616-10 Adapter Harness

For equivalent regional tools, refer to **Special Tools** .

Circuit/System Verification

1. Operate the vehicle in 2nd gear long enough to ensure at least a 3°C (5°F) rise in TCM temperature.
2. Operate the vehicle in drive range and ensure TCC is commanded ON for 1 min.
3. Verify the scan tool parameters listed below do not display Malfunction:
   - TCC Pressure Control Solenoid Valve Performance Test Status
   - TCC Pressure Control Solenoid Valve Control Circuit Low Voltage Test Status
   - TCC Pressure Control Solenoid Valve Control Circuit High Voltage Test Status
   - **If Malfunction is displayed**

     Refer to Circuit/System Testing below.

   - **If Malfunction is not displayed**
4. Operate the vehicle within the Conditions for Running the DTC. You may also operate the vehicle within the conditions that you observed from the Freeze Frame/Failure Records data.
5. Verify the DTC does not set.
   - **If the DTC sets**

Refer to Circuit/System Testing below.

- **If the DTC does not set**

6. All OK.

Circuit/System Testing

NOTE: You must perform the Circuit/System Verification first.

1. Ignition OFF, remove the Q8 Control Solenoid Valve Assembly.
2. Verify the Q8 Control Solenoid Valve Assembly is not contaminated with any debris and clean as necessary. Refer to **Control Solenoid Valve and Transmission Control Module Assembly Inspection (Gen 2 with 1.4L (LUV) 1.8L (LUW, LWE))**.
   - **If contaminated**

     Repair as necessary.

   - **If not contaminated**
3. Verify the resistance is within the specified range for each solenoid listed in the **Control Solenoid Valve and Transmission Control Module Assembly Inspection (Gen 2 with 1.4L (LUV) 1.8L (LUW, LWE))**.
   - **If the resistance is not within range**

     Replace the Q8 Control Solenoid Valve Assembly.

   - **If the resistance is within range**
4. Place the Q8 Control Solenoid Valve Assembly on a clean work surface near the transmission assembly.
5. Connect the **DT-48616-10** adapter harness between the vehicle harness connector and the Q8 Control Solenoid Valve Assembly connector. Ignition ON.
6. Verify the scan tool parameters listed below do not display Malfunction:
   - TCC Pressure Control Solenoid Valve Performance Test Status
   - TCC Pressure Control Solenoid Valve Control Circuit Low Voltage Test Status
   - TCC Pressure Control Solenoid Valve Control Circuit High Voltage Test Status
   - **If Malfunction is displayed**

     Replace the Q8 Control Solenoid Valve Assembly.

   - **If Malfunction is not displayed**
7. All OK.

Repair Instructions

Perform the **Diagnostic Repair Verification** after completing the repair.

- Perform the **Transmission Adaptive Values Learn** following all transmission repairs.
- **Control Module References** for Control Solenoid Valve Assembly replacement, programming and setup.

SYMPTOMS - AUTOMATIC TRANSMISSION

NOTE: Use the symptom tables only if the following conditions are met:

- **Refer to Diagnostic Starting Point - Vehicle .**
- **There are no DTCs set.**
- **The control modules can communicate via the serial data link.**
- **Review the system operation in order to familiarize yourself with the system functions. Refer to Transmission General Description , and Transmission Component and System Description .**

Visual/Physical Inspection

Inspect the easily accessible or visible system components for obvious damage or conditions which could cause the symptom.

Intermittent

Faulty electrical connections or wiring may be the cause of intermittent conditions. Refer to **Testing for Intermittent Conditions and Poor Connections** .

Symptom List

Refer to a symptom diagnostic procedure from the following list in order to diagnose the symptom:

- Fluid Diagnosis
  - **Transmission Fluid Level and Condition Check**
  - **Fluid Pressure High or Low**
  - **Automatic Transmission Fluid Leaks**
  - **Fluid Leak Diagnosis (Non Hybrid)**
- Noise and Vibration Diagnosis
  - **Whine/Growl Noise**
  - **Noise and Vibration Analysis**
  - **Torque Converter Diagnosis**
  - **Non-Shifting Clutch Function Verification Description** for bump
- Range Performance Diagnosis
  - **No Park**
  - **No Drive in All Ranges**
  - **No Reverse Gear**

- Shift Quality Feel Diagnosis
  - **Harsh Garage Shift**
  - **Harsh or Late First, Second, Third, and Fourth Shift**
  - **Harsh First and Reverse Shift**
  - **Harsh or Late Second and Sixth Shift**
  - **Harsh or Late Third, Fifth, and Reverse Shift**
  - **Harsh Fourth, Fifth, and Sixth Shift**
  - **Non-Shifting Clutch Function Verification Description** for bump
- Shift Pattern
  - **No First and Reverse Gears**
  - **No First, Second, Third, and Fourth Gear**
  - **No Second and Sixth Gear**
  - **No Fourth, Fifth, and Sixth Gear**
  - **No Third, Fifth, and Reverse Gear**
- Torque Converter Diagnosis
  - **Torque Converter Diagnosis**
  - **No Torque Converter Clutch Apply**
  - **No Torque Converter Clutch Release**
- Symptom Not Found or No Symptom Detected
  - **Transmission Fluid Level and Condition Check**
  - **Road Test**
  - **Line Pressure Check**
  - **Non-Shifting Clutch Function Verification Description** for bump

CONTROL SOLENOID VALVE AND TRANSMISSION CONTROL MODULE ASSEMBLY INSPECTION (GEN 2 WITH 1.4L (LUV) 1.8L (LUW, LWE))

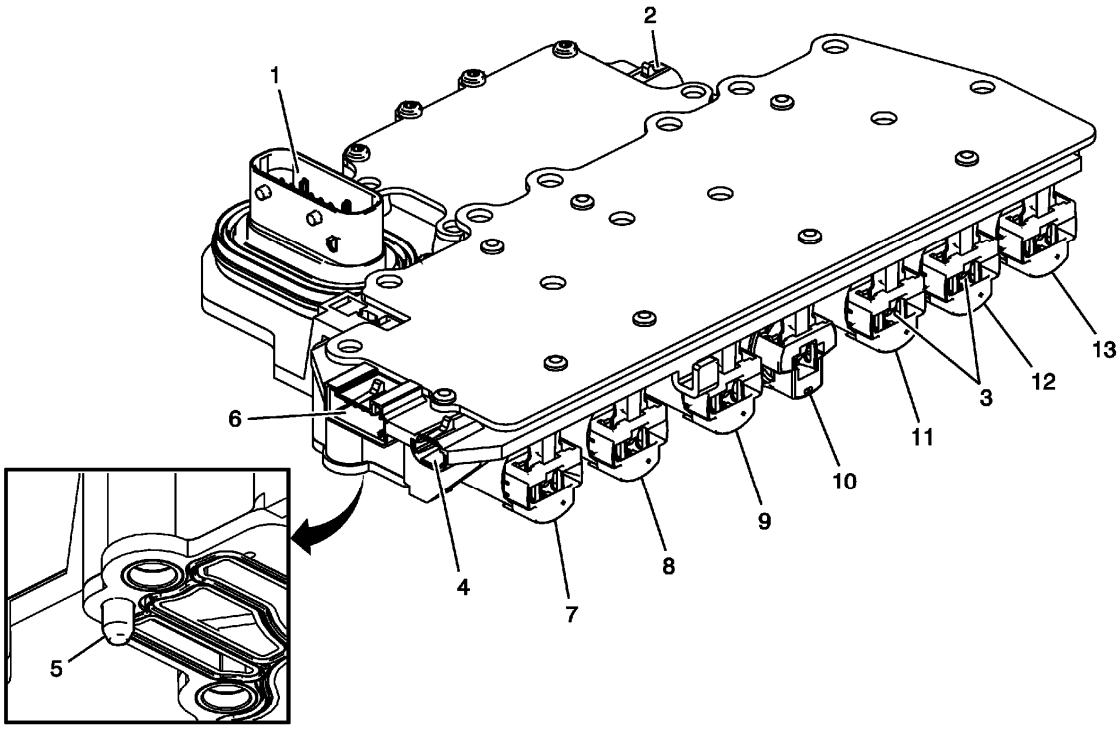

Fig. 1: View Of Control Solenoid Valve & Transmission Control Module Assembly
Courtesy of GENERAL MOTORS COMPANY

1. Verify the conditions listed below do not exist. Carefully inspect the control solenoid valve assembly connectors and pins (1, 2, 4, 6) for the condition. Repair or replace as necessary.
    - Damage
    - Bent pins
    - Debris
    - Broken retaining tab
    - Contamination
2. Verify there is no metallic debris inside the connectors near the terminal pins. Clean as necessary.
3. Verify the control solenoid valve assembly solenoid leads (3) do not have contamination or metallic debris. Clean as necessary.
4. Verify the resistance between the leads of each solenoid is within the range in the table below, with the solenoids at room temperature. If the resistance of any solenoid is not within range, replace the Control Valve Body Assembly.
5. Inspect the 2 control solenoid valve assembly filter plate retaining tabs (5) for cracks and ensure proper tension when filter plate is attached.

NOTE: **The connector on the TCC pressure control solenoid valve (8) will be either clear/transparent or yellow. The clear/transparent connector will have a color contrast when compared to the connectors on pressure control solenoid 2 (11) and pressure control solenoid 4 (12).**

Solenoid Resistance

Solenoid Name	Illustration Number	Expected Resistance ohms
Pressure Control Solenoid 3	7	4.55-5.75
Pressure Control Solenoid 5	8	4.55-5.75
TCC Pressure Control Solenoid Valve	9	3.42-4.18 Clear/transparent Connector 4.55-5.75 Yellow Connector
Shift Solenoid Valve 1	10	16.2-19.8
Pressure Control Solenoid 2	11	4.55-5.75
Pressure Control Solenoid 4	12	4.55-5.75
Line Pressure Control Solenoid Valve	13	4.55-5.75

CONTROL SOLENOID VALVE AND TRANSMISSION CONTROL MODULE ASSEMBLY INPUT SHAFT SPEED/OUTPUT SHAFT SPEED INPUT TEST

Special Tools

- **EL 35616** GM-Approved Terminal Test Kit
- **EL 38522** Variable Signal Generator

For equivalent regional tools, refer to **Special Tools** .

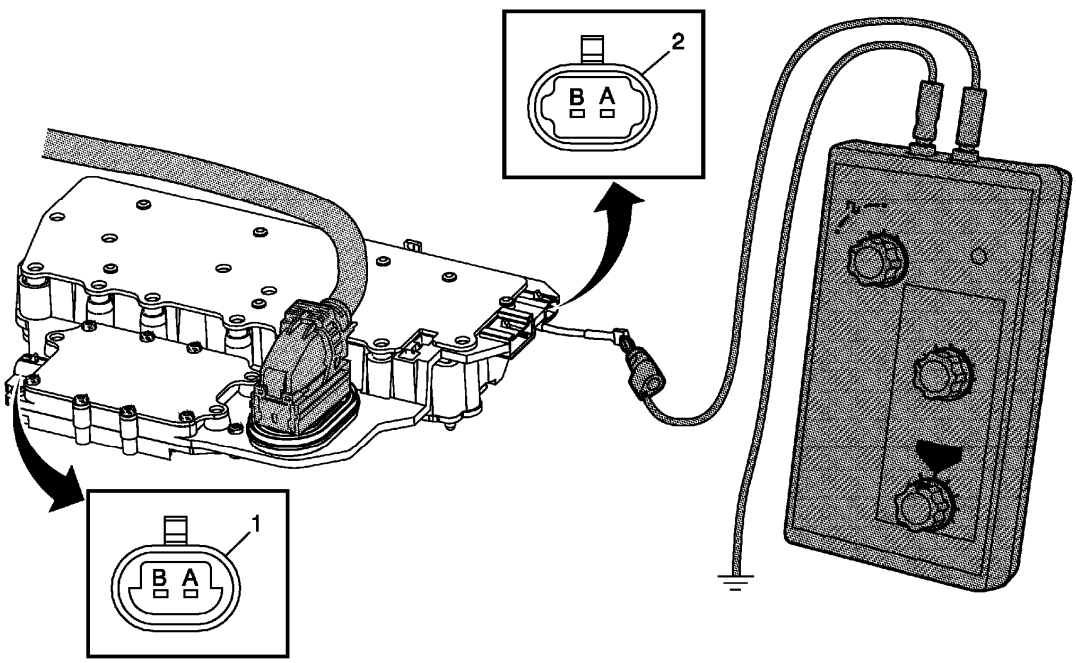

Fig. 2: View Of Special Tool & Control Solenoid Valve and Transmission Control Module Assembly
Courtesy of GENERAL MOTORS COMPANY

The purpose of this test is to provide a simulated input/output speed sensor (ISS/OSS) signal to the control solenoid valve assembly ISS/OSS input circuits.

Transmission Input Speed Sensor

1. Ignition OFF, disconnect the ISS wiring harness connector X3 (1) from the control solenoid valve assembly.
2. Ignition ON, test for 11-14 volts at terminal B.
    - If not within the specified range, replace the control solenoid valve assembly. Refer to **Control Solenoid Valve and Transmission Control Module Assembly Replacement** .
3. Ignition OFF, using the **EL 35616** terminal test kit, connect the **EL 38522** variable signal generator red lead to the ISS signal circuit terminal A on the TCM.
4. Connect the black lead from the **EL 38522** variable signal generator to ground.
5. Set the **EL 38522** variable signal generator to 5 volts, the frequency to 300 Hz, and the percent duty cycle to 50 or the normal position.
6. Ignition ON, verify with a scan tool the Transmission ISS parameter is between 495-505 RPM.
    - If not within the specified range, replace the control solenoid valve assembly. Refer to **Control Solenoid Valve and Transmission Control Module Assembly Replacement** .

Transmission Output Speed Sensor

1. Ignition OFF, disconnect the OSS wiring harness connector X4 (2) from the control solenoid valve assembly.
2. Ignition ON, test for 11-14 volts at terminal B.
    - If not within the specified range, replace the control solenoid valve assembly. Refer to **Control Solenoid Valve and Transmission Control Module Assembly Replacement** .
3. Ignition OFF, using the **EL 35616** terminal test kit, connect the **EL 38522** variable signal generator red lead to the OSS signal circuit terminal A on the TCM.
4. Connect the black lead from the **EL 38522** variable signal generator to ground.
5. Set the **EL 38522** variable signal generator to 5 volts, the frequency to 300 Hz, and the percent duty cycle to 50 or the normal position.
6. Ignition ON, verify with a scan tool the Transmission OSS parameter is between 745-825 RPM.
    - If not within the specified range, replace the control solenoid valve assembly. Refer to **Control Solenoid Valve and Transmission Control Module Assembly Replacement** .

CONTROL SOLENOID VALVE AND TRANSMISSION CONTROL MODULE ASSEMBLY SOLENOID PERFORMANCE TEST

Special Tools

DT-48616 Solenoid Assembly Test Kit & Adapter Harness

For equivalent regional tools, refer to **Special Tools** .

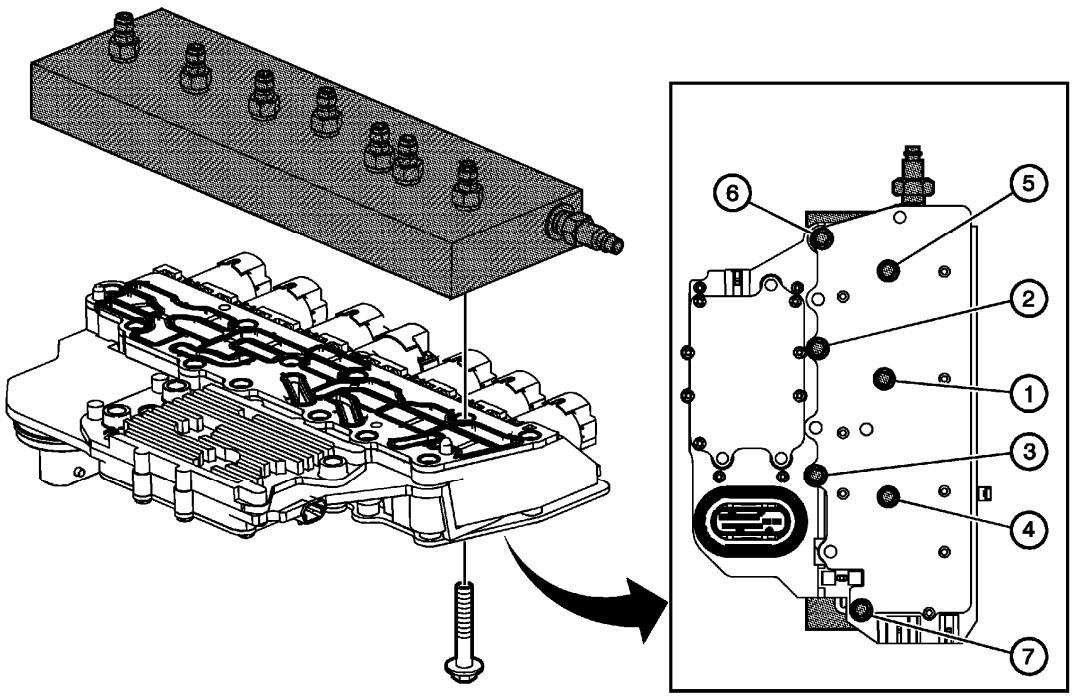

Fig. 3: Identifying Control Solenoid (W/Body & TCM) Valve Assembly Test Points
Courtesy of GENERAL MOTORS COMPANY

NOTE: Air inlet may be installed at either end of the DT-48616-1 test plate.

The purpose of this procedure is to test the functionality of the control solenoid valve assembly solenoids for a gross stuck open or stuck closed condition. **DT-48616** test plate is bolted to the control solenoid valve assembly on the valve body mounting surface. Pressurized air is passed into the aluminum test block, through the control solenoid valve assembly solenoid passage and back to a pressure gauge on the test block. The pressure gauge indicates open if air pressure is passed through the solenoid, or closed if the solenoid is unable to pass air through. A scan tool is used to command the solenoids ON and OFF. While watching the pressure gauge, one can determine the valve functionality.

NOTE: The scan tool output control will not work on Gen 1 transmissions, thus the Q8 Control Solenoid Valve Assembly performance test cannot be performed on these models. Gen 2 and later transmissions do not contain transmission fluid pressure switches. As a result, Gen 2 and later transmissions cannot have a valid Transmission Fluid Pressure Switch DTC. Steps 1 and 2 in the test procedure will determine if you are working with a Gen 1 or Gen 2 and later transmission.

1. Ignition ON, use a scan tool to check for Specific DTC P0842.
2. Verify that DTC P0842 shows invalid.
    - **If parameter does not indicate Invalid**
    1. Do not attempt to complete the performance test as it will not work on a Gen 1 Q8 Control

Solenoid Valve Assembly.

2. Verify the vehicle model year, engine, and options to make certain the correct diagnostic is selected.
   - **If parameter indicates Invalid**

3. Remove the control solenoid valve assembly and filter plate from the transmission. Refer to **Control Solenoid Valve and Transmission Control Module Assembly Replacement** .

CAUTION: Refer to Fastener Caution .

NOTE: Drain the TCM of excess transmission fluid before attaching to test block and use caution when attaching air to test block air inlet.

4. Bolt the **DT-48616-1** test plate to the filter plate, and control solenoid valve assembly. Use the bolts and washers supplied with the tool to attach the test block. Tighten the bolts to 5 N.m (44 lb in) using a center out alternating torque sequence.
5. Install the pressure gauge to the affected solenoid air port. Reference the Control Solenoid Valve Assembly Solenoid Performance Test Plate to Component Identification for test plate port identification.

NOTE: If air pressure greater than 345 kpa (50 psi) is applied, an accurate test of the shift solenoid cannot be performed.

6. Regulate the shop air pressure to 310-345 kpa (45-50 psi) and connect the line to the **DT-48616-1** test plate air inlet port.
7. Connect the **DT-48616-10** harness to the vehicle harness and the control solenoid valve assembly.

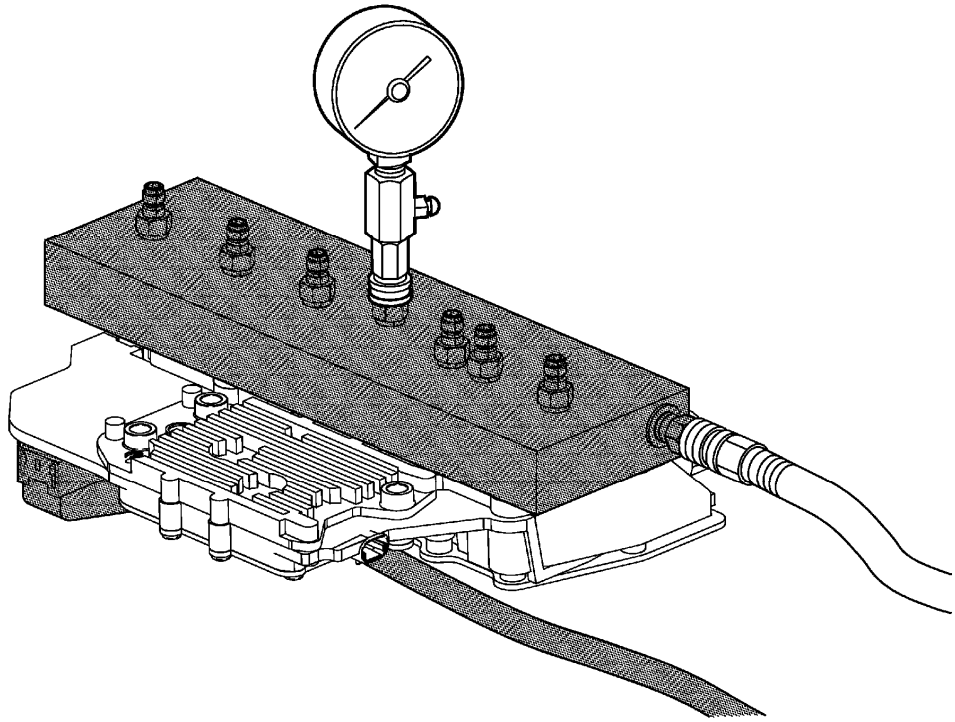

Fig. 4: Valve Pressure Test
Courtesy of GENERAL MOTORS COMPANY

NOTE: **The TCM limits the time the solenoids are commanded on to prevent overheating of the solenoids. Once the time limit is reached, the TCM prevents the test from being continued for 5 minutes. The ignition must remain ON during the 5 minute countdown period.**

8. Ignition ON.

NOTE:
- **Release the air pressure in the gauge between pressurization tests.**
- **If the solenoid valve is stuck, no pressure change will occur.**

9. Verify the pressure gauge changes when commanding the appropriate solenoid ON and OFF with a scan tool. Repeat test as necessary.
   - **If the pressure gauge does not change**

     Replace the Q8 Control Solenoid Valve Assembly.

   - **If the pressure gauge changes**
10. Solenoids are not grossly stuck.

Control Solenoid Valve Assembly Solenoid Performance Test Plate to Component Identification

		Commanded State	

Component	Port On Test Plate	ON	OFF
PC Solenoid 2, 35R	GEN 2 - C	Full pressure to gauge	No pressure to gauge
PC Solenoid 3, R1/456	G	Full pressure to gauge	No pressure to gauge
PC Solenoid 4, 2-6	B	Full pressure to gauge	No pressure to gauge
PC Solenoid 5, 1234	GEN 2 - F	Full pressure to gauge	No pressure to gauge
Shift Solenoid	D	Full pressure to gauge	Below full pressure to gauge
Line Pressure Control Solenoid	A	Command to highest setting, full pressure to gauge	Command to lowest setting, below full pressure to gauge
TCC PC Solenoid	E	Full pressure to gauge	No pressure to gauge

NOTE:
With the key on engine off (KOEO), the TCM will normally cycle some of the transmission solenoids On and Off to facilitate keeping the ports and solenoids clean and free of debris. This dither function is a normal activity and will cause the valves to cycle open and closed quickly when the TCM is powered up. This can cause the psi gauge to flicker high and low as the valves open and close. This may cause some air to exit the ports where the psi gauge is not connected as those solenoids cycle on and off.

TRANSMISSION ADAPTIVE VALUES LEARN

Transmission Adaptive Values Learn is a procedure for 6 speed automatic transmissions in which a series of tests are run to allow the transmission control module (TCM) to learn individual clutch characteristics. Once the clutch data is learned, Transmission Adaptive Values Learn translates it into the adaptive data cells, which the TCM uses for clutch control during shifts. The scan tool provides initiation of the Transmission Adaptive Values Learn procedure. This procedure is to be used following transmission repair.

The Transmission Adaptive Values Learn procedure must be performed when one of the following repairs have been made to the vehicle. Failure to perform the procedure after one of the following repairs may result in poor transmission performance, as well as transmission DTCs being set:

- Transmission internal service/overhaul
- Valve body repair or replacement
- Control solenoid valve assembly replacement
- TCM software/calibration update
- Any service in response to a shift quality concern

NOTE: Ensure the following conditions are met before performing the Transmission Adaptive Values Learn procedure:

- **Drive wheels are blocked**
- **Parking brake is applied**
- **Service brake is applied**
- **Zero percent throttle and no external engine RPM control**

- **Transmission fluid temperature is between values listed below:**
  - **MY 2011 and prior 70-95°C (158-203°F)**
  - **MY 2012 Gen 1 70-95°C (158-203°F)**
  - **MY 2012 Gen 2 64-95°C (147-203°F)**
  - **MY 2013 Gen 1 70-95°C (158-203°F)**
  - **MY 2013 Gen 2 64-76°C (147-158°F)**
  - **MY 2014 and later 64-76°C (147-158°F)**
- **Transmission gear selector has been cycled from Park to Reverse 3 times in order to purge air from the reverse clutches.**
- **Transmission Adaptive Values Learn will abort if the transmission fluid temperature increases to the values listed below:**
  - **MY 2011 and prior 110°C (230°F)**
  - **MY 2012 Gen 1 110°C (230°F)**
  - **MY 2012 Gen 2 100°C (212°F)**
  - **MY 2013 Gen 1 110°C (230°F)**
  - **MY 2013 Gen 2 86°C (187°F)**
  - **MY 2014 and later 86°C (187°F)**

NOTE: **If at any time during the procedure, required conditions are not met, Transmission Adaptive Values Learn Adapts may abort and the process may need to be started again from the beginning. If this occurs, the transmission will be left in a neutral state until the controller is shut down, key OFF and remove the scan tool and wait for more than 30 seconds prior to re-try procedure. If the procedure repeatedly fails, a limit that engineering set is being exceeded and there is possibly a transmission hardware issue.**

1. Use the scan tool to navigate to Transmission Adaptive Values Learn by selecting the following:
   1. Module Diagnostics
   2. Transmission Control Module
   3. Configurations/Reset Functions
   4. Transmission Adaptive Values Learn

NOTE: **If at any time during the procedure, required conditions are not met, Transmission Adaptive Values Learn may abort and the process may need to be started again from the beginning.**

2. Use the scan tool to perform the Transmission Adaptive Values Learn procedure. As the procedure is being performed, the scan tool data display will provide operator instructions. Follow the scan tool instructions, as required.
3. Once the procedure is complete, shut OFF the engine and power down the TCM. You will lose

communication to the scan tool.

NOTE: When the Transmission Adaptive Values Learn procedure is completed, the transmission will remain in a neutral state until the controller shuts down. If after 1-2 minutes of sitting, with the key OFF and scan tool removed, the vehicle remains in a neutral state, disconnect the battery and wait 5-10 minutes and then hook the battery back up. Reverse and drive should return.

4. Restart the engine. This will complete the Transmission Adaptive Values Learn procedure.

Troubleshooting

If the Transmission Adaptive Values Learn will not run and the above stated conditions have been met, ensure the following:

NOTE: The generation of transmission can be determined by using a scan tool to check for Specific DTC P0842. If DTC does not show Invalid, the transmission is Gen 1. If DTC shows Invalid, transmission is Gen 2.

- Determine if transmission is Gen 1 or Gen 2.
- Verify vehicle model year.
- Verify transmission fluid temperature is between the temperatures listed above for the vehicle model year and generation of transmission.
- Brakes and brake switch are functioning properly
- No active DTCs
- Closed throttle and engine RPM increases above 1, 500 RPM while at entrance of the test
- Park/Neutral position switch is properly adjusted and functioning
- Line pressure control is able to provide 1, 000 kPa and is within specifications
- Vehicle is not moving or vibrating excessively
- Clutches are properly assembled

BRAKE PEDAL POSITION SENSOR LEARN

Brake Pedal Position Sensor Learn is a procedure for the ECM to determine the position of the brake pedal position sensor when the brake pedal is in the released position.

NOTE: The Brake Pedal Position Sensor Learn procedure is required when the following service procedures have been performed:

- An Engine Control Module Replacement
- A BPP Sensor Replacement
- Any repair procedure that effects the brake pedal position sensor alignment

1. Install a scan tool.
2. Monitor the ECM for DTCs with a scan tool. If other DTCs are set, refer to **Diagnostic Trouble Code (DTC) List - Vehicle** for the applicable DTC that set.
3. Navigate to the scan tool Brake Pedal Position Sensor Learn command by selecting the following:
    1. Module Diagnosis
    2. Engine Control Module
    3. Configuration/Reset Functions
    4. Learn Functions
    5. Brake Pedal Position Sensor Learn
4. Ignition ON, Engine OFF, transmission in Park, brake pedal in the fully released position, select Learn.
5. Verify Brake Pedal Position Sensor and Brake Pedal Position Sensor Learned Home Position are within.1 Volts.
6. Select Exit.
7. Perform the body control module (BCM) brake pedal position sensor calibration. Refer to **Brake Pedal Position Sensor Calibration** .

MANUAL MODE OR TAP UP/DOWN DIAGNOSIS

1. If any DTCs are set, diagnose those DTCs first. Refer to **Diagnostic Trouble Code (DTC) List - Vehicle** .
2. If the Manual Mode or Tap Up/Down does not function, refer to the Circuit/System Verification for **DTC P0815, P0816, or P0826**.

TRANSMISSION FLUID LEVEL AND CONDITION CHECK

This procedure checks both the transmission fluid level, as well as the condition of the fluid itself.

CAUTION: Use Dexron VI transmission fluid only. Failure to use the proper fluid may result in transmission internal damage.

NOTE: Ensure the transmission has enough fluid in it to safely start the vehicle without damaging the transmission. With the vehicle off and the transmission fluid temperature at approximately 20-25°C (68-77°F) there must be at least enough fluid to drain out of the fluid level hole. This will ensure that there is enough fluid in the sump to fill the components once the vehicle is started.

Non Dipstick Level Checking Procedure

1. Start the engine.
2. Depress the brake pedal and move the shift lever through each gear range, pausing for about 3 seconds in each range. Then move the shift lever back to PARK (P).
3. Allow the engine to idle 500-800 rpm for at least 3 minutes to allow any fluid foaming to dissipate and

the fluid level to stabilize. Release the brake pedal.

NOTE: If the TFT reading is not at the required temperature, allow the vehicle to cool, or operate the vehicle until the appropriate TFT is reached. If the fluid temperature is below the specified range, perform the following procedure to raise the fluid temperature to the specification.

Drive the vehicle in second gear until the fluid temperature is at the specified temperature.

4. Keep the engine running and observe the transmission fluid temperature (TFT) using the Driver Information Center or a scan tool.

CAUTION: The transmission fluid level must be checked when the transmission fluid temperature (TFT) is at 85-95°C (185-203°F). If the TFT is not at this temperature, operate the vehicle or allow the fluid to cool as required. Setting the fluid level with a TFT outside this temperature will result in either an under or over-filled transmission. TFT 95°C under-filled, TFT 85°C over-filled. An under-filled transmission will cause premature component wear or damage. An over-filled transmission will cause fluid to discharge out the vent tube, fluid foaming, or pump cavitation.

5. Raise the vehicle on a hoist. The vehicle must be level, with the engine running and the shift lever in the PARK range.

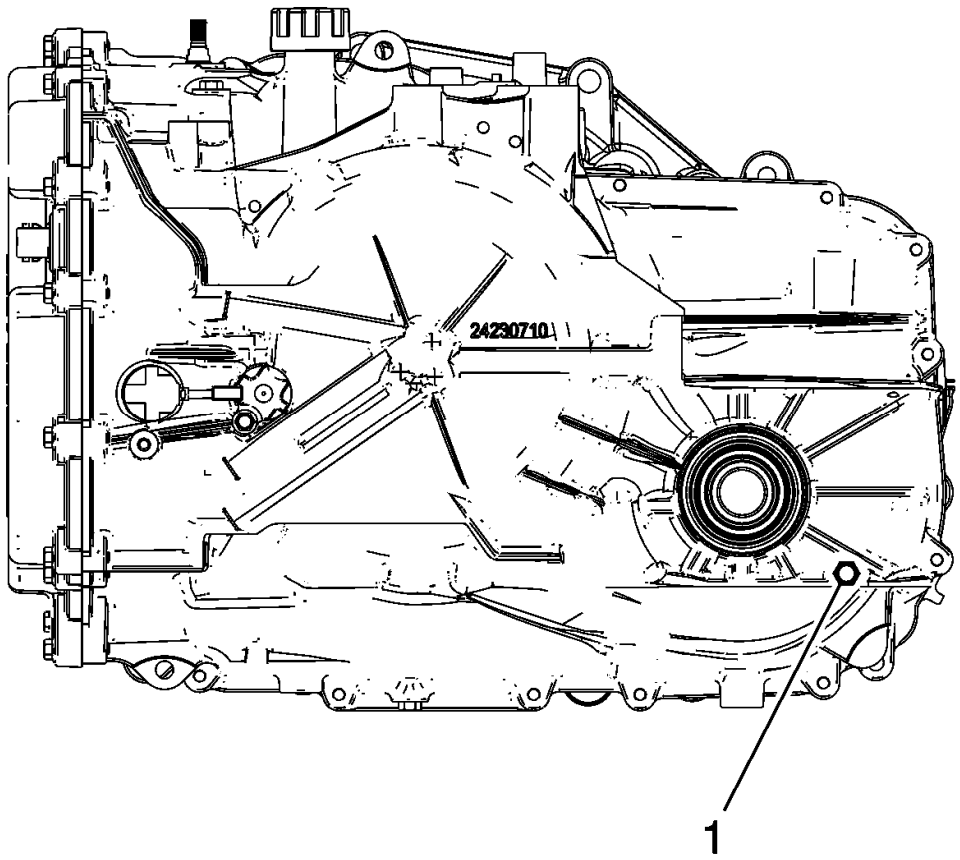

Fig. 5: View of Oil Level Plug
Courtesy of GENERAL MOTORS COMPANY

6. While the vehicle is idling, remove the oil level set plug. Allow any fluid to drain.

   Oil Level Plug (1)

   - If the fluid is flowing as a steady stream, wait until the fluid begins to drip.
   - If no fluid comes out, add fluid until fluid drips out.
7. Inspect the fluid color. The fluid should be red or dark brown.
   - If the fluid color is very dark or black and has a burnt odor, inspect the fluid for excessive metal particles or other debris. A small amount of "friction" material is a "normal" condition. If large pieces and/or metal particles are noted in the fluid, flush the oil cooler and cooler lines and overhaul the transmission. If there are no signs of transmission internal damage noted, replace the fluid, repair the oil cooler, and flush the cooler lines.
   - Fluid that is cloudy or milky or appears to be contaminated with water indicates engine coolant or water contamination. Refer to **Engine Coolant/Water in Transmission**.
8. Inspect for external leaks. Refer to **Fluid Leak Diagnosis (Non Hybrid)**.

9. If the fluid was changed, reset the transmission oil life monitor if applicable.

Dipstick Level Checking Procedure (If equipped)

1. Park the vehicle on a level surface, apply the parking brake and place the shift lever in PARK (P). Start the engine.
2. Depress the brake pedal and move the shift lever through each gear range, pausing for about 3 seconds in each range. Then move the shift lever back to PARK (P).
3. Allow the engine to idle 500-800 rpm for at least 3 minutes to allow any fluid foaming to dissipate and the fluid level to stabilize. Release the brake pedal.
4. Keep the engine running and observe the transmission fluid temperature (TFT) using the Driver Information Center or a scan tool.

CAUTION: The transmission fluid level must be checked when the transmission fluid temperature (TFT) is at 85-95°C (185-203°F). If the TFT is not at this temperature, operate the vehicle or allow the fluid to cool as required. Setting the fluid level with a TFT outside this temperature will result in either an under or over-filled transmission. TFT 95°C under-filled, TFT 85°C over-filled. An under-filled transmission will cause premature component wear or damage. An over-filled transmission will cause fluid to discharge out the vent tube, fluid foaming, or pump cavitation.

NOTE:

- **If the TFT reading is not at the required temperature, allow the vehicle to cool, or operate the vehicle until the appropriate TFT is reached. If the fluid temperature is below the specified range, perform the following procedure to raise the fluid temperature to the specification.**
- **Check the transmission fluid level when the TFT is at between 85-95° C (185-203°F). The fluid level rises as fluid temperature increases, so it is important to ensure the transmission fluid temperature is at the specified temperature.**

  Drive the vehicle in second gear until the fluid temperature is at the specified temperature.

5. The vehicle must be level, with the engine running and the shift lever in the PARK range.
6. Remove the dipstick and wipe it with a clean rag or paper towel.
7. Inspect the fluid color. The fluid should be red or dark brown.
   - If the fluid color is very dark or black and has a burnt odor, inspect the fluid for excessive metal particles or other debris. A small amount of "friction" material is a "normal" condition. If large pieces and/or metal particles are noted in the fluid, flush the oil cooler and cooler lines and overhaul the transmission. If there are no signs of transmission internal damage noted, replace the fluid, repair the oil cooler, and flush the cooler lines.

- Fluid that is cloudy or milky or appears to be contaminated with water indicates engine coolant or water contamination. Refer to **Engine Coolant/Water in Transmission**.

8. Install the dipstick. Wait three seconds and then remove it again.

NOTE: Always check the fluid level at least twice. Consistent readings are important to maintaining proper fluid level. If inconsistent readings are noted, inspect the transmission vent cap to ensure it is clean and unclogged.

NOTE: It is not necessary to get the fluid level all the way up to the MAX mark. Anywhere within the crosshatch band is acceptable.

9. Check both sides of the dipstick and read the lower level.
10. Install and remove the dipstick again to verify the reading.

NOTE: Do not add more than one half pint (0.25L) at a time without rechecking the level. Once the oil is on the dipstick bullet, it will not take much more fluid to raise the fluid level into the crosshatch band. Do not overfill. Also, if the fluid level is low, inspect the transmission for leaks. Refer to Fluid Leak Diagnosis (Non Hybrid).

11. If the fluid level is not within the crosshatch band, and the transmission temperature is at 90°C (194°F), add or drain fluid as necessary to bring the level into the crosshatch band. If the fluid level is low, add only enough fluid to bring the level into the crosshatch band.
12. If the fluid level is in the acceptable range, install the dipstick.
13. If the fluid was changed, reset the transmission oil life monitor if applicable.

Fluid Condition Inspection

- Inspect the fluid color. The fluid should be red in color. The fluid may also turn brown form normal use, and does not always indicate contamination.

NOTE: Fluid that is very dark or black and has a burnt odor usually indicates contamination or overheating.

- If the fluid color is very dark or black and has a burnt odor, inspect the fluid for excessive metal particles or other debris which may indicate transmission damage. Refer to **Road Test** to verify transmission operation. Change the transmission fluid if no other conditions are found.
- Fluid that is cloudy or milky or appears to be contaminated with water indicates engine coolant or water contamination. Refer to **Engine Coolant/Water in Transmission**.

LINE PRESSURE CHECK

Special Tools

GE-21867-A Oil Pressure Gauge Kit

For equivalent regional tools, refer to **Special Tools** .

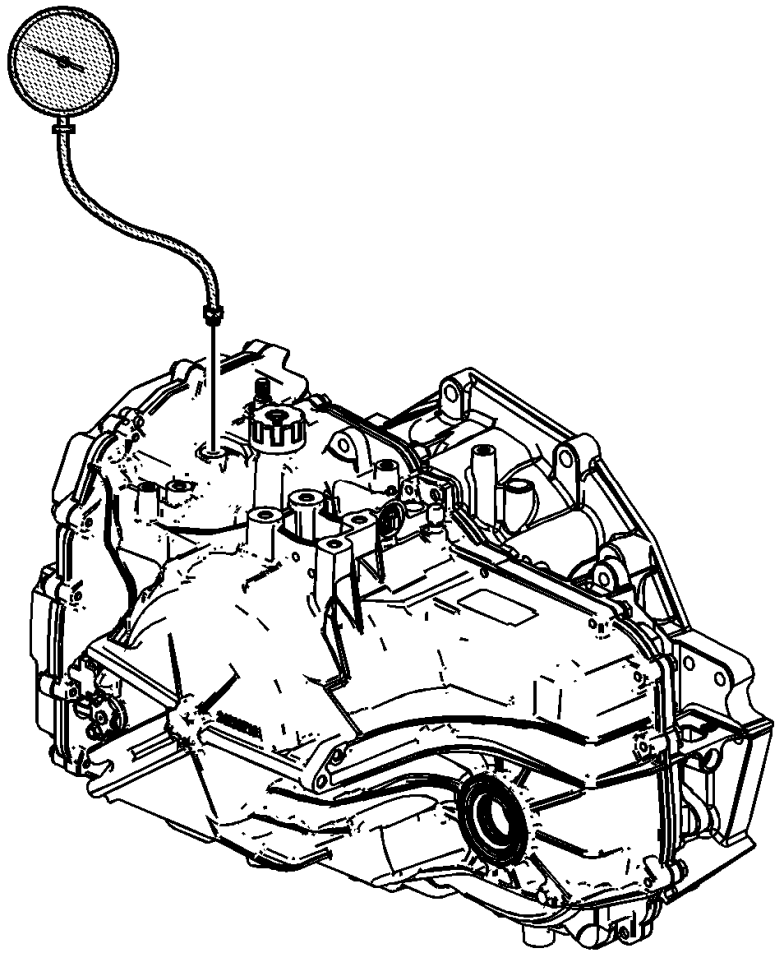

Fig. 6: Illustrating Line Pressure Checking
Courtesy of GENERAL MOTORS COMPANY

WARNING: Keep the brakes applied at all times in order to prevent unexpected vehicle motion. Personal injury may result if the vehicle moves unexpectedly.

1. Install a scan tool.
2. Start the engine.
3. Inspect the transmission for the proper fluid level. Refer to **Transmission Fluid Level and Condition Check**.
4. Use the scan tool to inspect for any active or stored diagnostic trouble codes.
5. Inspect the manual linkage at the transmission for proper function.

6. Turn the engine OFF.
7. Remove the line pressure test hole plug.
8. Install the **GE-21867-A** pressure gauge.
9. Access the Scan Tool Transmission Output Controls for the Line PC Solenoid.
10. Start the engine.

NOTE:

- **In order to achieve accurate line pressure readings, the following procedure must be performed at least 3 times in order to gather uniform pressure readings.**
- **The scan tool is only able to control the line PC solenoid in PARK and NEUTRAL with engine speeds below 1500 RPM. This protects the clutches from extreme high or low line pressures.**

11. Use the scan tool to increase and decrease the Line PC Solenoid in increments of approximately 100 KPa (15 psi). The scan tool commands the increment values automatically.
12. Allow the pressure to stabilize between increments.
13. Compare the pressure readings on the scan tool to those indicated on the **GE-21867-A** pressure gauge. Refer to **Solenoid Valve Pressure (Gen 1)** , **Solenoid Valve Pressure (Gen 2)** .
14. If the pressure readings vary greatly, refer to **Fluid Pressure High or Low**.
15. Turn the engine OFF.
16. Remove the **GE-21867-A** pressure gauge.

CAUTION: Refer to Fastener Caution .

17. Install the line pressure test hole plug. Tighten the pressure test hole plug to 12 N.m (106 lb in).

ROAD TEST

NOTE: The Road Test Procedure should be performed only as part of the Symptom Diagnosis.

Perform the road test in conjunction with the symptom diagnosis. Refer to **Symptoms - Automatic Transmission**.

The following test provides a method of evaluating the condition of the automatic transmission. The test is structured so that most driving conditions would be achieved. The test is divided into the following parts:

- Electrical Function Check
- Upshift Control and Torque Converter Clutch (TCC) Apply
- Part Throttle Step-In Downshifts
- Manual Downshifts

- Coasting Downshifts
- Manual Gear Range Selection
  - REVERSE
  - Driver Shift Control

NOTE: Complete the test in the sequence given. Incomplete testing cannot guarantee an accurate evaluation.

Before the road test, ensure the following:

- The engine is performing properly.
- Transmission fluid level is correct. Refer to **Transmission Fluid Level and Condition Check**.
- Tire pressure is correct.

During the road test:

- Perform the test only when traffic conditions permit.
- Operate the vehicle in a controlled, safe manner.
- Observe all traffic regulations.
- View the scan tool data while conducting this test.

  Take along qualified help in order to operate the vehicle safely.

- Observe any unusual sounds or smells.
- Ensure the transmission fluid temperature is at least 90°C (194°F).

After the road test, check the following:

- Inspect for proper transmission fluid level. Refer to **Transmission Fluid Level and Condition Check**.
- Inspect for any diagnostic trouble codes (DTCs) that may have set during the testing. Refer to the applicable DTC.
- Monitor the scan tool data for any abnormal readings or data.
- Inspect for fluid leaks. Refer to **Fluid Leak Diagnosis (Non Hybrid)**.

Electrical Function Check

Perform this procedure first in order to ensure the electronic transmission components are functioning properly. If these components are not checked, a simple electrical condition could be misdiagnosed.

1. Connect the scan tool.
2. Ensure the gear selector is in PARK and set the parking brake.
3. Start the engine.
4. Verify that the following scan tool data can be obtained and is functioning properly.

Refer to **Control Module References** for typical data values. Data that is questionable may indicate a concern.

- Engine Speed
- Transmission ISS
- Transmission OSS
- Vehicle Speed
- IMS
- Commanded Gear
- Gear Ratio
- Line PC Sol. Pressure Cmd.
- Brake Switch
- ECT, Engine Data List
- Trans. Fluid Temp.
- TCM Temperature
- Calc. Throttle Position
- Ignition Voltage
- TFP Switch 1
- TFP Switch 3
- TFP Switch 4
- TFP Switch 5
- PC Sol. 2 Pressure Cmd.
- PC Sol. 3 Pressure Cmd.
- PC Sol. 4 Pressure Cmd.
- PC Sol. 5 Pressure Cmd.
- Shift Solenoid 1
- Shift Solenoid 2
- TCC PC Sol. Duty Cycle
- TCC Slip Speed

5. Check the garage shifts.
    1. Apply the brake pedal and ensure the parking brake is set.
    2. Move the gear selector through the following ranges:
        1. PARK to REVERSE
        2. REVERSE to NEUTRAL
        3. NEUTRAL to DRIVE
        4. DRIVE to REVERSE
        5. REVERSE to DRIVE
    3. Pause 2 to 3 seconds in each gear position.

4. Verify the gear engagements are immediate (less than 2 seconds to complete if transmission fluid temperature is above 20°C (68°C) and not harsh. Note that these shifts may be almost imperceptible in some applications. Using the scan tool to monitor Transmission ISS achieving 0 rpm can be used to check delay in these cases.

NOTE: Harsh engagement may be caused by any of the following conditions:

- **High engine idle speed-Compare engine idle speed to desired idle speed.**
- **Incorrect line pressure-Investigate Line PC Sol. Pressure Cmd. kPa (psi), also perform Line Pressure Check.**
- **A default condition caused by certain DTCs that result in maximum line pressure to prevent clutch slippage.**
- **Incomplete adapting or incorrect adapting-Repeat maneuver multiple times to see if shift quality improves. If it does not, refer to the service procedures for Harsh Garage Shift.**

NOTE: Delayed engagement may be caused by any of the following conditions:

- **Low idle speed-Compare engine idle speed to desired idle speed.**
- **Low fluid level**
- **Incorrect line pressure-Investigate Line PC Sol. Pressure Cmd. kPa (psi), also perform Line Pressure Check.**
- **Cold transmission fluid temperature (TFT)-Use the scan tool to determine TFT.**
- **Selector linkage-Inspect and adjust as necessary.**
- **Incomplete adapting or incorrect adapting-Repeat maneuver multiple times to see if delay improves. If it does not, refer to the service procedures for Harsh First and Reverse Shift.**

6. Monitor transmission range on the scan tool, transmission data list.
    1. Apply the brake pedal and ensure the parking brake is set.
    2. Move the gear selector through all ranges.
    3. Pause 2 to 3 seconds in each range.
    4. Return gear selector to PARK.
    5. Verify that all selector positions match the scan tool display.
7. Check throttle position input.
    1. Apply the brake pedal and ensure the parking brake is set.
    2. Ensure the gear selector is in PARK.
    3. Monitor the scan tool Calc. Throttle Position while increasing and decreasing engine speed with the throttle pedal. The scan tool Calc. Throttle Position percentage should increase and decrease with engine speed.

If any of the above checks do not perform properly, record the result for reference after completion of the road test.

Upshift Control and Torque Converter Clutch (TCC) Apply

The TCM calculates the upshift points based primarily on 2 inputs: throttle position and vehicle speed. When the TCM determines that conditions are met for a shift to occur, the TCM commands the shift by varying current to the appropriate PC solenoids to control oncoming and offgoing clutch pressures.

Perform the following steps:

1. Monitor the following scan tool parameters:
    - Calc. Throttle Position
    - Vehicle Speed
    - Engine Speed
    - Transmission ISS
    - Transmission OSS
    - Commanded Gear
    - TCC PC Sol. Pressure Cmd.
    - TCC Slip Speed
    - TFP Switch 1
    - TFP Switch 3
    - TFP Switch 4
    - TFP Switch 5
    - PC Sol. 2 Pressure Cmd.
    - PC Sol. 3 Pressure Cmd.
    - PC Sol. 4 Pressure Cmd.
    - PC Sol. 5 Pressure Cmd.
    - Shift Solenoid 1 and 2
2. Place the gear selector in the DRIVE position.
3. Accelerate the vehicle using a steady throttle position between 15 and 20 percent. Hold the throttle steady.
4. As the transmission upshifts, there should be a noticeable shift feel or engine speed change within 1 to 2 seconds of the commanded gear change. The PC solenoid pressure command should chang to "YES" for the oncoming clutch and the PC solenoid pressure command should change to "NO" for the offgoing clutch.
5. Note any harsh, soft or delayed shifts or slipping. Note any noise or vibration.
6. The TCC feel may not be noticeable. In many applications the TCC will apply after the 1-2 shift and TCC events will not be easily detected using engine speed.

NOTE: This transmission is equipped with an electronically controlled capacity clutch (ECCC), which allows operation of the clutch without fully locking

to the torque converter cover. The clutch maintains a small amount of slippage, approximately 20 RPM, in 2nd, 3rd, 4th, 5th, and 6th gears, depending on the vehicle application. ECCC was developed to reduce the possibility of noise, vibration or chuggle caused by TCC apply. Full lockup is available at highway speeds on some applications.

7. Monitor TCC PC solenoid pressure command while driving and check TCC slip speed when the pressure command indicates that the TCC is commanded to apply:

   When the TCC applies, slip speed should be controlled to below 100 RPM when the transmission is not shifting and the throttle is held steady. If the TCC slip exceeds this value for more than 6 seconds after the TCC PC Sol. Pressure Command indicates that the TCC is commanded on:

   - Check for DTCs.
   - Refer to **Torque Converter Diagnosis**.

Part Throttle Step-In Downshifts

1. Place the gear selector in the DRIVE position.
2. Accelerate the vehicle at light throttle (5-15 percent) until 3rd gear is just achieved.
3. Quickly increase throttle angle until commanded gear indicates that a downshift to 2nd gear is commanded.
4. Verify that the transmission downshifts within 2 seconds of the throttle movement.
5. Repeat steps 2 to 4 at higher speed to achieve 4th gear and then step in to command a 4th gear to 3rd gear downshift.
6. Repeat steps 2 to 4 at higher speed to achieve 5th gear and then step in to command a 5th to 4th gear downshift.
7. Repeat steps 2 to 4 at higher speed to achieve 6th gear and then step in to command a 6th gear to 5th gear downshift.
8. Note any harsh, soft or delayed shifts or slipping. Note any noise or vibration.

Manual Downshifts

Manual downshift testing is not required since all vehicles equipped are also equipped with some form of Driver Shift Control(DSC). The TCM will automatically override DSC downshifts to protect the transmission from damage.

Coasting Downshifts

1. Place the gear selector in the DRIVE position.
2. Accelerate the vehicle to 6th gear with the TCC applied.
3. Release the throttle and apply the brakes
4. Verify that the downshifts occur as commanded by monitoring gear ratio, which should change after commanded gear changes.

Manual Gear Range Selection

This application does not utilize manual forward gear ranges.

Reverse

Perform the following test using a 10-15 percent throttle position.

1. With the vehicle stopped, move the gear selector to REVERSE.
2. Slowly accelerate the vehicle.
3. Verify that there is no noticeable slip, noise or vibration.

Driver Shift Control (DSC)

Refer to the owner's manual for specific instructions on the type of DSC available in this application. Utilize the DSC to ensure that the transmission responds appropriately to driver's commands. The TCM will upshift automatically when maximum engine speed is achieved and will protect from any downshift which may cause excessive engine RPMs.

TORQUE CONVERTER DIAGNOSIS

Torque Converter Stator

The torque converter stator roller clutch can have 2 different malfunctions.

- The stator assembly freewheels in both directions.
- The stator assembly remains locked up in both directions.

Poor Acceleration at Low Speed - Stator Roller Clutch Freewheels at All Times

If the stator is freewheeling at all times, the vehicle tends to have poor acceleration from a standstill and at speeds below 48-55 km/h (30-34 mph). At speeds above 48-55 km/h (30-34 mph), the vehicle may act normally.

For poor acceleration at low speeds, you should first determine that the exhaust system is not blocked, and the transmission is in First gear when starting out. If the engine freely accelerates to high RPM in NEUTRAL, you can assume that the engine and the exhaust system are normal. Check for poor performance in DRIVE and REVERSE to help determine if the stator is freewheeling at all times.

Poor Acceleration at High Speed - Stator Roller Clutch is Locked Up at All Times

If the stator is locked up at all times, performance is normal when accelerating from a standstill. Engine RPM and vehicle speed are limited or restricted at speeds above 48-55 km/h (30-34 mph). Visual examination of the converter may reveal a blue color from overheating.

Torque Converter Bearing Noise

NOTE: Do not confuse this noise with pump whine noise, which is usually noticeable in all gear ranges. Pump whine will vary with line pressure.

Torque converter whine is noticed when the vehicle is stopped and the transmission is in DRIVE or REVERSE. This noise will increase as you increase the engine RPM. The noise will stop when the vehicle is moving or when you apply the torque converter clutch, because there is no slip speed across the bearings.

Perform a stall test to verify that the noise is actually coming from the torque converter:

1. Place your foot on the brake.
2. Put the gear selector in DRIVE.

CAUTION: You may damage the transmission if you depress the accelerator for more than 6 seconds.

3. Depress the accelerator to approximately 1, 200 RPM for no more than six seconds.

A torque converter noise will increase under this load.

Torque Converter Clutch

The torque converter clutch (TCC) is applied by fluid pressure, which is controlled by a TCC pressure control (PC) solenoid. This solenoid is part of the control solenoid valve assembly, which is located inside the automatic transmission assembly. The solenoid is controlled through a combination of computer controlled switches and sensors. Electronically controlled capacity clutch (ECCC) is controlled slip across the TCC.

Torque Converter Clutch Shudder

The key to diagnosing torque converter clutch (TCC) shudder is to note when it happens and under what conditions. TCC shudder should only occur during the apply, release, or ECCC conditions of the converter clutch. Shudder should never occur after the TCC is fully locked (approximately 0 RPM slip).

If Shudder Occurs During TCC Apply, Release, and ECCC

If the shudder occurs while the TCC is applying, the problem can be within the transmission or the torque converter. Something is causing one of the following conditions to occur:

- The clutch is not engaging completely.
- The clutch is not releasing completely.
- The clutch is releasing and applying rapidly and continuously.

One of the following conditions may be causing the TCC Shudder to occur:

- Leaking turbine shaft/TCC seals
- A restricted release orifice

- A distorted clutch or converter cover due to long flexplate to converter bolts
- Defective friction material on the TCC plate

If Shudder Occurs After TCC has Locked

Engine problems may go unnoticed under light throttle and load, but they become noticeable after the TCC has locked when going up a hill or accelerating.

Refer to **Symptoms - Engine Controls** (1.6L LDE or 1.8L) in order to avoid misdiagnosis of TCC shudder and the unnecessary disassembly of a transmission or the unnecessary replacement of a torque converter.

Torque Converter Vibration Test

NOTE: The Noise and Vibration Analysis procedure should be performed prior to performing this test.

Indexing Torque Converter

To determine and correct a torque converter vibration, the following procedure may have to be performed several times to achieve the best possible torque converter to flexplate balance.

1. Remove the torque converter bolts.
2. Rotate the torque converter one bolt position from the original marked position.

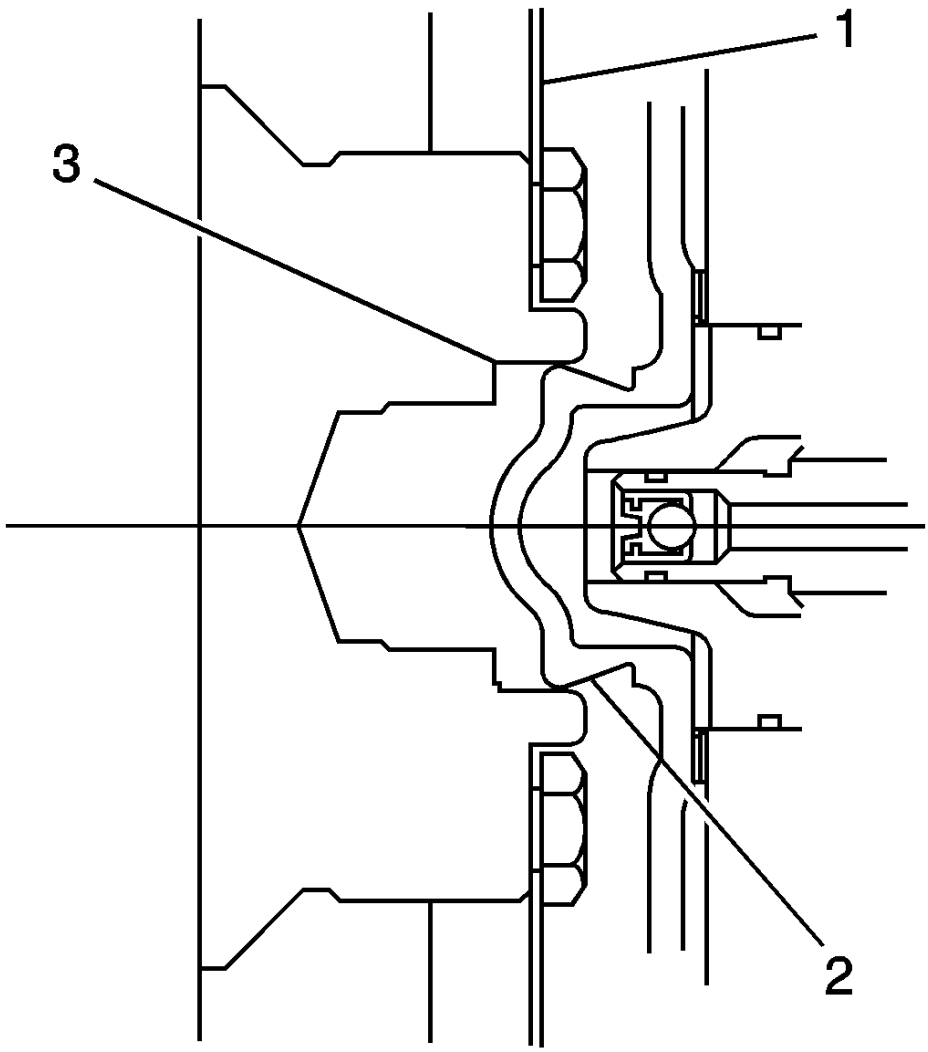

Fig. 7: View Of Torque Converter Hub In Engine Crankshaft
Courtesy of GENERAL MOTORS COMPANY

CAUTION: When installing the torque converter to the flexplate, make sure to use specified bolts. DO NOT use longer bolts. Using longer bolts will result in deformation of the torque converter cover and cause internal damage.

CAUTION: Refer to Fastener Caution .

3. Align the torque converter pilot (2) in the engine crankshaft (3). Install the torque converter to flexplate bolts, and tighten according to **Fastener Tightening Specifications (Off Vehicle)** , **Fastener Tightening Specifications (On Vehicle)** .
4. Lower the vehicle.
5. With the engine at idle speed and the transmission in PARK or NEUTRAL, observe the vibration.

Repeat this procedure until the best possible balance is obtained.

6. Install the torque converter access cover and bolts (if equipped) and tighten according to **Fastener Tightening Specifications (Off Vehicle)** , **Fastener Tightening Specifications (On Vehicle)** .

Torque Converter Replacement Guide

Condition	Action
• Transmission Fluid Oxidized/Discolored • Clutch Fiber Material	Do not replace the torque converter. Refer to **Transmission Fluid Level and Condition Check**.
Transmission Fluid Contaminated with Metal Particles	**NOTE:** **Do not replace the torque converter for clutch system or gearset component damage. Fine metallic debris or clutch plate material that is suspended in the fluid will not cause damage to the internal torque converter components nor any internal transmission components.**
Harsh Gear Shifts	Do not replace the torque converter. Refer to **Symptoms - Automatic Transmission**.
Noise-Whine	• Refer to **Symptoms - Automatic Transmission**. • Do not replace the torque converter if noise is present in Neutral/Park. Refer to **Symptoms - Engine Mechanical** (1.6L LDE or 1.8L).
Vibration-Out of Balance	Refer to Torque Converter Vibration Test in this procedure.
No Drive/Slips in Drive	Do not replace the torque converter until completing all engine and transmission diagnostics.
Idle Surge/Rough Idle	Do not replace the torque converter. Refer to **Symptoms - Engine Controls** (1.6L LDE or 1.8L).
TCC Apply/Release Shudder	Do not replace the torque converter. Refer to Torque Converter Clutch Shudder in this procedure.
TCC Chuggle	Do not replace the torque converter. Refer to **Symptoms - Engine Controls** (1.6L LDE or 1.8L).
DTC P0741-TCC Stuck OFF/High Slip-Intermittent Only	Do not replace the torque converter. Refer to **DTC P0741 or P0742 (Gen 2 with 1.4L (LUV) 1.8L (LUW, LWE))** diagnostic table.
	Do not replace the torque converter.

DTC P0741-TCC Stuck OFF/High Slip	Refer to **DTC P0741 or P0742 (Gen 2 with 1.4L (LUV) 1.8L (LUW, LWE))** diagnostic table.
DTC P0742-TCC Stuck ON	Do not replace the torque converter. Refer to **DTC P0741 or P0742 (Gen 2 with 1.4L (LUV) 1.8L (LUW, LWE))** diagnostic table.
Transmission Fluid Contaminated with Sludge/Metal Particles as a result of: • Engine Coolant/Oil • Pump damage • Drive sprocket support damage • Turbine/stator shaft damage • Internal converter damage with no damage found in the transmission	Replace the torque converter.
Poor Acceleration above 48 km/h (30 mph) - Good Launch	Do not replace the torque converter until completing all engine and transmission diagnostics. • Refer to Torque Converter Stator in this procedure. • Refer to **Symptoms - Engine Controls** (1.6L LDE or 1.8L).
Poor Launch - Good Acceleration above 48 km/h (30 mph)	Do not replace the torque converter until completing all engine and transmission diagnostics. • Refer to Torque Converter Stator in this procedure. • Refer to **Symptoms - Engine Controls** (1.6L LDE or 1.8L).
Stripped Converter Bolt Holes	• Replace the torque converter. • Inspect flexplate and refer to **Lower Engine Noise, Regardless of Engine Speed** (1.6L or 1.8L).
Torque Converter Pilot Damaged	Replace the torque converter.
Torque Converter Hub surface is damaged - scored, raised/transferred metal.	Replace the torque converter.
External Leaks in the weld areas - hub, lug or closure weld.	Replace the torque converter.
Broken/Cracked Flexplate	Replace the torque converter.
Torque Converter Discolored/Overheated	Replace the torque converter.

CLUTCH PLATE DIAGNOSIS

Composition Plates

Dry the plates and inspect the plates for the following conditions:

- Pitting
- Flaking
- Delamination-splitting or separation of bonded clutch material
- Wear
- Glazing
- Cracking
- Charring
- Chips or metal particles embedded in the lining

Replace a composition plate which shows any of these conditions.

Steel Plates

Wipe the plates dry and check the plates for heat discoloration. If the surfaces are smooth, even if color smear is indicated, you can reuse the plate. If the plate is discolored with heat spots or if the surface is scuffed, replace the plate.

Causes of Burned Clutch Plates

The following conditions can result in a burned clutch plate:

- Incorrect usage of clutch or apply plates
- Engine coolant or water in the transmission fluid
- A cracked clutch piston
- Damaged or missing seals
- Low line pressure
- Valve body conditions
    - The valve body face is not flat.
    - Porosity in between channels.
    - The valve train retainers are improperly installed.
    - The checkballs are misplaced.
    - Malfunctioning valves.
- The Teflon® seal rings are worn or damaged.

ENGINE COOLANT/WATER IN TRANSMISSION

CAUTION: The antifreeze or water will deteriorate the seals, gaskets and the glue that

bonds the clutch material to the pressure plate. Both conditions may cause damage to the transmission.

If antifreeze or water has entered the transmission, perform the following:

1. Disassemble the transmission.
2. Replace all of the rubber type seals. The coolant will attack the seal material which will cause leakage.
3. Replace the composition-faced clutch plate assemblies. The facing material may separate from the steel center portion.
4. Replace all of the nylon parts - washers.
5. Replace the torque converter.
6. Thoroughly clean and rebuild the transmission, using new gaskets and oil filter.
7. Flush the cooler lines after the transmission cooler has been properly repaired or replaced.
8. Inspect the rubber hose portion of the oil cooler lines for damage, if applicable. Refer to **Transmission Fluid Cooler Flushing and Flow Test**.

FLUID LEAK DIAGNOSIS (NON HYBRID)

General Method

1. Verify that the leak is transmission fluid.

CAUTION: Do not clean using brake cleaner or other reactive solvents as these solvents can damage rubber gaskets, seals and bushings.

2. Thoroughly clean the suspected leak area using a rag.

NOTE: Do not idle vehicle, this will not actuate transmission systems, and do not drive the vehicle on the freeway as this will splatter oil inhibiting leak diagnosis.

3. Operate the vehicle for 15-20 minutes under city driving conditions until normal operating temperatures are reached.
4. Park the vehicle over clean paper or cardboard.
5. Shut OFF the engine.
6. Look for fluid spots on the paper.
7. Make the necessary repairs.

Powder Method

CAUTION: Do not clean using brake cleaner or other reactive solvents as these solvents can damage rubber gaskets, seals and bushings.

1. Thoroughly clean the suspected leak area using a rag.
2. Apply an aerosol type leak tracing powder to the suspected leak area.

NOTE: Do not idle vehicle, this will not actuate transmission systems, and do not drive the vehicle on the freeway as this will splatter oil inhibiting leak diagnosis.

3. Operate the vehicle for 15-20 minutes under city driving conditions until normal operating temperatures are reached.
4. Shut OFF the engine.
5. Inspect the suspected leak area.
6. Trace the leak path through the powder in order to find the source of the leak.
7. Make the necessary repairs.

Dye and Black Light Method

A fluid dye and black light kit is available from various tool manufacturers.

1. Follow the manufacturer's instructions in order to determine the amount of dye to use.
2. Operate the vehicle for 24 km (15 mi) or until normal operating temperatures are reached.
3. Detect the leak with the black light.
4. Make the necessary repairs.

Find the Cause of the Leak

Pinpoint the leak and trace the leak back to the source. You must determine the cause of the leak in order to repair the leak properly. For example, if you replace a gasket, but the sealing flange is bent, the new gasket will not repair the leak. You must also repair the bent flange. Before you attempt to repair a leak, check for the following conditions, and make repairs as necessary:

Gaskets

- Fluid level/pressure is too high
- Plugged vent or drain-back holes
- Improperly tightened fasteners
- Dirty or damaged threads
- Warped flanges or sealing surface
- Scratches, burrs, or other damage to the sealing surface
- Damaged or worn gasket
- Cracking or porosity of the component
- Improper sealant used, where applicable
- Incorrect gasket

Seals

- Fluid level/pressure is too high
- Plugged vent or drain-back holes
- Damaged seal bore
- Damaged or worn seal
- Improper installation
- Cracks in component
- Manual shaft or output shaft surface is scratched, nicked, or damaged
- Loose or worn bearing causing excess seal wear

Possible Points of Fluid Leaks

Transmission Valve Body Cover

- Incorrectly tightened bolts
- Improperly installed or damaged gasket/seal
- Damaged mounting face
- Incorrect gasket seal

Case Leak

- Damaged input speed sensor seal
- Damaged manual shaft seal
- Loose or damaged oil cooler lines/seals
- Worn or damaged axle shaft oil seal
- Loose line pressure pipe plug or fluid level pipe plug
- Porous casting
- Warped torque converter housing
- Damaged converter housing to case seal

Leak at the Torque Converter End

- Converter leak in the weld area
- Converter seal lip cut. Check the converter hub for damage
- Converter seal bushing moved forward and damaged
- Converter seal garter spring missing from the seal
- Porous casting of the torque converter housing

Leak at the Vent

- Overfilled system

- Water or coolant in the fluid; The fluid will appear milky
- Transmission case porous
- Incorrect fluid level indicator causing an overfilled system
- Plugged vent

Leak Inspection Points

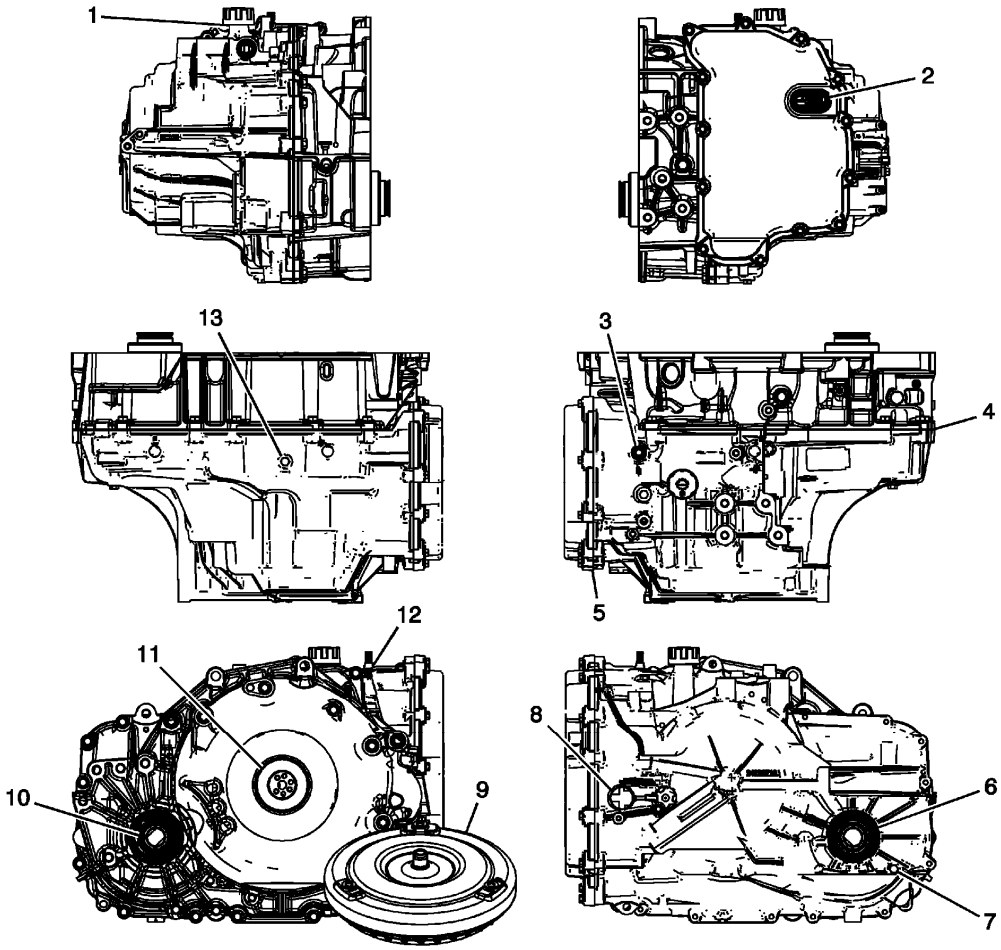

Fig. 8: Identifying Leak Inspection Points
Courtesy of GENERAL MOTORS COMPANY

Callout	Component Name
1	Fill Cap Seal
2	Control Valve Body Cover Hole Seal
3	Line Pressure Tap Plug
4	Converter Housing to Case Joint
5	Control Valve Body Cover Gasket
6	Drive Shaft Oil Seal Assembly

7	Oil Level Plug
8	A/Trans Input Speed Sensor Assembly O-Ring Seal
9	Torque Converter Assembly
10	Front Wheel Drive Shaft Oil Seal Assembly
11	Torque Converter Fluid Seal Assembly
12	Manual Shift Shaft Seal
13	Drain Plug

CASE POROSITY REPAIR

Some external leaks are caused by case porosity in non-pressurized areas.

1. Thoroughly clean the area to be repaired with a cleaning solvent. Air dry the area.

WARNING: Epoxy adhesive may cause skin irritations and eye damage. Read and follow all information on the container label as provided by the manufacturer.

2. Using instructions from the manufacturer, mix a sufficient amount of an epoxy to make the repair.
3. Apply the epoxy. A clean, dry soldering acid brush can be used to clean the area and also to apply the epoxy cement. Make certain that the area to be repaired is fully covered.
4. Allow the epoxy cement to cure for three hours before assembling the components.
5. Repeat the fluid leak diagnosis procedures.

TRANSMISSION FLUID COOLER FLUSHING AND FLOW TEST

GM studies indicate that plugged or restricted transmission oil coolers and pipes cause insufficient transmission lubrication and elevated operating temperatures which can lead to premature transmission failure. Many repeat repair cases could have been prevented by following published procedures for transmission oil cooler flushing and flow checking. This procedure includes flow checking and flushing the auxiliary transmission oil cooler, if equipped.

NOTE: Use the DT-45096 flush and flow test tool or equivalent to flush and flow test the transmission oil cooler and the oil cooler pipes after the transaxle is removed for repairs.

Only GM Goodwrench DEXRON®VI automatic transmission fluid should be used when doing a repair on a GM transmission.

Time allowance for performing the cooler flow checking and flushing procedure has been included in the appropriate labor time guide operations since the 1987 model year. The service procedure steps for oil cooler flushing and flow testing are as follows:

Cooler Flow Check and Flushing Steps

1. Machine Set-up
2. Determine Minimum Flow Rate
3. Back Flush
4. Forward Flush
5. Flow Test
6. Code Recording Procedure
7. Clean-up

Special Tools

- **DT-45096** Transmission Oil Cooling System Flush and Flow Test Tool
- **DT-45096-50** Transmission Cooler Flush Adapter
- Shop air supply with water/oil filters, regulator and pressure gauge - minimum 90 psi
- Eye protection
- Rubber gloves

For equivalent regional tools, refer to **Special Tools** .

Machine Set-up

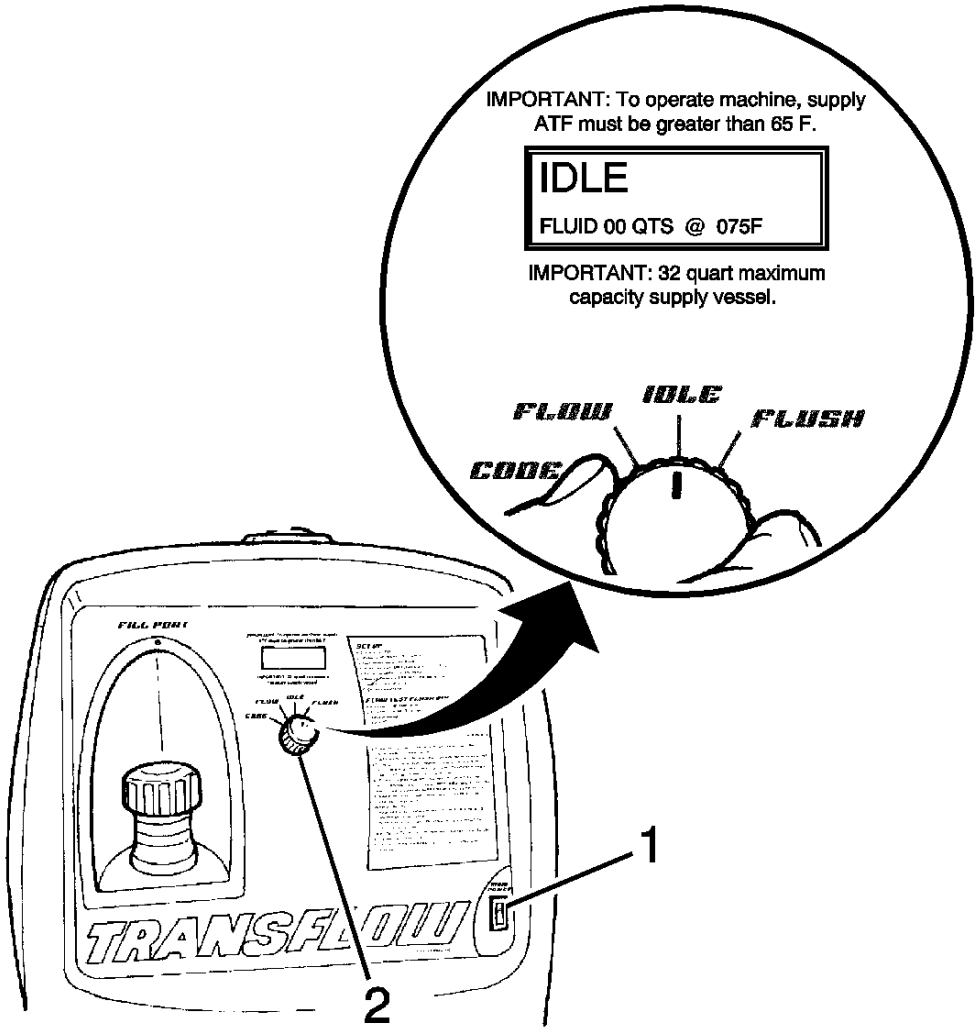

Fig. 9: View Of Main Power Switch & Main Function Switch
Courtesy of GENERAL MOTORS COMPANY

1. Verify that the main power switch (1) is in the OFF position.
2. Place the main function switch (2) in the IDLE position.

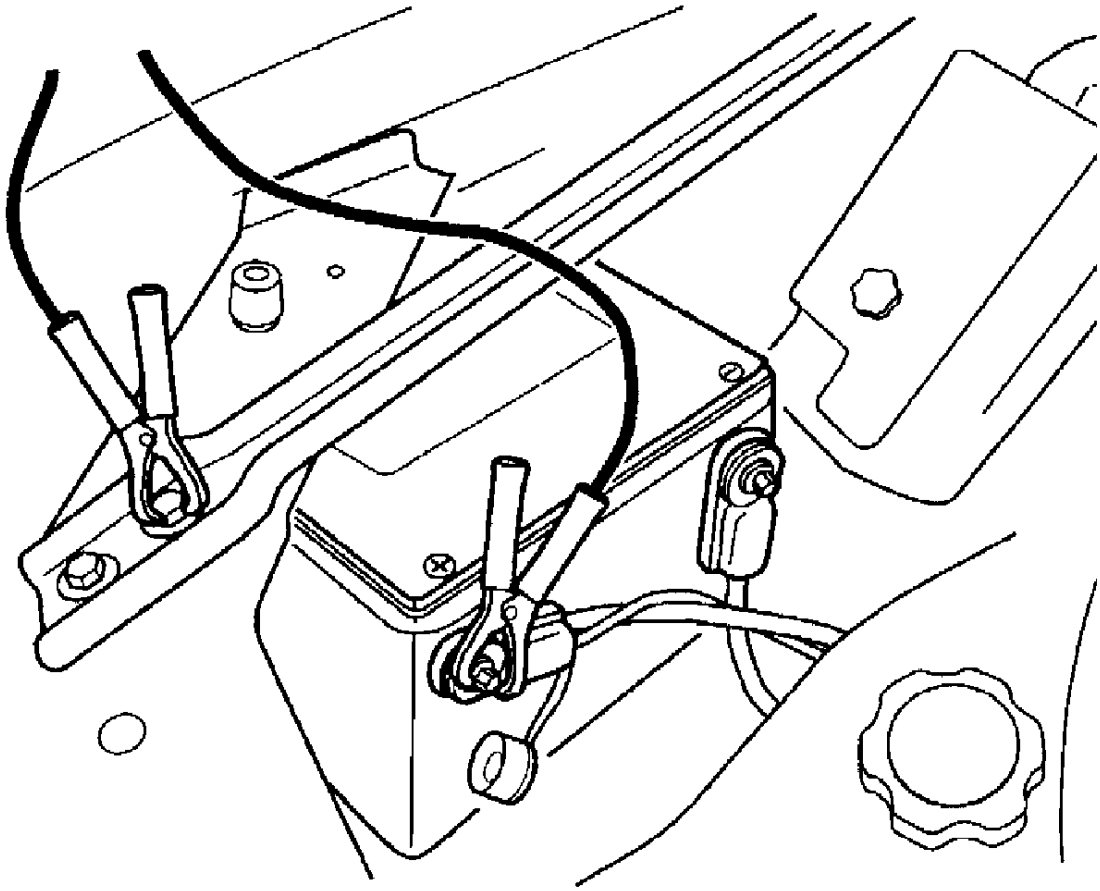

Fig. 10: Connecting To 12V DC Power Source
Courtesy of GENERAL MOTORS COMPANY

3. Connect **DT-45096** flush and flow test tool to the vehicle 12V DC power source by connecting the red battery clip to the positive, +, battery post on the vehicle and connect the negative lead to a known good chassis ground.
4. Turn the main power switch to the ON position.

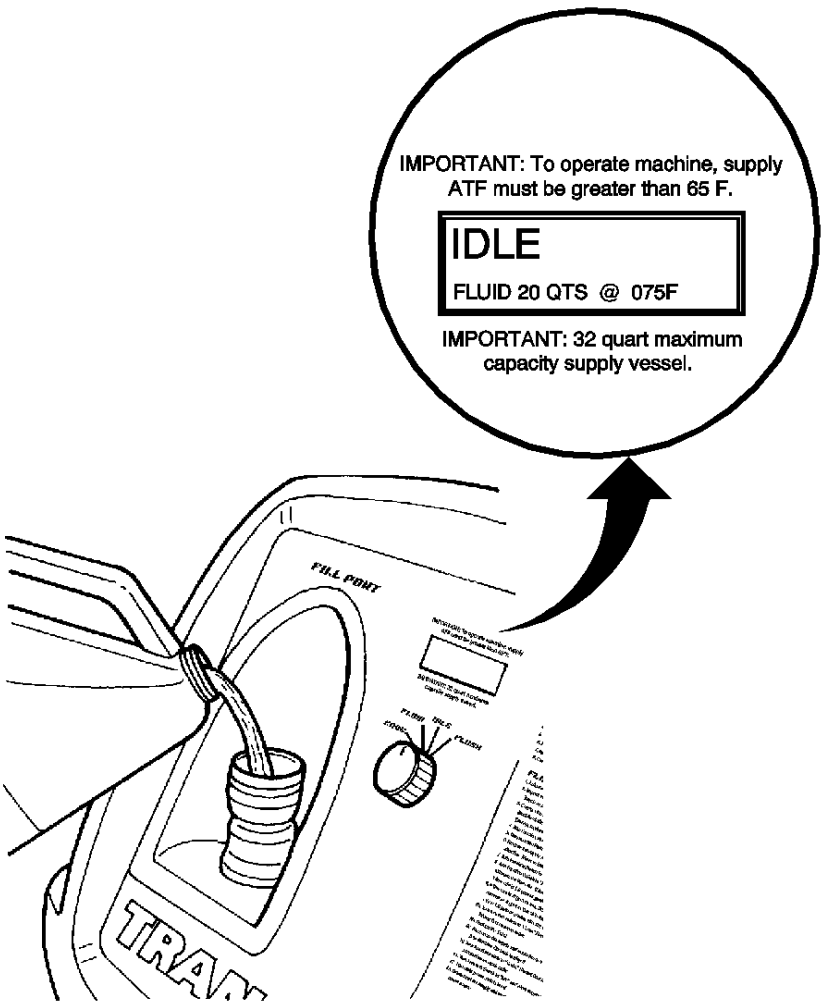

Fig. 11: Filling Supply Tank With Transmission Fluid
Courtesy of GENERAL MOTORS COMPANY

CAUTION: Do not overfill the supply vessel. Damage to the unit may result. To verify the fluid level, view the LCD screen display while filling the unit, to ensure the fluid level does not exceed 30 L (32 qt).

5. Fill the supply tank with Dexron®VI through the fill port.
6. Reinstall and tighten the fill cap.

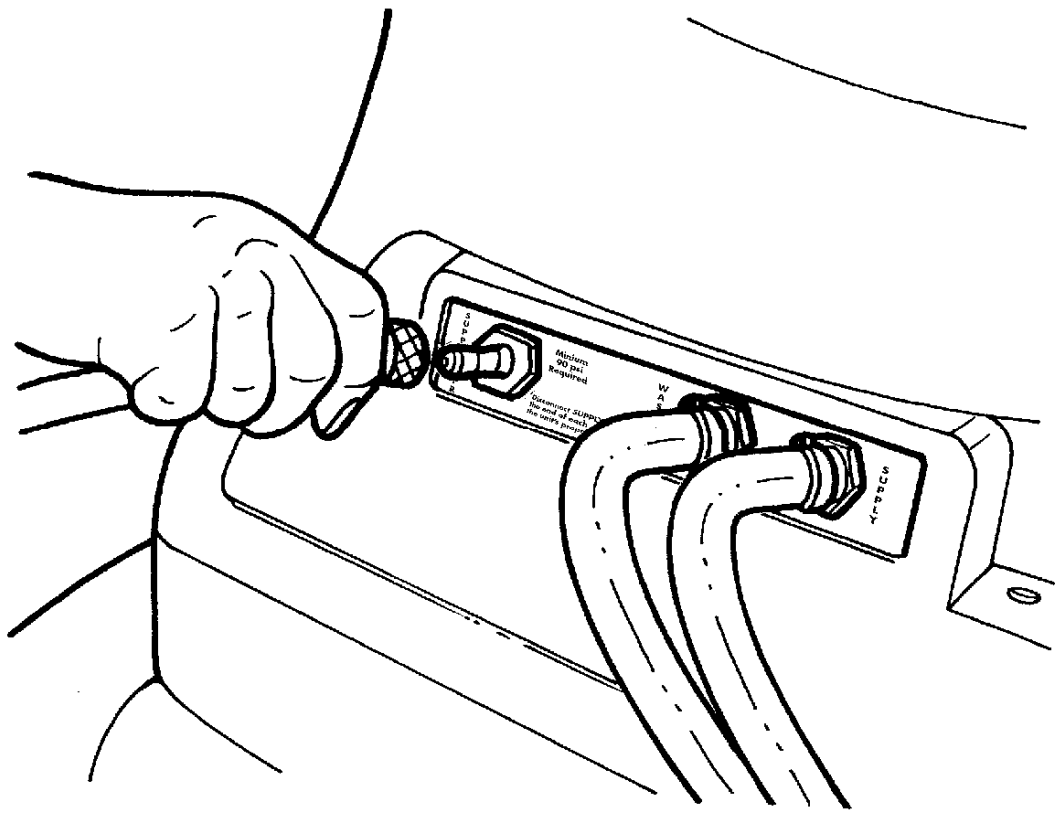

Fig. 12: Applying Shop Air Supply Hose To Quick-Disconnect
Courtesy of GENERAL MOTORS COMPANY

7. Connect a shop air supply hose to the quick-disconnect on the rear panel marked SUPPLY AIR.

Determine Minimum Flow Rate

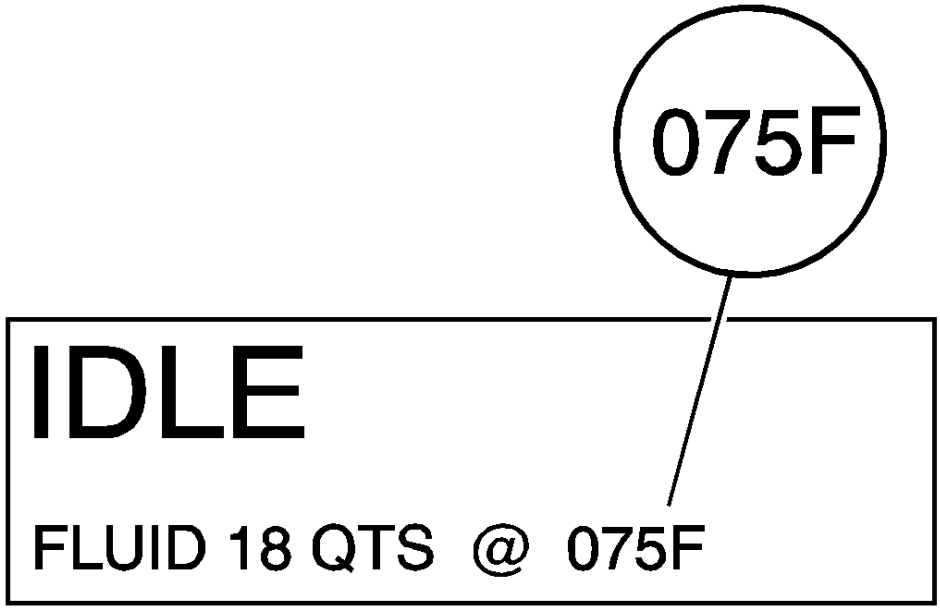

Fig. 13: Identifying Machine Display Of Automatic Transmission Fluid Temperature
Courtesy of GENERAL MOTORS COMPANY

1. From the machine display, identify the temperature of the automatic transmission fluid that is stored in the supply vessel of **DT-45096** flush and flow test tool.

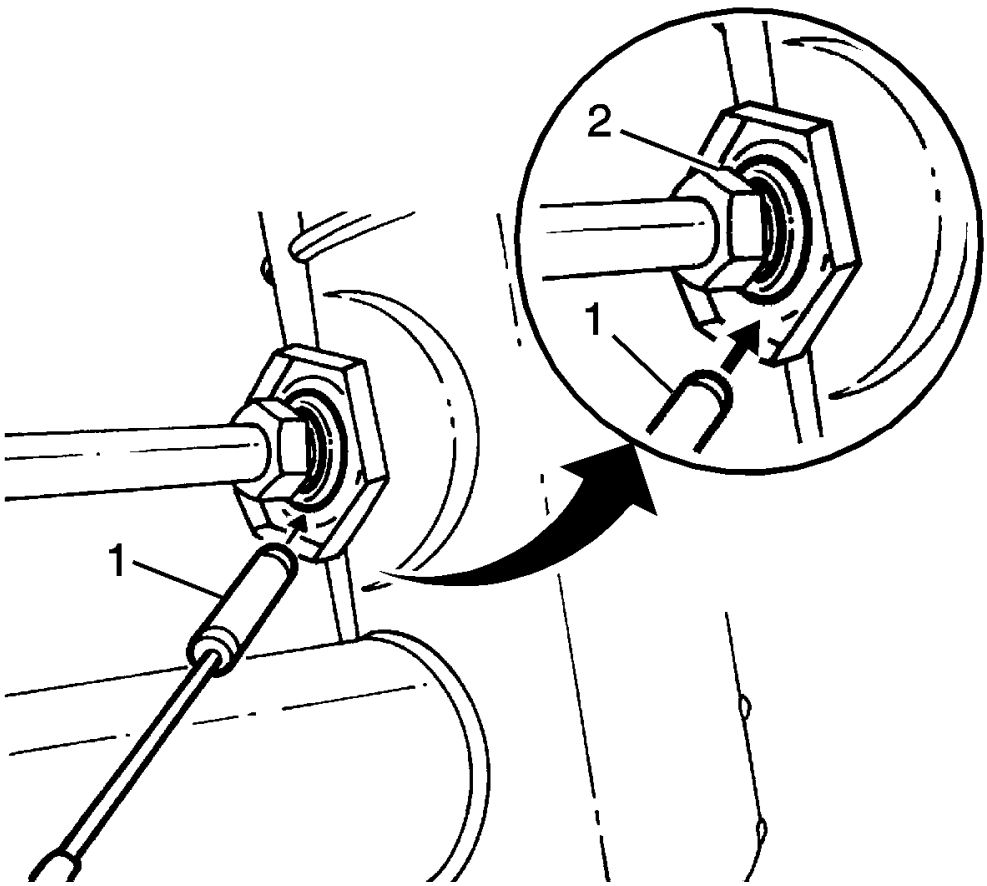

Fig. 14: Identifying Transmission Oil Cooler Metal Composition
Courtesy of GENERAL MOTORS COMPANY

2. Determine whether the transmission oil cooler is steel or aluminum by using a magnet (1) at the cooler flange (2) at the radiator.
3. Refer to the table below. Using the temperature from step 1, locate on either the Steel MINIMUM Flow Rate table or the Aluminum MINIMUM Flow Rate table the minimum flow rate in gallons per minutes (GPM). Record the minimum flow rate in GPMs and the supply fluid temperature for further reference.

   Example

   - Fluid temperature: 75°F
   - Cooler type: Steel

   The MINIMUM flow rate for this example would be 0.8 GPM.

4. Inspect transmission oil cooler lines for damage or kinks that could cause restricted oil flow. Repair as needed and refer to the appropriate GM service manual procedures.

Minimum Flow Rate in Gallons Per Minute (gpm)

Temperature Range	Steel	Aluminum
65 - 66°F	0.6 gpm	0.5 gpm
67 - 70°F	0.7 gpm	0.6 gpm
71 - 75°F	0.8 gpm	0.7 gpm
76 - 80°F	0.9 gpm	0.8 gpm
81 - 84°F	1.0 gpm	0.9 gpm
85 - 89°F	1.1 gpm	1.0 gpm
90 - 94°F	1.2 gpm	1.1 gpm
95 - 98°F	1.3 gpm	1.2 gpm
99 - 103°F	1.4 gpm	1.3 gpm
104 - 108°F	1.5 gpm	1.4 gpm
109 - 112°F	1.6 gpm	1.5 gpm
113 - 117°F	1.7 gpm	1.6 gpm
118 - 120°F	1.8 gpm	1.7 gpm

Back Flush Procedure

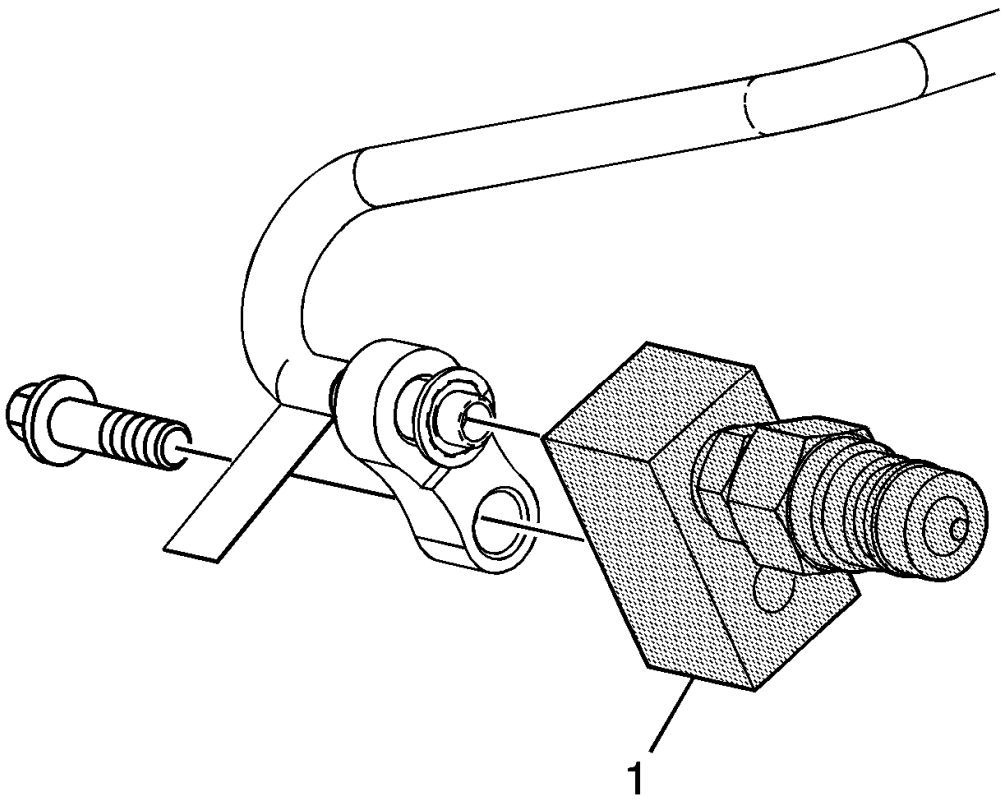

Fig. 15: Identifying Special Tool - J 45096-50
Courtesy of GENERAL MOTORS COMPANY

1. Connect the **DT-45096-50** cooler flush adapter (1) to the vehicle transmission oil cooler supply and return lines at the transmission.

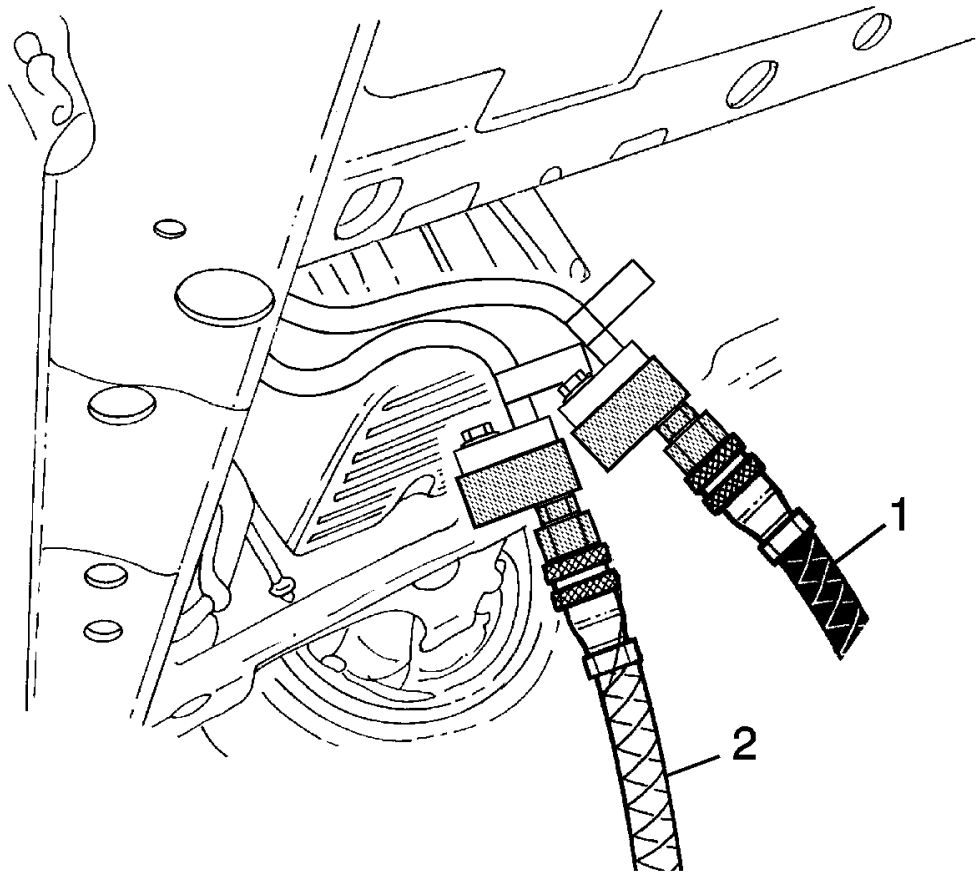

Fig. 16: View Of Black Supply Hose And Clear Waste Hose
Courtesy of GENERAL MOTORS COMPANY

2. Connect the black supply hose (1) to the return line, top connector of the transmission, and the clear waste hose (2) to the feed line, bottom connector of the transmission, to the vehicle cooler lines. This is the reverse flow - backflush direction.

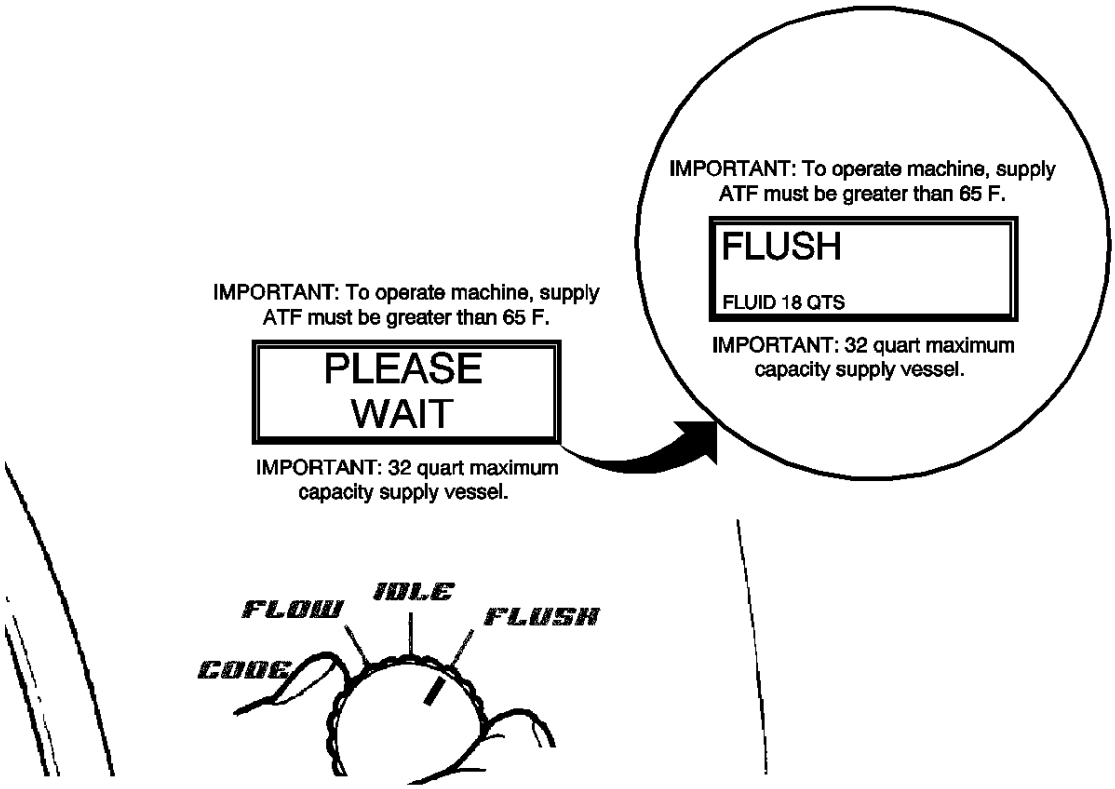

Fig. 17: View Of Main Function Switch FLUSH Position
Courtesy of GENERAL MOTORS COMPANY

3. Turn the main function switch to the FLUSH position. Allow the machine to operate for 30 seconds.

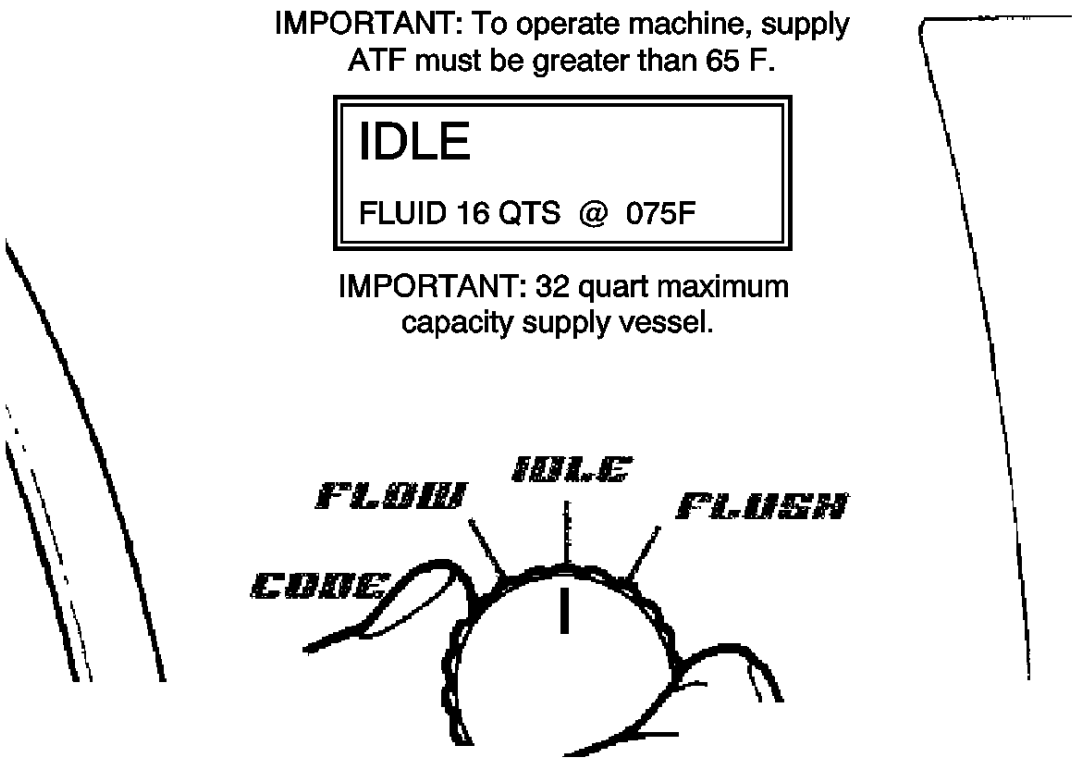

Fig. 18: View Of Main Function Switch IDLE Position
Courtesy of GENERAL MOTORS COMPANY

4. Turn the main function switch to the IDLE position and allow the supply vessel pressure to dissipate.

Forward Flush

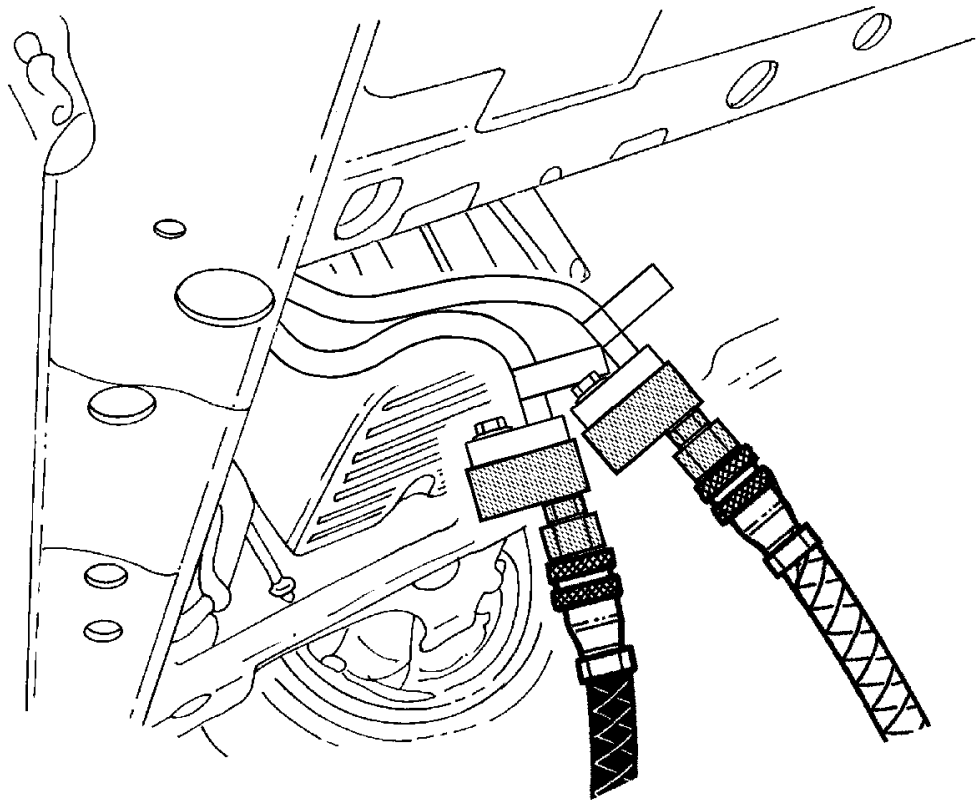

Fig. 19: Identifying Supply And Waste Hoses
Courtesy of GENERAL MOTORS COMPANY

1. Disconnect the supply and waste hoses from the vehicle cooler lines. Reverse the supply and waste hoses to provide a normal flow direction.

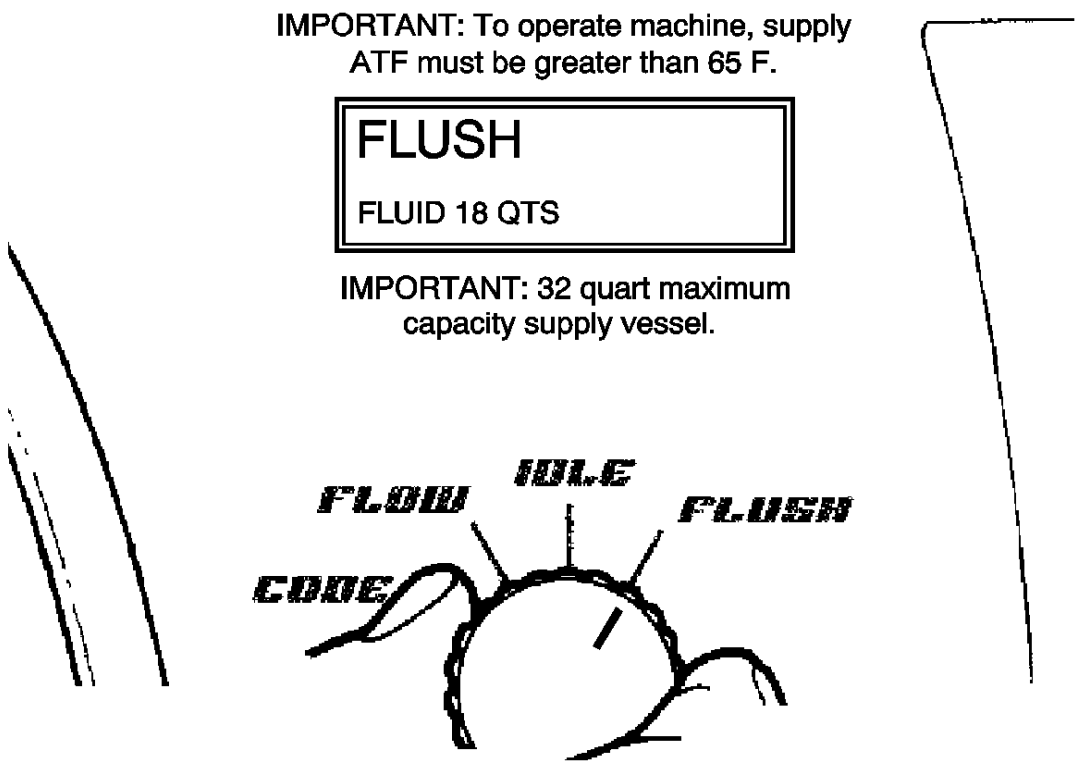

Fig. 20: View Of Main Function Switch FLUSH Position
Courtesy of GENERAL MOTORS COMPANY

2. Turn the main function switch to the FLUSH position and allow machine to operate for 30 seconds.

Flow Test

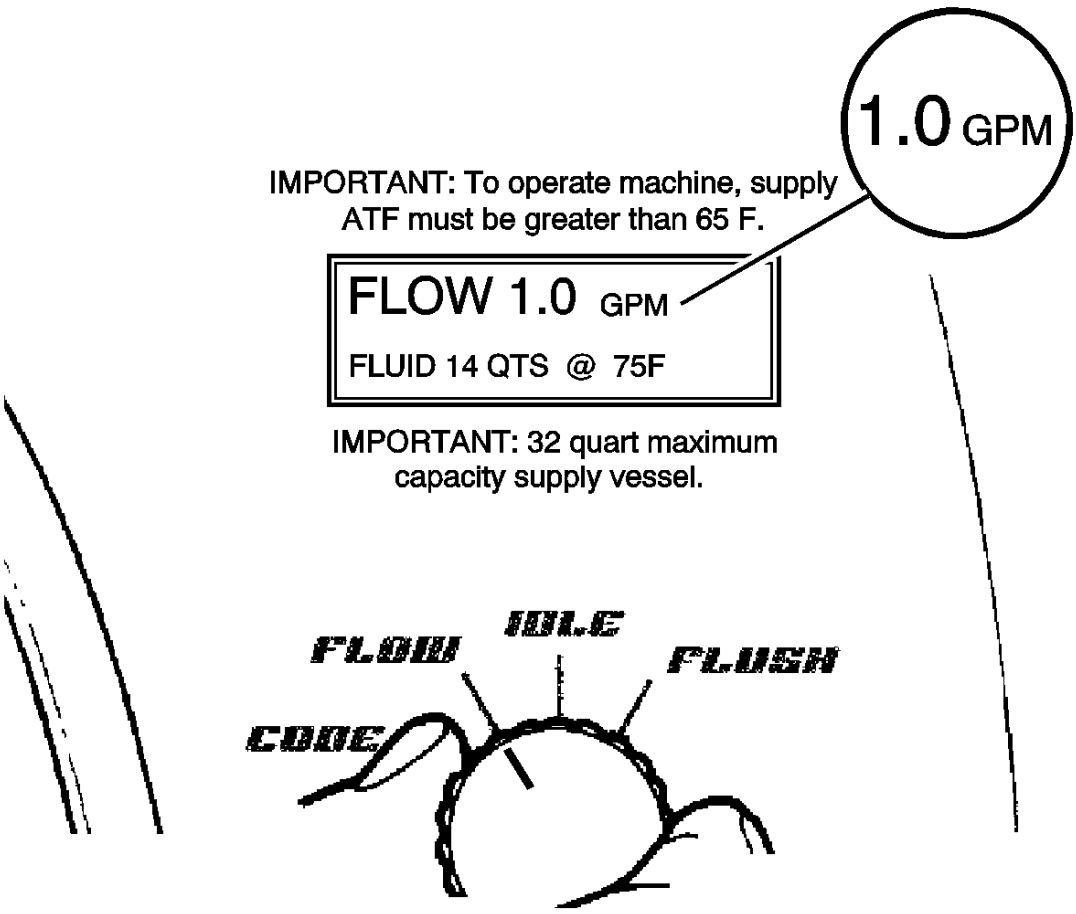

Fig. 21: View Of Main Function Switch FLOW Position
Courtesy of GENERAL MOTORS COMPANY

NOTE: If the flow rate is less than 0.5 gpm, the LCD displays an error message. Refer to the Troubleshooting section of the operation manual.

1. Turn the main function switch to the FLOW position and allow the oil to flow for 15 seconds. Observe and note the flow rate; this is the TESTED flow rate.
2. Compare the TESTED flow rate to the MINIMUM flow rate information previously recorded.
   - If the TESTED flow rate is equal to or greater than the MINIMUM flow rate recorded, the oil cooling system is functioning properly. Perform Code Recording Procedure.
   - If the TESTED flow rate is less than the MINIMUM flow rate previously recorded, repeat the back flush and forward flush procedures.
3. If the TESTED flow rate is less than the MINIMUM flow rate after the second test, perform Code Recording Procedure.

1. Replace the transmission oil cooler.
2. Reconnect supply and waste hoses to the cooler lines in the normal flow direction. Perform Flow Test.
3. Perform Code Recording Procedure.

Code Recording Procedure

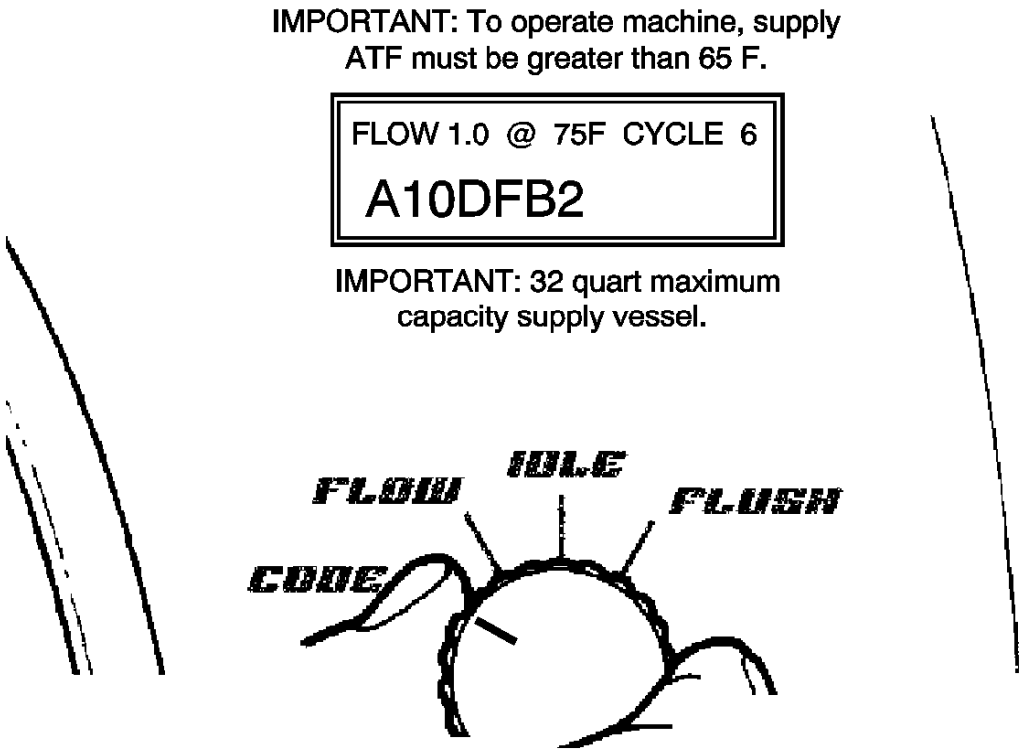

Fig. 22: View Of Main Function Switch CODE Position
Courtesy of GENERAL MOTORS COMPANY

1. Turn the main function switch to the CODE position.

NOTE:

- **If power is interrupted prior to the recording of the seven-character code, the code will be lost and the flow rate test will need to be repeated.**

- **The flow test must run for a minimum of 8-10 seconds and be above 0.5 GPM for a code to be generated.**

2. Record TESTED flow rate, temperature, cycle and seven-character flow code information on repair order.

Clean-up

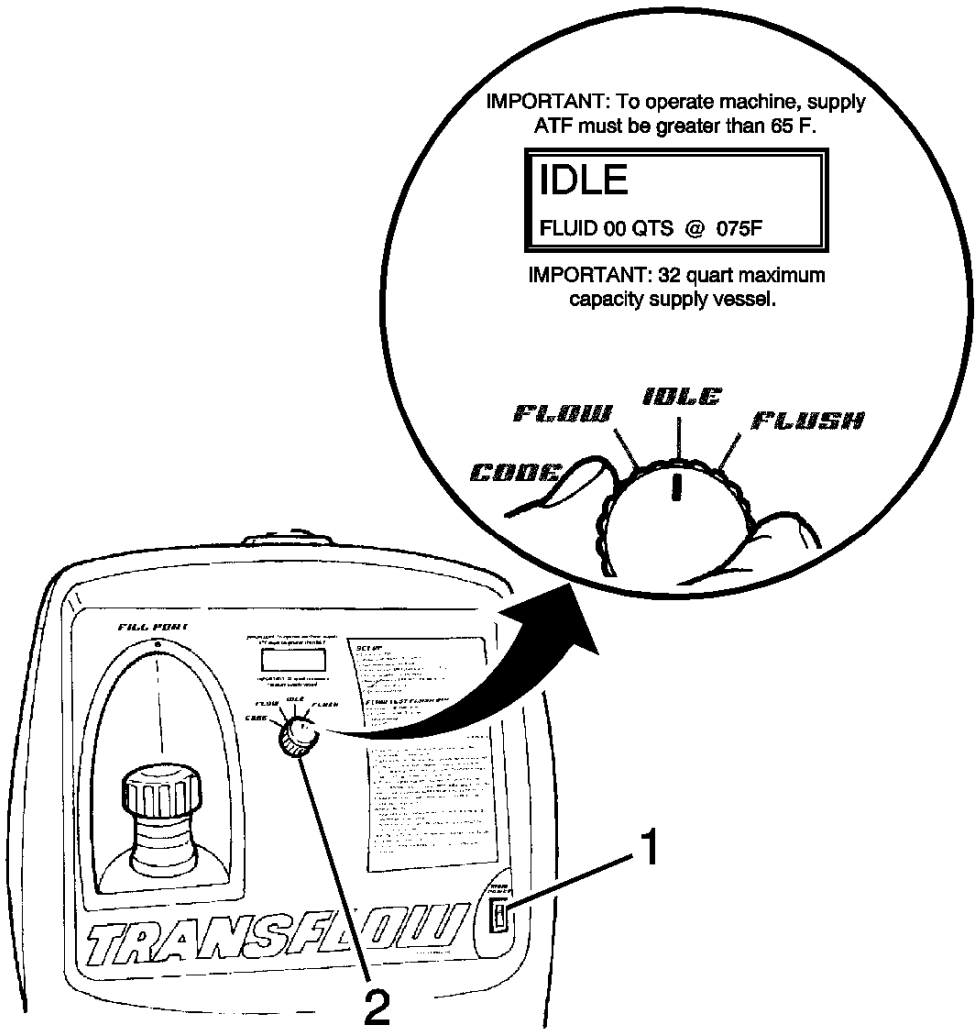

Fig. 23: View Of Main Power Switch & Main Function Switch
Courtesy of GENERAL MOTORS COMPANY

1. Turn the main function switch (2) to the IDLE position and allow the supply vessel pressure to dissipate.
2. Turn the main power switch (1) to the OFF position.

NOTE: A small amount of water may drain from the bottom of the unit when the air supply is disconnected. This is a normal operation of the built-in water

separator.

3. Disconnect the supply and waste hoses and the 12-volt power source from the vehicle.

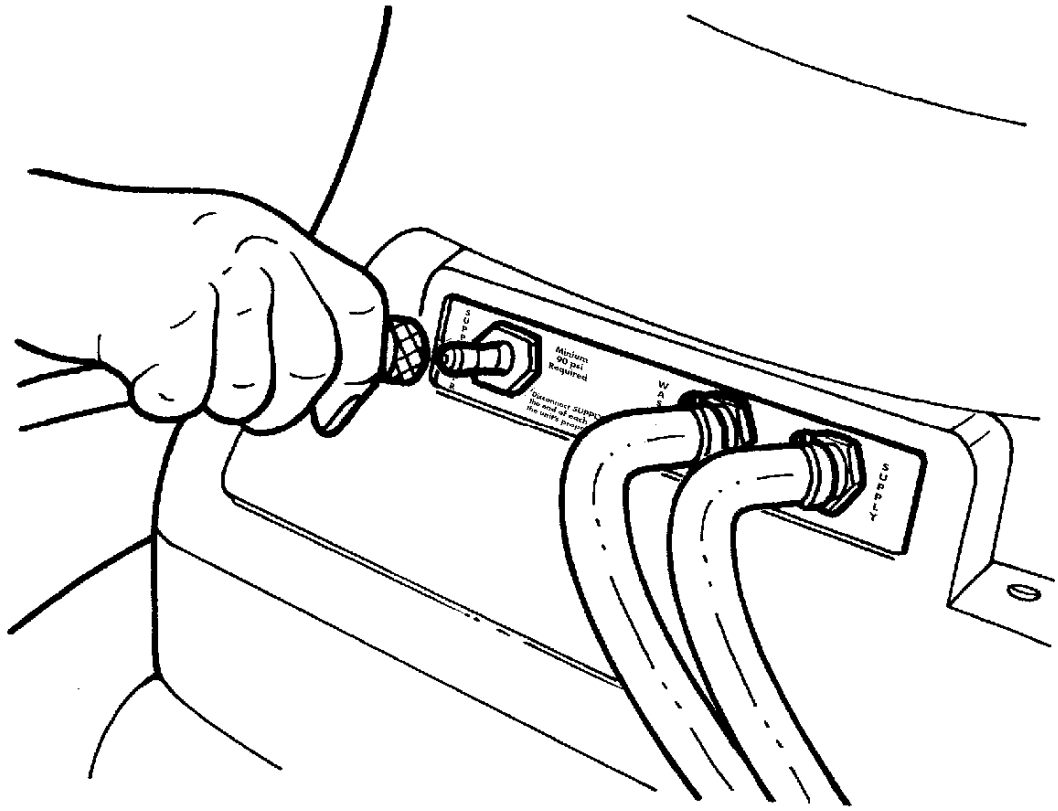

Fig. 24: Applying Shop Air Supply Hose To Quick-Disconnect
Courtesy of GENERAL MOTORS COMPANY

4. Disconnect the air supply hose from **DT-45096** flush and flow test tool.
5. Dispose of the waste ATF in accordance with all applicable federal, state, and local requirements.

BUSHING AND MATING SHAFT INSPECTION

NOTE: Proper bushing and corresponding mating shaft inspection should be performed before replacing the bushing, shaft, and in some cases, the component which houses the bushing. Thoroughly clean and dry the bushing and shaft surfaces before inspecting for damage.

Any of the following bushing conditions require replacement of the bushing and/or housing:

- Discoloration due to heat distress
- Misalignment or displacement of bushing as a result of spinning in housing
- Medium to heavy scoring that can be easily detected with fingernail. Light scoring is a normal condition.
- Debris embedded into the bushing lining material
- Obvious damage, including excessive and uneven wear
- Excessive polishing. Minor polishing of the bushing is an indication of normal wear and does not require replacement.

Any of the following conditions require replacement of the bushing's mating shaft:

- Discoloration due to heat distress
- Rough surface finish that can be easily detected with finger
- Obvious shaft abnormalities, including warping or uneven surfaces
- Obvious damage or cracking

NOISE AND VIBRATION ANALYSIS

A noise or vibration that is noticeable when the vehicle is in motion MAY NOT be the result of the transmission.

If noise or vibration is noticeable in PARK and NEUTRAL with the engine at idle, but is less noticeable as RPM increases, the vibration may be a result of poor engine performance.

- Vibration may also be caused by a small amount of water inside the converter.
- Inspect the engine and transmission mounts for damage and loose bolts.
- Inspect the transmission case mounting holes for the following conditions:
  - Missing bolts, nuts, and studs
  - Stripped threads
  - Cracks
- Inspect the flywheel for the following conditions:
  - Missing or loose bolts
  - Cracks
  - Imbalance
- Inspect the torque converter for the following conditions:
  - Missing or loose bolts or lugs
  - Missing or loose balance weights
  - Imbalance caused by heat distortion or fluid contamination
- If the noise or vibration is noticeable in PARK and NEUTRAL with the engine at idle, but is more noticeable as RPM increases, the vibration may be an engine imbalance or a transmission imbalance. Refer to **Torque Converter Diagnosis**.

WHINE/GROWL NOISE

Whine/Growl Noise

Checks	Causes
Differential Assembly (232)	• Inspect for worn wheel bearings or axles. • Inspect for worn or damaged Side Gear Thrust Washer) or Pinion Gear Thrust Washer • Inspect for loose or worn Side Gear Axle Splines • Inspect for damaged or worn Side Gear • Inspect for worn or damaged Final Drive Inner and Outer Washers (584) • Inspect for loose, damaged or worn Front Differential Carrier Thrust Bearings, (228, 231, 233) • Inspect for broken, worn or disengaged Final Drive Pinion Pin Retainer (581) • Inspect for damaged or worn Pinion Gears
Drive Link Assembly (225)	• Inspect for worn, loose or damaged links • Inspect for broken, worn or loose Drive Link Lube Scoop (60)
Drive Sprocket Assembly (224)	• Inspect for improper Drive Sprocket (224) tooth surface finish • Inspect for broken or damaged Drive Sprocket (224) teeth • Inspect for worn or damaged Drive Sprocket Thrust Bearings (223, 556) • Inspect for worn or damaged Output Carrier Transfer Drive Gear Hub Assembly splines (222) • Inspect for loose, worn or damaged Output Carrier Transfer Drive Gear Hub Assembly bushing
Driven Sprocket Assembly (229)	• Inspect for worn, binding or damaged Driven Sprocket Bearing Assembly (228) • Inspect for worn or damaged Driven Sprocket Ball Bearing Assembly • Inspect for improper Driven Sprocket (229) tooth surface finish • Inspect for broken or damaged Driven Sprocket (229) teeth
Input Carrier Assembly (570)	• Inspect for pitted/spalled Pinion Gear teeth • Inspect for worn or damaged Pinion Gear Thrust Washers and Bushings • Inspect for worn or damaged Pinion Gears, Pins or Needle Bearings • Inspect for loose or broken Hub and Ring Gear

	• Inspect for loose or broken Output Internal Gear Retainer • Inspect for loose or worn Sun Gear Thrust Bearings (569, 572)
Output Carrier Assembly (574)	• Inspect for worn or damaged Pinion Gear Thrust Washers and Bushings • Inspect for worn or damaged Pinion Gears, Pins or Needle Bearings • Inspect for loose Hub and Ring Gear
Output Sun Gear Assembly (555)	• Inspect for worn or damaged Output Sun Gear Thrust Bearing (556) • Inspect for loose, worn or damaged Output Sun Gear bushing • Inspect for worn or damaged Output Sun Gear teeth
Reaction Carrier Assembly (567)	• Inspect for worn or damaged Pinion Gear Thrust Washers and Bushings • Inspect for worn or damaged Pinion Gears, Pins or Needle Bearings • Inspect for loose hub and Ring Gear • Inspect for worn or damaged Reaction Carrier Thrust Bearings (565)
Reaction Sun Gear Assembly (566)	Inspect for loose, worn or damaged Reaction Sun Gear Assembly bushing
Fluid Pump Assembly (201)	1. Inspect for proper fluid level 2. Inspect for leaking Pump Fluid Outlet Seal Assembly (24) or Filter Seal
3-5-Reverse Clutch Assembly	• Inspect for inadequate Clutch Plate Clearance • Inspect for stripped or sheared Clutch Plate Splines (508-510) • Inspect for loose or worn Backing Plate Retainer (511) • Inspect for loose Speed Sensor Reluctor Wheel (501) or Retainer (500)
4-5-6 Clutch Assembly	• Inspect for inadequate Clutch Plate Clearance • Inspect for stripped or sheared Clutch Plate Splines (425-428) • Inspect for loose or worn Clutch Dam Retainer (524) • Inspect for loose or worn 3-5-Reverse/4-5-6 Clutch Housing Bushing
1-2-3-4 Clutch Assembly	• Inspect for inadequate Clutch Plate Clearance • Inspect for stripped or sheared Clutch Plate Splines (557-559)

	• Inspect for loose or worn Clutch Spring Retainer (561)
Low and Reverse Clutch Assembly (OWC) (543)	• Inspect for stripped or sheared Low and Reverse Clutch Assembly (543) splines • Inspect for non-rotating Low and Reverse Clutch Assembly (543)
Low and Reverse Clutch	• Inspect for inadequate Clutch Plate Clearance • Inspect for stripped or sheared Clutch Plate Splines (545-547) • Inspect for loose or worn Clutch Spring Retainer (548)
2-6 Clutch Assembly	• Inspect for inadequate Clutch Plate Clearance • Inspect for stripped or sheared Clutch Plate Splines (540-542) • Inspect for loose or worn Clutch Spring Retainer (537)
Case Assembly (50)	• Inspect for loose or broken Transmission Mount Bolts • Inspect for loose Torque Converter and Differential Housing Bolts (26) • Inspect for loose, worn or damaged differential bushing • Inspect for loose or broken Input Shaft Support Bolts (57) • Inspect for loose or broken Front Differential Carrier Baffle Bolts (61) • Inspect for stripped or sheared splines • Inspect for loose, worn or damaged bushing
Torque Converter Housing Assembly (208)	• Inspect for loose or broken Front Differential Ring Gear Retainer (206) • Inspect for loose, worn or damaged differential bushing • Inspect for loose or broken Pinion Gear Shaft Retainer Pin • Inspect for loose or broken Front Differential Carrier Baffle Bolts (204) • Inspect for loose or broken Fluid Pump Bolts (200) • Inspect for loose Torque Converter and Differential Housing Bolts (26) • Inspect for loose, worn or damaged bushing
Control Valve Body Cover Assembly (2)	Inspect for loose, missing or broken Valve Body Cover Bolts (1)
Torque Converter (28)	• Inspect for improper alignment of Torque Converter to the Crankshaft • Inspect for ballooning of the Torque Converter
	• Inspect for worn or damaged Differential Carrier (582) • Inspect for worn or damaged Pinion Pins (583)

Differential Carrier Assembly (232)	• Inspect for broken, worn or damaged Differential Sun Gear Bearing (231) or Driven Sprocket Bearing (228) • Inspect for worn or damaged Differential Side Gear teeth, Final Drive Pinion Gear (586) teeth or Final Drive Sun Gear (230) teeth • Inspect for worn or damaged Differential Side Gear Thrust Washers or Final Drive Inner and Outer Washers (584) • Inspect for worn or damaged Final Drive Rollers (585) • Inspect for broken or damaged Differential Pinion Gear Shaft Retainer

AUTOMATIC TRANSMISSION FLUID LEAKS

Automatic Transmission Fluid Leaks

Checks	Causes
Torque Converter (28)	Inspect for damage
Case Assembly (50)	• Inspect for cracked or broken Case (50) • Inspect for porosity or damage on the sealing surfaces • Inspect for loose Oil Cooler Line Bolts or damaged Oil Cooler Line Seals • Inspect for damaged Manual Shift Shaft Seal (604) • Inspect for damaged or worn Axle Seal (65) or Axle Seal Slinger on the axle shafts • Inspect for plugged Vent Cap (52) • Inspect for loose Pressure Test Plug (51), Drain Plug (64) and Fluid Level Plug (63) • Inspect for damaged Park Pawl Actuator Guide Seal (605) • Inspect for damaged or worn Input Speed Sensor Seals (19)
Torque Converter Housing Assembly (208)	• Inspect for damaged Torque Converter Housing Assembly (208) • Inspect for porosity or damage on the sealing surfaces • Inspect for damaged Torque Converter Housing Seal (23) • Inspect for damaged or worn Torque Converter Fluid Seal (301) • Inspect for loose Torque Converter and Differential Housing Bolts (26) • Inspect for damaged or worn Axle Seal (209) or Axle Seal Slingers on the axle shafts • Inspect for loose, missing or damaged Fluid Fill Tube Plug Assembly (27) • Inspect for damaged Torque Converter and Differential

	Housing Seal (202)
Valve Body Cover Assembly (2)	• Inpsect for damaged or warped Valve Body Cover Assembly (2) • Inspect for damaged or improperly installed Valve Body Cover Gasket (3) • Inspect for loose Valve Body Cover Bolts (1) • Inspect for damaged or improperly installed Wire Connector Hole Seal (5)

SHIFT INDICATOR INDICATES WRONG GEAR SELECTION

Shift Indicator Indicates Wrong Gear Selection

Checks	Causes
Shift Cable	• Inspect for damage. • Verify proper attachment to shifter. • Verify cable is locked into shifter bracket. • Verify cable is properly attached to the transmission. • Verify that the cable is locked into the transmission bracket. • Verify proper cable adjustment. Refer to **Range Selector Lever Cable Adjustment** .
Manual Shaft	• Verify shift lever is properly attached to the manual shaft. • Verify manual shaft is not twisted or damaged.
Manual Shift Detent Lever with Shaft Position Switch Assembly, IMS	Verify proper operation. Refer to **Transmission Internal Mode Switch Logic** .

NO PARK

No Park

Checks	Causes
Differential Carrier Assembly (232)	• Inspect for damaged or broken Front Differential Assembly (232). • Inspect for damaged or broken Front Differential Side Gear or Pinion Gear. • Inspect for damaged or broken Front Differential Pinion Gear Shaft. • Inspect for damaged or broken Front Differential Pinion Gear Shaft Pin. • Inspect for worn, stripped or sheared Front Differential Side Gear splines. • Inspect for damaged or broken Final Drive Sun, Pinion

	or Ring Gear. • Inpsect for worn, stripped or sheared Final Drive Sun Gear splines.
Output Carrier Transfer Drive Gear Hub Assembly (222)	• Inspect for broken Drive Gear Hub (222). • Inspect for worn, stripped or sheared Drive Gear hub (222) splines. • Inspect for disengaged or broken Park Gear Retainer Ring (220). • Inspect for damaged or broken park Gear (221). • Inspect for disengaged or broken Drive Sprocket Retainer Ring (227).
Drive Link Assembly (225)	• Inspect for broken, worn or damaged Drive Link Assembly (225). • Inspect for broken, worn or damaged Drive Sprocket (224). • Inspect for broken, worn or damaged Driven Sprocket Assembly (229). • Inspect for worn, stripped or sheared Driven Sprocket splines. • Inspect for broken Drive Gear Hub (222).
Case Assembly (50)	• Inspect for broken or damaged Case. • Inspect for broken or bent Park Pawl Shaft (600). • Inspect for broken or missing Park Pawl Actuator Guide Pin (603) or Manual Shaft Pin (611). • Inspect for broken or missing Manual Shaft Detent Lever Pin (610). • Inspect for broken or missing Manual Shift Shaft Pin (611). • Inspect for damaged or broken Manual Shift Detent Lever Shaft (608). • Inspect for loose, damaged or broken Detent Lever Spring Assembly (17). • Inspect for broken, loose or misaligned Park Pawl Actuator Guide (606). • Inspect for binding, bent or broken Park Pawl (602) or Actuator Assembly (607).

HARSH GARAGE SHIFT

Harsh Garage Shift

Checks	Causes

Input Carrier Assembly (570)	Inspect for worn or stripped Output Internal Gear Splines.
Low-Reverse and 1-2-3-4 Clutch Housing (551)	• Inspect for damaged or fatigued 1-2-3-4 Clutch Wave Plate (557) and Low and Reverse Clutch Wave Plate (547). Refer to **Clutch Plate Diagnosis**. • Inspect for stripped or sheared splines on 1-2-3-4 Clutch Plate (546). Refer to **Clutch Plate Diagnosis**. • Inspect for improperly positioned or plugged Low Reverse Piston (550) air bleed. • Inspect for correct fluid level.
Low and Reverse Clutch Assembly (OWC) (543)	Inspect for stripped or sheared internal and external splines on Low and Reverse Clutch Assembly (543).

NO DRIVE IN ALL RANGES

No Drive in All Ranges

Checks	Causes
Case Assembly (50)	• Inspect for cracked or broken Case (50). • Inspect for stripped or sheared splines. • Inspect for binding Manual Shift Detent Lever Assembly (609). • Inspect for missing Manual Shift Shaft Pin (611). • Inspect for missing Manual Shaft Lever Pin (610). • Inspect for interference or binding Park Pawl Actuator Assembly (607). • Inspect for broken or disengaged 1-2-3-4 Clutch Backing Plate Retainer Ring (561). • Inspect for loose or damaged case bushing. • Inspect A/Trans Fluid Pump Seal Assembly (25) for damage.
Torque Converter (28)	• Inspect for stripped or sheared splines on Turbine Shaft. • Inspect for missing Torque Converter to Flywheel bolts. • Inspect for damaged or disengaged Torque Converter Hub to Oil Pump Drive Gear.
Torque Converter Housing (208)	• Inspect for stripped or sheared Differential Ring Gear splines. • Inspect for broken or disengaged Differential Ring Gear Retainer (206). • Inspect for loose, missing or broken Torque Converter and Differential Housing bolts (26). • Inspect for loose, missing or broken Fluid Pump bolts (200).

35R/456 Housing Assembly (516)	• Inspect for damaged or broken Input Shaft Thrust Bearing Assembly (538). • Inspect for stripped or sheared splines on the Input Shaft to the 3-5 Reverse/4-5-6 Clutch Housing (516).
Oil Pump Assembly (201)	• Inspect for fluid leaks / improper fluid level. • Inspect for leaking Fluid Outlet Seal Assembly (24). • Inspect for loose or missing Oil Pump Bolts (200). • Inspect for damaged, restricted or improperly installed Oil Filter Assembly (203). • Inspect for damaged or leaking Oil Filter Neck Seal. • Inspect for broken or seized Fluid Pump Drive Gear (315) and Fluid Pump Driven Gear (316).
Low & Reverse Clutch Assembly (543)	Inspect for stripped or sheared splines to the Reaction Carrier (567).
Input Carrier Assembly (570)	• Inspect for stripped or sheared castle splines to ring gear. • Inspect for improperly installed carrier pinion gear pins. • Inspect for damaged or broken Pinion Gears. • Inspect for stripped or sheared splines on the Input Sun Gear (571). • Inspect for damaged or broken Output Internal Gear. • Inspect for broken or disengaged Output Internal Gear Retainer Ring. • Inspect for damaged or broken Input Carrier Thrust Bearing Assembly (568) and Output Carrier Thrust Bearing Assembly (573). • Inspect for damaged or broken Input Carrier Thrust Bearings (569, 572).
Reaction Carrier Assembly (567)	• Inspect for stripped or sheared Reaction Carrier Assembly (567) splines. • Inspect for damaged or broken Input Carrier Thrust Bearings (568). • Inspect for damaged or broken Pinion Gear teeth. • Inspect for damaged or broken Reaction Internal Gear teeth. • Inpsect for disengaged or broken Reaction Internal Gear retainer ring.
Reaction Sun Gear Assembly (566)	• Inspect for damaged or broken weld at Sun Gear. • Inspect for loose or worn Reaction Sun Gear Assembly bushing.
	• Inspect for stripped or sheared splines to reaction internal

Output Carrier Assembly (574)	ring gear. • Inspect for damaged or broken Input Sun Gear Thrust Bearings (572). • Inspect for damaged or broken Pinion Gear teeth. • Inspect for damaged or broken Input Carrier Thrust Bearings (573). • Inspect for broken or damaged Output Internal Gear.
Output Sun Gear Assembly (555)	• Inspect for stripped or sheared Output Sun Gear Assembly (555) splines. • Inspect for broken Output Sun Gear Assembly (555) hub or weld.
Low-Reverse and 1-2-3-4 Clutch Housing (551)	Inspect for disengaged or broken 1-2-3-4 Clutch Piston Spring Retainer (554).
Drive Link Assembly (225)	• Inspect for broken, worn or damaged Drive Link Assembly (225). • Inspect for broken, worn or damaged Drive Sprocket (224). • Inspect for broken, worn or damaged Driven Sprocket Assembly (229). • Inspect for broken Drive Gear Hub (222).
Differential Carrier Assembly (232)	• Inspect for stripped or sheared splines on Differential Side Gear. • Inspect for stripped or sheared splines Final Drive Sun Gear (230). • Inspect for stripped or sheared splines Differential Carrier to PTU (AWD only). • Inspect for stripped broken or disengaged Final Drive Retainer (581). • Inspect for damaged or broken Pinion Gear teeth. • Inpsect for damaged or broken Final Drive Rollers (585). • Inspect for broken, worn or damaged Final Drive Inner and Outer Thrust Washers (584).
Control Solenoid (w/Body and TCM) Valve Assembly	• Check that the Manual Valve (432) is engaged with Manual Shift Detent Lever Assembly (609). • Inspect the Control Solenoid (w/Body and TCM) Valve Assembly (7) and verify that it is functioning properly.

NO FIRST AND REVERSE GEARS

No First and Reverse Gears

Checks	Causes

Low and Reverse Clutch Assembly (543)	• Inspect for stripped or sheared internal or external splines on Low and Reverse Clutch Assembly (543) • Inspect for broken or disengaged retainer ring
Low and Reverse Clutch	• Inspect for stripped or sheared splines on Low and Reverse Clutch Plates (545-547) • Inspect for damaged, deformed or improper surface finish on the Low and Reverse Clutch Plates (545-547) • Inspect for stripped or sheared splines on Low and Reverse Clutch Backing Plate (544) • Inspect for worn, damaged or debonding Low and Reverse Clutch Piston Seals (550) • Inspect for broken or fatigued Low and Reverse Clutch Piston Return Spring (549)
Low-Reverse and 1-2-3-4 Clutch Housing (551)	• Inspect for disengaged or broken Low and Reverse Clutch Piston Spring Retainer (548) • Inspect for broken or deformed Low and Reverse Clutch Piston (550) • Inspect for damaged or improper surface finish in the piston bore

NO FIRST, SECOND, THIRD, AND FOURTH GEAR

No First, Second, Third, and Fourth Gear

Checks	Causes
Control Solenoid (w/Body and TCM) Valve Assembly	Check 1234 PC Solenoid 5 for proper operation. Refer to **Control Solenoid Valve and Transmission Control Module Assembly Solenoid Performance Test**.
Control Valve Body Assembly	Inspect 1-2-3-4 Clutch Regulator Valve (417) and 1-2-3-4 Clutch Boost Valve (414) for debris and stickyness.
1-2-3-4 Clutch Assembly	• Inspect for damaged, stripped or sheared splines on 1-2-3-4 Clutch Plates (557-559), Backing Plate (560). • Inspect for damaged or broken 1-2-3-4 Clutch Piston (552) and Piston Seals damaged, worn or delaminating. • Inspect for broken or fatigued 1-2-3-4 Clutch Piston Return Spring (553). • Inspect for broken or disengaged 1-2-3-4 Clutch Piston Return Spring Retainer (554). • Inspect for broken or fatigued 1-2-3-4 Clutch Waved Plate (557). • Inspect for disengaged or broken 1-2-3-4 Clutch Backing Plate Retainer (561). • Inspect for broken, porous or improper surface finish or

	plugged oil passages of the Low-Reverse/1-2-3-4 Clutch Housing (551). • Inspect for worn or damaged Low-Reverse/ 1-2-3-4 Clutch Housing (551) splines.
Output Sun Gear Assembly (555)	Inspect for stripped or sheared splines on the Output Sun Gear shell.
Reaction Carrier Assembly (567)	• Inspect for stripped or sheared splines on the Input Ring Gear • Inspect for disengaged or broken Input Ring Gear Retainer.
Output Carrier Assembly (574)	• Low/Reverse Clutch Assembly (OWC) (543) splines stripped or sheared. • Inspect for disengaged or broken Reaction Ring Gear Retainer.
Case Assembly (50)	1. Inspect for leaking or damaged 1-2-3-4 and Low-Reverse Clutch Fluid Passage Seals (67). 2. Inspect for worn or damaged case splines or retainer ring grooves.
Input Sun Gear (571)	Inspect for damaged gear teeth and damaged splines.
Turbine Shaft (517)	Inspect for damaged splines to the Input Shaft Sun Gear.

NO SECOND AND SIXTH GEAR

No Second and Sixth Gear

Checks	Causes
2-6 Clutch Assembly	• Inspect for damaged or worn 2-6 Clutch Plates (540-542). • Inspect for damaged, worn, broken, improper surface finish or sheared splines on the Low-Reverse Clutch Assembly (543). • Inspect for damaged or broken 2-6 Clutch Piston (535) and piston seals damaged, worn or delaminating. • Inspect for broken or binding 2-6 clutch Piston Return Spring (536).
Reaction Carrier Assembly (567)	• Inspect for stripped or sheared splines on the Input Ring Gear. • Inspect for disengaged or broken Input Ring Gear Retainer.
Reaction Sun Gear Assembly (566)	• Inspect for damaged or broken Reaction Sun Gear Assembly hub. • Inspect for damaged or broken sun gear weld. • Inspect for loose or worn Reaction Sun Gear Assembly bushing.
Case Assembly (50)	• Inspect for stripped or sheared splines. • Inspect for broken or disengaged 2-6 Clutch Piston Return Spring Retainer (537). • Inspect for damaged, worn, or improper surface finish in the piston bore.

Output Carrier Assembly (574)	Inspect for reaction ring gear damage or missing ring gear snap ring.
Control Valve Body Assembly	Inspect 2-6 Clutch Regulator Valve (419) for debris and stickyness.
Control Solenoid (w/Body and TCM) Valve Assembly	Check 2-6 PC Solenoid 4 for proper operation. Refer to **Control Solenoid Valve and Transmission Control Module Assembly Solenoid Performance Test**.

HARSH OR LATE FIRST, SECOND, THIRD, AND FOURTH SHIFT

Harsh or Late First, Second, Third, and Fourth Shift

Checks	Causes
Low-Reverse and 1-2-3-4 Clutch Housing (551)	• Inspect for damaged or broken 1-2-3-4 Clutch Piston (552) and piston seals damaged, worn or leaking. • Inspect for fatigued or binding 1-2-3-4 Clutch Piston Return Spring (553). • Inspect for improper surface finish on 1-2-3-4 Clutch Plates (557-559). Refer to **Clutch Plate Diagnosis**. • Inspect for broken or fatigued 1-2-3-4 Clutch Waved Plate (557). • Inspect for plugged or restricted Low-Reverse and 1-2-3-4 Clutch Piston Housing (551) air bleed.
Case Assembly (50)	• Inspect for leaking or loose fitting Fluid Check Valve (55). • Inspect for leaking or damaged 1-2-3-4 and Low-Reverse Clutch Fluid Passage Seals (67).

HARSH FIRST AND REVERSE SHIFT

Harsh First and Reverse Shift

Checks	Causes
Low-Reverse and 1-2-3-4 Clutch Housing (551)	Inspect for plugged or restricted Low-Reverse/1-2-3-4 Clutch Piston Housing (551) air bleed
Low and Reverse Clutch	• Inspect for improper surface finish on Low and Reverse Clutch Plates (545-547) • Inspect for broken or fatigued Low and Reverse Clutch Apply Plate (547) • Inspect for damaged or broken Low and Reverse Clutch Piston (550) and piston seals damaged, worn or leaking • Inspect for fatigued or binding Low and Reverse Clutch Piston Return Spring (549)

NO THIRD, FIFTH, AND REVERSE GEAR

No Third, Fifth, and Reverse Gear

Checks	Causes
3-5 Reverse Clutch Assembly	• Inspect for damaged, stripped or sheared splines on 3-5 Reverse Clutch Plates (507-509), Backing Plate (510) • Inspect for sheared or stripped splines on 3-5 Rev/4-5-6 Housing (516) to Turbine Shaft (517) • Inspect for damage, improper surface finish, porosity, deformed or unbalanced 3-5 Rev/4-5-6 Housing (516) • Inspect for damaged, worn, loose or seized hub bushing in the 3-5 Rev/4-5-6 Housing • Inspect for broken, porous or improper surface finish or plugged oil passages of the 3-5 Rev/4-5-6 Housing (516) • Inspect for failure of the Input Shaft Thrust Bearing (538) • Inspect for disengaged or broken 3-5 Reverse Clutch Backing Plate (511) • Inspect for damaged, worn or leaking 3-5 Reverse Clutch Piston Seals (504-506) • Inspect for damaged or broken 3-5 Rev/4-5-6 Clutch Housing (516) • Inspect for warped, damaged, improper surface finish or debonding 3-5 Reverse Clutch Piston (502) • Inspect for broken or fatigued 3-5 Reverse Clutch Spring (503) • Inspect for disengaged or broken Speed Sensor Reluctor Retainer (500) • Inspect for worn, broken or damaged Speed Sensor Reluctor Wheel (501)
Reaction Sun Gear Assembly (566)	Inspect for stripped or sheared splines
Reaction Carrier (567)	• Inspect for broken or disengaged Input Internal Gear Retainer • Inspect for stripped or sheared splines on the Input Internal Gear
Output Carrier (574)	Inspect for stripped or sheared splines for the Reaction Internal Ring Gear
4-5-6 Clutch Assembly	• Inspect for plugged or missing 4-5-6 Piston Dam Oil Feed hole • Inspect for leaking 4-5-6 Piston Dam

HARSH OR LATE SECOND AND SIXTH SHIFT

Harsh or Late Second and Sixth Shift

Checks	Causes

2-6 Clutch Assembly	• Inspect for worn or improper surface finish on the 2-6 Clutch Plates (540-542) • Inspect for fatigued 2-6 Clutch Piston Apply Plate (540) • Inspect for plugged, restricted or incorrect orientation of the 2-6 Clutch Piston (535) air bleed
Case Assembly (50)	• Inspect for damaged or broken 2-6 Clutch Piston (535) and piston seals damaged, worn or delaminating • Inspect for fatigued 2-6 Clutch Piston Return Spring (536)

NO FOURTH, FIFTH, AND SIXTH GEAR

No Fourth, Fifth, and Sixth Gear

Checks	Causes
4-5-6 Clutch Assembly	• Inspect for damaged, stripped or sheared splines on 4-5-6 Clutch Plates (526-528), Backing Plate (529) • Inspect for broken or fatiqued 4-5-6 Clutch Waved Plate (525) • Inspect for damaged or broken 4-5-6 Clutch Piston (520) and Piston Seals (518, 519, 521) • Inspect for broken or fatigued 4-5-6 Piston Return Spring (522) • Inspect for broken or disengaged 4-5-6 Backing Plate Retainer (532) • Inspect for damaged or broken 4-5-6 Clutch Dam Piston (523) and piston seals damaged, worn or delaminating • Inspect for broken or disengaged 4-5-6 Clutch Dam Retainer (524) • Inspect for stripped or sheared splines on the Reaction Carrier Hub (531) • Inspect for stripped or sheared splines on 3-5 Rev/4-5-6 Housing to Turbine Shaft (516) • Inspect for loose, worn or damaged 3-5 Rev/4-5-6 Housing Bushing • Inspect for broken, porous or improper surface finish or plugged oil passages of the 3-5 Rev/4-5-6 Housing (516)
Transmission Case Assembly	Inspect the input shaft support (56) for missing or damaged fluid ring seals (58).
Control Valve Body Assembly	Inspect the reverse and 4-5-6 regulator valve (411) and ball check valve (404) for debris and stickyness.
	Check the pressure control solenoid 3 (R1/456) for proper

Control Solenoid (w/Body and TCM) Valve Assembly	operation. Refer to **Control Solenoid Valve and Transmission Control Module Assembly Solenoid Performance Test**.

HARSH OR LATE THIRD, FIFTH, AND REVERSE SHIFT

Harsh or Late Third, Fifth, and Reverse Shift

Checks	Causes
3-5 Reverse Clutch Assembly	• Inspect for damaged splines or improper surface finish on 3-5 Reverse Clutch Plates (507-509), Backing Plate (510) • Inspect for damaged, worn or leaking 3-5 Reverse Clutch Piston Seals (504-506) • Inspect for warped 3-5 Rev/4-5-6 Clutch Housing (516) • Inspect for broken or fatigued 3-5 Reverse Clutch Waved Plate (507)

HARSH FOURTH, FIFTH, AND SIXTH SHIFT

Harsh Fourth, Fifth, and Sixth Shift

Checks	Causes
4-5-6 Clutch Assembly	• Inspect for leaking or damaged 4-5-6 Clutch Piston (520) and Piston Seals (518, 519, 521) • Inspect for plugged or restricted 4-5-6 Piston Dam air bleed • Inspect for leaking or damaged 4-5-6 Clutch Dam (523) • Inspect for plugged or restricted Dam oil feed hole in the 4-5-6 Piston (520) • Inspect for fatiqued 4-5-6 Clutch Piston Spring (522) • Inspect for leaking 4-5-6 Clutch Dam Seals (523) • Inspect for improper surface finish on 4-5-6 Clutch Plates (525-528) • Inspect for fatigued 4-5-6 Clutch Waved Plate (525) • Inspect for porous, improper surface finish, seal groove damage or plugged or restricted oil passages of the 3-5 Rev/4-5-6 Housing (516)

NO TORQUE CONVERTER CLUTCH APPLY

No Torque Converter Clutch Apply

Checks	Causes
Torque Converter Assembly (28)	• Inspect for damaged Torque Converter Clutch Seal (inside converter assembly).

	• Diagnose Torque Converter Assembly for possible internal damage. Refer to **Torque Converter Diagnosis**.
Valve Body Assembly (433)	Inspect for worn, damaged or sticking TCC Regulator Apply (425) and TCC Regulator Apply Shuttle (426) Valves. Refer to **Control Solenoid Valve and Transmission Control Module Assembly Inspection (Gen 2 with 1.4L (LUV) 1.8L (LUW, LWE))**.
Oil Pump Assembly (201)	Inspect for worn or damaged Torque Converter Fluid Seal Assembly (301).
Torque Converter Housing Assembly (29)	Inspect for leaking or damaged Torque Converter Fluid Seal Assembly (301), Torque Converter Fluid Seal Assembly (319) and A/Trans Fluid Pump Assembly (201).

NO TORQUE CONVERTER CLUTCH RELEASE

No Torque Converter Clutch Release

Checks	Causes
Torque Converter Assembly (28)	Diagnose Torque Converter Assembly for possible internal damage. Refer to **Torque Converter Diagnosis**.
Valve Body Assembly (433)	Inspect for worn, damaged or sticking TCC Regulator Apply (425) and TCC Regulator Apply Shuttle (426) Valves.

HARSH TORQUE CONVERTER CLUTCH APPLY, OR INOPERATIVE OR NO ELECTRONICALLY CONTROLLED CAPACITY CLUTCH CONTROL

Harsh Torque Converter Clutch Apply, or Inoperative or No Electronically Controlled Capacity Clutch Control

Checks	Causes
Torque Converter Assembly (28)	• Inspect for leaking or damaged Torque Converter Clutch Hub Seal. • Diagnose Torque Converter Assembly for possible internal damage. Refer to **Torque Converter Diagnosis**.
Valve Body Assembly (433)	Inspect for worn, damaged or sticking TCC Regulator Apply (425) and TCC Regulator Apply Shuttle (426) Valves.

NO REVERSE GEAR

No Reverse Gear

Checks	Causes
Control Solenoid (w/Body and TCM) Valve Assembly	Check the 35R PC Solenoid 2 for proper operation. Refer to **Control Solenoid Valve and Transmission Control Module Assembly Solenoid Performance Test**.
	• Inspect the 3-5-Reverse Clutch Regulator Valve (421) and Control Valve Body Ball Check Valve

Control Valve Body Assembly	(404) for debris and stickyness. • Inspect the Clutch Select Valve (428) and the Actuator Feed Limit Valve (430) for debris and stickyness.
Transmission Case Assembly	Inspect the Input Shaft Support (56) for missing or damaged Fluid Seal Rings (58).
3-5 Reverse Clutch Assembly	• Inspect for damaged, stripped or sheared splines on 3-5 Reverse Clutch Plates (507-509), Backing Plate (510). • Inspect for stripped or sheared splines on 3-5 Rev/4-5-6 Housing to Turbine Shaft (516). • Inspect for damage, improper surface finish, porosity, deformed or unbalanced 3-5 Rev/4-5-6 Housing (516). • Inspect for damaged, worn, loose or seized hub bushing in the 3-5 Rev/4-5-6 Housing. • Inspect for broken, porous or improper surface finish or plugged oil passages of the 3-5 Rev/4-5-6 Housing (516). • Inspect for failure of the Input Shaft Thrust Bearing (538). • Inspect for disengaged or broken 3-5 Reverse Clutch Backing Plate Retainer (511). • Inspect for damaged, worn or leaking 3-5 Reverse Clutch Piston Seals (504-506). • Inspect for damaged or broken 3-5 Rev/4-5-6 Clutch Housing (516). • Inspect for warped, damaged, improper surface finish or debonding 3-5 Reverse Clutch Piston (502). • Inspect for broken or fatiqued 3-5 Reverse Clutch Spring (503). • Inspect for disengaged or broken Speed Sensor Reluctor Retainer (500). • Inspect for broken Speed Sensor Reluctor Wheel (501).

FLUID PRESSURE HIGH OR LOW

Fluid Pressure High or Low

Checks	Causes
Fluid Pump Assembly (201)	• Inspect for loose fluid pump bolts (204). • Inspect for leaking or damaged fluid pump outlet seals (24)

	and oil filter seal. • Inspect for improperly installed, restricted or damaged oil filter (203). • Inspect for sticking line pressure blow off valve (304). • Inspect for worn, sticking or damaged pressure regulator valve (309) or pressure regulator valve spring (308). • Inspect for damaged or restricted oil ports in the oil pump body (303). • Inspect for missing, leaking, or damaged auxiliary fluid inlet pump seal (371) - Hybrid Models.
Torque Converter Housing (208)	• Inspect for missing or restricted differential lube oil circuit orifice. • Inspect for missing front differential carrier baffle (205).
Control Solenoid Valve Assembly (w/Body and TCM) (7)	• Inspect for leaking or damaged filter plate assembly seals (8). • Verify VBS operation is not stuck high or low.
Case Assembly (50)	• Inspect for proper fluid level. • Inspect for missing lube oil circuit orifice or front differential carrier baffle (62). • Inspect for leaking or damaged valve body spacer plate assembly (12). • Inspect for damaged or leaking fluid check valve (55). • Inspect for leaking, damaged or broken fluid level control valve (13).
Torque Converter Assembly (28)	• Inspect for damaged torque converter clutch seal (inside converter assembly). • Inspect for damaged or disengaged torque converter hub to oil pump drive gear.

2013 TRANSMISSION

Automatic Transmission - 6T30/6T40 - Cruze

DIAGNOSTIC CODE INDEX

DIAGNOSTIC CODE INDEX

DTC	Description
DTC P057B-P057D	DTC P057B Brake Pedal Position Sensor Performance DTC P057C Brake Pedal Position Sensor Circuit Low Voltage DTC P057D Brake Pedal Position Sensor Circuit High Voltage
DTC P057C or P057D	DTC P057C Brake Pedal Position Sensor Circuit Low Voltage DTC P057D Brake Pedal Position Sensor Circuit High Voltage
DTC P0601, P0603, P0604, or P062F	DTC P0601 Control Module Read Only Memory Performance DTC P0603 Control Module Long Term Memory Reset DTC P0604 Control Module Random Access Memory Performance DTC P062F Control Module Long Term Memory Performance
DTC P0634	DTC P0634 Control Module Overtemperature
DTC P0658 or P0659	DTC P0658 Actuator High Control Circuit Group 1 Low Voltage DTC P0659 Actuator High Control Circuit Group 1 High Voltage
DTC P0667, P0668, or P0669	DTC P0667 Control Module Temperature Sensor Performance DTC P0668 Control Module Temperature Sensor Circuit Low Voltage DTC P0669 Control Module Temperature Sensor Circuit High Voltage
DTC P06AC, P06AD, or P06AE	DTC P06AC Control Module Power Up Temperature Sensor Performance DTC P06AD Control Module Power Up Temperature Sensor Circuit Low Voltage DTC P06AE Control Module Power Up Temperature Sensor Circuit High Voltage
DTC P0711-P0713	DTC P0711 Transmission Fluid Temperature Sensor Performance DTC P0712 Transmission Fluid Temperature Sensor

	Circuit Low Voltage DTC P0713 Transmission Fluid Temperature Sensor Circuit High Voltage
DTC P0716, P0717, P07BF, or P07C0	DTC P0716 Input Speed Sensor Performance DTC P0717 Input Speed Sensor Circuit No Signal DTC P07BF Input Speed Sensor Circuit Low Voltage DTC P07C0 Input Speed Sensor Circuit High Voltage
DTC P071D	DTC P071D Transmission Sport Mode Switch Circuit
DTC P0722, P0723, P077C, or P077D	DTC P0722 Output Speed Sensor Circuit No Signal DTC P0723 Output Speed Sensor Circuit Intermittent DTC P077C Output Speed Sensor Circuit Low Voltage DTC P077D Output Speed Sensor Circuit High Voltage
DTC P0741 or P0742 (Gen 2 with 1.4L (LUV) 1.8L (LUW, LWE))	DTC P0741 Torque Converter Clutch (TCC) System Stuck Off DTC P0742 Torque Converter Clutch (TCC) System Stuck On
DTC P0751 or P0752 (Gen 2 with 1.4L (LUV) 1.8L (LUW, LWE))	DTC P0751 Shift Solenoid Valve 1 Performance - Stuck Off DTC P0752 Shift Solenoid Valve 1 Performance - Stuck On
DTC P0776 or P0777 (Gen 2 with 1.4L (LUV) 1.8L (LUW, LWE))	DTC P0776 Pressure Control Solenoid Valve 2 Stuck Off DTC P0777 Pressure Control Solenoid Valve 2 Stuck On
DTC P0796 or P0797 (Gen 2 with 1.4L (LUV) 1.8L (LUW, LWE))	DTC P0796 Pressure Control Solenoid Valve 3 Stuck Off DTC P0797 Pressure Control Solenoid Valve 3 Stuck On
DTC P0815, P0816, or P0826	DTC P0815 Upshift Switch Circuit DTC P0816 Downshift Switch Circuit DTC P0826 Up and Down Shift Switch Circuit
DTC P0850-P0852	DTC P0850 Park/Neutral Position Switch Circuit DTC P0851 Park/Neutral Position Switch Circuit Low Voltage DTC P0852 Park/Neutral Position Switch Circuit High Voltage
DTC P0961-P0963	DTC P0961 Line Pressure Control Solenoid Valve Performance DTC P0962 Line Pressure Control Solenoid Valve Control Circuit Low Voltage DTC P0963 Line Pressure Control Solenoid Valve Control Circuit High Voltage
	DTC P0965 Pressure Control Solenoid Valve 2 Performance

DTC P0965-P0967	DTC P0966 Pressure Control Solenoid Valve 2 Control Circuit Low Voltage DTC P0967 Pressure Control Solenoid Valve 2 Control Circuit High Voltage
DTC P0969-P0971	DTC P0969 Pressure Control Solenoid Valve 3 Performance DTC P0970 Pressure Control Solenoid Valve 3 Control Circuit Low Voltage DTC P0971 Pressure Control Solenoid Valve 3 Control Circuit High Voltage
DTC P0973 or P0974	DTC P0973 Shift Solenoid Valve 1 Control Circuit Low Voltage DTC P0974 Shift Solenoid Valve 1 Control Circuit High Voltage
DTC P1761	DTC P1761 Up and Down Shift Switch Signal Message Counter Incorrect
DTC P182E or P1915	DTC P182E Internal Mode Switch Indicates Invalid Range DTC P1915 Internal Mode Switch Does Not Indicate Park/Neutral During Start
DTC P1876	DTC P1876 Up and Down Shift Enable Switch Circuit Low Voltage
DTC P2714 or P2715 (Gen 2 with 1.4L (LUV) 1.8L (LUW, LWE))	DTC P2714 Pressure Control Solenoid Valve 4 Stuck Off DTC P2715 Pressure Control Solenoid Valve 4 Stuck On
DTC P2719-P2721	DTC P2719 Pressure Control Solenoid Valve 4 Performance DTC P2720 Pressure Control Solenoid Valve 4 Control Circuit Low Voltage DTC P2721 Pressure Control Solenoid Valve 4 Control Circuit High Voltage
DTC P2723 or P2724 (Gen 2 with 1.4L (LUV) 1.8L (LUW, LWE))	DTC P2723 Pressure Control Solenoid Valve 5 Stuck Off DTC P2724 Pressure Control Solenoid Valve 5 Stuck On
DTC P2728-P2730	DTC P2728 Pressure Control Solenoid Valve 5 Performance DTC P2729 Pressure Control Solenoid Valve 5 Control Circuit Low Voltage DTC P2730 Pressure Control Solenoid Valve 5 Control Circuit High Voltage
DTC P2762, P2763, or P2764	DTC P2762 Torque Converter Clutch (TCC) Pressure Control Solenoid Valve Performance DTC P2763 Torque Converter Clutch (TCC) Pressure Control Solenoid Valve Control Circuit High Voltage

	DTC P2764 Torque Converter Clutch (TCC) Pressure Control Solenoid Valve Control Circuit Low Voltage

2013 TRANSMISSION

Automatic Transmission - 6T30/6T40 - Repair Instructions - On Vehicle - Cruze

REPAIR INSTRUCTIONS - ON VEHICLE

MANUAL SHIFT DETENT LEVER WITH SHAFT POSITION SWITCH ASSEMBLY REPLACEMENT

Special Tools

DT-41229 Manual Shaft Pin Installer

For equivalent regional tools, refer to **Special Tools** .

Removal Procedure

1. Remove the control valve body. Refer to **Control Valve Body Replacement**.

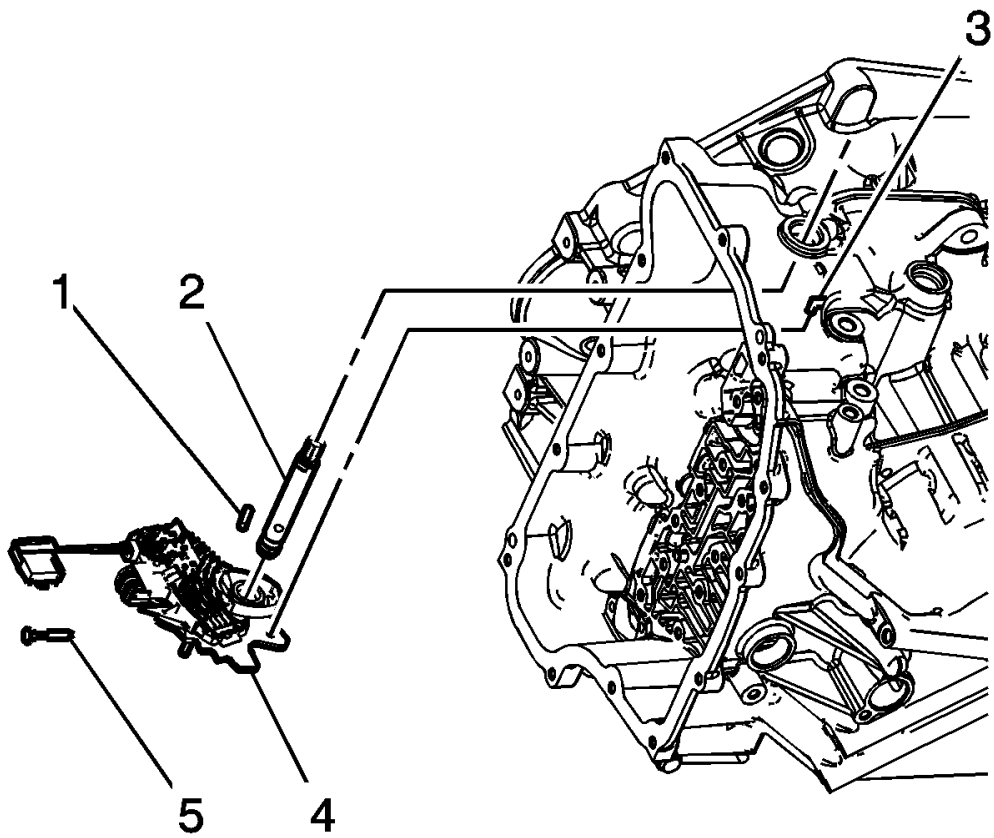

Fig. 1: View Of Manual Shift Detent Lever & Shaft Position Switch Assembly
Courtesy of GENERAL MOTORS COMPANY

2. Remove the manual shaft detent lever hub pin (1) using a pry bar and pliers.
3. Remove and DISCARD the manual shift shaft pin (5) using diagonal pliers or equivalent tool.
4. Remove the manual shaft (2).
5. Disconnect the actuator rod (3) from the detent lever assembly. Do not remove the actuator rod from the transmission case.

NOTE: Do not pull the park actuator rod end out beyond the machined oil passage surface in the case. A no park condition will exist if the park pawl actuator assembly is pulled out of the transmission too far and the actuator rod disengages from the park pawl. The transmission assembly will require disassembly to re-install the actuator rod over the park pawl.

6. Remove the manual shaft detent (with shift position switch) lever assembly (4).

Installation Procedure

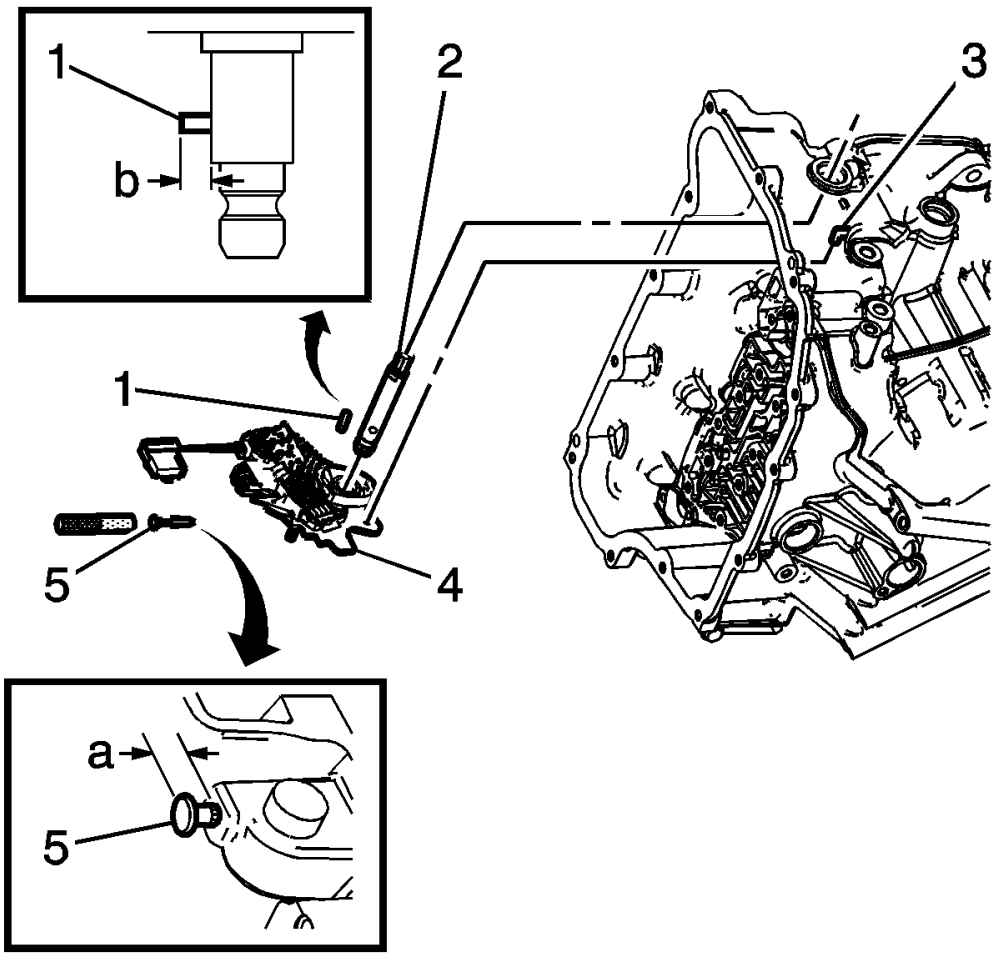

Fig. 2: Identifying Manual Shaft Detent (W/Shift Position Switch) Lever Assembly
Courtesy of GENERAL MOTORS COMPANY

1. Connect the actuator rod (3) to the detent lever assembly.
2. Install the manual shaft detent (with shift position switch) lever assembly (4).
3. Install the manual shaft (2).
4. Install the manual shaft detent lever hub pin (1) to height of 7.9 mm (0.38 in) (b).

CAUTION: Use J 41229 to install the manual shaft pin at the correct height in order to properly secure the manual shaft. If you install the pin too deep, the case bore may crack.

5. Install the NEW manual shift shaft pin (5) using **DT-41229** pin installer. Use a NEW pin to ensure proper engagement with the case.
6. Inspect pin installed height is within 7.2-8.2 mm (0.28-0.32 in) (a).
7. Install the control valve body. Refer to **Control Valve Body Replacement**.
8. Perform the transmission adaptive values learn procedure. Refer to **Transmission Adaptive Values**

Learn .

TRANSMISSION CONTROL LEVER KNOB REPLACEMENT

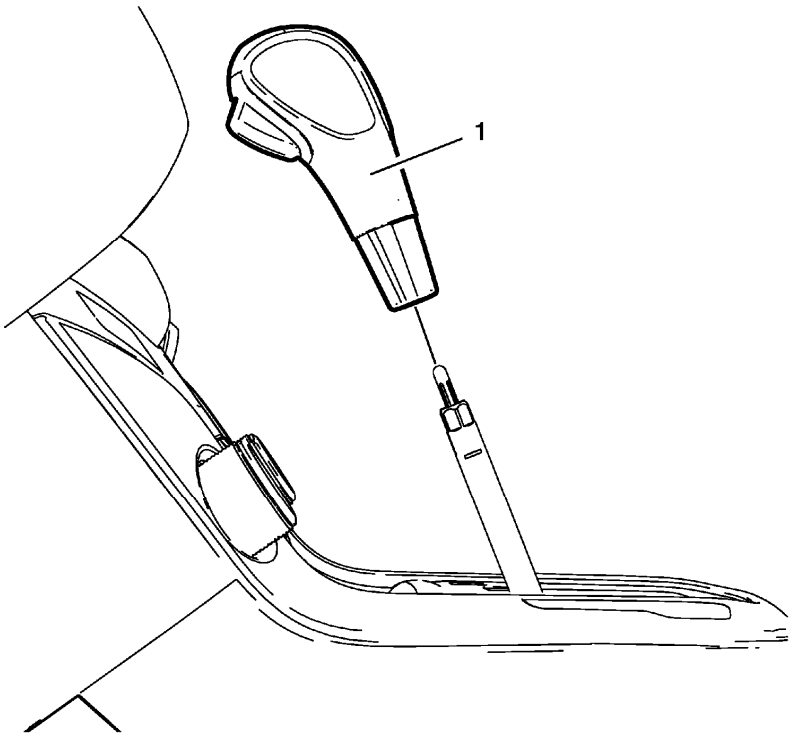

Fig. 3: Transmission Control Lever Knob
Courtesy of GENERAL MOTORS COMPANY

Transmission Control Lever Knob Replacement

Callout	Component Name
1	Transmission Control Lever Knob **Procedure** 1. Pull the knob with both hands upward with a twisting motion of max. 1- 2 degress to release from the transmission control lever. 2. Remove transmission control lever knob from the transmission control. **NOTE:** **Considerable effort may be necessary to release the knob from the control lever.**

TRANSMISSION CONTROL REPLACEMENT

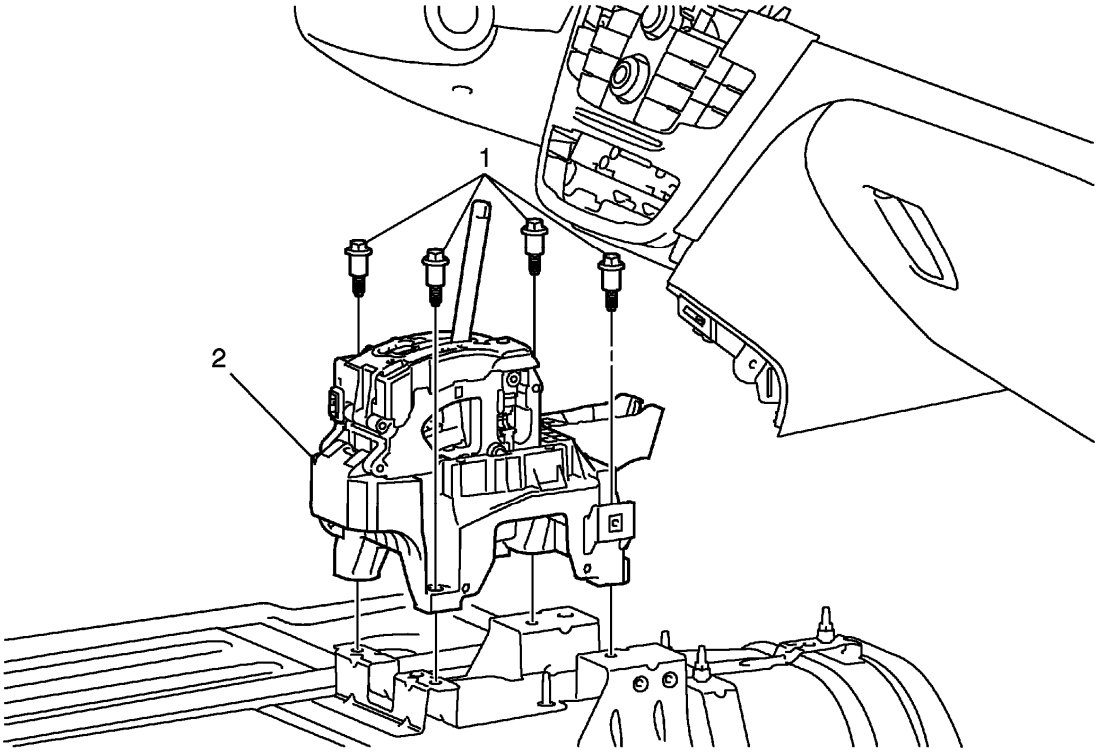

Fig. 4: Transmission Control & Fasteners
Courtesy of GENERAL MOTORS COMPANY

Transmission Control Replacement

Callout	Component Name
Preliminary Procedures 1. Remove control lever knob. Refer to **Transmission Control Lever Knob Replacement**. 2. Remove front floor console. Refer to **Front Floor Console Replacement** .	
1	Transmission Control Fastener (Qty: 4) **CAUTION:** **Refer to Fastener Caution .** **Procedure** 1. Unclip wiring harness and disconnect electrical connector transmission control. 2. Disconnect range selector lever cable. Refer to **Range Selector Lever Cable Replacement**. 3. Adjust range selector lever cable. Refer to **Range Selector Lever Cable Adjustment**.

	Tighten 9 N.m (80 lb in)
2	Transmission Control

AUTOMATIC TRANSMISSION RANGE SELECTOR LEVER REPLACEMENT

Removal Procedure

1. Set the park brake and chock the wheels.
2. Remove the battery tray. Refer to **Battery Tray Replacement** .

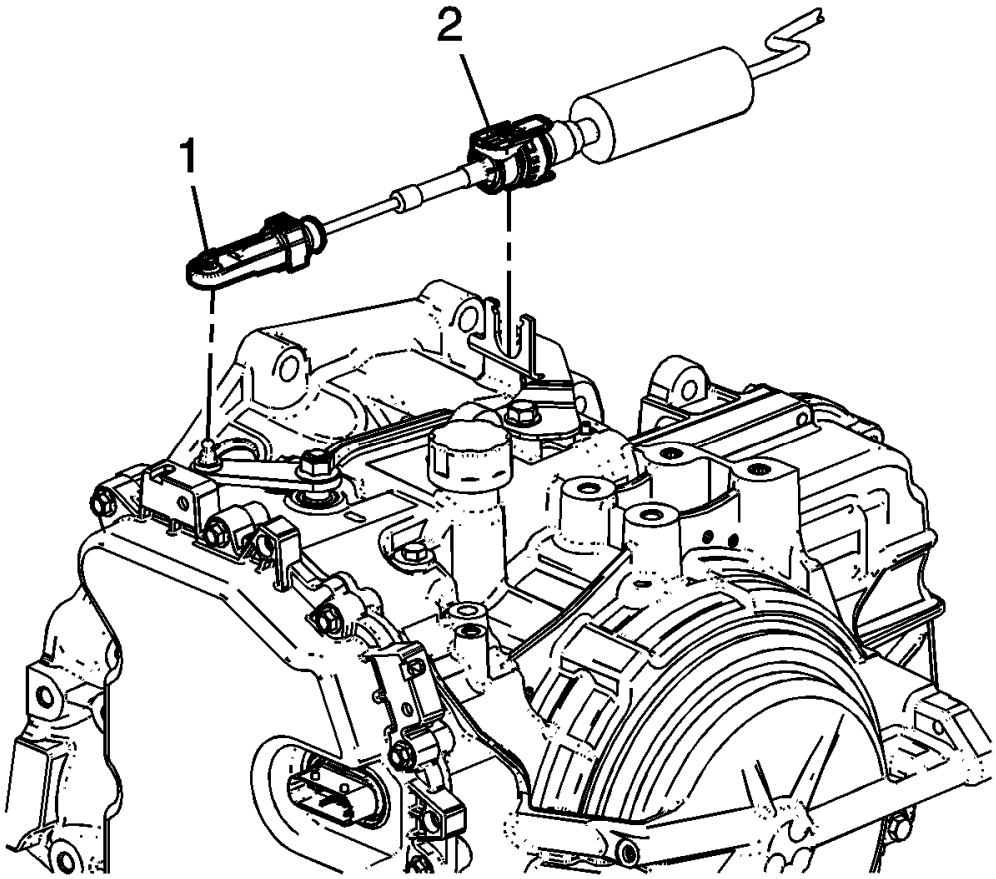

Fig. 5: View Of Transmission Range Selector Lever & Cable Connection
Courtesy of GENERAL MOTORS COMPANY

3. Disconnect the transmission range selector lever cable terminal (1) from the transmission manual shift lever pin.
4. Press the locking tabs inward in order to release the transmission range selector lever cable (2) from the cable bracket.

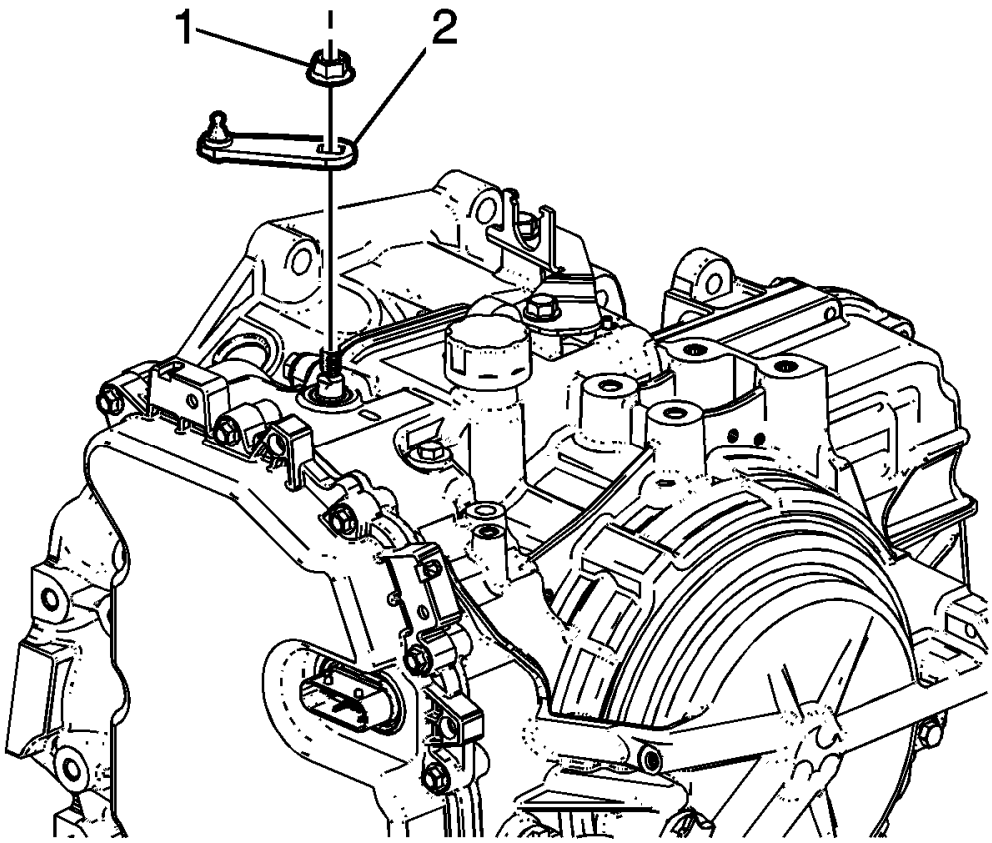

Fig. 6: View Of Transmission Range Selector Lever
Courtesy of GENERAL MOTORS COMPANY

WARNING: Hold the transmission range selector lever while removing or installing the lever retaining nut. Excessive torque on the manual shaft can damage the detent lever hub retainer which could allow the vehicle to roll when placed in the park position.

5. Remove the transmission range selector lever nut (1).
6. Remove the transmission range selector lever (2).

Installation Procedure

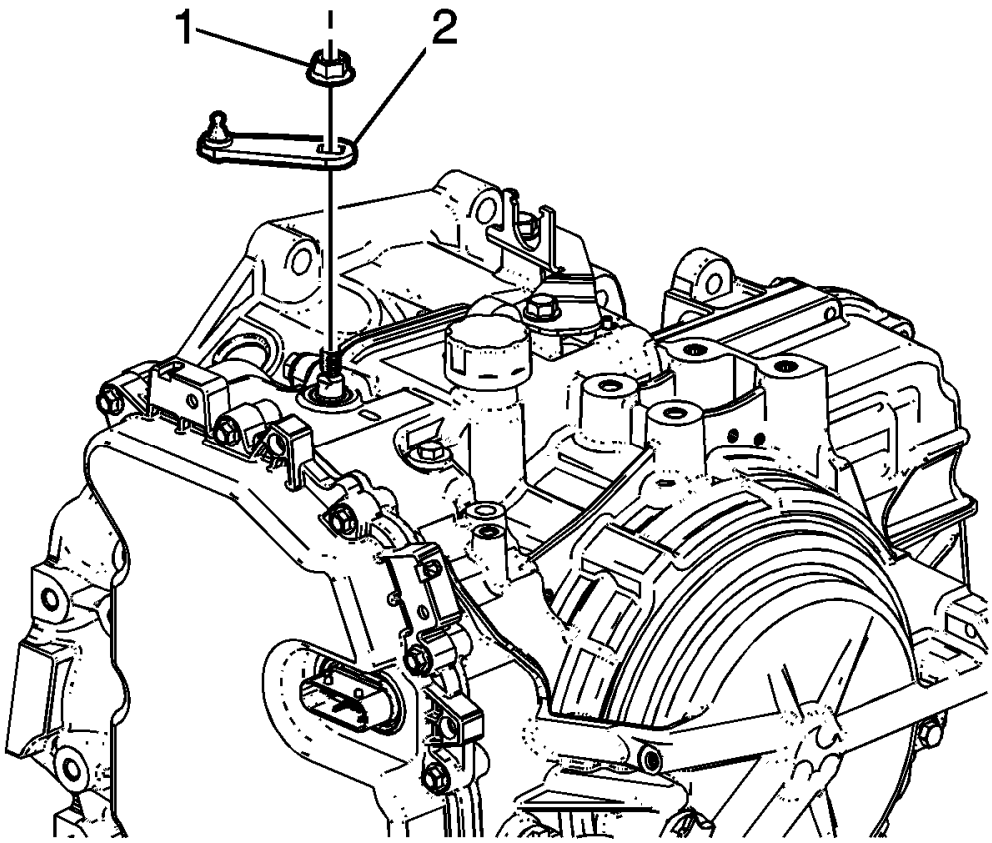

Fig. 7: View Of Transmission Range Selector Lever
Courtesy of GENERAL MOTORS COMPANY

WARNING: Hold the transmission range selector lever while removing or installing the lever retaining nut. Excessive torque on the manual shaft can damage the detent lever hub retainer which could allow the vehicle to roll when placed in the park position.

1. Install the transmission range selector lever (2).

CAUTION: Refer to Fastener Caution .

2. Install the transmission range selector lever nut (1) and tighten to 30 N.m (22 lb ft).

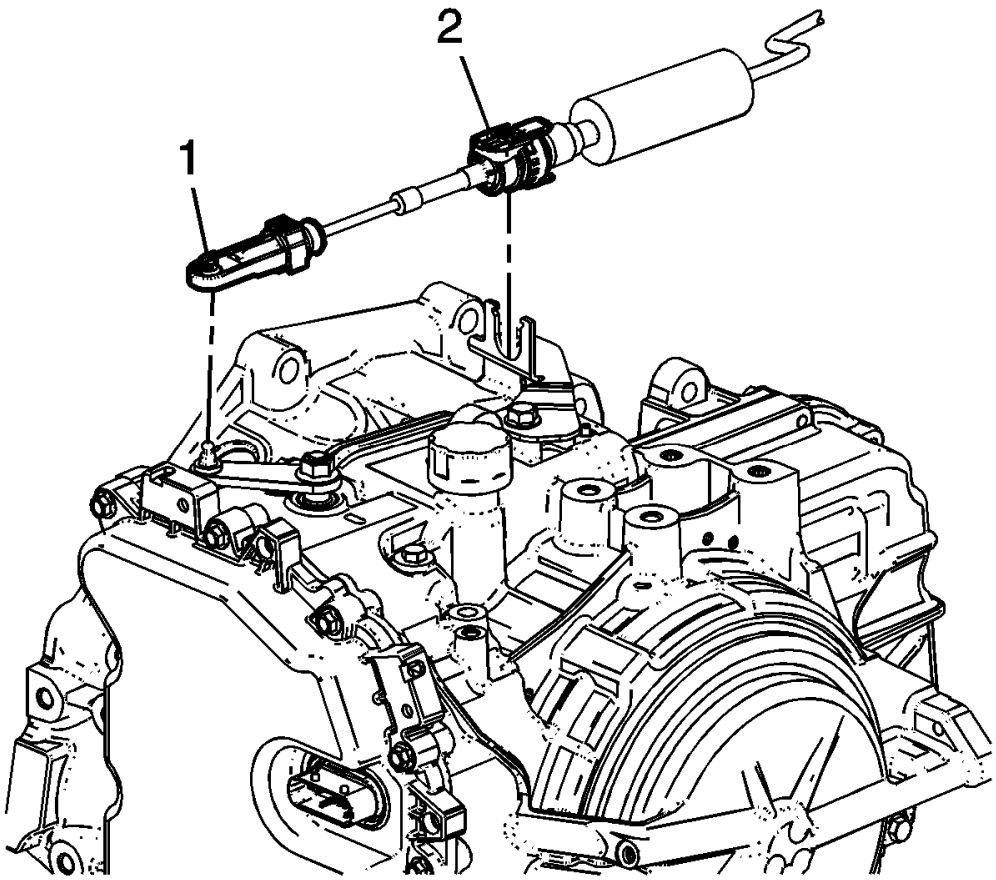

Fig. 8: View Of Transmission Range Selector Lever & Cable Connection
Courtesy of GENERAL MOTORS COMPANY

3. Install the transmission range selector lever cable (2) to the cable bracket.
4. Connect the transmission range selector lever cable terminal (1) to the transmission manual shift lever pin.
5. Check the range selector cable adjustment. Refer to **Range Selector Lever Cable Adjustment**.
6. Install the battery tray. Refer to **Battery Tray Replacement** .

RANGE SELECTOR LEVER CABLE REPLACEMENT

Removal Procedure

1. Set the park brake and chock the wheels.

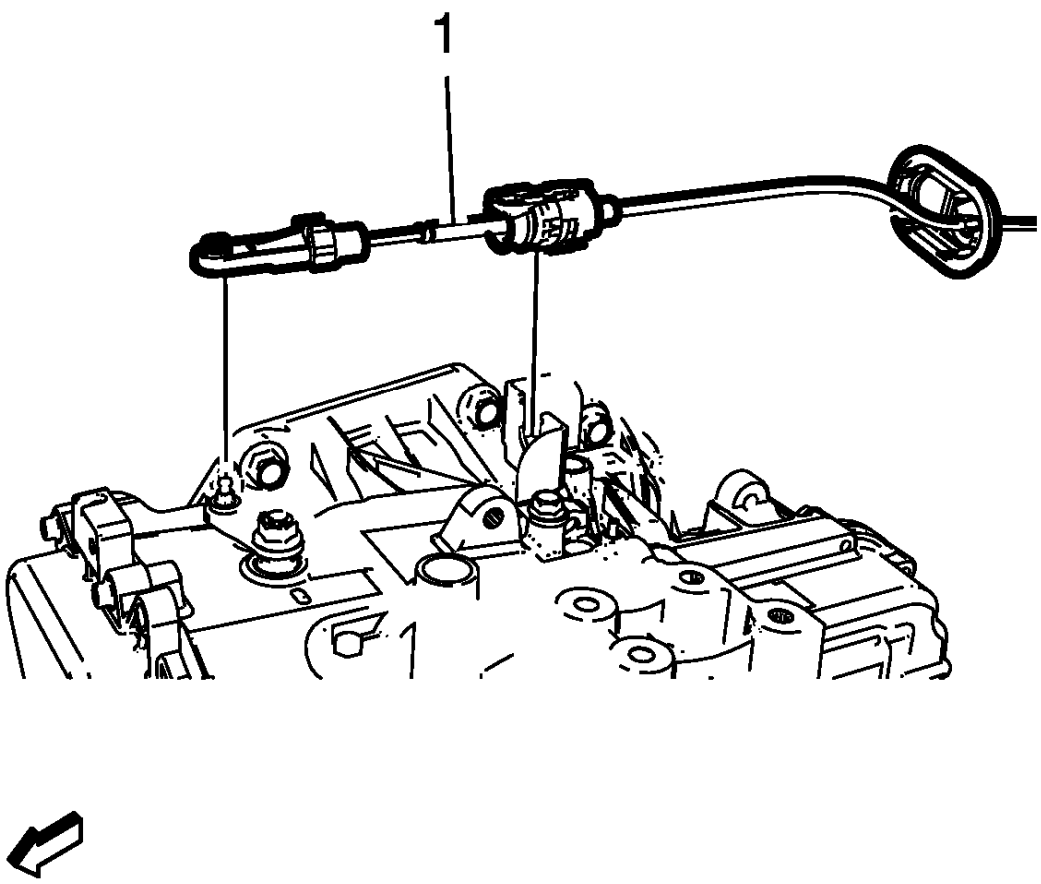

Fig. 9: Automatic Transmission Control Lever Knob
Courtesy of GENERAL MOTORS COMPANY

2. Disconnect the transmission range selector lever cable (1) from the transmission manual shift lever pin and cable bracket.
3. Remove the left instrument panel lower trim panel. Refer to **Instrument Panel Lower Trim Panel Replacement - Left Side** .

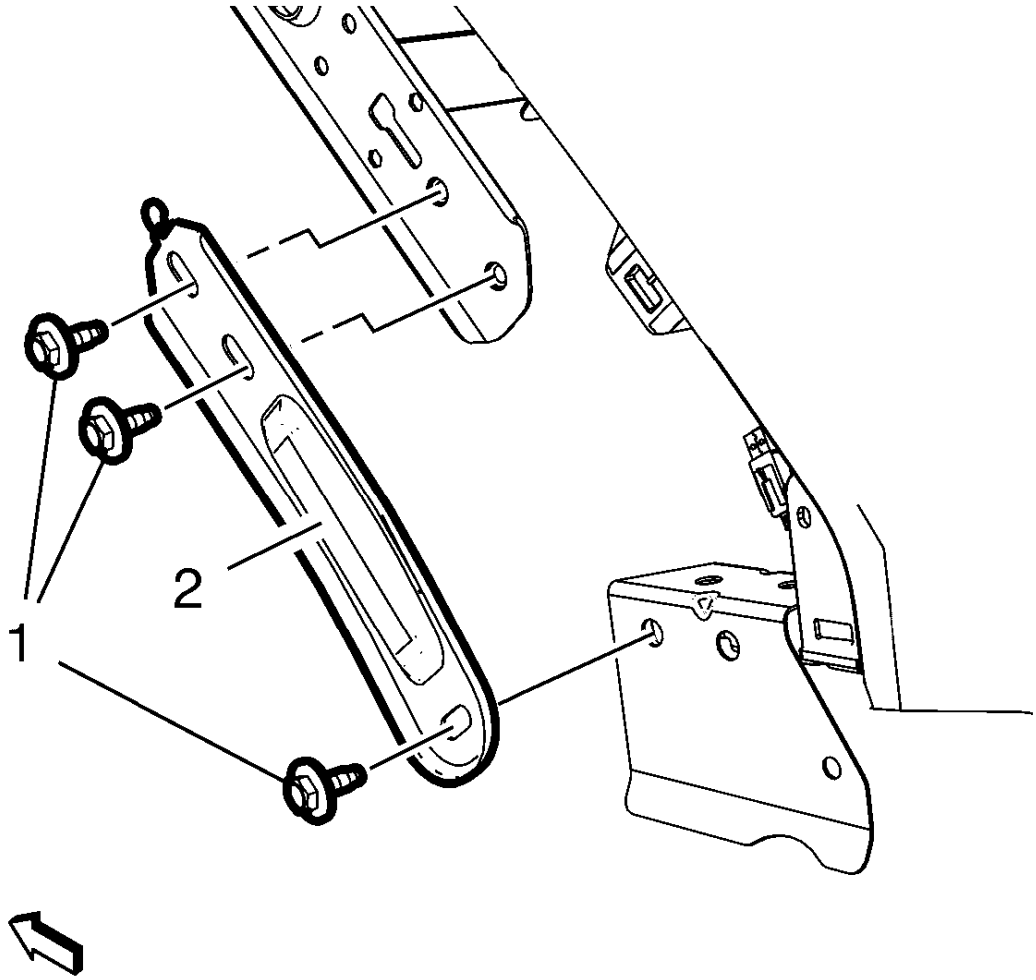

Fig. 10: Instrument Panel Tie Bar Brace
Courtesy of GENERAL MOTORS COMPANY

4. Remove the instrument panel tie bar brace bolts (1).
5. Remove the instrument panel tie bar brace (2).

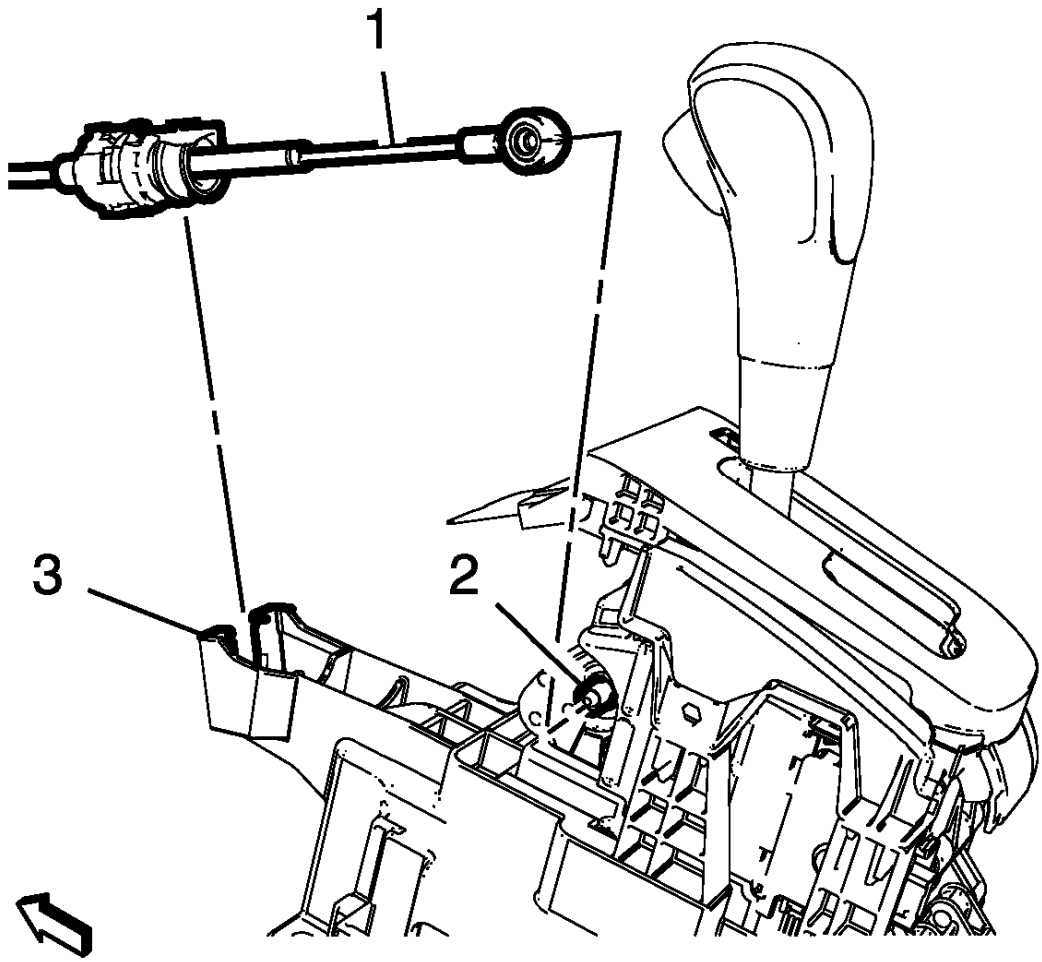

Fig. 11: Transmission Range Selector Lever Cable And Bracket
Courtesy of GENERAL MOTORS COMPANY

6. Remove the transmission range selector lever cable (1) from the cable bracket (3).
7. Remove the cable end terminal from shifter pin (2).

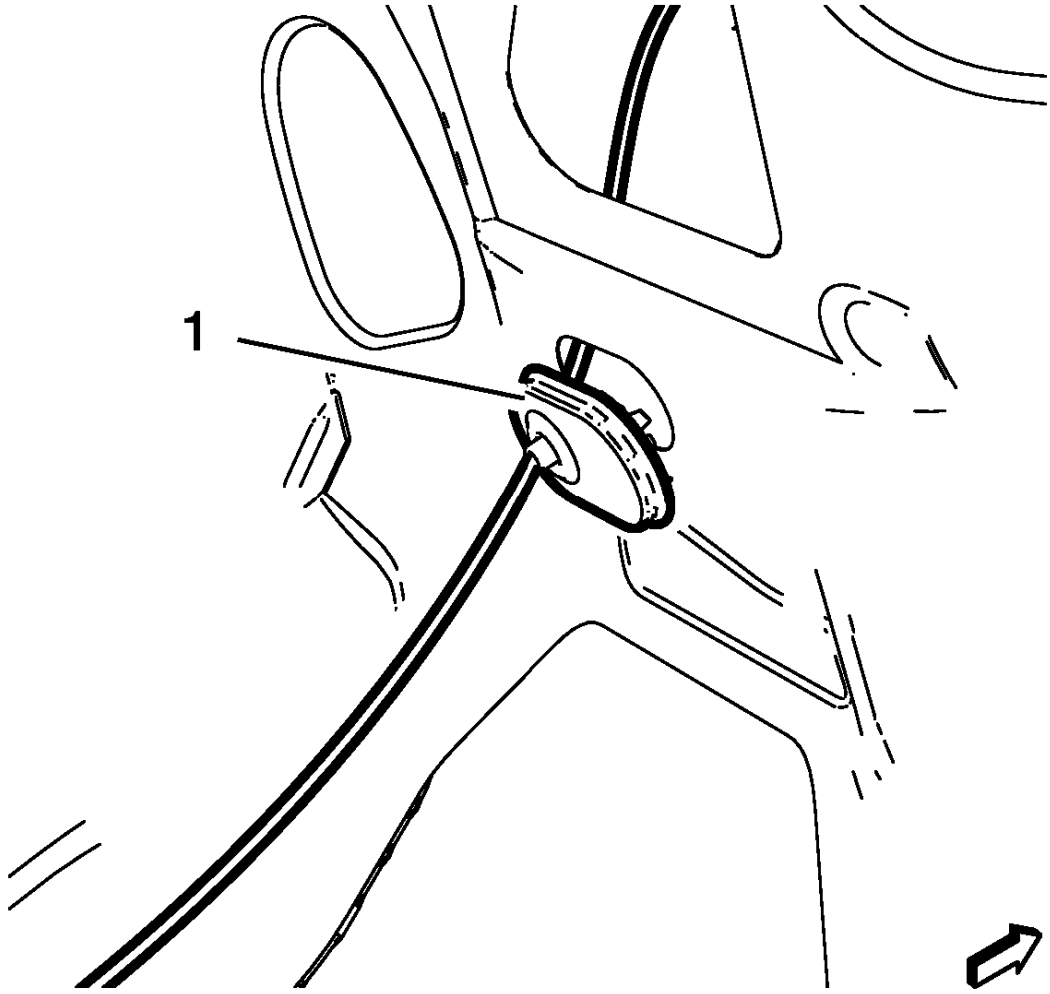

Fig. 12: Automatic Transmission Range Selector Lever Cable Grommet
Courtesy of GENERAL MOTORS COMPANY

8. Remove the transmission range selector lever cable grommet (1) from the cowl panel.
9. Remove the transmission range selector lever cable from the vehicle.

Installation Procedure

1. Install the transmission range selector lever cable to the vehicle.

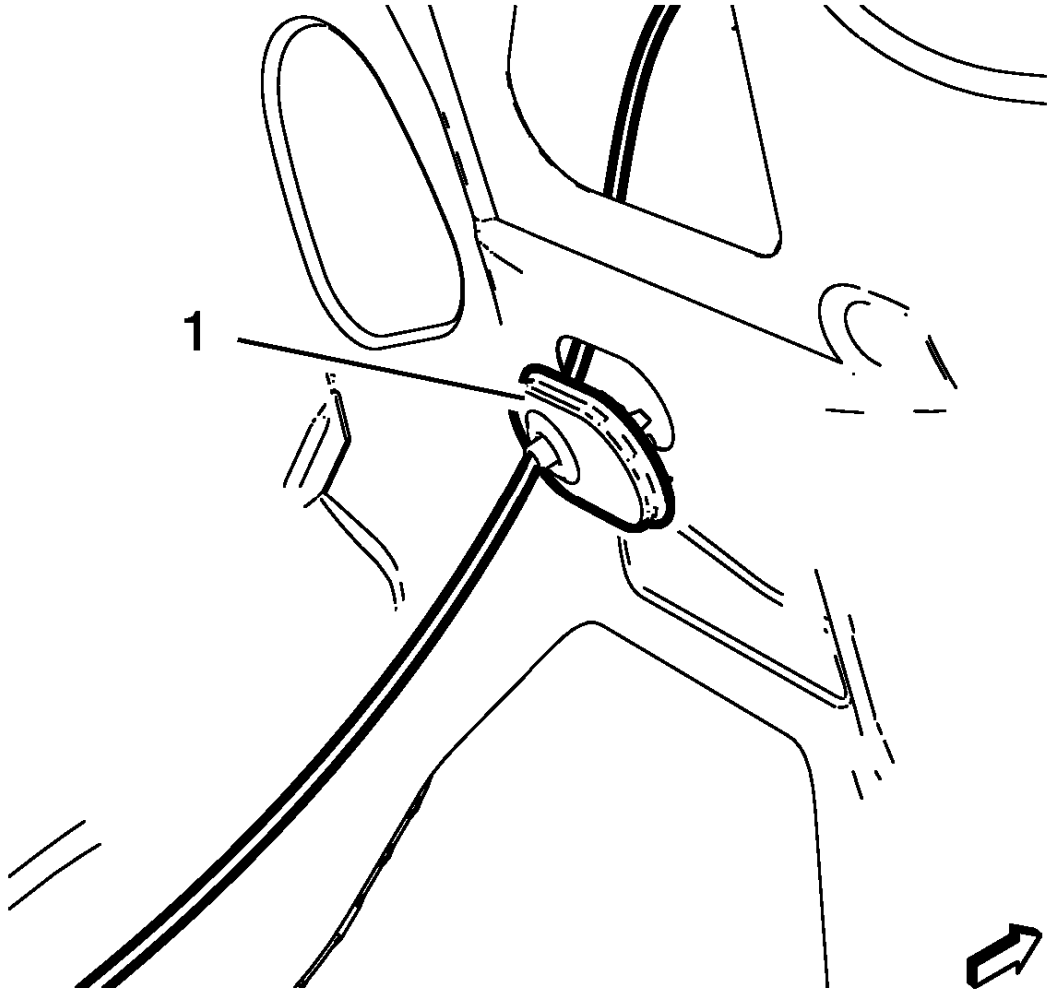

Fig. 13: Automatic Transmission Range Selector Lever Cable Grommet
Courtesy of GENERAL MOTORS COMPANY

2. Install the transmission range selector lever cable grommet (1) to the cowl panel.

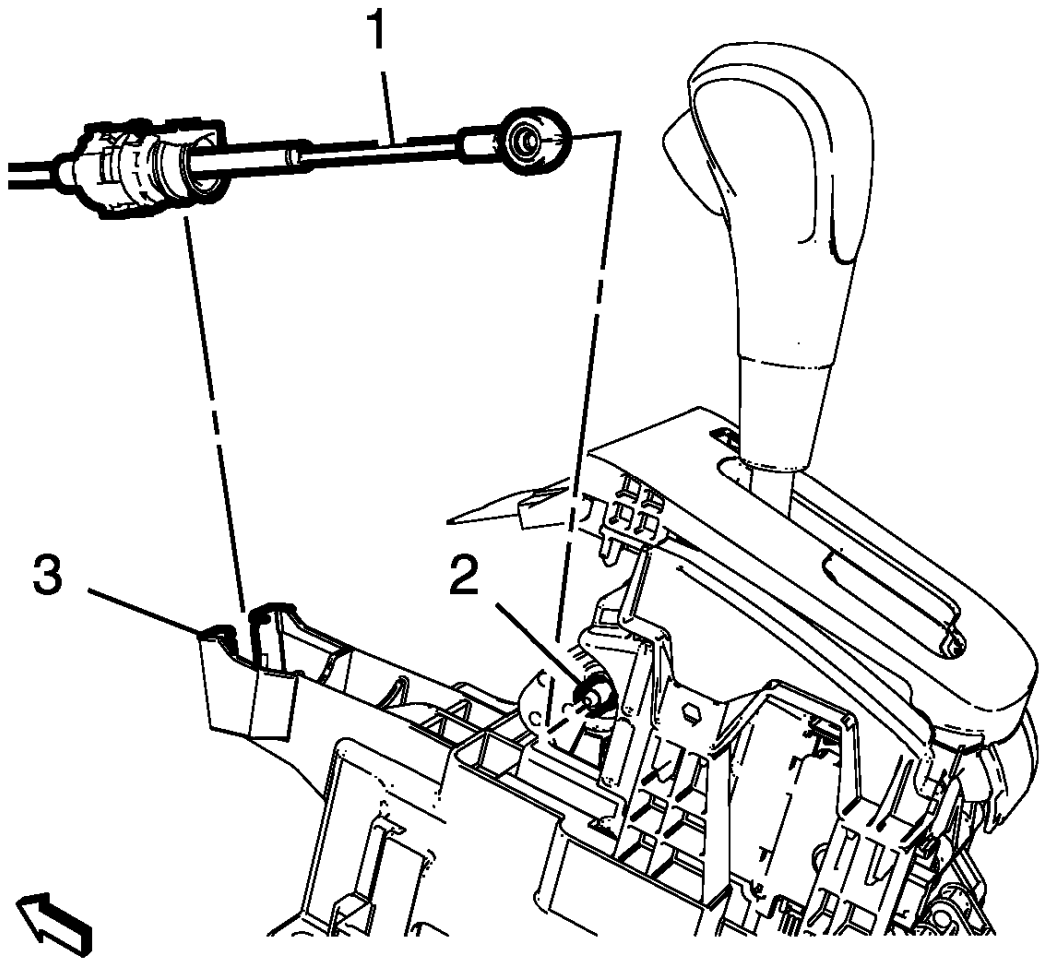

Fig. 14: Transmission Range Selector Lever Cable And Bracket
Courtesy of GENERAL MOTORS COMPANY

3. Connect the transmission range selector cable terminal to the shift lever pin (2).
4. Install the transmission range selector lever cable (1) to the cable bracket (3)

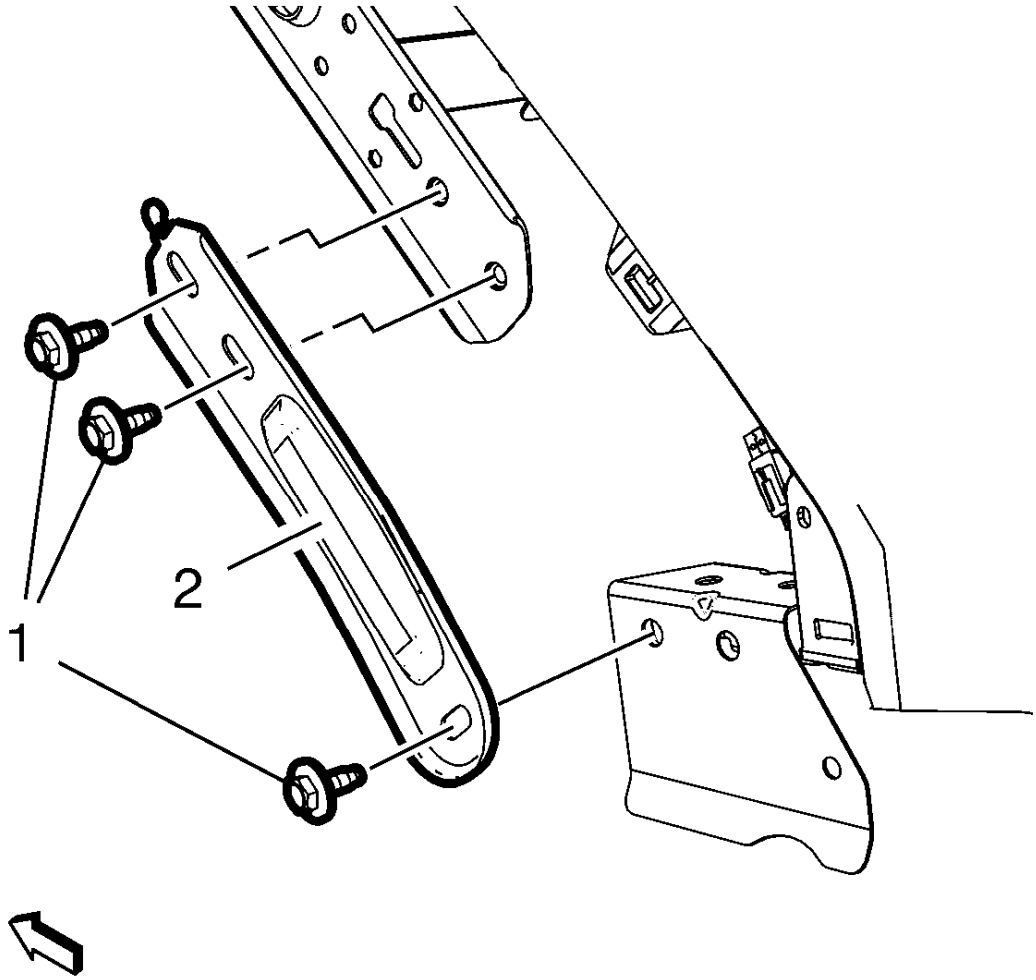

Fig. 15: Instrument Panel Tie Bar Brace
Courtesy of GENERAL MOTORS COMPANY

5. Install the instrument panel tie bar brace (2)

CAUTION: Refer to Fastener Caution .

6. Install the instrument panel tie bar brace bolts (1) and tighten to 22 N.m (16 lb ft).
7. Install the left instrument panel lower trim panel. Refer to **Instrument Panel Lower Trim Panel Replacement - Left Side** .

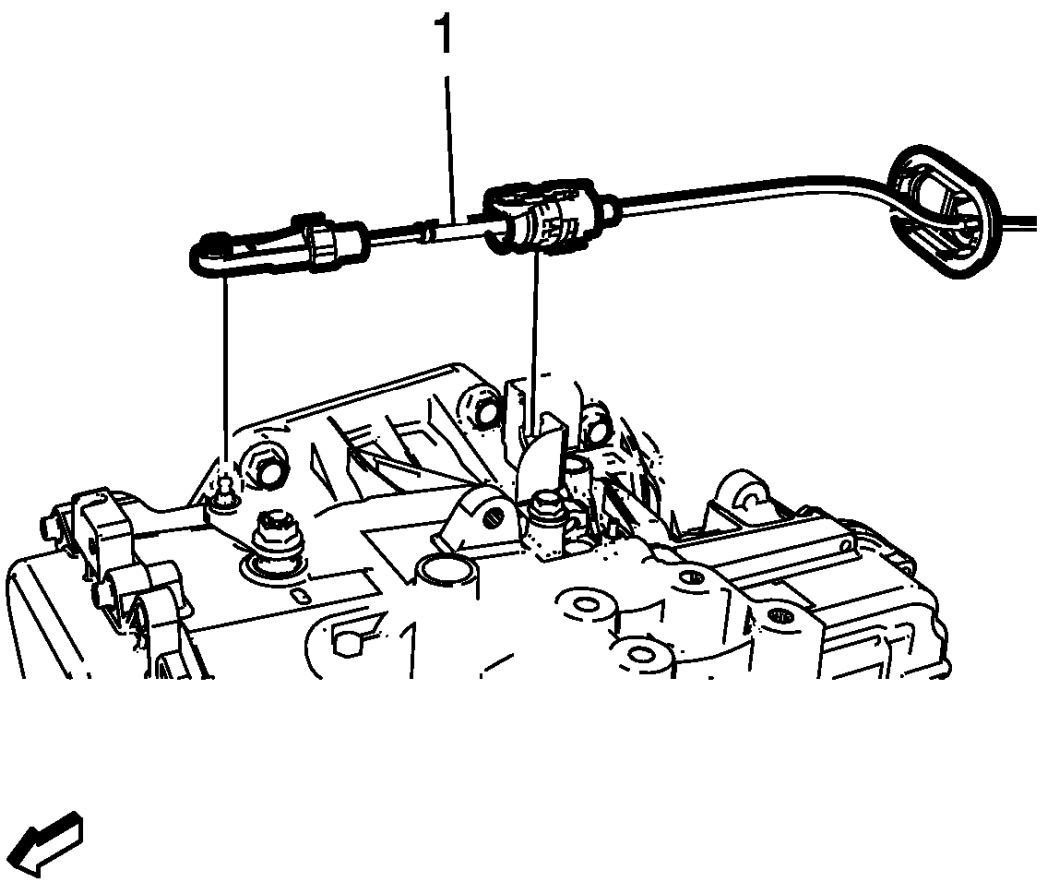

Fig. 16: Automatic Transmission Control Lever Knob
Courtesy of GENERAL MOTORS COMPANY

8. Connect the transmission range selector lever cable (1) to the transmission manual shift lever pin and cable bracket.
9. Adjust the range selector lever cable. Refer to **Range Selector Lever Cable Adjustment**.

RANGE SELECTOR LEVER CABLE ADJUSTMENT

Removal Procedure

NOTE: Adjust the automatic transmission range selector cable while the transmission and the gear selector are in the Park position only. Failure to do so may cause miss-adjustment.

1. Set the park brake and chock the wheels.

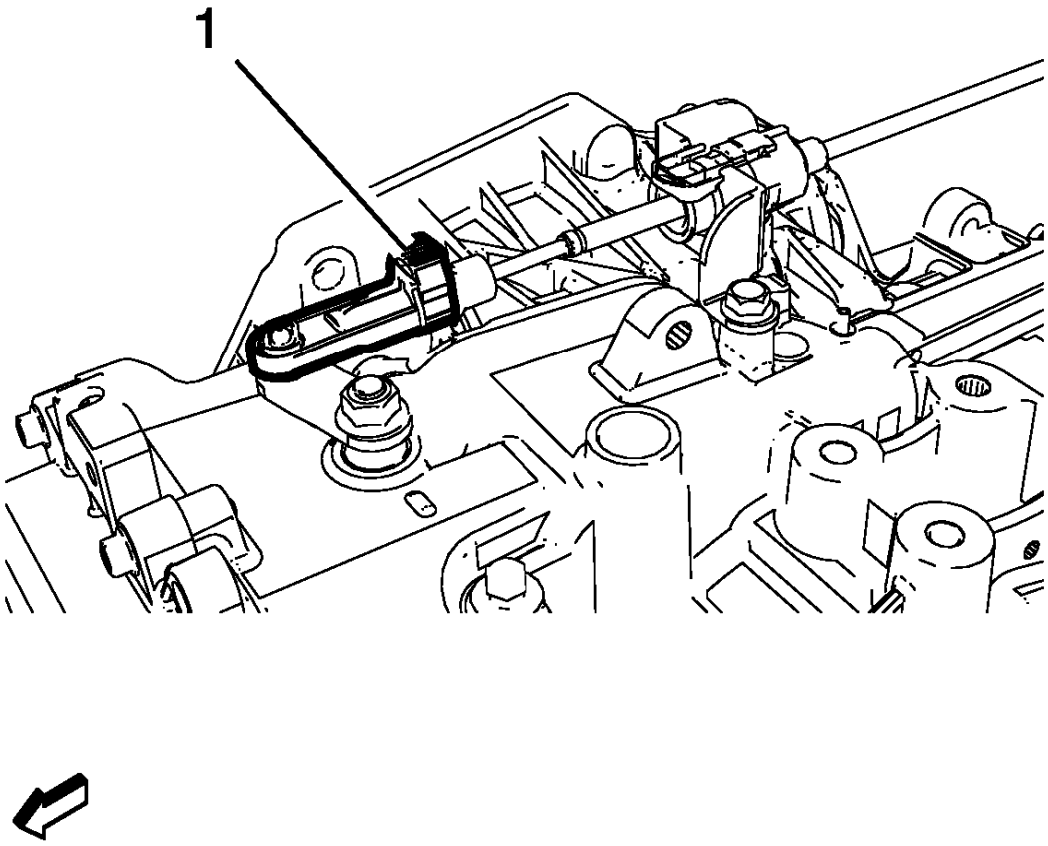

Fig. 17: Automatic Transmission Range Selector Lever Cable Adjust Lock
Courtesy of GENERAL MOTORS COMPANY

2. Remove range selector lever cable adjust lock (1).

Installation Procedure

1. Verify the transmission range selector lever is in the park position.
2. Verify the transmission shift lever is in the park position.

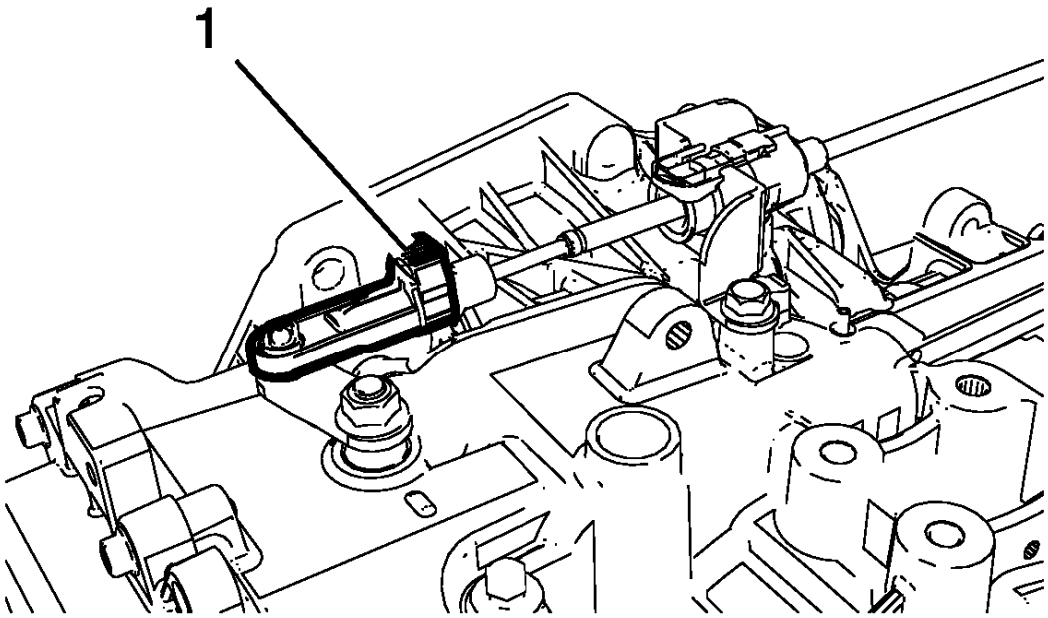

Fig. 18: Automatic Transmission Range Selector Lever Cable Adjust Lock
Courtesy of GENERAL MOTORS COMPANY

3. Install the range selector lever cable adjust lock (1).
4. Check the transmission range selector lever in all gear selections for proper operation.

RANGE SELECTOR LEVER CABLE BRACKET REPLACEMENT

Removal Procedure

1. Set the park brake and chock the wheels.
2. Remove the battery tray. Refer to **Battery Tray Replacement** .

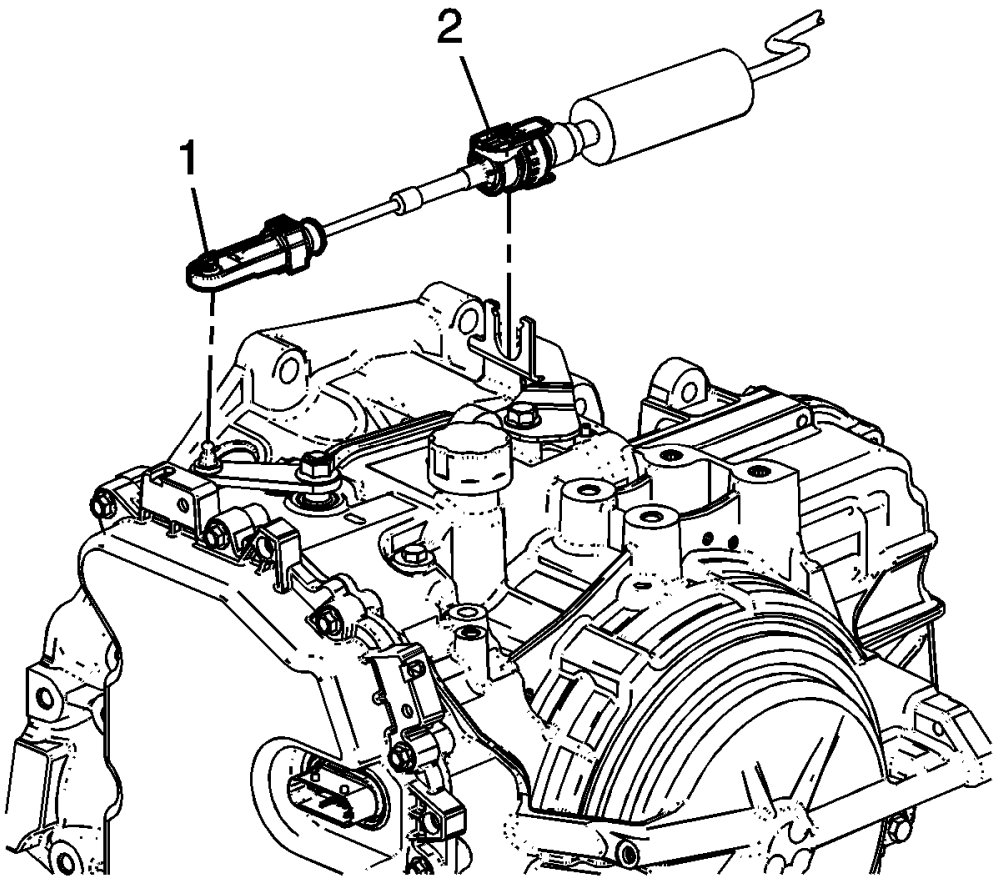

Fig. 19: View Of Transmission Range Selector Lever & Cable Connection
Courtesy of GENERAL MOTORS COMPANY

3. Disconnect the range selector cable end (1) from the range selector lever.
4. Disconnect the range selector cable (2) from the range selector cable bracket.

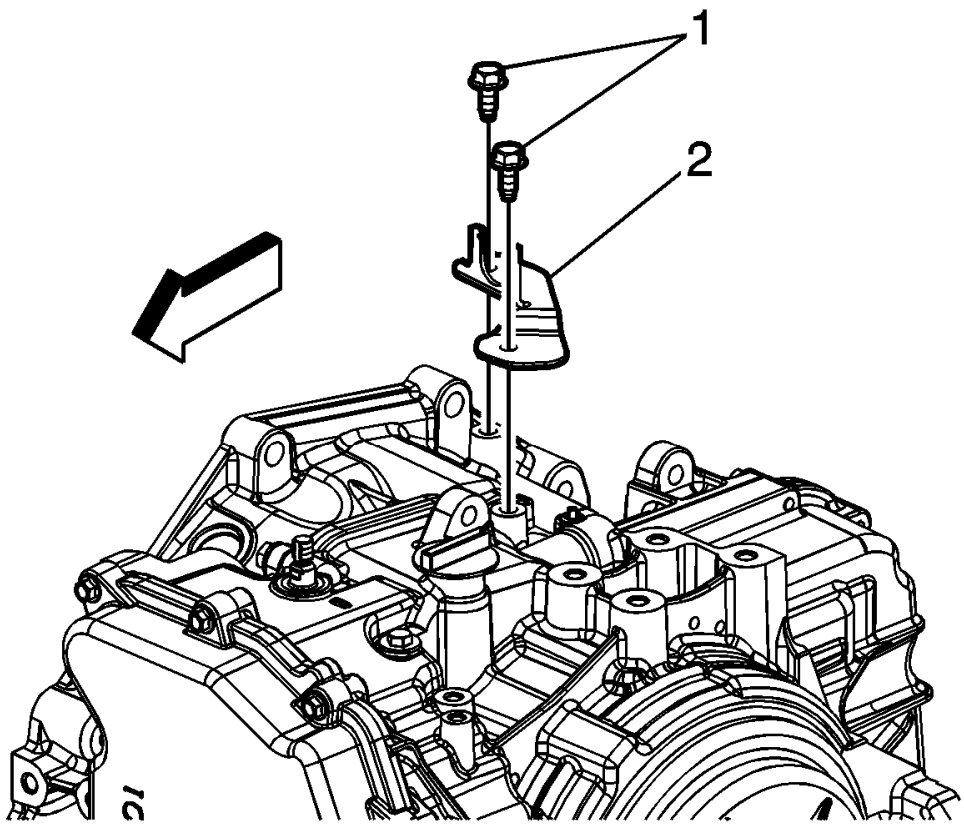

Fig. 20: Identifying Selector Cable Bracket & Bolts
Courtesy of GENERAL MOTORS COMPANY

5. Remove the transmission range selector cable bracket bolts (1).
6. Remove the transmission range selector cable bracket (2).

Installation Procedure

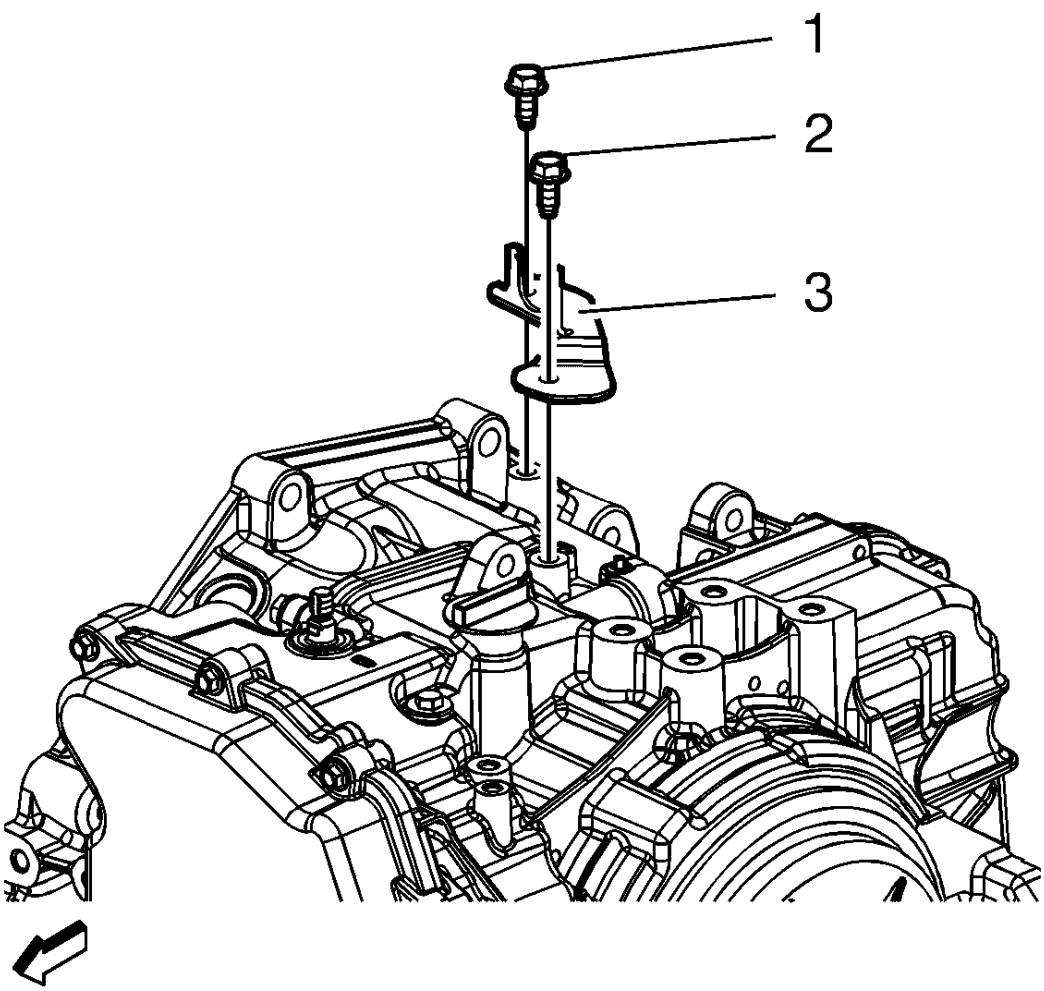

Fig. 21: Transmission Range Selector Cable Bracket
Courtesy of GENERAL MOTORS COMPANY

1. Install the transmission range selector cable bracket (3).

CAUTION: Refer to Fastener Caution .

2. Install the transmission range selector cable bracket bolts (1, 2) and tighten to 22 N.m (16 lb ft).

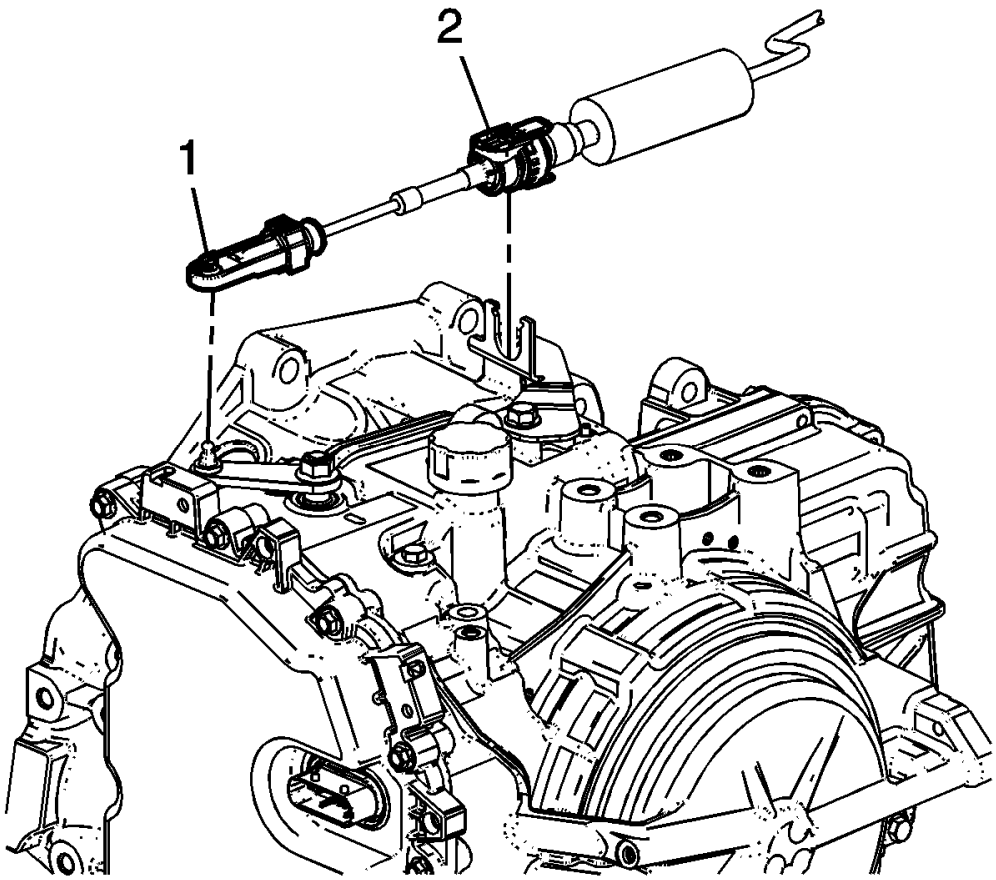

Fig. 22: View Of Transmission Range Selector Lever & Cable Connection
Courtesy of GENERAL MOTORS COMPANY

3. Connect the range selector cable (2) to the range selector cable bracket.
4. Connect the range selector cable end (1) to the range selector lever.
5. Check the range selector cable adjustment. Refer to **Range Selector Lever Cable Adjustment**.
6. Install the battery tray. Refer to **Battery Tray Replacement** .

TRANSMISSION FLUID DRAIN AND FILL

Draining Procedure

WARNING: When the transmission is at operating temperatures, take necessary precautions when removing the check/fill plug, to avoid being burned by draining fluid.

WARNING: The transmission fluid is hot. Caution must be taken to prevent personal injury when the transmission fluid drains from the transmission.

NOTE: Previous to the removing of any plug, clean the surrounding area of this plug.

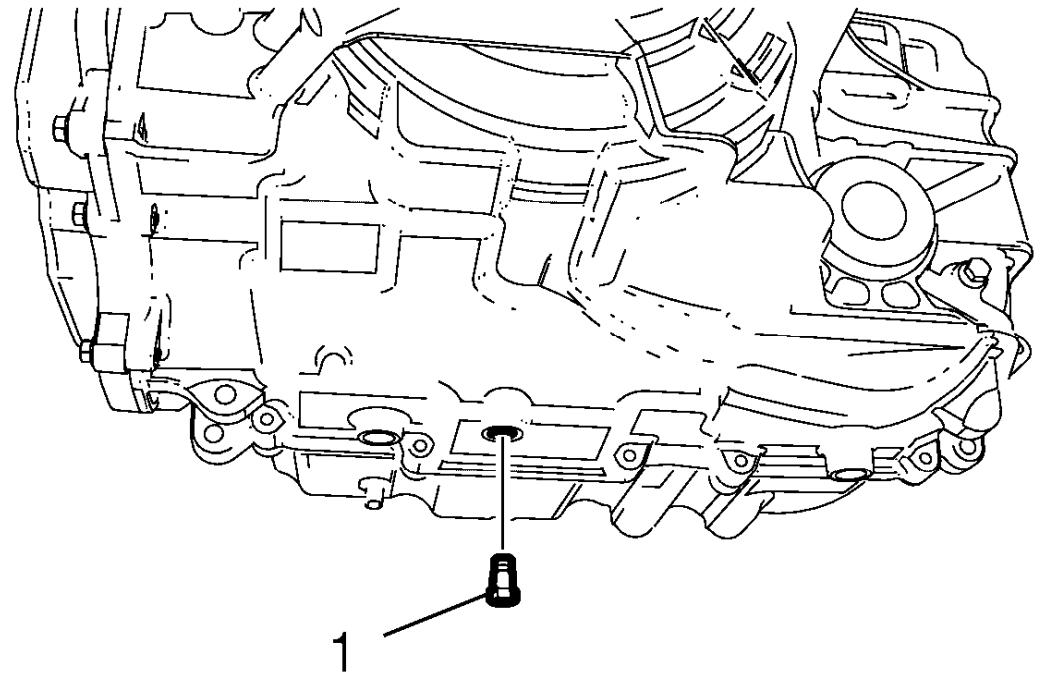

Fig. 23: Transmission Fluid Drain Plug
Courtesy of GENERAL MOTORS COMPANY

1. Raise and support the vehicle. Refer to **Lifting and Jacking the Vehicle** .
2. If equipped, remove the front compartment insulator. Refer to **Front Compartment Insulator Replacement** .
3. Remove the fluid drain plug (1).
4. Drain the transmission fluid into a suitable container.
5. Let the transmission fluid run out for 10 minutesand check the transmission fluid amount. If necessary, fill up the drained amount to the proper level with the correct fluid. Refer to **Transmission General Specifications (6T30)** , **Transmission General Specifications (6T40/6T45/6T50)** , and **Fluid Capacity Specifications (6T40/45/50)** , **Fluid Capacity Specifications (6T30)** .

6. Check the collected transmission oil for burnt oil exhalation, metal chips and other foreign bodies. If this the fact, search for the reason caused by the transmission.

CAUTION: Refer to Fastener Caution .

7. Install the fluid drain plug (1) and tighten to 12 N.m (106 lb in).

Filling Procedure

1. Lower the vehicle.
2. Without disconnecting the electrical connector, remove the engine control module and hang aside.
   - For 1.4L engine, refer to **Engine Control Module Replacement** .
   - For 1.8L engine, refer to **Engine Control Module Replacement** .

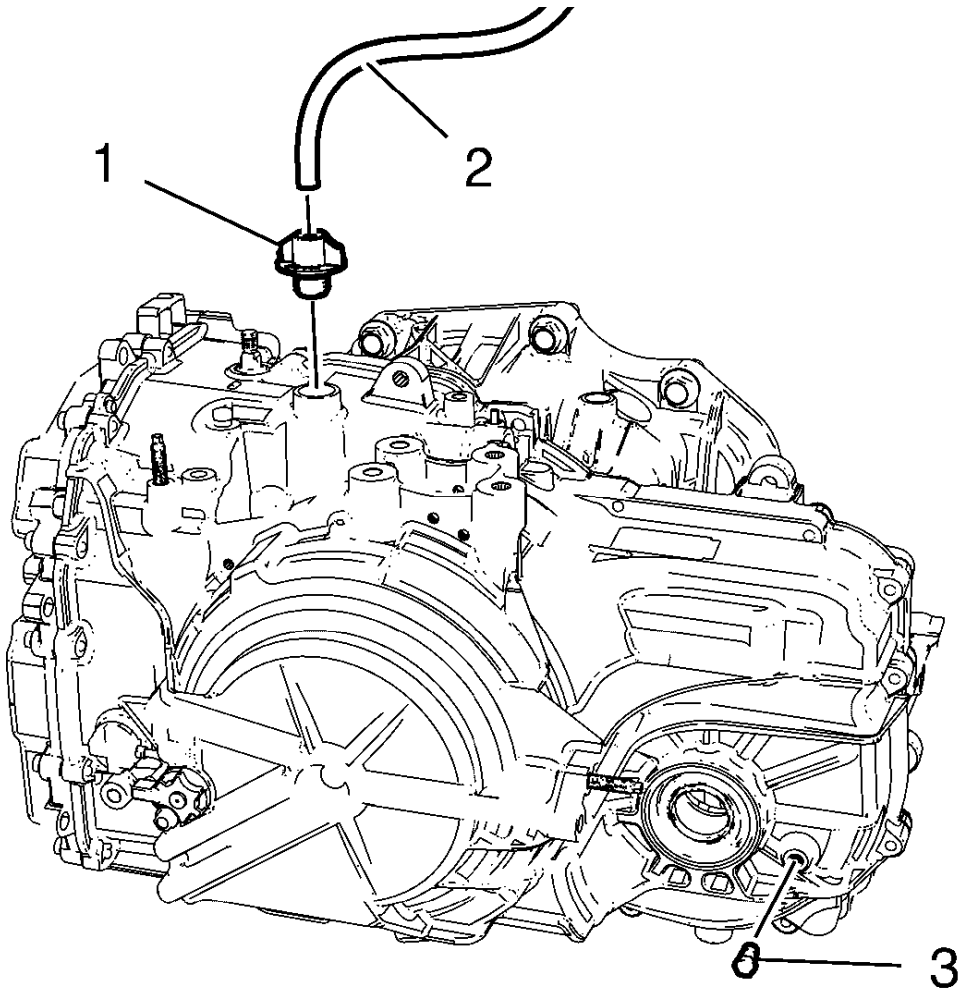

Fig. 24: Transmission Vent Hose And Transmission Fluid Filler Cap

Courtesy of GENERAL MOTORS COMPANY

3. Remove the transmission vent hose (2) and the fluid filler cap (1).
4. Fill the transmission with the proper amount of the correct fluid. Refer to **Transmission General Specifications (6T30)** , **Transmission General Specifications (6T40/6T45/6T50)** , and **Fluid Capacity Specifications (6T40/45/50)** , **Fluid Capacity Specifications (6T30)** .
5. Install the fluid filler cap (1) and the transmission vent hose (2).

Fluid Level Check

1. Start the engine.
2. Depress the brake pedal and move the shift lever through each gear range, pausing for about 3 secondsin each range. Then move the shift lever back to PARK (P).
3. Allow the engine to idle between 500 to 800 RPMfor at least 3 minutes, to allow any fluid frothing to dissipate and the fluid level to stabilize. Release the brake pedal.

CAUTION: The transmission fluid level must be checked when the transmission fluid temperature (TFT) is at 85-95°C (185-203°F). If the TFT is not at this temperature, operate the vehicle or allow the fluid to cool as required. Setting the fluid level with a TFT outside this temperature will result in either an under or over-filled transmission. TFT over 95° C under-filled, TFT under 85°C over-filled. An under-filled transmission will cause premature component wear or damage. An over-filled transmission will cause fluid to discharge out the vent tube, fluid foaming, or pump cavitation.

4. Keep the engine running and observe the transmission fluid temperature (TFT), using the driver information center or a scan tool.
5. Raise the vehicle on a hoist.

NOTE: The vehicle must be level, with the engine running and the shift lever in the PARK range.

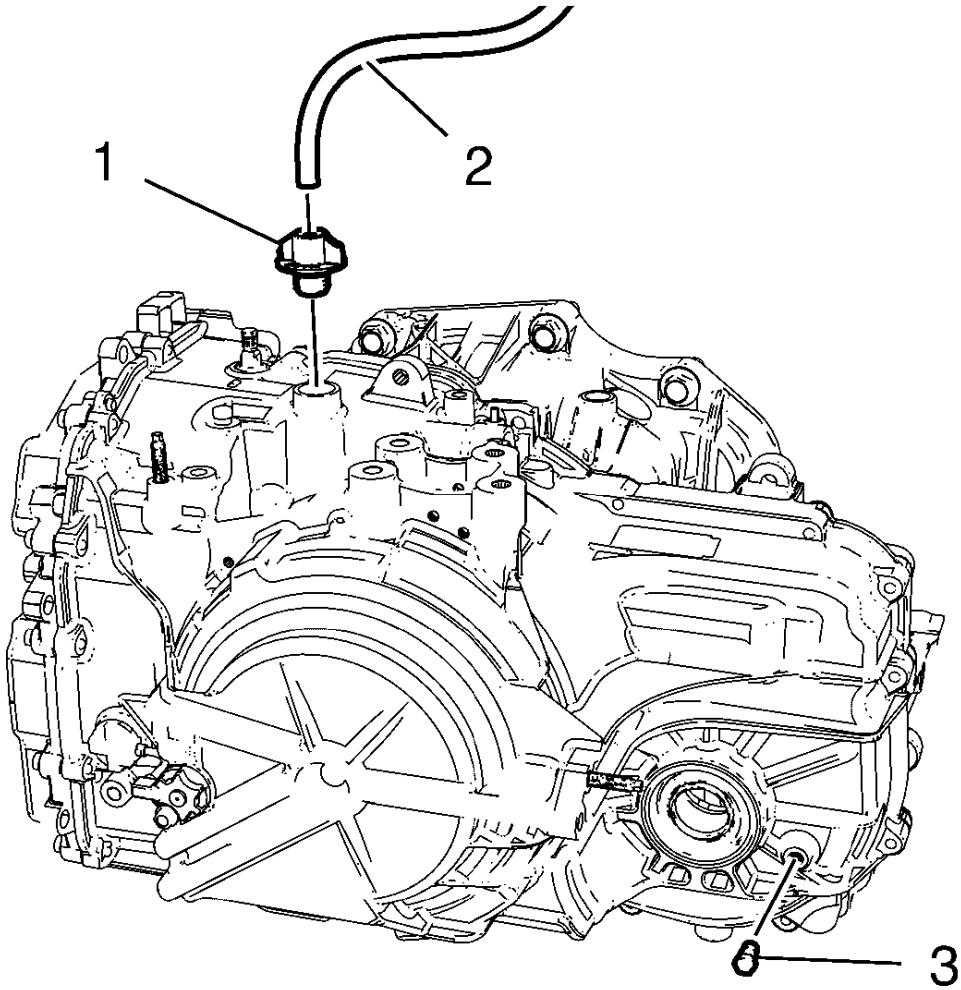

Fig. 25: Transmission Vent Hose And Transmission Fluid Filler Cap
Courtesy of GENERAL MOTORS COMPANY

WARNING: The engine must be running when the transmission fluid fill plug is removed, or excessive fluid loss will occur. Transmission fluid may be hot. Since the actual fluid level is unknown, stand clear when removing the fill plug. Have a container ready to capture any lost fluid. Do not turn the engine off with the fill plug removed, as you can be injured by hot transmission fluid being expelled out of the oil fill opening.

6. While the vehicle is idling, remove the fluid level plug (3). Allow any fluid to drain into a drip pan.
   - If the fluid is flowing as a steady stream, wait until the fluid begins to drip. Continue with step 10.
   - If no fluid comes out, add fluid until it drips out of the fluid level plug hole. Continue with step 7.
7. Lower the vehicle.
8. Remove the transmission vent hose (2) and the transmission fluid filler cap (1).

9. While the vehicle is idling, add fluid through the fluid filler cap hole, until fluid is flowing as a stream out of the fluid level plug hole. Wait until the fluid is only dripping out of the fluid level plug hole.
10. Raise the vehicle

CAUTION: Refer to Fastener Caution .

11. Install the fluid level plug (3) and tighten to 12 N.m (106 lb in).
12. Lower the vehicle.
13. Stop the engine.
14. Install the transmission fluid filler cap (1) and the transmission vent hose (2).
15. Install the engine control module.
    - For 1.4L engine, refer to **Engine Control Module Replacement** .
    - For 1.8L engine, refer to **Engine Control Module Replacement** .
16. Raise the vehicle.
17. If equipped, install the front compartment insulator. Refer to **Front Compartment Insulator Replacement** .
18. Lower the vehicle.

TRANSMISSION FLUID AUXILIARY COOLER REPLACEMENT

Removal Procedure

1. Remove radiator grille reinforcement support. Refer to **Front Grille Support Replacement** .

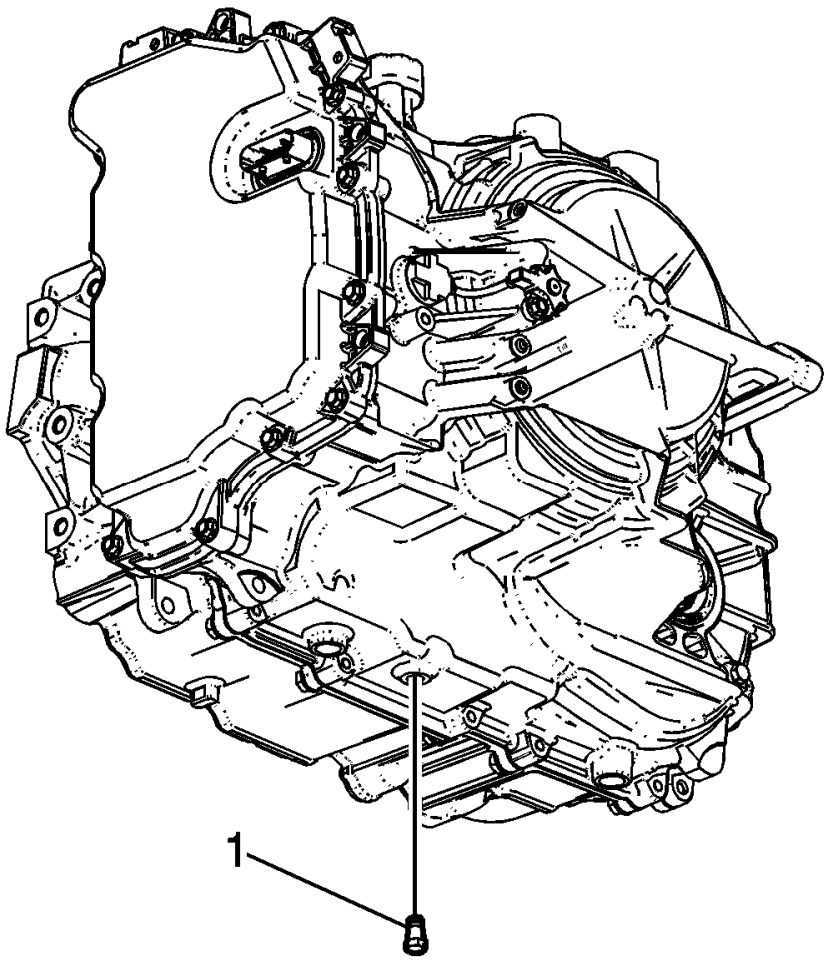

Fig. 26: Identifying Fluid Level Hole Plug
Courtesy of GENERAL MOTORS COMPANY

2. Remove the fluid level drain plug (1).
3. Drain transmission fluid into a suitable container.

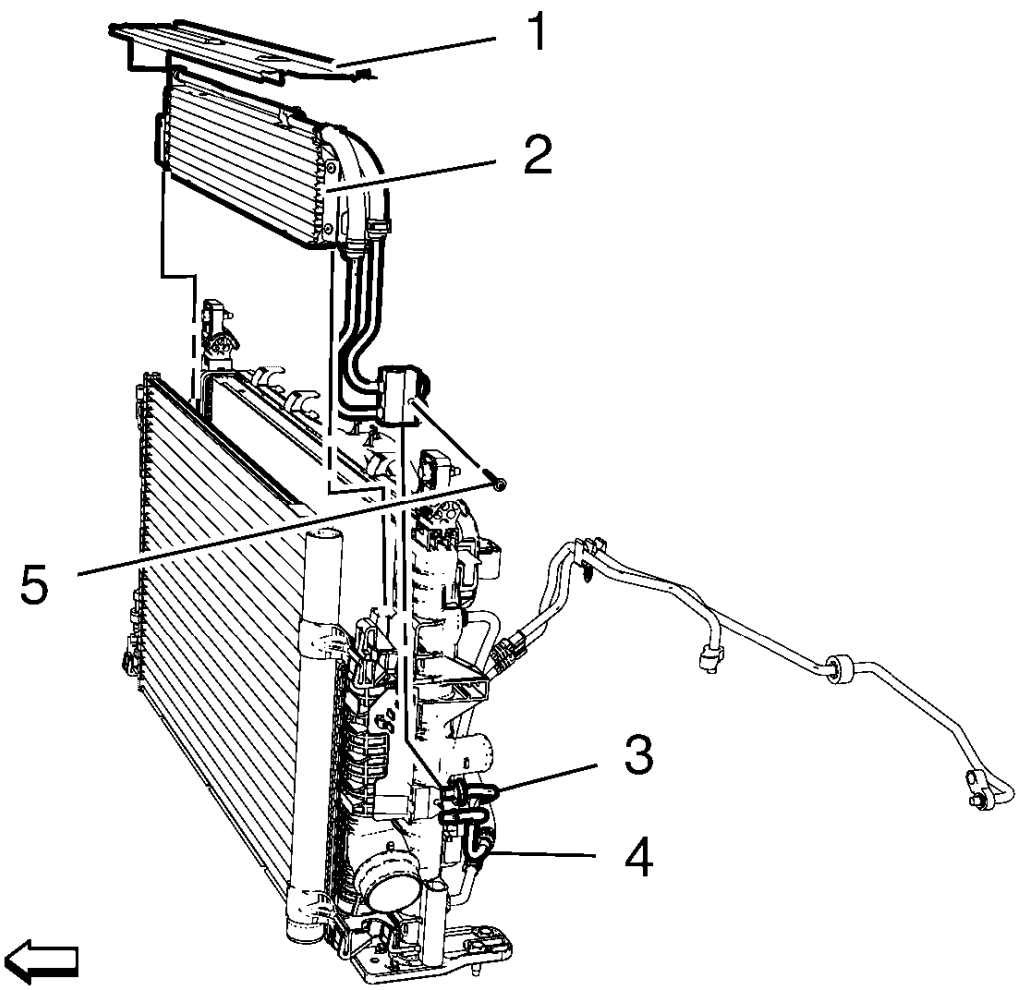

Fig. 27: Automatic Transmission Fluid Auxiliary Cooler
Courtesy of GENERAL MOTORS COMPANY

4. Detach transmission fluid cooler outlet pipe (3) and transmission fluid cooler intermediate pipe (4) from transmission fluid auxiliary cooler. Refer to **Transmission Fluid Cooler Hose/Pipe Quick-Connect Fitting Disconnection and Connection**.
5. Remove transmission fluid auxiliary cooler pipe bolt (5).
6. Remove radiator air seal (1).
7. Remove transmission fluid auxiliary cooler (2).

Installation Procedure

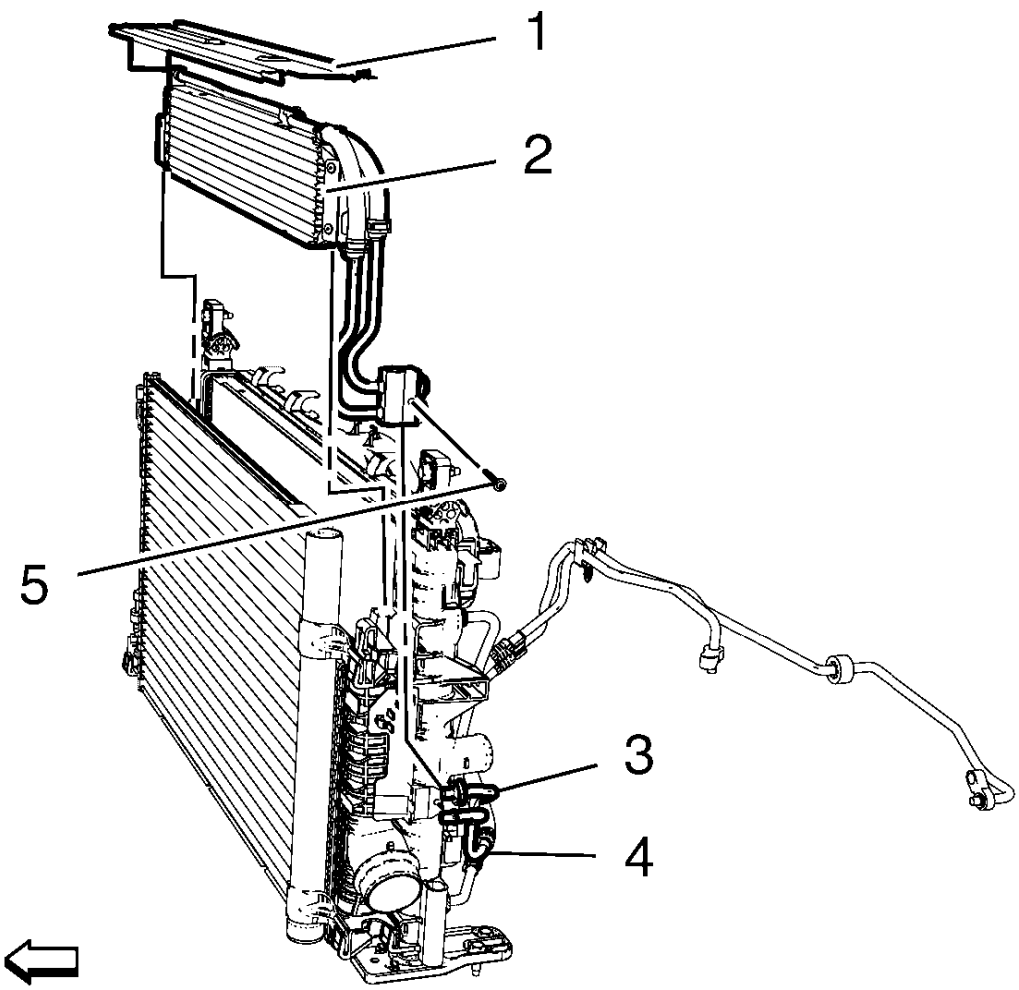

Fig. 28: Automatic Transmission Fluid Auxiliary Cooler
Courtesy of GENERAL MOTORS COMPANY

1. Install transmission fluid auxiliary cooler (2).

CAUTION: Refer to Fastener Caution .

2. Install transmission fluid auxiliary cooler pipe bolt (5) and tighten to 4 N.m (35 lb in).
3. Attach transmission fluid cooler intermediate pipe (4) and fluid cooler outlet pipe (3) to transmission fluid auxiliary cooler. Refer to **Transmission Fluid Cooler Hose/Pipe Quick-Connect Fitting Disconnection and Connection**.
4. Install radiator air seal (1).

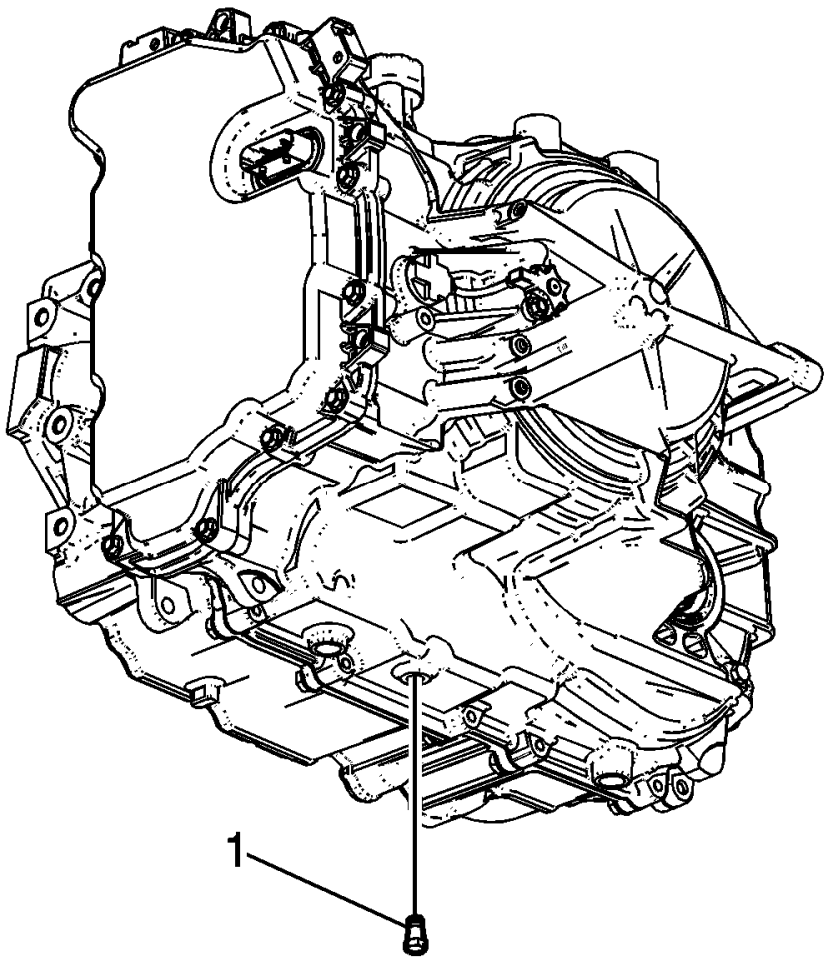

Fig. 29: Identifying Fluid Level Hole Plug
Courtesy of GENERAL MOTORS COMPANY

5. Install the fluid level drain plug (1) and tighten to 12 N.m (106 lb in)
6. Top up transmission fluid and check transmission fluid level. Refer to **Transmission Fluid Drain and Fill**.
7. Install radiator grille reinforcement support. Refer to **Front Grille Support Replacement** .

TRANSMISSION FLUID COOLER PIPE CONNECTOR REPLACEMENT - RADIATOR (1.4L LUV)

Removal Procedure

1. Remove charge air cooler outlet air hose. Refer to **Charge Air Cooler Outlet Air Hose Replacement (Automatic Transmission)** , **Charge Air Cooler Outlet Air Hose Replacement (Manual Transmission)** .
2. Drain the cooling system. Refer to **Cooling System Draining and Filling (Static Fill)** , **Cooling System Draining and Filling (GE-47716 Fill)** .

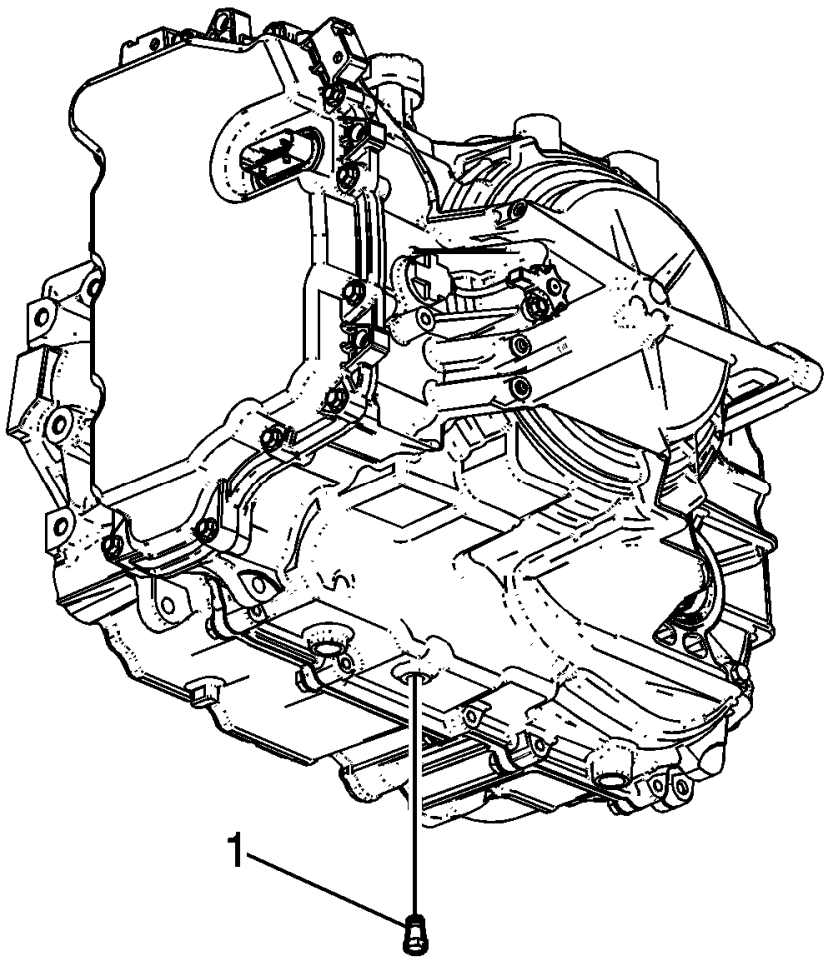

Fig. 30: Identifying Fluid Level Hole Plug
Courtesy of GENERAL MOTORS COMPANY

3. Remove the fluid level drain plug (1).
4. Drain transmission fluid into a suitable container.
5. Remove the transmission oil cooler pipes from the oil cooler fittings on the radiator. Refer to **Transmission Fluid Cooler Hose/Pipe Quick-Connect Fitting Disconnection and Connection**.

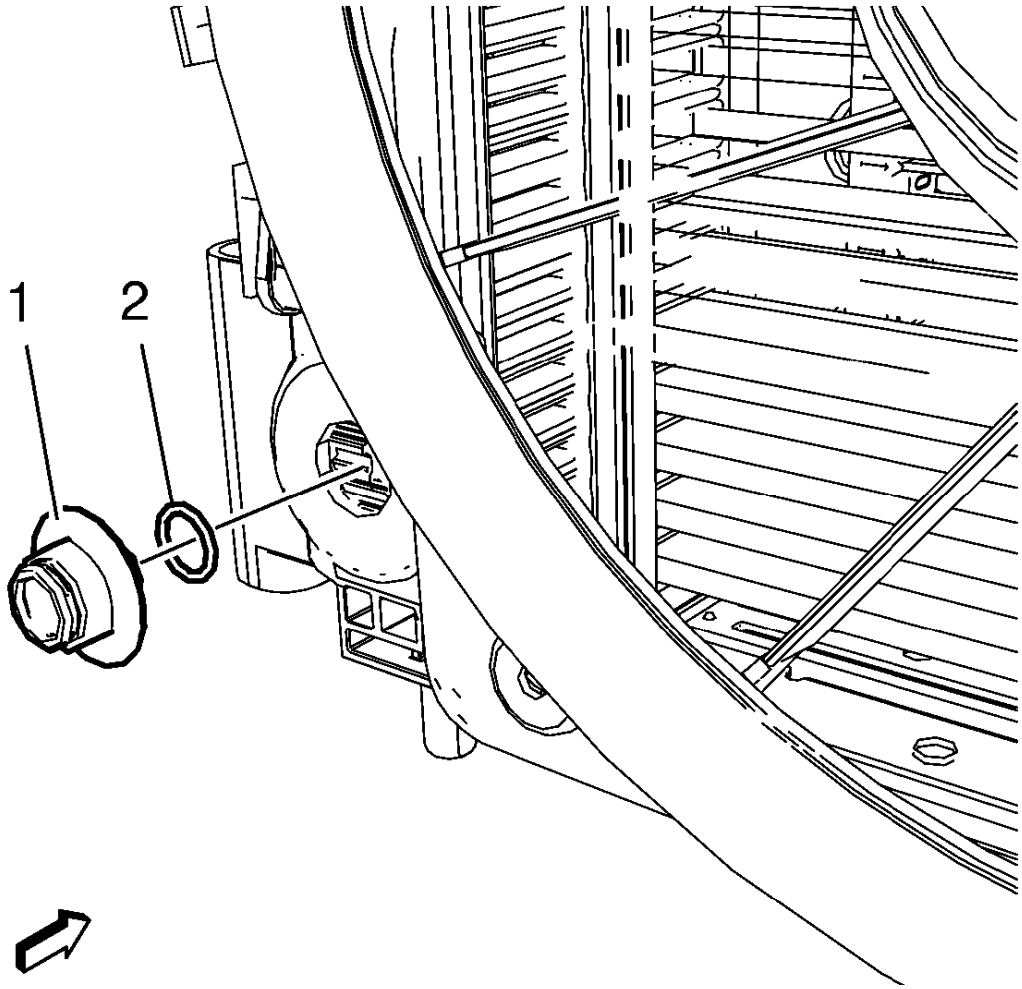

Fig. 31: Transmission Oil Cooler Fitting
Courtesy of GENERAL MOTORS COMPANY

NOTE: Do not remove the upper and lower transmission oil cooler fittings from the radiator at the same time other wise the transmission oil cooler will fall inside the radiator end tank.

6. Remove the oil cooler fitting (1) and the O-ring (2) from the radiator.

Installation Procedure

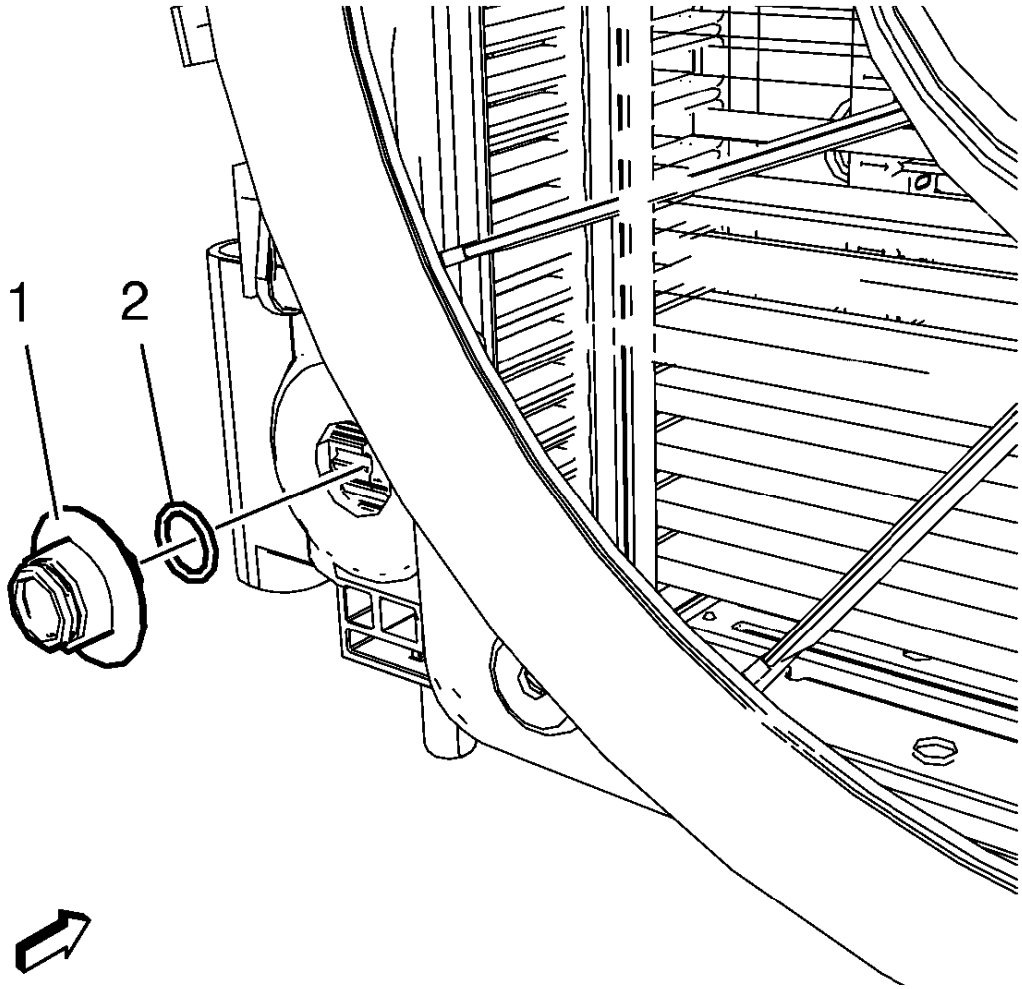

Fig. 32: Transmission Oil Cooler Fitting
Courtesy of GENERAL MOTORS COMPANY

1. Inspect the NEW O-ring (2) seals for cracks, cuts or damage. Replace if necessary.

CAUTION: Refer to Component Fastener Tightening Caution .

NOTE: The correct thread engagement is critical. Cross-threaded fittings can achieve proper tightness and still leak.

2. Install the oil cooler fitting (1) to the radiator and tighten to 20 N.m (15 lb ft).
3. Install the transmission oil cooler hoses to the oil cooler fittings to the radiator. Refer to **Transmission Fluid Cooler Hose/Pipe Quick-Connect Fitting Disconnection and Connection**.
4. Fill the cooling system. Refer to **Cooling System Draining and Filling (Static Fill)** , **Cooling System Draining and Filling (GE-47716 Fill)** .

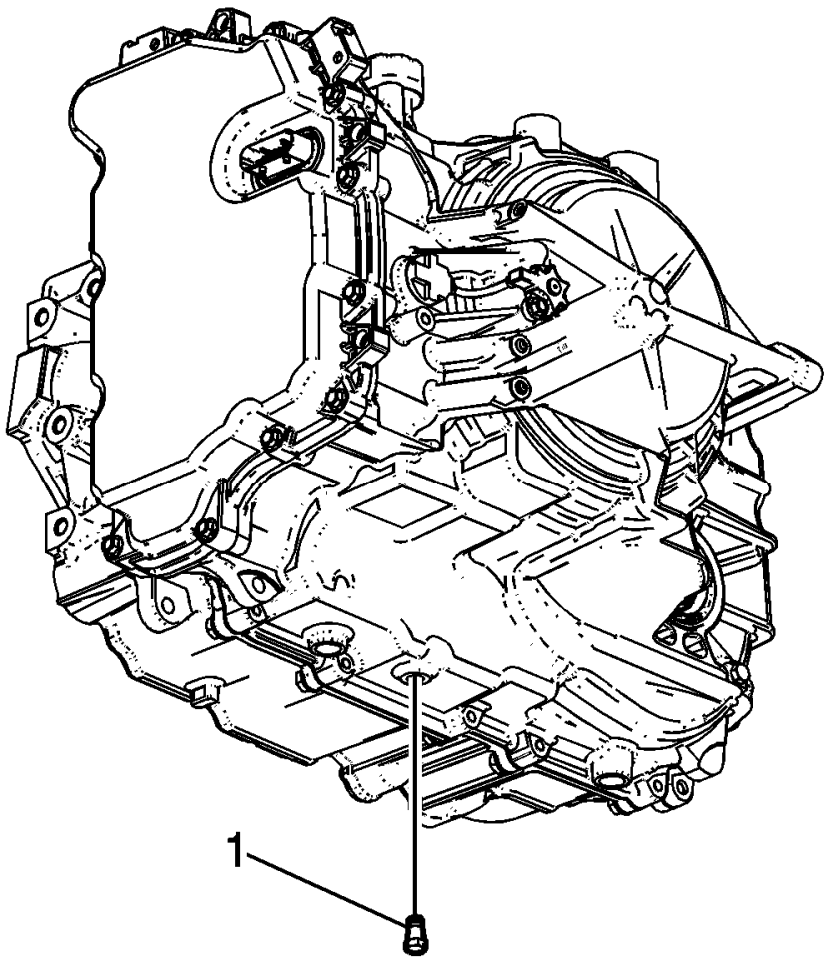

Fig. 33: Identifying Fluid Level Hole Plug
Courtesy of GENERAL MOTORS COMPANY

CAUTION: Refer to Fastener Caution .

5. Install the fluid level drain plug (1) and tighten to 12 N.m (106 lb in).
6. Top up transmission fluid and check transmission fluid level. Refer to **Transmission Fluid Drain and Fill**.
7. Install charge air cooler outlet air hose. Refer to **Charge Air Cooler Outlet Air Hose Replacement (Automatic Transmission)** , **Charge Air Cooler Outlet Air Hose Replacement (Manual Transmission)** .
8. Inspect for fluid leaks.

TRANSMISSION FLUID COOLER PIPE CONNECTOR REPLACEMENT - RADIATOR (1.8L LWE AND LUW)

Removal Procedure

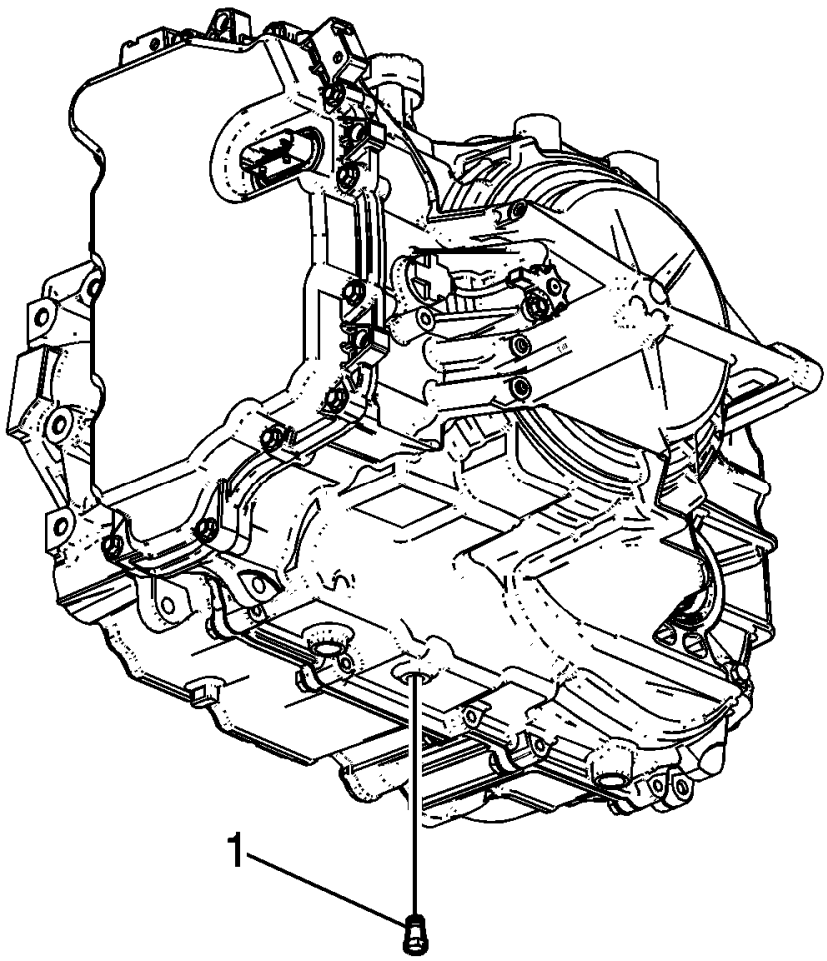

Fig. 34: Identifying Fluid Level Hole Plug
Courtesy of GENERAL MOTORS COMPANY

1. Remove the fluid level drain plug (1).
2. Drain transmission fluid into a suitable container.
3. Remove the transmission oil cooler pipes from the oil cooler fittings on the radiator. Refer to **Transmission Fluid Cooler Hose/Pipe Quick-Connect Fitting Disconnection and Connection**.

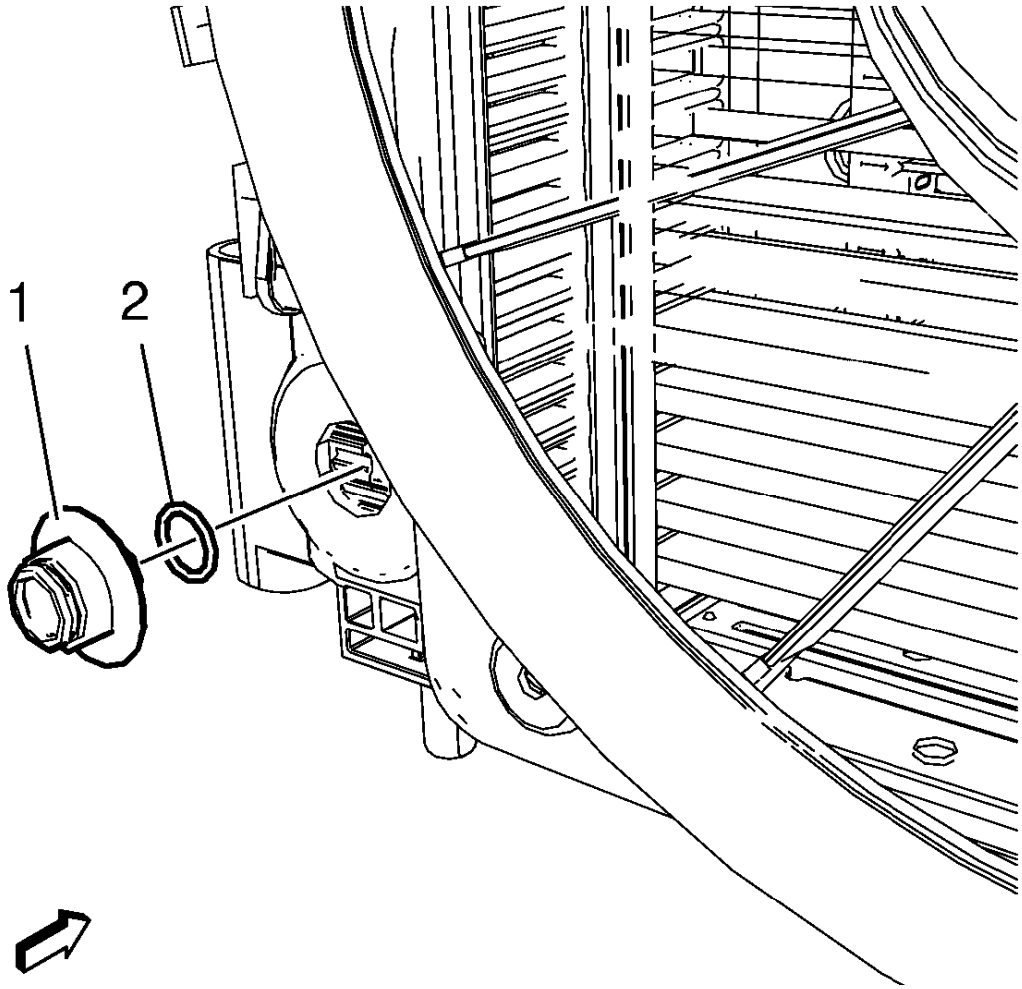

Fig. 35: Transmission Oil Cooler Fitting
Courtesy of GENERAL MOTORS COMPANY

NOTE: Do not remove the upper and lower transmission oil cooler fittings from the radiator at the same time other wise the transmission oil cooler will fall inside the radiator end tank.

4. Remove the oil cooler fitting (1) and the O-ring (2) from the radiator.

Installation Procedure

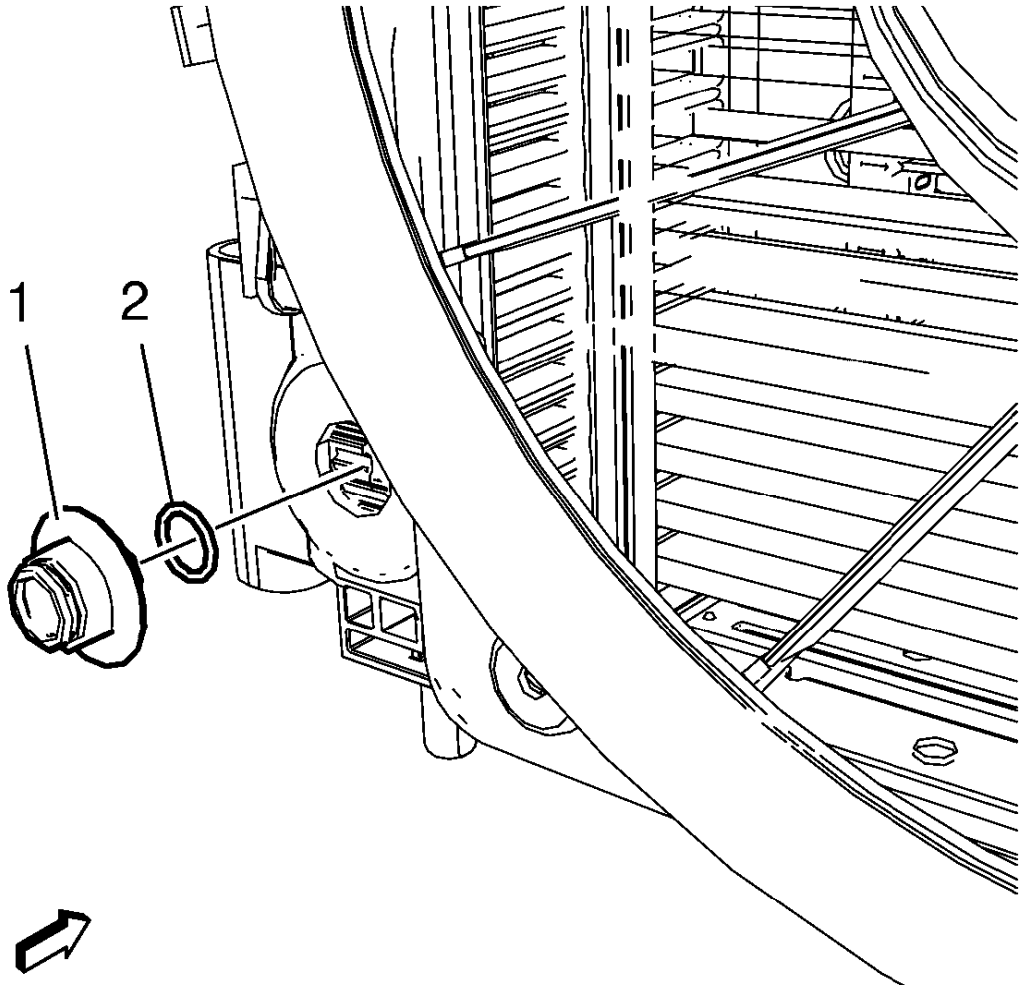

Fig. 36: Transmission Oil Cooler Fitting
Courtesy of GENERAL MOTORS COMPANY

1. Inspect the NEW O-ring (2) seals for cracks, cuts or damage. Replace if necessary.

CAUTION: Refer to Fastener Caution .

NOTE: The correct thread engagement is critical. Cross-threaded fittings can achieve proper tightness and still leak.

2. Install the oil cooler fitting (1) to the radiator and tighten to 20 N.m (15 lb ft).
3. Install the transmission oil cooler hoses to the oil cooler fittings to the radiator. Refer to **Transmission Fluid Cooler Hose/Pipe Quick-Connect Fitting Disconnection and Connection**.
4. Fill the cooling system. Refer to **Cooling System Draining and Filling (Static Fill)** , **Cooling System Draining and Filling (GE-47716 Fill)** .

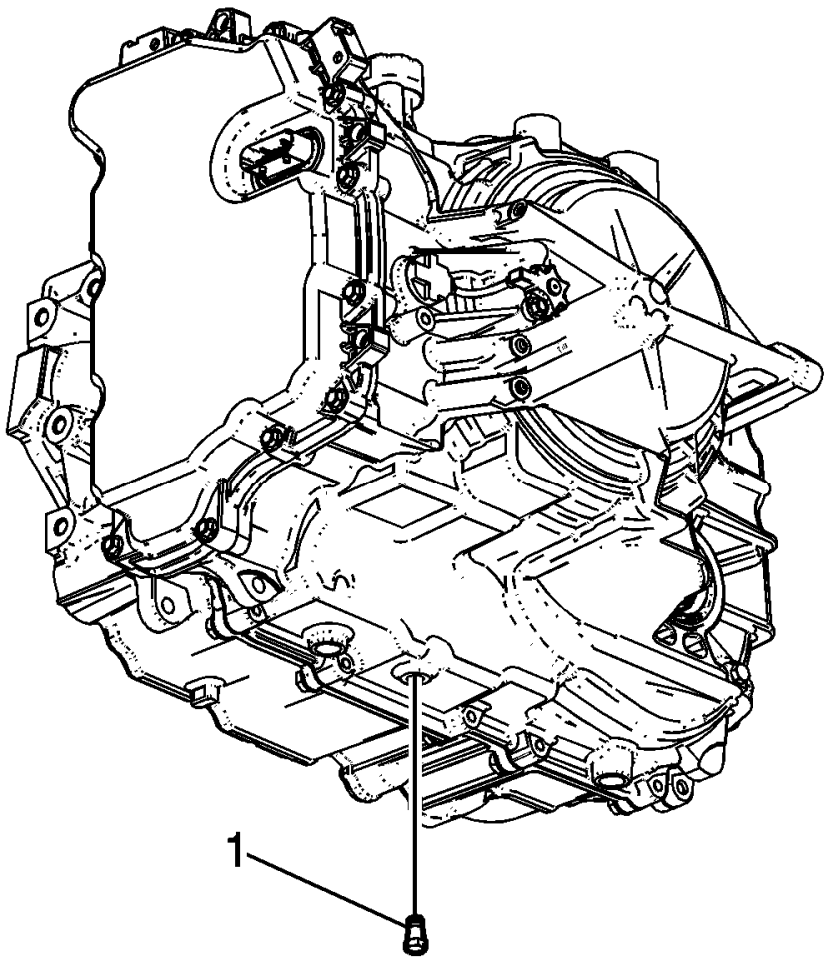

Fig. 37: Identifying Fluid Level Hole Plug
Courtesy of GENERAL MOTORS COMPANY

5. Install the fluid level drain plug (1) and tighten to 12 N.m (106 lb in)
6. Top up transmission fluid and check transmission fluid level. Refer to **Transmission Fluid Drain and Fill**.
7. Inspect for fluid leaks.

TRANSMISSION FLUID COOLER HOSE/PIPE QUICK-CONNECT FITTING DISCONNECTION AND CONNECTION

Removal Procedure

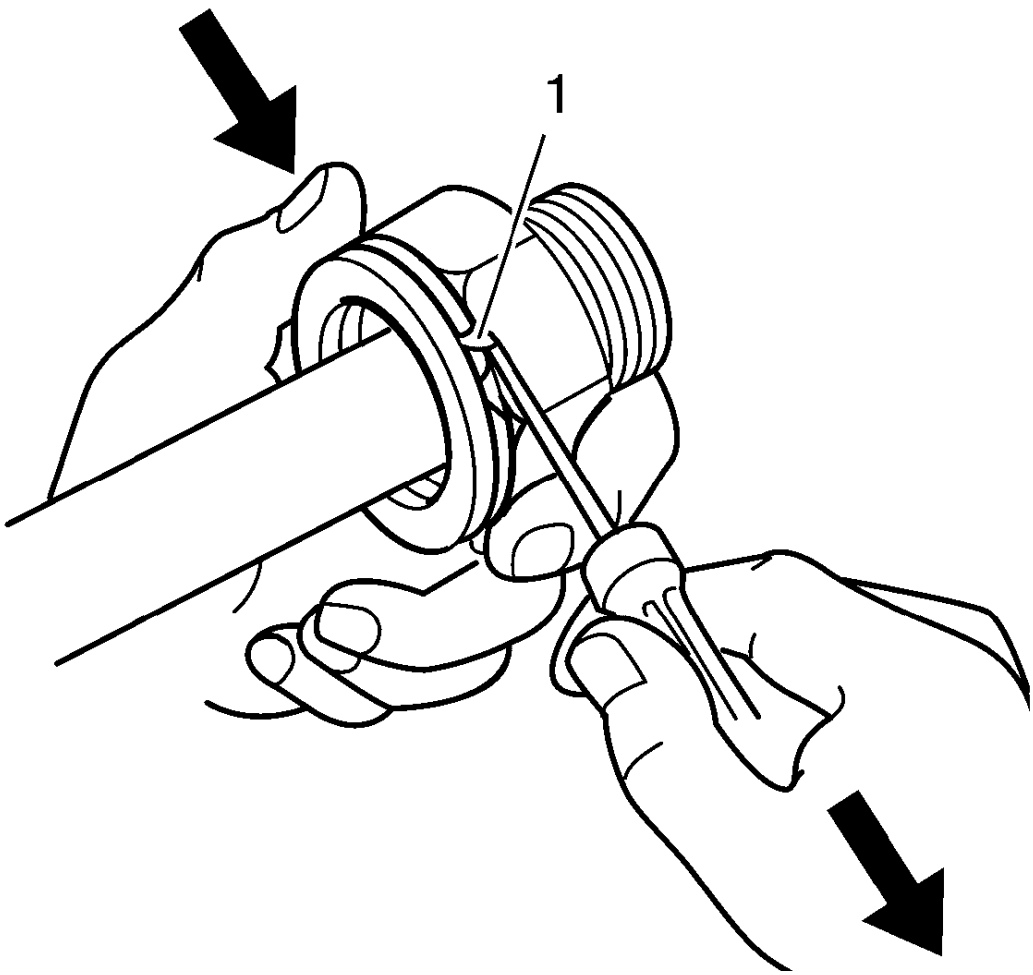

Fig. 38: Automatic Transmission Oil Cooler Fitting Retaining Ring
Courtesy of GENERAL MOTORS COMPANY

NOTE: Perform the following procedure when removing the retaining rings and cooler lines from the quick connect fittings located on the radiator and/or the transmission.

1. Pull the plastic cap back from the quick connect fitting and down along the cooler line about 5 cm (2 in).
2. Using a bent-tip screwdriver, pull on one of the open ends of the retaining ring (1) in order to rotate the retaining ring around the quick connect fitting until the retaining ring is out of position and can be completely removed.
3. Remove the retaining ring from the quick connect fitting.
4. Discard the retaining ring.

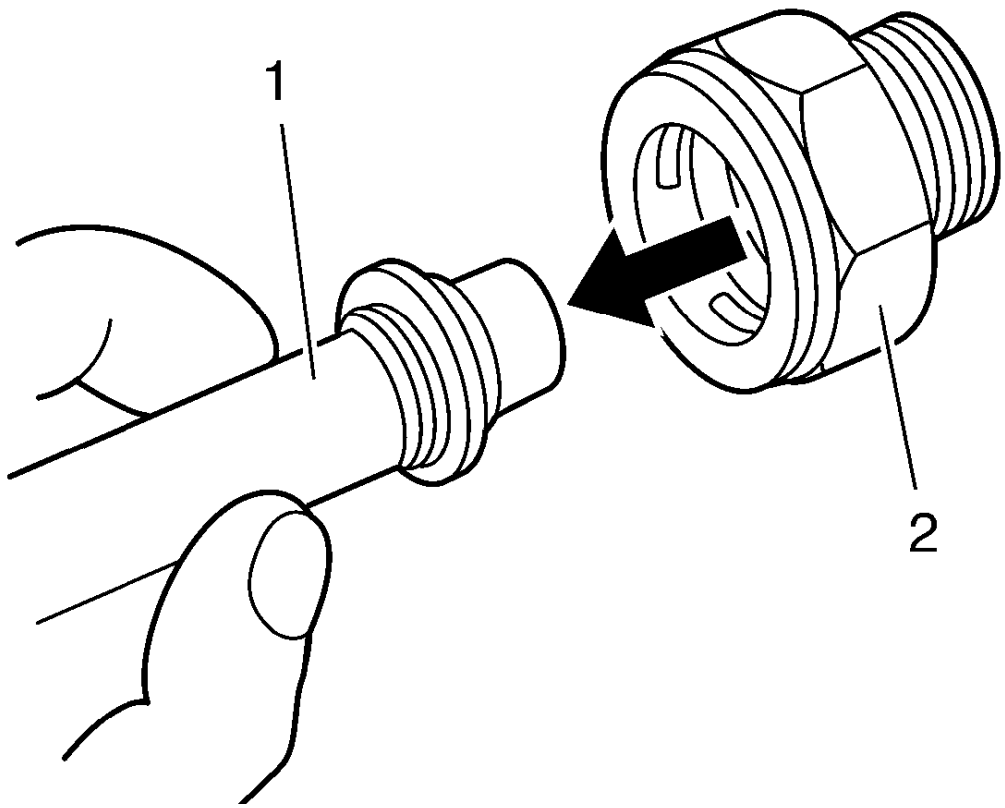

Fig. 39: Automatic Transmission Cooler Line
Courtesy of GENERAL MOTORS COMPANY

5. Pull the cooler line (1) straight out from the quick connect fitting (2).

Installation Procedure

NOTE:

- **Do not reuse any of the existing oil lines or oil line fittings if there is excessive corrosion.**
- **Do not reuse any of the existing retaining rings that were removed from the existing quick connect fittings. Install new retaining rings.**
- **Ensure the following procedures are performed when installing the new retaining rings onto the fittings.**

1. Install a new retaining ring into the quick connect fitting using the following procedure:

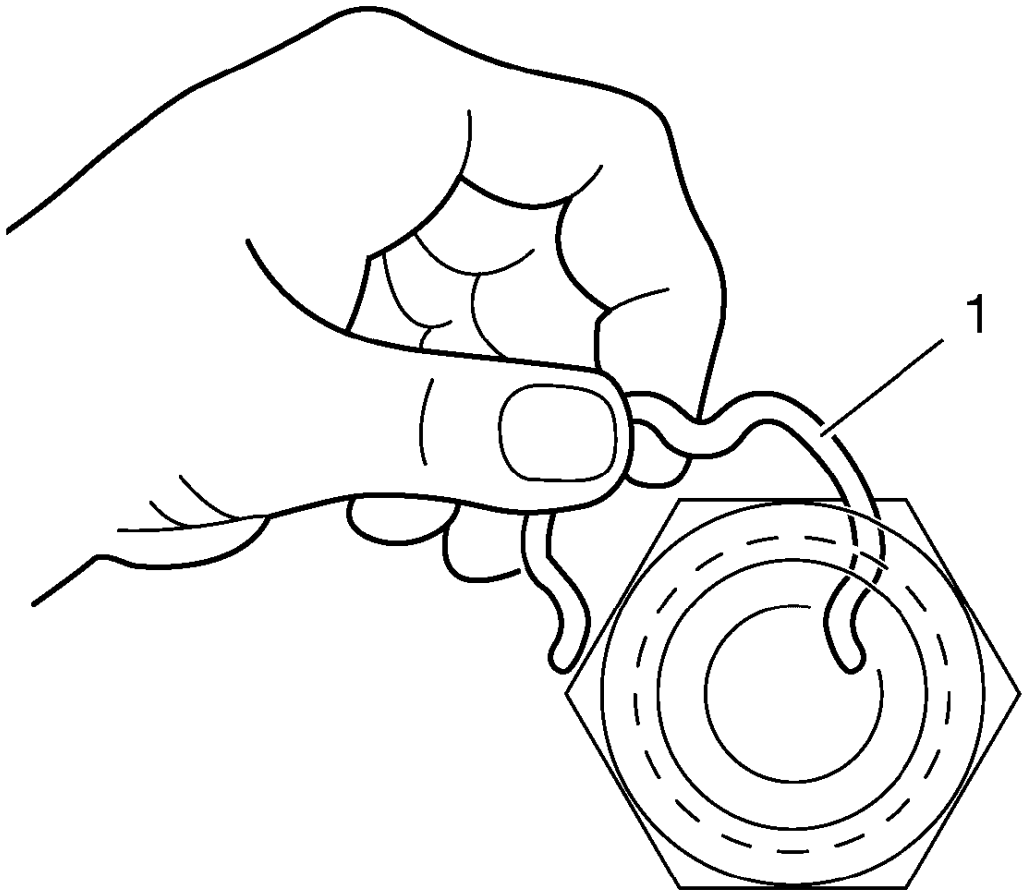

Fig. 40: Automatic Transmission Oil Cooler Fitting Retaining Ring
Courtesy of GENERAL MOTORS COMPANY

1. Hook one of the open ends of the retaining ring (1) in one of the slots in the quick connect fitting.

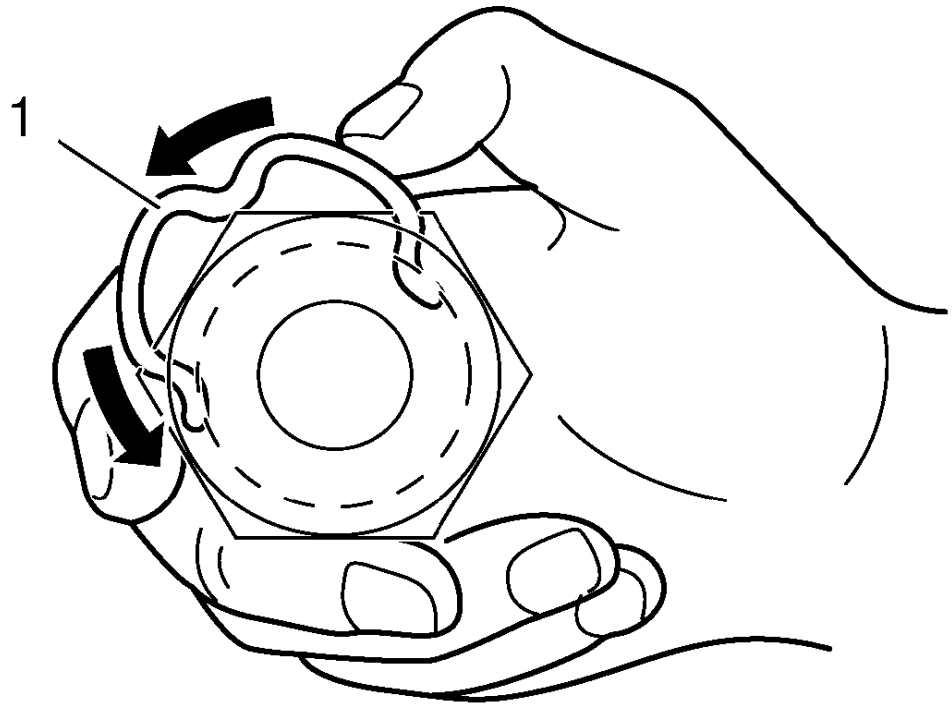

Fig. 41: Rotating Automatic Transmission Oil Cooler Fitting Retaining Ring
Courtesy of GENERAL MOTORS COMPANY

2. Rotate the retaining ring (1) around the fitting until the retaining ring is positioned with all three ears through the three slots on the fitting.

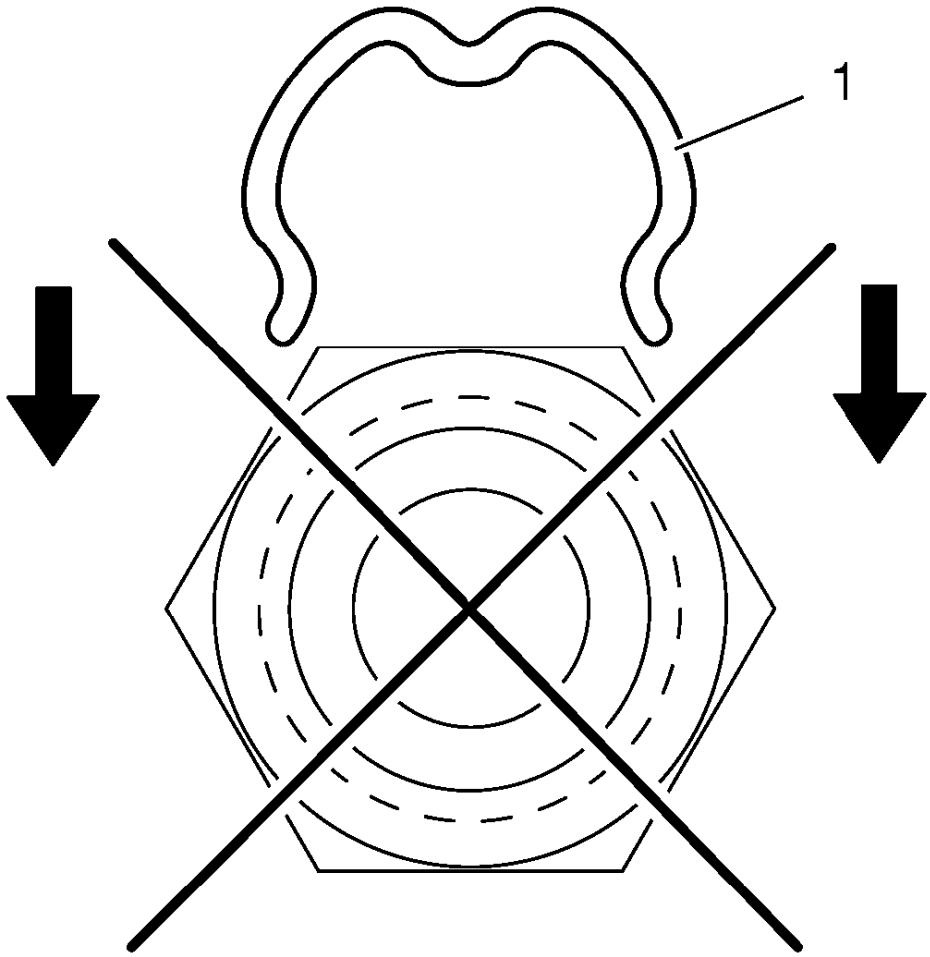

Fig. 42: Automatic Transmission Oil Cooler Fitting Retaining Ring Caution
Courtesy of GENERAL MOTORS COMPANY

3. Do not install the new retaining ring (1) onto the fitting by pushing the retaining ring.

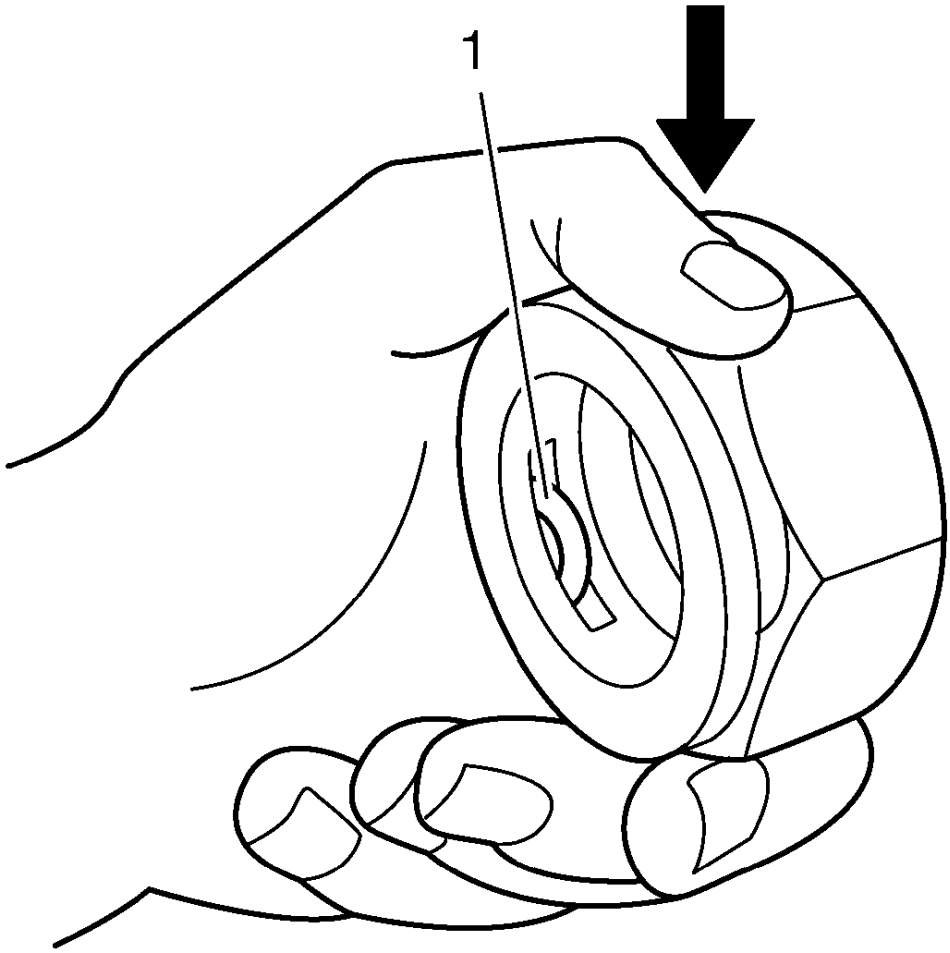

Fig. 43: Retaining Ring Ears
Courtesy of GENERAL MOTORS COMPANY

4. Ensure that the three retaining ring ears are seen from inside the fitting (1) and that the retaining ring moves freely in the fitting slots.

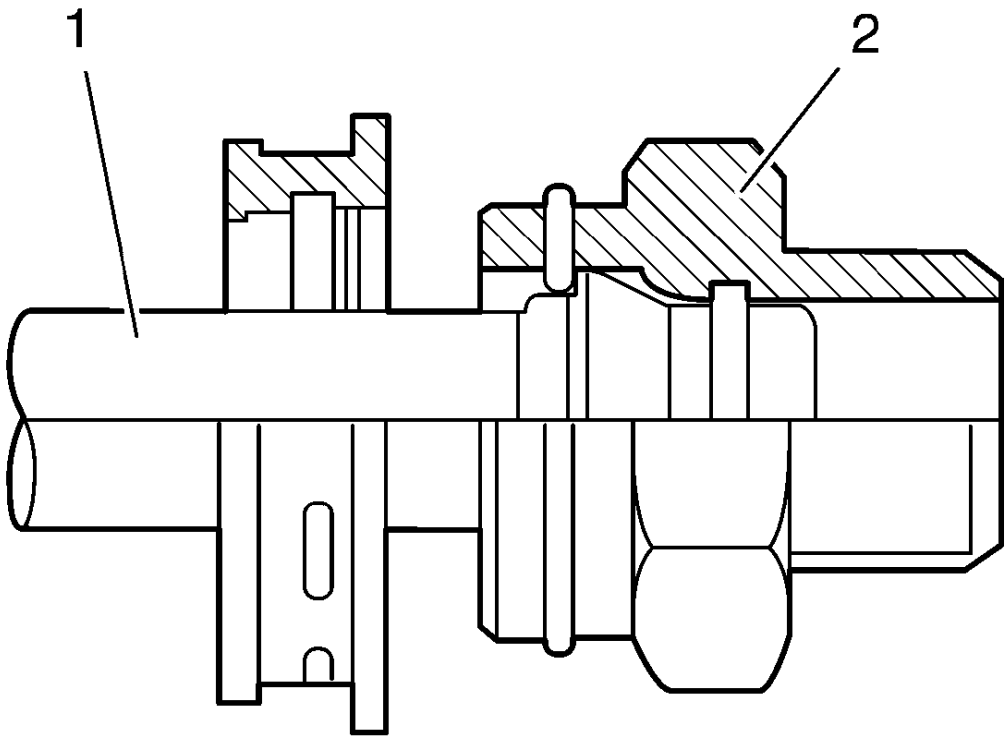

Fig. 44: Cutaway View Of Automatic Transmission Oil Cooler Fitting
Courtesy of GENERAL MOTORS COMPANY

2. Install the cooler line (1) into the quick connect fitting (2).
3. Insert the cooler line end into the quick connect fitting until a click is either heard or felt.

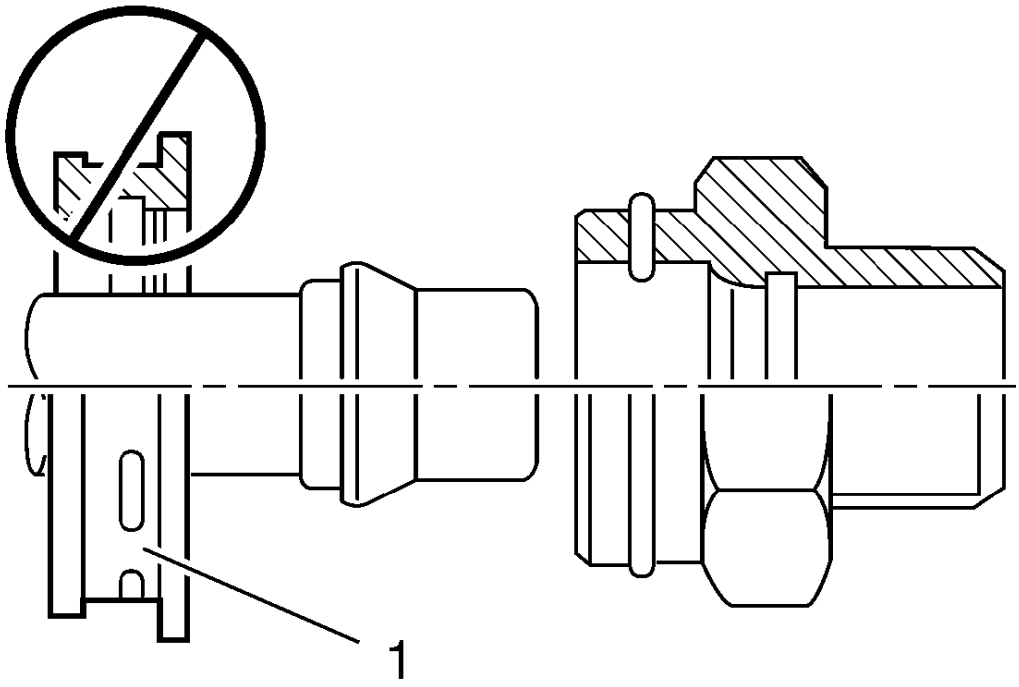

Fig. 45: Automatic Transmission Oil Cooler Line And Fitting Caution
Courtesy of GENERAL MOTORS COMPANY

4. Do not use the plastic cap (1) on the cooler line in order to install the cooler line into the fitting.
5. Pull back sharply on the cooler line in order to ensure that the cooler line is fastened into the quick connect fitting.

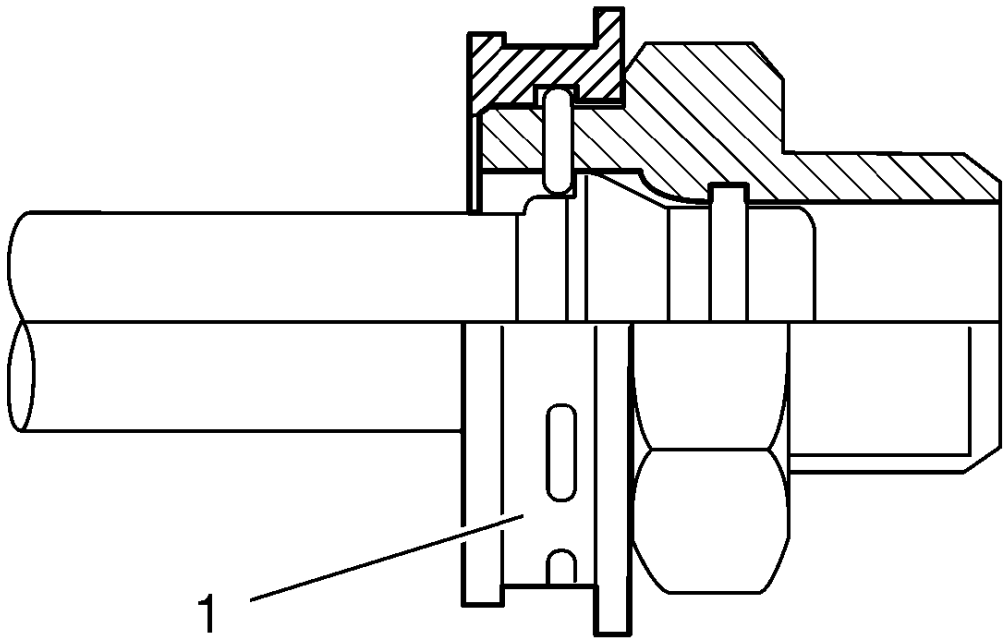

Fig. 46: Automatic Transmission Oil Cooler Fitting Plastic Cap
Courtesy of GENERAL MOTORS COMPANY

NOTE: Do not manually depress the retaining clip when installing the plastic cap.

6. Position (snap) the plastic cap (1) onto the fitting. Do not manually depress the retaining ring when installing the plastic cap onto the quick connect fitting.
7. Ensure that the plastic cap is fully seated against the fitting.

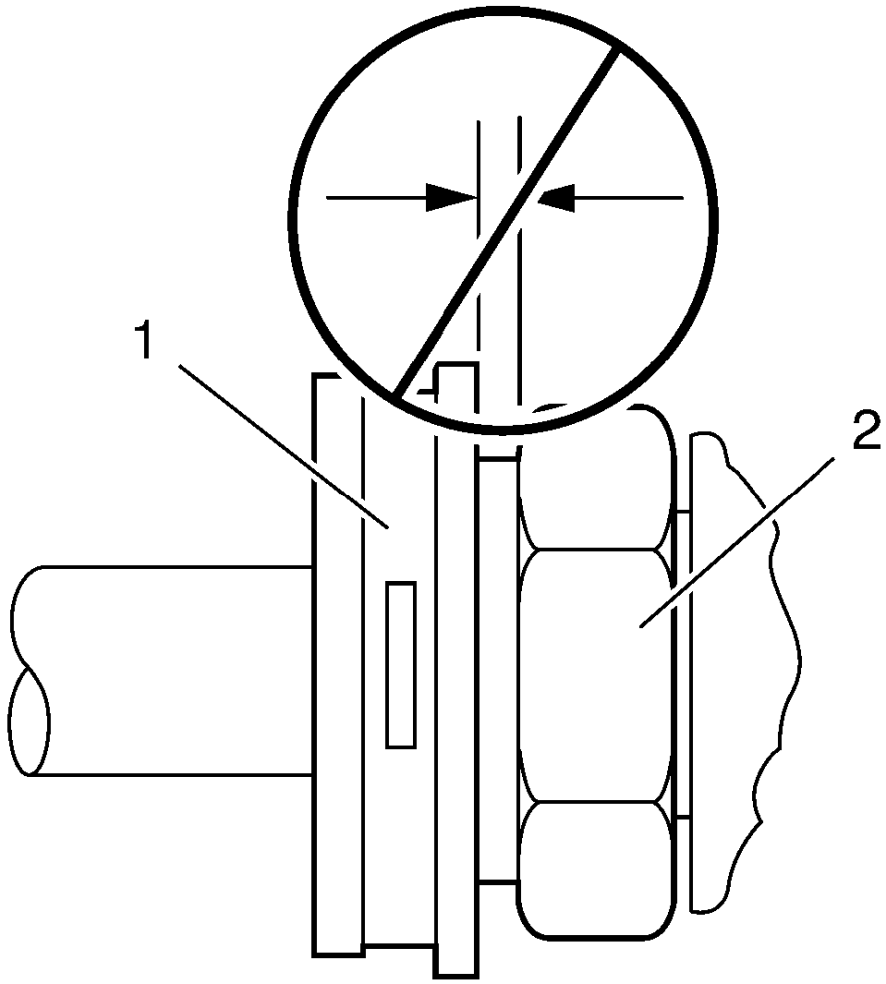

Fig. 47: Automatic Transmission Oil Cooler Fitting Plastic Cap Caution
Courtesy of GENERAL MOTORS COMPANY

8. Ensure that no gap is present between the plastic cap (1) and the fitting (2).

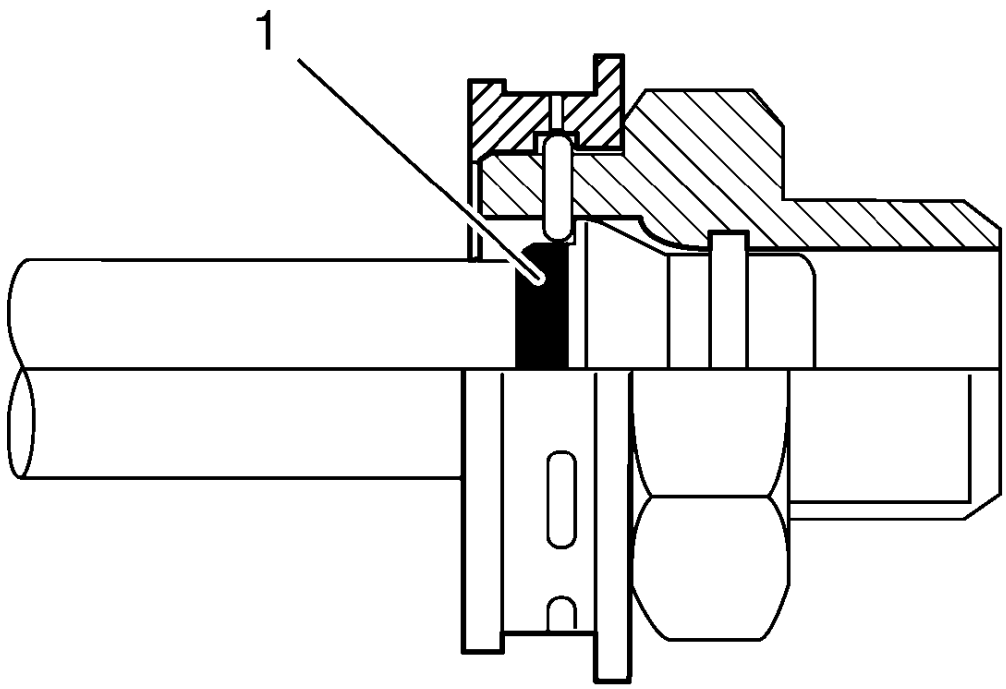

Fig. 48: Yellow Identification Band
Courtesy of GENERAL MOTORS COMPANY

9. Ensure that the yellow identification band (1) on the tube is hidden within the quick connect fitting.

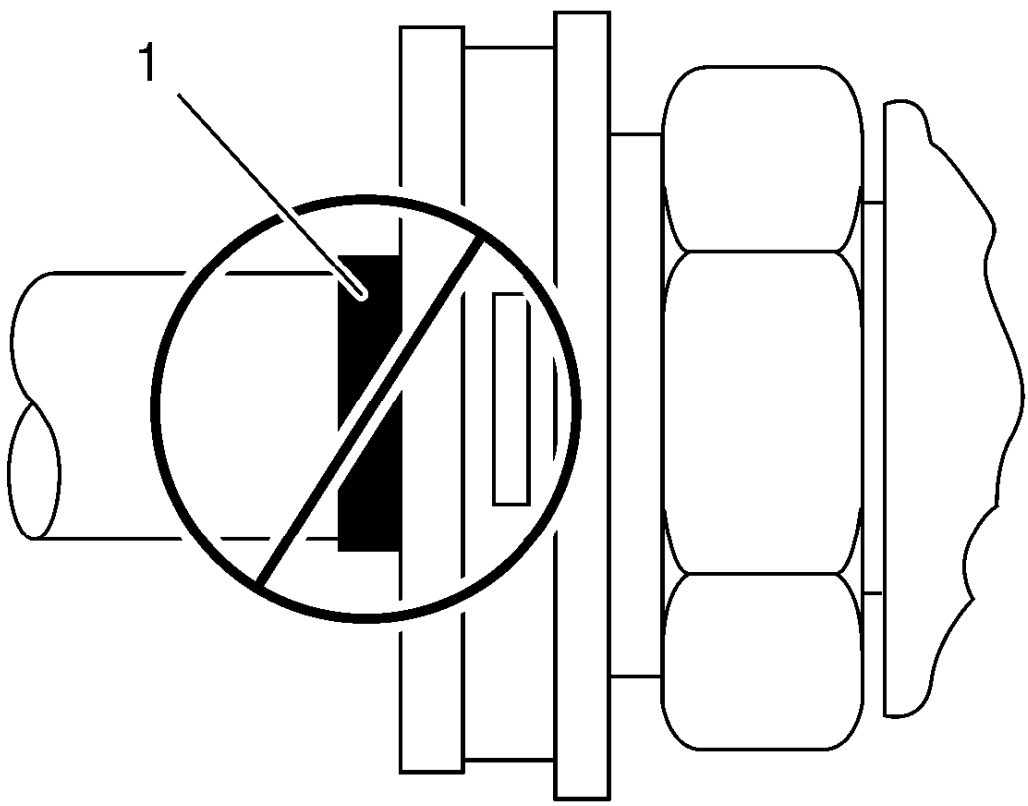

Fig. 49: Yellow Identification Band Caution
Courtesy of GENERAL MOTORS COMPANY

10. A hidden yellow identification band (1) indicates proper joint seating.
11. Fill the transmission to the proper level. Refer to **Transmission Fluid Drain and Fill**.

TRANSMISSION FLUID COOLER HOSE/PIPE REPLACEMENT

Removal Procedure

1. Raise and support the vehicle. Refer to **Lifting and Jacking the Vehicle** .
2. Remove front bumper fascia. Refer to **Front Bumper Fascia Replacement** .

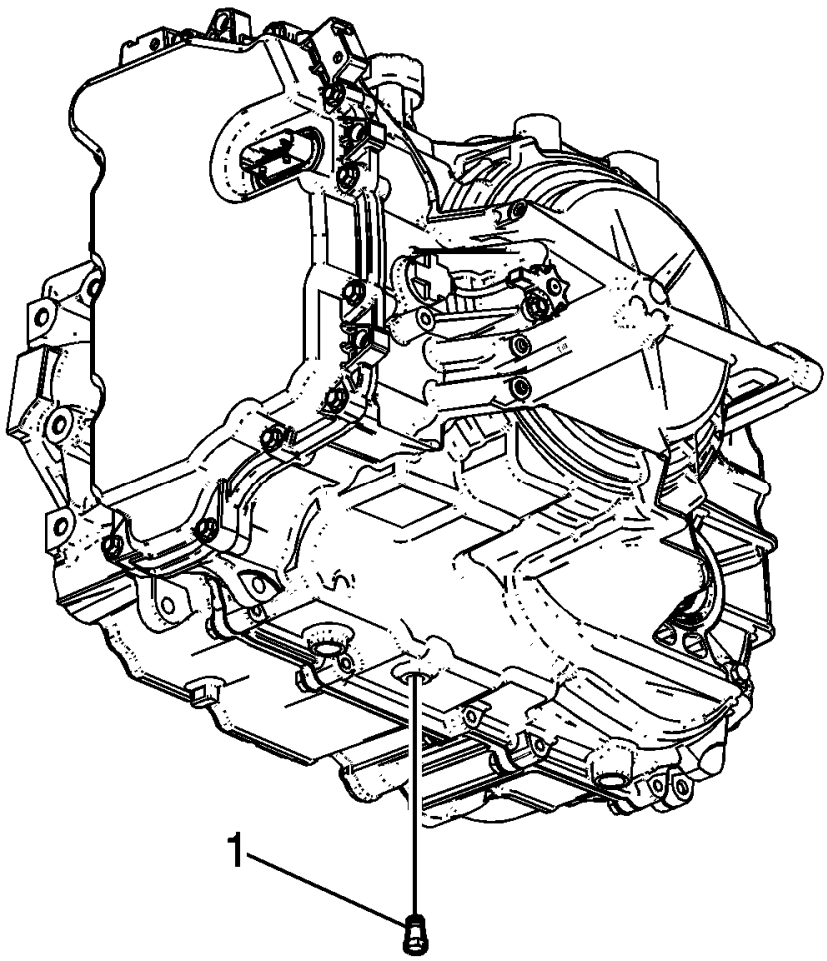

Fig. 50: Identifying Fluid Level Hole Plug
Courtesy of GENERAL MOTORS COMPANY

3. Remove the fluid level drain plug (1).
4. Drain transmission fluid into a suitable container.

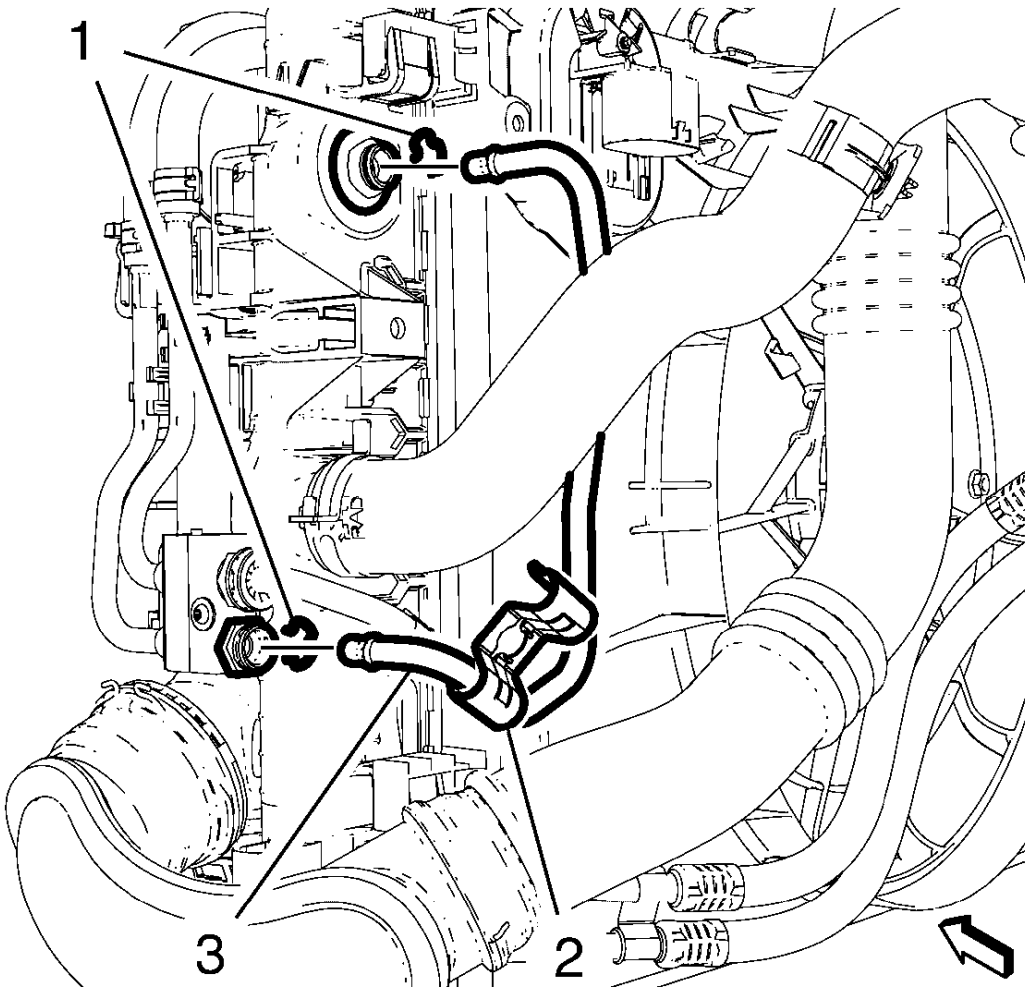

Fig. 51: Transmission Fluid Cooler Pipe
Courtesy of GENERAL MOTORS COMPANY

5. Disconnect transmission fluid cooler pipe (2) from transmission fluid auxiliary cooler and radiator. Remove 2 retainers (1) and retainer clip (3). Refer to **Transmission Fluid Cooler Hose/Pipe Quick-Connect Fitting Disconnection and Connection**.
6. Remove the fluid cooler hose/pipe from pipe retainer.
7. Remove transmission fluid cooler pipe (2).
8. Remove the fluid cooler hose/pipe from pipe retainer.

Installation Procedure

1. Install the fluid cooler hose/pipe from pipe retainer.

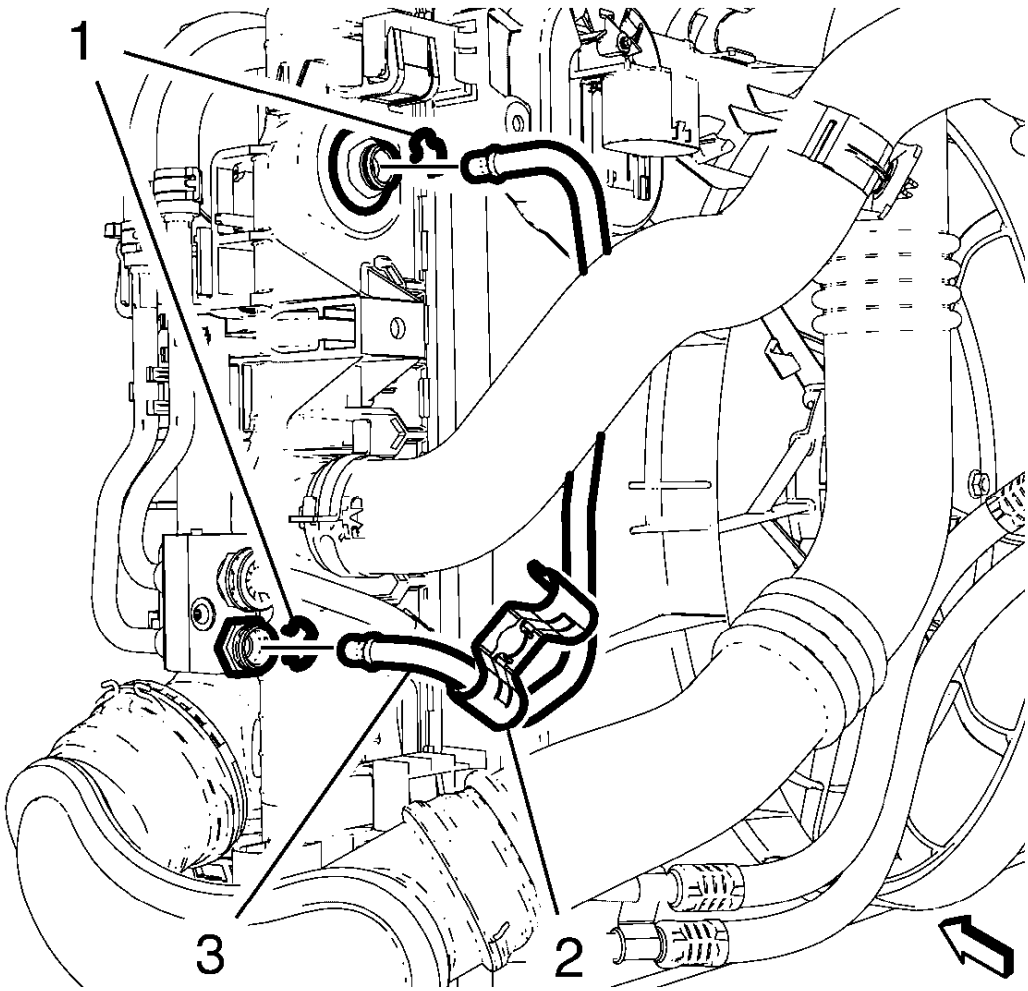

Fig. 52: Transmission Fluid Cooler Pipe
Courtesy of GENERAL MOTORS COMPANY

2. Install transmission fluid cooler pipe (2).

CAUTION: Refer to Component Fastener Tightening Caution .

3. Connect transmission fluid cooler pipe (2) to transmission fluid auxiliary cooler and radiator. Install 2 retainers (1). Refer to **Transmission Fluid Cooler Hose/Pipe Quick-Connect Fitting Disconnection and Connection**.

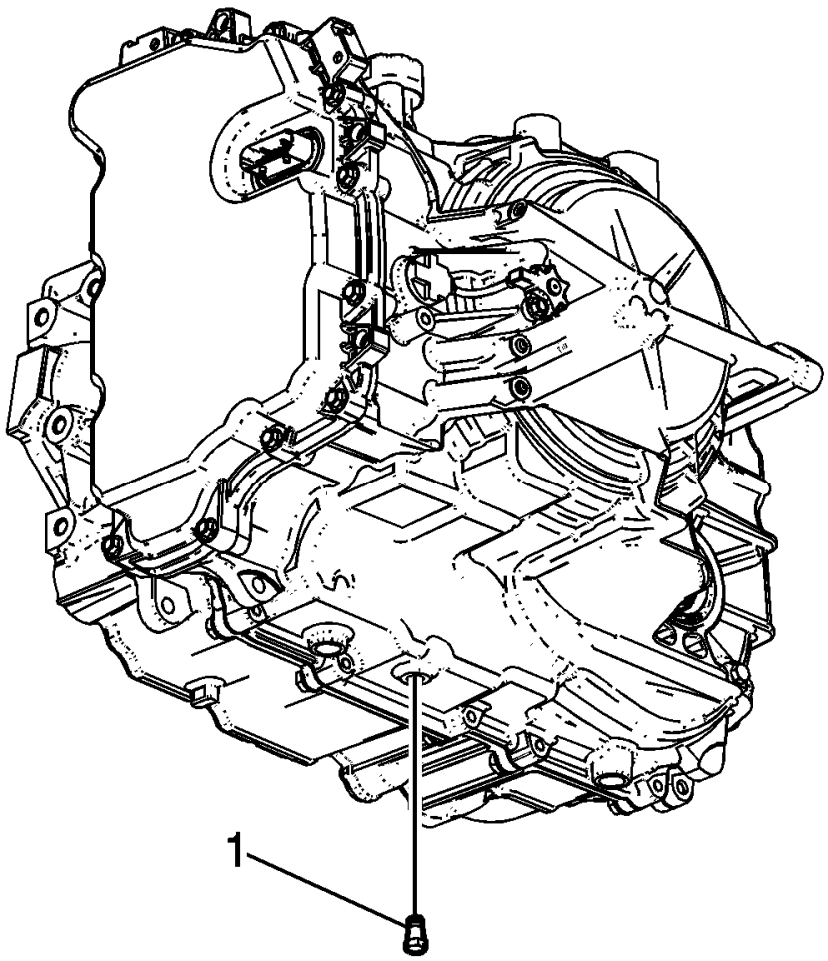

Fig. 53: Identifying Fluid Level Hole Plug
Courtesy of GENERAL MOTORS COMPANY

CAUTION: Refer to Fastener Caution .

4. Install the fluid level drain plug (1) and tighten to 12 N.m (106 lb in).
5. Top up transmission fluid and check transmission fluid level. Refer to **Transmission Fluid Drain and Fill**.
6. Install front bumper fascia. Refer to **Front Bumper Fascia Replacement** .
7. Install battery tray. Refer to **Battery Tray Replacement** .

TRANSMISSION FLUID COOLER OUTLET PIPE REPLACEMENT (1.4L LUV)

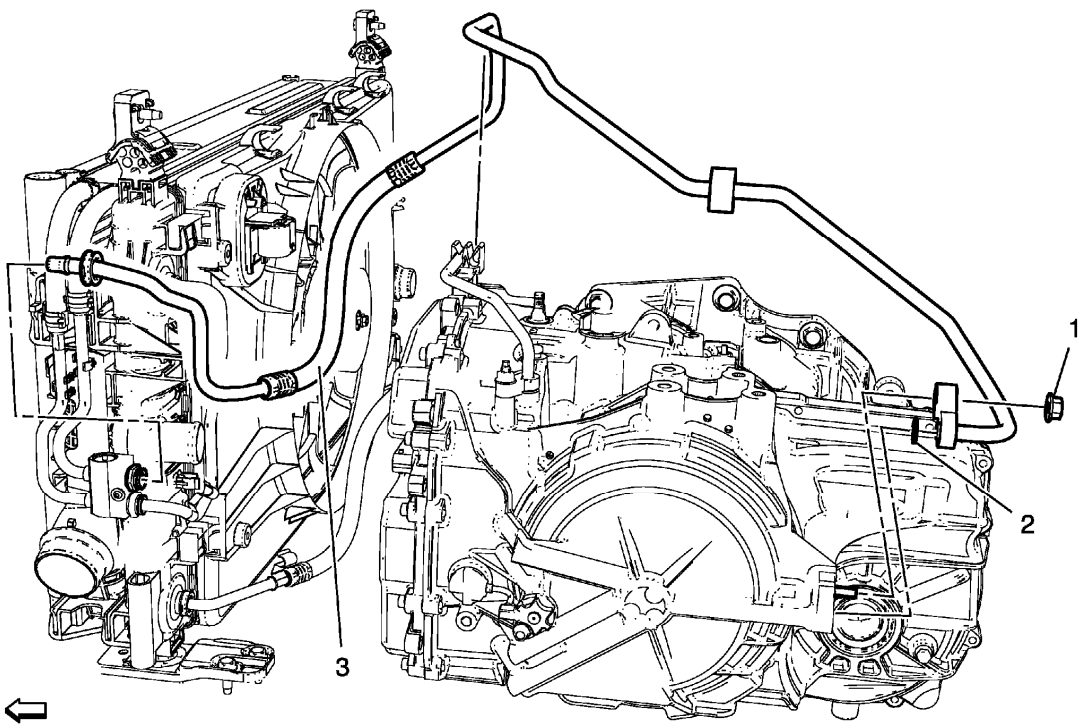

Fig. 54: Transmission Fluid Cooler Outlet Pipe (1.4L LUV)
Courtesy of GENERAL MOTORS COMPANY

Transmission Fluid Cooler Outlet Pipe Replacement (1.4L LUV)

Callout	Component Name
Preliminary Procedures 1. Remove battery tray. Refer to **Battery Tray Replacement** 2. Remove radiator inlet hose. Refer to **Radiator Inlet Hose Replacement (1.4L LUV)** , **Radiator Inlet Hose Replacement (1.8L LUW and LWE)** . 3. Remove charge air cooler outlet air hose. Refer to **Charge Air Cooler Outlet Air Hose Replacement (Automatic Transmission)** , **Charge Air Cooler Outlet Air Hose Replacement (Manual Transmission)** . 4. Disconnect the transmission pipe from the radiator and transmission. Refer to **Transmission Fluid Cooler Hose/Pipe Quick-Connect Fitting Disconnection and Connection**. 5. Note the routing of the transmission pipe to ensure proper installation. 6. Remove the transmission pipe from the clips securing the line to the transmission and inlet pipe.	
1	Transmission Fluid Cooler Pipe Nut **CAUTION:** **Refer to Fastener Caution .** **Tighten**

	22 N.m (16 lb ft)
2	Sealing Washer **Procedure** DISCARD the sealing washer and use NEW only.
3	Transmission Fluid Cooler Outlet Pipe **Procedure** Inspect the transmission fluid level. Refer to **Transmission Fluid Drain and Fill**.

TRANSMISSION FLUID COOLER INLET PIPE REPLACEMENT (1.4L LUV)

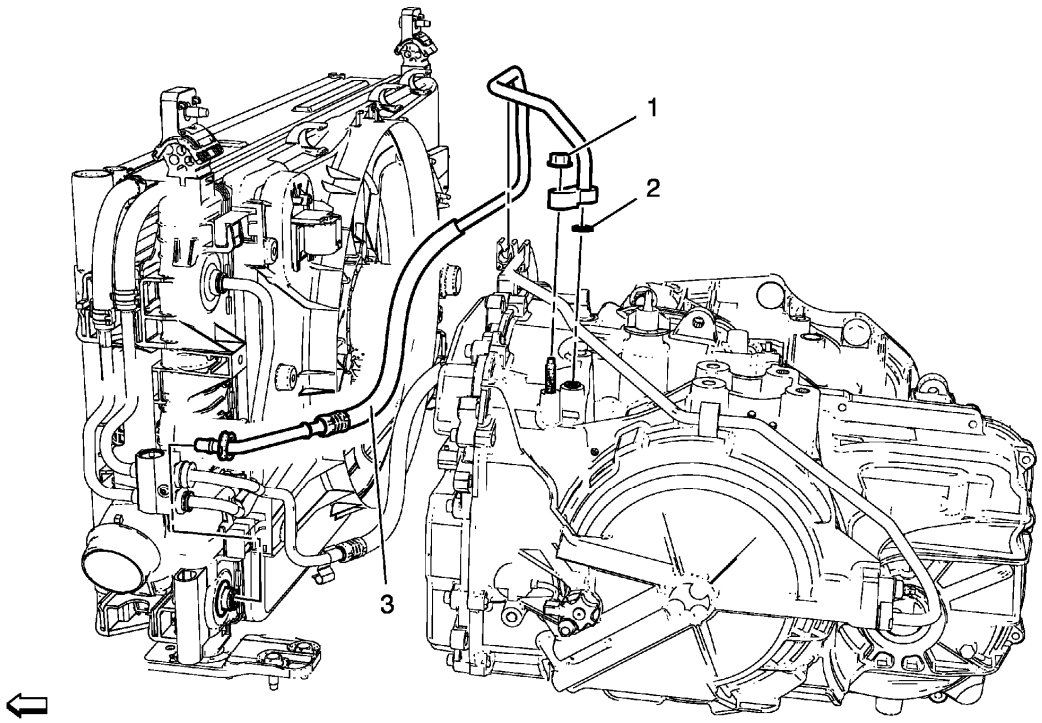

Fig. 55: Transmission Fluid Cooler Inlet Pipe (1.4L LUV)
Courtesy of GENERAL MOTORS COMPANY

Transmission Fluid Cooler Inlet Pipe Replacement (1.4L LUV)

Callout	Component Name
Preliminary Procedures 1. Remove battery tray. Refer to **Battery Tray Replacement** . 2. Remove radiator inlet hose. Refer to **Radiator Inlet Hose Replacement (1.4L LUV)** , **Radiator Inlet Hose Replacement (1.8L LUW and LWE)** . 3. Remove charge air cooler outlet air hose. Refer to **Charge Air Cooler Outlet Air Hose Replacement (Automatic Transmission)** , **Charge Air Cooler Outlet Air Hose Replacement (Manual Transmission)** .	

4. Disconnect the transmission pipe from the radiator and transmission. Refer to **Transmission Fluid Cooler Hose/Pipe Quick-Connect Fitting Disconnection and Connection**.
5. Note the routing of the transmission pipe to ensure proper installation.
6. Remove the transmission pipe from the clips securing the line to the transmission and inlet pipe.

1	Transmission Fluid Cooler Pipe Nut **CAUTION:** **Refer to Fastener Caution .** **Tighten** 22 N.m (16 lb ft)
2	Sealing Washer **Procedure** DISCARD the sealing washer and use NEW only.
3	Transmission Fluid Cooler Inlet Pipe **Procedure** Inspect the transmission fluid level. Refer to **Transmission Fluid Drain and Fill**.

AUTOMATIC TRANSMISSION FLUID PRESSURE TEST HOLE PLUG REPLACEMENT

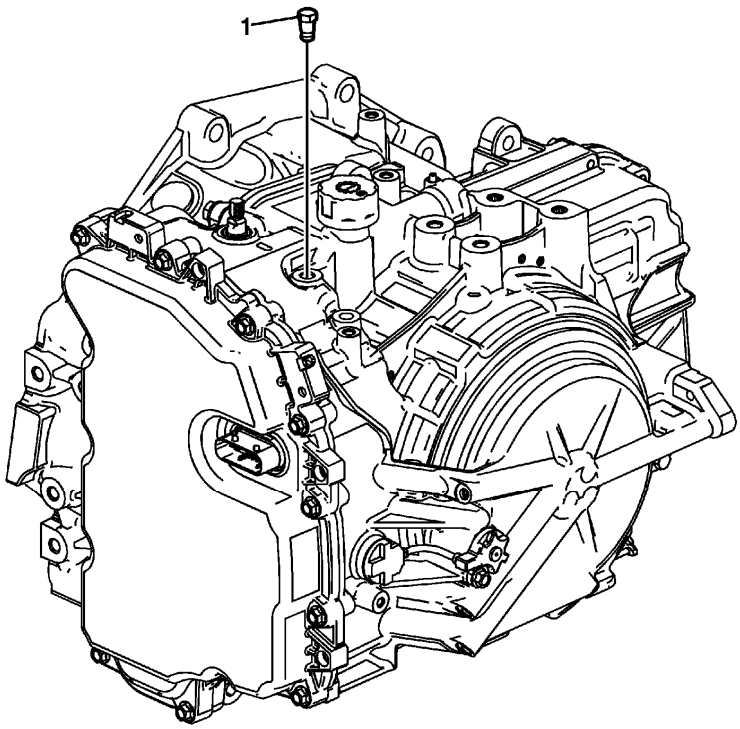

Fig. 56: Identifying Pressure Test Plug
Courtesy of GENERAL MOTORS COMPANY

Automatic Transmission Fluid Pressure Test Hole Plug Replacement

Callout	Component Name
Preliminary Procedure Remove the battery tray. Refer to **Battery Tray Replacement** .	
1	Fluid Pressure Test Hole Plug **CAUTION:** **Refer to Component Fastener Tightening Caution .** **Tighten** 12 N.m (106 lb in)

FRONT WHEEL DRIVE SHAFT SEAL REPLACEMENT - LEFT SIDE

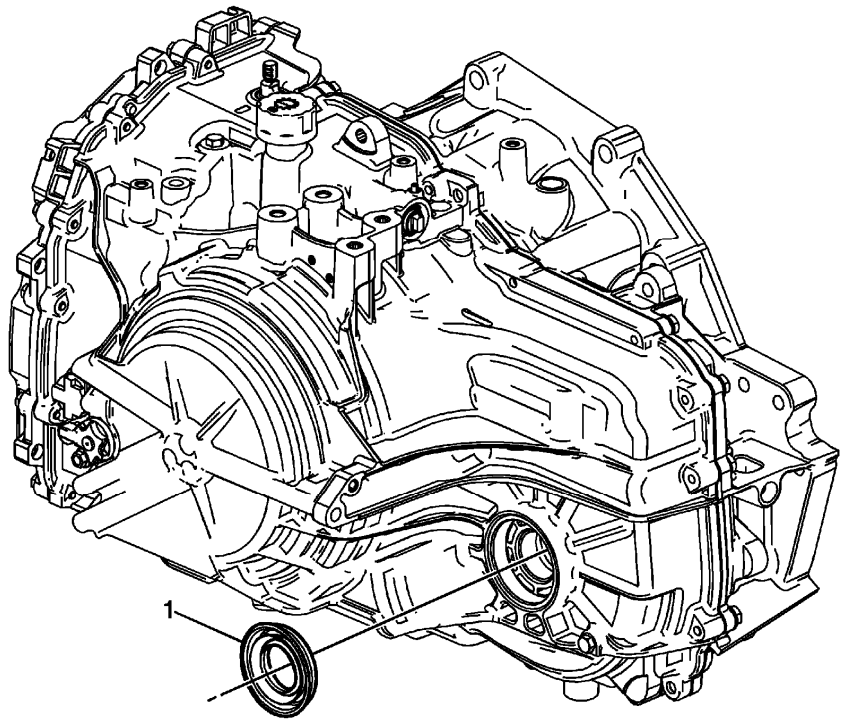

Fig. 57: Identifying Left Front Wheel Drive Shaft Seal
Courtesy of GENERAL MOTORS COMPANY

Front Wheel Drive Shaft Seal Replacement - Left Side

Callout	Component Name
Preliminary Procedures 1. Raise and support the vehicle. Refer to **Lifting and Jacking the Vehicle** . 2. Remove the left wheel drive shaft. Refer to **Front Wheel Drive Shaft Replacement - Left Side** .	

1	Left Front Wheel Drive Shaft Oil Seal **Procedure** 1. For seal removal use **DT-7004** slide hammer with **DT-586** seal remover. 2. For seal installation use **DT-8092** driver handle with **DT-47790** seal installer. **Special Tools** • **DT-586** Universal Seal Remover • **DT-7004** Slide Hammer • **DT-8092** Driver Handle • **DT-47790** Seal Installer For equivalent regional tools, refer to **Special Tools** .

FRONT WHEEL DRIVE SHAFT SEAL REPLACEMENT - RIGHT SIDE

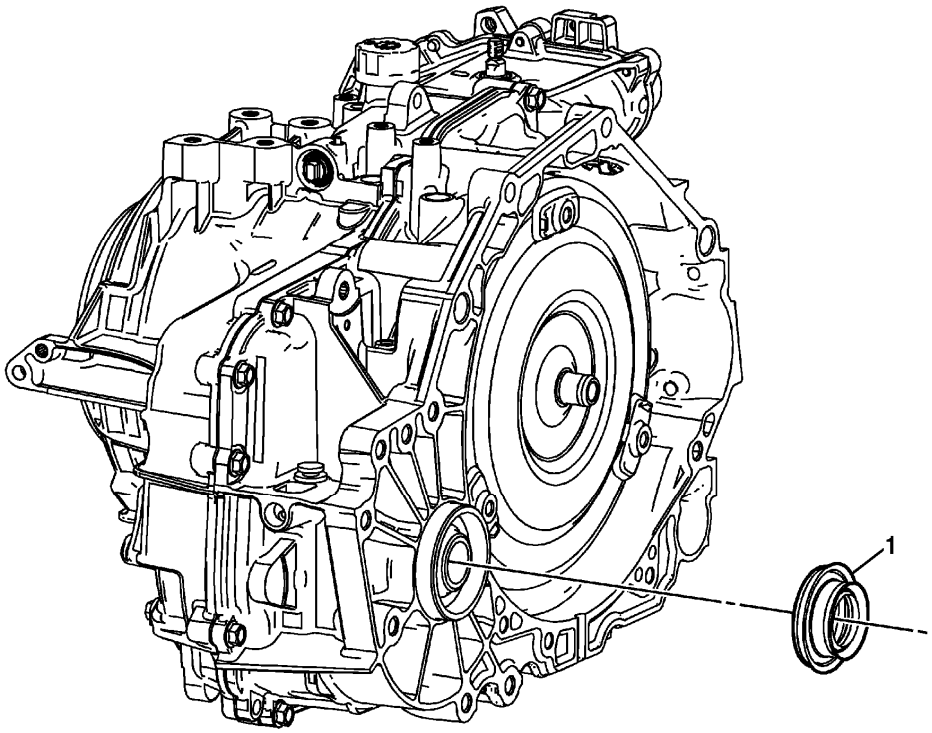

Fig. 58: Identifying Right Front Wheel Drive Shaft Seal
Courtesy of GENERAL MOTORS COMPANY

Front Wheel Drive Shaft Seal Replacement - Right Side

Callout	Component Name
Preliminary Procedures 1. Raise and support the vehicle. Refer to **Lifting and Jacking the Vehicle** . 2. Remove the intermediate drive shaft if equipped. Refer to **Front Wheel Drive Intermediate Shaft Replacement** . 3. Remove the right wheel drive shaft if intermediate shaft is not equipped. Refer to **Front Wheel Drive Shaft Replacement - Right Side**	
1	Right Front Wheel Drive Shaft Oil Seal **Procedure** 1. For seal removal use **DT-7004** slide hammer with **DT-586** seal remover. 2. For seal installation use **DT-8092** driver handle with **DT-47790** seal installer. **Special Tools** • **DT-586** Universal Seal Remover • **DT-7004** Slide Hammer • **DT-8092** Driver Handle • **DT-47790** Seal Installer For equivalent regional tools, refer to **Special Tools** .

MANUAL SHIFT SHAFT AND SEAL REPLACEMENT

Special Tools

- **DT-45201** Cooler Line Seal Remover
- **DT-49101** Seal Installer

For equivalent regional tools, refer to **Special Tools** .

Removal Procedure

1. Remove the manual shaft and position switch assembly. Refer to **Manual Shift Detent Lever with Shaft Position Switch Assembly Replacement**.

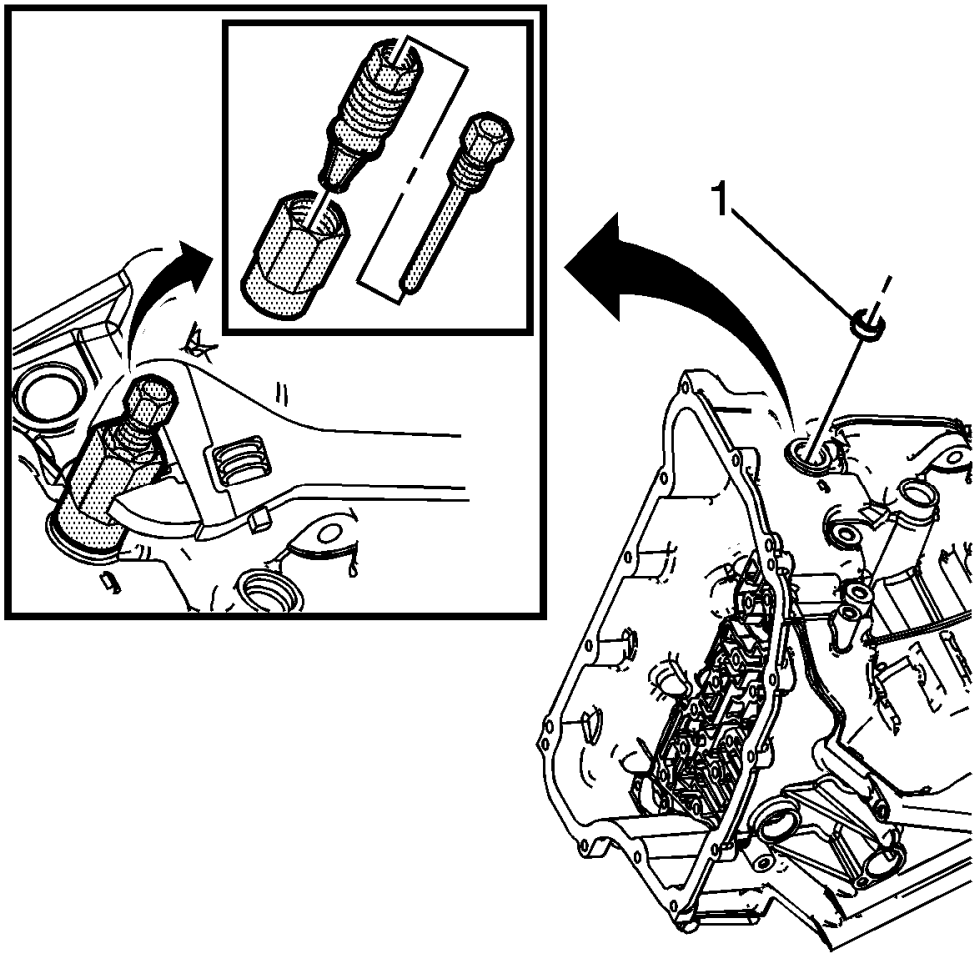

Fig. 59: Identifying Seal Removal Tool J 45201
Courtesy of GENERAL MOTORS COMPANY

2. Remove the manual shaft seal (1) using **DT-45201** seal remover.

Installation Procedure

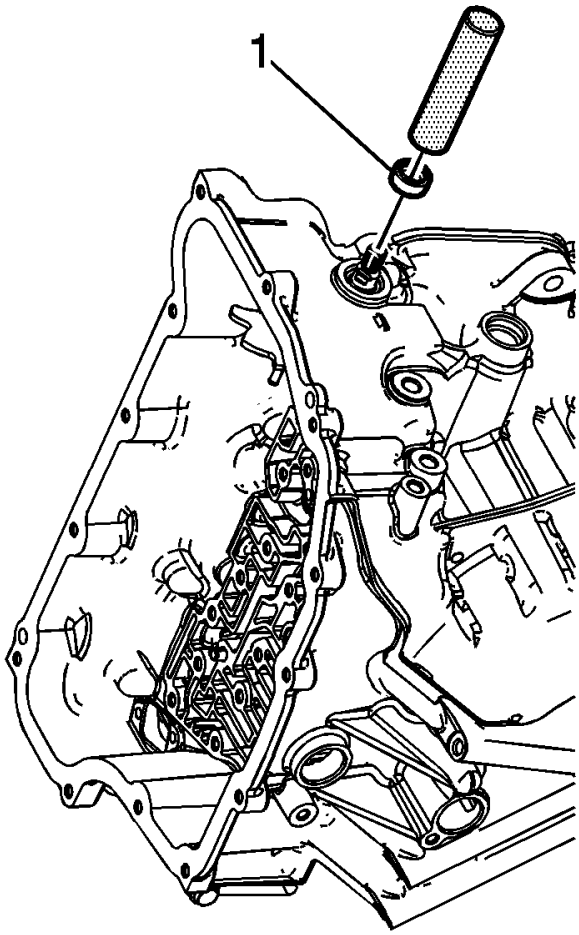

Fig. 60: Identifying Seal Installation Tool J-46626
Courtesy of GENERAL MOTORS COMPANY

1. Install the manual shaft seal (1) using **DT-49101** seal installer.
2. Install the manual shaft and position switch assembly. Refer to **Manual Shift Detent Lever with Shaft Position Switch Assembly Replacement**.

CONTROL SOLENOID VALVE AND TRANSMISSION CONTROL MODULE ASSEMBLY REPLACEMENT

Removal Procedure

1. Remove the transmission control valve body cover. Refer to **Control Valve Body Cover Replacement (1.8L LWE and LUW)**, **Control Valve Body Cover Replacement (1.4L LUV)**.

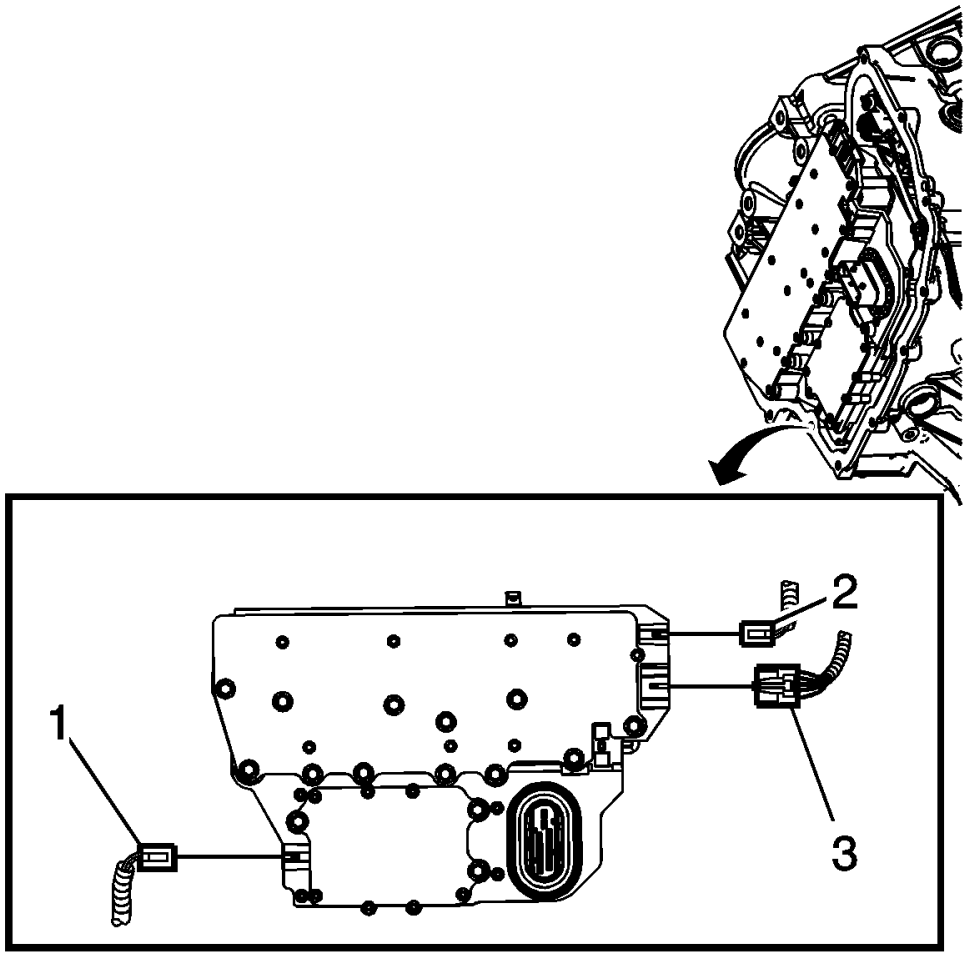

Fig. 61: Identifying Input Speed Sensor Electrical Connector
Courtesy of GENERAL MOTORS COMPANY

2. Disconnect the output speed sensor electrical connector (2).
3. Disconnect the shift position switch electrical connector (3).
4. Disconnect the input speed sensor electrical connector (1).

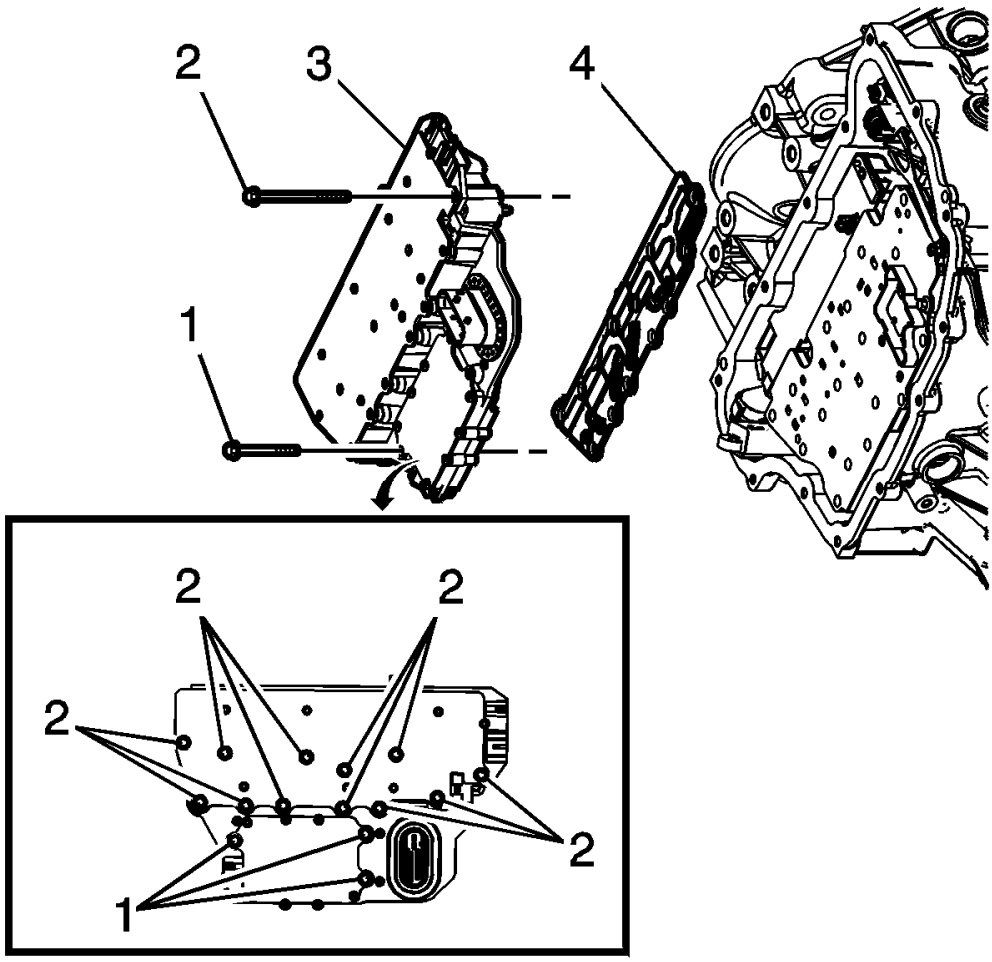

Fig. 62: Control Valve Body And Bolts
Courtesy of GENERAL MOTORS COMPANY

5. Remove the 3 control valve body bolts (1) M5 x 40.5.
6. Remove the 12 control valve body bolts (2) M6 x 97.
7. Remove the control solenoid valve assembly (3) with transmission control module.

CAUTION: Use care when removing or installing the filter plate assembly. A broken or missing retaining tab may not adequately secure the filter plate to the control solenoid valve assembly, resulting in possible damage or contamination.

8. Remove the control solenoid valve assembly filter plate (4). Discard the filter plate. It is not reusable.
9. Inspect the pressure switch seals for damage or contamination. Replace the control solenoid valve assembly as necessary.
10. Inspect the channel plate bolt pass through holes for damage or burnelling. Any damage could cause leaking. Replace as necessary.

Installation Procedure

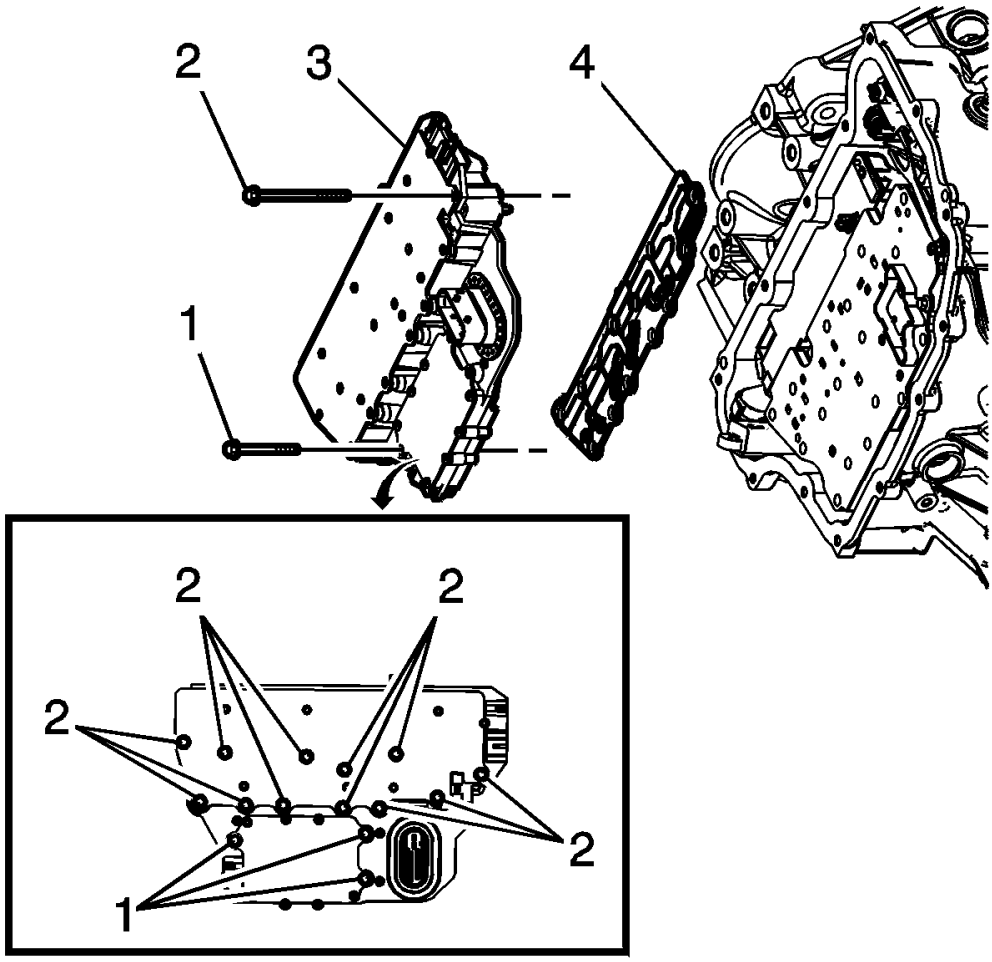

Fig. 63: Control Valve Body And Bolts
Courtesy of GENERAL MOTORS COMPANY

CAUTION: Use care when removing or installing the filter plate assembly. A broken or missing retaining tab may not adequately secure the filter plate to the control solenoid valve assembly, resulting in possible damage or contamination.

1. Install a NEW control solenoid valve assembly filter plate (4) to prevent fluid leaks past the fluid seals.
2. Install the control solenoid valve assembly (3) with transmission control module.
3. Hand start the control valve body bolts (1, 2).

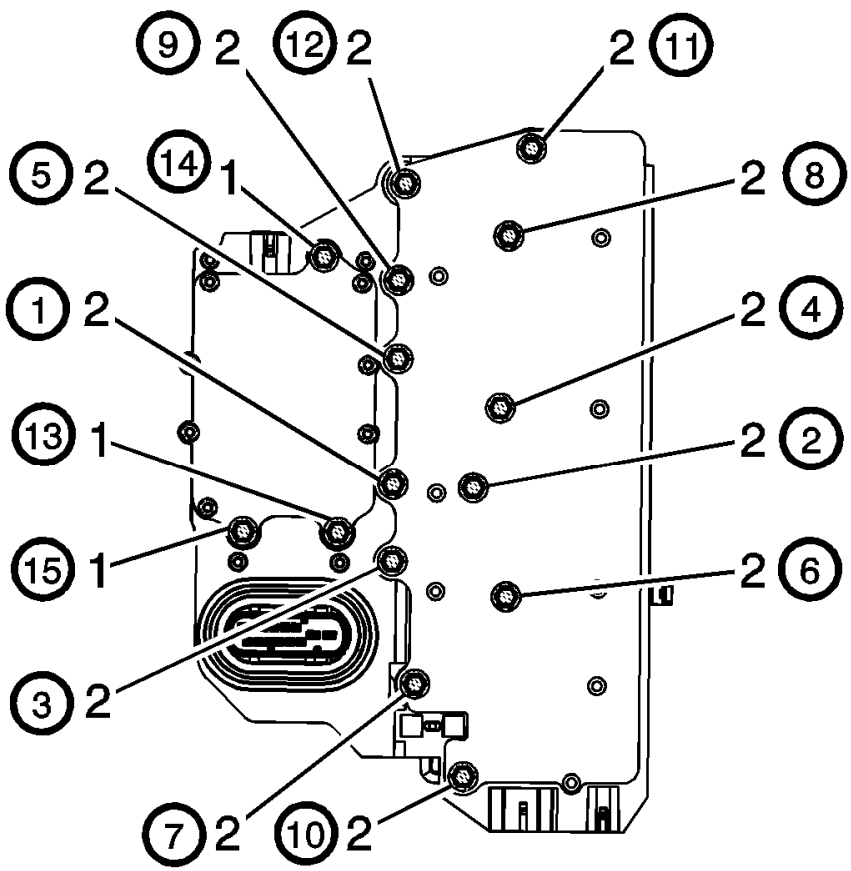

Fig. 64: Identifying Control Valve Body Bolt Tightening Sequence
Courtesy of GENERAL MOTORS COMPANY

CAUTION: Refer to Fastener Caution .

4. Secure the 12 control valve body bolts (2) M6 x 97 and tighten in sequence to 12 N.m(106 lb in).
5. Secure the 3 control valve body bolts (1) M5 x 40.5 and tighten in sequence to 8 N.m(71 lb in).
6. Connect the input speed sensor electrical connector (1).
7. Connect the output speed sensor electrical connector (2).
8. Install the transmission control valve body cover. Refer to **Control Valve Body Cover Replacement (1.8L LWE and LUW)**, **Control Valve Body Cover Replacement (1.4L LUV)**.
9. After repairs, refer to **Control Module References** for programming and set up procedures.
10. Perform the transmission adaptive values learn. Refer to **Transmission Adaptive Values Learn** .

CONTROL VALVE BODY COVER REPLACEMENT (1.4L LUV)

Removal Procedure

1. Remove the battery tray. Refer to **Battery Tray Replacement** .
2. Raise and support the vehicle. Refer to **Lifting and Jacking the Vehicle** .
3. Remove the left front wheelhouse liner. Refer to **Front Wheelhouse Liner Replacement** .

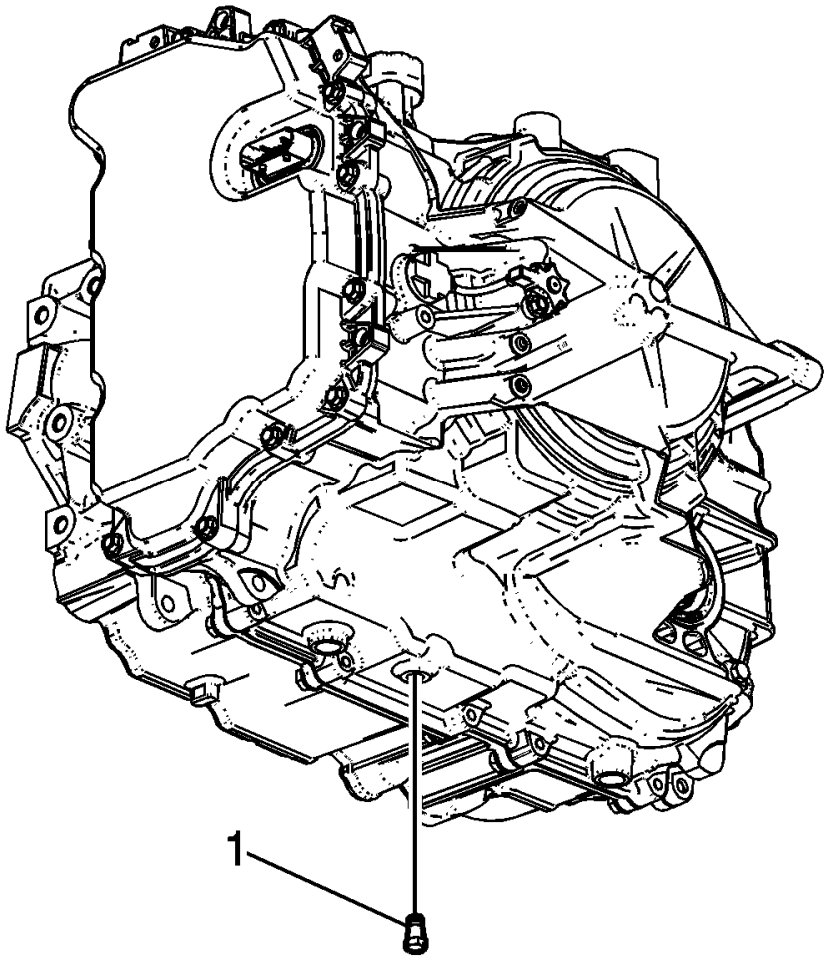

Fig. 65: Identifying Fluid Level Hole Plug
Courtesy of GENERAL MOTORS COMPANY

4. Remove the fluid level drain plug (1).
5. Drain transmission fluid into a suitable container.
6. Lower the vehicle.
7. Remove the radiator inlet hose. Refer to **Radiator Inlet Hose Replacement (1.4L LUV)** , **Radiator Inlet Hose Replacement (1.8L LUW and LWE)** .
8. Remove the charge air cooler outlet air hose. Refer to **Charge Air Cooler Outlet Air Hose Replacement (Automatic Transmission)** , **Charge Air Cooler Outlet Air Hose Replacement (Manual Transmission)** .

9. Remove the transmission fluid cooler inlet pipe. Refer to **Transmission Fluid Cooler Inlet Pipe Replacement (1.4L LUV)**.
10. Remove the transmission fluid cooler outlet pipe. Refer to **Transmission Fluid Cooler Outlet Pipe Replacement (1.4L LUV)**.
11. Plug and/or cap the pipes and transmission to prevent contamination.

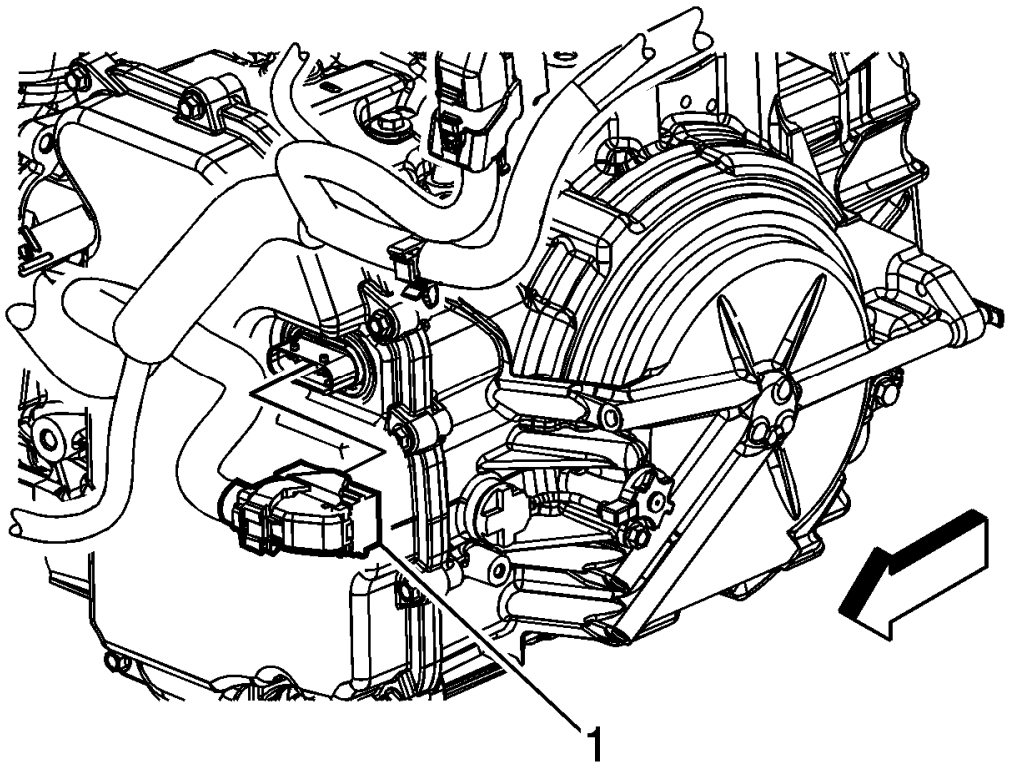

Fig. 66: Identifying Control Valve Body Transmission Control Module (TCM) Electrical Connector
Courtesy of GENERAL MOTORS COMPANY

12. Disconnect electrical connector (1) transmission control module (TCM), then unclip the connector from the transmission.
13. Remove wiring harness starter motor from transmission. Remove bolt from retainer on valve body cover. Unclip wiring harness from retainer on valve body cover and range selector cable bracket.

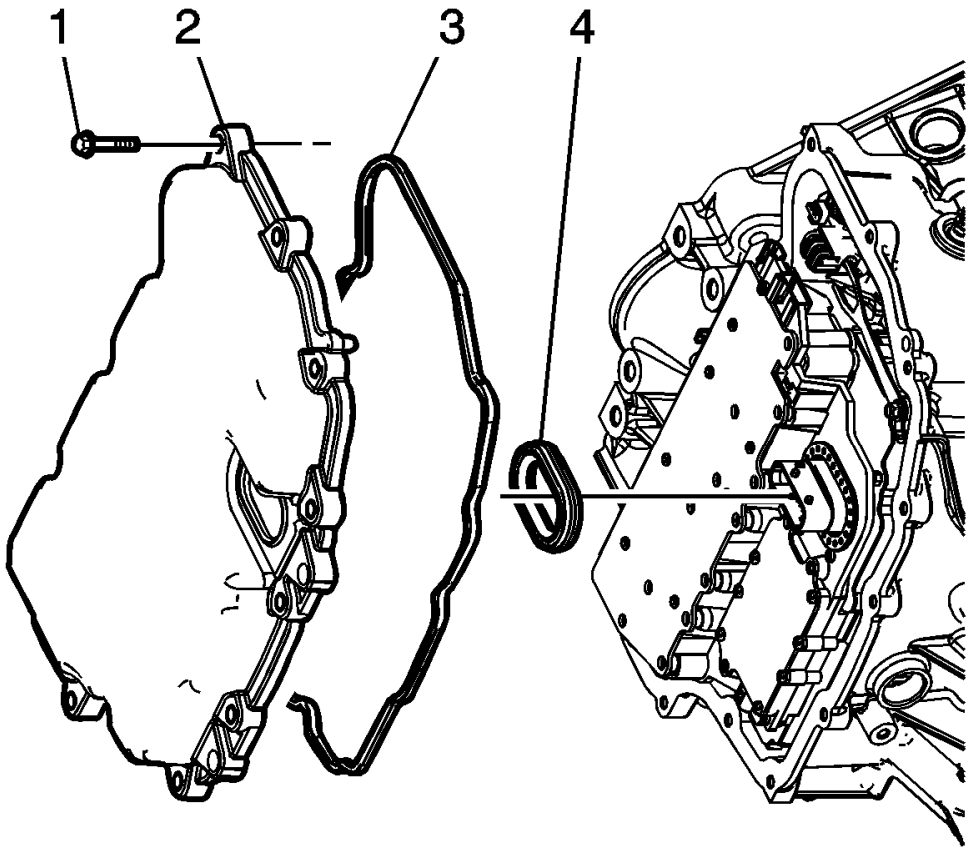

Fig. 67: View Of Control Valve Body
Courtesy of GENERAL MOTORS COMPANY

14. Remove the 13 control valve body cover bolts (1).
15. Remove the control valve body cover (2).
16. Remove the control valve body cover gasket (3).

CAUTION: Support the control solenoid valve assembly around the connector when removing the seal. Excessive pulling force can damage the internal electrical connections.

17. Remove the control valve body cover wiring connector hole seal (4).
18. Remove all traces of the old gasket material. Clean the transmission case and control valve body cover gasket surfaces.

Installation Procedure

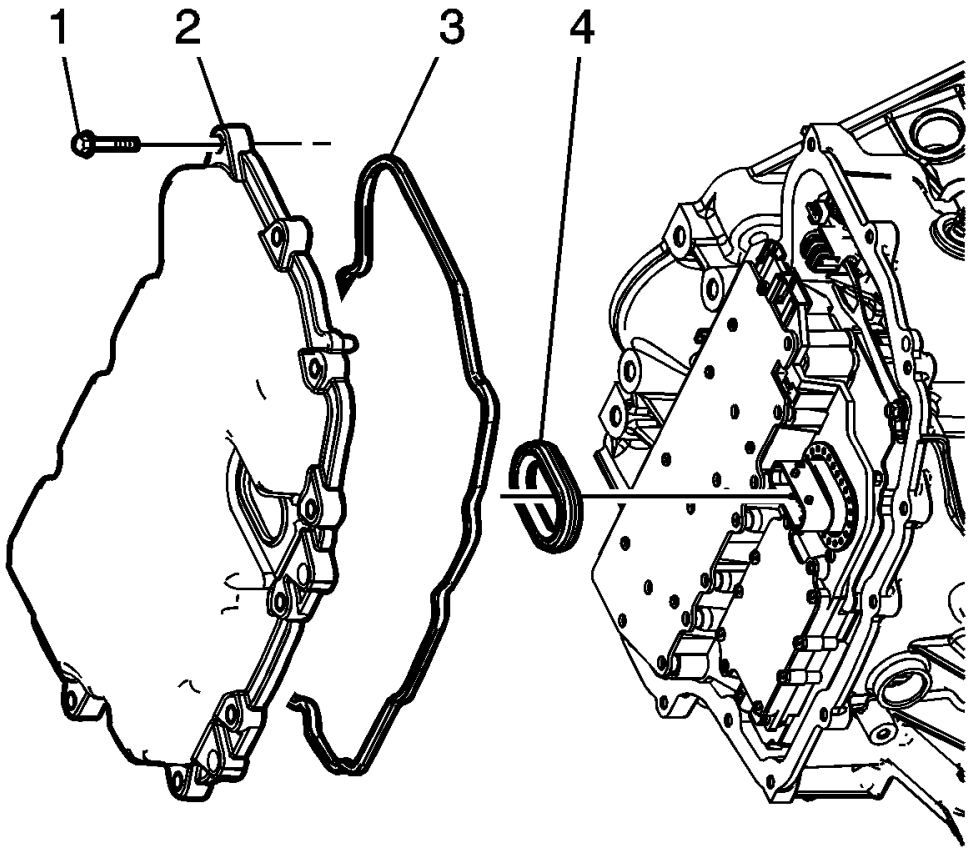

Fig. 68: View Of Control Valve Body
Courtesy of GENERAL MOTORS COMPANY

1. Install the control valve body cover wiring connector hole seal (4).
2. Install the control valve body cover gasket (3) to the control valve body cover.
3. Install the control valve body cover (2).
4. Hand start the 13 control valve body cover bolts (1).

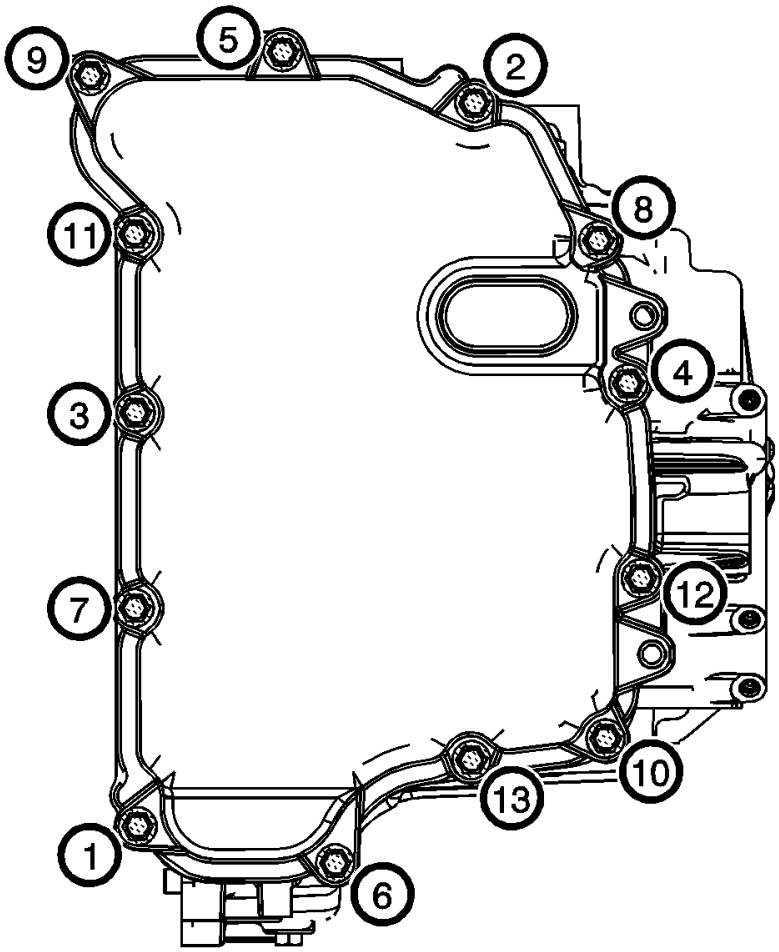

Fig. 69: Identifying Valve Body Cover Bolt Tightening Sequence
Courtesy of GENERAL MOTORS COMPANY

CAUTION: Refer to Fastener Caution .

NOTE: Install all control valve body cover bolts and studs by hand then torque all bolts and studs in sequence.

5. Install the control valve body cover bolts. Tighten the bolts in sequence to 12 N.m (106 lb in).

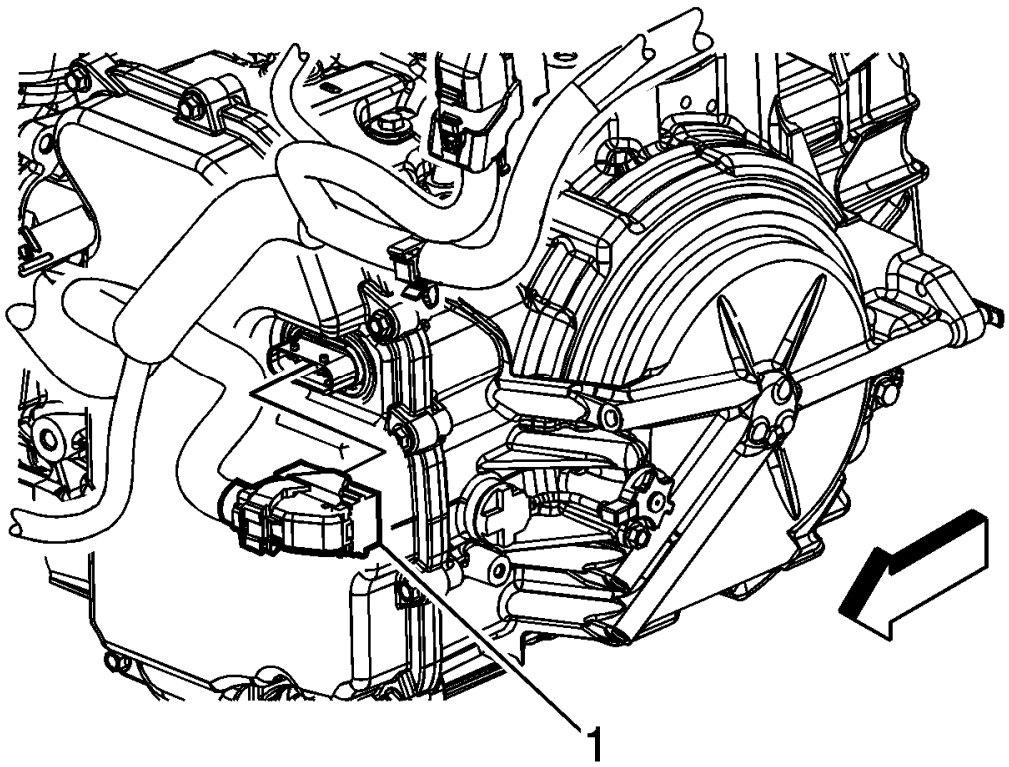

Fig. 70: Identifying Control Valve Body Transmission Control Module (TCM) Electrical Connector
Courtesy of GENERAL MOTORS COMPANY

6. Connect the electrical connector (1) transmission control module (TCM), then clip in the wiring harness to transmission.
7. Install the wiring harness starter motor to transmission. Install bolt to retainer on valve body cover. Clip in wiring harness to retainer on valve body cover and range selector cable bracket.
8. Raise the vehicle.
9. Install the left front wheelhouse liner. Refer to **Front Wheelhouse Liner Replacement** .
10. Lower the vehicle.
11. Install the transmission fluid cooler outlet pipe. Use NEW sealing washer. Refer to **Transmission Fluid Cooler Outlet Pipe Replacement (1.4L LUV)**.
12. Install the transmission fluid cooler inlet pipe to the transmission. Use NEW sealing washer. Refer to **Transmission Fluid Cooler Inlet Pipe Replacement (1.4L LUV)**.
13. Install the radiator inlet hose. Refer to **Radiator Inlet Hose Replacement (1.4L LUV)** , **Radiator Inlet Hose Replacement (1.8L LUW and LWE)** .
14. Install the charge air cooler outlet air hose. Refer to **Charge Air Cooler Outlet Air Hose Replacement**

(Automatic Transmission) , **Charge Air Cooler Outlet Air Hose Replacement (Manual Transmission)** .

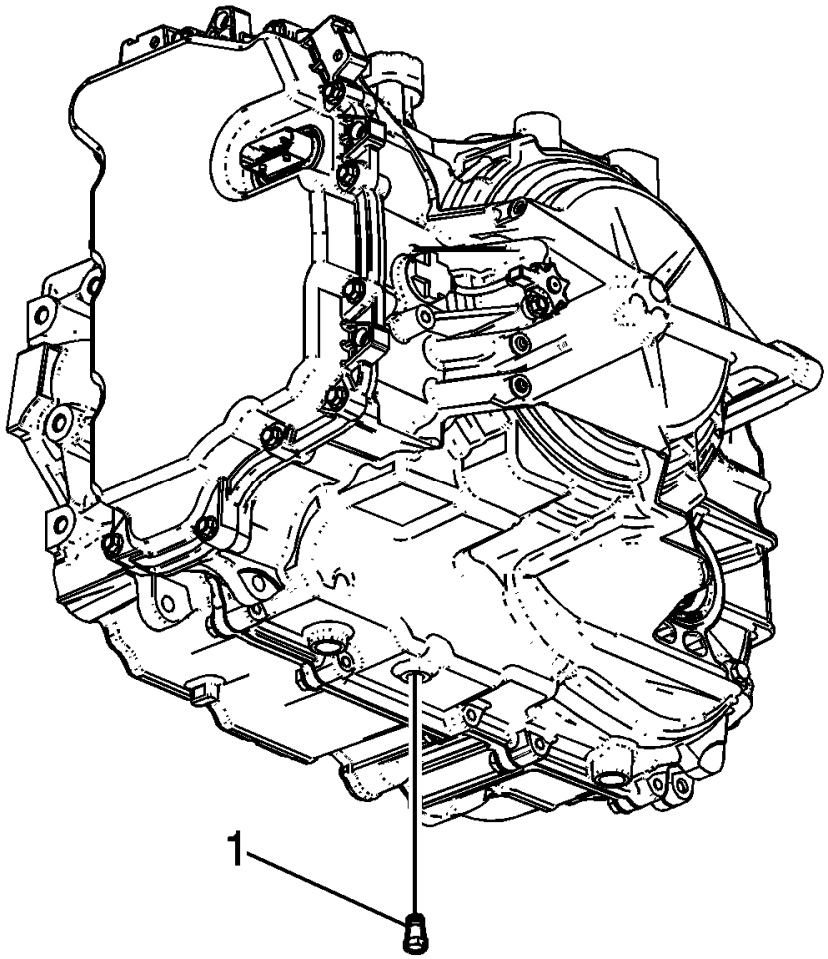

Fig. 71: Identifying Fluid Level Hole Plug
Courtesy of GENERAL MOTORS COMPANY

15. Install the fluid level drain plug (1) and tighten to 12 N.m (106 lb in)
16. Top up transmission fluid and check transmission fluid level. Refer to **Transmission Fluid Drain and Fill**.
17. Check for leaks.
18. Install the battery tray. Refer to **Battery Tray Replacement** .

CONTROL VALVE BODY COVER REPLACEMENT (1.8L LWE AND LUW)

Removal Procedure

1. Remove the battery tray. Refer to **Battery Tray Replacement** .
2. Raise and support the vehicle. Refer to **Lifting and Jacking the Vehicle** .

3. Remove the left front wheelhouse liner. Refer to **Front Wheelhouse Liner Replacement** .
4. Drain the transmission. Refer to **Transmission Fluid Drain and Fill**.
5. Lower the vehicle.

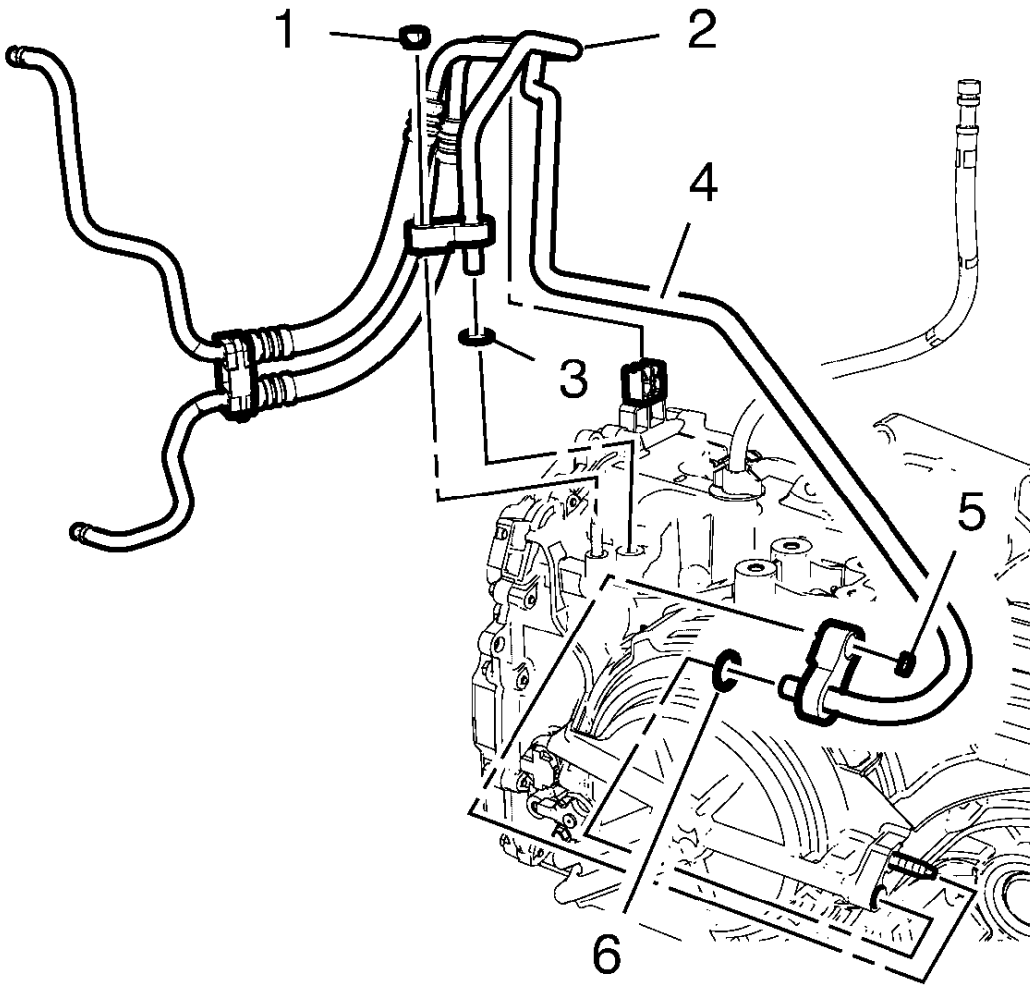

Fig. 72: Transmission Fluid Cooler Inlet Pipe
Courtesy of GENERAL MOTORS COMPANY

6. Remove transmission fluid cooler inlet pipe (2) from the transmission. Refer to **Transmission Fluid Cooler Inlet Pipe Replacement (1.4L LUV)**.
7. Discard sealing washer (3).
8. Remove transmission fluid cooler outlet pipe (4) from the transmission. Refer to **Transmission Fluid Cooler Outlet Pipe Replacement (1.4L LUV)**.
9. Discard the sealing washer (6).
10. Plug and/or cap the pipes and transmission to prevent contamination.

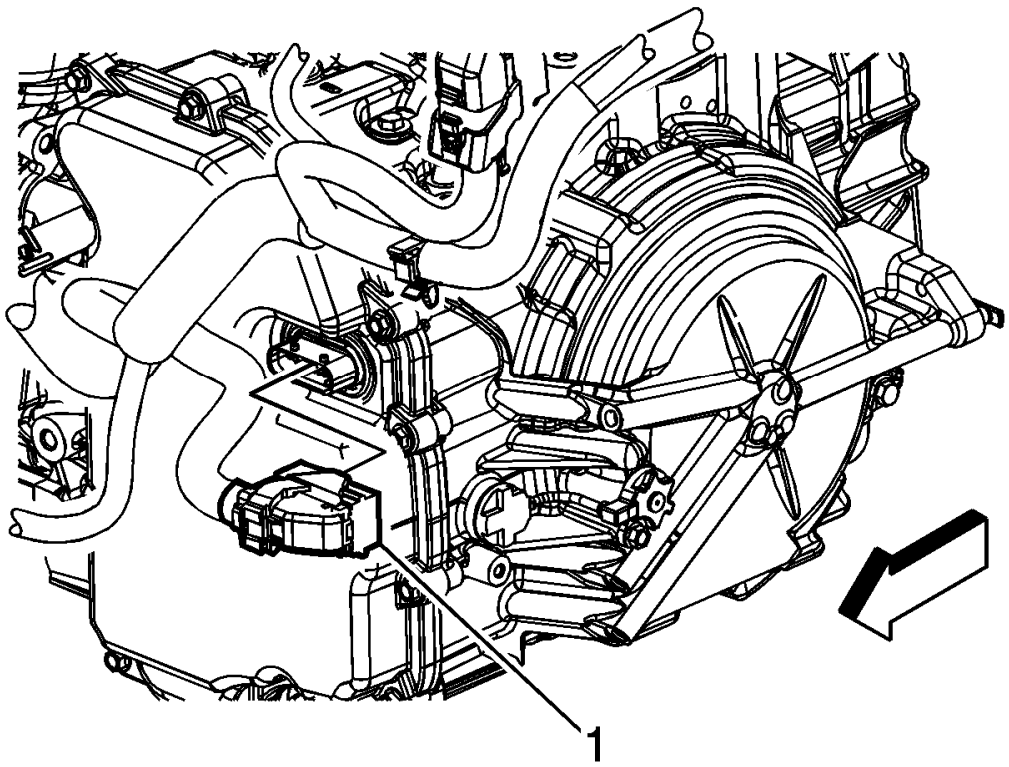

Fig. 73: Identifying Control Valve Body Transmission Control Module (TCM) Electrical Connector
Courtesy of GENERAL MOTORS COMPANY

11. Disconnect electrical connector (1) transmission control module (TCM), then unclip the connector from the transmission.
12. Remove wiring harness starter motor from transmission. Remove bolt from retainer on valve body cover. Unclip wiring harness from retainer on valve body cover and range selector cable bracket.

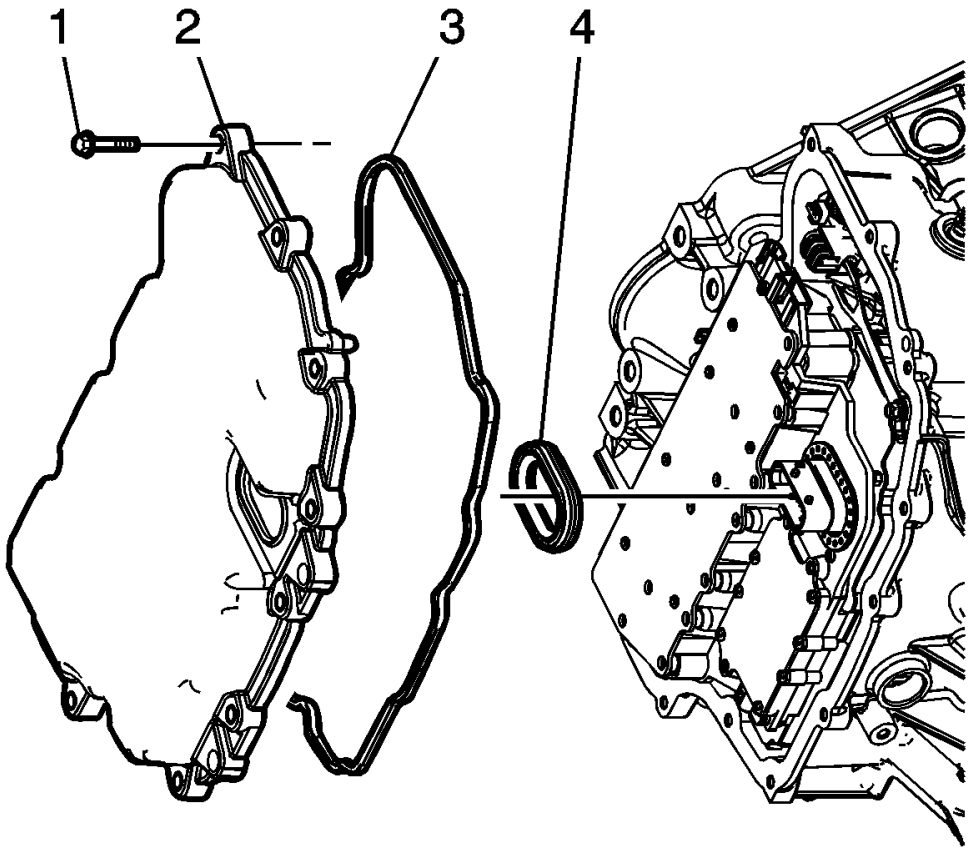

Fig. 74: View Of Control Valve Body
Courtesy of GENERAL MOTORS COMPANY

13. Remove the control valve body cover bolts (1).
14. Remove the control valve body cover (2).
15. Remove the control valve body cover gasket (3).

CAUTION: Support the control solenoid valve assembly around the connector when removing the seal. Excessive pulling force can damage the internal electrical connections.

16. Remove the control valve body cover wiring connector hole seal (4).
17. Remove all traces of the old gasket material. Clean the transmission case and control valve body cover gasket surfaces.

Installation Procedure

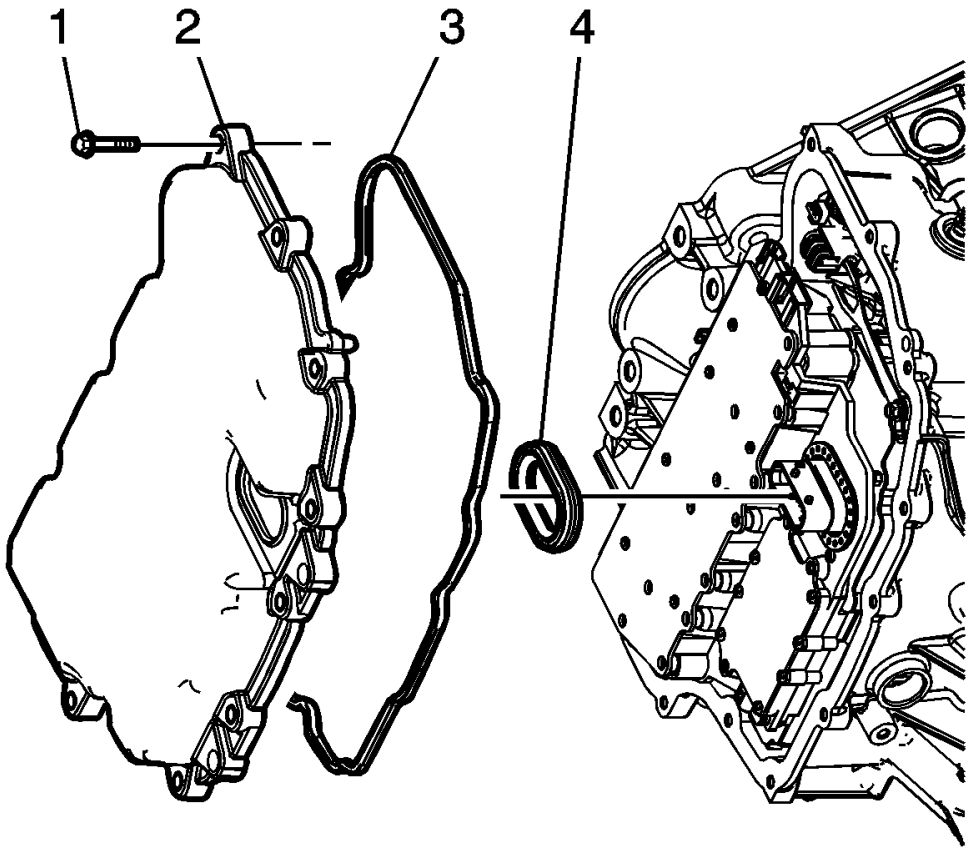

Fig. 75: View Of Control Valve Body
Courtesy of GENERAL MOTORS COMPANY

1. Install the control valve body cover wiring connector hole seal (4).
2. Install the control valve body cover gasket (3) to the control valve body cover.
3. Install the control valve body cover (2).
4. Hand start the control valve body cover bolts (1).

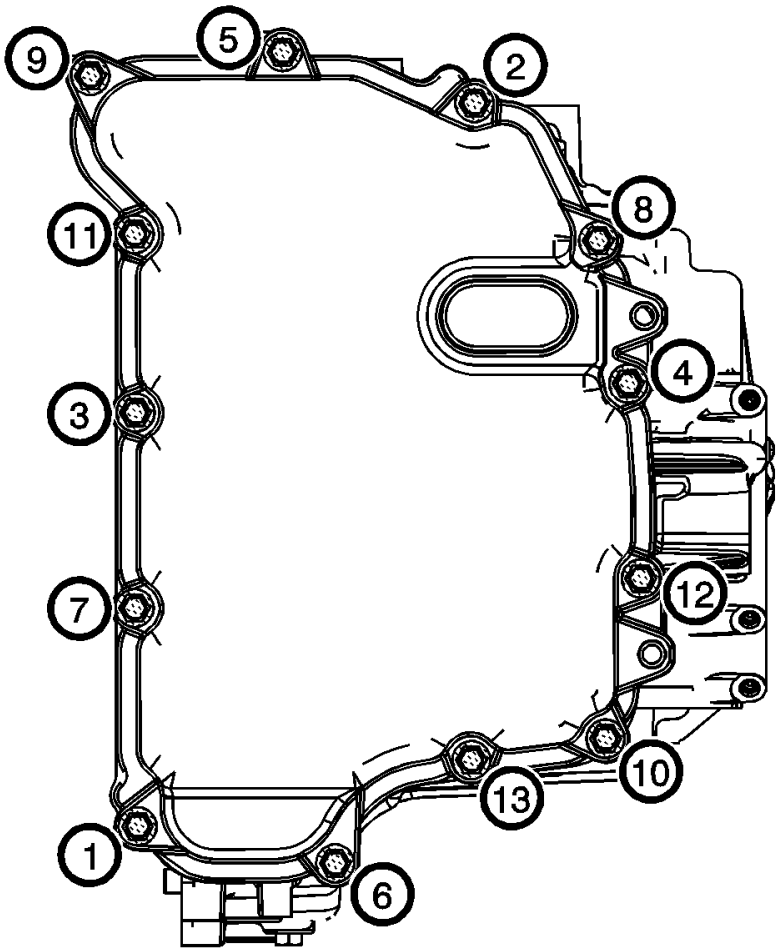

Fig. 76: Identifying Valve Body Cover Bolt Tightening Sequence
Courtesy of GENERAL MOTORS COMPANY

CAUTION: Refer to Fastener Caution .

NOTE: Install all control valve body cover bolts and studs by hand then torque all bolts and studs in sequence.

5. Install the control valve body cover bolts. Tighten the bolts in sequence to 12 N.m (106 lb in).

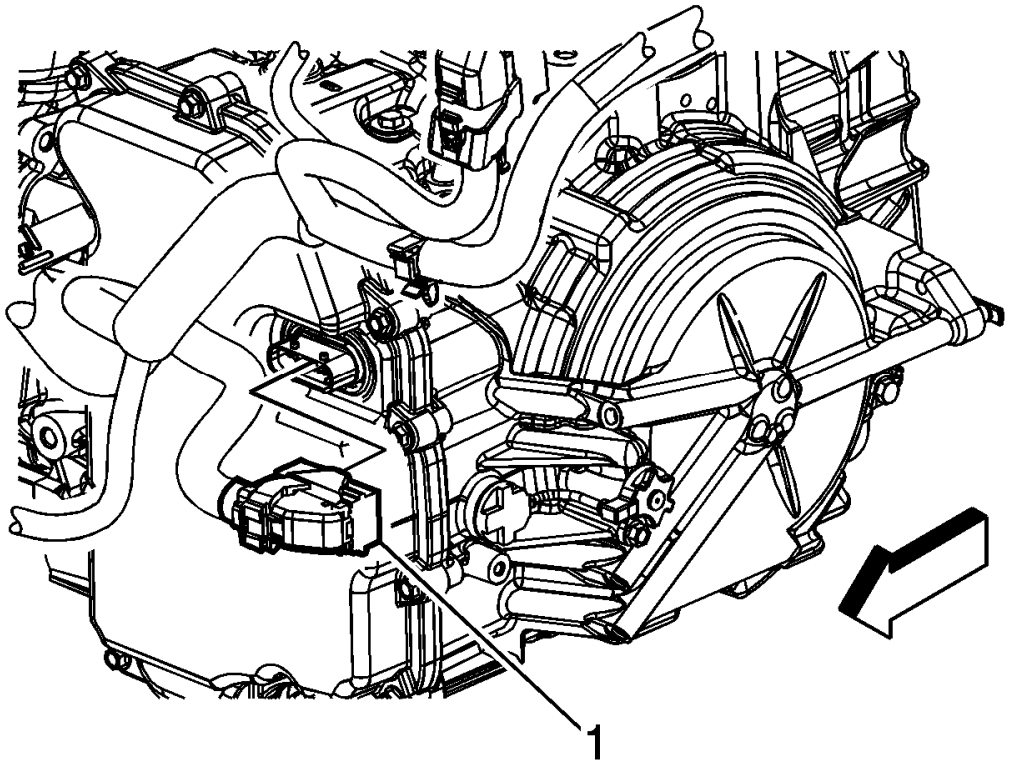

Fig. 77: Identifying Control Valve Body Transmission Control Module (TCM) Electrical Connector
Courtesy of GENERAL MOTORS COMPANY

6. Connect the electrical connector (1) transmission control module (TCM), then clip in the wiring harness to transmission.
7. Install the wiring harness starter motor to transmission. Install bolt to retainer on valve body cover. Clip in wiring harness to retainer on valve body cover and range selector cable bracket.
8. Raise the vehicle.
9. Install the left front wheelhouse liner. Refer to **Front Wheelhouse Liner Replacement** .
10. Lower the vehicle.

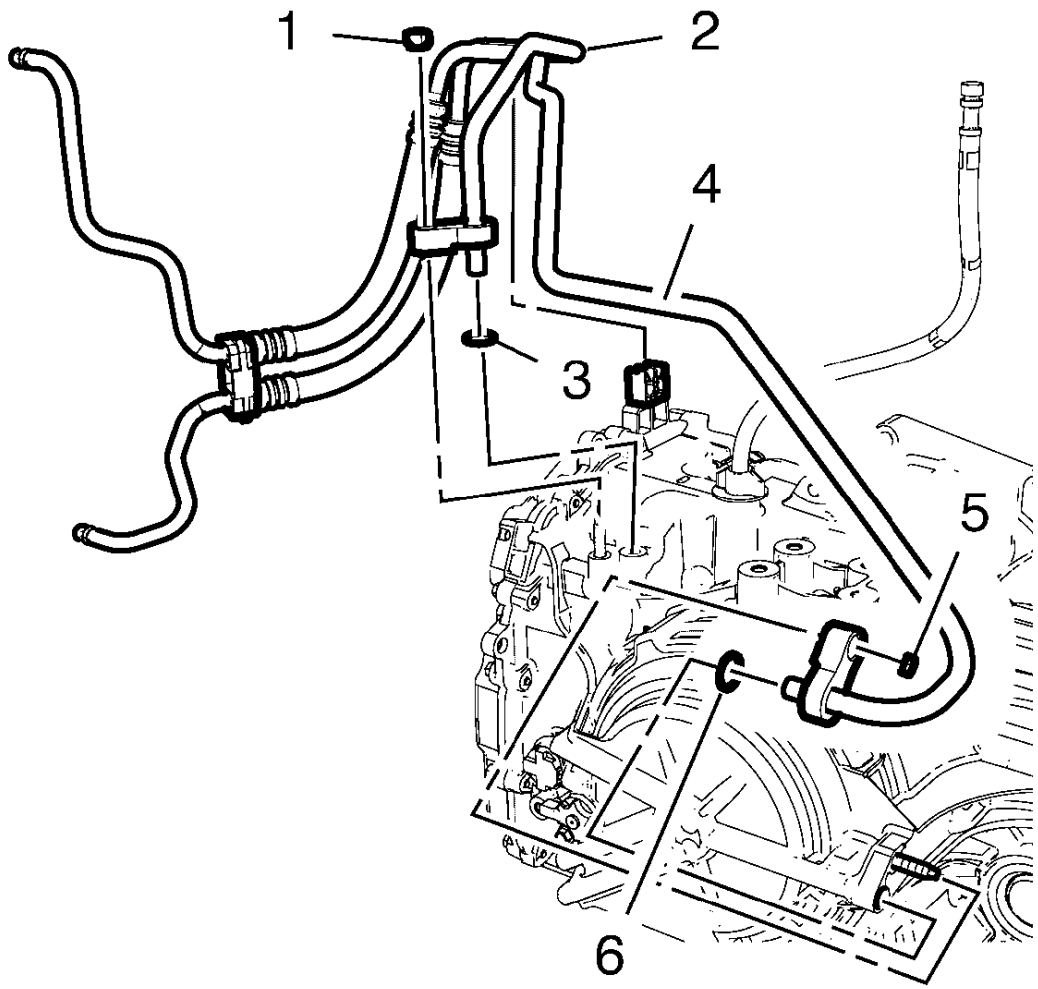

Fig. 78: Transmission Fluid Cooler Inlet Pipe
Courtesy of GENERAL MOTORS COMPANY

11. Install the transmission fluid cooler outlet pipe (4) to the transmission. Use a NEW sealing washer (6). Refer to **Transmission Fluid Cooler Outlet Pipe Replacement (1.4L LUV)**.
12. Install the transmission fluid cooler inlet pipe (2) to the transmission. Use a NEW sealing washer (3). Refer to **Transmission Fluid Cooler Inlet Pipe Replacement (1.4L LUV)**.
13. Fill the transmission. Refer to **Transmission Fluid Drain and Fill**.
14. Check for leaks.
15. Install the battery tray. Refer to **Battery Tray Replacement** .

CONTROL VALVE BODY REPLACEMENT

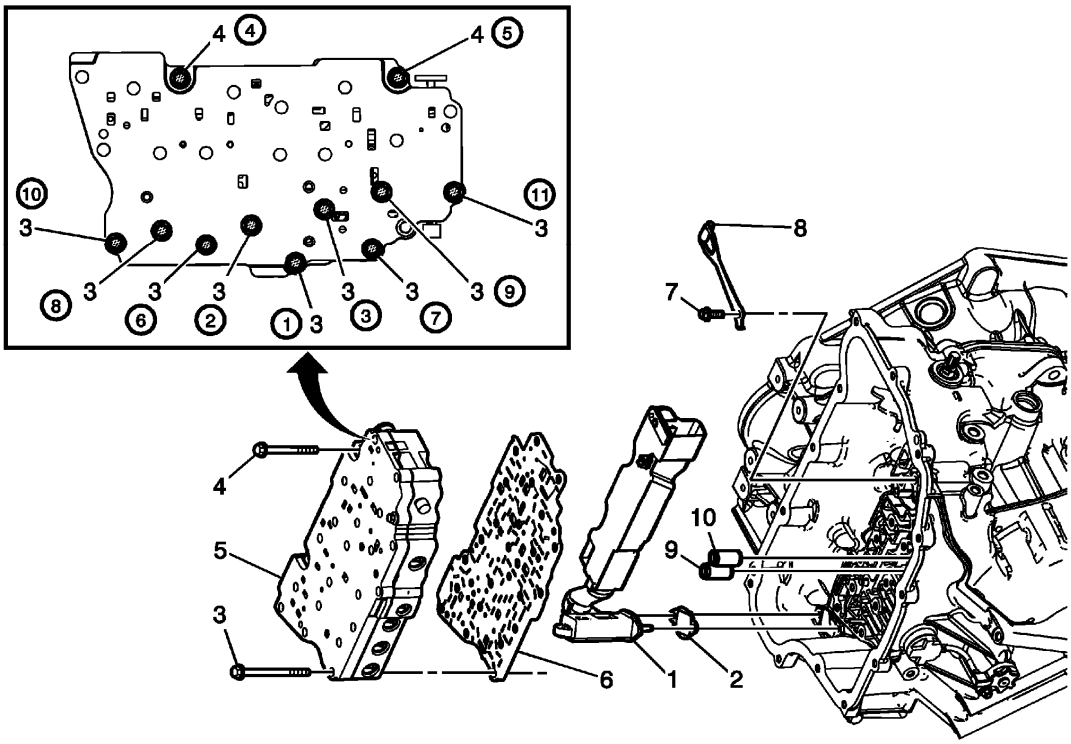

Fig. 79: View Of Control Valve Body
Courtesy of GENERAL MOTORS COMPANY

Control Valve Body Replacement

Callout	Component Name
Preliminary Procedures Remove the control solenoid valve and the transmission control module assembly. Refer to **Control Solenoid Valve and Transmission Control Module Assembly Replacement**.	
1	Fluid Level Control Valve
2	Fluid Level Control Valve Gasket **Procedure** DISCARD the gasket. Use a NEW gasket only.
3	Control Valve Body Bolt M6 x 60 (Qty: 9) **CAUTION:** **Refer to Fastener Caution .** **Procedure** Tighten in specified sequence. **Tighten** 12 N.m (106 lb in)
4	Control Valve Body Bolt M6 x 53 (Qty: 2) **Procedure** Tighten in specified sequence.

	Tighten 12 N.m (106 lb in)
5	Control Valve Body Assembly **Procedure** 1. After repairs, refer to **Control Module References** for programming and set up procedures. 2. Perform the transmission adaptive values learn. Refer to **Transmission Adaptive Values Learn** .
6	Control Valve Body Spacer Plate Assembly
7	Manual Shaft Detent Spring Bolt M6 x 16 (Qty: 1) **Tighten** 12 N.m (106 lb in)
8	Manual Shaft Detent Lever Spring Assembly
9	1-2-3-4 Clutch Fluid Passage Seal **Procedure** DISCARD the seal. Use a seal NEW seal only.
10	Low/Reverse Clutch Fluid Passage Seal **Procedure** DISCARD the seal. Use a seal NEW seal only.

TRANSMISSION FLUID COOLER INLET AND OUTLET PIPE REPLACEMENT (1.8L LWE AND LUW)

Removal Procedure

1. Remove the battery tray. **Battery Tray Replacement** .
2. Raise and support the vehicle. **Lifting and Jacking the Vehicle** .
3. Remove the left front wheelhouse liner. Refer to **Front Wheelhouse Liner Replacement** .

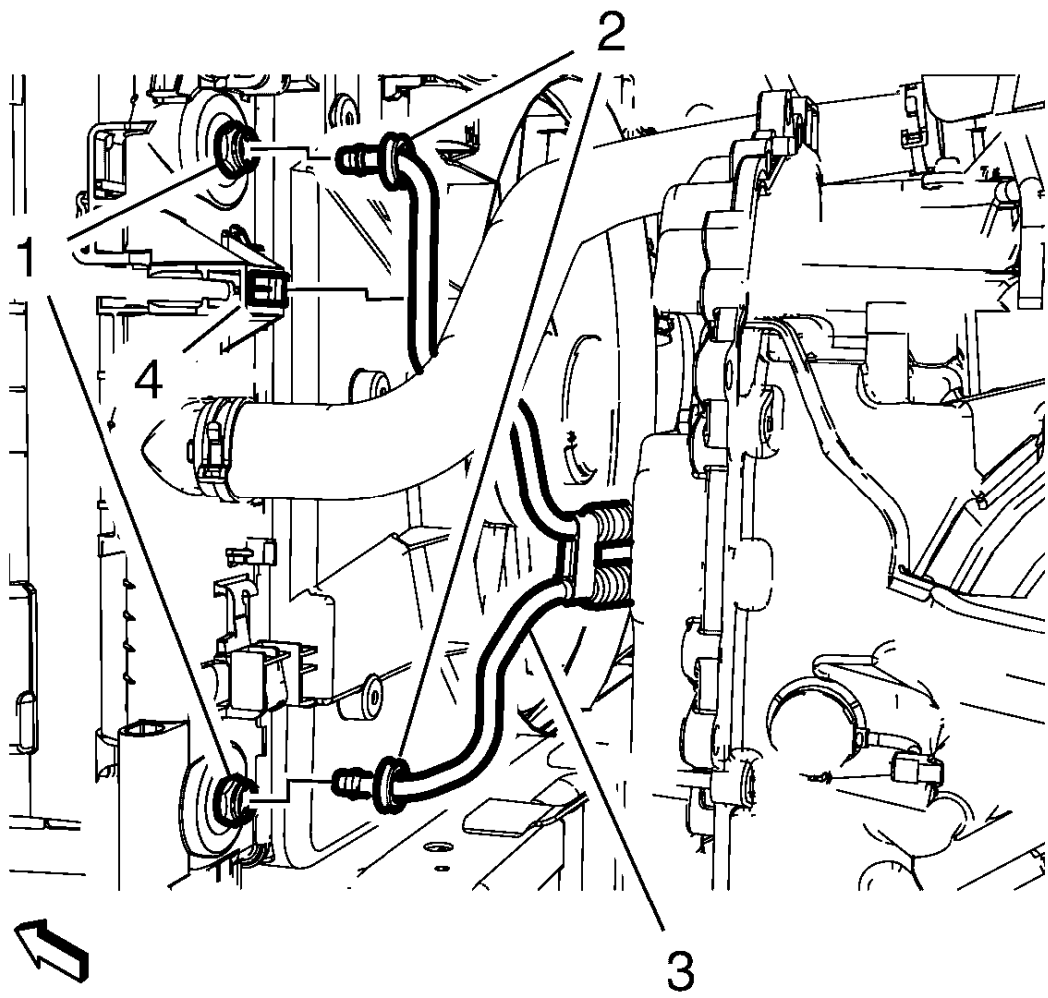

Fig. 80: Plastic Clips And Outlet Pipe
Courtesy of GENERAL MOTORS COMPANY

4. Disconnect the 2 plastic clips (2) from the quick connect fittings of transmission fluid cooler inlet and outlet pipe (1) and down along the pipes (3). Refer to **Transmission Fluid Cooler Hose/Pipe Quick-Connect Fitting Disconnection and Connection**.
5. Remove the transmission fluid cooler outlet pipe from the clip (4) on the fan shroud.
6. Note the routing of the transmission fluid cooler inlet and outlet pipe (3) to ensure proper installation.
7. Plug and/or cap the pipes and the transmission fluid cooler connectors (1) to prevent contamination.

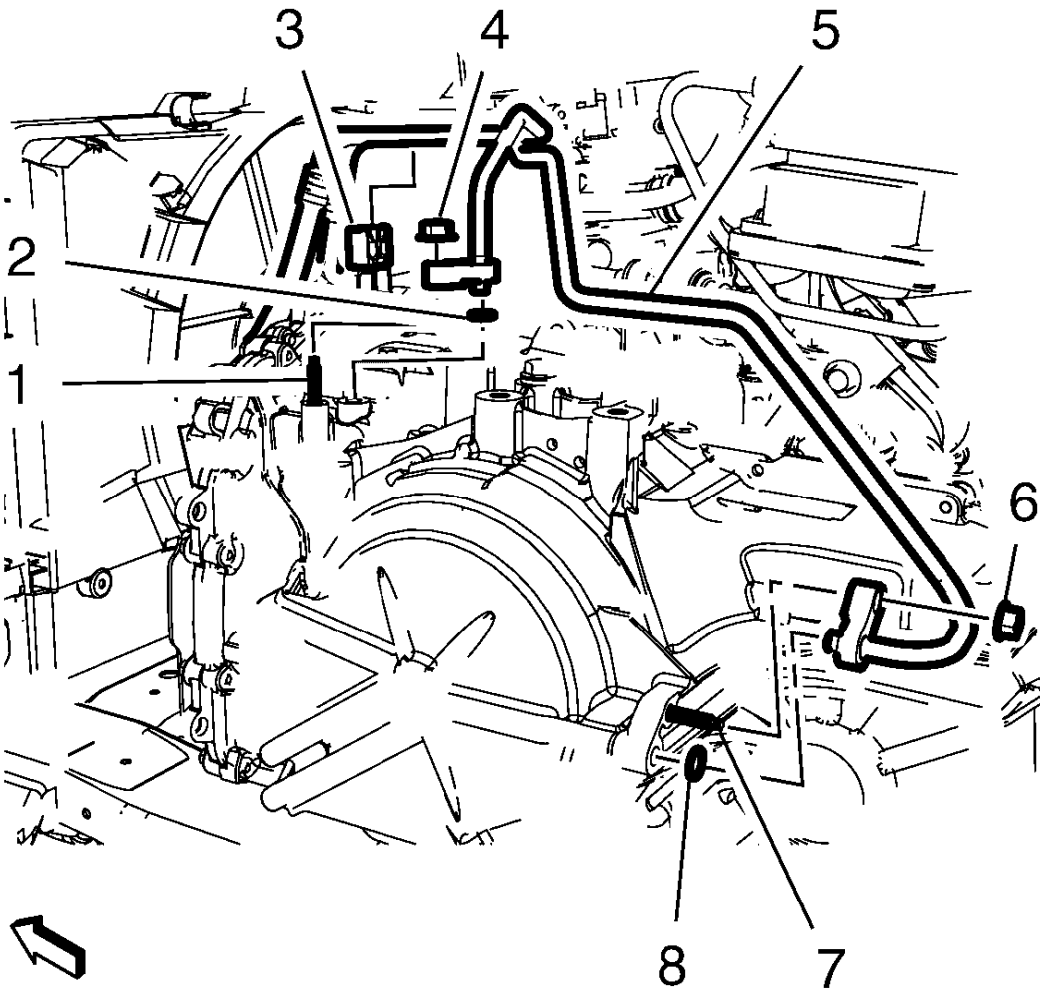

Fig. 81: Inlet Pipe And Transmission Housing Clip
Courtesy of GENERAL MOTORS COMPANY

8. Remove the nut (4) from the transmission fluid cooler inlet pipe fitting bolt (1).
9. Raise the vehicle.
10. Remove the nut (6) from the transmission fluid cooler outlet pipe fitting bolt (7).
11. Lower the vehicle.
12. Remove the transmission fluid cooler outlet and inlet pipe (5) from the transmission housing clip (3).
13. Plug and/or cap the pipes and the transmission to prevent contamination.
14. Remove the transmission fluid cooler outlet and inlet pipe from the vehicle.

Installation Procedure

1. DISCARD the sealing washer and use NEW only.

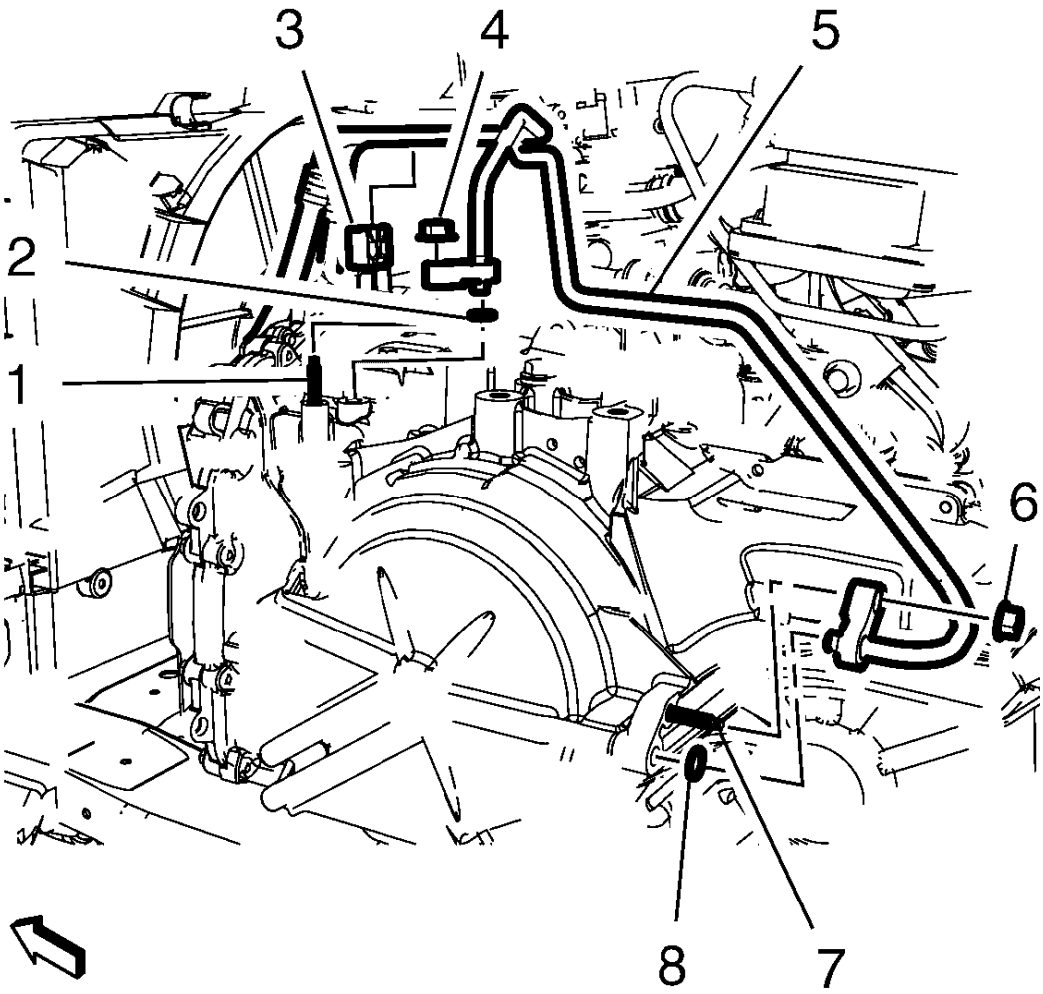

Fig. 82: Inlet Pipe And Transmission Housing Clip
Courtesy of GENERAL MOTORS COMPANY

2. Install the transmission fluid cooler inlet and outlet pipe (5) to the transmission housing clip (3).
3. Raise the vehicle.

CAUTION: Refer to Fastener Caution .

4. Install the nut (6) to the transmission fluid cooler outlet pipe fitting bolt (7) and tighten to 22 N.m (16 lb ft).
5. Lower the vehicle.
6. Install the nut (4) to the transmission fluid cooler inlet pipe fitting bolt (1) and tighten to 22 N.m (16 lb ft).

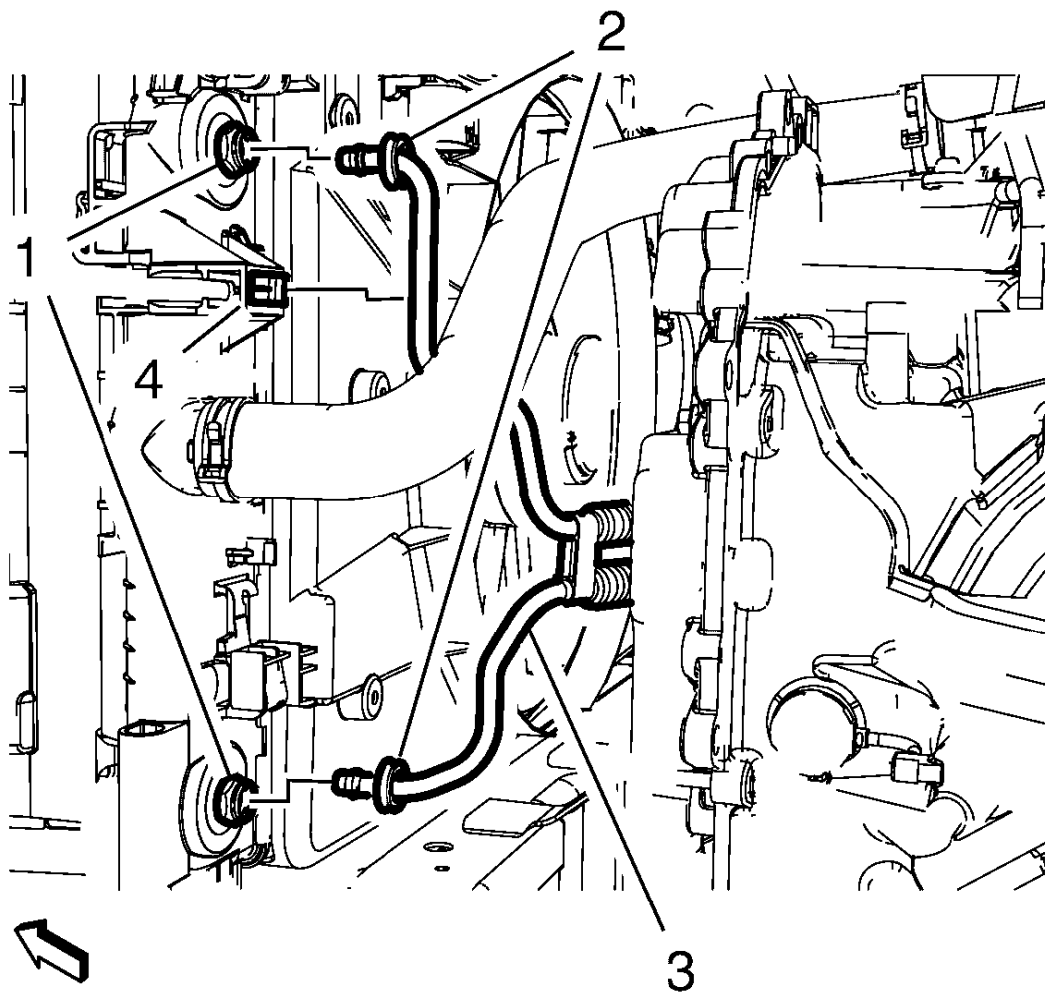

Fig. 83: Plastic Clips And Outlet Pipe
Courtesy of GENERAL MOTORS COMPANY

7. Connect the 2 plastic clips (2) to the quick connect fittings of transmission fluid cooler inlet and outlet pipe (1). Refer to **Transmission Fluid Cooler Hose/Pipe Quick-Connect Fitting Disconnection and Connection**.
8. Install the transmission fluid cooler outlet pipe to the clip to the fan shroud clip (4).
9. Install the battery tray. **Battery Tray Replacement** .
10. Install the left front wheelhouse liner. Refer to **Front Wheelhouse Liner Replacement** .
11. Check and correct the transmission fluid level. Refer to **Transmission Fluid Drain and Fill**.
12. Check for leaks.

OUTPUT SPEED SENSOR REPLACEMENT

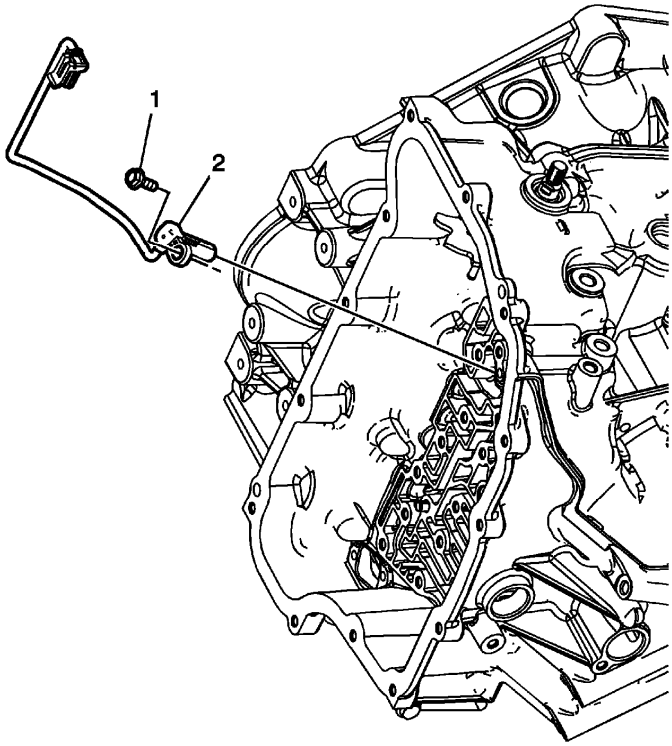

Fig. 84: Identifying Output Speed Sensor
Courtesy of GENERAL MOTORS COMPANY

Output Speed Sensor Replacement

Callout	Component Name
Preliminary Procedure 1. Remove the control valve body. Refer to **Control Valve Body Replacement**. 2. Perform the transmission adaptive values learn procedure. Refer to **Transmission Adaptive Values Learn** .	
1	Output Speed Sensor Bolt M6 x 18 **CAUTION:** **Refer to Fastener Caution .** **Tighten** 12 N.m (106 lb in)
2	Output Speed Sensor

INPUT SPEED SENSOR REPLACEMENT

Removal Procedure

1. Remove the control valve body. Refer to **Control Valve Body Replacement**.

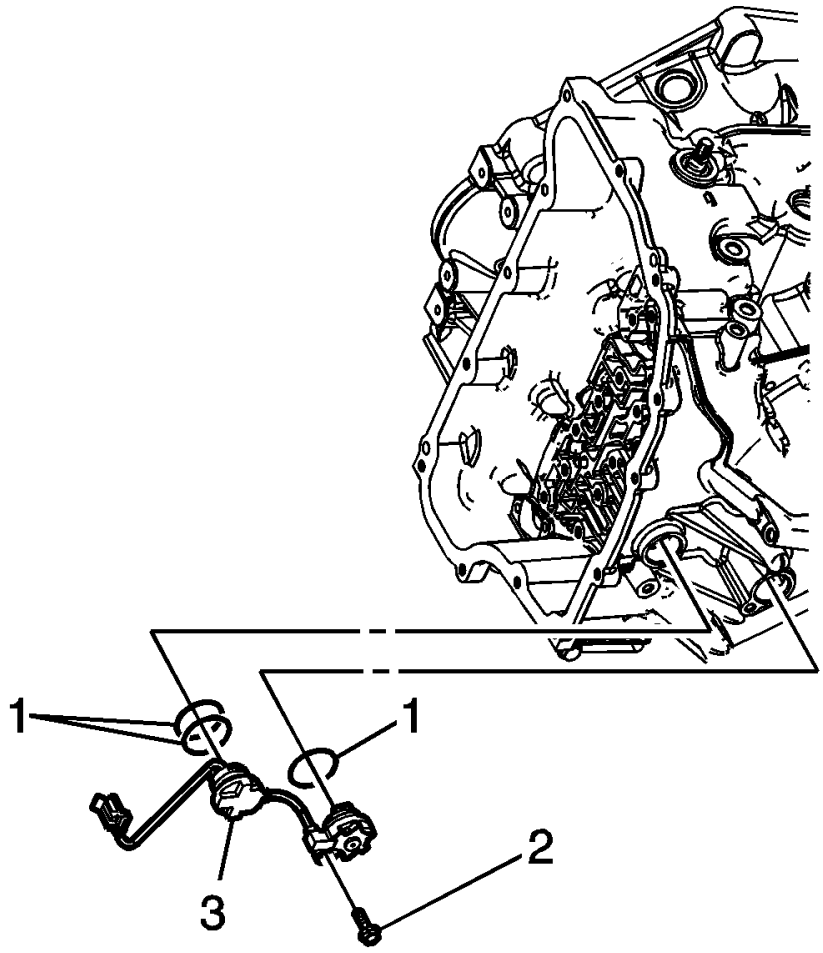

Fig. 85: Identifying Input Speed Sensor Mounting Bolt
Courtesy of GENERAL MOTORS COMPANY

2. Remove the input speed sensor bolt (2) M6 x 23.
3. Unlock the 2 retaining tabs inside the transmission housing.
4. Remove the input speed sensor (3).
5. Remove the 3 input speed sensor seals (1).

Installation Procedure

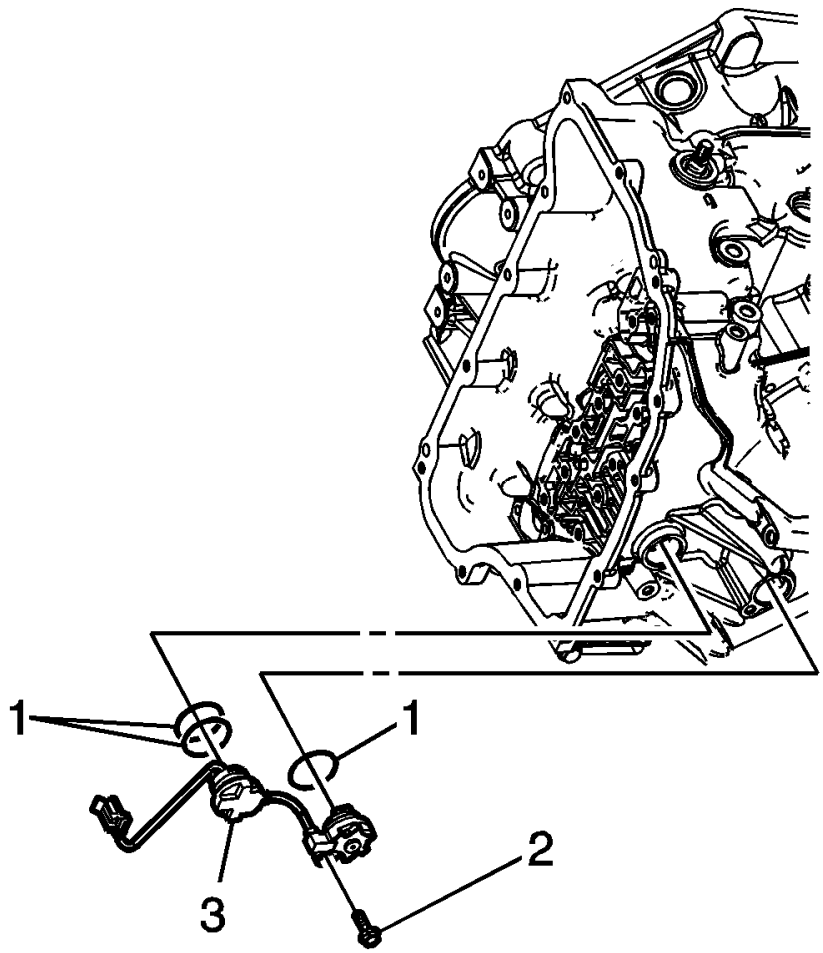

Fig. 86: Identifying Input Speed Sensor Mounting Bolt
Courtesy of GENERAL MOTORS COMPANY

1. Install the 3 input speed sensor seals (1).
2. Install the input speed sensor (3).
3. Verify that the retaining tabs are locked completely.

CAUTION: Refer to Fastener Caution .

4. Install the input speed sensor bolt (2) M6 x 23 and tighten to 9 N.m (80 lb in).
5. Install the control valve body. Refer to **Control Valve Body Replacement**.
6. Perform the transmission adaptive values learn procedure. Refer to **Transmission Adaptive Values Learn** .

TRANSMISSION MOUNT BRACKET REPLACEMENT - REAR

Removal Procedure

1. Raise and support the vehicle. Refer to **Lifting and Jacking the Vehicle** .
2. Using a suitable jack stand, support the rear of the transmission.

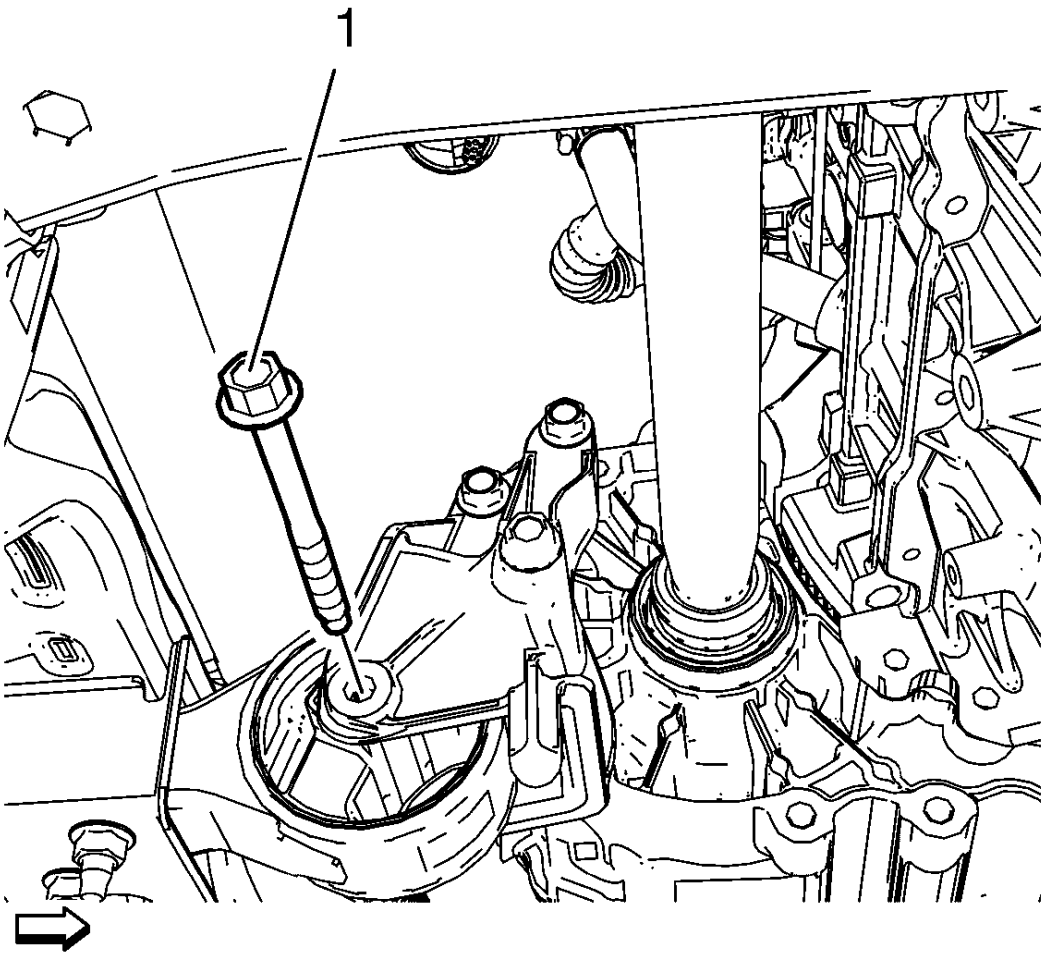

Fig. 87: Transmission Bracket Mount To Mount Through Bolt
Courtesy of GENERAL MOTORS COMPANY

3. Remove the rear transmission mount bracket to rear mount through bolt (1).

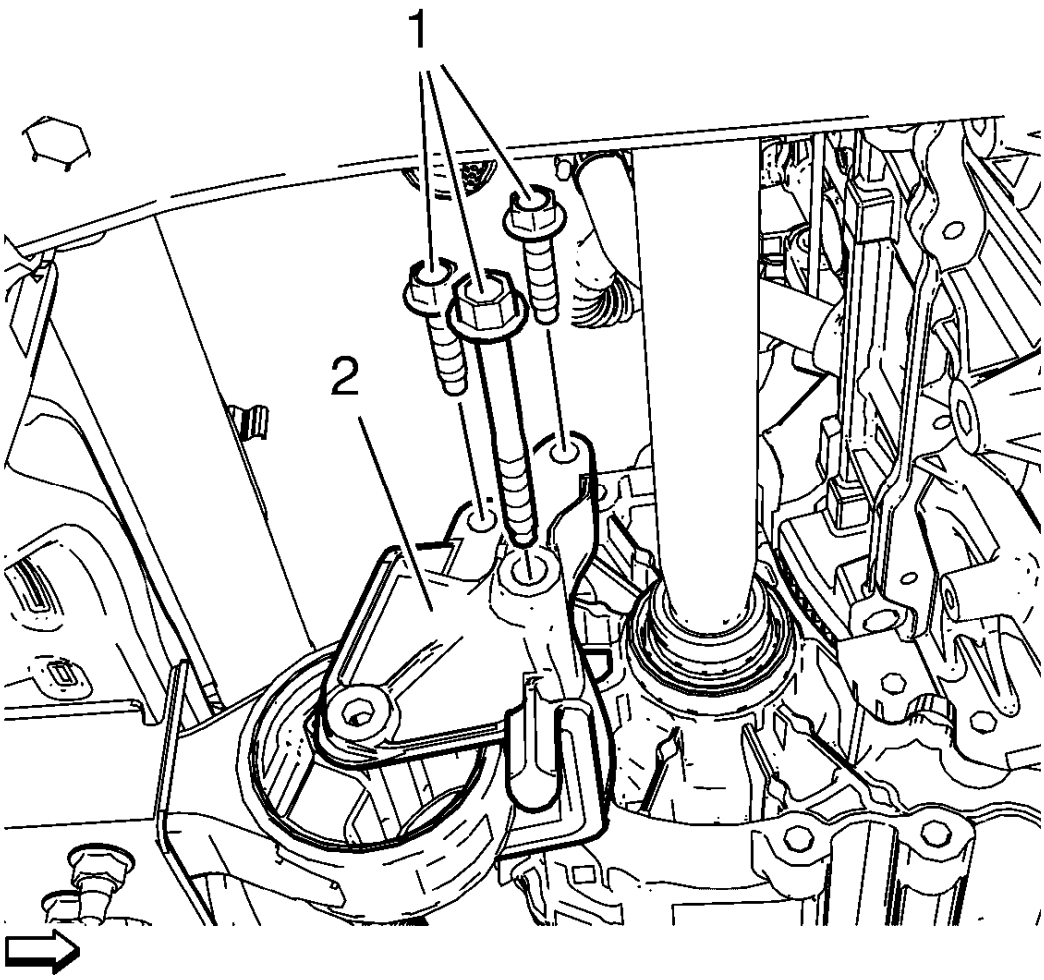

Fig. 88: Automatic Transmission Mount Bracket Bolts
Courtesy of GENERAL MOTORS COMPANY

4. Remove the 3 rear transmission mount bracket to transmission bolts (1).
5. Remove the rear transmission mount bracket (2).

Installation Procedure

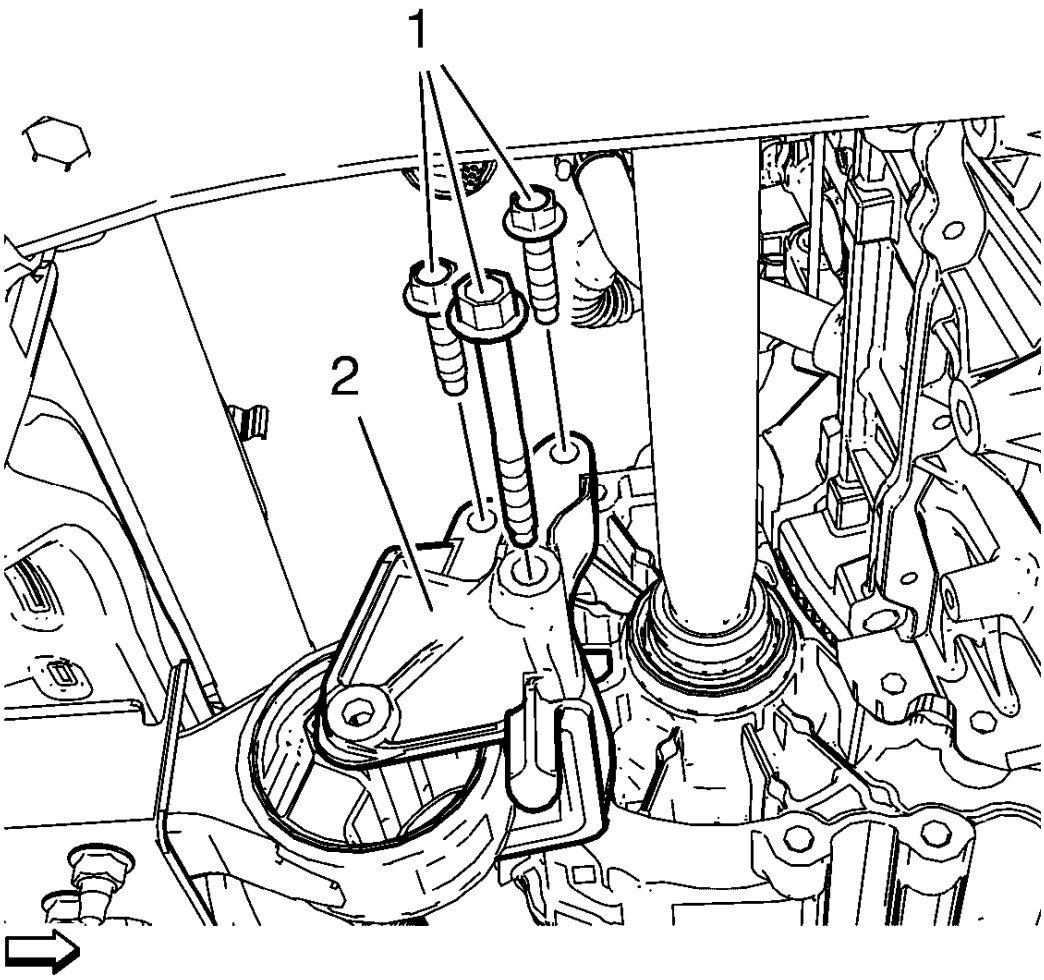

Fig. 89: Automatic Transmission Mount Bracket Bolts
Courtesy of GENERAL MOTORS COMPANY

1. Install the rear transmission mount bracket (2).

CAUTION: Refer to Fastener Caution .

2. Install the 3 rear transmission mount bracket to transmission bolts (1) and tighten to 100 N.m (74 lb ft).

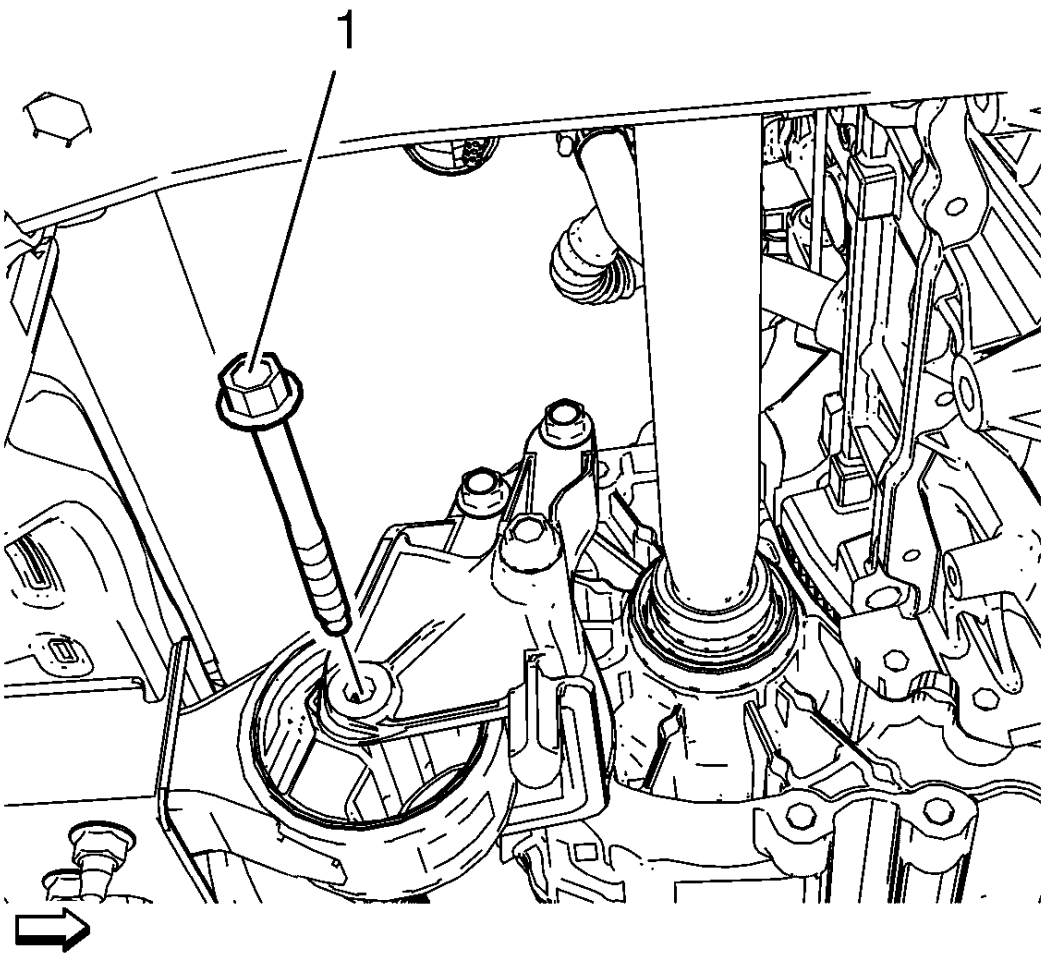

Fig. 90: Transmission Bracket Mount To Mount Through Bolt
Courtesy of GENERAL MOTORS COMPANY

3. Install the rear transmission mount bracket to rear mount through bolt (1) and tighten to 100 N.m (74 lb ft).
4. Remove the jack stand.
5. Lower the vehicle.

TRANSMISSION MOUNT REPLACEMENT - LEFT SIDE

Special Tools

EN-45059 Angle Meter

For regional equivalent tools, refer to **Special Tools** .

Removal Procedure

1. Remove the battery tray. Refer to **Battery Tray Replacement** .
2. Use an engine lifter to raise and lower the engine.

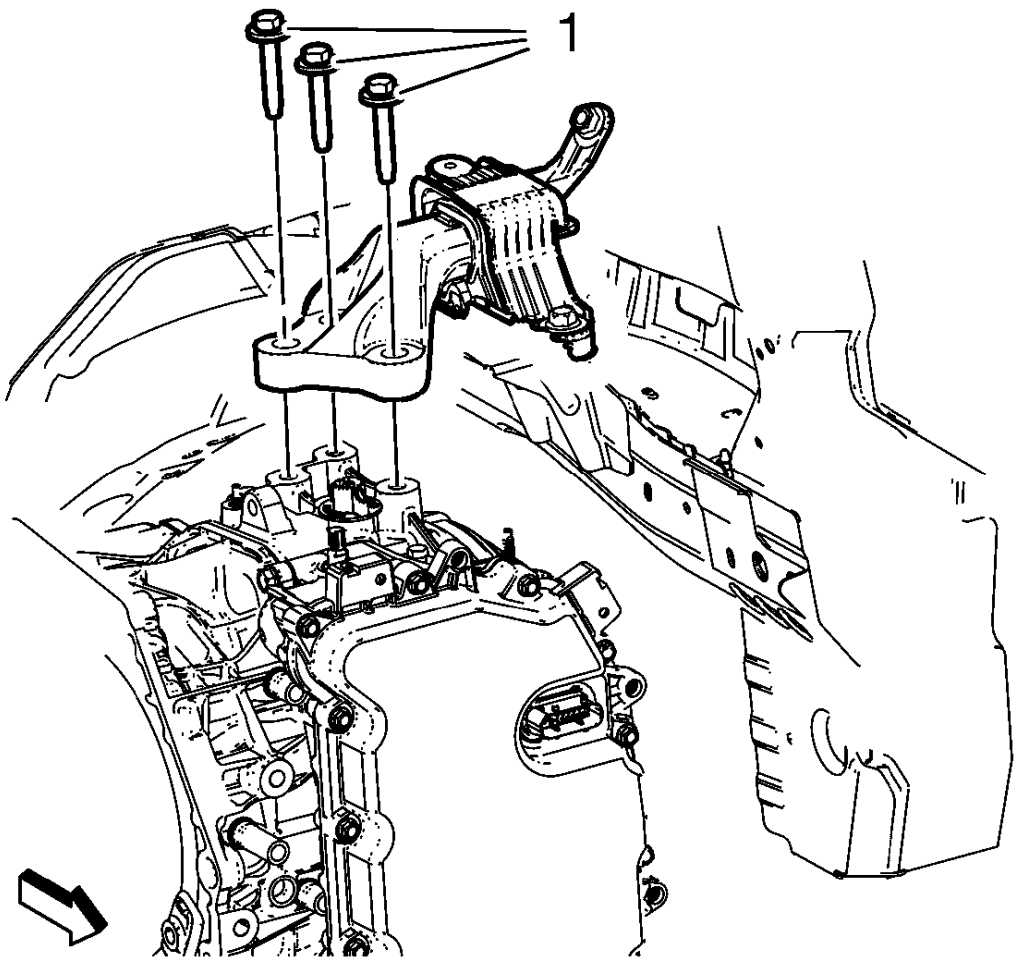

Fig. 91: Left Transmission Mount Bolts
Courtesy of GENERAL MOTORS COMPANY

3. Remove and DISCARD the left transmission mount to the bracket bolts (1).

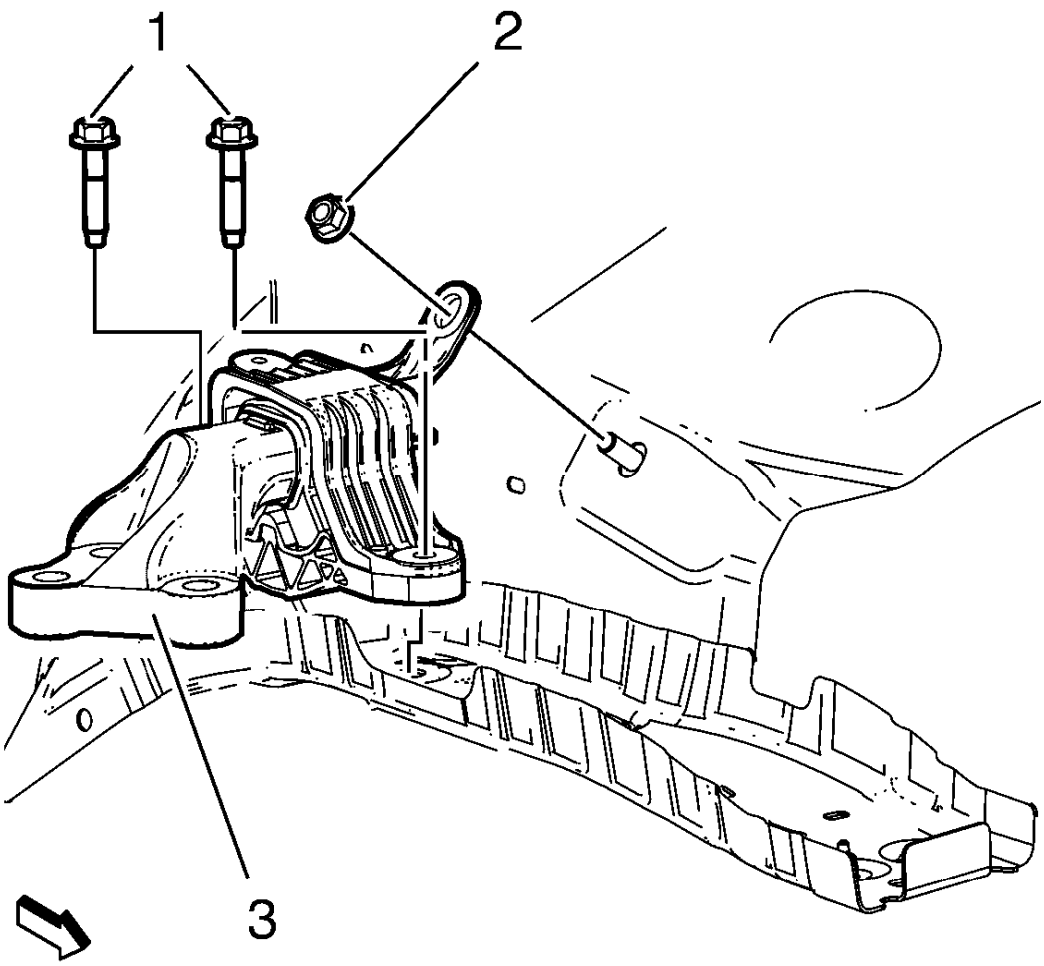

Fig. 92: Left Transmission Mount
Courtesy of GENERAL MOTORS COMPANY

4. Remove the left transmission mount to the body bolts (1).
5. Remove the left transmission mount to the body nut (2).
6. Remove the transmission mount (3) from the vehicle.

Installation Procedure

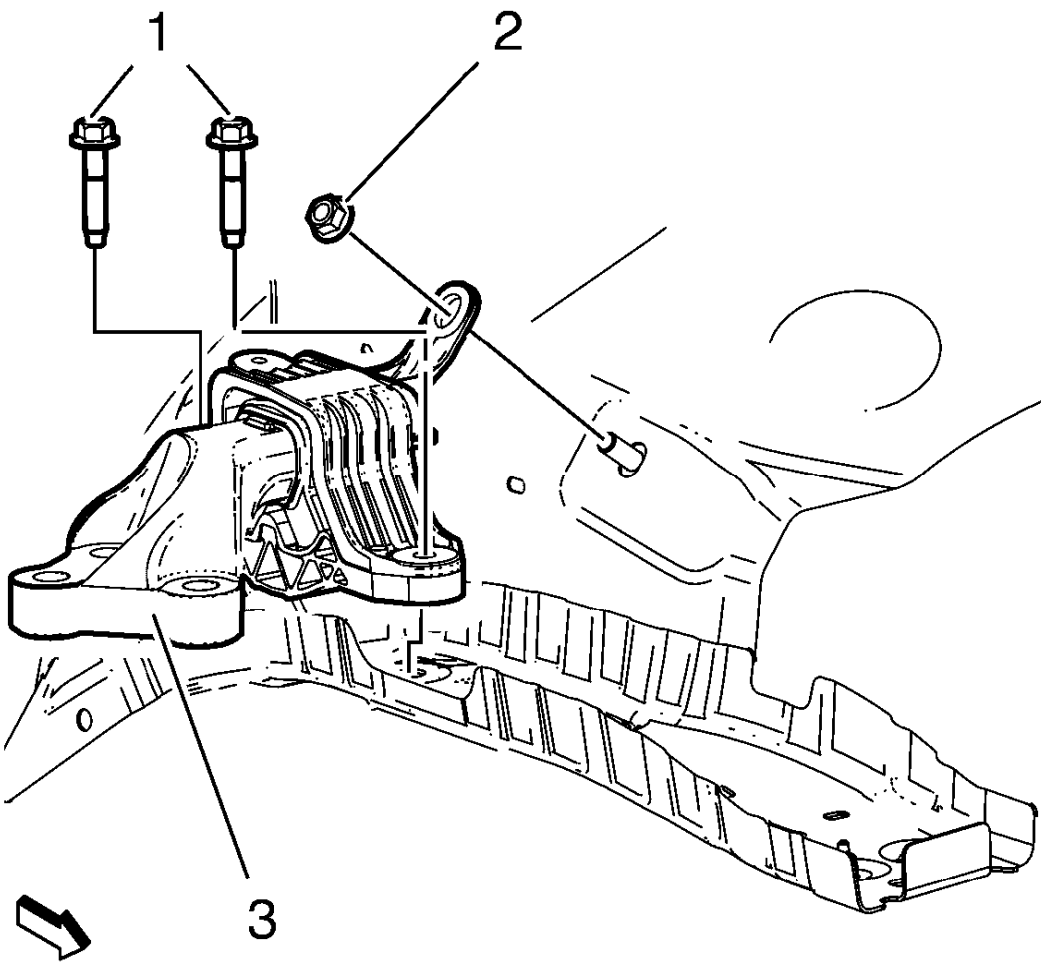

Fig. 93: Left Transmission Mount
Courtesy of GENERAL MOTORS COMPANY

1. Install the left transmission mount (3) to the vehicle.

CAUTION: Refer to Fastener Caution .

2. Install the transmission mount to the body bolts (1) and tighten to 62 N.m (46 lb ft).
3. Install the transmission mount to the body nut (2) and tighten to 62 N.m (46 lb ft).

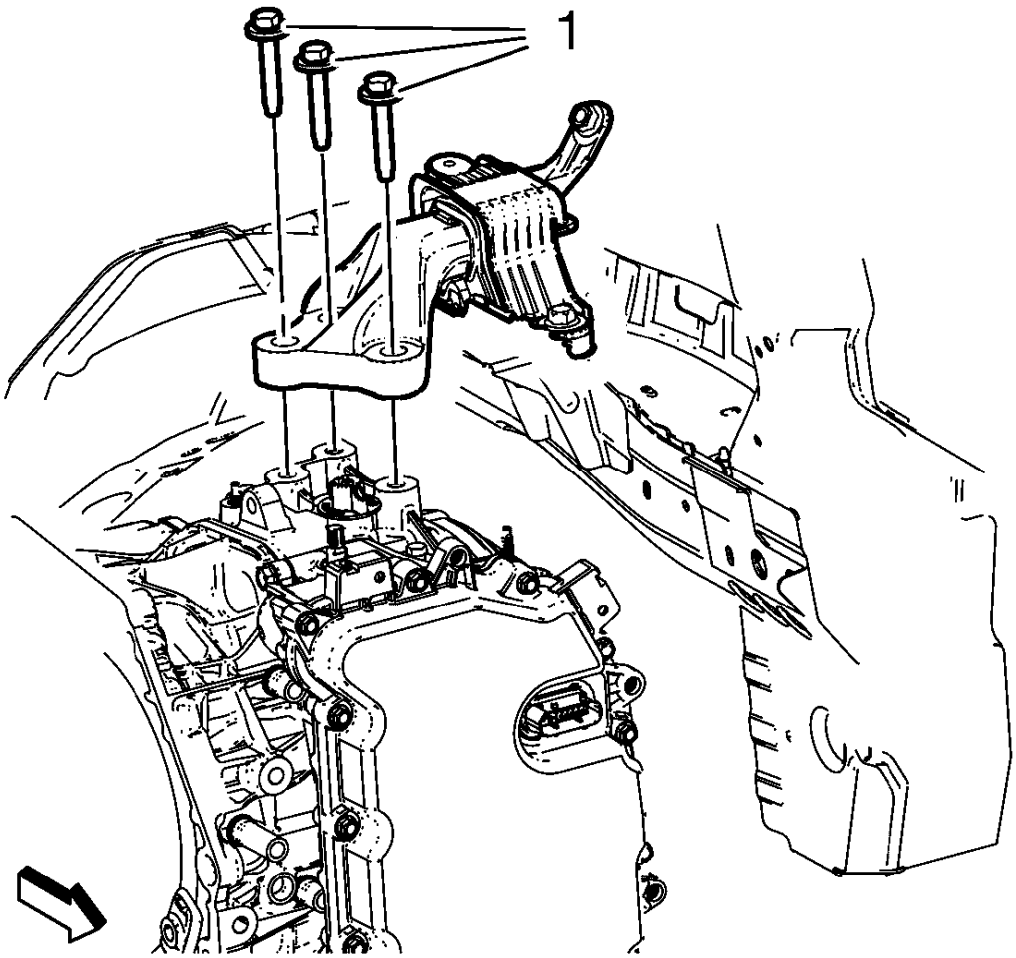

Fig. 94: Left Transmission Mount Bolts
Courtesy of GENERAL MOTORS COMPANY

CAUTION: Refer to Torque-to-Yield Fastener Caution .

4. Install the 3 NEW transmission mount bolts (1) and tighten a first pass to 50 N.m (37 lb ft).
5. Tighten the 3 NEW transmission mount bolts (1) a final pass to an additional 60-75 degrees, using the **EN-45059** meter.
6. Install the battery tray. Refer to **Battery Tray Replacement** .

TRANSMISSION FRONT MOUNT REPLACEMENT

Removal Procedure

1. Raise and support the vehicle. Refer to **Lifting and Jacking the Vehicle** .

2. Support the front of the transmission using a suitable jack stand.

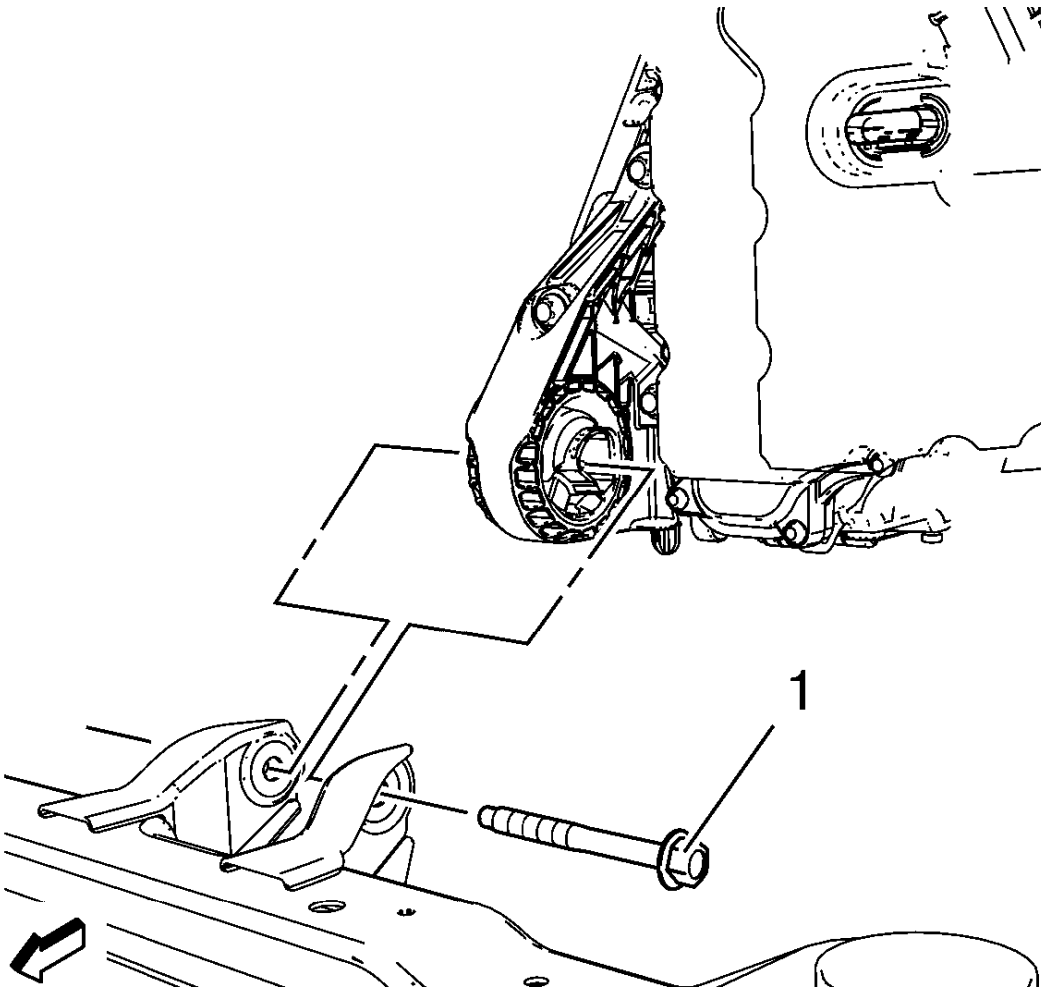

Fig. 95: Front Transmission Mount Through Bolt
Courtesy of GENERAL MOTORS COMPANY

3. Remove the transmission front mount through bolt (1).

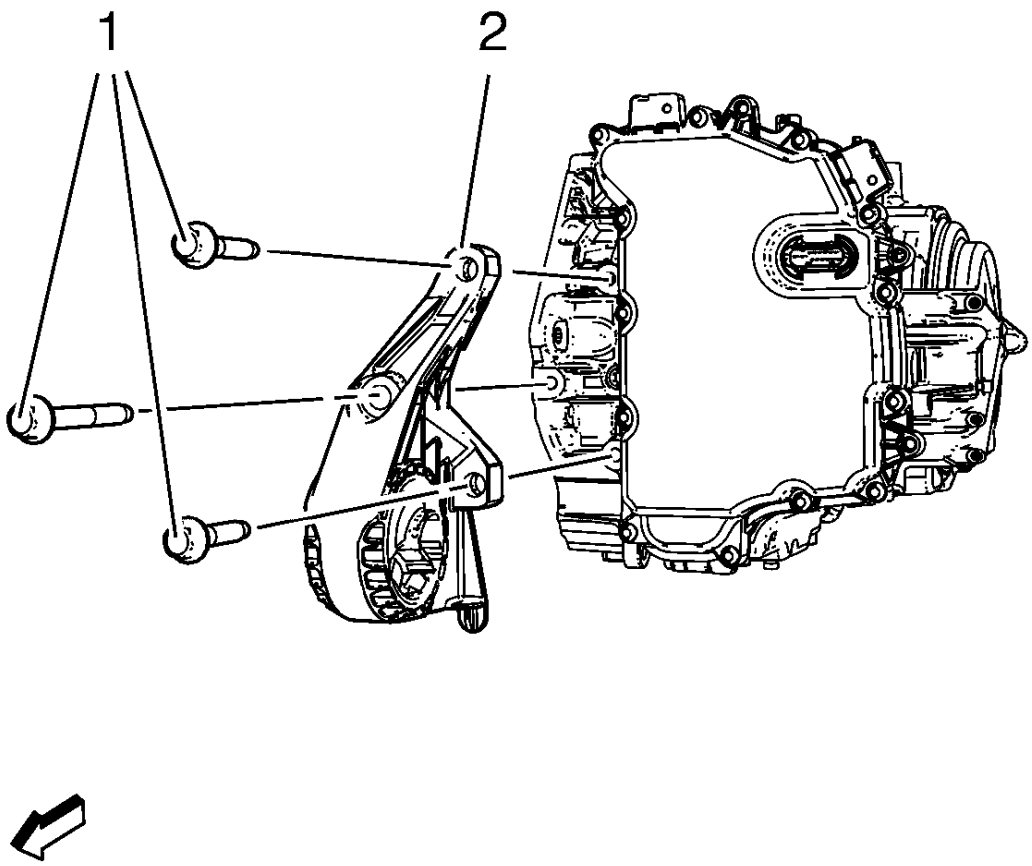

Fig. 96: Automatic Transmission Mount Bolts
Courtesy of GENERAL MOTORS COMPANY

4. Remove the transmission front mount bolts (1).
5. Remove the transmission front mount (1).

Installation Procedure

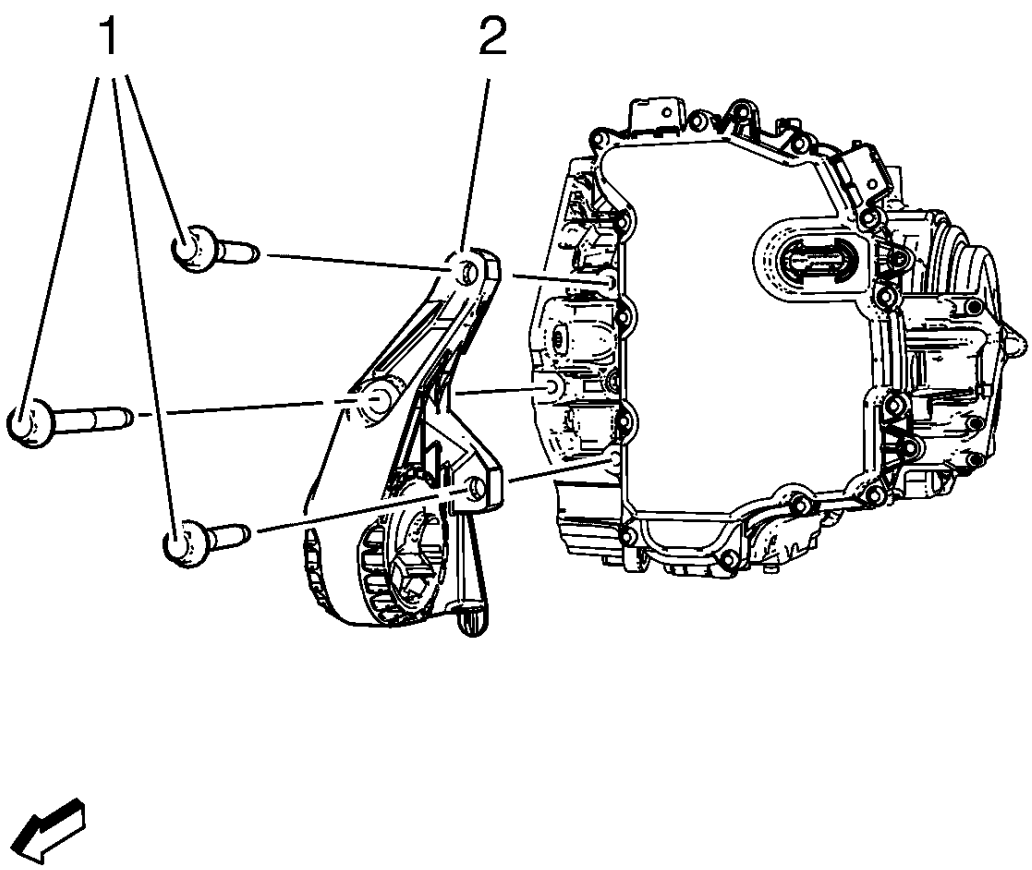

Fig. 97: Automatic Transmission Mount Bolts
Courtesy of GENERAL MOTORS COMPANY

1. Install the transmission front mount (2).

CAUTION: Refer to Fastener Caution .

2. Install the transmission front mount bolts (1) and tighten to 62 N.m (46 lb ft).

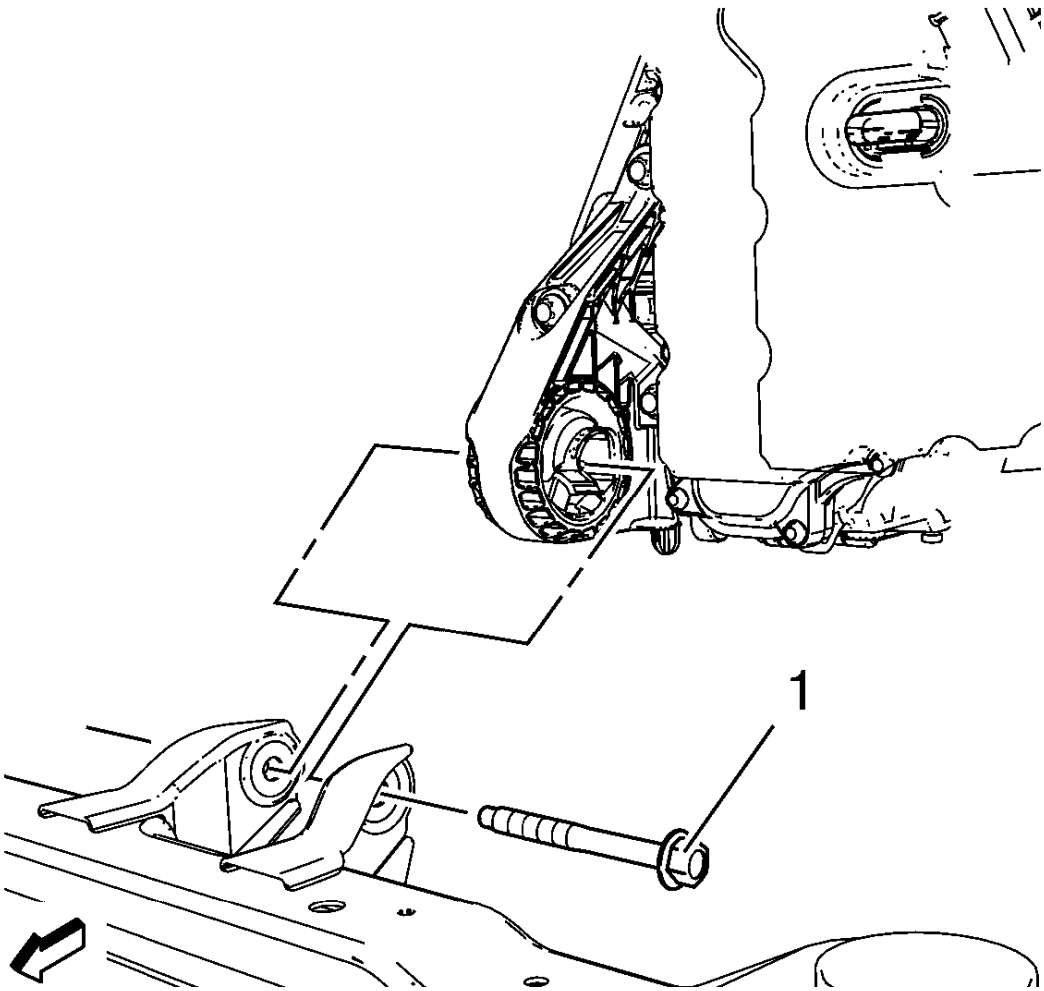

Fig. 98: Front Transmission Mount Through Bolt
Courtesy of GENERAL MOTORS COMPANY

3. Install the transmission front mount through bolt (1) and tighten to 100 N.m (74 lb ft).
4. Remove the jack stand.
5. Lower the vehicle.

TRANSMISSION REAR MOUNT REPLACEMENT

Removal Procedure

1. Remove steering gear - EPS. Refer to **Steering Gear Replacement** .
2. Remove rear transmission mount bracket. Refer to **Transmission Mount Bracket Replacement - Rear**.

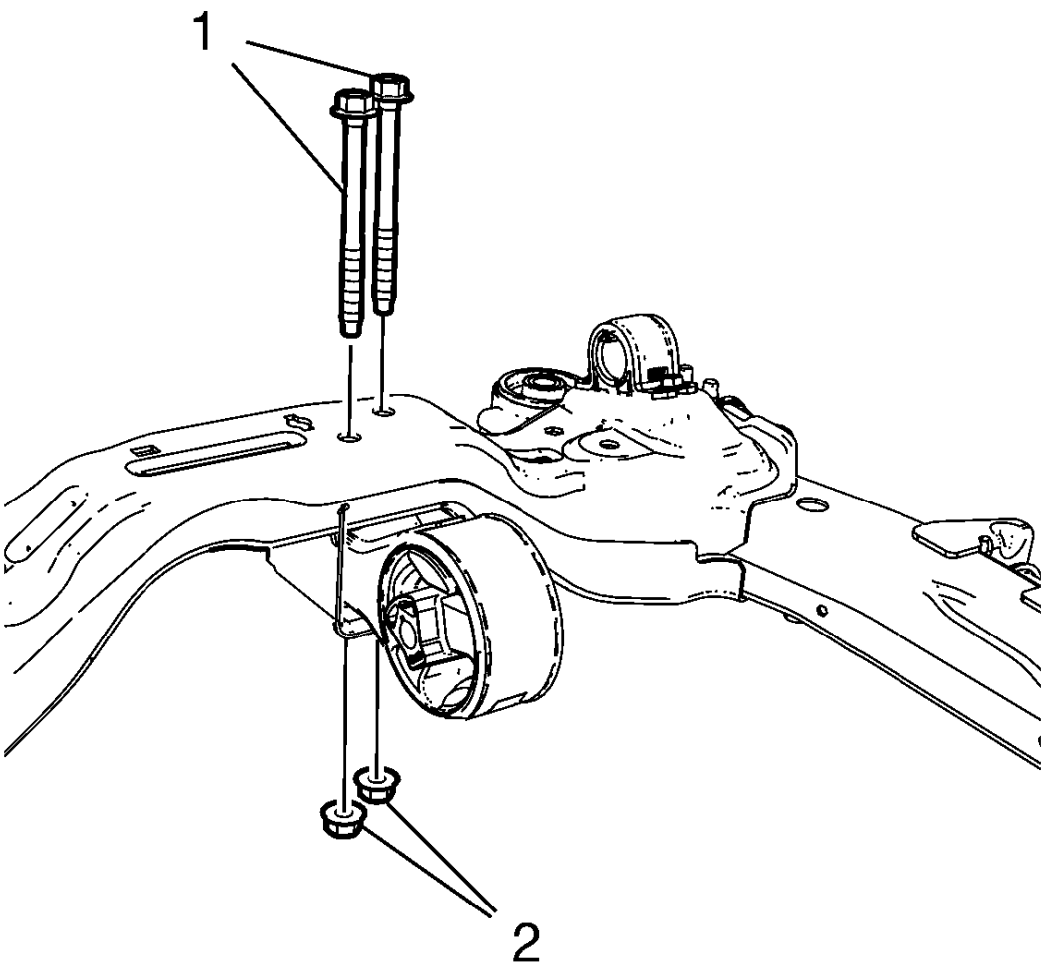

Fig. 99: Automatic Transmission Mount Bolts
Courtesy of GENERAL MOTORS COMPANY

3. Remove rear transmission mount to frame bolts (1) and nuts (2).
4. Remove rear transmission mount.

Installation Procedure

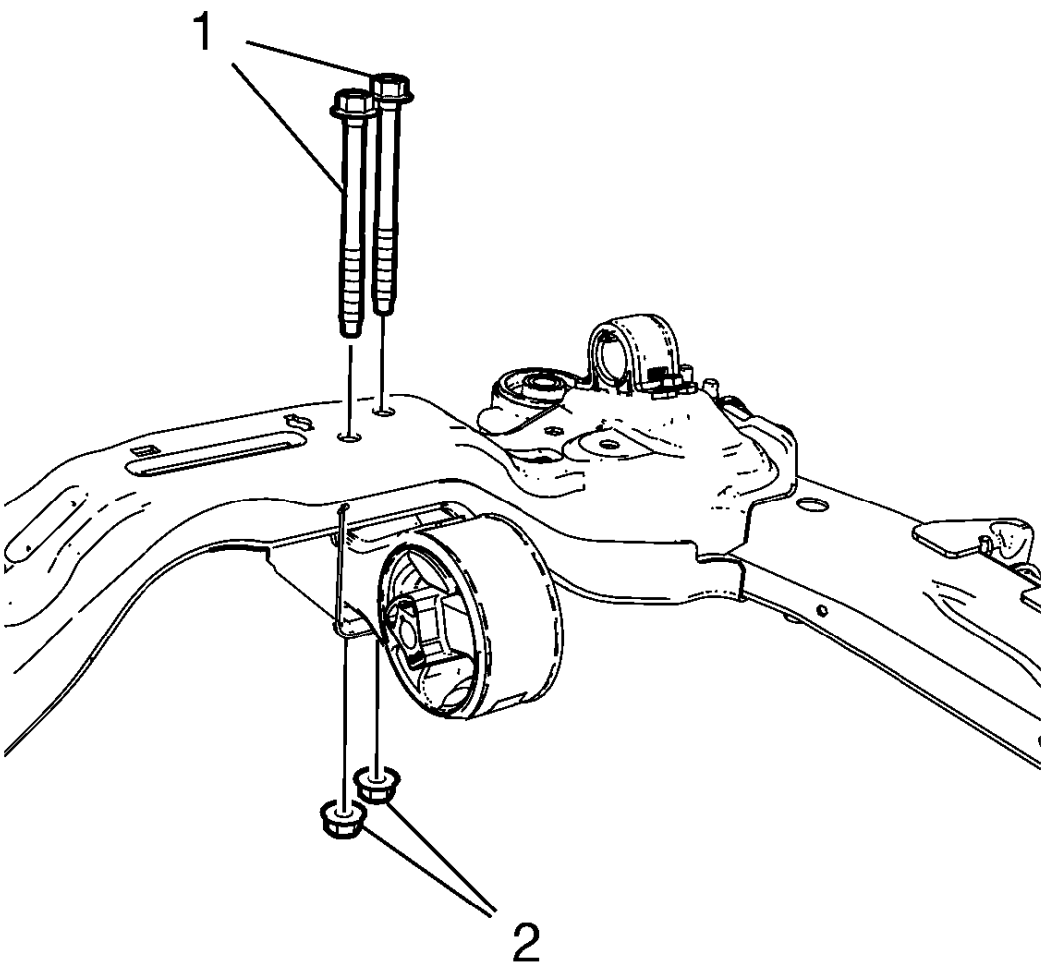

Fig. 100: Automatic Transmission Mount Bolts
Courtesy of GENERAL MOTORS COMPANY

1. Install rear transmission mount.

CAUTION: Refer to Fastener Caution .

2. Install rear transmission mount to frame bolts (1) and nuts (2) and tighten to 110 N.m (81 lb ft).
3. Install rear transmission mount bracket. Refer to **Transmission Mount Bracket Replacement - Rear**.
4. Install steering gear - EPS. Refer to **Steering Gear Replacement** .

TRANSMISSION REPLACEMENT

Removal Procedure

1. Remove battery tray. Refer to **Battery Tray Replacement** .
2. Remove transmission range selector lever cable and bracket. Refer to **Range Selector Lever Cable Bracket Replacement**.
3. Raise and support the vehicle. Refer to **Lifting and Jacking the Vehicle** .
4. Remove the left front wheelhouse liner. Refer to **Front Wheelhouse Liner Replacement** .
5. Drain transmission fluid.
6. Remove radiator inlet hose. Refer to **Radiator Inlet Hose Replacement (1.4L LUV)** , **Radiator Inlet Hose Replacement (1.8L LUW and LWE)** .
7. Remove charge air cooler outlet air hose.

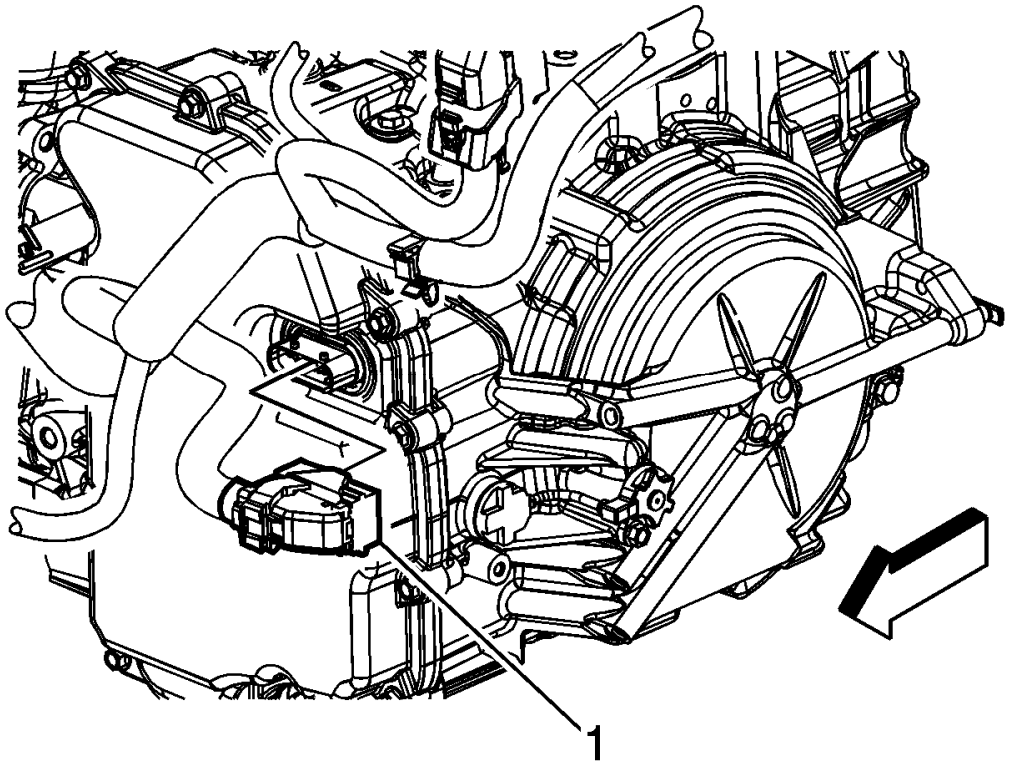

Fig. 101: Identifying Control Valve Body Transmission Control Module (TCM) Electrical Connector
Courtesy of GENERAL MOTORS COMPANY

8. Disconnect electrical connector (1) transmission control module (TCM), then disconnect the connector from the transmission.
9. Remove transmission fluid cooler inlet pipe and outlet pipe from the transmission. Refer to **Transmission**

Fluid Cooler Inlet and Outlet Pipe Replacement (1.8L LWE and LUW).

10. Discard the inlet pipe seal.
11. Discard the outlet pipe seal.
12. Plug and/or cap the pipes and transmission to prevent contamination.
13. Remove transmission vent hose.
14. Remove wiring harness for the starter motor from transmission. Remove bolt from retainer on valve body cover. Disconnect the wiring harness from retainer on valve body cover and range selector cable bracket.

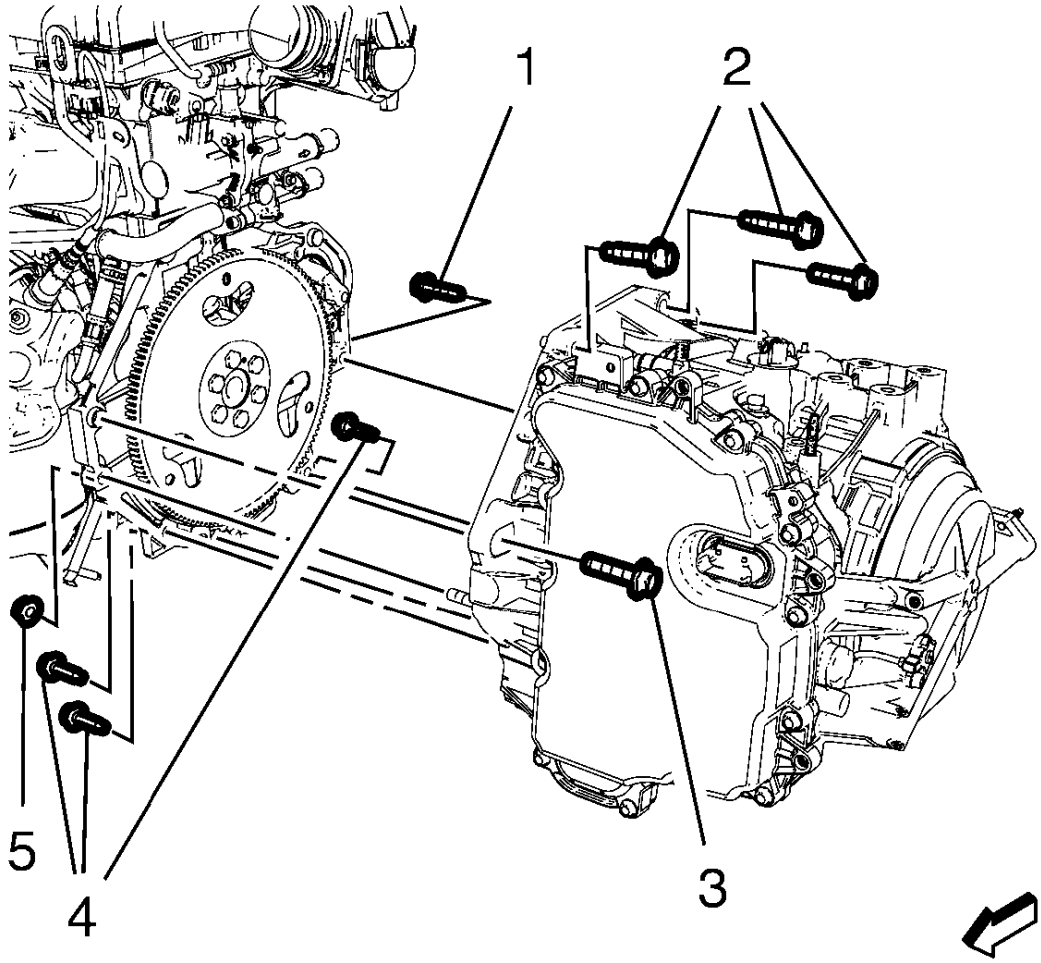

Fig. 102: Identifying Automatic Transmission Mounting Bolts
Courtesy of GENERAL MOTORS COMPANY

15. Remove the 3 upper transmission bolts (2).
16. Raise the vehicle.
17. Install the engine support fixture. For the 1.4L engine, refer to **Engine Support Fixture** .

    For the 1.8L engine, refer to **Engine Support Fixture** .

18. Remove the drivetrain and front suspension frame. Refer to **Drivetrain and Front Suspension Frame Replacement** .
19. Disconnect the left front wheel drive shaft from transmission. Refer to **Front Wheel Drive Shaft Replacement - Left Side** .
20. Disconnect the right front wheel drive shaft from transmission. Refer to **Front Wheel Drive Shaft Replacement - Right Side** .
21. Remove the transmission rear mount bracket from the transmission. Refer to **Transmission Mount Bracket Replacement - Rear**.
22. Remove the transmission front mount from the transmission. Refer to **Transmission Front Mount Replacement**.

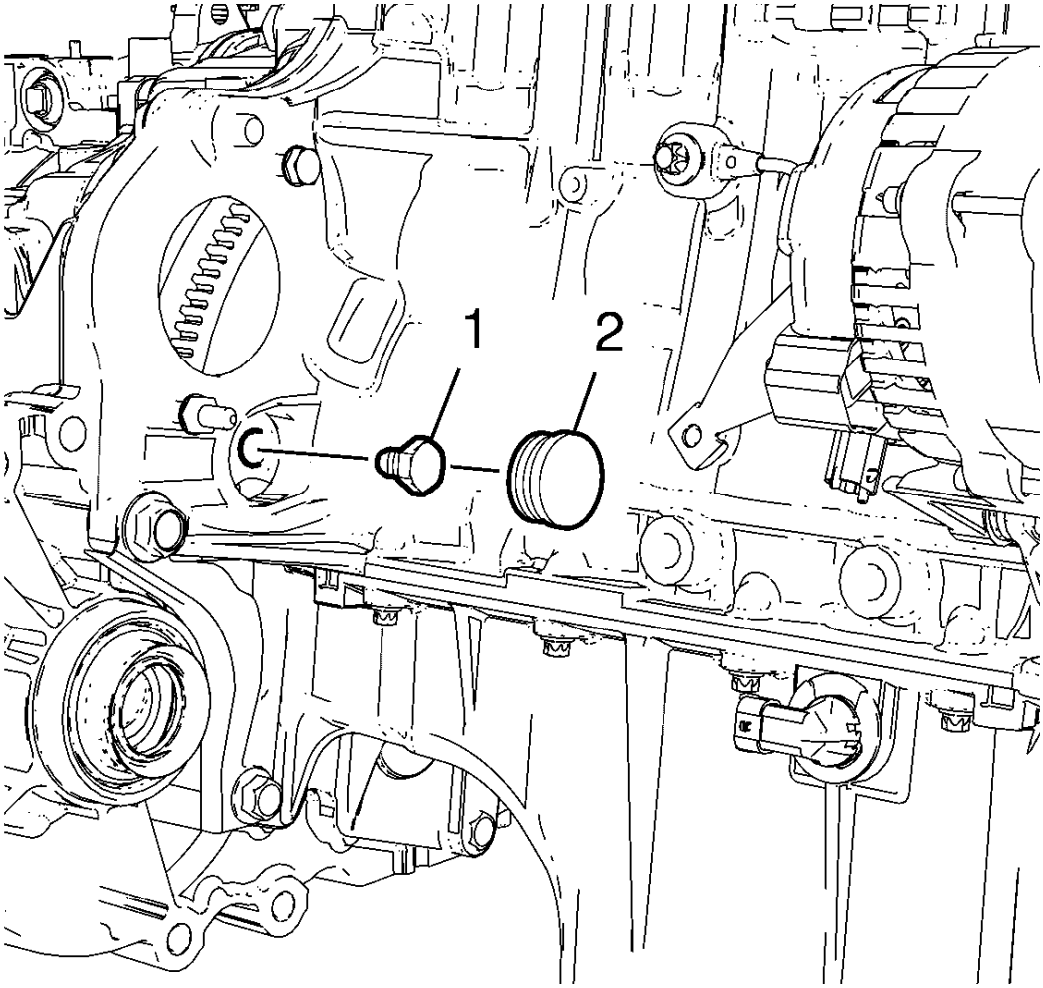

Fig. 103: Identifying Flex Plate To Torque Converter Bolts
Courtesy of GENERAL MOTORS COMPANY

23. Remove the starter motor. Refer to **Starter Replacement (1.4L LUV)** , **Starter Replacement (1.8L LUW and LWE)** .

24. Remove access cover from transmission.
25. Mark the relationship of the flex plate to the torque converter for reassembly.
26. Remove and DISCARD the flex plate to torque converter bolts (1).
27. Lower the vehicle.
28. Remove and DISCARD the 3 left transmission mount bolts from the transmission. Refer to **Transmission Mount Replacement - Left Side**.
29. Lower the engine and the transmission on the left hand side with the engine support fixture to allow clearance for removal.
30. Raise the vehicle.
31. Position a suitable transmission jack under the transmission.
32. Secure the transmission to the transmission jack using suitable straps or chains.

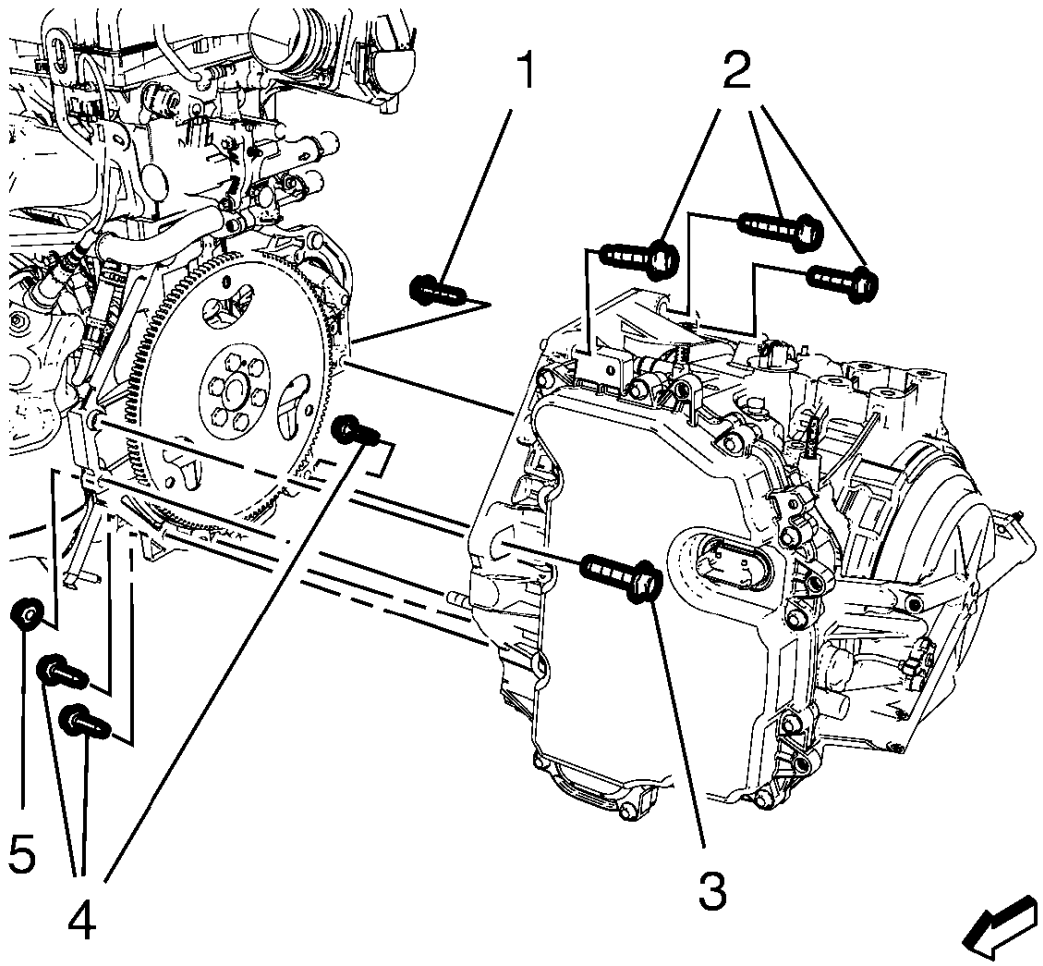

Fig. 104: Identifying Automatic Transmission Mounting Bolts
Courtesy of GENERAL MOTORS COMPANY

33. Remove the transmission bolts (1, 3, 4) and nut (5).

NOTE: Insure the torque converter remains securely in place on the transmission input shaft while separating and removing the transmission.

34. Separate the transmission from the engine.
35. Lower the transmission from the vehicle.
36. Flush and flow test the transmission oil cooler and lines. Refer to **Transmission Fluid Cooler Flushing and Flow Test** .

Installation Procedure

1. If the removed transmission will be reinstalled, clean 3 threads of torque converter.
2. Raise the transmission with the transmission jack and position the transmission to the engine.

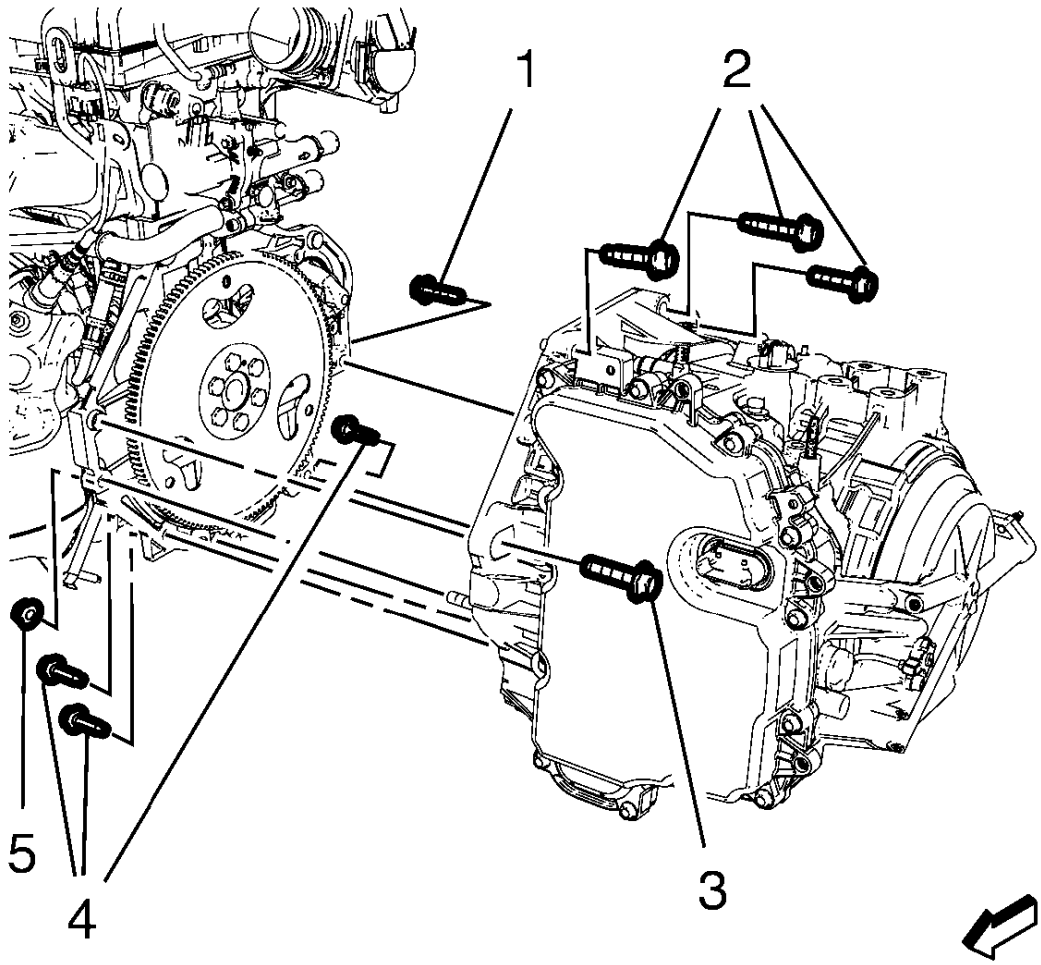

Fig. 105: Identifying Automatic Transmission Mounting Bolts

Courtesy of GENERAL MOTORS COMPANY

CAUTION: Refer to Fastener Caution .

3. Install the transmission bolts (1, 3) and tighten to 70 N.m (52 lb ft).
4. Install the transmission bolts (4) and tighten to 45 N.m (33 lb ft).
5. Install the transmission nut (5) and tighten to 45 N.m (33 lb ft).
6. Remove the transmission jack.
7. Lower the vehicle.
8. Raise the engine and the transmission on the left hand side with the engine support fixture.
9. Install the 3 NEW left transmission mount bolts but do not tighten at this time.
10. Raise the vehicle.

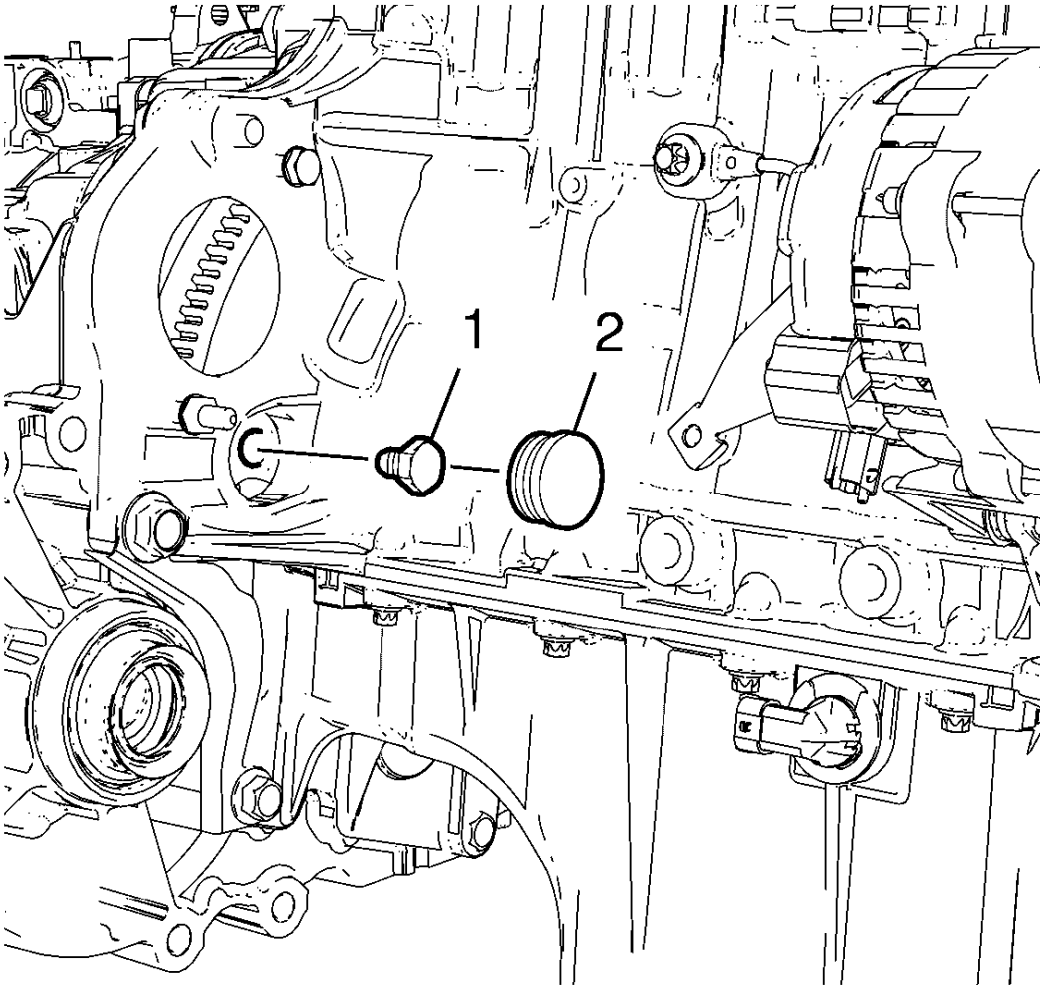

Fig. 106: Identifying Flex Plate To Torque Converter Bolts

Courtesy of GENERAL MOTORS COMPANY

CAUTION: Refer to Torque-to-Yield Fastener Caution .

11. Install the NEW flex plate to torque converter bolts (1) and tighten to 60 N.m (45 lb ft).
12. Install access cover on the transmission.
13. Install the starter motor. Refer to **Starter Replacement (1.4L LUV)** , **Starter Replacement (1.8L LUW and LWE)** .
14. Install the transmission rear mount bracket to the transmission. Refer to **Transmission Mount Bracket Replacement - Rear**.
15. Install the transmission front mount to the transmission. Refer to **Transmission Front Mount Replacement**.
16. Install the right front wheel drive shaft to the transmission. Refer to **Front Wheel Drive Shaft Replacement - Right Side** .
17. Install the left front wheel drive shaft to the transmission. Refer to **Front Wheel Drive Shaft Replacement - Left Side** .
18. Install the drivetrain and front suspension frame. Refer to **Drivetrain and Front Suspension Frame Replacement** .

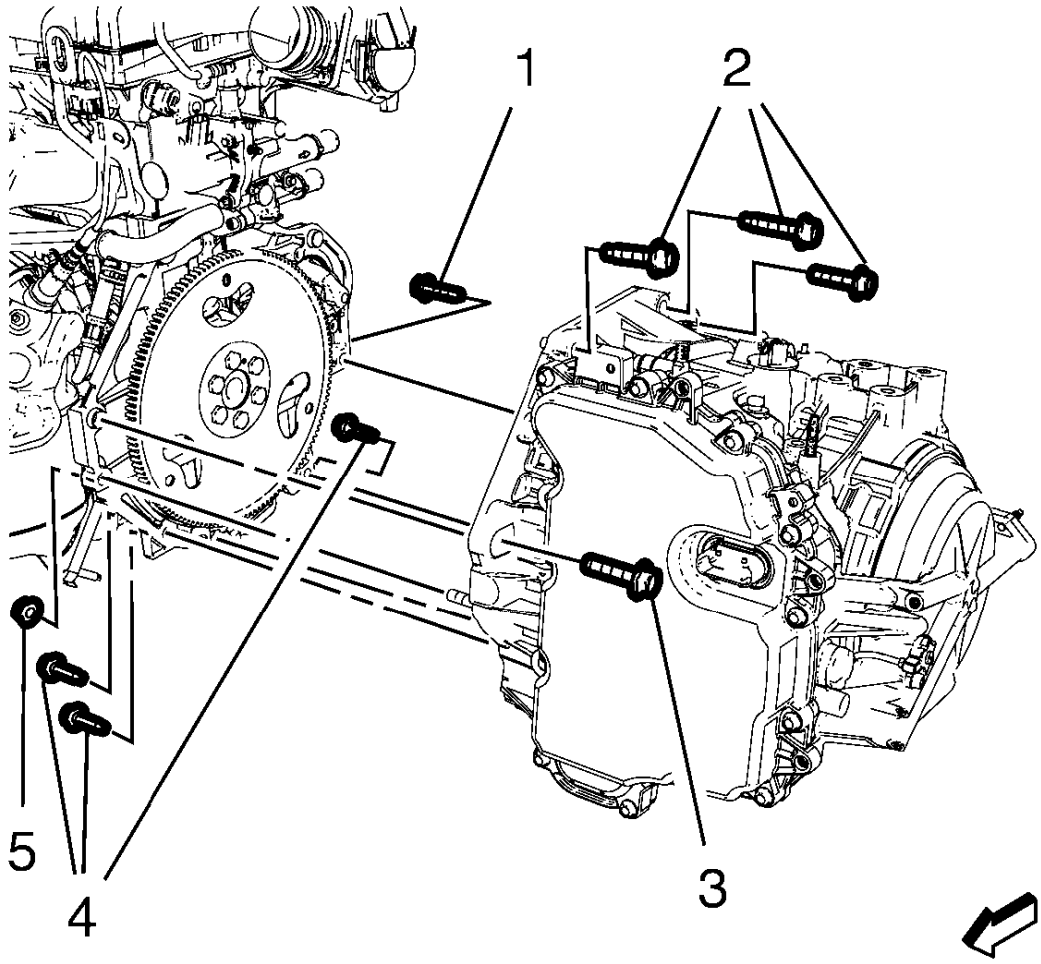

Fig. 107: Identifying Automatic Transmission Mounting Bolts
Courtesy of GENERAL MOTORS COMPANY

19. Install the upper transmission bolts (2) and tighten to 70 N.m (52 lb ft).
20. Remove the engine support fixture.
21. Tighten the 3 NEW left transmission mount bolts to 50 N.m (37 lb ft) plus 60-75 degrees.
22. Raise the vehicle.
23. Install the left front wheelhouse liner. Refer to **Front Wheelhouse Liner Replacement** .
24. Lower the vehicle.
25. Install the transmission fluid cooler outlet pipe and inlet pipe to the transmission. Use a NEW seal. Refer to **Transmission Fluid Cooler Inlet and Outlet Pipe Replacement (1.8L LWE and LUW)**.

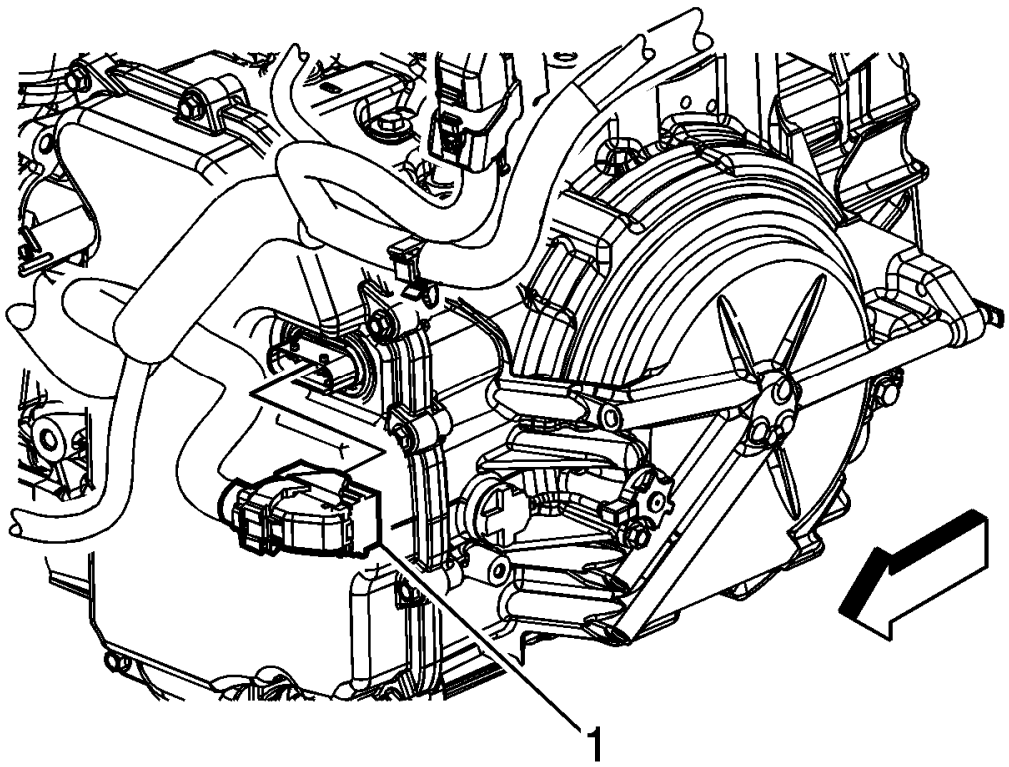

Fig. 108: Identifying Control Valve Body Transmission Control Module (TCM) Electrical Connector
Courtesy of GENERAL MOTORS COMPANY

26. Connect the electrical connector (1) transmission control module (TCM), then connect the wiring harness to transmission.
27. Install charge air cooler outlet air hose.
28. Install radiator inlet hose. Refer to **Radiator Inlet Hose Replacement (1.4L LUV)** , **Radiator Inlet Hose Replacement (1.8L LUW and LWE)** .
29. Install the transmission range selector lever cable and bracket. Refer to **Range Selector Lever Cable Bracket Replacement**.
30. Adjust the automatic transmission range selector lever cable. Refer to **Range Selector Lever Cable Adjustment**.
31. Install the wiring harness starter motor to transmission. Install bolt to retainer on valve body cover. Connect the wiring harness to retainer on valve body cover and range selector cable bracket.
32. Install the transmission vent hose.
33. Fill the transmission with correct fluid.

34. Check transmission fluid level. Refer to **Transmission Fluid Level and Condition Check** .
35. Install the battery tray. Refer to **Battery Tray Replacement** .
36. Refer to **Control Module References** for programming and set up information.

2013 TRANSMISSION

Automatic Transmission - 6T30/6T40 - Schematic and Routing Diagrams - Automatic Transmission Controls Schematics - Cruze

SCHEMATIC WIRING DIAGRAMS

AUTOMATIC TRANSMISSION CONTROLS WIRING SCHEMATICS

Module Power, Ground, Data Communication, and MIL Wiring Schematics

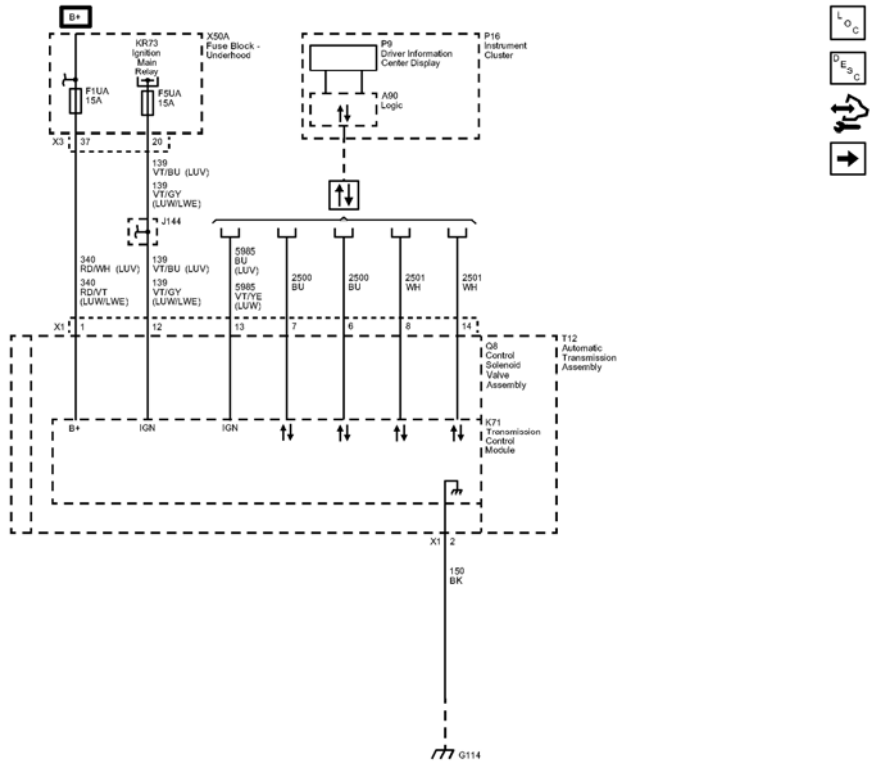

Fig. 1: Module Power, Ground, Data Communication, and MIL Wiring Schematics
Courtesy of GENERAL MOTORS COMPANY

Callout	Component Name
SD	Serial Data
Data_Communication_Schematics_REF	Data Communication Schematics
340	Battery Positive Voltage
340_RD/WH	340 RD/WH
CAV_1	1
CONN_X1	X1

CAV_37	37
CONN_X3	X3
340_RD/VT	340 RD/VT
LUV	ENGINE-GAS, 4 CYL, 1.4L, MFI, DOHC, TURBO, VVT, ALUM, GME, E85 MAX
LUW	ENGINE-GAS, 4 CYL, 1.8L, MFI, 103KW, DOHC, E85 MAX
LWE	ENGINE-GAS, 4 CYL, 1.8L, MFI, DOHC, VVT, 103 KW, GME
139	Run/Crank Ignition 1 Voltage
139_VT/BU	139 VT/BU
CAV_12	12
CAV_20	20
139_VT/BU	139 VT/BU
139_VT/GY	139 VT/GY
139_VT/GY	139 VT/GY
LUV	ENGINE-GAS, 4 CYL, 1.4L, MFI, DOHC, TURBO, VVT, ALUM, GME, E85 MAX
LUW	ENGINE-GAS, 4 CYL, 1.8L, MFI, 103KW, DOHC, E85 MAX
LWE	ENGINE-GAS, 4 CYL, 1.8L, MFI, DOHC, VVT, 103 KW, GME
LUV	ENGINE-GAS, 4 CYL, 1.4L, MFI, DOHC, TURBO, VVT, ALUM, GME, E85 MAX
LUW	ENGINE-GAS, 4 CYL, 1.8L, MFI, 103KW, DOHC, E85 MAX
LWE	ENGINE-GAS, 4 CYL, 1.8L, MFI, DOHC, VVT, 103 KW, GME
5985	Accessory Wakeup Serial Data
5985_BU	5985 BU
CAV_13	13
5985_VT/YE	5985 VT/YE
LUW	ENGINE-GAS, 4 CYL, 1.8L, MFI, 103KW, DOHC, E85

	MAX
2500	High Speed GMLAN Serial Data (+) (1)
2500 BU	2500 BU
CAV_7	7
2500_BU	2500 BU
CAV_6	6
2501	High Speed GMLAN Serial Data (-) (1)
2501_WH	2501 WH
CAV_8	8
2501 WH	2501 WH
CAV_14	14
150	Ground
150_BK	150 BK
CAV_2	2
CONN_X1	X1
LUV	ENGINE-GAS, 4 CYL, 1.4L, MFI, DOHC, TURBO, VVT, ALUM, GME, E85 MAX
F1UA	F1UA 15A
F5UA	F5UA 15A
X50A	
Q8	(MH8/MH9)
K71	(MH8/MH9)
T12	(MH8/MH9)
P16	
A90	Logic
KR73	
P9	

Temperature and Speed Sensors, Manual Valve, Pressure Controls and Shift Controls Wiring Schematics

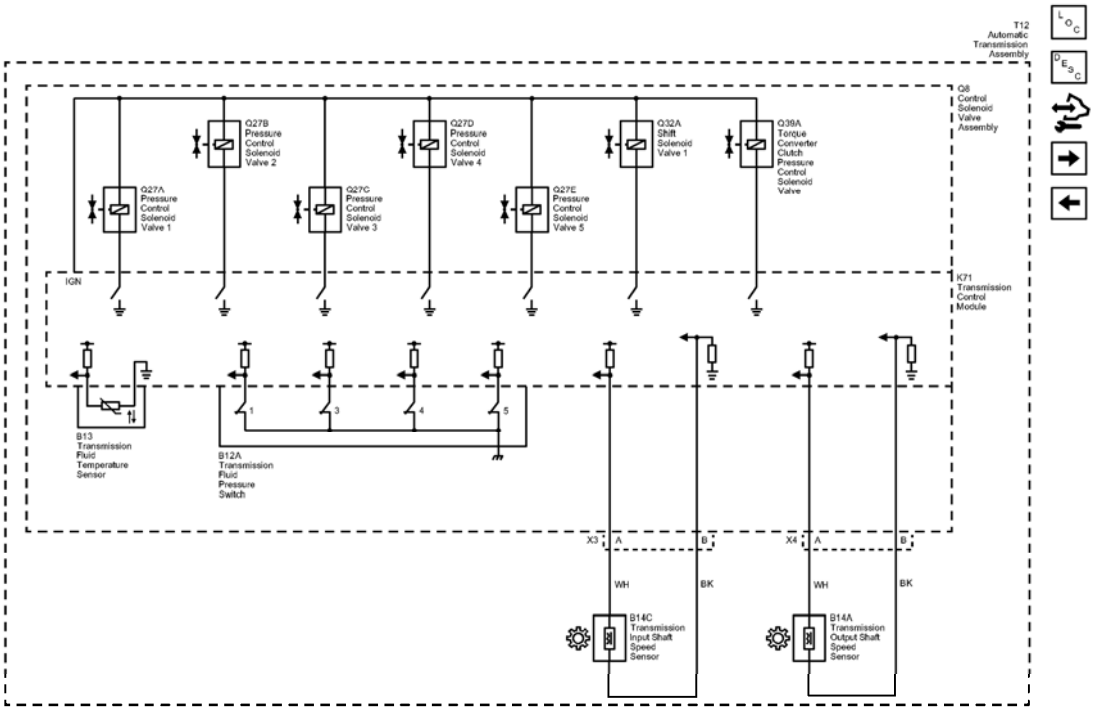

Fig. 2: Temperature and Speed Sensors, Manual Valve, Pressure Controls and Shift Controls Wiring Schematics

Courtesy of GENERAL MOTORS COMPANY

Callout	Component Name
_WH	WH
CAV_A	A
CONN_X3	X3
_BK	BK
CAV_B	B
_WH	WH
CAV_A	A
CONN_X4	X4
BK	BK
CAV_B	B
Q32A	(MH8/MH9)
Q27E	(MH8/MH9)
Q27D	(MH8/MH9)
Q27A	(MH8/MH9)
Q27B	(MH8/MH9)
Q27C	(MH8/MH9)

Q8	(MH8/MH9)
B14A	(MH8/MH9)
B14C	(MH8/MH9)
Q39A	(MH8/MH9)
K71	(MH8/MH9)
T12	(MH8/MH9)
B13	(MH8/MH9)
B12A	(MH8/MH9)

Internal Mode Switch and Manual Shift Switches Wiring Schematics

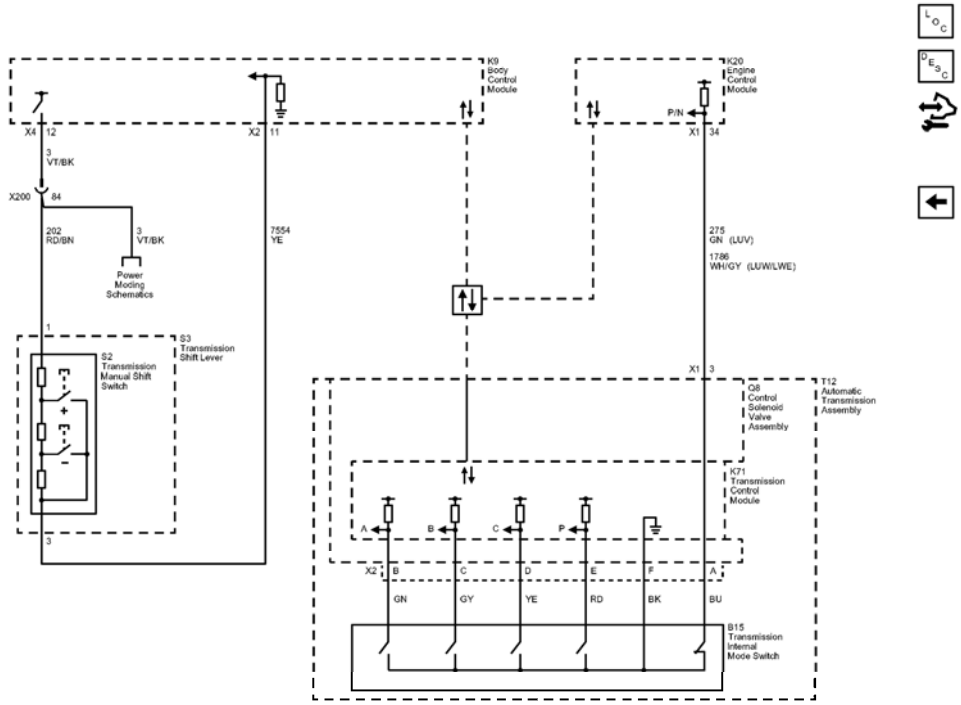

Fig. 3: Internal Mode Switch and Manual Shift Switches Wiring Schematics
Courtesy of GENERAL MOTORS COMPANY

Callout	Component Name
202	Battery Positive Voltage
3	Run/Crank Ignition 1 Voltage
3_VT/BK	3 VT/BK
CAV_12	12
CONN_X4	X4
3_VT/BK	3 VT/BK

202_RD/BN	202 RD/BN
CAV_1	1
7554	Park Lock Solenoid Soft Control
7554_YE	7554 YE
CAV_11	11
CONN_X2	X2
CAV_3	3
275	Park Neutral Position Switch Park Signal
275_GN	275 GN
CAV 3	3
CONN_X1	X1
CAV 34	34
CONN_X1	X1
SD	Serial Data
Data_Communication_Schematics_REF	Data Communication Schematics
1786_WH/GY	1786 WH/GY
LUV	ENGINE-GAS, 4 CYL, 1.4L, MFI, DOHC, TURBO, VVT, ALUM, GME, E85 MAX
LUW	ENGINE-GAS, 4 CYL, 1.8L, MFI, 103KW, DOHC, E85 MAX
LWE	ENGINE-GAS, 4 CYL, 1.8L, MFI, DOHC, VVT, 103 KW, GME
CAV_84	84
_GN	GN
CAV_B	B
CONN_X2	X2
_GY	GY
CAV C	C
_YE	YE
CAV D	D
_RD	RD
CAV_E	E
_BK	BK
CAV_F	F
_BU	BU
CAV_A	A

X200	X200
K20	
Q8	(MH8/MH9)
B15	(MH8/MH9)
S2	(MH8/MH9)
S3	(MH8/MH9)
T12	(MH8/MH9)
Power_Moding_Schematics_REF	Power Moding Schematics
K9	
K71	(MH8/MH9)

2013 TRANSMISSION

Automatic Transmission - 6T30/6T40 - Special Tools and Equipment - Special Tools - Cruze

SPECIAL TOOLS AND EQUIPMENT

SPECIAL TOOLS

Illustration	Tool Number/Description
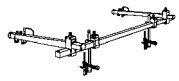	CH-49290 Mounting Engine/Transmission
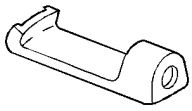	DT-586 J-23129 KM-586 87 92 384 Universal Seal Remover
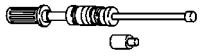	DT-7004 J-6125-1B KM-J-7004 Slide Hammer with Adapter
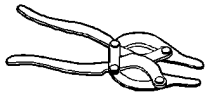	DT-8059 J-8059 KM-396 Snap Ring Pliers-Parallel Jaw
	DT-8092 J-8092 KM-J-8092 DW340-010 Driver Handle
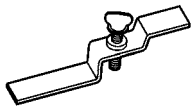	DT-21366 J-21366 Converter Holding Strap
	DT-28585

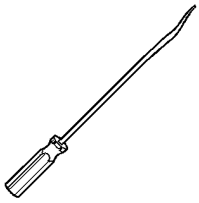	J-28585 KM-J-28585 Snap Ring Remover
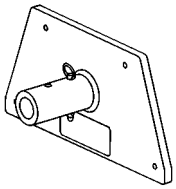	DT-39890 J-39890 Transmission Holding Fixture Adapter
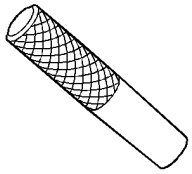	DT-41229 J-41229 Manual Shaft Pin Installer
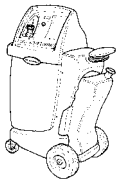	DT-45096 J-45096 Transmission Oil Cooling System Flush and Flow Test Tool
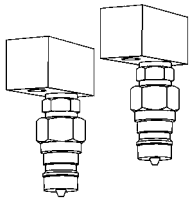	DT-45096-50 J-45096-50 Transmission Oil Cooler Flush Adapter
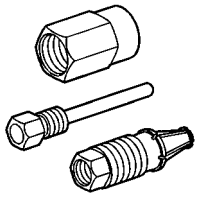	DT-45201 J-45201 DT-48203 Cooler Line Seal Remover
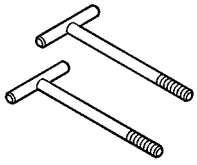	DT-46409 J-46409 KM-922 Torque Converter Lifting Handles
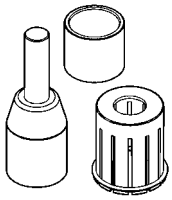	DT-46620 J-46620 Seal Installer

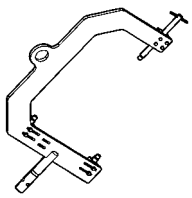	DT-46625 J-46625 Holding Fixture
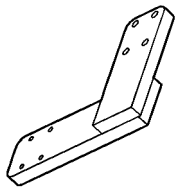	DT-46625-10 J-46625-10 Holding Fixture Adapter
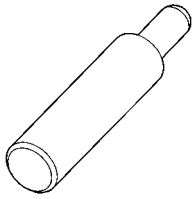	DT-46626 J-46626 Seal Installer
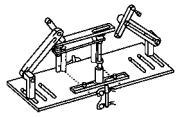	DT-47648 Transmission Holder
	DT-47694 Spring Compressor
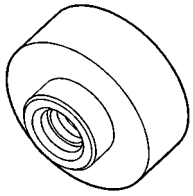	DT-47790 Seal Installer
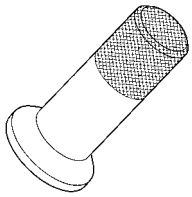	DT-47791-A Seal Installer
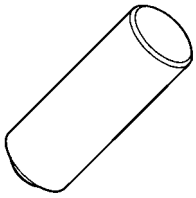	DT-47792 Seal Installer

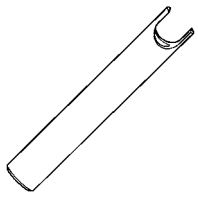	DT-47793 Differential Rotating Tool
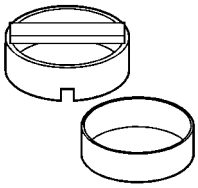	DT-47794 Spring Compressor
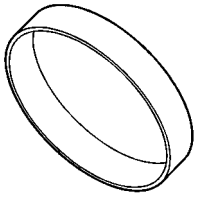	DT-47796 Seal Protector
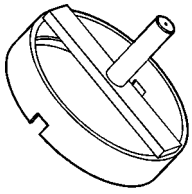	DT-47797 Spring Installer
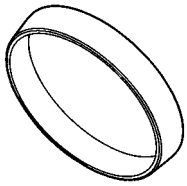	DT-47798 Seal Protector
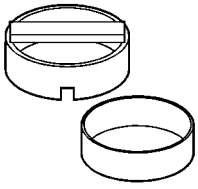	DT-47799 Clutch Piston Spring Compressor
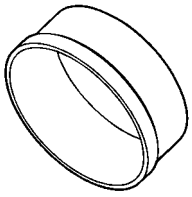	DT-47805 Seal Protector
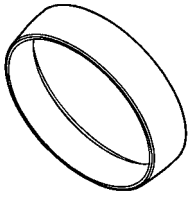	DT-47807 Clutch Piston Seal Installer

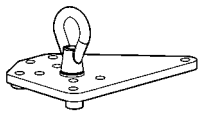	DT-47811-S1 Lift Plate
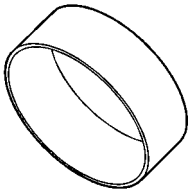	DT-47951-1 Seal Protector
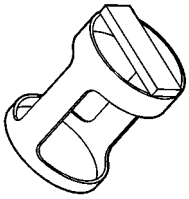	DT-47951-2 Spring Compressor
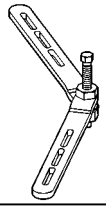	DT-48056 Spring Compressor Bridge
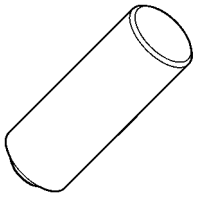	DT-48270 Spring Installer
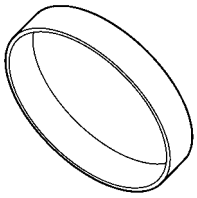	DT-48271 Seal Protector
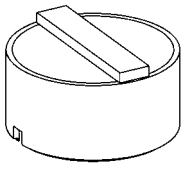	DT-48272 Spring Installer
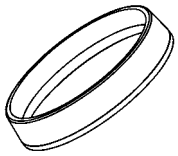	DT-48273 Seal Protector

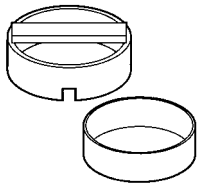	DT-48274 Spring Compressor
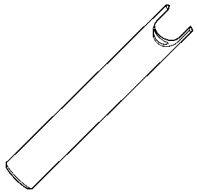	DT-48277 Differential Rotating Tool
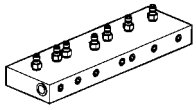	DT-48616 Control Solenoid Test Plate
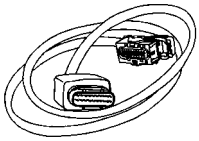	DT-48616-10 Adapter Harness
	DT-48866 Spring Compressor
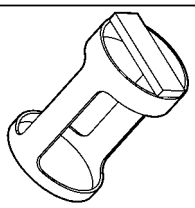	DT-48903 Spring Compressor
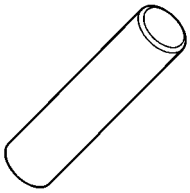	DT-49101 Seal Installer
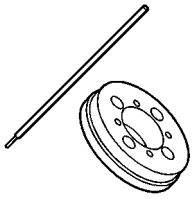	DT-49131 Seal Staking Tool

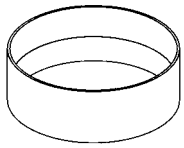	DT-50117-1 Seal Protector
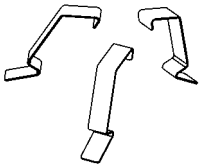	DT-50117-2 Seal Protector Retaining Clips
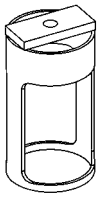	DT-50573 Retaining Ring Installer
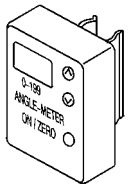	EN-45059 J-45059 Angle Meter
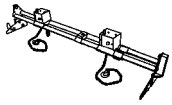	EN-47649 Engine Support Fixture
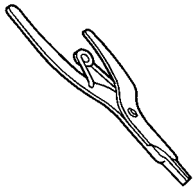	GE-5586-A J-5586-A Snap Ring Pliers
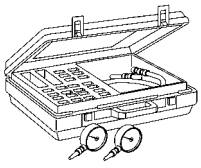	GE-21867-A J-21867-A Oil Pressure Gauge Kit
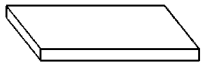	GE-34673 J-34673 Flat Gauge Bar

2013 TRANSMISSION

Automatic Transmission - 6T30/6T40 - Specifications - Cruze

SPECIFICATIONS

FASTENER TIGHTENING SPECIFICATIONS (OFF VEHICLE)

Fastener Tightening Specifications (Off Vehicle)

Application	Ref No.*	Quantity	Size	Specification	
				Metric	English
A/Trans Auxiliary Fluid Pump Outlet Bolt (Hybrid Models)	350	4	-	22 N.m	16 lb ft
A/Trans Auxiliary Fluid Pump Bolt (Hybrid Models)	355	1	-	22 N.m	16 lb ft
A/Trans Auxiliary Fluid Pump (Pump to Motor) Bolt (Hybrid Models)	370	4	-	10-12 N.m	89-106 lb in
A/Trans Fluid Pump Bolt to Converter Housing					
• First Pass	200	7 - 6T30, 8 - 6T40/45/50	M8x33	10 N.m	89 lb in
• Final Pass	200		M8x33	45°	
A/Trans Fluid Pump Cover Bolt	302	3 - 6T30, 23 - 6T40/45/50	M6x25	12 N.m	106 lb in
A/Trans Fluid Pump Cover Bolt	320	20 - 6T30,	M6x21.5	12 N.m	106 lb in
Control Solenoid Valve Assembly (w/TCM and Body) to Case Bolt	4	12	M6x97	10 N.m	89 lb in
Control Solenoid Valve Assembly (w/TCM and Body) to Case Bolt	6	3	M5x40.5	7 N.m	62 lb in
Control Valve Body Assembly (Complete) Bolt	400	1	M5x40.5	7 N.m	62 lb in
Control Valve Body to Case Bolt	9	2	M6x53	11 N.m	97 lb in
Control Valve Body to Case Bolt	10	9	M6x60	11 N.m	97 lb in
Control Valve Body Cover Bolt	1	13	M6x30	12 N.m	106 lb in
Drain Plug	64	1	1/8"-27 NPTF	12 N.m	106 lb in
Fluid Level Hole Plug	63	1	1/8"-27 NPTF	12 N.m	106 lb in

Fluid Pressure Test Hole Plug	51	1	1/8"-27 NPTF	12 N.m	106 lb in
Front Differential Carrier Baffle Bolt - Converter Housing	204	2	M6x25	12 N.m	106 lb in
Front Differential Carrier Baffle Bolt - Case	61	2	M6x18.5 - 6T30, M6x16 - 6T40/45/50	12 N.m	106 lb in
Input Shaft Support Bolt	57	3	M6x50	12 N.m	106 lb in
Input Speed Sensor Bolt	21	1	M6x23	9 N.m	80 lb in
Manual Shift Detent Spring	17	1	M6x16	12 N.m	106 lb in
Output Speed Sensor Bolt	15	1	M6x18	9 N.m	80 lb in
Torque Converter and Differential Housing Bolt					
• First Pass	27	14 - 6T30, 15 - 6T40/45/50	M8x30	10 N.m	89 lb in
• Final Pass	27		M8x30	50°	
*Reference number refers to the component callout number in Disassembled Views					

FASTENER TIGHTENING SPECIFICATIONS (ON VEHICLE)

Fastener Tightening Specifications (On Vehicle)

Application	Specification	
	Metric	English
A/Trans Control Bolt	9	80 lb in
A/Trans Flex Plate Bolt	60	44 lb ft
Control Solenoid Valve and Transmission Control Module Bolts - M5 x 40.5	8	71 lb in
Control Solenoid Valve and Transmission Control Module Bolts - M6 x 97	12	106 lb in
Control Valve Body Bolts	12	106 lb in
Control Valve Body Cover Fastener	12	106 lb in
Fluid Pressure Test Hole Plug	12	106 lb in
Input Speed Sensor Fastener	9	80 lb in
Manual Sift Detent Spring Bolt	12	106 lb in
Output Speed Sensor Fastener	12	106 lb in
Torque Converter to Flywheel Bolt	60	44 lb ft
Transmission Bolt	58	43 lb ft
Transmission Front Mount to Frame Bolt	100	74 lb ft
Transmission Front Mount to Transmission Case Bolt	62	46 lb ft
Transmission Fluid Auxiliary Cooler Pipe Bolt	4	35 lb in

Transmission Fluid Cooler Inlet Pipe Nut	22	16 lb ft
Transmission Fluid Cooler Outlet Pipe Nut	22	16 lb ft
Transmission Fluid Cooler Pipe Connector	20	15 lb ft
Transmission Mount - Left Side to Body Bolt	62	46 lb ft
Transmission Mount - Left Side to Body Nut	62	46 lb ft
Transmission Mount - Left Side to Transmission Bolt		
• First Pass	50	37 lb ft
• Final Pass	60 - 75 degrees	
Transmission Oil Drain Plug	12	106 lb in
Transmission Oil Level Check Plug	12	106 lb in
Transmission Rear Mount to Frame Bolt	110	81 lb ft
Transmission Rear Mount Bracket to Transmission Case Bolt	100	74 lb ft
Transmission Rear Mount Bracket to Rear Mount Bolt	100	74 lb ft
Transmission Range Selector Cable Bracket Bolt	22	16 lb ft
Transmission Range Selector Lever Nut	30	22 lb ft

TRANSMISSION GENERAL SPECIFICATIONS (6T30)

Transmission General Specifications (6T30)

Name	6T30
RPO Codes	MH9
Production Location	Korea/China
Transmission Drive	Front Wheel Drive
Reverse Gear Ratio	2.87
1st Gear Ratio	4.449
2nd Gear Ratio	2.908
3rd Gear Ratio	1.893
4th Gear Ratio	1.446
5th Gear Ratio	1.000
6th Gear Ratio	0.742
Effective Final Drive Gear Ratio	2.84/3.14/3.37/3.72/4.11
Torque Converter Size- Diameter of Torque Converter Turbine	220 mm
Pressure Taps	Line Pressure
Transmission Fluid Type	DEXRON VI®
Transmission Fluid Capacity	7.5 L/8.0 qts Quarts
Transmission Type: 6	Six Forward Gears
Transmission Type: T	Transverse Mount
Transmission Type: 30	Product Series

Position Quadrant	P, R, N, D, * *(Refer to the applicable owner's manual)
Case Material	Die Cast Aluminum
Transmission Net Weight	72 kg (159 lbs)
Maximum Trailer Towing Capacity	N/A
Maximum Gross Vehicle Weight (GVW)	2268 kg (5, 000 lbs)

TRANSMISSION GENERAL SPECIFICATIONS (6T40/6T45/6T50)

Transmission General Specifications (6T40/6T45/6T50)

Name	6T40/6T45/6T50
RPO Codes	MH8, MH7, MHK, MHH, MHC, MHJ, MNH, MHB
Production Location	Korea/China/Mexico/Toledo
Transmission Drive	Front Wheel Drive
Reverse Gear Ratio	2.94
1st Gear Ratio	4.584
2nd Gear Ratio	2.964
3rd Gear Ratio	1.912
4th Gear Ratio	1.446
5th Gear Ratio	1.000
6th Gear Ratio	0.746
Effective Final Drive Gear Ratio	2.64/2.89/3.23/3.53/3.87
Torque Converter Size- Diameter of Torque Converter Turbine	236 mm
Pressure Taps Line	Pressure
Transmission Fluid Type	DEXRON VI®
Transmission Fluid Capacity	8.0 L/8.5 Quarts
Transmission Type: 6	Six Forward Gears
Transmission Type: T	Transverse Mount
Transmission Type: 40/45/50	Product Series
Position Quadrant	P, R, N, D, * *(Refer to the applicable owner's manual)
Case Material	Die Cast Aluminum
Transmission Net Weight	81/86 kg (178/190 lbs)
Maximum Trailer Towing Capacity	N/A
Maximum Gross Vehicle Weight (GVW)	6T40 - 2000 kg (4, 409 lbs) 6T45 - 2200 kg (4, 850 lbs) 6T50 - 2500 kg (5, 511 lbs)

ADHESIVES, FLUIDS, LUBRICANTS, AND SEALERS

Adhesives, Fluids, Lubricants, and Sealers

		GM Part Number	

Application	Type of Material	United States	Canada
Automatic Transmission Fluid	DEXRON®VI	88861037	19264717

FLUID CAPACITY SPECIFICATIONS (6T40/45/50)

Fluid Capacity Specifications (6T40/45/50)

Application	Specification	
	Metric	English
Valve Body Cover Removal - Approximate Capacity	5.0-7.0 liters	5.3-7.4 quarts
Fluid Change - Drain Plug - Approximate Capacity	4.0-6.0 liters	4.2- 6.3 quarts
Overhaul - Approximate Capacity	8.0-8.5 liters	8.5-9.0 quarts

FLUID CAPACITY SPECIFICATIONS (6T30)

Fluid Capacity Specifications (6T30)

Application	Specification	
	Metric	English
Valve Body Cover Removal - Approximate Capacity	4.0-5.0 liters	4.2-5.3 quarts
Fluid Change - Drain Plug - Approximate Capacity	4.5-5.5 liters	4.75- 5.8 quarts
Overhaul - Approximate Capacity	7.62 liters	8.05 quarts

FLUID PUMP SELECTIVE SPECIFICATIONS

Fluid Pump Selective Specifications

Fluid Pump Body Pocket Depth		Fluid Pump Gear Thickness	
Metric	English	Metric	English
12.617-12.625 mm	0.4967-0.4970 in	12.580-12.588 mm	0.4952-0.4955 in
12.626-12.636 mm	0.4970-0.4974 in	12.589-12.599 mm	0.4956-0.4960 in
12.637-12.645 mm	0.4975-0.4978 in	12.600-12.608 mm	0.4960-0.4963 in

RANGE REFERENCE

Range Reference

Range	Park	Reverse	Neutral	Drive						
				1st Braking	1st	2nd	3rd	4th	5th	6th
1-2-3-4 Clutch	-	-	-	Applied	Applied	Applied	Applied	Applied	-	-
3-5 Reverse Clutch	-	Applied	-	-	-	-	Applied	-	Applied	-
4-5-6 Clutch	-	-	-	-	-	-	-	Applied	Applied	Applied

2-6 Clutch	-	-	-	-	-	Applied	-	-	-	Applied
Low and Reverse Clutch	Applied*	Applied	Applied*	Applied	-	-	-	-	-	-
Low Clutch Assembly (OWL)	-	-	-	Holding	Holding	-	-	-	-	-
* = Applied with NO load										

SHIFT SOLENOID VALVE STATE AND GEAR RATIO

Shift Solenoid Valve State and Gear Ratio

Gear	Shift SOL 1	1-2-3-4 CL PC SOL 5 N.L.	2-6 CL PC SOL 4 N.L.	3-5 REV CL PC SOL 2 N.H.	LOW REV 4-5-6 CL PC SOL 3 N.H.	Gear Ratio 6T30	Gear Ratio 6T40/45/50
Park	ON	OFF	OFF	OFF	ON	-	-
Reverse	ON	OFF	OFF	ON	ON	2.87	2.940
Neutral	ON	OFF	OFF	OFF	ON	-	-
1st Braking	ON	ON	OFF	OFF	ON	4.449	4.584
1st	OFF	ON	OFF	OFF	OFF	4.449	4.584
2nd	OFF	ON	ON	OFF	OFF	2.908	2.964
3rd	OFF	ON	OFF	ON	OFF	1.893	1.912
4th	OFF	ON	OFF	OFF	ON	1.446	1.446
5th	OFF	OFF	OFF	ON	ON	1.000	1.000
6th	OFF	OFF	ON	OFF	ON	0.742	0.746
For shift solenoid 1, "ON" = Solenoid Energized (Pressurized) "OFF" = Solenoid De-energized (No Pressure). For pressure control solenoids, "ON" = Pressurized, "OFF" = No Pressure							

TRANSMISSION FLUID PRESSURE SWITCH LOGIC

Transmission Fluid Pressure Switch Logic

Gear	Transmission Fluid Pressure Switch States			
	Switch 1	*Switch 3	Switch 4	Switch 5
Park	Low	Low	Low	Low
Reverse	Low	Low	Low	Low
Neutral	Low	Low	Low	Low
Drive 1st - Engine Braking	Low	High	Low	Low
Drive 1st	High	High	Low	High
Drive 2nd	High	Low	Low	High
Drive 3rd	Low	High	Low	High

Drive 4th	High	High	Low	Low
Drive 5th	Low	High	High	Low
Drive 6th	High	Low	High	Low

High = 12V (Switch Open or Pressurized)
Low = 0V (Switch Closed or No Pressure)
Note: All transmission fluid pressure switches are normally closed (NC)
*Transmission fluid pressure switch 2 does not exist

TRANSMISSION INTERNAL MODE SWITCH LOGIC

Transmission Internal Mode Switch Logic

Gear Selector Position	Signal A	Signal B	Signal C	Signal P
Park	LOW	HI	HI	LOW
Park/Reverse	LOW	LOW	HI	LOW
Reverse	LOW	LOW	HI	HI
Reverse/Neutral	HI	LOW	HI	HI
Neutral	HI	LOW	HI	LOW
Neutral/Drive 6	HI	LOW	LOW	LOW
Drive 6	HI	LOW	LOW	HI
Drive 6/Drive 4	LOW	LOW	LOW	HI
Drive 4	LOW	LOW	LOW	LOW
Drive 4/Drive 3	LOW	HI	LOW	LOW
Drive 3	LOW	HI	LOW	HI
Drive 3/Drive 2	HI	HI	LOW	HI
Drive 2	HI	HI	LOW	LOW
Open	HI	HI	HI	HI
Invalid	HI	HI	HI	LOW
Invalid	LOW	HI	HI	HI

HI = Ignition voltage
LOW = 0 volts

SOLENOID VALVE PRESSURE (GEN 1)

Line PC Solenoid Valve Pressure

Requested Pressure (kPa)	Actual Pressure	
	Metric	English
None	345-550 kPa	50-80 psi
200	690-900 kPa	100-130 psi
400	1100-1310 kPa	160-190 psi
600	1520-1725 kPa	220-250 psi
800	1860-2275 kPa	270-330 psi
1000	1860-2275 kPa	270-330 psi

1200	1860-2275 kPa	270-330 psi
1400	1860-2275 kPa	270-330 psi
1600	1860-2275 kPa	270-330 psi
1800	1860-2275 kPa	270-330 psi
2000	1860-2275 kPa	270-330 psi

SOLENOID VALVE PRESSURE (GEN 2)

Line PC Solenoid Valve Pressure

Requested Pressure (kPa)	Actual Pressure	
	Metric	English
None	172-379 kPa	25-55 psi
200	662-869 kPa	96-126 psi
400	1145-1351 kPa	166-196 psi
600	1634-1841 kPa	237-267 psi
800	2117-2324 kPa	307-337 psi
1000	2117-2324 kPa	307-337 psi
1200	2117-2324 kPa	307-337 psi
1400	2117-2324 kPa	307-337 psi
1600	2117-2324 kPa	307-337 psi
1800	2117-2324 kPa	307-337 psi

TRANSMISSION PARTS KIT SPECIFICATIONS

A/Trans Seal Kit (Gen 1& 2) 24251028

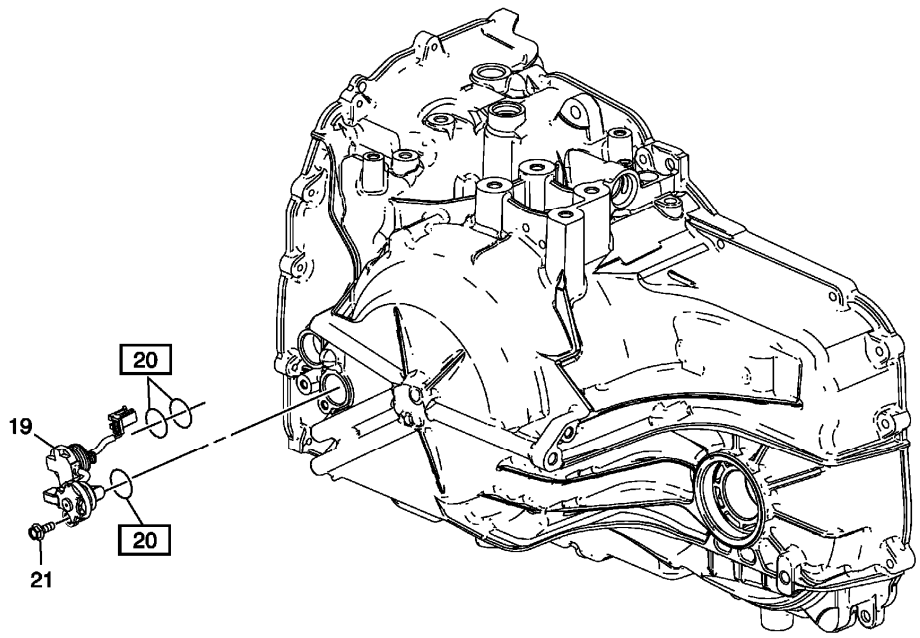

Fig. 1: Automatic Trans Seal Kit (Gen 1 And 2) 24251028
Courtesy of GENERAL MOTORS COMPANY

NOTE: Callouts with boxes around them indicate part is included in the service kit. Callouts without boxes are shown for relationship purposes only.

A/Trans Seal Kit (Gen 1& 2) 24251028

Callout	Quantity	Component Name
20	3	A/Trans Input Speed Sensor Assembly O-Ring Seal

Front Wheel Seal Kit (Gen 1& 2) 19258415

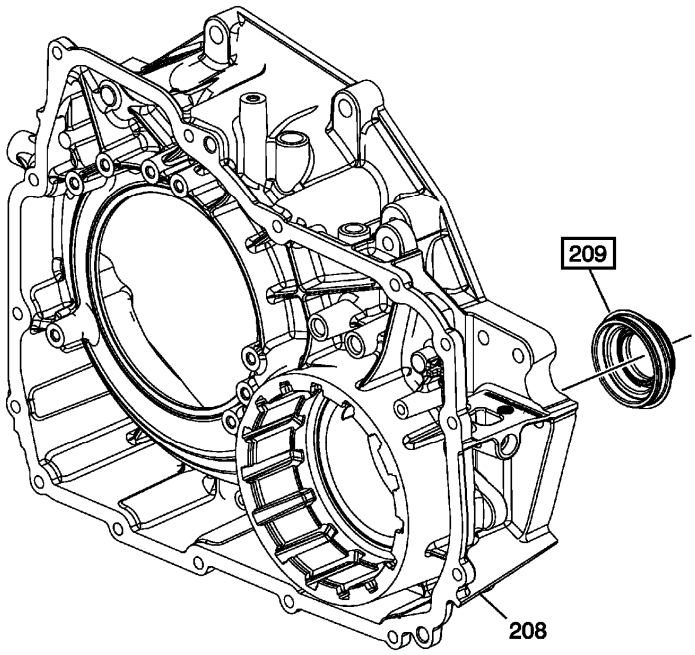

Fig. 2: Front Wheel Seal Kit (Gen 1 And 2) 19258415
Courtesy of GENERAL MOTORS COMPANY

NOTE: Callouts with boxes around them indicate part is included in the service kit. Callouts without boxes are shown for relationship purposes only.

Front Wheel Seal Kit (Gen 1& 2) 19258415

Callout	Quantity	Component Name
209	1	Front Wheel Drive Shaft Oil Seal Assembly

Front Wheel Seal Kit (Gen 1& 2) 19258416

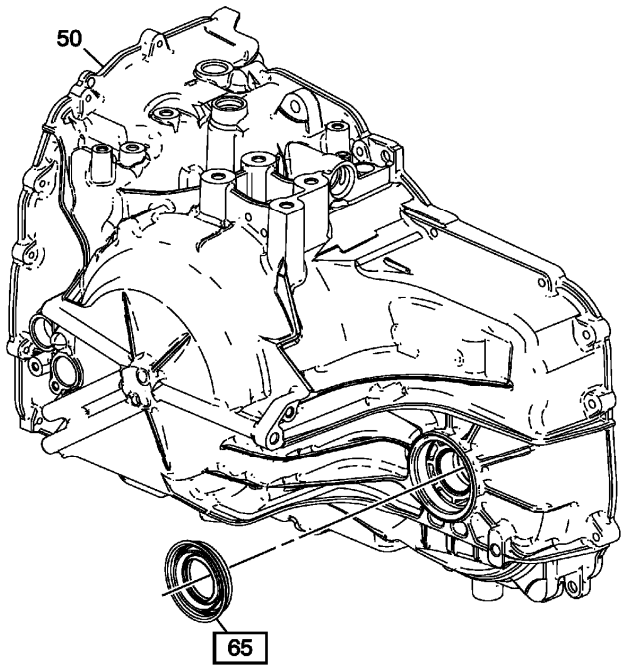

Fig. 3: Front Wheel Seal Kit (Gen 1 And 2) 19258416
Courtesy of GENERAL MOTORS COMPANY

NOTE: Callouts with boxes around them indicate part is included in the service kit. Callouts without boxes are shown for relationship purposes only.

Front Wheel Seal Kit (Gen 1& 2) 19258416

Callout	Quantity	Component Name
65	1	Drive Shaft Oil Seal Assembly

A/Trans Seal Kit (Gen 1) 24251353 (1 of 2)

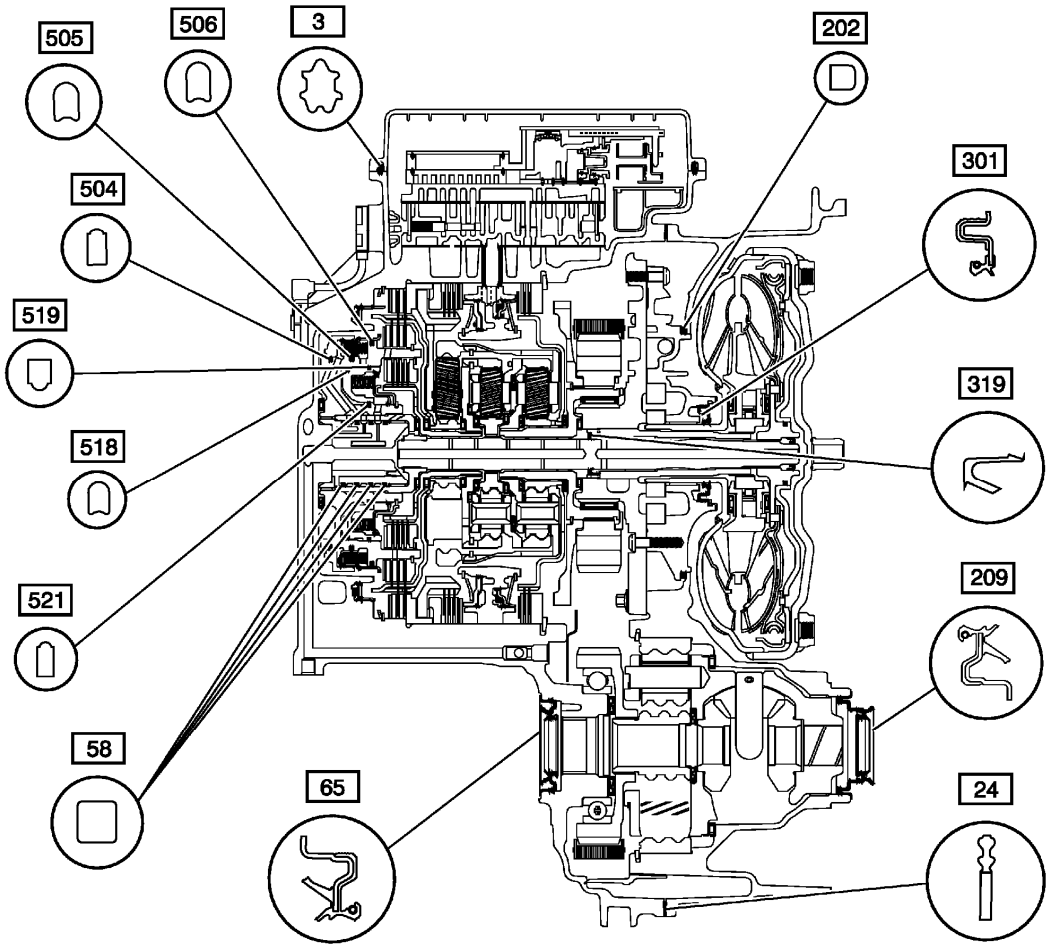

Fig. 4: Automatic Trans Seal Kit (Gen 1) 24251353 (1 Of 2)
Courtesy of GENERAL MOTORS COMPANY

A/Trans Seal Kit (Gen 1) 24251353 (1 of 2)

Callout	Quantity	Component Name
3	1	Control Valve Body Cover Gasket
24	1	Torque Converter Housing Gasket
58	4	3-5-Reverse and 4-5-6 Clutch Fluid Seal Ring
65	1	Drive Shaft Oil Seal Assembly
202	1	Torque Converter and Differential Housing Seal
209	1	Front Wheel Drive Shaft Oil Seal Assembly
301	1	Torque Converter Fluid Seal Assembly
319	1	Torque Converter Fluid Seal Assembly
504	1	3-5-Reverse Clutch Piston Inner Seal
505	1	3-5-Reverse Clutch Piston Inner Seal
506	1	3-5-Reverse Clutch Piston Dam Seal
518	1	4-5-6 Clutch Piston Outer Seal

519	1	4-5-6 Clutch Piston Outer Seal
521	1	4-5-6 Clutch Piston Inner Seal

A/Trans Seal Kit (Gen 1) 24251353 (2 of 2)

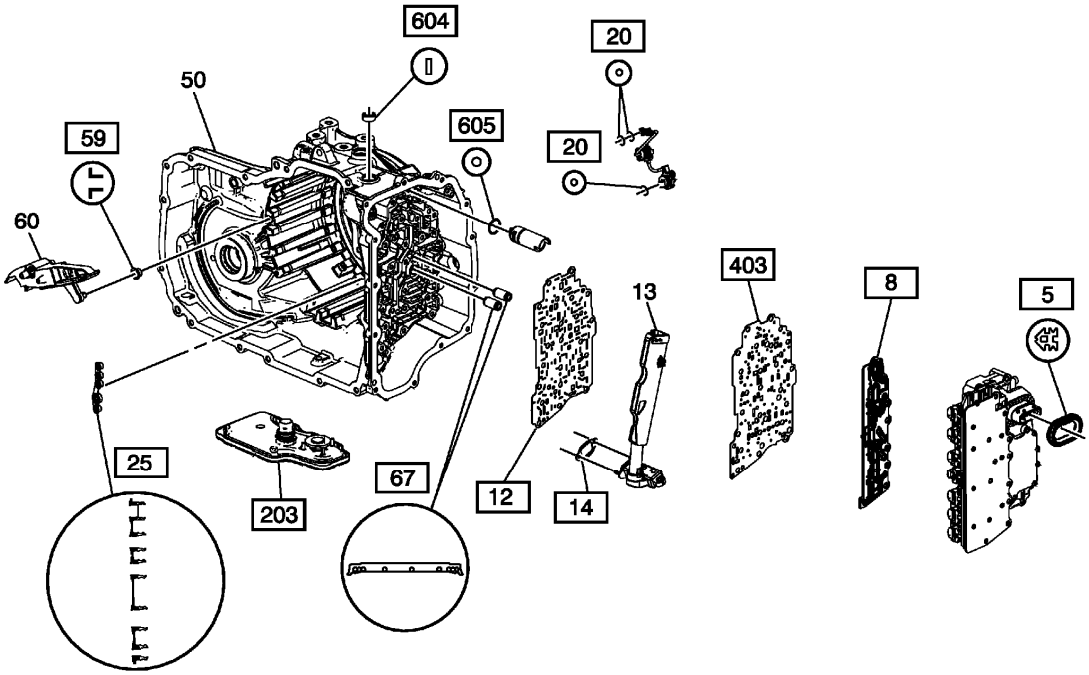

Fig. 5: Automatic Trans Seal Kit (Gen 1) 24251353 (2 Of 2)
Courtesy of GENERAL MOTORS COMPANY

NOTE: Callouts with boxes around them indicate part is included in the service kit. Callouts without boxes are shown for relationship purposes only.

A/Trans Seal Kit (Gen 1) 24251353 (2 of 2)

Callout	Quantity	Component Name
5	1	Control Valve Body Cover Hole Seal
8	1	Control Valve Body Filter Plate Assembly
12	1	Control Valve Body Spacer Plate Assembly
14	1	A/Trans Fluid Level Control Valve Gasket
20	3	A/Trans Input Speed Sensor Assembly O-Ring Seal
25	1	A/Trans Fluid Pump Seal Assembly
59	1	Drive Link Lube Fluid Seal
67	1	1-2-3-4 and Low Reverse Clutch Fluid Passage Seal
203	1	A/Trans Fluid Filter Assembly

403	1	Channel Plate to Valve Body Spacer Plate Assembly
604	1	Manual Shift Shaft Seal
605	1	Park Pawl Actuator Guide Seal

A/Trans Seal Kit (Gen 2) 24260603 (1 of 2)

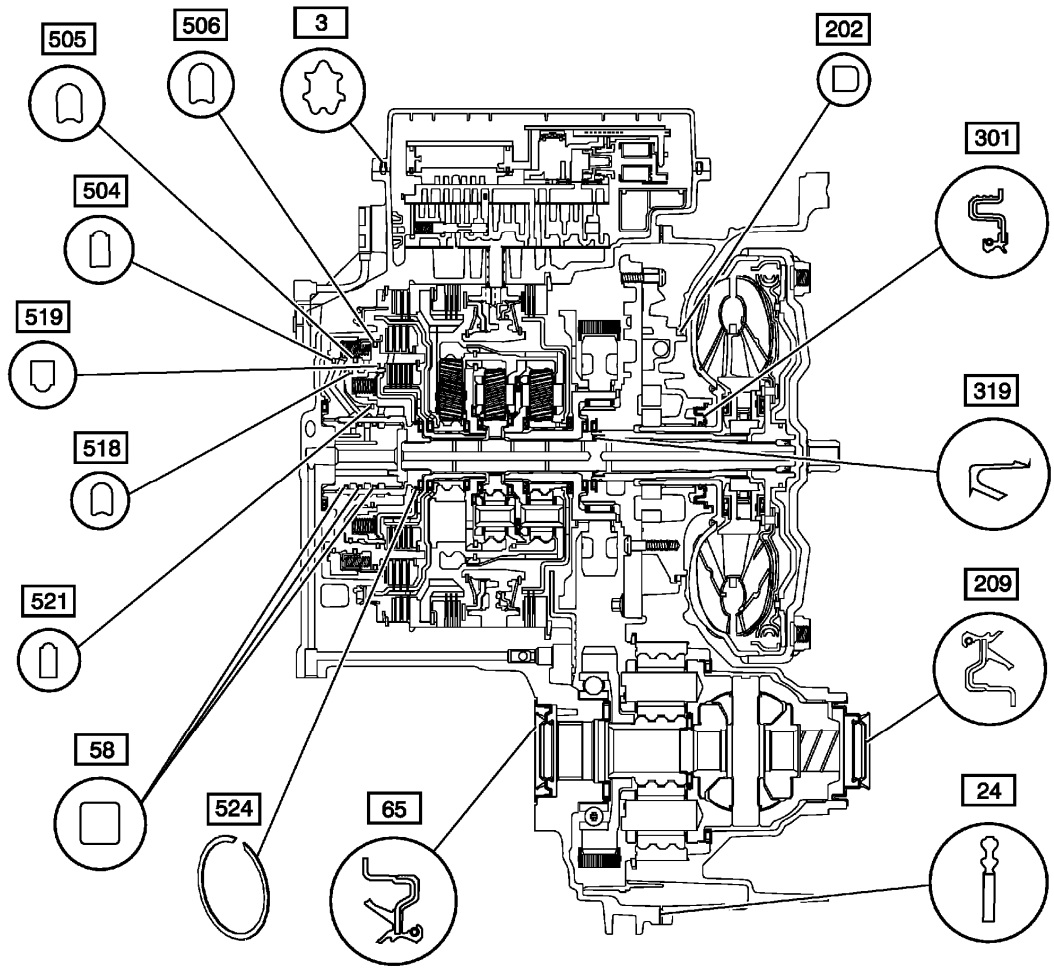

Fig. 6: Automatic Trans Seal Kit (Gen 2) 24260603 (1 Of 2)
Courtesy of GENERAL MOTORS COMPANY

A/Trans Seal Kit (Gen 2) 24260603 (1 of 2)

Callout	Quantity	Component Name
3	1	Control Valve Body Cover Gasket
24	1	Torque Converter Housing Gasket
58	3	3-5-Reverse and 4-5-6 Clutch Fluid Seal Ring
65	1	Drive Shaft Oil Seal Assembly
202	1	Torque Converter and Differential Housing Seal
209	1	Front Wheel Drive Shaft Oil Seal Assembly

301	1	Torque Converter Fluid Seal Assembly
319	1	Torque Converter Fluid Seal Assembly
504	1	3-5-Reverse Clutch Piston Inner Seal
505	1	3-5-Reverse Clutch Piston Inner Seal
506	1	3-5-Reverse Clutch Piston Dam Seal
518	1	4-5-6 Clutch Piston Outer Seal
519	1	4-5-6 Clutch Piston Outer Seal
521	1	4-5-6 Clutch Piston Inner Seal
524	1	4-5-6 Clutch Piston Fluid Dam Retainer Ring

A/Trans Seal Kit (Gen 2) 24260603 (2 of 2)

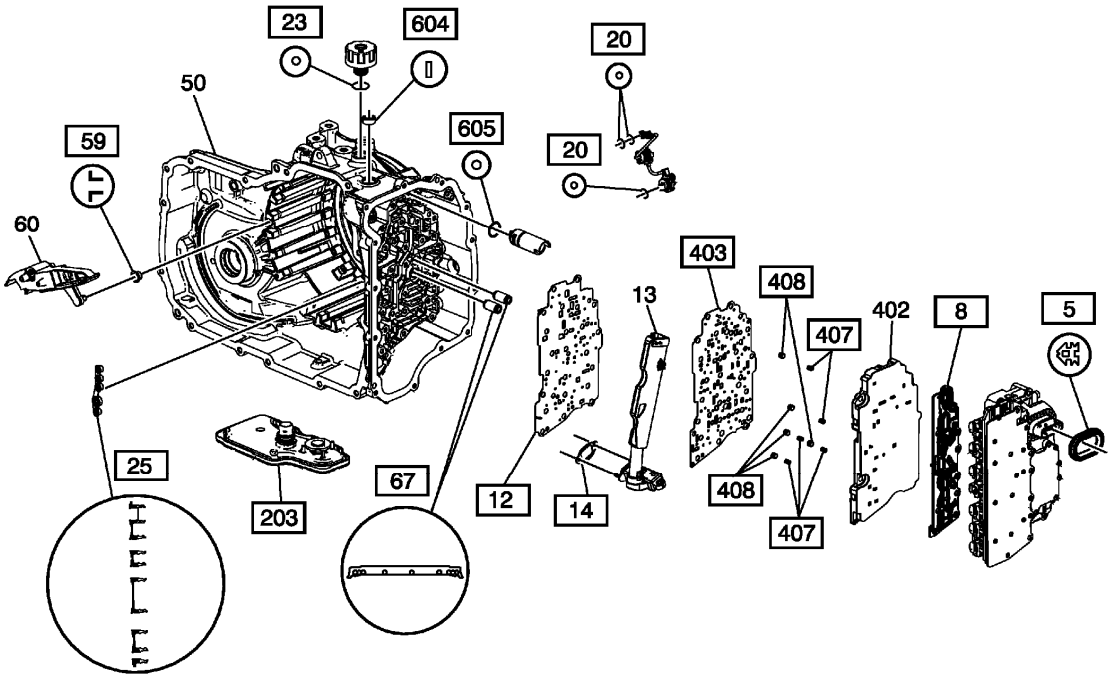

Fig. 7: Automatic Trans Seal Kit (Gen 2) 24260603 (2 Of 2)
Courtesy of GENERAL MOTORS COMPANY

NOTE: Callouts with boxes around them indicate part is included in the service kit. Callouts without boxes are shown for relationship purposes only.

A/Trans Seal Kit (Gen 2) 24260603 (2 of 2)

Callout	Quantity	Component Name
5	1	Control Valve Body Cover Hole Seal
8	1	Control Valve Body Filter Plate Assembly
12	1	Control Valve Body Spacer Plate Assembly
14	1	A/Trans Fluid Level Control Valve Gasket

20	3	A/Trans Input Speed Sensor Assembly O-Ring Seal
23	1	Fill Cap Seal
25	1	A/Trans Fluid Pump Seal Assembly
59	1	Drive Link Lube Fluid Seal
67	1	1-2-3-4 and Low Reverse Clutch Fluid Passage Seal
203	1	A/Trans Fluid Filter Assembly
403	1	Channel Plate to Valve Body Spacer Plate Assembly
407	5	Actuator Feed Accumulator Spring
408	5	Actuator Feed Accumulator Piston
604	1	Manual Shift Shaft Seal
605	1	Park Pawl Actuator Guide Seal

Transmission Kit (Gen 1) 24260701

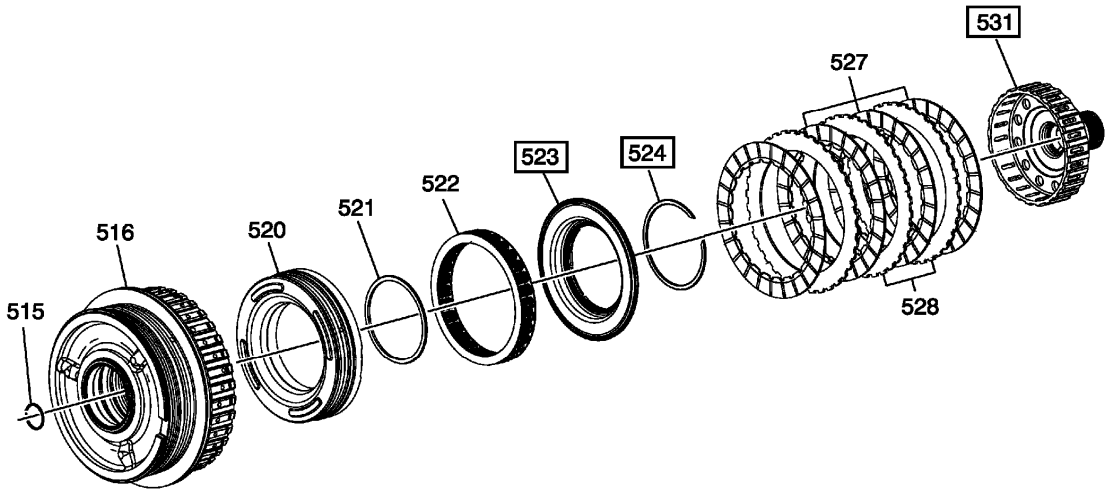

Fig. 8: Transmission Kit (Gen 1) 24260701
Courtesy of GENERAL MOTORS COMPANY

NOTE: Callouts with boxes around them indicate part is included in the service kit. Callouts without boxes are shown for relationship purposes only.

Transmission Kit (Gen 1) 24260701

Callout	Quantity	Component Name
523	1	4-5-6 Clutch Piston Fluid Dam Assembly
524	1	4-5-6 Clutch Piston Fluid Dam Retainer Ring
531	1	Reaction Carrier Hub Assembly

Control Valve Body Kit (Gen 1) 24248473

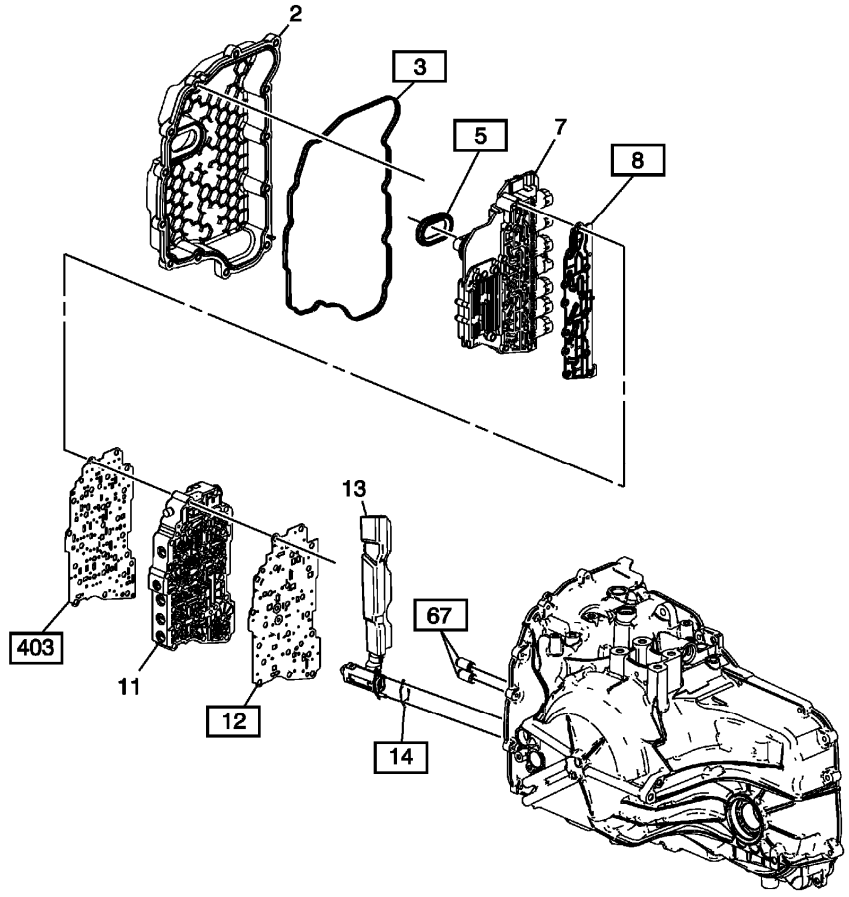

Fig. 9: Control Valve Body Kit (Gen 1) 24248473
Courtesy of GENERAL MOTORS COMPANY

NOTE: Callouts with boxes around them indicate part is included in the service kit. Callouts without boxes are shown for relationship purposes only.

Control Valve Body Kit (Gen 1) 24248473

Callout	Quantity	Component Name
3	1	Control Valve Body Cover Gasket
5	1	Control Valve Body Cover Hole Seal
8	1	Control Valve Body Filter Plate Assembly

12	1	Control Valve Body Spacer Plate Assembly
14	1	A/Trans Fluid Level Control Valve Gasket
67	2	1-2-3-4 and Low Reverse Clutch Fluid Passage Seal
403	1	Channel Plate to Valve Body Spacer Plate Assembly

Control Valve Body Kit (Gen 2) 24260702

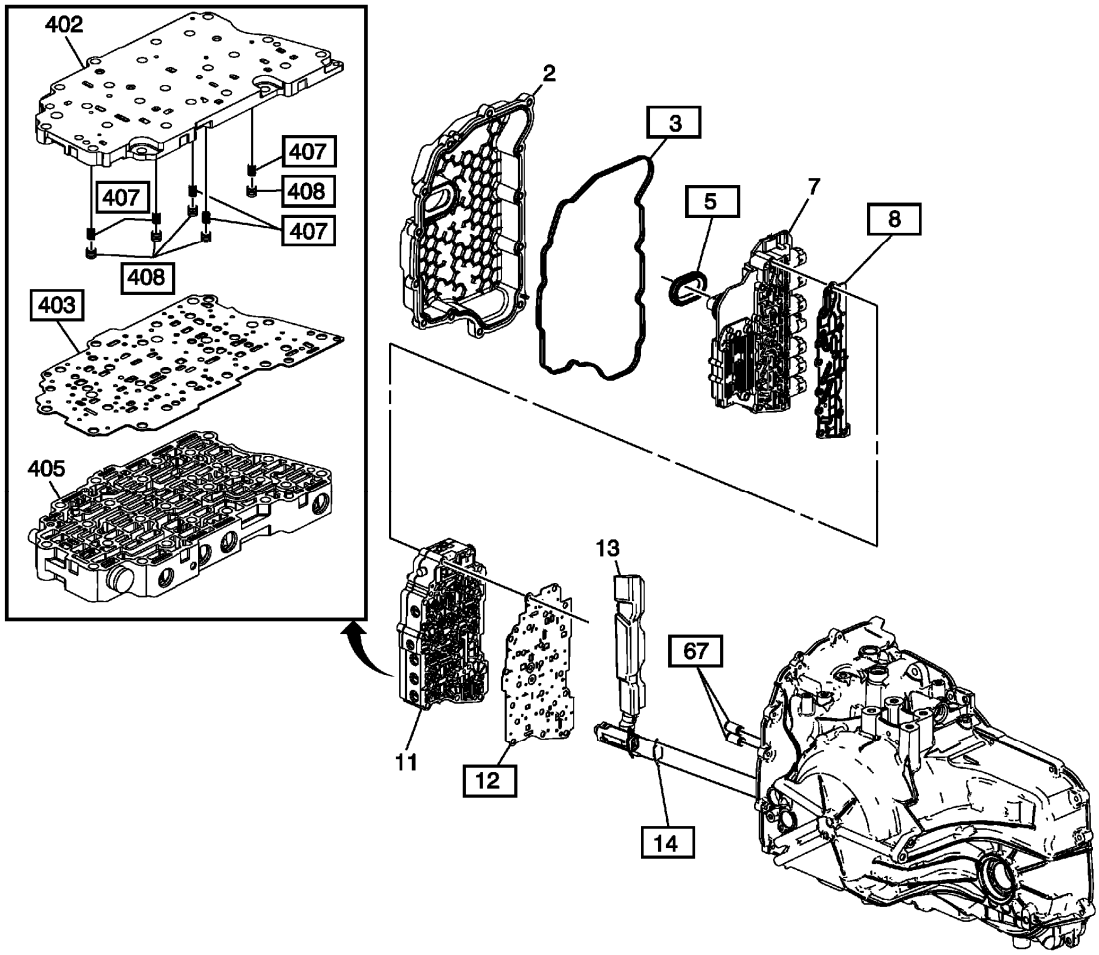

Fig. 10: Control Valve Body Kit (Gen 2) 24260702
Courtesy of GENERAL MOTORS COMPANY

NOTE: Callouts with boxes around them indicate part is included in the service kit. Callouts without boxes are shown for relationship purposes only.

Control Valve Body Kit (Gen 2) 24260702

Callout	Quantity	Component Name
3	1	Control Valve Body Cover Gasket

5	1	Control Valve Body Cover Hole Seal
8	1	Control Valve Body Filter Plate Assembly
12	1	Control Valve Body Spacer Plate Assembly
14	1	A/Trans Fluid Level Control Valve Gasket
67	2	1-2-3-4 and Low Reverse Clutch Fluid Passage Seal
403	1	Channel Plate to Valve Body Spacer Plate Assembly
407	5	Actuator Feed Accumulator Spring
408	5	Actuator Feed Accumulator Piston

Clutch Plate Package (Gen 1) 24249460

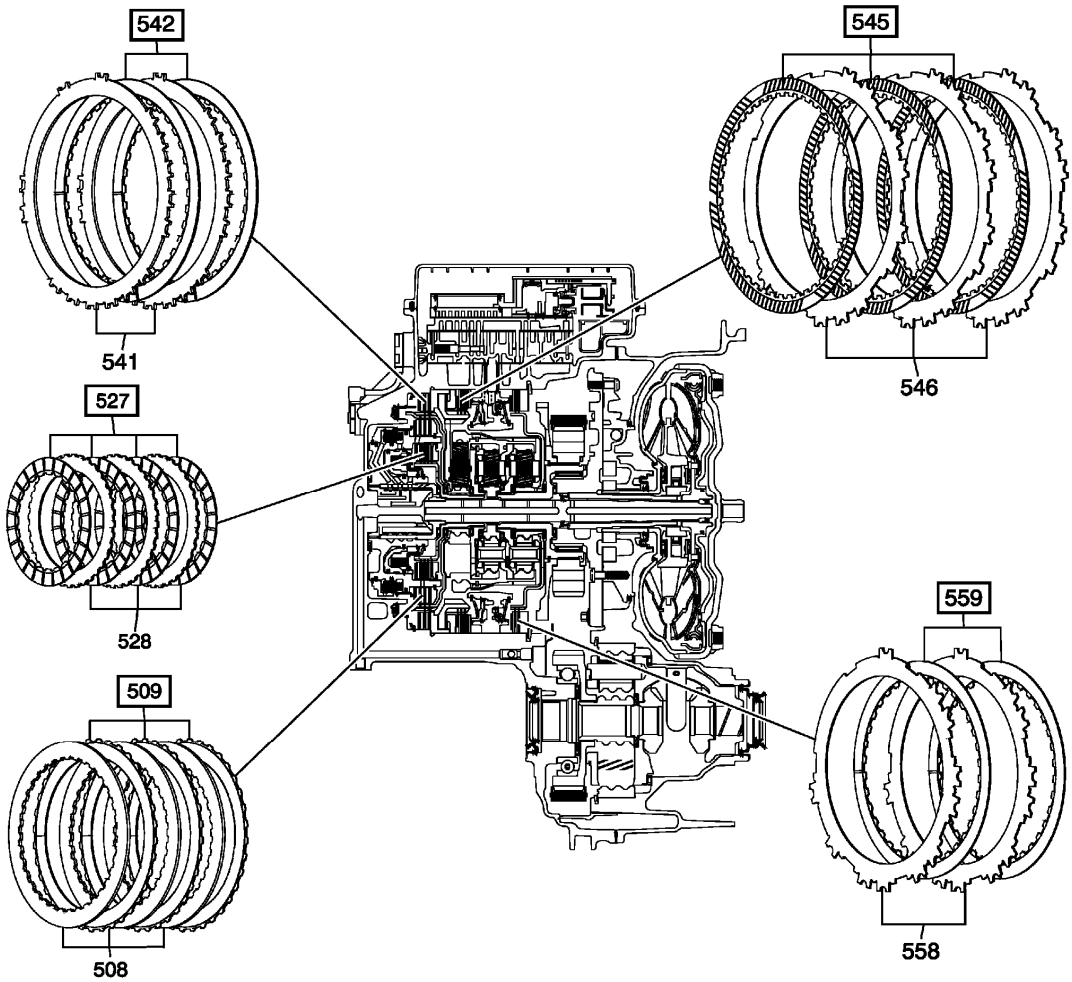

Fig. 11: Clutch Plate Package (Gen 1) 24249460
Courtesy of GENERAL MOTORS COMPANY

NOTE: Callouts with boxes around them indicate part is included in the service kit. Callouts without boxes are shown for relationship purposes only.

Clutch Plate Package (Gen 1) 24249460

Callout	Quantity	Component Name
509	3	3-5 Reverse Clutch (w/Friction Material) Plate Assembly
527	4	4-5-6 Clutch (w/Friction Material) Plate Assembly
542	2	2-6 Clutch (w/Friction Material) Plate Assembly
545	3	Low and Reverse Clutch (w/Friction Material) Plate Assembly
559	2	1-2-3-4 Clutch (w/Friction Material) Plate Assembly

Clutch Plate Package (Gen 2) 24260695

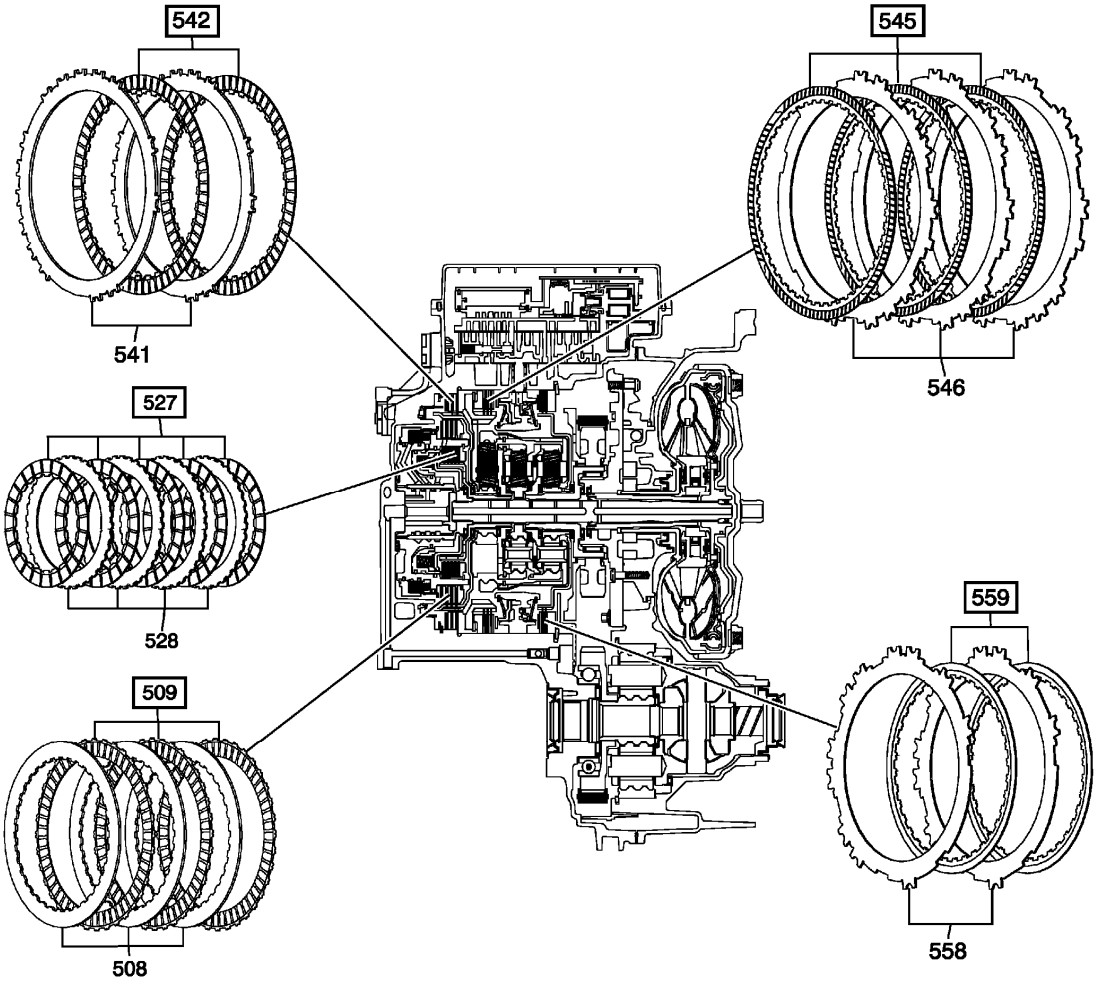

Fig. 12: Clutch Plate Package (Gen 2) 24260695
Courtesy of GENERAL MOTORS COMPANY

NOTE: Callouts with boxes around them indicate part is included in the service kit.

Callouts without boxes are shown for relationship purposes only.

Clutch Plate Package (Gen 2) 24260695

Callout	Quantity	Component Name
509	3	3-5 Reverse Clutch (w/Friction Material) Plate Assembly
527	5	4-5-6 Clutch (w/Friction Material) Plate Assembly
542	2	2-6 Clutch (w/Friction Material) Plate Assembly
545	3	Low and Reverse Clutch (w/Friction Material) Plate Assembly
559	2	1-2-3-4 Clutch (w/Friction Material) Plate Assembly

4-5-6 Plate Assembly (Gen 2) 24260700

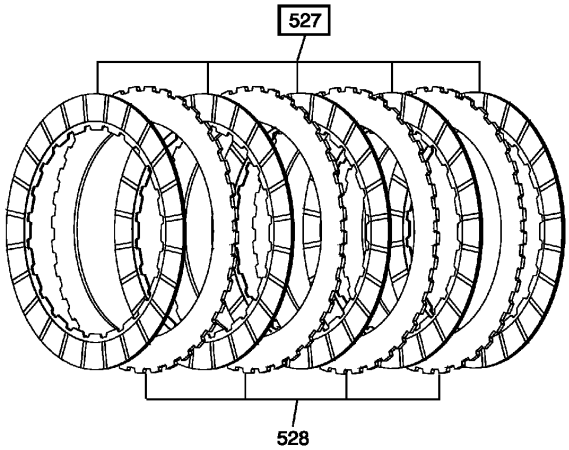

Fig. 13: 4-5-6 Plate Assembly (Gen 2) 24260700
Courtesy of GENERAL MOTORS COMPANY

NOTE: Callouts with boxes around them indicate part is included in the service kit. Callouts without boxes are shown for relationship purposes only.

4-5-6 Plate Assembly (Gen 2) 24260700

Callout	Quantity	Component Name
527	5	4-5-6 Clutch (w/Friction Material) Plate Assembly

Low and Reverse Plate Assembly (Gen 2) 24260696

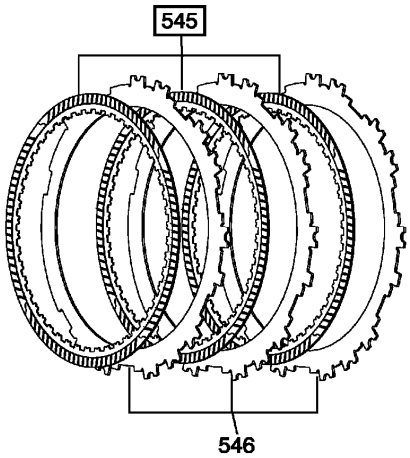

Fig. 14: Low And Reverse Plate Assembly (Gen 2) 24260696
Courtesy of GENERAL MOTORS COMPANY

NOTE: Callouts with boxes around them indicate part is included in the service kit. Callouts without boxes are shown for relationship purposes only.

Low and Reverse Plate Assembly (Gen 2) 24260696

Callout	Quantity	Component Name
545	3	Low and Reverse Clutch (w/Friction Material) Plate Assembly

3-5 Reverse Plate Assembly (Gen 2) 24260697

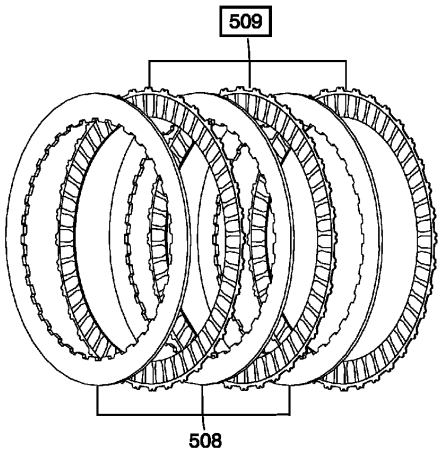

Fig. 15: 3-5 Reverse Plate Assembly (Gen 2) 24260697
Courtesy of GENERAL MOTORS COMPANY

NOTE: Callouts with boxes around them indicate part is included in the service kit. Callouts without boxes are shown for relationship purposes only.

3-5 Reverse Plate Assembly (Gen 2) 24260697

Callout	Quantity	Component Name
509	3	3-5 Reverse Clutch (w/Friction Material) Plate Assembly

2-6 Plate Assembly (Gen 2) 24260698

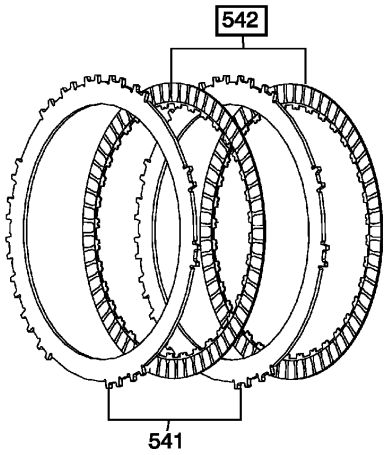

Fig. 16: 2-6 Plate Assembly (Gen 2) 24260698
Courtesy of GENERAL MOTORS COMPANY

NOTE: Callouts with boxes around them indicate part is included in the service kit. Callouts without boxes are shown for relationship purposes only.

2-6 Plate Assembly (Gen 2) 24260698

Callout	Quantity	Component Name
542	2	2-6 Clutch (w/Friction Material) Plate Assembly

1-2-3-4 Plate Assembly (Gen 2) 24260699

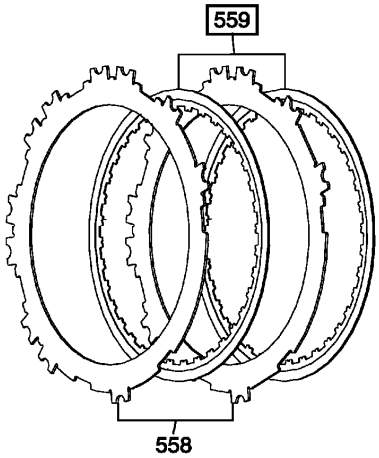

Fig. 17: 1-2-3-4 Plate Assembly (Gen 2) 24260699
Courtesy of GENERAL MOTORS COMPANY

NOTE: Callouts with boxes around them indicate part is included in the service kit. Callouts without boxes are shown for relationship purposes only.

1-2-3-4 Plate Assembly (Gen 2) 24260699

Callout	Quantity	Component Name
559	2	1-2-3-4 Clutch (w/Friction Material) Plate Assembly

A/Trans Seal Kit (Gen 2) 24260704

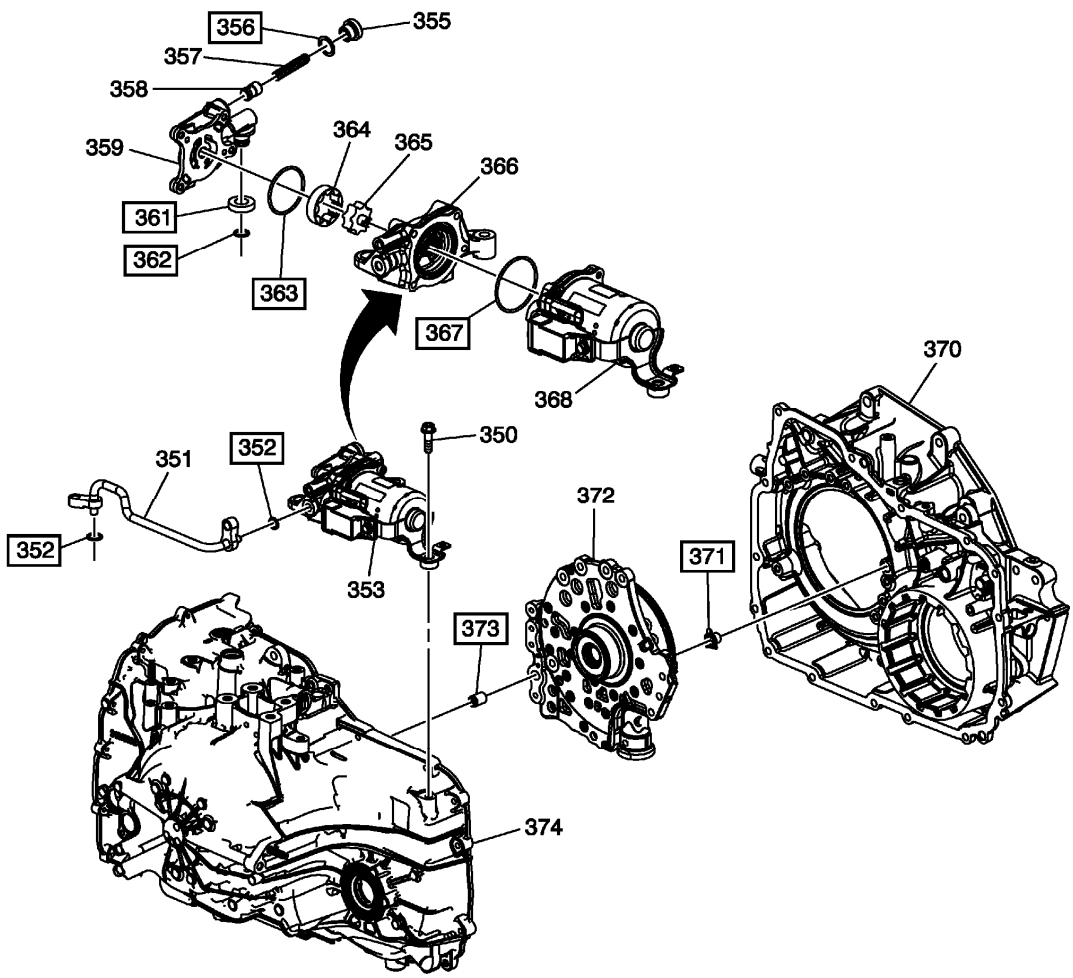

Fig. 18: Automatic Trans Seal Kit (Gen 2) 24260704
Courtesy of GENERAL MOTORS COMPANY

NOTE: Callouts with boxes around them indicate part is included in the service kit. Callouts without boxes are shown for relationship purposes only.

A/Trans Seal Kit (Gen 2) 24260704

Callout	Quantity	Component Name
352	2	A/Trans Auxiliary Fluid Pump Outlet Pipe Seal Assembly
356	1	Pressure Regulator Valve Spring Spacer
361	1	A/Trans Auxiliary Fluid Pump Gasket
362	1	A/Trans Auxiliary Fluid Pump Seal
363	1	A/Trans Auxiliary Fluid Pump Cover Seal
367	1	A/Trans Auxiliary Fluid Pump Motor Cover Seal- O-Ring
371	1	A/Trans Auxiliary Fluid Inlet Pump Seal
373	1	A/Trans Fluid Trough Check Ball

A/Trans Auxiliary Seal Kit (Gen 2) 24260705

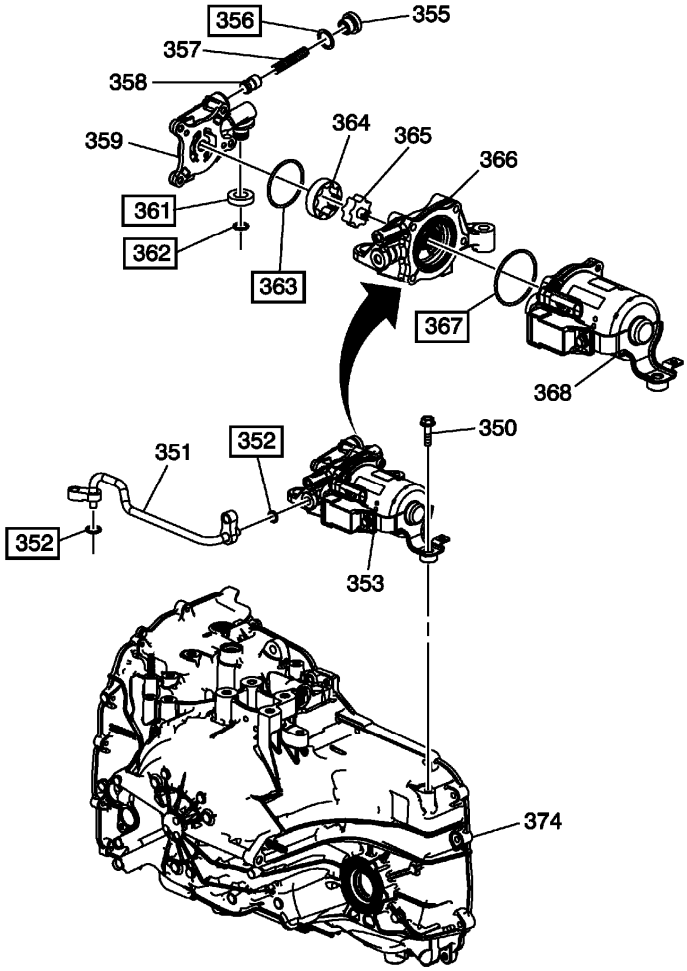

Fig. 19: Automatic Trans Auxiliary Seal Kit (Gen 2) 24260705
Courtesy of GENERAL MOTORS COMPANY

NOTE: **Callouts with boxes around them indicate part is included in the service kit. Callouts without boxes are shown for relationship purposes only.**

A/Trans Auxiliary Seal Kit (Gen 2) 24260705

Callout	Quantity	Component Name
352	2	A/Trans Auxiliary Fluid Pump Outlet Pipe Seal Assembly
356	1	Pressure Regulator Valve Spring Spacer
361	1	A/Trans Auxiliary Fluid Pump Gasket
362	1	A/Trans Auxiliary Fluid Pump Seal
363	1	A/Trans Auxiliary Fluid Pump Cover Seal
367	1	A/Trans Auxiliary Fluid Pump Motor Cover Seal- O-Ring

2013 TRANSMISSION

Automatic Transmission - 6T30/6T40 - Repair Instructions - Off Vehicle - Cruze

REPAIR INSTRUCTIONS - OFF VEHICLE

LIFT PLATE AND HOLDING FIXTURE INSTALLATION

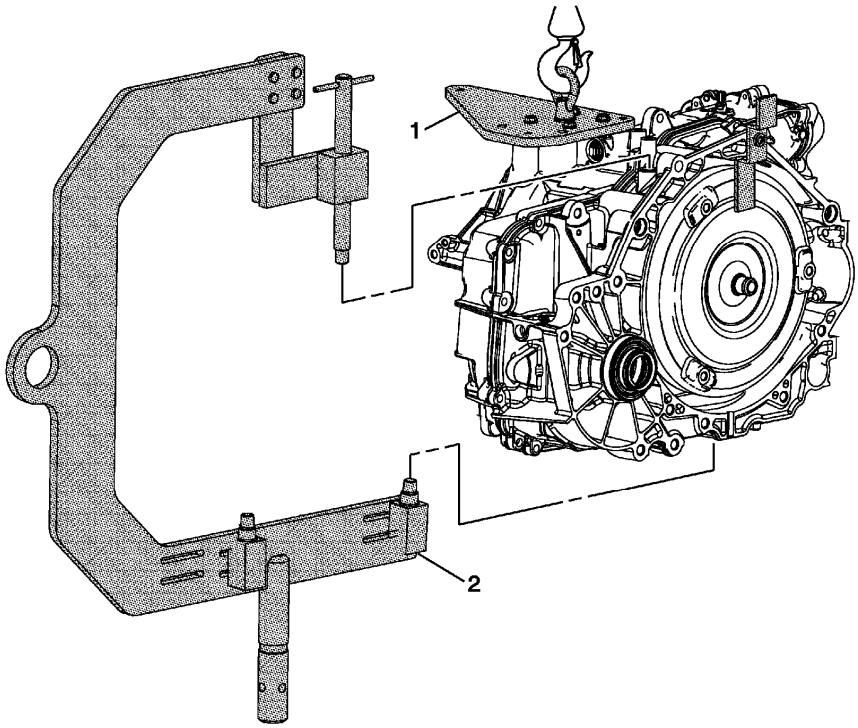

Fig. 1: Identifying Lift Plate & Holding Fixture
Courtesy of GENERAL MOTORS COMPANY

Lift Plate and Holding Fixture Installation

Callout	Component Name
1	**DT-47811-A** Transmission Lift Plate **WARNING:** **Handle with care, the transmission assembly weighs over 83 Kg (183 lbs). Bodily injury could occur if not handled properly.** **CAUTION:** **Refer to Fastener Caution .** **Procedure** Tighten bolts and nut.

	Tighten 12 N.m (106 lb in) **Special Tools** **DT-47811-A** Transmission Lift Plate For equivalent regional tools, refer to **Special Tools** .
2	**DT-46625** Transmission Holding Fixture **Procedure** 1. Raise the transmission with an overhead hoist. 2. Adjust mounting block on fixture to match bosses on case, then tighten bolts. **Tighten** 13 N.m (10 lb ft) **Special Tools** **DT-46625-10** Holding Fixture Adapter For equivalent regional tools, refer to **Special Tools** .

TORQUE CONVERTER REMOVAL

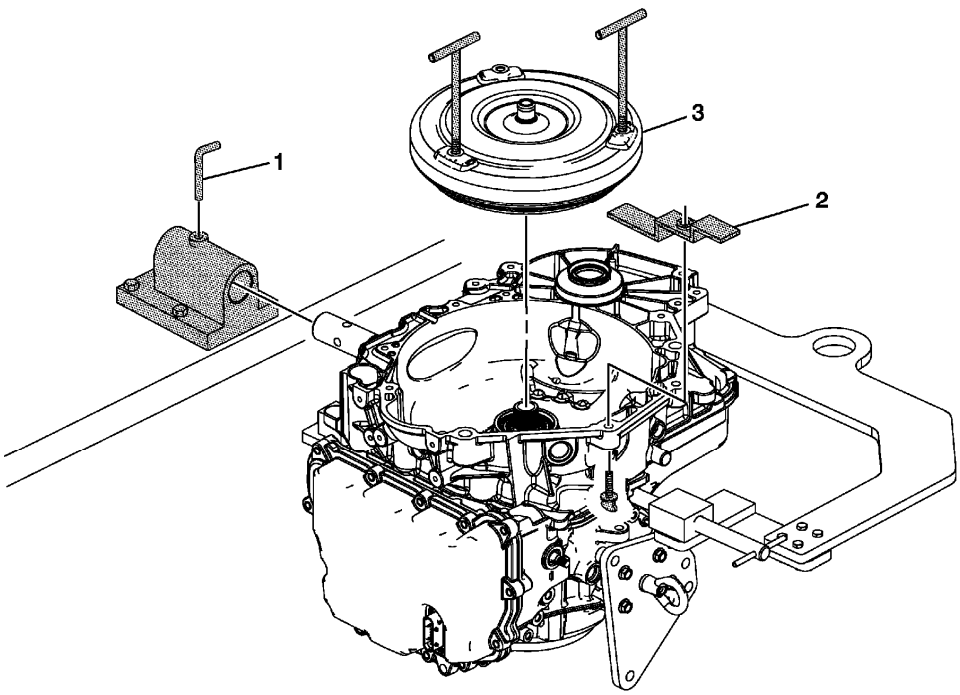

Fig. 2: View Of Torque Converter
Courtesy of GENERAL MOTORS COMPANY

Torque Converter Removal

Callout	Component Name
1	Lock Pin **WARNING:** **Lock pin must be secured into the bench fixture to hold the transmission and prevent bodily injury.** **NOTE:** **Ensure the DT 3289-20 holding fixture is mounted to a bench that is properly supported and will support the weight of the transmission assembly without tipping. DT-39890 holding fixture adapter and an engine stand can be used as an alternative method for supporting the transmission assembly during repairs.** **Special Tools** • **DT 3289-20** Holding Fixture • **DT-39890** Transmission Holding Fixture Adapter For equivalent regional tools, refer to **Special Tools** .
2	**DT 21366** Torque Converter Holding Strap
3	Torque Converter Assembly **CAUTION:** **Only install the lift assist handles until it stops. Do not tighten. Over tightening the lift assist handles can cause damage to the torque converter.** **NOTE:** **Failure to raise the torque converter straight up could damage the torque converter clutch lip seal inside the torque converter clutch assembly.** **Special Tool** **DT 46409** Torque Converter Lifting Handles For equivalent regional tools, refer to **Special Tools** .

CONTROL VALVE BODY ASSEMBLY REMOVAL

Control Valve Body Cover Removal

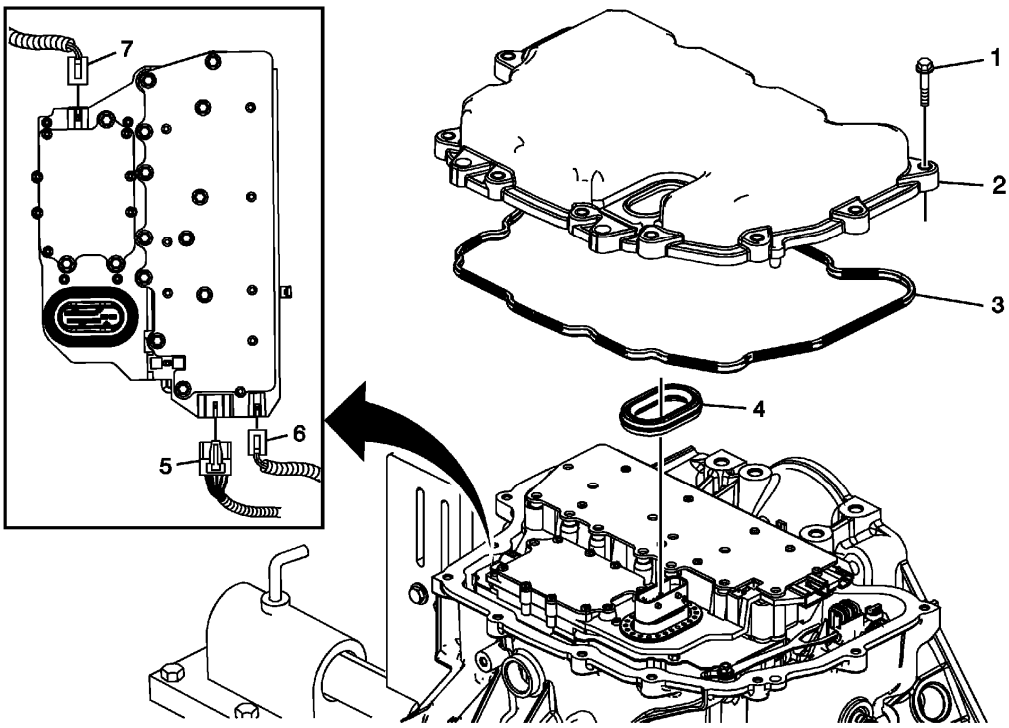

Fig. 3: View Of Control Valve Body Cover
Courtesy of GENERAL MOTORS COMPANY

Control Valve Body Cover Removal

Callout	Component Name
1	Control Valve Body Cover Bolts M6 x 30 (Qty: 13)
2	Control Valve Body Cover
3	Control Valve Body Gasket **NOTE:** **Discard the seal. It is not reusable.**
4	Control Valve Body Cover Wiring Connector Hole Seal **CAUTION:** **Support the control solenoid valve assembly around the connector when removing the seal. Excessive pulling force can damage the internal electrical connections.** **NOTE:** **Discard the seal. It is not reusable.**
5	Shift Position Switch Connector
6	Output Speed Sensor Connector
7	Input Speed Sensor Connector

Control Solenoid (With Body and TCM) Valve Assembly Removal

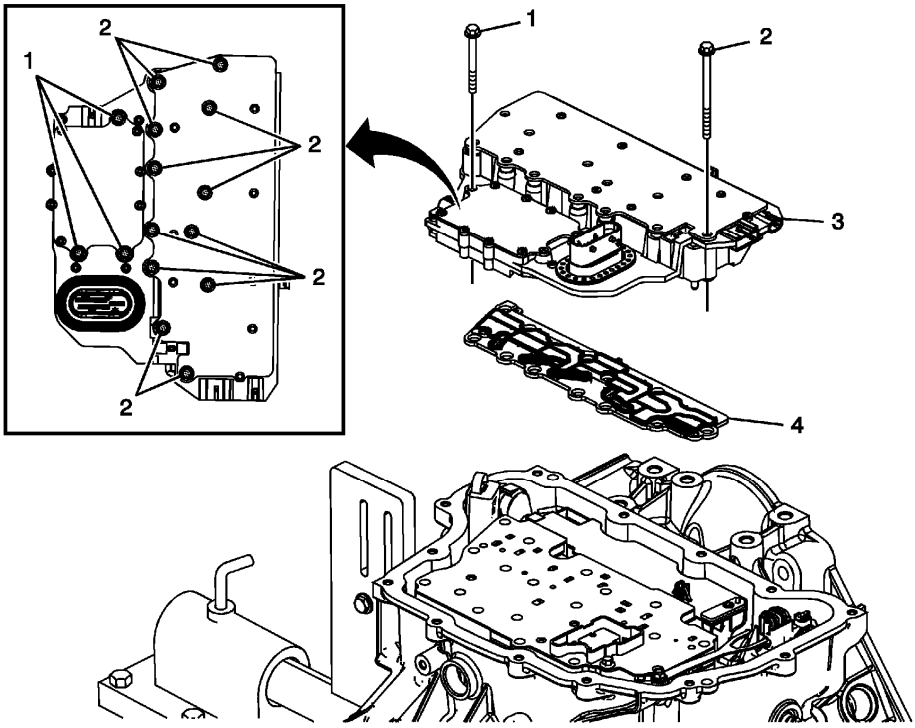

Fig. 4: View Of Control Solenoid (w/Body & TCM) Valve Assembly
Courtesy of GENERAL MOTORS COMPANY

Control Solenoid (With Body and TCM) Valve Assembly Removal

Callout	Component Name
1	Control Valve Body M5 x 40.5 (Qty: 3)
2	Control Valve Body Bolt M6 x 30 (Qty: 12)
3	Control Solenoid (with Body and TCM) Valve Assembly
4	Control Solenoid Valve Assembly Filter Plate **CAUTION:** **Use care when removing or installing the filter plate assembly. A broken or missing retaining tab may not adequately secure the filter plate to the control solenoid valve assembly, resulting in possible damage or contamination.** **NOTE:** **Discard the filter plate. It is not reusable.**

Control Valve Body Assembly Removal

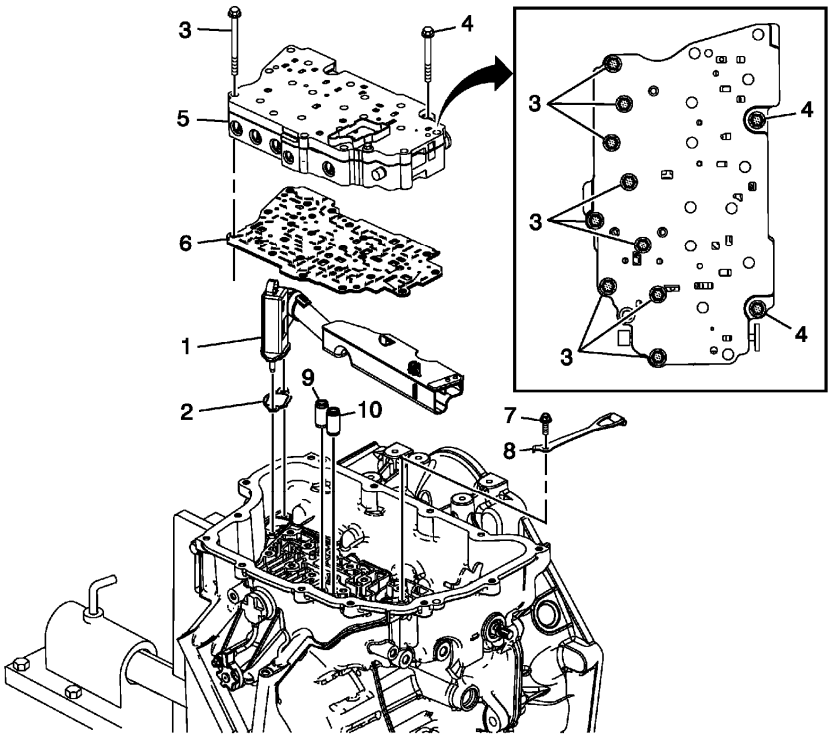

Fig. 5: View Of Control Valve Body Assembly
Courtesy of GENERAL MOTORS COMPANY

Control Valve Body Assembly Removal

Callout	Component Name
1	Fluid Level Control Valve
2	Fluid Level Control Valve Gasket
3	Control Valve Body Bolt M6 x 60 (Qty: 9)
4	Control Valve Body Bolt M6 x 53 (Qty: 2)
5	Control Valve Body Assembly
6	Control Valve Body Spacer Plate Assembly
7	Manual Shaft Detent Spring Bolt M6 x 16 (Qty: 1)
8	Manual Shaft Detent Lever Spring Assembly
9	1-2-3-4 Clutch Fluid Passage Seal **NOTE:** **Discard the seal. It is not reusable.**
10	Low/Reverse Clutch Fluid Passage Seal **NOTE:** **Discard the seal. It is not reusable.**

INPUT AND OUTPUT SPEED SENSOR REMOVAL

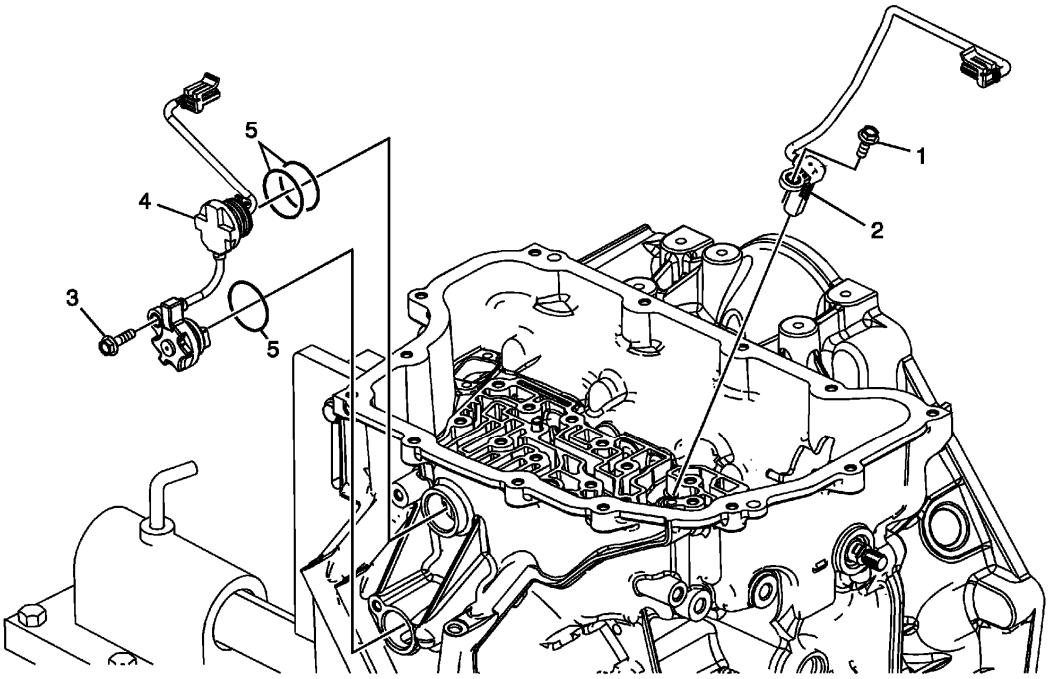

Fig. 6: View Of Input & Output Speed Sensor
Courtesy of GENERAL MOTORS COMPANY

Input and Output Speed Sensor Removal

Callout	Component Name
1	A/Trans Output Speed Sensor Bolt M6 x 18 (Qty: 1)
2	A/Trans Output Speed Sensor Assembly
3	Input Speed Sensor Bolt M6 x 23 (Qty: 1)
4	Input Speed Sensor Assembly **NOTE:** **Compress the locking tabs on the plug to release it from the case and to avoid damaging the retainers.**
5	Input Speed Sensor Assembly Seals (Qty: 3) **NOTE:** **Discard the seals. They are not reusable.**

TORQUE CONVERTER HOUSING WITH FLUID PUMP ASSEMBLY REMOVAL (NON HYBRID)

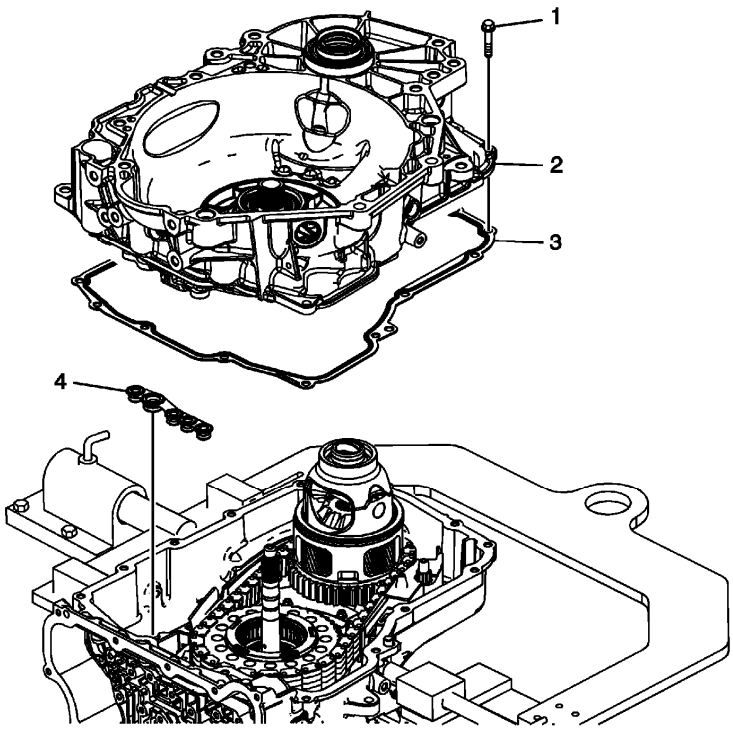

Fig. 7: View Of Torque Converter Housing & Fluid Pump Assembly
Courtesy of GENERAL MOTORS COMPANY

Torque Converter Housing with Fluid Pump Assembly Removal (Non Hybrid)

Callout	Component Name
1	Torque Converter and Differential Housing Bolts M8 x 30 (Qty: 15)
2	Torque Converter with Fluid Pump Housing Assembly
3	Torque Converter Housing Gasket **NOTE:** **Discard the seal. It is not reusable.**
4	Fluid Pump Seal Assembly **NOTE:** **Discard the seal. It is not reusable.**

DIFFERENTIAL CARRIER REMOVAL (6T40/45/50)

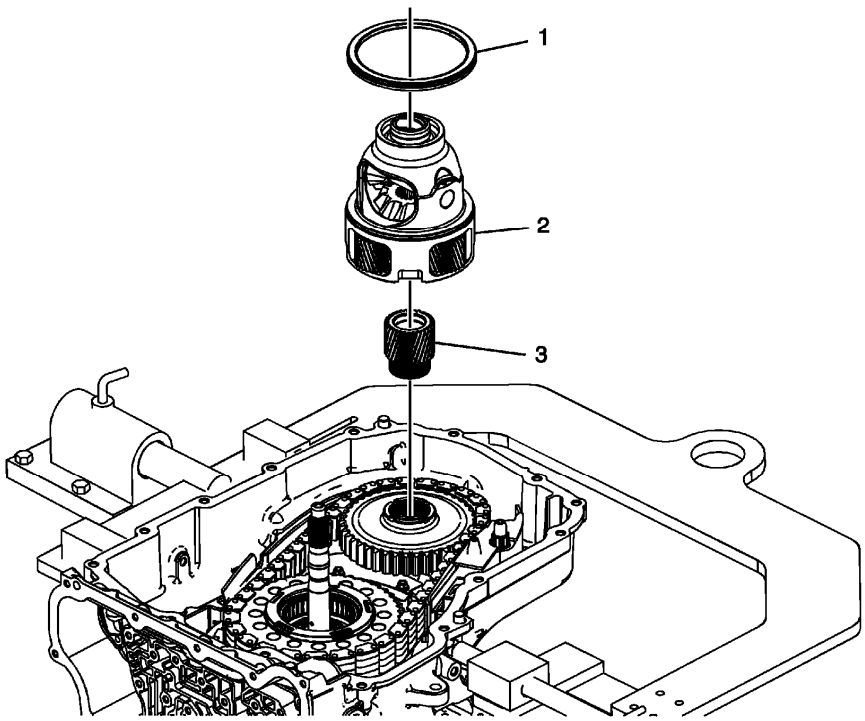

Fig. 8: View Of Front Differential Carrier Assembly
Courtesy of GENERAL MOTORS COMPANY

Differential Carrier Removal (6T40/45/50)

Callout	Component Name
1	Front Differential Carrier Bearing Assembly
2	Differential Carrier Assembly
3	Final Drive Sun Gear

DIFFERENTIAL CARRIER REMOVAL (6T30)

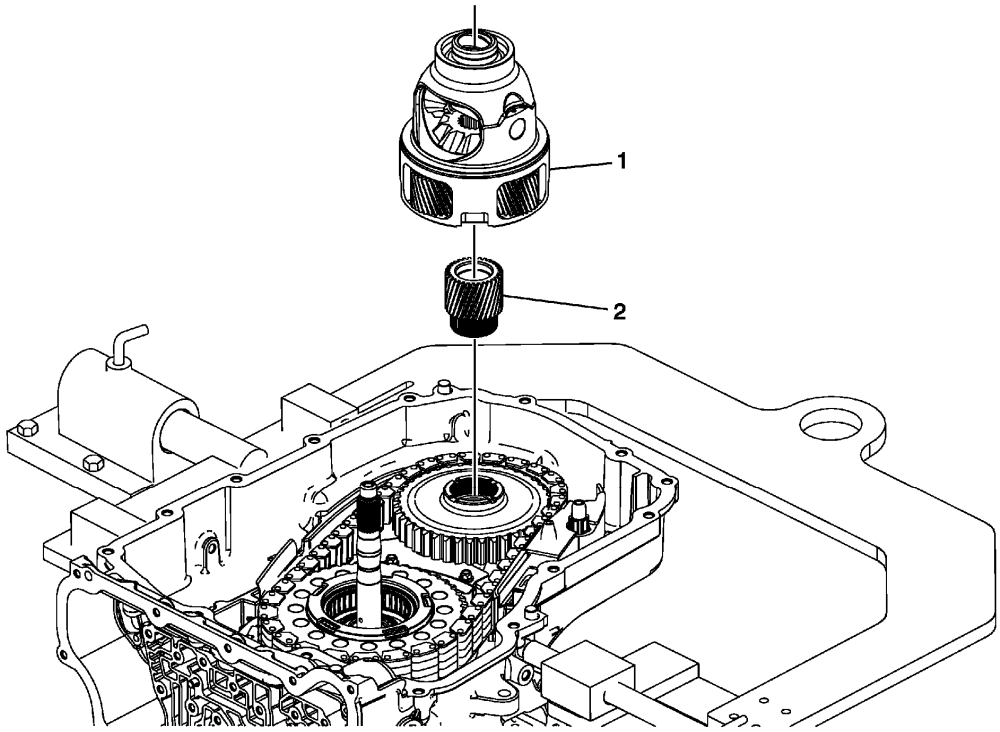

Fig. 9: Front Differential Carrier Assembly (6T30)
Courtesy of GENERAL MOTORS COMPANY

Differential Carrier Removal (6T30)

Callout	Component Name
1	Differential Carrier Assembly
2	Final Drive Sun Gear

DRIVE AND DRIVEN SPROCKET, DRIVE LINK, AND PARK PAWL REMOVAL (6T40/45/50)

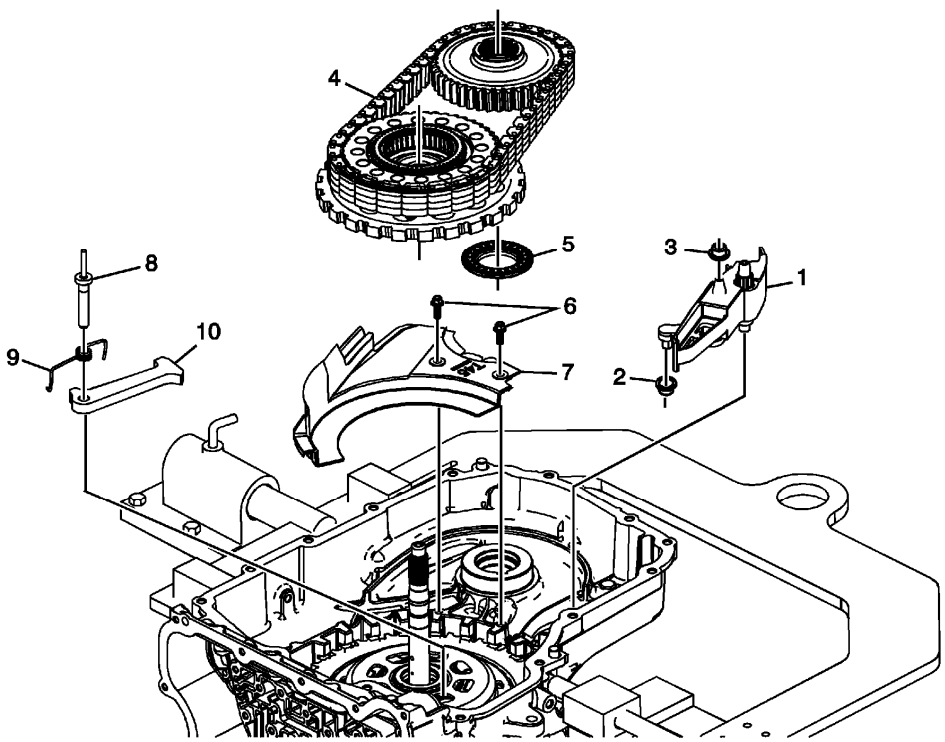

Fig. 10: View Of Drive and Driven Sprocket, Drive Link & Park Pawl
Courtesy of GENERAL MOTORS COMPANY

Drive and Driven Sprocket, Drive Link, and Park Pawl Removal (6T40/45/50)

Callout	Component Name
1	Drive Link Lube Scoop
2	Drive Link Lube Scoop Seals
3	Drive Link Lube Fluid Seal
4	Driven Sprocket Assembly, Drive Sprocket and Park Gear Assembly and Drive Link **Procedure** 1. The drive link, drive and driven sprocket assemblies must be removed at the same time. 2. The driven sprocket ball bearing inner race has a slight interference fit with the case. Pull straight up to ease removal.
5	Driven Sprocket Bearing Assembly **NOTE:** **The driven sprocket bearing may be stuck to the driven sprocket.**
6	Front Differential Carrier Baffle Bolts M6 x 16 (Qty: 2)
7	Front Differential Carrier Baffle
8	Park Pawl Shaft

9	Park Pawl Spring
10	Park Pawl

DRIVE AND DRIVEN SPROCKET, DRIVE LINK, AND PARK PAWL REMOVAL (6T30)

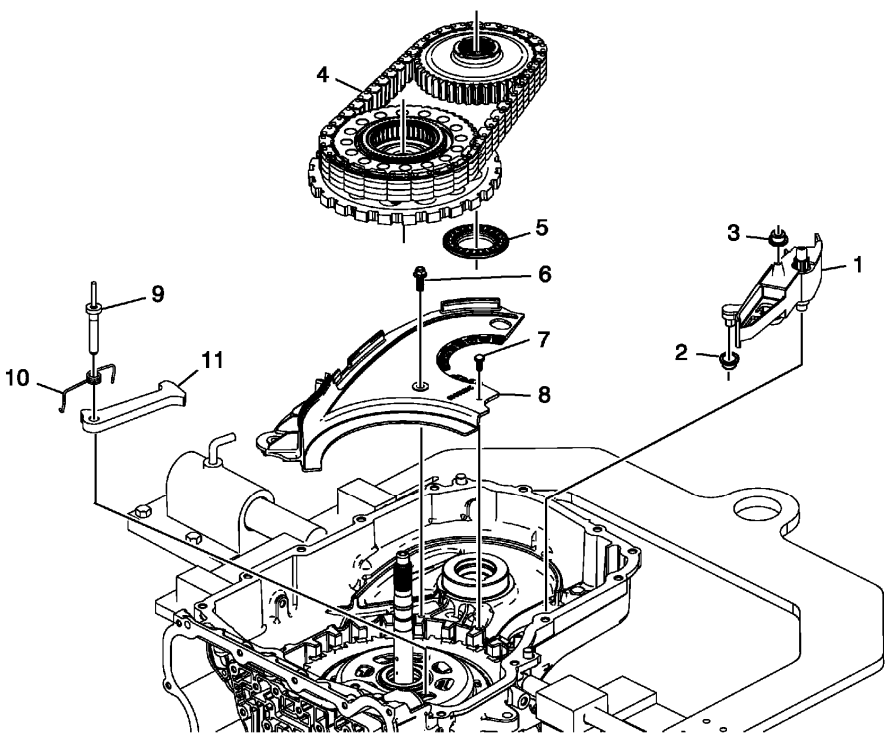

Fig. 11: Drive And Driven Sprocket, Drive Link, and Park Pawl (6T30)
Courtesy of GENERAL MOTORS COMPANY

Drive and Driven Sprocket, Drive Link, and Park Pawl Removal (6T30)

Callout	Component Name
1	Drive Link Lube Scoop
2	Drive Link Lube Scoop Seals
3	Drive Link Lube Fluid Seal
4	Driven Sprocket Assembly, Drive Sprocket and Park Gear Assembly and Drive Link 1. The drive link, drive and driven sprocket assemblies must be removed at the same time. 2. The driven sprocket ball bearing inner race has a slight interference fit with the case. Pull straight up to ease removal.
5	Driven Sprocket Bearing Assembly **TIP:** The driven sprocket bearing may be stuck to the driven sprocket.
6	Baffle Retainer
7	Front Differential Carrier Baffle Bolts M6 x 16 (Qty: 2)

8	Front Differential Carrier Baffle
9	Park Pawl Shaft
10	Park Pawl Spring
11	Park Pawl

INTERNAL COMPONENTS REMOVAL

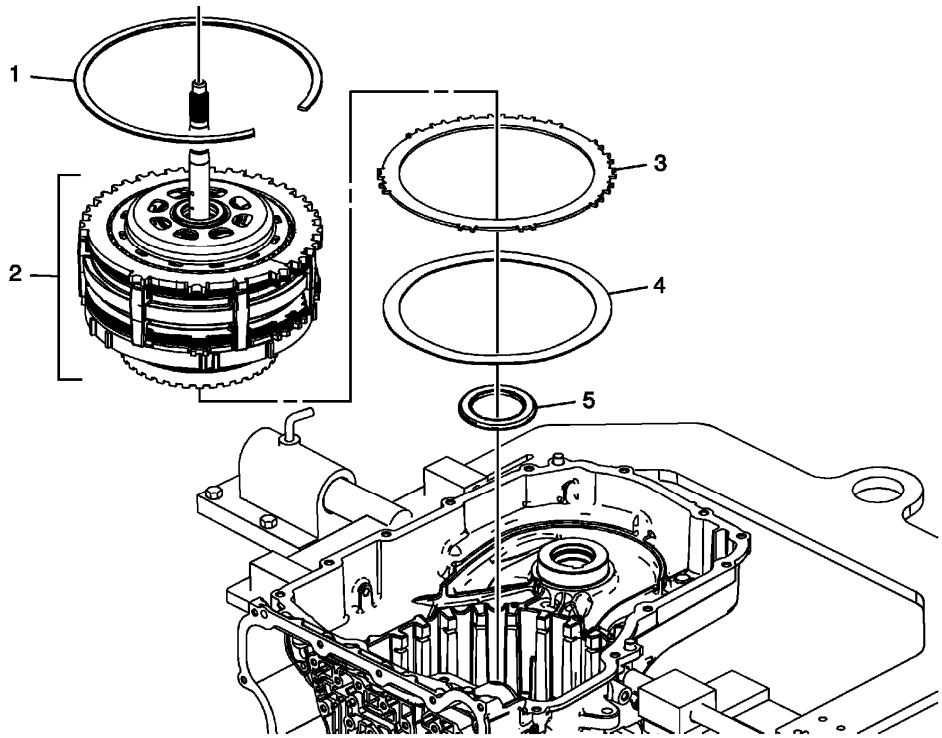

Fig. 12: View Of Transmission Internal Components
Courtesy of GENERAL MOTORS COMPANY

Internal Components Removal

Callout	Component Name
1	1-2-3-4 Clutch Backing Plate Retainer Ring **WARNING:** **The retainer is under tension. Use care when removing or installing the retainer. Personal injury could result.** **CAUTION:** **Use caution during removal or installation of the retainer ring to avoid damage to the case machined surface in the park pawl area. Burrs or raised edges on the case machined surface can cause the park pawl to bind and prohibit it from engaging the park gear.**

	NOTE: **Remove one end of the retainer using DT-28585 snap ring remover or equivalent and work the retainer out of the case groove.** **Special Tool** **DT-28585** Snap Ring Remover or equivalent For equivalent regional tools, refer to **Special Tools** .
2	3-5 Reverse and 4-5-6 Clutch Housing Assembly, Gearset, Low-Reverse Clutch Assembly and Low-Reverse and 1-2-3-4 Clutch Housing **NOTE:** **This unit is heavy - weighs 40 lbs. (18 Kg).**
3	2-6 Clutch Plate (Qty: 1)
4	2-6 Clutch Apply Plate (Waved)
5	35R and 456 Clutch Housing Thrust Bearing Assembly

2-6 CLUTCH PISTON REMOVAL

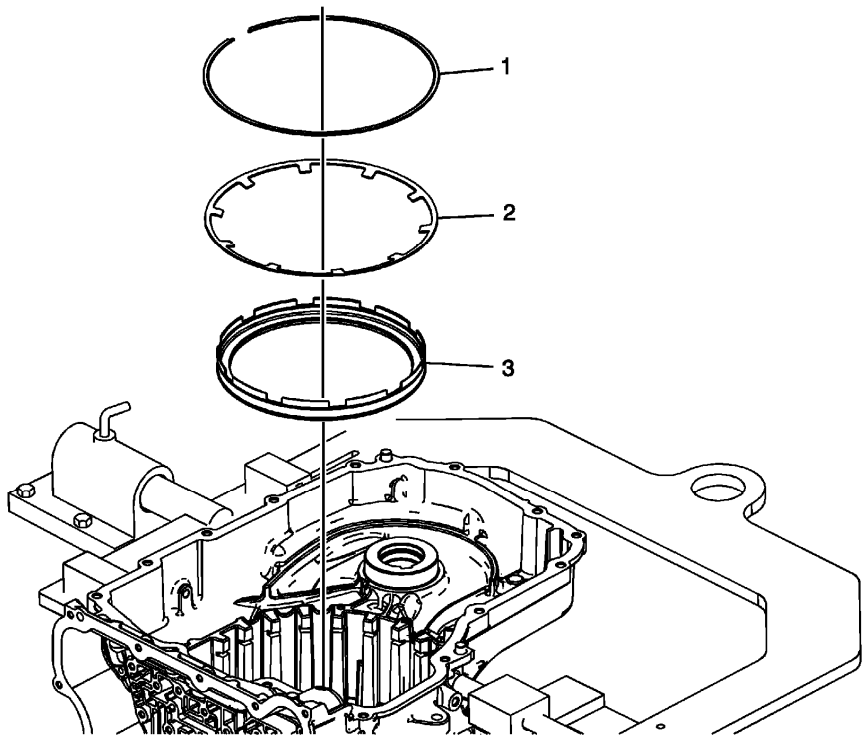

Fig. 13: View Of 2-6 Clutch Piston & Attached Components
Courtesy of GENERAL MOTORS COMPANY

2-6 Clutch Piston Removal

Callout	Component Name
1	2-6 Clutch Spring Retainer **Special Tool** **DT-28585** Snap Ring Remover or equivalent For equivalent regional tools, refer to **Special Tools** .
2	2-6 Clutch Spring
3	2-6 Clutch Piston Assembly **NOTE:** • **Use pliers to remove the piston.** • **Inspect the piston seals for damage and/or wear. The piston is reusable.**

MANUAL SHIFT DETENT LEVER WITH SHAFT POSITION SWITCH ASSEMBLY AND PARK PAWL ACTUATOR REMOVAL

Manual Shaft Detent (w/Shift Position Switch) Lever Assembly Removal

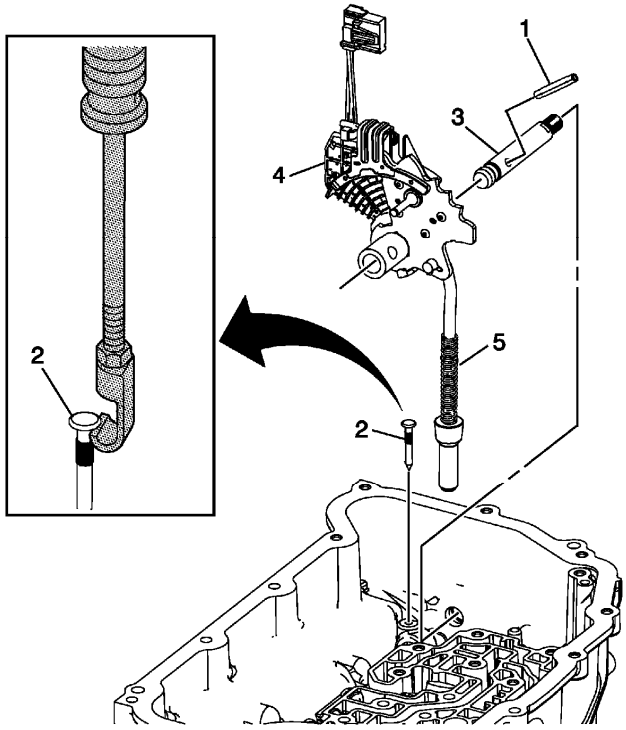

Fig. 14: Identifying Manual Shaft Detent Lever Assembly
Courtesy of GENERAL MOTORS COMPANY

Manual Shaft Detent (w/Shift Position Switch) Lever Assembly Removal

Callout	Component Name
	Manual Shaft Detent Lever Hub Pin

1	**NOTE:** **Use side cutter to remove the pin (1) and discard.**
2	Manual Shift Shaft Pin **NOTE:** **Discard the pin. It is not reusable.** **Special Tools** • **DT-23129** Universal Seal Remover • **GE-6125-1B** Slide Hammer For equivalent regional tools, refer to **Special Tools** .
3	Manual Shaft
4	Manual Shaft Detent (w/Shift Position Switch) Lever Assembly
5	Park Pawl Actuator Assembly

Park Pawl Actuator Guide Removal

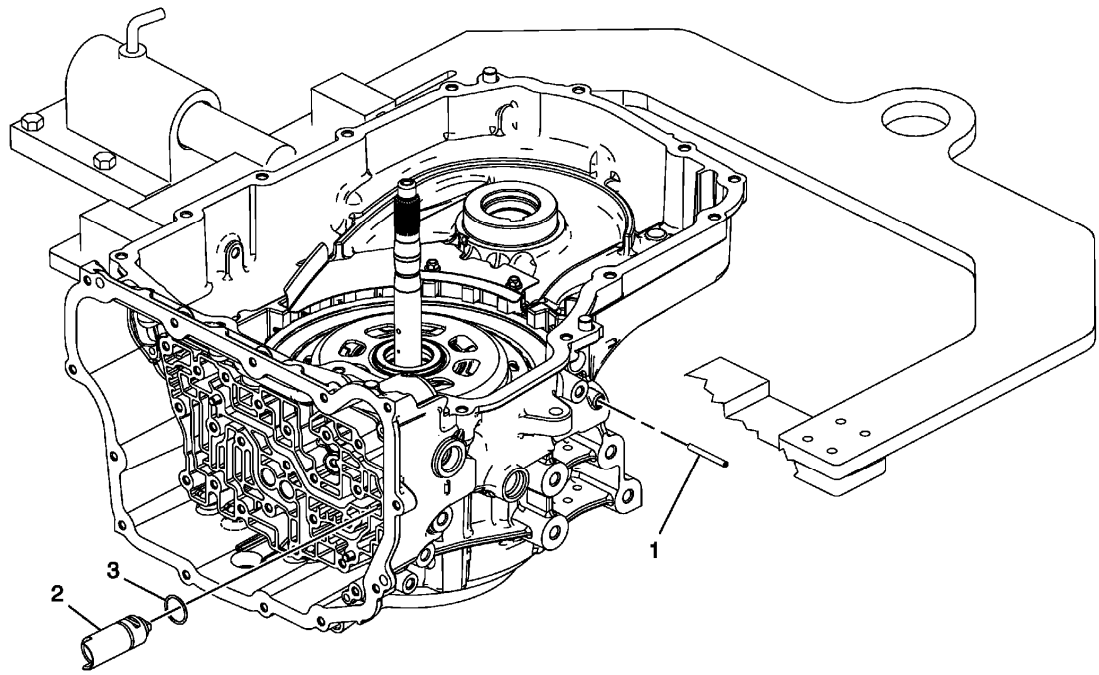

Fig. 15: Identifying Park Pawl Actuator Guide Components
Courtesy of GENERAL MOTORS COMPANY

Park Pawl Actuator Guide Removal

Callout	Component Name

1	Park Pawl Actuator Guide Pin **NOTE:** **Use side cutter to remove the pin (1) and discard.**
2	Park Pawl Actuator Guide Assembly
3	Park Pawl Actuator Guide Assembly Seal **NOTE:** **Discard the seal. It is not reusable.**

MANUAL SHIFT SHAFT SEAL REMOVAL

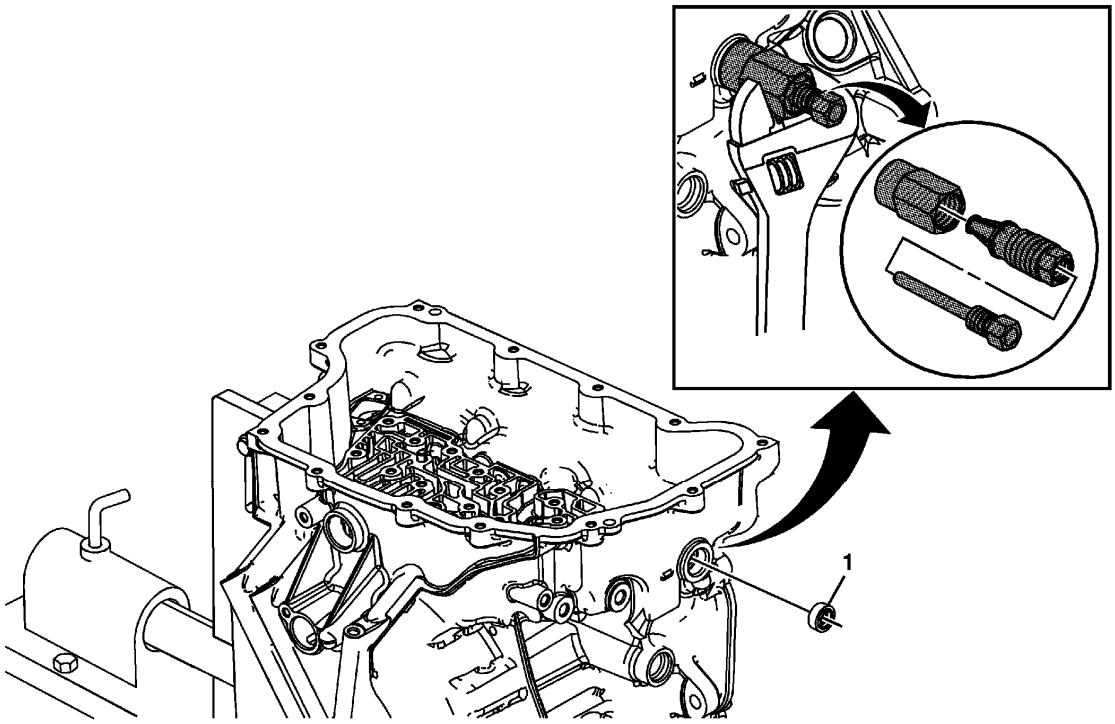

Fig. 16: identifying Manual Shift Shaft Seal
Courtesy of GENERAL MOTORS COMPANY

Manual Shift Shaft Seal Removal

Callout	Component Name
1	Manual Shift Shaft Seal **NOTE:** **Use the DT-45201 seal remover to remove the seal to prevent damage to the case surface.** **Special Tools**

	DT-45201 Seal Remover For equivalent regional tools, refer to **Special Tools** .

INPUT SHAFT SUPPORT REPLACEMENT (GEN 1)

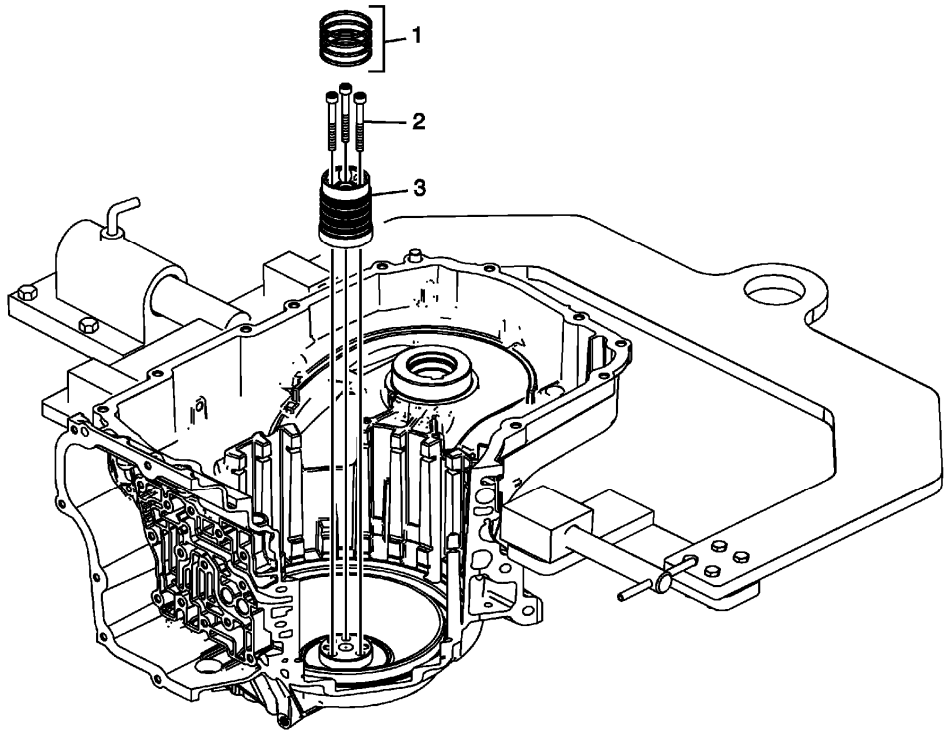

Fig. 17: identifying Input Shaft Support & Attachments
Courtesy of GENERAL MOTORS COMPANY

Input Shaft Support Replacement (Gen 1)

Callout	Component Name
1	3-5 Reverse and 4-5-6 Clutch Fluid Seals (Qty: 4) **NOTE:** • **Discard the fluid seals. They are not reusable.** • **Refer to 3-5-Reverse and 4-5-6 Clutch Fluid Seal Ring Replacement (Gen 2), 3-5-Reverse and 4-5-6 Clutch Fluid Seal Ring Replacement (Gen 1).**
2	Input Shaft Support Bolts M6 x 50 (Qty: 3) **CAUTION:** **Refer to Fastener Caution .** **Tighten** 12 N.m (106 lb in)

3	Input Shaft Support **NOTE:** **Inspect the support for wear, damage or porosity.**

INPUT SHAFT SUPPORT REPLACEMENT (GEN 2)

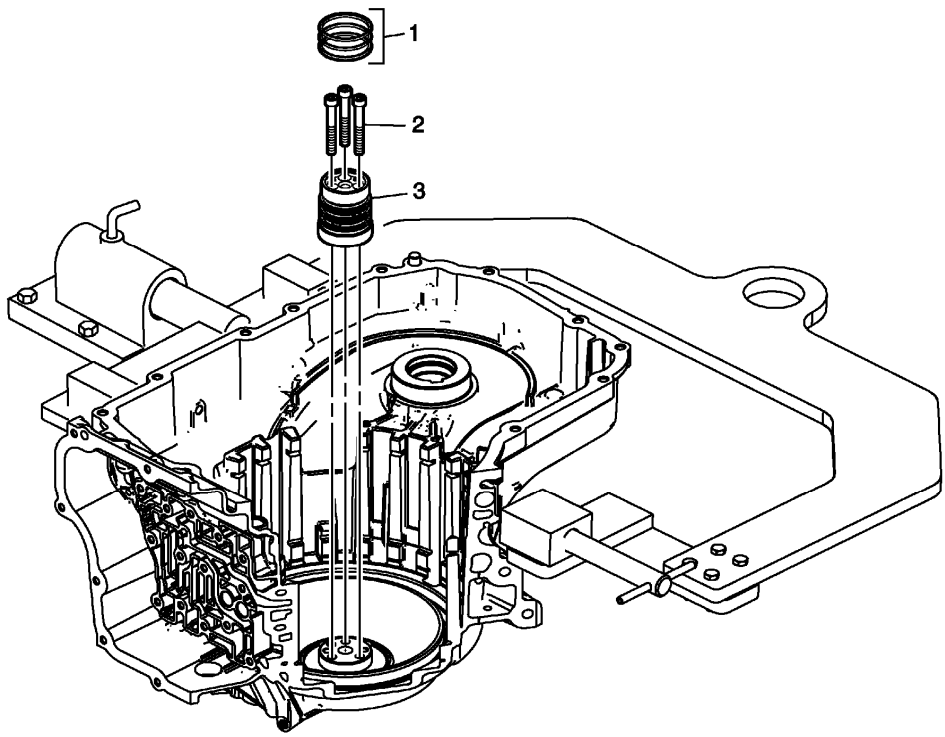

Fig. 18: Input Shaft Support (Gen 2)
Courtesy of GENERAL MOTORS COMPANY

Input Shaft Support Replacement (Gen 2)

Callout	Component Name
1	3-5 Reverse and 4-5-6 Clutch Fluid Seals (Qty: 3) **NOTE:** • **Discard the fluid seals. They are not reusable.** • **Refer to 3-5-Reverse and 4-5-6 Clutch Fluid Seal Ring Replacement (Gen 2), 3-5-Reverse and 4-5-6 Clutch Fluid Seal Ring Replacement (Gen 1).**
2	Input Shaft Support Bolts M6 x 50 (Qty: 3) **CAUTION:** **Refer to Fastener Caution .**

	Tighten 12 N.m (106 lb in)
3	Input Shaft Support **NOTE:** **Inspect the support for wear, damage or porosity.**

3-5-REVERSE AND 4-5-6 CLUTCH FLUID SEAL RING REPLACEMENT (GEN 1)

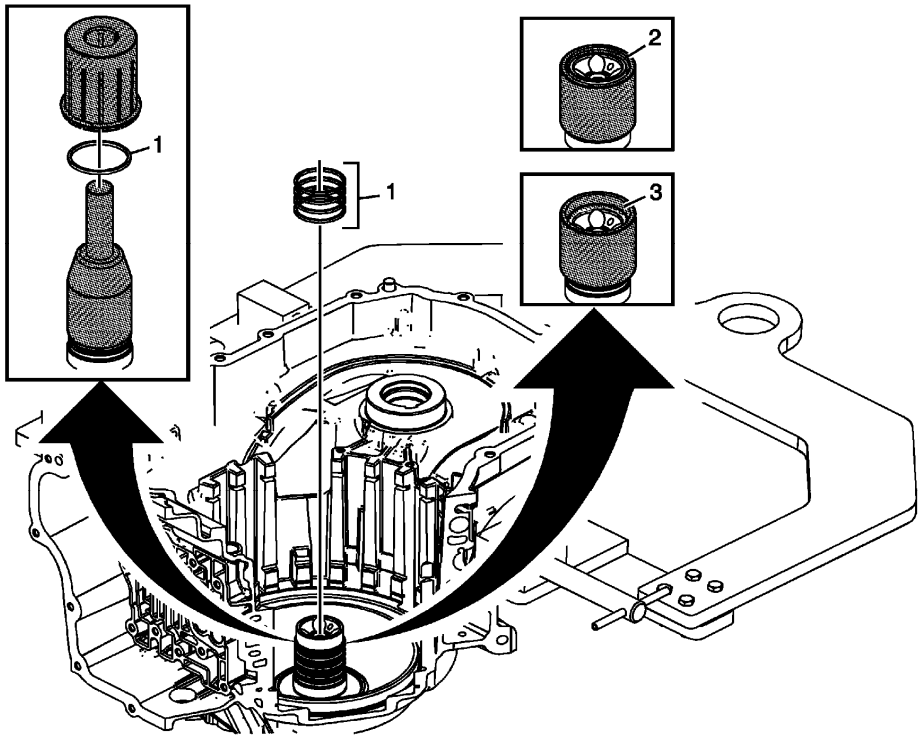

Fig. 19: identifying 3-5-Reverse & 4-5-6 Clutch Fluid Seal Rings
Courtesy of GENERAL MOTORS COMPANY

3-5-Reverse and 4-5-6 Clutch Fluid Seal Ring Replacement (Gen 1)

Callout	Component Name
Special Tools **DT-46620** Seal Installer For equivalent regional tools, refer to **Special Tools** .	
1	3-5 Reverse and 4-5-6 Clutch Fluid Seals (Qty: 4) **Procedure** 1. Place DT-46620-3 which is part of **DT-46620** seal installer over the case hub and adjust it so that only the bottom seal ring is exposed. 2. Place a NEW fluid seal ring onto DT-46620-3 which is part of

	DT-46620 seal installer. 3. Use DT-46620-2 which is part of **DT-46620** seal installer to push the fluid seal ring down over DT-46620-3 which is part of **DT-46620** seal installer into the hub ring groove. 4. Repeat the above steps to install all 4 seal rings, adjusting DT-46620-3 which is part of **DT-46620** seal installer to the appropriate ring groove.
2	Small Chamfer Up **CAUTION:** **Do not force the seal installer down over the seals as this will roll and damage the seals. The large chamfer is designed to fit over the over stretched seal. Use a hand to help shrink the seal if the seal installer is difficult to install over the seal rings.** **Procedure** Install DT-46620-1 which is part of **DT-46620** seal installer with the large chamfer end down over the fluid seal rings and leave DT-46620-1 which is part of **DT-46620** seal installer on the seals for at least 60 seconds.
3	Large Chamfer Up **Procedure** 1. Install DT-46620-1 which is part of **DT-46620** seal installer with the small chamfer end facing down for at least 60 seconds. This will properly size the bottom seal ring. 2. Leaving DT-46620-1 which is part of **DT-46620** seal installer on the fluid seal rings for an extended period of time could cause a fluid leak on the initial clutch piston circuit until the seal rings warm up and expand to the proper dimension.

3-5-REVERSE AND 4-5-6 CLUTCH FLUID SEAL RING REPLACEMENT (GEN 2)

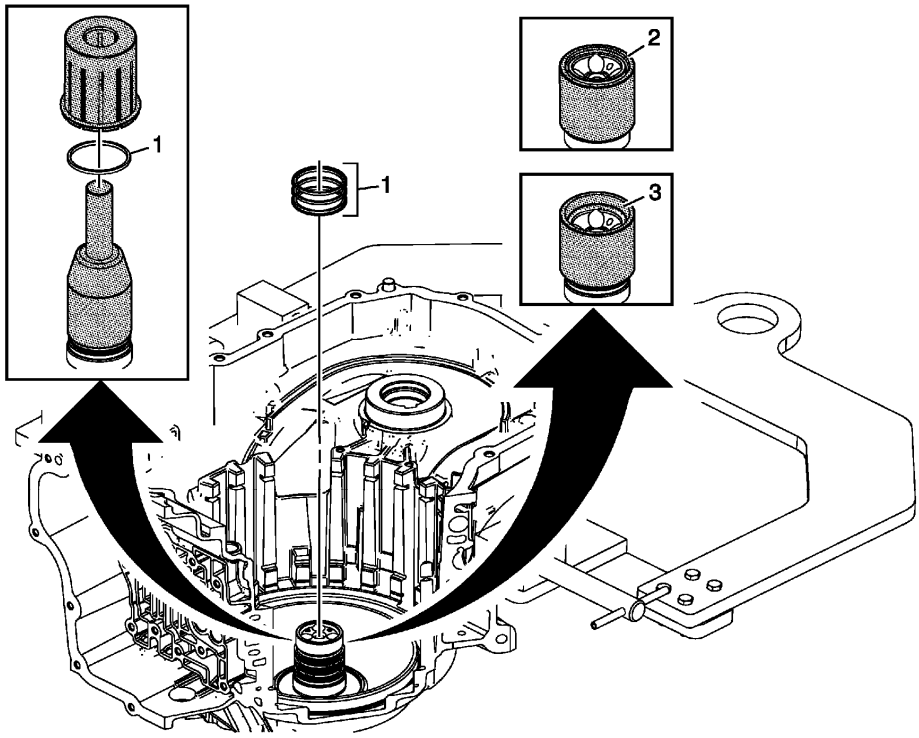

Fig. 20: 3-5-Reverse and 4-5-6 Clutch Fluid Seal Ring (Gen 2)
Courtesy of GENERAL MOTORS COMPANY

3-5-Reverse and 4-5-6 Clutch Fluid Seal Ring Replacement (Gen 2)

Callout	Component Name
Special Tools **DT-46620** Seal Installer For equivalent regional tools, refer to **Special Tools** .	
1	3-5 Reverse and 4-5-6 Clutch Fluid Seals (Qty: 3) **Procedure** 1. Place DT-46620-3 which is part of **DT-46620** seal installer over the case hub and adjust it so that only the bottom seal ring is exposed. 2. Place a NEW fluid seal ring onto DT-46620-3 which is part of **DT-46620** seal installer. 3. Use DT-46620-2 which is part of **DT-46620** seal installer to push the fluid seal ring down over DT-46620-3 which is part of **DT-46620** seal installer into the hub ring groove. 4. Repeat the above steps to install all 3 seal rings, adjusting DT-46620-3 which is part of **DT-46620** seal installer to the appropriate ring groove.
	Small Chamfer Up

2	**CAUTION:** **Do not force the seal installer down over the seals as this will roll and damage the seals. The large chamfer is designed to fit over the over stretched seal. Use a hand to help shrink the seal if the seal installer is difficult to install over the seal rings.** **Procedure** Install DT-46620-1 which is part of **DT-46620** seal installer with the large chamfer end down over the fluid seal rings and leave DT-46620-1 which is part of **DT-46620** seal installer on the seals for at least 60 seconds.
3	Large Chamfer Up **Procedure** 1. Install DT-46620-1 which is part of **DT-46620** seal installer with the small chamfer end facing down for at least 60 seconds. This will properly size the bottom seal ring. 2. Leaving DT-46620-1 which is part of **DT-46620** seal installer on the fluid seal rings for an extended period of time could cause a fluid leak on the initial clutch piston circuit until the seal rings warm up and expand to the proper dimension.

FRONT WHEEL DRIVE SHAFT SEAL REPLACEMENT - CASE SIDE

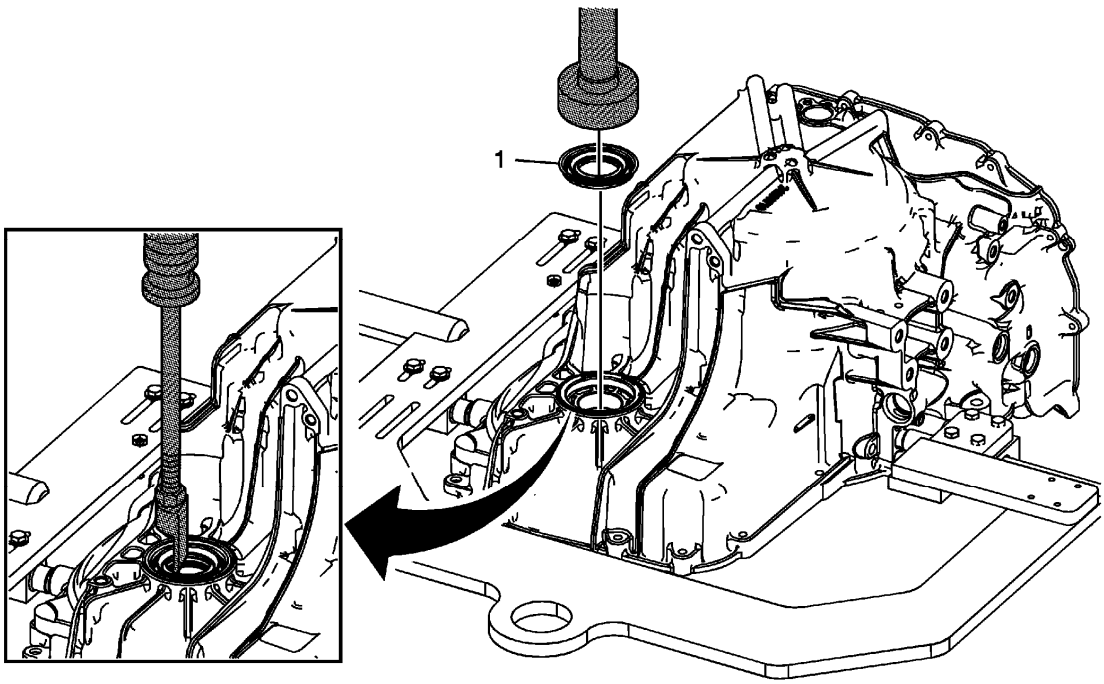

Fig. 21: View Of Case Side Front Wheel Drive Shaft Seal
Courtesy of GENERAL MOTORS COMPANY

Front Wheel Drive Shaft Seal Replacement - Case Side

Callout	Component Name
1	Front Wheel Drive Shaft Oil Seal **Special Tools** • **DT-23129** Universal Seal Remover • **DT-47790** Seal Installer • **GE-6125-1B** Slide Hammer • **GE-8092** Driver Handle For equivalent regional tools, refer to **Special Tools** .

TRANSMISSION CASE CLEANING AND INSPECTION

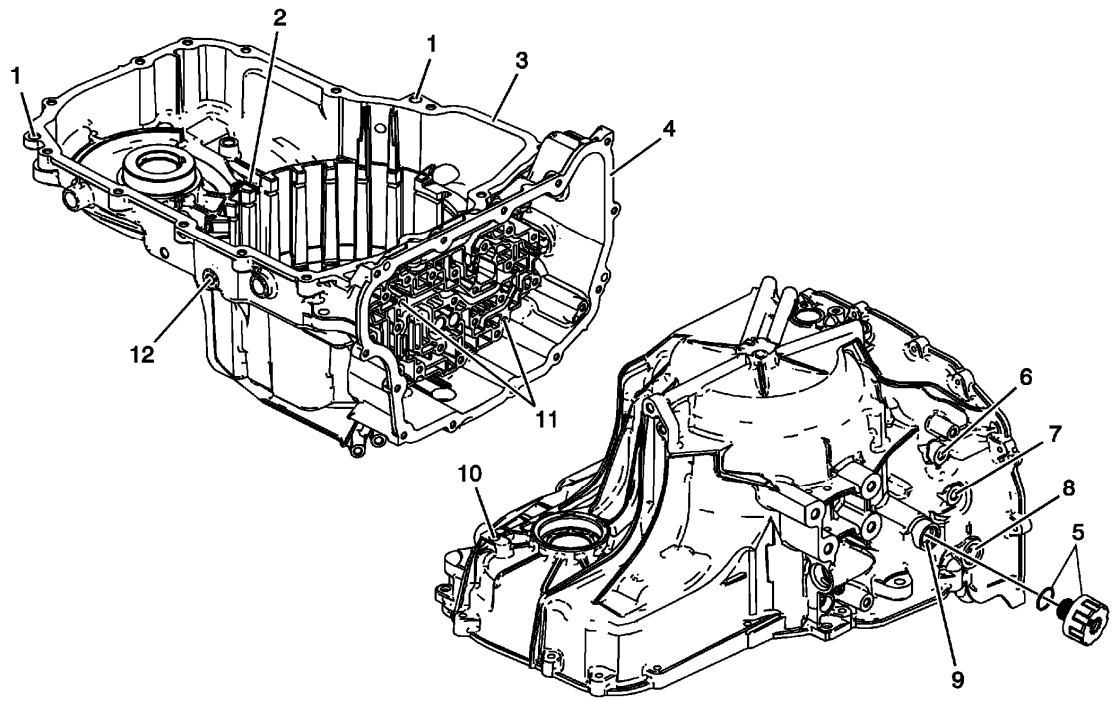

Fig. 22: Cleaning & Inspecting Transmission Case
Courtesy of GENERAL MOTORS COMPANY

Transmission Case Cleaning and Inspection

Callout	Component Name
CAUTION:	

Do not use abrasive pads or bristle devices to clean the sealing surfaces. Abrasive pads produce a fine grit that can effect transmission function. Abrasive pads can also remove enough metal to create oil leaks.

CAUTION:
After cleaning the transmission components, allow to air dry. Do not use cloth or paper towels in order to dry any transmission components. Lint from the towels can cause component failure.

CAUTION:
Do not reuse cleaning solvents. Previously used solvents may deposit sediment which may damage the component.

Preliminary Procedures

1. Thoroughly clean the transmission case assembly, including case threads, with clean solvent.
2. Clean gasket sealing surfaces. Remove all residual gasket material.
3. Inspect all threaded holes. If necessary, repair any thread damage.

1	Torque Converter Housing Locating Pin **Procedure** Inspect the torque converter housing locating pins. **NOTE:** **The locating pins installed height is 7.4 mm (0.29 in).**
2	Fluid Trough Check Ball **NOTE:** **The check ball installed depth is 11 mm (0.43 in).**
3	Converter Housing Sealing Surface
4	Control Valve Body Cover Sealing Surface
5	Fill Cap Seal
6	Transmission Fluid Cooler Pipe Sealing Surface
7	Fluid Pressure Test Plug **CAUTION:** **Refer to Fastener Caution .** **Tighten** 12 N.m (106 lb in)
8	Manual Shift Shaft Seal Surface
9	Fluid Fill Cap Sealing Surface
10	Fluid Level Plug **Tighten** 12 N.m (106 lb in)

11	Valve Body Locating Pin **Procedure** Inspect the valve body locating pins. **NOTE:** **The locating pins installed height is 5.8 mm (0.22 in).**
12	Drain Plug **Tighten** 12 N.m (106 lb in)

MANUAL SHIFT DETENT LEVER WITH SHAFT POSITION SWITCH ASSEMBLY AND PARK PAWL ACTUATOR INSTALLATION

Park Pawl Actuator Guide Installation

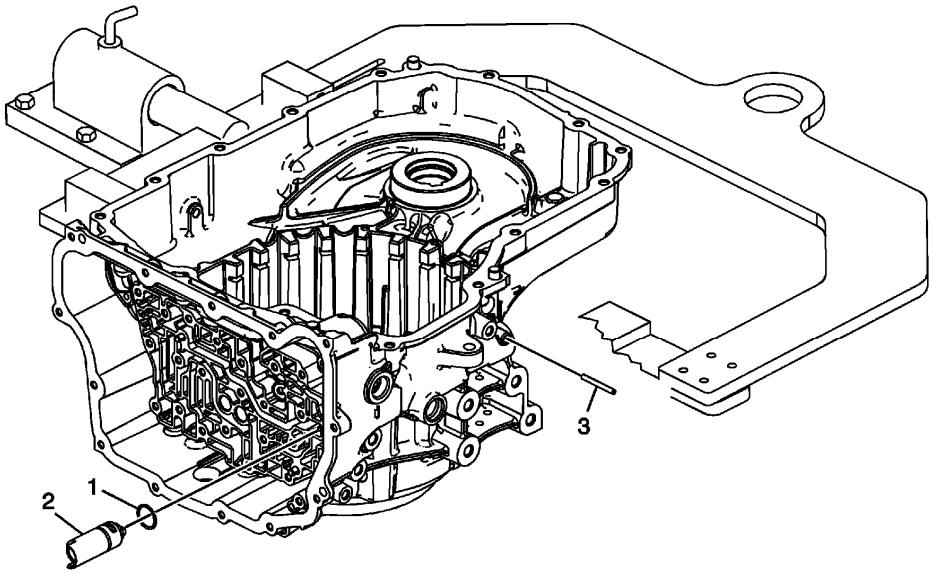

Fig. 23: View Of Park Pawl Actuator Guide & Seal
Courtesy of GENERAL MOTORS COMPANY

Park Pawl Actuator Guide Installation

Callout	Component Name
1	Park Pawl Actuator Guide Assembly Seal
2	Park Pawl Actuator Guide Assembly
	Park Pawl Actuator Guide Pin **CAUTION:**

	Refer to Fastener Caution .
3	**Procedure** Install the park pawl actuator guide pin to correct height. **Tighten** 7.2 mm (0.28 in)

Park Pawl Actuator Installation

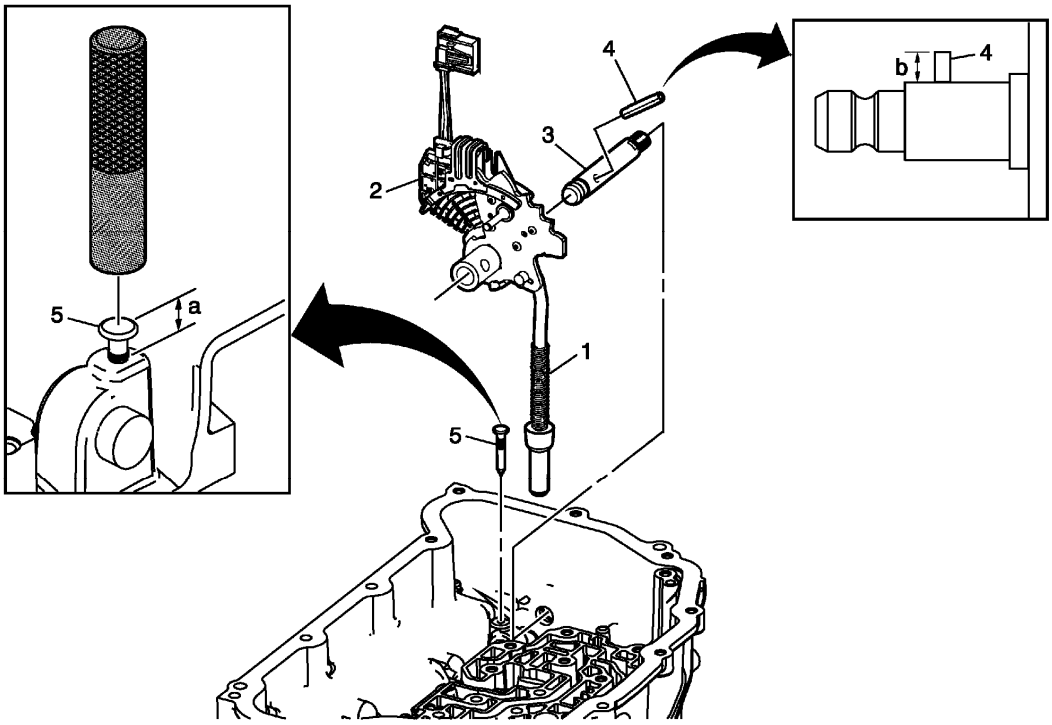

Fig. 24: Identifying Manual Shift Detent Lever with Shaft Position Switch Assembly & Park Pawl Actuator
Courtesy of GENERAL MOTORS COMPANY

Park Pawl Actuator Installation

Callout	Component Name
1	Park Pawl Actuator Assembly
2	Manual Shift Detent (w/Shaft Position Switch) Lever Assembly
3	Manual Shaft **NOTE:** **Lubricate the shaft with ATF to prevent damage to the manual shift shaft seal during installation.**
	Manual Shaft Detent Lever Hub Pin

4	**CAUTION:** **Refer to Fastener Caution .** **Procedure** Install the manual shaft detent lever hub pin to correct height. **NOTE:** **Use a NEW pin to ensure proper engagement with the shaft.** **Specification** 7.9 mm (0.38 in) (b) **Special Tools** **DT-48550** Detent Lever Pin Remover For equivalent regional tools, refer to **Special Tools** .
5	Manual Shift Shaft Pin **CAUTION:** **Use the manual shaft pin installer to install the pin at the correct height in order to properly secure the manual shaft. If you install the pin too deep, the case bore may crack.** **Procedure** Inspect pin installed height is within specifications. **NOTE:** **Use a NEW pin to ensure proper engagement with the case.** **Specification** 7.2-8.2 mm (0.28-0.32 in) (a) **Special Tools** **DT-41229** Manual Shaft Pin Installer For equivalent regional tools, refer to **Special Tools** .

MANUAL SHIFT SHAFT SEAL INSTALLATION

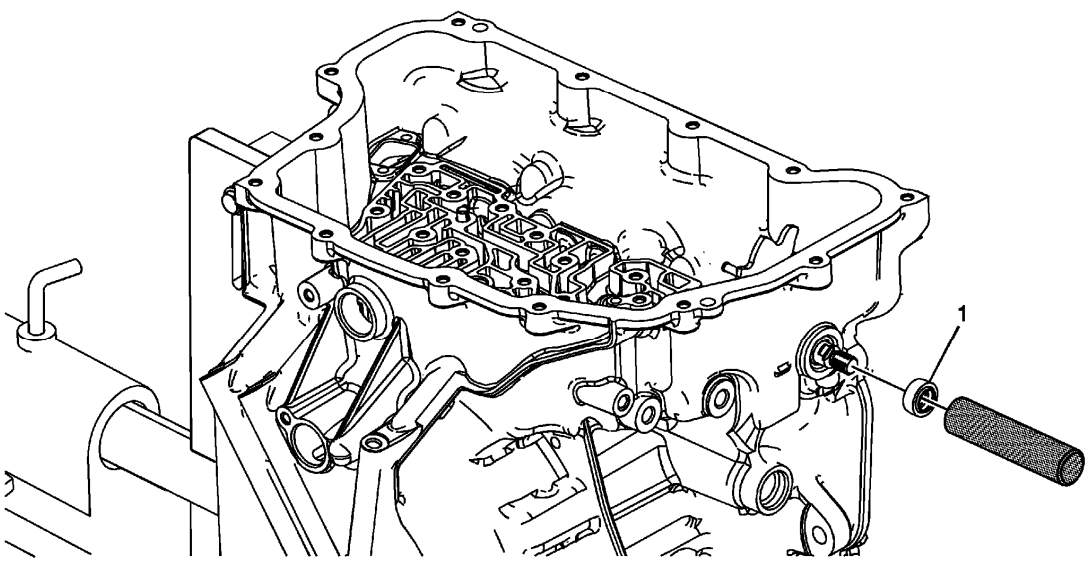

Fig. 25: Identifying Manual Shift Shaft Seal
Courtesy of GENERAL MOTORS COMPANY

Manual Shift Shaft Seal Installation

Callout	Component Name
1	Manual Shift Shaft Seal **Special Tool** **DT-49101** Seal Installer For equivalent regional tools, refer to **Special Tools** .

2-6 CLUTCH PISTON INSTALLATION (6T30)

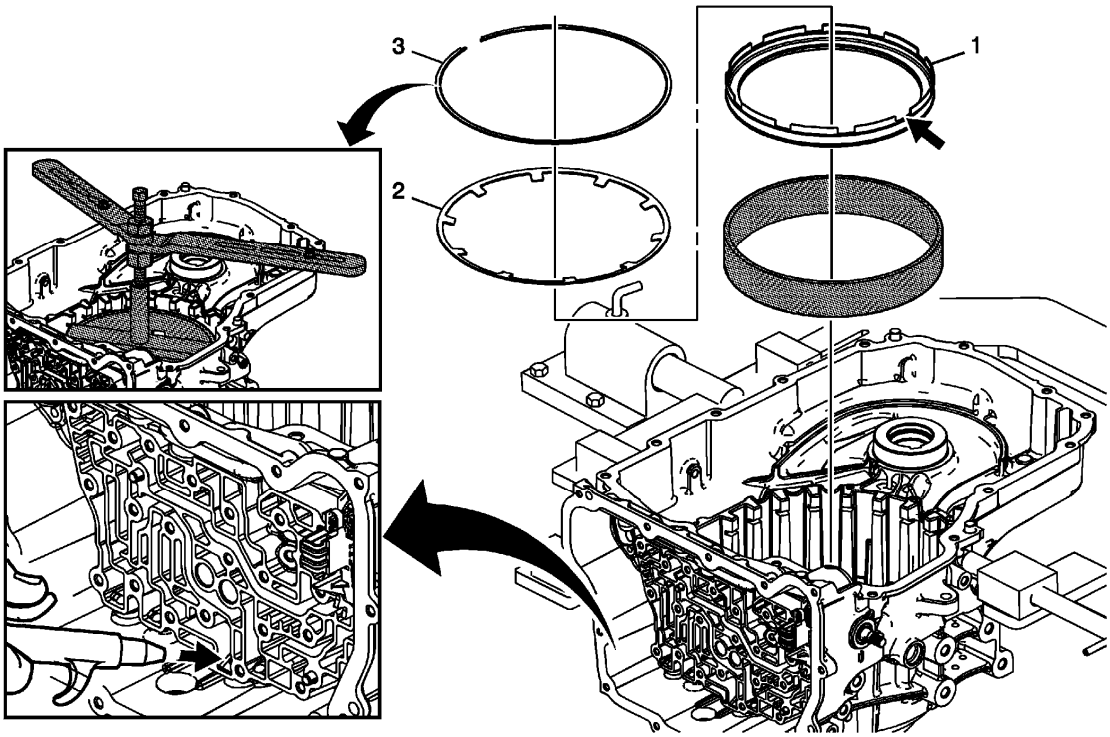

Fig. 26: View Of 2-6 Clutch Piston Assembly
Courtesy of GENERAL MOTORS COMPANY

2-6 Clutch Piston Installation (6T30)

Callout	Component Name
1	2-6 Clutch Piston Assembly • Position the 2-6 piston air bleed and large slot toward the top of the case. • **DT-48271** seal protector prevents the piston seal lip from damage during installation. Apply a thin coat of ATF to the I.D. of the **DT-48271** seal protector to ease installation of the piston. **Special Tool** **DT-48271** Seal Protector For equivalent regional tools, refer to **Special Tools** .
2	2-6 Clutch Spring
	2-6 Clutch Spring Retainer **CAUTION:** **Regulate the air pressure to 276 kPa (40 psi) maximum. High pressure could cause the piston to over travel and damage the piston seals.** • Place the retainer on the 2-6 clutch spring and align the retainer

	opening with the largest gap in the case splines toward the bottom of the case. The retainer opening should be supported by a spline tooth of the case. • Apply shop air to the clutch fluid feed hole in the case to verify proper piston operation.
3	**Special Tools** • **DT-48272** Spring Installer • **DT-48056** Spring Compressor Bridge For equivalent regional tools, refer to **Special Tools** .

2-6 CLUTCH PISTON INSTALLATION (6T40/45/50)

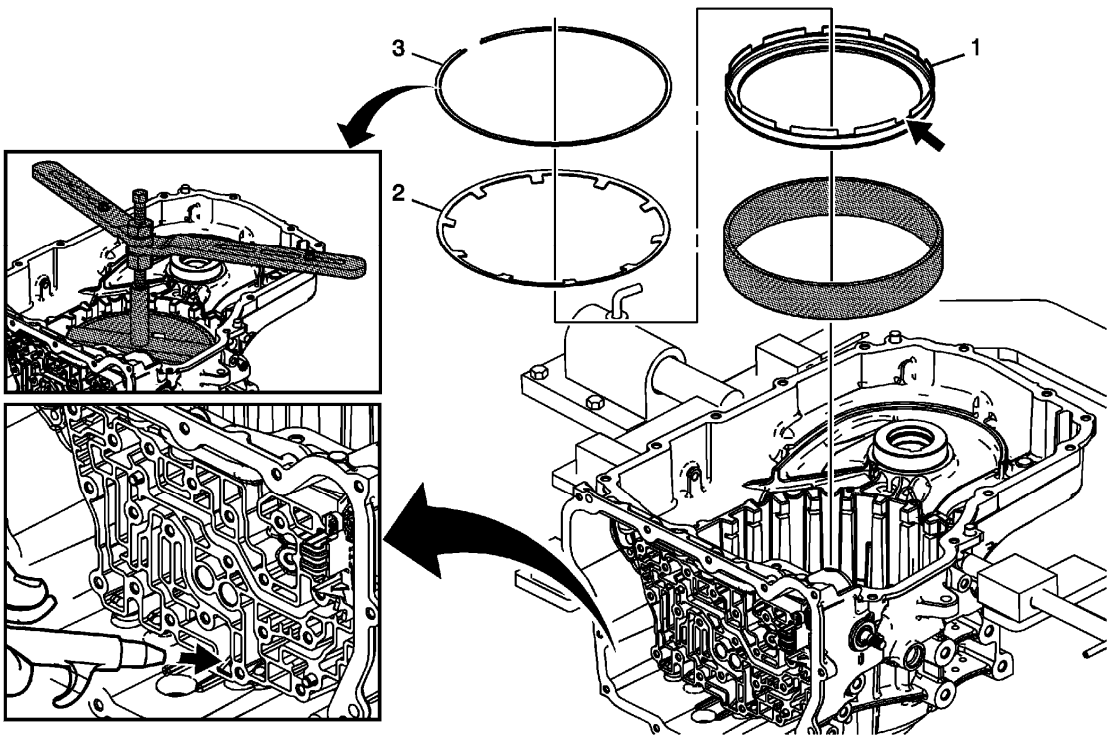

Fig. 27: View Of 2-6 Clutch Piston Assembly
Courtesy of GENERAL MOTORS COMPANY

2-6 Clutch Piston Installation (6T40/45/50)

Callout	Component Name
	2-6 Clutch Piston Assembly **NOTE:** • **Position the 2-6 piston air bleed and large slot toward the top of**

1	**the case.** • **DT-47796 seal protector prevents the piston seal lip from damage during installation. Apply a thin coat of ATF to the I.D. of the DT-47796 seal protector to ease installation of the piston.** **Special Tool** **DT-47796** Seal Protector For equivalent regional tools, refer to **Special Tools** .
2	2-6 Clutch Spring
3	2-6 Clutch Spring Retainer **CAUTION:** **Regulate the air pressure to 276 kPa (40 psi) maximum. High pressure could cause the piston to over travel and damage the piston seals.** **NOTE:** • **Place the retainer on the 2-6 clutch spring and align the retainer opening with the largest gap in the case splines toward the bottom of the case. The retainer opening should be supported by a spline tooth of the case.** • **Apply shop air to the clutch fluid feed hole in the case to verify proper piston operation.** **Special Tools** • **DT-47797** Spring Installer • **DT-48056** Spring Compressor Bridge For equivalent regional tools, refer to **Special Tools** .

LOW AND REVERSE AND 1-2-3-4 CLUTCH HOUSING, LOW AND REVERSE CLUTCH ASSEMBLY, OUTPUT SUN GEAR, AND 2-6 CLUTCH PLATE DISASSEMBLE (GEN 1)

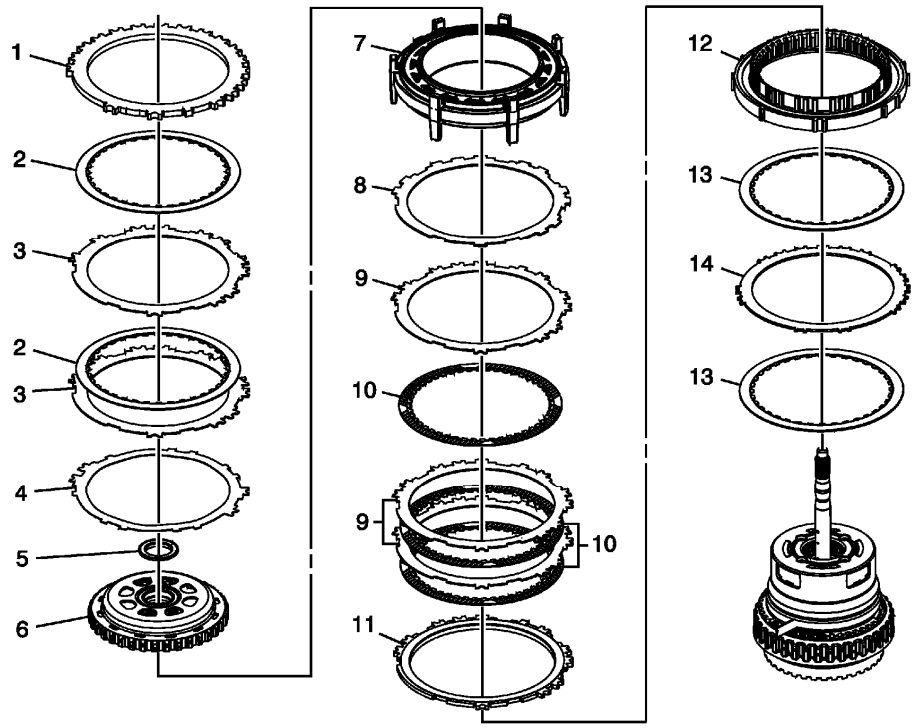

Fig. 28: Disassembled View Of Low/Reverse & 1-2-3-4 Clutch Housing, Low & Reverse Clutch Assembly
Courtesy of GENERAL MOTORS COMPANY

Low and Reverse and 1-2-3-4 Clutch Housing, Low and Reverse Clutch Assembly, Output Sun Gear, and 2-6 Clutch Plate Disassemble (Gen 1)

Callout	Component Name
1	1-2-3-4 Clutch Backing Plate
2	1-2-3-4 Clutch Plate Assembly (Qty: 2)
3	1-2-3-4 Clutch Plate (Qty: 2)
4	1-2-3-4 Clutch Waved Plate
5	Output Sun Gear Thrust Bearing Assembly **NOTE:** **The sun gear thrust bearing may be stuck to the driven sprocket hub.**
6	Output Sun Gear Assembly
7	Low-Reverse and 1-2-3-4 Clutch Housing Assembly
8	Low and Reverse Clutch Apply Plate
9	Low and Reverse Clutch Plate (Qty: 3)
10	Low and Reverse Clutch Plate Assembly (Qty: 3)
11	Low and Reverse Clutch Backing Plate
12	Low and Reverse Clutch Assembly (OWC)
13	2-6 Clutch Plate Assembly (Qty: 2)
14	2-6 Clutch Plate (Qty: 1)

LOW AND REVERSE AND 1-2-3-4 CLUTCH HOUSING, LOW AND REVERSE CLUTCH ASSEMBLY, OUTPUT SUN GEAR, AND 2-6 CLUTCH PLATE DISASSEMBLE (GEN 2)

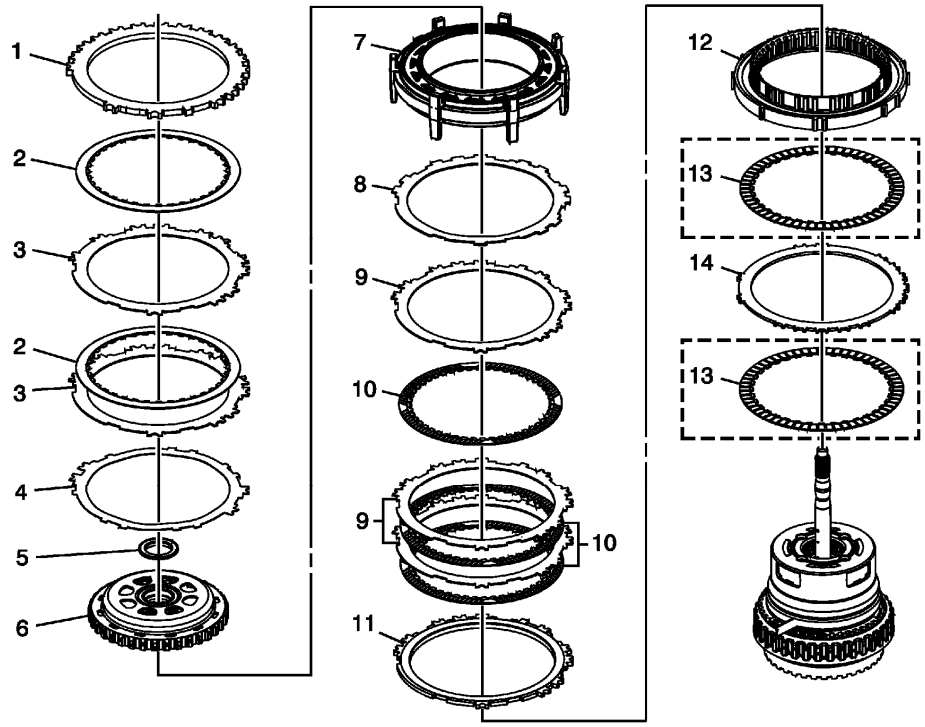

Fig. 29: 1-2-3-4 Clutch Housing And Clutch Assembly Components
Courtesy of GENERAL MOTORS COMPANY

Low and Reverse and 1-2-3-4 Clutch Housing, Low and Reverse Clutch Assembly, Output Sun Gear, and 2-6 Clutch Plate Disassemble (Gen 2)

Callout	Component Name
1	1-2-3-4 Clutch Backing Plate
2	1-2-3-4 Clutch Plate Assembly (Qty: 2)
3	1-2-3-4 Clutch Plate (Qty: 2)
4	1-2-3-4 Clutch Waved Plate
5	Output Sun Gear Thrust Bearing Assembly **NOTE:** **The sun gear thrust bearing may be stuck to the driven sprocket hub.**
6	Output Sun Gear Assembly
7	Low-Reverse and 1-2-3-4 Clutch Housing Assembly
8	Low and Reverse Clutch Apply Plate
9	Low and Reverse Clutch Plate (Qty: 3)
10	Low and Reverse Clutch Plate Assembly (Qty: 3)
11	Low and Reverse Clutch Backing Plate

12	Low and Reverse Clutch Assembly (OWC)
13	2-6 Clutch Plate Assembly (Qty: 2) - Model Dependent **NOTE:** **The number of grooves in the clutch plate friction material varies depending on model.**
14	2-6 Clutch Plate (Qty: 1)

INPUT, REACTION, AND OUTPUT CARRIER DISASSEMBLE

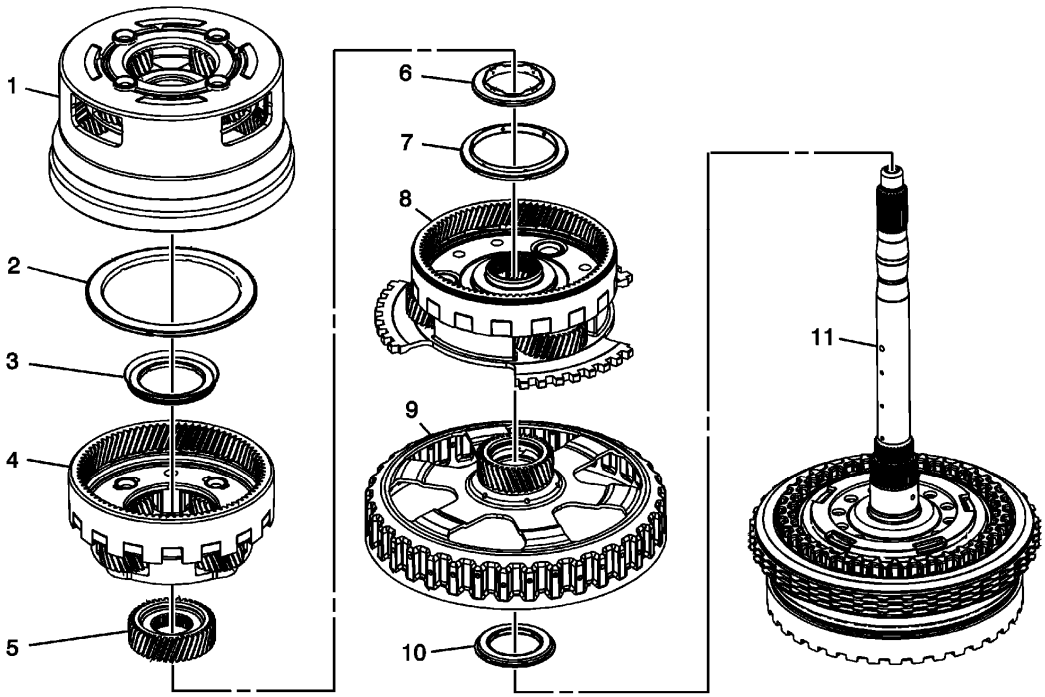

Fig. 30: Disassembled View Of Input, Reaction & Output Carrier
Courtesy of GENERAL MOTORS COMPANY

Input, Reaction, and Output Carrier Disassemble

Callout	Component Name
1	Output Carrier Assembly **NOTE:** • **The 6T30 and 6T40 have 4 pinions.** • **The 6T45 and 6T50 have 5 pinions.**
2	Output Carrier Thrust Bearing Assembly
3	Input Sun Gear Thrust Bearing Assembly
	Input Carrier Assembly

4	**NOTE:** • **The 6T30 and 6T40 have 4 pinions.** • **The 6T45 and 6T50 have 5 pinions.**
5	Input Sun Gear
6	Input Sun Gear Thrust Bearing Assembly
7	Input Carrier Thrust Bearing Assembly
8	Reaction Carrier Assembly **NOTE:** **Starting in 2012, all 6T30/40/45/50 models have 3 pinion reaction carriers. The 3 pinion reaction carriers are back serviceable for all models.** **Original Configuration:** • The 6T30 and 6T40 had 3 pinions. • The 6T45 and 6T50 had 4 pinions.
9	Reaction Carrier Sun Gear Assembly
10	Reaction Carrier Sun Gear Thrust Bearing **NOTE:** **The sun gear thrust bearing may be stuck to the sun gear.**
11	3-5 Reverse and 4-5-6 Clutch Housing Assembly

3-5-REVERSE AND 4-5-6 CLUTCH HOUSING DISASSEMBLE (6T30/40/45/50 - GEN 1)

Turbine Shaft, Reluctor Wheel and Piston Removal

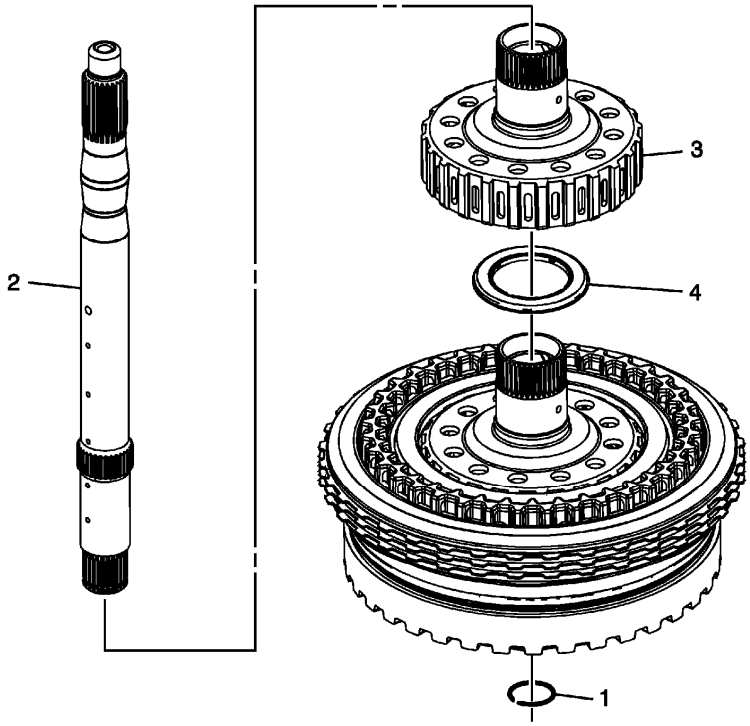

Fig. 31: View Of Turbine Shaft, Reluctor Wheel & Piston
Courtesy of GENERAL MOTORS COMPANY

Turbine Shaft, Reluctor Wheel and Piston Removal

Callout	Component Name
1	Turbine Shaft Retainer Ring **NOTE:** **Discard the retainer ring. It is not re-usable.** **Special Tools** **GE 5586-A** Snap Ring Pliers or equivalent For equivalent regional tools, refer to **Special Tools** .
2	Turbine Shaft
3	Reaction Carrier Hub Assembly
4	Reaction Carrier Hub Thrust Bearing Assembly

4-5-6 Clutch Plate Removal

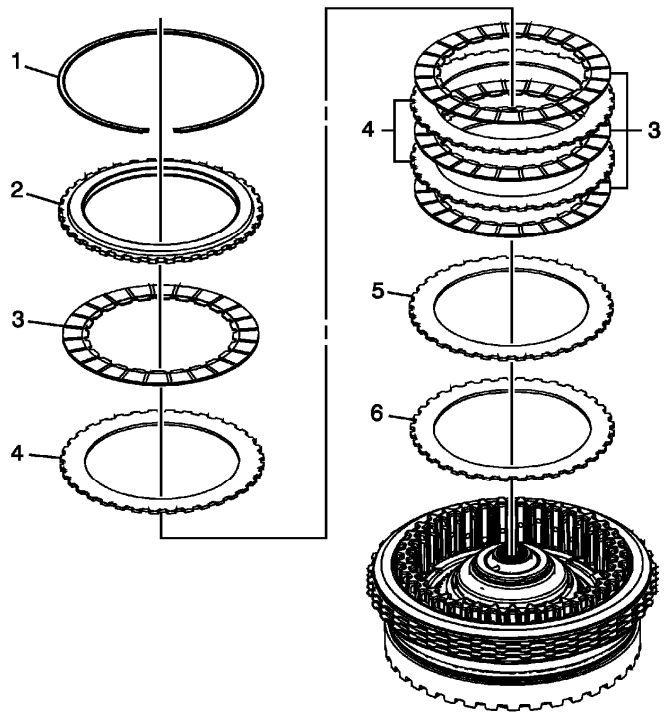

Fig. 32: View Of 4-5-6 Clutch Plate Components
Courtesy of GENERAL MOTORS COMPANY

4-5-6 Clutch Plate Removal

Callout	Component Name
1	4-5-6 Clutch Backing Plate Retaining Ring
2	4-5-6 Clutch Backing Plate
3	4-5-6 Clutch Plate Assembly (Qty: 4)
4	4-5-6 Clutch Plate (Qty: 3)
5	4-5-6 Clutch Apply Plate
6	4-5-6 Clutch Wave Plate

4-5-6 Clutch Piston Removal

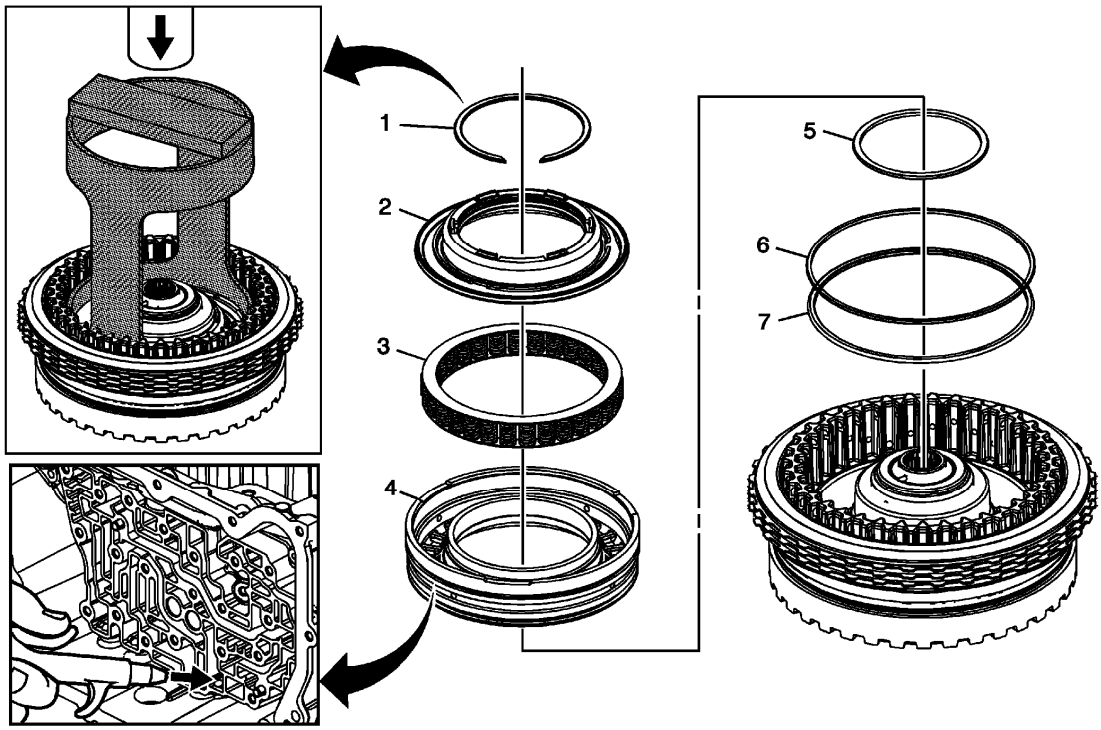

Fig. 33: View Of 4-5-6 Clutch Piston Components
Courtesy of GENERAL MOTORS COMPANY

4-5-6 Clutch Piston Removal

Callout	Component Name
1	4-5-6 Clutch Dam Retaining Ring **NOTE:** **The 4-5-6 clutch dam retaining ring is not reusable.** **Special Tools** • **DT-47951-2** Spring Compressor • **GE 5586-A** Snap Ring Pliers or equivalent For equivalent regional tools, refer to **Special Tools** .
2	4-5-6 Clutch Piston Fluid Dam Assembly **Procedure** 1. Place the 3-5 reverse and 4-5-6 clutch housing onto the support hub in the case. 2. Apply shop air to the 4-5-6 clutch feed hole using a rubber tipped air gun to dislodge the dam piston and the 4-5-6 clutch piston

	from the clutch housing.
3	4-5-6 Clutch Piston Return Spring Assembly
4	4-5-6 Clutch Piston **NOTE:** **Apply shop air to the 4-5-6 clutch feed hole using a rubber tipped air gun to dislodge the clutch piston.**
5	4-5-6 Clutch Piston Inner Seal
6	4-5-6 Clutch Piston Outer Seal (Dark Blue) (Stepped)
7	4-5-6 Clutch Piston Outer Seal (Large) (Rounded)

Reluctor Wheel and Piston Removal

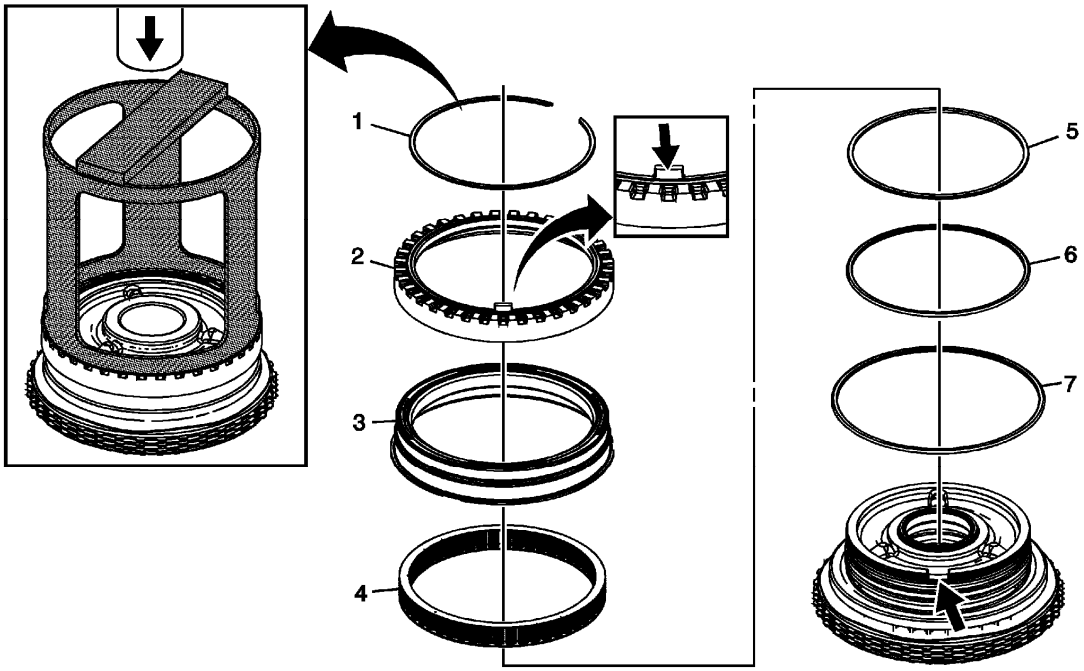

Fig. 34: Disassembled View Of Reluctor Wheel & Piston
Courtesy of GENERAL MOTORS COMPANY

Reluctor Wheel and Piston Removal

Callout	Component Name
1	Input Shaft Speed Sensor Reluctor Ring Retainer Ring **CAUTION:** **Compress the reluctor wheel just enough to clear the retainer. Over compressing the reluctor wheel will break the alignment tab and the clutch housing.**

	Special Tool **DT-47694** Piston Spring Compressor For equivalent regional tools, refer to **Special Tools** .
2	Input Shaft Speed Sensor Reluctor Wheel
3	3-5 Reverse Clutch Piston
4	3-5 Reverse Clutch Piston Return Spring Assembly
5	3-5 Reverse Clutch Piston Inner (Reluctor) Seal (Orange)
6	3-5 Reverse Clutch Piston Inner Seal
7	3-5 Reverse Clutch Piston Dam Seal (Black)

3-5 Reverse Clutch Plate Removal

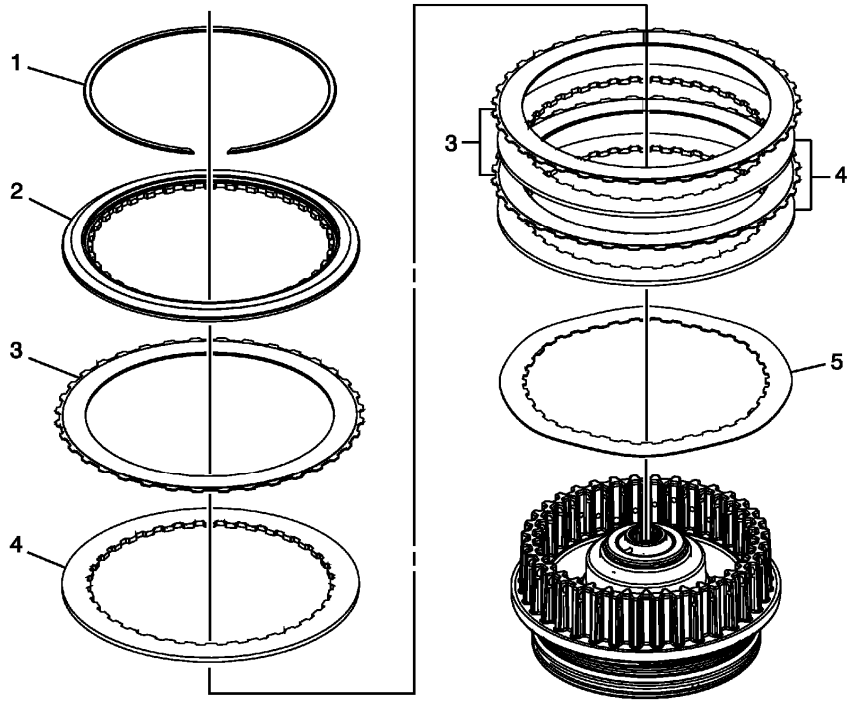

Fig. 35: Disassembled View Of 3-5 Reverse Clutch Plate Assembly
Courtesy of GENERAL MOTORS COMPANY

3-5 Reverse Clutch Plate Removal

Callout	Component Name
1	3-5 Reverse Clutch Backing Plate Ring Retainer Ring **NOTE:** **Gently push down on the backing plate to get enough clearance between the backing plate and retainer.**
2	3-5 Reverse Clutch Backing Plate
3	3-5 Reverse Clutch Plate Assembly (Qty: 3)

4	3-5 Reverse Clutch Plate (Qty: 3)
5	3-5 Reverse Clutch Apply Plate (Waved)

3-5-REVERSE AND 4-5-6 CLUTCH HOUSING DISASSEMBLE (6T30/40/45/50 - GEN 2)

Turbine Shaft, Reluctor Wheel and Piston Removal

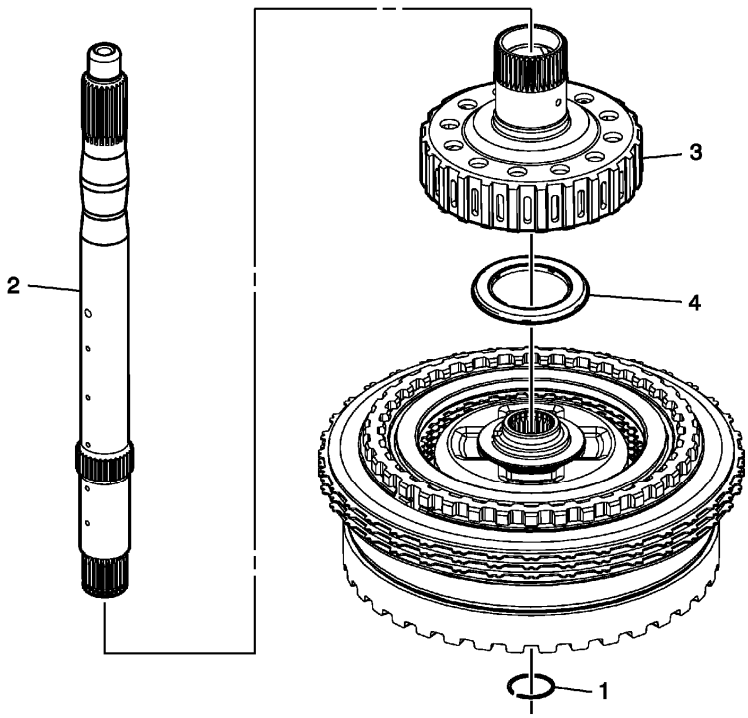

Fig. 36: Turbine Shaft, Reluctor Wheel And Piston
Courtesy of GENERAL MOTORS COMPANY

Turbine Shaft, Reluctor Wheel and Piston Removal

Callout	Component Name
1	Turbine Shaft Retainer Ring **NOTE:** **Discard the retainer ring. It is not re-usable.** **Special Tools** **GE 5586-A** Snap Ring Pliers or equivalent For equivalent regional tools, refer to **Special Tools** .
2	Turbine Shaft
3	Reaction Carrier Hub Assembly
4	Reaction Carrier Hub Thrust Bearing Assembly

4-5-6 Clutch Plate Removal

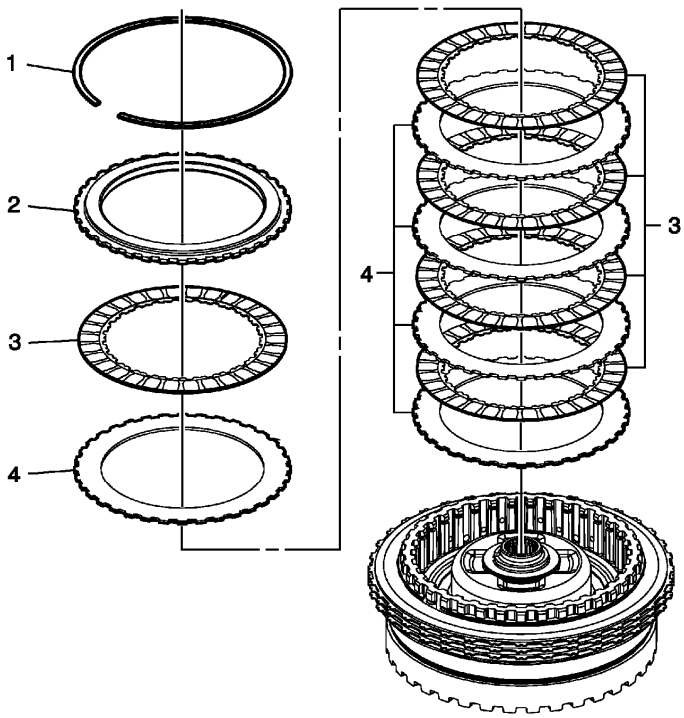

Fig. 37: 4-5-6 Clutch Plate
Courtesy of GENERAL MOTORS COMPANY

4-5-6 Clutch Plate Removal

Callout	Component Name
1	4-5-6 Clutch Backing Plate Retaining Ring
2	4-5-6 Clutch Backing Plate
3	4-5-6 Clutch Plate Assembly (Qty: 5)
4	4-5-6 Clutch Plate (Gen 2 - Qty: 5)

4-5-6 Clutch Piston Removal

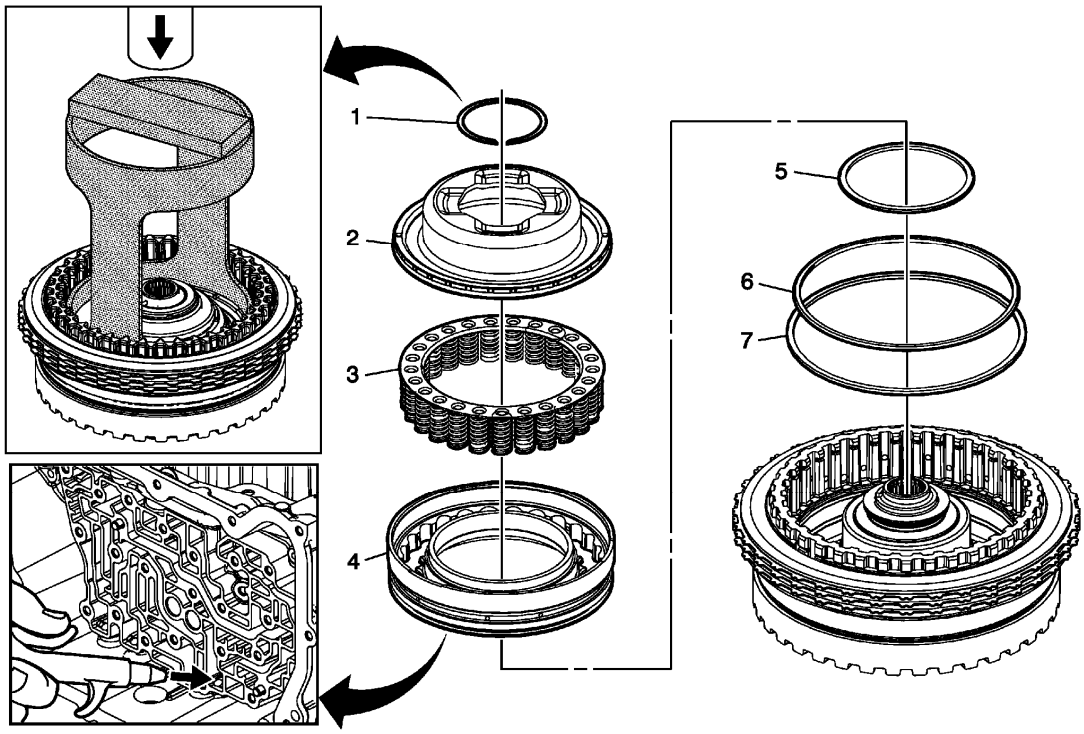

Fig. 38: 4-5-6 Clutch Piston
Courtesy of GENERAL MOTORS COMPANY

4-5-6 Clutch Piston Removal

Callout	Component Name
1	4-5-6 Clutch Dam Retaining Ring **NOTE:** **The 4-5-6 clutch dam retaining ring is not reusable.** **Special Tools** • **DT-47951-2** Spring Compressor • **GE 5586-A** Snap Ring Pliers or equivalent For equivalent regional tools, refer to **Special Tools** .
2	4-5-6 Clutch Piston Fluid Dam Assembly **Procedure** 1. Place the 3-5 reverse and 4-5-6 clutch housing onto the support hub in the case. 2. Apply shop air to the 4-5-6 clutch feed hole using a rubber tipped air gun to dislodge the dam piston and the 4-5-6 clutch piston

	from the clutch housing.
3	4-5-6 Clutch Piston Return Spring Assembly
4	4-5-6 Clutch Piston **NOTE:** **Apply shop air to the 4-5-6 clutch feed hole using a rubber tipped air gun to dislodge the clutch piston.**
5	4-5-6 Clutch Piston Inner Seal
6	4-5-6 Clutch Piston Outer Seal (Dark Blue) (Stepped)
7	4-5-6 Clutch Piston Outer Seal (Large) (Rounded)

Reluctor Wheel and Piston Removal

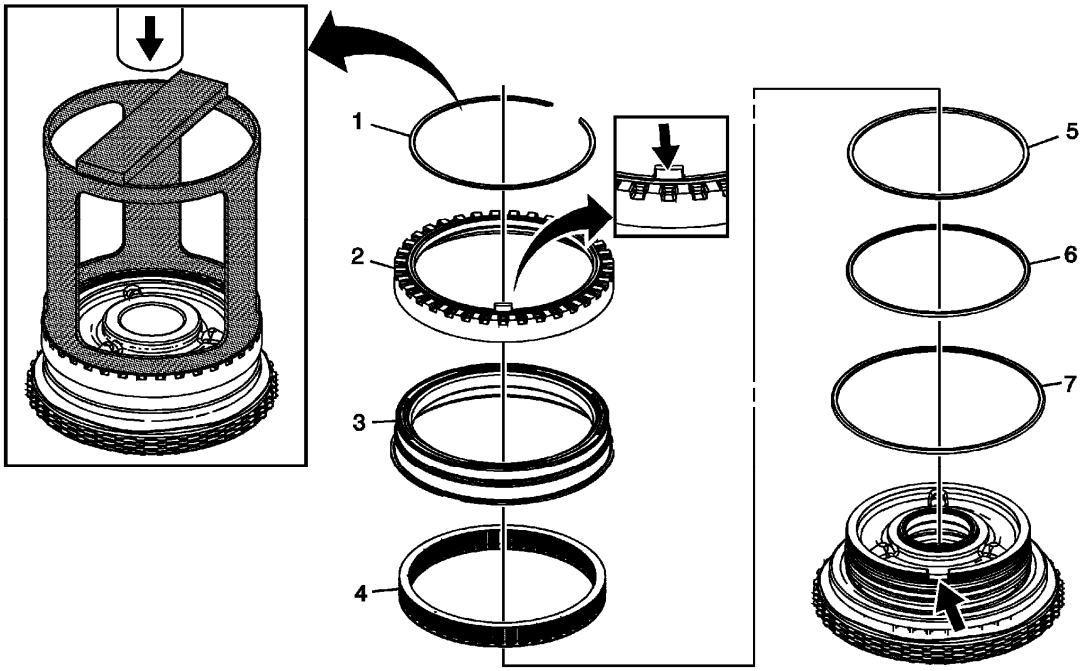

Fig. 39: Disassembled View Of Reluctor Wheel & Piston
Courtesy of GENERAL MOTORS COMPANY

Reluctor Wheel and Piston Removal

Callout	Component Name
1	Input Shaft Speed Sensor Reluctor Ring Retainer Ring **CAUTION:** **Compress the reluctor wheel just enough to clear the retainer. Over compressing the reluctor wheel will break the alignment tab and the clutch housing.**

	Special Tool **DT-47694** Piston Spring Compressor For equivalent regional tools, refer to **Special Tools** .
2	Input Shaft Speed Sensor Reluctor Wheel
3	3-5 Reverse Clutch Piston
4	3-5 Reverse Clutch Piston Return Spring Assembly
5	3-5 Reverse Clutch Piston Inner (Reluctor) Seal (Orange)
6	3-5 Reverse Clutch Piston Inner Seal
7	3-5 Reverse Clutch Piston Dam Seal (Black)

3-5 Reverse Clutch Plate Removal

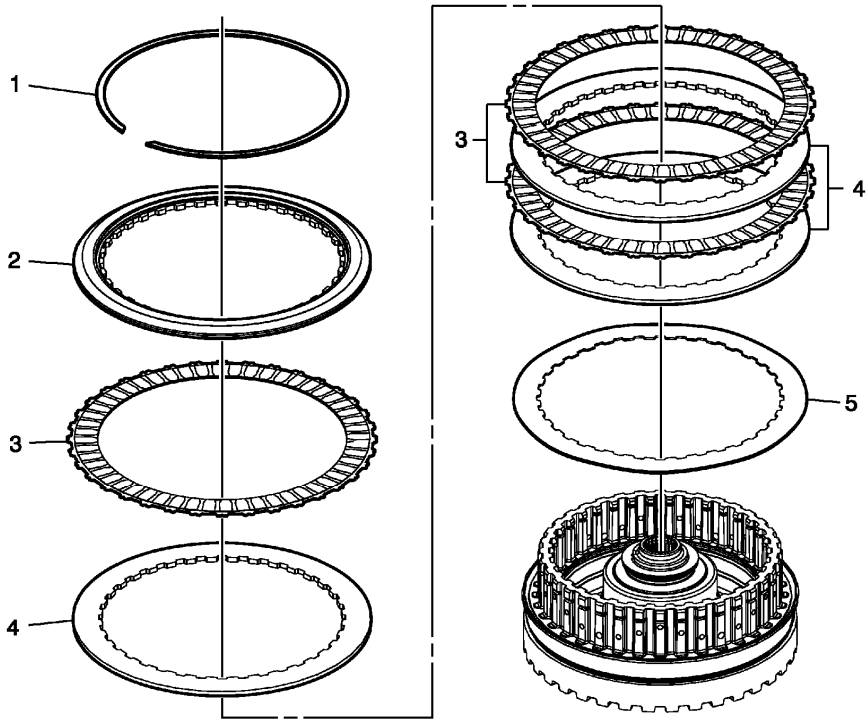

Fig. 40: 3-5 Reverse Clutch Plate
Courtesy of GENERAL MOTORS COMPANY

3-5 Reverse Clutch Plate Removal

Callout	Component Name
1	3-5 Reverse Clutch Backing Plate Ring Retainer Ring **NOTE:** **Gently push down on the backing plate to get enough clearance between the backing plate and retainer.**
2	3-5 Reverse Clutch Backing Plate
3	3-5 Reverse Clutch Plate Assembly (Qty: 3)

4	3-5 Reverse Clutch Plate (Qty: 3)
5	3-5 Reverse Clutch Apply Plate (Waved)

3-5-REVERSE AND 4-5-6 CLUTCH HOUSING ASSEMBLE (6T30/40/45/50 - GEN 1)

3-5 Reverse Clutch Plates Installation

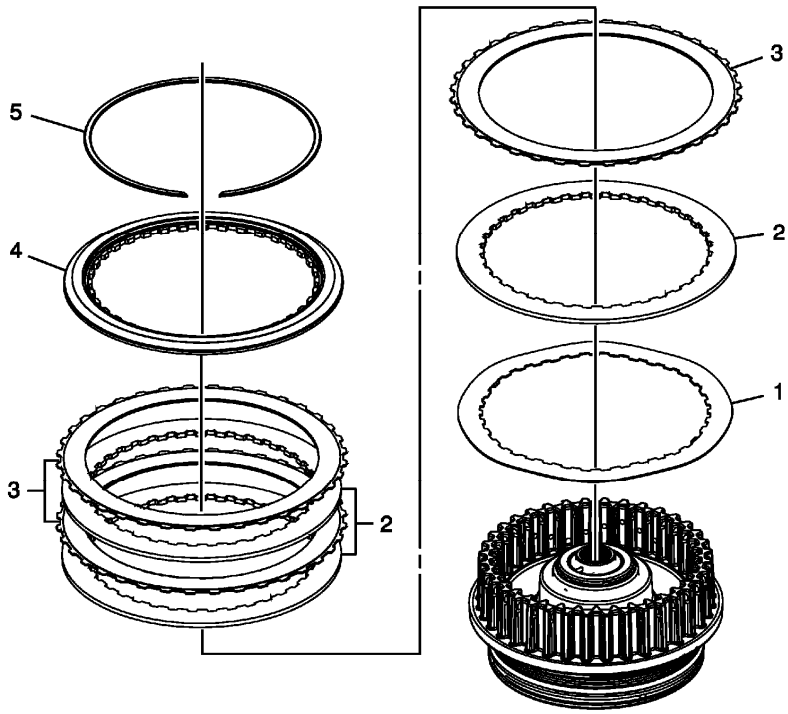

Fig. 41: Exploded View Of 3-5 Reverse Clutch Plates
Courtesy of GENERAL MOTORS COMPANY

3-5 Reverse Clutch Plates Installation

Callout	Component Name
1	3-5 Reverse Clutch Apply Plate (Waved)
2	3-5 Reverse Clutch Plate (Qty: 3)
3	3-5 Reverse Clutch Plate Assembly (Qty: 3)
4	3-5 Reverse Clutch Backing Plate
5	3-5 Reverse Clutch Backing Plate Ring Retainer Ring

Reluctor Wheel and Piston Installation

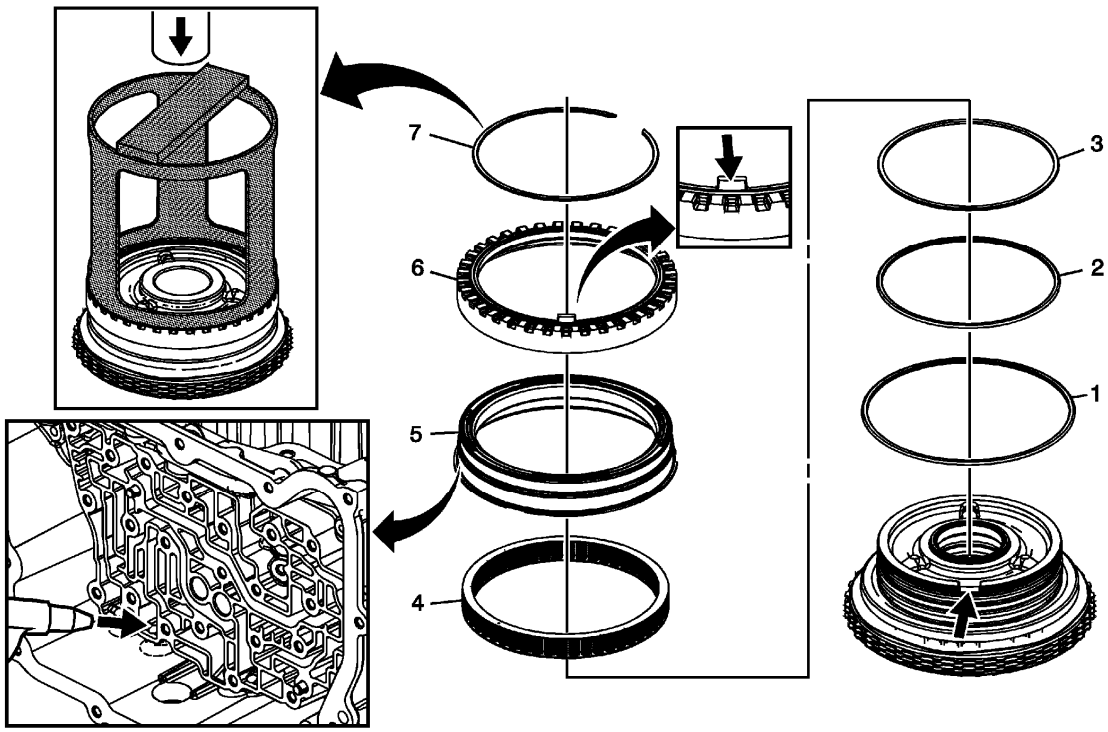

Fig. 42: Exploded View Of Reluctor Wheel & Piston
Courtesy of GENERAL MOTORS COMPANY

Reluctor Wheel and Piston Installation

Callout	Component Name
1	3-5 Reverse Clutch Piston Dam Seal (Black)
2	3-5 Reverse Clutch Piston Inner Seal
3	3-5 Reverse Clutch Piston Inner (Reluctor) Seal (Orange)
4	3-5 Reverse Clutch Piston Return Spring Assembly
5	3-5 Reverse Clutch Piston
6	Input Shaft Speed Sensor Reluctor Wheel
7	Input Shaft Speed Sensor Reluctor Ring Retainer Ring **CAUTION:** **Compress the reluctor wheel just enough to clear the retainer. Over compressing the reluctor wheel will break the alignment tab and the clutch housing.** **CAUTION:** **Regulate the air pressure to 276 kPa (40 psi) maximum. High pressure could cause the piston to over travel and damage the piston seals.** **Procedure**

	Place the housing assembly onto the input shaft support inside the case. Apply shop air to the clutch fluid feed hole in the case to verify proper piston operation. **Special Tools** **DT-47694** Piston Spring Compressor For equivalent regional tools, refer to **Special Tools** .

4-5-6 Clutch Piston Installation

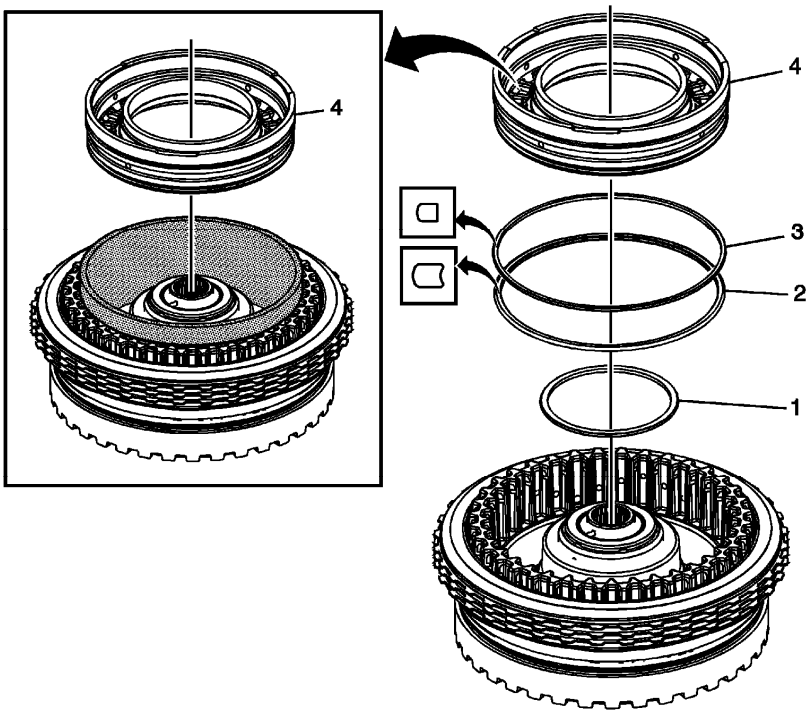

Fig. 43: Exploded View Of 4-5-6 Clutch Piston Assembly
Courtesy of GENERAL MOTORS COMPANY

4-5-6 Clutch Piston Installation

Callout	Component Name
1	4-5-6 Clutch Piston Inner Seal
2	4-5-6 Clutch Piston Outer Seal (Large) (Rounded)
3	4-5-6 Clutch Piston Outer Seal (Dark Blue) (Stepped)
4	4-5-6 Clutch Piston **NOTE:** • **DT-47805 seal protector prevents the piston seal lip from damage during installation. Apply a thin coat of ATF to the I.D. of DT-47805 seal protector to ease the installation of the piston.** • **DT-47951-2 spring compressor can be used as a pusher if necessary.**

	Special Tools • **DT-47805** Seal Protector • **DT-47951-2** Spring Compressor For equivalent regional tools, refer to **Special Tools** .

4-5-6 Clutch Fluid Dam Installation

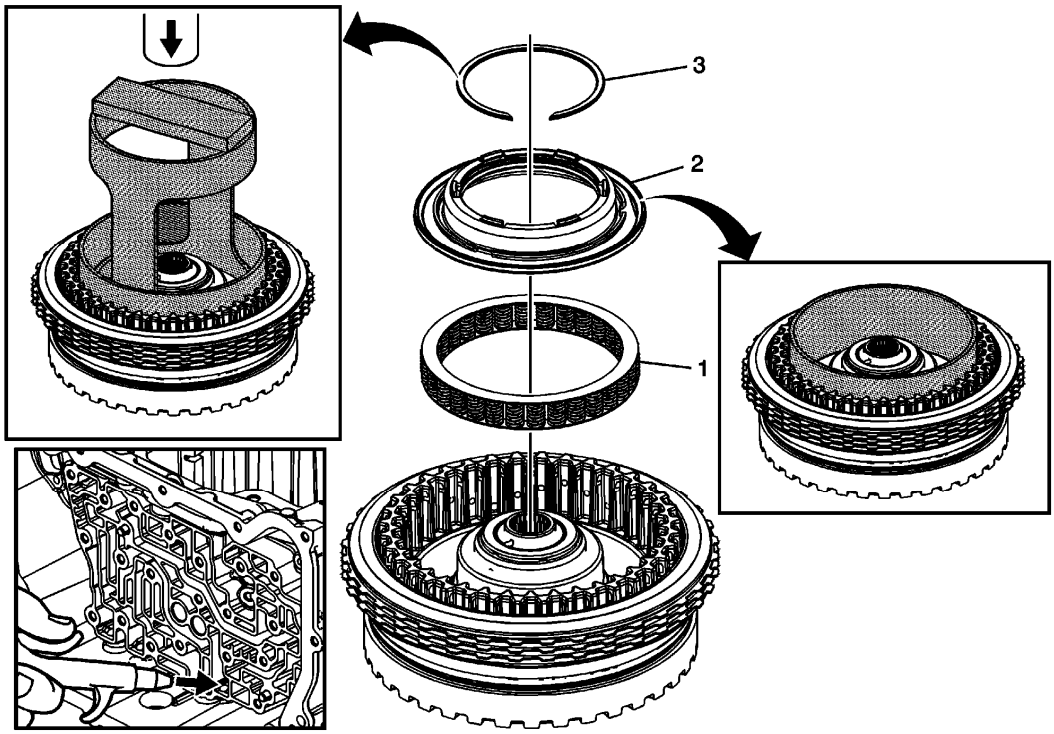

Fig. 44: View Of 4-5-6 Clutch Fluid Dam Components
Courtesy of GENERAL MOTORS COMPANY

4-5-6 Clutch Fluid Dam Installation

Callout	Component Name
1	4-5-6 Clutch Piston Return Spring Assembly
2	4-5-6 Clutch Piston Fluid Dam Assembly **NOTE:** **The seal protector prevents the dam seal lip from damage during installation. Apply a thin coat of ATF to the I.D. of the seal protector to ease the installation of the dam.** **Special Tools**

	• **DT-47951-1** Seal Protector for 6T40/45 applications • **DT-50117** Seal Proctector for 6T50 applications For equivalent regional tools, refer to **Special Tools** .
3	4-5-6 Clutch Dam Retaining Ring **CAUTION:** **Regulate the air pressure to 276 kPa (40 psi) maximum. High pressure could cause the piston to over travel and damage the piston seals.** **Procedure** 1. The 4-5-6 clutch dam retaining ring is not reusable, install a NEW retaining ring. 2. Leave the seal protector in place while installing the retaining ring. 3. Place the housing assembly onto the input shaft support inside the case. Apply shop air to the clutch fluid feed hole in the case to verify proper piston operation. **Special Tools** **DT-47951-2** Spring Compressor For equivalent regional tools, refer to **Special Tools** .

4-5-6 Clutch Plates Installation

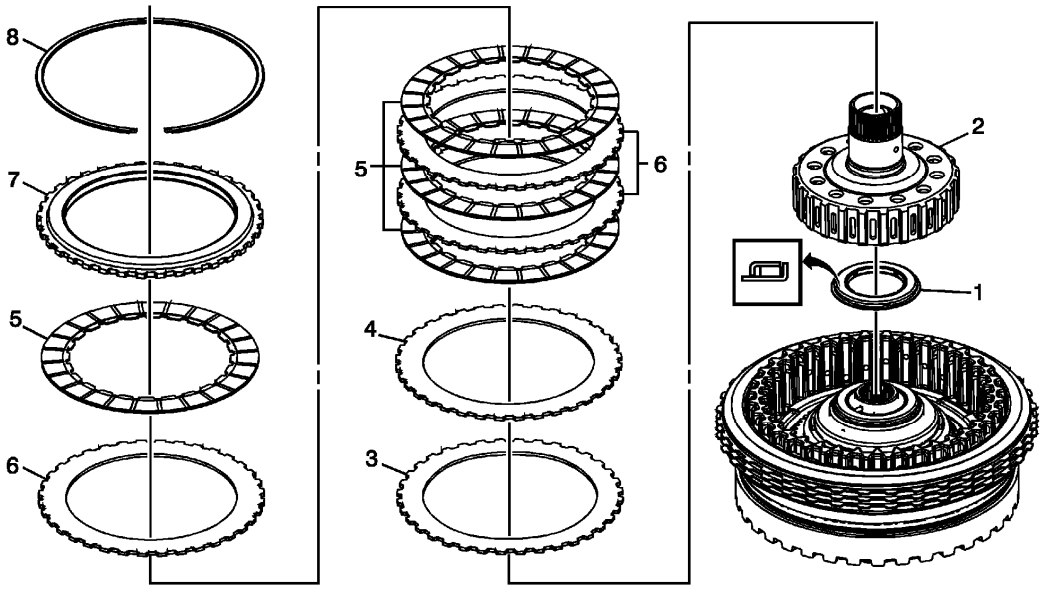

Fig. 45: View Of 4-5-6 Clutch Plates
Courtesy of GENERAL MOTORS COMPANY

4-5-6 Clutch Plates Installation

Callout	Component Name
1	Reaction Carrier Hub Thrust Bearing Assembly
2	Reaction Carrier Hub Assembly
3	4-5-6 Clutch Wave Plate
4	4-5-6 Clutch Apply Plate
5	4-5-6 Clutch Plate Assembly (Qty: 4)
6	4-5-6 Clutch Plate (Qty: 3)
7	4-5-6 Clutch Backing Plate
8	4-5-6 Clutch Backing Plate Retaining Ring

Turbine Shaft Installation

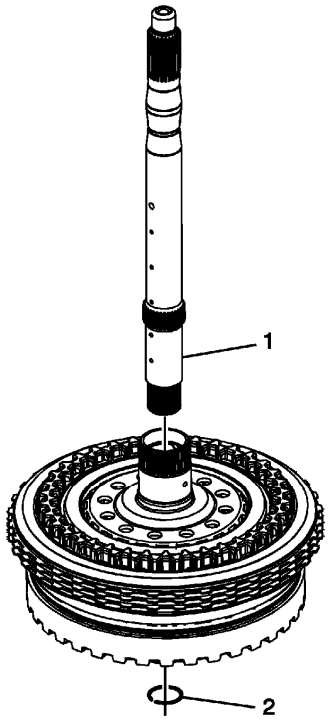

Fig. 46: View Of Turbine Shaft
Courtesy of GENERAL MOTORS COMPANY

Turbine Shaft Installation

Callout	Component Name
1	Turbine Shaft
2	Turbine Shaft Retainer Ring **NOTE:** **Do not re-use the turbine shaft retainer ring.** **Special Tools** **GE 5586-A** Snap Ring Pliers or equivalent For equivalent regional tools, refer to **Special Tools** .

3-5-REVERSE AND 4-5-6 CLUTCH HOUSING ASSEMBLE (6T30/40/45/50 - GEN 2)

4-5-6 Clutch Piston Installation

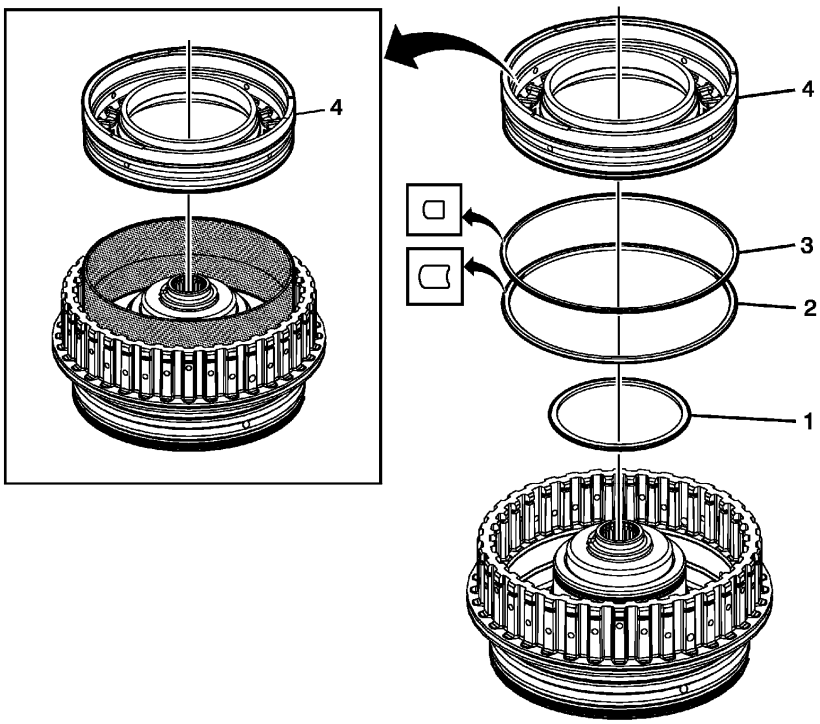

Fig. 47: 4-5-6 Clutch Piston
Courtesy of GENERAL MOTORS COMPANY

4-5-6 Clutch Piston Installation

Callout	Component Name
1	4-5-6 Clutch Piston Inner Seal
2	4-5-6 Clutch Piston Outer Seal (Large) (Rounded)
3	4-5-6 Clutch Piston Outer Seal (Dark Blue) (Stepped)
4	4-5-6 Clutch Piston **NOTE:** • **DT-47805 seal protector prevents the piston seal lip from damage during installation. Apply a thin coat of ATF to the I.D. of DT-47805 seal protector to ease the installation of the piston.** • **DT-47951-2 spring compressor can be used as a pusher if necessary.** **Special Tools** • **DT-47805** Seal Protector • **DT-47951-2** Spring Compressor For equivalent regional tools, refer to **Special Tools** .

4-5-6 Clutch Fluid Dam Installation

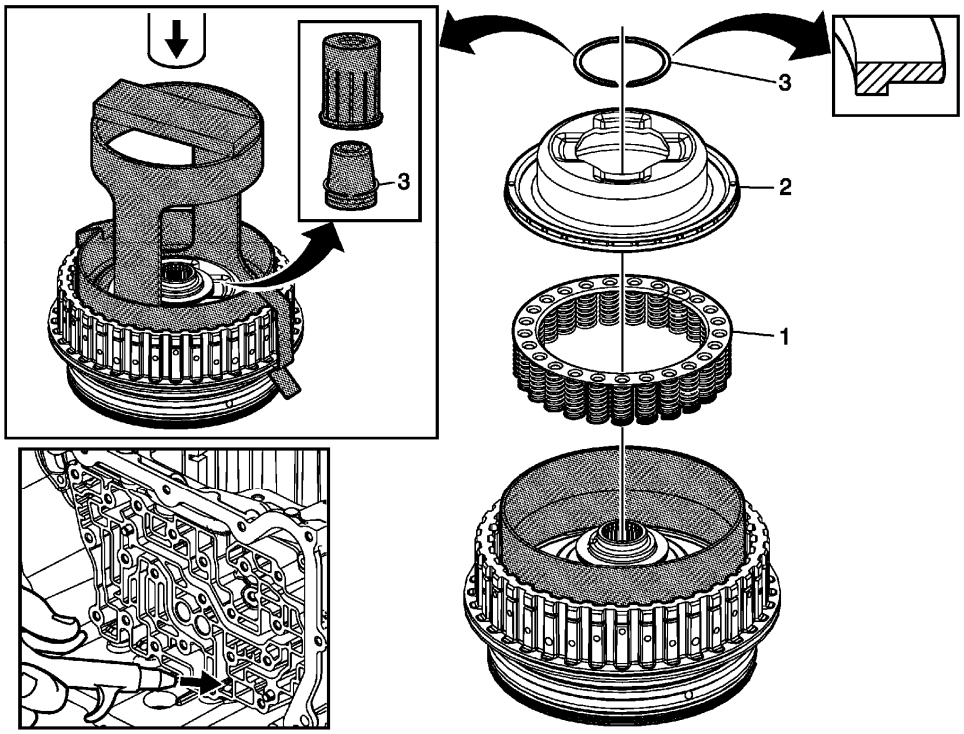

Fig. 48: 4-5-6 Clutch Fluid Dam
Courtesy of GENERAL MOTORS COMPANY

4-5-6 Clutch Fluid Dam Installation

Callout	Component Name
1	4-5-6 Clutch Piston Return Spring Assembly
2	4-5-6 Clutch Piston Fluid Dam Assembly **NOTE:** **The seal protector prevents the dam seal lip from damage during installation. Apply a thin coat of ATF to the I.D. of the seal protector to ease the installation of the dam.** **Special Tools** • **DT-47951-1** Seal Protector for 6T40/45 applications • **DT-50117** Seal Protector for 6T50 applications For equivalent regional tools, refer to **Special Tools** .
	4-5-6 Clutch Dam Retaining Ring **CAUTION:**

3	**Regulate the air pressure to 276 kPa (40 psi) maximum. High pressure could cause the piston to over travel and damage the piston seals.** **Procedure** 1. Leave the seal protector on the clutch housing while installing the retaining ring. Install the damn retainer clips **DT 50117-1** seal protector to hold the seal protector in place. 2. Use **DT 46620-2** retaining clips and **DT 50573** ring guide to install a NEW 4-5-6 clutch dam retaining ring. Assemble the ring "L" leg facing down, DT 50573 and DT 46620 and insert as an assembly onto the clutch hub to install the ring. 3. Place the housing assembly onto the input shaft support inside the case. Apply shop air to the clutch fluid feed hole in the case to verify proper piston operation. **Special Tools** • **DT-47951-2** Spring Compressor • **DT 46620** Seal Installer • **DT 50117-1** Seal Protector • **DT 50117-2** Seal Protector Retaining Clips • **DT 50573** Retaining Ring Installer For equivalent regional tools, refer to **Special Tools** .

3-5 Reverse Clutch Plates Installation

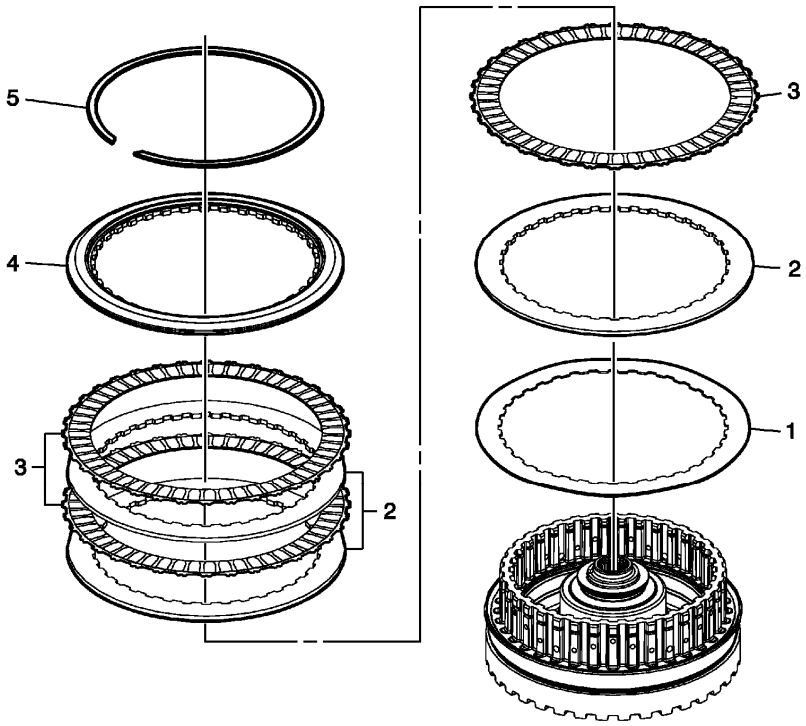

Fig. 49: 3-5 Reverse Clutch Plates
Courtesy of GENERAL MOTORS COMPANY

3-5 Reverse Clutch Plates Installation

Callout	Component Name
1	3-5 Reverse Clutch Apply Plate (Waved)
2	3-5 Reverse Clutch Plate (Qty: 3)
3	3-5 Reverse Clutch Plate Assembly (Qty: 3)
4	3-5 Reverse Clutch Backing Plate
5	3-5 Reverse Clutch Backing Plate Ring Retainer Ring

Reluctor Wheel and Piston Installation

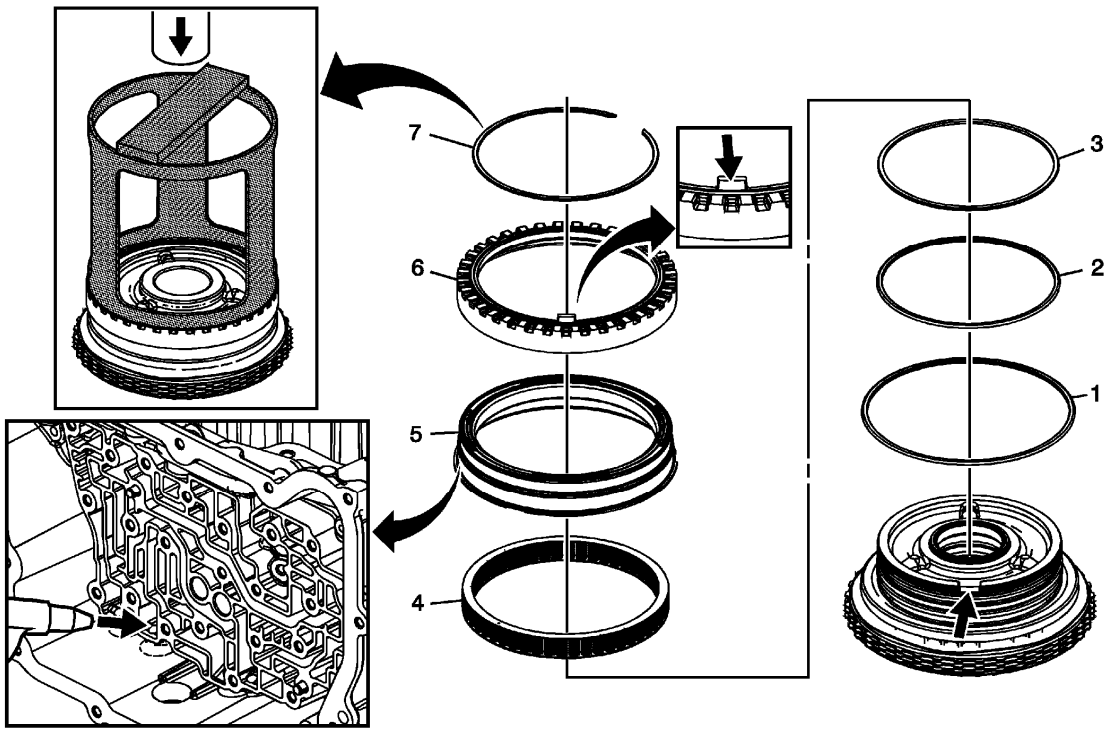

Fig. 50: Exploded View Of Reluctor Wheel & Piston
Courtesy of GENERAL MOTORS COMPANY

Reluctor Wheel and Piston Installation

Callout	Component Name
1	3-5 Reverse Clutch Piston Dam Seal (Black)
2	3-5 Reverse Clutch Piston Inner Seal
3	3-5 Reverse Clutch Piston Inner (Reluctor) Seal (Orange)
4	3-5 Reverse Clutch Piston Return Spring Assembly
5	3-5 Reverse Clutch Piston
6	Input Shaft Speed Sensor Reluctor Wheel
7	Input Shaft Speed Sensor Reluctor Ring Retainer Ring **CAUTION:** **Compress the reluctor wheel just enough to clear the retainer. Over compressing the reluctor wheel will break the alignment tab and the clutch housing.** **CAUTION:** **Regulate the air pressure to 276 kPa (40 psi) maximum. High pressure could cause the piston to over travel and damage the piston seals.** **Procedure**

	Place the housing assembly onto the input shaft support inside the case. Apply shop air to the clutch fluid feed hole in the case to verify proper piston operation. **Special Tools** **DT-47694** Piston Spring Compressor For equivalent regional tools, refer to **Special Tools** .

4-5-6 Clutch Plates Installation

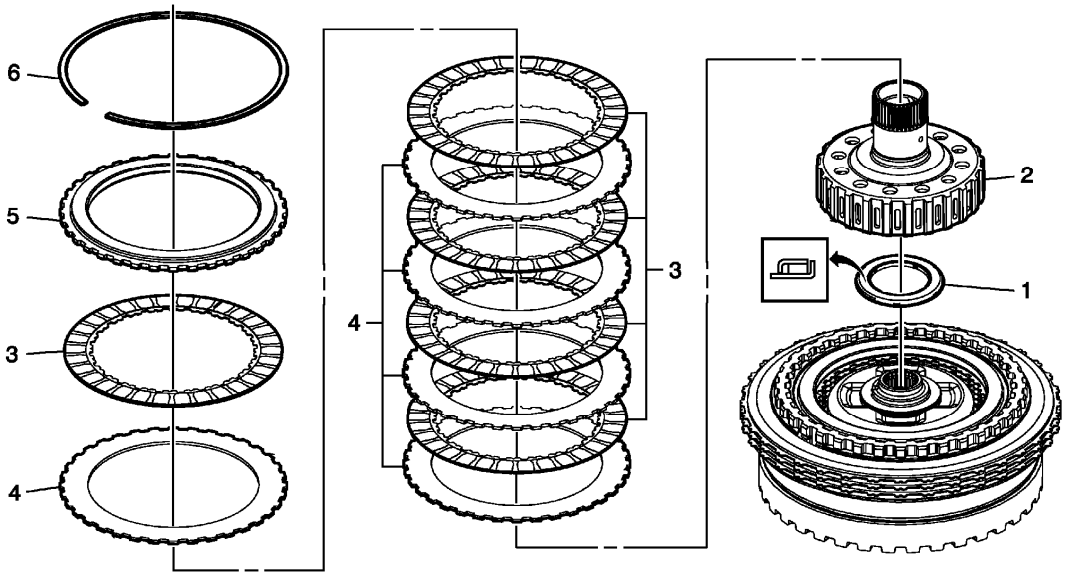

Fig. 51: 4-5-6 Clutch Plates
Courtesy of GENERAL MOTORS COMPANY

4-5-6 Clutch Plates Installation

Callout	Component Name
1	Reaction Carrier Hub Thrust Bearing Assembly
2	Reaction Carrier Hub Assembly
3	4-5-6 Clutch Plate Assembly (Qty: 5)
4	4-5-6 Clutch Plate (Qty: 5)
5	4-5-6 Clutch Backing Plate
6	4-5-6 Clutch Backing Plate Retaining Ring

Turbine Shaft Installation

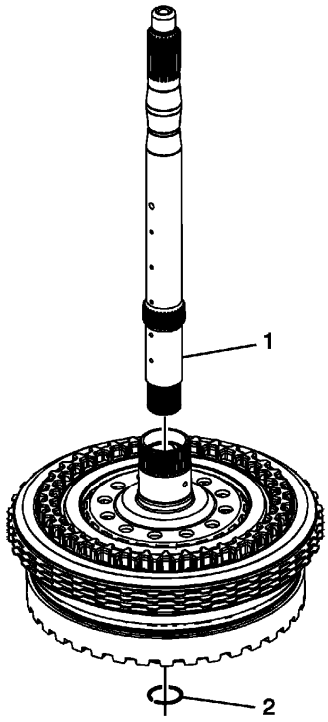

Fig. 52: View Of Turbine Shaft
Courtesy of GENERAL MOTORS COMPANY

Turbine Shaft Installation

Callout	Component Name
1	Turbine Shaft
2	Turbine Shaft Retainer Ring **NOTE:** **Do not re-use the turbine shaft retainer ring.** **Special Tools** **GE 5586-A** Snap Ring Pliers or equivalent For equivalent regional tools, refer to **Special Tools** .

INPUT, REACTION, AND OUTPUT CARRIER ASSEMBLE (GEN 1)

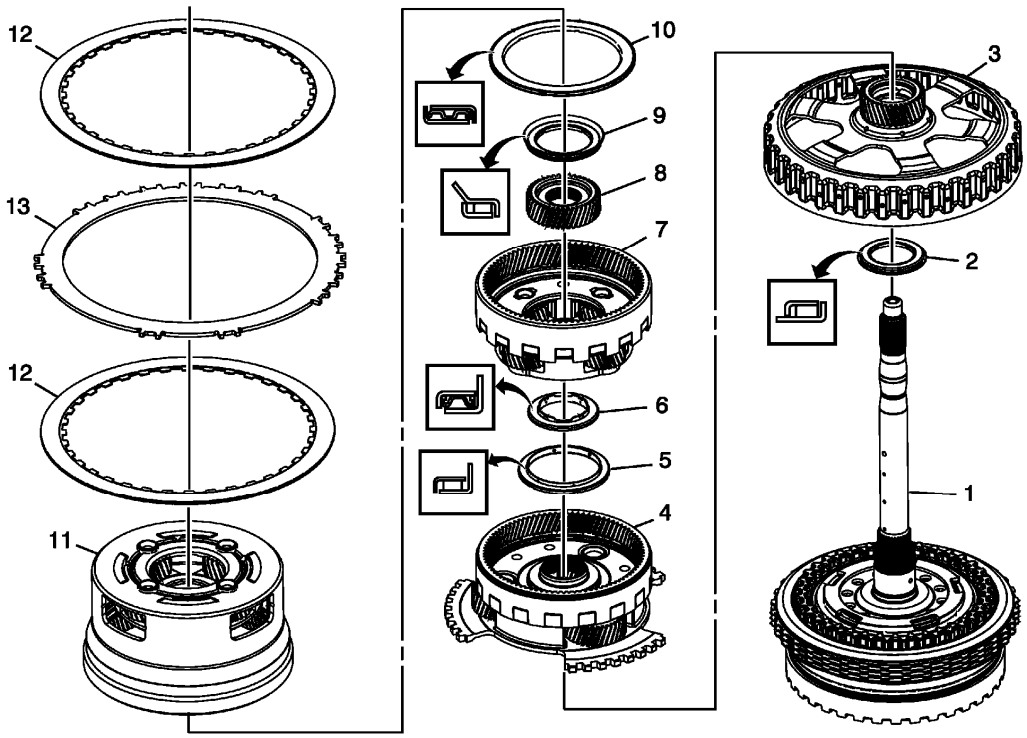

Fig. 53: Exploded View Of Input, Reaction & Output Carrier
Courtesy of GENERAL MOTORS COMPANY

Input, Reaction, and Output Carrier Assemble (Gen 1)

Callout	Component Name
1	3-5 Reverse and 4-5-6 Clutch Housing Assembly
2	Reaction Carrier Sun Gear Thrust Bearing
3	Reaction Carrier Sun Gear Assembly
4	Reaction Carrier Assembly **NOTE:** **Starting in 2012, all 6T30/40/45/50 models have 3 pinion reaction carriers. The 3 pinion reaction carriers are back serviceable for all models.** **Original Configuration:** • The 6T30 and 6T40 had 3 pinions. • The 6T45 and 6T50 had 4 pinions.
5	Input Carrier Thrust Bearing Assembly
6	Input Sun Gear Thrust Bearing Assembly
7	Input Carrier Assembly **NOTE:**

	• **The 6T30 and 6T40 have 4 pinions.** • **The 6T45 and 6T50 have 5 pinions.**
8	Input Sun Gear
9	Input Sun Gear Thrust Bearing Assembly
10	Output Carrier Thrust Bearing Assembly
11	Output Carrier Assembly **NOTE:** • **The 6T30 and 6T40 have 4 pinions.** • **The 6T45 and 6T50 have 5 pinions.**
12	2-6 Clutch Plate Assembly (Qty: 2) **NOTE:** **Begin with the clutch plate assembly and alternate with the clutch plate.**
13	2-6 Clutch Plate (Qty: 1) **NOTE:** **Only install one 2-6 Clutch Plate at this time. The remaining clutch plate is installed into the case.**

INPUT, REACTION, AND OUTPUT CARRIER ASSEMBLE (GEN 2)

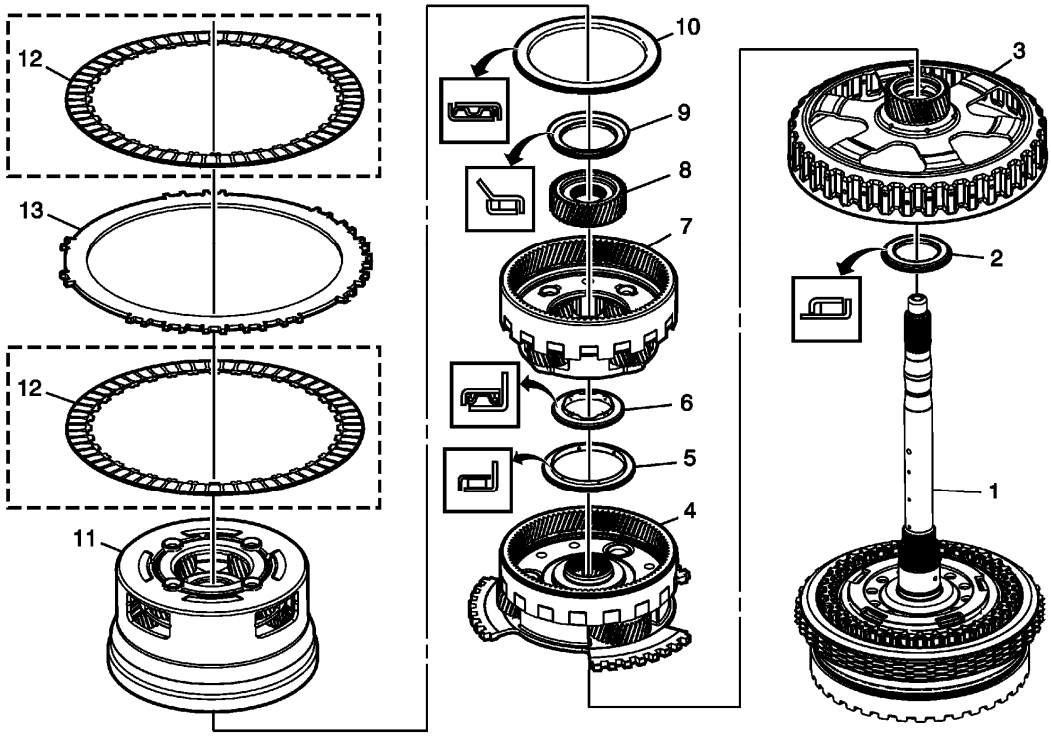

Fig. 54: Input, Reaction, and Output Carrier Components (Gen 2)

Courtesy of GENERAL MOTORS COMPANY

Input, Reaction, and Output Carrier Assemble (Gen 2)

Callout	Component Name
1	3-5 Reverse and 4-5-6 Clutch Housing Assembly
2	Reaction Carrier Sun Gear Thrust Bearing
3	Reaction Carrier Sun Gear Assembly
4	Reaction Carrier Assembly **NOTE:** **Starting in 2012, all 6T30/40/45/50 models have 3 pinion reaction carriers. The 3 pinion reaction carriers are back serviceable for all models.** **Original Configuration:** • The 6T30 and 6T40 had 3 pinions. • The 6T45 and 6T50 had 4 pinions.
5	Input Carrier Thrust Bearing Assembly
6	Input Sun Gear Thrust Bearing Assembly
7	Input Carrier Assembly **NOTE:** • **The 6T30 and 6T40 have 4 pinions.** • **The 6T45 and 6T50 have 5 pinions.**
8	Input Sun Gear
9	Input Sun Gear Thrust Bearing Assembly
10	Output Carrier Thrust Bearing Assembly
11	Output Carrier Assembly **NOTE:** • **The 6T30 and 6T40 have 4 pinions.** • **The 6T45 and 6T50 have 5 pinions.**
12	2-6 Clutch Plate Assembly (Qty: 2) - Model Dependent **NOTE:** • **Begin with the clutch plate assembly and alternate with the clutch plate.** • **The number of grooves in the clutch plate friction material varies depending on model.**
13	2-6 Clutch Plate (Qty: 1) **NOTE:**

	Only install one 2-6 Clutch Plate at this time. The remaining clutch plate is installed into the case.

3-5-REVERSE AND 4-5-6 CLUTCH HOUSING, AND INPUT, REACTION, AND OUTPUT CARRIER INSTALLATION

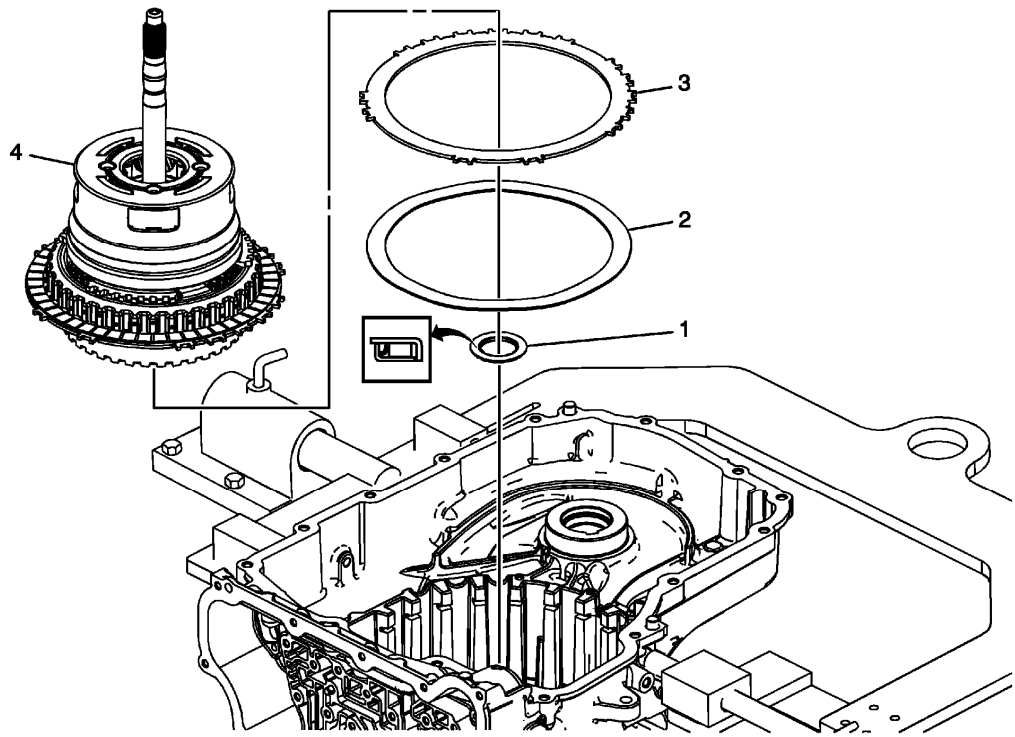

Fig. 55: View Of 3-5-Reverse, 4-5-6 Clutch Housing, Input, Reaction & Output Carrier Components
Courtesy of GENERAL MOTORS COMPANY

3-5-Reverse and 4-5-6 Clutch Housing, and Input, Reaction, and Output Carrier Installation

Callout	Component Name
1	3-5 Reverse and 4-5-6 Clutch Housing Thrust Bearing
2	2-6 Clutch Apply Plate (Waved)
3	2-6 Clutch Plate (Qty: 1) **NOTE:** • **Only install one 2-6 Clutch Plate. The remaining clutch plate is installed with the gearset assembly.** • **Align the large flat areas with the valve body end of the case and the 2 tabs on the clutch plate that are close to each other with the slots at the bottom right corner of the case.**
4	3-5 Reverse and 4-5-6 Clutch Housing Assembly and Gearset **NOTE:** **Align the large flat areas of the 2-6 Clutch Plate with the valve body**

	end of the case and the 2 tabs on the clutch plate that are close to each other with the slots at the bottom right corner of the case.

LOW AND REVERSE CLUTCH ASSEMBLY AND LOW AND REVERSE CLUTCH PLATE INSTALLATION

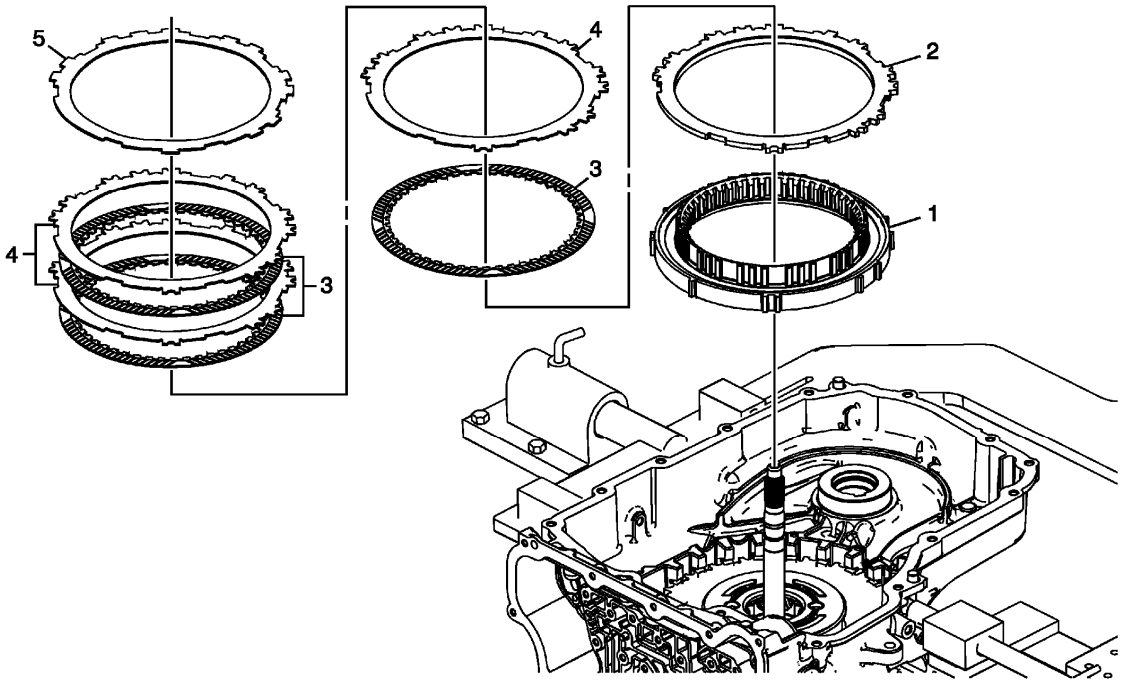

Fig. 56: View Of Low and Reverse Clutch Assembly
Courtesy of GENERAL MOTORS COMPANY

Low and Reverse Clutch Assembly and Low and Reverse Clutch Plate Installation

Callout	Component Name
1	Low and Reverse Clutch Assembly (OWC) **NOTE:** • **The Low and Reverse Clutch Assembly should rotate freely in one direction and lock in the opposite direction.** • **Align the large flat areas of the Low and Reverse Clutch Assembly with the valve body end of the case.**
2	Low and Reverse Clutch Backing Plate
3	Low and Reverse Clutch Plate Assembly (Qty: 3)
4	Low and Reverse Clutch Plate (Qty: 3) **NOTE:** **Align the large flat areas of the Low and Reverse Clutch Plate with the valve body end of the case.**

5	Low and Reverse Clutch Apply (Waved) Plate **NOTE:** • **Align the large flat areas of the Low and Reverse Clutch Apply Plate with the valve body end of the case.** • **Ensure the correct waved plate is being installed. The 1-2-3-4 clutch and low and reverse clutch waved plates are visually similar, however the low and reverse clutch waved plate is thicker.**

LOW AND REVERSE AND 1-2-3-4 CLUTCH HOUSING DISASSEMBLE

Low and Reverse Clutch Piston Removal

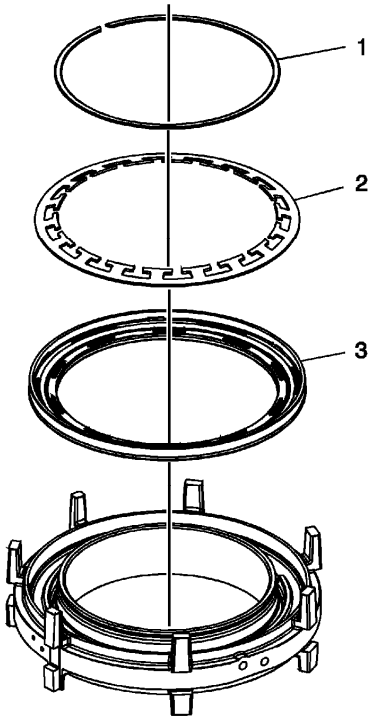

Fig. 57: View Of Low & Reverse Clutch Piston
Courtesy of GENERAL MOTORS COMPANY

Low and Reverse Clutch Piston Removal

Callout	Component Name
1	Low and Reverse Clutch Spring Retainer **Special Tool** **GE-8059** Snap Ring Pliers - Parallel Jaw For equivalent regional tools, refer to **Special Tools** .
2	Low and Reverse Clutch Spring
3	Low and Reverse Clutch Piston

1-2-3-4 Clutch Piston Removal

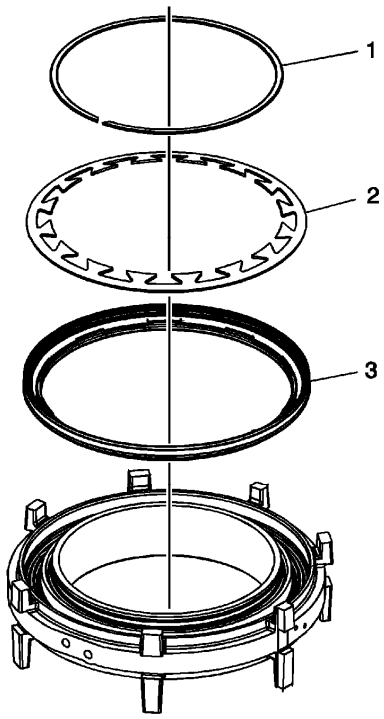

Fig. 58: View Of 1-2-3-4 Clutch Piston
Courtesy of GENERAL MOTORS COMPANY

1-2-3-4 Clutch Piston Removal

Callout	Component Name
1	1-2-3-4 Clutch Spring Retainer **Special Tool** **GE-8059** Snap Ring Pliers - Parallel Jaw For equivalent regional tools, refer to **Special Tools** .
2	1-2-3-4 Clutch Spring
3	1-2-3-4 Clutch Piston

LOW AND REVERSE AND 1-2-3-4 CLUTCH HOUSING CLEANING AND INSPECTION

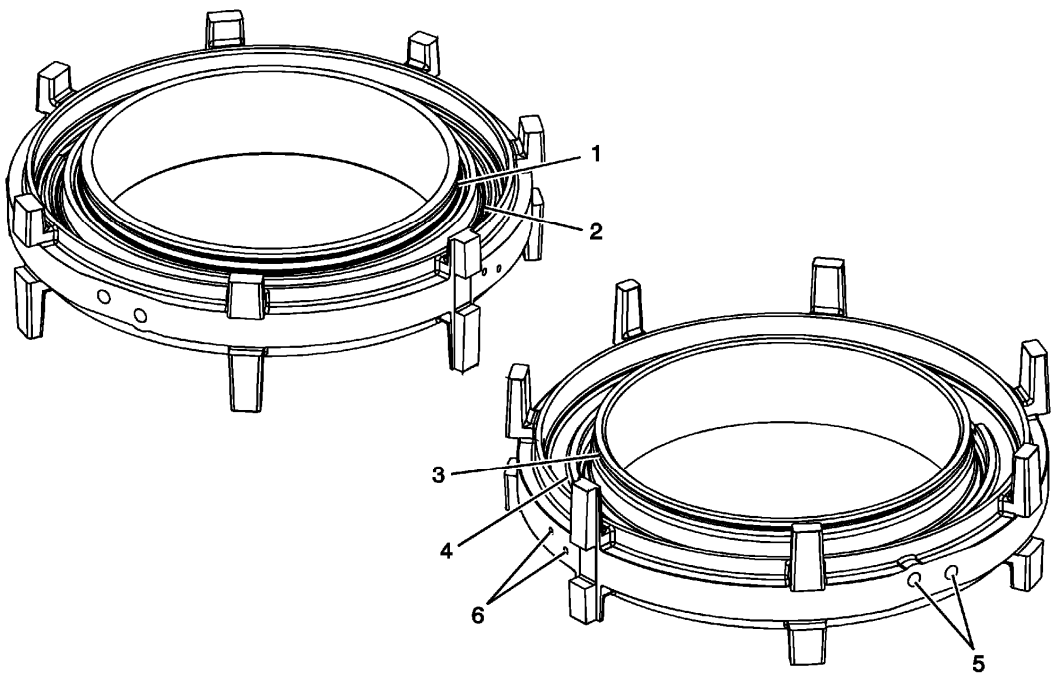

Fig. 59: Identifying Low and Reverse & 1-2-3-4 Clutch Housing
Courtesy of GENERAL MOTORS COMPANY

Low and Reverse and 1-2-3-4 Clutch Housing Cleaning and Inspection

Callout	Component Name
CAUTION: **After cleaning the transmission components, allow to air dry. Do not use cloth or paper towels in order to dry any transmission components. Lint from the towels can cause component failure.** **CAUTION:** **Do not reuse cleaning solvents. Previously used solvents may deposit sediment which may damage the component.** **Preliminary Procedures** 1. Thoroughly clean the housing with clean solvent. 2. Inspect the piston bores and retainer ring grooves for wear, damage or porosity.	
1	1-2-3-4 Clutch Spring Retainer Groove
2	1-2-3-4 Clutch Piston Bore
3	Low and Reverse Clutch Spring Retainer Groove
4	Low and Reverse Clutch Piston Bore
5	Clutch Oil Passages
6	Air Bleed Passages

LOW AND REVERSE AND 1-2-3-4 CLUTCH HOUSING ASSEMBLE (6T40/45/50)

1-2-3-4 Clutch Piston Installation

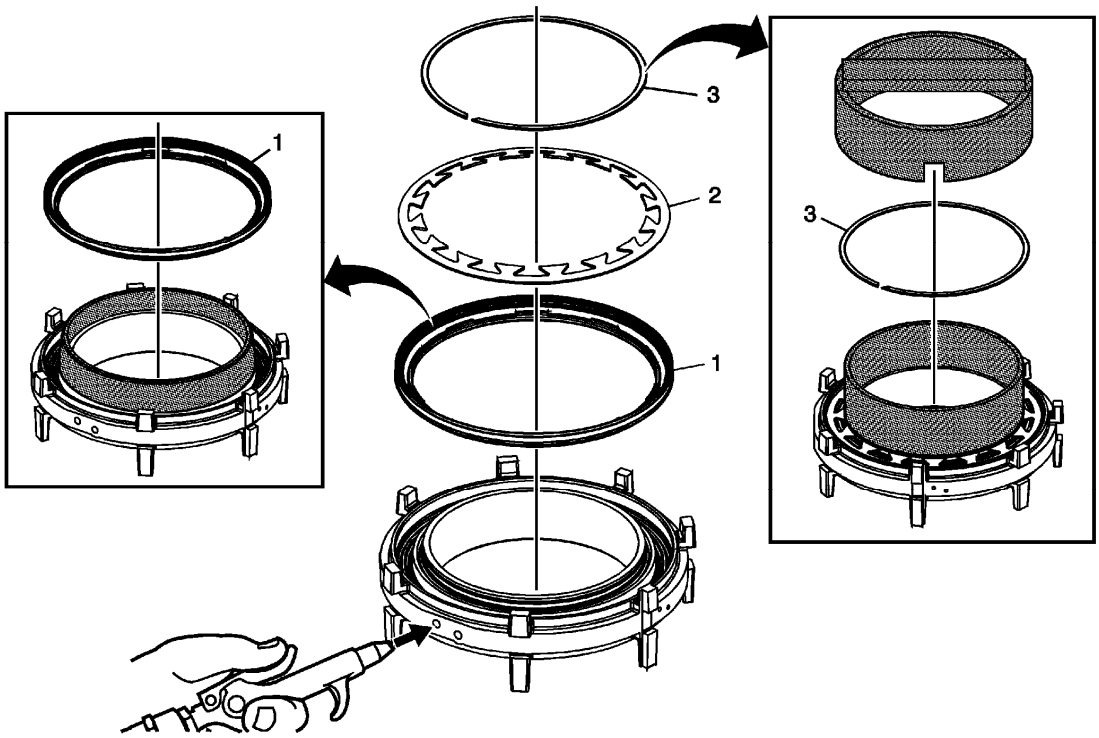

Fig. 60: View Of 1-2-3-4 Clutch Piston
Courtesy of GENERAL MOTORS COMPANY

1-2-3-4 Clutch Piston Installation

Callout	Component Name
1	1-2-3-4 Clutch Piston **TIP: DT-47798** seal protector prevents the piston seal lip from damage during installation. Apply a thin coat of ATF to the I.D. of **DT-47798** seal protector to ease the installation of the piston. **Special Tool** **DT-47798** Seal Protector For equivalent regional tools, refer to **Special Tools** .
2	1-2-3-4 Clutch Spring
3	1-2-3-4 Clutch Spring Retainer **CAUTION:** **Regulate the air pressure to 276 kPa (40 psi) maximum. High pressure could cause the piston to over travel and damage the piston seals.** 1. Place the retainer onto DT-47799-1 which is part of **DT-47799** spring compressor. Compressing the spring using DT-47799-2 which is part of **DT-47799** spring compressor, will install the retainer into the retainer groove. 2. Apply shop air to the clutch fluid feed hole in the clutch housing to

	verify proper piston operation. **Special Tool** **DT-47799** Clutch Piston Spring Compressor For equivalent regional tools, refer to **Special Tools** .

Low and Reverse Clutch Piston Installation

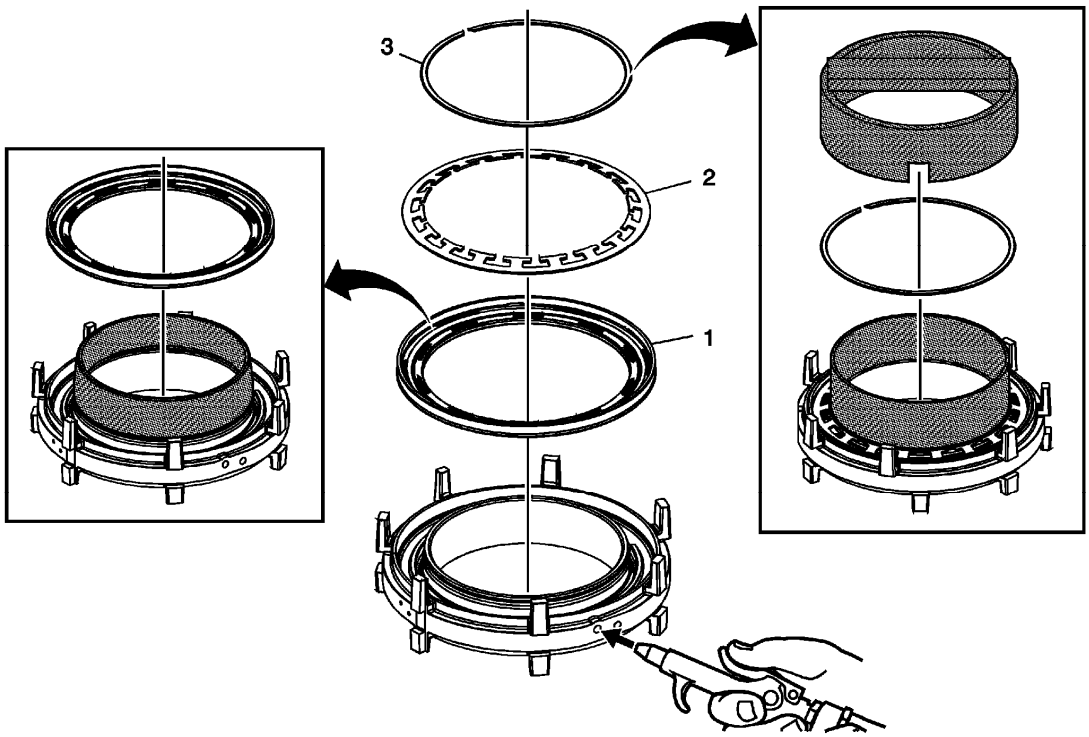

Fig. 61: View Of Low & Reverse Clutch Piston
Courtesy of GENERAL MOTORS COMPANY

Low and Reverse Clutch Piston Installation

Callout	Component Name
1	Low and Reverse Clutch Piston **TIP: DT-47807** seal protector prevents the piston seal lip from damage during installation. Apply a thin coat of ATF to the I.D. of **DT-47807** seal protector to ease the installation of the piston. **Special Tool** **DT-47807** Clutch Piston Seal Protector For equivalent regional tools, refer to **Special Tools** .
2	Low and Reverse Clutch Spring
	Low and Reverse Clutch Spring Retainer **CAUTION:**

3	**Regulate the air pressure to 276 kPa (40 psi) maximum. High pressure could cause the piston to over travel and damage the piston seals.** 1. Place the retainer onto DT-47794-1 which is part of **DT-47794** spring compressor. Compressing the spring using DT-47794-2 which is part of **DT-47794** spring compressor, will install the retainer into the retainer groove. 2. Apply shop air to the clutch fluid feed hole in the clutch housing to verify proper piston operation. **Special Tool** **DT-47794** Spring Compressor For equivalent regional tools, refer to **Special Tools** .

LOW AND REVERSE AND 1-2-3-4 CLUTCH HOUSING ASSEMBLE (6T30)

1-2-3-4 Clutch Piston Installation

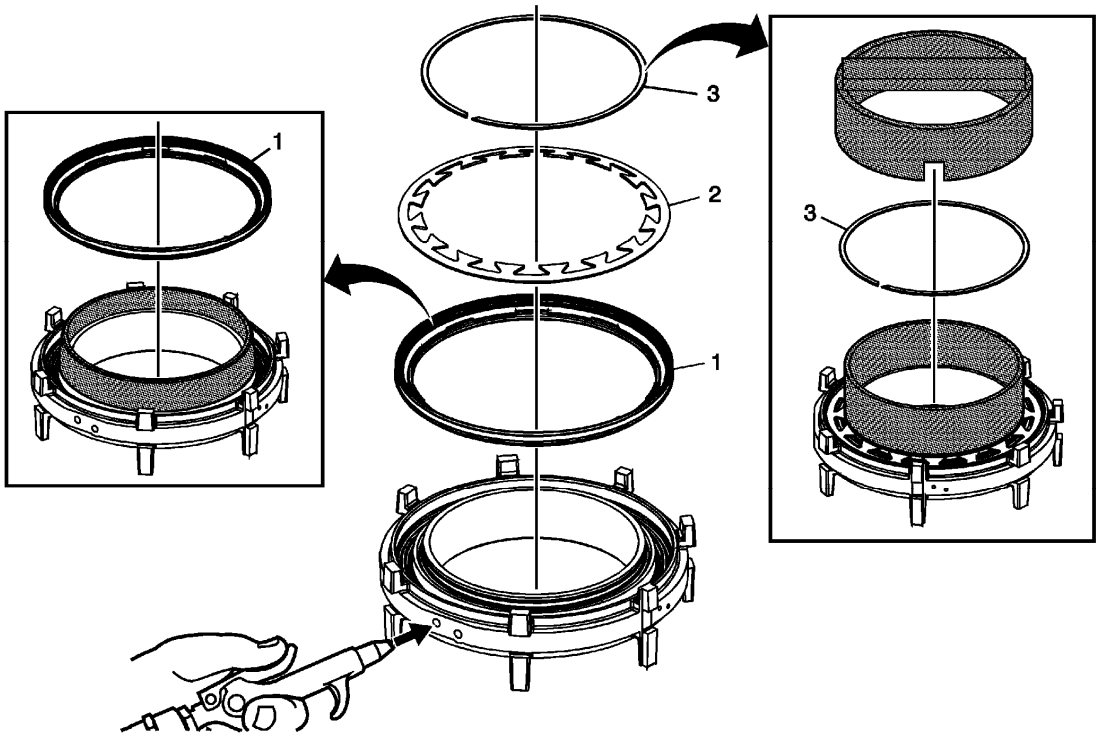

Fig. 62: View Of 1-2-3-4 Clutch Piston
Courtesy of GENERAL MOTORS COMPANY

1-2-3-4 Clutch Piston Installation

Callout	Component Name
	1-2-3-4 Clutch Piston **TIP: DT-48273** seal protector prevents the piston seal lip from damage

1	during installation. Apply a thin coat of ATF to the I.D. of **DT-48273** seal protector to ease the installation of the piston. **Special Tool** **DT-48273** Seal Protector For equivalent regional tools, refer to **Special Tools** .
2	1-2-3-4 Clutch Spring
3	1-2-3-4 Clutch Spring Retainer **CAUTION:** **Regulate the air pressure to 276 kPa (40 psi) maximum. High pressure could cause the piston to over travel and damage the piston seals.** 1. Place the retainer onto DT-48274-1 which is part of **DT-48274** spring installer. Compressing the spring using DT-48274-2 which is part of **DT-48274** spring installer, will install the retainer into the retainer groove. 2. Apply shop air to the clutch fluid feed hole in the clutch housing to verify proper piston operation. **Special Tool** **DT-48274** Clutch Piston Spring Installer For equivalent regional tools, refer to **Special Tools** .

Low and Reverse Clutch Piston Installation

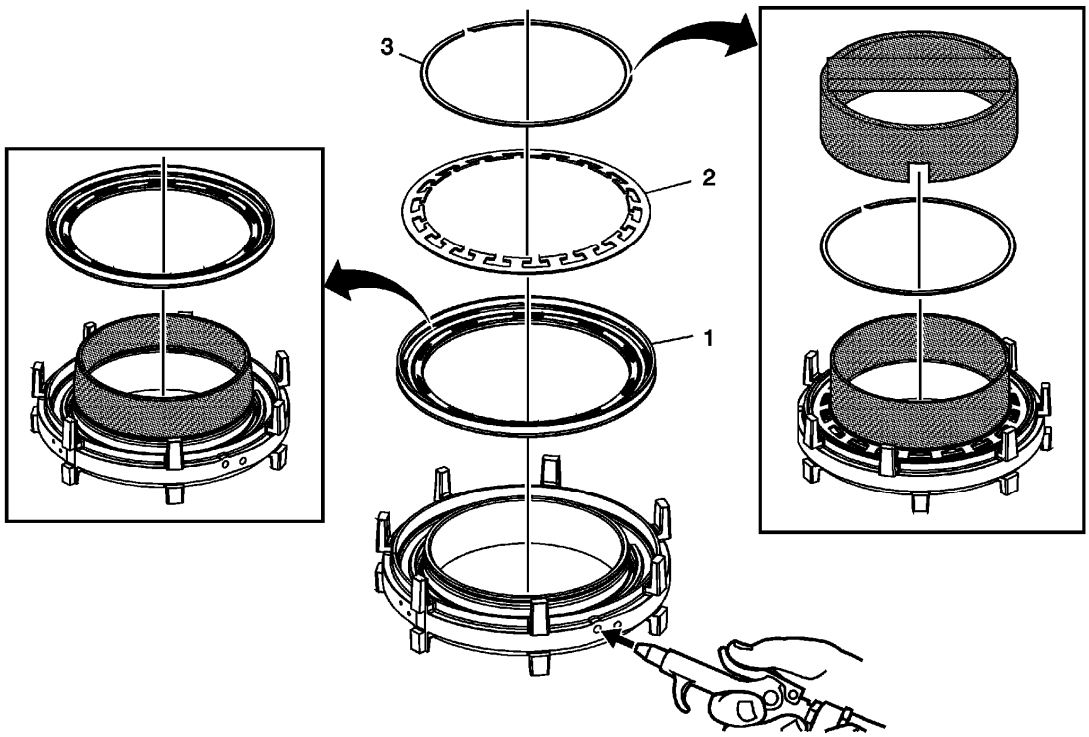

Fig. 63: View Of Low & Reverse Clutch Piston
Courtesy of GENERAL MOTORS COMPANY

Low and Reverse Clutch Piston Installation

Callout	Component Name
1	Low and Reverse Clutch Piston **TIP: DT-48273** seal protector prevents the piston seal lip from damage during installation. Apply a thin coat of ATF to the I.D. of **DT-48273** seal protector to ease the installation of the piston. **Special Tool** **DT-48273** Clutch Piston Seal Protector For equivalent regional tools, refer to **Special Tools** .
2	Low and Reverse Clutch Spring
3	Low and Reverse Clutch Spring Retainer **CAUTION:** **Regulate the air pressure to 276 kPa (40 psi) maximum. High pressure could cause the piston to over travel and damage the piston seals.** 1. Place the retainer onto DT-48274-1 which is part of **DT-48274** spring installer. Compressing the spring using DT-48274-2 which is part of **DT-48274** spring installer, will install the retainer into the retainer groove. 2. Apply shop air to the clutch fluid feed hole in the clutch housing to verify proper piston operation. **Special Tool** **DT-48274** Spring Installer For equivalent regional tools, refer to **Special Tools** .

LOW AND REVERSE AND 1-2-3-4 CLUTCH HOUSING, AND 1-2-3-4 CLUTCH PLATE INSTALLATION (6T40/45/50)

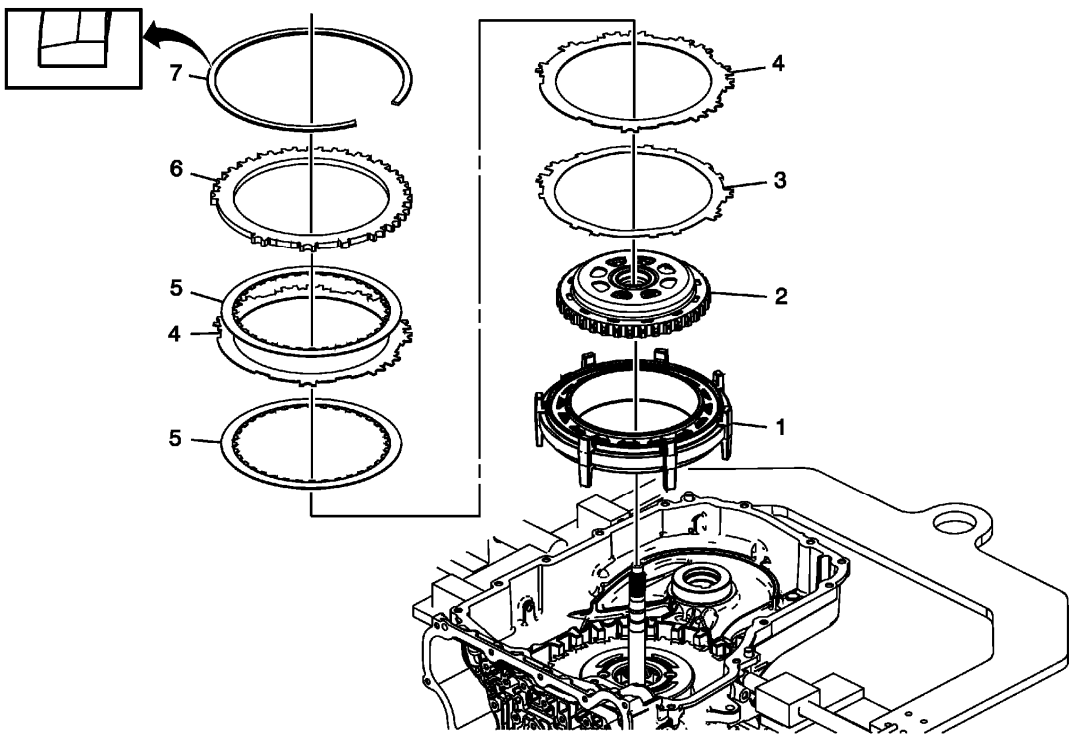

Fig. 64: View Of Low and Reverse & 1-2-3-4 Clutch Housing & Attached Components
Courtesy of GENERAL MOTORS COMPANY

Low and Reverse and 1-2-3-4 Clutch Housing, and 1-2-3-4 Clutch Plate Installation (6T40/45/50)

Callout	Component Name
1	Low and Reverse and 1-2-3-4 Clutch Housing **NOTE:** **The longer legs face the bottom of the case and the oil passages face the valve body end of the case.**
2	Output Sun Gear Assembly
3	1-2-3-4 Clutch Waved Plate **NOTE:** • **Align the single pair of tabs with the bottom valve body end of the case.** • **Ensure the correct waved plate is being installed. The 1-2-3-4 clutch and low and reverse clutch waved plates are visually similar, however the low and reverse clutch waved plate is thicker.**
4	1-2-3-4 Clutch Plate (Qty: 2)
5	1-2-3-4 Clutch Plate Assembly (Qty: 2)
6	1-2-3-4 Clutch Backing Plate **NOTE:**

	Align the single skinny tab with the case spline facing the top of the case.
7	1-2-3-4 Clutch Backing Plate Retainer Ring **WARNING:** **The retainer is under tension. Use care when removing or installing the retainer. Personal injury could result.** **CAUTION:** **Use caution during removal or installation of the retainer ring to avoid damage to the case machined surface in the park pawl area. Burrs or raised edges on the case machined surface can cause the park pawl to bind and prohibit it from engaging the park gear.** **NOTE:** • **Install the retainer with the taper facing away from the backing plate.** • **Align the retainer opening with the largest gap in the case splines toward the bottom of the case.** • **Install one end of the retainer into the retainer ring groove. Use DT-28585 snap ring remover and work the retainer into the case groove. Use a screwdriver to hold the retainer away from the case while pushing down on the retainer with DT-28585 snap ring remover.** **Special Tool** **DT-28585** Snap Ring Remover or equivalent For equivalent regional tools, refer to **Special Tools** .

LOW AND REVERSE AND 1-2-3-4 CLUTCH HOUSING, AND 1-2-3-4 CLUTCH PLATE INSTALLATION (6T30)

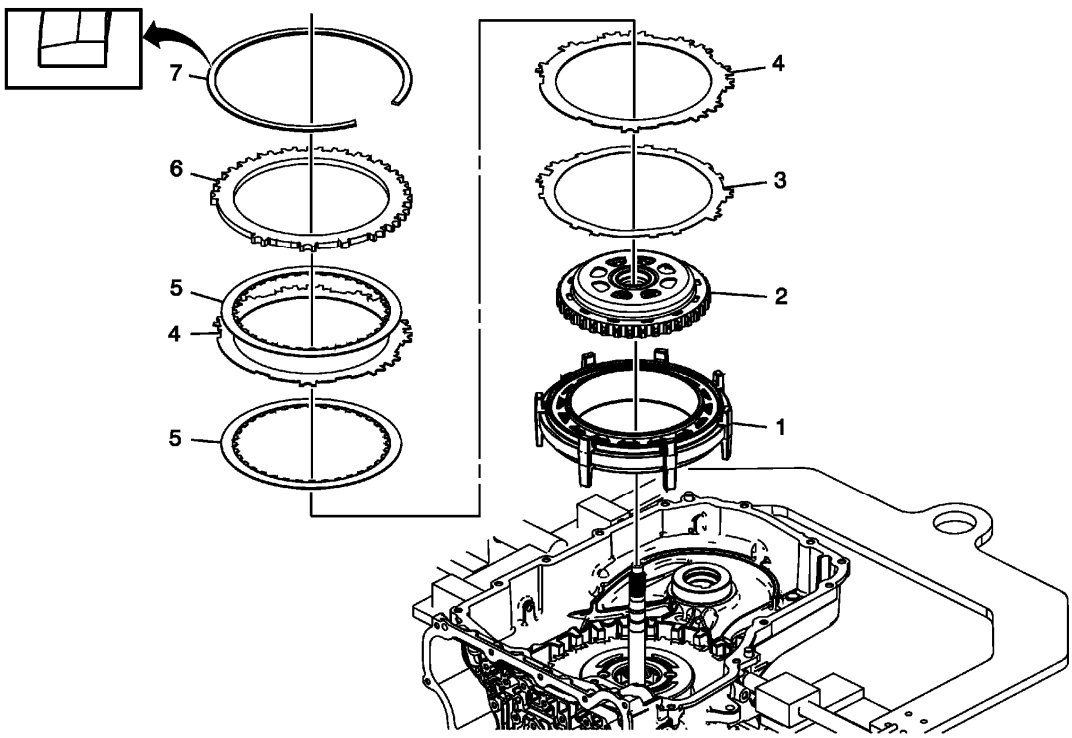

Fig. 65: View Of Low and Reverse & 1-2-3-4 Clutch Housing & Attached Components
Courtesy of GENERAL MOTORS COMPANY

Low and Reverse and 1-2-3-4 Clutch Housing, and 1-2-3-4 Clutch Plate Installation (6T30)

Callout	Component Name
1	Low and Reverse and 1-2-3-4 Clutch Housing **TIP:** The longer legs face the bottom of the case and the oil passages face the valve body end of the case.
2	Output Sun Gear Assembly
3	1-2-3-4 Clutch Waved Plate **TIP:** Align the single pair of tabs with the bottom valve body end of the case.
4	1-2-3-4 Clutch Plate (Qty: 2)
5	1-2-3-4 Clutch Plate Assembly (Qty: 2)
6	1-2-3-4 Clutch Backing Plate **TIP:** Align the single tab with the case spline facing the bottom of the case.
	1-2-3-4 Clutch Backing Plate Retainer Ring **WARNING:** **The retainer is under tension. Use care when removing or installing the retainer. Personal injury could result.** **CAUTION:** **Use caution during removal or installation of the retainer ring to**

7	**avoid damage to the case machined surface in the park pawl area. Burrs or raised edges on the case machined surface can cause the park pawl to bind and prohibit it from engaging the park gear.** • Install the retainer with the taper facing away from the backing plate. • Align the retainer opening with the largest gap in the case splines toward the bottom of the case. • Install one end of the retainer into the retainer ring groove. Use **DT-28585** snap ring remover and work the retainer into the case groove. Use a screwdriver to hold the retainer away from the case while pushing down on the retainer with **DT-28585** snap ring remover. **Special Tool** **DT-28585** Snap Ring Remover or equivalent For equivalent regional tools, refer to **Special Tools** .

DRIVE SPROCKET, DRIVEN SPROCKET, AND DRIVE LINK CLEANING AND INSPECTION

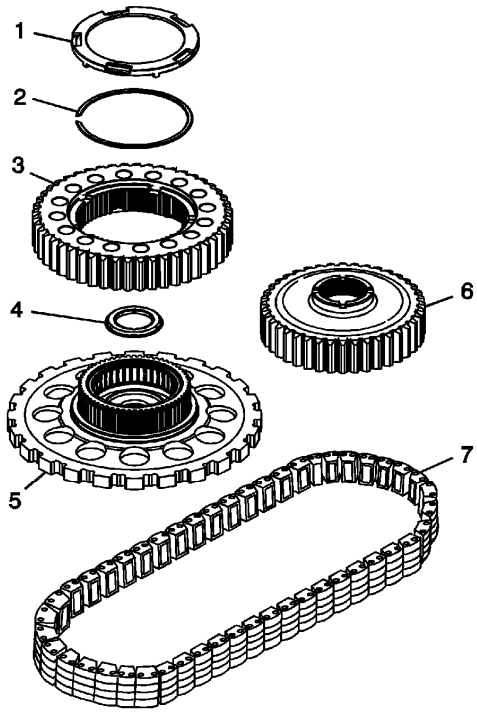

Fig. 66: View Of Drive Sprocket, Driven Sprocket & Drive Link
Courtesy of GENERAL MOTORS COMPANY

Drive Sprocket, Driven Sprocket, and Drive Link Cleaning and Inspection

Callout	Component Name

1	Drive Sprocket Thrust Washer
2	Drive Sprocket Retainer Ring
3	Drive Sprocket
4	Drive Sprocket Bearing Assembly
5	Park Gear
6	Driven Sprocket
7	Drive Link Assembly

DRIVE AND DRIVEN SPROCKET, DRIVE LINK, AND PARK PAWL INSTALLATION (6T40/45/50)

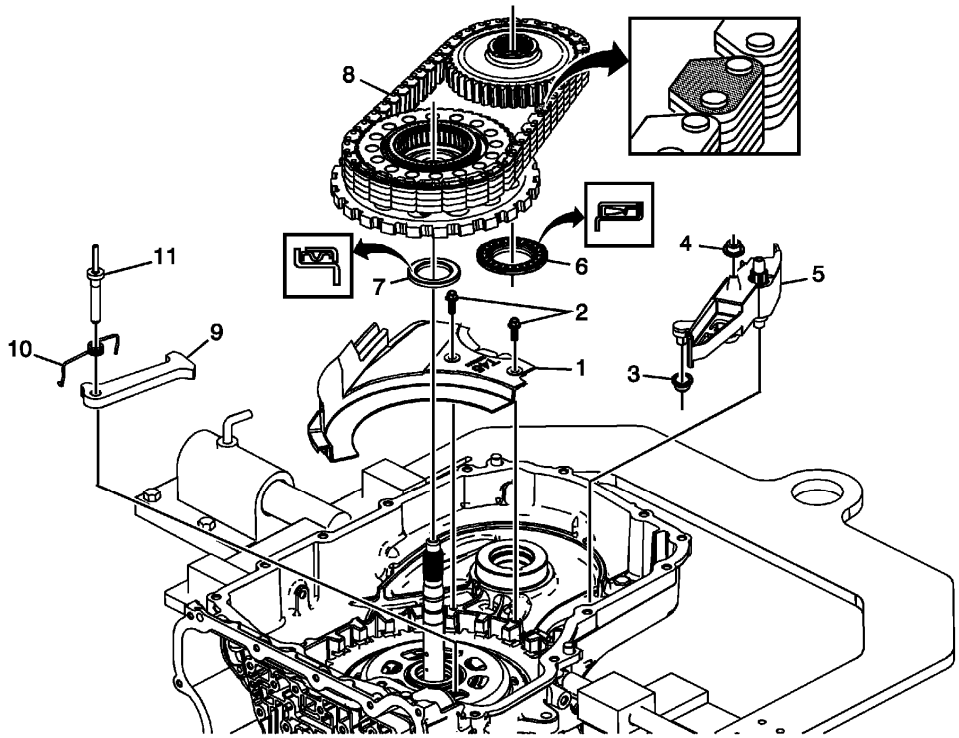

Fig. 67: View Of Drive Sprocket, Driven Sprocket & Park Paw
Courtesy of GENERAL MOTORS COMPANY

Drive and Driven Sprocket, Drive Link, and Park Pawl Installation (6T40/45/50)

Callout	Component Name
1	Front Differential Carrier Baffle
2	Front Differential Carrier Baffle Bolt M6 x 16 (Qty: 2) **CAUTION:** **Refer to Fastener Caution .** **Tighten** 12 N.m (106 lb in)

3	Drive Link Lube Scoop Seal
4	Drive Link Lube Fluid Seal
5	Drive Link Lube Scoop
6	Driven Sprocket Bearing Assembly
7	Drive Sprocket Bearing Assembly
8	Driven Sprocket Assembly, Drive Sprocket Assembly and Drive Link **NOTE:** • **Install the drive link with the colored links and/or part number facing up.** • **The drive link, drive, and driven sprocket assemblies must be installed at the same time.** • **The ball bearing should spin freely and smoothly.** • **The driven sprocket ball bearing inner race has a slight interference fit with the case. Tap gently with the palm of a hand or a soft tip hammer to install.**
9	Park Pawl
10	Park Pawl Spring
11	Park Pawl Shaft **NOTE:** **Check to ensure that the park pawl operates freely and is not binding.**

DRIVE AND DRIVEN SPROCKET, DRIVE LINK, AND PARK PAWL INSTALLATION (6T30)

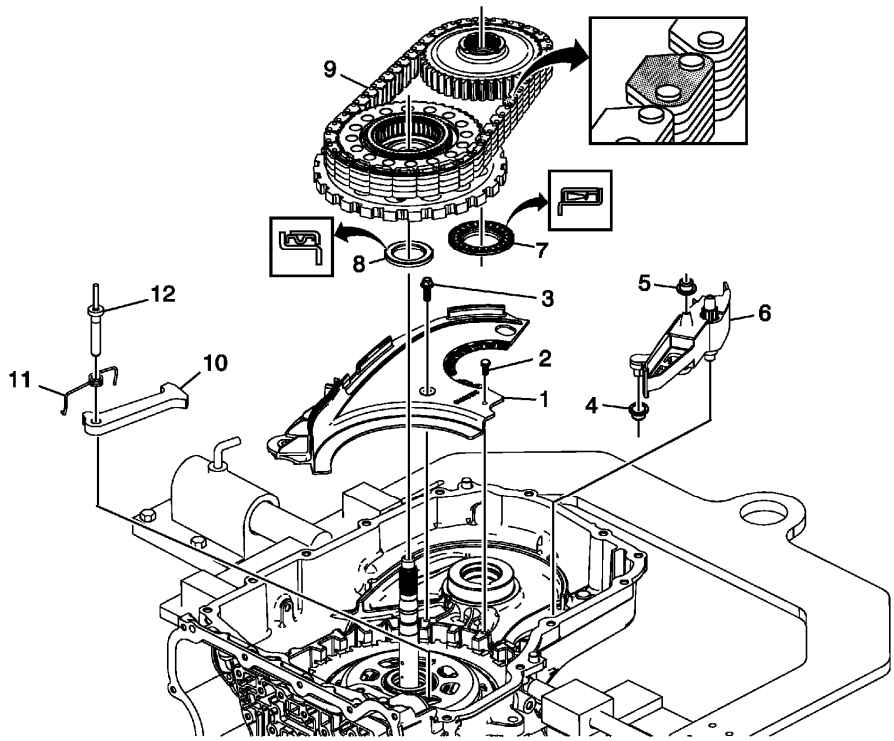

Fig. 68: Drive And Driven Sprocket, Drive Link, And Park Pawl
Courtesy of GENERAL MOTORS COMPANY

Drive and Driven Sprocket, Drive Link, and Park Pawl Installation (6T30)

Callout	Component Name
1	Front Differential Carrier Baffle
2	Baffle Retainer
3	Front Differential Carrier Baffle Bolt M6 x 16 (Qty: 2) **CAUTION:** **Refer to Fastener Caution .** **Tighten** 12 N.m (106 lb in)
4	Drive Link Lube Scoop Seal
5	Drive Link Lube Fluid Seal
6	Drive Link Lube Scoop
7	Driven Sprocket Bearing Assembly
8	Drive Sprocket Bearing Assembly
9	Driven Sprocket Assembly, Drive Sprocket Assembly and Drive Link • Install the drive link with the colored links and/or part number facing up. • The drive link, drive, and driven sprocket assemblies must be installed at the same time. • The ball bearing should spin freely and smoothly. • The driven sprocket ball bearing inner race has a slight interference fit with the case. Tap gently with the palm of a hand or a soft tip hammer to install.
10	Park Pawl
11	Park Pawl Spring
12	Park Pawl Shaft **TIP:** Check to ensure that the park pawl operates freely and is not binding.

FRONT DIFFERENTIAL CARRIER CLEANING AND INSPECTION

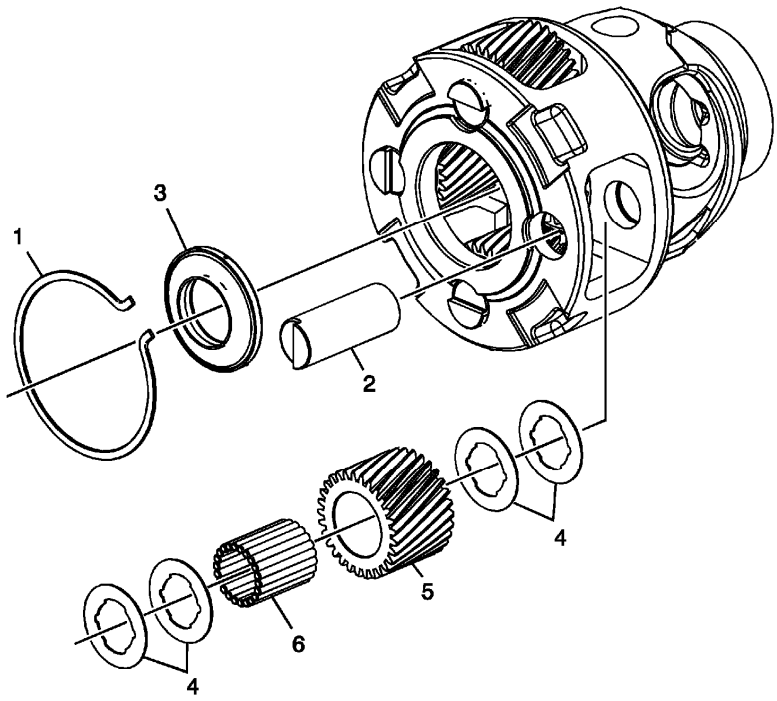

Fig. 69: View Of Front Differential Carrier
Courtesy of GENERAL MOTORS COMPANY

Front Differential Carrier Cleaning and Inspection

Callout	Component Name
CAUTION: **After cleaning the transmission components, allow to air dry. Do not use cloth or paper towels in order to dry any transmission components. Lint from the towels can cause component failure.** **CAUTION:** **Do not reuse cleaning solvents. Previously used solvents may deposit sediment which may damage the component.** **CAUTION:** **Keep thrust washers with the gear it was matched to. The thrust washers are selective sizes and it is difficult to identify the proper washer thickness. Improper assembly can cause premature failure of the differential assembly.** **Preliminary Procedures** • Clean and inspect the differential assembly, pinion gears and thrust washers for scoring, wear or damage. • The differential assembly is only serviced as an assembly.	
1	Front Differential Pinion Gear Shaft Retainer
2	Front Differential Pinion Gear Pin

3	Sun Gear to Differential Housing Bearing Assembly
4	Front Differential Pinion Gear Washer
5	Front Differential Pinion Gear
6	Front Differential Planetary Pinion Gear Bearing Roller

FRONT DIFFERENTIAL CARRIER INSTALLATION (6T40/45/50)

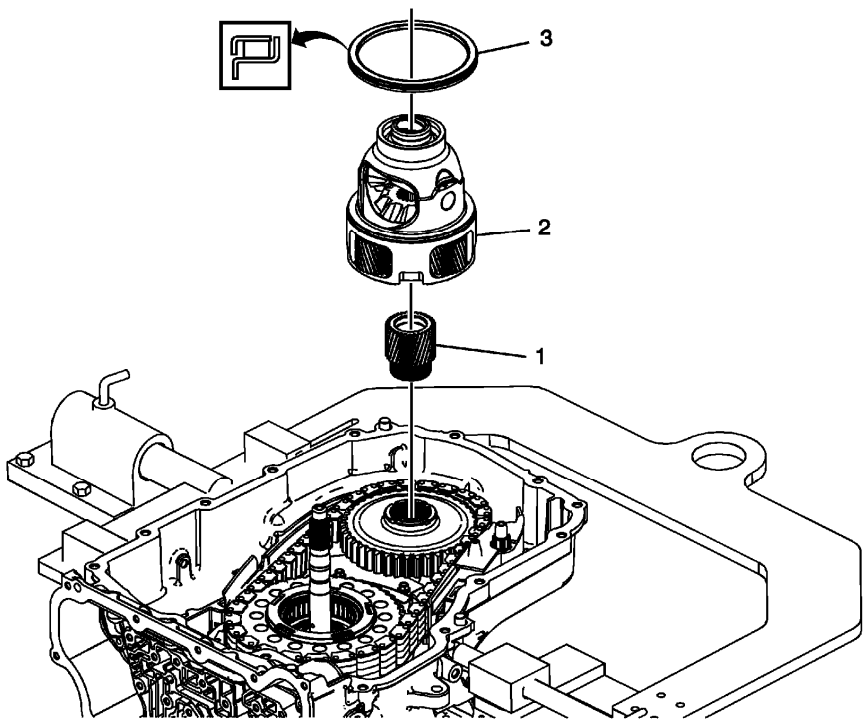

Fig. 70: View Of Front Differential Carrier Components
Courtesy of GENERAL MOTORS COMPANY

Front Differential Carrier Installation (6T40/45/50)

Callout	Component Name
1	Final Drive Sun Gear
2	Differential Carrier Assembly
3	Front Differential Carrier Bearing Asembly

FRONT DIFFERENTIAL CARRIER INSTALLATION (6T30)

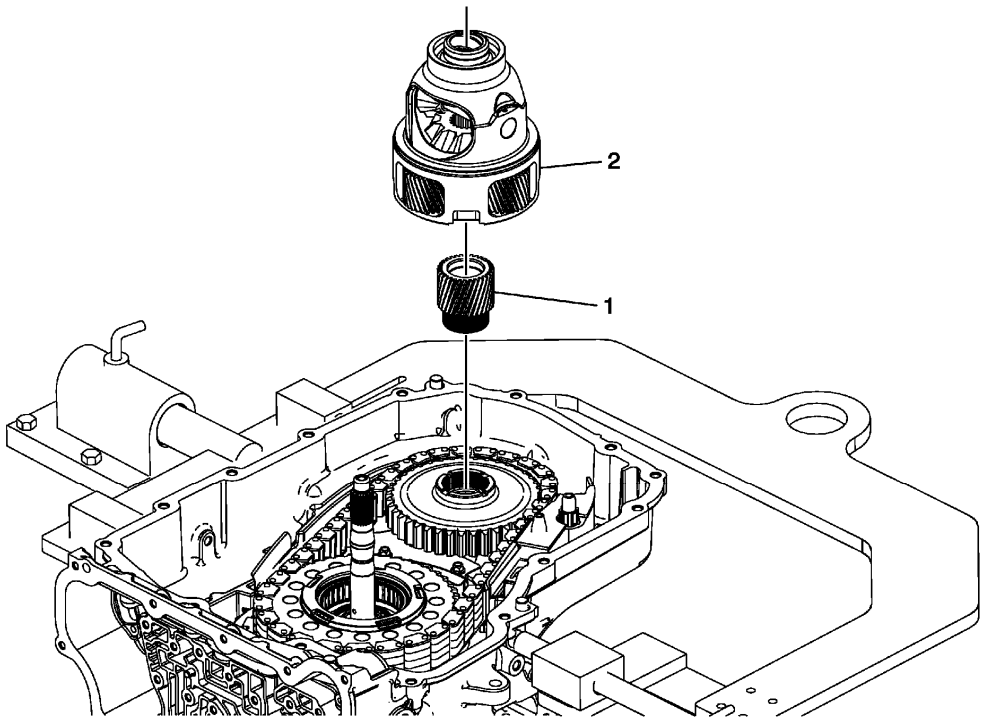

Fig. 71: Front Differential Carrier
Courtesy of GENERAL MOTORS COMPANY

Front Differential Carrier Installation (6T30)

Callout	Component Name
1	Final Drive Sun Gear
2	Differential Carrier Assembly

TRANSMISSION FLUID PUMP, FRONT DIFFERENTIAL CARRIER BAFFLE, AND FRONT DIFFERENTIAL RING GEAR REMOVAL (6T40/45)

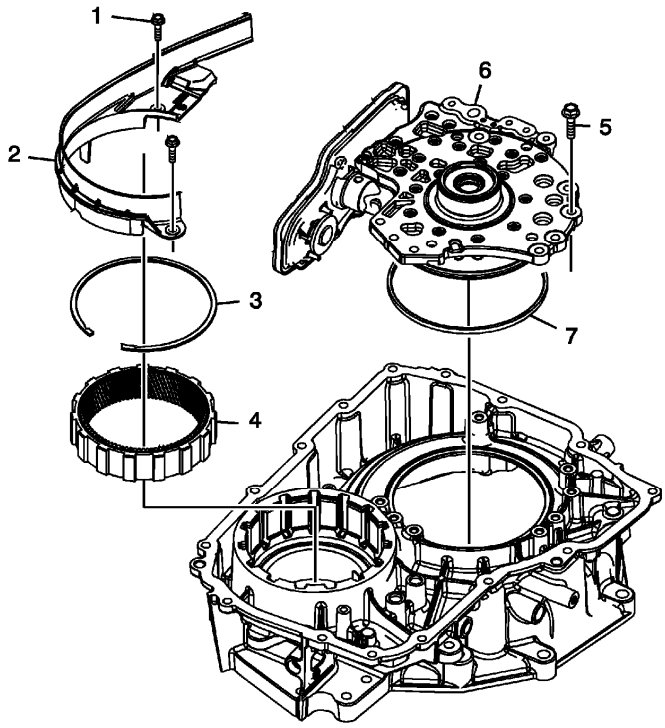

Fig. 72: View Of Transmission Fluid Pump, Front Differential Carrier Baffle & Components
Courtesy of GENERAL MOTORS COMPANY

Transmission Fluid Pump, Front Differential Carrier Baffle, and Front Differential Ring Gear Removal (6T40/45)

Callout	Component Name
1	Front Differential Carrier Baffle Bolts M6 x 25 (Qty: 2)
2	Front Differential Carrier Baffle
3	Front Differential Ring Gear Retainer **NOTE:** **Note the direction of the taper to ensure proper installation.**
4	Front Differential Ring Gear
5	Fluid Pump Bolts M8 x 33 (Qty: 8)
6	Fluid Pump Assembly
7	Torque Converter and Differential Housing Seal

TRANSMISSION FLUID PUMP, FRONT DIFFERENTIAL CARRIER BAFFLE, AND FRONT DIFFERENTIAL RING GEAR REMOVAL (6T30)

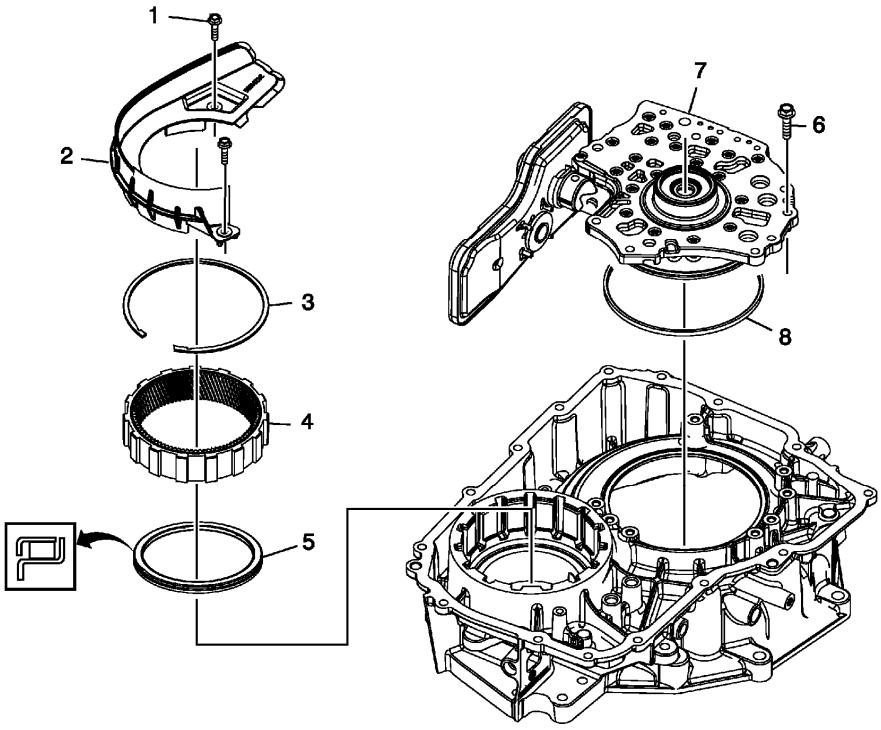

Fig. 73: Transmission Fluid Pump, Front Differential Carrier Baffle And Front Differential Ring Gear
Courtesy of GENERAL MOTORS COMPANY

Transmission Fluid Pump, Front Differential Carrier Baffle, and Front Differential Ring Gear Removal (6T30)

Callout	Component Name
1	Front Differential Carrier Baffle Bolts M6 x 25 (Qty: 2)
2	Front Differential Carrier Baffle
3	Front Differential Ring Gear Retainer **TIP:** Note the direction of the taper to ensure proper installation.
4	Front Differential Ring Gear
5	Front Differential Carrier Bearing Assembly
6	Fluid Pump Bolts M8 x 33 (Qty: 7)
7	Fluid Pump Assembly
8	Torque Converter and Differential Housing Seal

FRONT WHEEL DRIVE SHAFT SEAL REPLACEMENT - TORQUE CONVERTER HOUSING SIDE

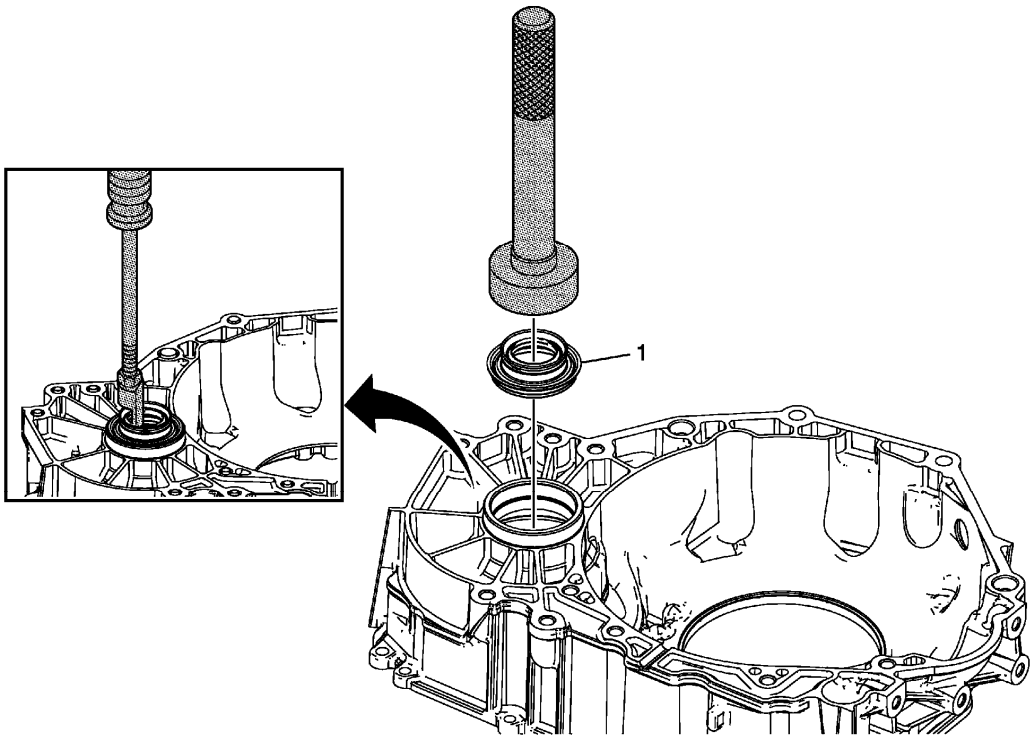

Fig. 74: View Of Front Wheel Drive Shaft Seal - Torque Converter Housing Side
Courtesy of GENERAL MOTORS COMPANY

Front Wheel Drive Shaft Seal Replacement - Torque Converter Housing Side

Callout	Component Name
1	Front Wheel Drive Shaft Oil Seal Assembly **Special Tools** • **DT-23129** Universal Seal Remover • **DT-47790** Seal Installer • **GE-6125-1B** Slide Hammer • **GE-8092** Driver Handle For equivalent regional tools, refer to **Special Tools** .

TORQUE CONVERTER HOUSING CLEANING AND INSPECTION

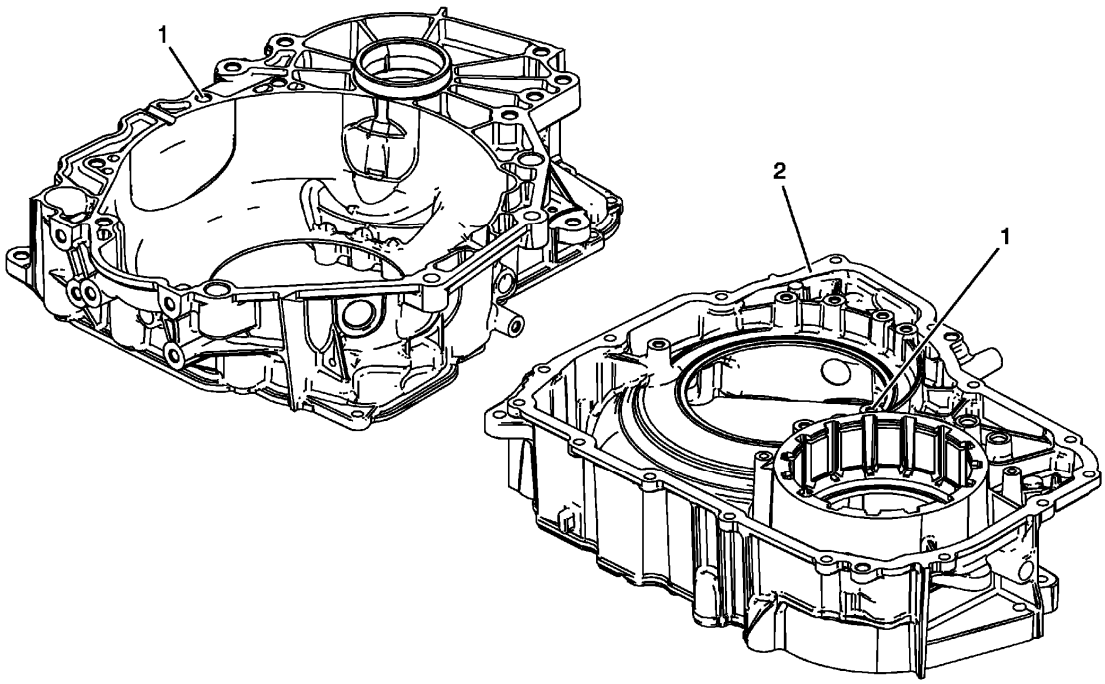

Fig. 75: Identifying Torque Converter Housing Inspection Areas
Courtesy of GENERAL MOTORS COMPANY

Torque Converter Housing Cleaning and Inspection

Callout	Component Name
CAUTION: **After cleaning the transmission components, allow to air dry. Do not use cloth or paper towels in order to dry any transmission components. Lint from the towels can cause component failure.** **CAUTION:** **Do not reuse cleaning solvents. Previously used solvents may deposit sediment which may damage the component.** **CAUTION:** **Do not use abrasive pads or bristle devices to clean the sealing surfaces. Abrasive pads produce a fine grit that can effect transmission function. Abrasive pads can also remove enough metal to create oil leaks.** **Preliminary Procedure** Thoroughly clean the torque converter housing, including case threads with clean solvent.	
1	Threaded Hole
2	Gasket Sealing Surface

TRANSMISSION FLUID PUMP DISASSEMBLE (6T40/45/50)

Fluid Filter Assembly and Torque Converter Fluid Seal Disassemble

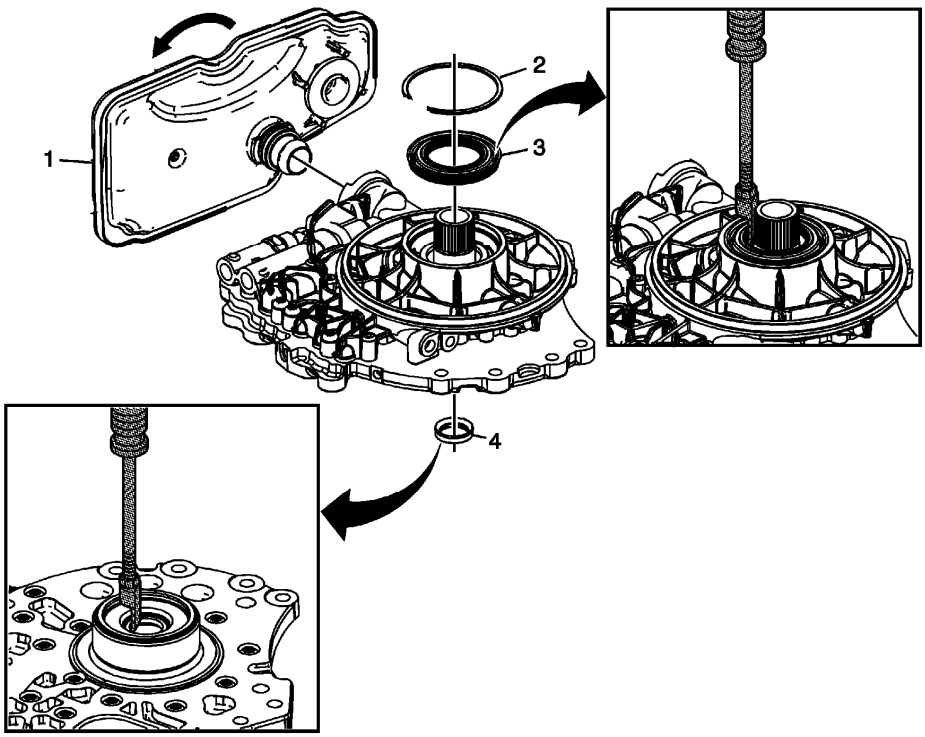

Fig. 76: View Of Fluid Filter Assembly & Torque Converter Fluid Seal
Courtesy of GENERAL MOTORS COMPANY

Fluid Filter Assembly and Torque Converter Fluid Seal Disassemble

Callout	Component Name
1	Fluid Filter Assembly **NOTE:** **Rotate filter 90 degrees to disengage locking tangs.**
2	Torque Converter Fluid Seal Retainer
3	Torque Converter Fluid Seal **Special Tools** • **DT-23129** Universal Seal Remover • **GE-6125-1B** Slide Hammer For equivalent regional tools, refer to **Special Tools** .
4	Torque Converter Fluid Seal Assembly **Special Tools** • **DT-23129** Universal Seal Remover • **GE-6125-1B** Slide Hammer

	For equivalent regional tools, refer to **Special Tools** .

Fluid Pump Disassemble

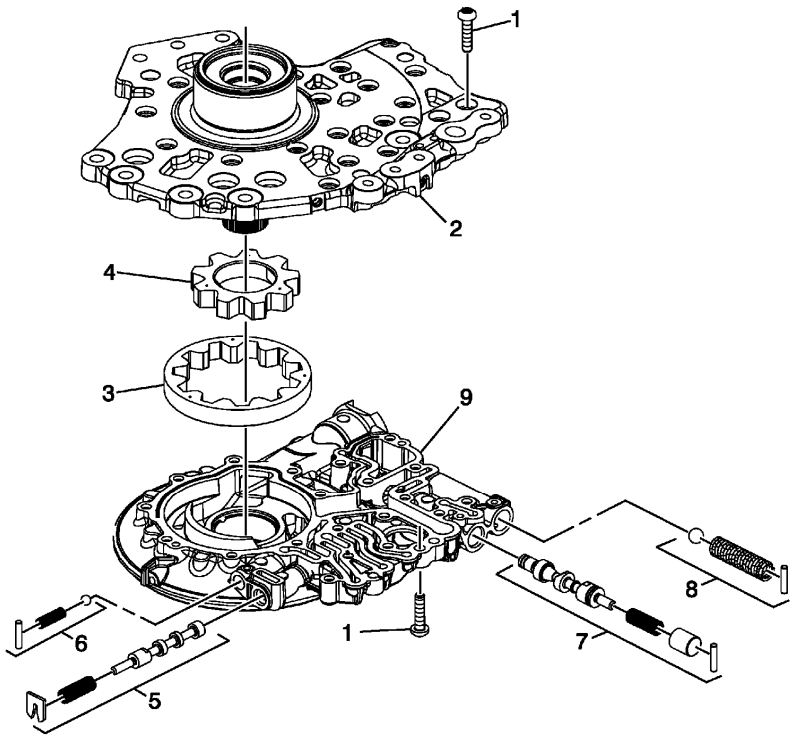

Fig. 77: Transmission Fluid Pump & Components
Courtesy of GENERAL MOTORS COMPANY

Fluid Pump Disassemble

Callout	Component Name
WARNING: **Valve springs can be tightly compressed. Use care when removing retainers and plugs. Personal injury could result.** **CAUTION:** **After cleaning the transmission components, allow to air dry. Do not use cloth or paper towels in order to dry any transmission components. Lint from the towels can cause component failure.** **CAUTION:** **Do not reuse cleaning solvents. Previously used solvents may deposit sediment which may damage the component.** **Preliminary Procedure** Clean and inspect all valve components and the pump body for wear and/or damage.	
	Fluid Pump Cover Bolts M6 x 25 (Qty: 23)

1	**NOTE:** **There are 3 bolts on the pump cover side and 20 bolts on the pump body side.**
2	Fluid Pump Cover
3	Fluid Pump Driven Gear
4	Fluid Pump Drive Gear
5	TCC Control Valve Train
6	TCC Blow Off Ball Valve Train
7	Pressure Regulator Valve Train
8	Fluid Pump Blow Off Ball Valve Train
9	A/Trans Fluid Pump Body

TRANSMISSION FLUID PUMP DISASSEMBLE (6T30)

Fluid Filter Assembly and Torque Converter Fluid Seal Disassemble

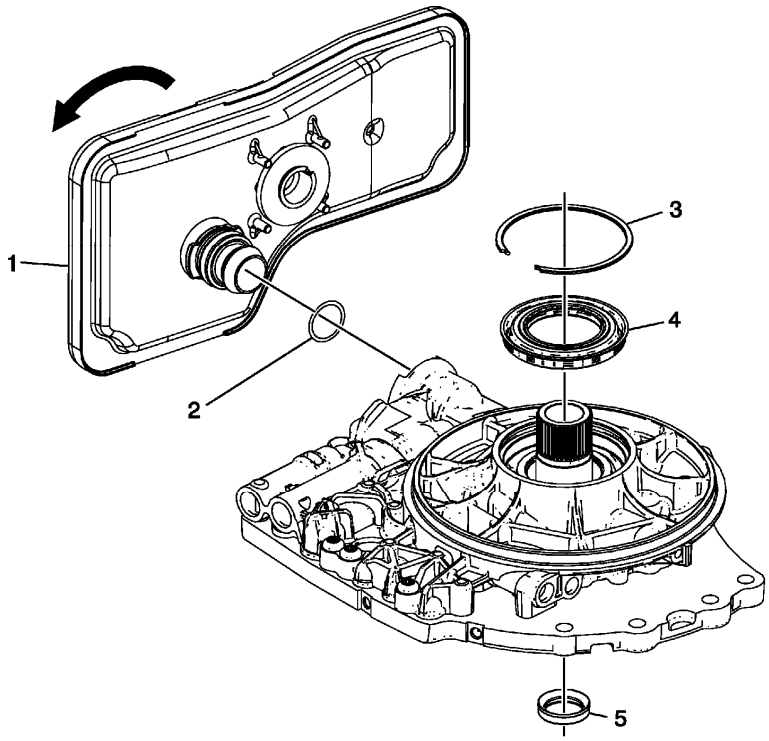

Fig. 78: Transmission Fluid Pump
Courtesy of GENERAL MOTORS COMPANY

Fluid Filter Assembly and Torque Converter Fluid Seal Disassemble

Callout	Component Name
1	Fluid Filter Assembly **TIP:** Rotate filter 90 degrees to disengage locking tangs.
2	A/Trans Fluid Filter Seal

3	Torque Converter Fluid Seal Retainer
4	Torque Converter Fluid Seal
5	Torque Converter Fluid Seal Assembly

Fluid Pump Disassemble

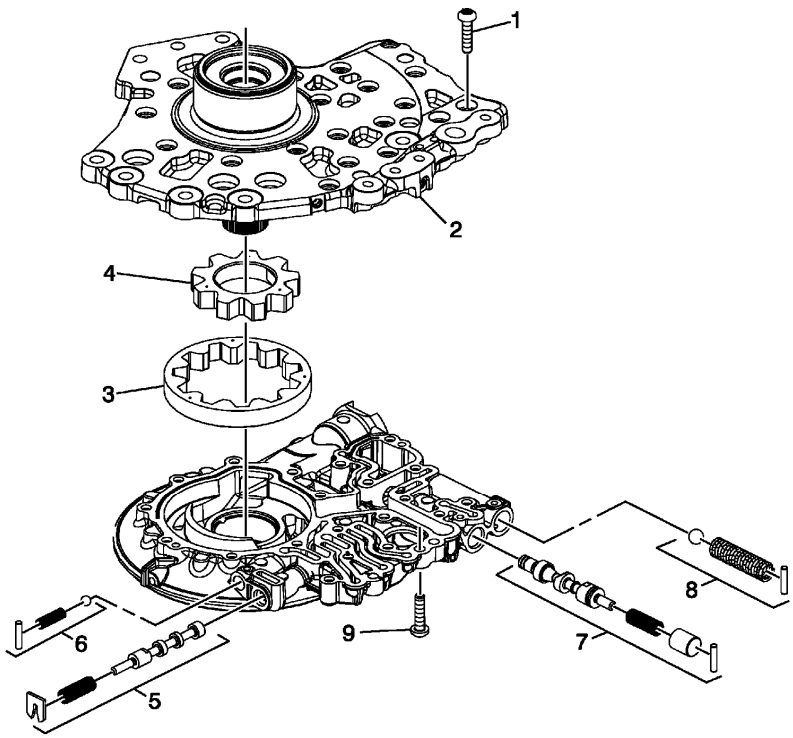

Fig. 79: Fluid Pump
Courtesy of GENERAL MOTORS COMPANY

Fluid Pump Disassemble

Callout	Component Name
WARNING: **Valve springs can be tightly compressed. Use care when removing retainers and plugs. Personal injury could result.** **CAUTION:** **After cleaning the transmission components, allow to air dry. Do not use cloth or paper towels in order to dry any transmission components. Lint from the towels can cause component failure.** **CAUTION:** **Do not reuse cleaning solvents. Previously used solvents may deposit sediment which may damage the component.** **Preliminary Procedure** Clean and inspect all valve components and the pump body for wear and/or damage.	

1	Fluid Pump Cover Bolts M6 x 21.5 (Qty: 20) **TIP:** There are 3 bolts on the pump cover side and 20 bolts on the pump body side.
2	Fluid Pump Cover
3	Fluid Pump Driven Gear
4	Fluid Pump Drive Gear
5	TCC Control Valve Train
6	Fluid Pump Blow Off Ball Valve Train
7	Pressure Regulator Valve Train
8	TCC Blow Off Ball Valve Train
9	Fluid Pump Cover Bolts M6 x 18.5 (Qty: 3)

FLUID PUMP SELECTIVE MEASUREMENT

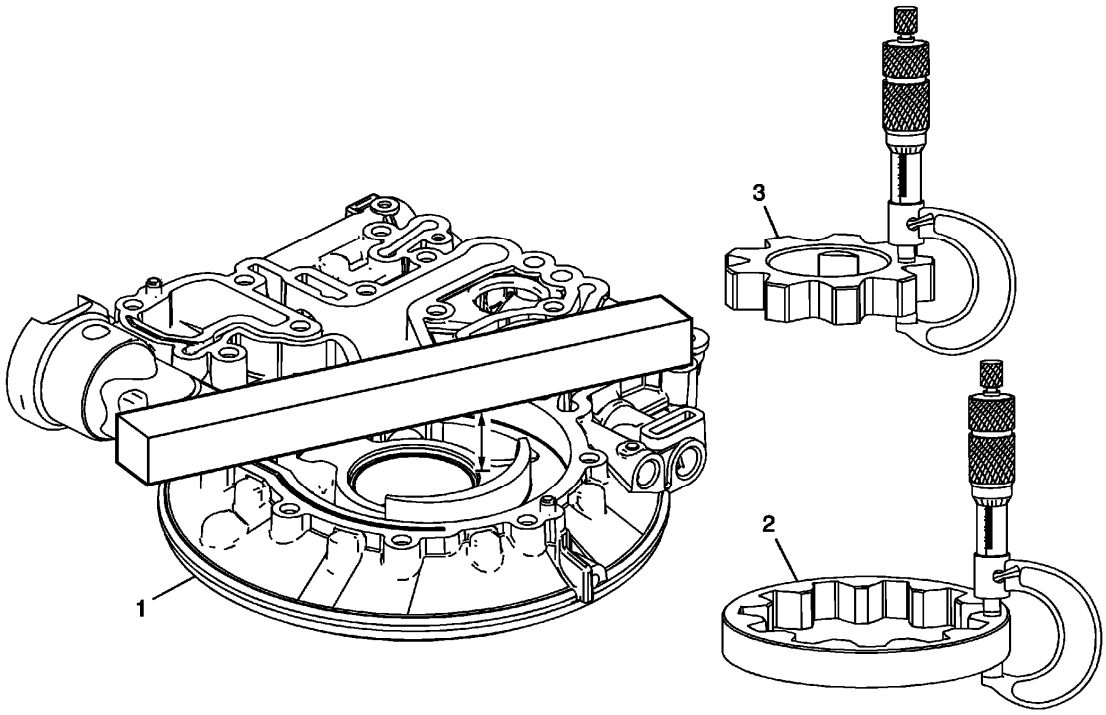

Fig. 80: Measuring Fluid Pump Components
Courtesy of GENERAL MOTORS COMPANY

Fluid Pump Selective Measurement

Callout	Component Name
1	A/Trans Fluid Pump Body **TIP:** Measure the distance from the bottom of a gauge bar to the bottom of the pump rotor cavity. Refer to **Fluid Pump Selective Specifications** . **Special Tools** **GE 34673** Flat Gauge Bar or equivalent

2	A/Trans Fluid Pump Driven Gear **TIP:** Refer to **Fluid Pump Selective Specifications** to select the correct gear.
3	A/Trans Fluid Pump Drive Gear **TIP:** Refer to **Fluid Pump Selective Specifications** to select the correct gear.

TRANSMISSION FLUID PUMP ASSEMBLE (6T40/45/50)

Fluid Pump w/Valve Trains Assemble

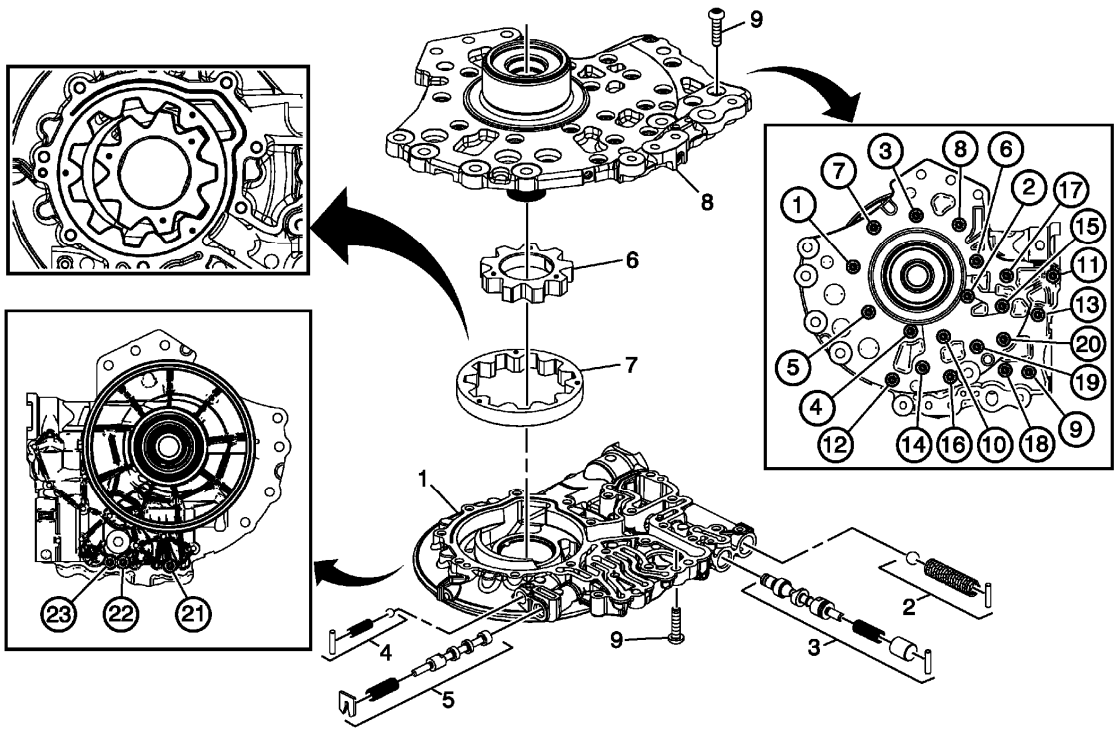

Fig. 81: Fluid Pump W/Valve Trains Assembly
Courtesy of GENERAL MOTORS COMPANY

Fluid Pump w/Valve Trains Assemble

Callout	Component Name
1	A/Trans Fluid Pump Body
2	Fluid Pump Blow Off Ball Valve Train
3	Pressure Regulator Valve Train
4	TCC Blow Off Ball Valve Train
5	TCC Control Valve Train
6	Fluid Pump Drive Gear **NOTE:** • **Align ID feature dots with the driven gear as shown above.**

	• **The chamfer on the drive gear teeth faces the pump body.**
7	Fluid Pump Driven Gear **NOTE:** • **Align ID feature dots with the drive gear as shown above, some models.** • **The chamfer on the driven gear O.D. faces the pump body.**
8	Fluid Pump Cover
9	Fluid Pump Cover Bolts M6 x 25 (Qty: 23) **CAUTION:** **Refer to Fastener Caution .** **Tighten** 12 N.m (106 lb in)

Torque Converter Fluid Seal and Fluid Filter Assembly Assemble

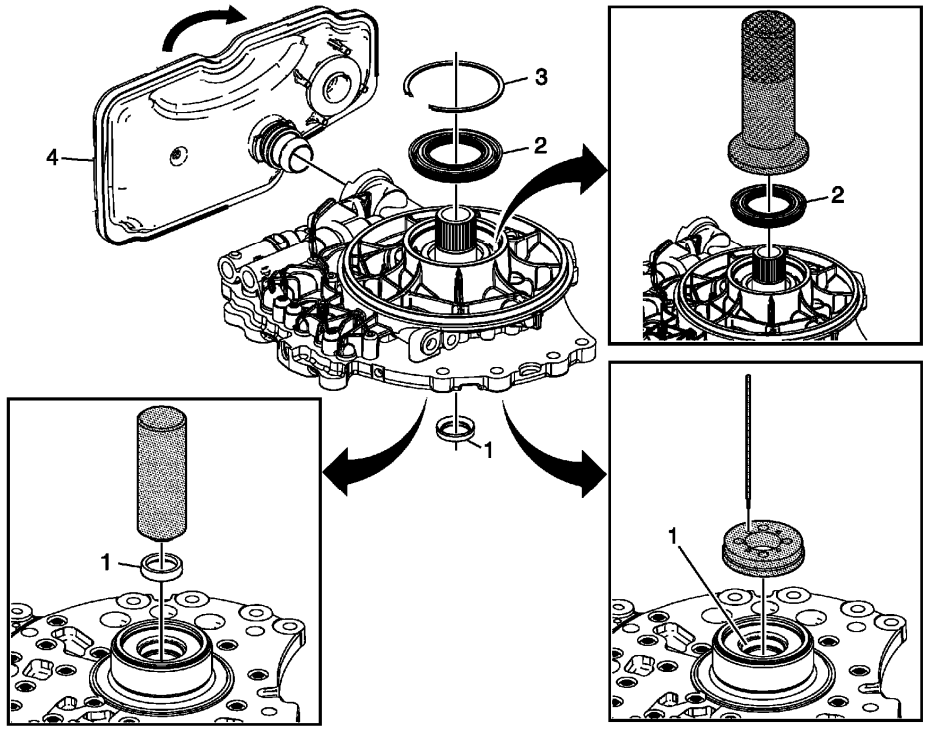

Fig. 82: View Of Torque Converter Fluid Seal & Fluid Filter Assembly
Courtesy of GENERAL MOTORS COMPANY

Torque Converter Fluid Seal and Fluid Filter Assembly Assemble

Callout	Component Name

1	Torque Converter Fluid Seal Assembly **NOTE:** **The fluid seal assembly must be staked in place using DT-49131 seal staking tool to ensure proper seal retention.** **Special Tool** • **DT-47792** Seal Installer • **DT-49131** Seal Staking Tool For equivalent regional tools, refer to **Special Tools** .
2	Torque Converter Fluid Seal **Special Tool** **DT-47791-A** Seal Installer For equivalent regional tools, refer to **Special Tools** .
3	Torque Converter Fluid Seal Retainer
4	Fluid Filter Assembly **NOTE:** **Rotate filter 90 degrees to engage locking tangs.**

TRANSMISSION FLUID PUMP ASSEMBLE (6T30)

Fluid Pump w/Valve Trains Assemble

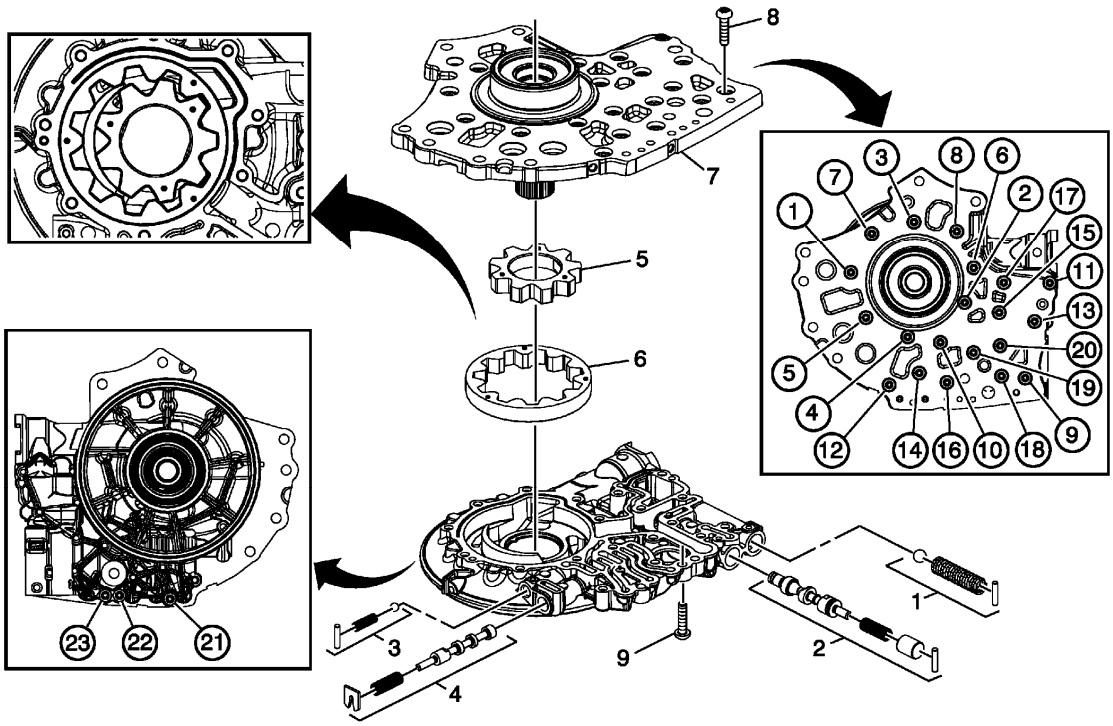

Fig. 83: Transmission Fluid Pump Assembly
Courtesy of GENERAL MOTORS COMPANY

Fluid Pump w/Valve Trains Assemble

Callout	Component Name
1	TCC Blow Off Ball Valve Train
2	Pressure Regulator Valve Train
3	Fluid Pump Blow Off Ball Valve Train
4	TCC Control Valve Train
5	Fluid Pump Drive Gear **TIP:** The chamfer on the drive gear teeth face towards the pump body.
6	Fluid Pump Driven Gear **TIP:** The chamfer on the driven gear O.D. faces the pump body.
7	Fluid Pump Cover
8	Fluid Pump Cover Bolts M6 x 21.5 (Qty: 20) **CAUTION:** **Refer to Fastener Caution .** **Tighten** 12 N.m (106 lb in)
9	Fluid Pump Cover Bolts M6 x 18.5 (Qty: 3) **Tighten**

	12 N.m (106 lb in)

Torque Converter Fluid Seal and Fluid Filter Assembly Assemble

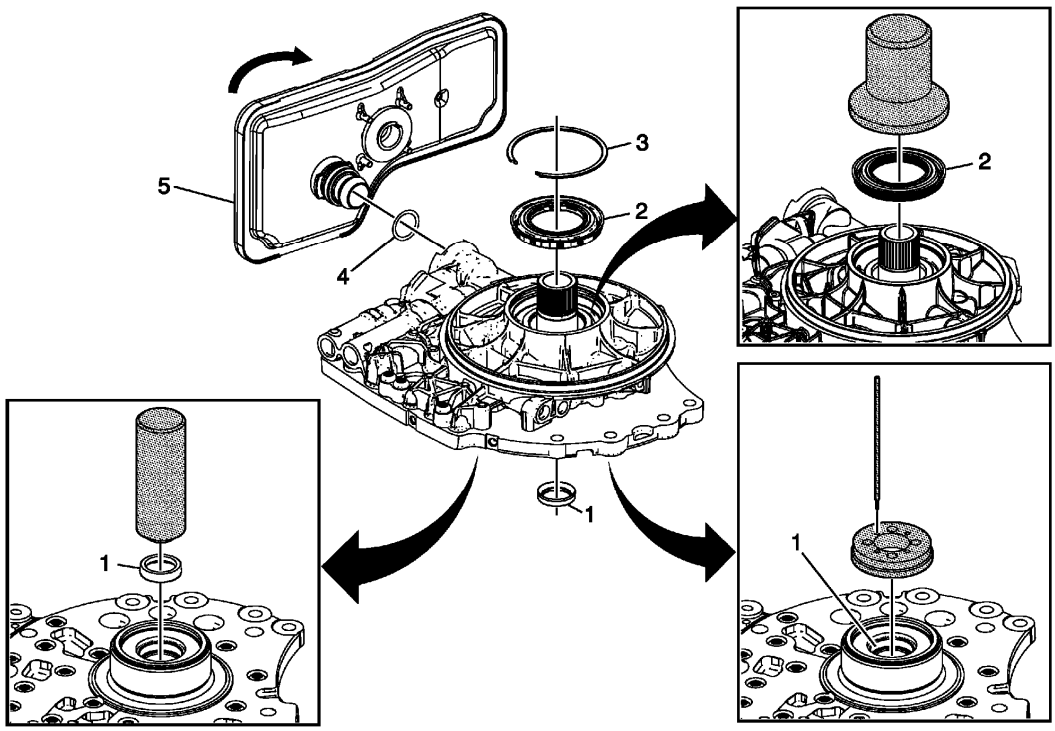

Fig. 84: Torque Converter Fluid Seal And Fluid Filter Assembly
Courtesy of GENERAL MOTORS COMPANY

Torque Converter Fluid Seal and Fluid Filter Assembly Assemble

Callout	Component Name
1	Torque Converter Fluid Seal Assembly **TIP:** The fluid seal assembly must be staked in place using **DT-49131** seal staking tool to ensure proper seal retention. **Special Tool** • **DT-48270** Seal Installer • **DT-49131** Seal Staking Tool For equivalent regional tools, refer to **Special Tools** .
2	Torque Converter Fluid Seal **Special Tool** **DT-47791** Seal Installer For equivalent regional tools, refer to **Special Tools** .
3	Torque Converter Fluid Seal Retainer

4	A/Trans Fluid Filter Seal
5	Fluid Filter Assembly **TIP:** Rotate filter 90 degrees to engage locking tangs.

TRANSMISSION FLUID PUMP, FRONT DIFFERENTIAL CARRIER BAFFLE, AND FRONT DIFFERENTIAL RING GEAR INSTALLATION (6T40/45)

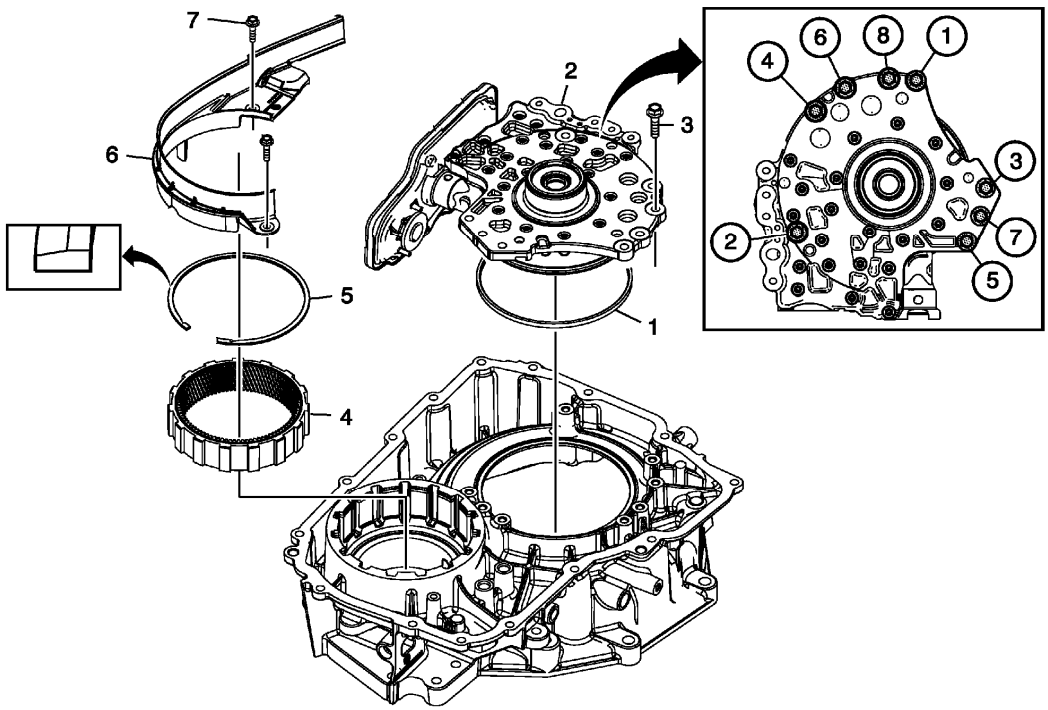

Fig. 85: Identifying Transmission Fluid Pump, Front Differential Carrier Baffle & Front Differential Ring Gear
Courtesy of GENERAL MOTORS COMPANY

Transmission Fluid Pump, Front Differential Carrier Baffle, and Front Differential Ring Gear Installation (6T40/45)

Callout	Component Name
1	Torque Converter and Differential Housing Seal
2	Fluid Pump Assembly
3	Fluid Pump Bolts M8 x 33 (Qty: 8) **CAUTION:** **Refer to Fastener Caution .** **Tighten** 10 N.m (89 lb in) then rotate the bolt an additional 45 degrees **Special Tool**

	EN-45059 Angle Meter or equivalent For equivalent regional tools, refer to **Special Tools** .
4	Front Differential Ring Gear
5	Front Differential Ring Gear Retainer **NOTE:** **Install the retainer with the taper facing away from the ring gear.**
6	Front Differential Carrier Baffle
7	Front Differential Carrier Baffle Bolts M6 x 25 (Qty: 2) **Tighten** 12 N.m (106.21 lb in)

TRANSMISSION FLUID PUMP, FRONT DIFFERENTIAL CARRIER BAFFLE, AND FRONT DIFFERENTIAL RING GEAR INSTALLATION (6T30)

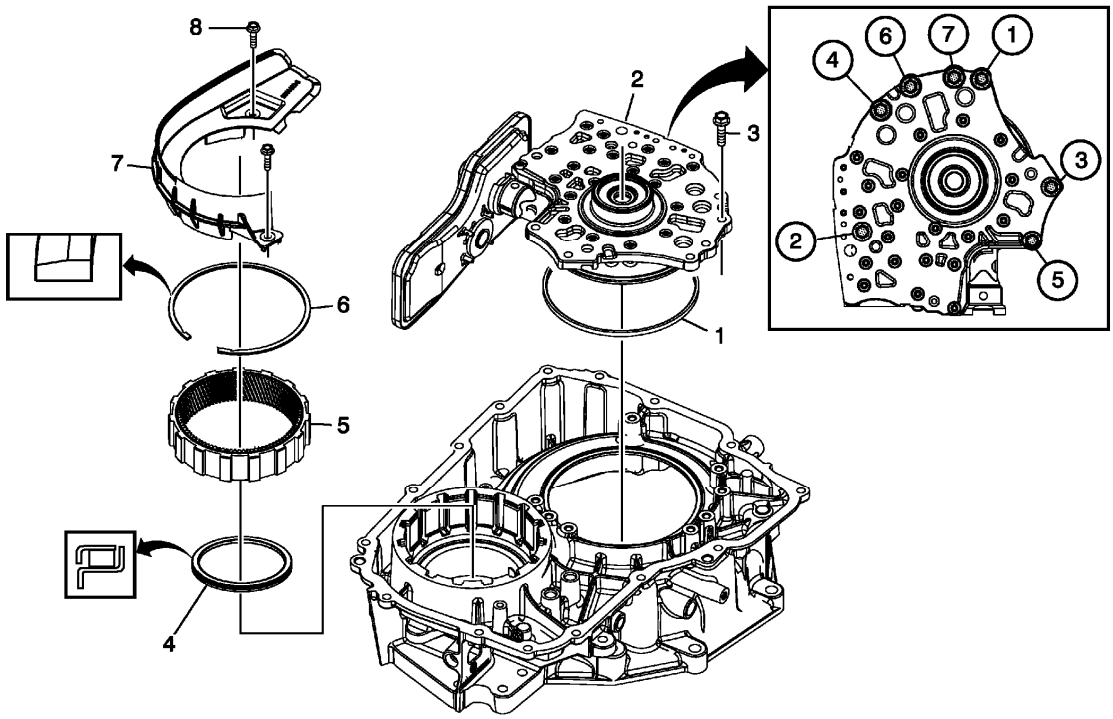

Fig. 86: Transmission Fluid Pump, Front Differential Carrier Baffle And Front Differential Ring Gear
Courtesy of GENERAL MOTORS COMPANY

Transmission Fluid Pump, Front Differential Carrier Baffle, and Front Differential Ring Gear Installation (6T30)

Callout	Component Name
1	Torque Converter and Differential Housing Seal
2	Fluid Pump Assembly
	Fluid Pump Bolts M8 x 33 (Qty: 7)

3	**CAUTION:** **Refer to Fastener Caution .** **Tighten** 10 N.m (89 lb in) then rotate the bolt an additional 45 degrees **Special Tool** **EN-45059** Angle Meter or equivalent For equivalent regional tools, refer to **Special Tools** .
4	Front Differential Carrier Bearing Assembly
5	Front Differential Ring Gear
6	Front Differential Ring Gear Retainer **TIP:** Install the retainer with the taper facing away from the ring gear.
7	Front Differential Carrier Baffle
8	Front Differential Carrier Baffle Bolts M6 x 25 (Qty: 2) **Tighten** 12 N.m (106.21 lb in)

TORQUE CONVERTER HOUSING WITH FLUID PUMP ASSEMBLY INSTALLATION (6T40/6T45/6T50 NON HYBRID)

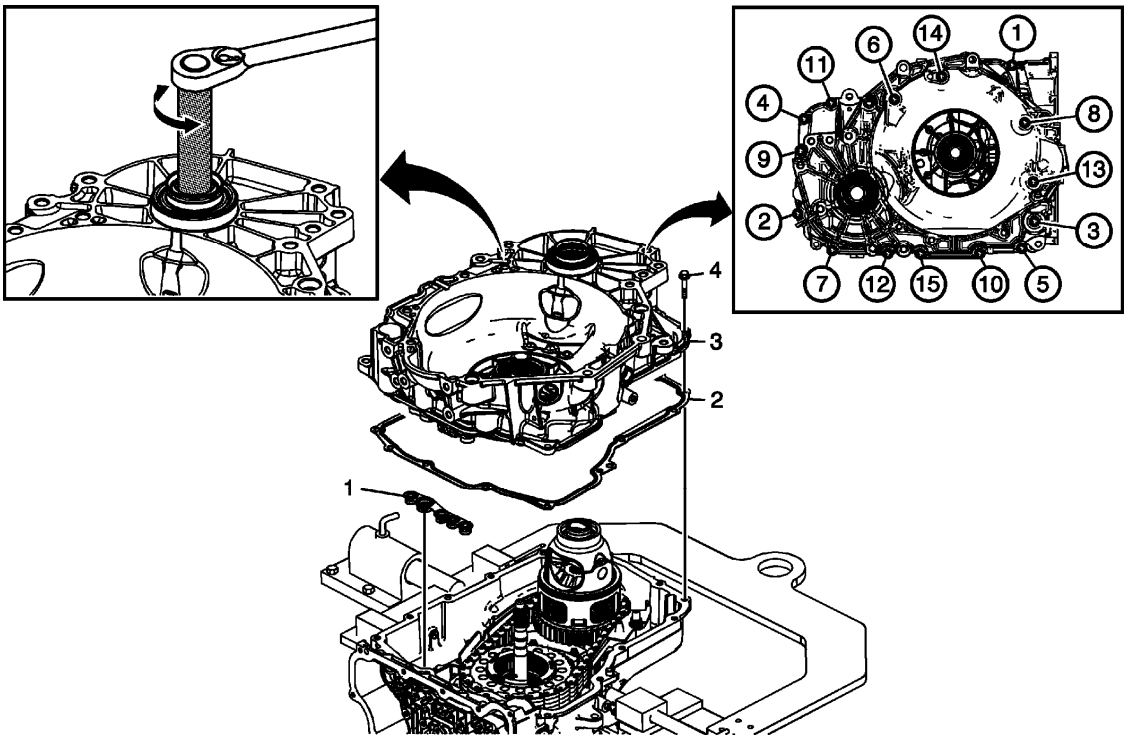

Fig. 87: Identifying Torque Converter Housing & Fluid Pump Assembly
Courtesy of GENERAL MOTORS COMPANY

Torque Converter Housing with Fluid Pump Assembly Installation (6T40/6T45/6T50 Non Hybrid)

Callout	Component Name
1	Fluid Pump Seal Assembly
2	Torque Converter Housing Gasket
3	Torque Converter (w/Fluid Pump) Housing Assembly **NOTE:** **Rotate the differential slightly in each direction using the rotating tool to align the Differential Pinion Gears with the Differential Ring Gear in the Torque Converter Housing.** • **DT-47793 Differential Rotating Tool for 6T40/45 applications** • **DT-49938 Differential Rotating Tool for 6T50 applications** **Special Tools** • **DT-47793** Differential Rotating Tool • **DT-49938** Differential Rotating Tool For equivalent regional tools, refer to **Special Tools** .
4	Torque Converter and Differential Housing Bolts M8 x 30 (Qty: 15) **CAUTION:** **Refer to Fastener Caution .** **Procedure** Tighten the bolts in sequence shown. **Tighten** 10 N.m (89 lb in) then rotate the bolt an additional 50 degrees **Special Tool** **EN-45059** Angle Meter or equivalent For equivalent regional tools, refer to **Special Tools** .

TORQUE CONVERTER HOUSING WITH FLUID PUMP ASSEMBLY INSTALLATION (6T30)

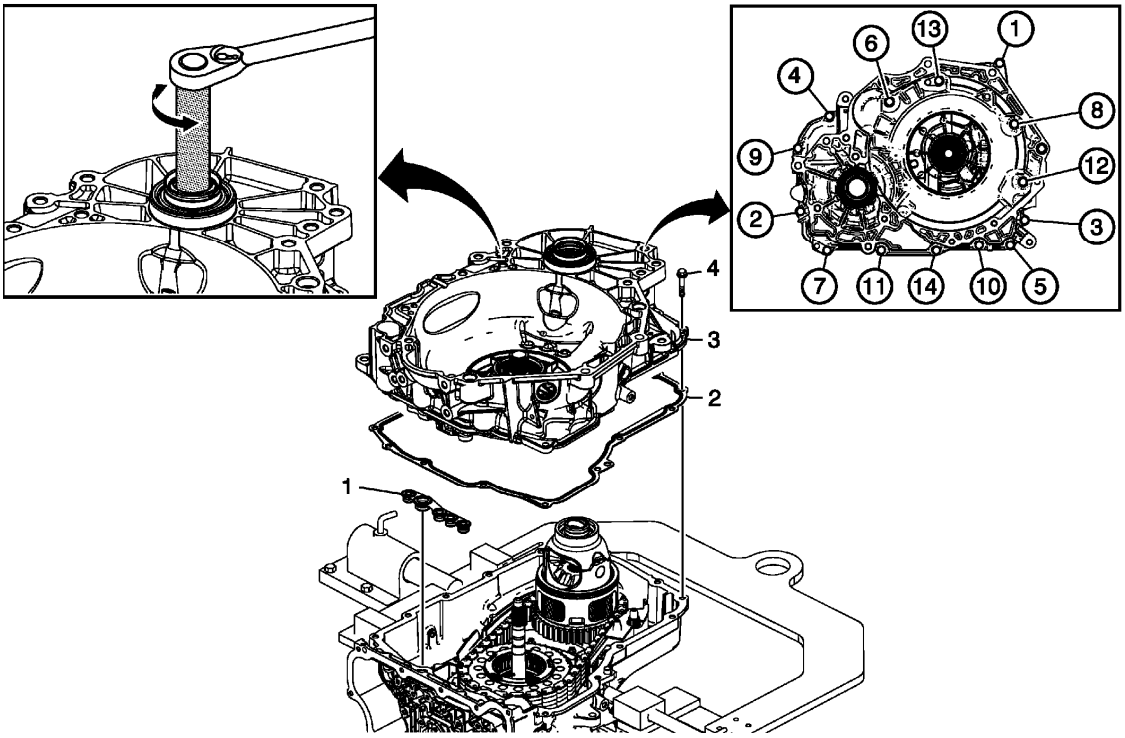

Fig. 88: Torque Converter Housing With Fluid Pump Assembly
Courtesy of GENERAL MOTORS COMPANY

Torque Converter Housing with Fluid Pump Assembly Installation (6T30)

Callout	Component Name
1	Fluid Pump Seal Assembly
2	Torque Converter Housing Gasket
3	Torque Converter (w/Fluid Pump) Housing Assembly **TIP:** Rotate the differential slightly in each direction using **DT-48277** rotating tool to align the Differential Pinion Gears with the Differential Ring Gear in the Torque Converter Housing. **Special Tool** **DT-48277** Differential Rotating Tool For equivalent regional tools, refer to **Special Tools** .
4	Torque Converter and Differential Housing Bolts M8 x 30 (Qty: 14) **CAUTION:** **Refer to Fastener Caution .** **Procedure** Tighten the bolts in sequence shown. **Tighten** 10 N.m (89 lb in) then rotate the bolt an additional 50 degrees **Special Tool** **EN-45059** Angle Meter or equivalent

	For equivalent regional tools, refer to **Special Tools** .

INPUT AND OUTPUT SPEED SENSOR INSTALLATION

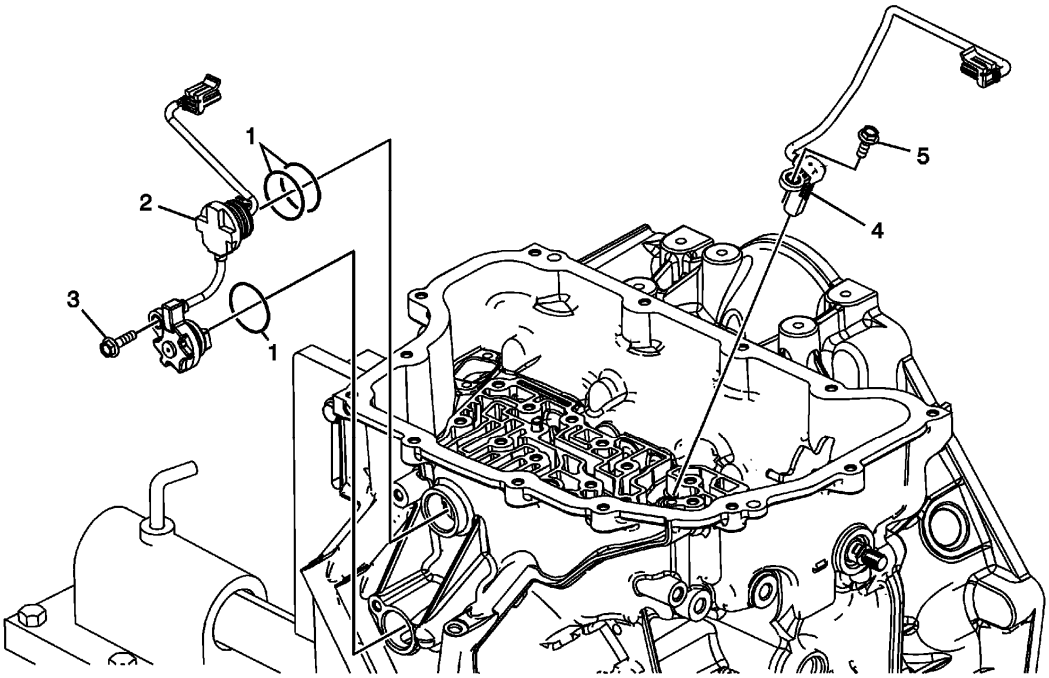

Fig. 89: Identifying Input & Output Speed Sensor
Courtesy of GENERAL MOTORS COMPANY

Input and Output Speed Sensor Installation

Callout	Component Name
1	Input Speed Sensor Assembly Seals
2	Input Speed Sensor Assembly
3	Input Speed Sensor Bolt M6 x 23 (Qty: 1) **CAUTION:** **Refer to Fastener Caution .** **Tighten** 9 N.m (80 lb in)
4	A/Trans Output Speed Sensor Assembly
5	A/Trans Output Speed Sensor Bolt M6 x 18 (Qty: 1) **Tighten** 9 N.m (80 lb in)

CONTROL VALVE BODY ASSEMBLY DISASSEMBLE (GEN 1)

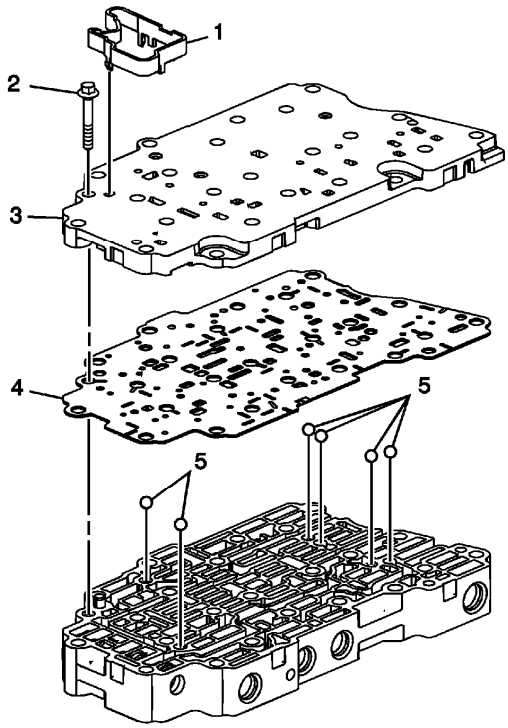

Fig. 90: View Of Control Valve Body Assembly
Courtesy of GENERAL MOTORS COMPANY

Control Valve Body Assembly Disassemble (Gen 1)

Callout	Component Name
1	Control Solenoid Valve Support
2	Control Valve Body Bolt M5 x 40.5 (Qty: 1)
3	Valve Channel Plate **NOTE:** **Inspect the channel plate bolt pass through holes for damage or brinelling. Any damage will cause incorrect pressure switch operation. Replace as necessary.**
4	Control Valve Channel Plate Spacer Plate Assembly
5	Valve Body Ball Check Valves (Qty: 6)

CONTROL VALVE BODY ASSEMBLY DISASSEMBLE (GEN 2)

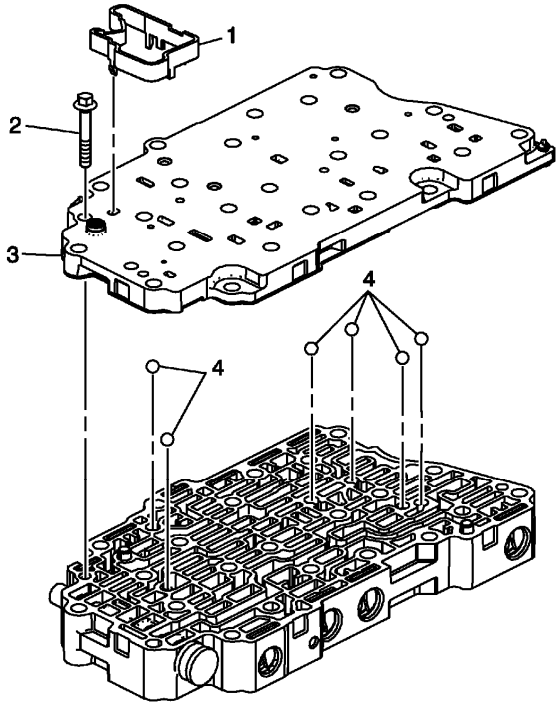

Fig. 91: Control Valve Body (Gen 2)
Courtesy of GENERAL MOTORS COMPANY

Control Valve Body Assembly Disassemble (Gen 2)

Callout	Component Name
1	Control Solenoid Valve Support
2	Control Valve Body Bolt M5 x 40.5 (Qty: 1)
3	Valve Channel Plate **NOTE:** **Inspect the channel plate bolt pass through holes for damage or brinelling. Any damage will cause incorrect pressure switch operation. Replace as necessary.**
4	Valve Body Ball Check Valves (Qty: 6)

CONTROL VALVE BODY CLEANING AND INSPECTION (GEN 1)

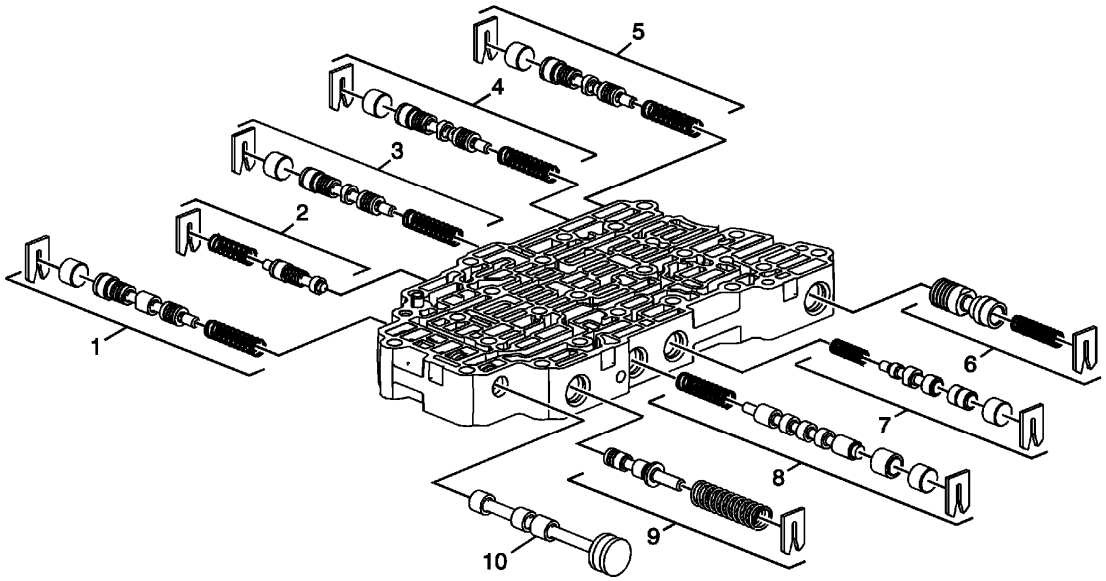

Fig. 92: Exploded View Of Control Valve Body
Courtesy of GENERAL MOTORS COMPANY

Control Valve Body Cleaning and Inspection (Gen 1)

Callout	Component Name
WARNING: **Valve springs can be tightly compressed. Use care when removing retainers and plugs. Personal injury could result.** **CAUTION:** **After cleaning the transmission components, allow to air dry. Do not use cloth or paper towels in order to dry any transmission components. Lint from the towels can cause component failure.** **CAUTION:** **Do not reuse cleaning solvents. Previously used solvents may deposit sediment which may damage the component.** **Preliminary Procedure** Clean and inspect all valve components and the valve body. The control valve body assembly is only replaceable as an assembly.	
1	First-Reverse and 4-5-6 Clutch Regulator Valve Train
2	1-2-3-4 Clutch Boost Valve Train
3	1-2-3-4 Clutch Regulator Valve Train
4	2-6 Clutch Regulator ValveTrain
5	3-5 Reverse Clutch Regulator Valve Train
6	Clutch Piston Dam Feed Regulator Valve Train

7	TCC Regulator Apply Valve Train
8	Clutch Select Valve Train
9	Actuator Feed Limit Valve Train
10	Manual Valve

CONTROL VALVE BODY CLEANING AND INSPECTION (GEN 2)

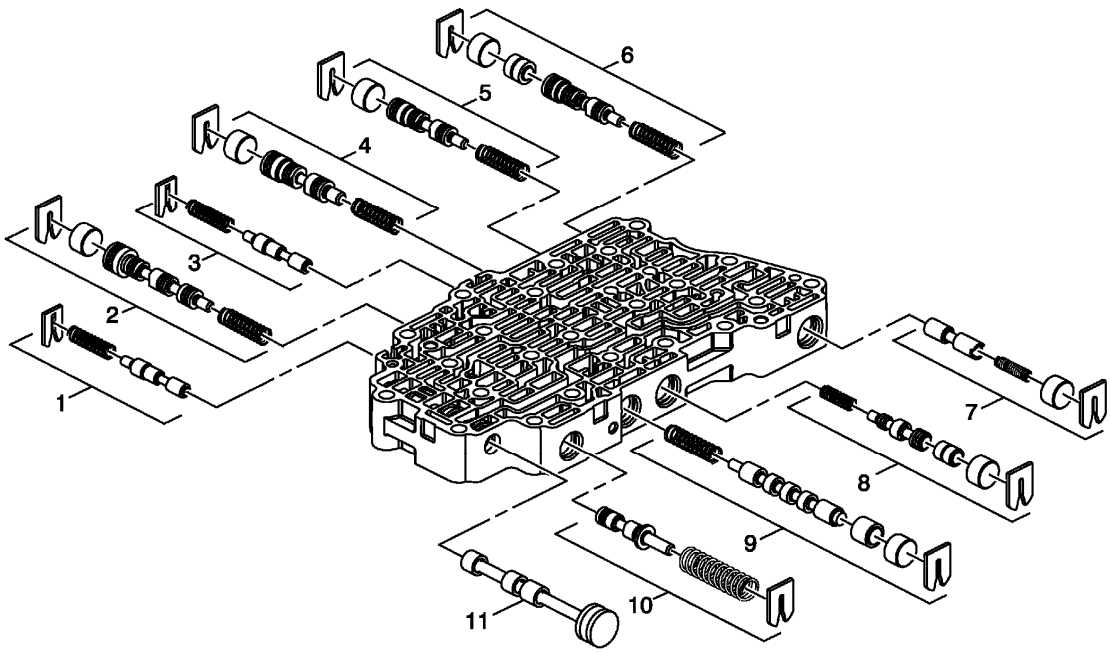

Fig. 93: Control Valve Body Cleaning and Inspection (Gen 2)
Courtesy of GENERAL MOTORS COMPANY

Control Valve Body Cleaning and Inspection (Gen 2)

Callout	Component Name

WARNING:
Valve springs can be tightly compressed. Use care when removing retainers and plugs. Personal injury could result.

CAUTION:
After cleaning the transmission components, allow to air dry. Do not use cloth or paper towels in order to dry any transmission components. Lint from the towels can cause component failure.

CAUTION:
Do not reuse cleaning solvents. Previously used solvents may deposit sediment which may damage the component.

Preliminary Procedure Clean and inspect all valve components and the valve body. The control valve

body assembly is only replaceable as an assembly.	
1	Low-Reverse and 4-5-6 Clutch Boost Valve Train
2	Low-Reverse and 4-5-6 Clutch Regulator Valve Train
3	1-2-3-4 Clutch Boost Valve Train
4	1-2-3-4 Clutch Regulator Valve Train
5	2-6 Clutch Regulator ValveTrain
6	3-5 Reverse Clutch Regulator Valve Train
7	Defualt Override Valve Train
8	TCC Regulator Apply Valve Train
9	Clutch Select Valve Train
10	Actuator Feed Limit Valve Train
11	Manual Valve

CONTROL VALVE CHANNEL PLATE CLEANING AND INSPECTION (6T30/40/45/50 - GEN 1)

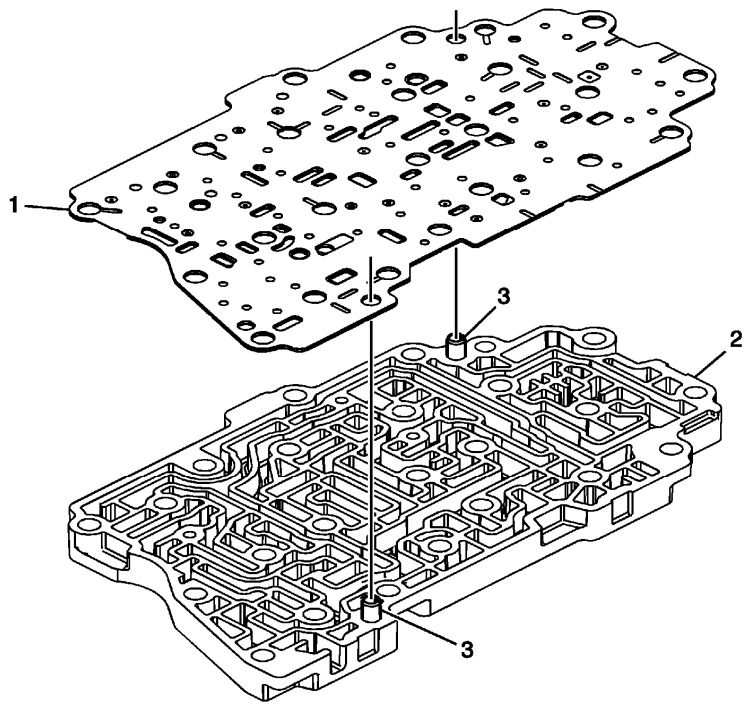

Fig. 94: Identifying Control Valve Channel Plate Inspection Areas
Courtesy of GENERAL MOTORS COMPANY

Control Valve Channel Plate Cleaning and Inspection (6T30/40/45/50 - Gen 1)

Callout	Component Name
1	Channel Plate to Valve Body Spacer Plate Assembly
2	Valve Channel Plate **NOTE:**

	Inspect the channel plate bolt pass through holes for damage or brinelling. Any damage will cause incorrect pressure switch operation. Replace as necessary.
3	Control Valve Body Guide Pins

CONTROL VALVE CHANNEL PLATE CLEANING AND INSPECTION (6T30/40/45/50 - GEN 2)

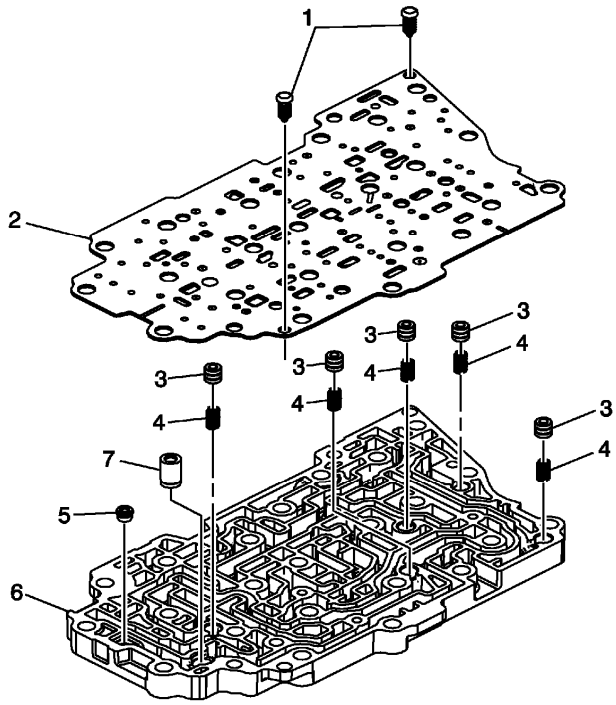

Fig. 95: Control Valve Channel Plate Cleaning and Inspection
Courtesy of GENERAL MOTORS COMPANY

Control Valve Channel Plate Cleaning and Inspection (6T30/40/45/50 - Gen 2)

Callout	Component Name
1	Control Valve Body Spacer Plate Retainer
2	Channel Plate to Valve Body Spacer Plate Assembly
3	Actuator Feed Accumulator Piston (Qty: 5)
4	Actuator Feed Accumulator Spring (Qty: 5)
5	Variable Hi and 2-3-4 Clutch Housing Valve Ball
6	Valve Channel Plate **NOTE:** **Inspect the channel plate bolt pass through holes for damage or brinelling. Any damage will cause incorrect pressure switch operation. Replace as necessary.**
7	Control Valve Channel Plate Ball Spring Assembly

CONTROL VALVE BODY ASSEMBLY ASSEMBLE (GEN 1)

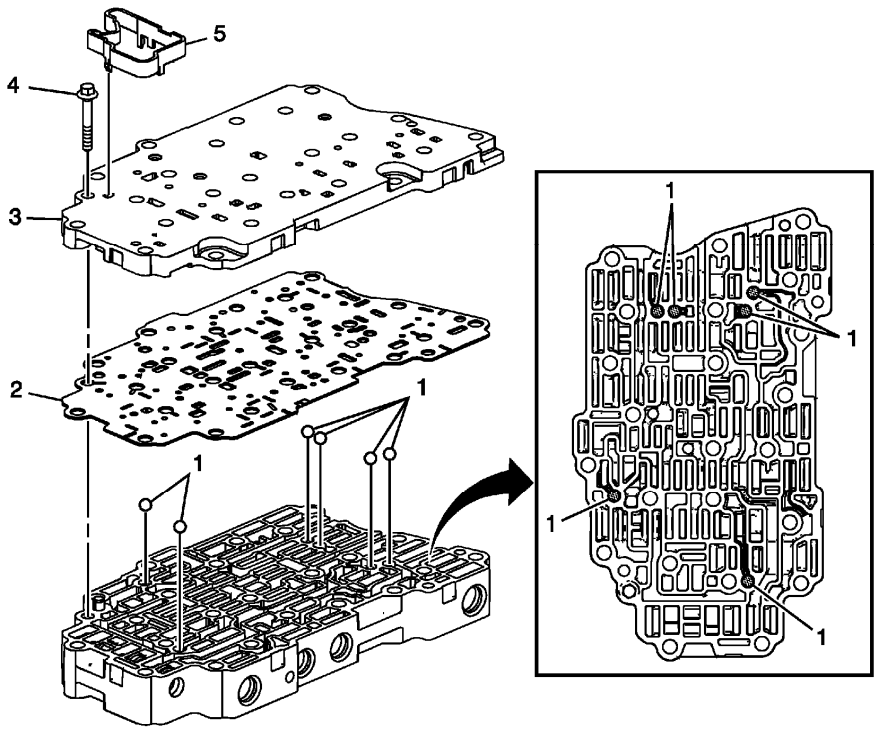

Fig. 96: View Of Control Valve Body Assembly
Courtesy of GENERAL MOTORS COMPANY

Control Valve Body Assembly Assemble (Gen 1)

Callout	Component Name
1	Valve Body Ball Check Valve (Qty: 6)
2	Control Valve Channel Plate Spacer Plate Assembly
3	Valve Channel Plate **NOTE:** **Inspect the channel plate bolt pass through holes for damage or brinelling. Any damage could cause leaking. Replace as necessary.**
4	Control Valve Body Bolt M5 x 40.5 (Qty: 1) **CAUTION:** **Refer to Fastener Caution .** **Tighten** 7 N.m (62 lb in)
5	Control Solenoid Valve Support

CONTROL VALVE BODY ASSEMBLY ASSEMBLE (GEN 2)

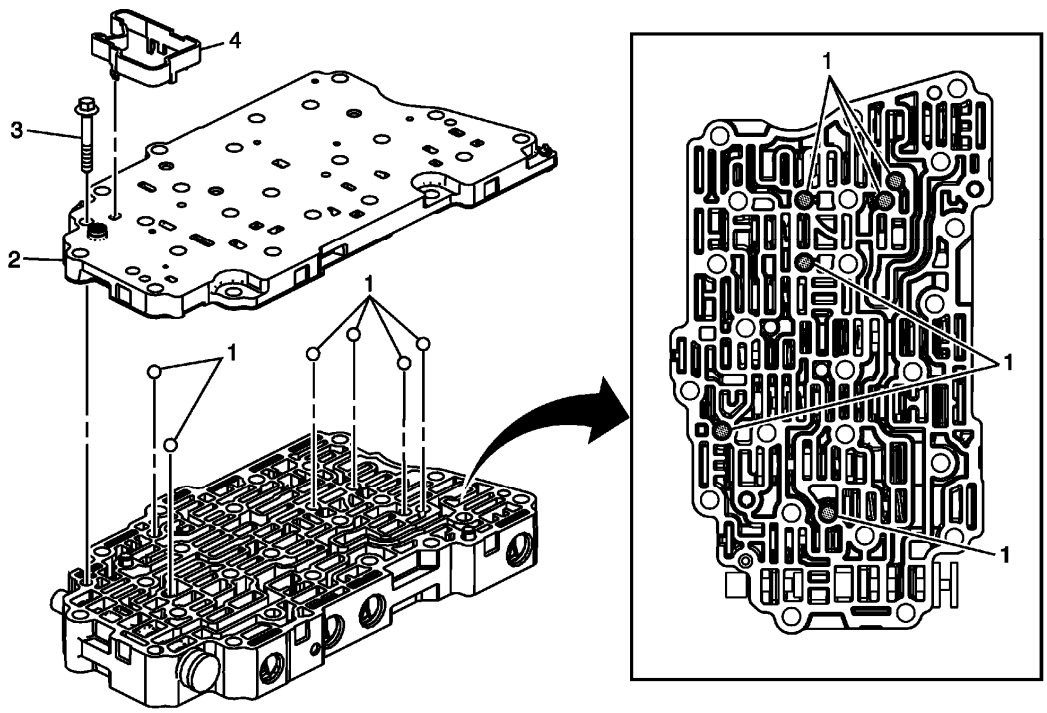

Fig. 97: Control Valve Body & Components
Courtesy of GENERAL MOTORS COMPANY

Control Valve Body Assembly Assemble (Gen 2)

Callout	Component Name
1	Valve Body Ball Check Valve (Qty: 6)
2	Valve Channel Plate
3	Control Valve Body Bolt M5 x 40.5 (Qty: 1) **CAUTION:** **Refer to Fastener Caution .** **Tighten** 7 N.m (62 lb in)
4	Control Solenoid Valve Support

CONTROL VALVE BODY ASSEMBLY INSTALLATION

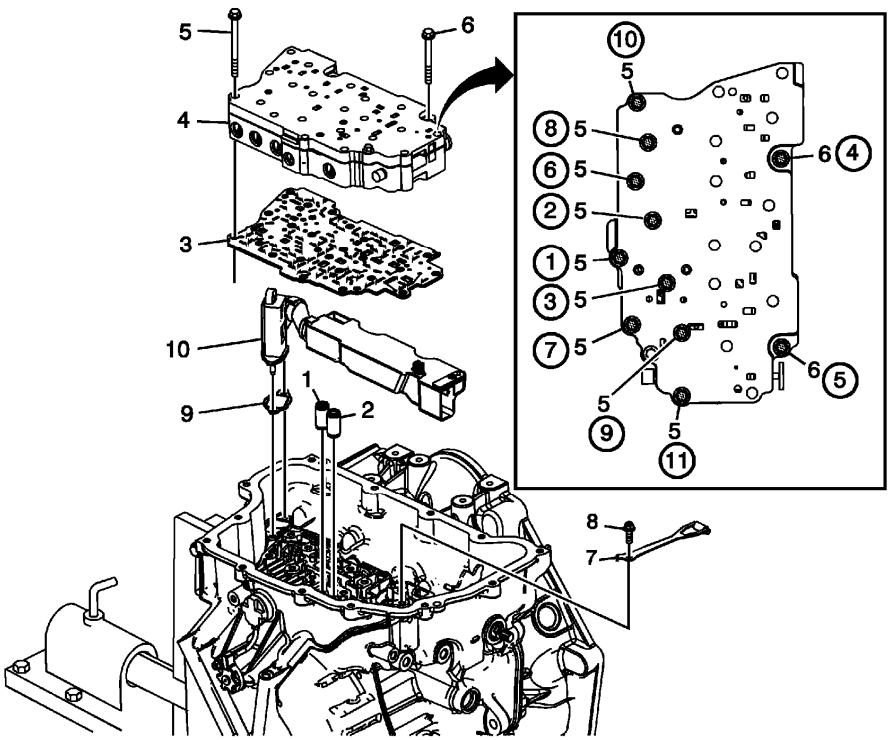

Fig. 98: View Of Control Valve Body Assembly Attachments
Courtesy of GENERAL MOTORS COMPANY

Control Valve Body Assembly Installation

Callout	Component Name
1	Low and Reverse Clutch Fluid Passage Seal
2	1-2-3-4 Clutch Fluid Passage Seal
3	Control Valve Body Spacer Plate Assembly
4	Control Valve Body Assembly **NOTE:** **Align the manual valve to the rod on the manual shaft.**
5	Control Valve Body Bolt M6 x 60 (Qty: 9) **CAUTION:** **Refer to Fastener Caution .** **Tighten** 11 N.m (97 lb in)
6	Control Valve Body Bolt M6 x 53 (Qty: 2) **Tighten** 11 N.m (97 lb in)
7	Manual Shaft Detent Lever Spring Assembly
	Manual Shaft Detent Spring Bolt M6 x 16 (Qty: 1)

8	**Tighten** 12 N.m (106 lb in)
9	Fluid Level Control Valve Gasket
10	Fluid Level Control Valve

CONTROL SOLENOID VALVE AND TRANSMISSION CONTROL MODULE ASSEMBLY INSTALLATION

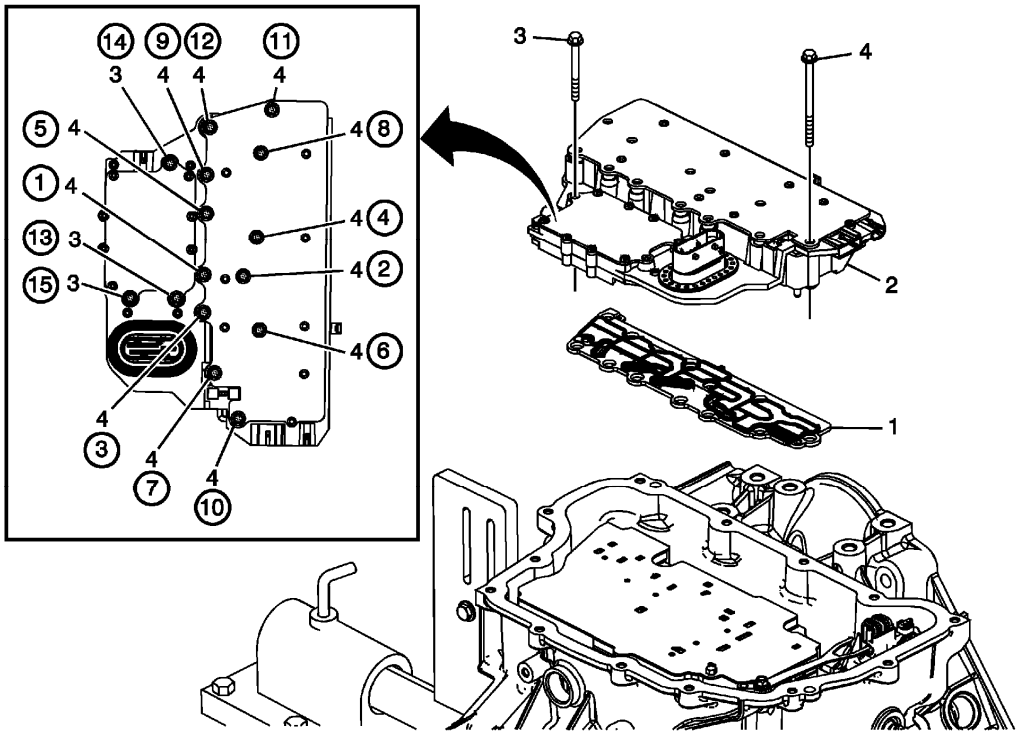

Fig. 99: Identifying Control Solenoid Valve & TCM Bolt Tightening Sequence
Courtesy of GENERAL MOTORS COMPANY

Control Solenoid Valve and Transmission Control Module Assembly Installation

Callout	Component Name
1	Control Solenoid Valve Assembly Filter Plate **CAUTION:** **Use care when removing or installing the filter plate assembly. A broken or missing retaining tab may not adequately secure the filter plate to the control solenoid valve assembly, resulting in possible damage or contamination.** **NOTE:** **Install a NEW filter plate to prevent fluid leaks past the fluid seals.**
2	Control Solenoid (w/Body and TCM) Valve Assembly
	Control Valve Body Bolt M5 x 40.5 (Qty: 3)

3	**CAUTION:** **Refer to Fastener Caution .** **Tighten** 7 N.m (62 lb in)
4	Control Valve Body Bolt M6 x 97 (Qty: 12) **Tighten** 10 N.m (89 lb in)

CONTROL VALVE BODY COVER INSTALLATION

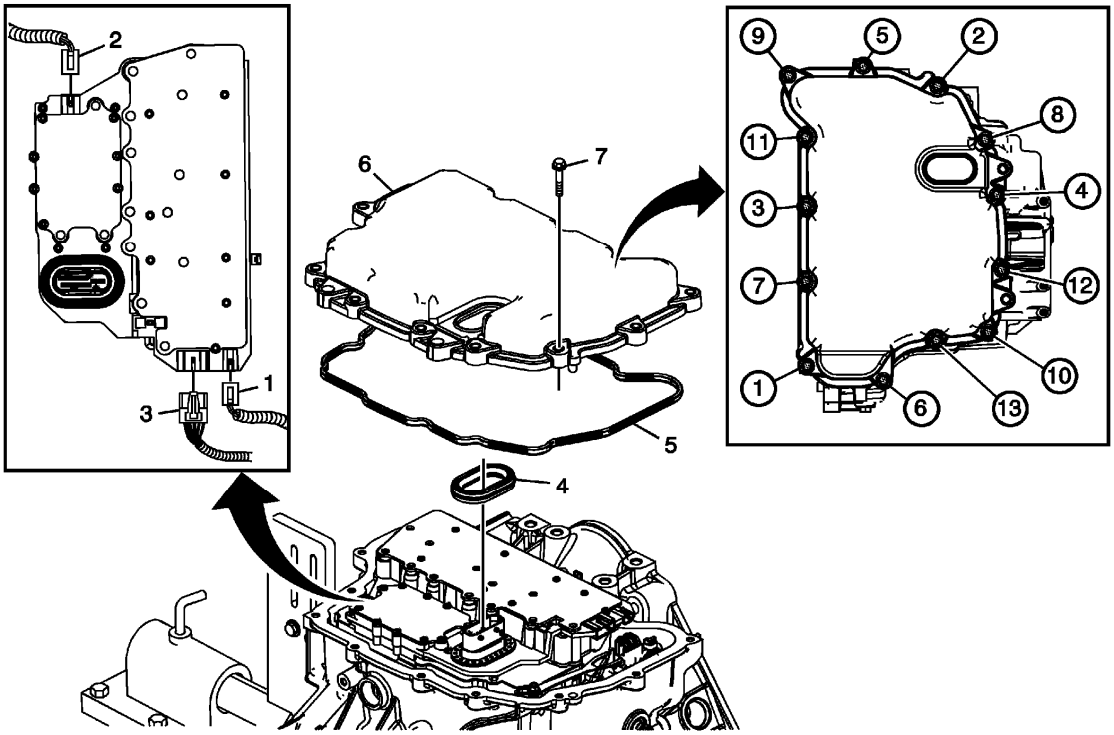

Fig. 100: Identifying Control Valve Body Cover Bolt Tightening Sequence
Courtesy of GENERAL MOTORS COMPANY

Control Valve Body Cover Installation

Callout	Component Name
1	Input Speed Sensor Connector
2	Output Speed Sensor Connector
3	Shift Position Switch Connector
4	Control Valve Body Cover Wiring Connector Hole Seal **NOTE:** **Do not re-use the valve body cover wiring connector hole seal.**

5	Control Valve Body Cover Gasket **NOTE:** **Do not re-use the valve body cover gasket.**
6	Control Valve Body Cover
7	Control Valve Body Cover Bolts M6 x 30 (Qty: 13) **CAUTION:** **Refer to Fastener Caution .** **Tighten** 12 N.m (106 lb in)

TORQUE CONVERTER FLUID SEAL REPLACEMENT

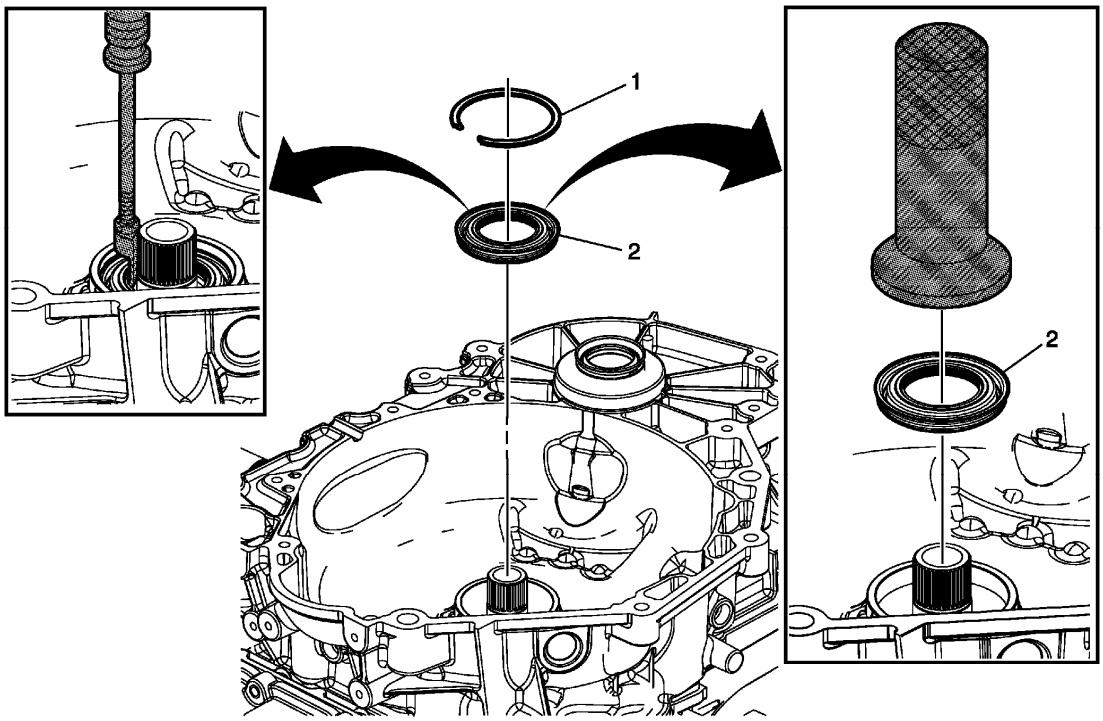

Fig. 101: View Of Torque Converter Fluid Seal & Retainer
Courtesy of GENERAL MOTORS COMPANY

Torque Converter Fluid Seal Replacement

Callout	Component Name
1	Torque Converter Fluid Seal Retainer
	Torque Converter Fluid Seal **Special Tools**

2	• **DT-47791-A** Seal Installer • **DT-6125-B** Slide Hammer • **EN-23129** Universal Seal Remover For equivalent regional tools, refer to **Special Tools** .

TORQUE CONVERTER INSTALLATION

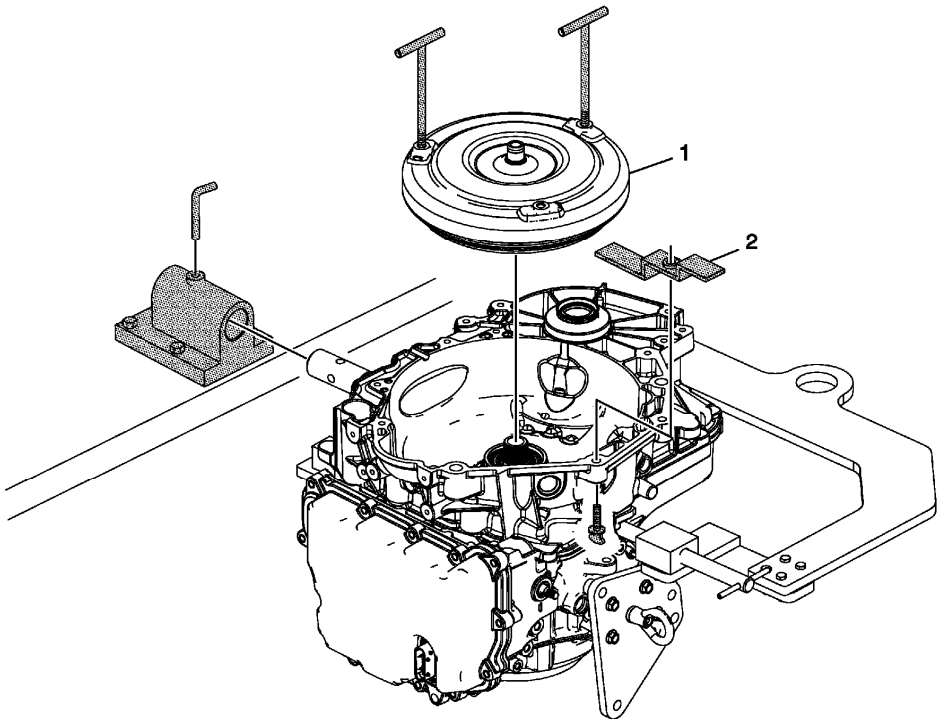

Fig. 102: View Of Torque Converter
Courtesy of GENERAL MOTORS COMPANY

Torque Converter Installation

Callout	Component Name
1	Torque Converter Assembly **NOTE:** **Failure to lower the torque converter straight down could damage the torque converter clutch lip seal inside the torque converter clutch assembly.** **Special Tool** **DT-46409** Torque Converter Lifting Handles For equivalent regional tools, refer to **Special Tools** .

2	**DT-21366** Converter Holding Strap **WARNING:** **The torque converter must be held to the torque converter housing by a retaining device such as shipping brackets. Without the retaining device, the torque converter may slide forward, disengaging the oil pump, or may fall completely out of the transmission causing personal injury and/or property damage.**

LIFT PLATE AND HOLDING FIXTURE REMOVAL

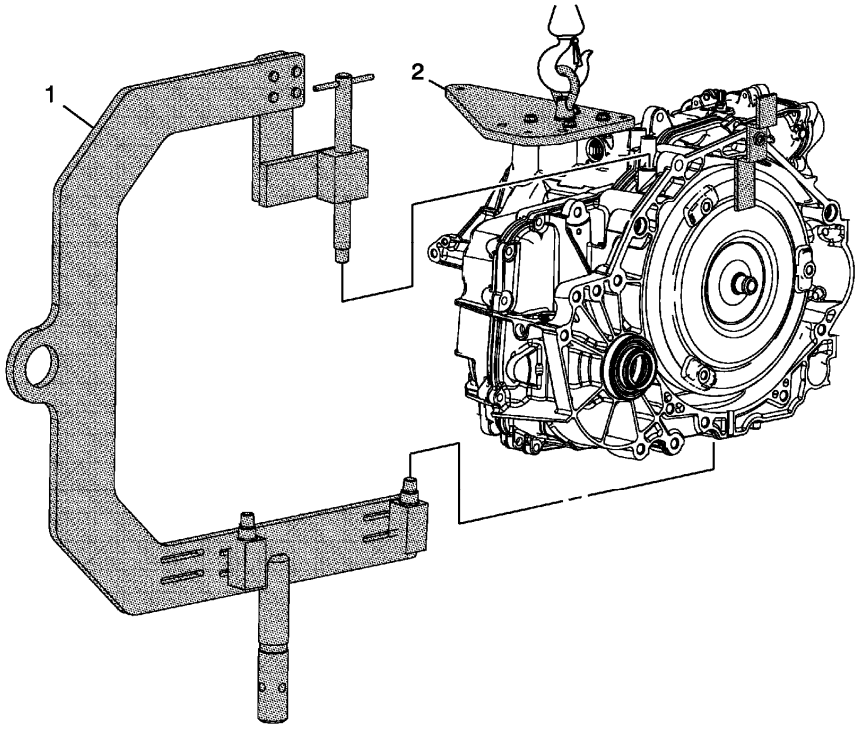

Fig. 103: Identifying Lift Plate & Holding Fixture
Courtesy of GENERAL MOTORS COMPANY

Lift Plate and Holding Fixture Removal

Callout	Component Name
1	**DT-46625** Transmission Holding Fixture For equivalent regional tools, refer to **Special Tools** . **NOTE:** **Raise the transmission in order to remove the holding fixture.**
2	**DT-47811-S1** Transmission Lift Plate For equivalent regional tools, refer to **Special Tools** . **NOTE:**

	Lower the transmission assembly onto the transmission jack in order to remove the lift plate.

2013 TRANSMISSION

Clutch - Cruze

SPECIFICATIONS

FASTENER TIGHTENING SPECIFICATIONS

Fastener Tightening Specifications

Application	Specification	
	Metric	English
Brake Pressure Modulator Valve Bracket Bolt	20 N.m	15 lb ft
Clutch Actuator Cylinder Bolt	6 N.m	53 lb in
Clutch Master Cylinder Nut	18 N.m	13 lb ft
Clutch Pedal Position Sensor Bolt	3 N.m	27 lb in
Clutch Pressure Plate Bolt	28 N.m	21 lb ft

GENERAL SPECIFICATIONS

General Specifications

Application	Specification	
	Metric	English
Fluid	DOT 3	
Inside Diameter	146 mm	5.75 in
Outside Diameter	216 mm	8.50 in
Thickness	7.2 mm (at 5 200 N load)	0.28 in (at 5 200 N load)
Type	Single Dry Plate	

DIAGNOSTIC INFORMATION AND PROCEDURES

SYMPTOMS - CLUTCH

Symptom List

Refer to a symptom diagnostic procedure from the following list in order to diagnose the symptom.

- **Clutch Does Not Disengage**
- **Clutch Slipping**
- **Clutch Grabbing**
- **Clutch Rattle**
- **Release Bearing Noisy with Clutch Engaged**
- **Clutch Noisy**

- **Clutch Pedal Hard to Push**
- **Clutch Drag Hard Shifting**
- **Clutch Pedal Spongy Low Pedal Effort**
- **Clutch Vibration**

CLUTCH DOES NOT DISENGAGE

Clutch Does Not Disengage

Cause	Actions
DEFINITION: When the pedal is pressed to the floor, the shift lever does not move freely in and out of reverse gear.	
Damaged clutch disc.	Replace the clutch assembly. Refer to **Clutch Pressure and Driven Plate Replacement (1.4L LUV)**, **Clutch Pressure and Driven Plate Replacement (1.8L LUW and LWE)**.
Clutch disc hub binding on the input shaft splines.	Replace the clutch assembly. Refer to **Clutch Pressure and Driven Plate Replacement (1.4L LUV)**, **Clutch Pressure and Driven Plate Replacement (1.8L LUW and LWE)**.
Warped or bent clutch disc.	Replace the clutch assembly. Refer to **Clutch Pressure and Driven Plate Replacement (1.4L LUV)**, **Clutch Pressure and Driven Plate Replacement (1.8L LUW and LWE)**.
Pedal blocked from full travel.	1. Inspect for obstacles that will prevent the pedal from going to the floor. 2. Clear any obstacles from under the pedal area, such as floor mats or interior panels.
Too much free play between pedal and hydraulic clutch master cylinder.	1. Inspect the pedal for worn bushings. 2. Replace the pedal bushings if worn.
Hydraulic clutch master cylinder seized or binding.	1. Inspect the master cylinder for the piston being able to move freely and full range of travel. 2. Replace the clutch master cylinder as required. Refer to **Clutch Master Cylinder Replacement**.
Air in the hydraulic clutch system.	Bleed the hydraulic clutch system. Refer to **Hydraulic Clutch System Bleeding**.
Hydraulic clutch actuator cylinder seized or binding	1. Inspect the clutch actuator piston for moving freely. 2. Replace the clutch actuator cylinder if the piston is binding. Refer to **Clutch Actuator Cylinder Replacement**.
Hydraulic clutch master cylinder leaking internally.	**NOTE:** **The clutch pedal reserve is the distance from the floor carpet up to the point when the clutch begins to engage. There should always be more than 13 mm (0.5 in) of clutch pedal reserve.** 1. Inspect for proper pedal reserve.

	1. Let up halfway on pedal. 2. Apply the pedal a few times. 3. Inspect to ensure there is still the proper pedal reserve. 2. Replace the clutch master cylinder if it will not hold pedal reserve. Refer to **Clutch Master Cylinder Replacement**.

CLUTCH DRAG HARD SHIFTING

Clutch Drag Hard Shifting

Cause	Action
DEFINITION: The clutch does not disengage completely to allow smooth shift operations. It may cause gear clashing while the vehicle is not moving, at idle, and shifting out of neutral, or hard shifting in and out of gears while driving the vehicle. Review the **Symptoms - Clutch** and perform the necessary inspections.	
Pedal blocked from full travel	1. Inspect for obstacles that will prevent the pedal from going to the floor. 2. Clear any obstacles from under the pedal area, such as floor mats or interior panels.
Too much travel between pedal and clutch master cylinder	1. Inspect the pedal for worn bushings. 2. Replace the Clutch pedal if bushings are worn. Refer to **Brake, Accelerator, and Clutch Pedal Replacement** .
Clutch pedal mounting loose	1. Inspect the clutch pedal mounting bracket for loose or missing fasteners. 2. Replace or repair the fasteners. Refer to **Brake, Accelerator, and Clutch Pedal Replacement** .
Linkage at pedal worn or damaged	1. Inspect the linkage at the pedal for excessive wear. 2. Repair or replace the linkage as required. Refer to **Brake, Accelerator, and Clutch Pedal Replacement** .
Clutch master cylinder seized or binding	1. Inspect the master cylinder for the piston being able to move freely and full range of travel. 2. Repair or replace the clutch master cylinder as required. Refer to **Clutch Master Cylinder Replacement**.
Air in the clutch hydraulic system	Bleed the clutch hydraulic system. Refer to **Hydraulic Clutch System Bleeding**.
Clutch actuator cylinder seized or binding	1. Inspect the clutch actuator piston for moving freely. 2. Replace the clutch actuator cylinder if the piston is binding. Refer to **Clutch Actuator Cylinder Replacement**.
Clutch master cylinder leaking internally	1. Inspect for proper pedal reserve. 1. Let up halfway on pedal. 2. Apply the pedal a few times.

	3. Inspect to ensure there is still the proper pedal reserve. 2. Replace the clutch master cylinder if it will not hold pedal reserve. Refer to **Clutch Master Cylinder Replacement**.
Damaged clutch assembly components	1. Remove the clutch assembly. Refer to **Clutch Pressure and Driven Plate Replacement (1.4L LUV)**, **Clutch Pressure and Driven Plate Replacement (1.8L LUW and LWE)**. 2. Inspect the following clutch assembly components for damage: • Damaged clutch disc hub splines • Bent clutch disc • Bent drive straps • Broken or warped pressure plate 3. Replace the clutch assembly if any of the above damage is found. Refer to **Clutch Pressure and Driven Plate Replacement (1.4L LUV)**, **Clutch Pressure and Driven Plate Replacement (1.8L LUW and LWE)**.
Excessive side loading on the clutch actuator cylinder	1. Inspect the following clutch system components: • Excessive flywheel runout • Excessive engine to transmission misalignment • Clutch actuator cylinder to transaxle misalignment 2. Repair or replace any faulty components.
Transaxle input shaft splines worn or damaged	Replace the transmission (M32) if it is worn. Refer to **Transmission Replacement**
Tight or contaminated clutch disc splines	1. Clean the clutch disc and input shaft splines. 2. If the clutch disc will not clean, replace the clutch assembly. Refer to **Clutch Pressure and Driven Plate Replacement (1.4L LUV)**, **Clutch Pressure and Driven Plate Replacement (1.8L LUW and LWE)**.
Flywheel housing, engine block to clutch housing, or transaxle front case excessively misaligned	1. Inspect the clutch housing or the transmission front case for being faulty. 2. Replace the transmission if the clutch housing is faulty. Refer to **Transmission Replacement** .
Grease or oil contamination on the clutch discs facing	1. Repair the oil leak. 2. Repair the grease leak. 3. Clean the clutch disc facing and the other clutch assembly components. 4. Replace the clutch assembly if it will not clean. Refer to **Clutch Pressure and Driven Plate Replacement (1.4L LUV)**, **Clutch Pressure and Driven Plate Replacement**

	(1.8L LUW and LWE).

CLUTCH SLIPPING

Clutch Slipping

Cause	Actions
DEFINITION: The clutch does not engage completely after the pedal is released, after shifting gears, or the clutch slips during maximum engine loads, such as climbing hills or high vehicle speeds. Clutch slipping is identified by increase in engine RPM without increase in vehicle speed. Review the **Symptoms - Clutch** and perform the necessary inspections.	
Incorrect clutch pedal height, not allowing the clutch master cylinder to return.	Adjust the clutch pedal position switch. Refer to **Clutch Pedal Position Sensor Replacement**.
The clutch pedal return spring is broken or missing.	Replace the clutch pedal return spring, if equipped. Refer to **Brake, Accelerator, and Clutch Pedal Replacement**.
The clutch pedal is binding or sticking.	1. Clear away any items that may be contacting the pedal. 2. Inspect the pedal bushings for ease of movement. 3. Replace the clutch pedal if it is faulty. Refer to **Brake, Accelerator, and Clutch Pedal Replacement**.
Clutch master cylinder binding or seized.	Replace the clutch master cylinder. Refer to **Clutch Master Cylinder Replacement**.
Clutch actuator cylinder binding or seized.	Replace the clutch actuator cylinder. Refer to **Clutch Actuator Cylinder Replacement**.
Kinked or damaged clutch actuator cylinder front pipe.	1. Inspect for the correct routing of the clutch actuator cylinder front pipe. 2. Route the clutch actuator cylinder front pipe properly. 3. Inspect for loose or faulty engine mounts that may allow the clutch actuator cylinder front pipe to be kinked or pinched. 4. Repair or replace faulty engine mounts. 5. Replace the clutch actuator cylinder front pipe if it is damaged. Refer to **Clutch Actuator Cylinder Front Pipe Replacement**.
Grease or oil contamination of the clutch disc.	1. Repair the source of the oil leak. 2. Repair the source of the grease leak. 3. Clean the contamination from the clutch components. 4. If contaminants cannot be removed, replace the clutch assembly. Refer to **Clutch Pressure and Driven Plate Replacement (1.4L LUV)**, **Clutch Pressure and Driven Plate Replacement (1.8L LUW and LWE)**.
Oil-soaked clutch disc.	Correct the leak at its source and install a new clutch disc.
Weak diaphragm spring.	Replace the clutch assembly. Refer to **Clutch Pressure and Driven Plate Replacement (1.4L LUV)**, **Clutch Pressure and Driven Plate Replacement (1.8L LUW and LWE)**.

Driven plate that is not seated.	Start the engine 30 - 40 times. Do not overheat the engine.
Driven plate is overheated.	Allow the driven plate to cool.
Worn or damaged flywheel.	Replace the engine flywheel. For 1.4L (LDD, LUH, LUJ), refer to **Engine Flywheel Replacement** . For 1.8L (LUW), refer to **Engine Flywheel Replacement** .
Worn clutch disc facing.	Replace the clutch assembly. Refer to **Clutch Pressure and Driven Plate Replacement (1.4L LUV)**, **Clutch Pressure and Driven Plate Replacement (1.8L LUW and LWE)**.
Burnt or glazed clutch discs.	Replace the clutch assembly. Refer to **Clutch Pressure and Driven Plate Replacement (1.4L LUV)**, **Clutch Pressure and Driven Plate Replacement (1.8L LUW and LWE)**.
Input shaft splines worn.	Replace the transmission for M32 (MF3, MZ0) **Transmission Replacement** .
Improper resurfacing of the flywheel.	Replace the flywheel if it has been improperly resurfaced, allowing contact of the clutch disc hub or insufficient clamping load of the pressure plate. For 1.4L (LDD, LUH, LUJ), refer to **Engine Flywheel Replacement** . For 1.8L (LUW), refer to **Engine Flywheel Replacement** .

CLUTCH GRABBING

Clutch Grabbing

Cause	Action
DEFINITION: The clutch grabs, or chatters, or the clutch is unable to release without the vehicle jerking. An abrupt engagement of the clutch. Review the **Symptoms - Clutch** and perform the necessary inspections.	
Grease or oil contamination on the clutch facings	1. Repair the cause of the oil leak or grease contamination. 2. Clean the clutch facings. 3. Replace the clutch components if they will not clean. Refer to **Clutch Pressure and Driven Plate Replacement (1.4L LUV)**, **Clutch Pressure and Driven Plate Replacement (1.8L LUW and LWE)**.
Loose or faulty engine mounts	1. Inspect the engine mounts for being loose or faulty. Refer to **Engine Mount Inspection** . 2. Repair or replace the engine/transmission mounts as required. Refer to: • 1.4 L LUJ **Engine Mount Replacement - Right Side** • 1.8L LUW **Engine Mount Replacement - Right Side** • **Transmission Mount Replacement - Left Side**
Clutch pedal sticking	1. Inspect the clutch pedal for correct operation. 2. Replace the clutch pedal if it is faulty. Refer to **Brake, Accelerator, and Clutch Pedal Replacement**.

Clutch actuator binding	1. Inspect the clutch actuator for the piston seals binding or sticking on the hub. 2. Replace the clutch actuator if it is binding. Refer to **Clutch Actuator Cylinder Replacement**.
Clutch master cylinder binding	1. Inspect the clutch master cylinder for the piston binding or sticking in the cylinder. 2. Replace the master cylinder if it is faulty. Refer to **Clutch Master Cylinder Replacement**.
Warped clutch cover	1. Inspect the clutch cover for distortion caused by improperly tightening the clutch cover bolts. 2. Replace the clutch cover if it is distorted. Refer to **Clutch Pressure and Driven Plate Replacement (1.4L LUV)**, **Clutch Pressure and Driven Plate Replacement (1.8L LUW and LWE)**.
Improper clutch installation	1. Inspect the pressure plate for distortion caused by improperly tightening the pressure plate bolts. 2. Inspect the clutch disc for a bent hub caused by forcing the installation of the transmission. 3. Inspect for the correct clutch disc. 4. Inspect the clutch disc for being installed backwards. 5. Replace the clutch assembly if it is damaged or the wrong components were installed. Refer to **Clutch Pressure and Driven Plate Replacement (1.4L LUV)**, **Clutch Pressure and Driven Plate Replacement (1.8L LUW and LWE)**.
Clutch disc binding on the input shaft	1. Inspect the input shaft for rust dirt or debris. **NOTE:** **Do not use mineral or paraffin based oil to lubricate the splines.** 2. Clean and lubricate the input shaft. 3. Inspect the clutch disc for a bent hub. 4. Replace the clutch assembly if the clutch disc is faulty. Refer to **Clutch Pressure and Driven Plate Replacement (1.4L LUV)**, **Clutch Pressure and Driven Plate Replacement (1.8L LUW and LWE)**. 5. Inspect the input shaft for excessive wear on the splines, causing the clutch disc to bind. 6. Replace the transmission if input shaft is worn. Refer to **Transmission Replacement** .
Clutch pressure plate damaged	1. Inspect the pressure plate for bent drive straps caused by improper vehicle use.

	2. Replace the clutch assembly if the clutch pressure plate is damaged. Inform the customer. Refer to **Clutch Pressure and Driven Plate Replacement (1.4L LUV)**, **Clutch Pressure and Driven Plate Replacement (1.8L LUW and LWE)**.
Flywheel improperly machined	1. Inspect the flywheel for being improperly machined, and causing interference with the clutch disc. 2. Replace the flywheel if it has been improperly machined. Refer to: • 1.4L LUJ **Engine Flywheel Replacement** • 1.8L LUW **Engine Flywheel Replacement**
Flywheel uneven	1. Inspect the flywheel surface for being warped or uneven. 2. Replace the flywheel if it is faulty. Refer to: • 1.4L LUJ **Engine Flywheel Replacement** • 1.8L LUW **Engine Flywheel Replacement**

CLUTCH RATTLE

Clutch Rattle

Cause	Actions
DEFINITION: A rattle noise coming from the clutch components with the clutch disengaged or engaged. Review the **Symptoms - Clutch** and perform the necessary inspections.	
Idle rattle clutch engaged	Replace the clutch disc, due to faulty damper springs. Refer to **Clutch Pressure and Driven Plate Replacement (1.4L LUV)**, **Clutch Pressure and Driven Plate Replacement (1.8L LUW and LWE)**.
Clutch is improperly installed	Remove the clutch and install it correctly. Refer to **Clutch Pressure and Driven Plate Replacement (1.4L LUV)**, **Clutch Pressure and Driven Plate Replacement (1.8L LUW and LWE)**.
Clutch disc damper worn or damaged	1. Inspect the clutch disc for a broken or worn damper. 2. Replace the clutch assembly. Refer to **Clutch Pressure and Driven Plate Replacement (1.4L LUV)**, **Clutch Pressure and Driven Plate Replacement (1.8L LUW and LWE)**.
Oil in the driven plate damper	Correct the cause of the oil leak and replace the clutch assembly. Refer to **Clutch Pressure and Driven Plate Replacement (1.4L LUV)**, **Clutch Pressure and Driven Plate Replacement (1.8L LUW and LWE)**.
Clutch disc splines and input shaft splines worn	1. Inspect the clutch disc hub to input shaft splines for excessive clearance. 2. Replace the clutch assembly if the clutch splines are worn. Refer to **Clutch Pressure and Driven Plate Replacement (1.4L LUV)**, **Clutch Pressure and Driven Plate Replacement (1.8L LUW and LWE)**.

	3. Replace the transmission (M32) if it is worn. Refer to **Transmission Replacement** for M32 transmission.

RELEASE BEARING NOISY WITH CLUTCH ENGAGED

Release Bearing Noisy with Clutch Engaged

Checks	Actions
Check for a binding clutch actuator cylinder.	Clean and re-lubricate the clutch actuator cylinder. Inspect the clutch actuator cylinder for burrs and nicks.

CLUTCH NOISY

Clutch Noisy

Cause	Actions
Clutch actuator cylinder damaged or worn.	Replace the clutch actuator cylinder. Refer to **Clutch Actuator Cylinder Replacement**.

CLUTCH PEDAL SPONGY LOW PEDAL EFFORT

Clutch Pedal Spongy Low Pedal Effort

Cause	Action
DEFINITION: The clutch pedal may feel spongy, or it requires very little effort to operate. Review **Symptoms - Clutch** and perform the necessary inspections.	
Air in the hydraulic system	Bleed the clutch hydraulic system. Refer to **Hydraulic Clutch System Bleeding**.
Master cylinder fluid level low	1. Inspect for leakage in the clutch master cylinder, hose connections, and the clutch actuator. 2. Repair or replace any faulty components.
Incomplete pedal return	1. Inspect the pedal for full return. 2. Clear any obstacles that may interfere with the pedal operation. 3. Replace the clutch pedal return spring, if equipped. Refer to **Brake, Accelerator, and Clutch Pedal Replacement** . 4. Adjust the clutch pedal position switch. Refer to **Clutch Pedal Position Sensor Replacement**.
Clutch incorrectly installed	Remove the clutch and install it correctly. Refer to **Clutch Pressure and Driven Plate Replacement (1.4L LUV)**, **Clutch Pressure and Driven Plate Replacement (1.8L LUW and LWE)**.
Clutch mounting bolts loose or broken	1. Remove the broken bolts. 2. Replace the broken or loose bolts, and tighten. Refer to **Clutch Pressure and Driven Plate Replacement**

	(1.4L LUV), **Clutch Pressure and Driven Plate Replacement (1.8L LUW and LWE)**.
Clutch actuator cylinder worn or damaged	Replace the release bearing. Refer to **Clutch Actuator Cylinder Replacement**.
Contaminated hydraulic fluid	1. Inspect the clutch hydraulic fluid for contamination of water. 2. Inspect the reservoir cap for being faulty if water is present. 3. Inspect the clutch hydraulic fluid for dirt or debris. 4. Inspect the clutch hydraulic fluid for contamination of mineral oil. If contaminated, replace the clutch master cylinder and the clutch actuator cylinder. Refer to **Clutch Master Cylinder Replacement**, and **Clutch Actuator Cylinder Replacement**. 5. Flush and bleed the clutch hydraulic system if the above conditions are found. Refer to **Hydraulic Clutch System Bleeding**.

CLUTCH PEDAL HARD TO PUSH

Clutch Pedal Hard to Push

Cause	Actions
DEFINITION: The clutch pedal requires high effort to operate. Review the **Symptoms - Clutch** and perform the necessary inspections.	
Incorrect hydraulic fluid.	1. Inspect for the correct fluid in the master cylinder. Refer to **Hydraulic Clutch System Bleeding**. 2. If mineral oil is found, replace the clutch master cylinder, the clutch actuator cylinder, and flush the hydraulic system and fill with the correct fluid. Refer to **Clutch Master Cylinder Replacement**, and **Hydraulic Clutch System Bleeding**.
Contaminated hydraulic fluid.	1. Inspect the hydraulic fluid for water. 2. Inspect the hydraulic fluid for dirt or debris. 3. Inspect the clutch hydraulic fluid for contamination of mineral oil. If contaminated, replace the clutch master cylinder and the clutch actuator cylinder. Refer to **Clutch Master Cylinder Replacement**. 4. Flush the hydraulic system and fill with the correct fluid. Refer to **Hydraulic Clutch System Bleeding**.
Clutch pedal binding.	1. Inspect the pedal for binding. 2. Replace the pedal. Refer to **Brake, Accelerator, and Clutch Pedal Replacement** .
Clutch pedal spring worn.	1. Inspect the clutch pedal spring for wear.

	2. Replace the clutch pedal. Refer to **Brake, Accelerator, and Clutch Pedal Replacement** .
Kinked or damaged clutch actuator cylinder front pipe.	1. Inspect for a kinked or damaged clutch actuator cylinder front pipe. 2. Replace the clutch actuator cylinder front pipe. Refer to **Clutch Actuator Cylinder Front Pipe Replacement**.
Clutch disc worn too thin.	Replace the clutch assembly. Refer to **Clutch Pressure and Driven Plate Replacement (1.4L LUV)**, **Clutch Pressure and Driven Plate Replacement (1.8L LUW and LWE)**.

CLUTCH VIBRATION

Clutch Vibration

Cause	Action
DEFINITION: Vibration from the clutch components during disengagement or engagement. Review the **Symptoms - Clutch** and perform the necessary inspections.	
Clutch incorrectly installed	Remove the clutch and install it correctly. Refer to **Clutch Pressure and Driven Plate Replacement (1.4L LUV)**, **Clutch Pressure and Driven Plate Replacement (1.8L LUW and LWE)**.
Transmission input splines worn or damaged	1. Inspect the clutch disc to input splines for wear or damage. 2. Replace theTransmission for M32. Refer to **Transmission Replacement** .
Clutch disc facings damaged	Replace the clutch assembly. Refer to **Clutch Pressure and Driven Plate Replacement (1.4L LUV)**, **Clutch Pressure and Driven Plate Replacement (1.8L LUW and LWE)**.
Flywheel housing to clutch housing excessively misaligned	Replace the Transmission. Refer to **Transmission Replacement** .
Clutch out of balance	Replace the clutch assembly. Refer to **Clutch Pressure and Driven Plate Replacement (1.4L LUV)**, **Clutch Pressure and Driven Plate Replacement (1.8L LUW and LWE)**.

REPAIR INSTRUCTIONS

BRAKE, ACCELERATOR, AND CLUTCH PEDAL REPLACEMENT

NOTE: The clutch pedal is part of the brake, accelerator, and clutch pedal assembly and cannot be serviced separately.

To replace the brake, accelerator and clutch pedal assembly, refer to **Brake, Accelerator, and Clutch Pedal Replacement** .

CLUTCH PEDAL RETURN SPRING REPLACEMENT (COIL SPRING)

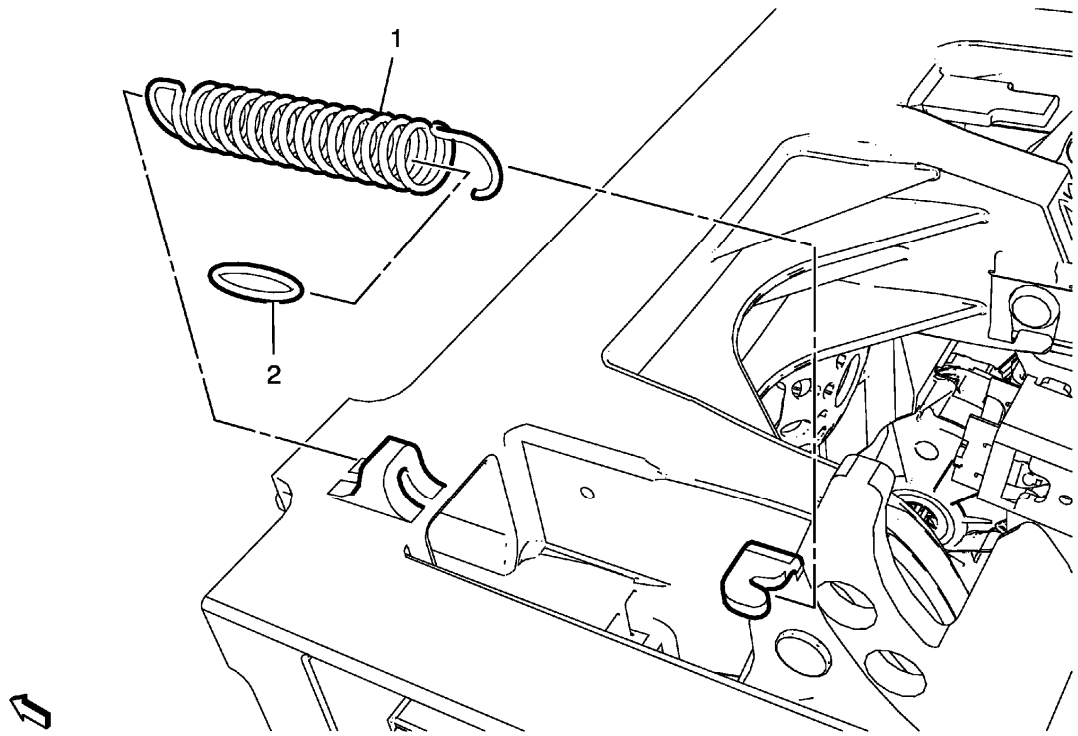

Fig. 1: Clutch Pedal Return Spring (Coil Spring)
Courtesy of GENERAL MOTORS COMPANY

Clutch Pedal Return Spring Replacement (Coil Spring)

Callout	Component Name
Preliminary Procedures Remove the brake, accelerator and clutch pedal assembly. Refer to **Brake, Accelerator, and Clutch Pedal Replacement** .	
1	Clutch Pedal Return Spring
2	Clutch Pedal Return Spring Bracket

CLUTCH PEDAL RETURN SPRING REPLACEMENT (TENSION SPRING)

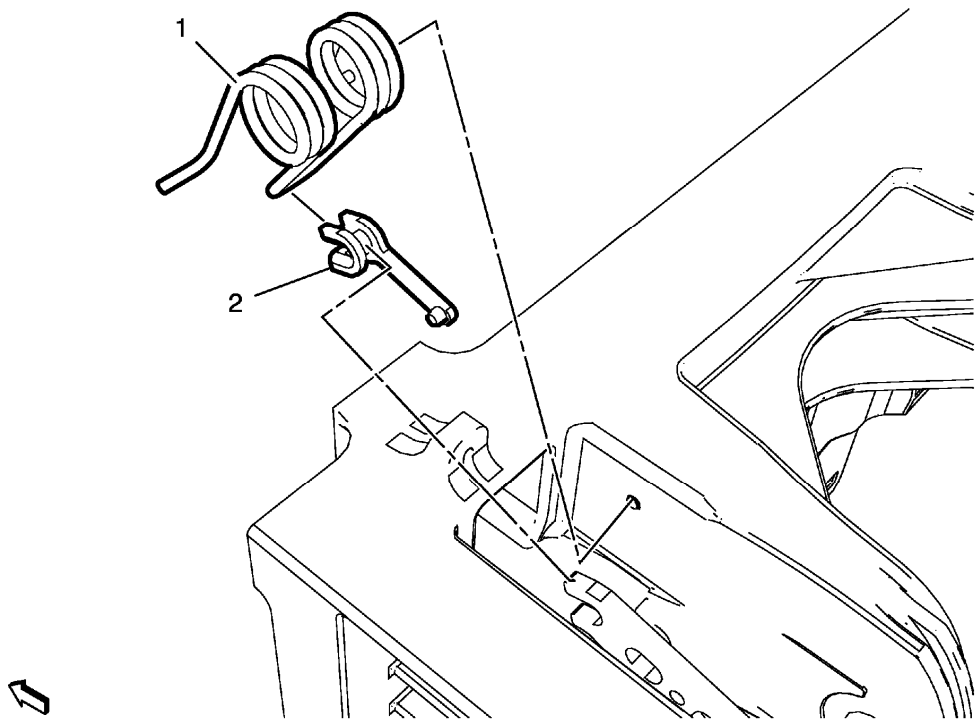

Fig. 2: Clutch Pedal Return Spring (Tension Spring)
Courtesy of GENERAL MOTORS COMPANY

Clutch Pedal Return Spring Replacement (Tension Spring)

Callout	Component Name
Preliminary Procedures Remove the brake, accelerator and clutch pedal assembly. Refer to **Brake, Accelerator, and Clutch Pedal Replacement** .	
1	Clutch Pedal Return Spring
2	Clutch Return Pedal Spring Bracket

CLUTCH MASTER CYLINDER RESERVOIR HOSE REPLACEMENT

Removal Procedure

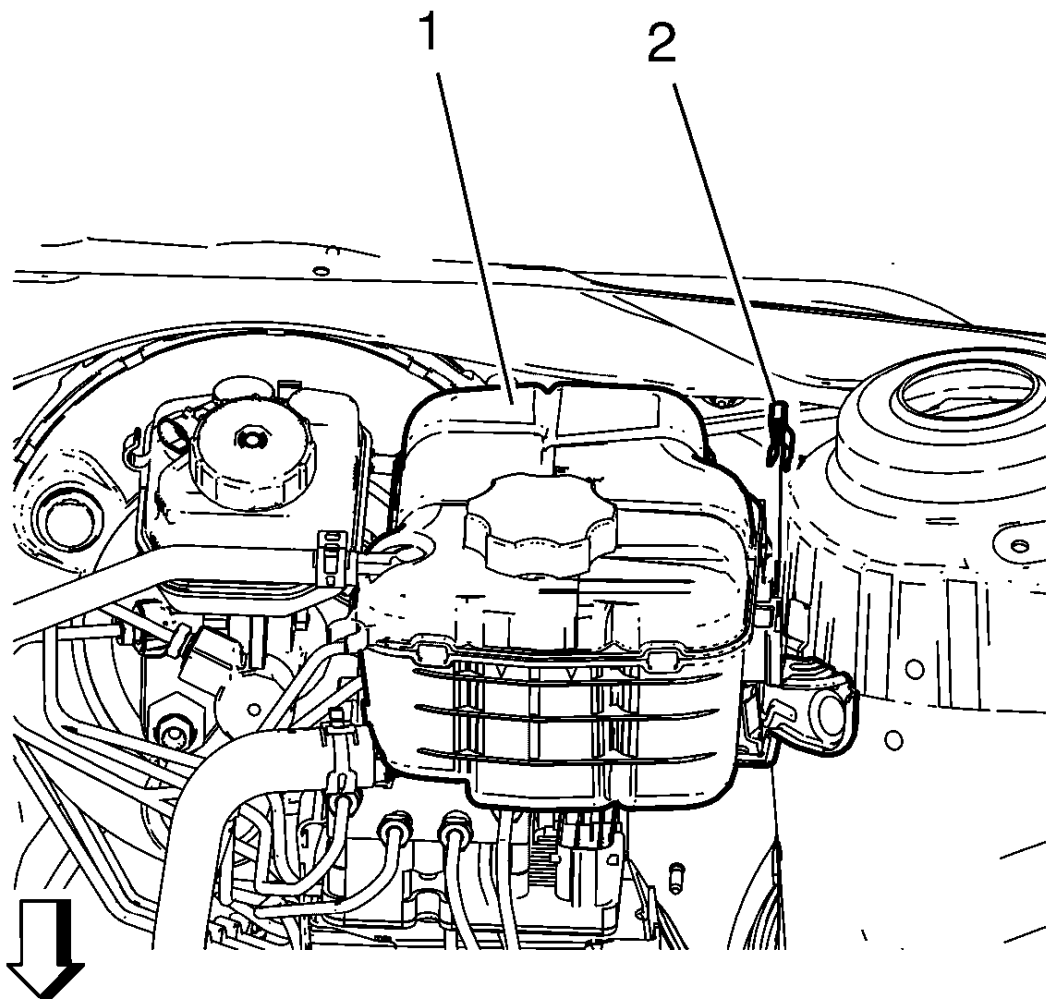

Fig. 3: View Of Radiator Surge Tank And Radiator Surge Tank Clip
Courtesy of GENERAL MOTORS COMPANY

NOTE: Do NOT disconnect engine coolant hoses.

1. Remove the radiator surge tank clip (2).
2. Remove the radiator surge tank (1).
3. Position the radiator surge tank (1) aside.

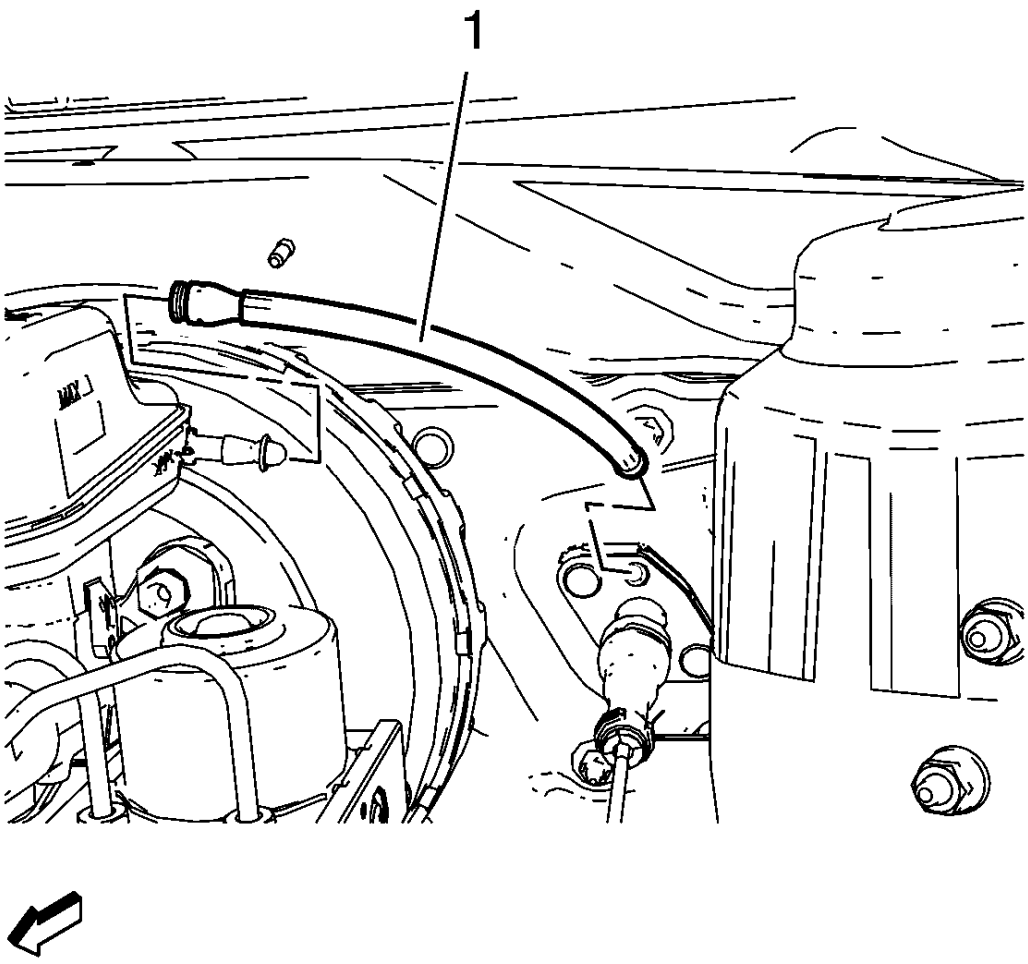

Fig. 4: Clutch Master Cylinder Reservoir Hose
Courtesy of GENERAL MOTORS COMPANY

NOTE: Before disconnecting the reservoir tank hose, remove the clutch/brake fluid from the reservoir tank.

4. Remove the clutch master cylinder reservoir hose (1) from the reservoir tank and the master cylinder.

Installation Procedure

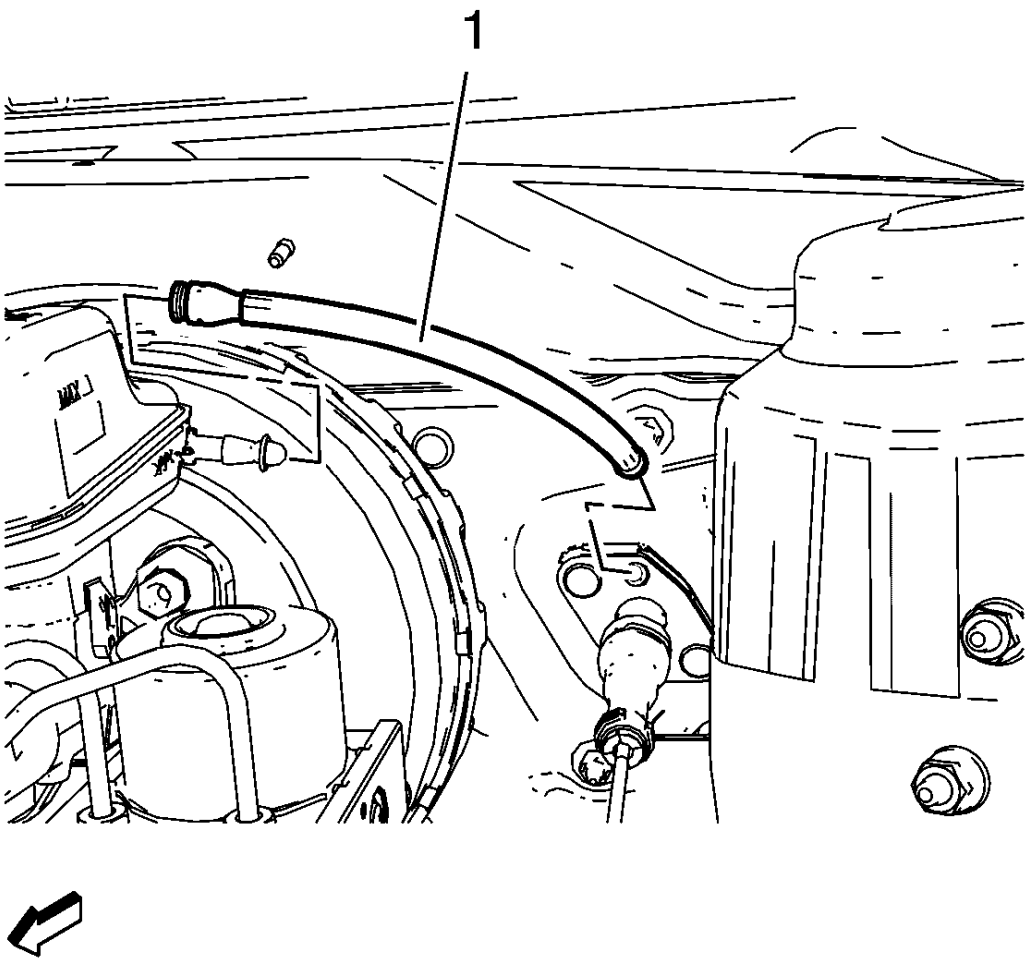

Fig. 5: Clutch Master Cylinder Reservoir Hose
Courtesy of GENERAL MOTORS COMPANY

1. Install the clutch master cylinder reservoir hose (1) to the reservoir tank and the master cylinder.
2. Fill the reservoir with clutch/brake fluid up to the MAX level.

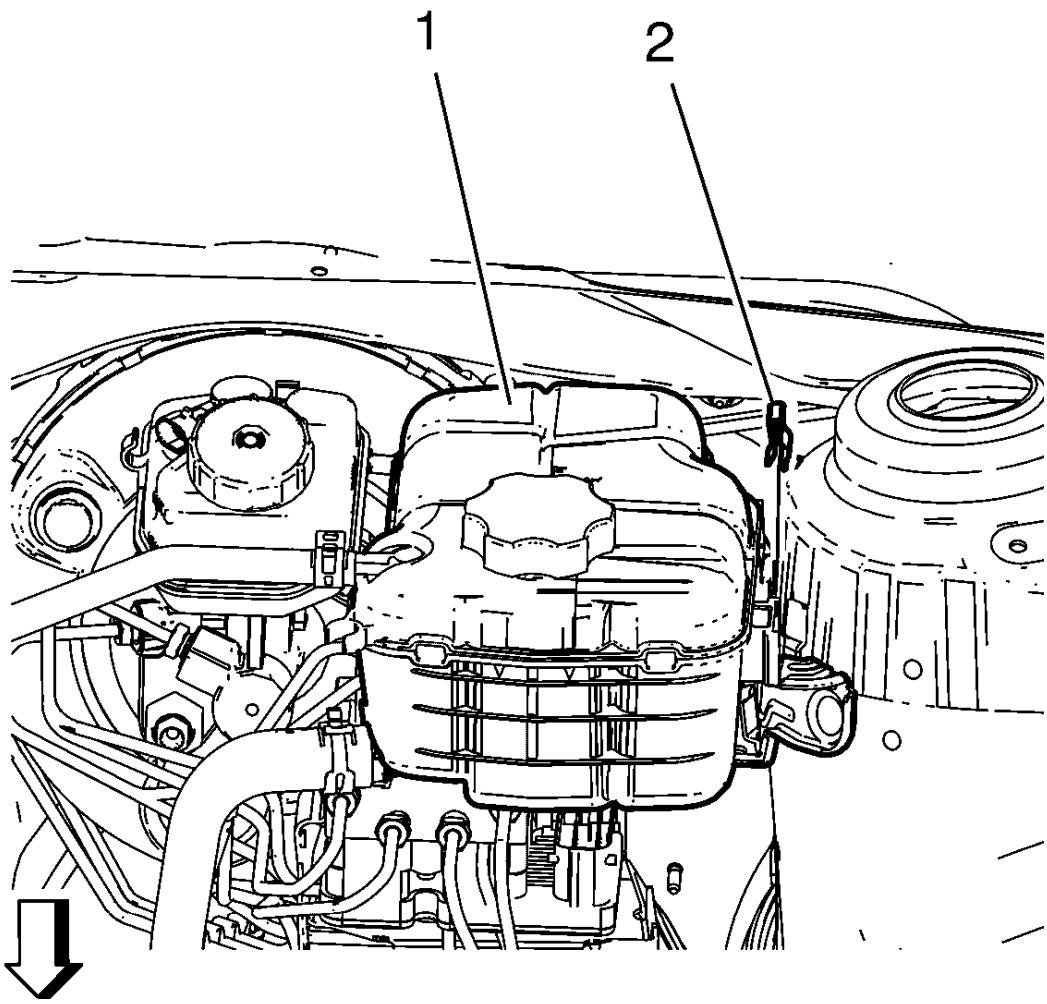

Fig. 6: View Of Radiator Surge Tank And Radiator Surge Tank Clip
Courtesy of GENERAL MOTORS COMPANY

3. Install the radiator surge tank (1).
4. Install the radiator surge tank clip (2).

CLUTCH MASTER CYLINDER REPLACEMENT

Special Tools

- **DT-6202-A** Pliers
- **DT-6202-B** Pliers
- **DT-6202-20** Adapter to DT-6202-A
- **DT-50894** Remover

For equivalent regional tools, refer to **Special Tools**.

Removal Procedure

1. Remove the battery tray. Refer to **Battery Tray Replacement** .

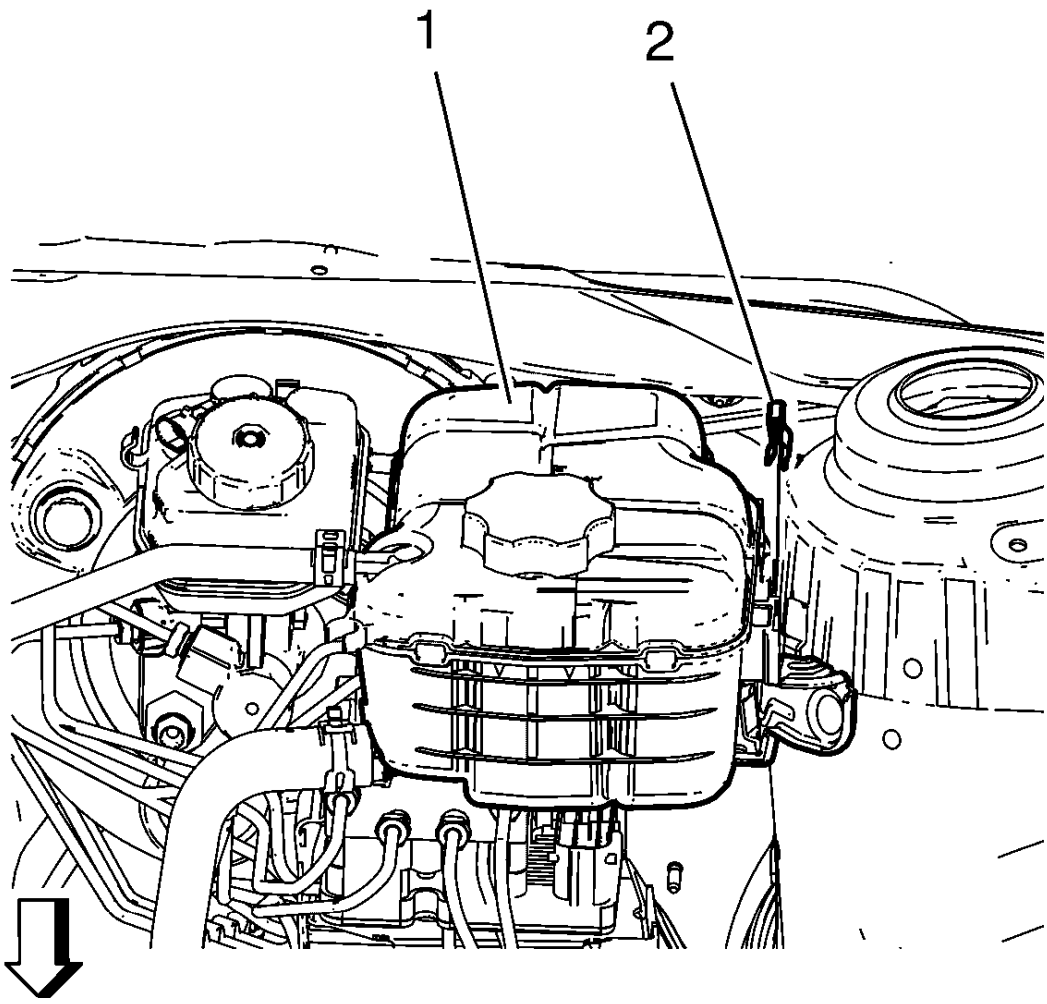

Fig. 7: View Of Radiator Surge Tank And Radiator Surge Tank Clip
Courtesy of GENERAL MOTORS COMPANY

2. Remove the radiator surge tank clip (2).
3. Remove the radiator surge tank (1) and lay aside.
4. Place a basin underneath.
5. Extract as much brake fluid out of the brake fluid reservoir as possible.

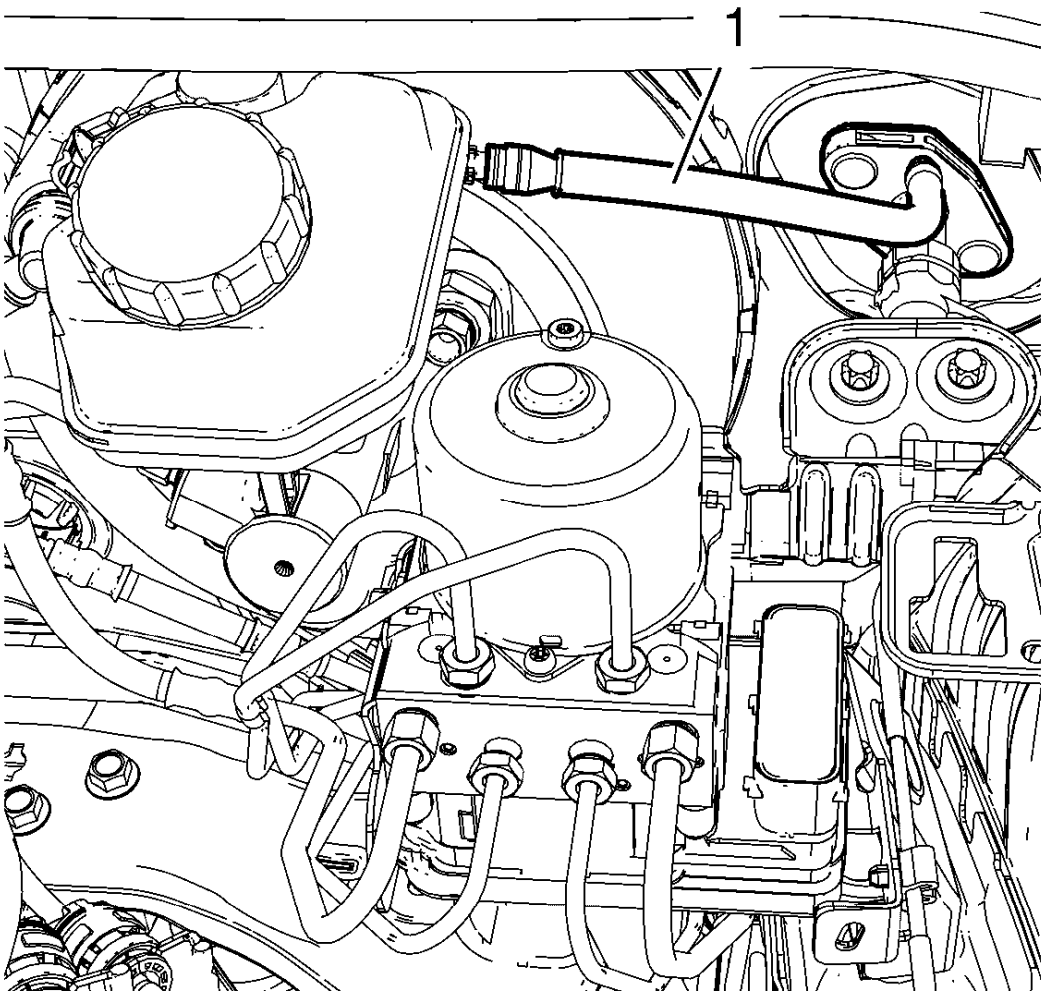

Fig. 8: Clutch Master Cylinder Reservoir Hose
Courtesy of GENERAL MOTORS COMPANY

6. Remove the clutch master cylinder reservoir hose (1) from the clutch master cylinder.

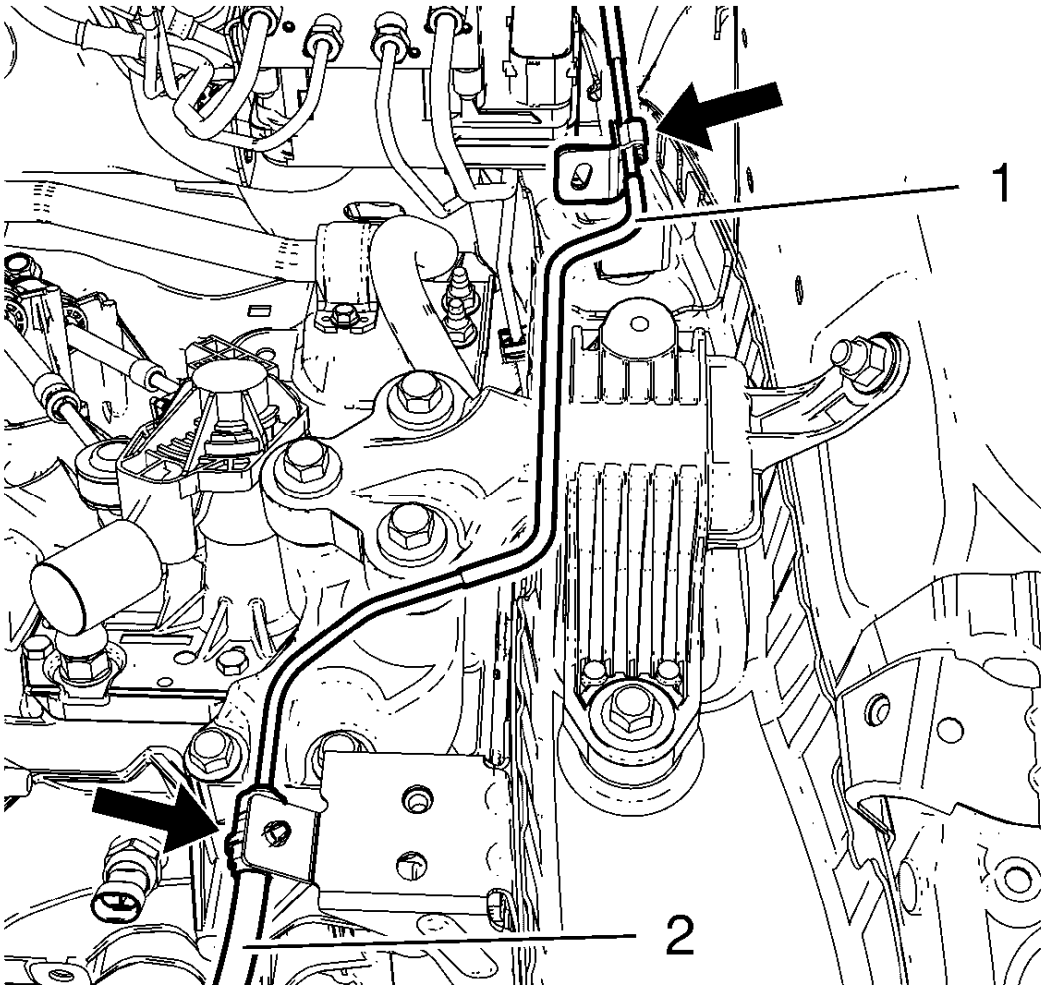

Fig. 9: Clutch Actuator Cylinder Front Pipe And Retainers
Courtesy of GENERAL MOTORS COMPANY

7. Clip the clutch actuator cylinder front pipe (1) out of the 2 retainers (arrows).

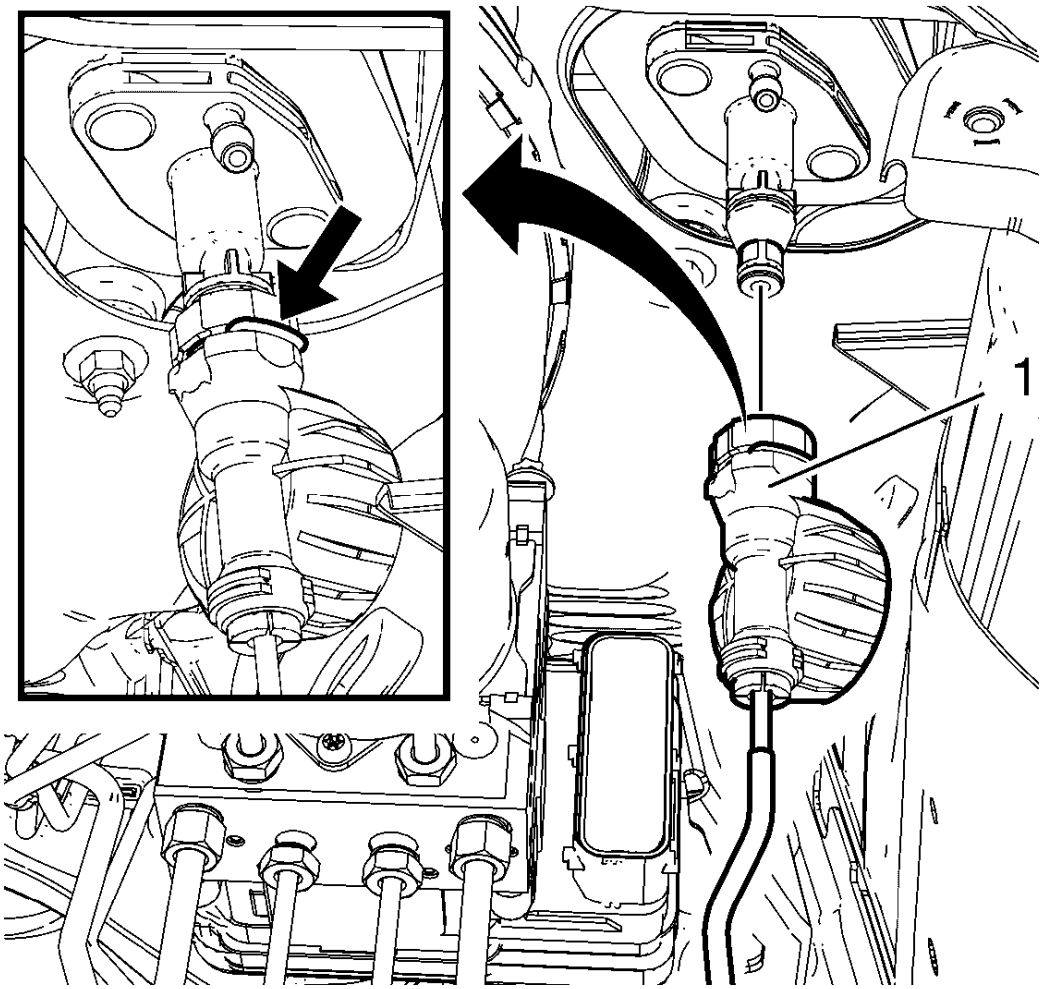

Fig. 10: Clutch Actuator Cylinder Front Pipe And Retaining Clip
Courtesy of GENERAL MOTORS COMPANY

8. Open the retaining clip (arrow).
9. Disconnect the clutch actuator cylinder front pipe (1) from the clutch master cylinder.

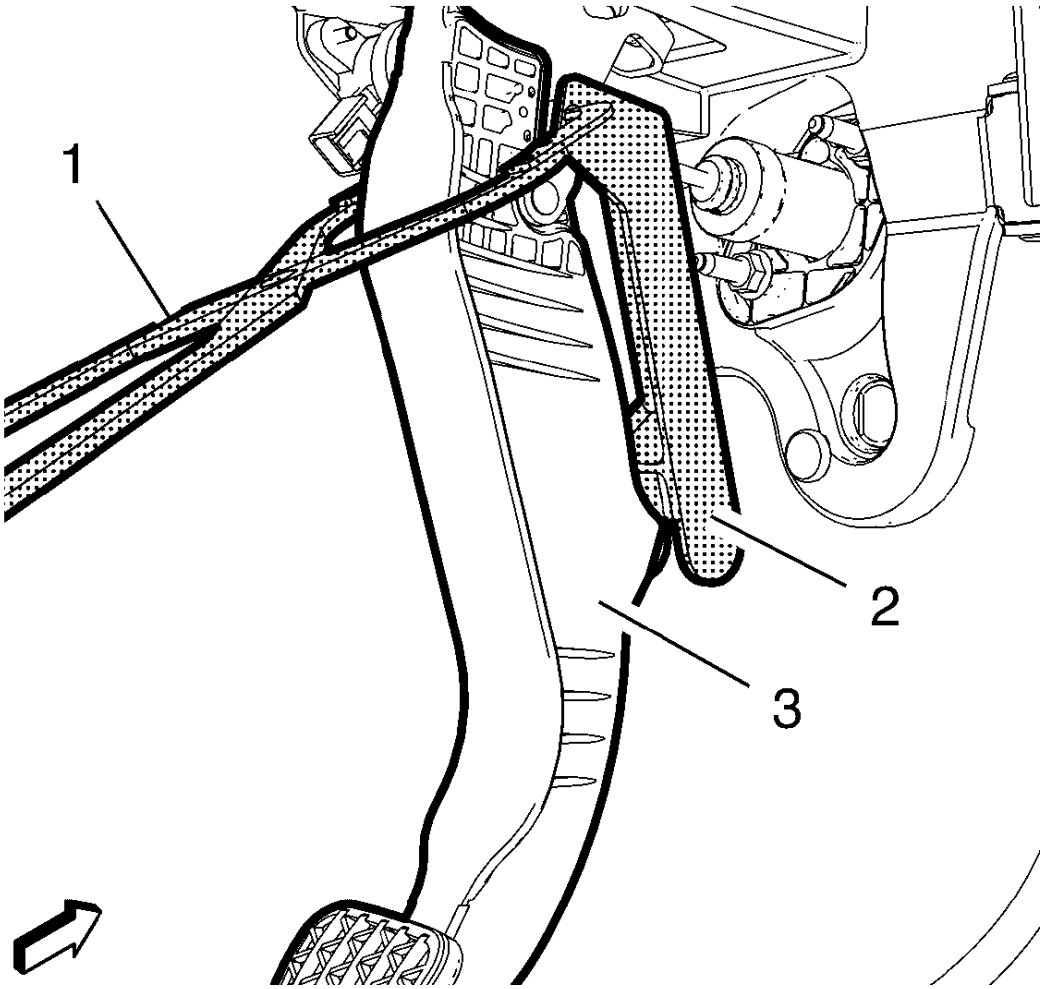

Fig. 11: Clutch Pedal And Push Rod Removal Tools
Courtesy of GENERAL MOTORS COMPANY

10. Disconnect the clutch master cylinder push rod from the clutch pedal (3), using the **DT-6202-A** pliers and the **DT-6202-20** adapters in conjunction with the **DT-50894** remover (2), or the **DT-6202-B** pliers (1) in conjunction with the **DT-50894** remover (2).

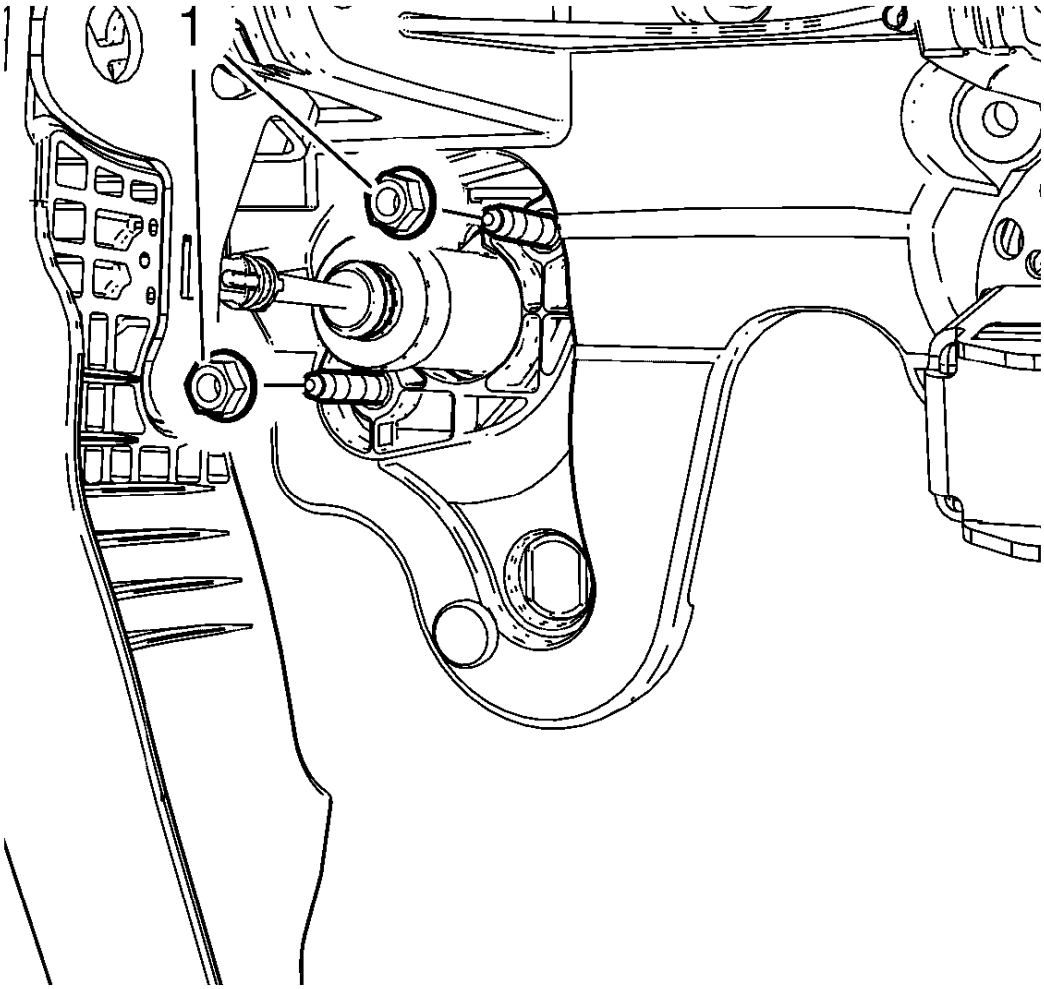

Fig. 12: Clutch Master Cylinder Nuts
Courtesy of GENERAL MOTORS COMPANY

11. Remove the 2 clutch master cylinder nuts (1).

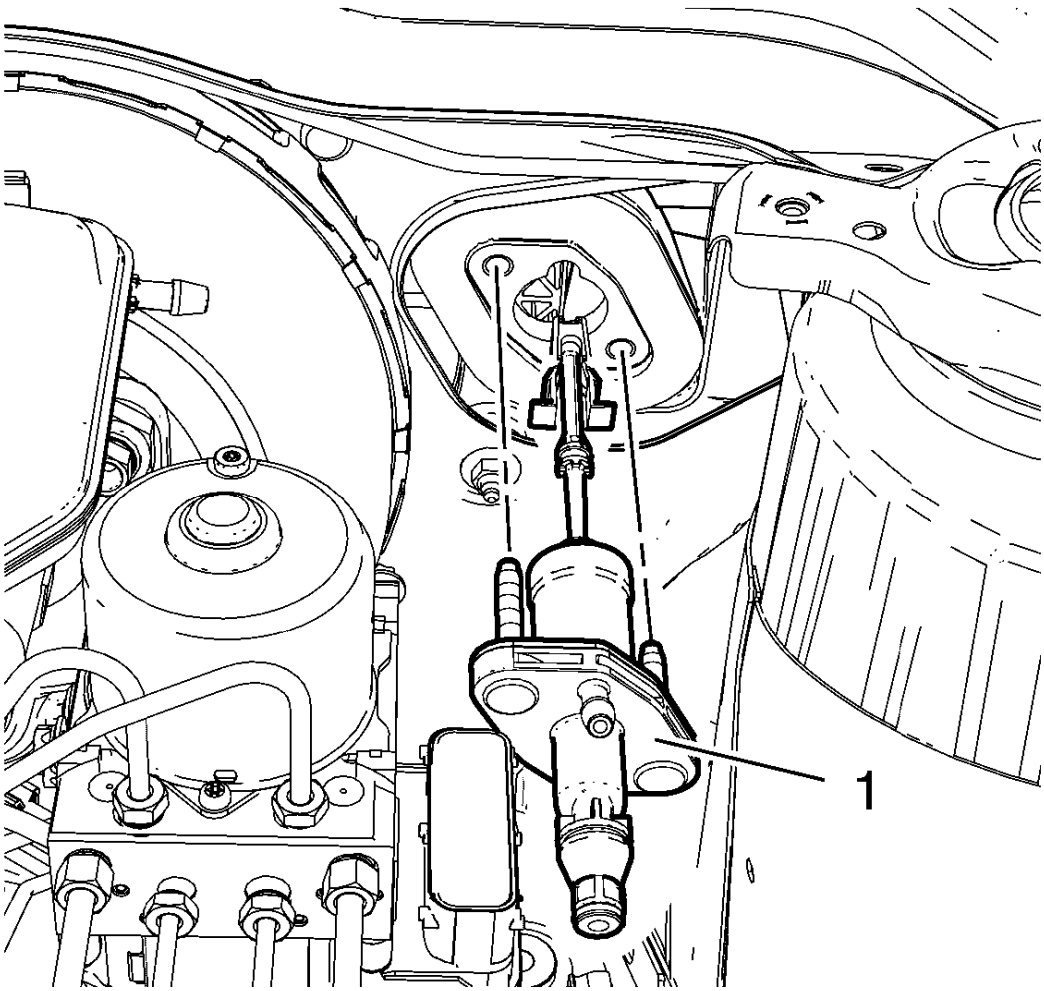

Fig. 13: Clutch Master Cylinder
Courtesy of GENERAL MOTORS COMPANY

12. Remove the clutch master cylinder (1).

Installation Procedure

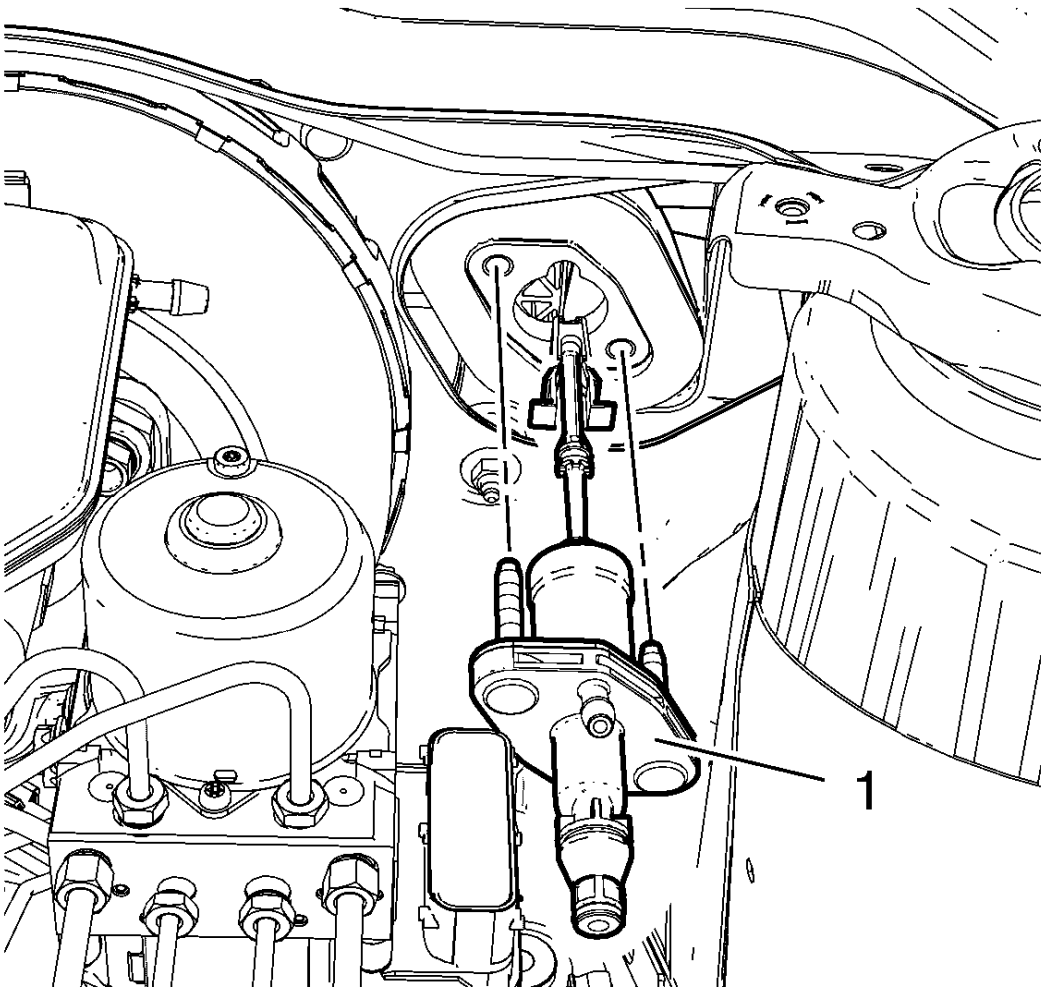

Fig. 14: Clutch Master Cylinder
Courtesy of GENERAL MOTORS COMPANY

1. Install the clutch master cylinder (1).

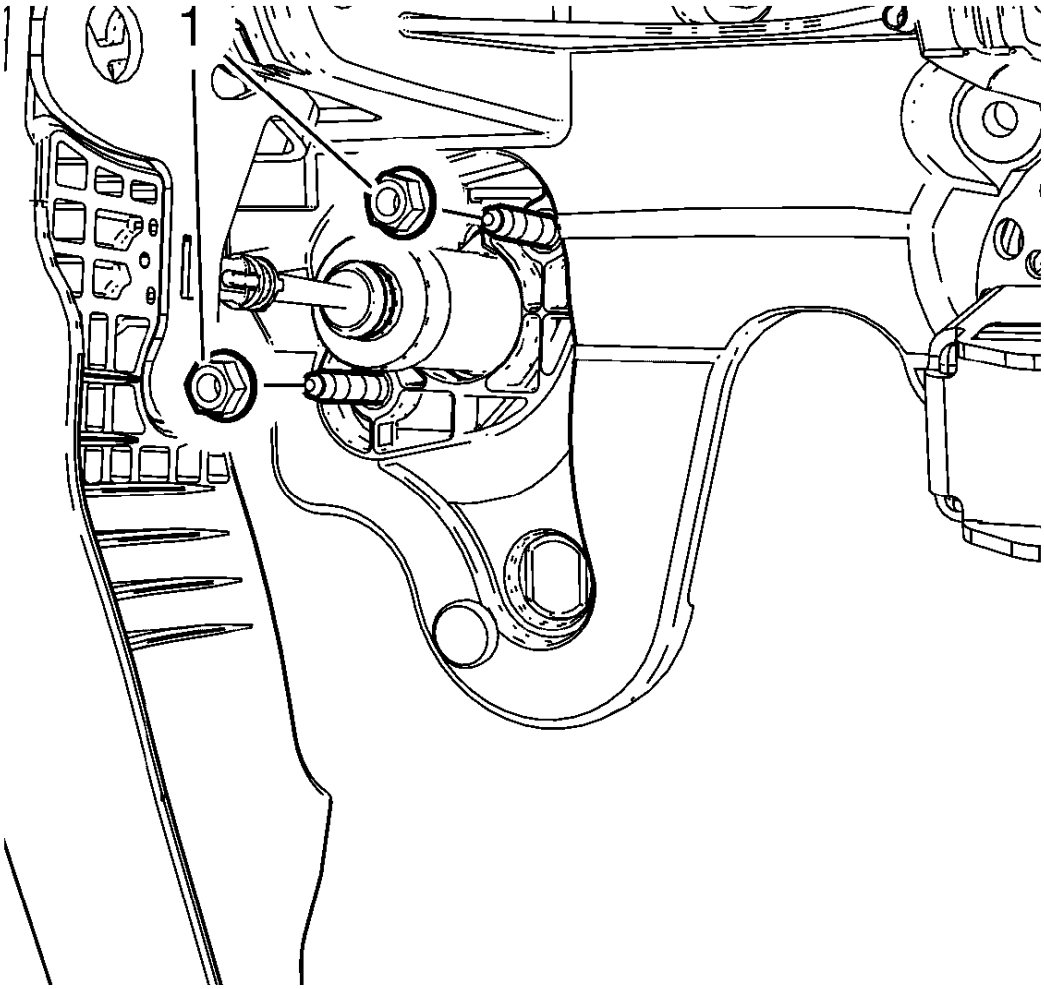

Fig. 15: Clutch Master Cylinder Nuts
Courtesy of GENERAL MOTORS COMPANY

CAUTION: Refer to Fastener Caution .

2. Install the 2 clutch master cylinder nuts (1) and tighten to 18 N.m (13 lb ft).

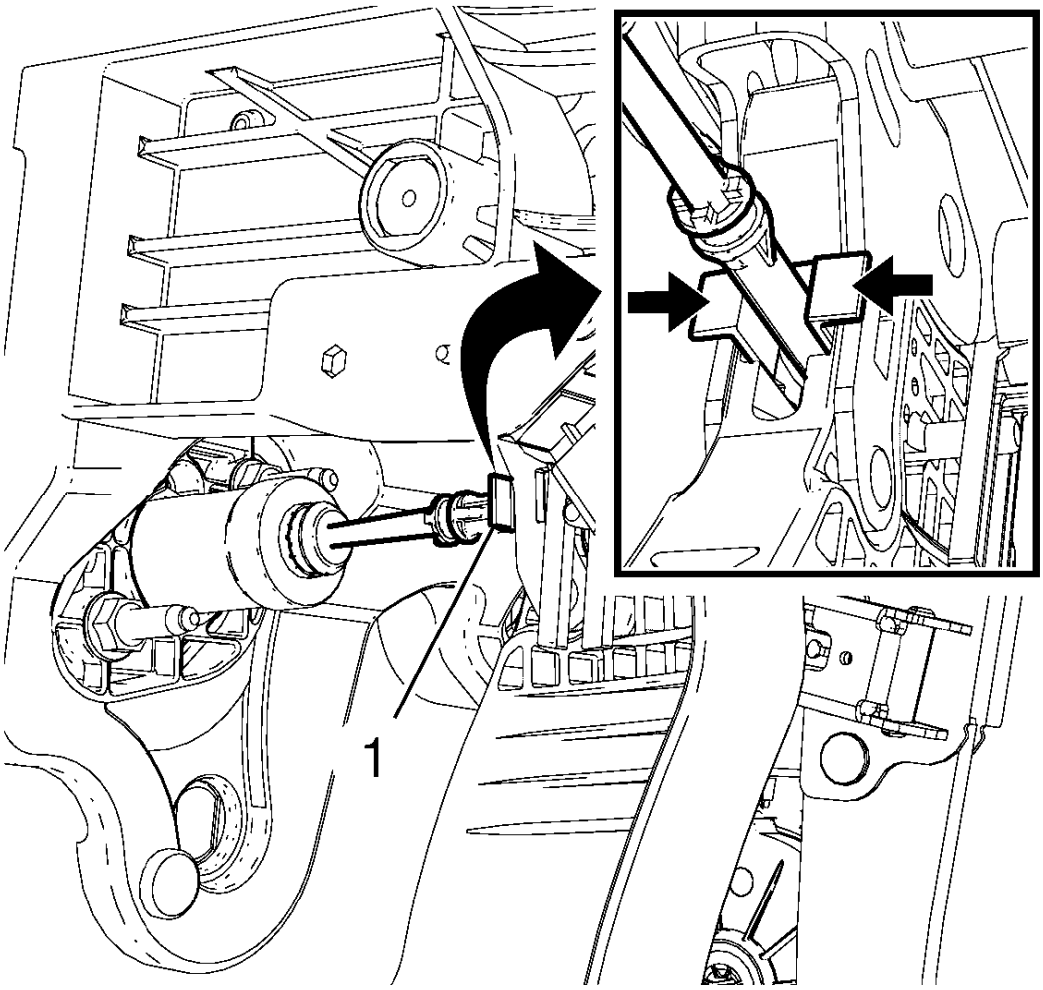

Fig. 16: Clutch Pedal Push Rod Retainer And Latches
Courtesy of GENERAL MOTORS COMPANY

NOTE: The retaining clip (arrows) has to engage audibly.

3. Connect the push rod retainer (1) to the clutch pedal.

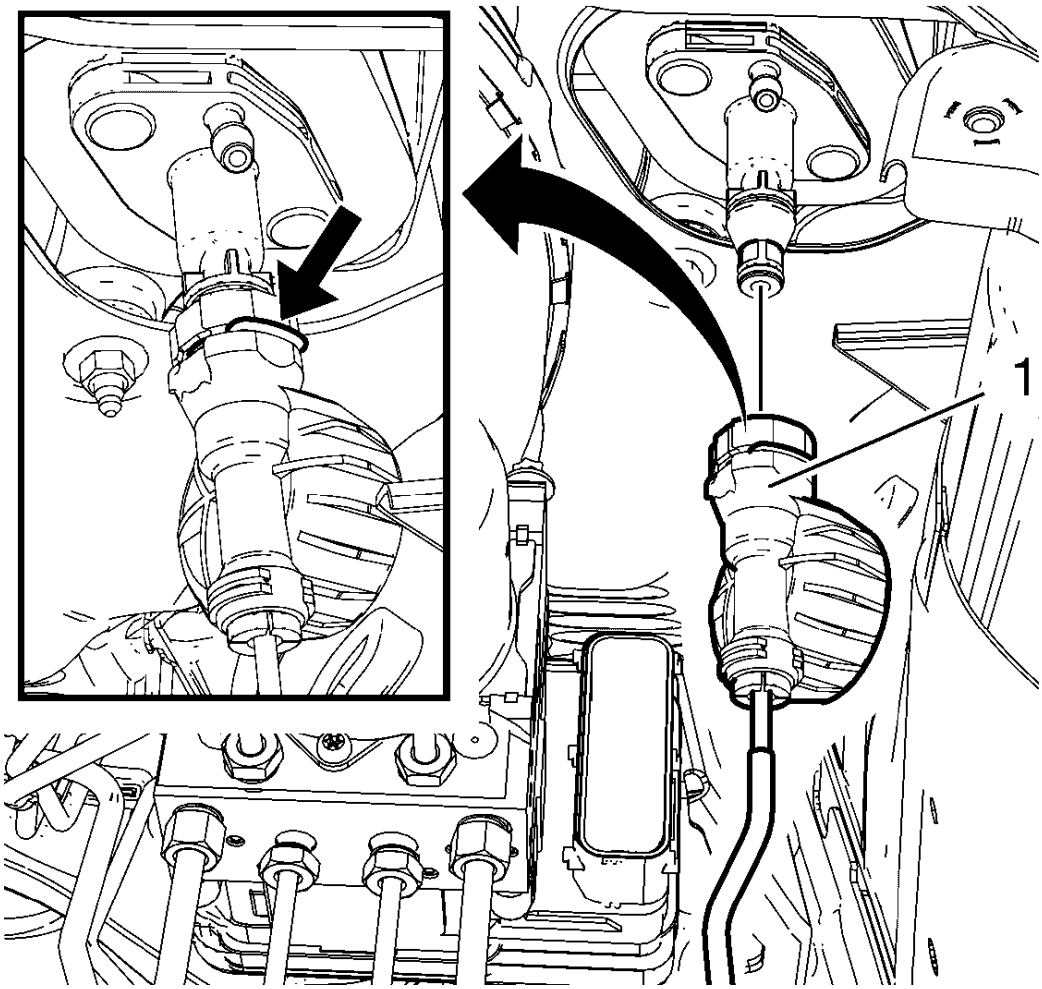

Fig. 17: Clutch Actuator Cylinder Front Pipe And Retaining Clip
Courtesy of GENERAL MOTORS COMPANY

4. Connect the clutch actuator cylinder front pipe (1) to the clutch master cylinder.
5. Close the retaining clip (arrow).

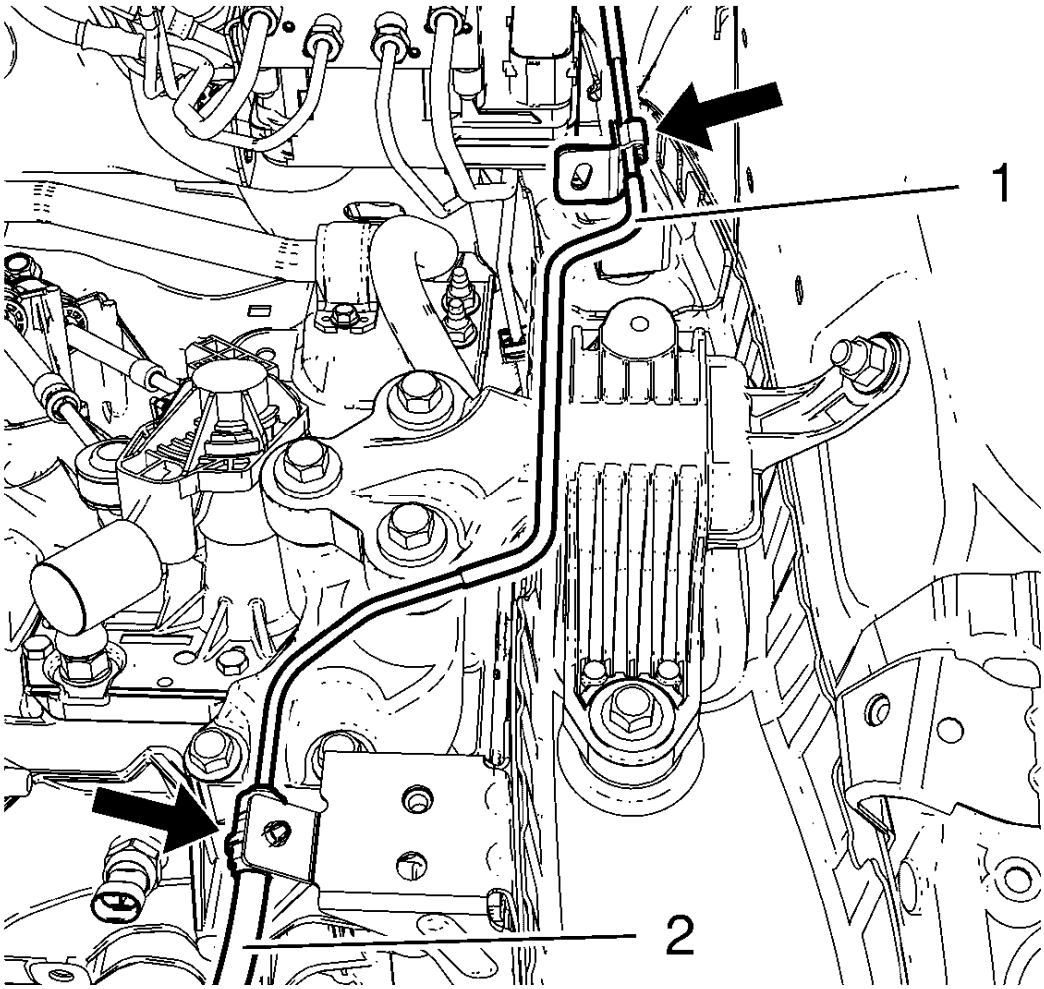

Fig. 18: Clutch Actuator Cylinder Front Pipe And Retainers
Courtesy of GENERAL MOTORS COMPANY

6. Clip the clutch actuator cylinder front pipe (1) into the 2 retainers (arrows).

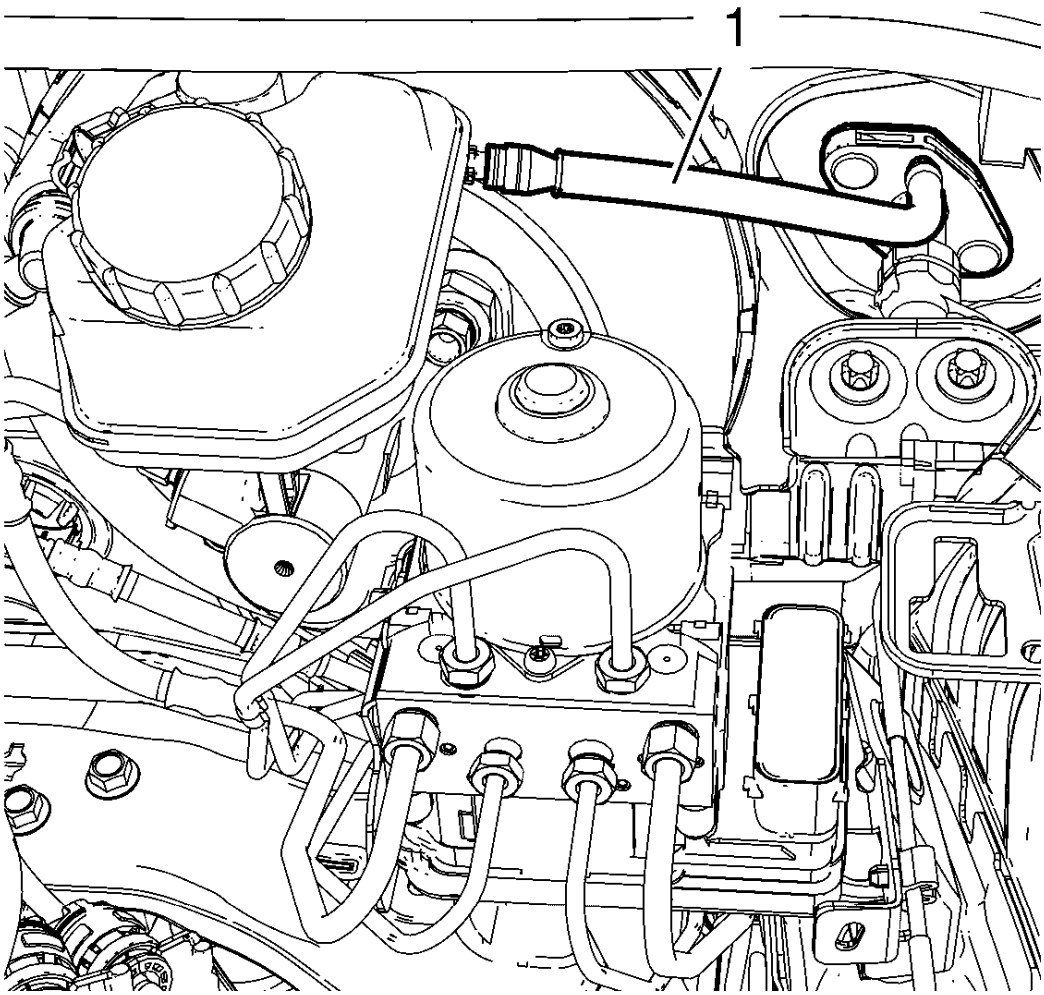

Fig. 19: Clutch Master Cylinder Reservoir Hose
Courtesy of GENERAL MOTORS COMPANY

7. Install the clutch master cylinder reservoir hose (1) to the clutch master cylinder.

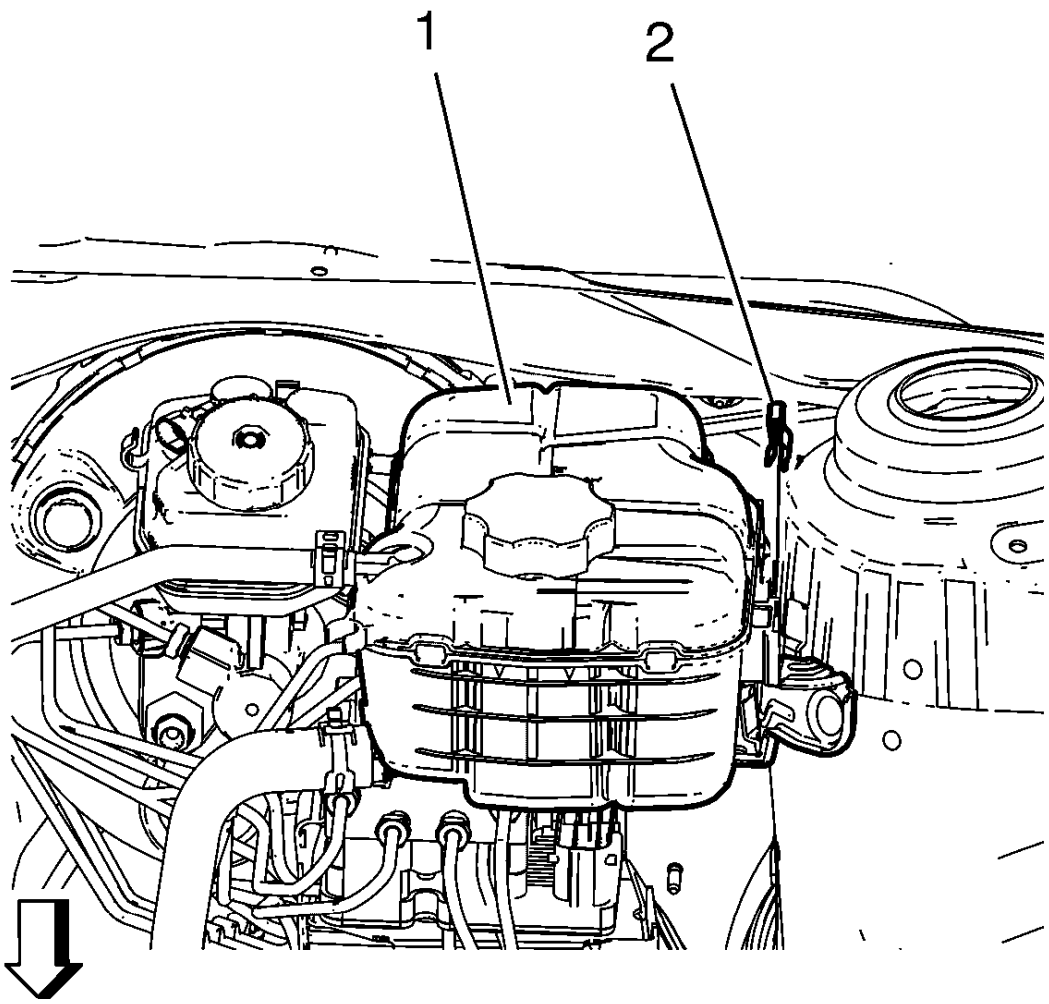

Fig. 20: View Of Radiator Surge Tank And Radiator Surge Tank Clip
Courtesy of GENERAL MOTORS COMPANY

8. Install the radiator surge tank (1).
9. Install the radiator surge tank clip (2).
10. Bleed the hydraulic clutch system. Refer to **Hydraulic Clutch System Bleeding**.
11. Install the battery tray. Refer to **Battery Tray Replacement** .

CLUTCH ACTUATOR CYLINDER FRONT PIPE REPLACEMENT

Removal Procedure

1. Remove battery tray. Refer to **Battery Tray Replacement** .

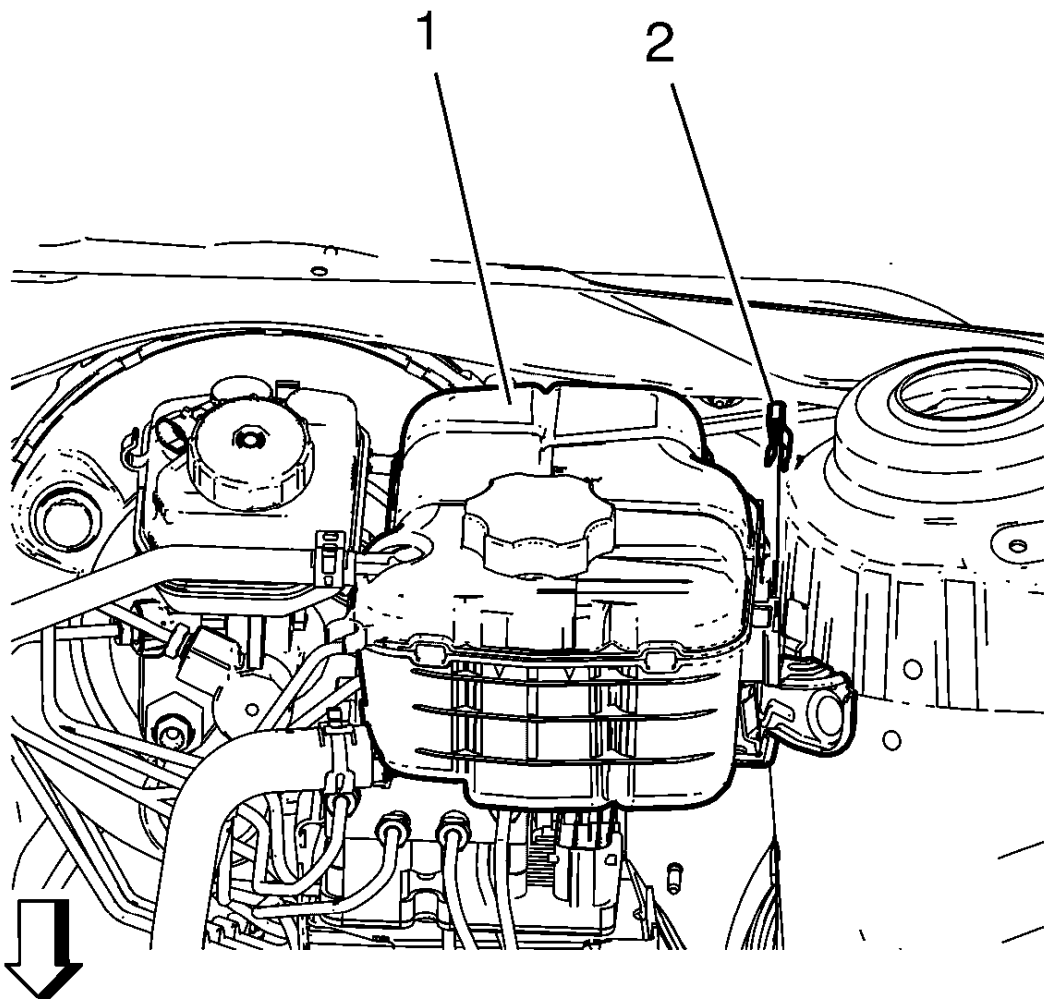

Fig. 21: View Of Radiator Surge Tank And Radiator Surge Tank Clip
Courtesy of GENERAL MOTORS COMPANY

2. Remove radiator surge tank clip (2).
3. Remove radiator surge tank (1) and lay aside.
4. Place basin underneath.

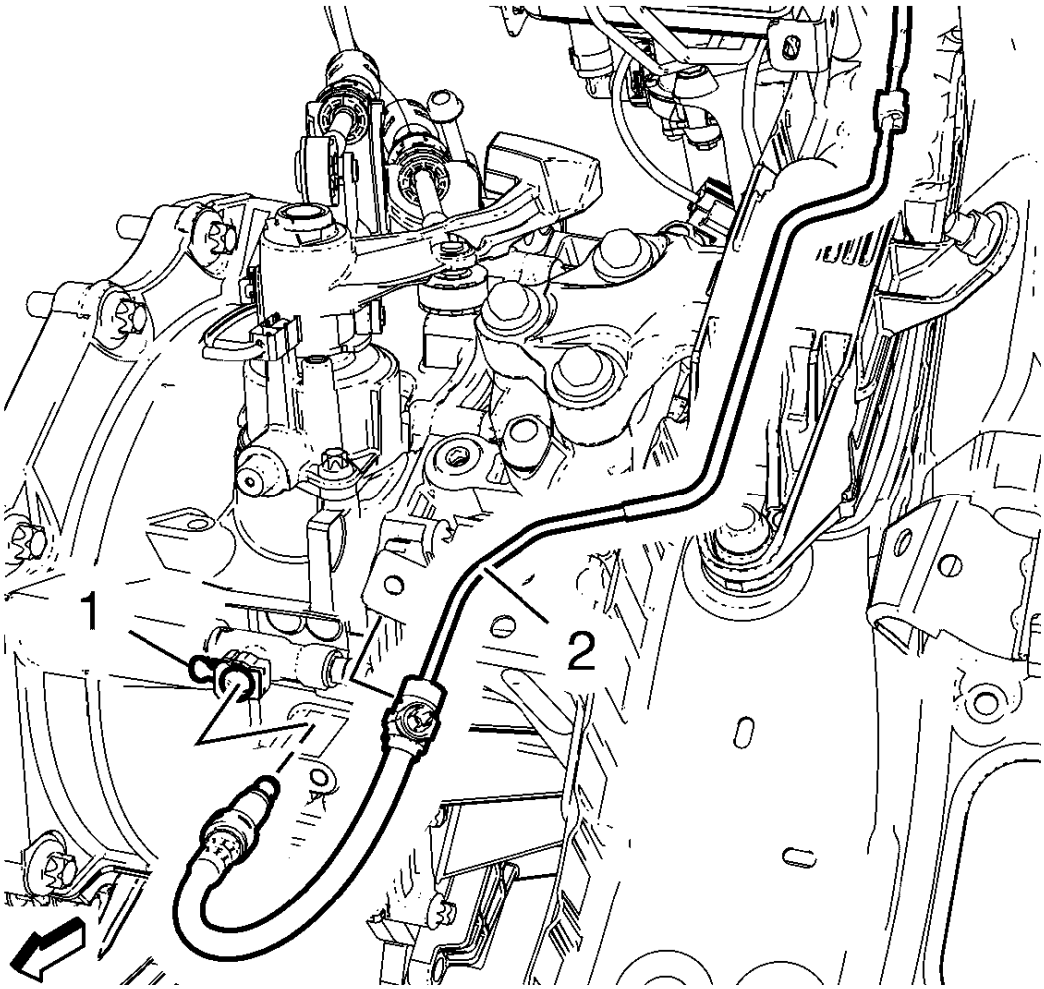

Fig. 22: Clutch Actuator Cylinder Front Pipe And Retainers
Courtesy of GENERAL MOTORS COMPANY

5. Clip clutch actuator cylinder front pipe (2) out of 2 retainers.
6. Open retaining clip (1).
7. Disconnect clutch actuator cylinder front pipe from clutch actuator cylinder pipe elbow.

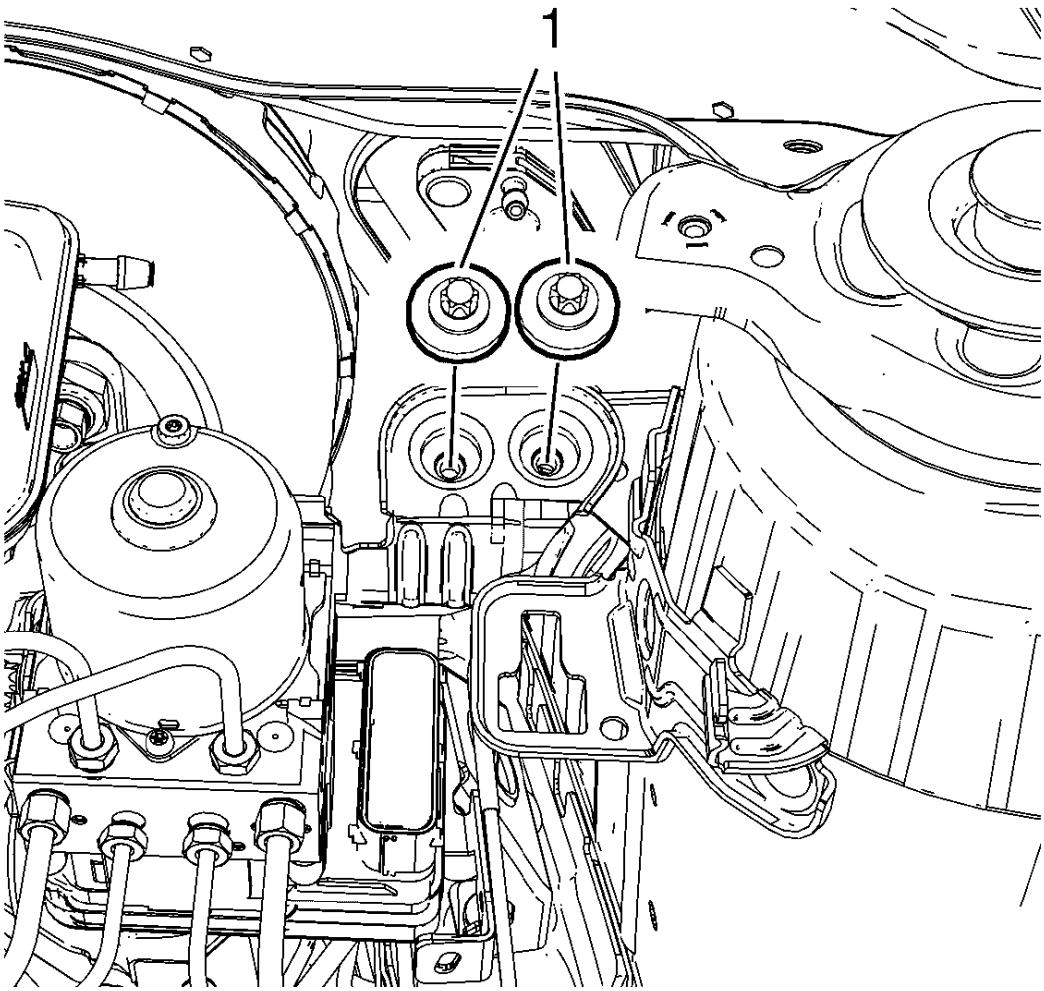

Fig. 23: Brake Pressure Modulator Valve Bracket Bolts
Courtesy of GENERAL MOTORS COMPANY

8. Remove 2 brake pressure modulator valve bracket bolts (1).

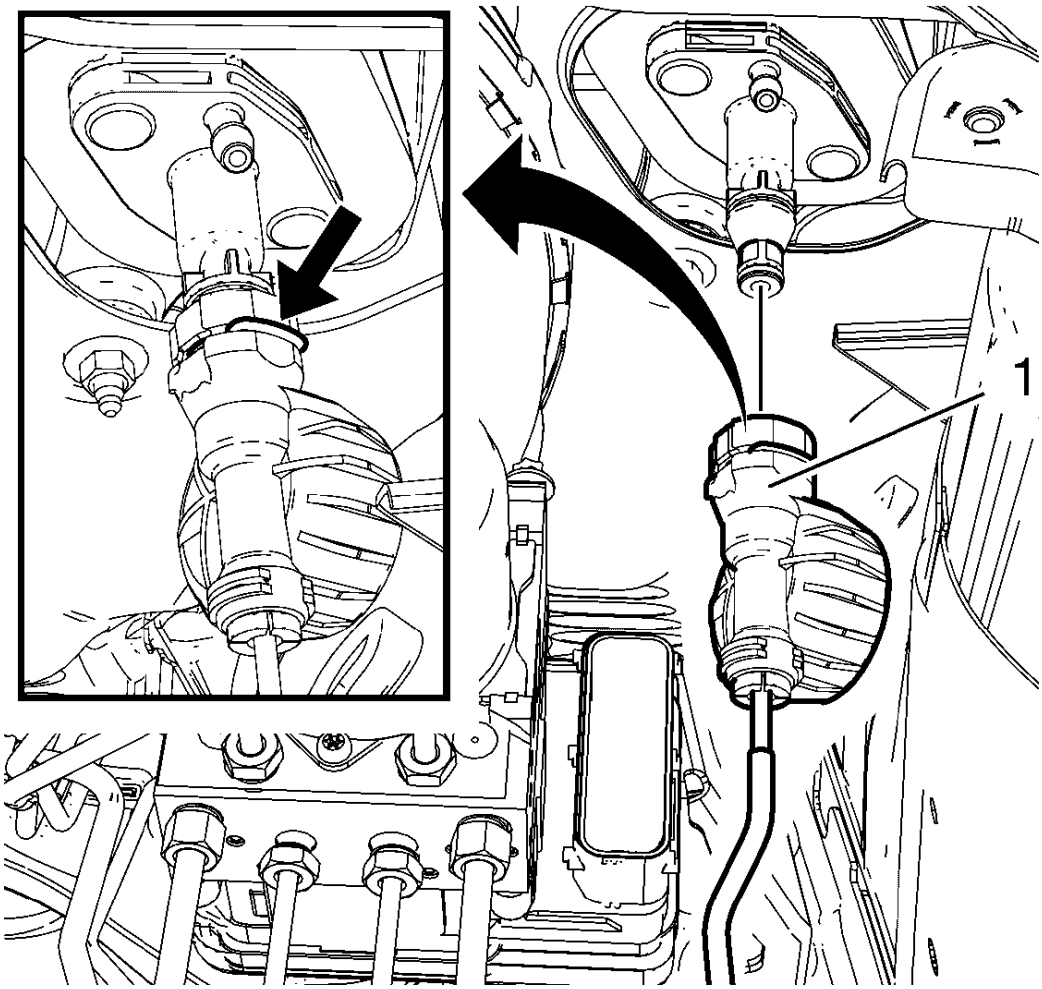

Fig. 24: Clutch Actuator Cylinder Front Pipe And Retaining Clip
Courtesy of GENERAL MOTORS COMPANY

9. Open retaining clip (arrow).
10. Disconnect clutch actuator cylinder front pipe (1) from clutch master cylinder.

NOTE: For removal of clutch actuator cylinder front pipe lift brake pressure modulator valve bracket carefully.

11. Remove clutch actuator cylinder front pipe.

Installation Procedure

NOTE: For installation of clutch actuator cylinder front pipe lift brake pressure modulator valve bracket carefully.

1. Install clutch actuator cylinder front pipe.

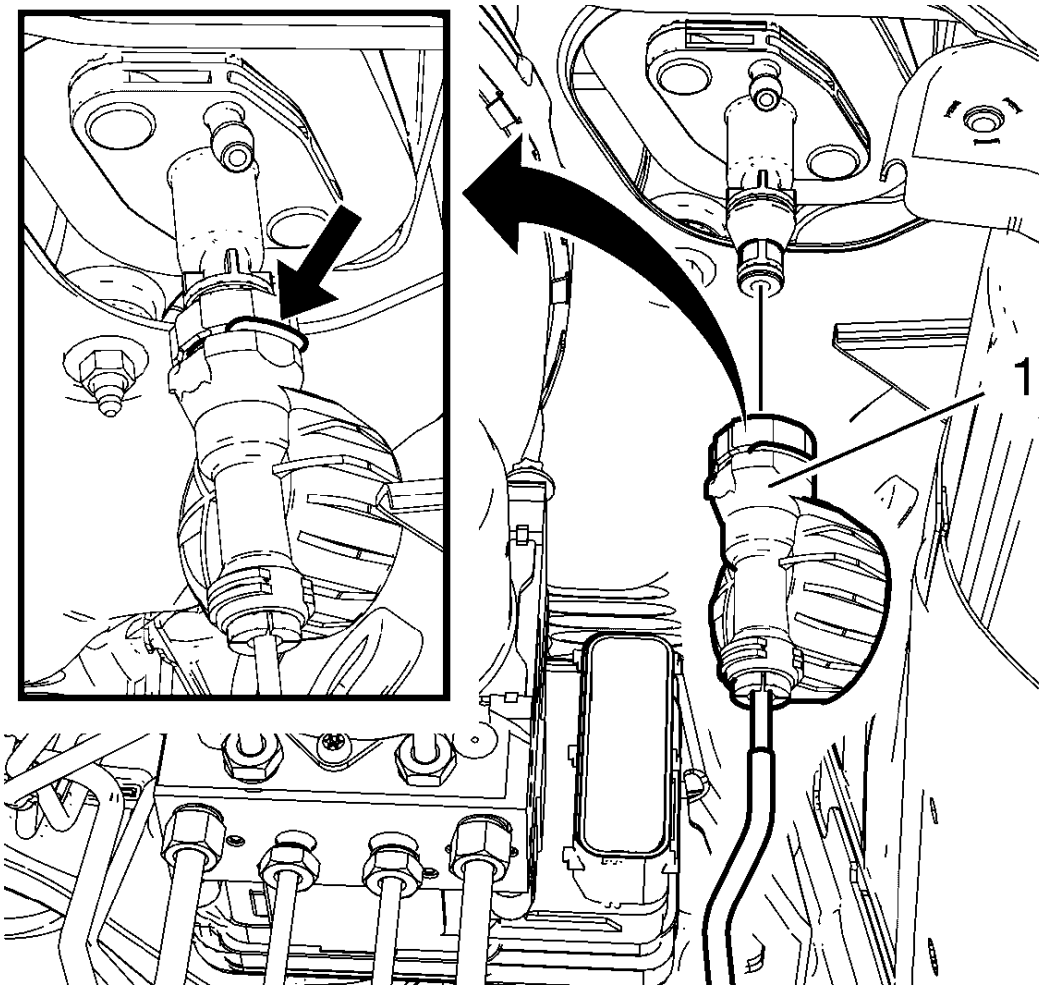

Fig. 25: Clutch Actuator Cylinder Front Pipe And Retaining Clip
Courtesy of GENERAL MOTORS COMPANY

2. Connect clutch actuator cylinder front pipe (1) to clutch master cylinder.
3. Close retaining clip (arrow).

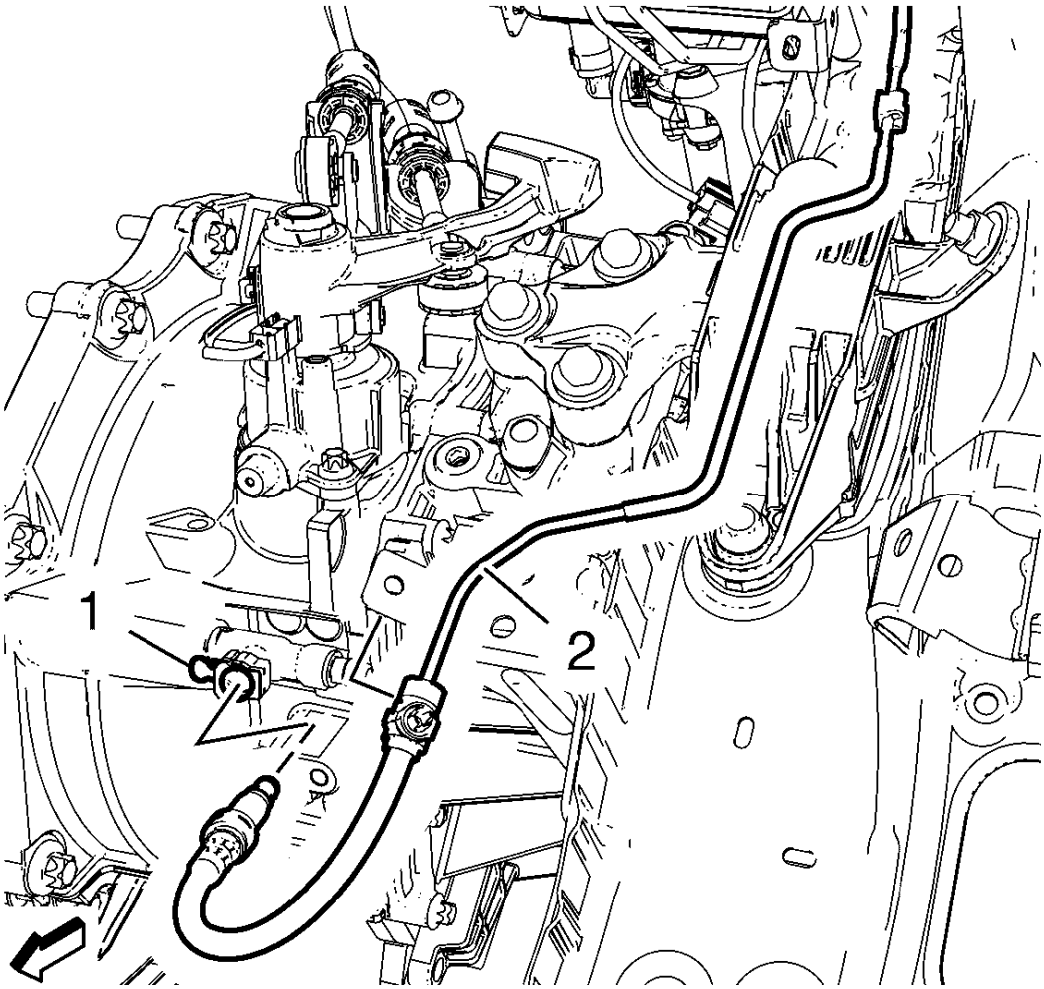

Fig. 26: Clutch Actuator Cylinder Front Pipe And Retainers
Courtesy of GENERAL MOTORS COMPANY

4. Connect clutch actuator cylinder front pipe (2) to clutch actuator cylinder pipe elbow.
5. Close retaining clip (1).
6. Clip clutch actuator cylinder front pipe into 2 retainers.

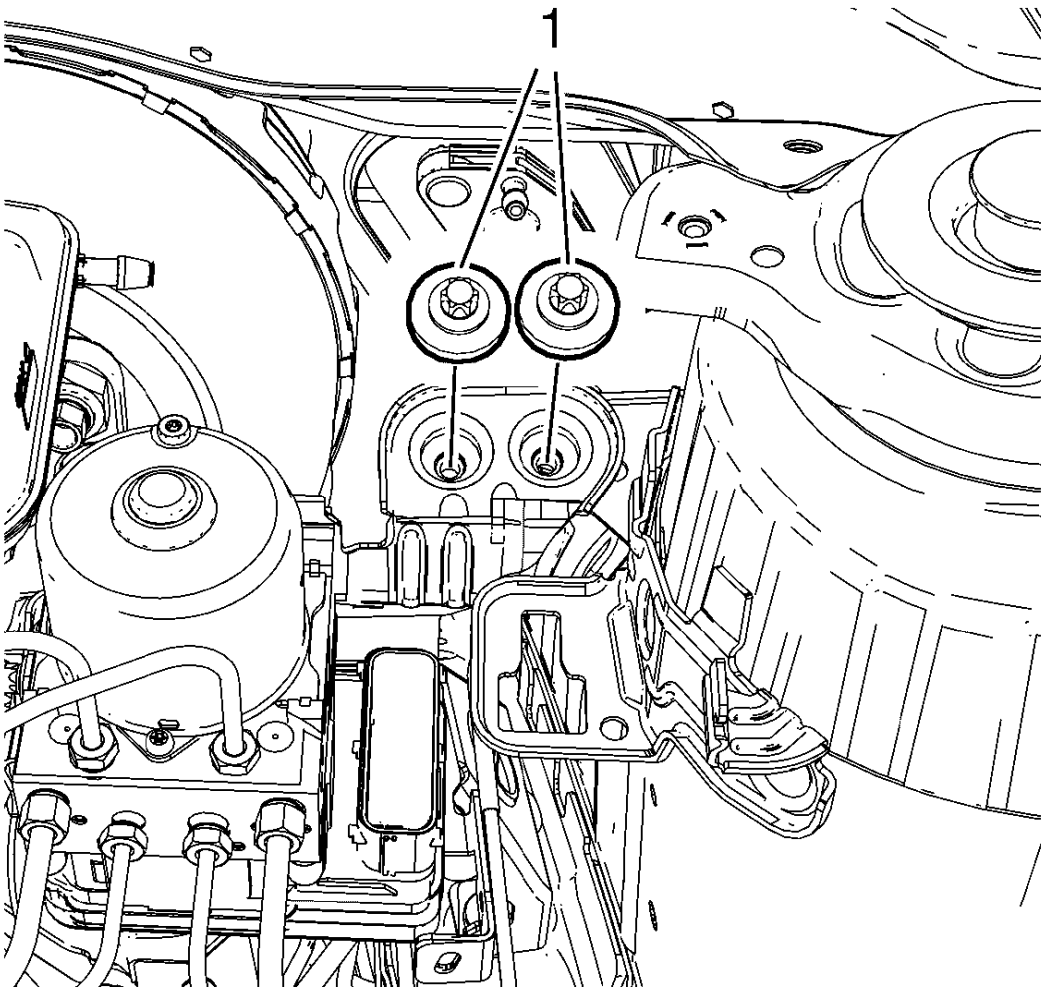

Fig. 27: Brake Pressure Modulator Valve Bracket Bolts
Courtesy of GENERAL MOTORS COMPANY

CAUTION: Refer to Fastener Caution .

7. Install 2 brake pressure modulator valve bracket bolts (1) and tighten to 20 N.m (15 lb ft).

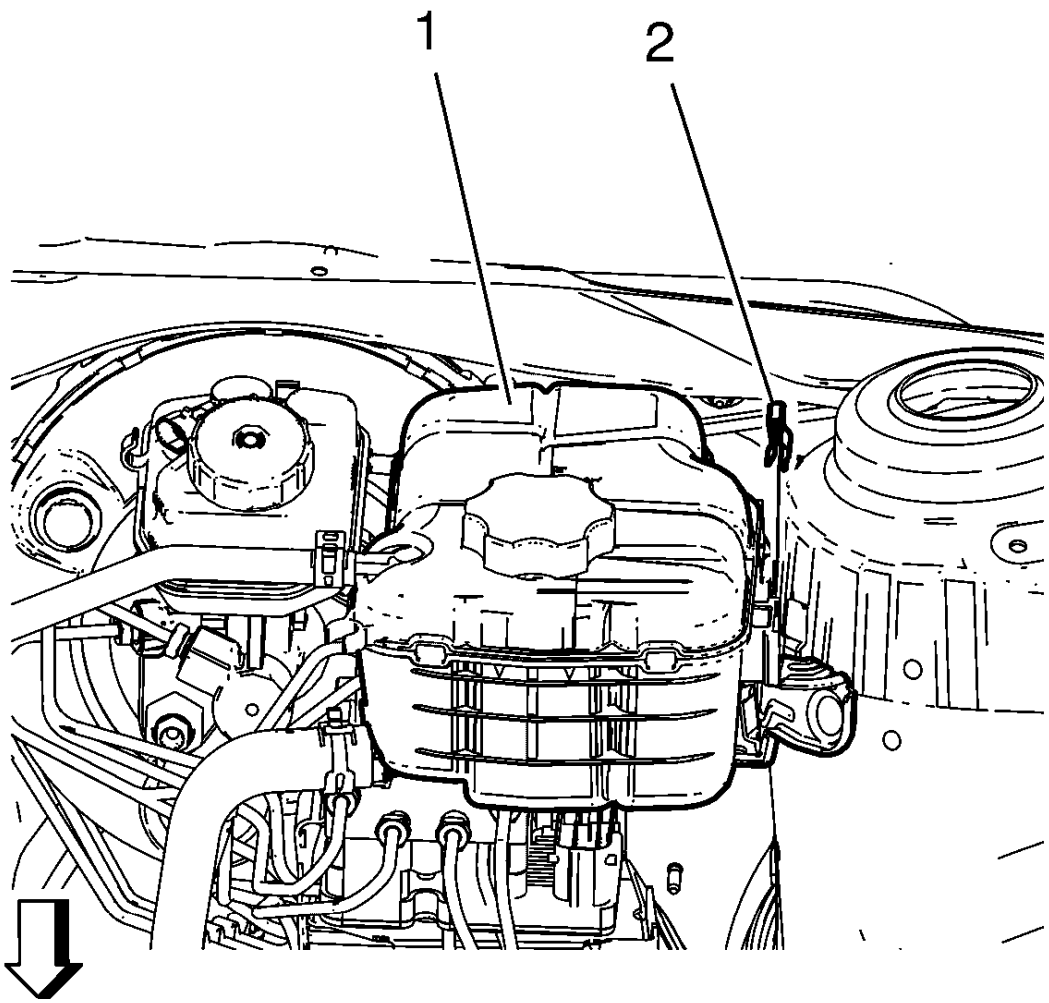

Fig. 28: View Of Radiator Surge Tank And Radiator Surge Tank Clip
Courtesy of GENERAL MOTORS COMPANY

8. Install radiator surge tank (1).
9. Install radiator surge tank clip (2).
10. Bleed hydraulic clutch system. Refer to **Hydraulic Clutch System Bleeding**.
11. Install battery tray. Refer to **Battery Tray Replacement** .

HYDRAULIC CLUTCH SYSTEM BLEEDING

Procedure

WARNING: Refer to Brake Fluid Irritant Warning .

CAUTION: Refer to Brake Fluid Effects on Paint and Electrical Components Caution .

NOTE: **Only use brake fluid DOT 3. The hydraulic clutch actuation must now only be bled from "below", i.e. from the bleeder valve. A brake bleeder must be used for this purpose - see " Workshop Equipment" catalogue. Manual bleeding is no longer permissible. Observe manufacturer's instructions before using brake bleeder. The brake bleeder must be set to an operating pressure of approximately 2 bar.**

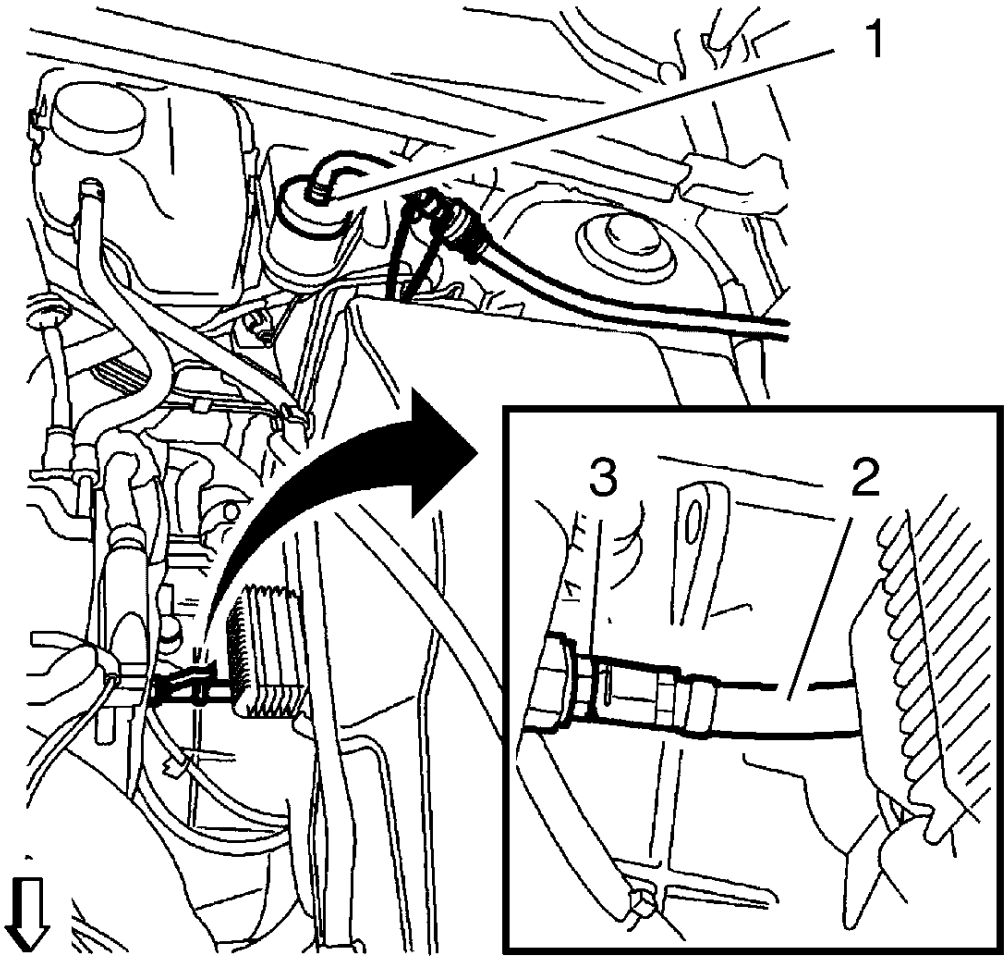

Fig. 29: Brake Bleeder And Brake Fluid Reservoir
Courtesy of GENERAL MOTORS COMPANY

1. Attach brake bleeder.
   - Screw adapter (1) for corresponding brake bleeder onto brake fluid reservoir.

NOTE: **Insert hose end in suitable brake fluid collecting basin.**

-
- Disconnect valve cap from bleeder valve.
- Connect bleeder hose (2) to bleeder valve (3).

2. Bleed clutch.
    - Switch on brake bleeder.
    - Open bleeder valve 2-3 turns.
    - Bleed until brake fluid escapes without bubbles at hose.
    - Close bleeder valve hand tight.
3. Detach brake bleeder.
    - Detach adapter from brake fluid reservoir.
    - Push valve cap onto bleeder valve to protect the bleeder valve.

NOTE: The following operational stages must be undertaken to fill the pressure line between the transmission housing and the central release. When bleeding, ensure that the brake fluid reservoir is always filled up sufficiently and does not run dry.

-
4. Bleed pressure line between transmission housing and central release.
    - Press and hold clutch pedal.
    - Open bleeder valve until air or air/brake fluid mixture emerges.
    - Close bleeder valve hand tight.

NOTE: Do not close the bleeder valve too fast.

- Release clutch pedal as far as the stop at normal speed.
- Wait approximately 5 seconds.
- Repeat this bleeding process 4 times.
- Tighten bleeder valve.
- Detach bleeder hose.
- Push valve cap on to bleeder valve to protect the bleeder valve.

5. Connect bleeder hose to bleeder valve, place free end in a suitable connecting container.
6. Top up brake fluid reservoir.
    - Fill brake fluid reservoir up to "MAX" marking.
    - Install brake fluid reservoir.
7. Check the actuation pressure of the clutch pedal. Ensure that the clutch pedal is not spongy and that there is sufficient clutch pedal reserve (more than 13 mm (0.5 in)).
8. Check shifting for ease of movement with vehicle stationary, with engine running and with clutch disengaged.
9. Road test the vehicle to ensure proper operation.

Undertake road test using varying RPM ranges and frequent gear changes, bring vehicle to operating temperature during this process. Ensure the brake and clutch system is operating correctly.

CLUTCH PEDAL POSITION SENSOR REPLACEMENT

Removal Procedure

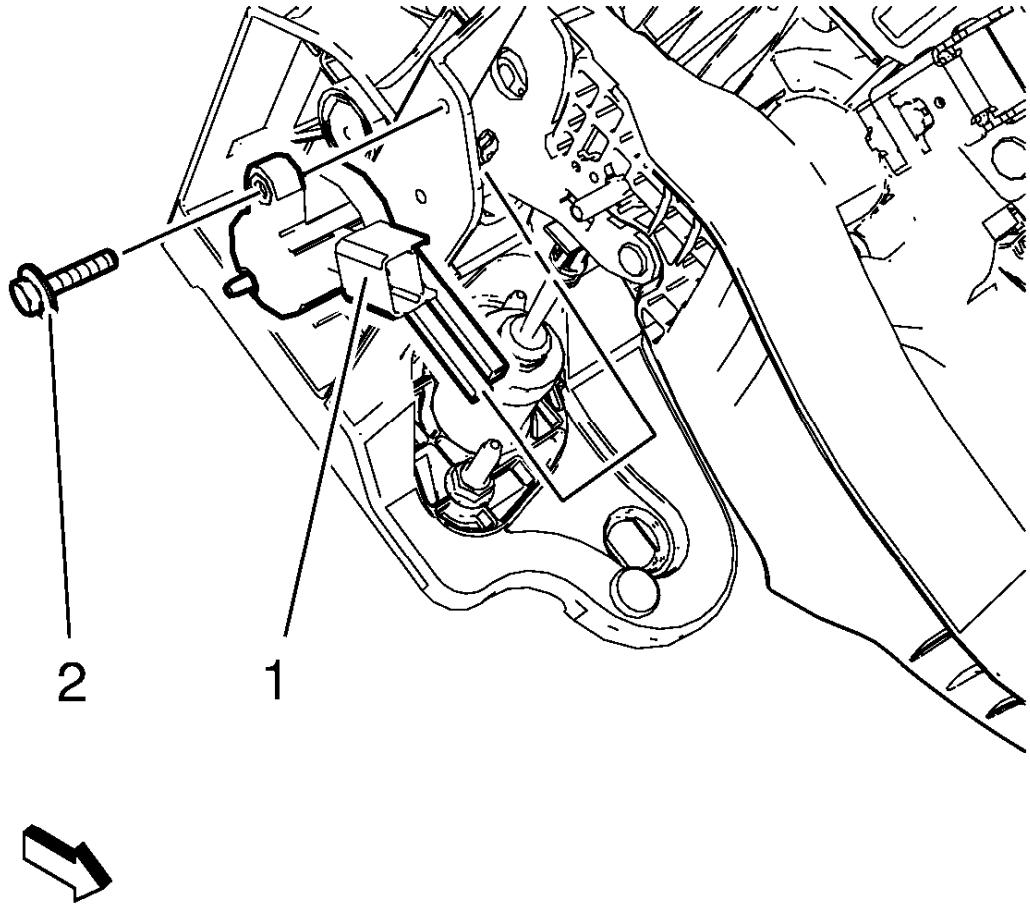

Fig. 30: Clutch Pedal Position Sensor And Bolt
Courtesy of GENERAL MOTORS COMPANY

1. Disconnect the clutch pedal position sensor wiring harness plug.
2. Remove the clutch pedal position sensor bolt (2).
3. Remove the clutch pedal position sensor (1).

Installation Procedure

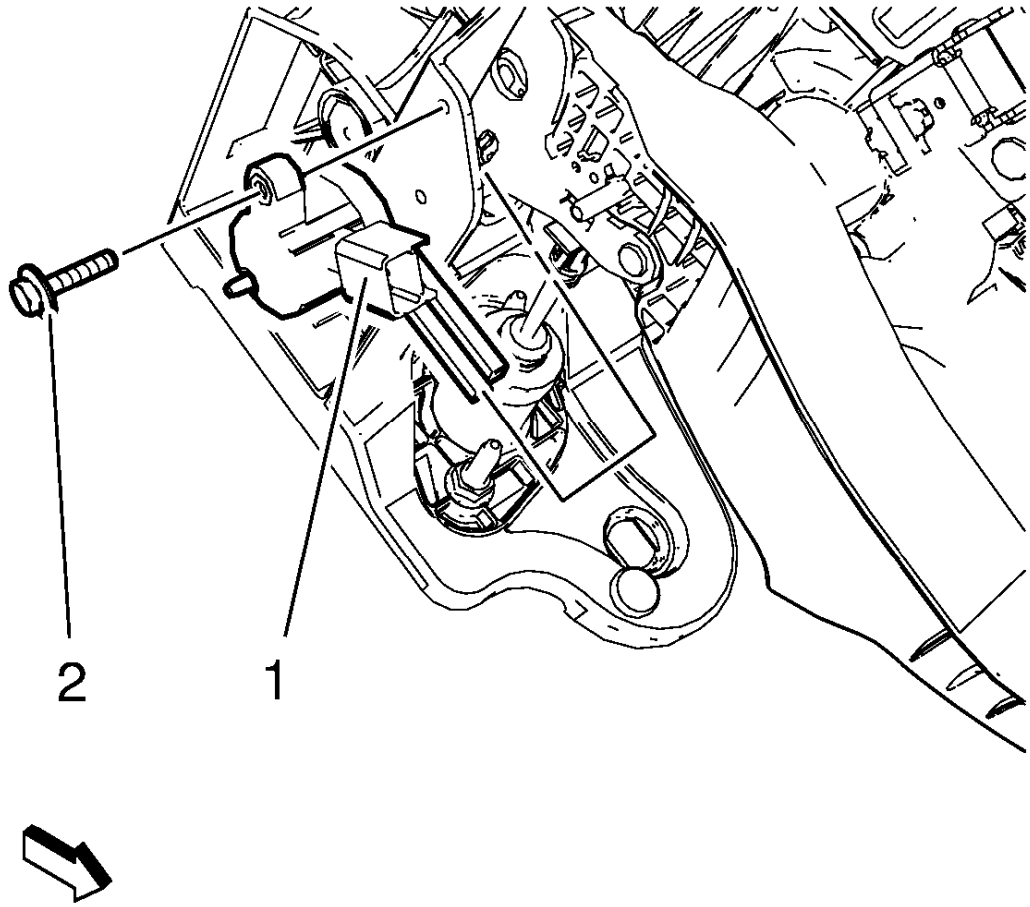

Fig. 31: Clutch Pedal Position Sensor And Bolt
Courtesy of GENERAL MOTORS COMPANY

1. Install the clutch pedal position sensor (1).

CAUTION: Refer to Fastener Caution .

2. Install the clutch pedal position sensor bolt (2) and tighten to 3 N.m(27 lb in).
3. Connect the clutch pedal position sensor wiring harness plug.
4. Learn clutch pedal position sensor, refer to **Clutch Pedal Position Sensor Learn** .

CLUTCH PRESSURE AND DRIVEN PLATE REPLACEMENT (1.4L LUV)

Special Tools

- **DT-6263** Remover / Installer
- **DT-6263-27** Clutch Center Guide
- **EN-652** Flywheel Holder

For equivalent tools, refer to **Special Tools**.

Removal Procedure

NOTE:

- **To prevent damage to the spring fangs of pressure plate use DT-6263 remover / installer to remove and install clutch pressure plate.**
- **Note the different lengths of the brackets for attaching DT-6263 remover / installer to lower engine block.**

1. Remove the transmission. Refer to **Transmission Replacement** .

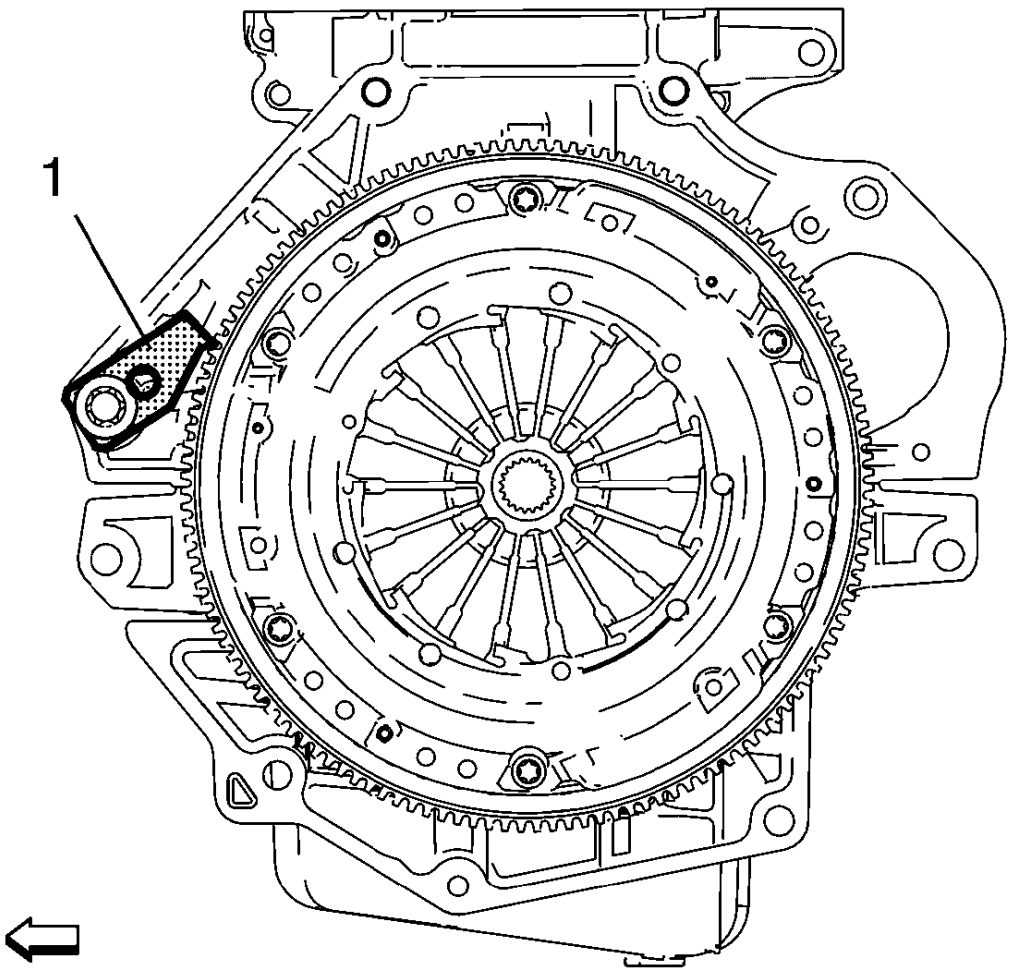

Fig. 32: Flywheel Holder Tool

Courtesy of GENERAL MOTORS COMPANY

2. Install the **EN-652** holder (1) to the engine block.

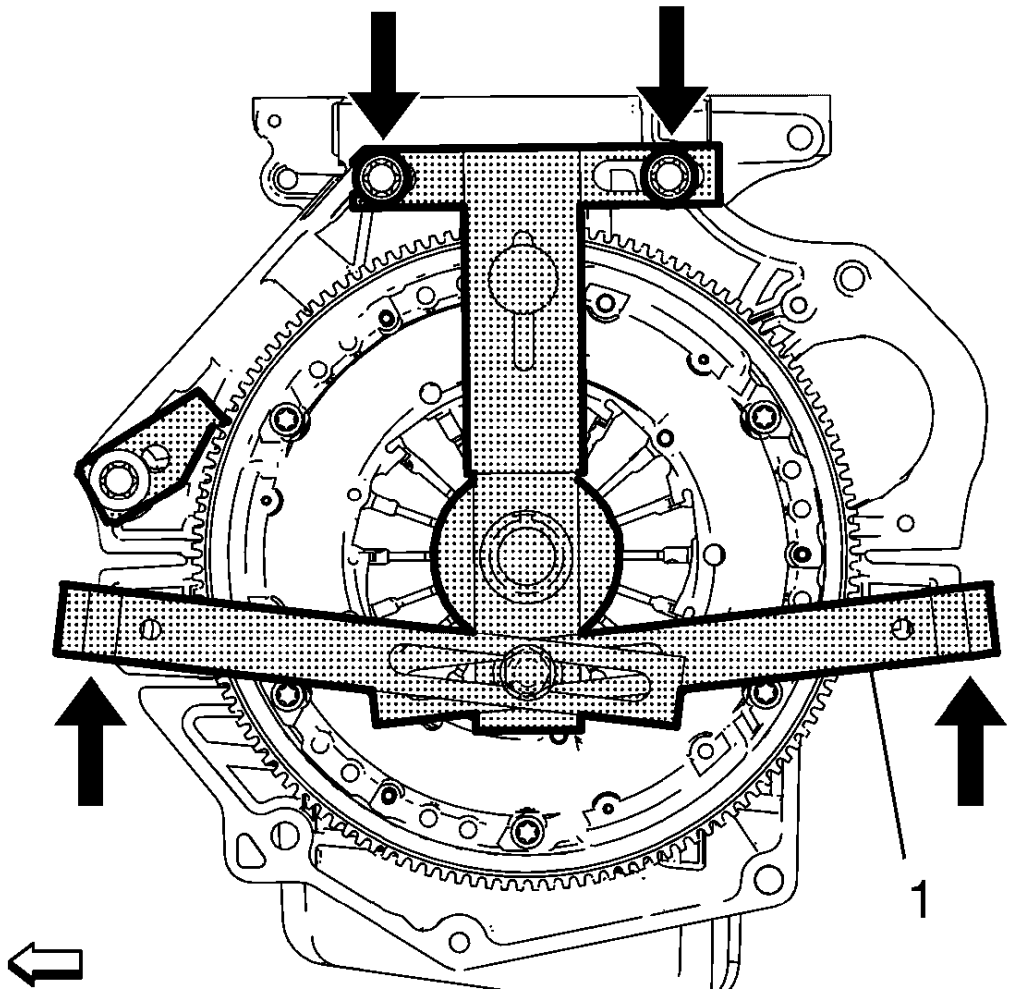

Fig. 33: Special Engine Block Brace Tool
Courtesy of GENERAL MOTORS COMPANY

3. Attach the **DT-6263** remover / installer (1) in conjunction with the **DT-6263-1** brace to the engine block.
4. Install the 4 bolts (arrows) to the engine block, but do not tighten yet.

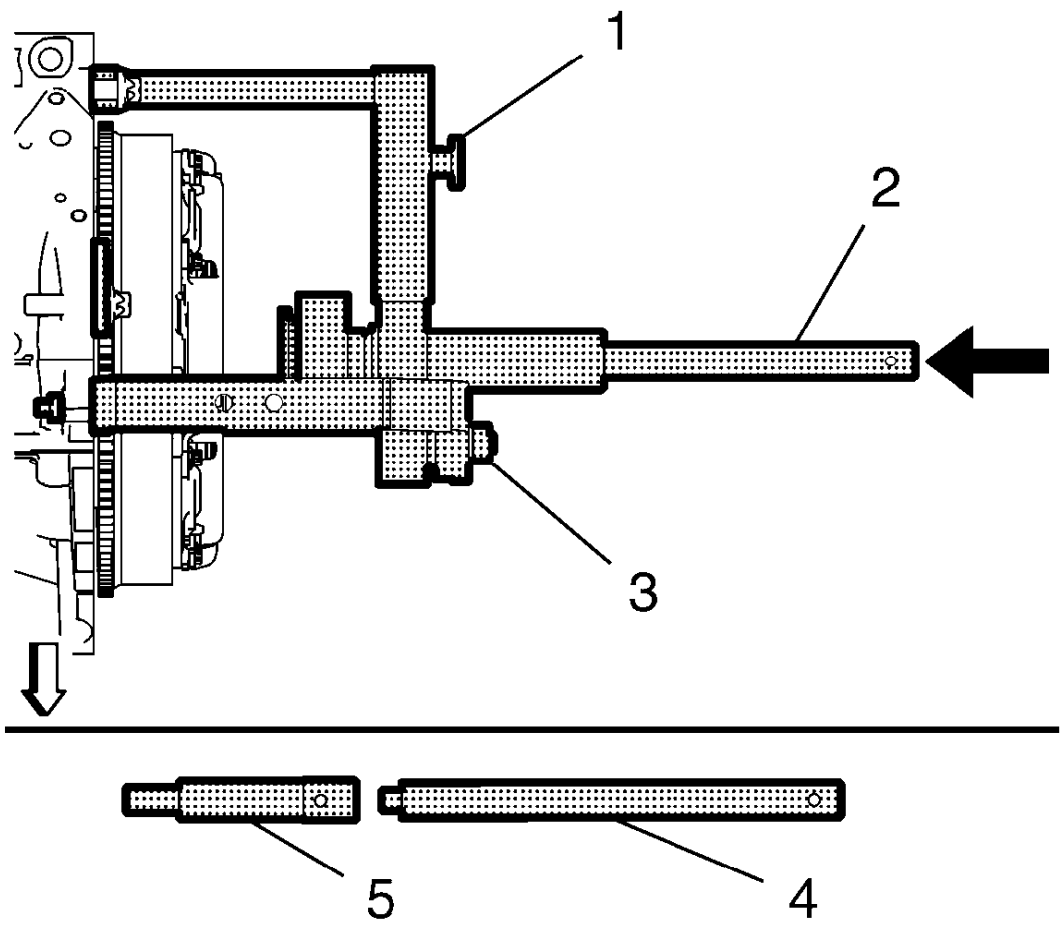

Fig. 34: Special Tools
Courtesy of GENERAL MOTORS COMPANY

5. Attach the **DT-6263-27** guide to the **DT-6263-30** drift (4).
6. Fasten the **DT-6263** remover / installer.
    1. Align the **DT-6263-30** centering drift (2) in conjunction with the clutch center guide through the **DT-6263** remover / installer into the clutch driven plate and crankshaft center (arrow).
    2. Tighten the knurled wheel (1).
    3. Tighten the bolt (3).
    4. Tighten the 4 bolts installing the **DT-6263** remover / installer to the engine block.

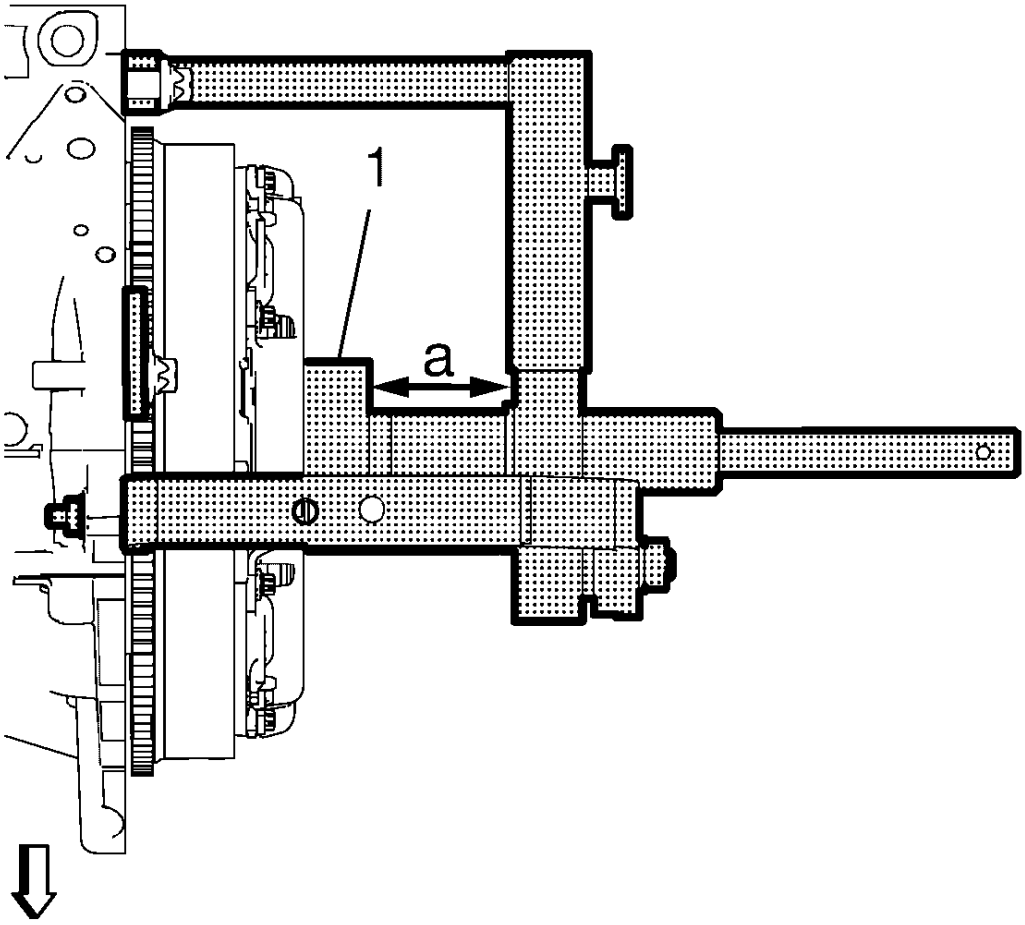

Fig. 35: Clutch Removal/Installation Tool
Courtesy of GENERAL MOTORS COMPANY

7. Preload the clutch springs, using the **DT-6263** remover / installer.
    1. Turn the threaded rod (1) until it rests against the spring tangs of the clutch pressure plate.
    2. Measure the distance a.

    NOTE: Do NOT turn further than necessary to gain free movement of the clutch disc.

    3. Turn the threaded rod clockwise until the distance a is extended by approximate 8 mm (0.31 in).
    4. Check for free movement of the clutch disc.

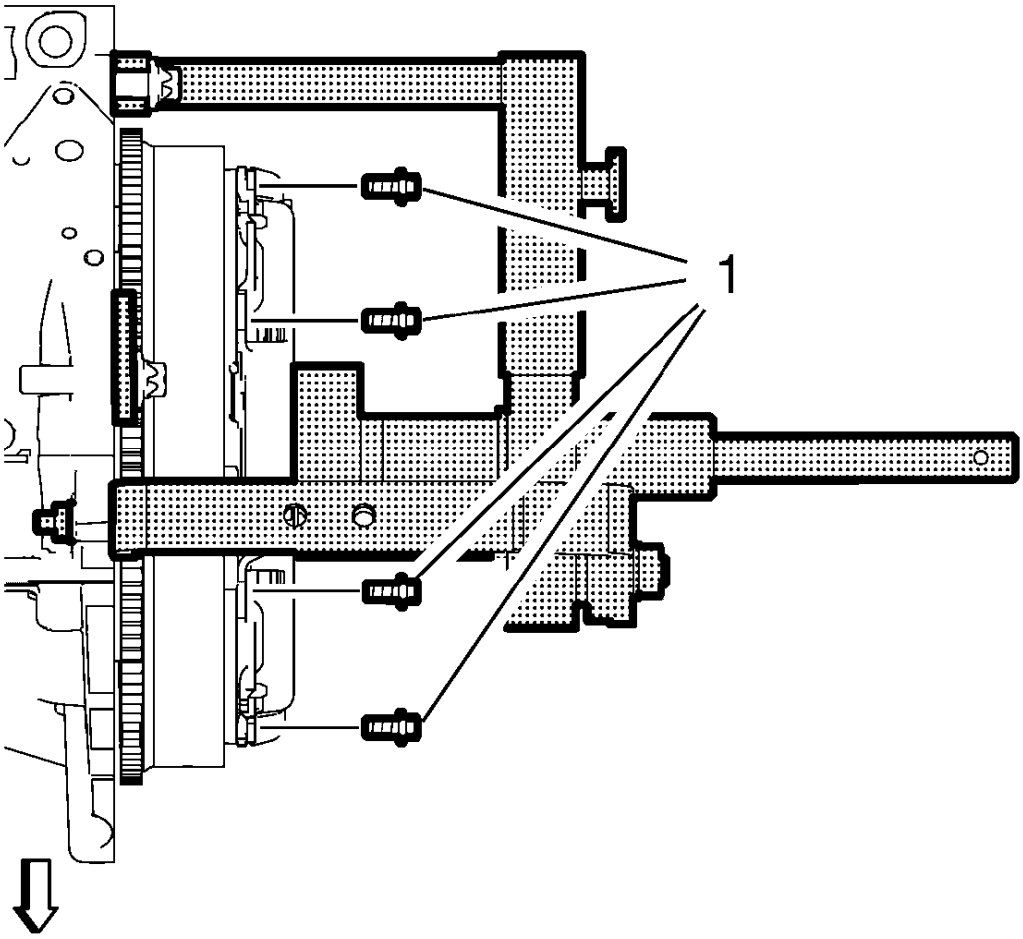

Fig. 36: Clutch Pressure Plate Bolts
Courtesy of GENERAL MOTORS COMPANY

NOTE: Ascertain if bolt was assembled with thread lock agent.

8. Remove and DISCARD the 6 clutch pressure plate bolts (1).

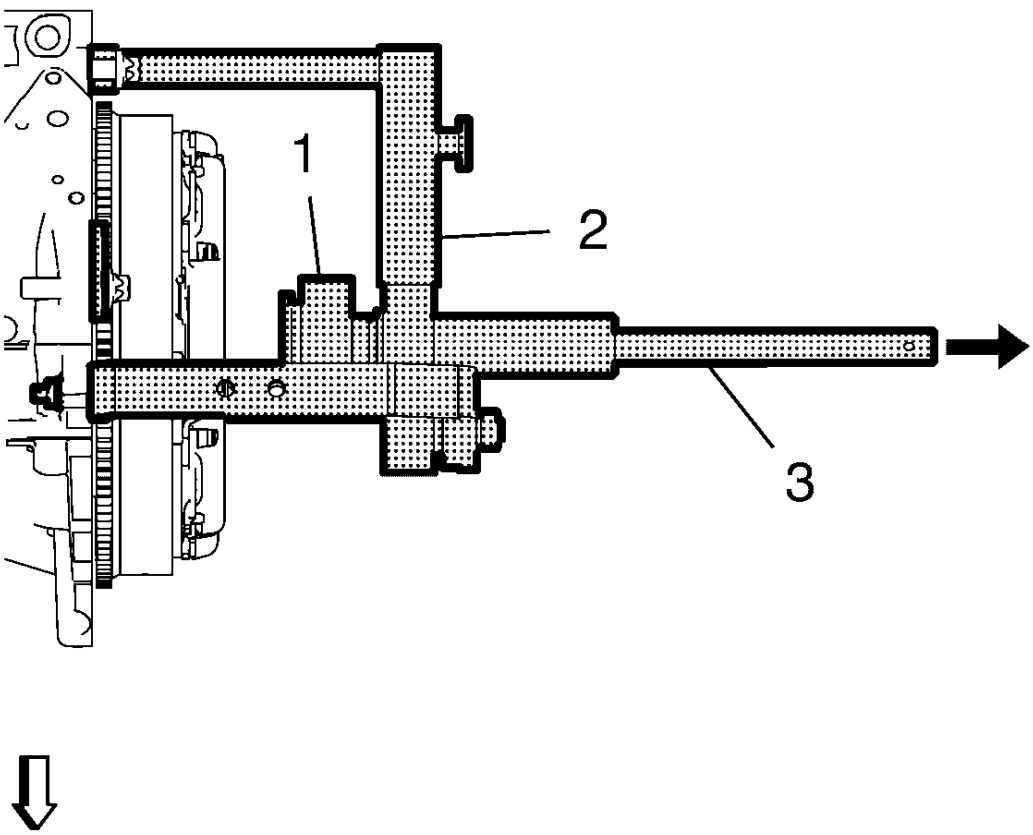

Fig. 37: Special Remover/Installer Tools
Courtesy of GENERAL MOTORS COMPANY

9. Release the **DT-6263** remover / installer (2).
    1. Turn the threaded rod (1) of the **DT-6263** remover / installer counterclockwise to the stop.
    2. Remove the **DT-6263-30** centering drift (3) in conjunction with the clutch center guide (arrow).

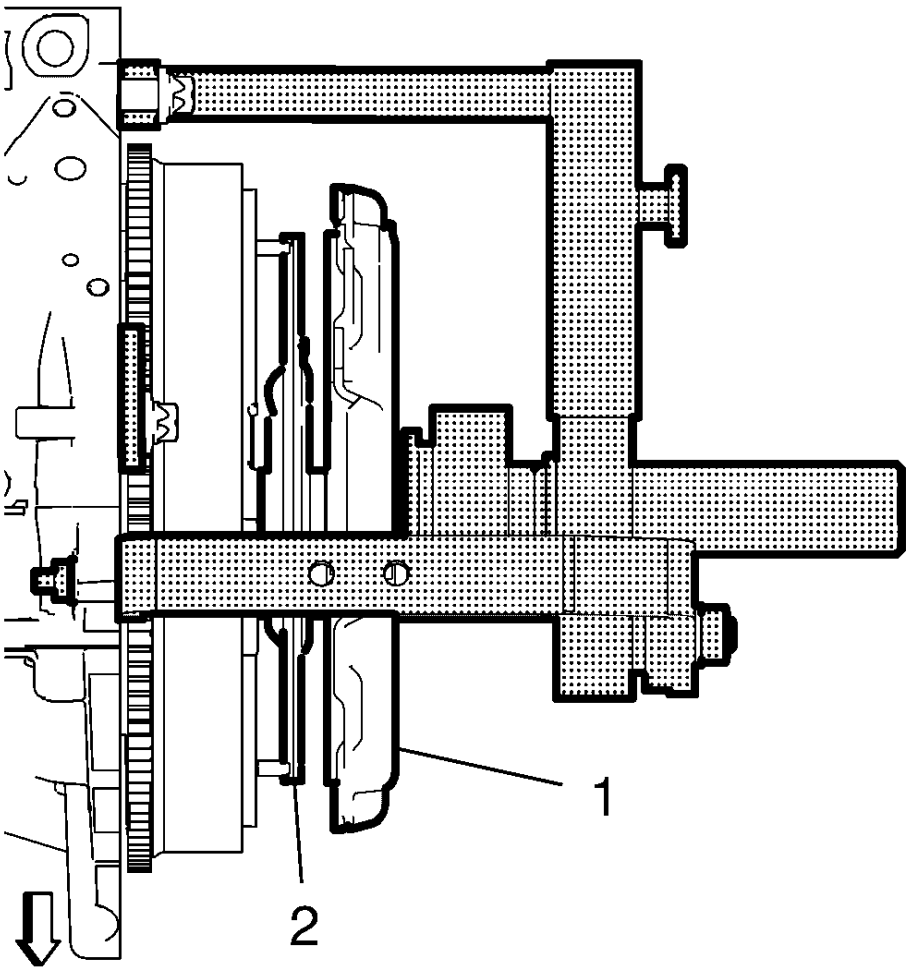

Fig. 38: Clutch Pressure Plate And Driven Plate
Courtesy of GENERAL MOTORS COMPANY

10. Remove the clutch pressure plate (1) and the driven plate (2).

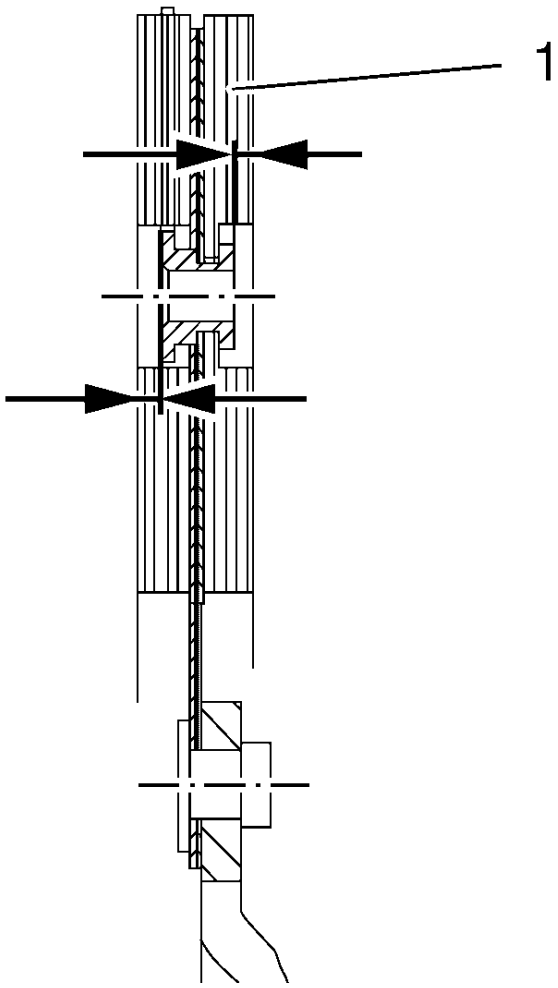

Fig. 39: Clutch Pressure Plate And Driven Plate Inspection Points
Courtesy of GENERAL MOTORS COMPANY

NOTE: Clutch pressure plate and driven plate contaminated by foreign bodies (oil, cleaning agent etc.) have to be replaced. Check clutch driven plate for damage and friction rust in the hub profile and replace if necessary. Do not clean clutch pressure plate and driven plate with a high pressure cleaner or component washing machine.

11. Inspect the clutch pressure plate and the driven plate (1) and replace, if necessary.

Inspect for:

- Excessive wear
- Burned friction surface
- Oil on friction surface

- Damaged spline hub
- Damaged springs

NOTE: The clutch driven plate has to be replaced if the lining projection is less than 0.5 mm (0.020 in) (arrows).

12. Inspect the projection of lining at the clutch lining rivets.
13. Slide the clutch pressure plate onto the transmission input shaft and check for easy movement.

Installation Procedure

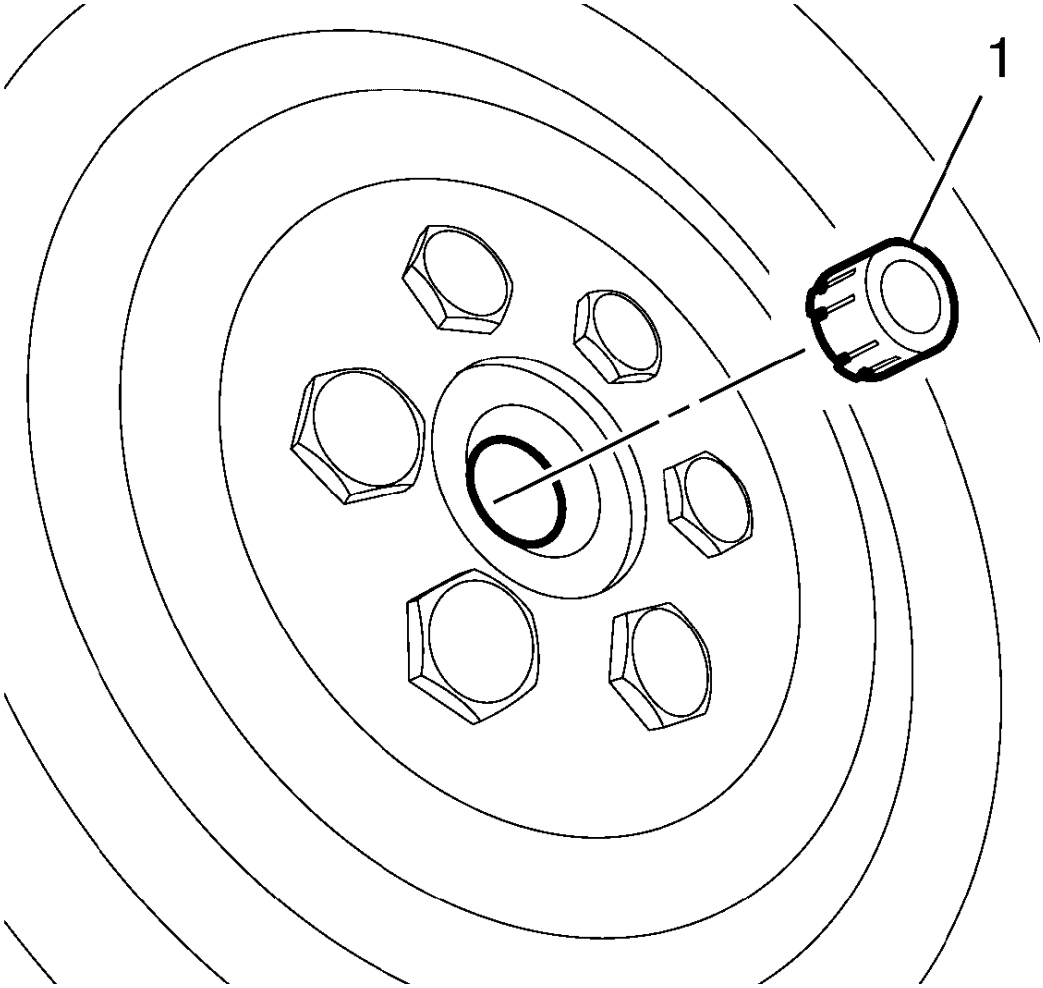

Fig. 40: Clutch Bolt Bushing
Courtesy of GENERAL MOTORS COMPANY

1. Install the bushing (1) to the crankshaft. The bushing stays in the crankshaft. For the correct bushing refer to the electronic parts catalog.

2. Re-cut the 6 clutch pressure plate bolt threads.

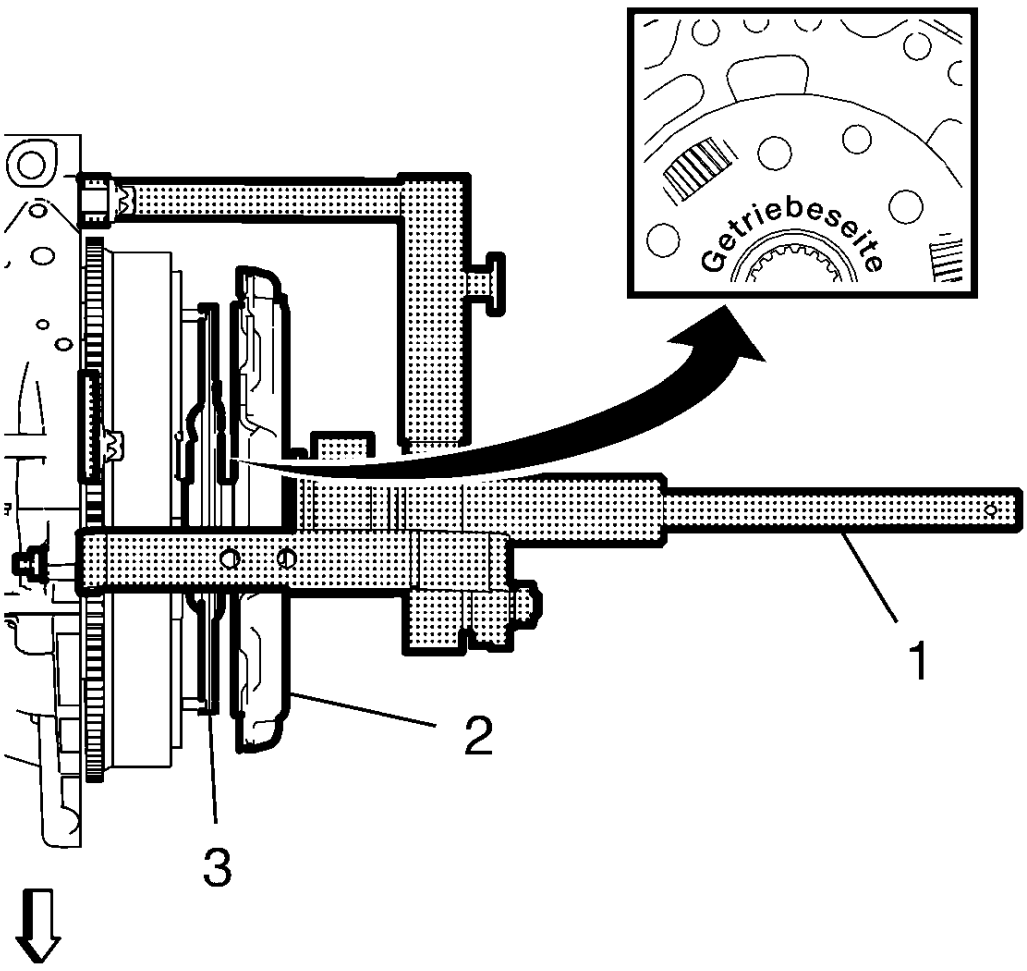

Fig. 41: Clutch Drive Plate
Courtesy of GENERAL MOTORS COMPANY

NOTE: The clutch drive plate must be installed so that the German lettering "Getriebe-seite" (means Gearbox-side) on the plate is orientated towards the transmission.

3. Install the clutch driven plate (3) and the clutch pressure plate (2).

   Center the clutch driven plate, using the **DT-6263-30** centering drift (1) in conjunction with the clutch center guide.

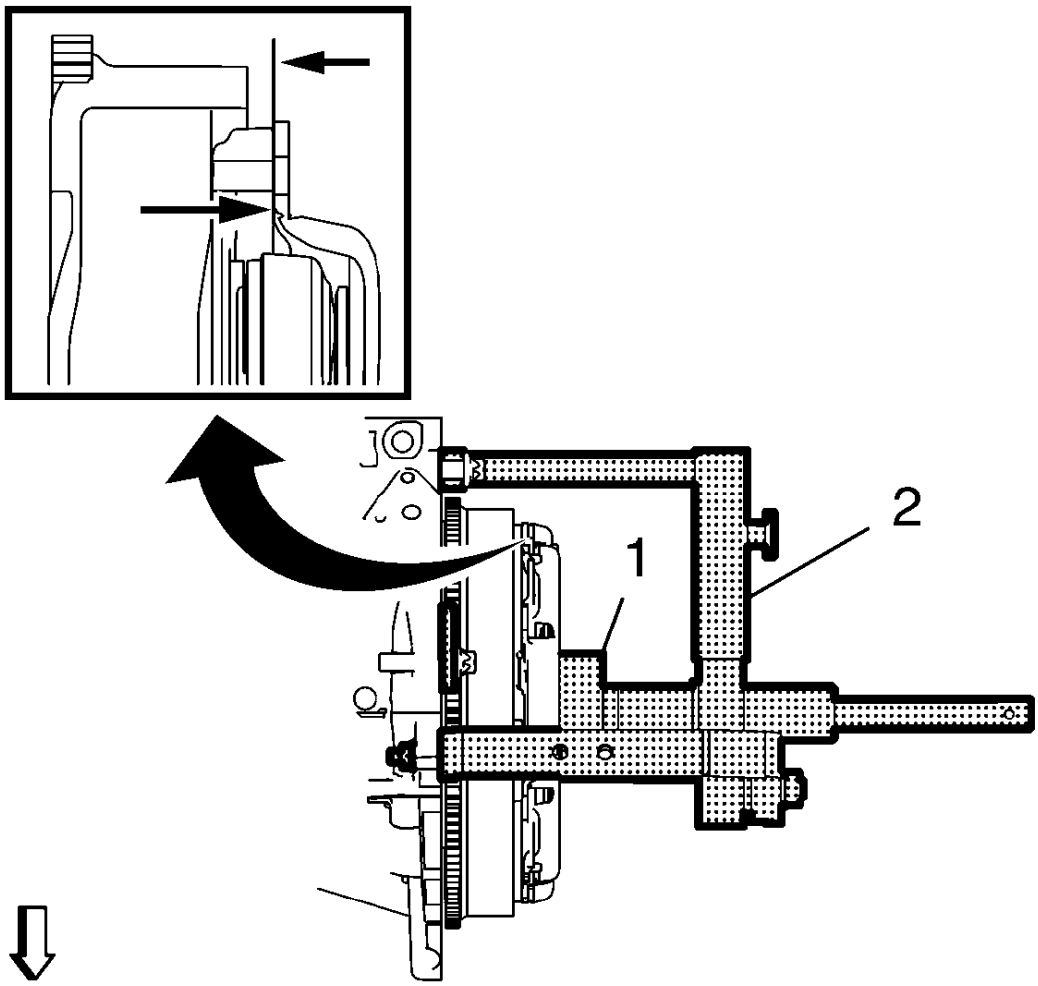

Fig. 42: Preload The Clutch Springs Using Special Tools
Courtesy of GENERAL MOTORS COMPANY

NOTE: Do NOT turn further than necessary.

4. Preload the clutch springs, using the **DT-6263** remover / installer (2).

   Turn the threaded rod (1) clockwise until the pressure plate contacts the flywheel (arrows).

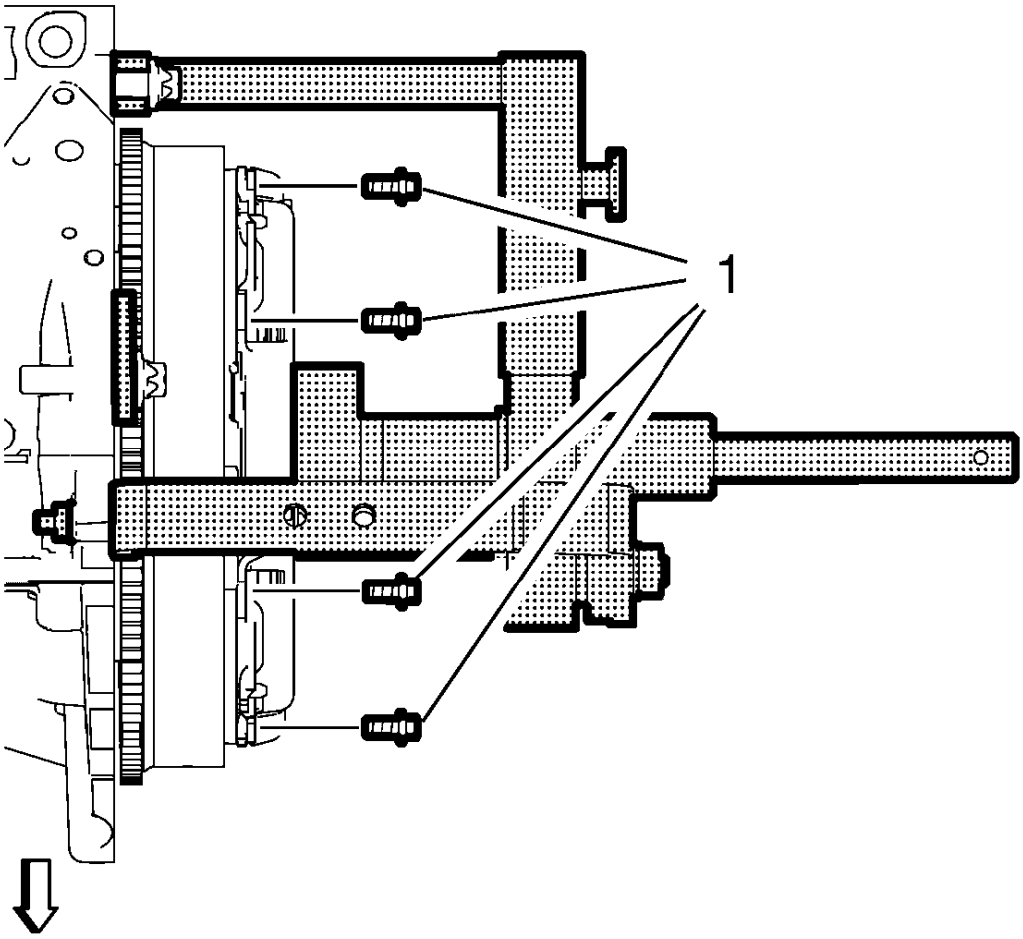

Fig. 43: Clutch Pressure Plate Bolts
Courtesy of GENERAL MOTORS COMPANY

CAUTION: Refer to Fastener Caution .

NOTE: In the case that the clutch pressure plate bolts where assembled with thread lock agent: Service may offer bolts that are not microencapsulated. If this is the case apply thread lock agent to the bolt. If fastener is microencapsulated, install NEW clutch pressure plate bolts. DO NOT reuse the old bolt.

5. Install the 6 NEW clutch pressure plate bolts (1). For the correct bolts refer to the electronic parts catalog.
6. Tighten the clutch pressure plate bolts to 28 (21 lb ft).

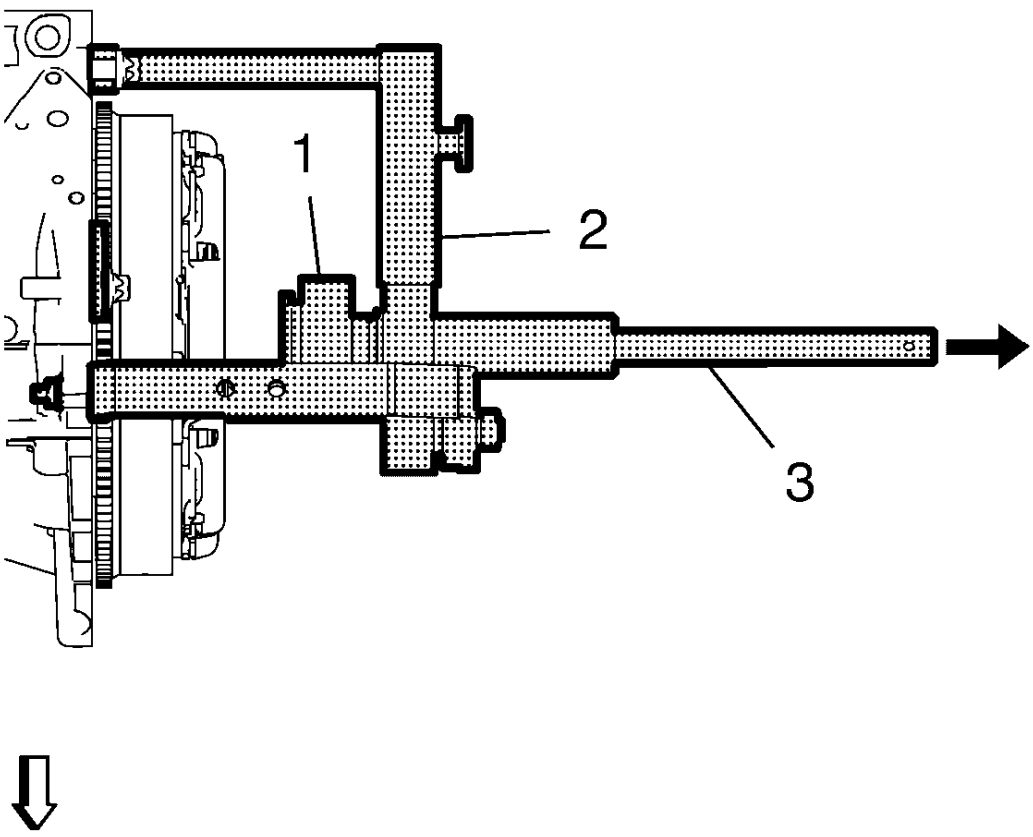

Fig. 44: Special Remover/Installer Tools
Courtesy of GENERAL MOTORS COMPANY

7. Remove the **DT-6263** remover / installer (2) from the engine block.
    1. Turn the threaded rod (1) of the **DT-6263** remover / installer counterclockwise to the stop.
    2. Remove the **DT-6263-30** centering drift (3) in conjunction with the clutch center guide (arrow).
    3. Remove the 4 bolts installing the **DT-6263** remover / installer to the engine block.

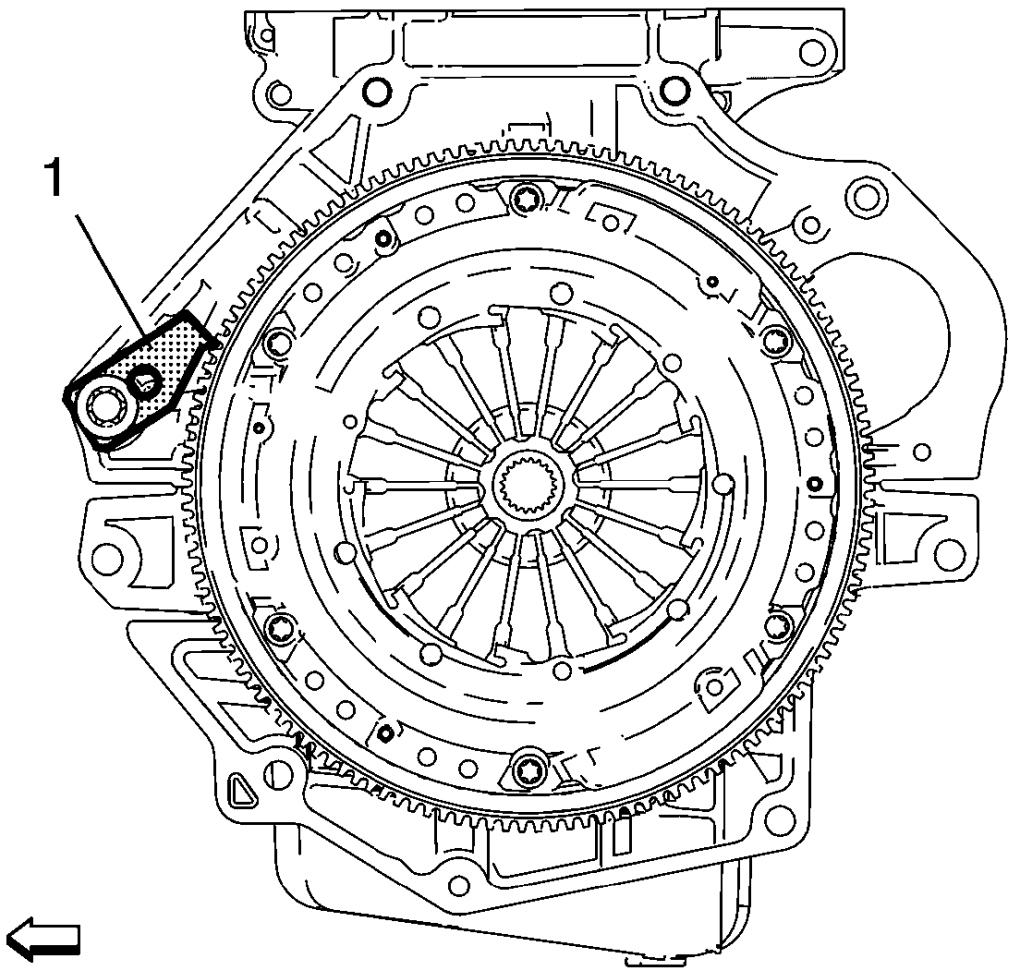

Fig. 45: Flywheel Holder Tool
Courtesy of GENERAL MOTORS COMPANY

8. Remove the **EN-652** holder (1) from the engine block.
9. Install the transmission. Refer to **Transmission Replacement** .

CLUTCH PRESSURE AND DRIVEN PLATE REPLACEMENT (1.8L LUW AND LWE)

Special Tools

- **DT-6263** Remover/Installer
- **DT-6263-27** Clutch Center Guide
- **EN-652** Flywheel Holder

For equivalent regional tools, refer to **Special Tools**.

Removal Procedure

NOTE:

- **To prevent damage to the spring fangs of pressure plate use the DT-6263 remover/installer to remove and install the clutch pressure plate.**
- **Note the different lengths of the brackets for attaching the DT-6263 remover/installer to the lower engine block.**

1. Remove the transmission. Refer to **Transmission Replacement** .

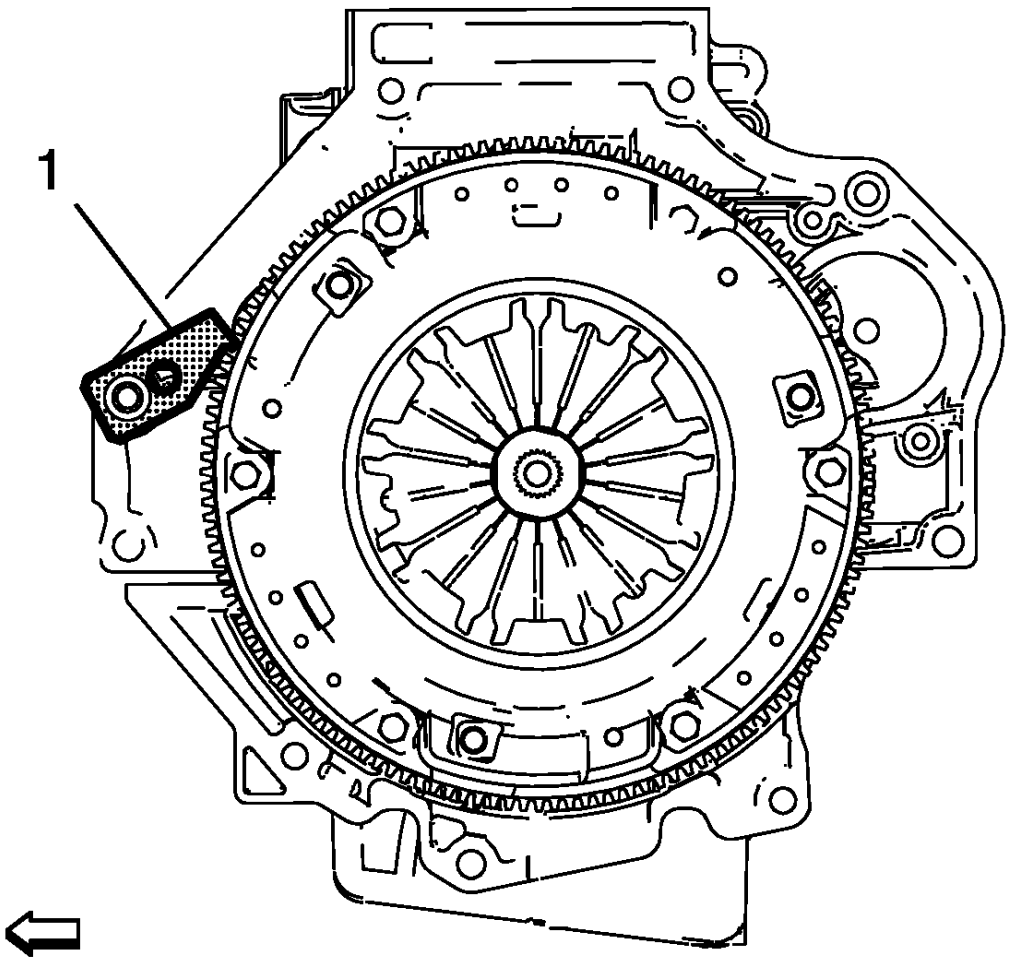

Fig. 46: Flywheel Holding Tool
Courtesy of GENERAL MOTORS COMPANY

2. Install the **EN-652** holder (1) to the engine block.

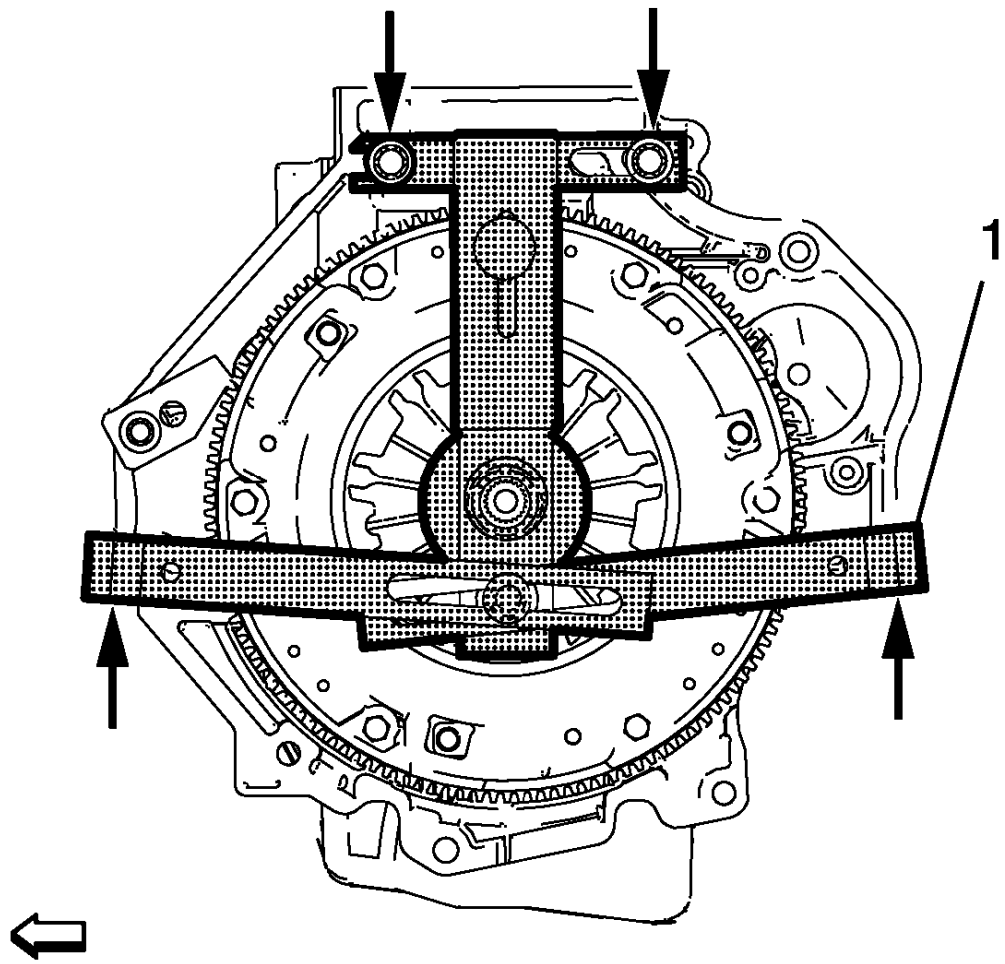

Fig. 47: Engine Support Brace
Courtesy of GENERAL MOTORS COMPANY

3. Install the **DT-6263** remover/installer (1) along with the **DT-6263-1** brace to the engine block.
4. Install the 4 bolts (arrows) to the engine block, but do not tighten yet.

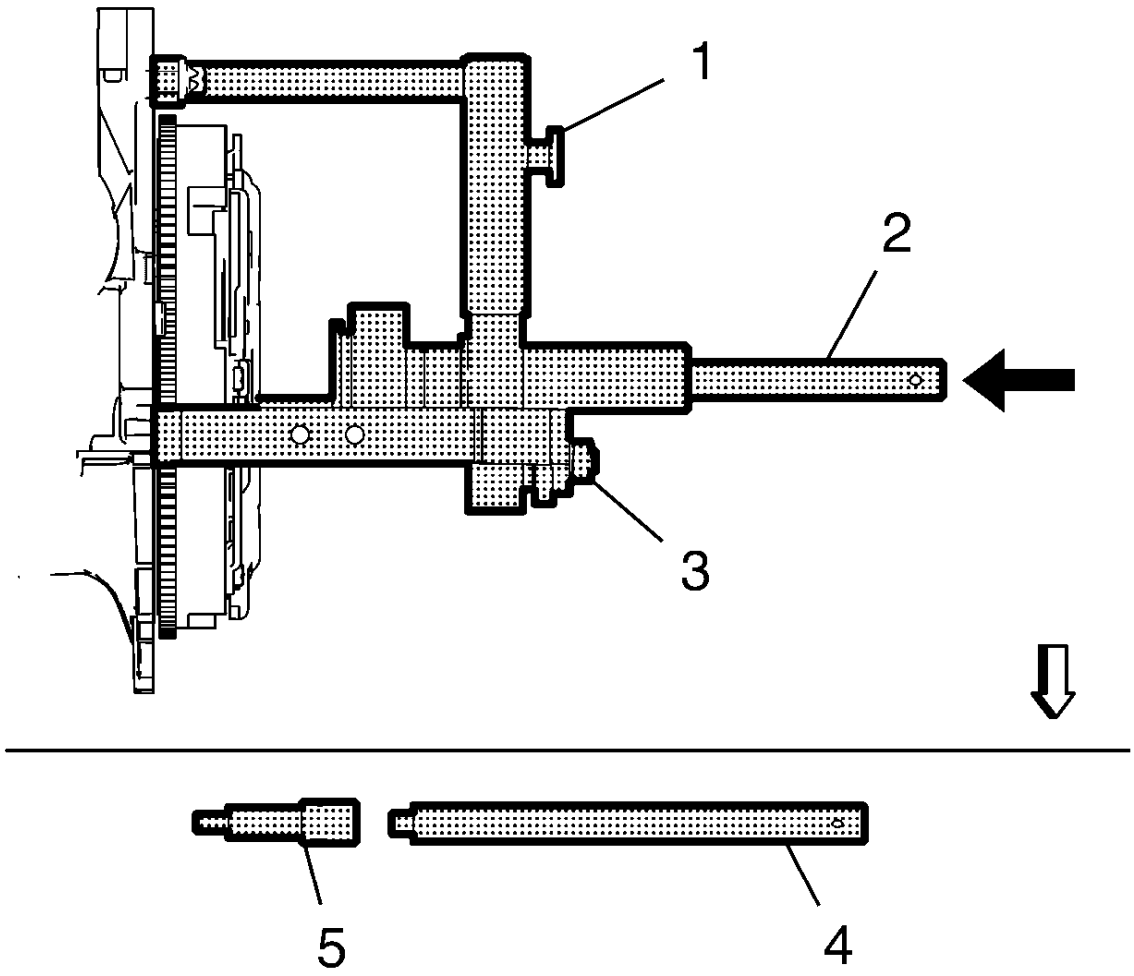

Fig. 48: Center Guide And Drift
Courtesy of GENERAL MOTORS COMPANY

5. Install the **DT-6263-27** center guide (5) to the **DT-6263-30** centering drift (4).
6. Tighten the **DT-6263** remover/installer.
    1. Align the **DT-6263-30** centering drift (2) along with the clutch center guide through the **DT-6263** remover/installer into the clutch driven plate and the crankshaft center (arrow).
    2. Tighten the knurled wheel (1).
    3. Tighten the bolt (3).
    4. Tighten the 4 bolts installing the **DT-6263** remover/installer to the engine block.

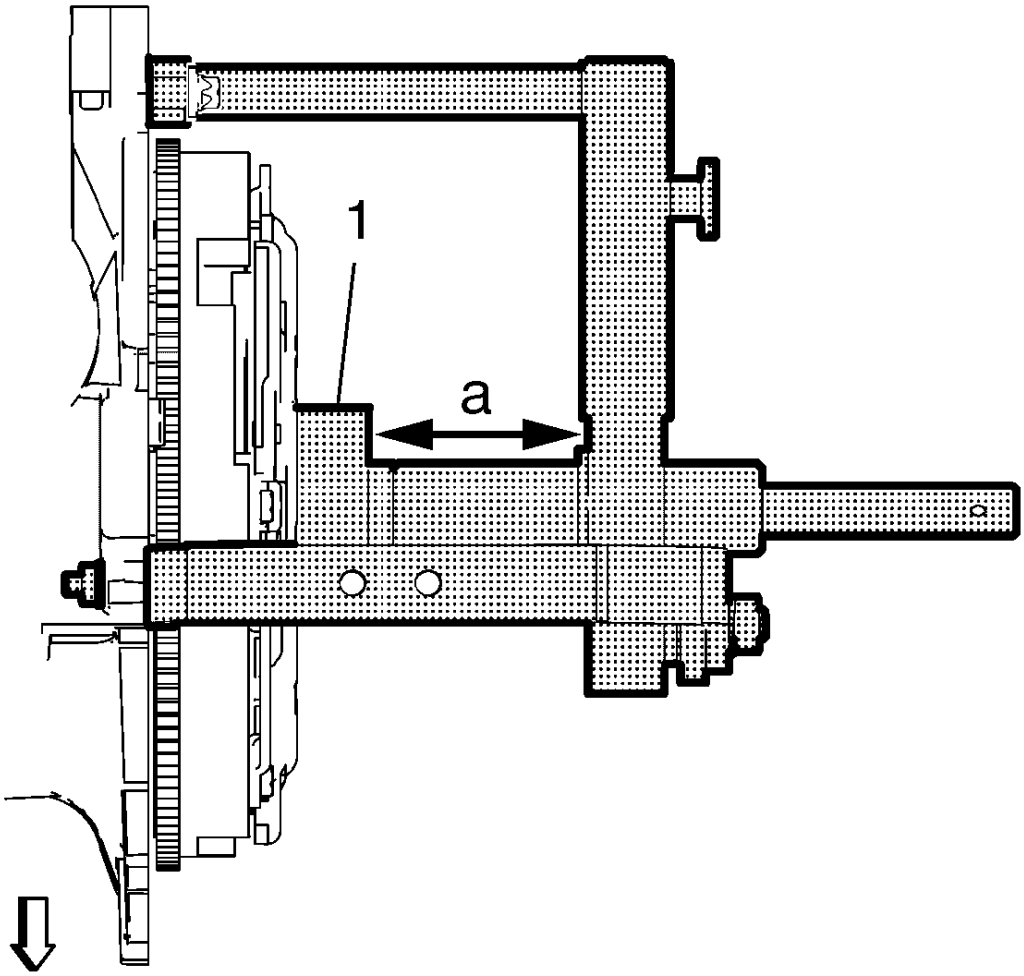

Fig. 49: Measuring Distance "a"
Courtesy of GENERAL MOTORS COMPANY

7. Preload the clutch springs, using the **DT-6263** remover/installer.
    1. Turn the threaded rod (1) until it rests against the spring tangs of the clutch pressure plate.
    2. Measure the distance a.

    NOTE: DO NOT turn further than necessary to gain free movement of the clutch disc.

    3.
    4. Turn the threaded rod clockwise until the distance a is extended by approximate 8 mm (0.31 lb in).
    5. Check for free movement of the clutch disc.

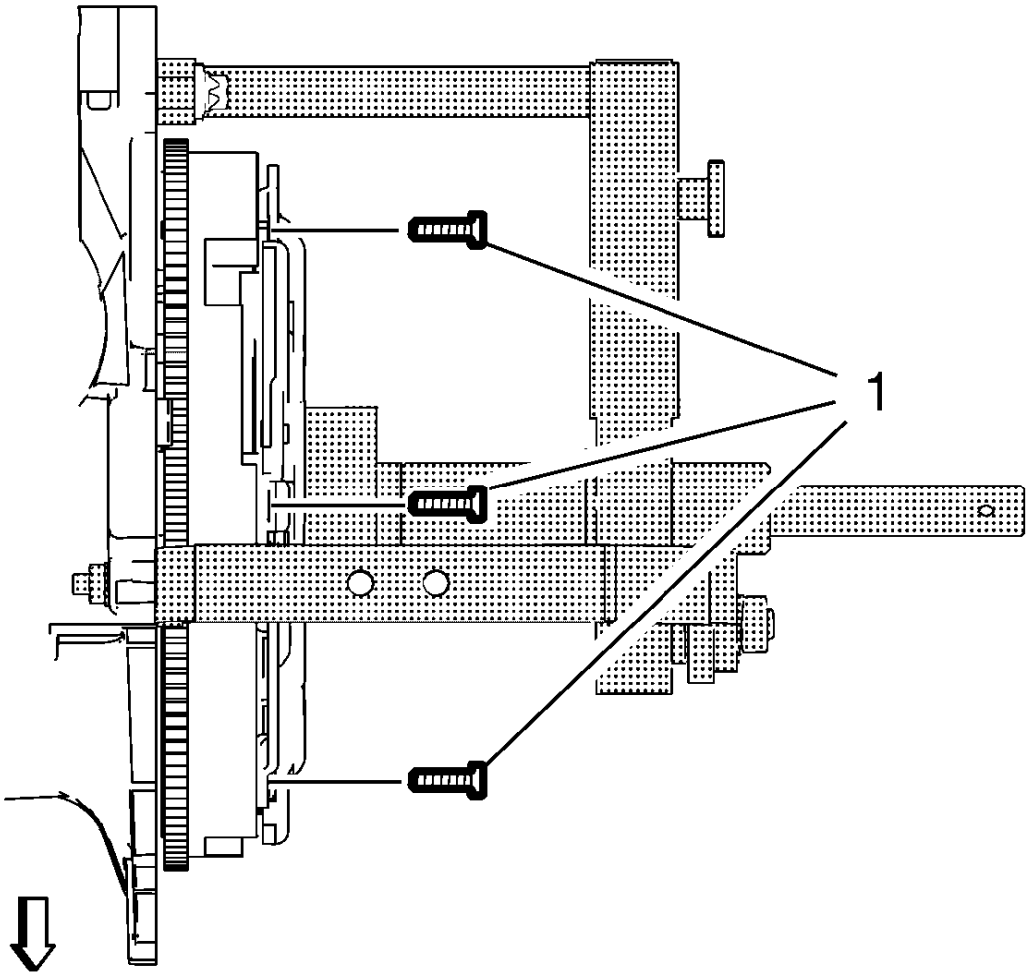

Fig. 50: Clutch Pressure Plate Bolts
Courtesy of GENERAL MOTORS COMPANY

NOTE: Check if bolt was installed with thread lock agent.

8. Remove and DISCARD the 6 clutch pressure plate bolts (1).

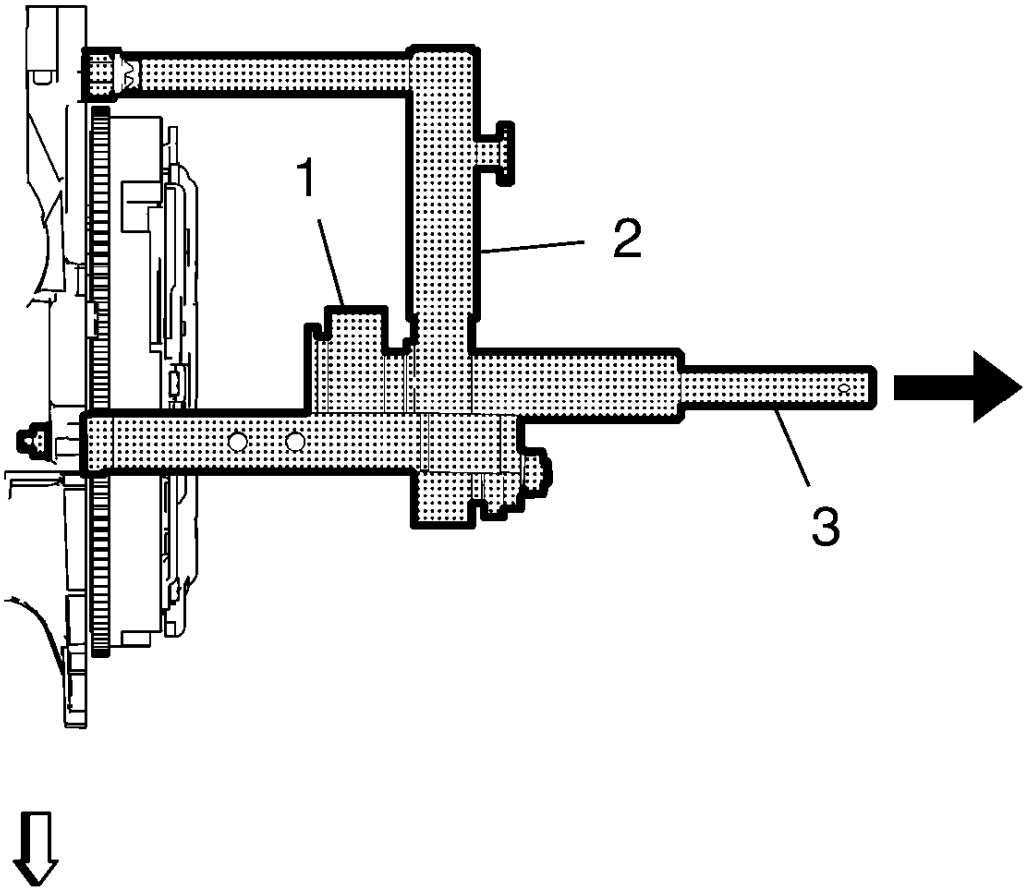

Fig. 51: Centering Drift And Clutch Center Guide
Courtesy of GENERAL MOTORS COMPANY

9. Release the **DT-6263** remover/installer (2).
    1. Turn the threaded rod (1) of the **DT-6263** remover/installer counter clockwise to the stop.
    2. Remove the **DT-6263-30** centering drift (3) along with the clutch center guide (arrow).

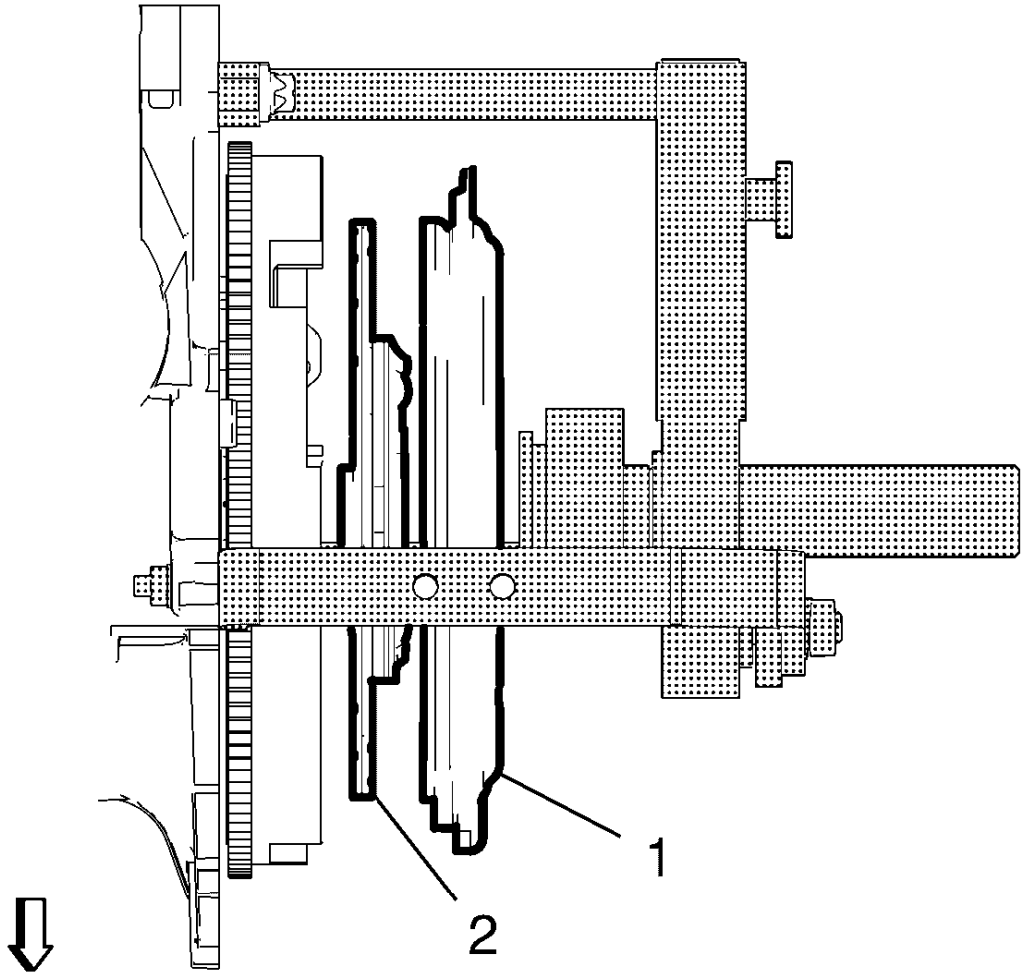

Fig. 52: Clutch Pressure Plate And Driven Plate
Courtesy of GENERAL MOTORS COMPANY

10. Remove the clutch pressure plate (1) and the driven plate (2).

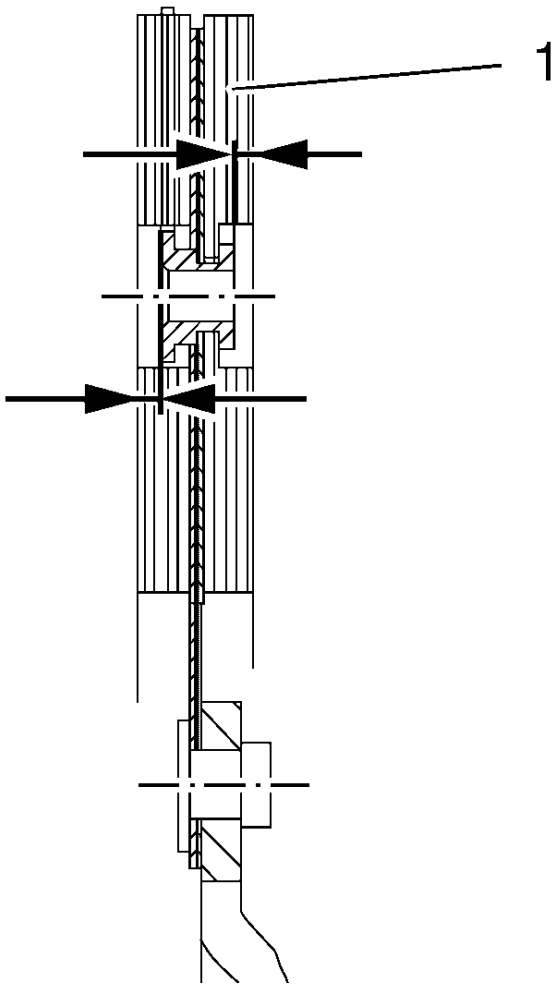

Fig. 53: Clutch Pressure Plate And Driven Plate Inspection Points
Courtesy of GENERAL MOTORS COMPANY

NOTE: Clutch pressure plate and driven plate contaminated by foreign bodies (oil, cleaning agent etc.) have to be replaced. Check the clutch driven plate for damage and friction rust in the hub profile and replace it if necessary. DO NOT clean the clutch pressure plate and the driven plate with a high pressure cleaner or component washing machine.

11. Inspect the clutch pressure plate and the driven plate (1) and replace it, if necessary.
    - Excessive wear
    - Burned friction surface
    - Oil on friction surface
    - Damaged spline hub
    - Damaged springs

NOTE: The clutch driven plate has to be replaced if the lining projection is less than 0.5 mm (0.020 in) (arrows).

12. Inspect the projection of the lining at the clutch lining rivets.
13. Slide the clutch pressure plate onto the transmission input shaft and check for easy movement.

Installation Procedure

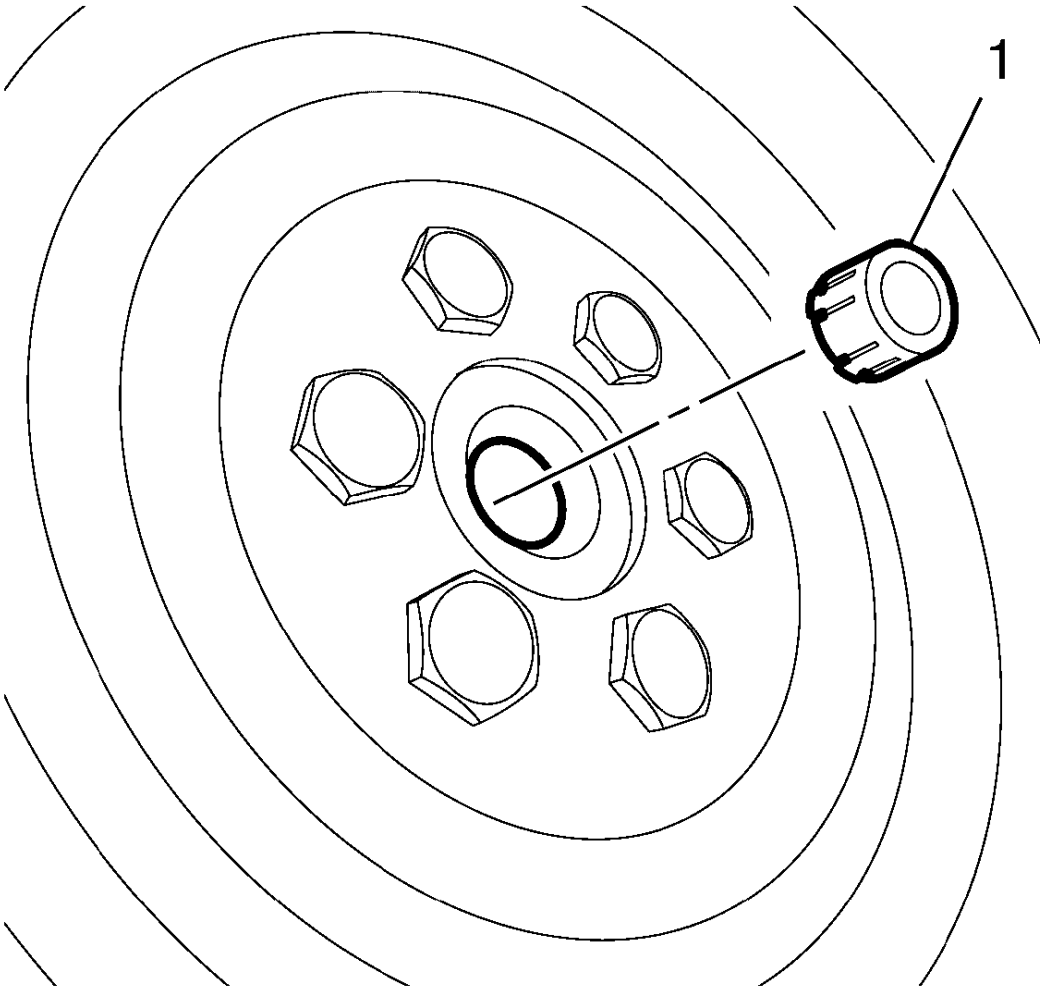

Fig. 54: Clutch Bolt Bushing
Courtesy of GENERAL MOTORS COMPANY

1. Install the bushing (1) to the crankshaft. The bushing stays in the crankshaft. For the correct bushing refer to the electronic parts catalog.

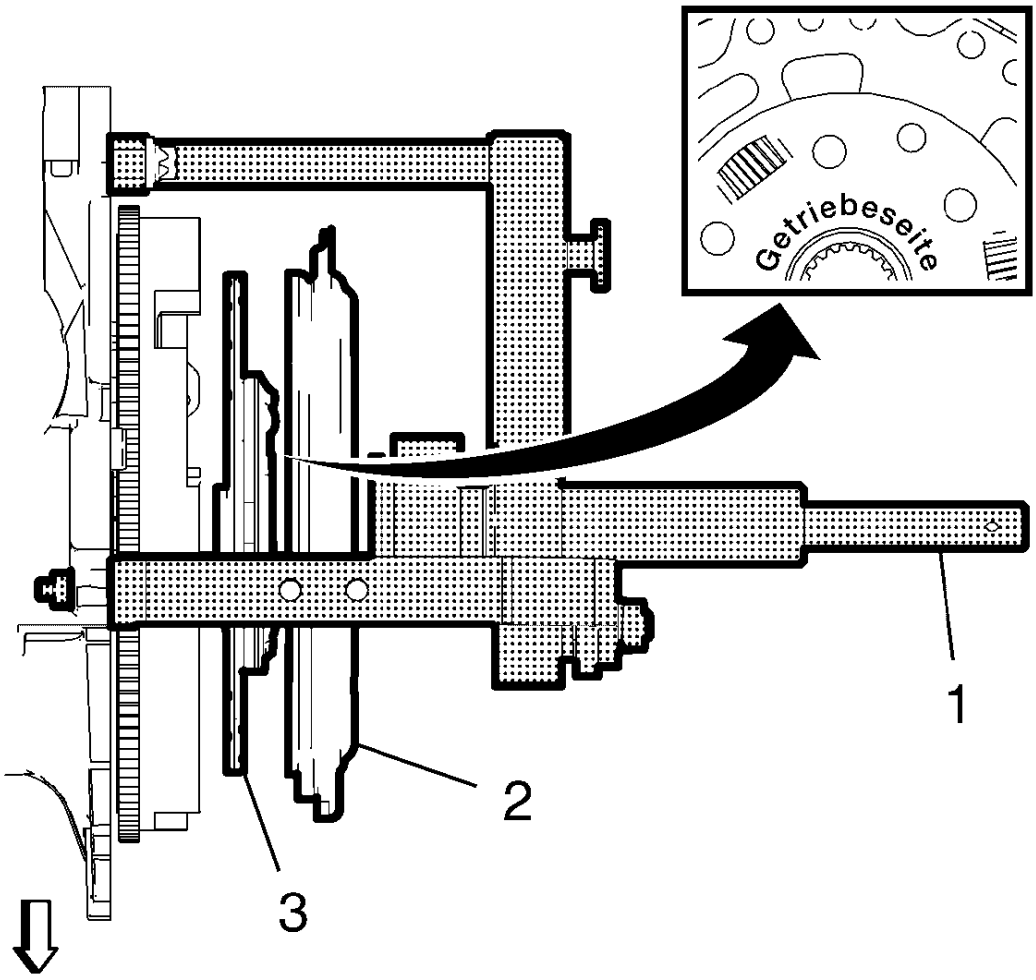

Fig. 55: Installing Bolts To Correct Site
Courtesy of GENERAL MOTORS COMPANY

2. Re-cut the 6 clutch pressure plate bolt threads.

NOTE: **The clutch driven plate must be installed so that the German lettering "Getriebe-seite" (means Gearbox-side) on the plate is orientated toward the transmission.**

3. Install the clutch driven plate (3) and the clutch pressure plate (2).
4. Center the clutch driven plate, using the **DT-6263-30** centering drift (1) along with the clutch center guide.

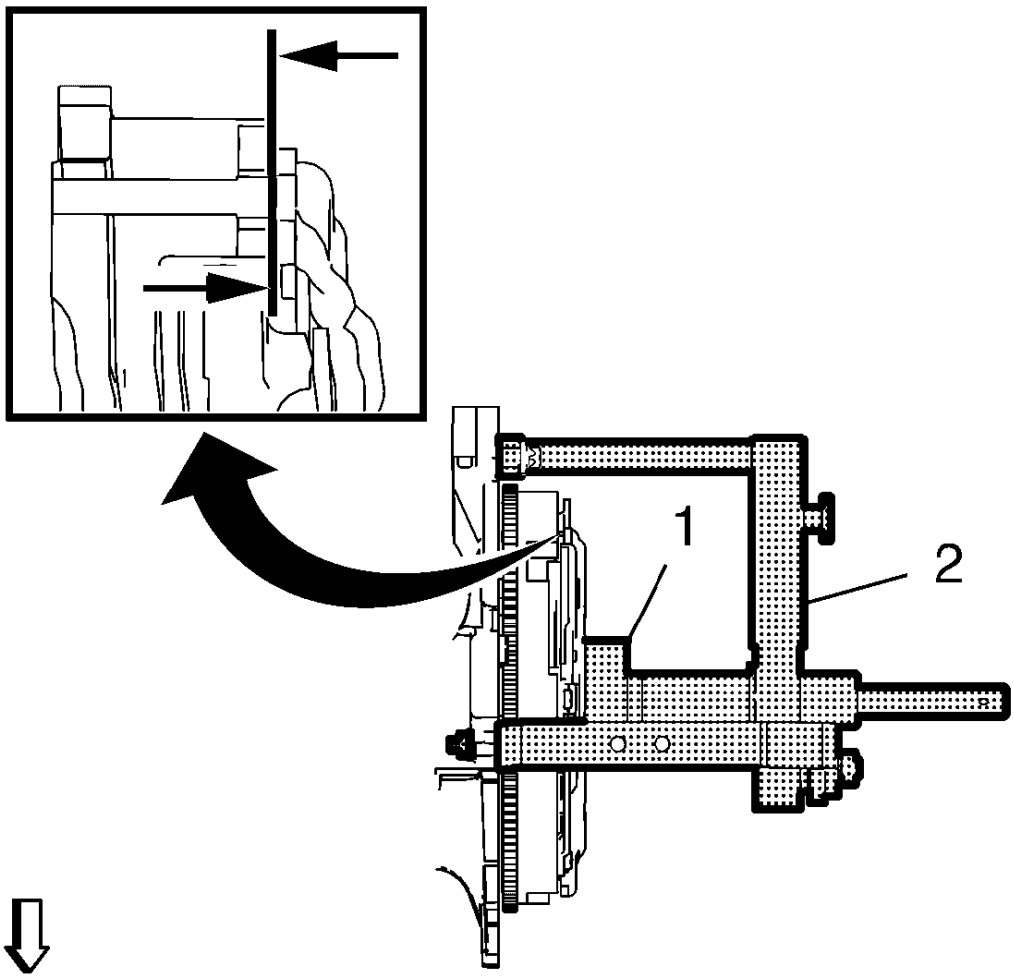

Fig. 56: Preloading Clutch Springs Using Special Tool
Courtesy of GENERAL MOTORS COMPANY

NOTE: DO NOT turn further than necessary.

5. Preload the clutch springs, using the **DT-6263** remover/installer (2).
6. Turn the threaded rod (1) clockwise until the pressure plate contacts the flywheel (arrows).

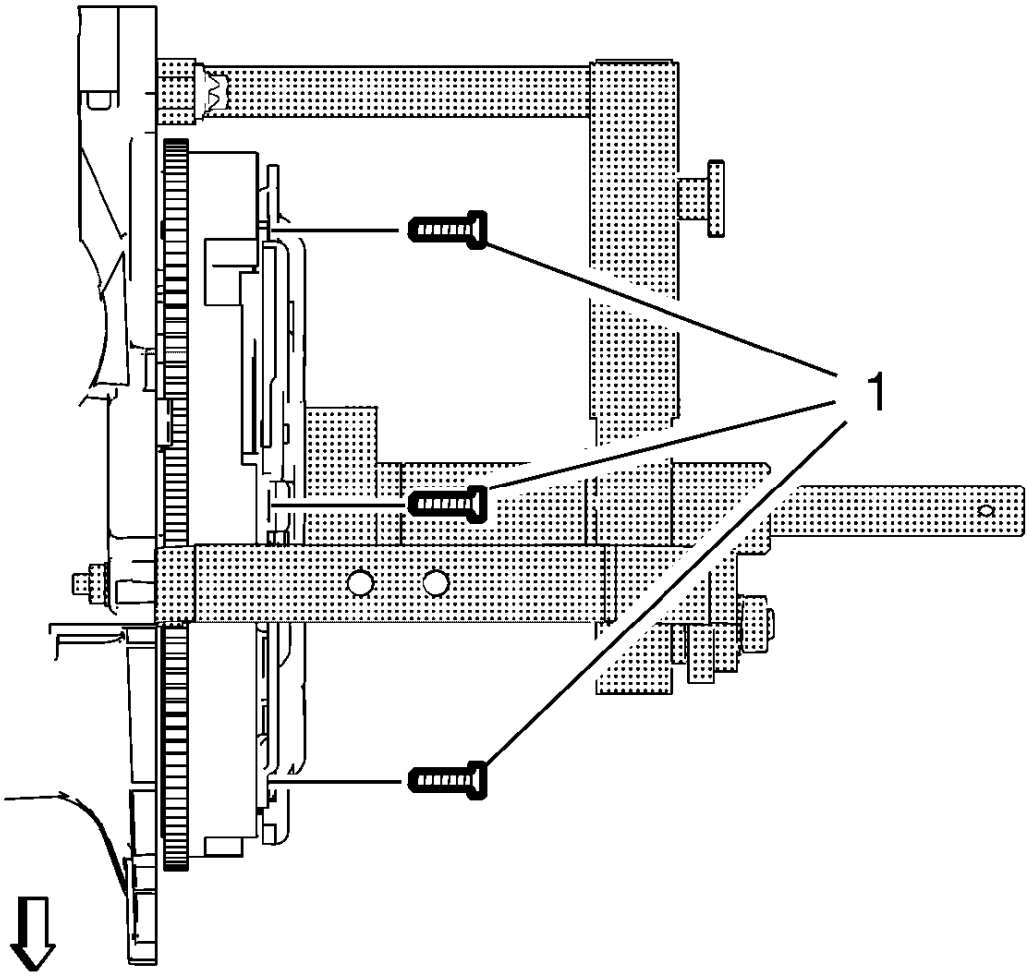

Fig. 57: Clutch Pressure Plate Bolts
Courtesy of GENERAL MOTORS COMPANY

CAUTION: Refer to Fastener Caution .

NOTE: In the case that the clutch pressure plate bolts where assembled with thread lock agent: Service may offer bolts that are not microencapsulated. If this is the case apply thread lock agent to the bolt. If the fastener is microencapsulated, install NEW clutch pressure plate bolts. DO NOT reuse the old bolts.

7. Install the 6 NEW clutch pressure plate bolts (1). For the correct bolts refer to the electronic parts catalog.
8. Tighten the clutch pressure plate bolts to 28 (21 lb ft).

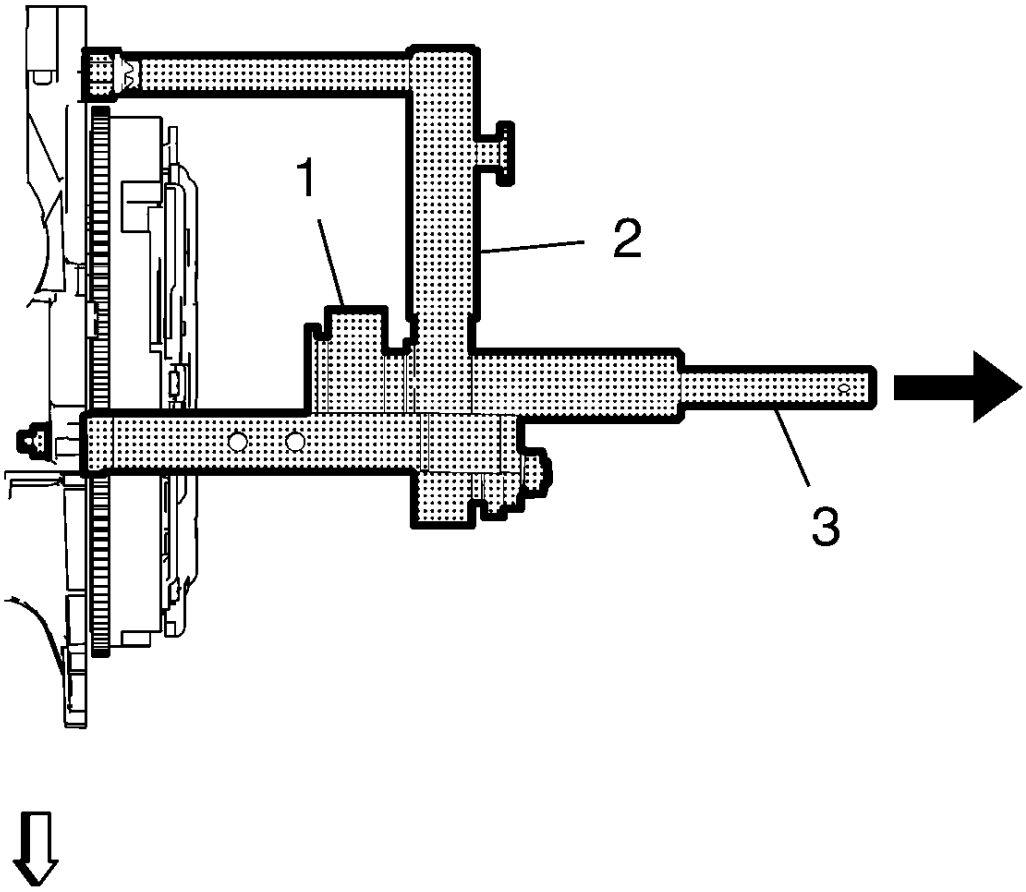

Fig. 58: Centering Drift And Clutch Center Guide
Courtesy of GENERAL MOTORS COMPANY

9. Remove the **DT-6263** remover/installer (2) from the engine block.
    1. Turn the threaded rod (1) of the **DT-6263** remover/installer counterclockwise to the stop.
    2. Remove the **DT-6263-30** centering drift (3) along with the clutch center guide (arrow).
    3. Remove the 4 bolts installing the **DT-6263** remover/installer to the engine block.

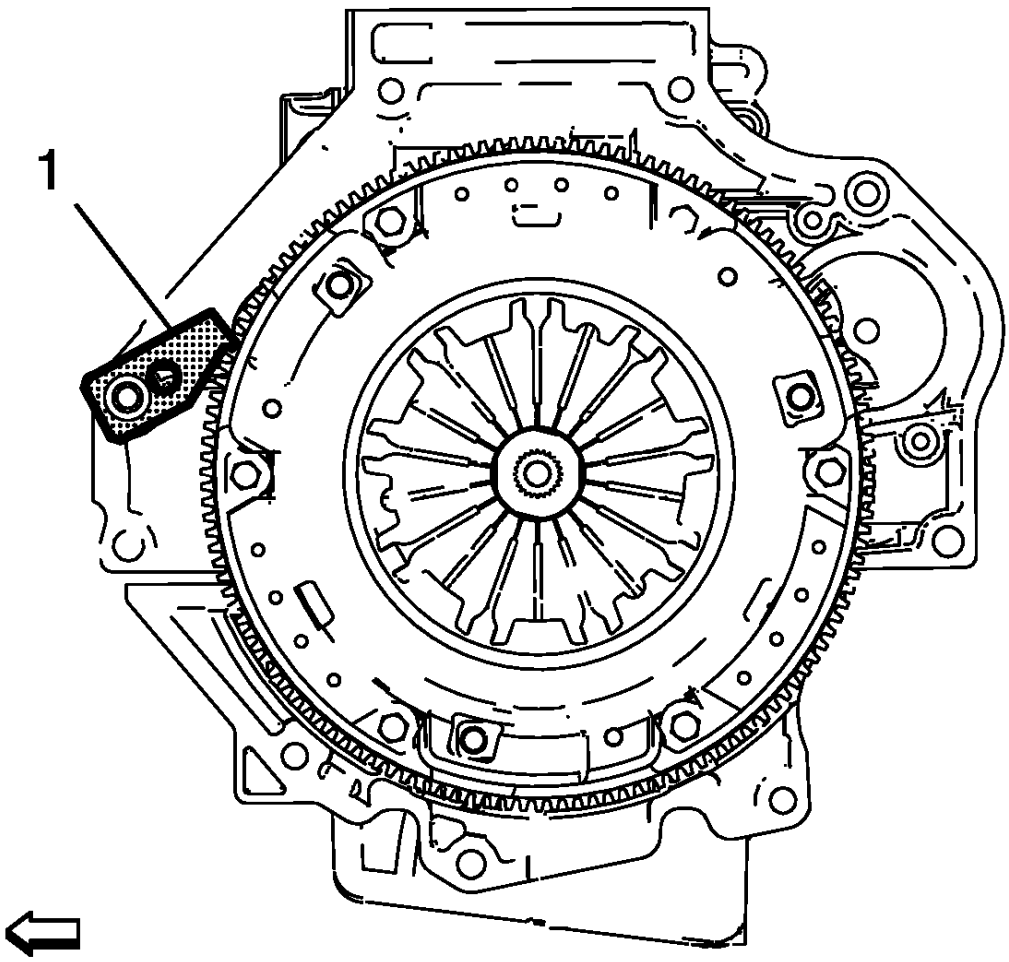

Fig. 59: Flywheel Holding Tool
Courtesy of GENERAL MOTORS COMPANY

10. Remove the **EN-652** holder (1) from the engine block.
11. Install the transmission. Refer to **Transmission Replacement** .

CLUTCH ACTUATOR CYLINDER REPLACEMENT

Removal Procedure

1. Remove the transmission. Refer to **Transmission Replacement** .

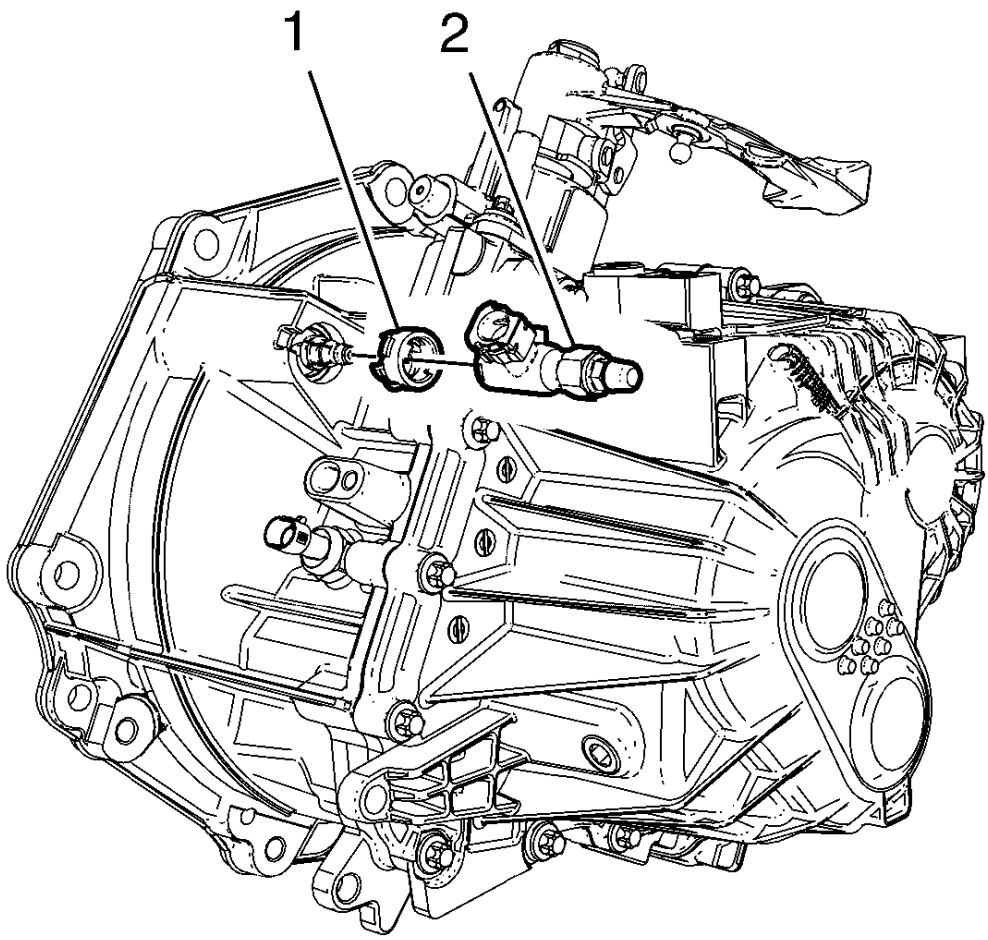

Fig. 60: Clutch Actuator Cylinder Pipe Sleeve And Elbow
Courtesy of GENERAL MOTORS COMPANY

WARNING: Use only Delco Supreme 11, GM P/N 12377967 (Canadian P/N 992667), or equivalent DOT 3 brake fluid from a clean, sealed container. Do not use fluid from an open container that may be contaminated with water. Improper or contaminated fluid could result in damage to components, or loss of braking, with possible injury.

2. Remove the clutch actuator cylinder pipe elbow (2) and the clutch actuator cylinder pipe sleeve (1). The clutch actuator pipe seal must not stick in the elbow pipe.

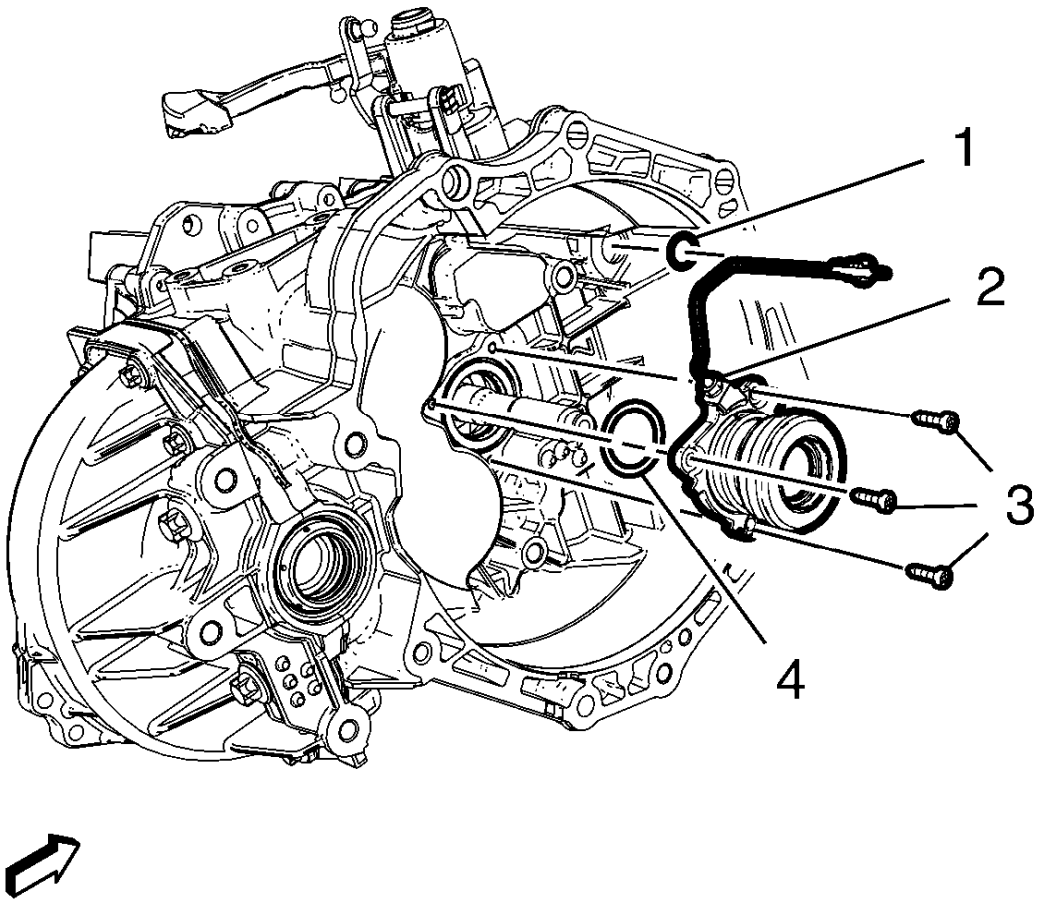

Fig. 61: Clutch Actuator Cylinder, Bolts And Seal
Courtesy of GENERAL MOTORS COMPANY

3. Remove the 3 clutch actuator cylinder bolts (3).
4. Remove the clutch actuator cylinder (2).
5. Remove and DISCARD the clutch actuator cylinder seal (4).
6. Remove and DISCARD the clutch actuator cylinder pipe seal (1)

Installation Procedure

1. Clean the 3 clutch actuator cylinder threads in clutch housing.

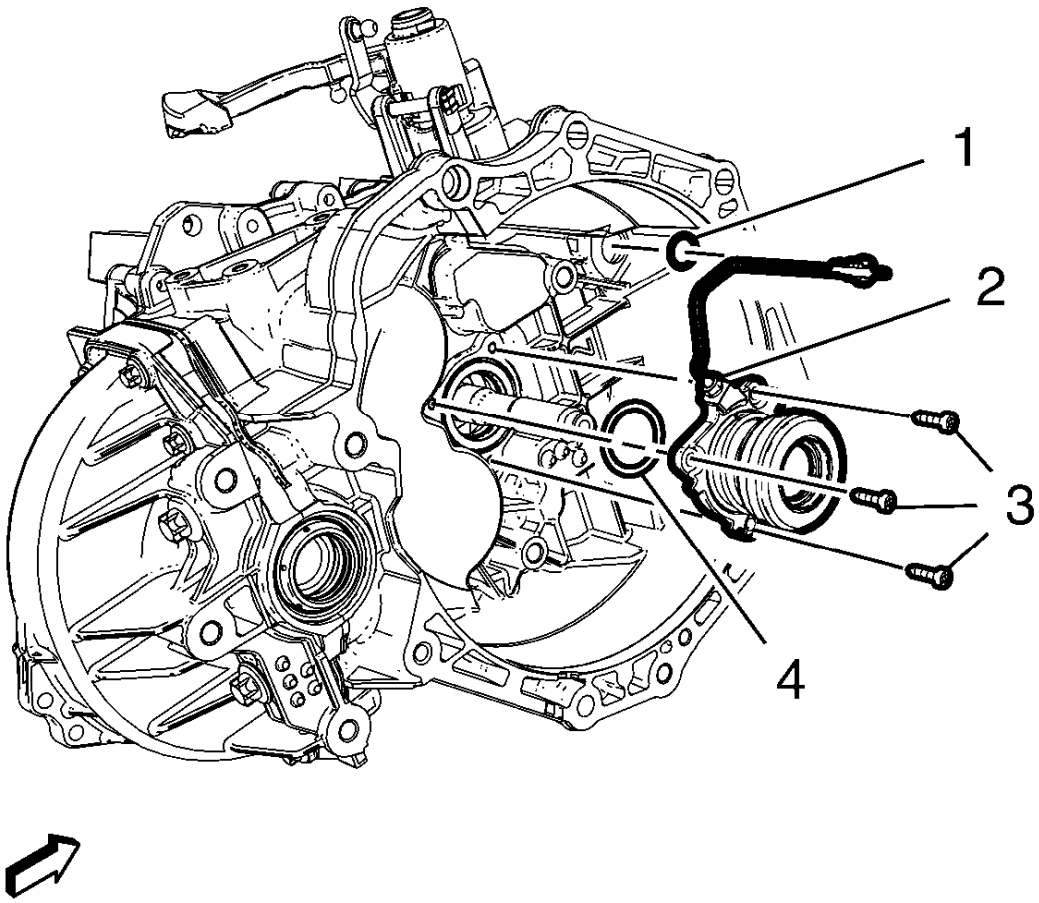

Fig. 62: Clutch Actuator Cylinder, Bolts And Seal
Courtesy of GENERAL MOTORS COMPANY

CAUTION: Refer to Clutch Actuator Cylinder and Seal Caution .

CAUTION: Refer to Clutch Actuator Cylinder Mounting Sleeve Caution .

2. Install the NEW clutch actuator cylinder pipe seal (1).
3. Install the NEW clutch actuator cylinder seal (4).

WARNING: Refer to Clutch Actuator Cylinder Warning .

4. Install the clutch actuator cylinder (2).

CAUTION: Refer to Fastener Caution .

NOTE: Service may offer bolts that are not coated with thread lock agent. If this is the case apply thread lock agent to the bolt.

5. Install 3 NEW clutch actuator cylinder bolts (3) and handtighten them equally.
6. Tighten the 3 clutch actuator cylinder bolts to 6 N.m (53 lb in).

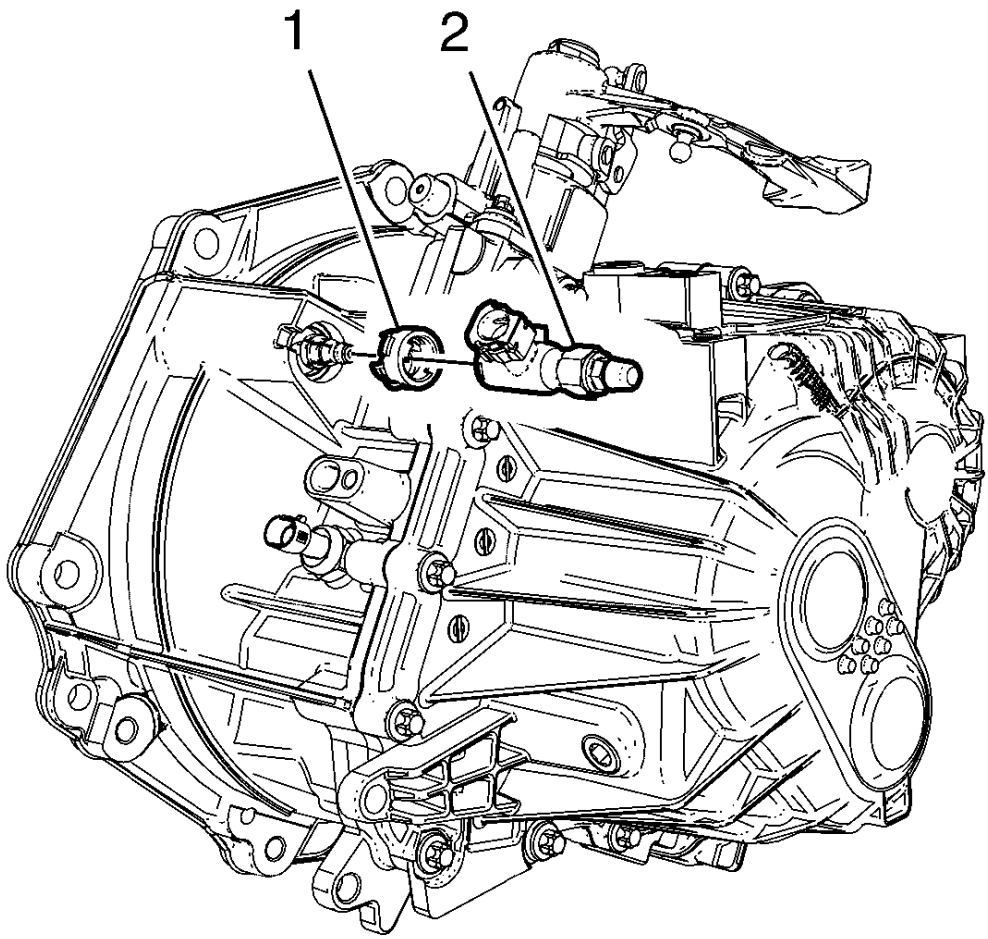

Fig. 63: Clutch Actuator Cylinder Pipe Sleeve And Elbow
Courtesy of GENERAL MOTORS COMPANY

7. Install clutch actuator cylinder pipe sleeve (1) and clutch actuator cylinder pipe elbow (2).

8. Install transmission. Refer to **Transmission Replacement** .

DESCRIPTION AND OPERATION

CLUTCH SYSTEM DESCRIPTION AND OPERATION

Clutch Spin Down Time

Inspect the clutch spin down time as follows:

1. Apply the parking brake and block the vehicle wheels.
2. Shift the manual transmission into NEUTRAL.
3. Start the engine. Run the engine at idle speed.
4. Engage the clutch.
5. Disengage the clutch. Wait 9 seconds.
6. Shift the transmission into REVERSE.

Clutch Driving Members

The clutch driving members are 2 flat surfaces machined to a smooth finish. They include the following:

- The rear face of the engine flywheel
- The front face of the clutch pressure plate

Clutch Driven Members

The driven member is the clutch driven plate. The clutch driven plate has a splined hub. The splined hub slides lengthwise along the splines of the input shaft. The splined hub drives the input shaft through these same splines. The driving and driven members are held together with a spring pressure. This pressure is exerted by a diaphragm spring in the clutch cover.

Hydraulic Clutch Fluid

CAUTION: Do not use mineral or paraffin-base oil in the clutch hydraulic system. These fluids may damage the rubber parts in the cylinders.

The hydraulic clutch fluid transmits the force from the clutch master cylinder to the clutch actuator cylinder.

Hydraulic Clutch Operating Members

The clutch system consists of the following components:

- A master cylinder with a remote reservoir and with the clutch actuator cylinder front pipe
- A clutch pedal position sensor

- An clutch actuator cylinder
- The clutch pressure plate
- The clutch cover
- The diaphragm spring
- The clutch driven plate
- The torsional springs

With the depression of the clutch pedal, the clutch master cylinder becomes pressurized from the force of the push rod into the master cylinder. This push rod motion forces hydraulic fluid through the hose assembly from the master cylinder to the clutch actuator cylinder. The clutch actuator cylinder then pushes the release bearing into the diaphragm spring to disengage the clutch. A hole in the bulkhead accommodates the master cylinder. A quick connect coupling attaches the clutch actuator cylinder front pipe assembly to the actuator cylinder. The actuator cylinder is inside the transmission and on the input bearing retainer. The master cylinder and clutch actuator cylinder front pipe assembly can be replaced without having to gain access to the clutch system internal components; simply disengage/engage the quick connect coupling mounted through the transmission housing. No adjustments to the clutch system are necessary. As the clutch wears, the fluid level in the clutch reservoir changes to compensate for clutch wear. A new system has fluid in the reservoir. The clutch pedal position sensor on the clutch pedal/bracket assembly has 2 functions. One function is a clutch interlock, ensuring the engine does not start unless the clutch pedal is positioned on the floor. The second function is to cut off the cruise control system, if equipped, when the clutch pedal is pushed downward.

SPECIAL TOOLS AND EQUIPMENT

SPECIAL TOOLS

Illustration	Tool Number/ Description
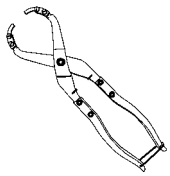	DT-6202-A Pliers
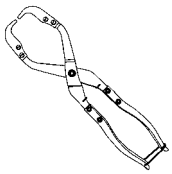	DT-6202-B Pliers
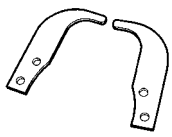	DT-6202-20 Adapter to DT-6202-A
	DT-6263

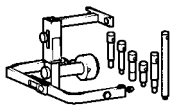	KM-6263 Remover/Installer
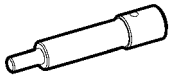	DT-6263-27 KM-6263-27 Center Guide
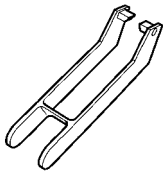	DT-50894 Remover
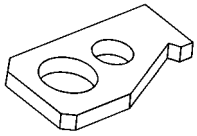	EN-652 KM-652 Flywheel Holder

2013 TRANSMISSION

Manual Transmission - M32 - Cruze

SPECIFICATIONS

FASTENER TIGHTENING SPECIFICATIONS

Fastener Tightening Specifications

Application	Specification	
	Metric	English
Backup Lamp Switch	35 N.m	26 lb ft
Front Differential Carrier Flange Bolt		
• First Pass	20 N.m (1)	15 lb ft (1)
• Final Pass	45 degrees	
Oil Drain Plug	20 N.m	15 lb ft
Oil Filler Plug	30 N.m	22 lb ft
Shift Control Lever Bracket Bolt	20 N.m	15 lb ft
Shift Control Housing - to Transmission	20 N.m	15 lb ft
Transmission Control - to Chassis	8 N.m	71 lb in
Transmission Front and Rear Bolt (M12)	60 N.m	44 lb ft
Transmission Front Mount Bolt - to Front Suspension Frame	100 N.m	74 lb ft
Transmission Front Mount Bolt - to Transmission	100 N.m	74 lb ft
Transmission Lower Bolt (M10)	40 N.m	30 lb ft
Transmission Mount Bracket Bolt - Left Side - to Transmission	100 N.m	74 lb ft
Transmission Mount Bolt - Left Side - to Chassis	62 N.m	46 lb ft
Transmission Mount Nut - Left Side - to Chassis	62 N.m	46 lb ft
Transmission Mount Bolt - Left Side - to Bracket		
• First Pass	50 N.m (1)	37 lb ft (1)
• Final Pass	60 to 75 degrees	
Transmission Mount Bracket - Rear Bolt - to Transmission	100 N.m	74 lb ft
Transmission Mount - Rear Bolt - to Front Suspension Frame	110 N.m	81 lb ft
Transmission Mount - Rear Bolt - to Mount Bracket	100 N.m	74 lb ft
Transmission Nut and Bolt (M10)	40 N.m	30 lb ft
Transmission Upper Bolt (M12)	60 N.m	44 lb ft
1 = Use NEW Fastener.		

MANUAL TRANSMISSION SPECIFICATIONS

Manual Transmission Specifications

Name	Specification		
Transmission Type	M32-6		
Production Location	GMPT Europe		
Transmission Drive	Transverse mounted- Front Wheel Drive		
Maximum Engine Torque	320 N.m (236 lb ft)		
Transmission Content	Fully synchronized with final drive gear and differential		
Transmission RPO Codes	MZ0	MF3	MR5
Engine RPO Codes	LUW (U18XFR) LWE (P18XER)	LUV (U14NFT)	LUV (U14NFT)
1st Gear Ratio	3.818	4.273	4.273
2nd Gear Ratio	2.158	2.158	2.353
3rd Gear Ratio	1.475	1.302	1.475
4th Gear Ratio	1.067	0.959	1.067
5th Gear Ratio	0.875	0.744	0.875
6th Gear Ratio	0.744	0.614	0.744
Reverse Gear Ratio	3.545	3.818	3.818
Transmission Fluid Type	US Part Number: 19259104 Canadian Part Number: 19259105		
Fluid Capacity Total	1.9 liters (2 quarts)		
Fluid Capacity Refill	1.8 liters (1.9 quarts)		
Fluid Capacity Re-Manufactured Transmission	1.5 liters (1.6 quarts)		
Transmission Weight Dry (Approximate)	53.5 - 55.5 kg (118 - 122 lb)		

ADHESIVES, FLUIDS, LUBRICANTS, AND SEALERS

Adhesives, Fluids, Lubricants, and Sealers

Application	Type of Material	GM Part Number	
		United States	Canada
Input Shaft Lubrication	GNY 202	Refer to Electronic Parts Catalog	Refer to Electronic Parts Catalog
Manual Transmission Fluid	Castrol BOT 402	19259104	19259105

SCHEMATIC WIRING DIAGRAMS

MANUAL TRANSMISSION WIRING SCHEMATICS

MF3 and MZ0

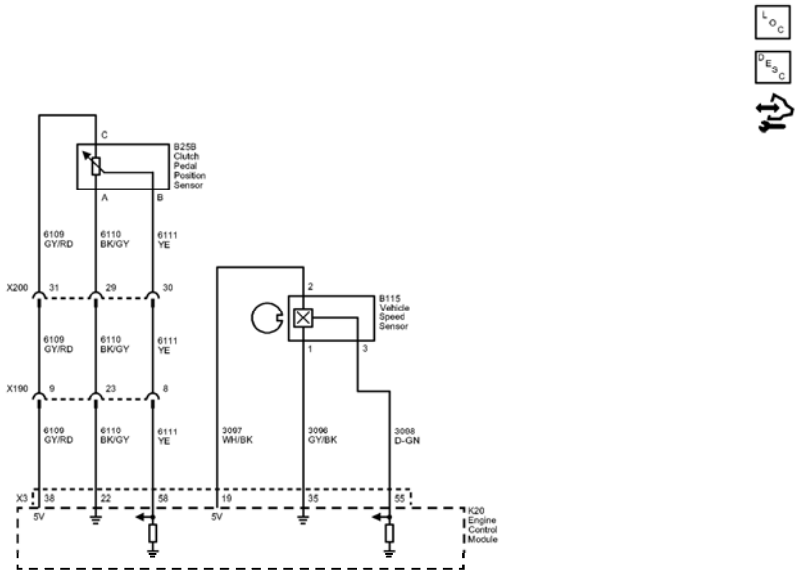

Fig. 1: Manual Transmission (MF3 and MZ0) Wiring Schematics
Courtesy of GENERAL MOTORS COMPANY

Callout	Component Name
6109	Clutch Apply Sensor Voltage Reference
6109 GY/RD	6109 GY/RD
CAV_38	38
CONN_X3	X3
CAV_C	C
6110	Clutch Apply Sensor Low Reference
6110_BK/GY	6110 BK/GY
CAV_22	22
CAV_A	A
6111	Clutch Apply Sensor Signal
6111_YE	6111 YE
CAV_58	58
CAV_B	B
3097	Output Speed (Digital) 5V Sensor Return
3097_WH/BK	3097 WH/BK
CAV_19	19
CAV_2	2

3096	Output Speed (Digital) 5V Sensor Reference
3096_GY/BK	3096 GY/BK
CAV_35	35
CAV_1	1
3098	Output Speed (Digital) Signal
3098_D-GN	3098 D-GN
CAV_55	55
CAV_3	3
6109_GY/RD	6109 GY/RD
6110_BK/GY	6110 BK/GY
6111_YE	6111 YE
6109_GY/RD	6109 GY/RD
6110 BK/GY	6110 BK/GY
6111_YE	6111 YE
X200	X200
CAV_31	31
CAV_29	29
CAV_30	30
X190	X190
CAV_9	9
CAV_23	23
CAV_8	8
X200	X200
X190	X190
B25B	(MF3 or MZ0)
K20	
B115	(MF3 or MZ0)

COMPONENT LOCATOR

MANUAL TRANSMISSION COMPONENT VIEWS

Shift Control and Shift Lever/Selector Lever Cable Components

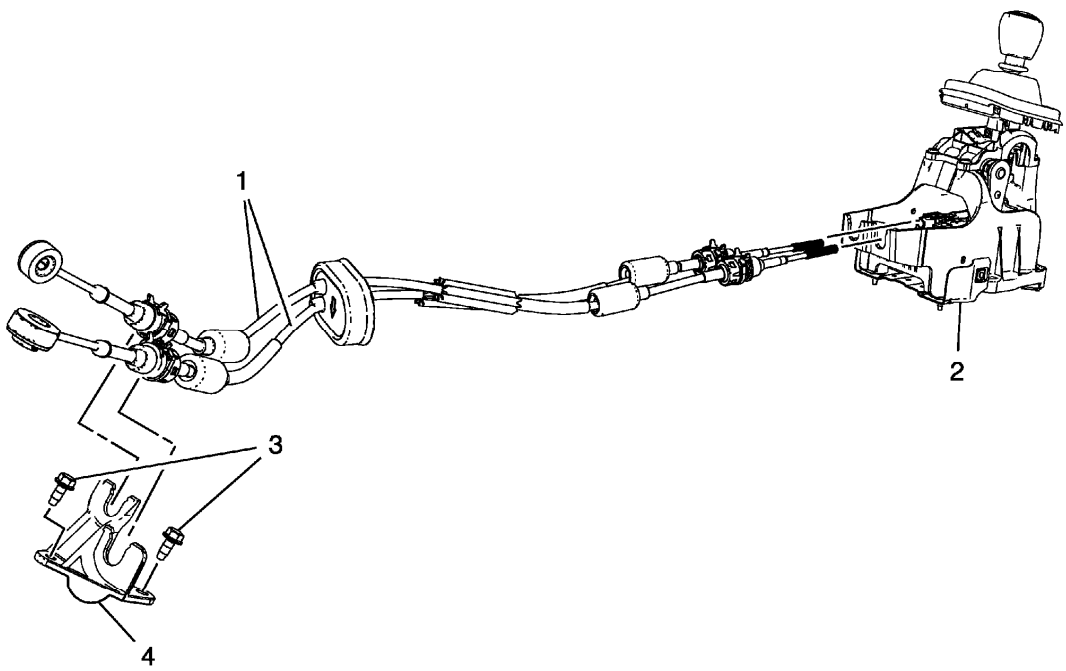

Fig. 2: Shift Control And Shift Lever/Selector Lever Cable
Courtesy of GENERAL MOTORS COMPANY

Callout	Component Name
1	Manual Transmission Shift Lever and Selector Lever Cable
2	Shift Control Lever
3	Manual Transmission Selector and Shift Lever Cable Bracket Bolt (Qty: 2)
4	Manual Transmission Selector and Shift Lever Cable Bracket

Shift Shaft Components

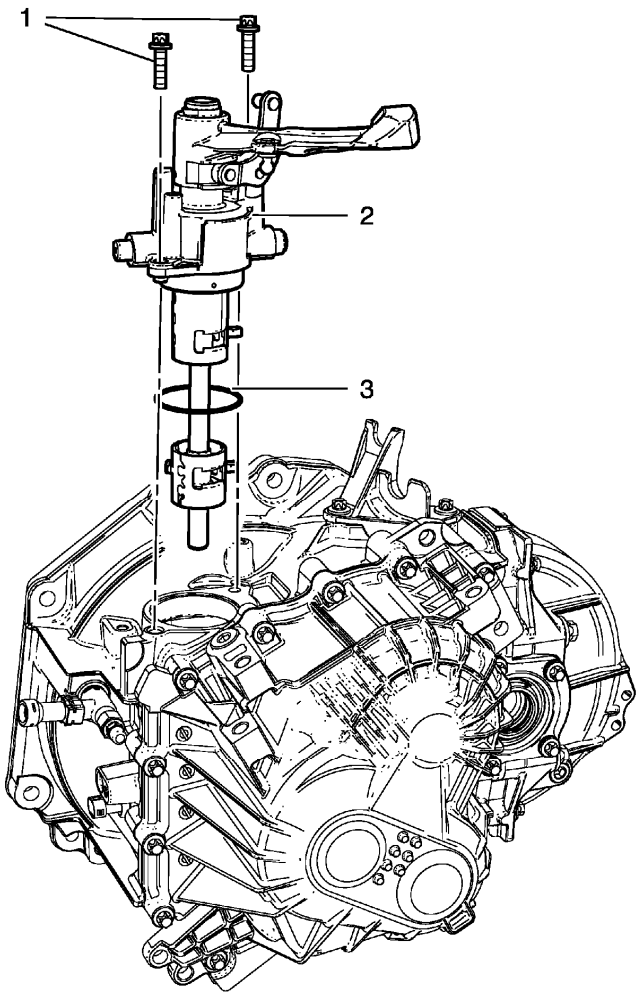

Fig. 3: Shift Shaft Components
Courtesy of GENERAL MOTORS COMPANY

Callout	Component Name
1	Shift Shaft Bolts (Qty: 2)
2	Shift Shaft
3	Shift Shaft O-Ring

Clutch Housing Components - Right Hand View

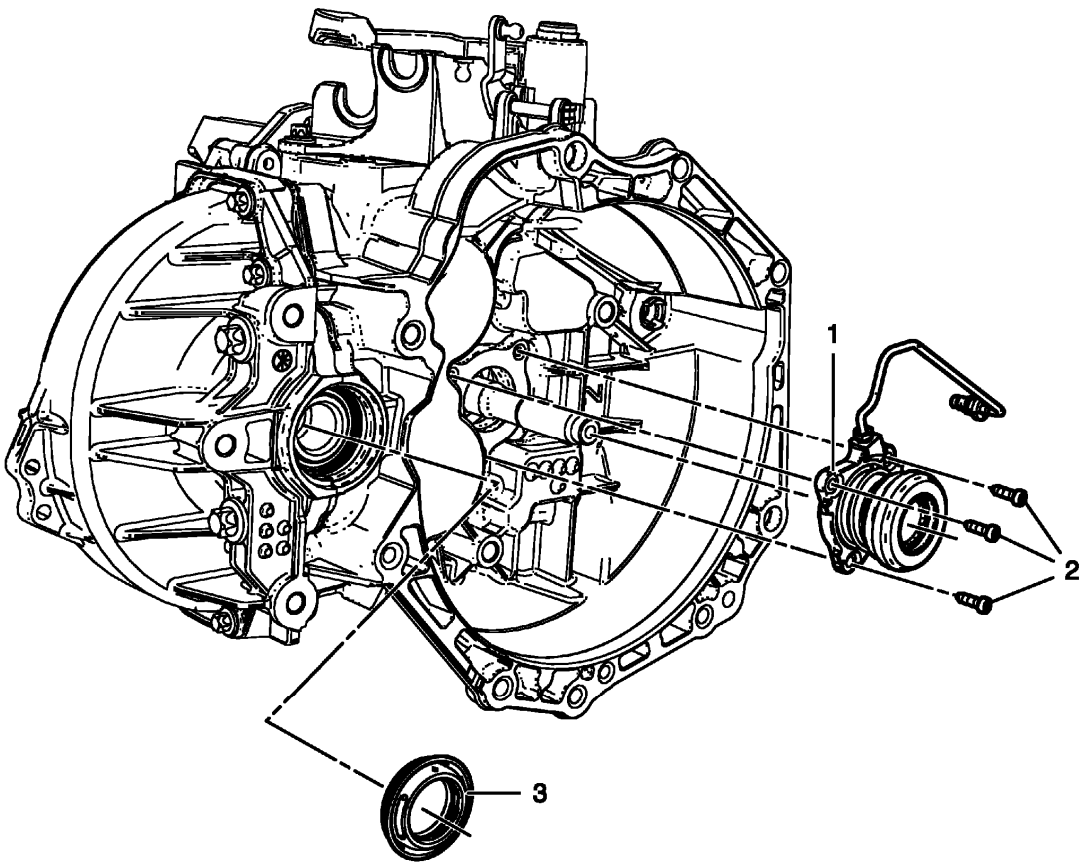

Fig. 4: Clutch Housing Components - Right Side
Courtesy of GENERAL MOTORS COMPANY

Callout	Component Name
1	Clutch Actuator Cylinder
2	Clutch Actuator Cylinder Bolts (Qty: 3)
3	Front Wheel Drive Shaft Oil Seal

Clutch Housing Components- Left Hand View

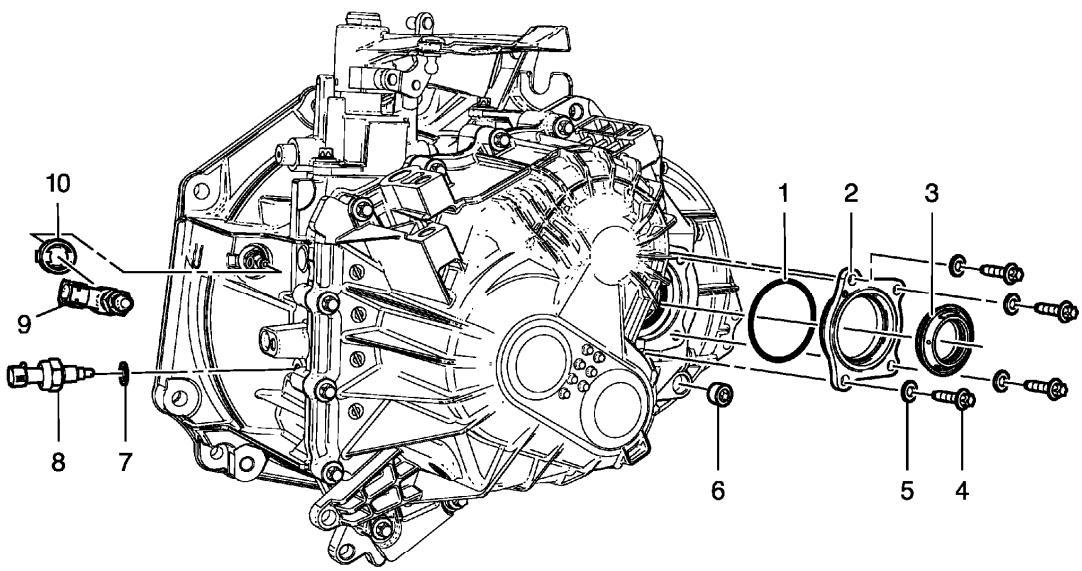

Fig. 5: Clutch Housing Components - Left Hand View
Courtesy of GENERAL MOTORS COMPANY

Callout	Component Name
1	Front Differential Carrier Flange Seal
2	Front Differential Carrier Flange
3	Front Wheel Drive Shaft Oil Seal
4	Front Differential Carrier Flange Bolts (Qty: 4)
5	Front Differential Carrier Flange Bolt Washers (Qty: 4)
6	Transmission Oil Drain Plug
7	Backup Lamp Switch Washer
8	Backup Lamp Switch
9	Clutch Actuator Cylinder Pipe Elbow
10	Clutch Actuator Cylinder Pipe Sleeve

Transmission Housing Components

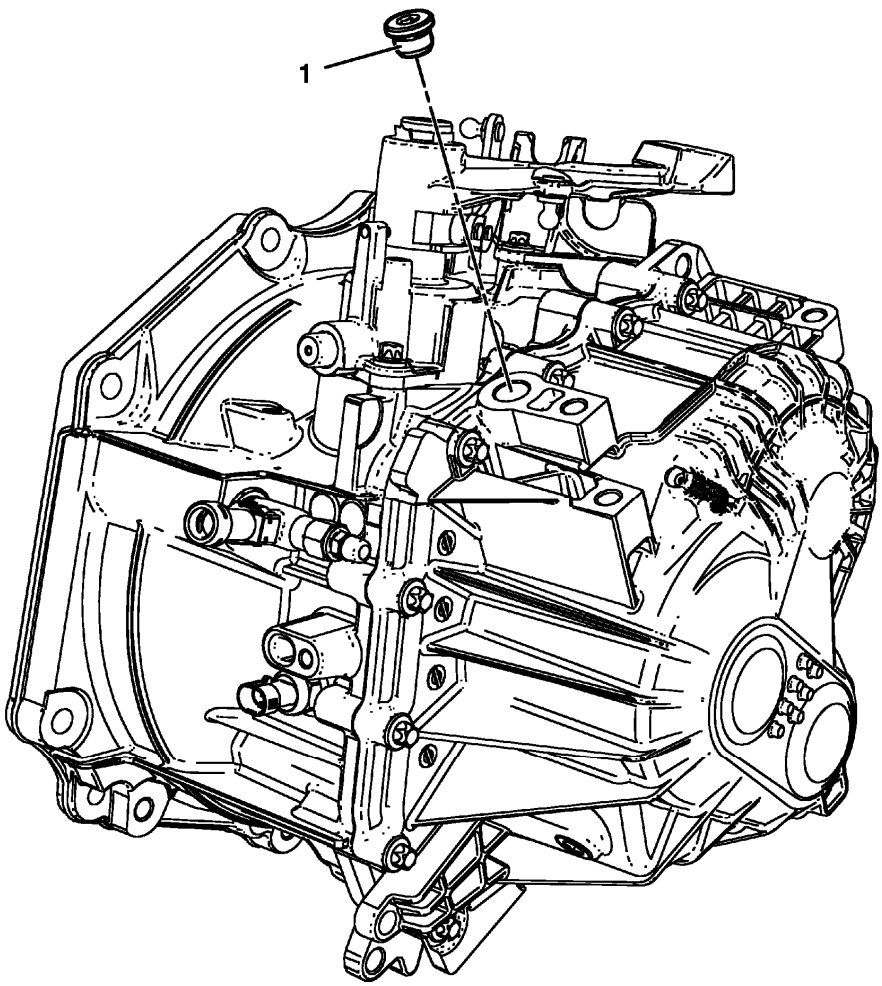

Fig. 6: Transmission Housing Components
Courtesy of GENERAL MOTORS COMPANY

Callout	Component Name
1	Transmission Oil Filler Plug

Transmission Shafts Overview

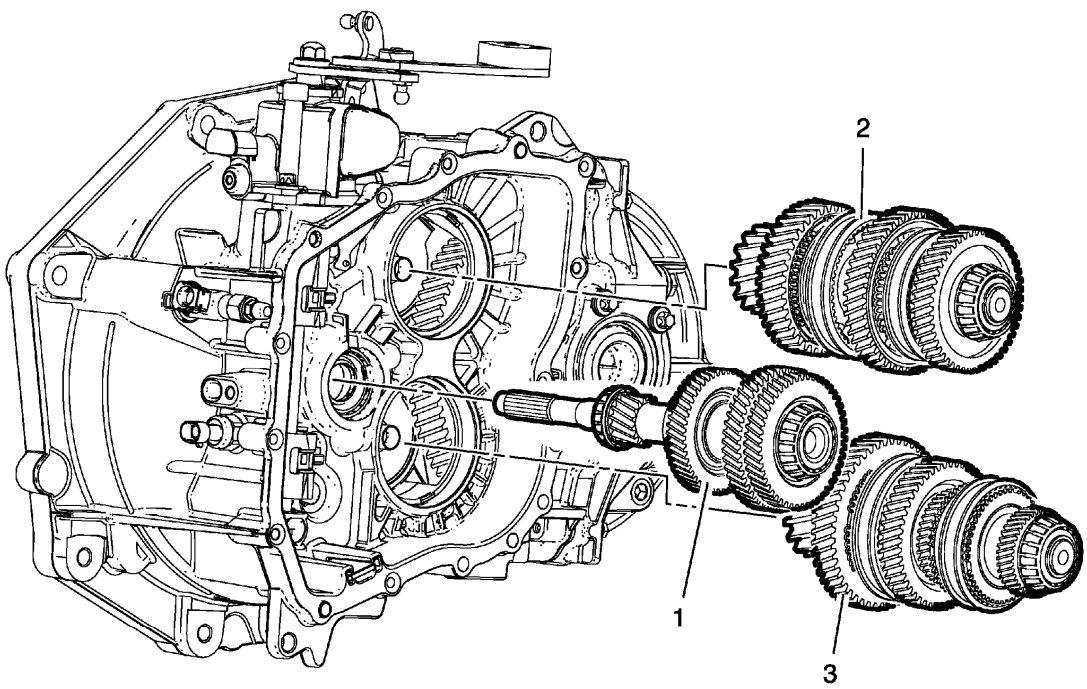

Fig. 7: Transmission Shafts
Courtesy of GENERAL MOTORS COMPANY

Callout	Component Name
1	Input Shaft
2	Upper Main Shaft
3	Lower Main Shaft

Input Shaft

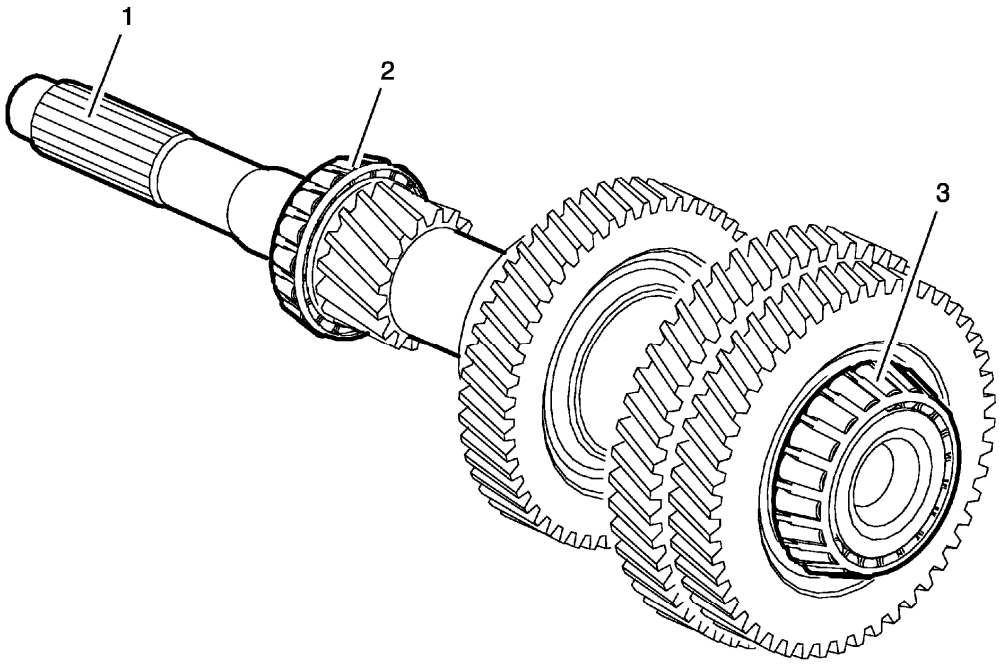

Fig. 8: Input Shaft
Courtesy of GENERAL MOTORS COMPANY

Callout	Component Name
1	Input Shaft
2	Inner Bearing
3	Outer Bearing

Upper Main Shaft

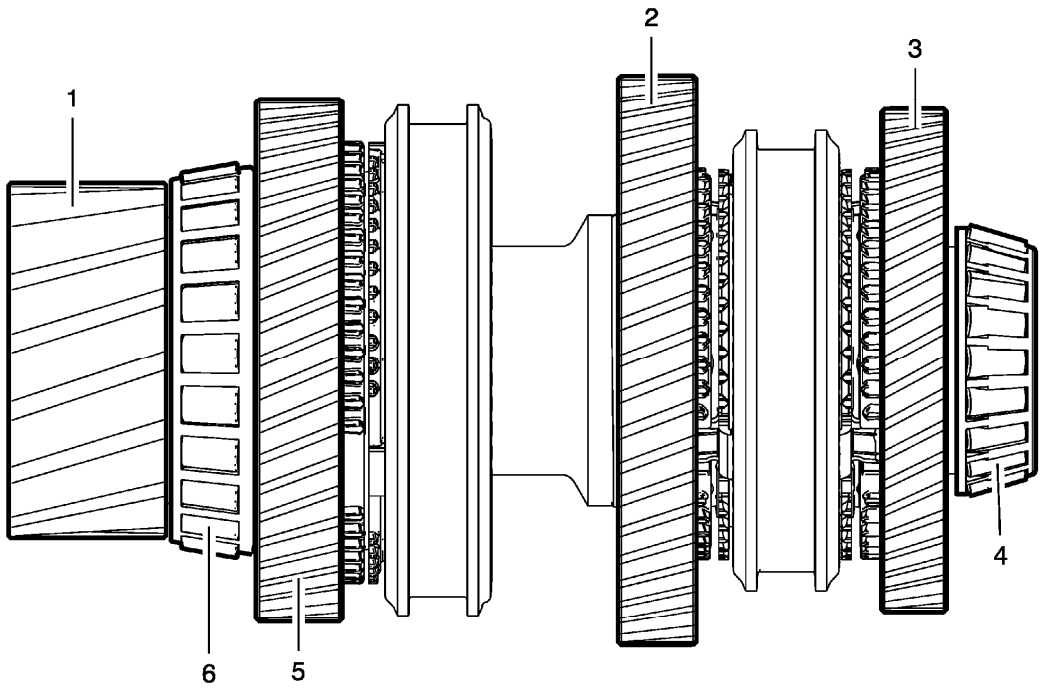

Fig. 9: Upper Main Shaft
Courtesy of GENERAL MOTORS COMPANY

Callout	Component Name
1	Upper Main Shaft
2	3rd Gear Gearwheel
3	4th Gear Gearwheel
4	Outer Bearing
5	Reverse Gear Gearwheel
6	Inner Bearing

Lower Main Shaft

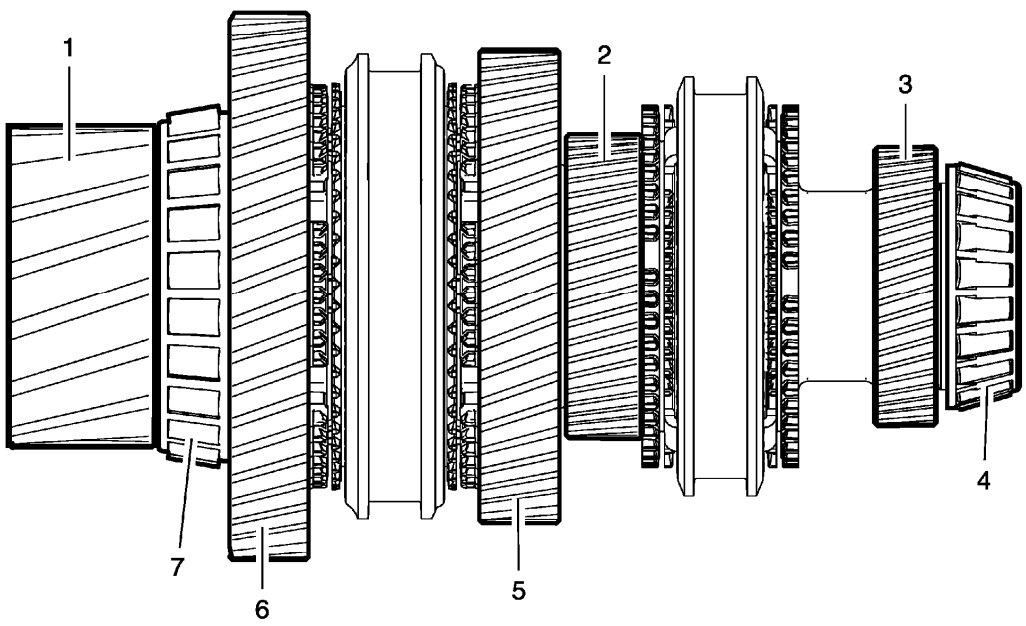

Fig. 10: Lower Main Shaft
Courtesy of GENERAL MOTORS COMPANY

Callout	Component Name
1	Lower Main Shaft
2	5th Gear Gearwheel
3	6th Gear Gearwheel
4	Outer Bearing
5	2nd Gear Gearwheel
6	1st Gear Gearwheel
7	Inner Bearing

1st / 2nd Gear Synchronizer

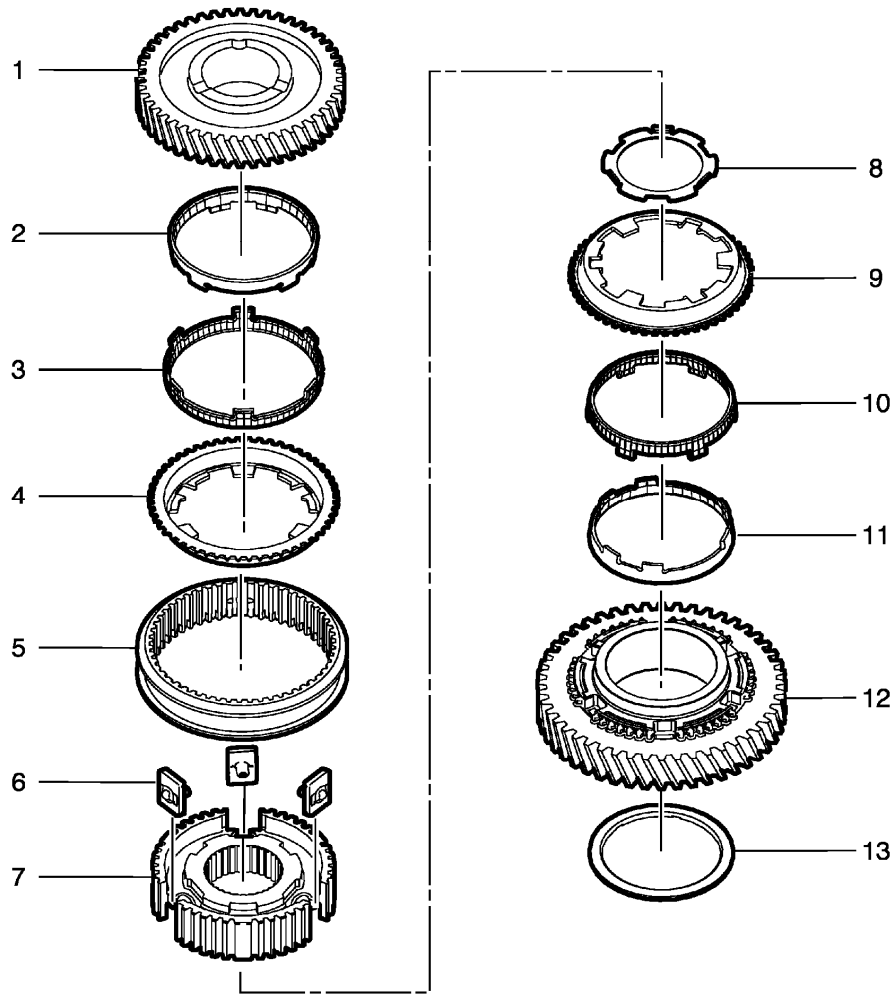

Fig. 11: 1st/2nd Gear Synchronizer
Courtesy of GENERAL MOTORS COMPANY

Callout	Component Name
1	2nd Gear Gearwheel
2	2nd Gear Inner Synchronizer Ring
3	2nd Gear Middle Synchronizer Ring
4	2nd Gear Outer Synchronizer Ring
5	1st/2nd Gear Selector Sleeve
6	Spring Catches
7	1st/2nd Gear Sleeve Carrier
8	Spacer
9	1st Gear Outer Synchronizer Ring
10	1st Gear Middle Synchronizer Ring
11	1st Gear Inner Synchronizer Ring
12	1st Gear Gearwheel

13	1st Gear Axial Needle Bearing

3rd/4th Gear Synchronizer

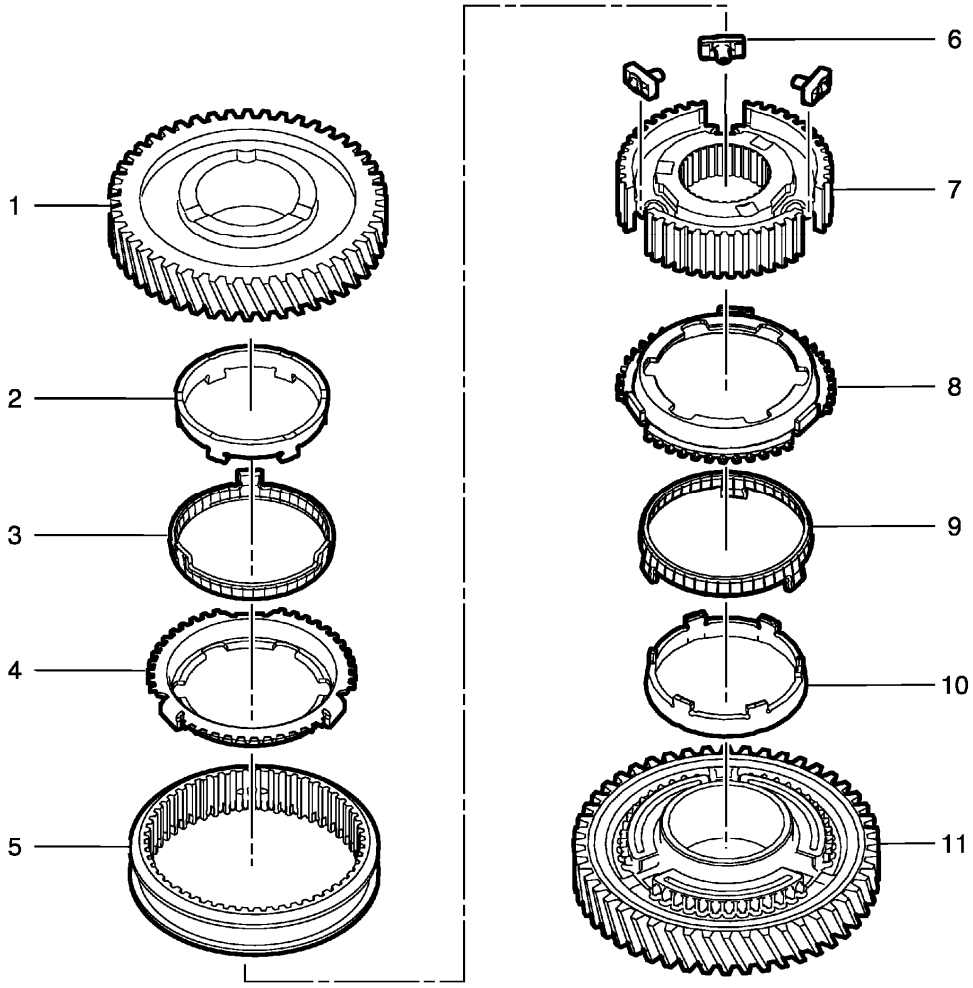

Fig. 12: 3rd/4th Gear Synchronizer
Courtesy of GENERAL MOTORS COMPANY

Callout	Component Name
1	4th Gear Gearwheel
2	4th Gear Inner Synchronizer Ring
3	4th Gear Middle Synchronizer Ring
4	4th Gear Outer Synchronizer Ring
5	3rd/4th Gear Selector Sleeve
6	Spring Catches
7	3rd/4th Gear Sleeve Carrier
8	3rd Gear Outer Synchronizer Ring
9	3rd Gear Middle Synchronizer Ring

10	3rd Gear Inner Synchronizer Ring
11	3rd Gear Gearwheel

5th / 6th Gear Synchronizer

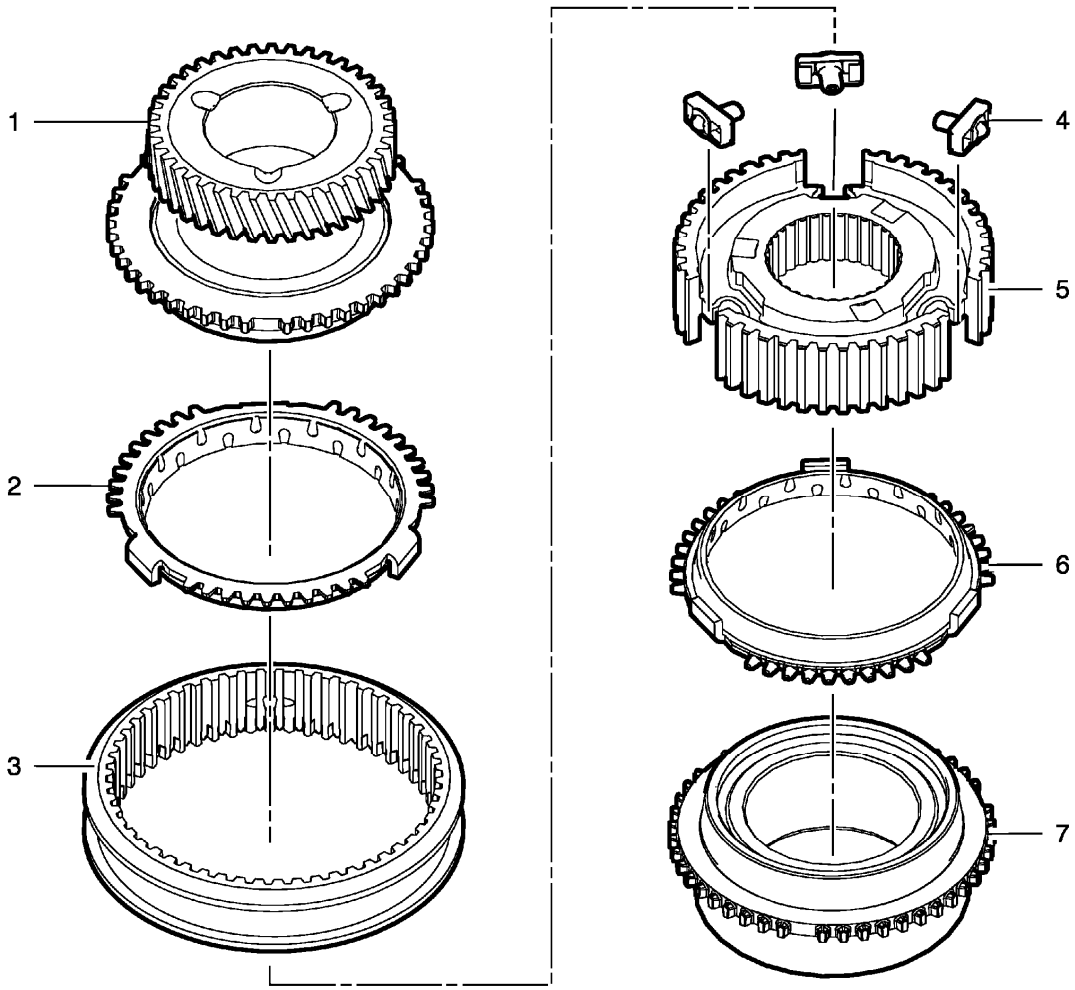

Fig. 13: 5th/6th Gear Synchronizer
Courtesy of GENERAL MOTORS COMPANY

Callout	Component Name
1	6th Gear Gearwheel
2	6th Gear Synchronizer Ring
3	5th/6th Gear Selector Sleeve
4	Spring Catches
5	5th/6th Gear Sleeve Carrier
6	5th Gear Synchronizer Ring
7	5th Gear Gearwheel

Reverse Gear Synchronizer

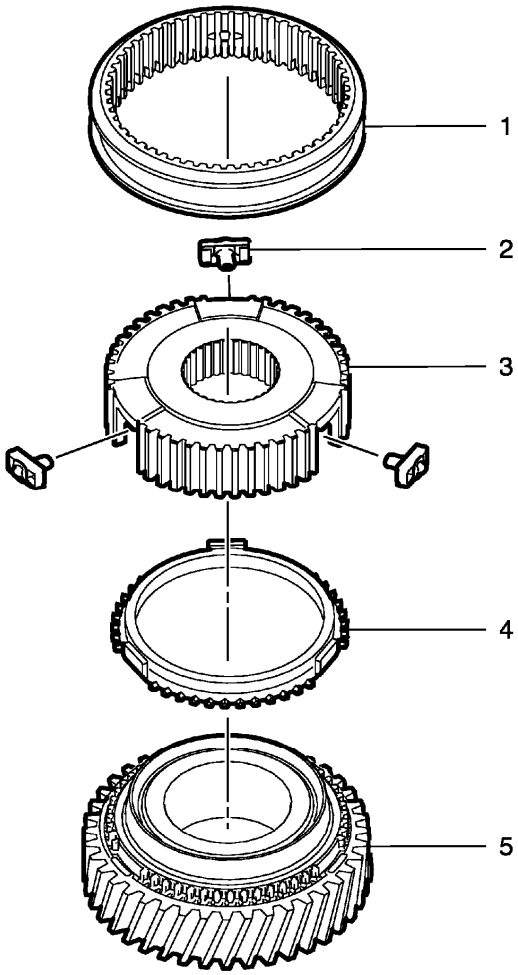

Fig. 14: Reverse Gear Synchronizer
Courtesy of GENERAL MOTORS COMPANY

Callout	Component Name
1	Reverse Gear Selector Sleeve
2	Spring Catches
3	Reverse Gear Sleeve Carrier
4	Reverse Gear Synchronizer Ring
5	Reverse Gear Gearwheel

DIAGNOSTIC INFORMATION AND PROCEDURES

DIAGNOSTIC CODE INDEX

DIAGNOSTIC CODE INDEX

DTC	Description
DTC P0502 or P0503	DTC P0502 Vehicle Speed Sensor (VSS) Circuit - Low Voltage DTC P0503 Vehicle Speed Sensor (VSS) Circuit - Intermittent
DTC P0806-P0808	DTC P0806 Clutch Pedal Position (CPP) Sensor Performance DTC P0807 Clutch Pedal Position (CPP) Sensor Circuit Low Voltage DTC P0808 Clutch Pedal Position (CPP) Sensor Circuit High Voltage
DTC P080A	DTC P080A Clutch Pedal Position (CPP) Not Learned
DTC P0812	DTC P0812 00 Reverse Position Switch Circuit - Malfunction

DTC P0502 OR P0503

Diagnostic Instructions

- Perform the **Diagnostic System Check - Vehicle** prior to using this diagnostic procedure.
- Review **Strategy Based Diagnosis** for an overview of the diagnostic approach.
- **Diagnostic Procedure Instructions** provides an overview of each diagnostic category.

DTC Descriptors

DTC P0502

Vehicle Speed Sensor (VSS) Circuit - Low Voltage

DTC P0503

Vehicle Speed Sensor (VSS) Circuit - Intermittent

Diagnostic Fault Information

Circuit	Short to Ground	Open/High Resistance	Short to Voltage	Signal Performance
Operating Conditions: Engine Running, drive wheels turning.				
VSS High Signal	P0502, P0503	P0502, P0503	P0502, P0503	P0503
VSS Low Signal	-	P0502, P0503	-	-

Circuit	Short to Ground	Open/High Resistance	Short to Voltage	Signal Performance
Operating Conditions: Engine Running, drive wheels turning.				

VSS High Signal	0 km/h (0 MPH)	0 km/h (0 MPH)	0 km/h (0 MPH)	-
VSS Low Signal	-	0 km/h (0 MPH)	-	-

Circuit/System Description

The vehicle speed sensor is provided to the engine control module by the vehicle speed sensor (VSS). The ECM provides a 5 V circuit, a low reference circuit, and a signal circuit to the VSS. The VSS provides a frequency signal that is proportional to an increase in vehicle speed.

Conditions for Running the DTC

P0502

The ignition is ON.

P0503

- Ignition voltage is between 11-18 V.
- Engine speed is between 1 500-6 500 RPMs.
- VSS signal is between 150-200 RPMs for 2 s.

Conditions for Setting the DTC

P0502

VSS signal is less than 60 RPMs for 4.5 s.

P0503

VSS signal is greater than 350 RPMs for 3.25 s.

Action Taken When the DTC Sets

P0502 and P0503 are Type B DTCs.

Conditions for Clearing the DTC

P0502 and P0503 are Type B DTCs.

Diagnostic Aids

The battery must be fully charged. Refer to **Battery Inspection/Test** .

Reference Information

Schematic Reference

Manual Transmission Schematics

Connector End View Reference

COMPONENT CONNECTOR END VIEWS - INDEX

Description and Operation

Transmission System Description and Operation

Electrical Information Reference

- **Circuit Testing**
- **Connector Repairs**
- **Testing for Intermittent Conditions and Poor Connections**
- **Wiring Repairs**

DTC Type Reference

Powertrain Diagnostic Trouble Code (DTC) Type Definitions

Scan Tool Reference

K20 Engine Control Module: Scan Tool Information

Circuit/System Verification

1. Operate the vehicle on the road at various speeds up to 64 km/h (40 MPH).
2. Verify with a scan tool that the B115 Vehicle Speed Sensor parameter and the speedometer display on the instrument cluster match.
    - **If the parameter does not match**

      Refer to Circuit/System Testing below.

    - **If the parameter matches**
3. Operate the vehicle within the conditions for running the DTC to verify the DTC does not reset. You may also operate the vehicle within the conditions that you observed from the Freeze Frame/Failure Records.
    - **If the DTC resets**

      Refer to Circuit/System Testing below.

    - **If the DTC does not reset**
4. All OK.

Circuit/System Testing

1. Ignition OFF, disconnect the B115 Vehicle Sensor harness connector.
2. Test for less than 5 ohms between the low reference circuit terminal 2 and ground.
    - **If 5 ohms or greater**
    1. Disconnect the X3 harness connector at the K20 Engine Control Module.
    2. Test for less than 2 ohms in the wire circuit end to end.
        - If 2 ohms or greater, repair the open/high resistance in the wire circuit.
        - If less than 2 ohms, replace the K20 Engine Control Module.
    - **If less than 5 ohms**
3. Ignition ON.
4. Test for greater than 4.8-5.2 V between the 5 V reference circuit terminal 1 and ground.
    - **If less than 4.8 V**
    1. Test for infinite resistance between the 5 V reference circuit and ground.
        - If less than infinite resistance repair the short to ground on the wire circuit.
        - If infinite resistance
        1. Disconnect the X3 harness connector at the K20 Engine Control Module.
        2. Test for less than 2 ohms in the 5 V reference wire circuit end to end.
            - If 2 ohms or greater, repair the open/high resistance in the wire circuit.
            - If less than 2 ohms, replace the K20 Engine Control Module.
    - **If greater than 5.2 V**
    1. Disconnect the X3 harness connector at the K20 Engine Control Module.
    2. Test for less than 0.3 V between the 5 V reference circuit terminal 35 and ground.
        - If 0.3 V or greater, repair the short to voltage on the wire circuit.
        - If less than 0.3 V, replace the K20 Engine Control Module.
    - **If between 4.8-5.2 V**
5. Ignition OFF.
6. Test for less than 1 V between the signal circuit terminal 3 and ground.
    - **If 1 V or greater**
    1. Disconnect the X3 harness connector at the K20 Engine Control Module.
    2. Test for less than 0.3 V between the signal circuit terminal 55 and ground.
        - If 0.3 V or greater, repair the short to voltage on the wire circuit.
        - If less than 0.3 V, replace the K20 Engine Control Module.
    - **If less than 1 V**
7. Ignition OFF, disconnect the X3 harness connector at the K20 Engine Control Module.
8. Test for less than 2 ohms between the signal circuit terminal 55 at the K20 Engine Control Module and the signal circuit terminal 3 at the B115 Vehicle Speed Sensor.
    - **If 2 ohms or greater**

      Repair the open/high resistance in the wire circuit.

- **If less than 2 ohms**

9. Test for infinite resistance between the signal circuit terminal 3 at the B115 Vehicle Speed Sensor.
   - **If less than infinite resistance**

     Repair the short to ground on the wire circuit.

   - **If infinite resistance**
10. Replace the B115 Vehicle Speed Sensor.

Repair Instructions

Perform the **Diagnostic Repair Verification** after completing the repair.

- **Vehicle Speed Sensor Replacement**
- **Control Module References** for ECM replacement, programming and setup.

DTC P0806-P0808

Diagnostic Instructions

- Perform the **Diagnostic System Check - Vehicle** prior to using this diagnostic procedure.
- Review **Strategy Based Diagnosis** for an overview of the diagnostic approach.
- **Diagnostic Procedure Instructions** provides an overview of each diagnostic category.

DTC Descriptors

DTC P0806

Clutch Pedal Position (CPP) Sensor Performance

DTC P0807

Clutch Pedal Position (CPP) Sensor Circuit Low Voltage

DTC P0808

Clutch Pedal Position (CPP) Sensor Circuit High Voltage

Diagnostic Fault Information

Circuit	Short to Ground	Open/High Resistance	Short to Voltage	Signal Performance
5 V Reference	P0651, P0807	P0807	P0651, P0808	-
Signal	P0807	P0807	P0808	P0806
Low Reference	-	P0808	P0808	-

Typical Scan Tool Data

CPP Sensor Voltage

Circuit	Short to Ground	Open	Short to Voltage
Operating Conditions: Ignition ON. **CPP Sensor Voltage Parameter Normal Range:** 0 V with clutch pedal applied to 5 V when clutch pedal is released.			
5 V Reference	0 V	0 V	5 V
Signal	0 V	0 V	5 V
Low Reference	-	5 V	-

CPP Sensor Percentage

Circuit	Short to Ground	Open	Short to Voltage
Operating Conditions: Ignition ON. **CPP Sensor Percent Parameter Normal Range:** 0% with clutch pedal released to 100% when clutch pedal is applied.			
5 V Reference	100%	100%	0-100%
Signal	100%	100%	100%
Low Reference	-	0%	-

Circuit/System Description

The clutch pedal position (CPP) sensor is a three wire sensor, connected to a 5 V reference circuit, a low reference circuit, and a signal circuit. The engine control module supplies 5 V to the CPP sensor, and also provides a sensor ground path on the low reference circuit. The CPP sensor sends a voltage signal to the ECM on the signal circuit. The voltage on the signal circuit will vary from a voltage less than or equal to 5 V when the clutch pedal is released, to a voltage less than or equal to 1.5 V when the clutch pedal is applied.

Conditions for Running the DTC

P0806

- DTC P0335, P0336, P0502, P0503, P0807, or P0808 is not set.
- The engine is running with transmission in gear.
- The vehicle speed is greater than 1.9 kmh (1.2 mph).

P0807 and P0808

- The ignition is ON.
- The system voltage is more than 10 V.

Conditions for Setting the DTC

P0806

The CPP sensor is stuck in range.

P0807

The CPP sensor voltage is less than 0.2 V for more than 1 s.

P0808

The CPP sensor voltage is more than 4.8 V for more than 1 s.

Action Taken When the DTC Sets

DTC P0806 - P0808 are Type A DTCs.

Conditions for Clearing the DTC

DTC P0806 - P0808 are Type A DTCs.

Reference Information

Schematic Reference

Manual Transmission Schematics

Connector End View Reference

COMPONENT CONNECTOR END VIEWS - INDEX

Description and Operation

Transmission System Description and Operation

Electrical Information Reference

- **Circuit Testing**
- **Connector Repairs**
- **Testing for Intermittent Conditions and Poor Connections**
- **Wiring Repairs**

DTC Type Reference

Powertrain Diagnostic Trouble Code (DTC) Type Definitions

Scan Tool Reference

K20 Engine Control Module: Scan Tool Information for scan tool information

Circuit/System Verification

1. If DTC P0651 or P080A is set, refer to **Diagnostic Trouble Code (DTC) List - Vehicle** .
2. Ignition ON.
3. Verify the scan tool CPP Sensor percent parameter varies from 0% when the clutch pedal is released, to 100% when the clutch pedal is in the apply position.
   - **If the percentage does not vary from 0% to 100%**

     Refer to Circuit/System Testing below.

   - **If the percentage varies from 0% to 100%**
4. Perform the CPP learn procedure.
5. Operate the vehicle within the conditions for running the DTC to verify the DTC does not set. You may also operate the vehicle within the conditions that you observed from the Freeze Frame/Failure Records data.
   - **If the DTC sets**

     Refer to Circuit/System Testing below.

   - **If the DTC does not set**
6. All OK.

Circuit/System Testing

1. Ignition OFF, disconnect the harness connector of the B25B Clutch Pedal Position Sensor.
2. Test for less than 5 ohms between the low reference circuit terminal A and ground:
   - **If 5 ohms or greater**
     1. Disconnect the X3 harness connector at the K20 Engine Control Module.
     2. Test for less than 2 ohms in the circuit end to end.
        - If 2 ohms or greater, repair the open/high resistance in the circuit.
        - If less than 2 ohms, replace the K20 Engine Control Module.
   - **If less than 5 ohms**
3. Ignition ON.
4. Test for 4.8-5.2 V between the 5 V reference circuit terminal C and ground:
   - **If less than 4.8 V**
     1. Ignition OFF, disconnect the X3 harness connector at the K20 Engine Control Module.
     2. Test for infinite resistance between the 5 V reference circuit and ground.
        - If less than infinite resistance, repair the short to ground on the circuit.
        - If infinite resistance
     3. Test for less than 2 ohms in the 5 V reference circuit end to end.
        - If 2 ohms or greater, repair the open/high resistance in the circuit.

- If less than 2 ohms, replace the K20 Engine Control Module.
- **If greater than 5.2 V**

1. Ignition OFF, disconnect the X3 harness connector at the K20 Engine Control Module.
2. Test for less than 1 V between the 5 V reference circuit and ground.
   - If 1 V or greater, repair the short to voltage on the circuit.
   - If less than 1 V, replace the K20 Engine Control Module.

- **If between 4.8-5.2 V**

5. Verify the scan tool CPP Sensor voltage parameter is less than 0.1 V.
   - **If 0.1 V or greater**

1. Ignition OFF, disconnect the X3 harness connector at the K20 Engine Control Module, Ignition ON.
2. Test for less than 1 V between the signal circuit terminal B and ground.
   - If 1 V or greater, repair the short to voltage on the circuit.
   - If less than 1 V, replace the K20 Engine Control Module.

   - **If less than 0.1 V**
6. Install a 3 A fused jumper wire between the signal circuit terminal B and the 5 V reference circuit terminal C.
7. Verify the scan tool CPP Sensor voltage parameter is greater than 4.9 V.
   - **If 4.9 V or less**

1. Ignition OFF, remove the jumper wire, disconnect the X3 harness connector at the K20 Engine Control Module.
2. Test for infinite resistance between the signal circuit terminal B and ground.
   - If less than infinite resistance, repair the short to ground on the circuit.
   - If infinite resistance
3. Test for less than 2 ohms in the signal circuit end to end.
   - If 2 ohms or greater, repair the open/high resistance in the circuit.
   - If less than 2 ohms, replace the K20 Engine Control Module.

   - **If greater than 4.9 V**
8. Test or replace the B25B Clutch Pedal Position Sensor.

Component Testing

Static Test

1. Ignition OFF, disconnect the harness connector of the B25B Clutch Pedal Position Sensor.
2. Measure the resistance between the signal terminal B and the low reference terminal A at the B25B Clutch Pedal Position Sensor. Depress the clutch pedal through the entire range. The resistance should vary from low to high and vice versa without any spikes or dropouts.
   - **If the resistance is erratic with spikes or dropouts**

Replace the B25B Clutch Pedal Position Sensor.

- **If the resistance is not erratic without spikes or dropouts**

3. All OK.

Repair Instructions

Perform the **Diagnostic Repair Verification** after completing the repair.

- **Clutch Pedal Position Sensor Learn**
- **Clutch Pedal Position Sensor Replacement**
- **Control Module References** for ECM replacement, programming and setup.

DTC P080A

Diagnostic Instructions

- Perform the **Diagnostic System Check - Vehicle** prior to using this diagnostic procedure.
- Review **Strategy Based Diagnosis** for an overview of the diagnostic approach.
- **Diagnostic Procedure Instructions** provides an overview of each diagnostic category.

DTC Descriptor

DTC P080A

Clutch Pedal Position (CPP) Not Learned

Circuit/System Description

The clutch pedal position (CPP) sensor is a three wire sensor, connected to a 5 V reference circuit, a low reference circuit, and a signal circuit. The engine control module supplies 5 V to the CPP sensor, and also provides a sensor ground path on the low reference circuit. The CPP sensor sends a voltage signal to the ECM on the signal circuit. The voltage on the signal circuit will vary from a voltage less than or equal to 5 V when the clutch pedal is released to a voltage less than or equal to 1.5 V when the clutch pedal is applied.

Conditions for Running the DTC

Clutch pedal fully applied.

Conditions for Setting the DTC

Clutch pedal position not learned.

Action Taken When the DTC Sets

P080A is a Type B DTC.

Conditions for Clearing the DTC

P080A is a Type B DTC.

Reference Information

Schematic Reference

Manual Transmission Schematics

Connector End View Reference

COMPONENT CONNECTOR END VIEWS - INDEX

Description and Operation

Transmission System Description and Operation

Electrical Information Reference

- **Circuit Testing**
- **Connector Repairs**
- **Testing for Intermittent Conditions and Poor Connections**
- **Wiring Repairs**

DTC Type Reference

Powertrain Diagnostic Trouble Code (DTC) Type Definitions

Scan Tool Reference

K20 Engine Control Module: Scan Tool Information for scan tool information

Circuit/System Verification

Perform the clutch pedal position sensor learn procedure. Refer to **Clutch Pedal Position Sensor Learn**.

Repair Instructions

Perform the **Diagnostic Repair Verification** after completing the repair.

- **Clutch Pedal Position Sensor Learn**
- **Control Module References**

DTC P0812

Diagnostic Instructions

- Perform the **Diagnostic System Check - Vehicle** prior to using this diagnostic procedure.
- Review **Strategy Based Diagnosis** for an overview of the diagnostic approach.
- **Diagnostic Procedure Instructions** provides an overview of each diagnostic category.

DTC Descriptor

DTC P0812 00

Reverse Position Switch Circuit - Malfunction

Diagnostic Fault Information

Circuit	Short to Ground	Open/High Resistance	Short to Voltage	Signal Performance
Reverse Switch Signal	P0812 00	1	P0812 00	-
Ground	-	1	1	-
1. Backup Lamps Malfunction				

Circuit/System Description

The reverse gear switch is a normally open switch that closes with the reverse gear engagement. When the switch is open the engine control module should detect a high signal voltage input. When the switch is closed the ECM should detect a low signal voltage input.

Conditions for Running the DTC

- No vehicle speed sensor faults exist.
- Reverse switch is ON.

Conditions for Setting the DTC

The ECM detects circuit malfunction of the reverse input switch.

Action Taken When the DTC Sets

DTC P0812 00 is Type C DTC.

Conditions for Clearing the DTC

DTC P0812 00 is Type C DTC.

Reference Information

Schematic Reference

Manual Transmission Schematics

Connector End View Reference

v

Description and Operation

Transmission System Description and Operation

Electrical Information Reference

- **Circuit Testing**
- **Connector Repairs**
- **Testing for Intermittent Conditions and Poor Connections**
- **Wiring Repairs**

Scan Tool Reference

Control Module References for scan tool information

Circuit/System Verification

1. Ignition ON.
2. Observe the scan tool Reverse Switch parameter. The reading should be Off and change to On when the transmission is shifted into reverse.
    - **If the parameter does not change from Off to On**

      Refer to Circuit/System Testing below.

    - **If the parameter changes from Off to On**
3. All OK.

Circuit/System Testing

1. Ignition OFF, disconnect the harness connector at the B16 Backup Lamp Switch.
2. Test for less than 5 ohms between the ground circuit terminal 2 and ground.
    - **If 5 ohms or greater**
    1. Test for less than 2 ohms in the ground circuit end to end.
        - If 2 ohms or greater, repair the open/high resistance in the circuit.
        - If less than 2 ohms, repair the open/high resistance in the ground connection.
    - **If less than 5 ohms**
3. Ignition ON, transmission in neutral position.
4. Verify the scan tool Reverse Switch parameter is Off.
    - **If the parameter is not OFF**

1. Disconnect the X3 harness connector at the K20 Engine Control Module.
2. Test for infinite resistance between the signal circuit terminal 1 and ground.
    - If less than infinite resistance, repair the short to ground on the circuit.
    - If infinite resistance, replace the K20 Engine Control Module.

- **If the parameter is OFF**

5. Ignition ON, install a 3 A fused jumper wire between the signal circuit terminal 1 at the B16 Backup Lamp Switch harness connector and ground.
6. Verify the scan tool Reverse Switch parameter is On.
    - **If the parameter is Off**
    1. Disconnect the X3 harness connector at the K20 Engine Control Module.
    2. Test for less than 2 ohms in the signal circuit end to end.
        - If 2 ohms or greater, repair the open/high resistance in the circuit.
        - If less than 2 ohms, replace the K20 Engine Control Module.
    - **If the parameter is On**
7. Test or replace the B16 Backup Lamp Switch.

Component Testing

1. Ignition OFF, disconnect the harness connector at the B16 Backup Lamp Switch.
2. Test for less then 5 ohms between the signal circuit terminal 1 and the ground circuit terminal 2 at the B16 Backup Lamp Switch.
    - **If 5 ohms or greater**

      Replace the B16 Backup Lamp Switch.

    - **If less than 5 ohms**
3. All OK.

Repair Instructions

Perform the **Diagnostic Repair Verification** after completing the repair.

Control Module References for ECM replacement, programming and setup.

CLUTCH PEDAL POSITION SENSOR LEARN

NOTE: The clutch pedal position (CPP) sensor learn procedure is required when the following service procedures have been performed regardless of whether DTC P080A is set:

- **An engine control module (ECM) replacement**
- **A CPP sensor replacement**

- **Any repairs which affect the CPP sensor relationship**

1. Install a scan tool.
2. Monitor the ECM for DTCs with a scan tool. If other DTCs are set, except DTC P080A, refer to **Diagnostic Trouble Code (DTC) List - Vehicle** for the applicable DTC that set.
3. With a scan tool, select Clutch Pedal Position Learn under Module Setup in Manual Transmission, and perform the following instructions displayed on the scan tool screen.

NOTE: The CPP sensor learn procedure cannot be performed more than once per ignition cycle. The clutch pedal needs to be fully depressed and held steady throughout this procedure in order to perform a correct learning.

4. The scan tool will display under CPP Learn Status: Not Learned, In Process, Complete, Fail - Low Volt, Fail - High Volt, or Fail Moving. The scan tool will display under CPP Learn Status Complete if the process was successful.
5. If the scan tool indicates that DTC P080A ran and passed this ignition the CPP sensor learn procedure is complete. If the scan tool indicates DTC P080A failed or did not run this ignition, refer to **DTC P080A**. If any other DTC is set, refer to **Diagnostic Trouble Code (DTC) List - Vehicle** for the applicable DTC.
6. Turn OFF the ignition for 30 s after the learn procedure has successfully completed in order to store the CPP sensor variation values in ECM history.

SYMPTOMS - MANUAL TRANSMISSION

Symptoms - Manual Transmission

Complaint/Condition	Possible Cause	correction
Knock at Low Speeds	• Worn drive axle joint • Worn side gear or pinion gear bores	• Inspect drive axle joint and replace if necessary. • Inspect differential case and replace if necessary.
Noisy Around Turns	Worn differential gears	Inspect differential gears and replace if necessary.
Clunk or Acceleration or Deceleration	• Loose engine mounts • Worn inboard drive axle joint • Worn differential pinion shaft • Worn side gear hub counterbore	• Inspect engine mounts and tighten if necessary. • Inspect inboard drive axle joint and replace if necessary. • Inspect differential pinion shaft and replace if necessary. • Inspect side gear hub counterbore and replace if necessary.
Click Noise On Turns	Worn outboard drive axle C/V	Inspect C/V joint and replace if

	joint	necessary.
Noisy in Neutral With Engine Running	• Worn input gear bearing • Worn speed gear bearing • Worn bearing races	• lnspect bearing and replace if necessary. • lnspect bearing and replace if necessary. • lnspect bearing race and replace if necessary.
Noisy in First Gear Only	• Worn, chipped, or scored 1st speed constant-mesh gears • Worn, shipped, or scored 1st/2nd synchronizer	• lnspect gears and replace if necessary. • lnspect synchronizer and replace if necessary.
Noisy in Second Gear Only	• Worn, chipped, or scored 2nd speed constant-mesh gears • Worn, chipped, or scored 1st/2nd synchronizer	• lnspect gears and replace if necessary. • lnspect synchronizer and replace if necessary.
Noisy in Third Gear Only	• Worn, chipped, or scored 3rd speed constant-mesh gears • Worn, chipped, or scored 3rd/4th synchronizer	• lnspect gears and replace if necessary. • lnspect synchronizer and replace if necessary.
Noisy in Fourth Gear Only	• Worn, chipped, or scored 4th speed constant-mesh gears • Worn, chipped, or scored 3rd/4th synchronizer • Worn, chipped, or scored output gear • Worn, chipped, or scored output gear	• lnspect gears and replace if necessary. • lnspect synchronizer and replace if necessary. • lnspect gear and replace if necessary. • lnspect gear and replace if necessary.
Noisy in Fifth Gear Only	• Worn, chipped, or scored 5th speed constant-mesh gears • Worn, chipped, or scored 5th synchronizer • Worn, chipped, or scored output gear	• lnspect gears and replace if necessary. • lnspect synchronizer and replace if necessary. • lnspect gear and replace if necessary.
Noisy in Reverse Only	• Worn, chipped, or scored reverse speed constant-mesh gears • Worn or damaged output	• lnspect gear and replace if necessary. • lnspect gear and replace if

	gear	necessary.
Noisy in All Gears	• Fluid level low • Worn or damaged wheel bearings • Worn, chipped, or scored input/output shaft gear • Worn output gear bearing • Loose shift rail guide bolt • Worn, chipped, or scored 1st, 2nd, 3rd, 4rd, 5th, or Reverse gears.	• Add fluid to proper level. • Inspect wheel bearing and replace if necessary. • Inspect gear and replace if necessary. • Inspect output gear bearing and replace if necessary. • Tighten shift rail guide bolt. • Inspect components and replace as necessary.
Slips Out of Gear	• Loose transaxle mounts • Bent or worn cables • Broken or loose input gear bearing retainer • Worn or bent shift fork • Dirty clutch housing and engine • Stiff shift lever seal • Manual transaxle internal shift mechanism malfunction	• Tighten or replace mounts. • Inspect cables and replace if necessary. • Inspect shift fork and replace if necessary. • Inspect shift fork and replace if necessary. • Clean clutch housing and engine. • Inspect seal and replace if necessary. • Disassemble transaxle, repair as necessary.
Slips Out of Gear While Accelerating	• Missing or misadjusted first gear thrust bearing or washer • Worn or damaged fist gear spline lock on 1st/2nd synchronizer • Worn of damaged second gear spline lock on 1st/2nd synchronizer • Worn or damaged third gear spline lock on 3rd/4th synchronizer • Worn or damaged fourth gear spline lock on 3rd/4th synchronizer	• Inspect bearing and washer and replace if necessary. • Inspect spline lock and replace if necessary. • Inspect spline lock and replace if necessary. • Inspect spline lock and replace if necessary. • Inspect spline lock and replace if necessary.

	• Worn or damaged 5th gear spline lock on the 5th/Reverse synchronizer • Worn or damaged Reverse gear spline lock on the 5th/Reverse synchronizer • Worn or damaged 1st, 2nd, 3rd, 4th, 5th or reverse gear spline lock • Manual transaxle internal shift mechanism malfunction	• Inspect spline lock and replace if necessary. • Inspect spline lock and replace if necessary. • Inspect spline lock and replace if necessary. • Disassemble transaxle, repair as necessary.
Slips Out of Gear While Coasting	• Damaged, worn, or missing shift rails • Manual transaxle internal shift mechanism malfunction	• Inspect shift rails and replace if necessary. • Disassemble transaxle, repair as necessary.
Fluid Leakage	• Fluid level high • Damaged axle shaft seals • Vent cap plugged • Poor sealing on shift cover • Poor sealing between case and clutch housing • Poor sealing on rear cover • Poor sealing or loose back-up lamp switch • Poor sealing or loose vehicle speed sensor	• Drain excess fluid. • Inspect axle shaft seals and replace if necessary. • Clear or replace vent cap. • Replace sealer on shift cover. • Replace sealer between case and clutch housing and tighten. • Replace sealant on rear cover and tighten. • Tighten switch or replace sealant as needed. • Tighten sensor or replace sealant as needed.

TRANSMISSION SHIFTS HARD

Diagnostic Aids

An intermittent hard shift may be caused by an intermittent clutch condition.

Test Description

The numbers below refer to the step numbers on the diagnostic table.

3

A static shift test is performed by shifting into all of the gear positions with the engine not operating. While performing the test one should note how the shift lever movement is felt. Also while shifting from one gear to the other feel for binding in the shift rails. You should be able to feel the detent plungers operating when coming out of a gear and going into a gear.

6

A dynamic shift test is performed by shifting into the gear positions with the engine operating. Test for the correct mesh of the synchronizers and for the clutch releasing correctly. When shifting into and out of a gear, feel for the shift detent plungers and for the synchronizers sleeve for moving freely.

8

The transmission uses a synthetic transmission fluid that allows proper synchronizer operation. The incorrect fluid may cause hard shifting by varnish build-up, or not enough lubrication for proper synchronizer operation.

Transmission Shifts Hard

Step	Action	Yes	No
DEFINITION: The transmission does not shift smoothly, or without difficulty, from one gear to the other.			
1	Did you review the **Symptoms - Manual Transmission** and perform the necessary inspections?	Go to **Step 2**	Go to **Symptoms - Manual Transmission**
2	Inspect the clutch system for proper operation. Refer to **Clutch System Description and Operation** . Did you find or repair the condition?	Go to **Step 12**	Go to **Step 3**
3	1. Perform a static shift test on the transmission. 2. Test for the following: • Blockage preventing full shift lever movement • Excessive movement in the shift lever • Binding in the shift lever • Detent plungers or shift rails binding • Shift cable binding • Shift cable proper adjustment Are you able to shift into all gears?	Go to **Step 6**	Go to **Step 4**
	1. Remove the floor console. Refer to **Front Floor Console Replacement** .		

4	2. Inspect for the following: • Loose mounting • Foreign debris Did you find and repair the condition?	Go to **Step 12**	Go to **Step 5**
5	Inspect for proper shift cable adjustment. Refer to **Manual Transmission Shift Lever and Selector Lever Cable Adjustment**. Did you find and repair the condition?	Go to **Step 12**	Go to **Step 6**
6	1. Perform a dynamic shift test on the transmission. 2. Test for the following: • Detent plungers or shift rails binding • Synchronizer sleeve binding • Gear clash into only one gear • Gear clash into all gears Did the transmission shift hard into all gears?	Go to **Step 7**	Go to **Step 11**
7	Inspect the transmission for the correct fluid level and type of the transmission fluid. Refer to **Transmission Fluid Drain and Fill**. Is the transmission at the correct level and the proper fluid being used?	Go to **Step 9**	Go to **Step 8**
8	Drain and refill the transmission with the correct type fluid. Refer to **Transmission Fluid Drain and Fill**. Did you find and repair the condition?	Go to **Step 12**	Go to **Step 9**
9	1. Remove the transmission. Refer to **Transmission Replacement**. 2. Inspect the clutch pressure plate and/or clutch driven plate. Is the clutch pressure plate and/or clutch driven plate worn or faulty?	Go to **Step 10**	Go to **Step 11**
10	Replace the clutch assembly. Refer to **Clutch Pressure and Driven Plate Replacement (1.4L LUV)** , **Clutch Pressure and Driven Plate Replacement (1.8L LUW and LWE)** . Did you find and repair the condition?	Go to **Step 12**	Go to **Step 11**
11	Replace the Transmission. Refer to **Transmission Replacement**. Did you find and repair the condition?	Go to **Step 12**	Go to Diagnostic Aids
12	Operate the system in order to verify the repair.		

	Did you correct the condition?	System OK	Go to **Step 1**

TRANSMISSION GEAR CLASH WHEN SHIFTING GEARS

Diagnostic Aids

Gear clashing may be caused by shifting at too high of an engine RPM or by rushing the shift. If gear clashing is occurring in more than one gear, the clutch may not be releasing properly for proper synchronizer operation.

Test Description

The numbers below refer to the step numbers on the diagnostic table.

2

This step tests for the proper releasing of the clutch. If the clutch reserve is not proper, the mainshaft gears may still be turning causing the gear clashing.

5

This step inspects for the proper transaxle fluid. A special fluid is required for the correct lubrication of the synchronizers.

7

A static shift test is performed by shifting into all of the gear positions with the engine not operating. While performing the test, you should note how the shift lever movement is felt. Also, while shifting from one gear to another, feel for binding in the shift rails. You should be able to feel the detent plungers operating when coming out of a gear and going into a gear. Excessive play in the gear shift lever may prevent the shift forks from fully engaging the synchronizer.

10

A dynamic shift test is performed by shifting into all of the gear positions with the engine operating. Test for the correct mesh of the synchronizers, and for the clutch releasing correctly. Move the shift lever and feel for the synchronizer sleeve to just release from the gear, then let up on the clutch pedal. Depress the clutch pedal and move the shift lever to engage that gear again. If it shifts back into the gear without clashing, the clutch is releasing correctly and the synchronizer is working. If clashing occurs, test on another gear. If all gears clash, the clutch is not releasing correctly.

Transmission Gear Clash When Shifting Gears

Step	Action	Yes	No
DEFINITION: Noise from the transaxle when shifting gears. A grinding or grating sound, when the synchronizer sleeve is engaging with the selector teeth on the speed gear. A suspected internal transaxle condition, if the noise only occurs in one gear.			
1	Did you review the **Symptoms - Manual Transmission** and perform the necessary		Go to **Symptoms -**

	inspections?	Go to **Step 2**	**Manual Transmission**
2	With the engine operating, does the transaxle shift from neutral to any gear, without the vehicle lurching or gear clashing?	Go to **Step 5**	Go to **Step 3**
3	Inspect for proper clutch operation. Refer to **Clutch System Description and Operation** . Does the clutch operate properly?	Go to **Step 5**	Go to **Step 4**
4	Repair the clutch system. Refer to **Symptoms - Clutch** . Did you find and repair the condition?	Go to **Step 11**	Go to **Step 5**
5	Inspect for the correct transaxle fluid level and the proper fluid. Refer to **Transmission Fluid Drain and Fill**. Is the transaxle fluid level correct and at the proper level?	Go to **Step 7**	Go to **Step 6**
6	Fill the transaxle to the correct level, or change the transaxle fluid if it is not the correct type. Does the transaxle still have gear clash?	Go to **Step 7**	Go to **Step 11**
7	1. Perform a static shift test on the transaxle. 2. Test for the following: • Blockage preventing full shift lever movement • Excessive movement in the shift lever • Binding in the shift lever • Detent plungers or shift rails binding • Shift cable binding • Shift cable proper adjustment Did the transaxle shift smoothly into the gear that is clashing?	Go to **Step 10**	Go to **Step 8**
8	Remove the floor console. Refer to **Front Floor Console Replacement** . Inspect for the following: • Loose mounting • Foreign debris		

	Did you find and repair the condition?	Go to **Step 12**	Go to **Step 10**
9	Inspect for proper shift cable adjustment. Refer to **Manual Transmission Shift Lever and Selector Lever Cable Adjustment**. Did you find and repair the condition?	Go to **Step 12**	Go to **Step 10**
10	1. Perform a dynamic shift test on the transaxle. 2. Test for the following: • Detent plungers or shift rails binding • Synchronizer sleeve binding • Gear clashing in more than the suspected gear Is the transaxle hard to shift into all gears?	Go to **Transmission Shifts Hard**	Go to **Step 11**
11	Replace the transmission Refer to **Transmission Replacement**. Did you replace the transmission?	Go to **Step 12**	Go to Diagnostic Aids
12	Operate the system and verify the repair. Did you correct the condition?	System OK	Go to **Step 1**

REPAIR INSTRUCTIONS - ON VEHICLE

TRANSMISSION FLUID DRAIN AND FILL

Draining Procedure

WARNING: When the transmission is at operating temperatures, take necessary precautions when removing the drain plug, to avoid being burned by draining fluid.

NOTE: The fluid plug at the front of transmission must not be removed. Prior to the removing of any plug, clean the surrounding area of the plug.

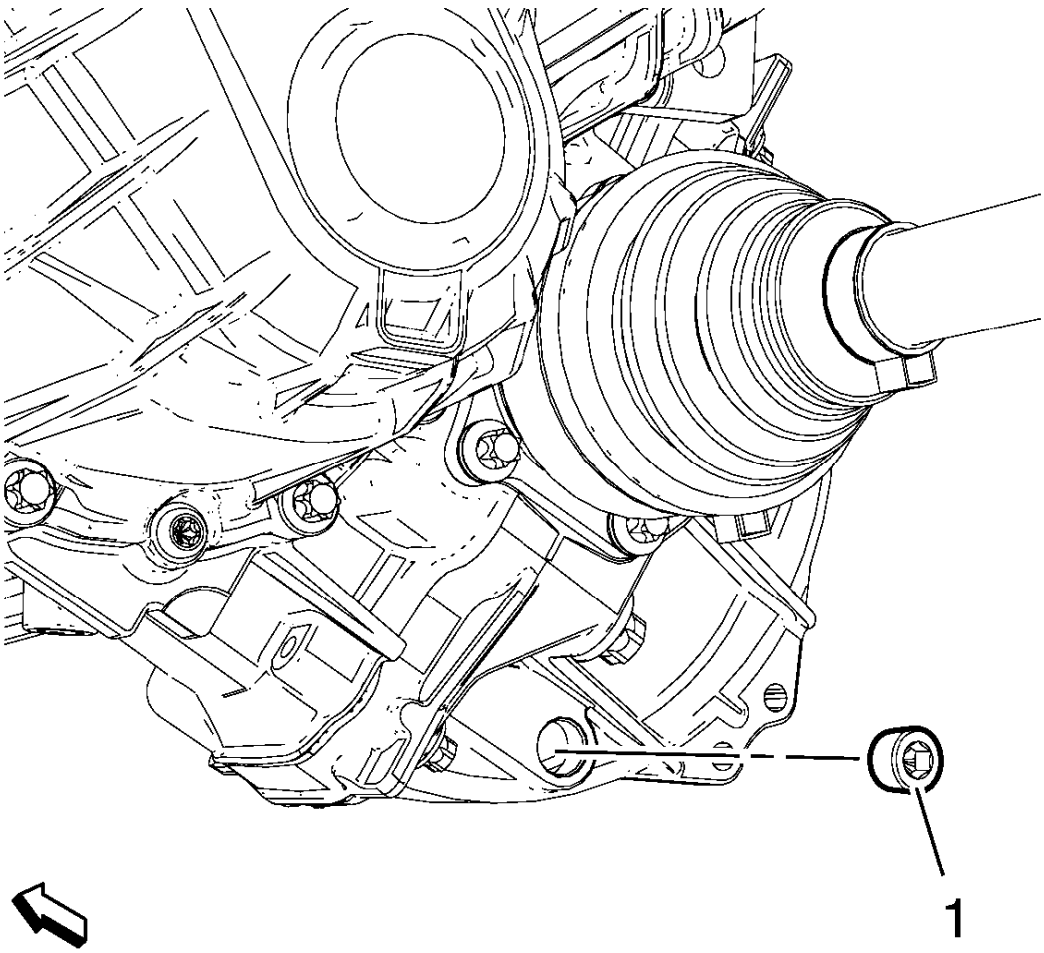

Fig. 15: Transmission Fluid Drain Plug
Courtesy of GENERAL MOTORS COMPANY

1. Raise and support the vehicle. Refer to **Lifting and Jacking the Vehicle** .
2. If equipped, remove the front compartment air deflector. Refer to **Front Compartment Air Deflector Replacement** .

NOTE: DO NOT re-use the fluid drain plug.

3. Remove and DISCARD the fluid drain plug (1).
4. Drain the transmission fluid into a suitable and clean container.

NOTE: This transmission is NOT equipped with a fluid level dipstick or oil level setting plug. The fluid level can only be checked by draining and filling procedure.

5. Let the transmission fluid drain for 10 minutes and record the transmission fluid amount.
6. Inspect the fluid for excessive metal particles or other debris which may indicate transmission damage. Perform any necessary repairs. Change the transmission fluid if no other conditions are found.

CAUTION: Refer to Fastener Caution .

NOTE: Apply thread locking compound to the plug. DO NOT re-use the old plug.

7. Install the NEW fluid drain plug (1) with thread sealing compound on the plug threads and tighten to 20 N.m (15 lb ft).
8. If equipped install the front compartment air deflector, refer to **Front Compartment Air Deflector Replacement** .

Filling Procedure

1. Lower the vehicle.
2. Without disconnecting the electrical connector, unclip the engine control module with the bracket from the battery tray and hang aside.
   - For 1.4L gasoline engine, refer to **Engine Control Module Replacement** .
   - For 1.8L gasoline engine, refer to **Engine Control Module Replacement** .

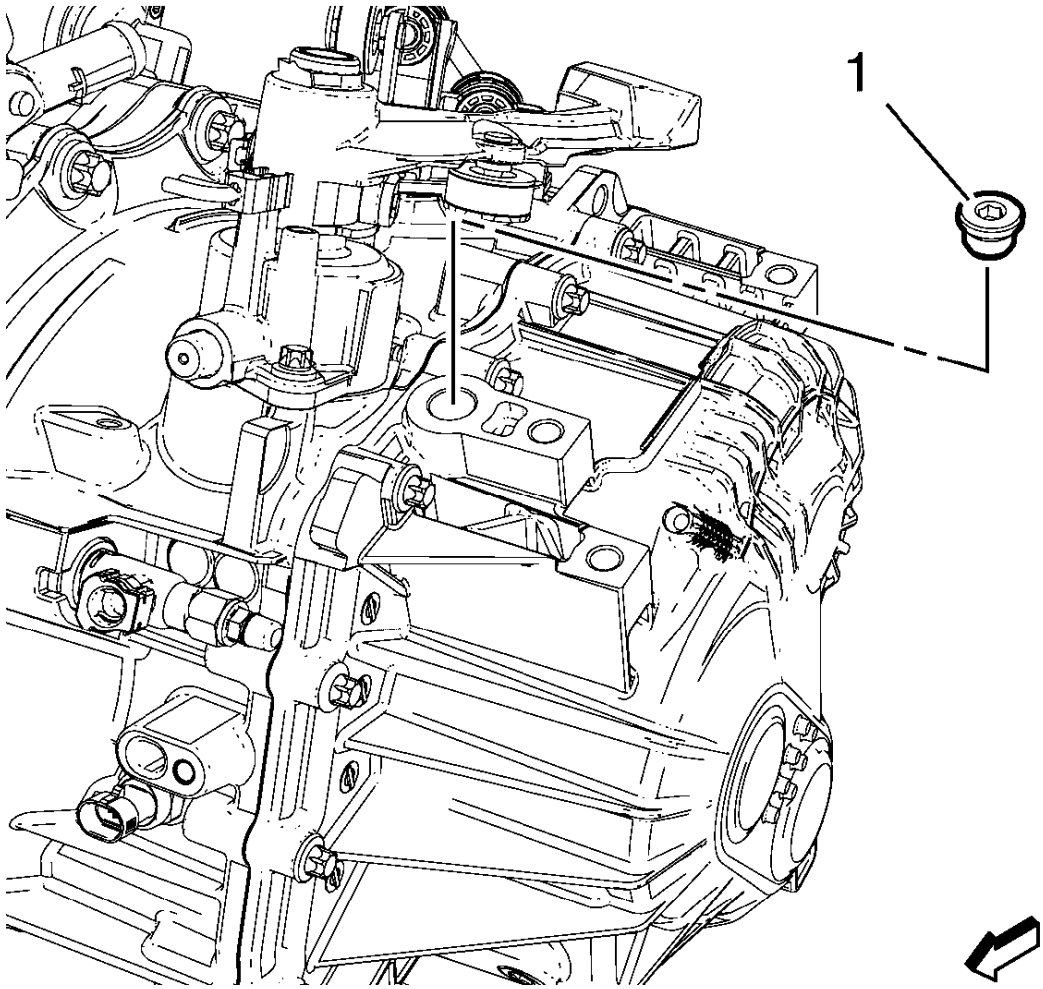

Fig. 16: Transmission Fluid Fill Plug
Courtesy of GENERAL MOTORS COMPANY

NOTE: Prior to the removing of any plug, clean the surrounding area of the plug.

3. Remove the fluid fill plug (1).

NOTE: This transmission is NOT equipped with a fluid level dipstick or oil level setting plug. The fluid level can only be checked by performing the draining and filling procedure.

4. Compare the amount of fluid drained to the transmission refill capacity. Fill the transmission with the appropriate amount of fluid. Refer to **Manual Transmission Specifications**.
5. Install the fluid fill plug (1) and tighten to 30 N.m (22 lb ft).
6. Clip in the engine control module.
   - For 1.4 gasoline engine, refer to **Engine Control Module Replacement** .

- For 1.8 gasoline engine, refer to **Engine Control Module Replacement** .

Fluid Level Check

1. This transmission is NOT equipped with a fluid dipstick or oil level setting plug. The fluid level is based on filling with the appropriate volume of fluid. The fluid level can only checked by performing the draining and filling procedure.

TRANSMISSION CONTROL LEVER KNOB REPLACEMENT

Removal Procedure

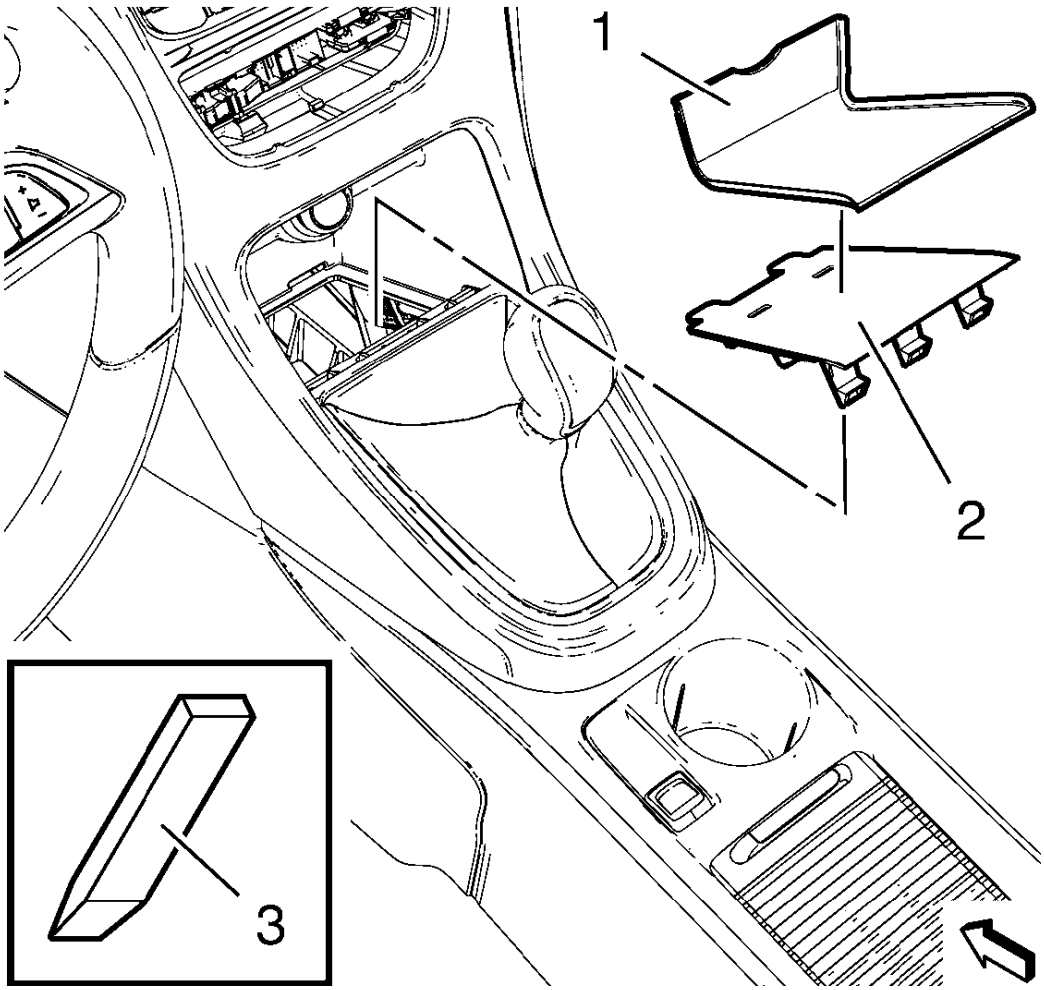

Fig. 17: Instrument Panel Lower Center Compartment Mat
Courtesy of GENERAL MOTORS COMPANY

1. Remove the instrument panel lower center compartment mat (1).
2. Remove the instrument panel lower center compartment liner (2) using a suitable plastic tool (3). Refer

to .

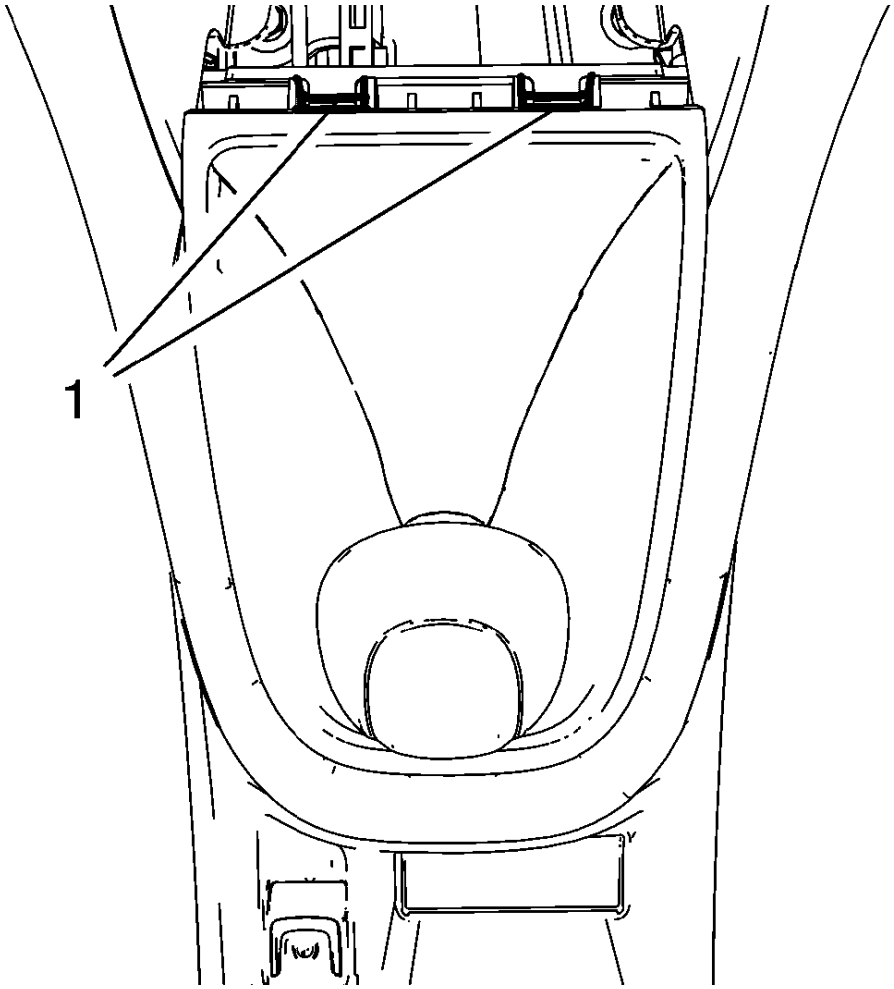

Fig. 18: Boot Frame Retainers
Courtesy of GENERAL MOTORS COMPANY

3. Using a suitable plastic tool, gently release the boot frame retainers (1) at the forward edge of the boot frame.

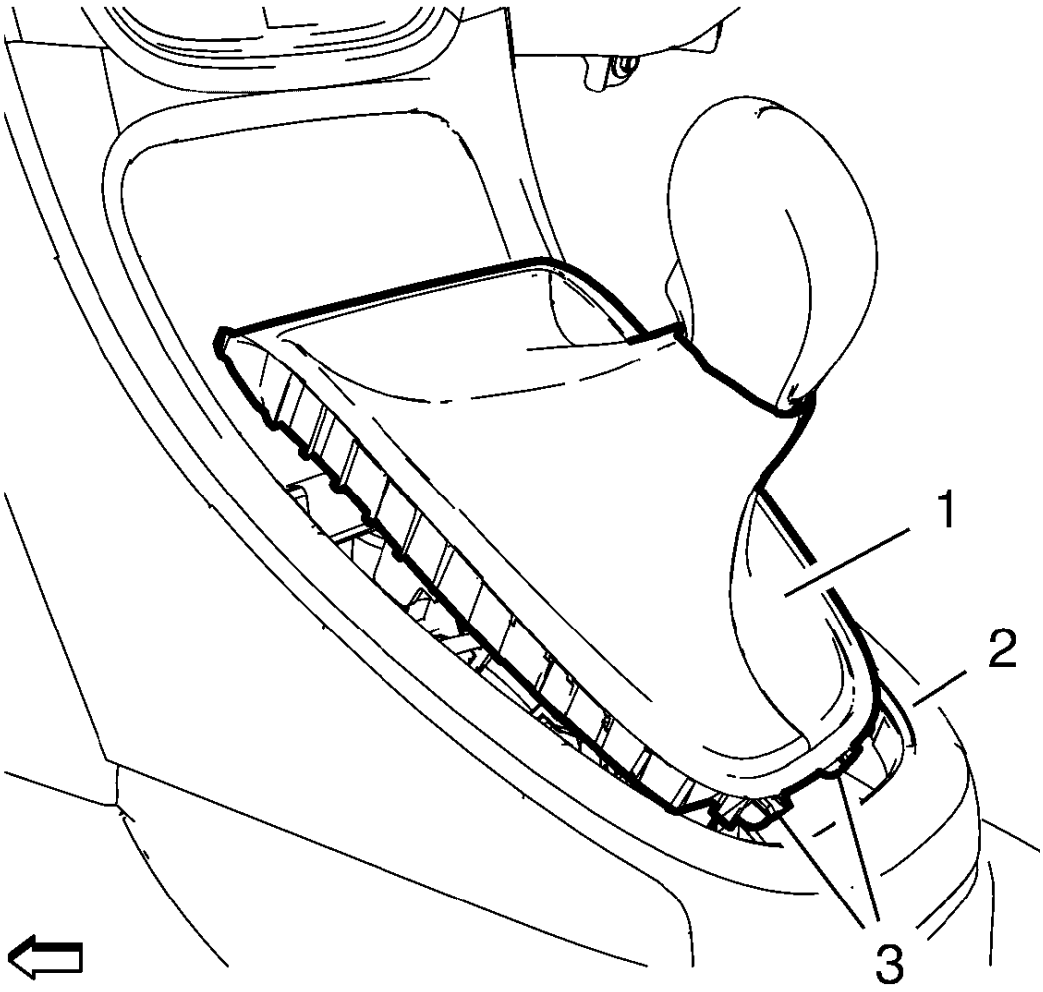

Fig. 19: Shift Boot Frame
Courtesy of GENERAL MOTORS COMPANY

4. Loosen the shift boot frame (1) from the front floor console (2):
    1. Lift the forward edge of the boot frame (1).
    2. Slide the boot frame (1) forward to disengage tabs (3).

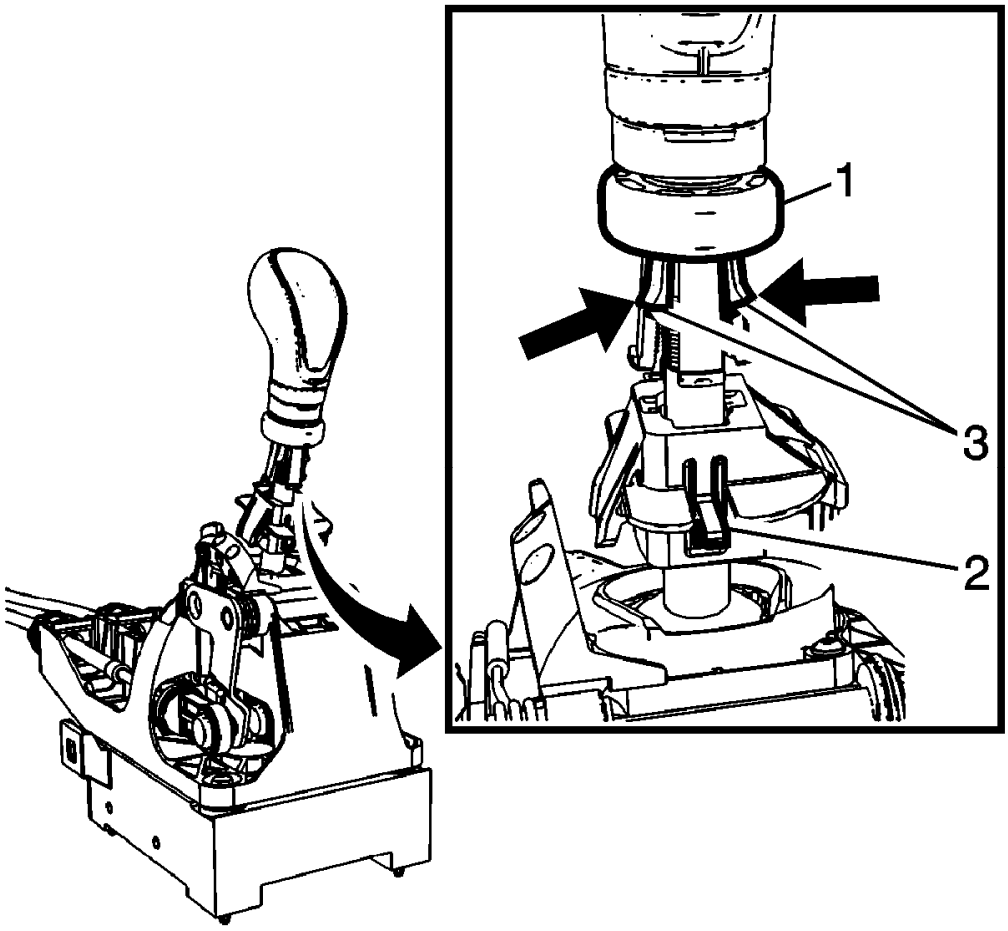

Fig. 20: Control Lever Retaining Ring & Latches
Courtesy of GENERAL MOTORS COMPANY

5. Disengage control lever retaining ring (1) by pressing both latches (3), while sliding up retaining ring until loose.
6. Pull up on the reverse lockout retaining tab (2) and lift the reverse lockout device to release it from the installed position.

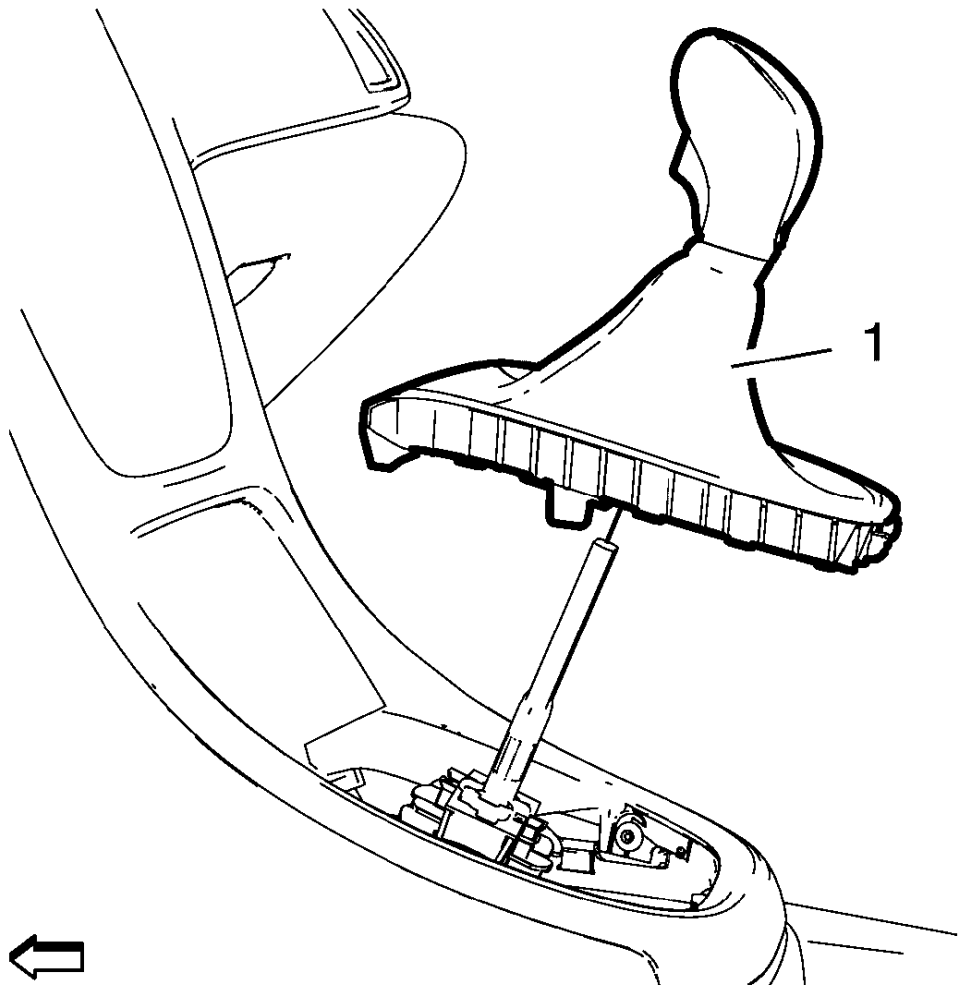

Fig. 21: Transmission Control Lever Knob Assembly
Courtesy of GENERAL MOTORS COMPANY

7. Remove the transmission control lever knob assembly (1).

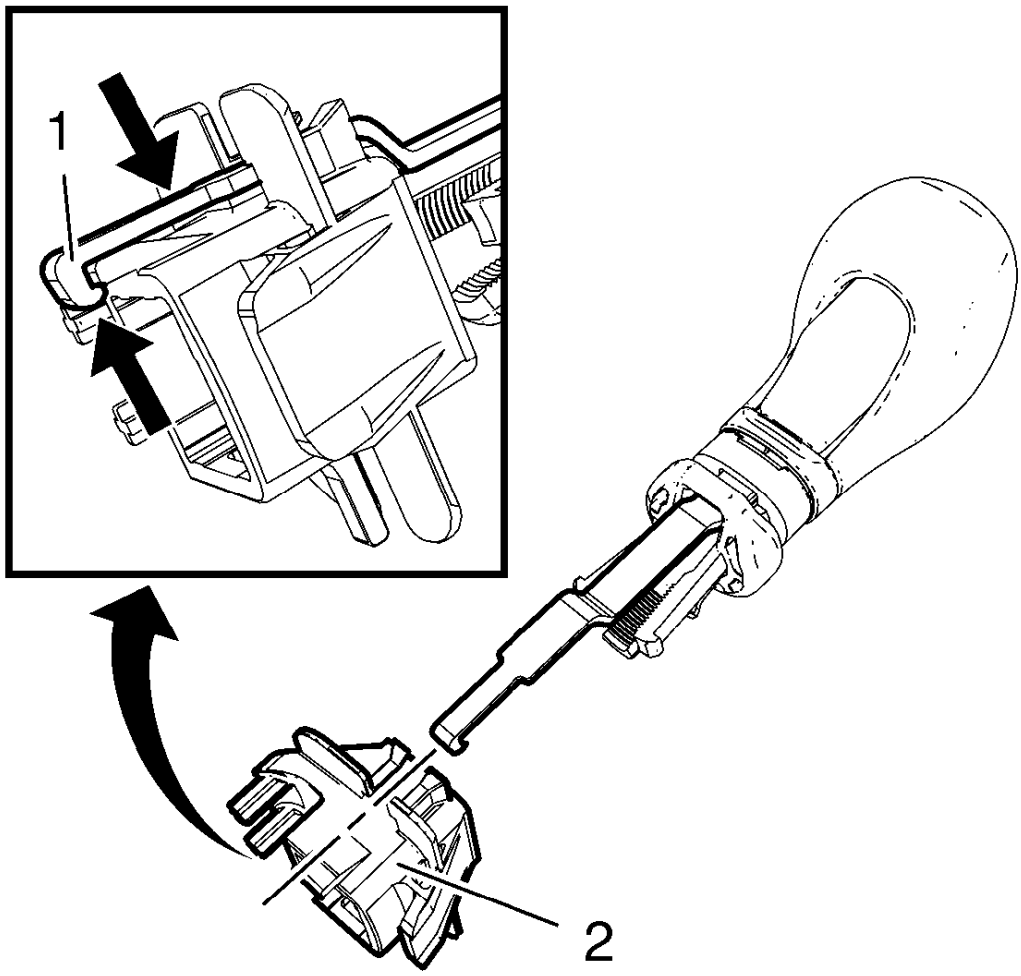

Fig. 22: Pull Latch
Courtesy of GENERAL MOTORS COMPANY

8. Press the retaining tab (1) in the direction of arrows.
9. Remove the reverse lockout device (2) from the transmission shifter knob assembly.

Installation Procedure

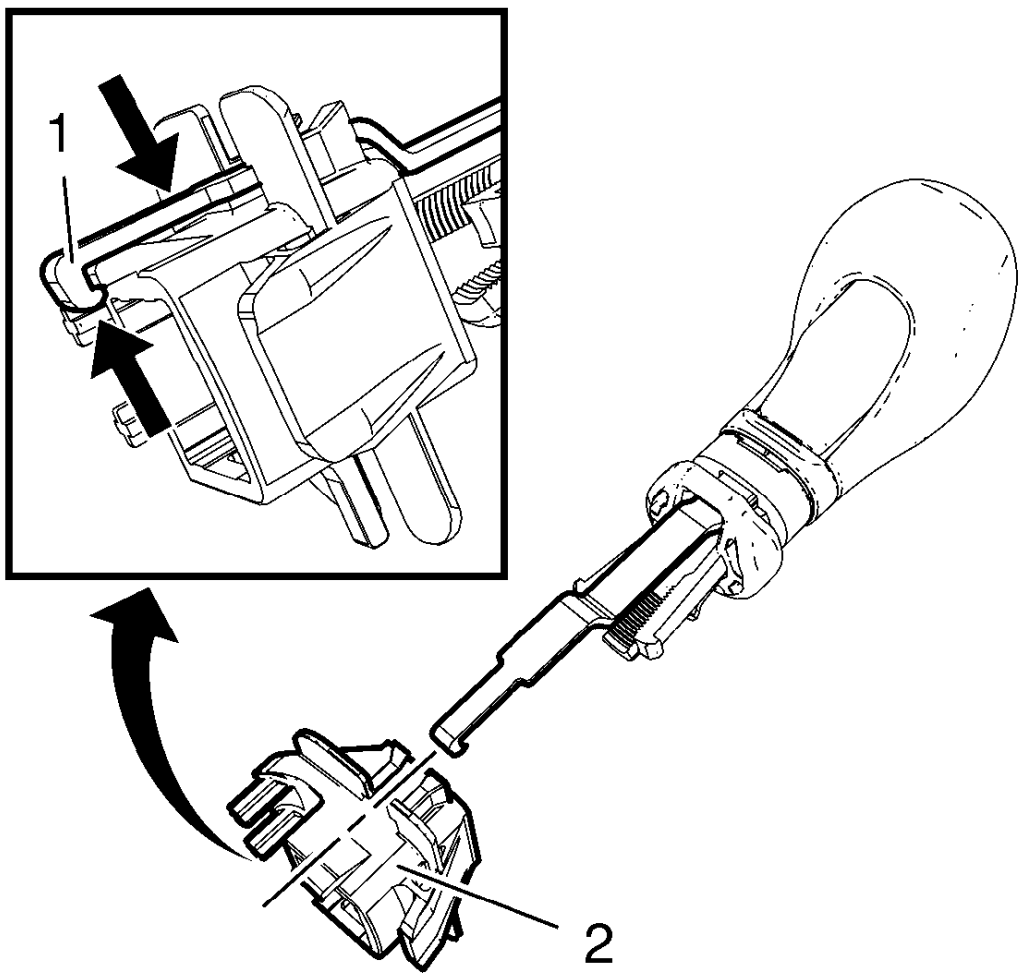

Fig. 23: Pull Latch
Courtesy of GENERAL MOTORS COMPANY

1. Install reverse lockout device (2) to transmission control lever knob assembly.
2. Ensure that the retaining tab (1) is fully engaged on the reverse lockout device (2).

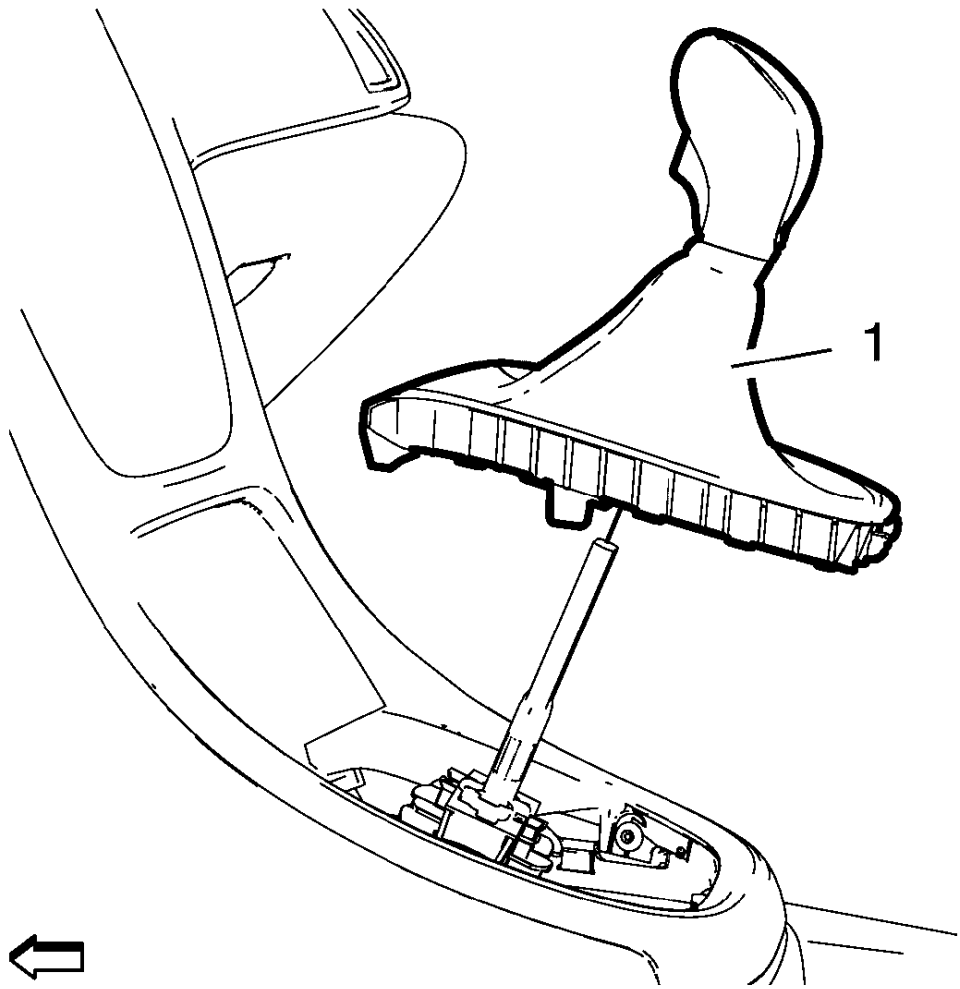

Fig. 24: Transmission Control Lever Knob Assembly
Courtesy of GENERAL MOTORS COMPANY

3. Install the transmission control lever knob assembly (1).
4. Engage the reverse lockout device tab by pushing downward on the reverse lockout device until fully seated.

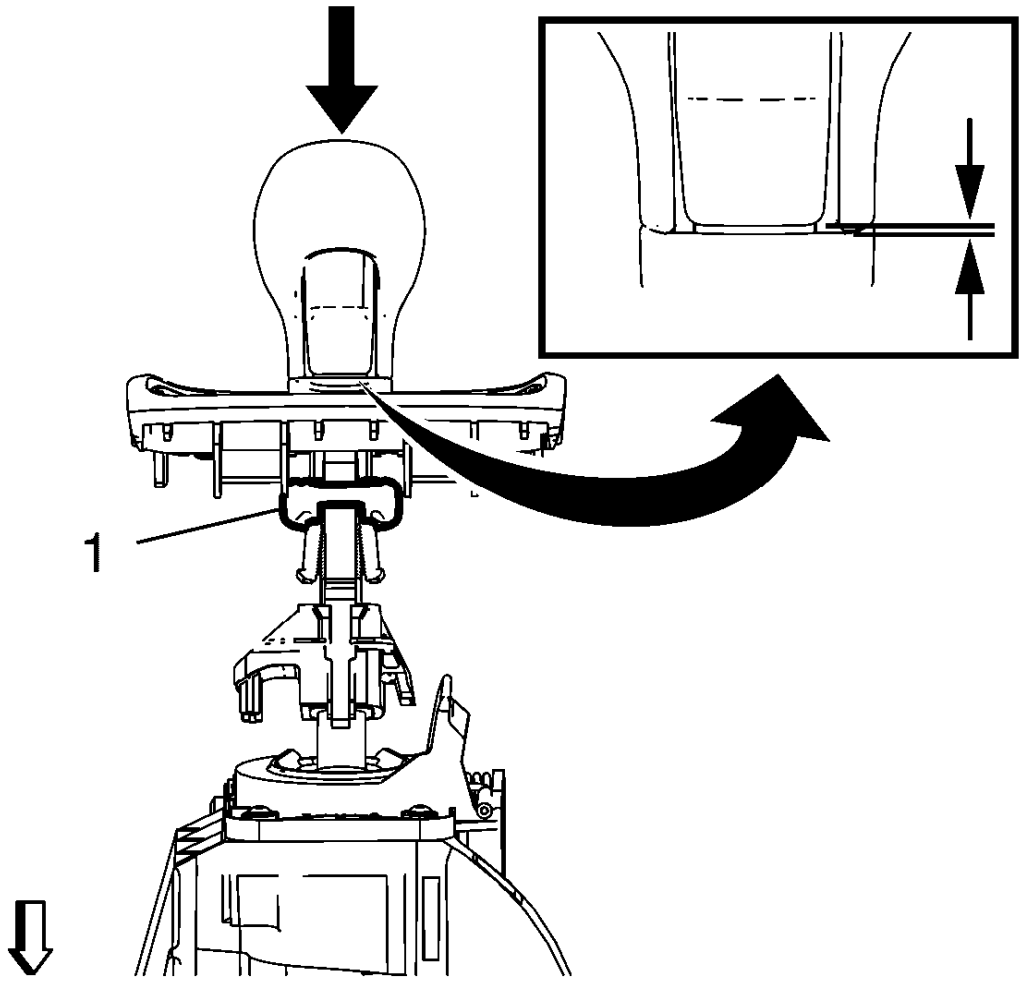

Fig. 25: Transmission Control Lever Retainer Ring
Courtesy of GENERAL MOTORS COMPANY

5. Slide the transmission control lever retainer ring (1) downward until fully seated. Confirm that there is a visible gap between the control lever knob and the reverse inhibitor button (arrows).

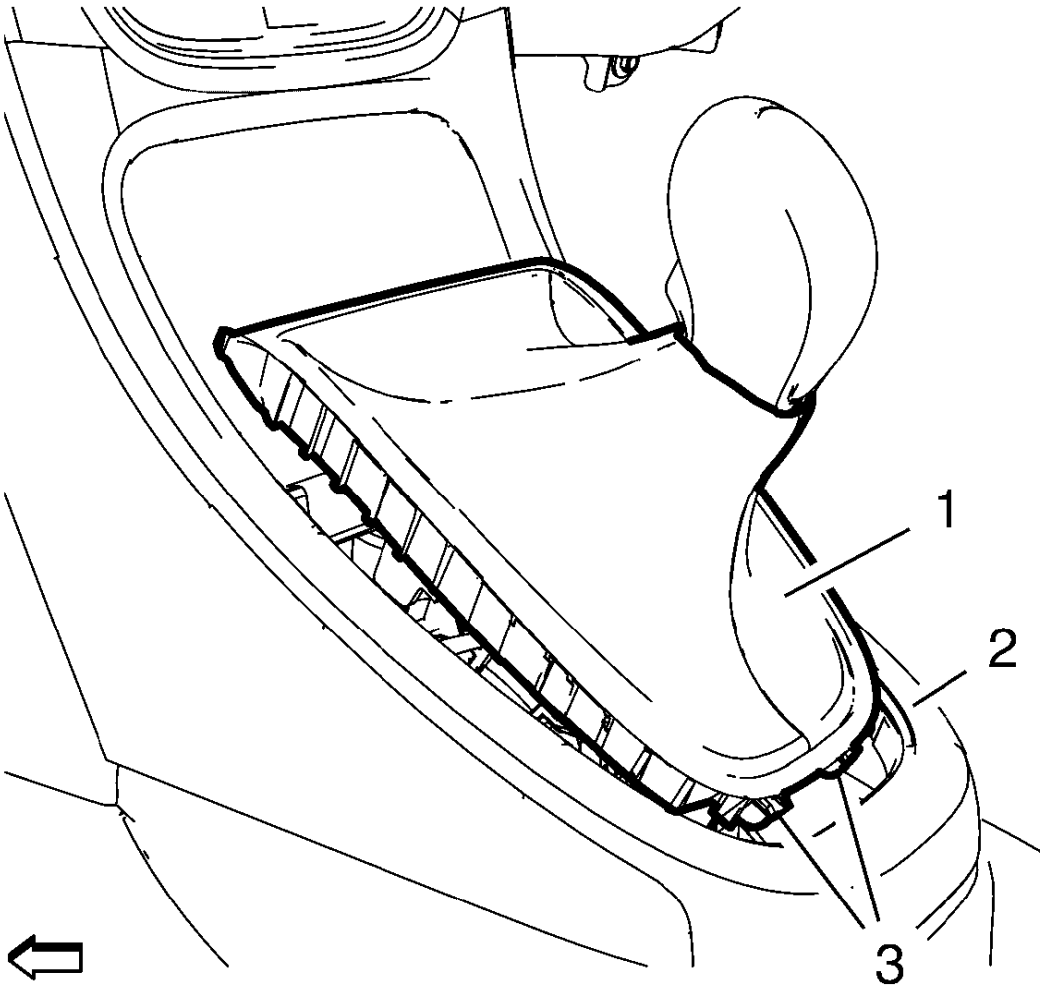

Fig. 26: Shift Boot Frame
Courtesy of GENERAL MOTORS COMPANY

6. Install the transmission control lever boot (1) into the front floor console (2).
    1. Insert the rear portion of the boot frame into the console.
    2. Lower the front portion of the boot into the console and press down to engage retainers.
7. Install the instrument panel lower center compartment liner (2) to the front floor console. Refer to .
8. Install the mat.

MANUAL TRANSMISSION SHIFT LEVER AND SELECTOR LEVER CABLE REPLACEMENT

Removal Procedure

1. Remove transmission control. Refer to **Transmission Control Replacement**.
2. Remove battery tray. Refer to **Battery Tray Replacement** .

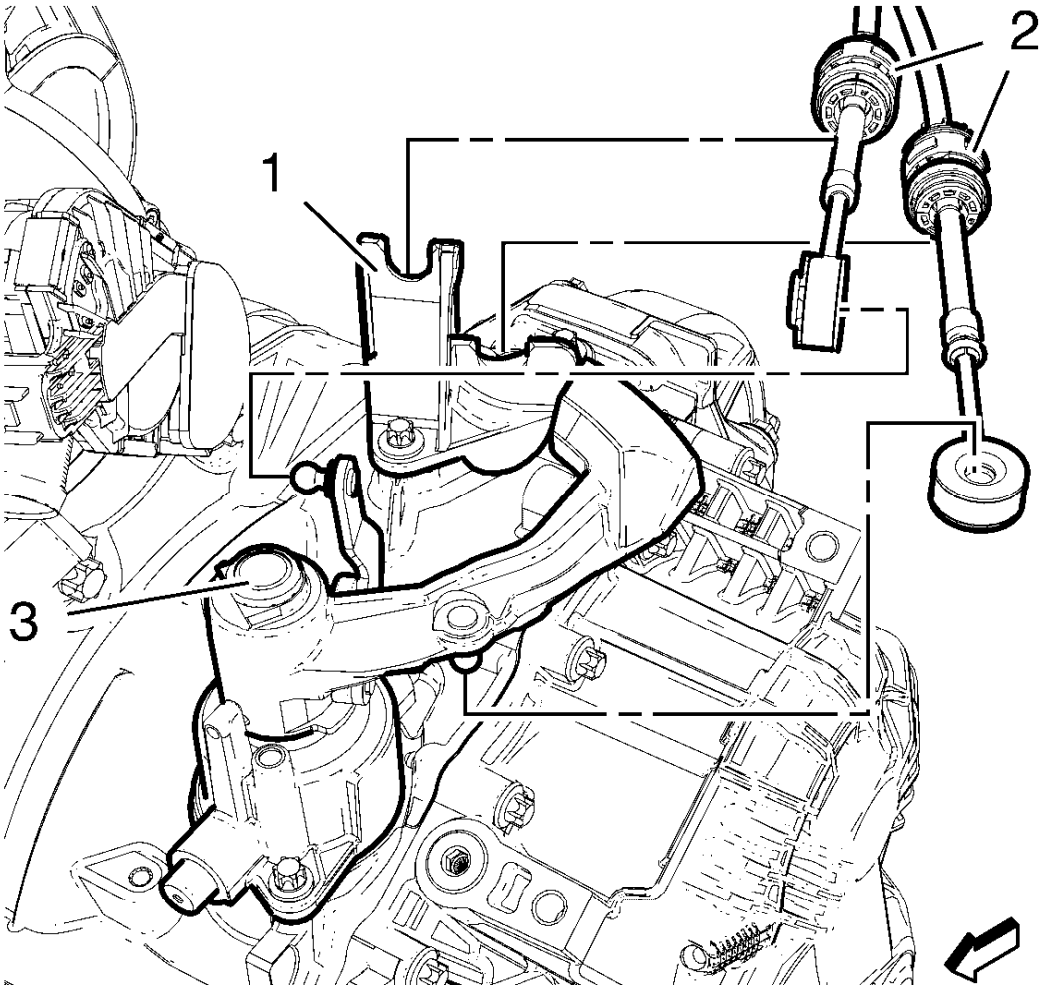

Fig. 27: Selector Lever Cable, Bracket And Transmission Control Housing
Courtesy of GENERAL MOTORS COMPANY

3. Using a suitable pry tool, carefully remove shift lever and selector lever cable (2) from transmission control housing (3).
4. Remove shift lever and selector lever cable from shift lever and selector lever cable bracket (1).

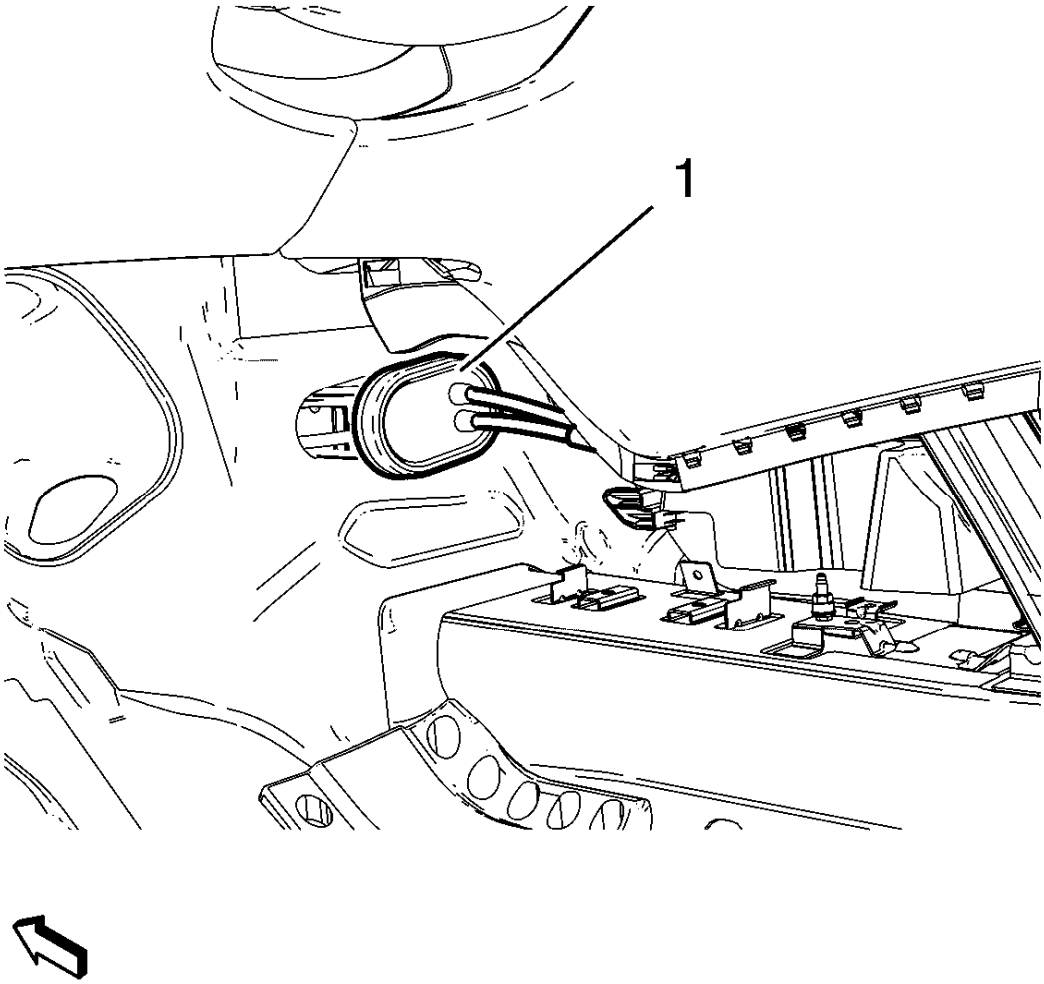

Fig. 28: Selector Lever Cable
Courtesy of GENERAL MOTORS COMPANY

5. Remove shift lever and selector lever cable (1) from bulkhead.
6. Remove shift lever and selector lever cable from inside the engine compartment.

Installation Procedure

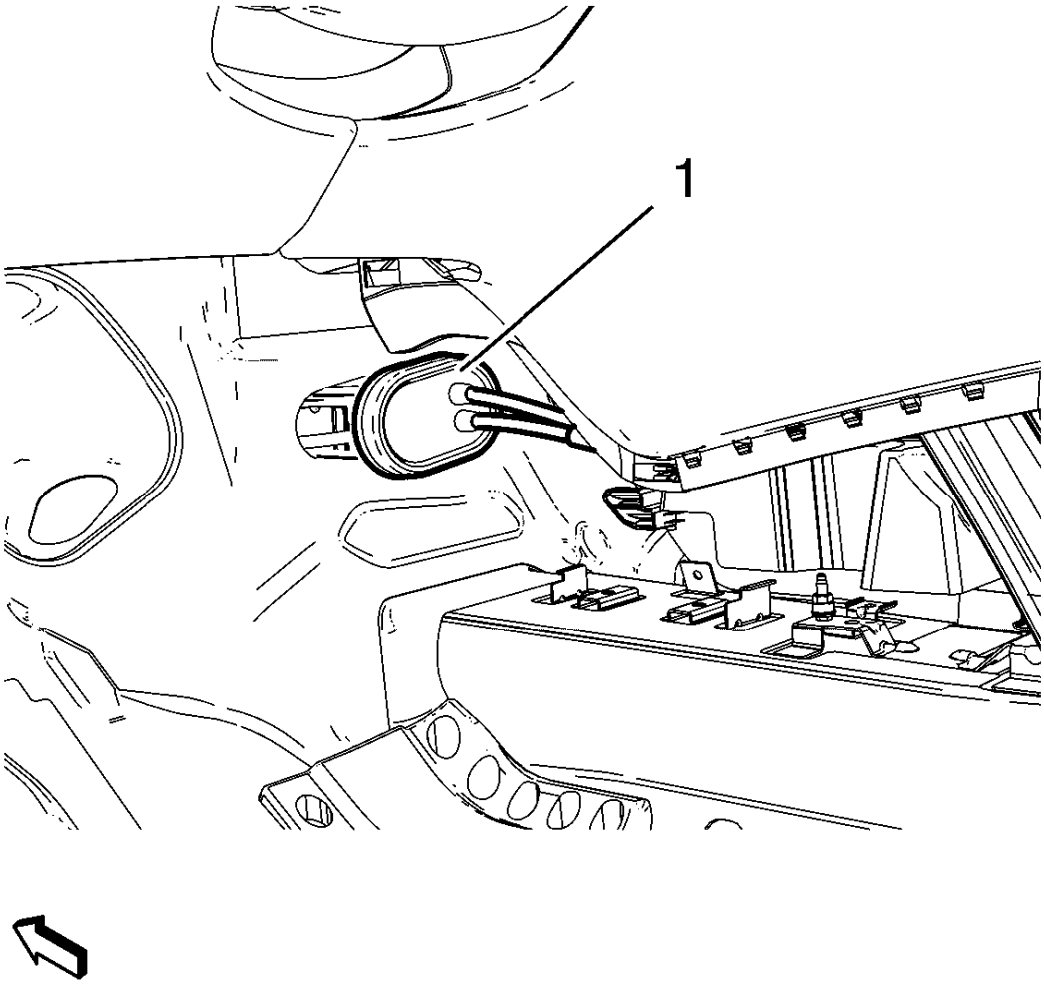

Fig. 29: Selector Lever Cable
Courtesy of GENERAL MOTORS COMPANY

1. Install shift lever and selector lever cable from inside the engine compartment.
2. Install shift lever and selector lever cable (1) to bulkhead.

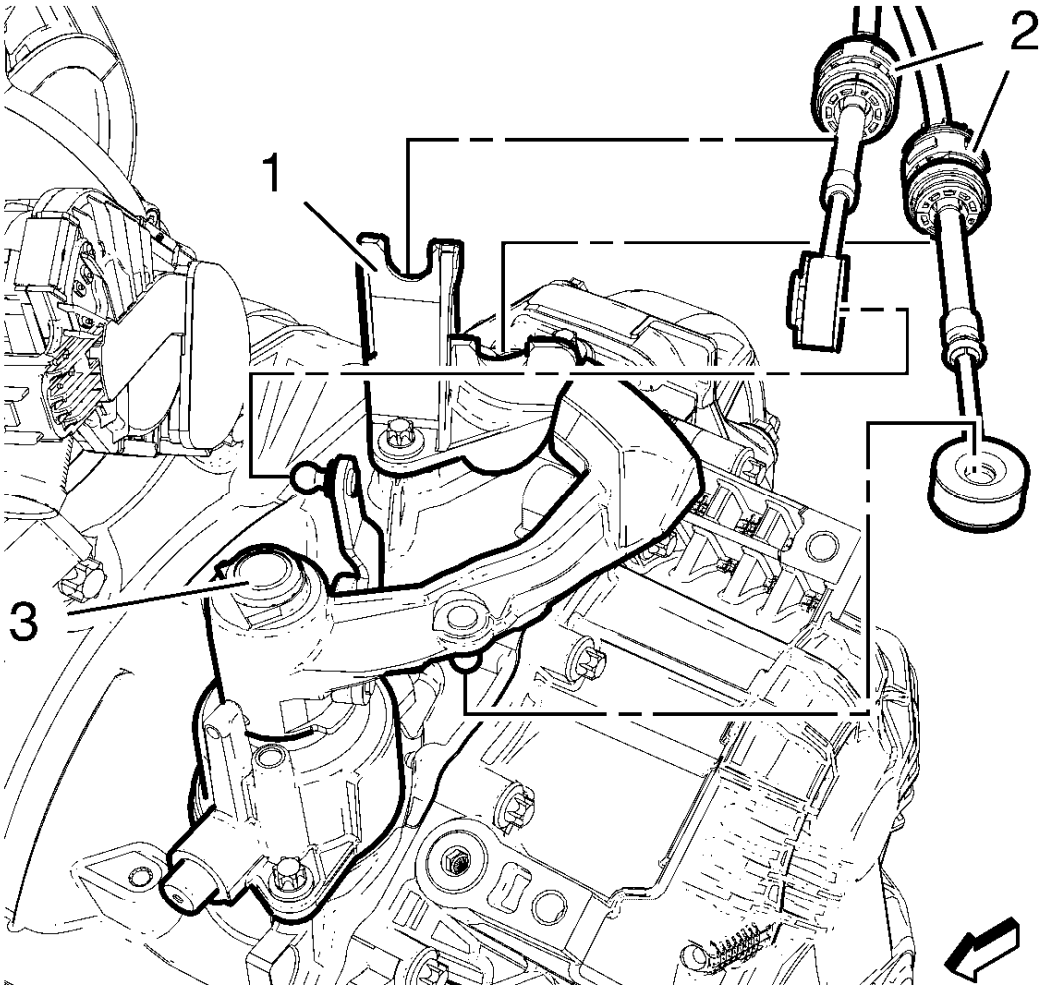

Fig. 30: Selector Lever Cable, Bracket And Transmission Control Housing
Courtesy of GENERAL MOTORS COMPANY

3. Install shift lever and selector lever cable (2) to shift lever and selector lever cable bracket (1).
4. Install shift lever and selector lever cable to transmission control housing (3).
5. Install transmission control. Refer to **Transmission Control Replacement**.
6. Install battery tray. Refer to **Battery Tray Replacement** .

SELECTOR AND SHIFT LEVER CABLE BRACKET REPLACEMENT

Removal Procedure

1. Remove battery tray. Refer to **Battery Tray Replacement** .

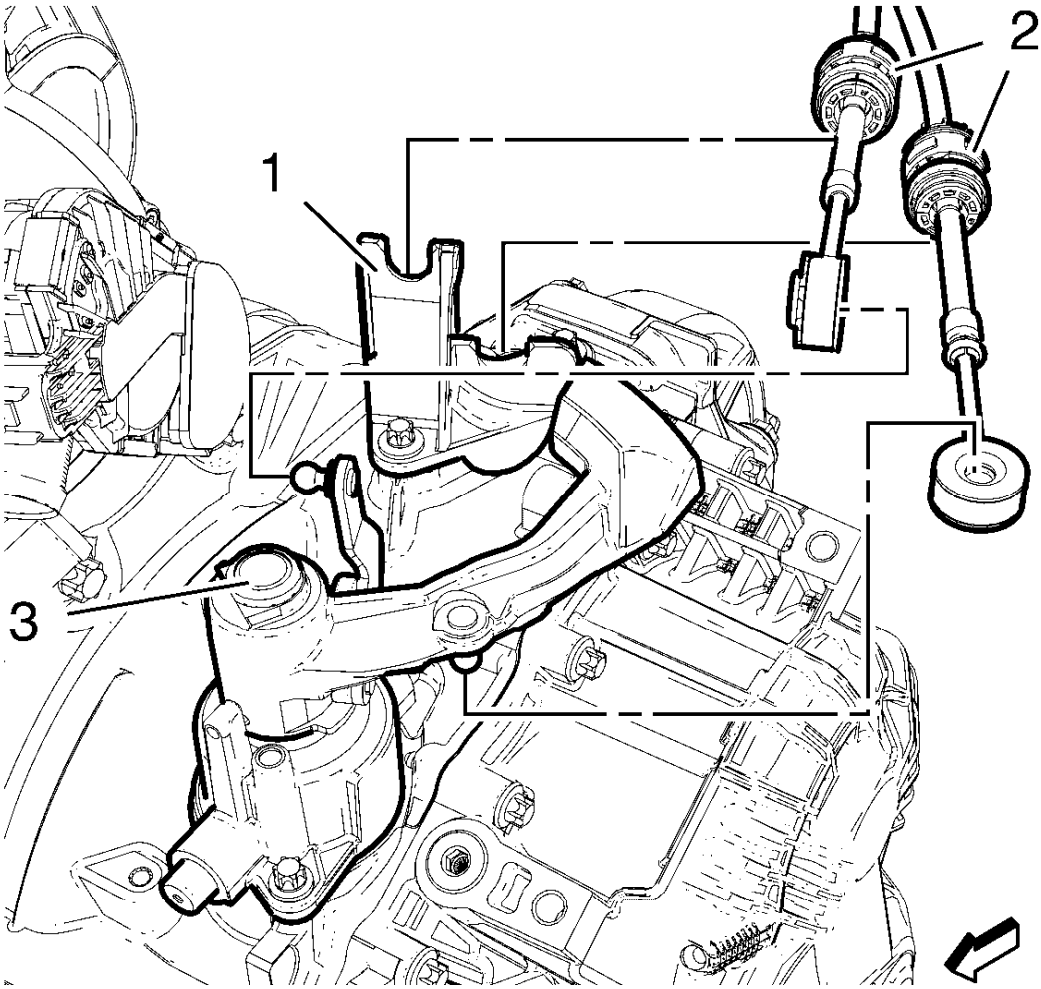

Fig. 31: Selector Lever Cable, Bracket And Transmission Control Housing
Courtesy of GENERAL MOTORS COMPANY

2. Using a suitable pry tool, carefully remove shift lever and selector lever cable (2) from transmission control housing (3) using.
3. Remove shift lever and selector lever cable from shift lever and selector lever cable bracket (1).

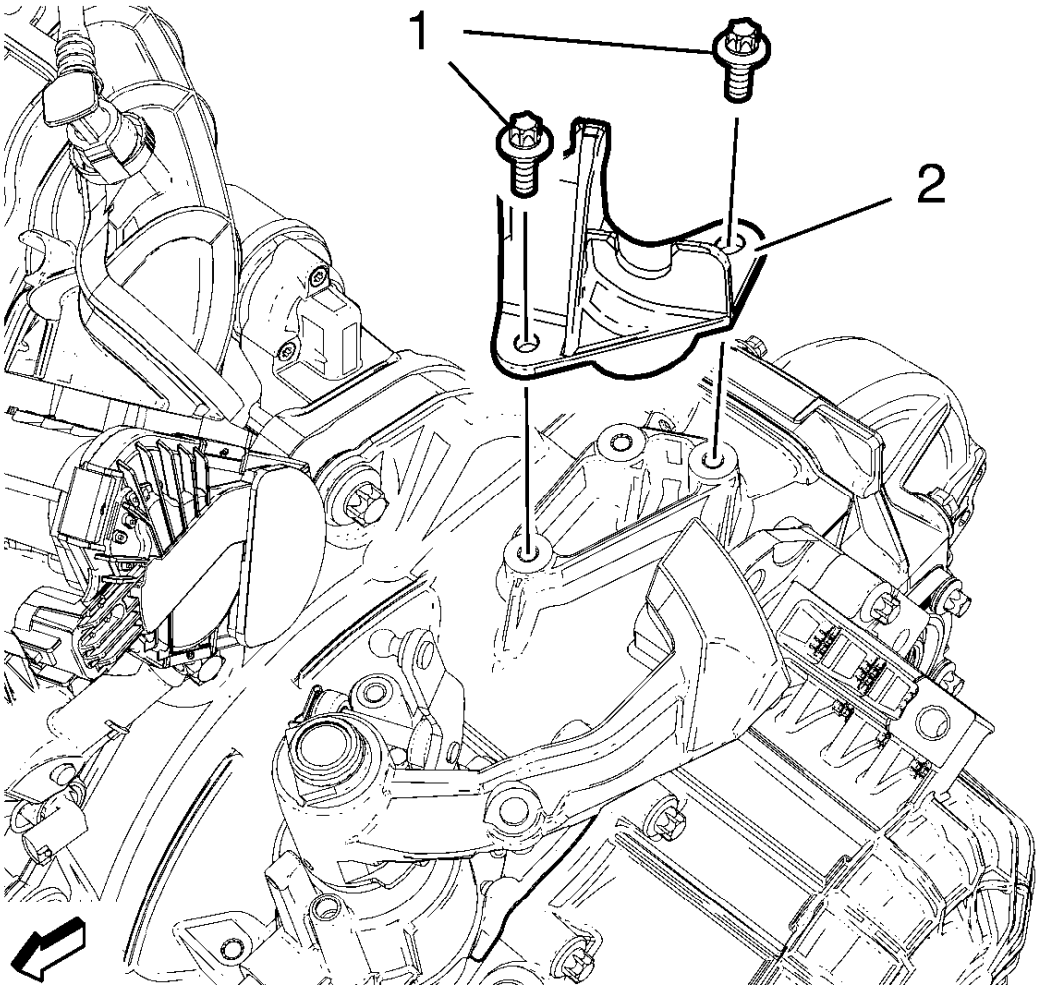

Fig. 32: Selector Lever Cable Bracket And Bolts
Courtesy of GENERAL MOTORS COMPANY

4. Remove 2 shift lever and selector lever cable bracket bolts (1).
5. Remove shift lever and selector lever cable bracket (2).

Installation Procedure

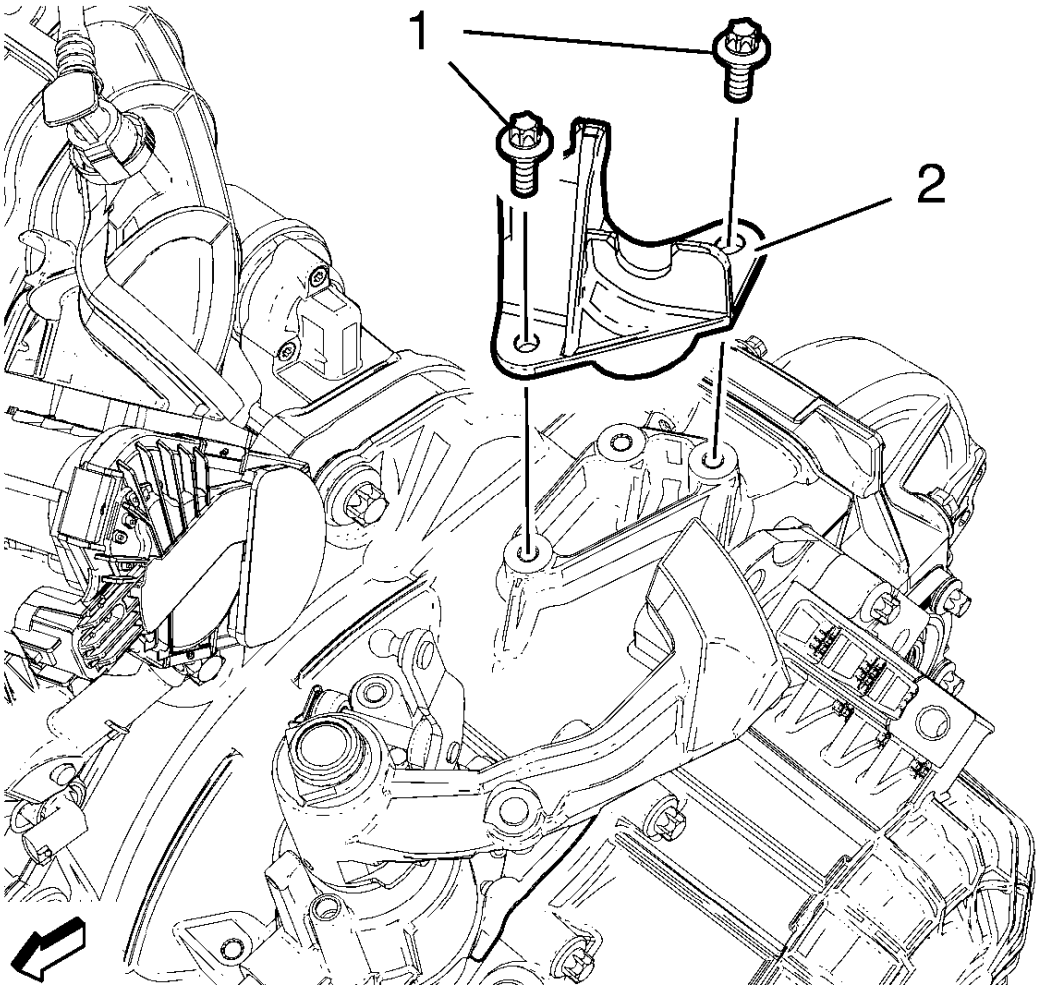

Fig. 33: Selector Lever Cable Bracket And Bolts
Courtesy of GENERAL MOTORS COMPANY

1. Install shift lever and selector lever cable bracket (2).

CAUTION: Refer to Fastener Caution .

2. Install 2 shift lever and selector lever cable bracket bolts (1) and tighten to 20 N.m (15 lb ft).

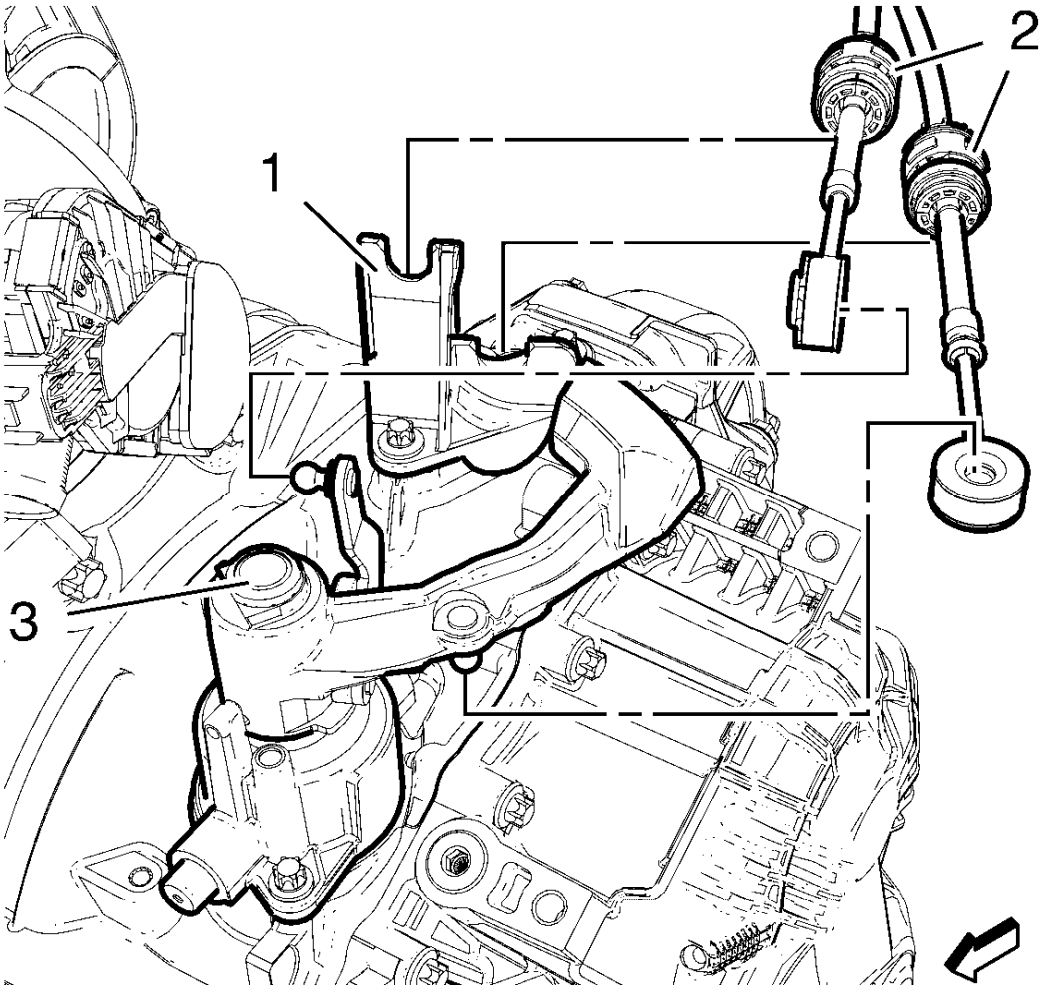

Fig. 34: Selector Lever Cable, Bracket And Transmission Control Housing
Courtesy of GENERAL MOTORS COMPANY

3. Install shift lever and selector lever cable (2) to shift lever and selector lever cable bracket (1).
4. Install shift lever and selector lever cable to transmission control housing (3).
5. Install battery tray. Refer to **Battery Tray Replacement** .

TRANSMISSION CONTROL REPLACEMENT

Removal Procedure

1. Remove front floor console. Refer to **Front Floor Console Replacement** .

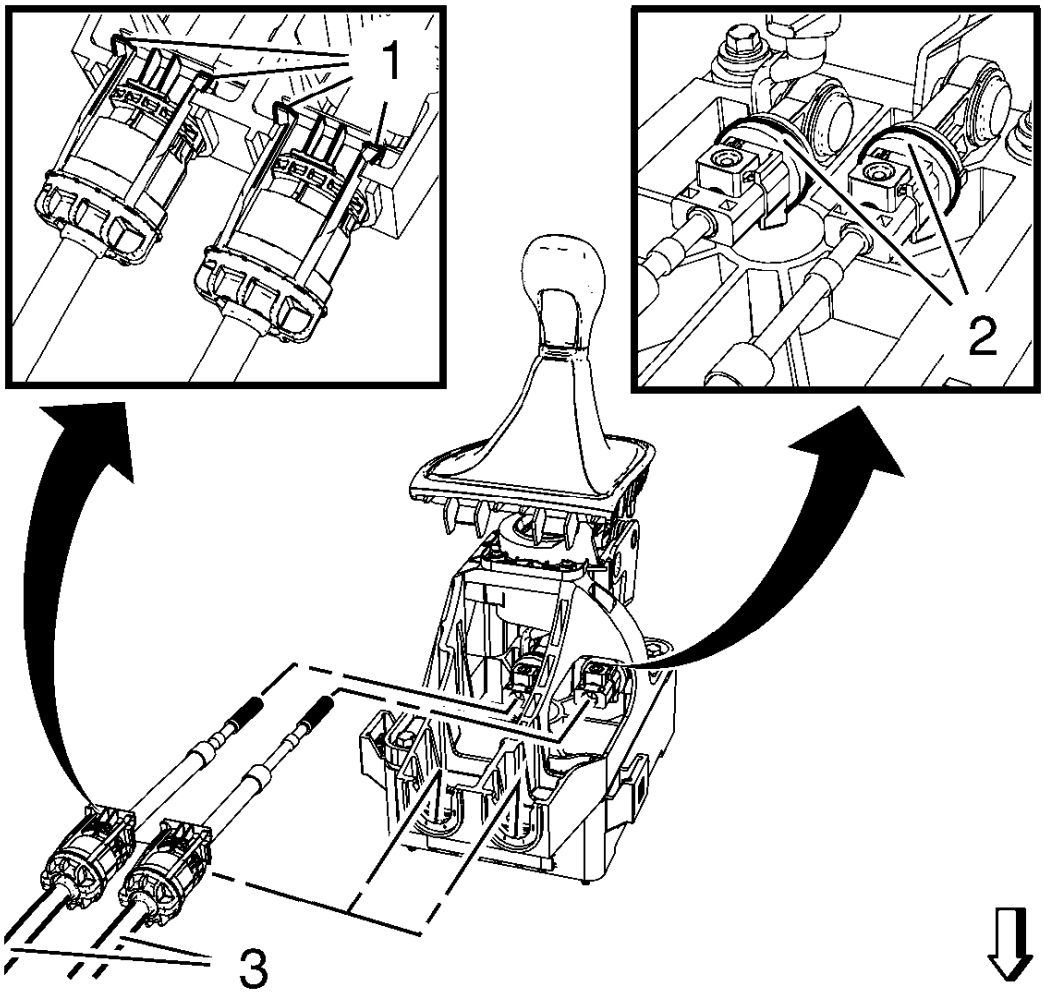

Fig. 35: Selector Lever Cable, Adjust Locks And Transmission Control Lever Housing
Courtesy of GENERAL MOTORS COMPANY

2. Unlock shift lever and selector lever cable adjust locks (2).
3. Clip shift lever and selector lever cable (3) out of transmission control lever housing (1).

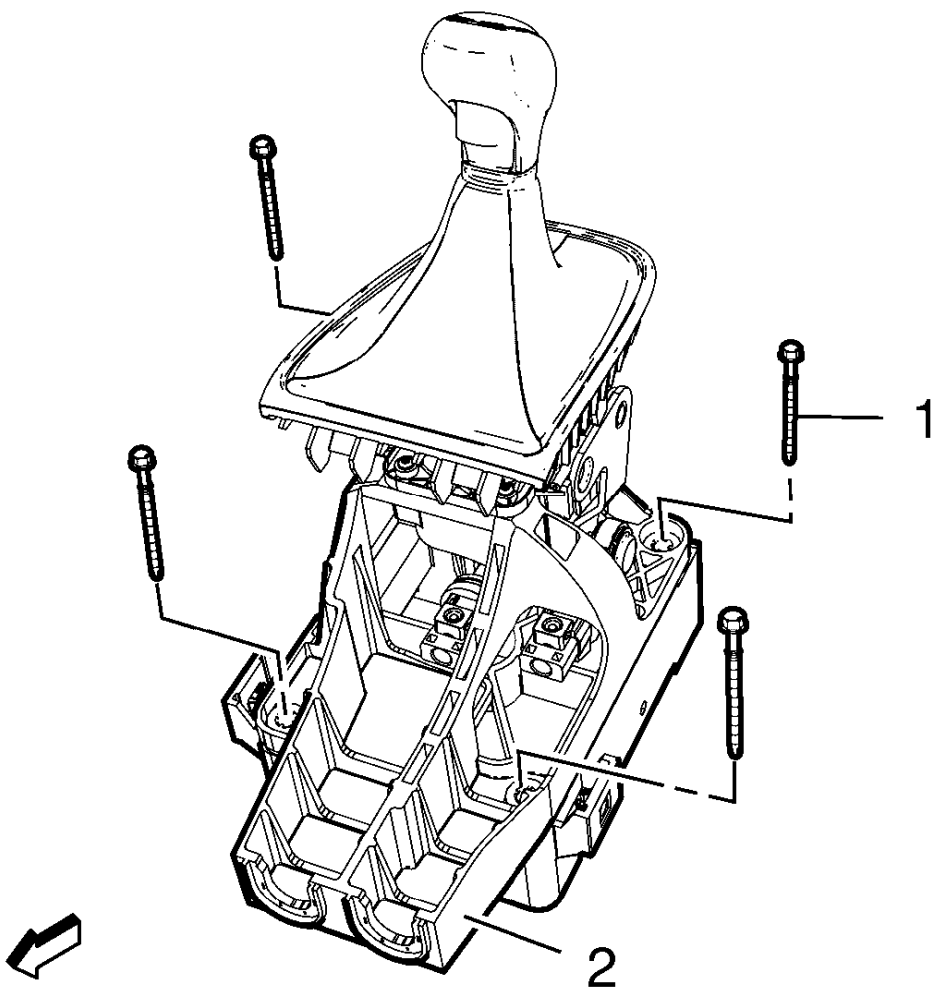

Fig. 36: Transmission Control Lever And Bolts
Courtesy of GENERAL MOTORS COMPANY

4. Remove 4 transmission control lever bolts (1).
5. Remove transmission control lever (2).

Installation Procedure

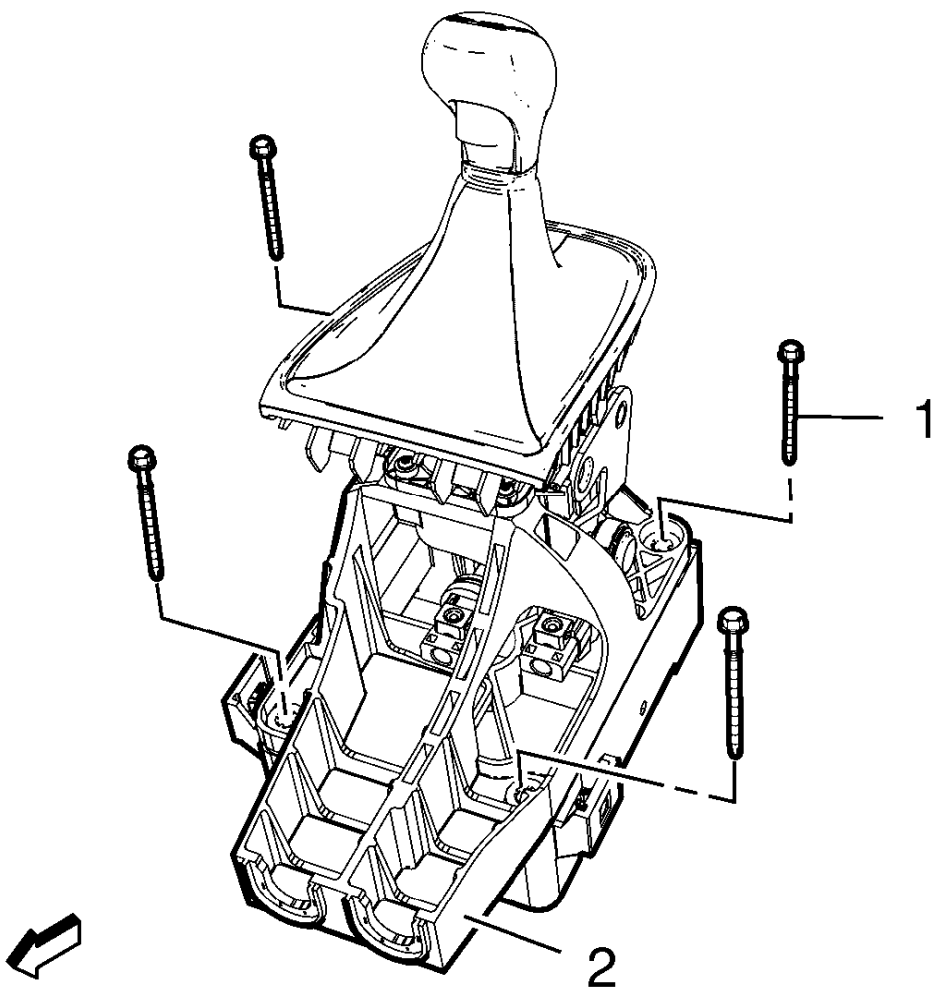

Fig. 37: Transmission Control Lever And Bolts
Courtesy of GENERAL MOTORS COMPANY

1. Install NEW transmission control lever (2).

CAUTION: Refer to Fastener Caution .

2. Install 4 transmission control lever bolts (1) and tighten to 8 N.m (71 lb in).

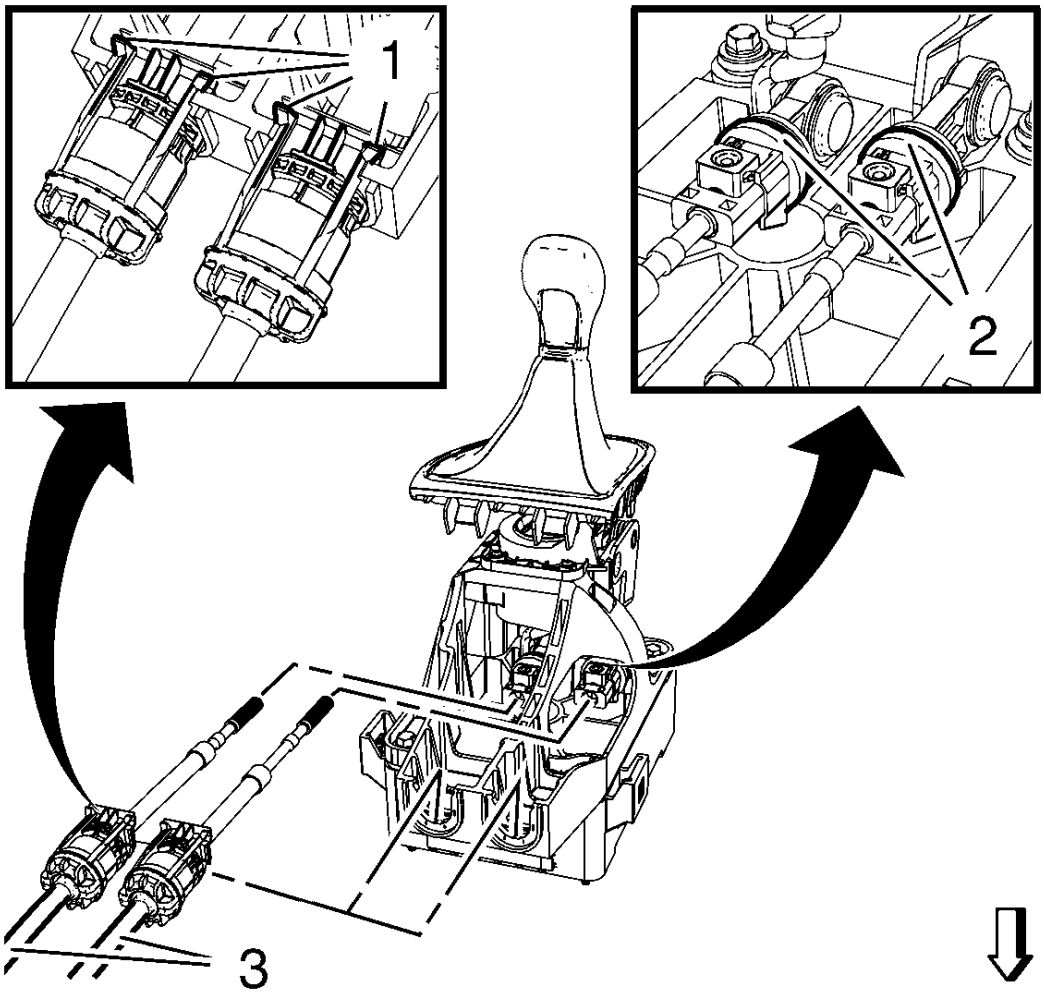

Fig. 38: Selector Lever Cable, Adjust Locks And Transmission Control Lever Housing
Courtesy of GENERAL MOTORS COMPANY

NOTE: Do not lock yet.

3. Slide shift lever and selector lever cable into shift lever and selector lever cable adjust locks (2).
4. Clip shift lever and selector lever cable (3) into transmission control lever housing (1).
5. Adjust shift lever and selector lever cable. Refer to **Manual Transmission Shift Lever and Selector Lever Cable Adjustment**.

MANUAL TRANSMISSION SHIFT LEVER AND SELECTOR LEVER CABLE ADJUSTMENT

Special Tools

DT-527-A Adjuster

For equivalent regional tools, refer to **Special Tools**.

Removal Procedure

1. Remove the transmission control lever trim cover. Refer to **Automatic or Manual Transmission Control Lever Trim Cover Replacement** .
2. Remove the front floor console storage tray. Refer to **Front Floor Console Stowage Tray Replacement** .

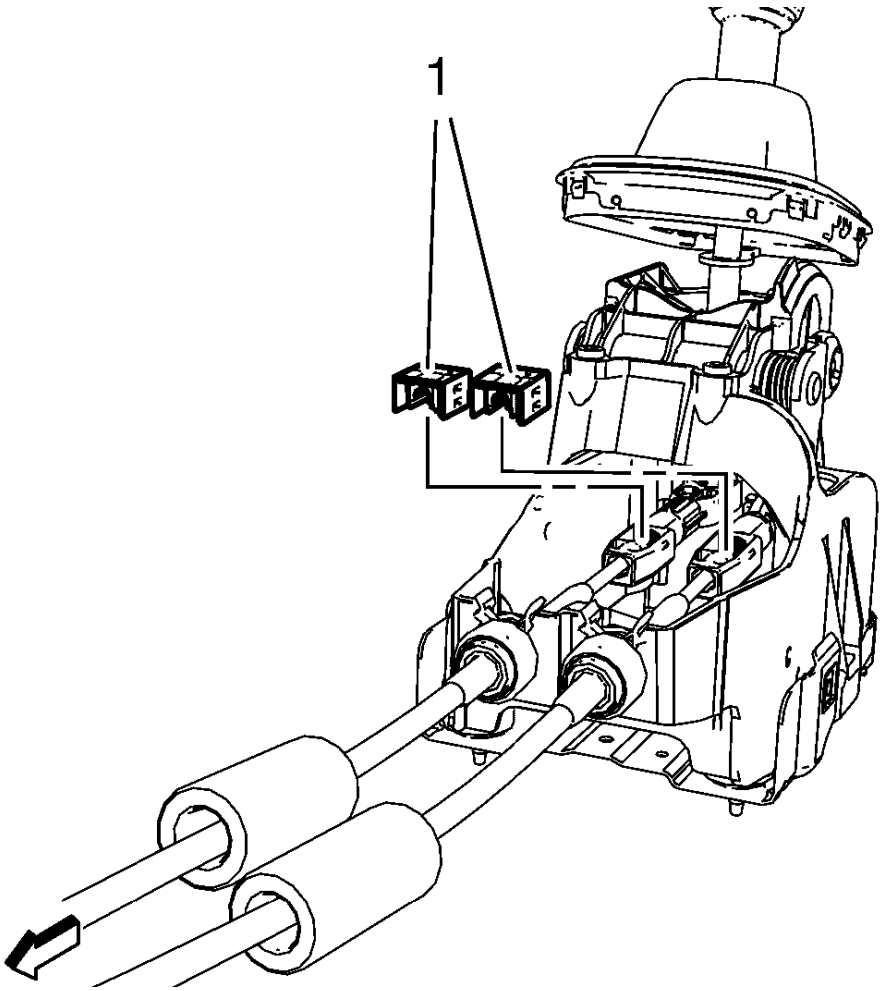

Fig. 39: Shift Lever And Select Lever Cable Adjust Locks
Courtesy of GENERAL MOTORS COMPANY

3. Lift upward and disengage but DO NOT remove both cable Lock adjusters (1) to release the internal cable assembly, one for each cable.

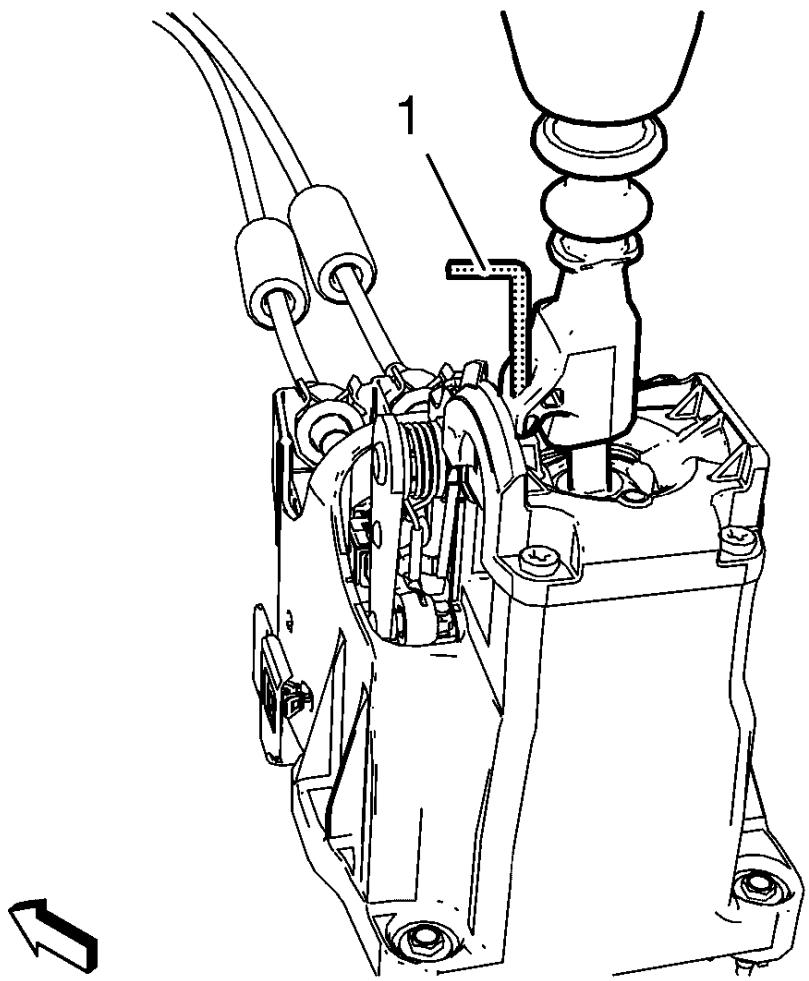

Fig. 40: Shift Control Lever
Courtesy of GENERAL MOTORS COMPANY

NOTE: **The hole of the shift control lever must be aligned to the hole in the shifter base so the pin (1) can pass through both. The shift control lever will be locked in the 1-2 neutral position. Not using the specified tools may lead to improper shift system adjustment.**

4. Lock the position of the shift control lever with **DT-527-A** adjuster (1) or a (5 mm 0.2 in) drill bit.

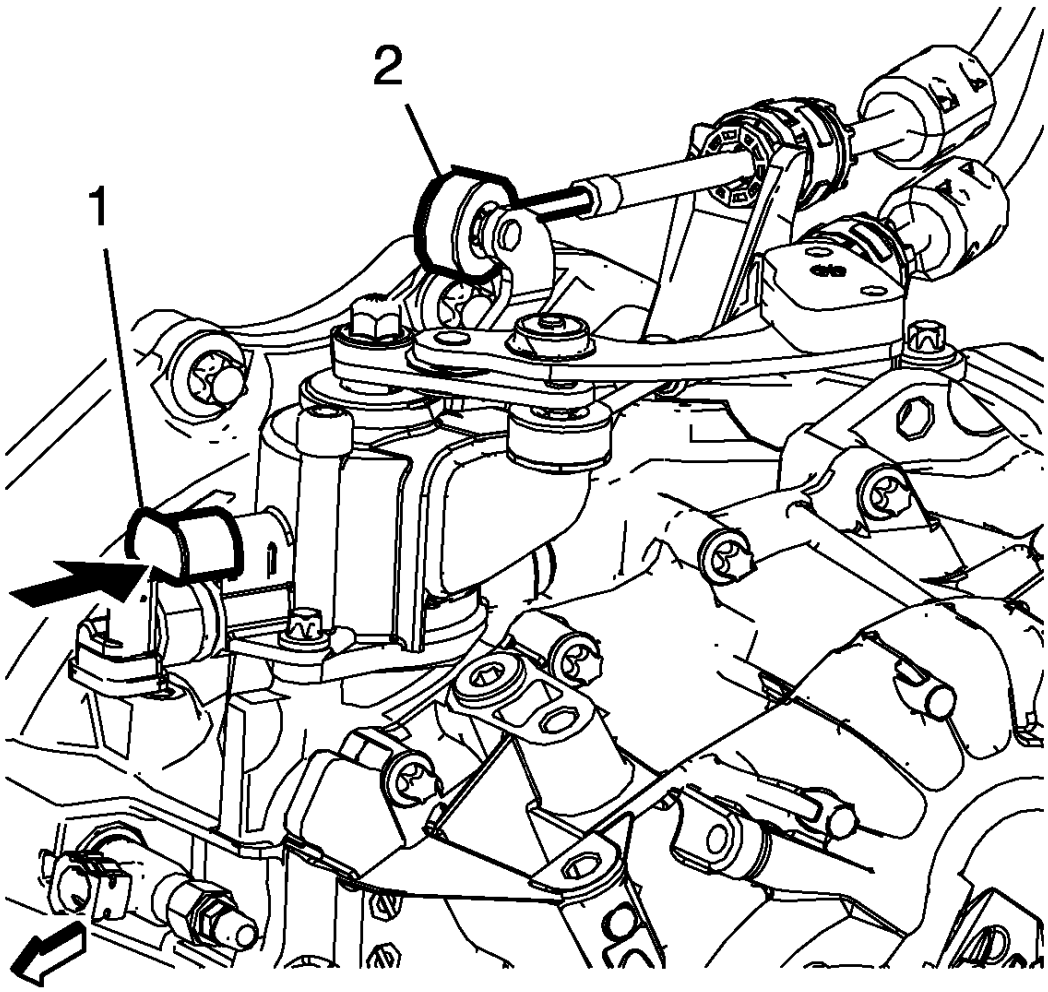

Fig. 41: Selector Lever
Courtesy of GENERAL MOTORS COMPANY

5. Block the shift control housing, push the selector lever (2) backwards and push (arrow) the blocking device (1) towards the shift control housing.

Installation Procedure

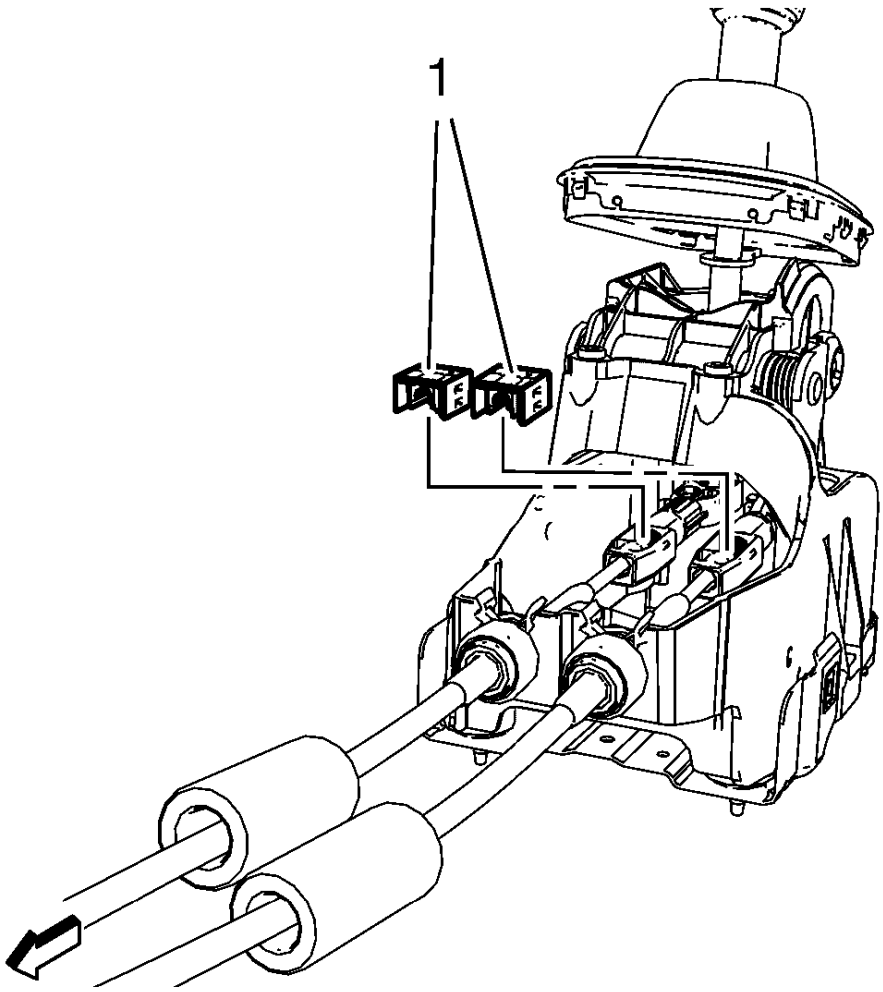

Fig. 42: Shift Lever And Select Lever Cable Adjust Locks
Courtesy of GENERAL MOTORS COMPANY

NOTE:

- **During this procedure DO NOT touch or preload the fixed shift lever as this may cause improper adjustment of the shift system.**
- **When locking the adjuster locks (1) a defined snap noise should be audible, a snap effect should be felt.**

1. Secure adjuster locks (1) by pushing down until locked and fully seated. One for each cable.

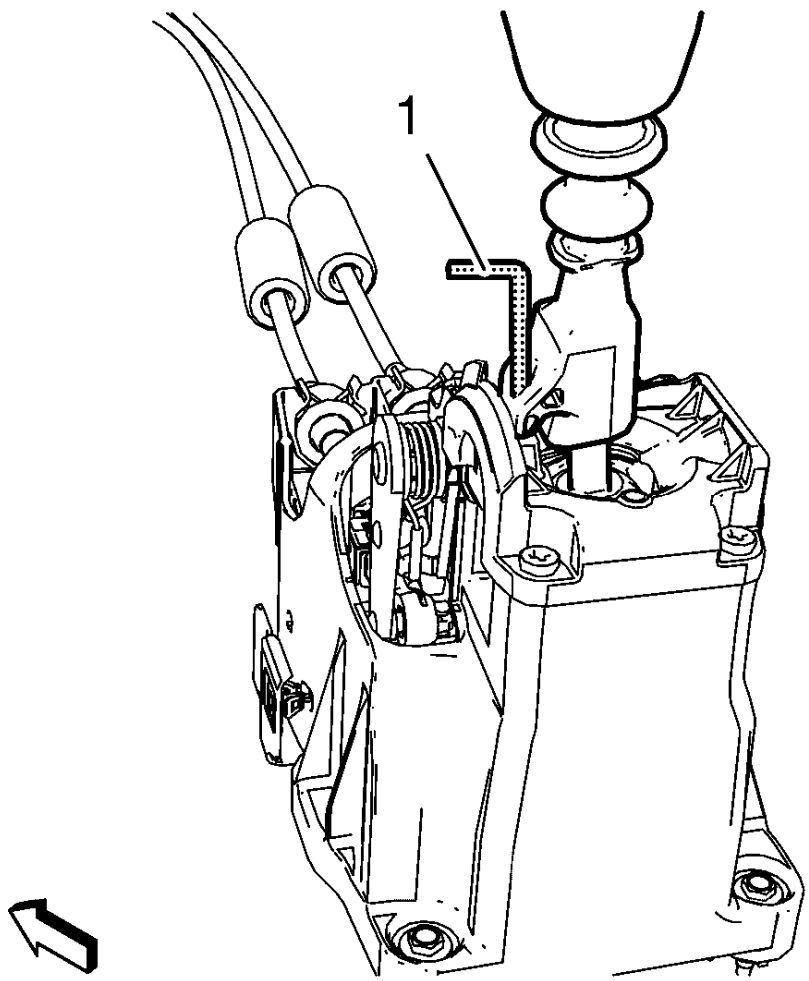

Fig. 43: Shift Control Lever
Courtesy of GENERAL MOTORS COMPANY

2. Remove the **DT-527-A** adjuster (1) or the drill bit from the shift control lever.

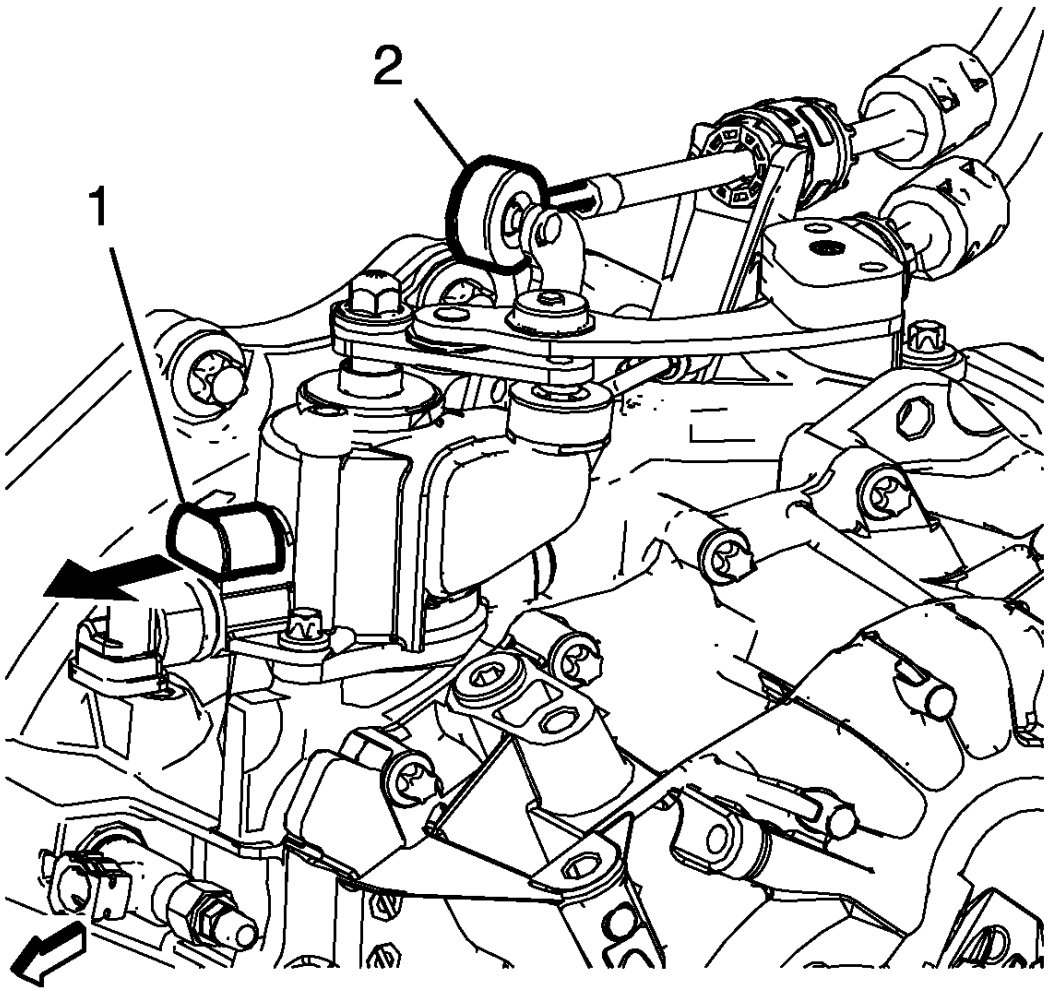

Fig. 44: Blocking Device
Courtesy of GENERAL MOTORS COMPANY

NOTE: When unblocking the blocking device (1) a defined snap noise should be audible / a snap effect should be felt.

3. Unblock the shift control housing, push slightly the selector lever (2) backwards and pull (arrow) the blocking device away from the shift control housing.
4. Check the correct shifting function.
5. If necessary repeat the adjusting procedure.
6. Install the front floor console storage tray. Refer to **Front Floor Console Stowage Tray Replacement** .
7. Install the transmission control lever trim cover. Refer to **Automatic or Manual Transmission Control Lever Trim Cover Replacement** .

SHIFT CONTROL HOUSING SEAL REPLACEMENT

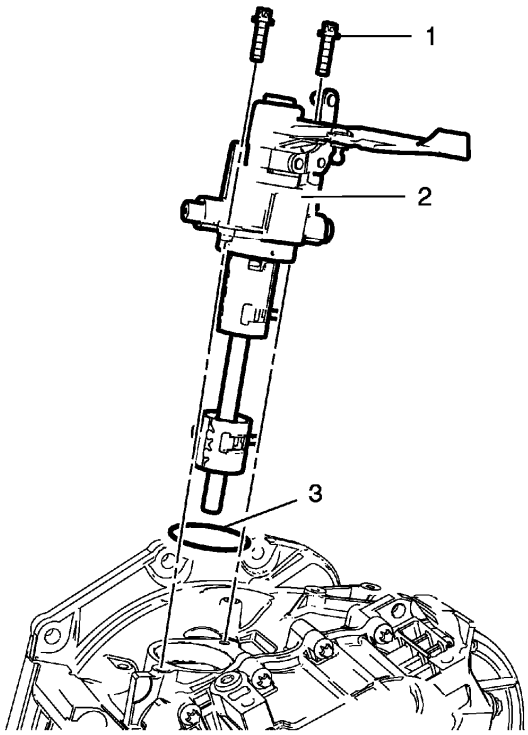

Fig. 45: Shift Control Housing Seal
Courtesy of GENERAL MOTORS COMPANY

Shift Control Housing Seal Replacement

Callout	Component Name
Preliminary Procedures 1. Remove the shift lever and selector lever cable from shift control housing. Refer to **Manual Transmission Shift Lever and Selector Lever Cable Replacement**. 2. Remove the backup lamp switch. Refer to **Backup Lamp Switch Replacement**.	
1	Shift Control Housing Bolt **CAUTION:** **Refer to Fastener Caution .** **Tighten** 20 N.m (15 lb ft)
2	Shift Control Housing **Procedure** After the installation adjust the shift lever and selector cable. Refer to **Manual Transmission Shift Lever and Selector Lever Cable Adjustment**.
3	Shift Control Housing Seal **Procedure**

	Install a NEW seal. DO NOT reuse the old seal.

VEHICLE SPEED SENSOR REPLACEMENT

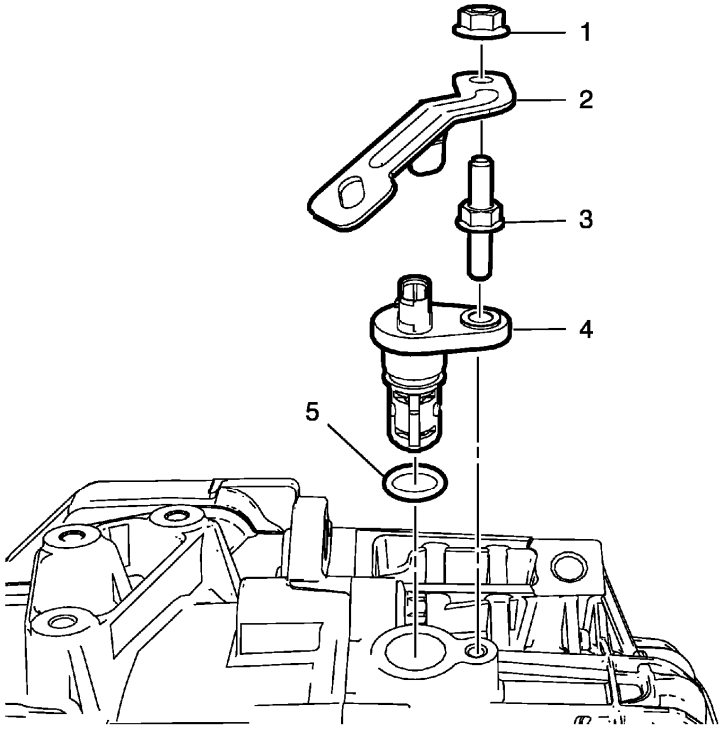

Fig. 46: Vehicle Speed Sensor
Courtesy of GENERAL MOTORS COMPANY

Vehicle Speed Sensor Replacement

Callout	Component Name
1	Engine Wiring Harness Bracket Nut **CAUTION:** **Refer to Fastener Caution .** **Tighten** 9 N.m (80 lb in)
2	Engine Wiring Harness Bracket
3	Vehicle Speed Sensor Bolt **Tighten** 9 N.m (80 lb in)
4	Vehicle Speed Sensor **Procedure** Disconnect wiring harness connector.

5	Vehicle Speed Sensor O-Ring **Procedure** DISCARD the seal and install NEW seal.

BACKUP LAMP SWITCH REPLACEMENT

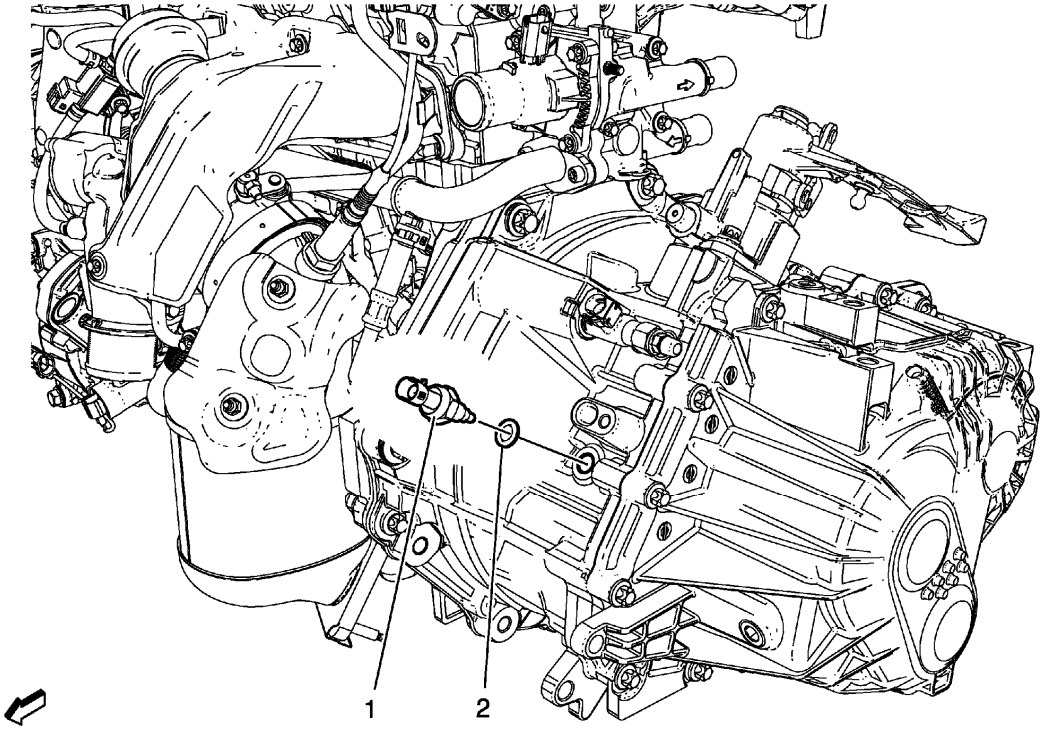

Fig. 47: Backup Lamp Switch
Courtesy of GENERAL MOTORS COMPANY

Backup Lamp Switch Replacement

Callout	Component Name
Preliminary Procedures Disconnect the electrical connector.	
1	Backup Lamp Switch **CAUTION:** **Refer to Component Fastener Tightening Caution .** **Tighten** 20 N.m (15 lb ft)
2	Backup Lamp Switch Washer **Procedure** DISCARD the washer and install a NEW washer.

SHIFT CONTROL HOUSING REPLACEMENT (FIRST DESIGN)

Special Tools

DT-527-A Adjuster

For equivalent regional tools, refer to **Special Tools**.

Removal Procedure

1. Set the parking brake.
2. Remove the battery tray. **Battery Tray Replacement** .
3. For 1.4L gasoline engine only, remove the throttle body assembly. Refer to **Throttle Body Assembly Replacement** .
4. Remove the shift lever and selector lever cable from the shift control housing. Refer to **Manual Transmission Shift Lever and Selector Lever Cable Replacement**.
5. Remove the backup lamp switch. Refer to **Backup Lamp Switch Replacement**.

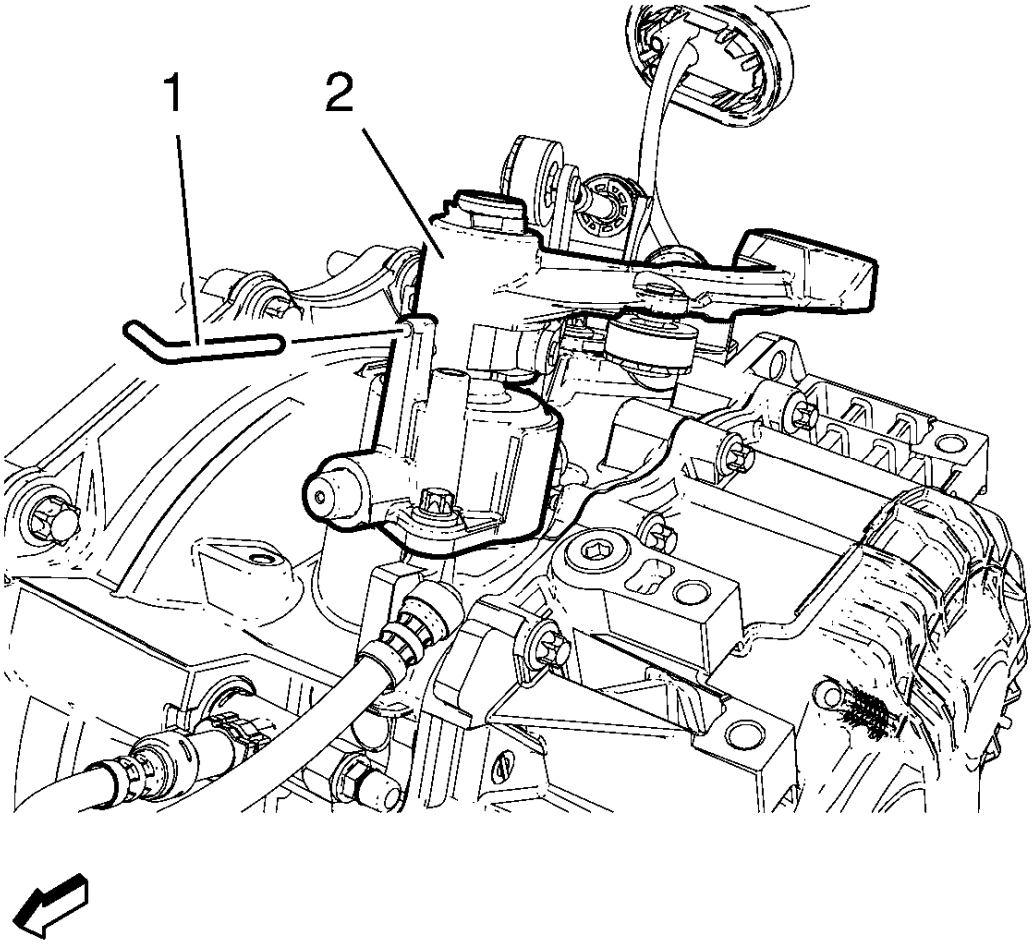

Fig. 48: Transmission Control Housing Adjuster Lock
Courtesy of GENERAL MOTORS COMPANY

6. Block the shift control housing (2), use the **DT-527-A** adjuster (1).
7. Disconnect the electrical connector from the shift control housing assembly.

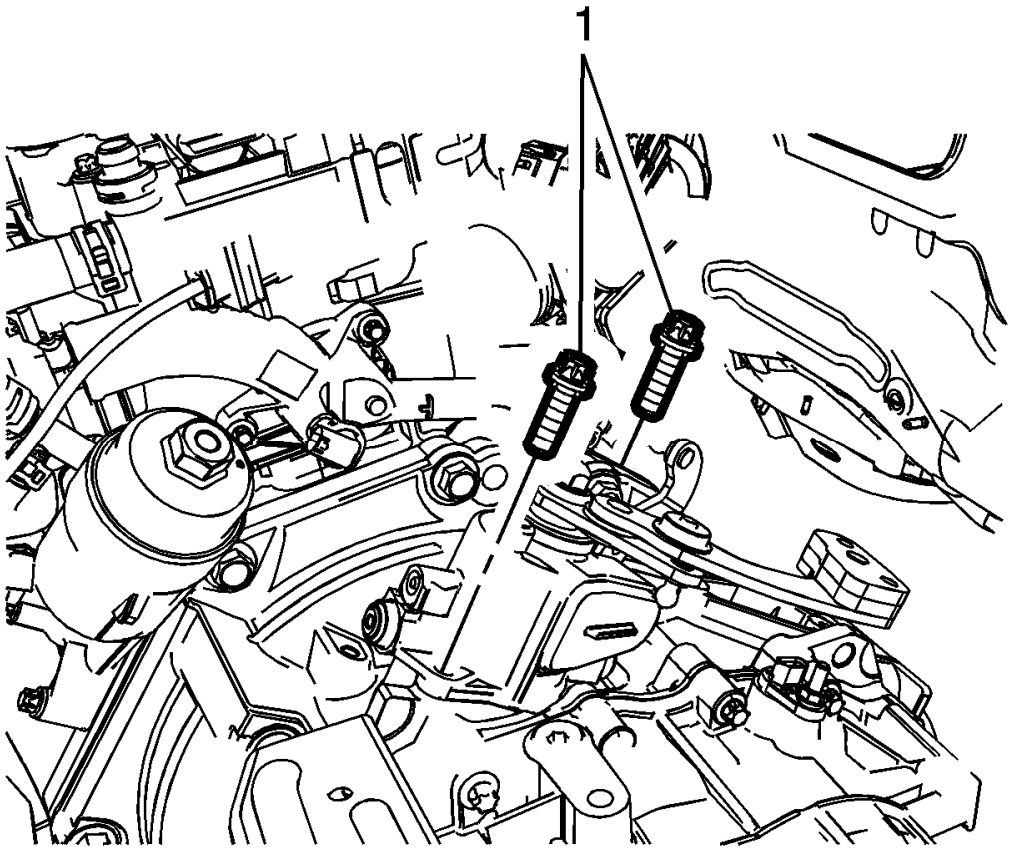

Fig. 49: 2 Shift Control Housing Bolts
Courtesy of GENERAL MOTORS COMPANY

8. Remove the 2 shift control housing bolts (1).

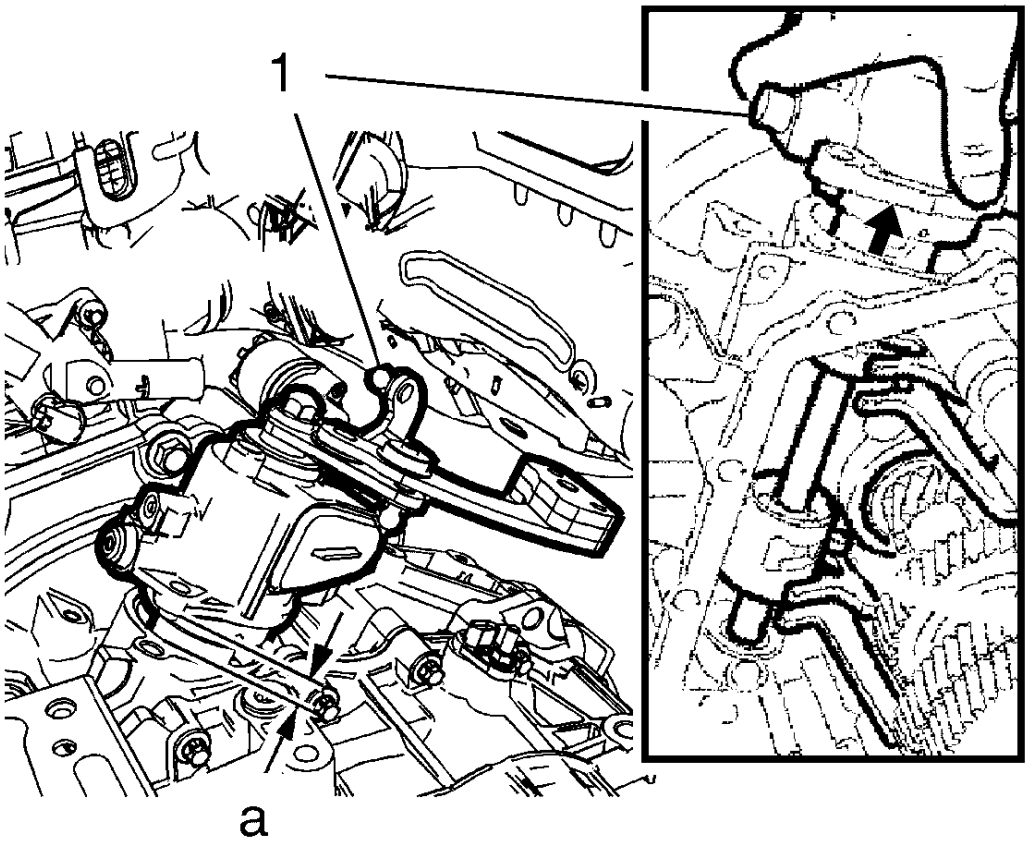

Fig. 50: Shift Control Housing
Courtesy of GENERAL MOTORS COMPANY

CAUTION: Refer to Transmission Shift Fork Caution .

9. Carefully lift the shift control housing (1) out of the transmission as far as the stop in the transmission housing, approximately 30 mm (1.18 in) shown by dimension (a).

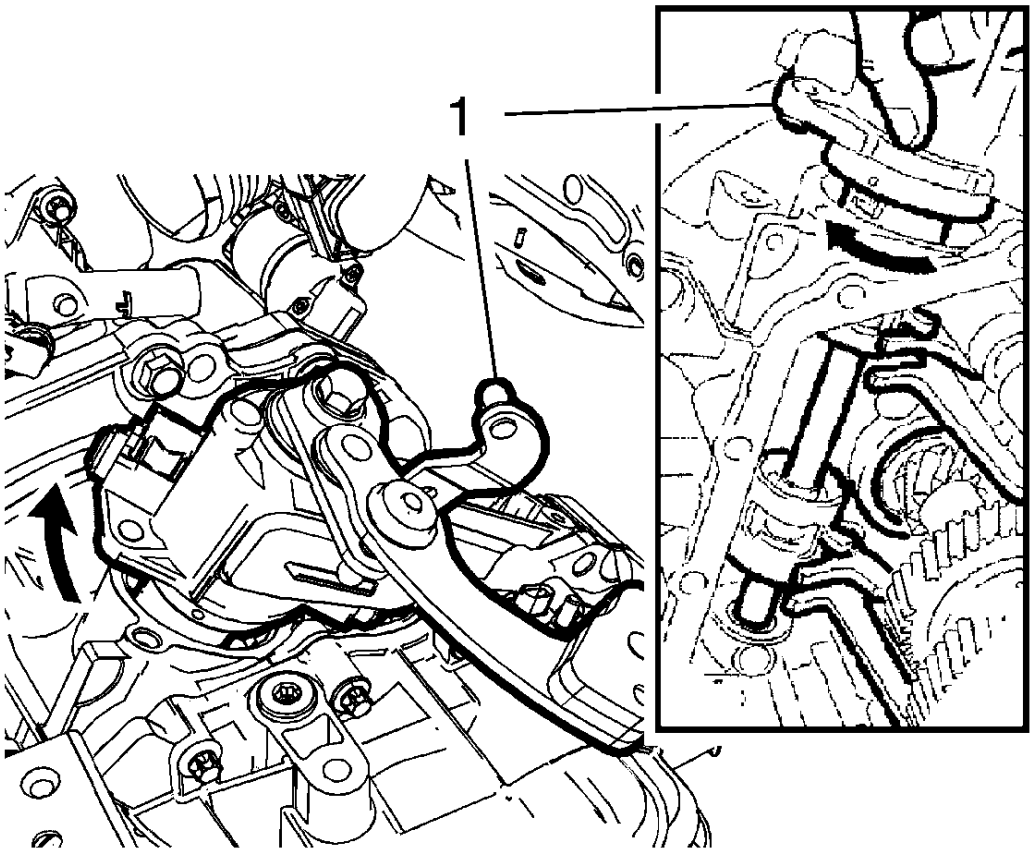

Fig. 51: Shift Control Housing
Courtesy of GENERAL MOTORS COMPANY

10. Holding the shift control housing (1) at the specified height, rotate the assembly clockwise approximately 30-45 degrees.

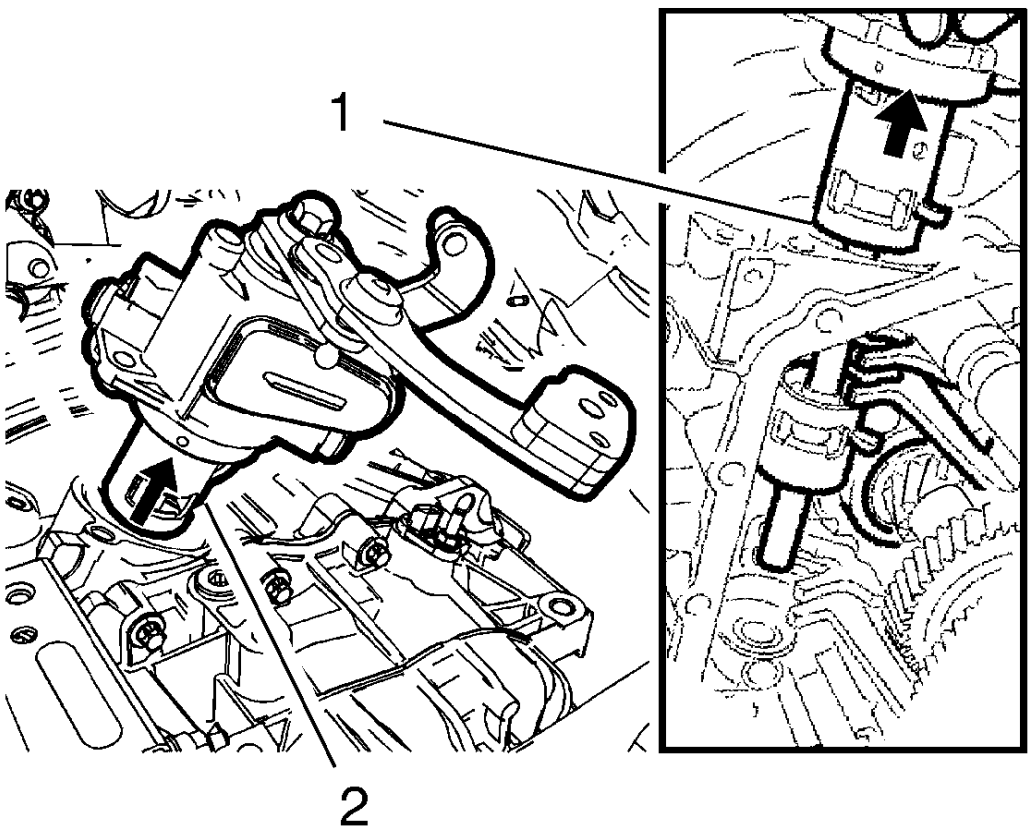

Fig. 52: Shift Control Housing
Courtesy of GENERAL MOTORS COMPANY

11. Carefully lift the shift control housing (2) out of the transmission until the lower edge (1) of the upper shift finger (2) is even with the transmission case.

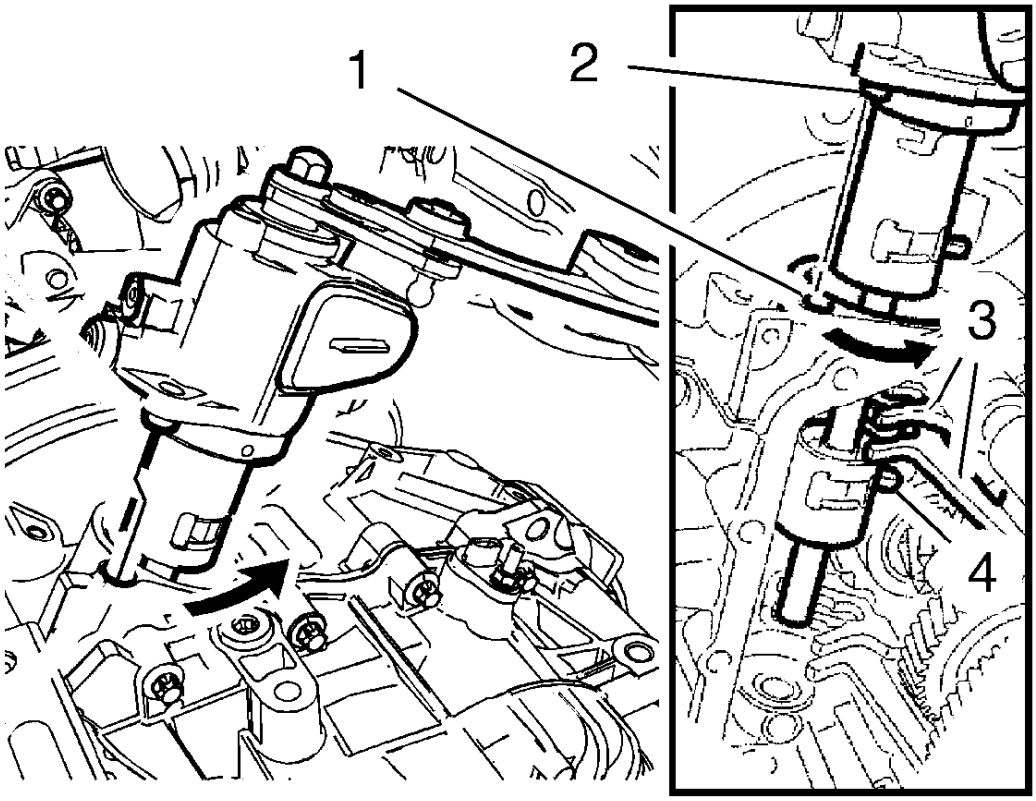

Fig. 53: Guide Peg, Pin And Shift Forks
Courtesy of GENERAL MOTORS COMPANY

12. Rotate the shift control housing counterclockwise approximately 30-45 degrees, until the guide peg (2) is in line with the threaded hole (1).

CAUTION: Refer to Transmission Shift Fork Caution .

13. Carefully remove the shift control housing from the transmission. Make sure that the pin (4) does not move the shift forks (3).

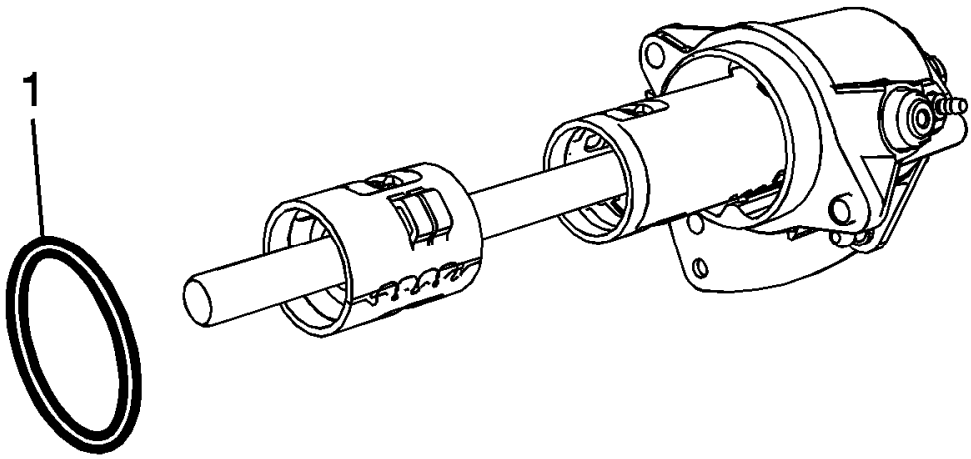

Fig. 54: Shift Control Housing Seal
Courtesy of GENERAL MOTORS COMPANY

14. Remove and DISCARD the shift control housing seal (1). If the seal is not present on the shift control housing, remove the seal at the transmission.

Installation Procedure

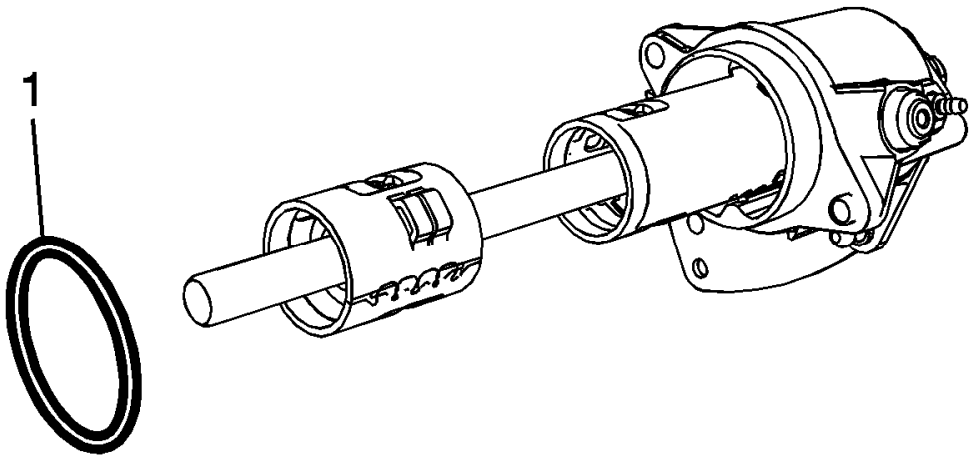

Fig. 55: Shift Control Housing Seal
Courtesy of GENERAL MOTORS COMPANY

NOTE:

- **Prior to starting the installation process, confirm that the original shift control housing seal is removed.**
- **A NEW seal should be provided with the replacement shift control housings. If the original shift control housing will be re-used, a NEW seal is still required.**
- **Make sure that the NEW vent cap is installed by the NEW shift control housing.**

1. Install a NEW shift control housing seal (1) to the shift control housing.

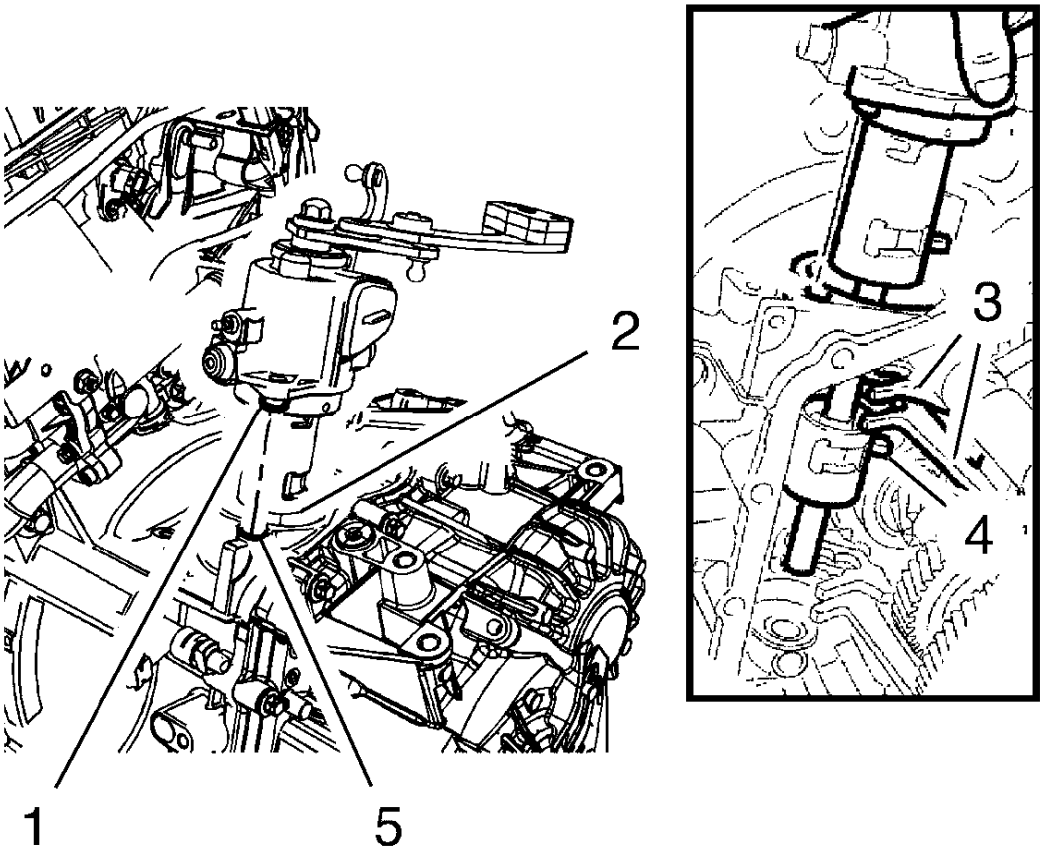

Fig. 56: Shift Control Housing Seal
Courtesy of GENERAL MOTORS COMPANY

CAUTION: Refer to Transmission Shift Fork Caution .

NOTE:

- **To facilitate the installation block the shift control housing. Push the blocking device towards to the shift control housing.**
- **Only insert the shift control housing until the lower edge of the upper shift finger (2) is even with the transmission case.**

2. Align the guide peg (1) in line with the threaded hole (5), then carefully insert the shift control housing in the transmission case, STOP when the lower edge of the upper shift finger (2) is even with the transmission case. Make sure that the pin (4) does not move the shift forks (3).

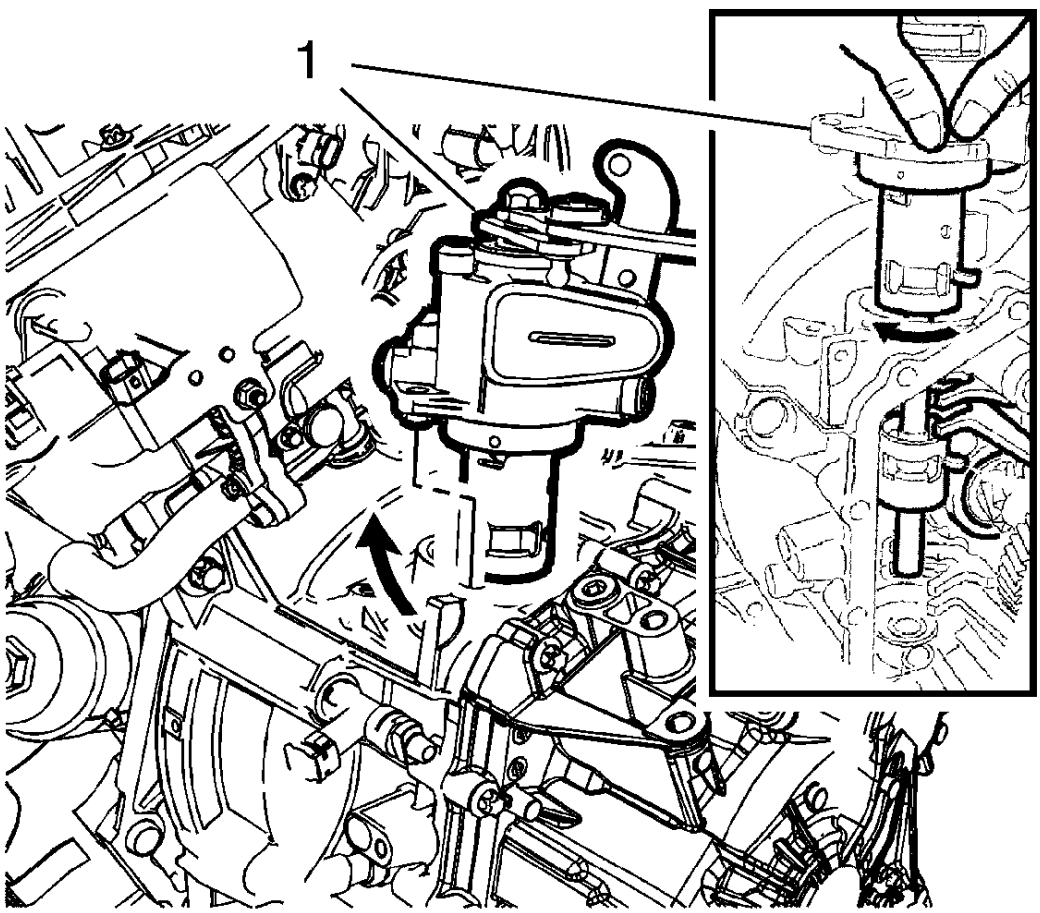

Fig. 57: Shift Control Housing
Courtesy of GENERAL MOTORS COMPANY

3. Rotate the shift control housing (1) clockwise approximately 30 - 45 degrees.

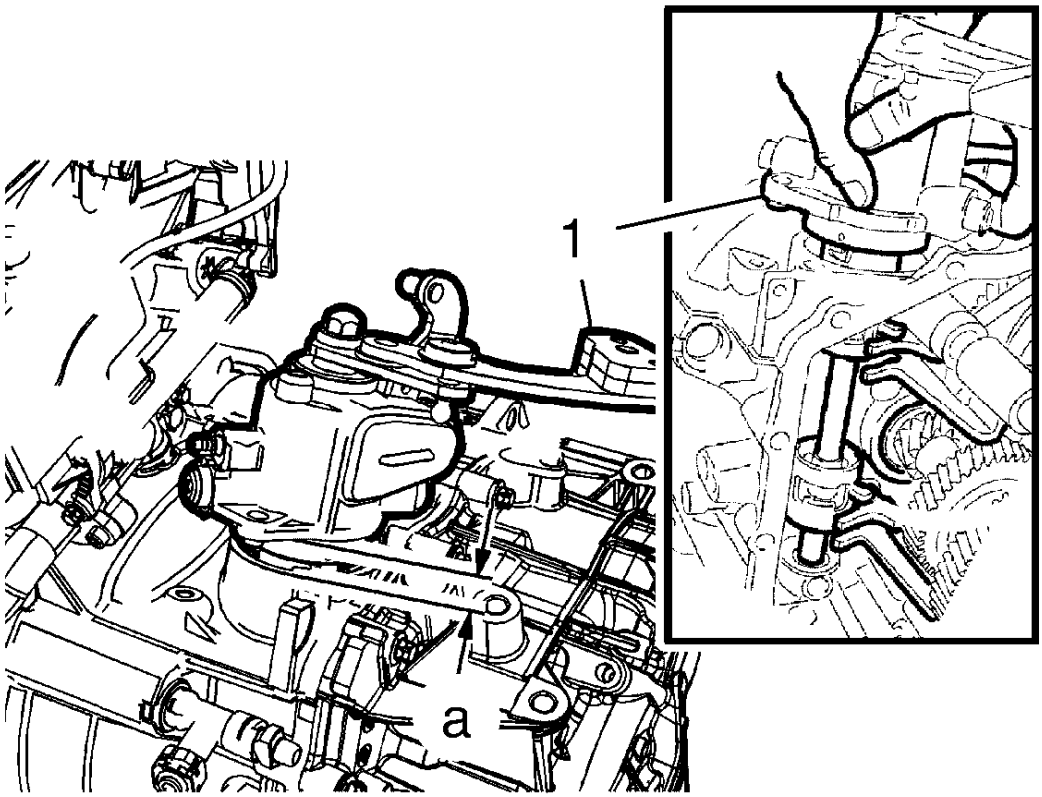

Fig. 58: Shift Control Housing
Courtesy of GENERAL MOTORS COMPANY

4. Lower the shift control housing (1) into the transmission case until there is a gap of approximately 30 mm (1.18 in) between the shift control housing and the transmission case, shown by dimension (a).

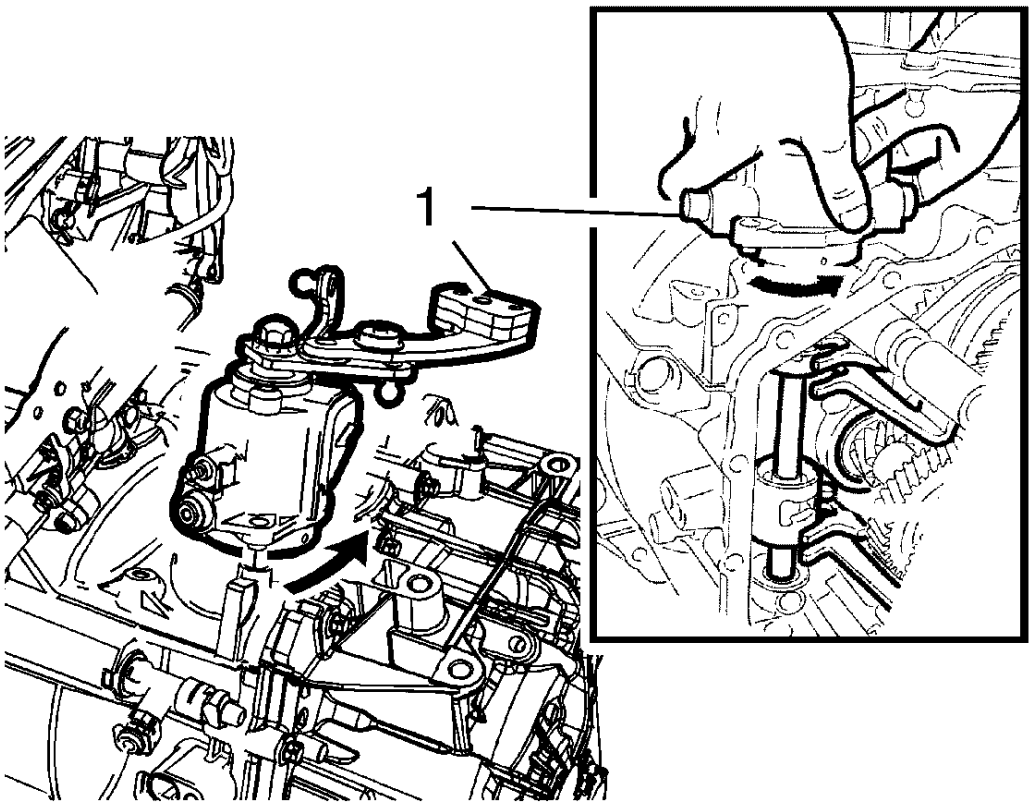

Fig. 59: Shift Control Housing
Courtesy of GENERAL MOTORS COMPANY

5. Holding the shift control housing (1) at the specified height, rotate the assembly counterclockwise approximately 30 - 45 degrees to align the guide peg with the threaded hole.

CAUTION: Refer to Transmission Shift Fork Caution .

6. Carefully lower the shift control housing into the transmission case.
    1. Align the shift control housing shaft with the transmission case bushing. As the guide peg contacts the transmission case, the housing shaft should contact the transmission case bushing. It may be necessary to reposition the shift control housing shaft to engage the bushing.
    2. Confirm that the shift control housing flange is fully seated against the transmission case.

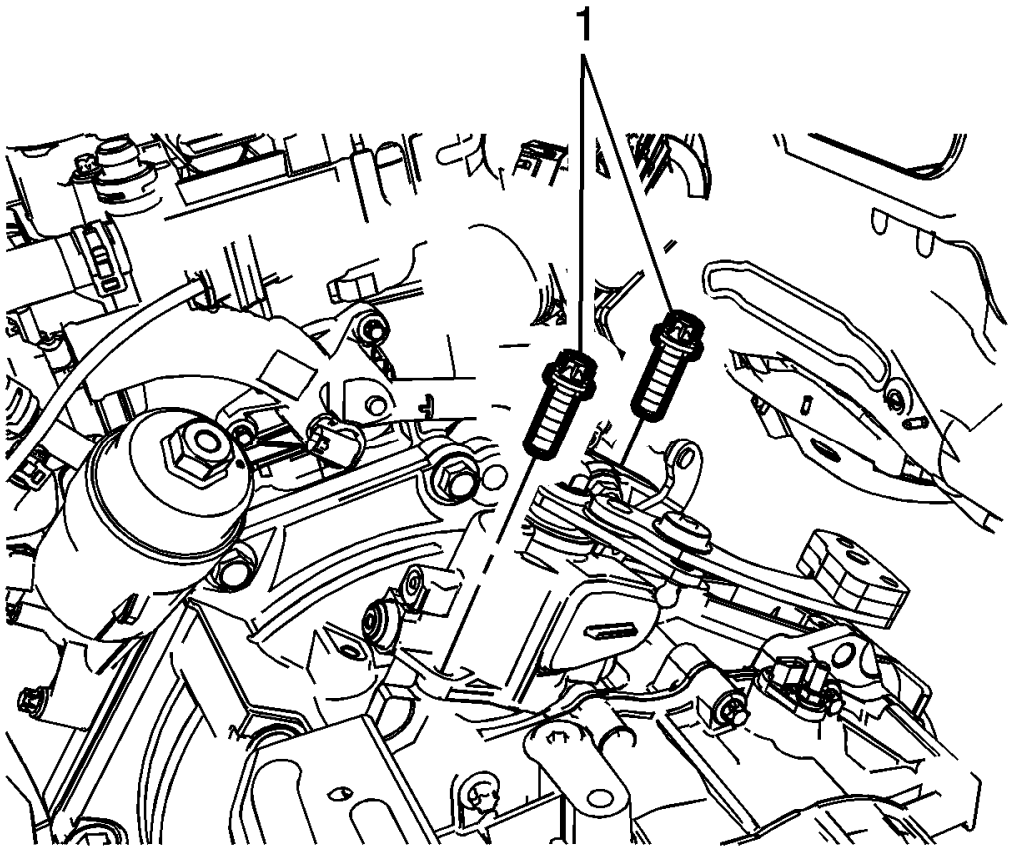

Fig. 60: 2 Shift Control Housing Bolts
Courtesy of GENERAL MOTORS COMPANY

CAUTION: Refer to Fastener Caution .

CAUTION: Ensure that the shift control housing flange is fully seated against the transmission case. If the flange does not fully seat, then the housing shaft is not properly seated in the case bushing and must be realigned. The housing shaft must be fully seated in the case bushing. Failure to follow this caution will result in transmission failure.

7. Install the 2 shift control housing bolts (1) and tighten to 25 N.m (18 lb ft).
8. Connect the electrical connector to the shift control housing.
9. Install the backup lamp switch. Refer to **Backup Lamp Switch Replacement**.
10. Install the shift lever and selector lever cable to the shift control housing. Refer to **Manual Transmission**

Shift Lever and Selector Lever Cable Replacement.

NOTE: Always perform the selector cable adjustment procedure, even if the cables appear to fit properly.

11. Adjust shift lever and selector lever cable. Refer to **Manual Transmission Shift Lever and Selector Lever Cable Adjustment**.
12. For the 1.4L gasoline engine only, install the throttle body assembly. Refer to **Throttle Body Assembly Replacement** .
13. Install the battery tray. **Battery Tray Replacement** .
14. Verify correct operation of the transmission control assembly.

SHIFT CONTROL HOUSING REPLACEMENT (SECOND DESIGN)

Removal Procedure

1. Set the parking brake.
2. Remove the battery tray. Refer to **Battery Tray Replacement** .
3. Remove the throttle body assembly for the 1.4L gasoline engine. Refer to **Throttle Body Assembly Replacement** .
4. Remove the shift lever and selector lever cable from the shift control housing. Refer to **Manual Transmission Shift Lever and Selector Lever Cable Replacement**.
5. Remove the backup lamp switch. Refer to **Backup Lamp Switch Replacement**.

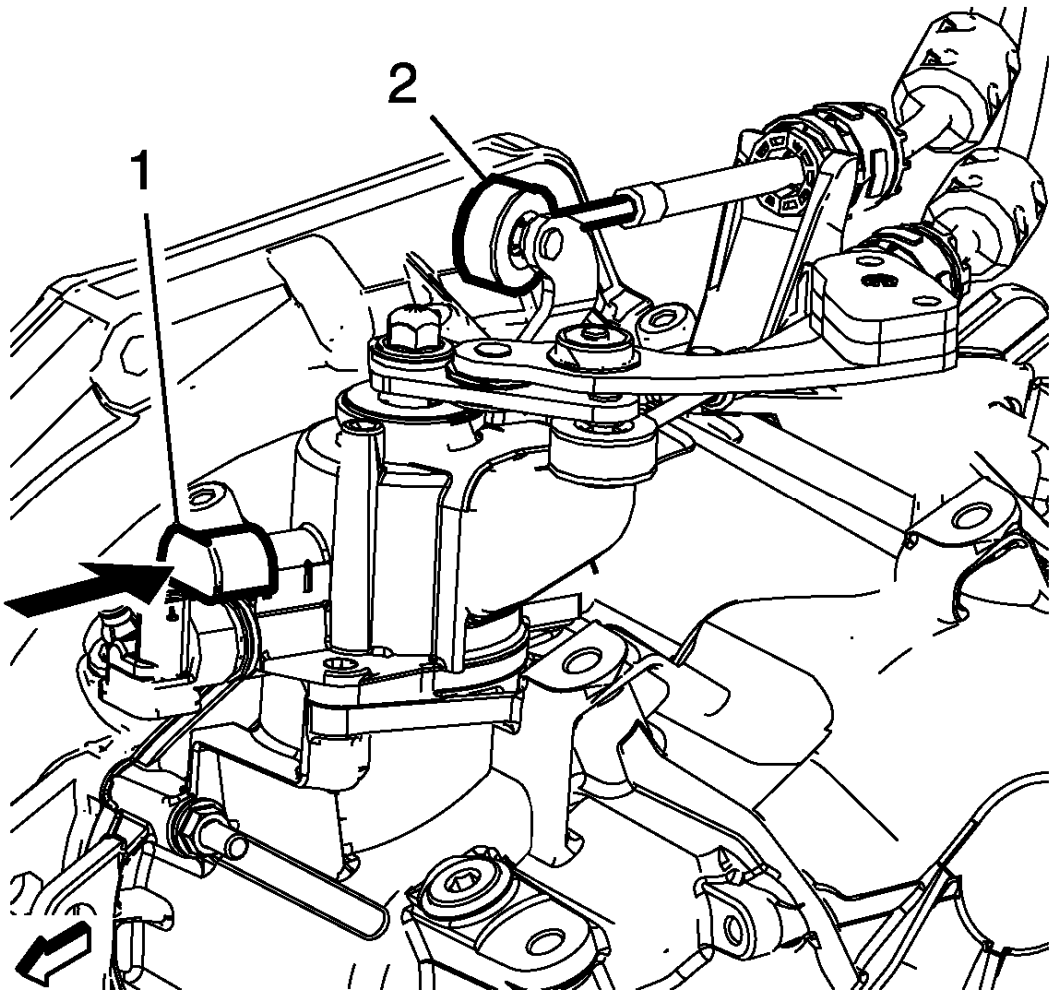

Fig. 61: Blocking Device
Courtesy of GENERAL MOTORS COMPANY

6. Block the shift control housing, push (arrow) the blocking device (1) towards to the shift control housing.
7. Disconnect the electrical connector from the shift control housing assembly.

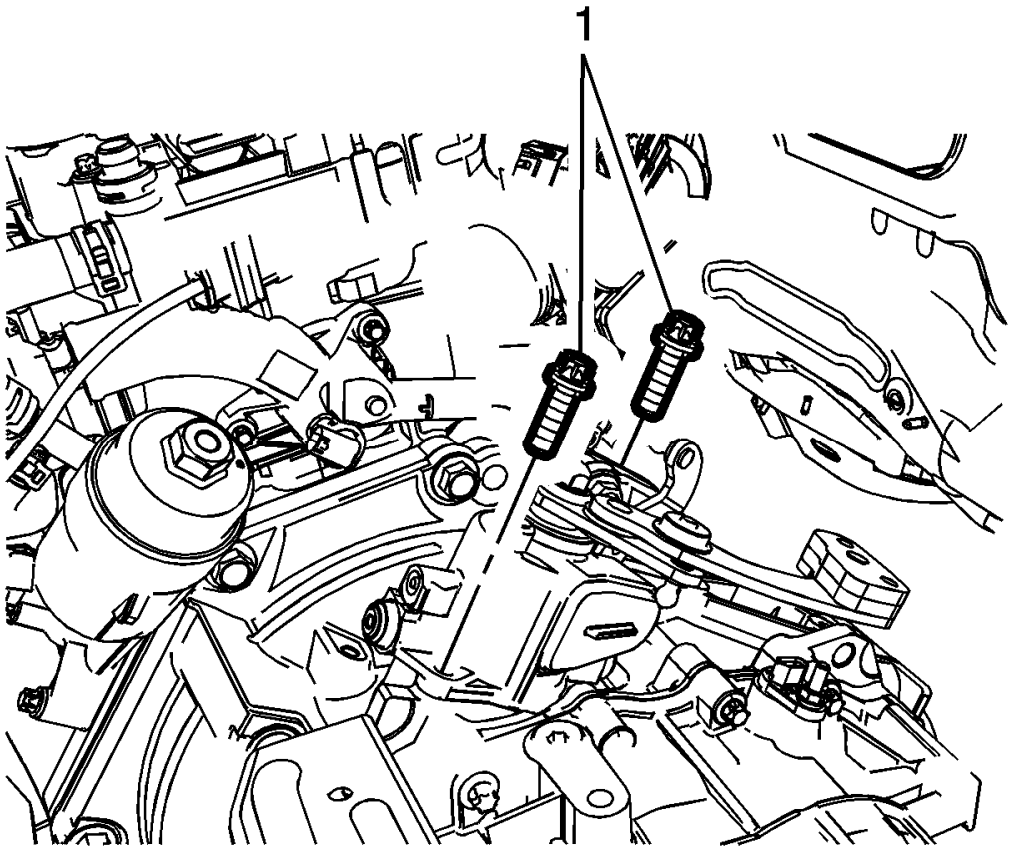

Fig. 62: 2 Shift Control Housing Bolts
Courtesy of GENERAL MOTORS COMPANY

8. Remove the 2 shift control housing bolts (1).

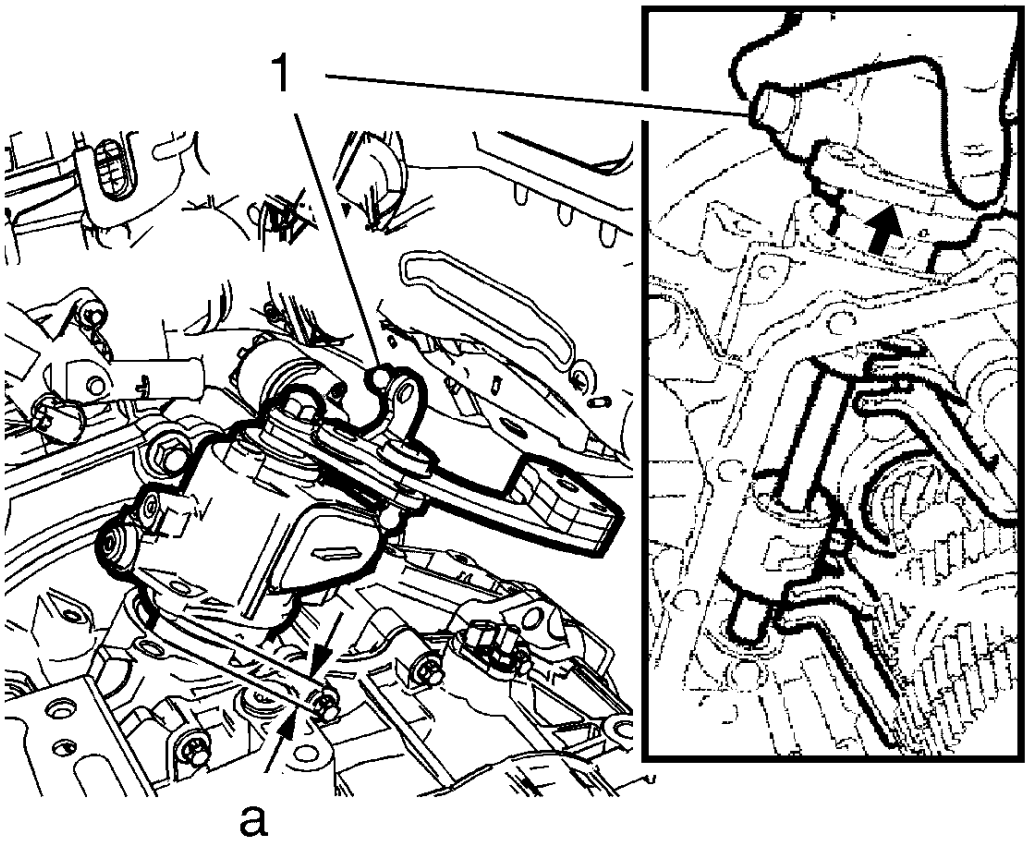

Fig. 63: Shift Control Housing
Courtesy of GENERAL MOTORS COMPANY

CAUTION: Refer to Transmission Shift Fork Caution .

9. Carefully lift the shift control housing (1) out of the transmission as far as the stop in the transmission housing, approximately 30 mm (1.18 in) shown by dimension (a).

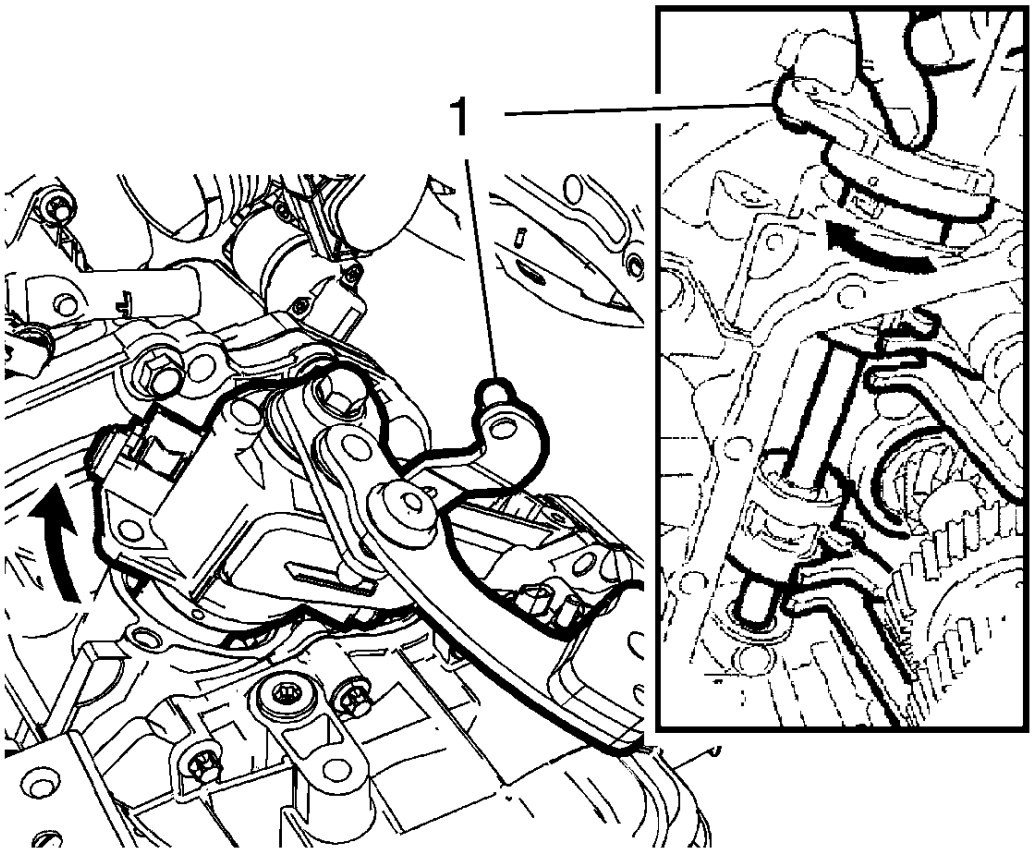

Fig. 64: Shift Control Housing
Courtesy of GENERAL MOTORS COMPANY

10. Holding the shift control housing (1) at the specified height, rotate the assembly clockwise approximately 30-45 degrees.

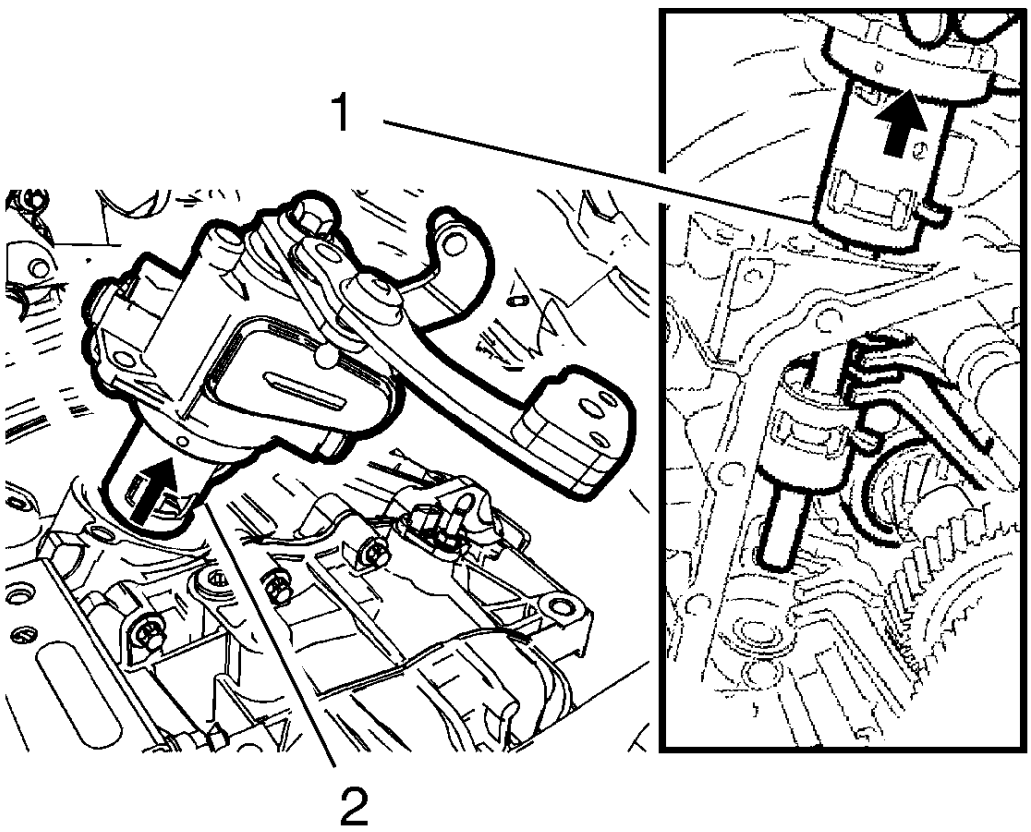

Fig. 65: Shift Control Housing
Courtesy of GENERAL MOTORS COMPANY

11. Carefully lift the shift control housing (2) out of the transmission until the lower edge (1) of the upper shift finger (2) is even with the transmission case.

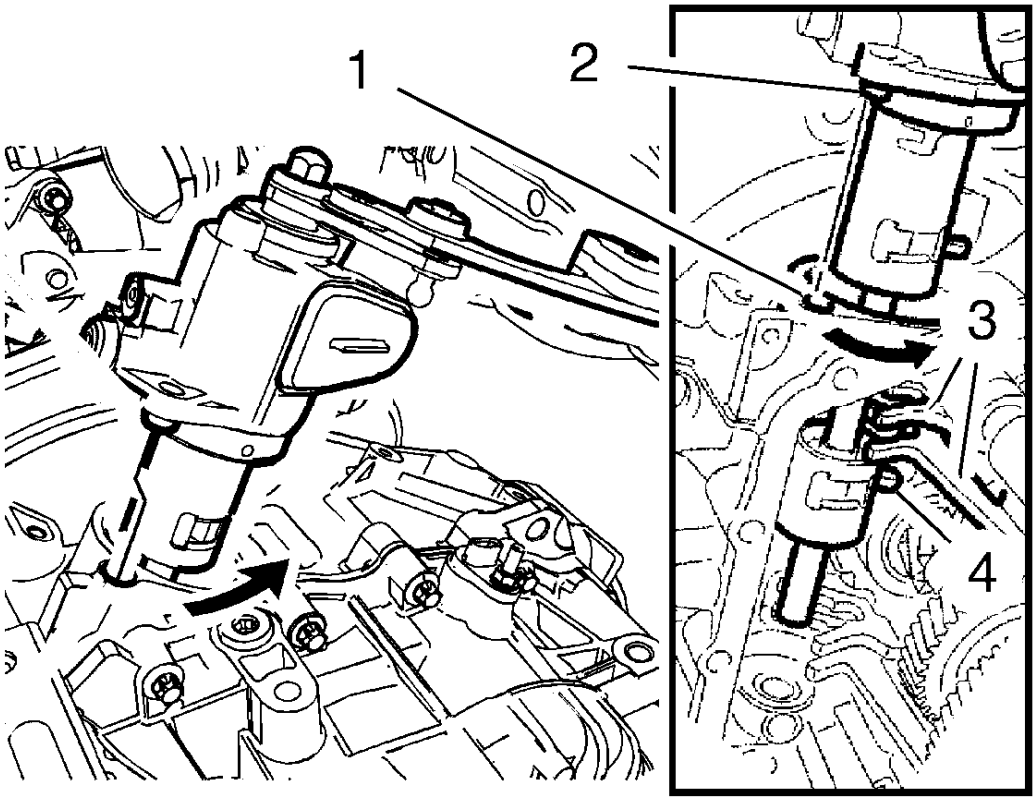

Fig. 66: Guide Peg, Pin And Shift Forks
Courtesy of GENERAL MOTORS COMPANY

12. Rotate the shift control housing counterclockwise approximately 30-45 degrees, until the guide peg (2) is in line with the threaded hole (1).

CAUTION: Refer to Transmission Shift Fork Caution .

13. Carefully remove the shift control housing from the transmission. Make sure that the pin (4) does not move the shift forks (3).

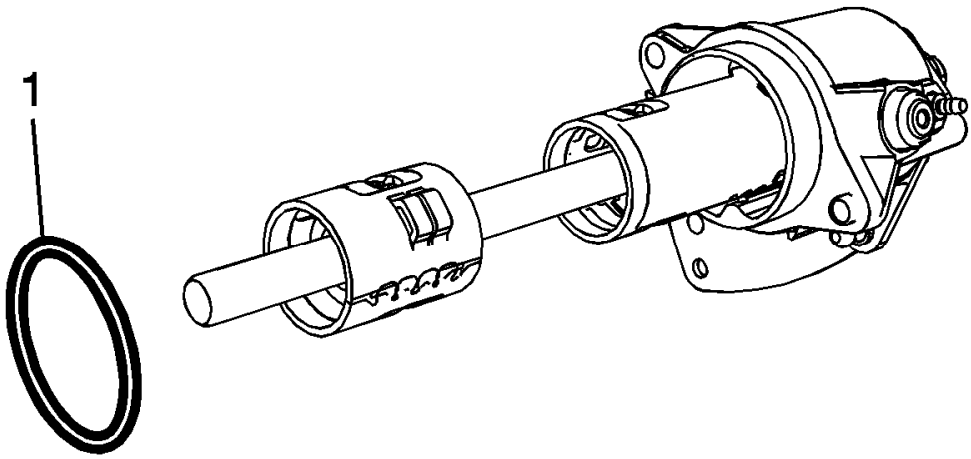

Fig. 67: Shift Control Housing Seal
Courtesy of GENERAL MOTORS COMPANY

14. Remove and DISCARD the shift control housing seal (1). If the seal is not present on the shift control housing, remove the seal at the transmission.

Installation Procedure

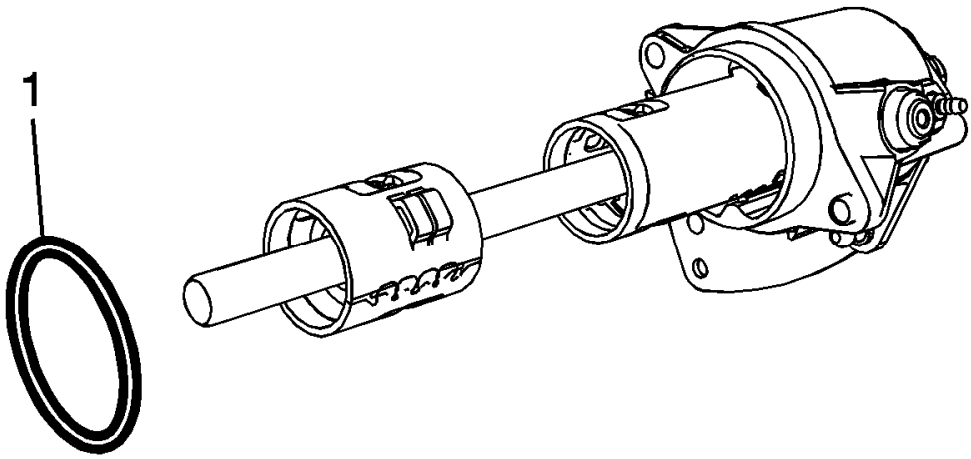

Fig. 68: Shift Control Housing Seal
Courtesy of GENERAL MOTORS COMPANY

NOTE:

- **Prior to starting the installation process, confirm that the original shift control housing seal is removed.**
- **A NEW seal should be provided with the replacement shift control housings. If the original shift control housing will be re-used, a NEW seal is still required.**
- **Make sure that the NEW vent cap is installed by the NEW shift control housing.**

1. Install a NEW shift control housing seal (1) to the shift control housing.

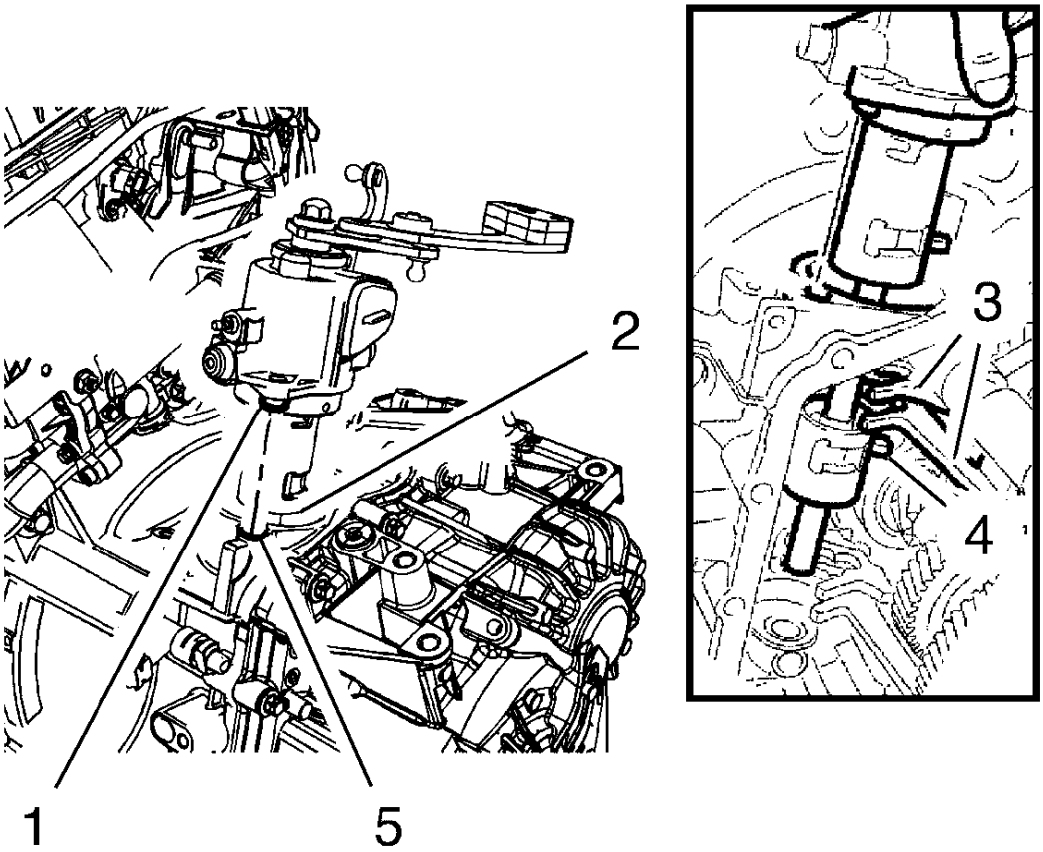

Fig. 69: Shift Control Housing Seal
Courtesy of GENERAL MOTORS COMPANY

CAUTION: Refer to Transmission Shift Fork Caution .

NOTE:

- **To facilitate the installation block the shift control housing. Push the blocking device towards to the shift control housing.**
- **Only insert the shift control housing until the lower edge of the upper shift finger (2) is even with the transmission case.**

2. Align the guide peg (1) in line with the threaded hole (5), then carefully insert the shift control housing in the transmission case, STOP when the lower edge of the upper shift finger (2) is even with the transmission case. Make sure that the pin (4) does not move the shift forks (3).

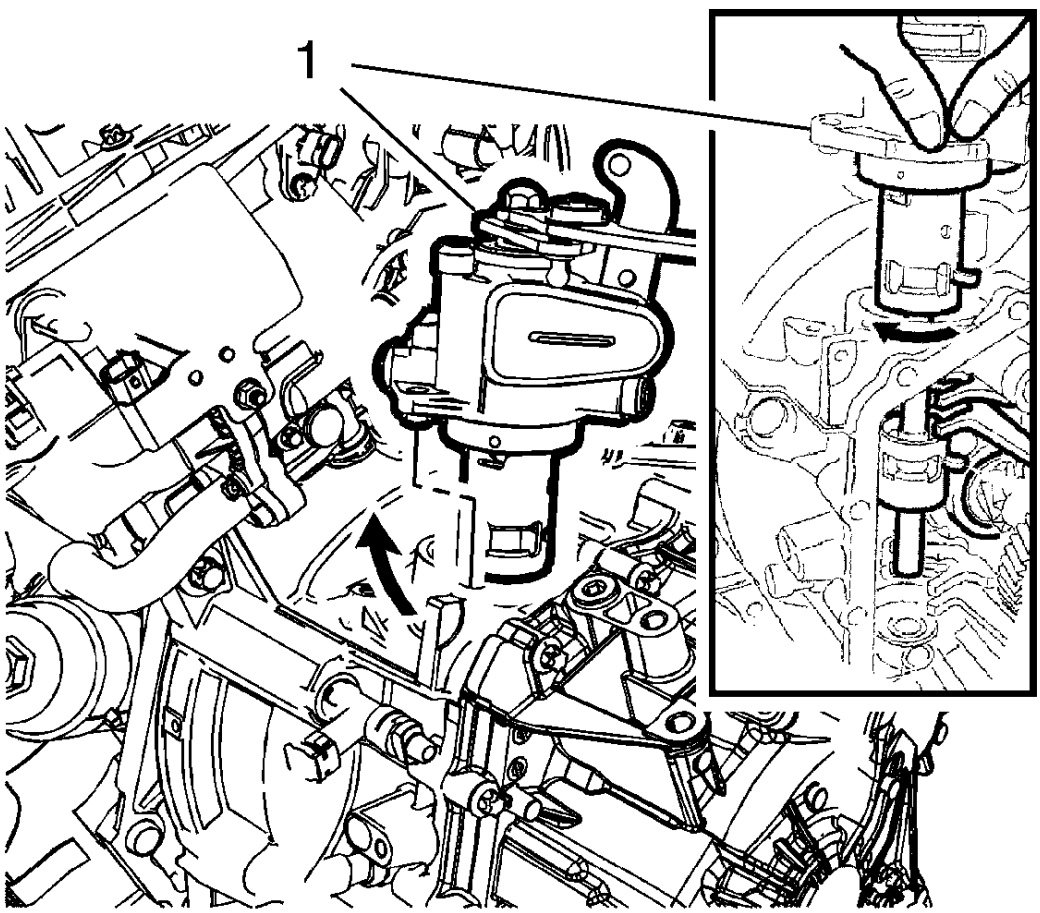

Fig. 70: Shift Control Housing
Courtesy of GENERAL MOTORS COMPANY

3. Rotate the shift control housing (1) clockwise approximately 30 - 45 degrees.

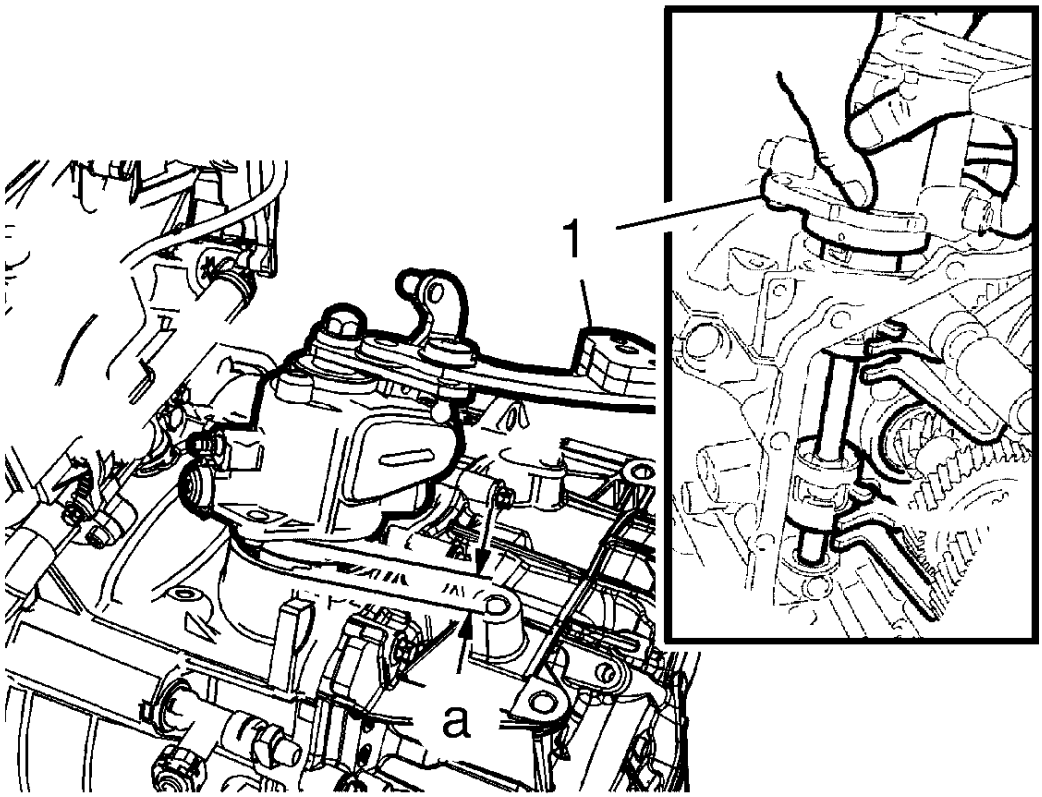

Fig. 71: Shift Control Housing
Courtesy of GENERAL MOTORS COMPANY

4. Lower the shift control housing (1) into the transmission case until there is a gap of approximately 30 mm (1.18 in) between the shift control housing and the transmission case, shown by dimension (a).

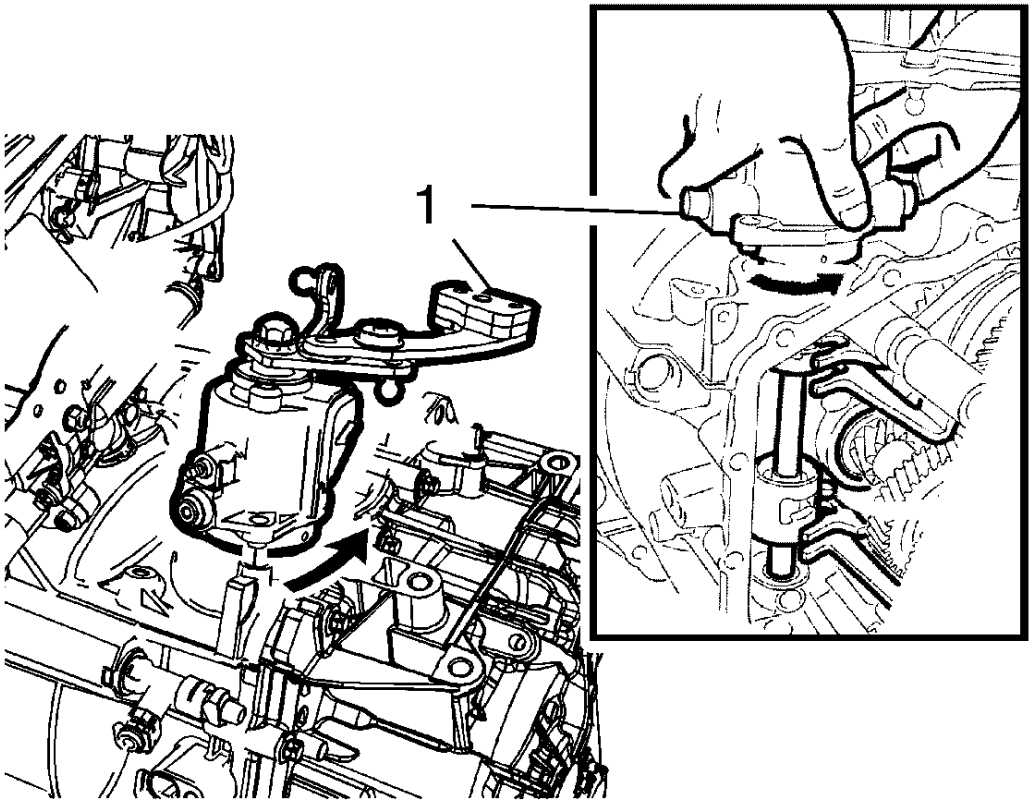

Fig. 72: Shift Control Housing
Courtesy of GENERAL MOTORS COMPANY

5. Holding the shift control housing (1) at the specified height, rotate the assembly counterclockwise approximately 30 - 45 degrees to align the guide peg with the threaded hole.

CAUTION: Refer to Transmission Shift Fork Caution .

6. Carefully lower the shift control housing into the transmission case.
    1. Align the shift control housing shaft with the transmission case bushing. As the guide peg contacts the transmission case, the housing shaft should contact the transmission case bushing. It may be necessary to reposition the shift control housing shaft to engage the bushing.
    2. Confirm that the shift control housing flange is fully seated against the transmission case.

CAUTION: Refer to Fastener Caution .

CAUTION: Ensure that the shift control housing flange is fully seated against the transmission case. If the flange does not fully seat, then the housing shaft is not properly seated in the case bushing and must be realigned. The housing shaft must be fully seated in the case bushing. Failure to follow this caution will result in transmission failure.

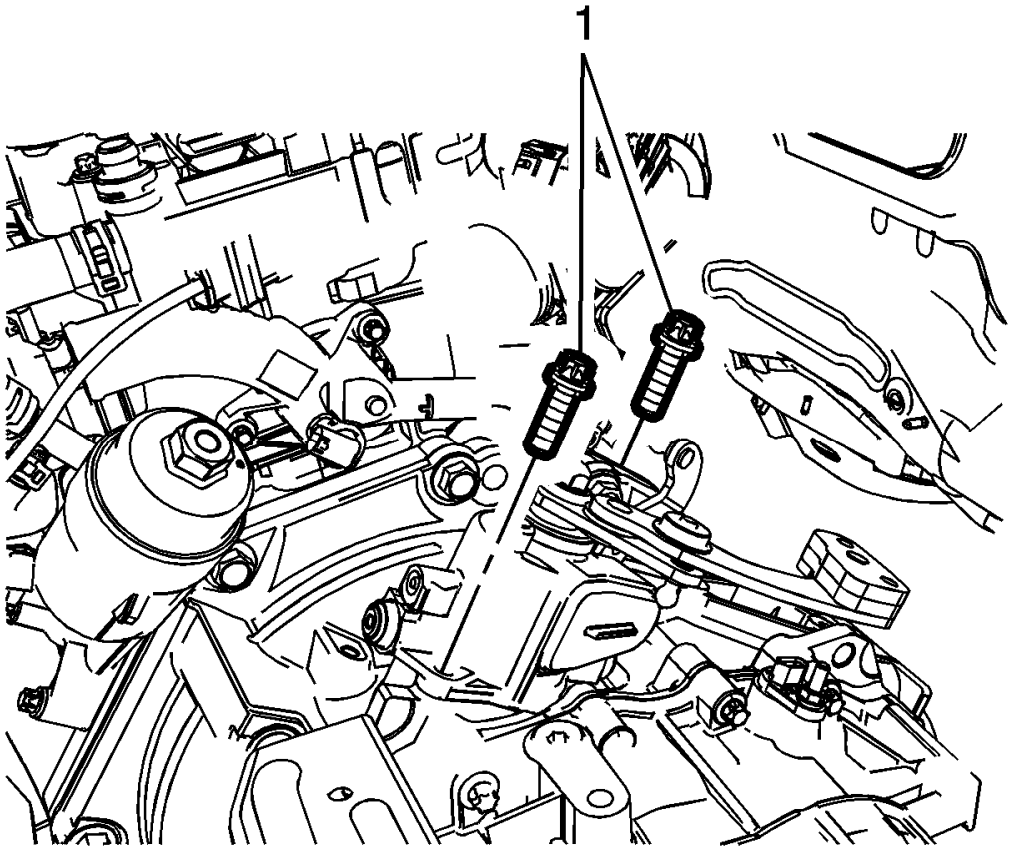

Fig. 73: 2 Shift Control Housing Bolts
Courtesy of GENERAL MOTORS COMPANY

7. Install the 2 shift control housing bolts (1) and tighten to 25 N.m (18 lb ft).
8. Connect the electrical connector to the shift control housing.
9. Install the backup lamp switch. Refer to **Backup Lamp Switch Replacement**.
10. Install the shift lever and selector lever cable to the shift control housing. Refer to **Manual Transmission Shift Lever and Selector Lever Cable Replacement**.

NOTE: Always perform the selector cable adjustment procedure, even if the cables appear to fit properly.

11. Adjust shift lever and selector lever cable. Refer to **Manual Transmission Shift Lever and Selector Lever Cable Adjustment**.
12. Install the throttle body assembly for the 1.4L gasoline engine. Refer to **Throttle Body Assembly Replacement** .
13. Install the battery tray. Refer to **Battery Tray Replacement** .
14. Verify correct operation of the transmission control assembly.

TRANSMISSION FRONT MOUNT REPLACEMENT

Removal Procedure

1. Raise vehicle. Refer to **Lifting and Jacking the Vehicle** .
2. If equipped, remove the front compartment insulator. Refer to **Front Compartment Insulator Replacement** .

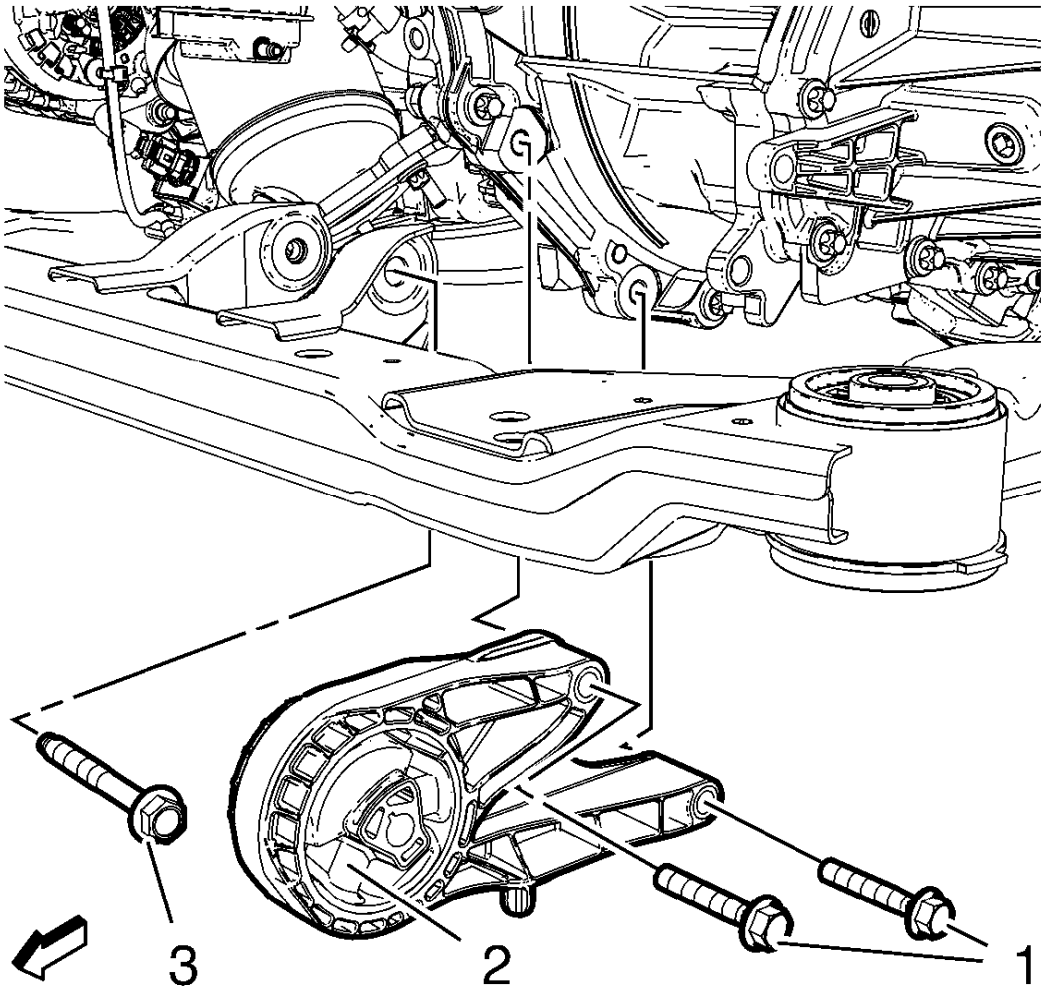

Fig. 74: Transmission Front Mount Bolt
Courtesy of GENERAL MOTORS COMPANY

3. Remove transmission front mount bolt (1).

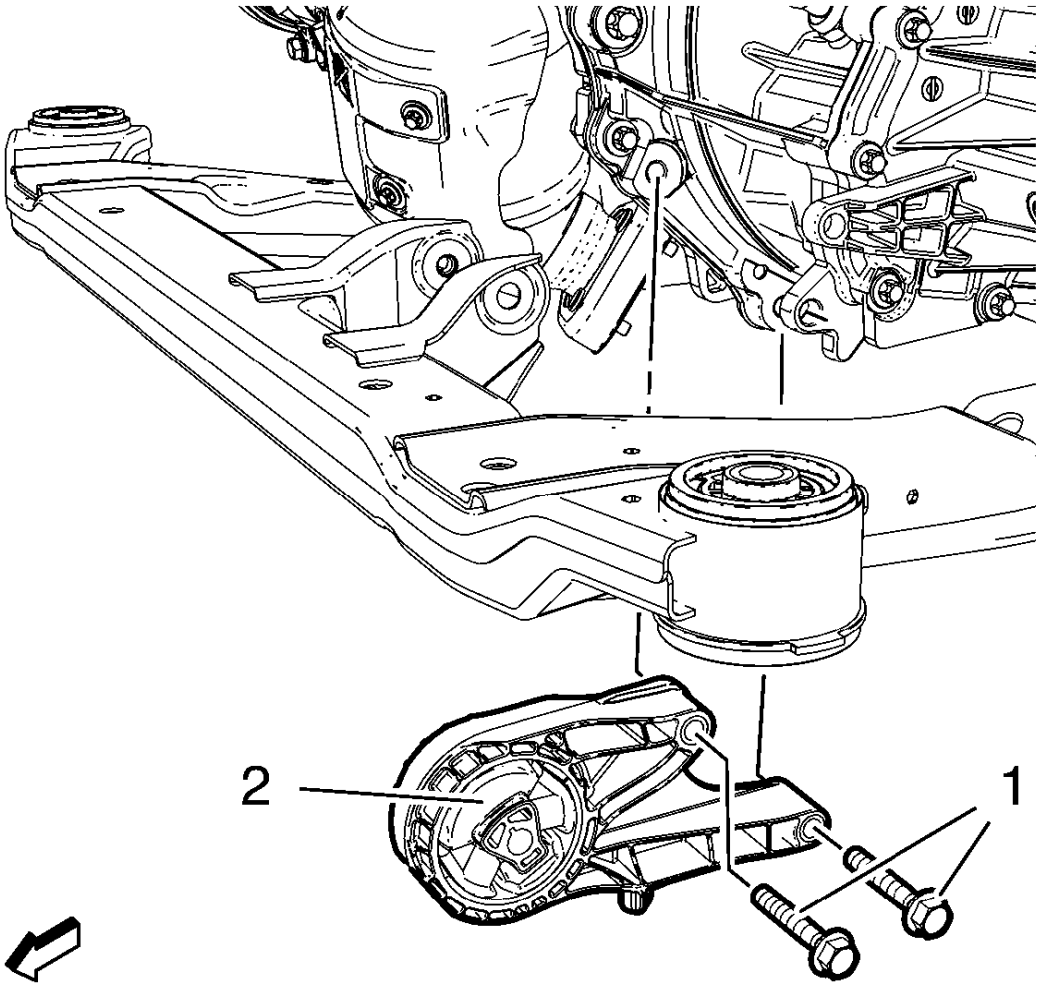

Fig. 75: Transmission Front Mount Bolts
Courtesy of GENERAL MOTORS COMPANY

4. Remove 2 transmission front mount bolts (1).
5. Remove transmission front mount (2).

Installation Procedure

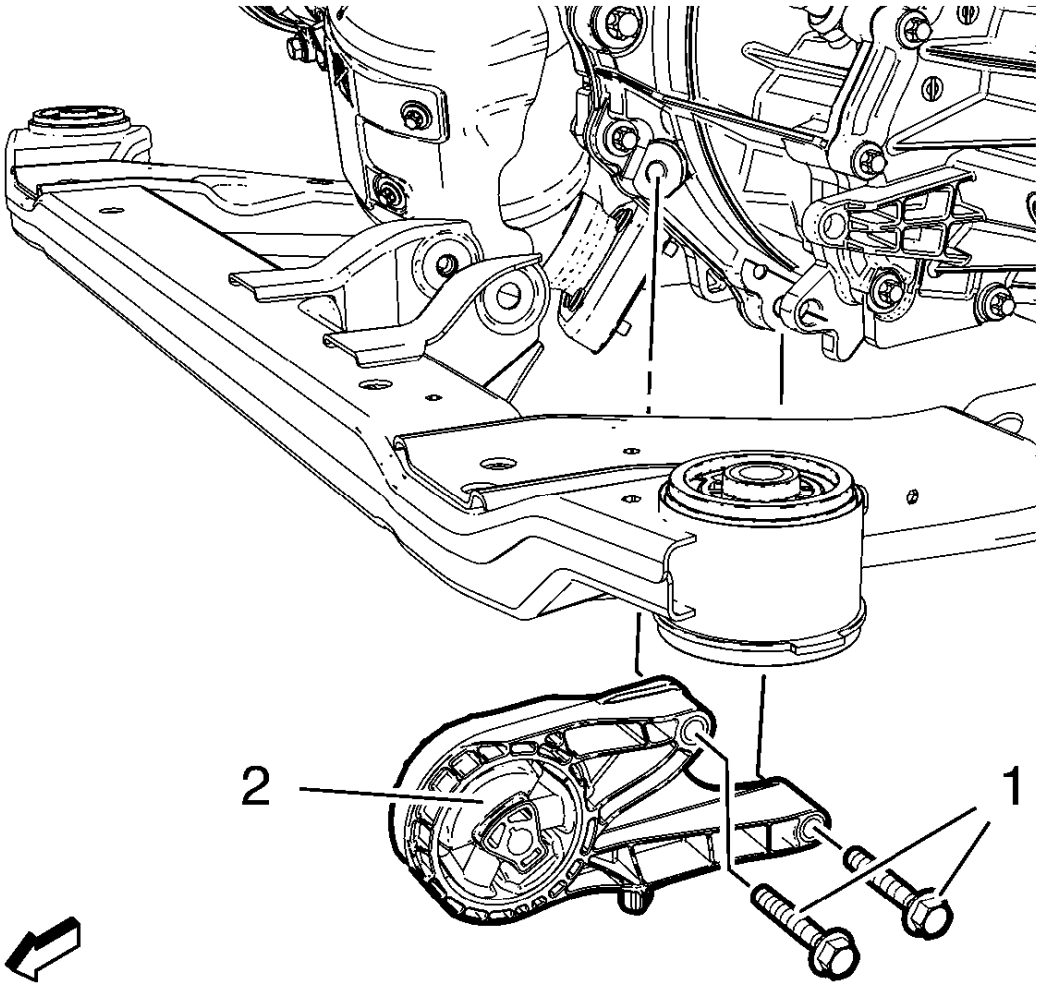

Fig. 76: Transmission Front Mount Bolts
Courtesy of GENERAL MOTORS COMPANY

1. Install transmission front mount (2).

CAUTION: Refer to Fastener Caution .

2. Install 2 transmission front mount bolts (1) and tighten to 100 N.m (74 lb ft).

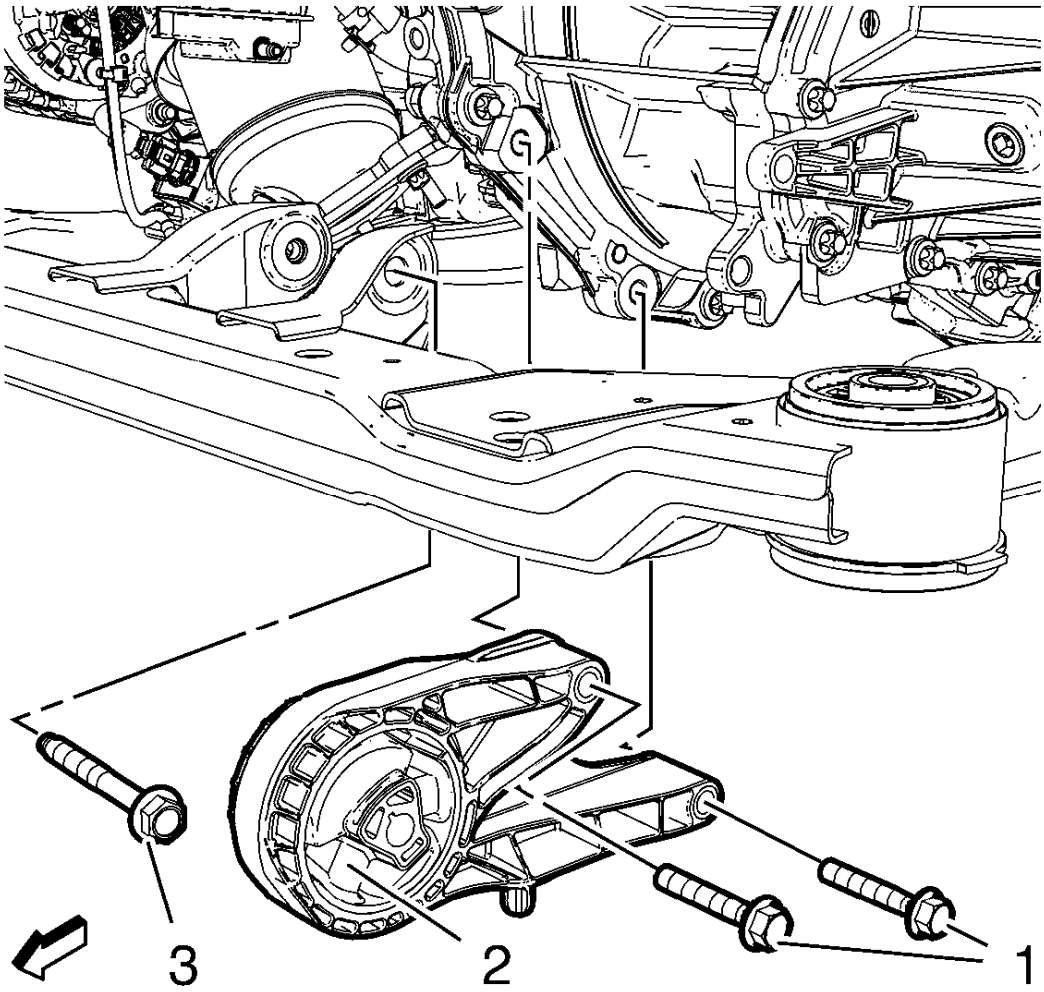

Fig. 77: Transmission Front Mount Bolt
Courtesy of GENERAL MOTORS COMPANY

3. Install transmission front mount bolt (1) and tighten to 100 N.m (74 lb ft).
4. If equipped, install the front compartment insulator. Refer to **Front Compartment Insulator Replacement** .
5. Lower vehicle.

TRANSMISSION REAR MOUNT REPLACEMENT

Removal Procedure

1. If equipped with Electronic Power Steering, remove the steering gear. Refer to **Steering Gear Replacement** .
2. Remove the transmission rear mount bracket. Refer to **Transmission Mount Bracket Replacement - Rear**.

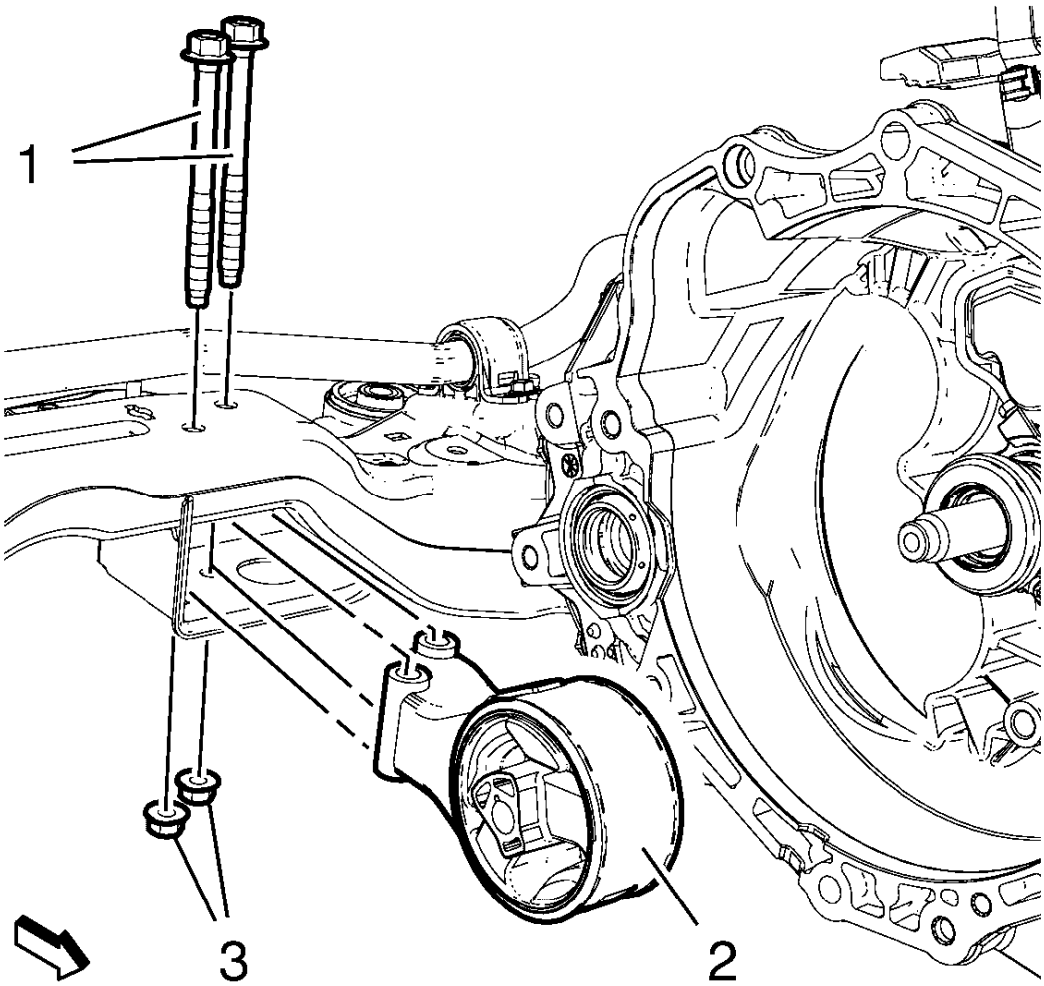

Fig. 78: Transmission Rear Mount, Nuts And Bolts
Courtesy of GENERAL MOTORS COMPANY

3. Remove the 2 transmission rear mount nuts (3) and the 2 transmission rear mount bolts (1).
4. Remove the transmission rear mount (2).

Installation Procedure

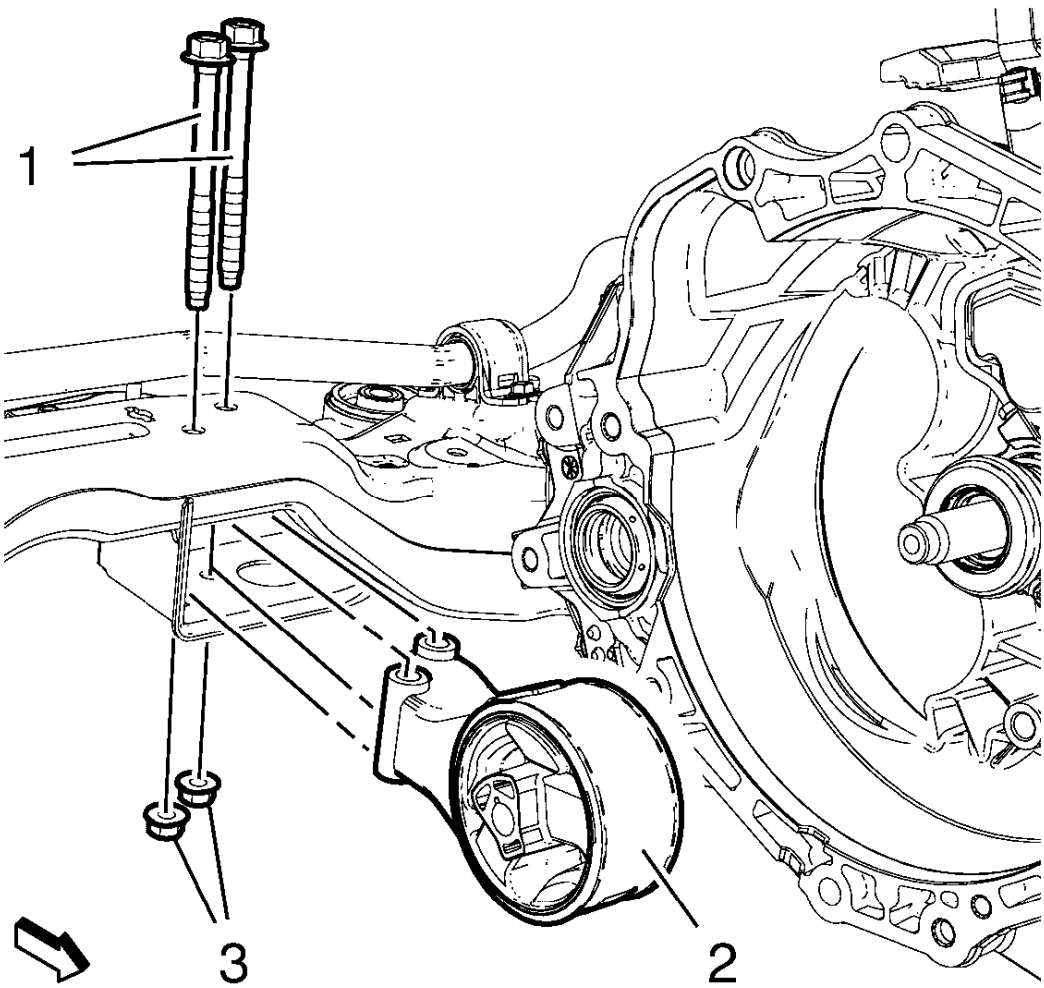

Fig. 79: Transmission Rear Mount, Nuts And Bolts
Courtesy of GENERAL MOTORS COMPANY

1. Install the transmission rear mount (2).
2. Install the 2 transmission rear mount bolts (1).

CAUTION: Refer to Fastener Caution .

3. Install the 2 transmission rear mount nuts (3) and tighten to 110 N.m (82 lb ft).
4. Install the transmission rear mount bracket. Refer to **Transmission Mount Bracket Replacement - Rear**.
5. If equipped with Electronic Power Steering, install the steering gear. Refer to **Steering Gear Replacement** .

TRANSMISSION MOUNT REPLACEMENT - LEFT SIDE

Special Tools

EN-45059 Angle Meter

For equivalent regional tools, refer to **Special Tools**.

Removal Procedure

1. Remove the battery tray. Refer to **Battery Tray Replacement** .
2. Install the engine lifter to the engine lift brackets.

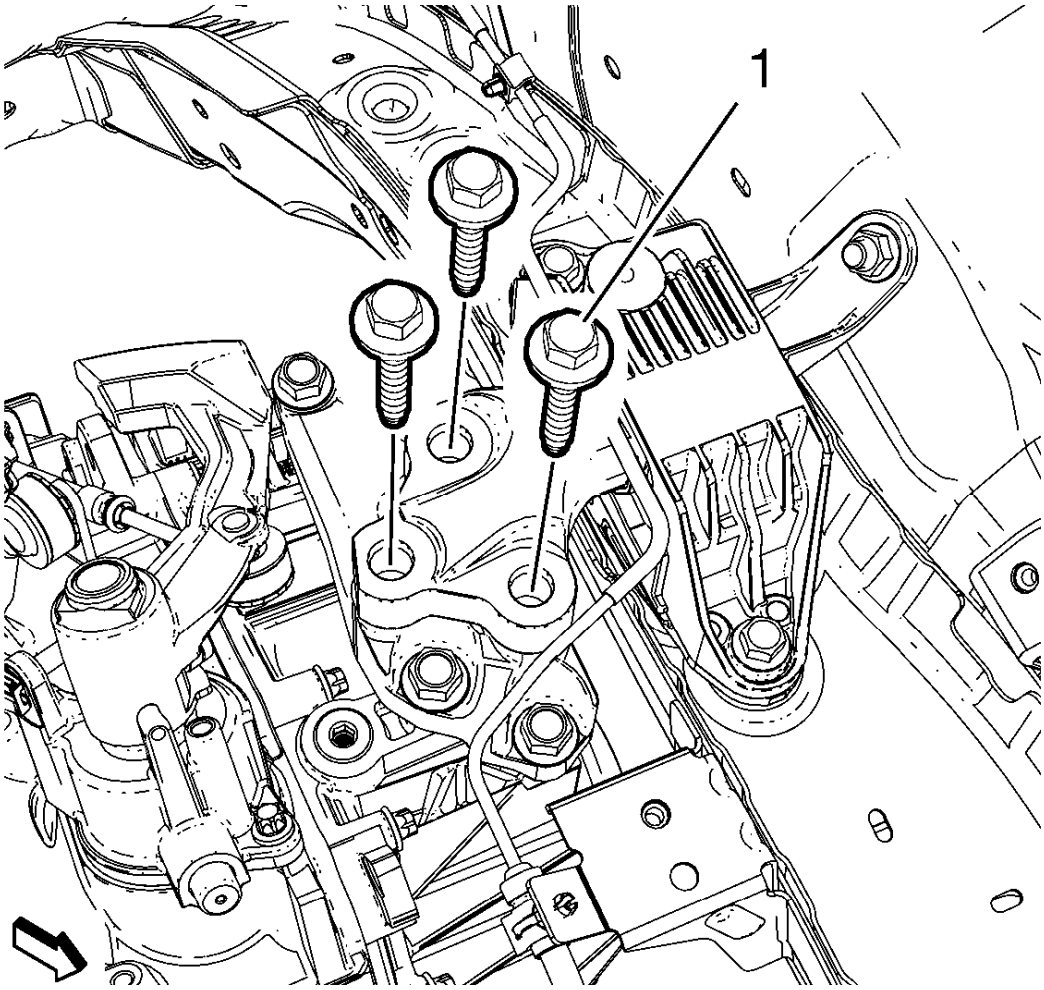

Fig. 80: Transmission Mount Bolts
Courtesy of GENERAL MOTORS COMPANY

3. Remove and DISCARD the 3 transmission mount bolts (1).

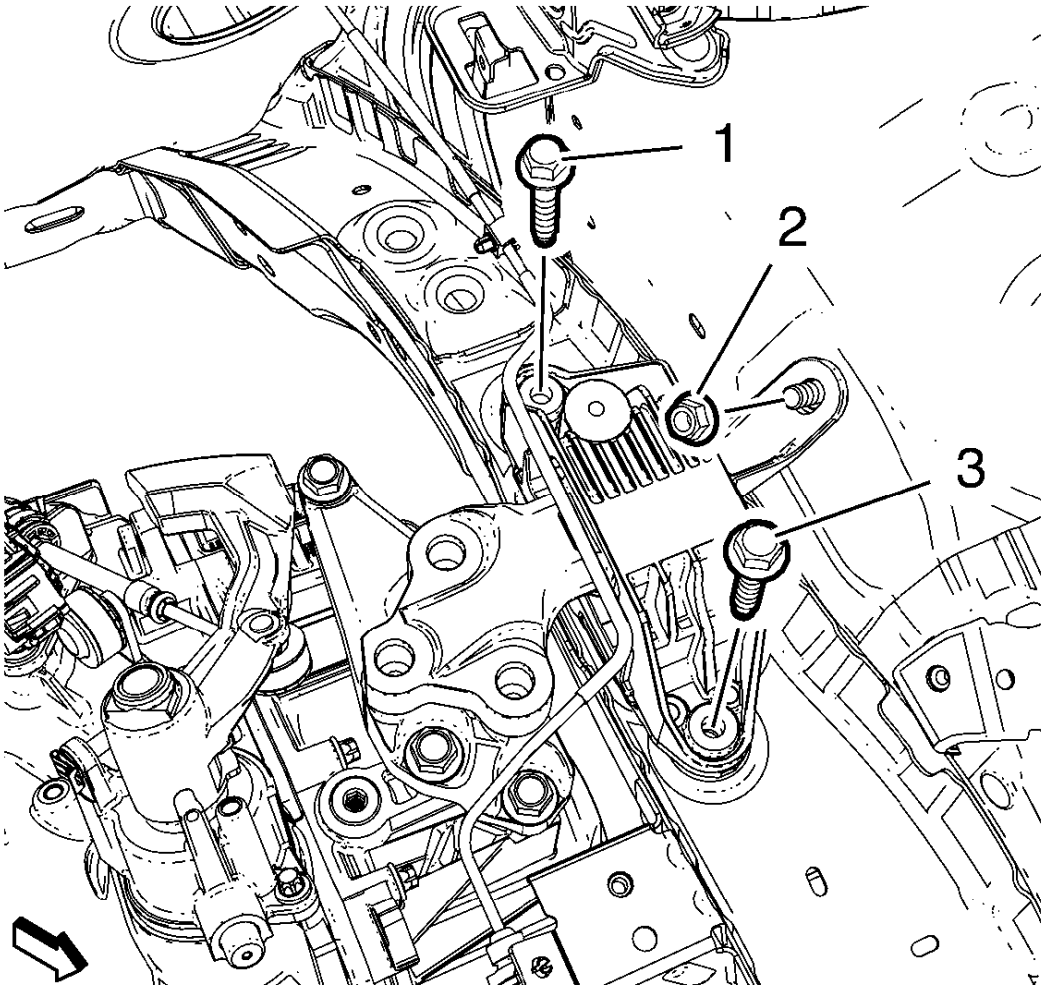

Fig. 81: Transmission Mount Nuts And Bolts
Courtesy of GENERAL MOTORS COMPANY

4. Remove the 2 transmission mount bolts (1, 3) and the transmission mount nut (2).

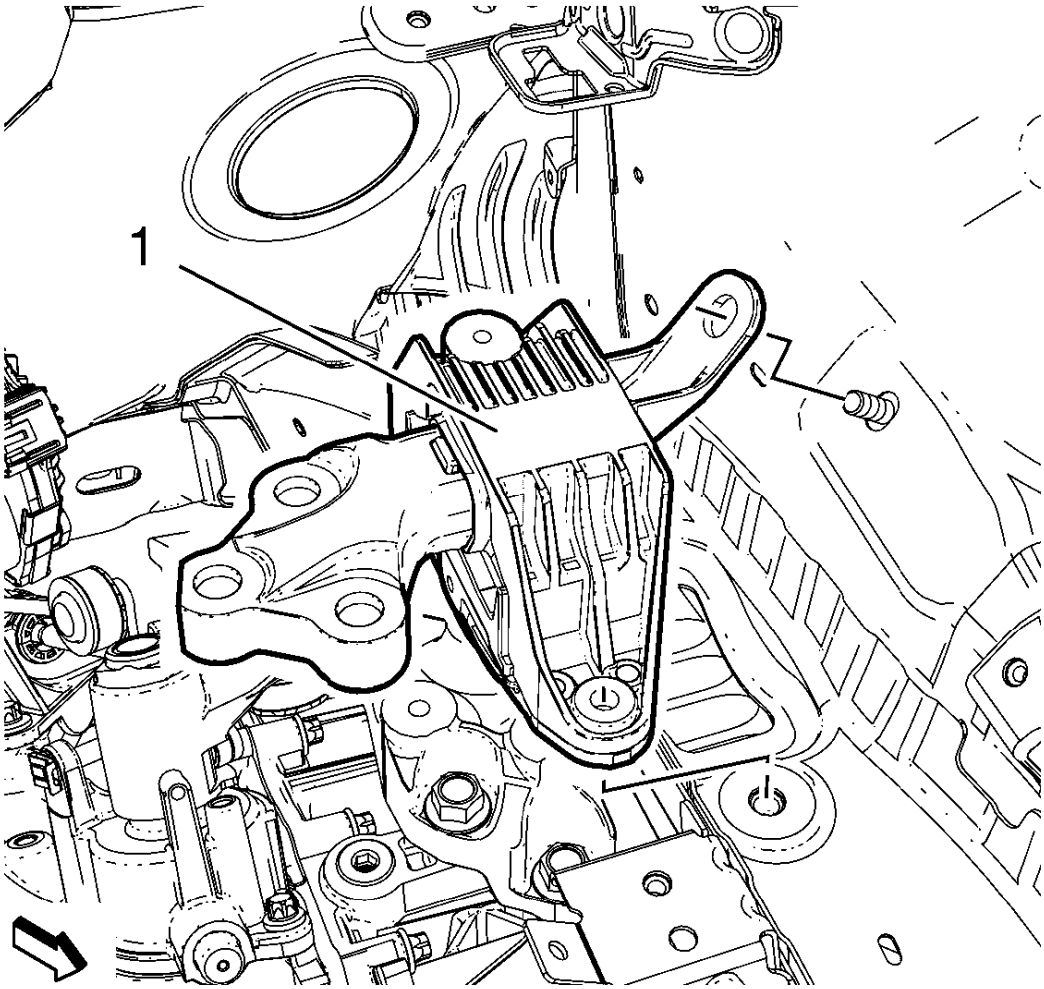

Fig. 82: Transmission Mount
Courtesy of GENERAL MOTORS COMPANY

5. Remove the transmission mount (1).

Installation Procedure

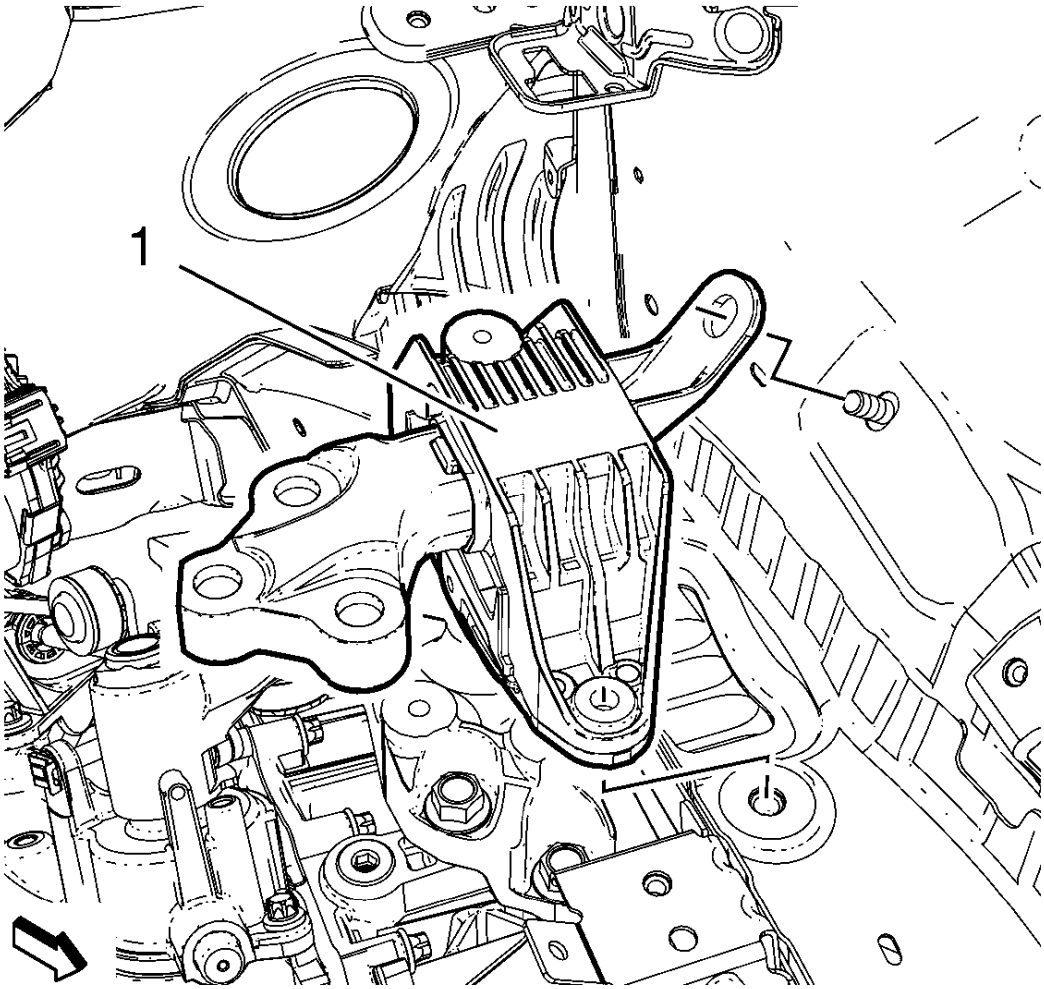

Fig. 83: Transmission Mount
Courtesy of GENERAL MOTORS COMPANY

1. Install the transmission mount (1).

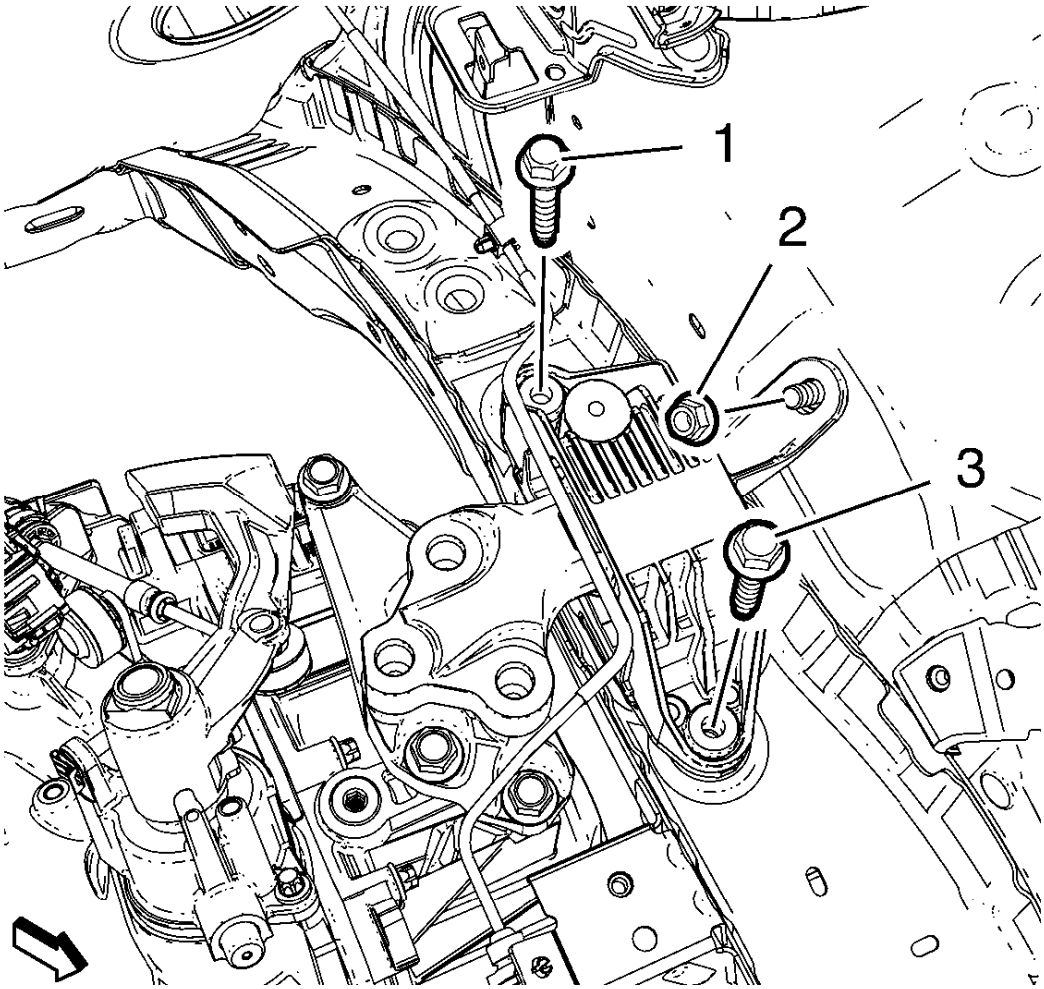

Fig. 84: Transmission Mount Nuts And Bolts
Courtesy of GENERAL MOTORS COMPANY

CAUTION: Refer to Fastener Caution .

2. Install the 2 transmission mount bolts (1, 3) and tighten to 62 N.m (46 lb ft).
3. Install the transmission mount nut (2) and tighten to 62 N.m (46 lb ft).

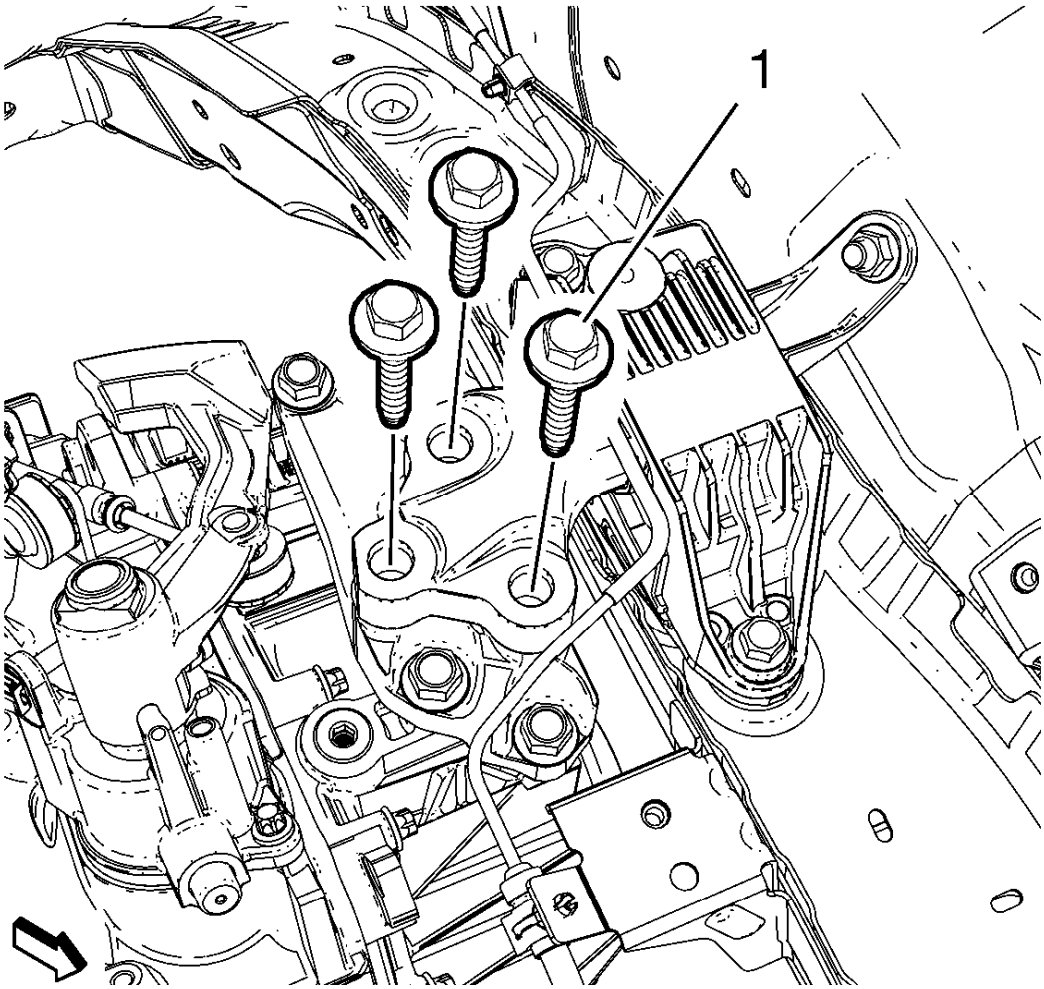

Fig. 85: Transmission Mount Bolts
Courtesy of GENERAL MOTORS COMPANY

CAUTION: Refer to Torque-to-Yield Fastener Caution .

4. Install the 3 NEW transmission mount bolts (1) and tighten a first pass to 50 N.m (37 lb ft).
5. Tighten the 3 NEW transmission mount bolts (1) a final pass to an additional 60 - 75 degrees, using the **EN-45059** meter.
6. Remove the engine lifter.
7. Install the battery tray. Refer to **Battery Tray Replacement** .

TRANSMISSION MOUNT BRACKET REPLACEMENT - REAR

Removal Procedure

1. Raise the vehicle. Refer to **Lifting and Jacking the Vehicle** .
2. Remove the 3 exhaust flexible pipe to catalytic converter nuts and lower the exhaust flexible pipe. Refer to **Catalytic Converter Replacement (1.4L LUV)** , **Catalytic Converter Replacement (1.8L LUW and LWE)** .
3. Support the rear of the powertrain using a suitable jack stand.

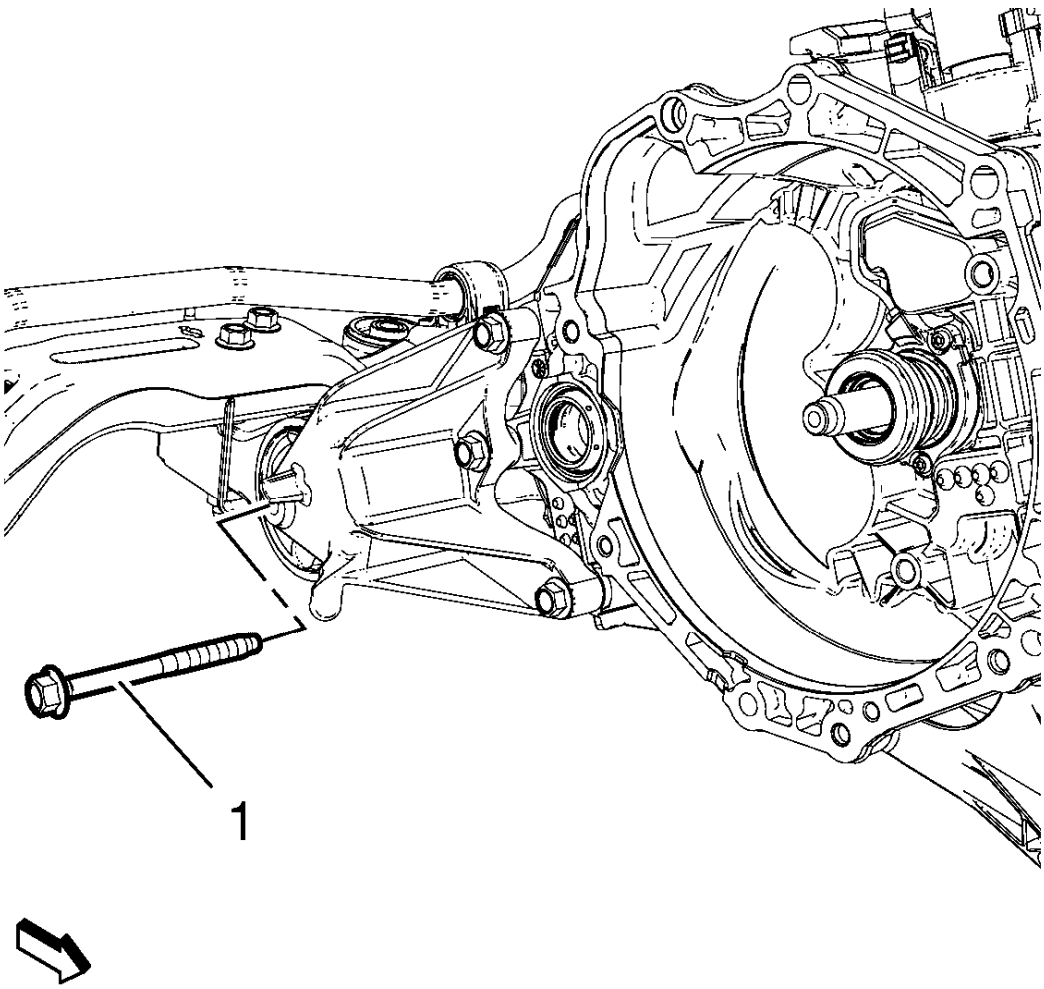

Fig. 86: Transmission Rear Mount Bolt
Courtesy of GENERAL MOTORS COMPANY

4. Remove the transmission rear mount bolt (1).

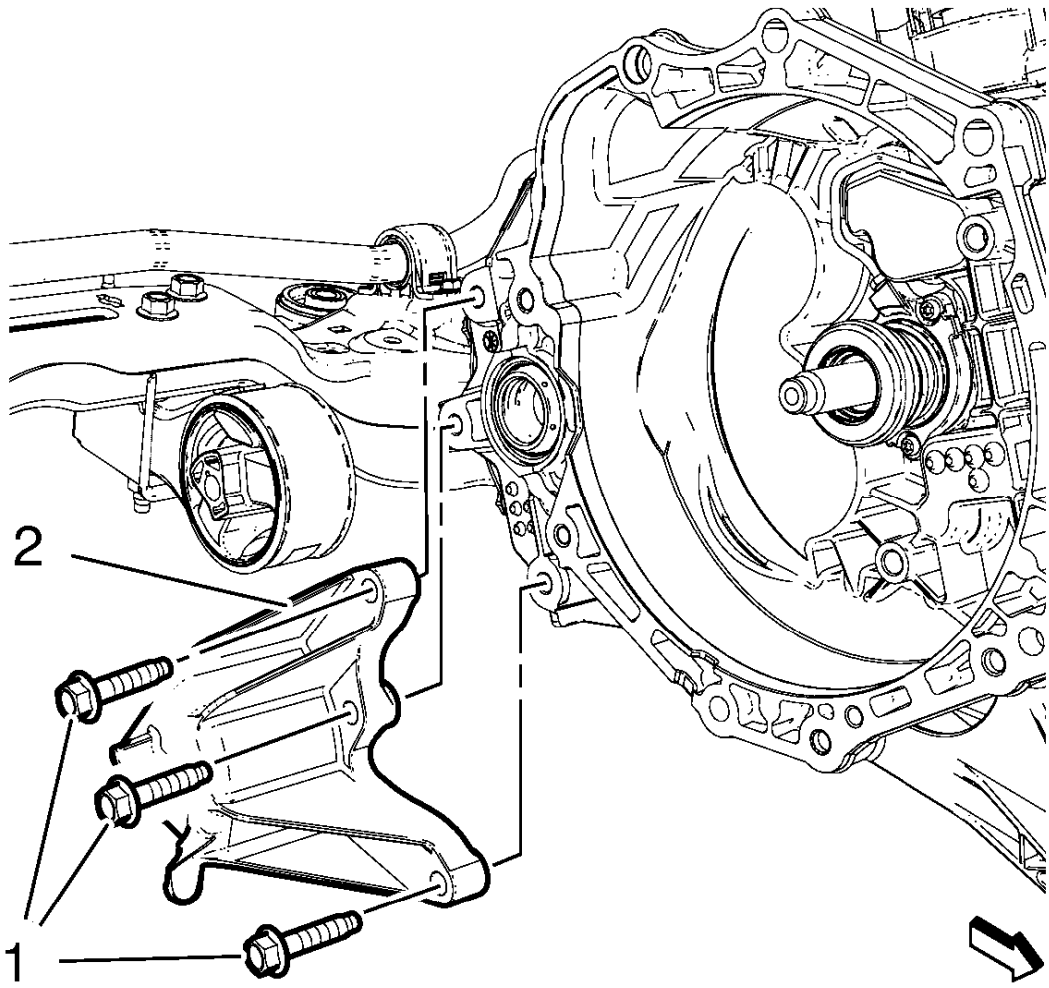

Fig. 87: Transmission Rear Mount And Bolts
Courtesy of GENERAL MOTORS COMPANY

5. Remove the 3 transmission rear mount bolts (1).
6. Remove the transmission rear mount (2).

Installation Procedure

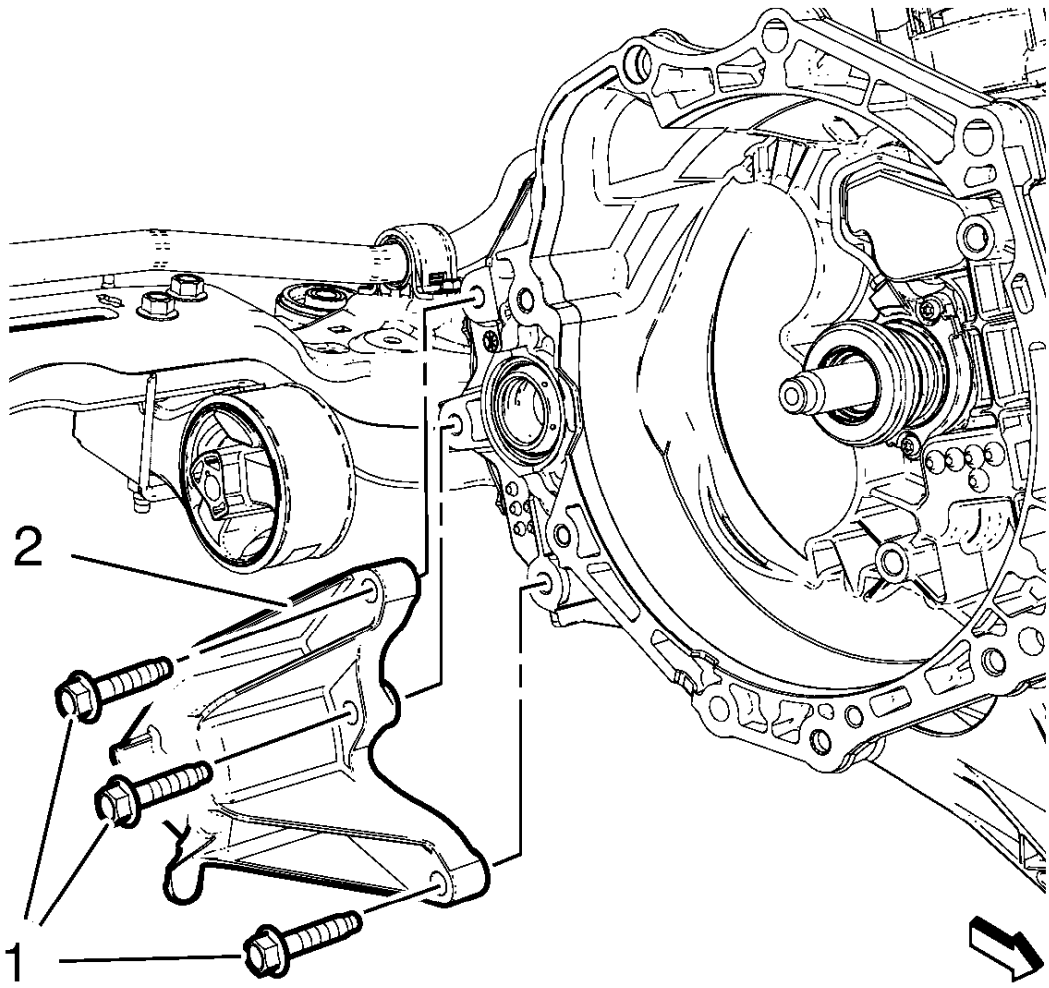

Fig. 88: Transmission Rear Mount And Bolts
Courtesy of GENERAL MOTORS COMPANY

1. Install the transmission rear mount (2).

CAUTION: Refer to Fastener Caution .

2. Install the 3 transmission rear mount bolts (1) and tighten to 100 (74 lb ft).

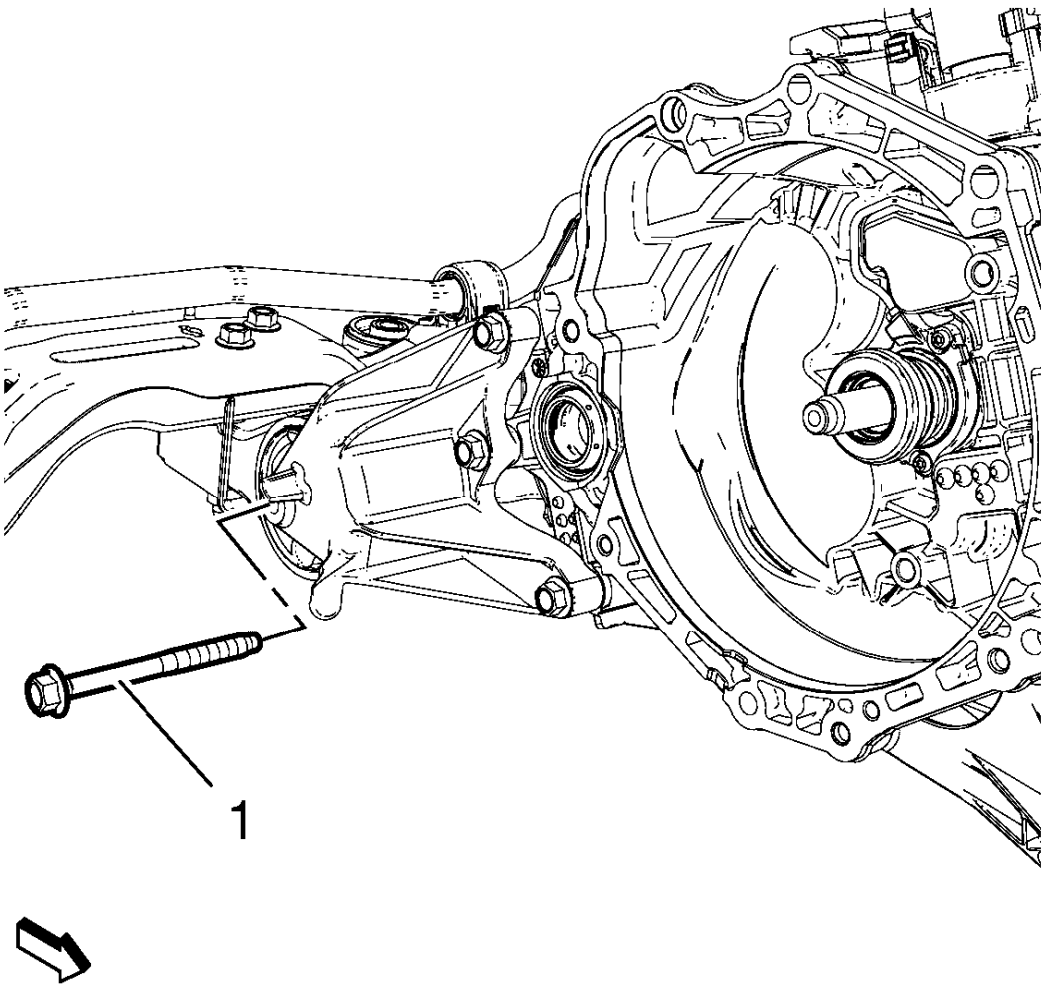

Fig. 89: Transmission Rear Mount Bolt
Courtesy of GENERAL MOTORS COMPANY

3. Install the transmission rear mount bolt (1) and tighten to 100 (74 lb ft).
4. Remove the jack stand.
5. Install the 3 exhaust flexible pipe to catalytic converter nuts. Refer to **Catalytic Converter Replacement (1.4L LUV)** , **Catalytic Converter Replacement (1.8L LUW and LWE)** .
6. Lower the vehicle.

TRANSMISSION MOUNT BRACKET REPLACEMENT - LEFT SIDE

Removal Procedure

1. Remove battery tray. Refer to **Battery Tray Replacement** .
2. Remove transmission mount - left side **Transmission Mount Replacement - Left Side**.

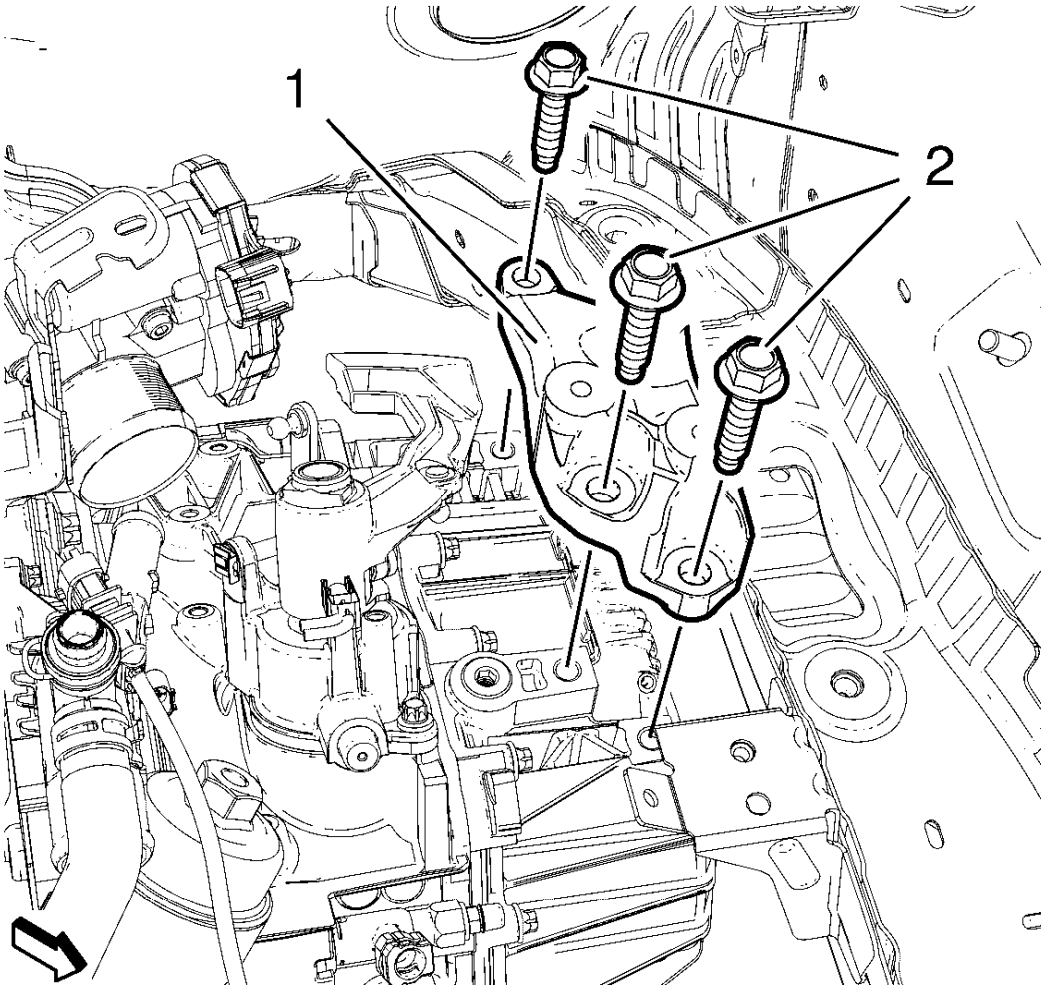

Fig. 90: Transmission Mount Bracket And Bolts
Courtesy of GENERAL MOTORS COMPANY

3. Remove 3 transmission mount bracket bolts (1).
4. Remove transmission mount bracket (2).

Installation Procedure

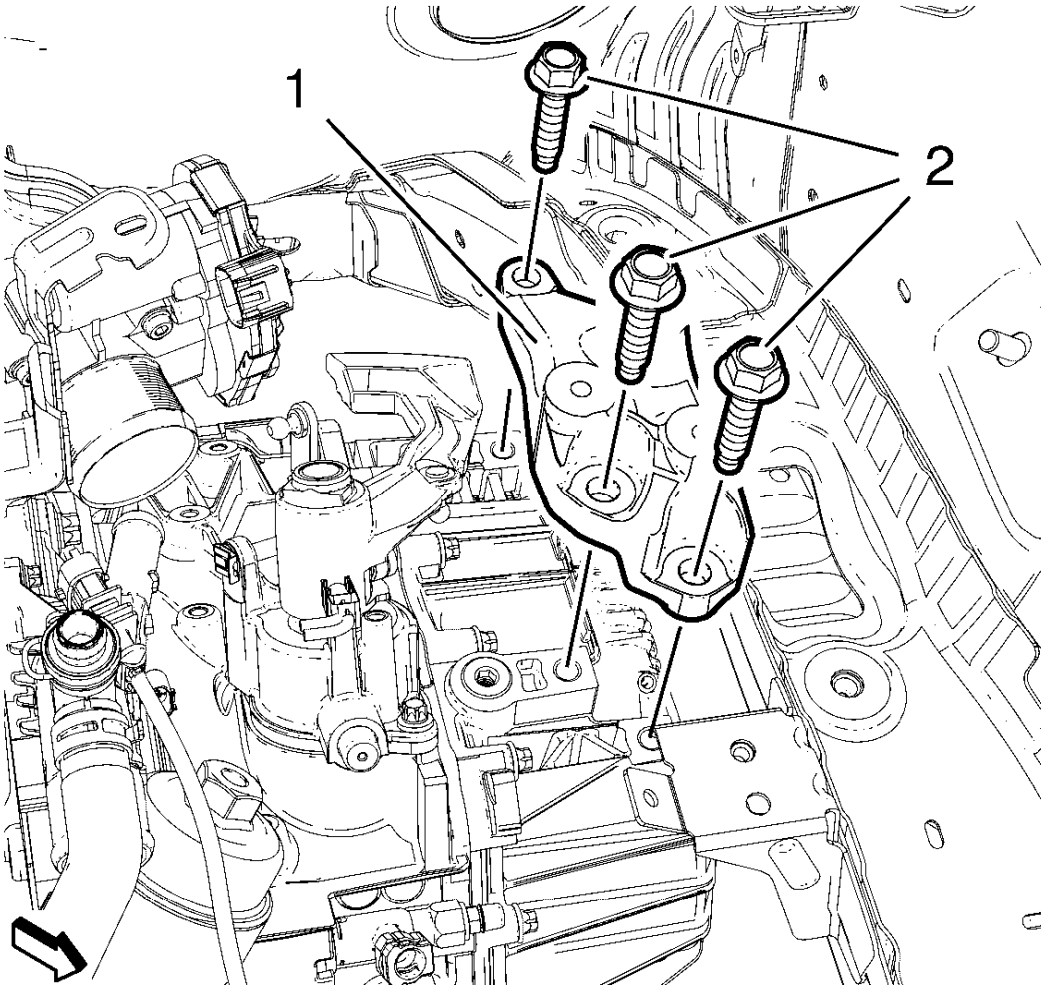

Fig. 91: Transmission Mount Bracket And Bolts
Courtesy of GENERAL MOTORS COMPANY

1. Install transmission mount bracket (2).

CAUTION: Refer to Fastener Caution .

2. Install 3 transmission mount bracket bolts (1) and tighten to 100 N.m (74 lb ft).
3. Install transmission mount - left side **Transmission Mount Replacement - Left Side**.
4. Install battery tray. Refer to **Battery Tray Replacement** .

FRONT WHEEL DRIVE SHAFT SEAL REPLACEMENT - LEFT SIDE

Special Tools

- **CH-466-A** Gear, Bearing Remover / Installer
- **DT-519** Installer Drift
- **DT-523** Remover / Installer

For equivalent regional tools, refer to **Special Tools**.

Removal Procedure

1. Remove left front wheel drive shaft. Refer to **Front Wheel Drive Shaft Replacement - Left Side** .

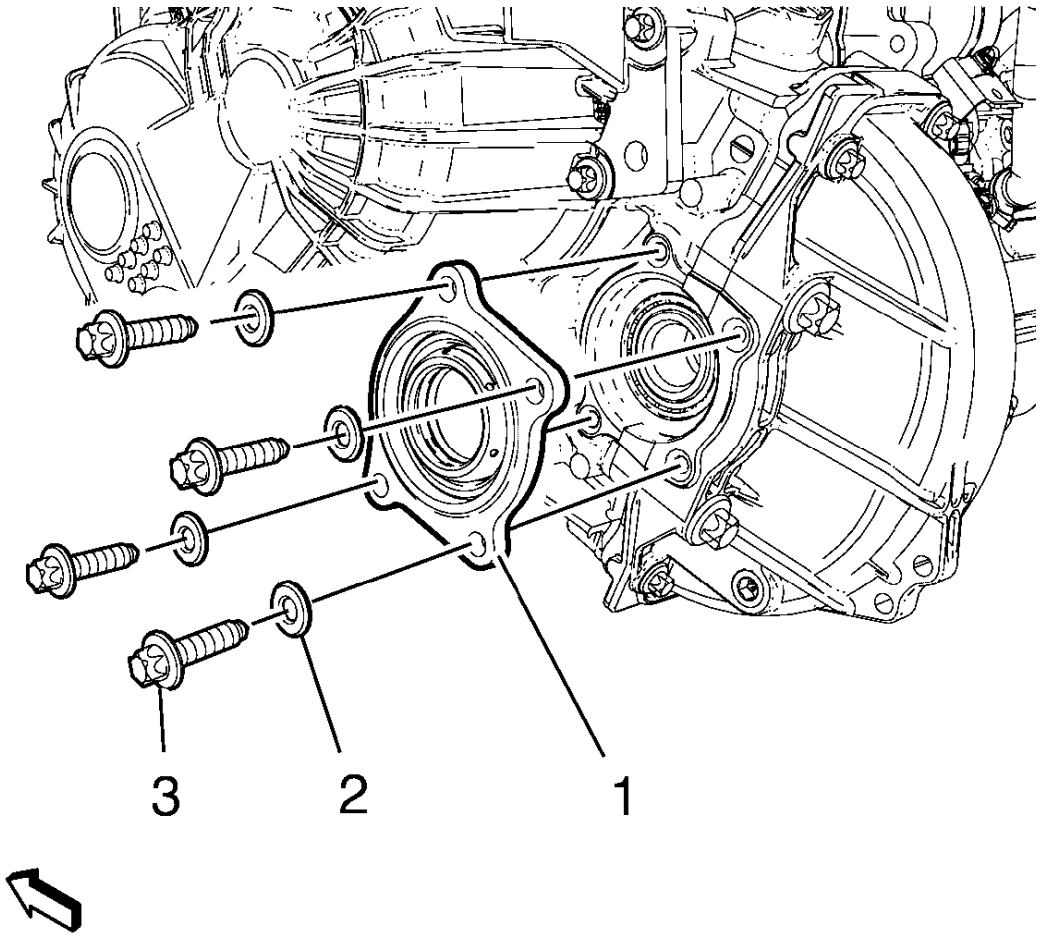

Fig. 92: Front Differential Carrier Flange, Bolts And Washers
Courtesy of GENERAL MOTORS COMPANY

2. Remove and DISCARD 4 front differential carrier flange bolts (3) and 4 washers (2).

   Remove front differential carrier flange (1) from transmission.

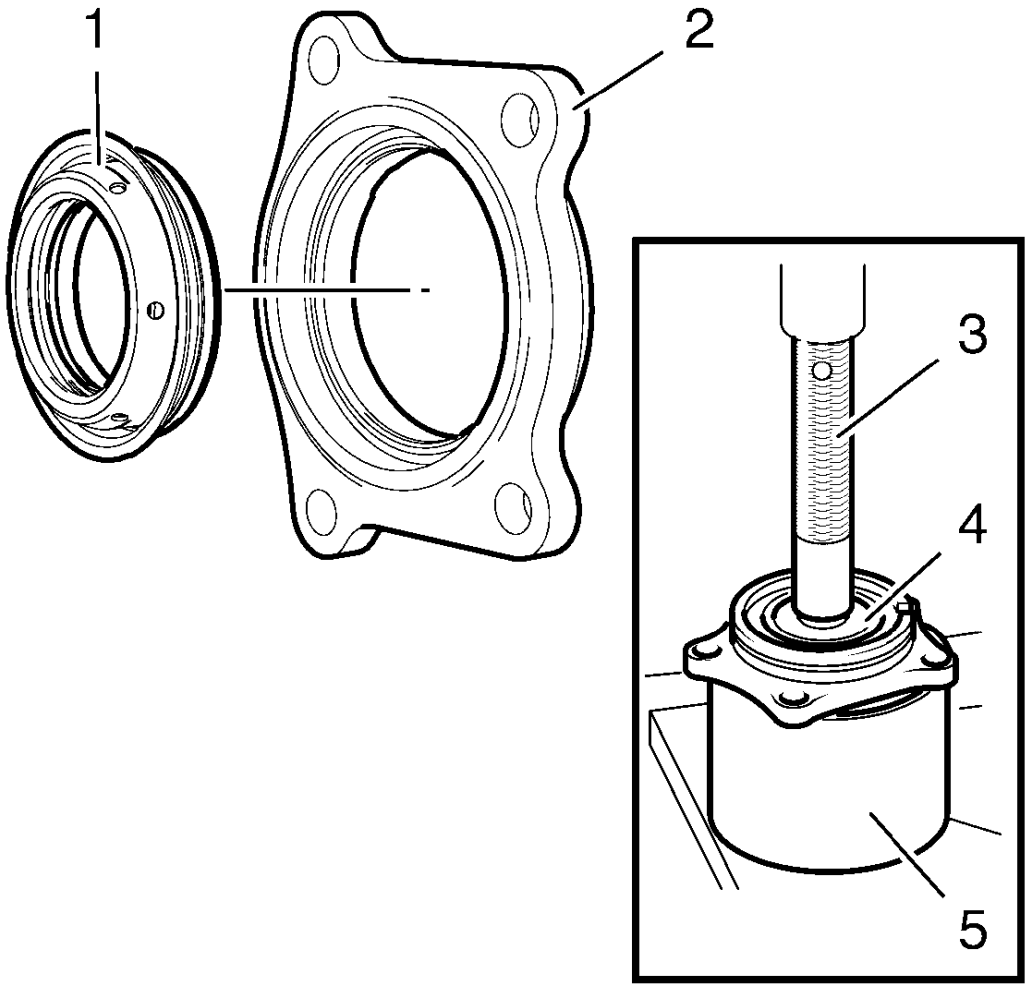

Fig. 93: Front Wheel Drive Shaft Oil Seal, Front Differential Carrier Flange And Remover/Installer
Courtesy of GENERAL MOTORS COMPANY

3. Remove front wheel drive shaft oil seal (1) from front differential carrier flange (2).

   Put front differential carrier flange on **CH-466-A** remover/installer (5) and press front wheel drive shaft oil seal out of front differential carrier flange using **DT-523-1** remover / installer (3) in conjunction with **DT-523-3** remover / installer (4).

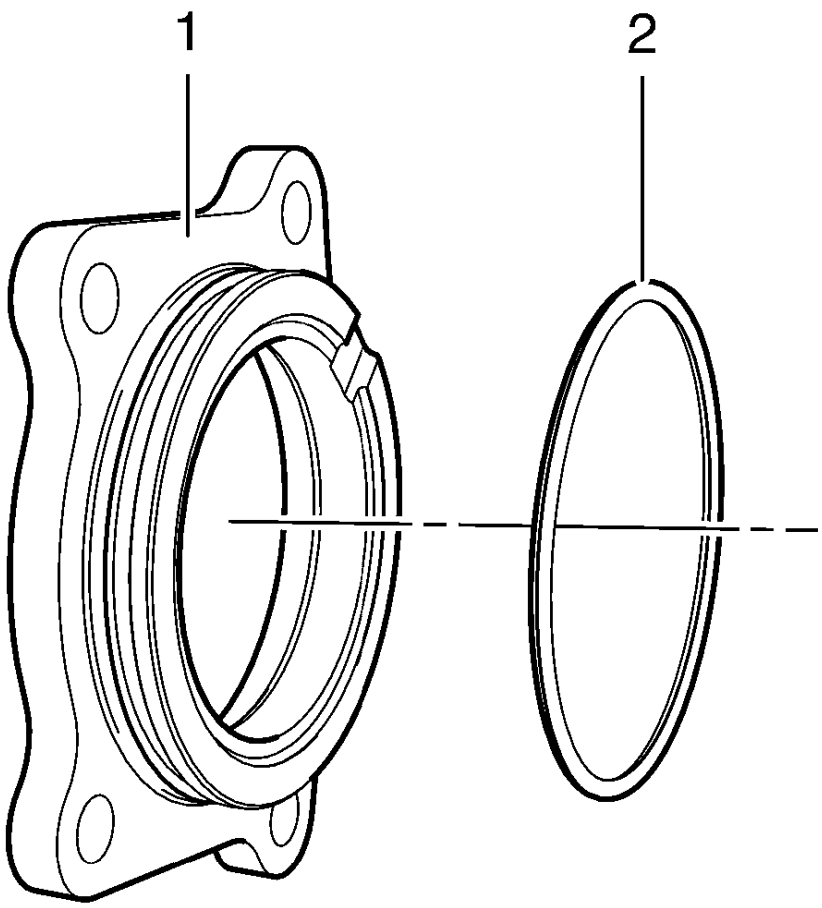

Fig. 94: Front Differential Carrier Flange And Seal
Courtesy of GENERAL MOTORS COMPANY

4. Remove front differential carrier flange seal (2) from front differential carrier flange (1).

Installation Procedure

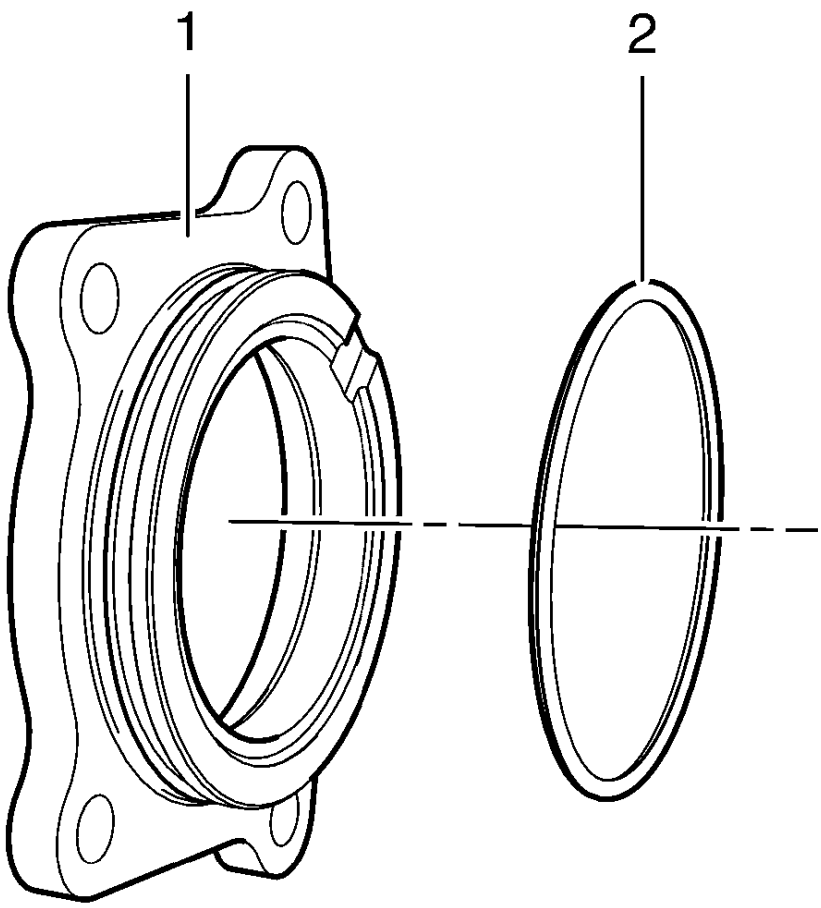

Fig. 95: Front Differential Carrier Flange And Seal
Courtesy of GENERAL MOTORS COMPANY

NOTE: Coat front differential carrier flange seal with NEW transmission fluid.

1. Install NEW front differential carrier flange seal (2) to front differential carrier flange (1).

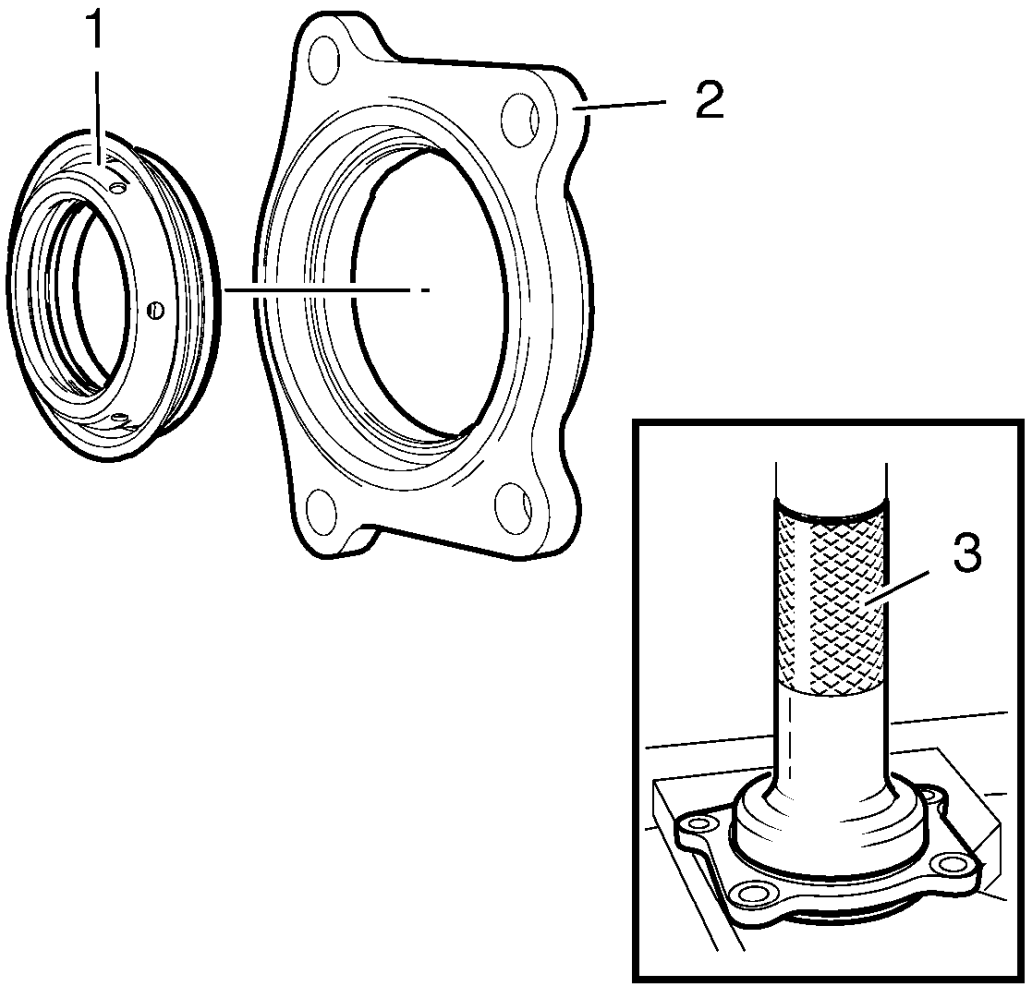

Fig. 96: Front Differential Carrier Flange, Front Wheel Drive Shaft Oil Seal And Installer Drift
Courtesy of GENERAL MOTORS COMPANY

NOTE: Coat front wheel drive shaft oil seal with NEW transmission fluid.

Press front wheel drive shaft oil seal into front differential carrier flange using DT-519 installer drift (3).

2. Install NEW front wheel drive shaft oil seal (1) to front differential carrier flange (2).

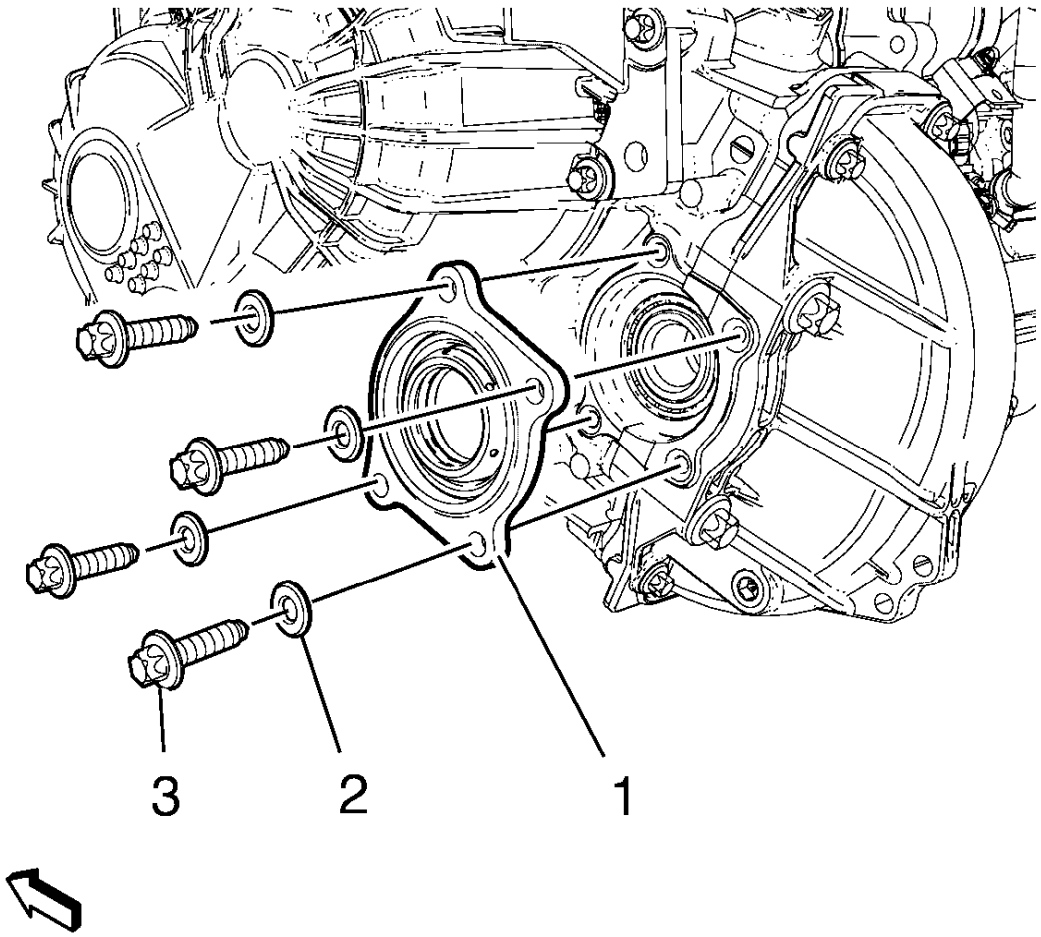

Fig. 97: Front Differential Carrier Flange, Bolts And Washers
Courtesy of GENERAL MOTORS COMPANY

3. Install front differential carrier flange (1) to transmission.

CAUTION: Refer to Fastener Caution .

CAUTION: Refer to Torque-to-Yield Fastener Caution .

4. Install 4 washers (2) and 4 NEW front differential carrier flange bolts (3) and tighten to 20 N.m +45° (15 lb ft +45°).
5. Install left front wheel drive shaft. Refer to **Front Wheel Drive Shaft Replacement - Left Side** .

FRONT WHEEL DRIVE SHAFT SEAL REPLACEMENT - RIGHT SIDE

Special Tools

- **DT-519** Installer Drift
- **DT-586** Remover Hook
- **DT-7004** Slide Hammer

For equivalent regional tools, refer to **Special Tools**.

Removal Procedure

1. Remove right front wheel drive shaft. Refer to **Front Wheel Drive Shaft Replacement - Right Side** .

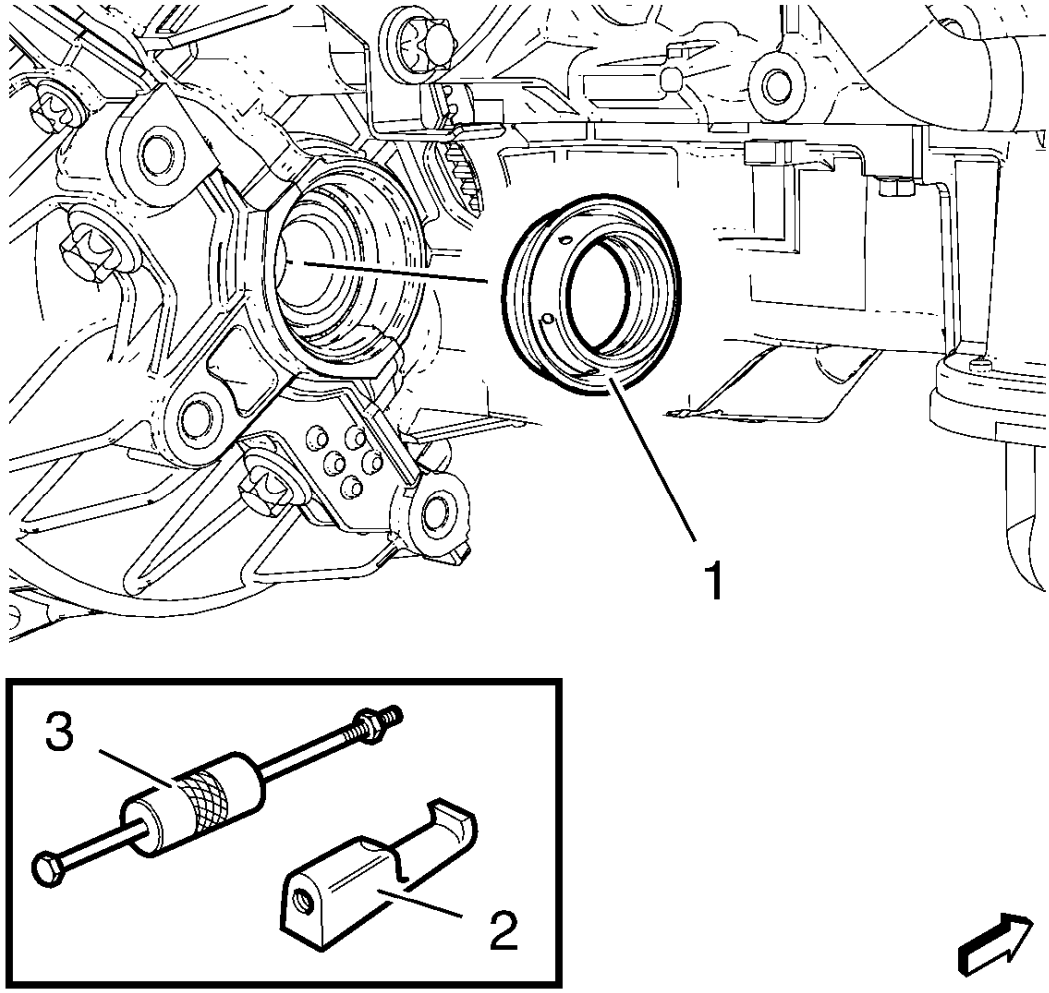

Fig. 98: Front Wheel Drive Shaft Oil Seal And Removal Tools (1.8L LUW)
Courtesy of GENERAL MOTORS COMPANY

2. Remove front wheel drive shaft oil seal (1) using **DT-7004** slide hammer (3) in conjunction with **DT-586** hook (2).

Installation Procedure

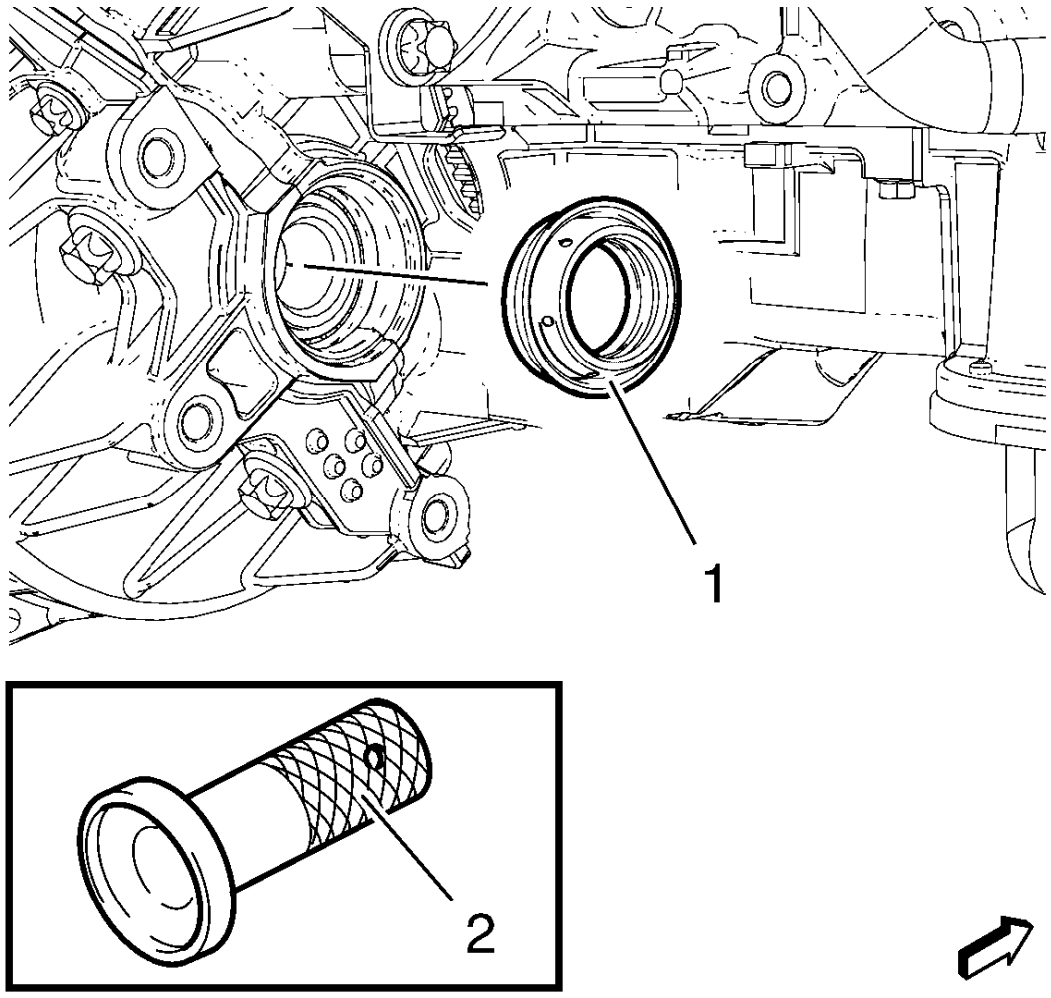

Fig. 99: Front Wheel Drive Shaft Oil Seal And Installation Tools (1.8L LUW)
Courtesy of GENERAL MOTORS COMPANY

NOTE: Coat seal lips with NEW transmission fluid.

1. Install NEW front wheel drive shaft oil seal (1) using **DT-519** installer drift (2) with hammer.
2. Install right front wheel drive shaft. Refer to **Front Wheel Drive Shaft Replacement - Right Side** .

TRANSMISSION REPLACEMENT

Removal Procedure

1. Remove battery tray. Refer to **Battery Tray Replacement** .
2. Remove the transmission shift lever cable from transmission. Refer to **Manual Transmission Shift Lever and Selector Lever Cable Replacement**.

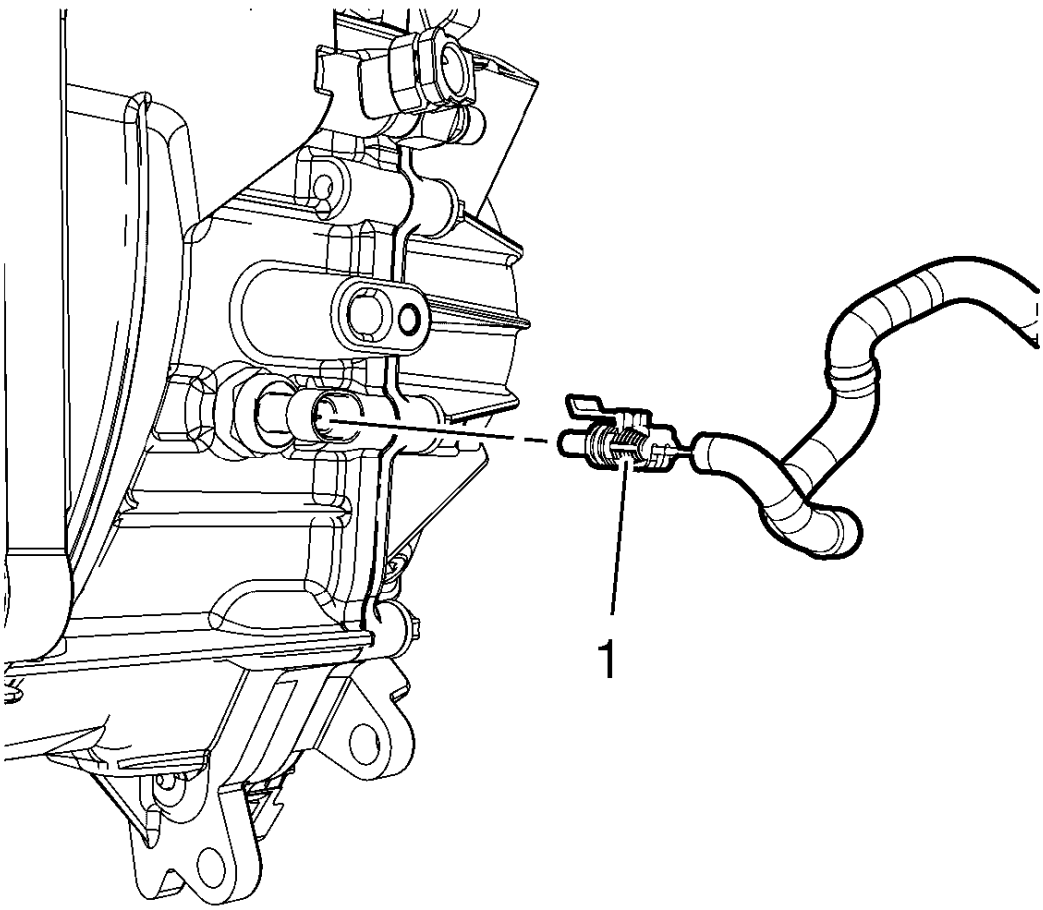

Fig. 100: Backup Lamp Switch Electrical Connector
Courtesy of GENERAL MOTORS COMPANY

3. Disconnect the electrical connector (1) from the backup lamp switch.

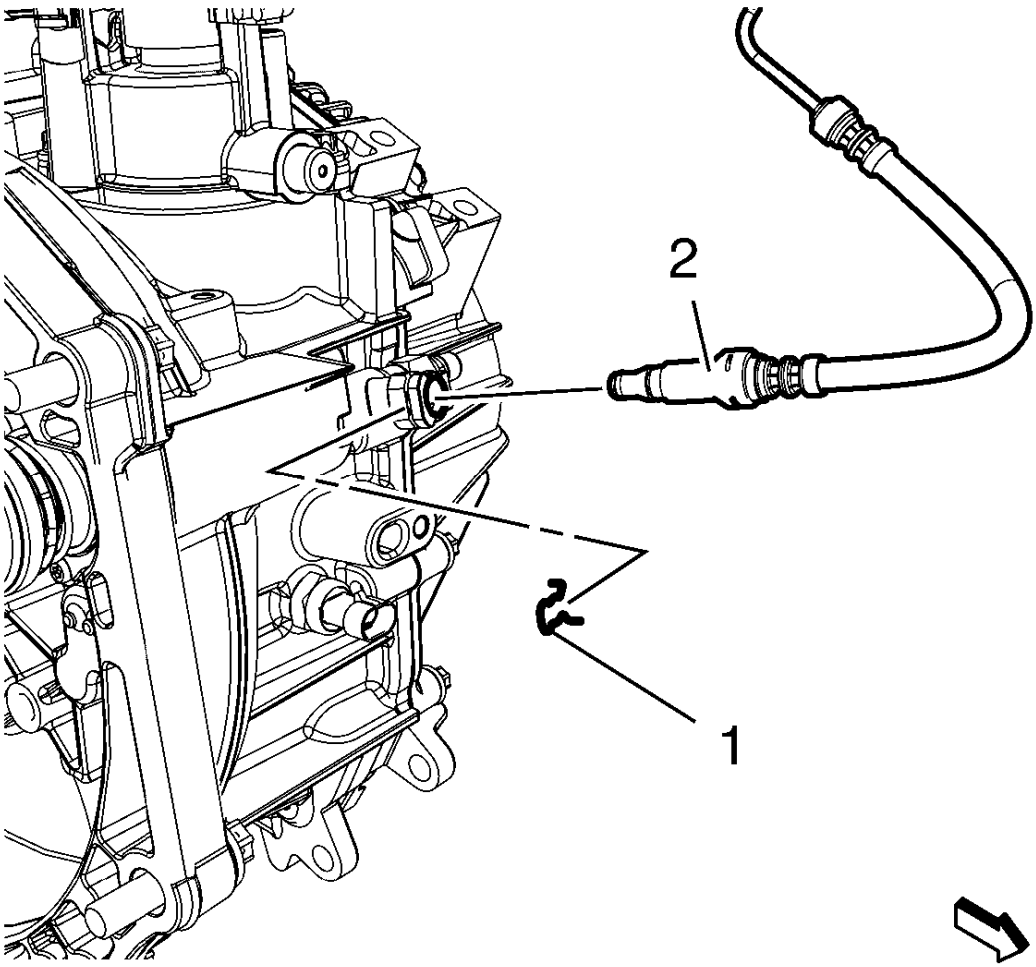

Fig. 101: Clutch Actuator Cylinder Front Pipe And Retainer
Courtesy of GENERAL MOTORS COMPANY

NOTE: Before disconnecting the clutch actuator cylinder front pipe, remove the clutch/brake fluid from the reservoir tank.

4. Remove the clutch actuator cylinder front pipe retainer (1).
5. Disconnect the clutch actuator cylinder front pipe (2) from the clutch actuator cylinder pipe elbow.

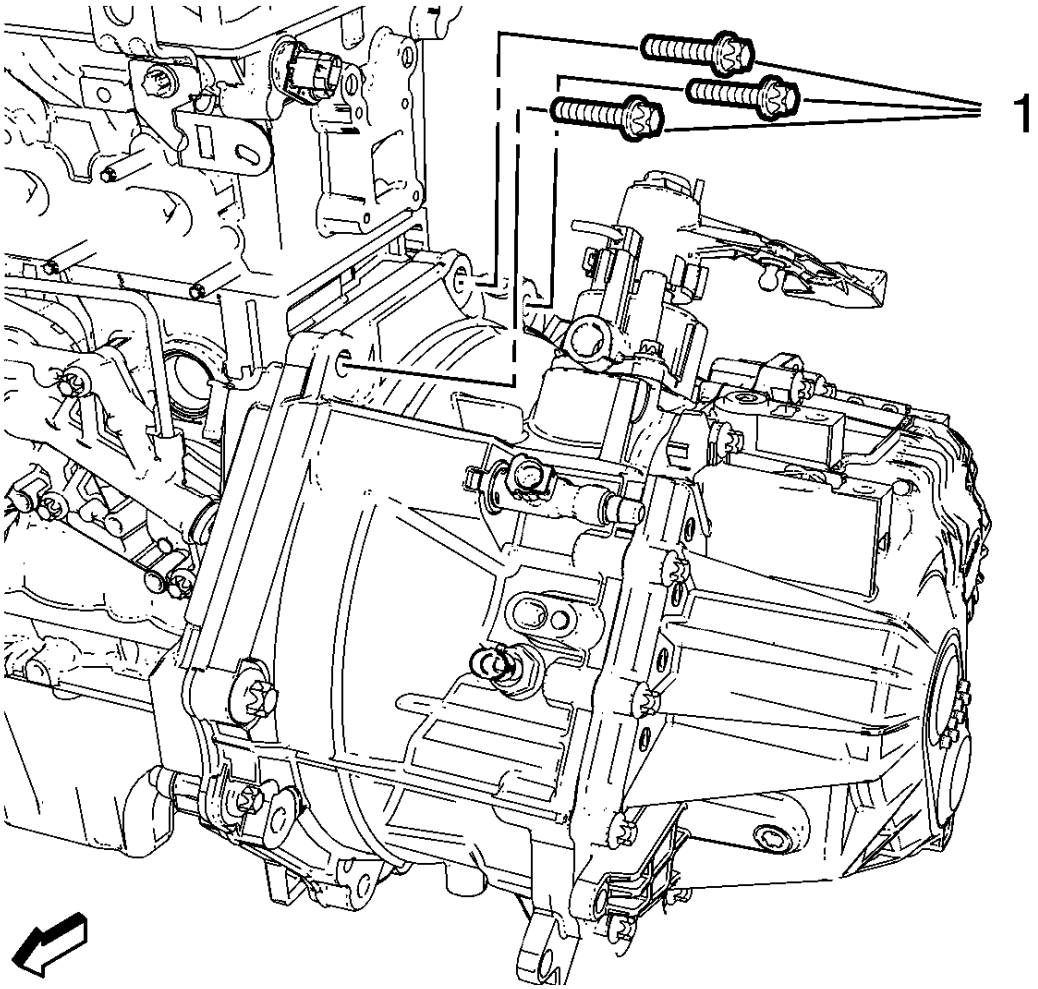

Fig. 102: Upper Transmission Bolts
Courtesy of GENERAL MOTORS COMPANY

6. Unclip the wire harness from the transmission.
7. Remove the 3 upper transmission bolts from engine (1).
8. Remove the drivetrain and front suspension frame. Refer to **Drivetrain and Front Suspension Frame Replacement** .

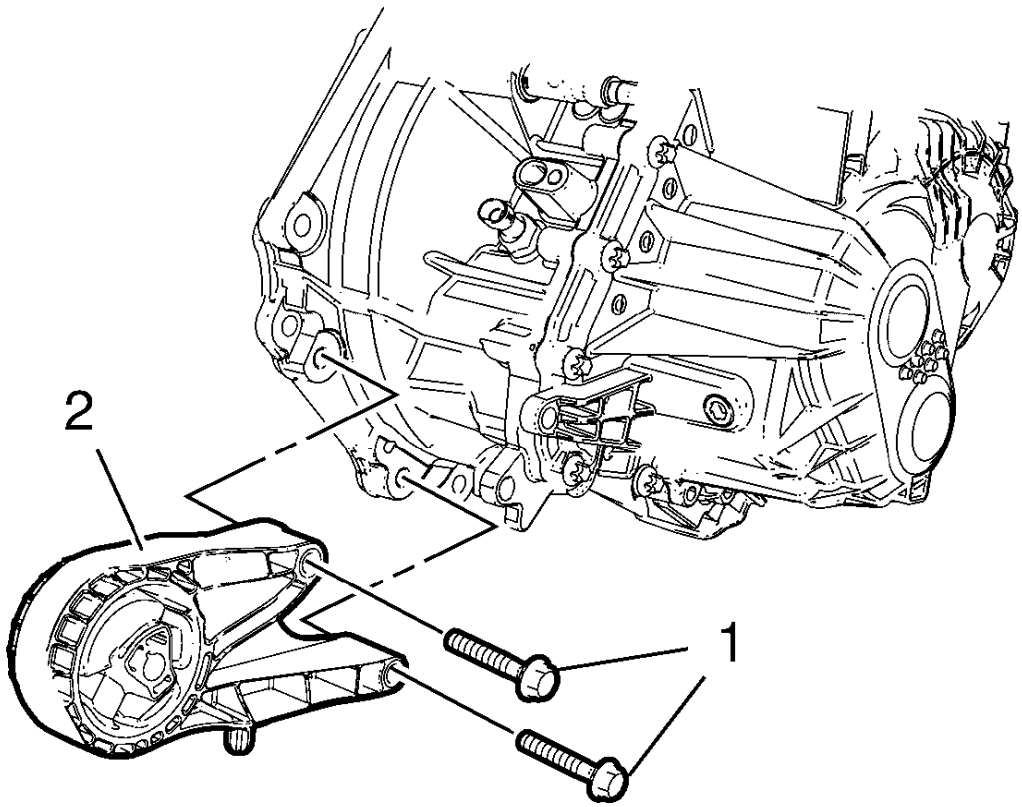

Fig. 103: Transmission Front Mount And Bolts
Courtesy of GENERAL MOTORS COMPANY

9. Remove transmission front mount from transmission (2). Remove 2 bolts (1).

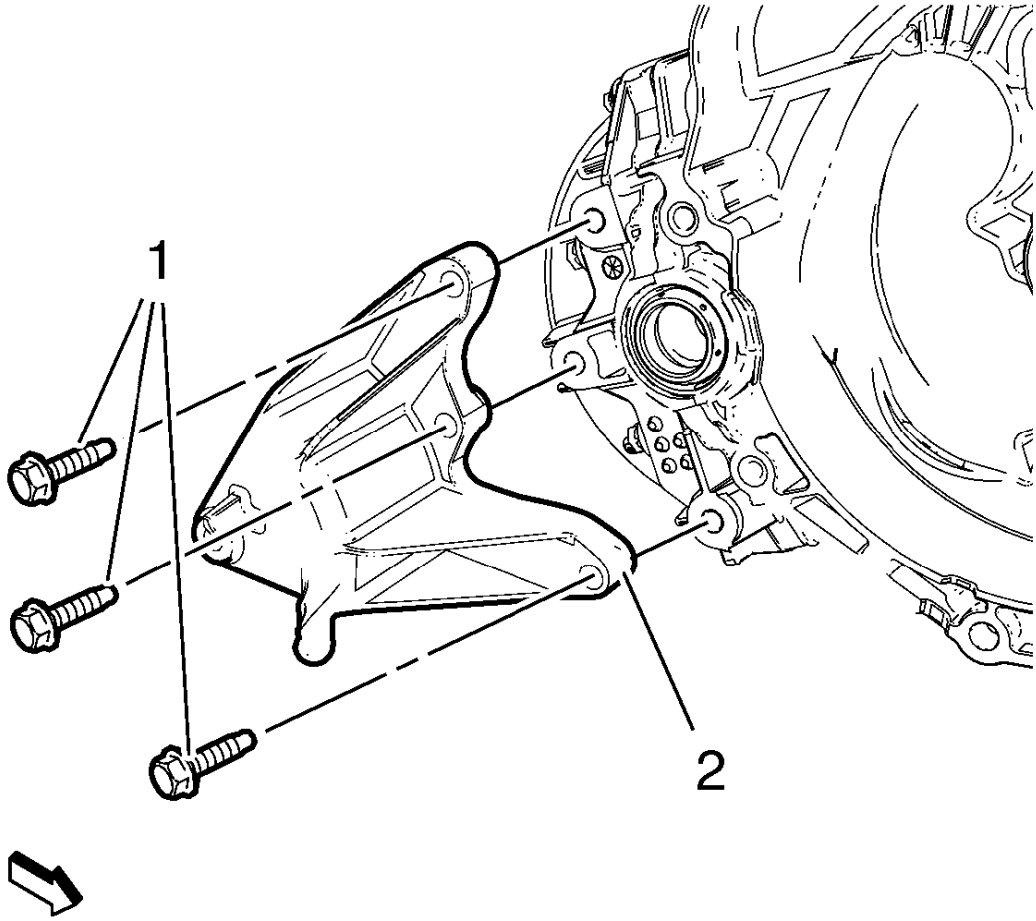

Fig. 104: Transmission Mount Bracket And Bolts
Courtesy of GENERAL MOTORS COMPANY

10. Remove the transmission mount bracket bolts (1) and the rear transmission mount bracket (2).
11. Drain transmission fluid.
12. Disconnect the left front wheel drive shaft from the transmission. Refer to **Front Wheel Drive Shaft Replacement - Left Side** .
13. Disconnect the right front wheel drive shaft from the transmission. Refer to **Front Wheel Drive Shaft Replacement - Right Side** .
14. Lower the vehicle.

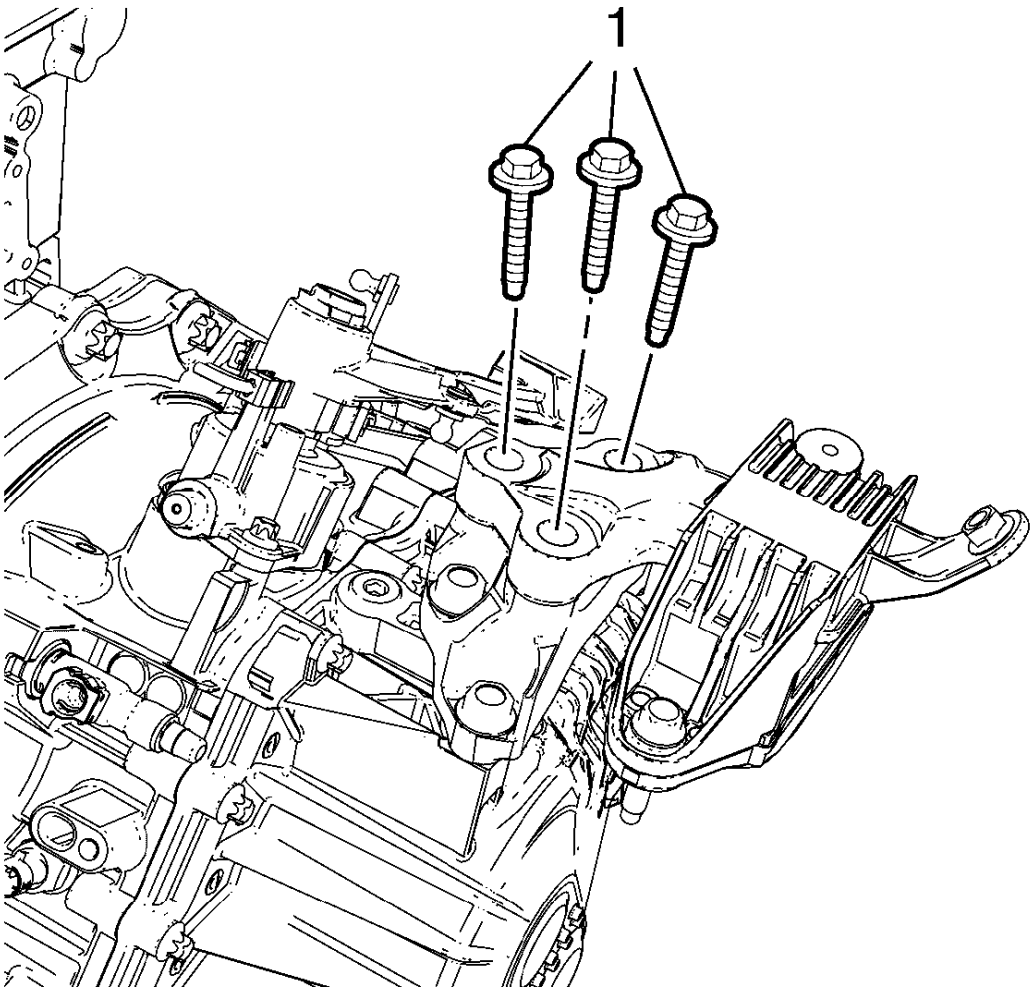

Fig. 105: Transmission Mount Bolts
Courtesy of GENERAL MOTORS COMPANY

15. Remove and DISCARD the transmission mount bolts (1) from transmission mount bracket.
16. Lower the engine and the transmission on the left hand side with the engine support fixture.

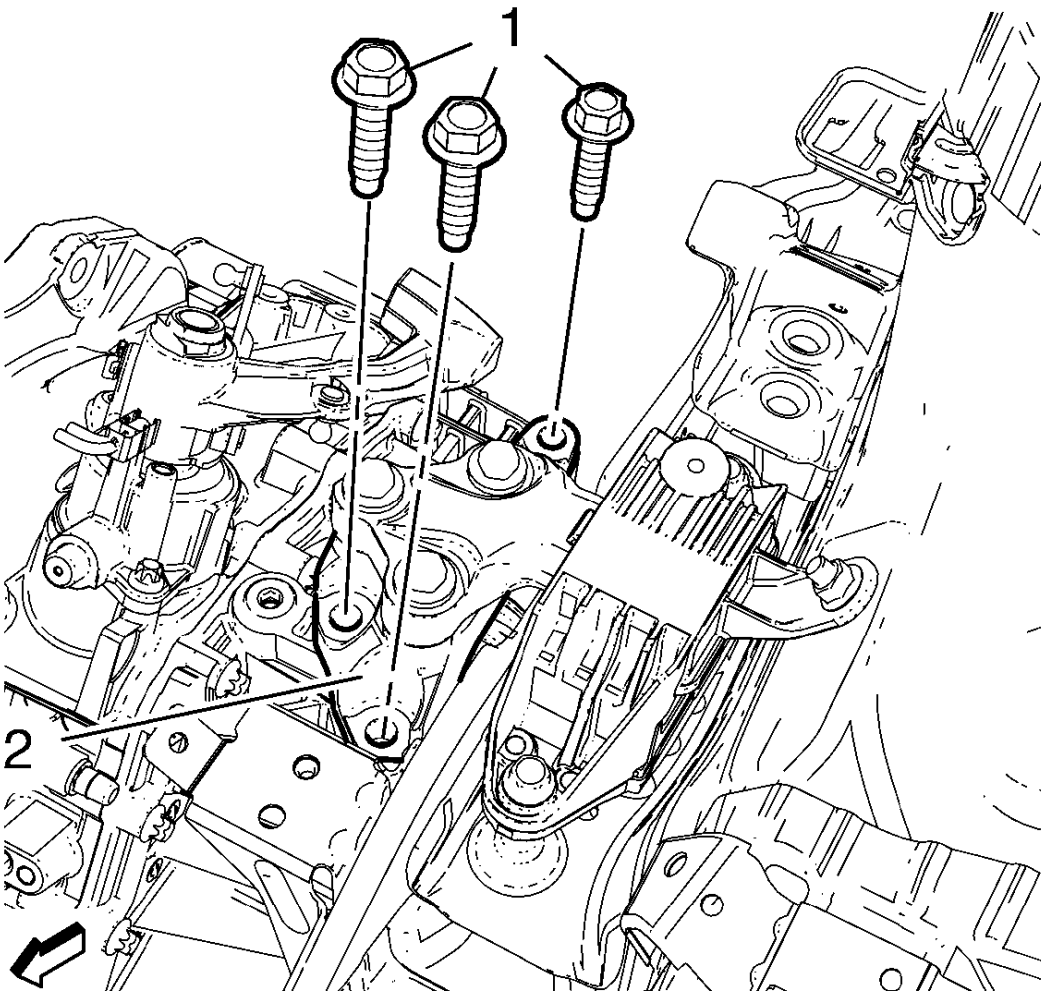

Fig. 106: Left Transmission Bracket And Bolts
Courtesy of GENERAL MOTORS COMPANY

17. Remove transmission mount bracket - left side from transmission (2). Remove 3 transmission mount bracket bolts (1).
18. Raise the vehicle.

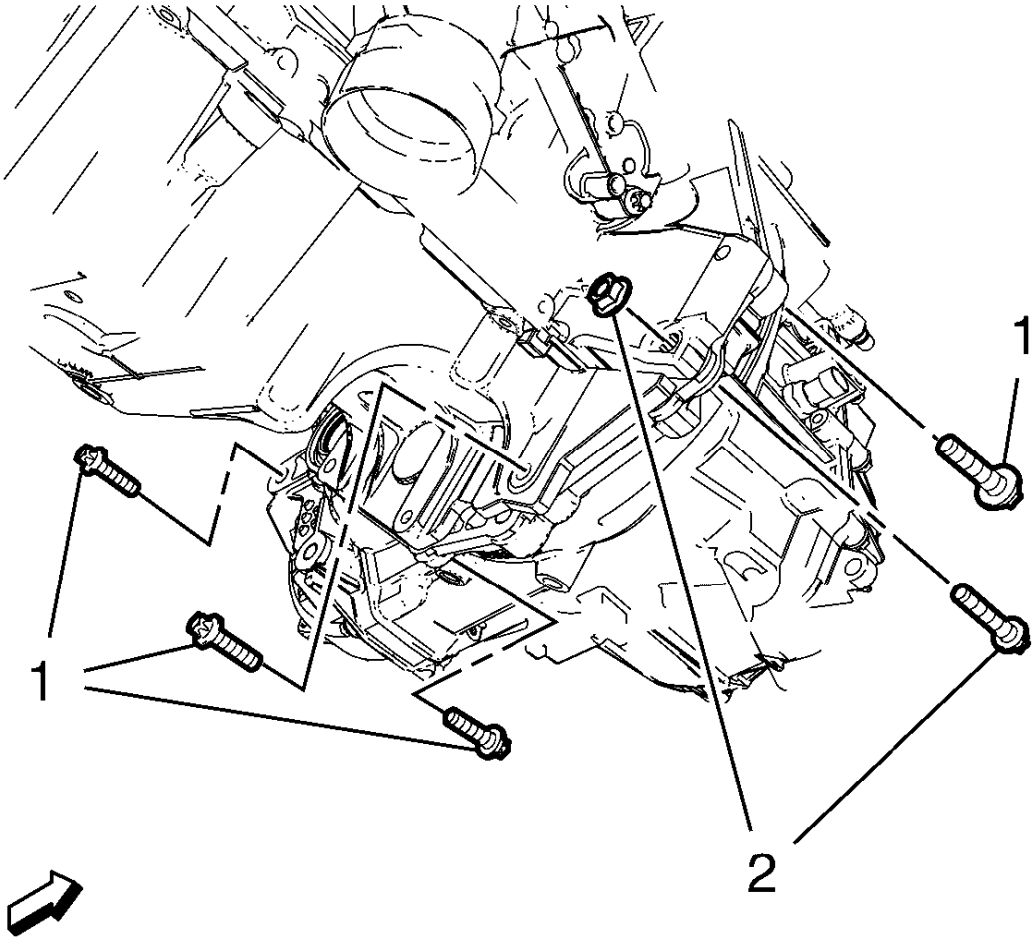

Fig. 107: Transmission Lower Bolts And Nuts
Courtesy of GENERAL MOTORS COMPANY

19. Using a suitable straps or chains, secure the transmission to a suitable transmission jack.
20. Remove 4 transmission lower bolts (1)
21. Remove transmission lower bolt and nut (2)

CAUTION: Refer to Fastener Caution .

22. Install NEW oil drain plug and tighten to 20 N.m (15 lb ft).

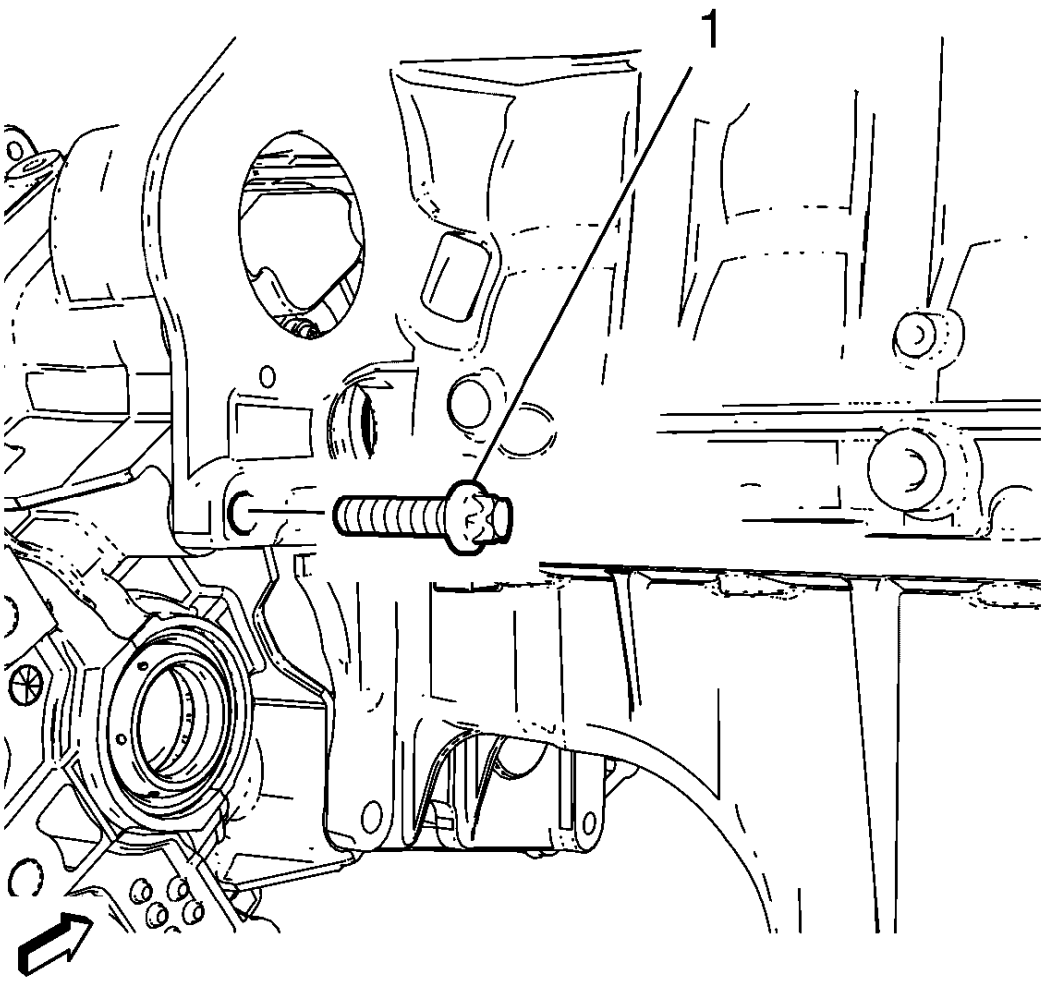

Fig. 108: Lower Transmission Bolt
Courtesy of GENERAL MOTORS COMPANY

23. Remove the remaining lower transmission bolts (1).
24. Separate the transmission from the engine.
25. Lower the transmission from the vehicle.

Installation Procedure

WARNING: Use care when cleaning the clutch hub. The clutch hub may have sharp edges and can cause personal injury if contact is made. Wear protective gloves to avoid personal injury.

1. Clean the clutch hub and the input shaft from any debris and contaminates with a lint-free towel.

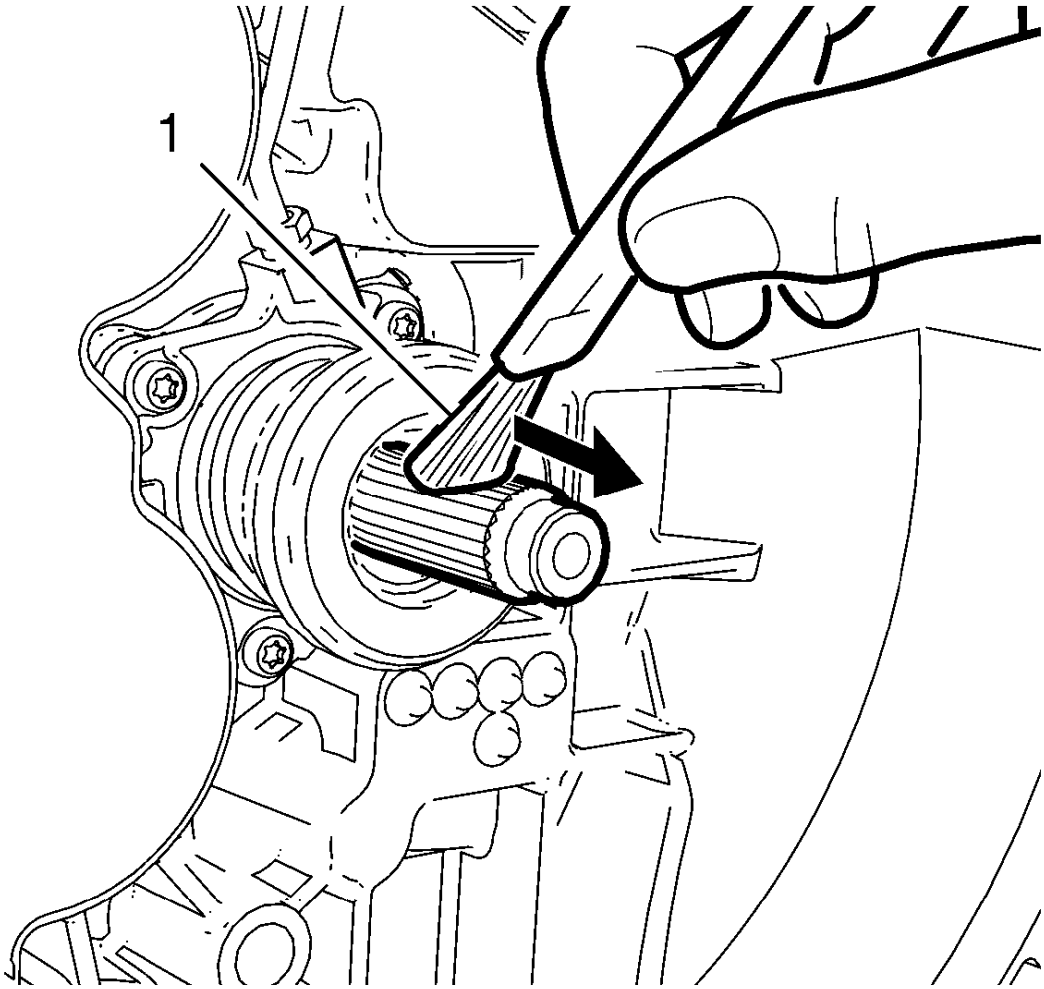

Fig. 109: Using Flat Brush To Apply Light Coating Of Multi-Purpose Grease
Courtesy of GENERAL MOTORS COMPANY

CAUTION: Applying too much or the wrong type of grease on the transmission input shaft may cause damage, clutch slippage or failure. Always apply the correct type of grease. Never apply more grease than is necessary to coat the transmission input shaft with a very thin film of grease.

2. Use a clean flat brush (1) to apply very light coating of multi-purpose grease to input shaft until the metal is only shiny. No visible clumps of grease are permissible regardless of size. Smear away from the transmission in direction of the shown arrow.

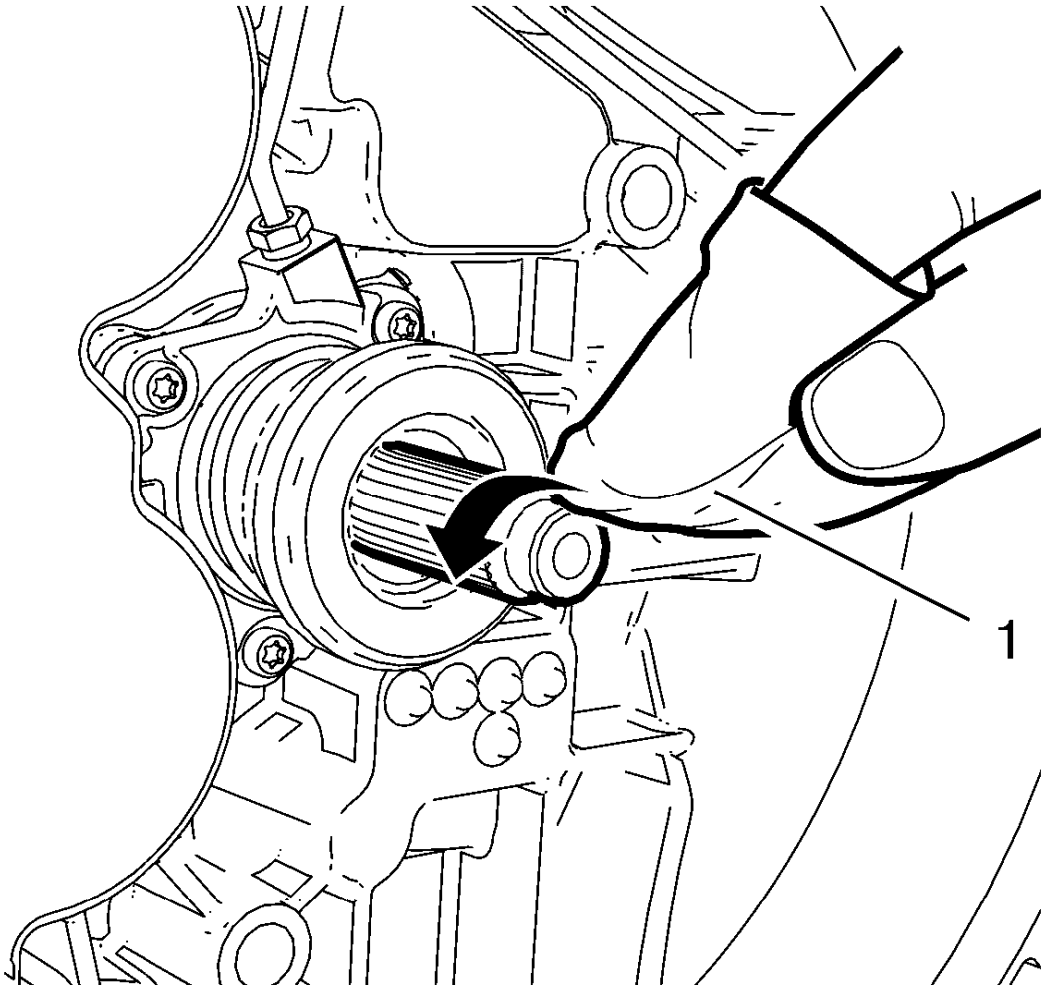

Fig. 110: Lint Free Towel
Courtesy of GENERAL MOTORS COMPANY

CAUTION: Ensure that no grease remains on the lead surface of the transmission input shaft. Clean the lead surface of the transmission input shaft prior to the assembly of the transmission to the engine. Failure to maintain a clean surface may cause clutch slippage or failure.

3. Clean the entire lead surface of the input shaft with a NEW, lint-free towel (1).
4. Raise the transmission with the transmission jack and position the transmission to the engine.

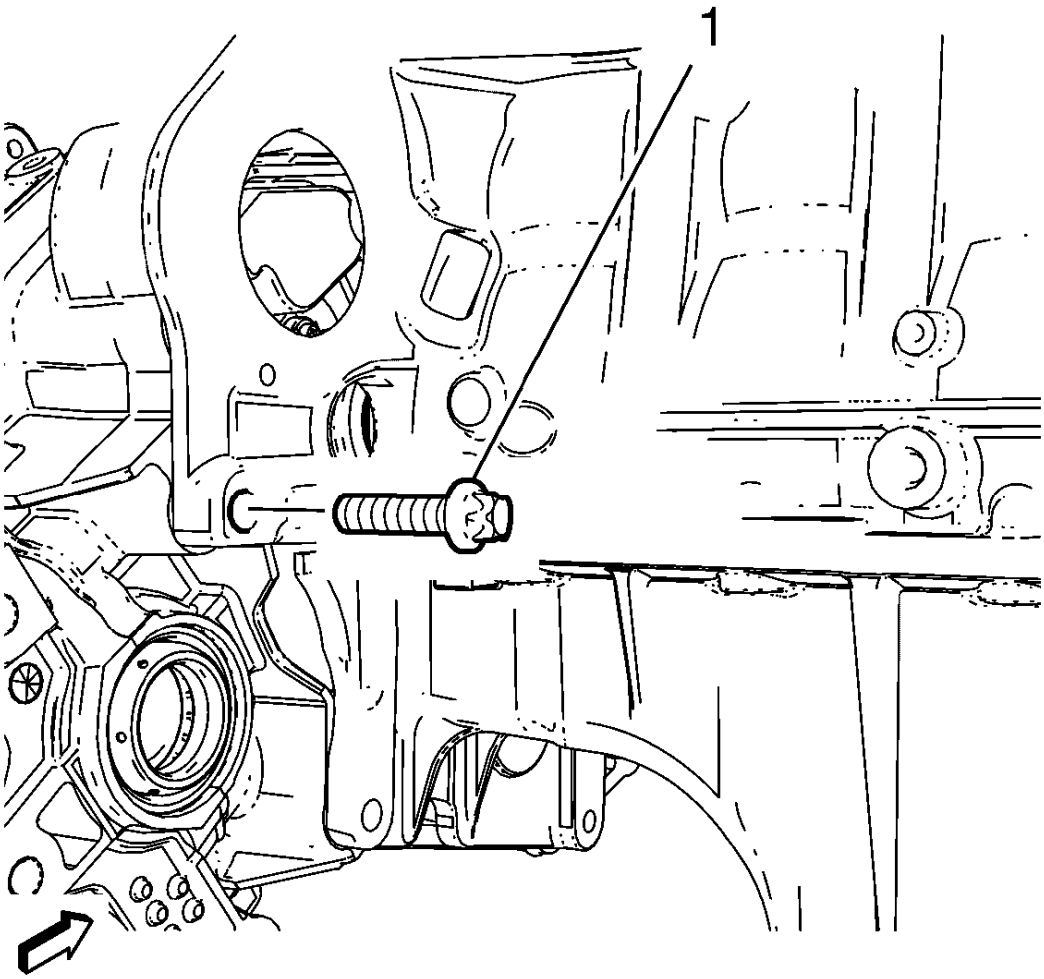

Fig. 111: Lower Transmission Bolt
Courtesy of GENERAL MOTORS COMPANY

CAUTION: Refer to Fastener Caution .

5. Install transmission lower bolt (1) and tighten to 60 N.m (44 lb ft).
6. Remove the transmission jack.

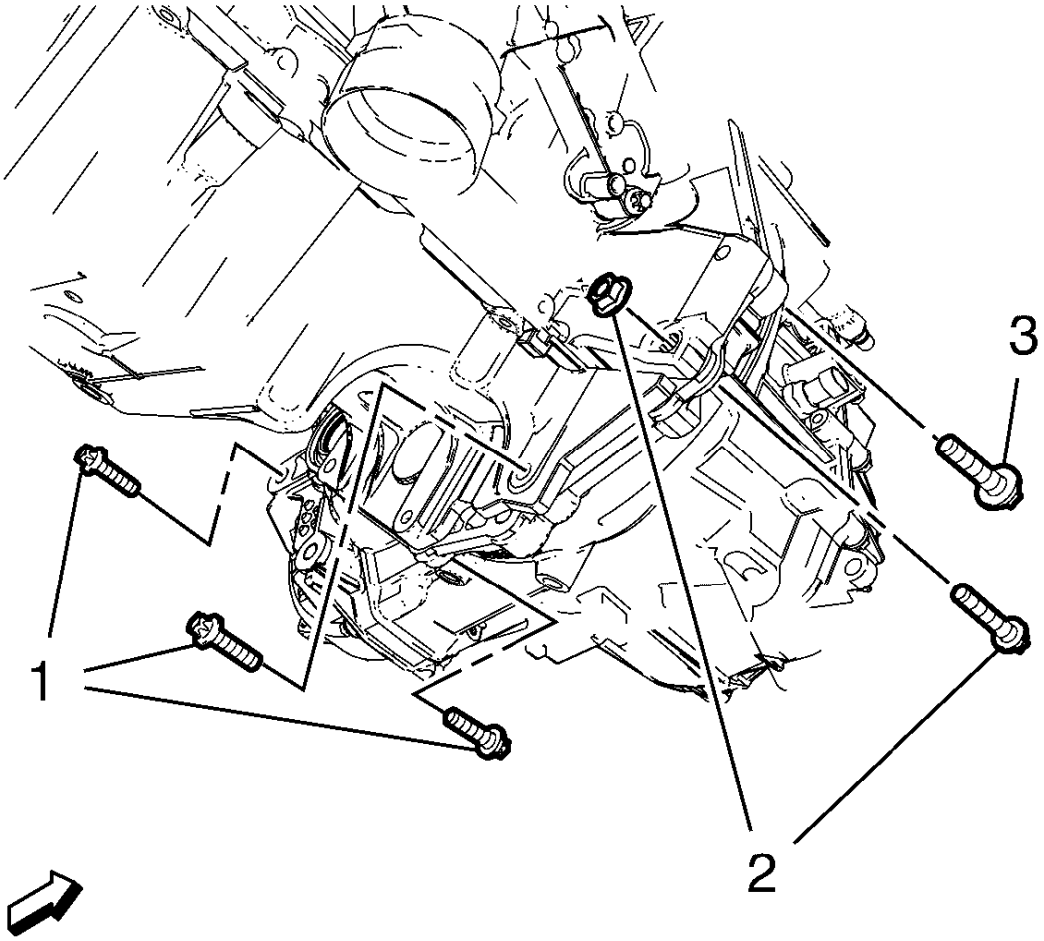

Fig. 112: Transmission Bolts
Courtesy of GENERAL MOTORS COMPANY

7. Install 3 transmission lower bolts (1) and tighten to 40 N.m (32 lb ft).
8. Install transmission bolt (3) and tighten to 60 N.m (44 lb ft).
9. Install transmission lower bolt and nut (2) and tighten to 40 N.m (32 lb ft).
10. Lower the vehicle.

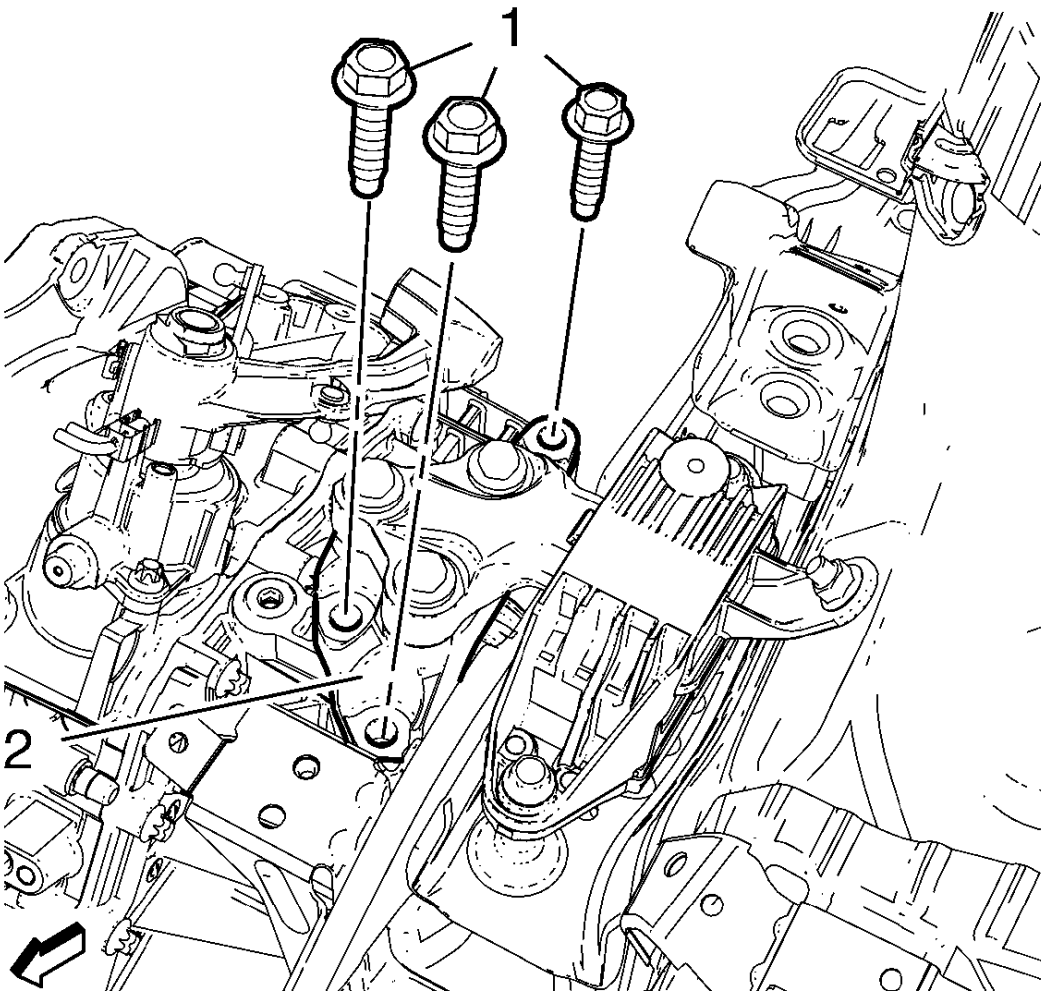

Fig. 113: Left Transmission Bracket And Bolts
Courtesy of GENERAL MOTORS COMPANY

11. Install transmission mount bracket - left side. Install 3 transmission mount bracket bolts (1) and tighten to 100 N.m (74 lb ft).
12. Raise the engine and the transmission on the left hand side with the engine support fixture.

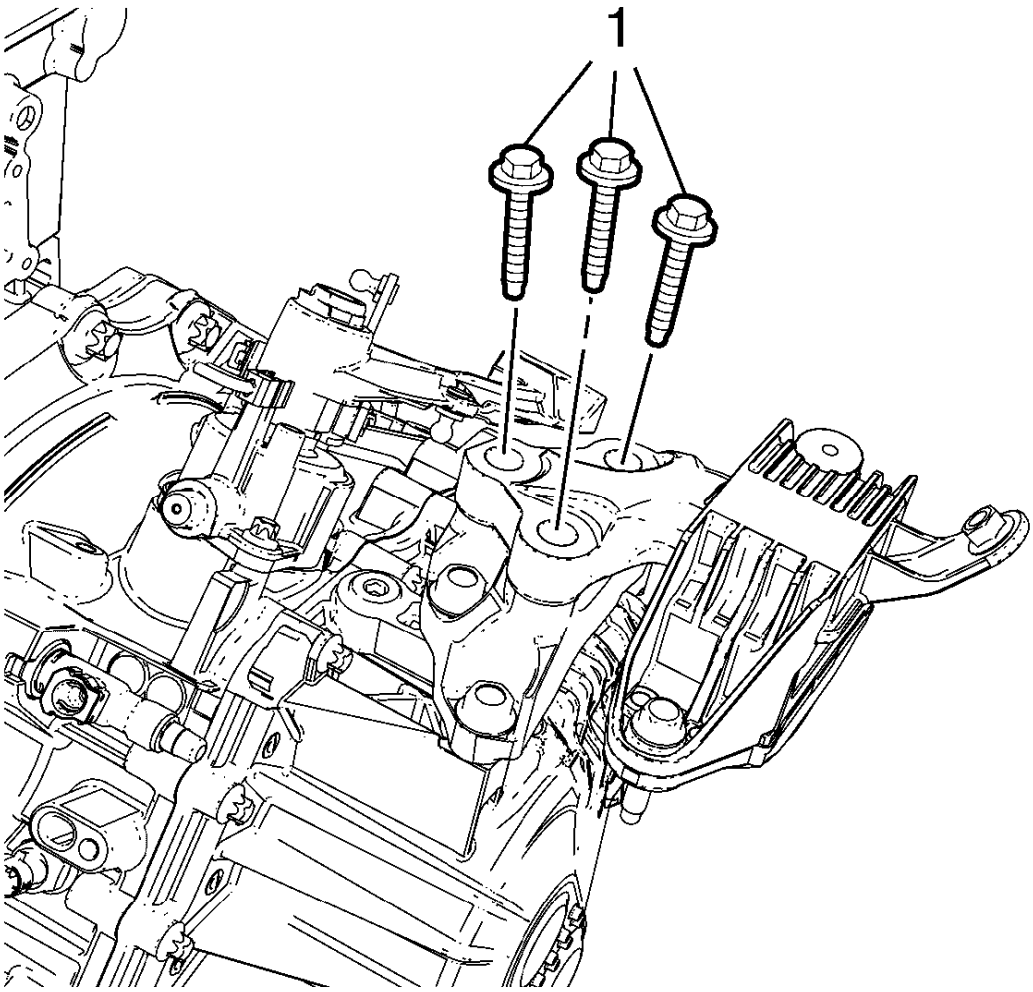

Fig. 114: Transmission Mount Bolts
Courtesy of GENERAL MOTORS COMPANY

13. Install the 3 NEW transmission mount bolts (1) but do not tighten yet.
14. Raise the vehicle.
15. Install the front wheel drive intermediate shaft. Refer to **Front Wheel Drive Intermediate Shaft Replacement** .
16. Install the left front wheel drive shaft to the transmission. Refer to **Front Wheel Drive Shaft Replacement - Left Side** .

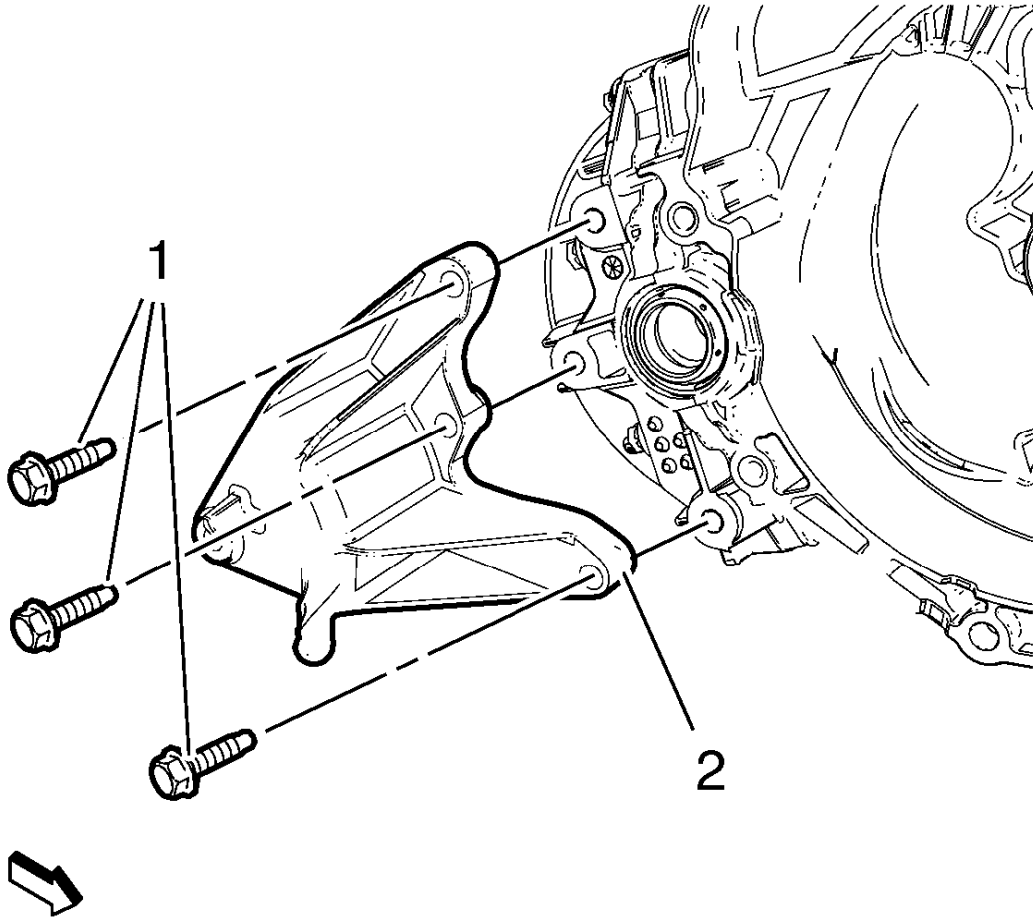

Fig. 115: Transmission Mount Bracket And Bolts
Courtesy of GENERAL MOTORS COMPANY

17. Install the transmission mount bracket - rear (2) and tighten the bolts (1) to 100 N.m (74 lb ft).

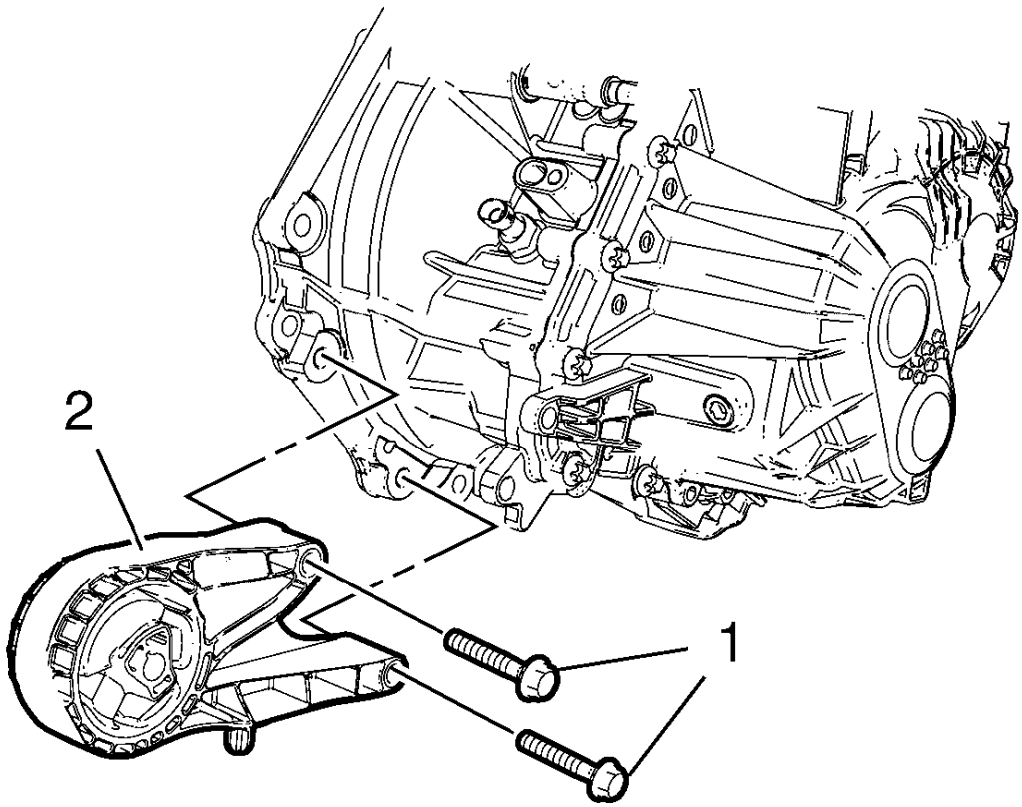

Fig. 116: Transmission Front Mount And Bolts
Courtesy of GENERAL MOTORS COMPANY

18. Install transmission front mount to transmission (2). Install 2 transmission front mount bolts (1) and tighten to 100 N.m (74 lb ft).
19. Install the drivetrain and front suspension frame. Refer to **Drivetrain and Front Suspension Frame Replacement** .
20. Lower the vehicle.

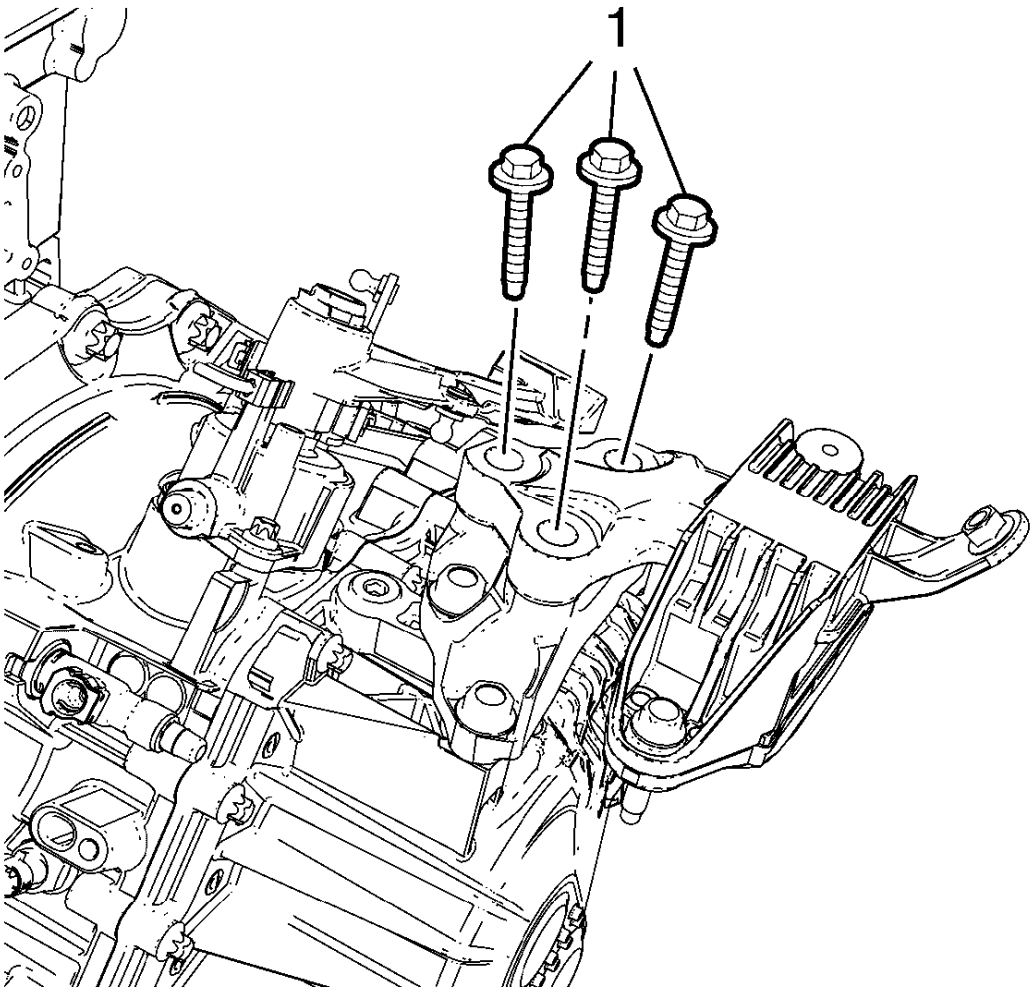

Fig. 117: Transmission Mount Bolts
Courtesy of GENERAL MOTORS COMPANY

CAUTION: Refer to Torque-to-Yield Fastener Caution .

21. Tighten the transmission mount bolts left side (1) to 50 N.m (46 lb ft) plus 60-75 degrees.
22. Remove the engine support fixture.

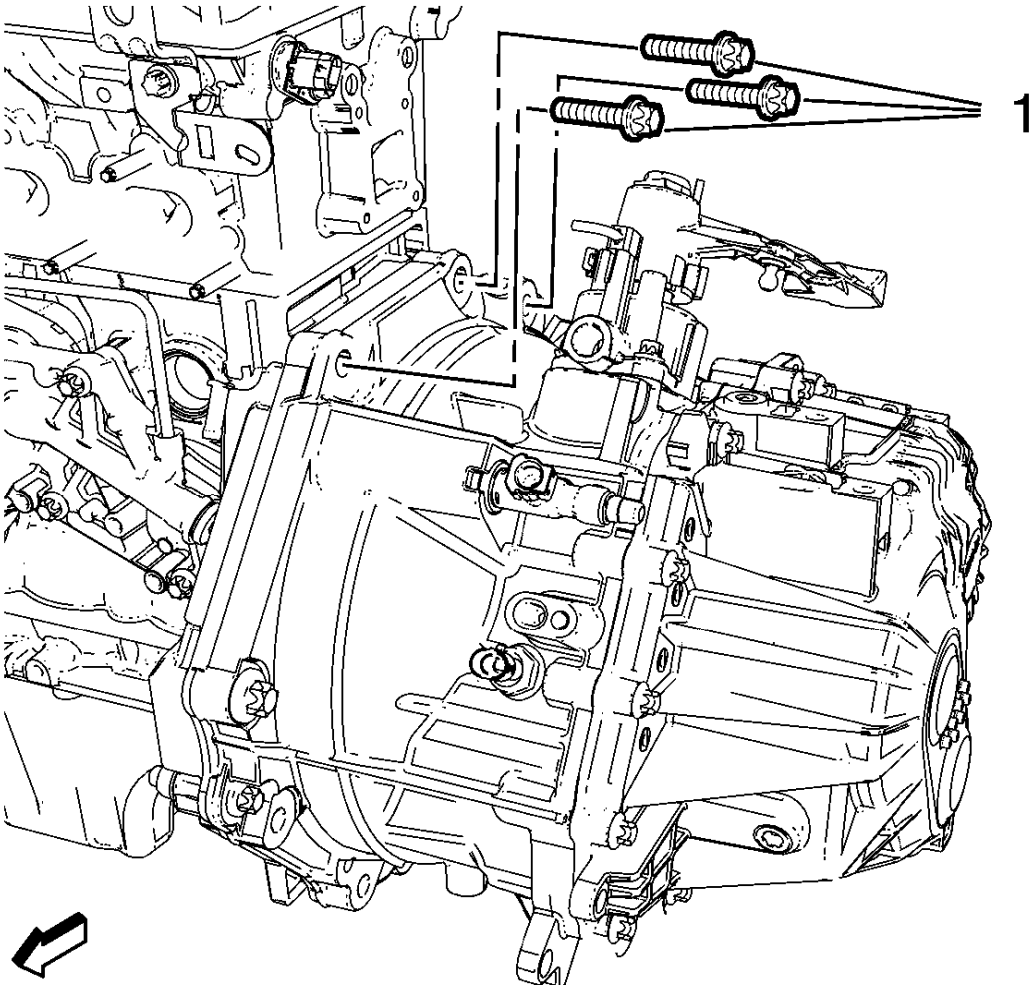

Fig. 118: Upper Transmission Bolts
Courtesy of GENERAL MOTORS COMPANY

23. Install the upper transmission bolts (1) to engine and tighten to 60 N.m (44 lb ft).

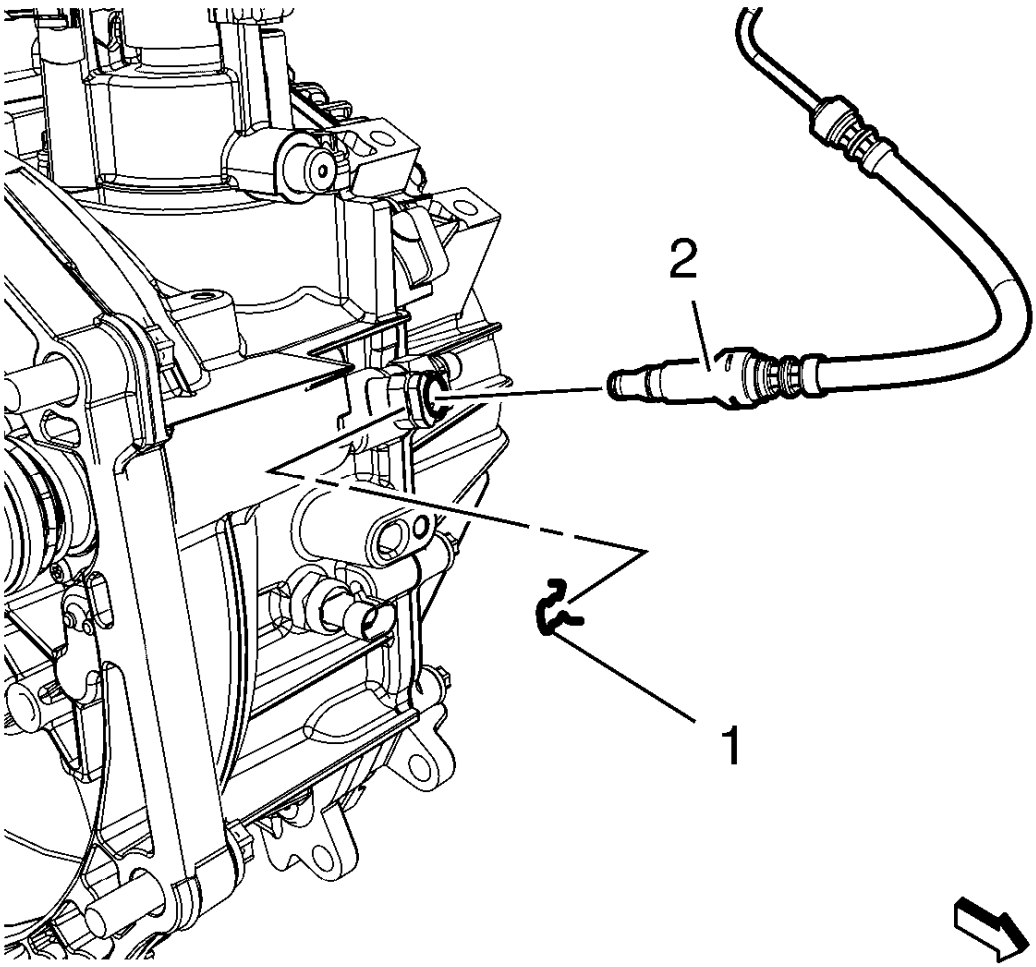

Fig. 119: Clutch Actuator Cylinder Front Pipe And Retainer
Courtesy of GENERAL MOTORS COMPANY

24. Connect the clutch actuator cylinder front pipe (2) to the clutch actuator cylinder pipe elbow.
25. Install the clutch actuator cylinder front pipe retainer (1) to the clutch actuator cylinder pipe elbow.

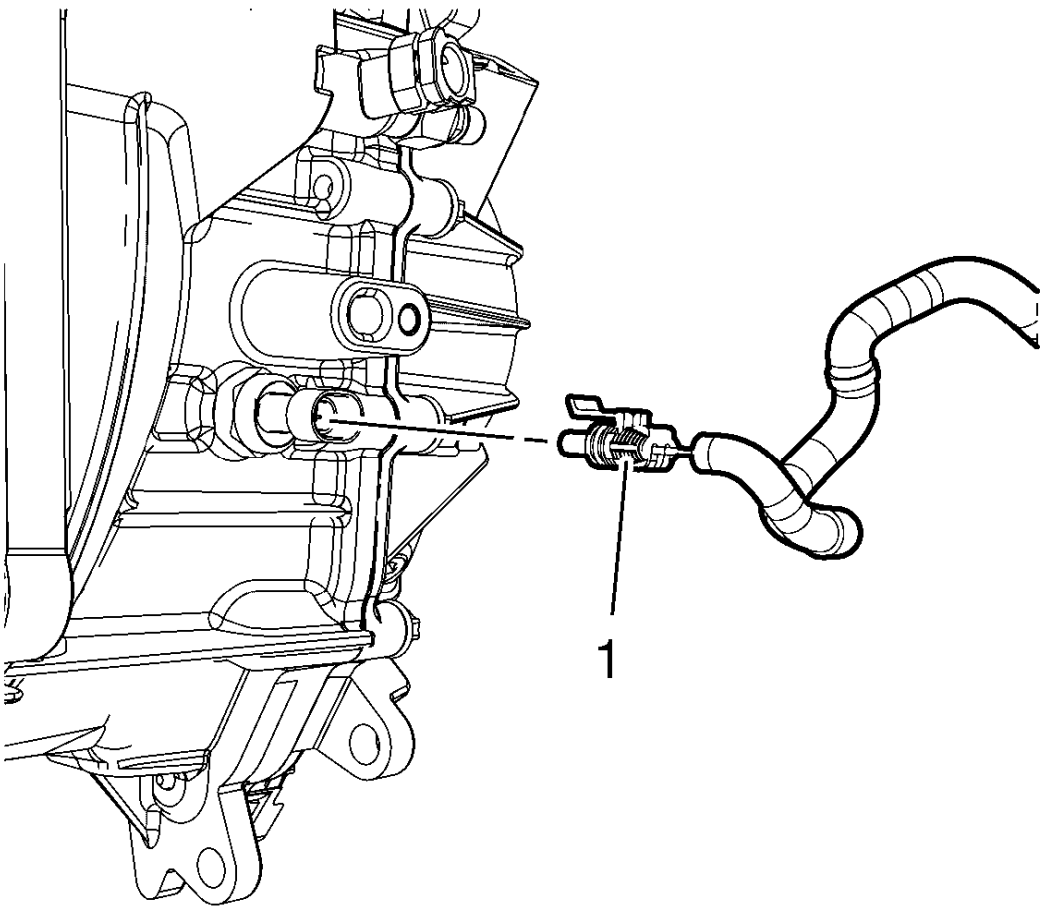

Fig. 120: Backup Lamp Switch Electrical Connector
Courtesy of GENERAL MOTORS COMPANY

26. Connect the electrical connector (1) to the backup lamp switch.
27. Install the transmission shift lever cable to transmission. Refer to **Manual Transmission Shift Lever and Selector Lever Cable Replacement**.
28. Adjust the shift lever and selector lever cables. Refer to **Manual Transmission Shift Lever and Selector Lever Cable Adjustment**.
29. Bleed the clutch hydraulic system. Refer to **Hydraulic Clutch System Bleeding** .
30. Inspect the transmission fluid level.
31. Install the battery tray. Refer to **Battery Tray Replacement** .
32. Road test the vehicle.

DESCRIPTION AND OPERATION

TRANSMISSION SYSTEM DESCRIPTION AND OPERATION

The M32-6 is a 6-speed manual transmission. This service information transmission is an all-synchromesh 3-shaft transmission.

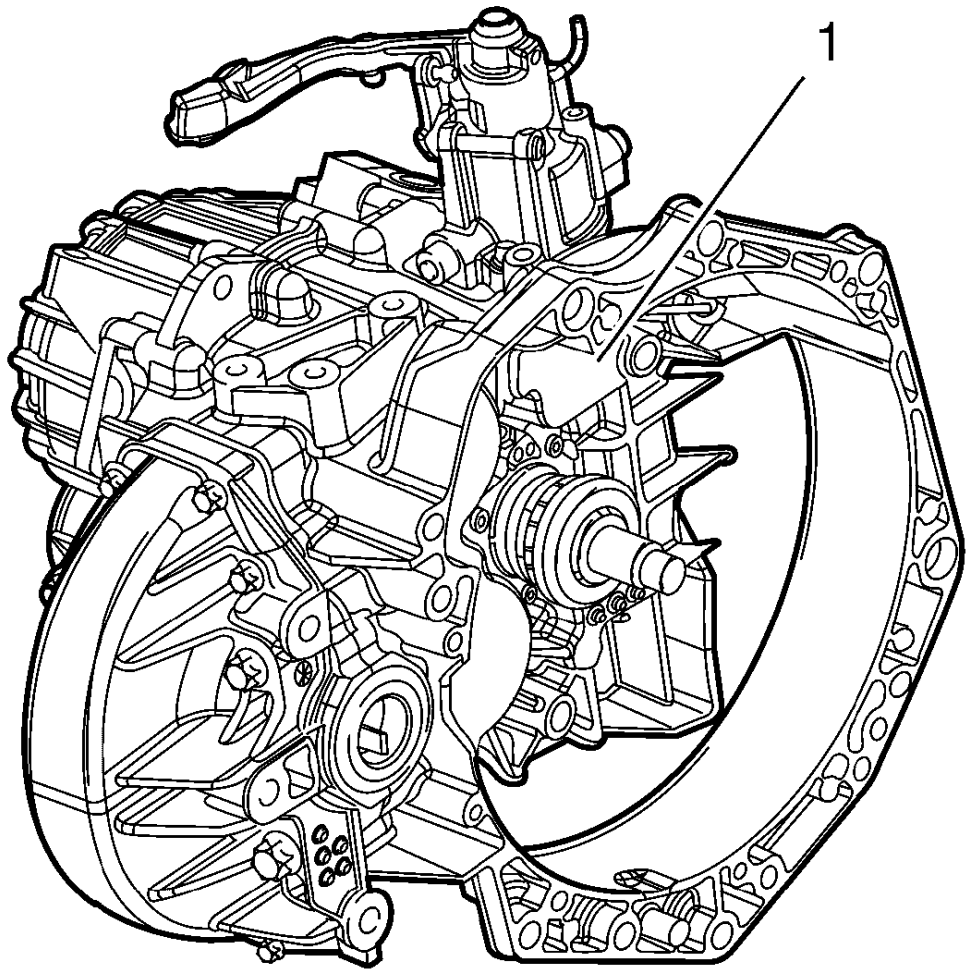

Fig. 121: 3 Shaft Transmission
Courtesy of GENERAL MOTORS COMPANY

This 3-shaft transmission (1) has the following advantages:

- Compact construction
- Improved smooth-running performance
- Better shift quality
- High torque transmission
- Low weight

Location of the Shafts

The following cross-sectional diagram shows the location of the respective shafts in the M32-6 transmission, as per the 3-shaft principle.

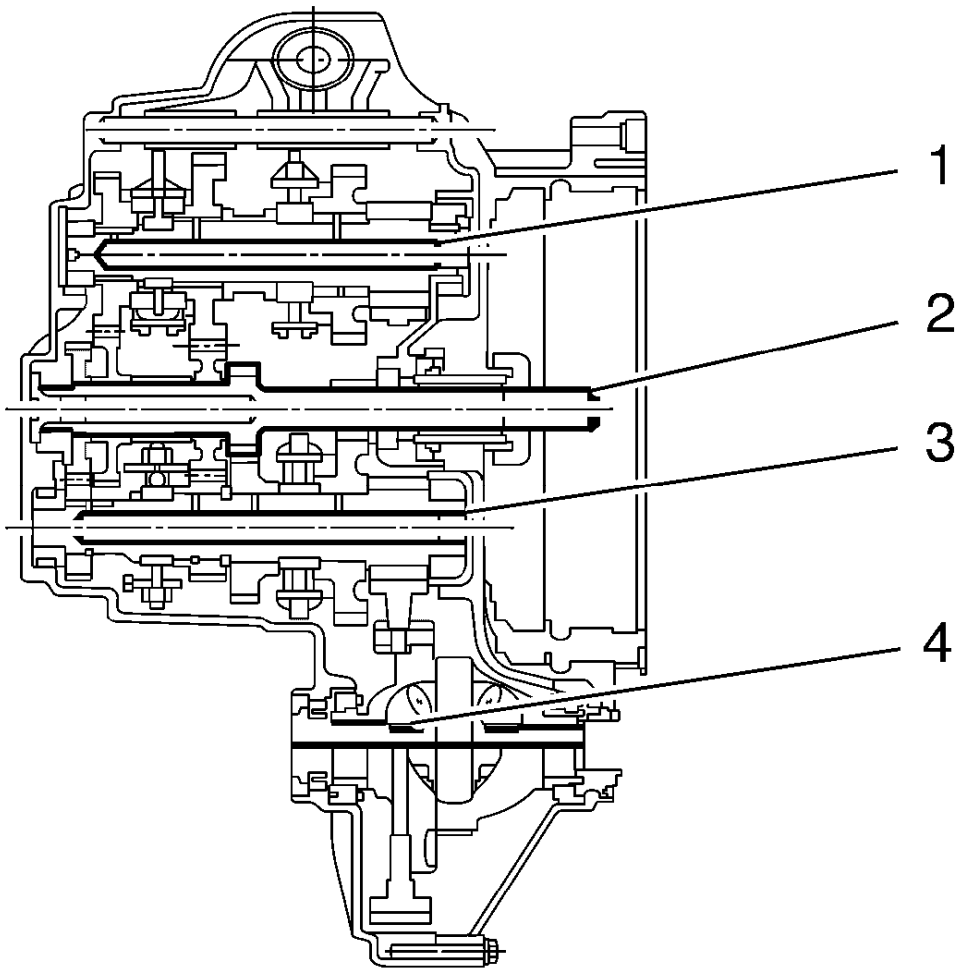

Fig. 122: Shaft Locations
Courtesy of GENERAL MOTORS COMPANY

Callout	Component Name
1	Upper Main Shaft
2	Input Shaft
3	Lower Main Shaft
4	Differential Gear

In this transmission angular cone bearings are used for all shafts. These bearings require a certain amount of play and pretension. The required amount of bearing play and pretension is achieved at the production stage by using shims under the angular cone bearing in the transmission housing.

Location of Gearwheels

This diagram shows the location of the gearwheels on the respective shaft.

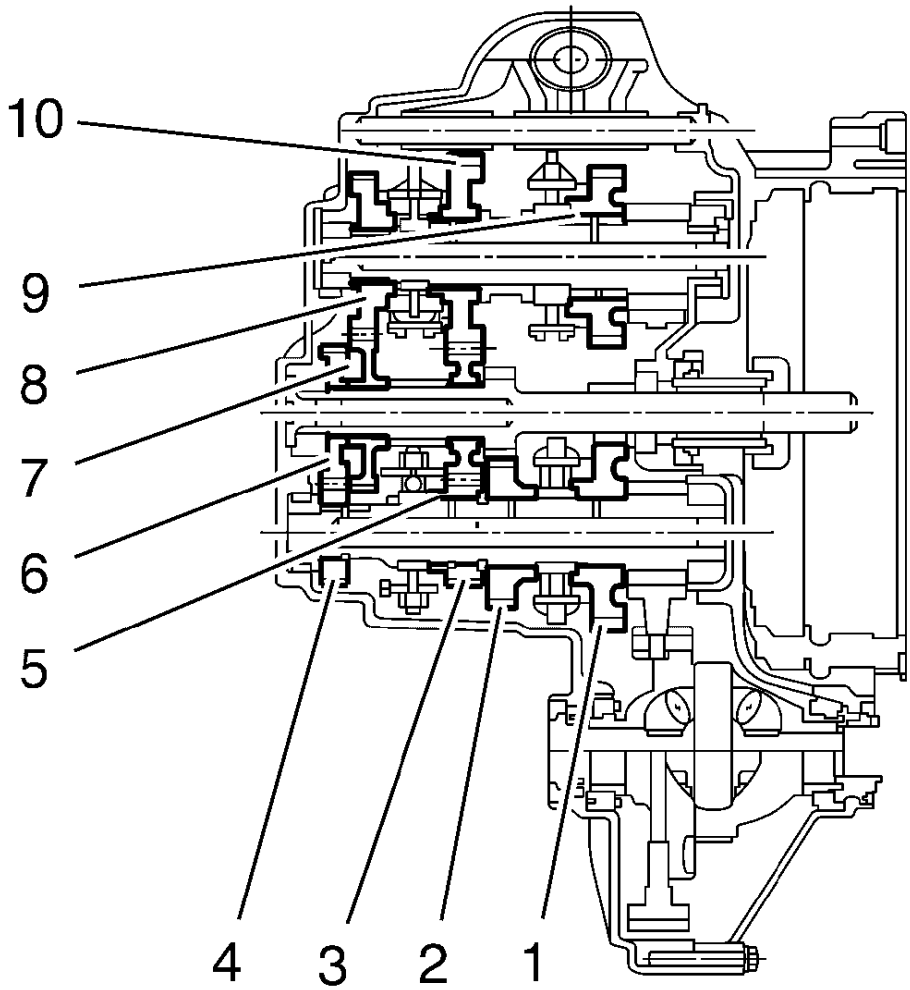

Fig. 123: Gearwheel Locations
Courtesy of GENERAL MOTORS COMPANY

Callout	Component Name
1	1st Gear Gearwheel
2	2nd Gear Gearwheel
3	5th Gear Gearwheel
4	6th Gear Gearwheel
5	3rd/5th Gear Gearwheel
6	6th Gear Gearwheel
7	4th Gear Gearwheel
8	4th Gear Gearwheel
9	Reverse Gear Gearwheel
10	3rd Gear Gearwheel

Power Flow in the Individual Gears

The following diagrams show the flow of power in the individual gears.

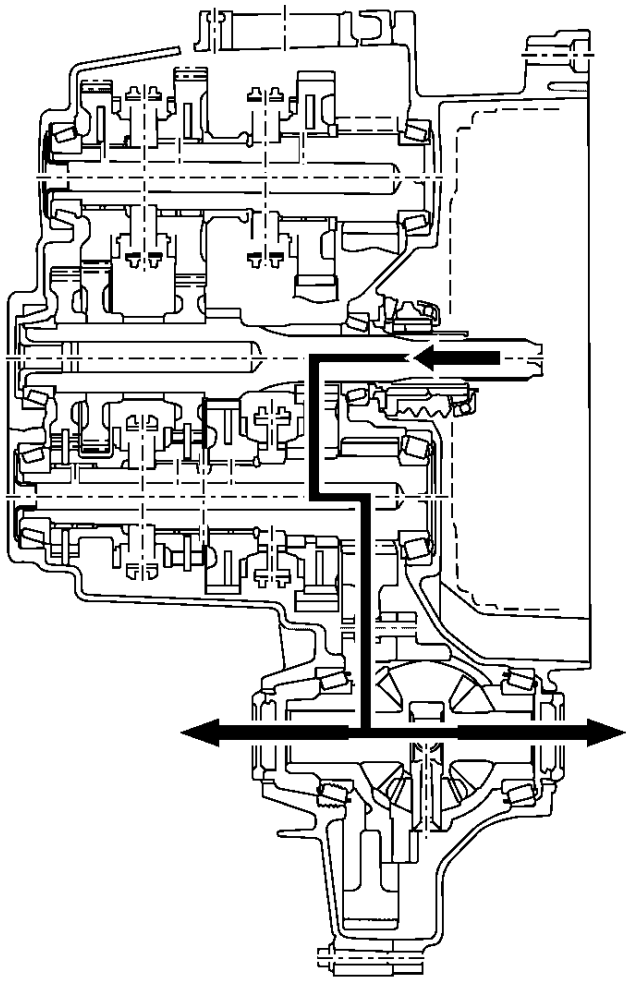

Fig. 124: Transmission 1st Gear Power Flow
Courtesy of GENERAL MOTORS COMPANY

1st gear

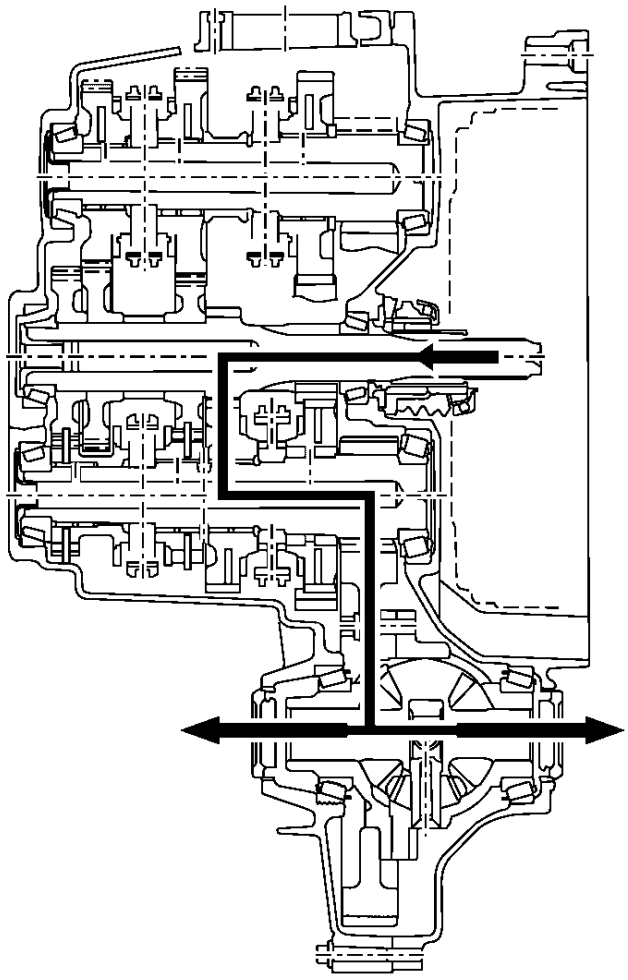

Fig. 125: Transmission 2nd Gear Power Flow
Courtesy of GENERAL MOTORS COMPANY

2nd gear

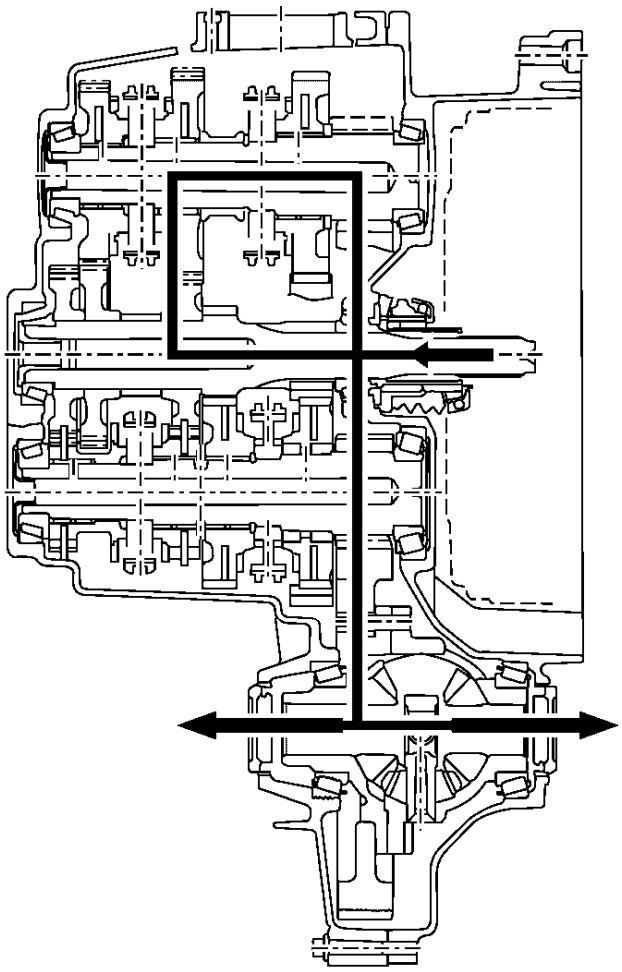

Fig. 126: Transmission 3rd Gear Power Flow
Courtesy of GENERAL MOTORS COMPANY

3rd gear

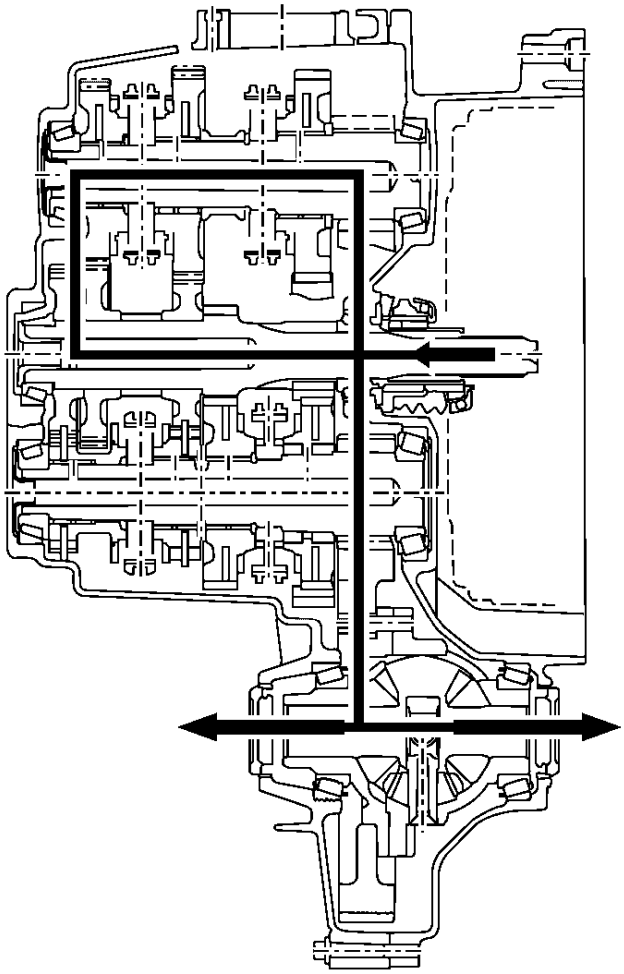

Fig. 127: Transmission 4th Gear Power Flow
Courtesy of GENERAL MOTORS COMPANY

4th gear

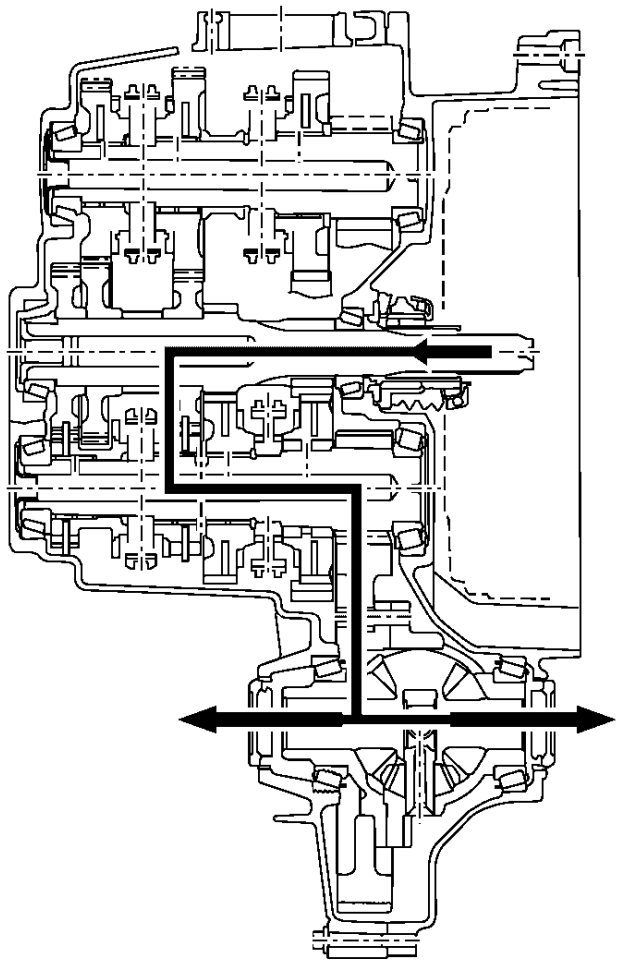

Fig. 128: Transmission 5th Gear Power Flow
Courtesy of GENERAL MOTORS COMPANY

5th gear

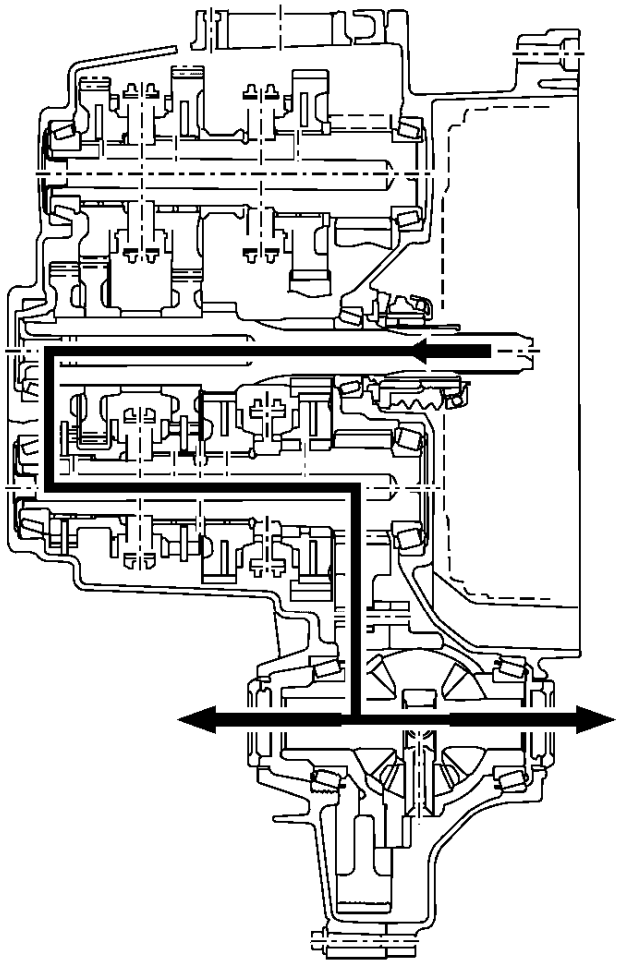

Fig. 129: Transmission 6th Gear Power Flow
Courtesy of GENERAL MOTORS COMPANY

6th gear

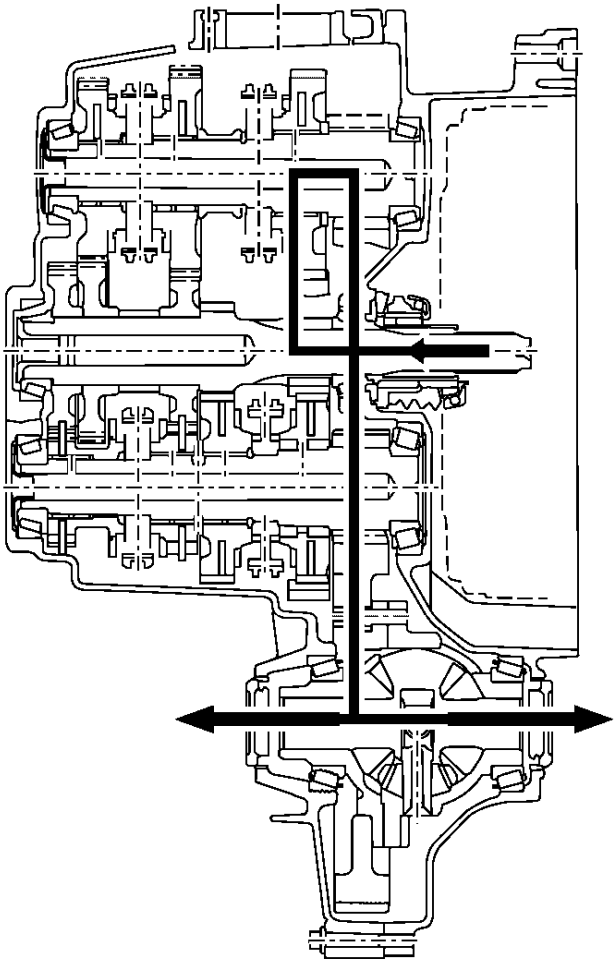

Fig. 130: Transmission Reverse Gear Power Flow
Courtesy of GENERAL MOTORS COMPANY

Reverse gear

TRANSMISSION IDENTIFICATION INFORMATION

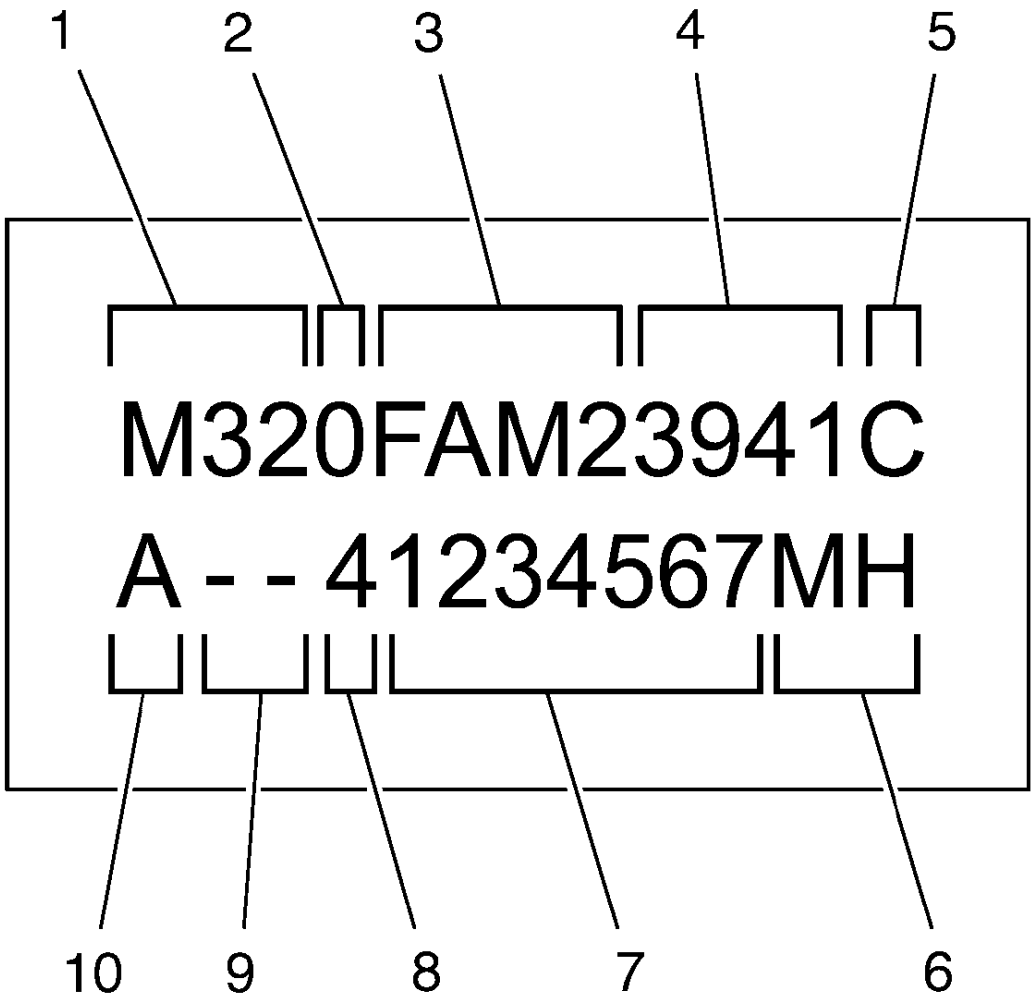

Fig. 131: Transmission Code Plate
Courtesy of GENERAL MOTORS COMPANY

The code for the M32-6 transmission will be found on the back of the transmission housing, above the axle shaft. In addition, an Alphacode sticker will be placed on the cover of the differential.

- Transmission type (M32) (1)
- Design (2)
- Engine family (3)
- Output ratio (3.941) (4)
- Gear set (C) (5)
- Alpha Code (MH) (6)
- Serial number (7 digit) (7)
- Last digit of year (4 = 2004) (8)
- 2 blanks (9)

- Manufacturing plant (A = Aspern) (10)

SPECIAL TOOLS AND EQUIPMENT

SPECIAL TOOLS

Illustration	Tool Number/Description
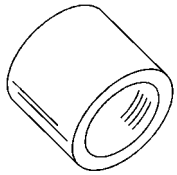	CH-466-A KM-466-A Gear, Bearing Remover/Installer
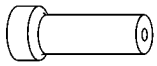	DT-519 KM-519 J-44385 Oil Seal/Ring Installer
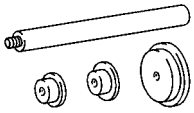	DT-523 KM-523 J-44809 Remover/Installer
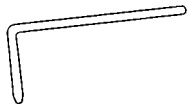	DT-527-A KM-527-A Adjuster
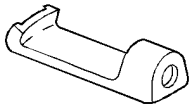	DT-586 KM-586 J-23129 Remover Hook
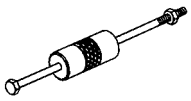	DT-7004 KM J-7004 GE-6125-1B Slide Hammer
	EN-45059 KM-45059 KM-470-B

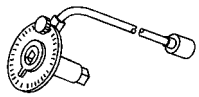	Angle Meter
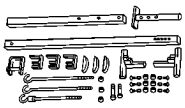	EN-28467-B J-28467-B Universal Engine Support Fixture

2013 TRANSMISSION

Shift Lock Control - Cruze

SCHEMATIC WIRING DIAGRAMS

SHIFT LOCK CONTROL WIRING SCHEMATICS

MH8

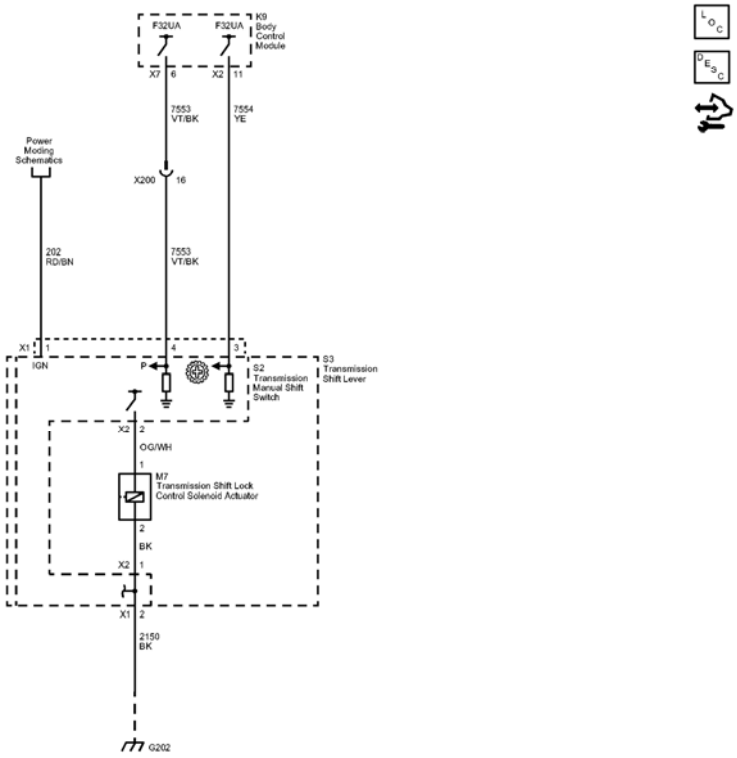

Fig. 1: Shift Lock Control (MH8) Wiring Schematics
Courtesy of GENERAL MOTORS COMPANY

Callout	Component Name
202	Battery Positive Voltage
202_RD/BN	202 RD/BN
CAV 1	1
CONN_X1	X1
7553	Park Lock Solenoid Control
7553_VT/BK	7553 VT/BK
CAV_4	4
CAV_6	6

CONN_X7	X7
7554	Park Lock Solenoid Soft Control
7554_YE	7554 YE
CAV_3	3
CAV_11	11
CONN_X2	X2
_OG/WH	OG/WH
CAV_1	1
CAV_2	2
CONN_X2	X2
_BK	BK
CAV_1	1
CONN X2	X2
CAV_2	2
2150	Ground
2150_BK	2150 BK
CAV_2	2
CONN_X1	X1
7553_VT/BK	7553 VT/BK
CAV_16	16
X200	X200
F32UA	F32UA
F32UA	F32UA
G202	G202
K9	
Power_Moding_Schematics_REF	Power Moding Schematics
S2	(MH8/MH9)
M7	(MH8/MH9)
S3	(MH8/MH9)

DIAGNOSTIC INFORMATION AND PROCEDURES

DIAGNOSTIC CODE INDEX

DIAGNOSTIC CODE INDEX

DTC	Description
DTC B270A	DTC B270A 01 Park Lock Solenoid Control Circuit Short to Battery DTC B270A 02 Park Lock Solenoid Control Circuit Short to Ground DTC B270A 04 Park Lock Solenoid Control Circuit Open

DTC B270A

Diagnostic Instructions

- Perform the **Diagnostic System Check - Vehicle** prior to using this diagnostic procedure.
- Review **Strategy Based Diagnosis** for an overview of the diagnostic approach.
- **Diagnostic Procedure Instructions** provides an overview of each diagnostic category.

DTC Descriptors

DTC B270A 01

Park Lock Solenoid Control Circuit Short to Battery

DTC B270A 02

Park Lock Solenoid Control Circuit Short to Ground

DTC B270A 04

Park Lock Solenoid Control Circuit Open

Diagnostic Fault Information

Circuit	Short to Ground	Open/High Resistance	Short to Voltage	Signal Performance
F24DA (BCM 4) Fuse B+	B270A 02	B270A 04	-	-
Control	B270A 02	B270A 04	B270A 01	-
Ground	-	B270A 04	-	-

Circuit/System Description

The body control module (BCM) controls the transmission shift lock control solenoid actuator by providing a battery positive voltage to the solenoid when the brake pedal is applied. The BCM monitors the voltage and current flow of the control circuit.

Conditions for Running the DTC

- The ignition switch is in the ON position.
- The brake pedal is applied.
- The transmission is in the PARK position.
- The DTC runs continuously once the above conditions are met.

Conditions for Setting the DTC

B270A 01

The body control module detects a short to voltage in the transmission shift lock control solenoid actuator control circuit for 1 second.

B270A 02

The body control module detects a short to ground in the transmission shift lock control solenoid actuator control circuit for 1 second.

B270A 04

The body control module detects an open or short to voltage in the transmission shift lock control solenoid actuator control circuit for 1 second.

Action Taken When the DTC Sets

The body control module will not attempt to enable the voltage supply circuit of the transmission shift lock control solenoid actuator until the next key cycle.

Conditions for Clearing the DTC

- A current DTC B270A will clear when the malfunction is no longer present and the ignition switch is cycled.
- A history DTC will clear after 100 ignition cycles with no current DTC active during the 100 ignition cycles.

Reference Information

Schematic Reference

Shift Lock Control Schematics

Connector End View Reference

COMPONENT CONNECTOR END VIEWS - INDEX

Description and Operation

Automatic Transmission Shift Lock Control Description and Operation

Electrical Information Reference

- **Circuit Testing**
- **Connector Repairs**
- **Testing for Intermittent Conditions and Poor Connections**
- **Wiring Repairs**

Scan Tool Reference

Control Module References for scan tool information

Circuit/System Verification

1. Ignition ON.
2. Verify the scan tool Brake Transmission Shift Interlock Solenoid Actuator Command parameter changes from Inactive to Active when the brake pedal is applied.
    - **If the Brake Transmission Shift Interlock Solenoid Actuator Command does not change**

      Refer to **Stop Lamps Malfunction**

    - **If the Brake Transmission Shift Interlock Solenoid Actuator Command changes**
3. Verify the S3 transmission shift lever moves out of the PARK position when the brake pedal is applied.
    - **If the the S3 transmission shift lever does not move out of the PARK position**

      Refer to Circuit/System Testing below.

    - **If the the S3 transmission shift lever does move out of the PARK position**

      All OK.

Circuit/System Testing

1. Ignition OFF, disconnect the X1 harness connector at the K9 body control module, ignition ON.
2. Verify a test lamp illuminates between the B+ circuit terminal 4 and ground.
    - **If the test lamp does not illuminate and the circuit fuse is good**
    1. Test for less than 2 ohms in the B+ circuit end to end.
        - If 2 ohms or greater, repair the open/high resistance in the circuit.
        - If less than 2 ohms, verify the fuse is not open and there is voltage at the fuse.
    - **If the test lamp does not illuminate and the circuit fuse is open**
    1. Test for infinite resistance between the B+ circuit and ground.
        - If less than infinite resistance, repair the short to ground on the circuit.
        - If infinite resistance, replace the K9 body control module.
    - **If the test lamp illuminates**
3. Ignition OFF and all vehicle systems OFF, disconnect the harness connector at the S3 transmission shift lever. It may take up to 2 minutes for all vehicle systems to power down.
4. Test for less than 10 ohms between the ground circuit terminal 2 X1 and ground.
    - **If 10 ohms or greater**
    1. Ignition OFF.
    2. Test for less than 2 ohms in the ground circuit end to end.
        - If 2 ohms or greater, repair the open/high resistance in the circuit.
        - If less than 2 ohms, repair the open/high resistance in the ground connection.

- **If less than 10 ohms**

5. Ignition ON, connect a test lamp between the control circuit terminal 4 X1 and the ground circuit terminal 2 X1.
6. Verify the test lamp turns ON and OFF when commanding the Brake Transmission Shift Interlock Solenoid Actuator ON and OFF with a scan tool.
   - **If the test lamp is always OFF**
   1. Ignition OFF, disconnect the harness connector at the K9 body control module.
   2. Test for infinite resistance between the control circuit and ground.
      - If less than infinite resistance, repair the short to ground on the circuit.
      - If infinite resistance
   3. Test for less than 2 ohms in the control circuit end to end.
      - If 2 ohms or greater, repair the open/high resistance in the circuit.
      - If less than 2 ohms
   4. Ignition ON.
   5. Verify a test lamp illuminates between each B+ and ignition circuit terminal at the control module harness connector.
      - If the test lamp does not illuminate, repair the circuit or fuse as necessary.
      - If the test lamp illuminates at each B+ and ignition circuit, replace the K9 body control module.
   - **If the test lamp is always ON**
   1. Ignition OFF, disconnect the harness connector at the K9 body control module, ignition ON.
   2. Test for less than 1 V between the control circuit and ground.
      - If 1 V or greater, repair the short to voltage on the circuit.
      - If less than 1 V, replace the K9 body control module.
   - **If the test lamp turns ON and OFF**
7. Test or replace the S3 transmission shift lever.

Component Testing

Dynamic Test

1. Install a 10 A fused jumper wire between the control terminal 4 X1 and 12 V. Momentarily install a jumper wire between the ground terminal 2 X1 and ground.
2. Verify the solenoid turns on & off/clicks, etc.
   - **If the solenoid does not turn on & off/clicks, etc.**

     Replace the S3 transmission shift lever.

   - **If the solenoid does turn on & off/clicks, etc.**
3. All OK

Repair Instructions

Perform the **Diagnostic Repair Verification** after completing the repair.

- **Transmission Control Replacement**
- **Control Module References** for BCM replacement, programming, and setup

SYMPTOMS - AUTOMATIC TRANSMISSION SHIFT LOCK CONTROL

IMPORTANT: The following steps must be completed before using the symptom tables.

1. Perform the **Diagnostic System Check - Vehicle** before using the Symptom Tables in order to verify that all of the following are true:
   - There are no DTCs set.
   - The control modules can communicate via the serial data link.
2. Review the system operation in order to familiarize yourself with the system functions. Refer to **Automatic Transmission Shift Lock Control Description and Operation**.

Visual/Physical Inspection

- Inspect for aftermarket devices which could affect the operation of the automatic transmission shift lock control. Refer to **Checking Aftermarket Accessories** .
- Inspect the easily accessible or visible system components for obvious damage or conditions which could cause the symptom.

Intermittent

Faulty electrical connections or wiring may be the cause of intermittent conditions. Refer to **Testing for Intermittent Conditions and Poor Connections**

Symptom List

Refer to a symptom diagnostic procedure in order to diagnose the symptom:

Transmission Control Lever Malfunction

TRANSMISSION CONTROL LEVER MALFUNCTION

Diagnostic Instructions

- Perform the **Diagnostic System Check - Vehicle** prior to using this diagnostic procedure.
- Review **Strategy Based Diagnosis** for an overview of the diagnostic approach.
- **Diagnostic Procedure Instructions** provides an overview of each diagnostic category.

Diagnostic Fault Information

Circuit	Short to Ground	Open/High Resistance	Short to Voltage	Signal Performance
Control	1	1	2	-
Ground	-	1	-	-

1. Transmission shift control lever will not move from PARK with the brake pedal applied.
2. Transmission shift control lever will move from PARK without the brake pedal applied.

Circuit/System Description

The body control module (BCM) controls the transmission shift lock control solenoid actuator by providing a battery positive voltage to the solenoid when the brake pedal is applied. The BCM monitors the voltage and current flow of the control circuit.

Reference Information

Schematic Reference

Shift Lock Control Schematics

Connector End View Reference

COMPONENT CONNECTOR END VIEWS - INDEX

Description and Operation

Automatic Transmission Shift Lock Control Description and Operation

Electrical Information Reference

- **Circuit Testing**
- **Connector Repairs**
- **Testing for Intermittent Conditions and Poor Connections**
- **Wiring Repairs**

Scan Tool Reference

Control Module References for scan tool information

Circuit/System Verification

1. Ignition ON.
2. Verify the scan tool Brake Transmission Shift Interlock Solenoid Actuator Command parameter changes from Inactive to Active when the brake pedal is applied.
    - **If the Brake Transmission Shift Interlock Solenoid Actuator Command does not change**

Refer to **Stop Lamps Malfunction**

- **If the Brake Transmission Shift Interlock Solenoid Actuator Command changes**

3. Verify the S3 transmission shift lever moves out of the PARK position when the brake pedal is applied.
   - **If the the S3 transmission shift lever does not move out of the PARK position**

     Refer to Circuit/System Testing below.

   - **If the the S3 transmission shift lever does move out of the PARK position**

     All OK.

Circuit/System Testing

1. Ignition OFF and all vehicle systems OFF, disconnect the X1 harness connector at the S3 transmission shift lever. It may take up to 2 minutes for all vehicle systems to power down.
2. Test for less than 10 ohms between the ground circuit terminal 2 and ground.
   - **If 10 ohms or greater**
     1. Ignition OFF.
     2. Test for less than 2 ohms in the ground circuit end to end.
        - If 2 ohms or greater, repair the open/high resistance in the circuit.
        - If less than 2 ohms, repair the open/high resistance in the ground connection.
   - **If less than 10 ohms**
3. Ignition ON, connect a test lamp between the control circuit terminal 4 X1 and the ground circuit terminal 2 X1.
4. Verify the test lamp turns ON and OFF when commanding the Brake Transmission Shift Interlock Solenoid Actuator ON and OFF with a scan tool.
   - **If the test lamp is always OFF**
     1. Ignition OFF, disconnect the harness connector at the K9 body control module.
     2. Test for infinite resistance between the control circuit and ground.
        - If less than infinite resistance, repair the short to ground on the circuit.
        - If infinite resistance
     3. Test for less than 2 ohms in the control circuit end to end.
        - If 2 ohms or greater, repair the open/high resistance in the circuit.
        - If less than 2 ohms
     4. Ignition ON.
     5. Verify a test lamp illuminates between each B+ and ignition circuit terminal at the control module harness connector.
        - If the test lamp does not illuminate, repair the circuit or fuse as necessary.
        - If the test lamp illuminates at each B+ and ignition circuit, replace the K9 body control module.

- **If the test lamp is always ON**

1. Ignition OFF, disconnect the harness connector at the K9 body control module, ignition ON.
2. Test for less than 1 V between the control circuit and ground.
   - If 1 V or greater, repair the short to voltage on the circuit.
   - If less than 1 V, replace the K9 body control module.

- **If the test lamp turns ON and OFF**

5. Test or replace the S3 transmission shift lever.

Component Testing

Dynamic Test

1. Install a 10 A fused jumper wire between the control terminal 4 X1 and 12 V. Momentarily install a jumper wire between the ground terminal 2 X1 and ground.
2. Verify the solenoid turns on & off/clicks, etc.
   - **If the solenoid does not turn on & off/clicks, etc.**

     Replace the S3 transmission shift lever.

   - **If the solenoid does turn on & off/clicks, etc.**
3. All OK

Repair Instructions

Perform the **Diagnostic Repair Verification** after completing the repair.

- **Transmission Control Replacement**
- **Control Module References** for BCM replacement, programming, and setup.

DESCRIPTION AND OPERATION

AUTOMATIC TRANSMISSION SHIFT LOCK CONTROL DESCRIPTION AND OPERATION

The automatic transmission park lock control system is a safety device that prevents an inadvertent shift out of PARK. The driver must press the brake pedal before moving the park lever out of the PARK position. The system consists of the following components:

- The automatic transmission park lock solenoid (serviced as the automatic transmission shift lock actuator), is located within the floor shift control assembly.
- The body control module, which controls the voltage supply circuit of the park lock control solenoid.
- The engine control module.

The body control module controls the voltage to the park lock control solenoid through the park lock control solenoid controlled voltage circuit. The following conditions must be met before the body control module will

supply voltage to the park lock solenoid:

- The ignition is in the ON position.
- The engine control module sends an input via GMLAN serial data to the body control module indicating the transmission is in the PARK position.
- The body control module determines the brake pedal is applied according the brake pedal position.

Since the park lock control solenoid is permanently grounded, the body control module supplies voltage to the automatic transmission park lock control solenoid, unlocking the park lever allowing the driver to move the park lever out of the PARK position as the solenoid energizes. When the brake pedal is not applied, the body control module turns the control voltage output of the park lock control solenoid OFF, de-energizing the park lock control solenoid. The de-energized solenoid mechanically locks the park lever in the PARK position.

2013 SYSTEM WIRING DIAGRAMS

Chevrolet - Cruze

AIR CONDITIONING

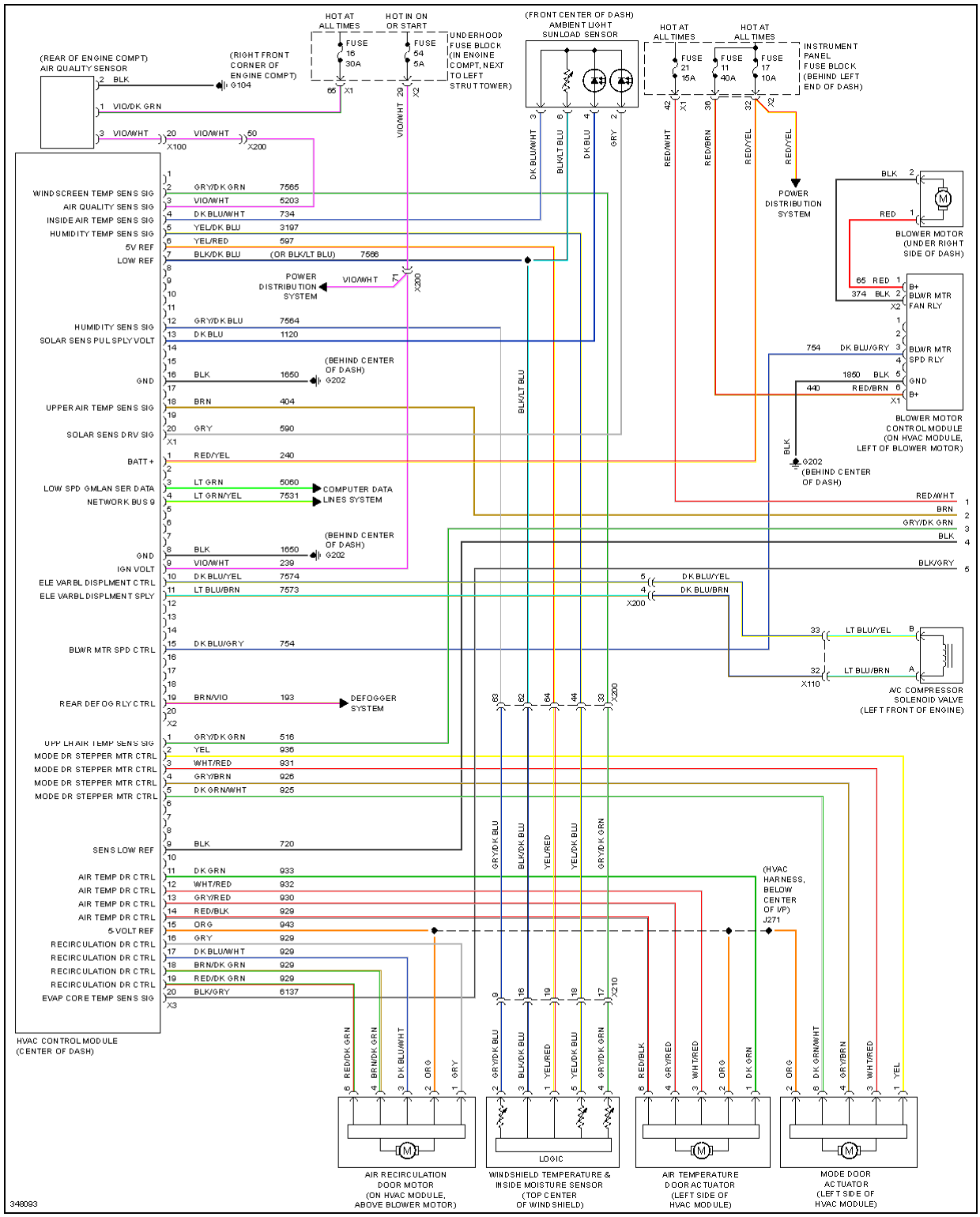

Fig. 1: Automatic A/C Circuit (1 of 2)

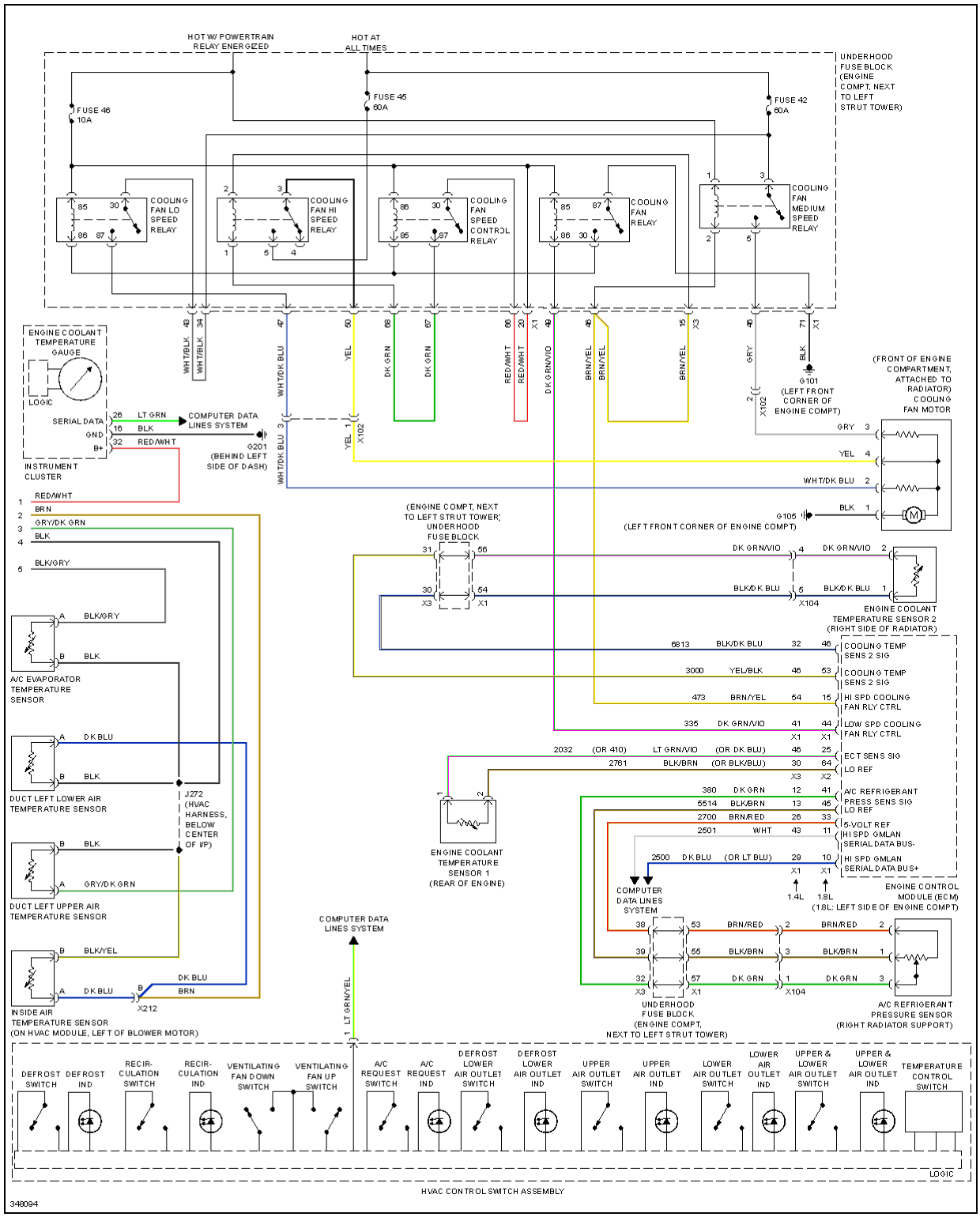

Fig. 2: Automatic A/C Circuit (2 of 2)

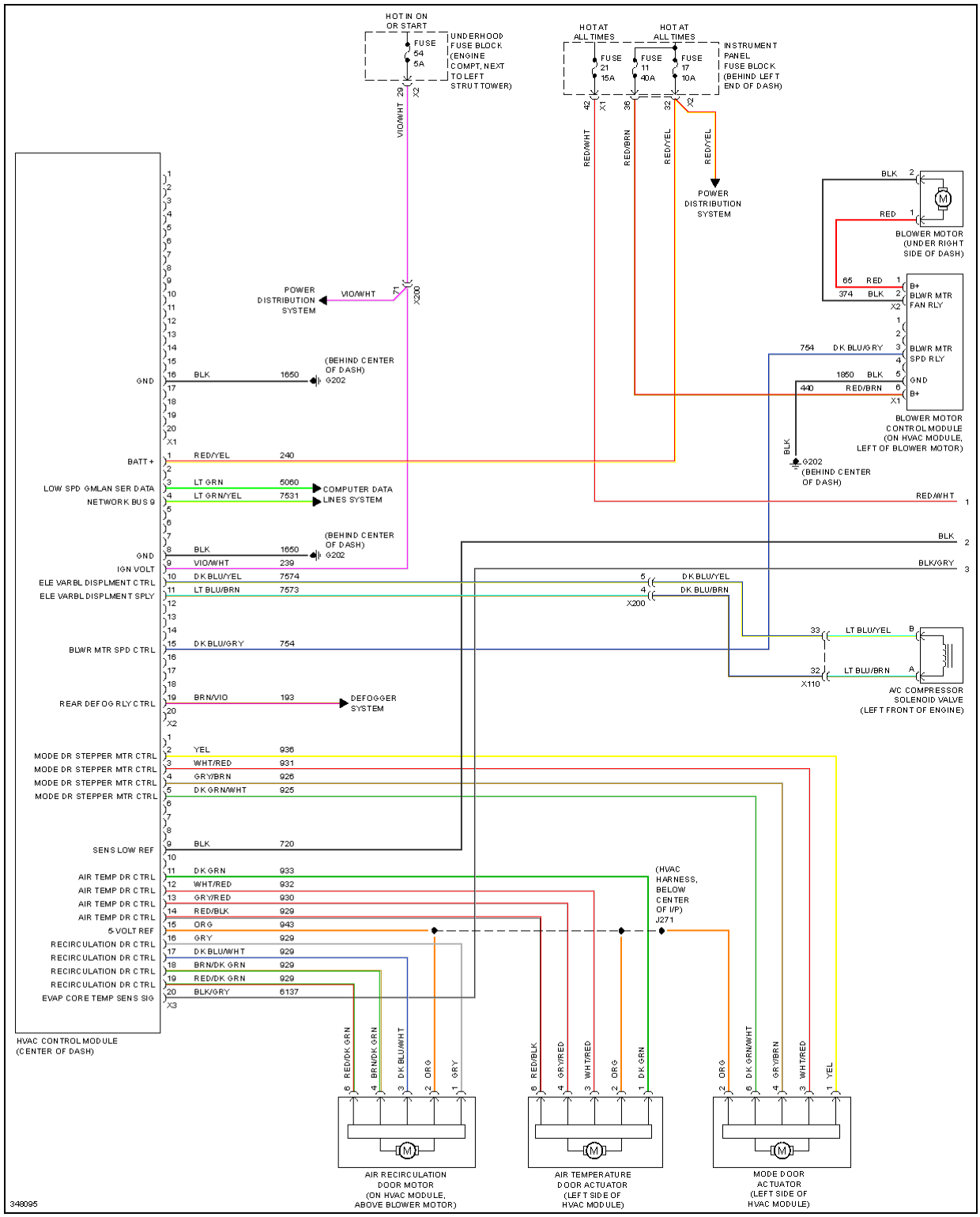

Fig. 3: Manual A/C Circuit (1 of 2)

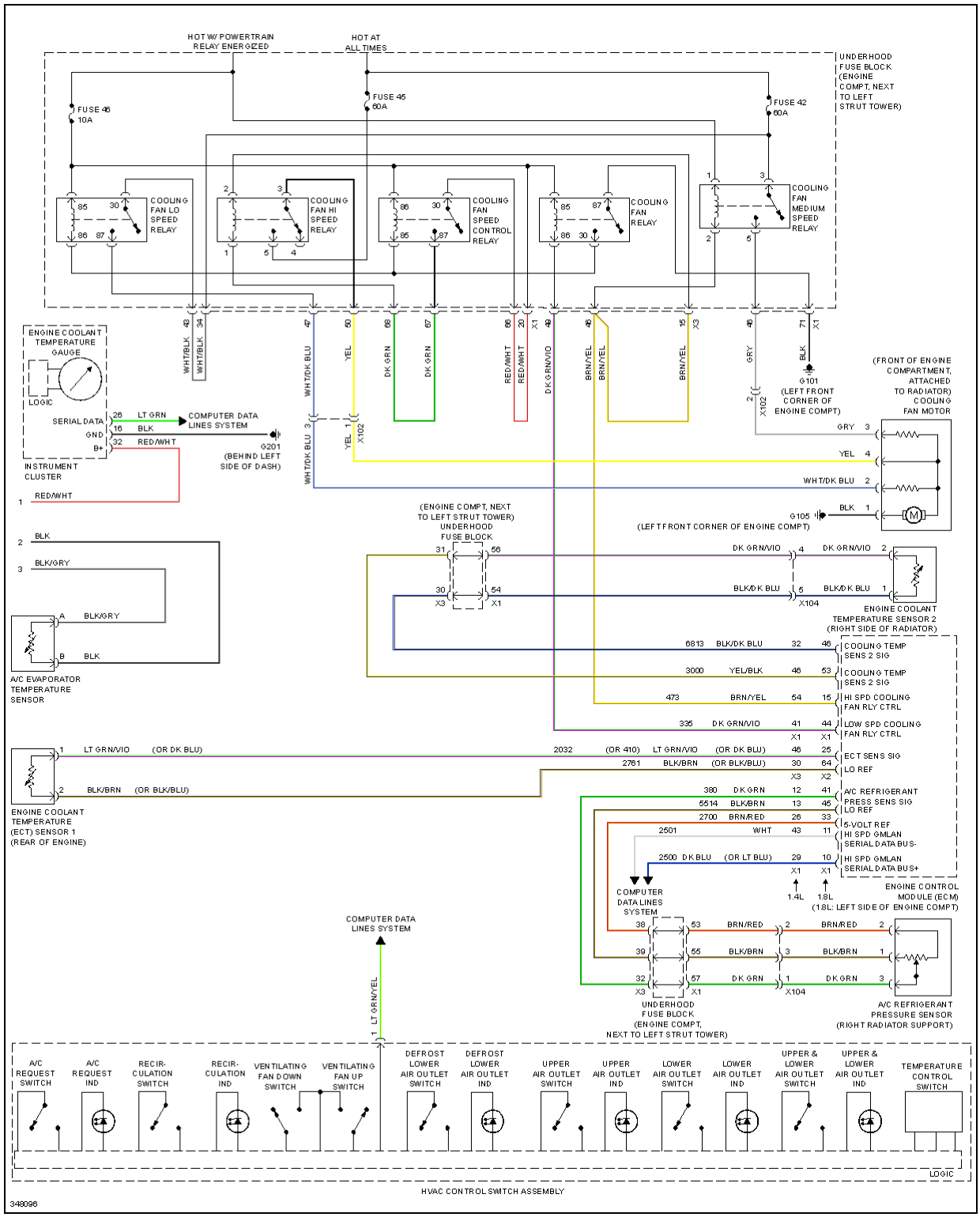

Fig. 4: Manual A/C Circuit (2 of 2)

ANTI-LOCK BRAKES

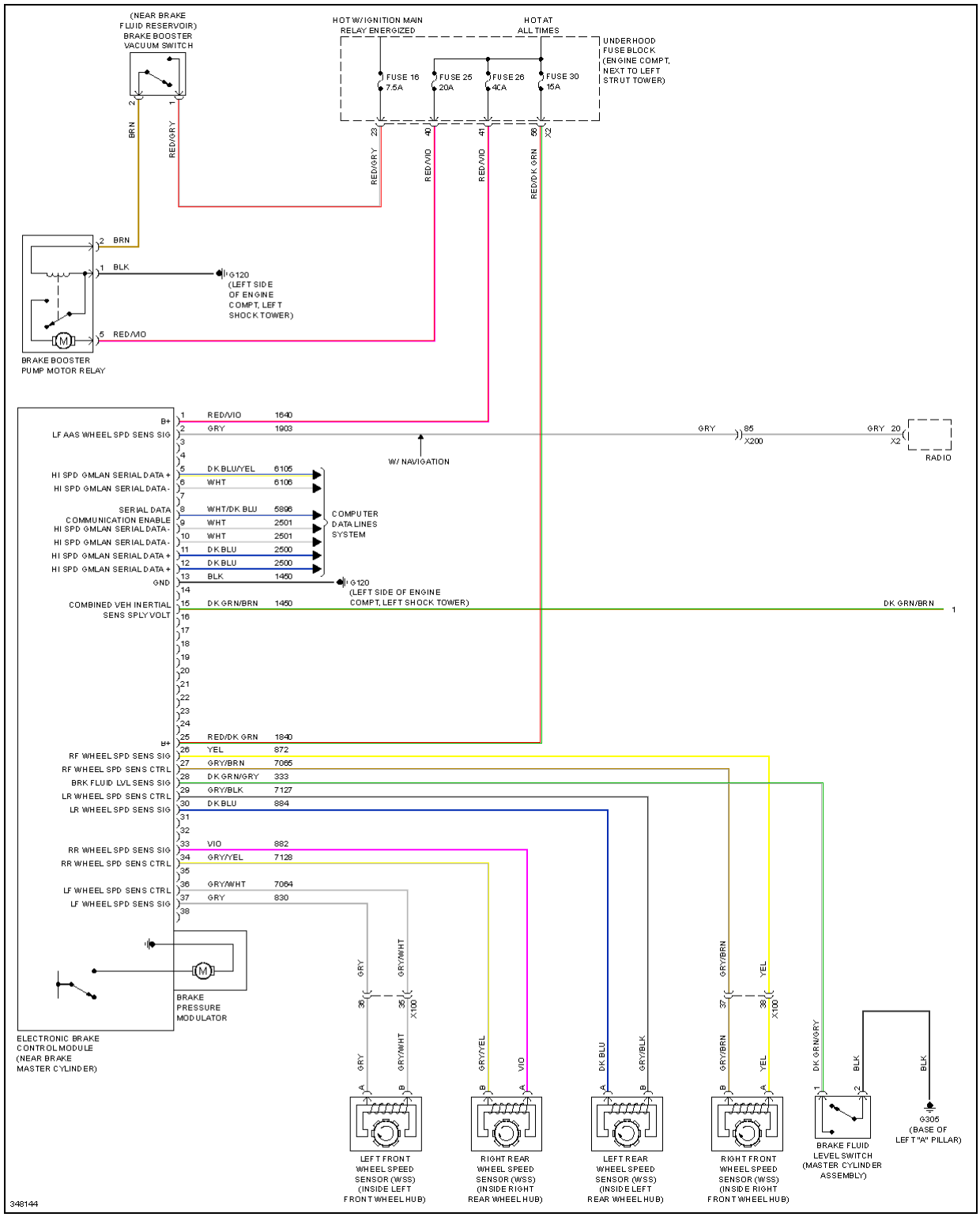

Fig. 5: Anti-lock Brakes Circuit (1 of 2)

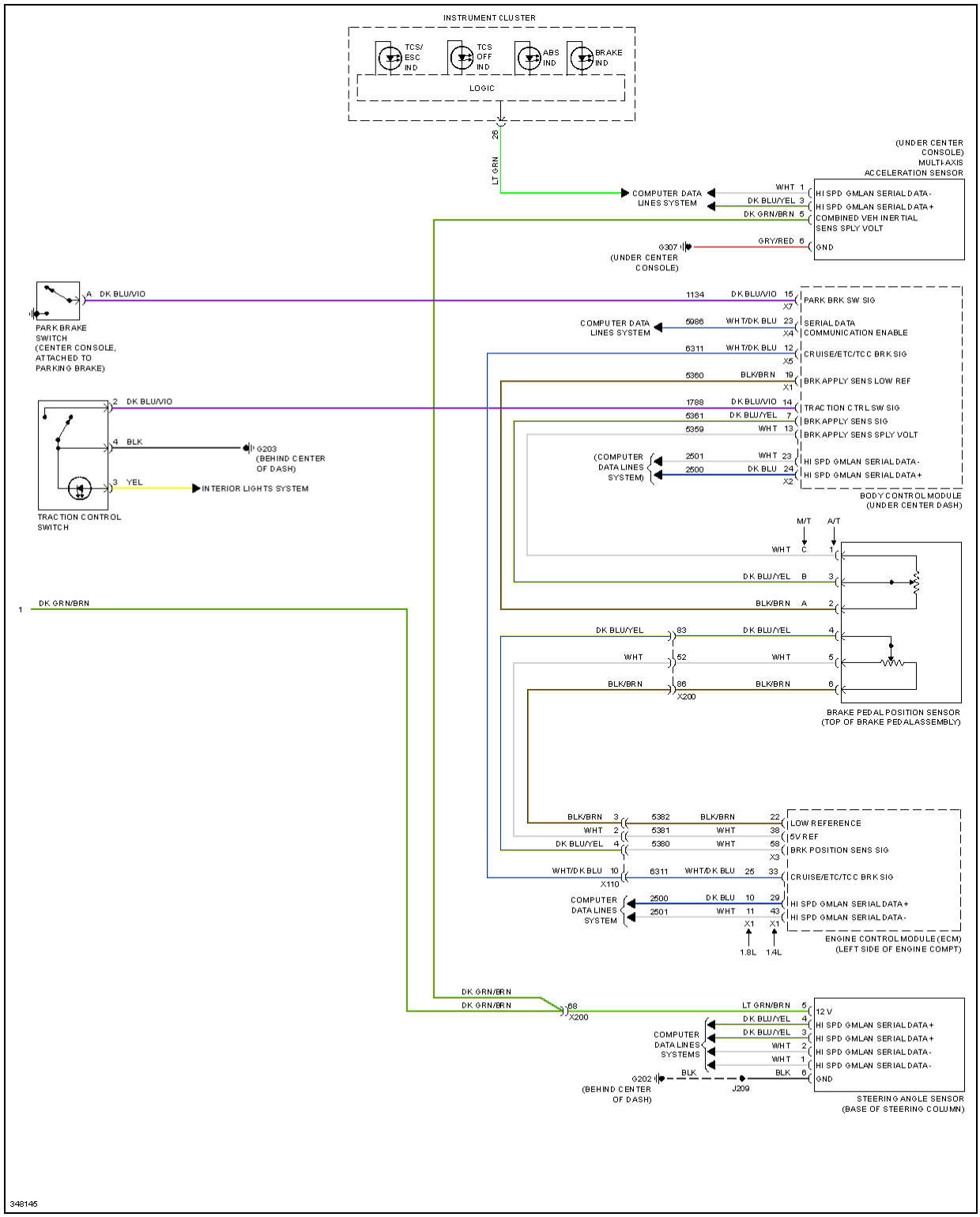

Fig. 6: Anti-lock Brakes Circuit (2 of 2)

ANTI-THEFT

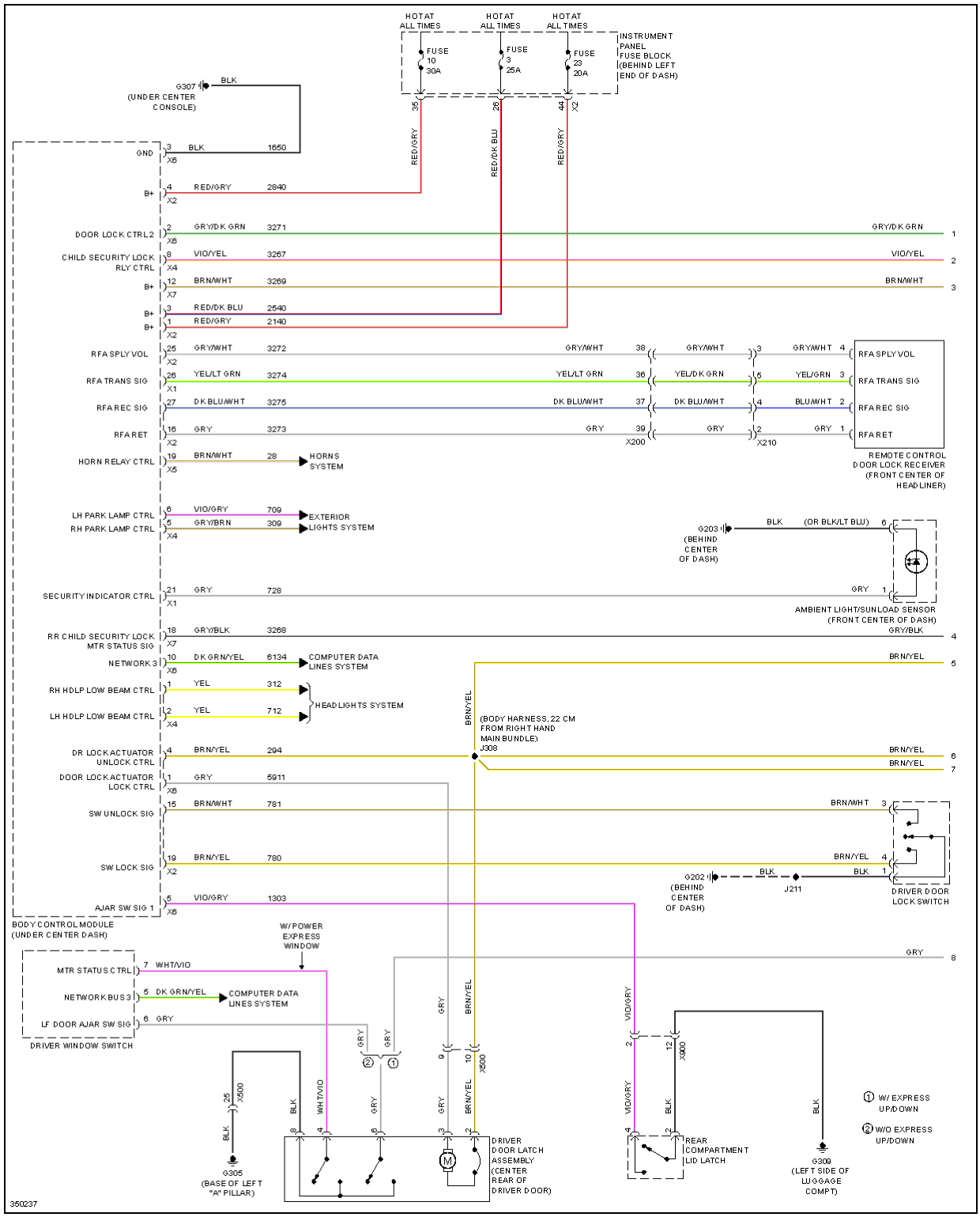

Fig. 7: Forced Entry Circuit (1 of 2)

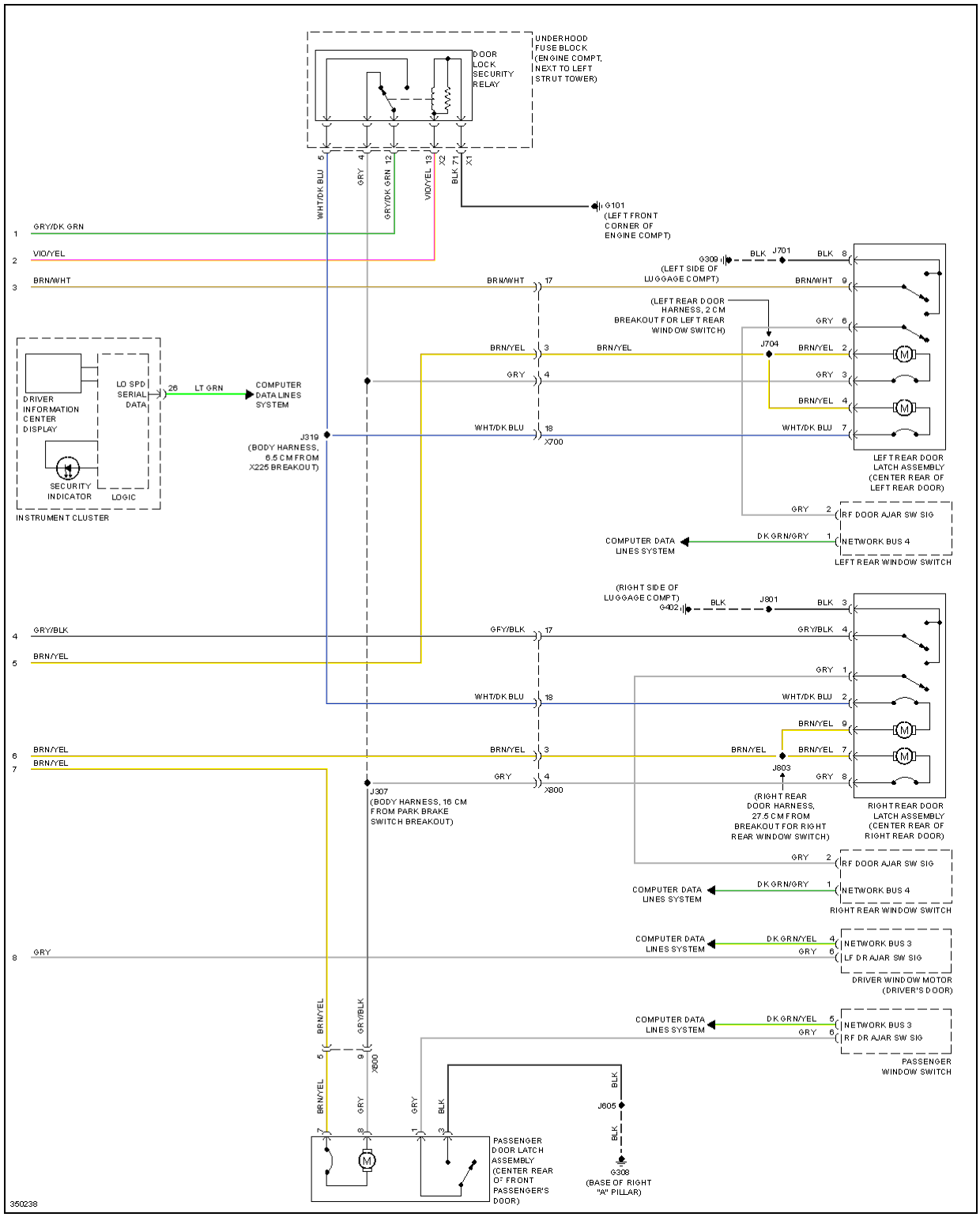

Fig. 8: Forced Entry Circuit (2 of 2)

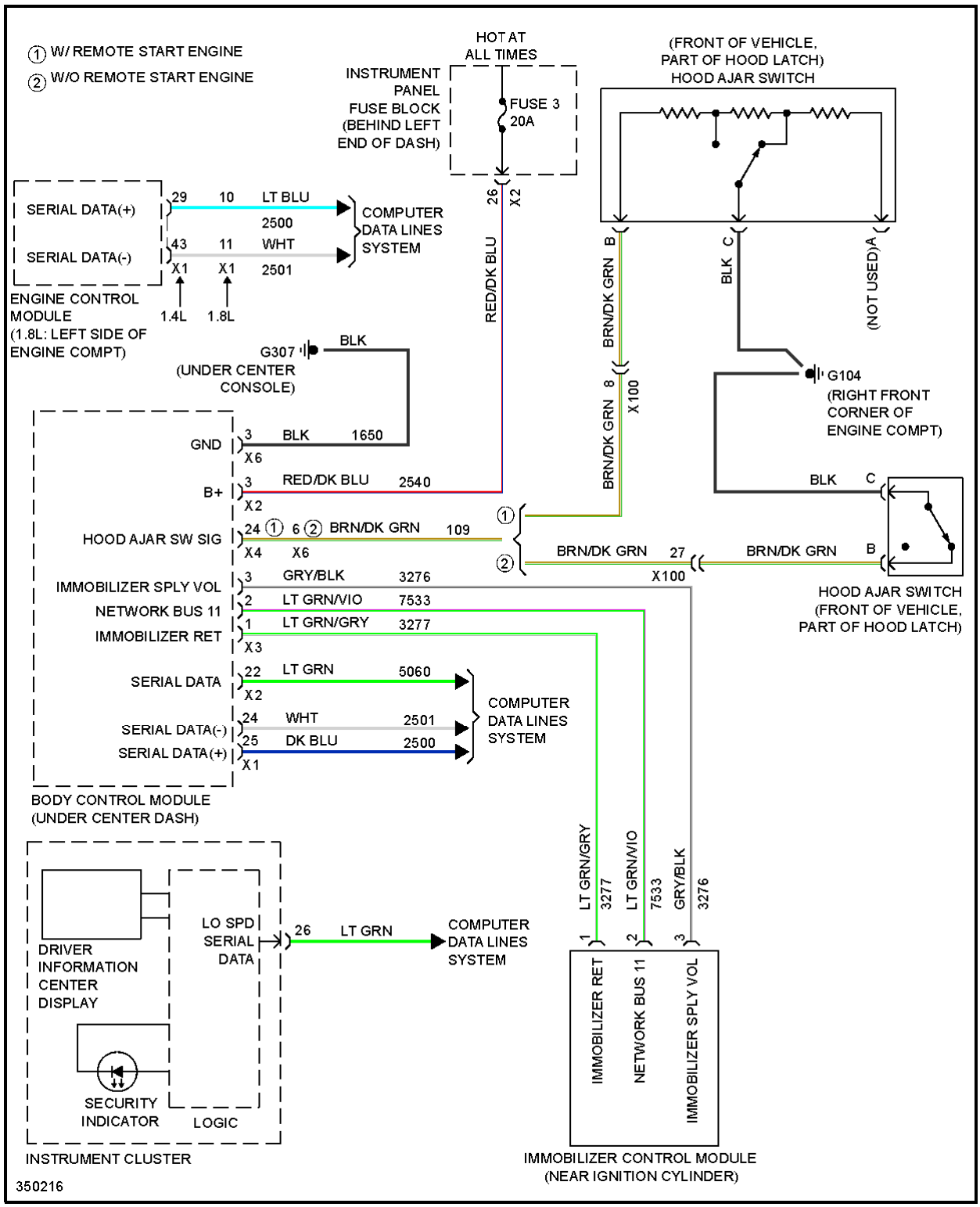

Fig. 9: Pass-Key Circuit

BODY CONTROL MODULES

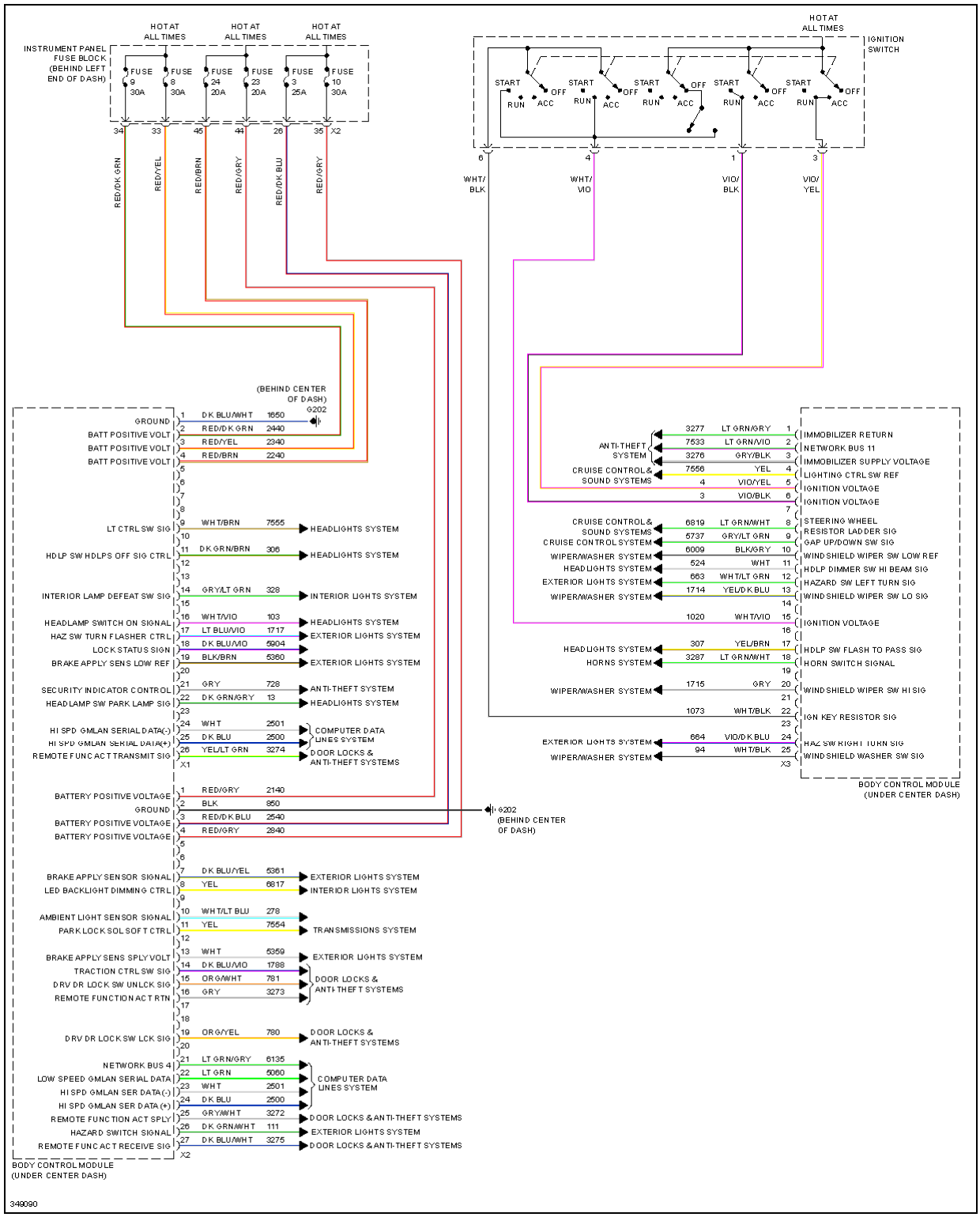

Fig. 10: Body Control Modules Circuit (1 of 2)

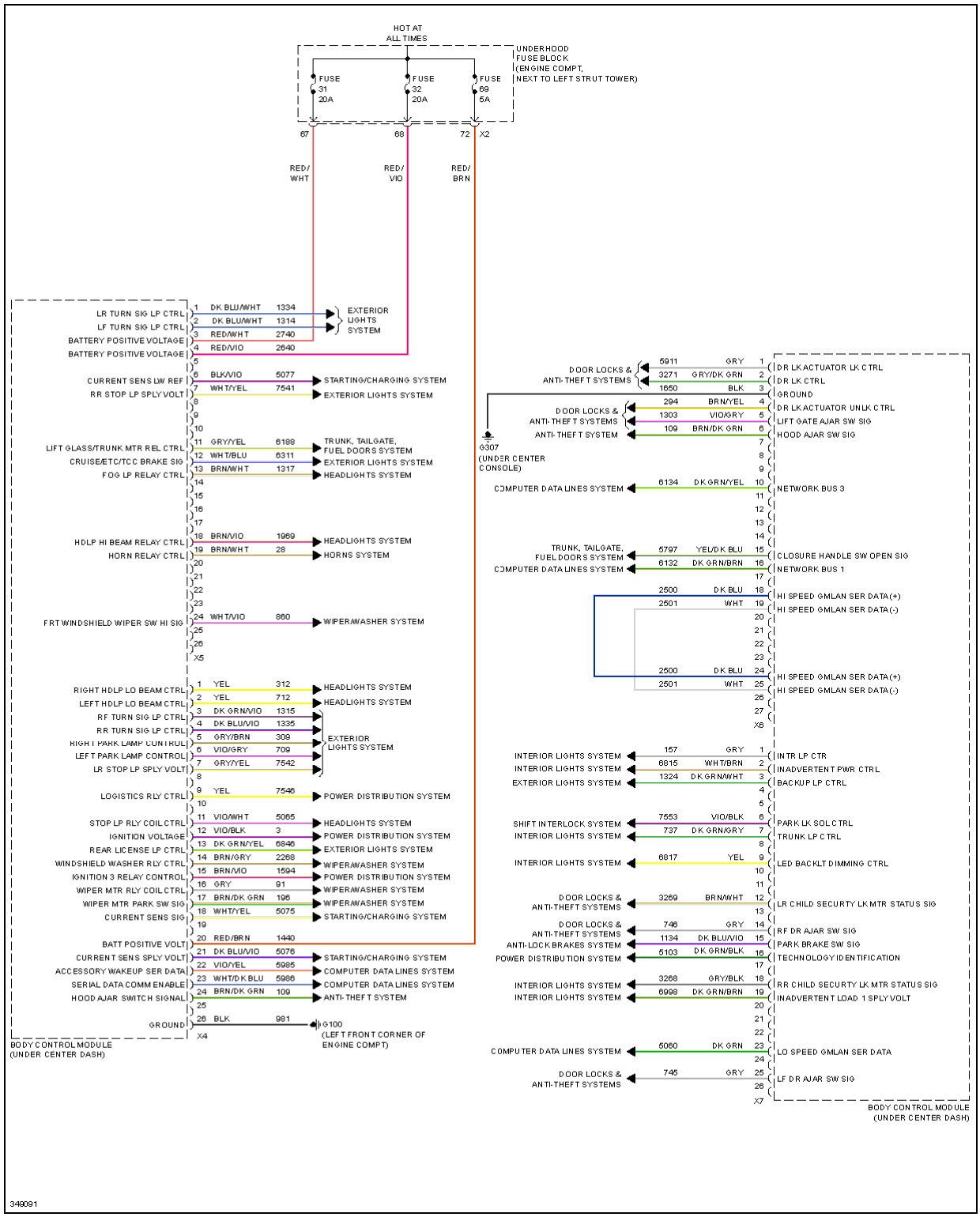

Fig. 11: Body Control Modules Circuit (2 of 2)

COMPUTER DATA LINES

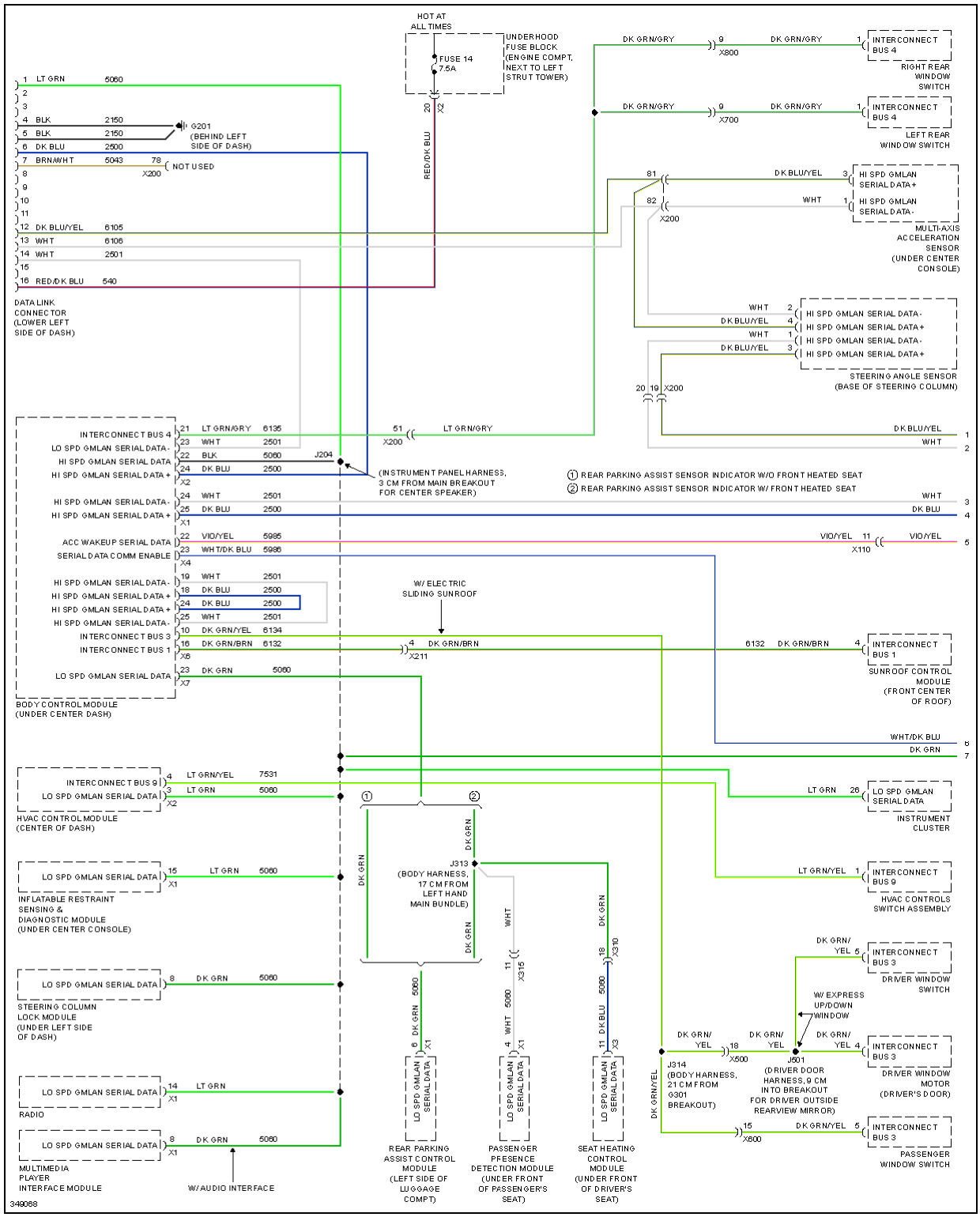

Fig. 12: Computer Data Lines Circuit (1 of 2)

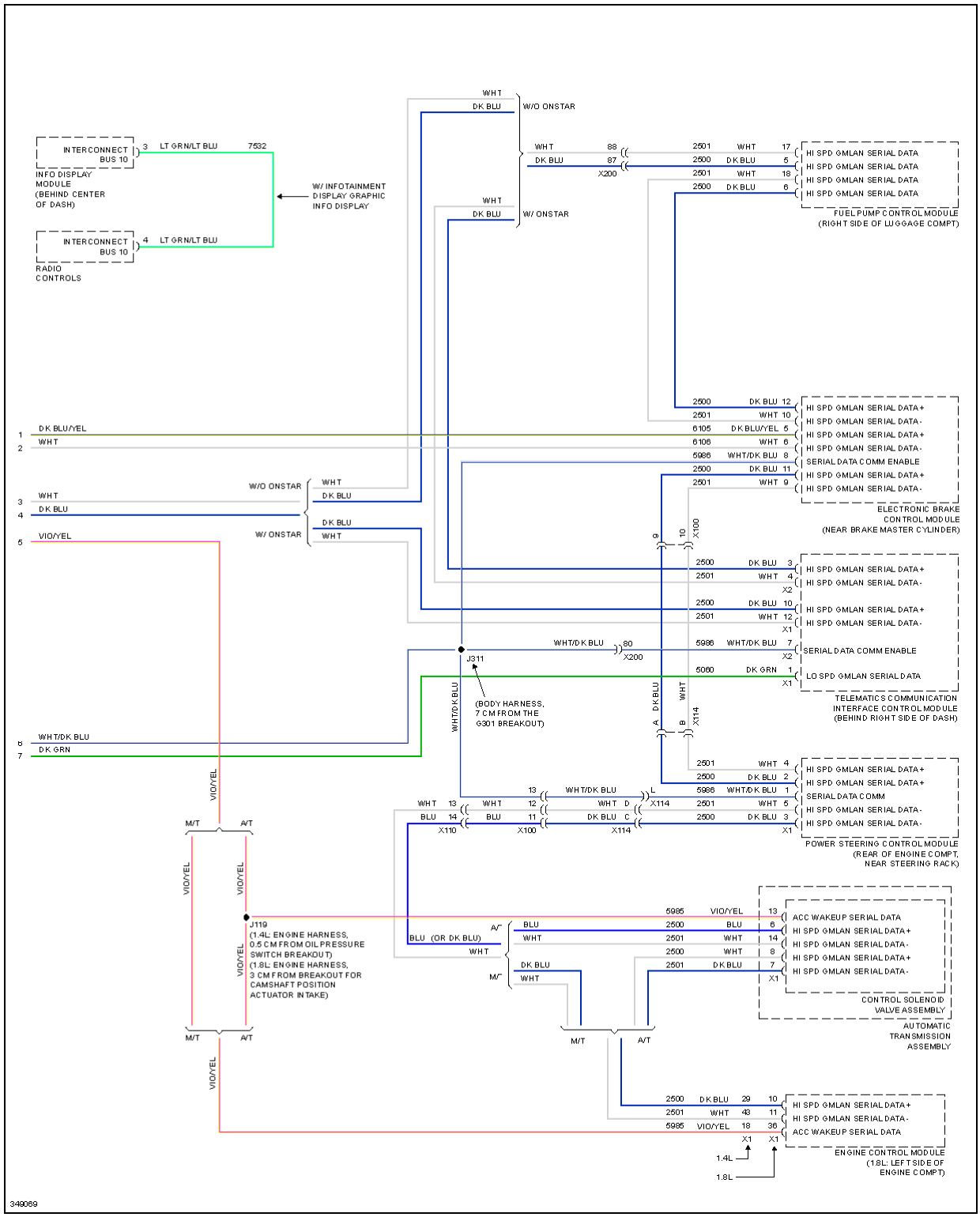

Fig. 13: Computer Data Lines Circuit (2 of 2)

COOLING FAN

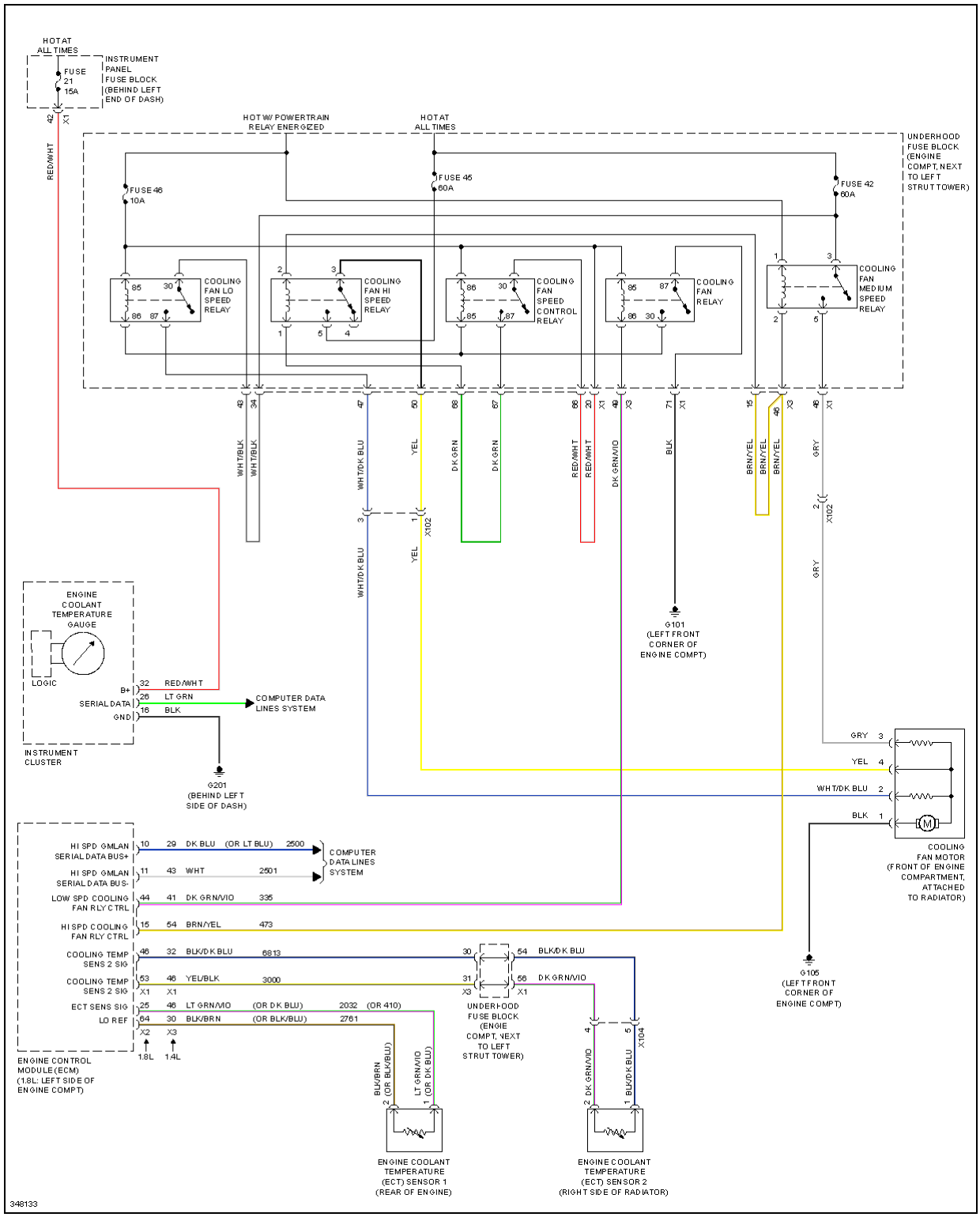

Fig. 14: Cooling Fan Circuit

CRUISE CONTROL

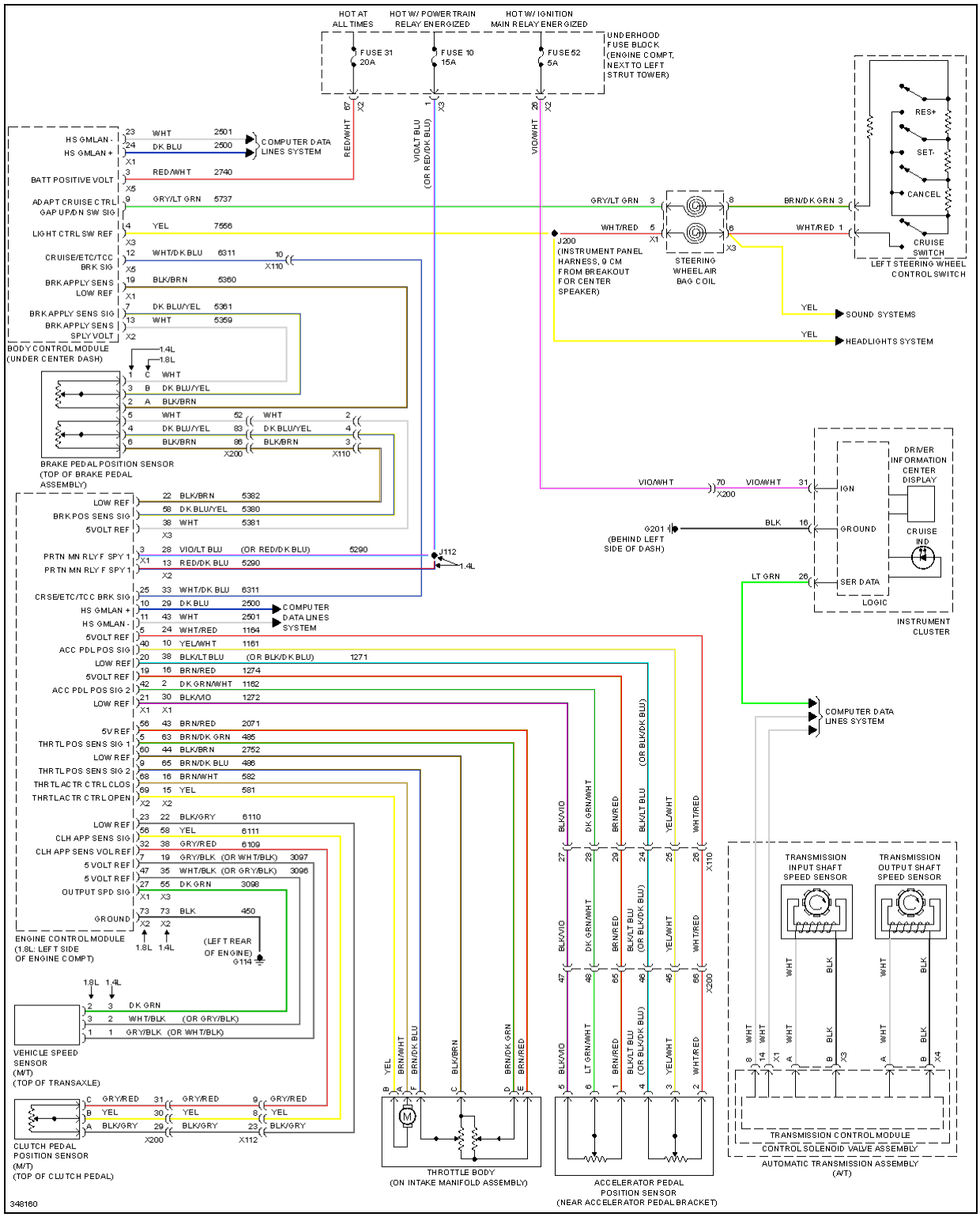

Fig. 15: Cruise Control Circuit

DEFOGGERS

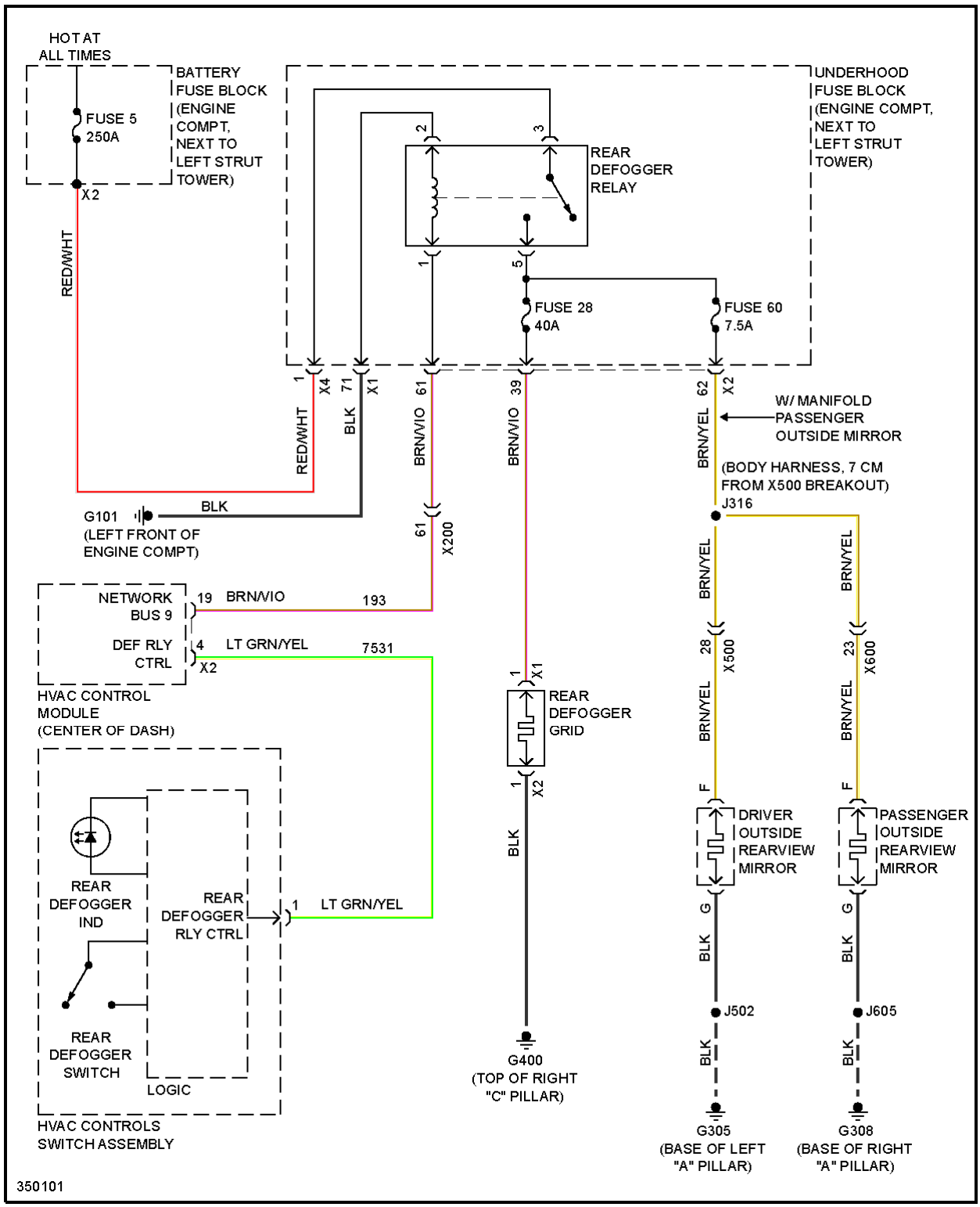

Fig. 16: Defoggers Circuit

ELECTRONIC POWER STEERING

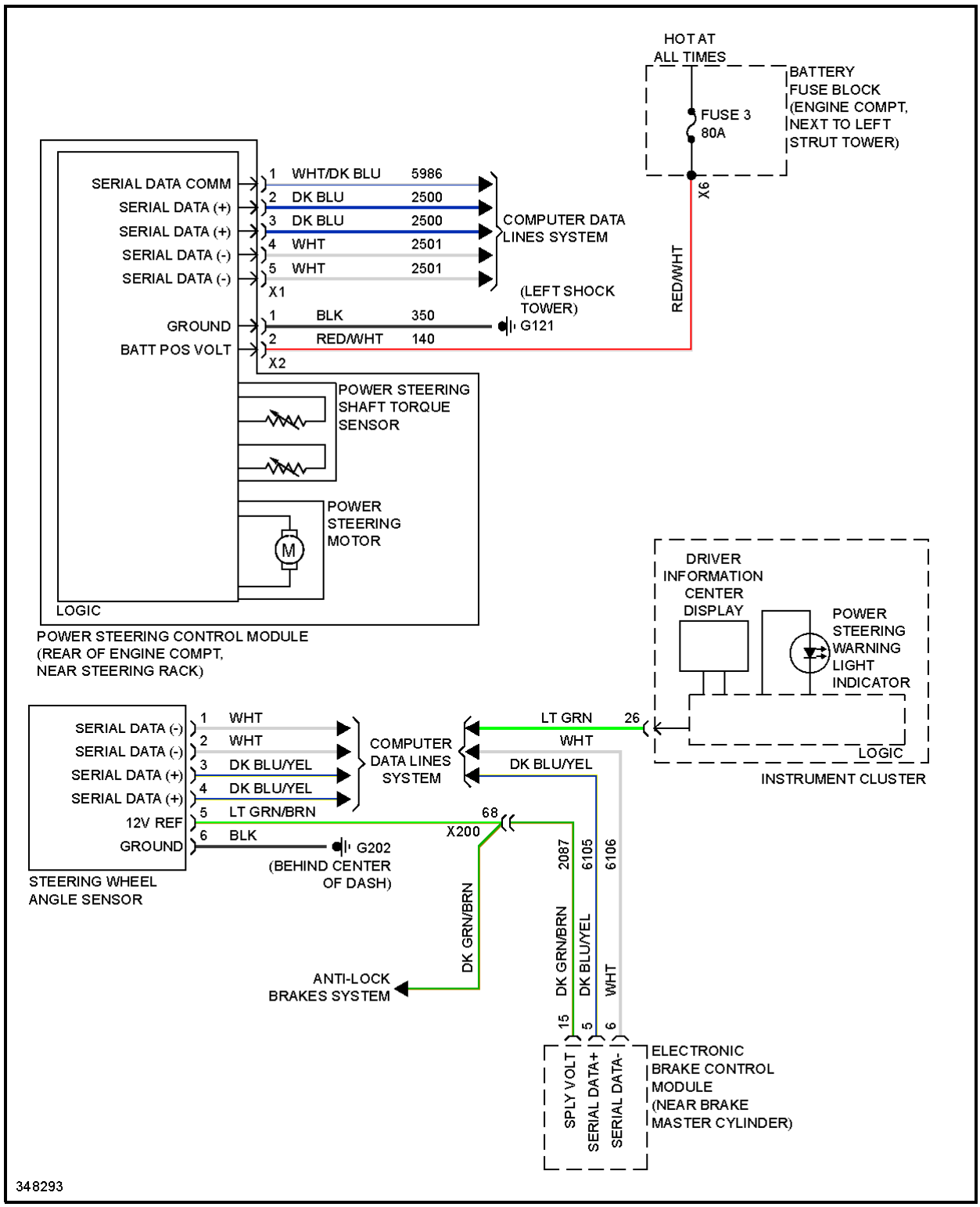

Fig. 17: Electronic Power Steering Circuit

ENGINE PERFORMANCE

1.4L VIN 9

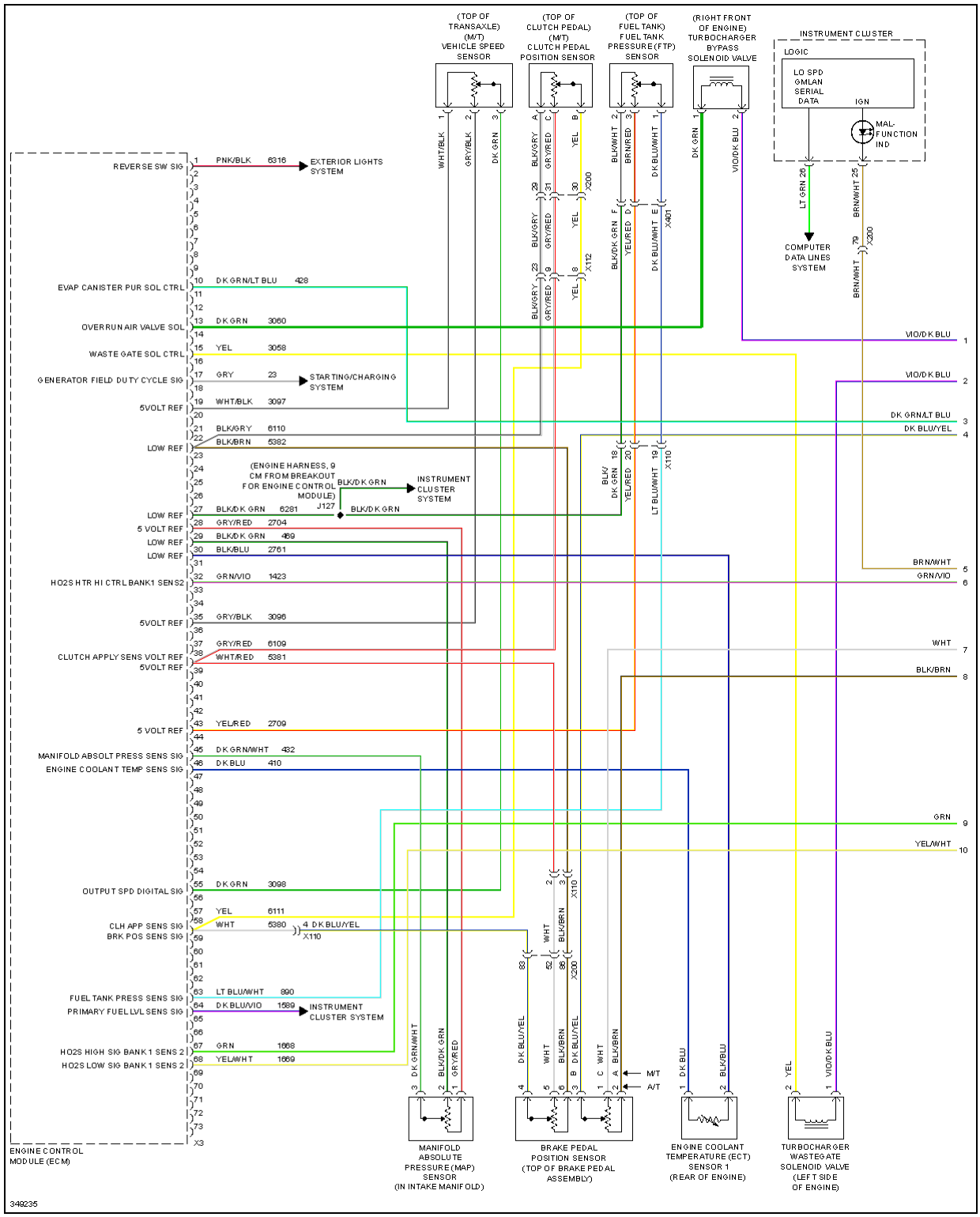

Fig. 18: 1.4L VIN 9, Engine Performance Circuit (1 of 6)

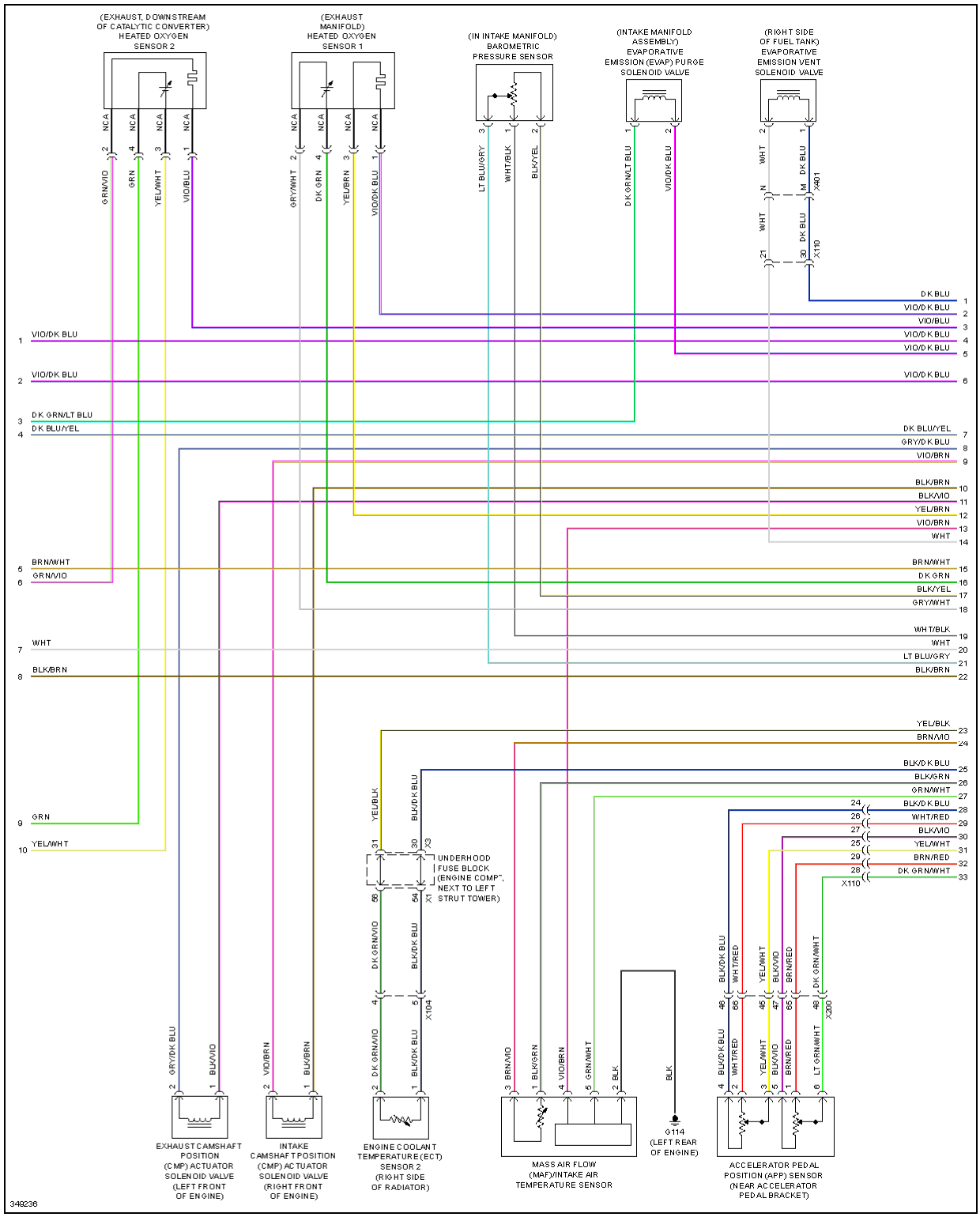

Fig. 19: 1.4L VIN 9, Engine Performance Circuit (2 of 6)

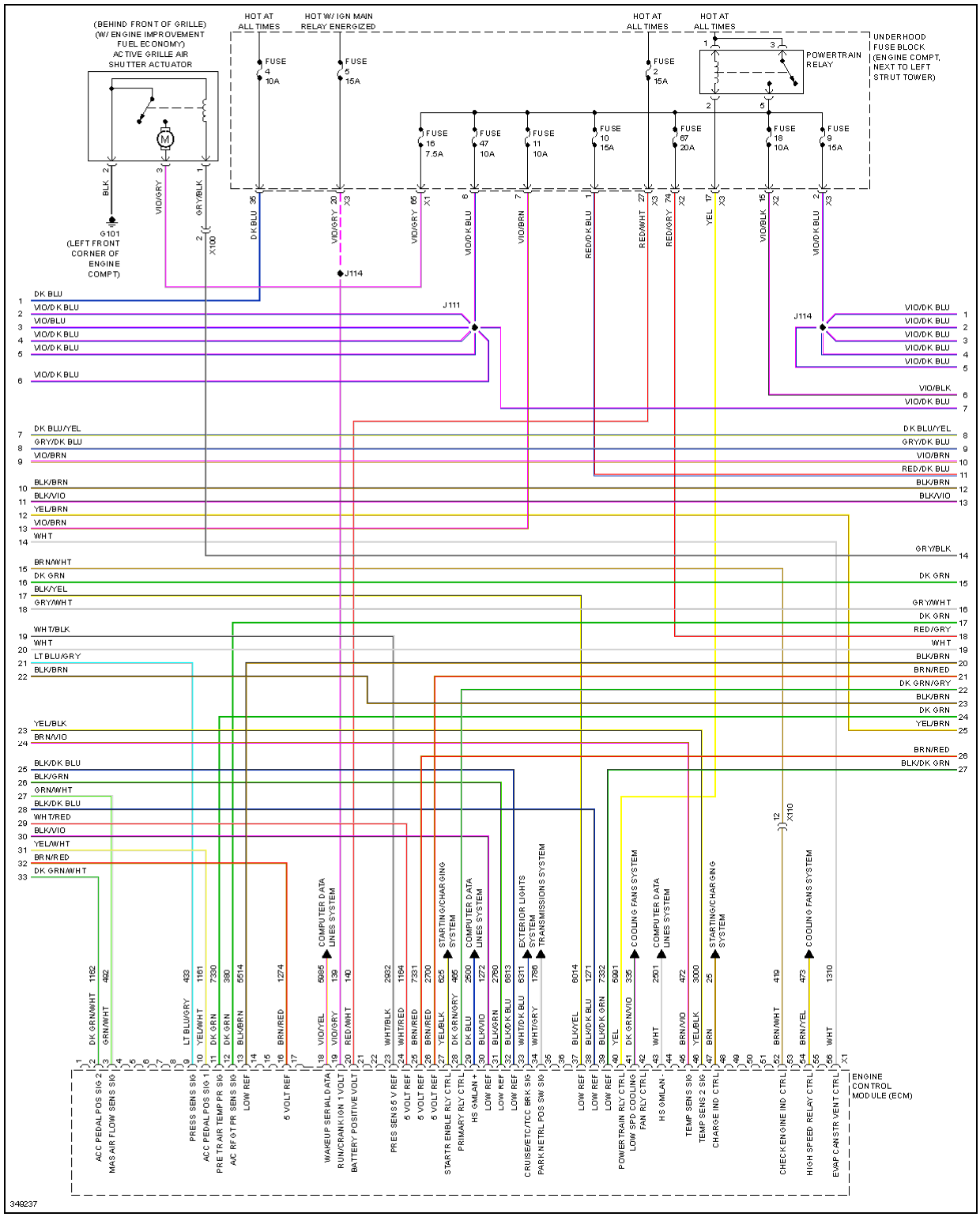

Fig. 20: 1.4L VIN 9, Engine Performance Circuit (3 of 6)

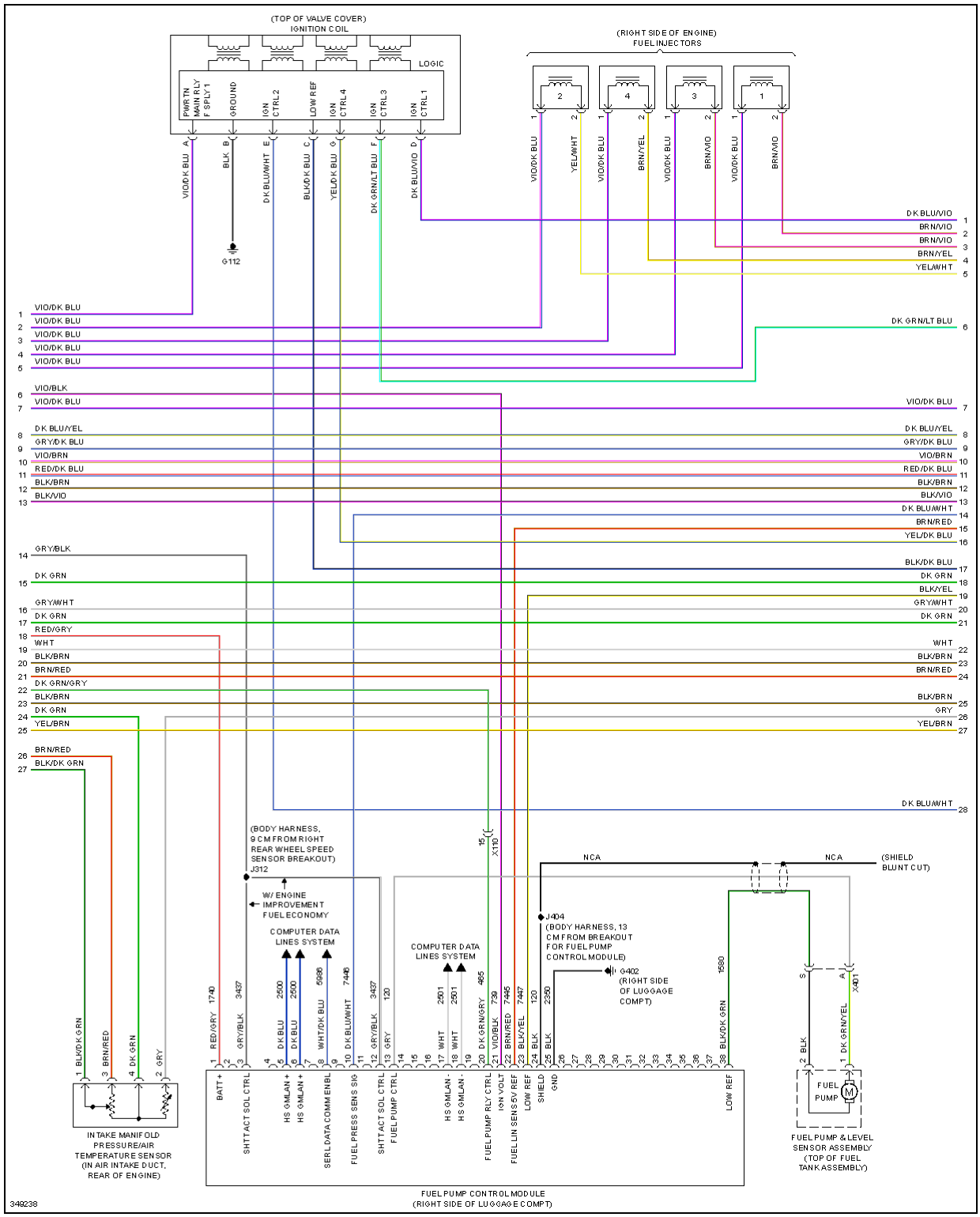

Fig. 21: 1.4L VIN 9, Engine Performance Circuit (4 of 6)

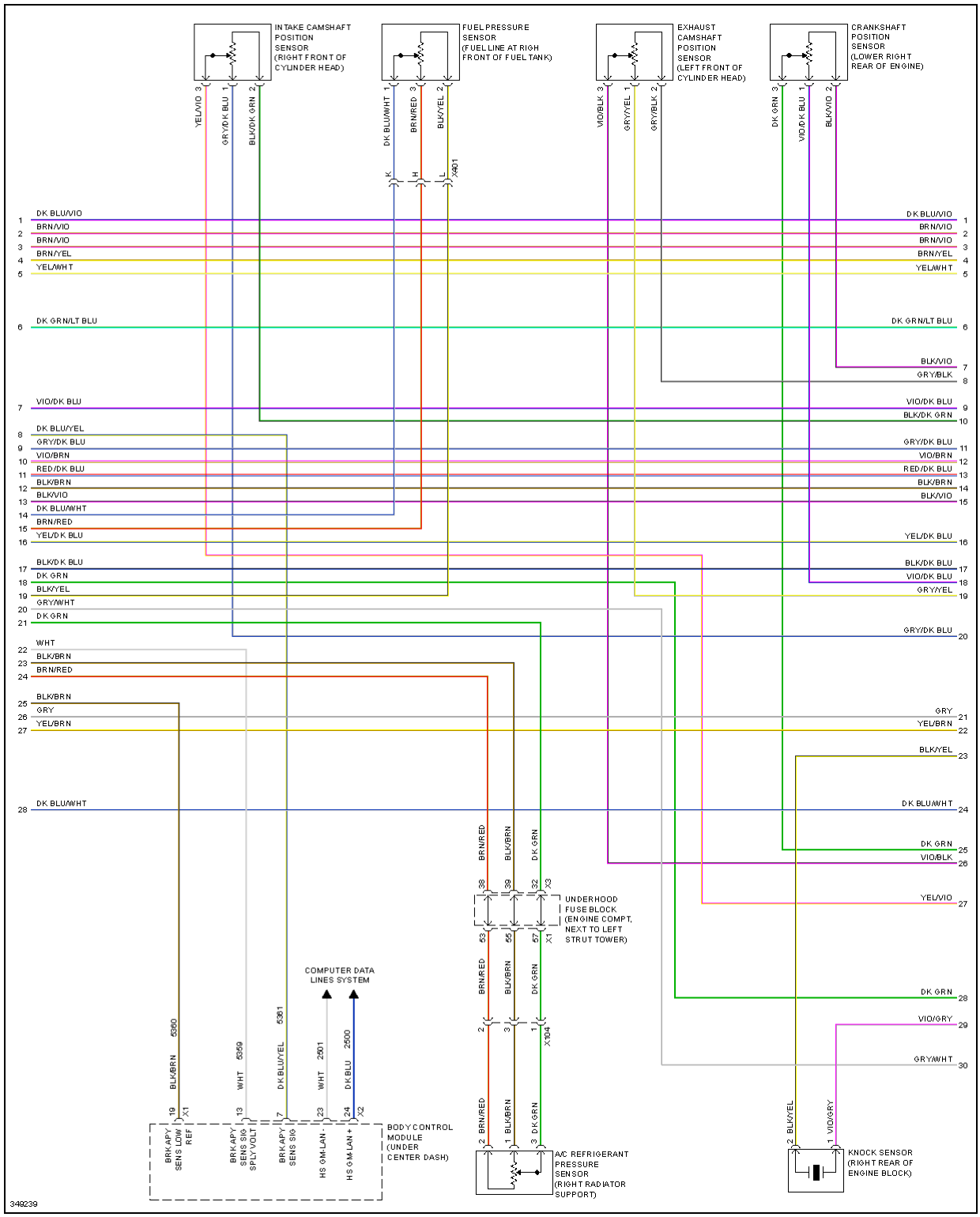

Fig. 22: 1.4L VIN 9, Engine Performance Circuit (5 of 6)

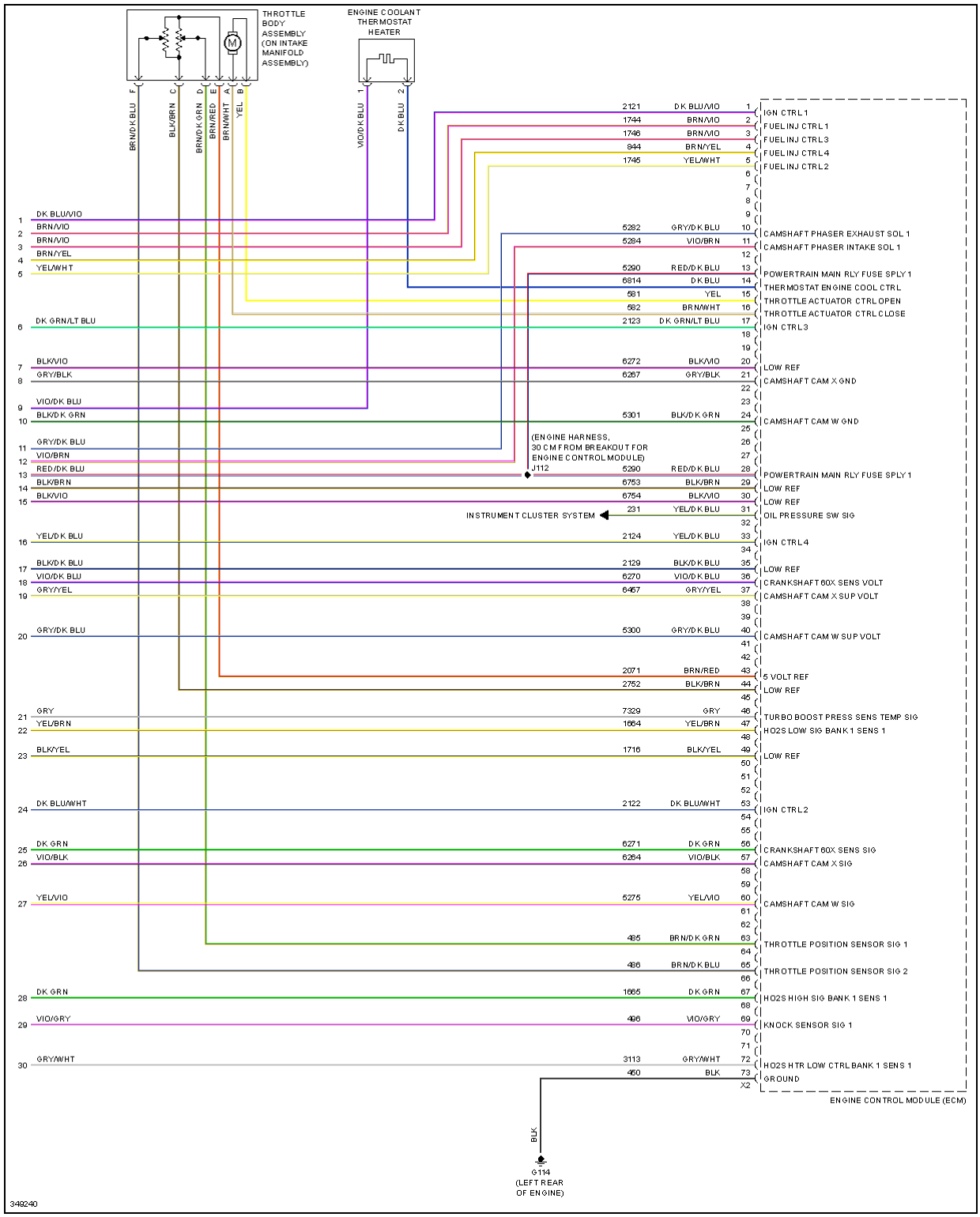

Fig. 23: 1.4L VIN 9, Engine Performance Circuit (6 of 6)

1.8L VIN H

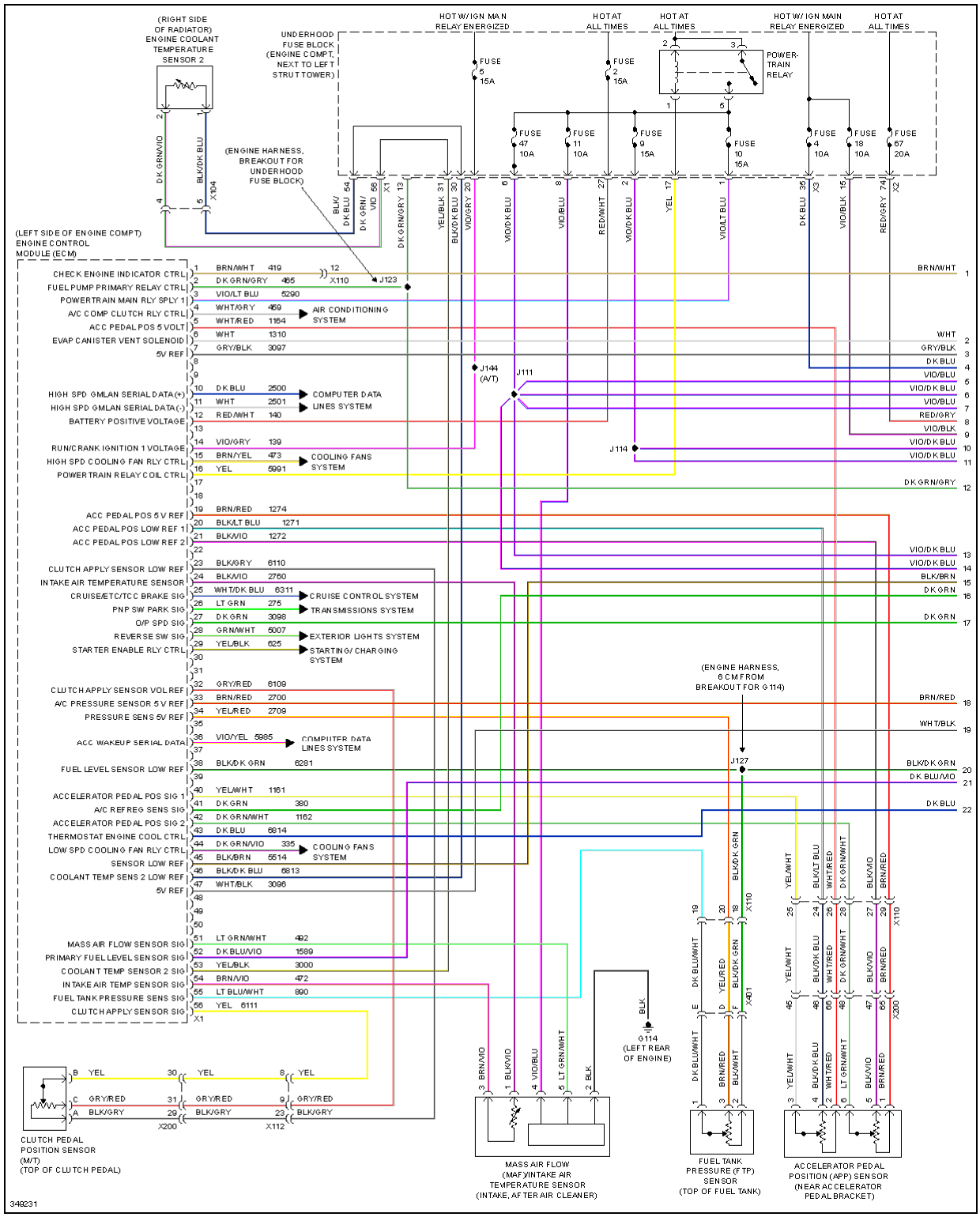

Fig. 24: 1.8L VIN H, Engine Performance Circuit (1 of 4)

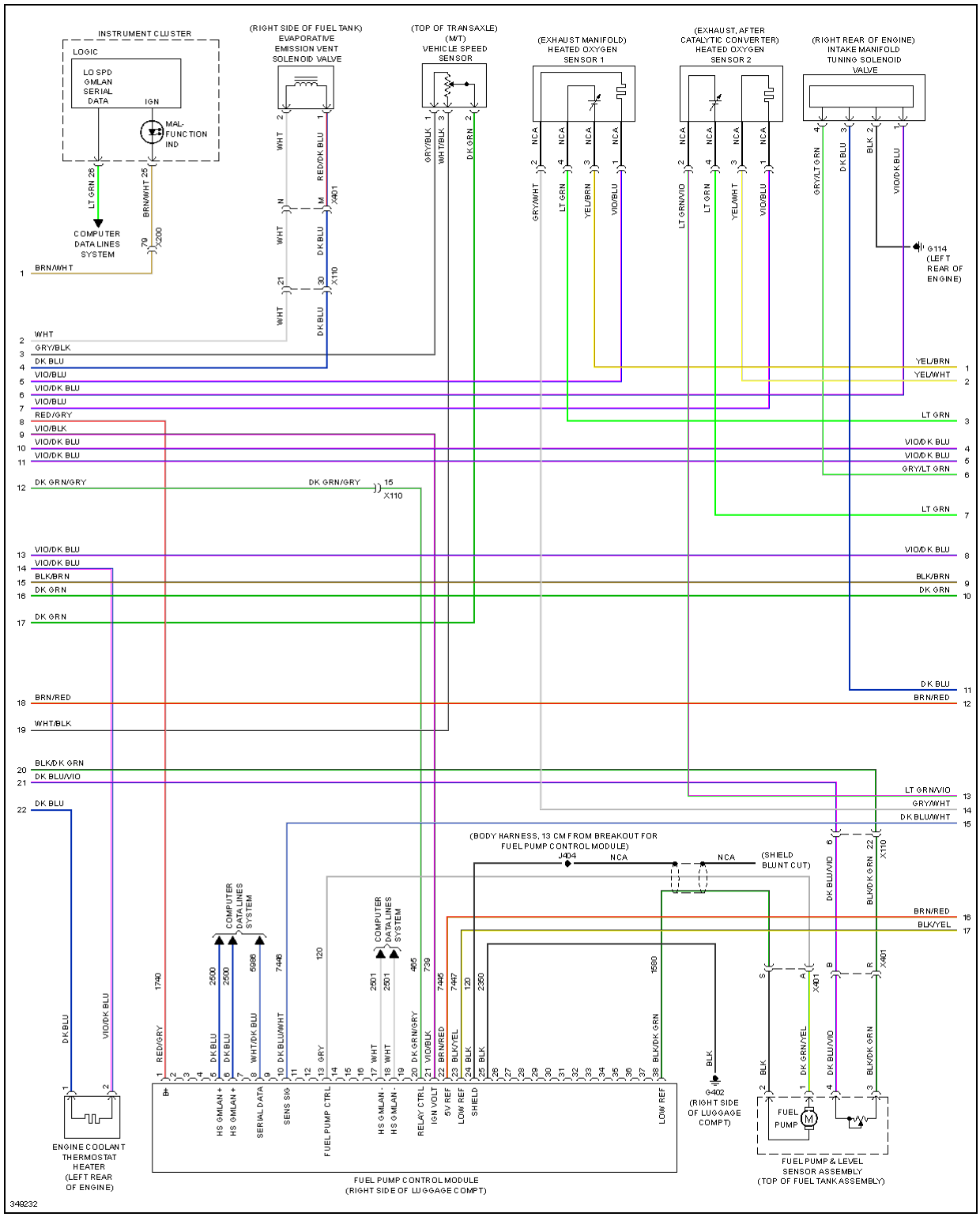

Fig. 25: 1.8L VIN H, Engine Performance Circuit (2 of 4)

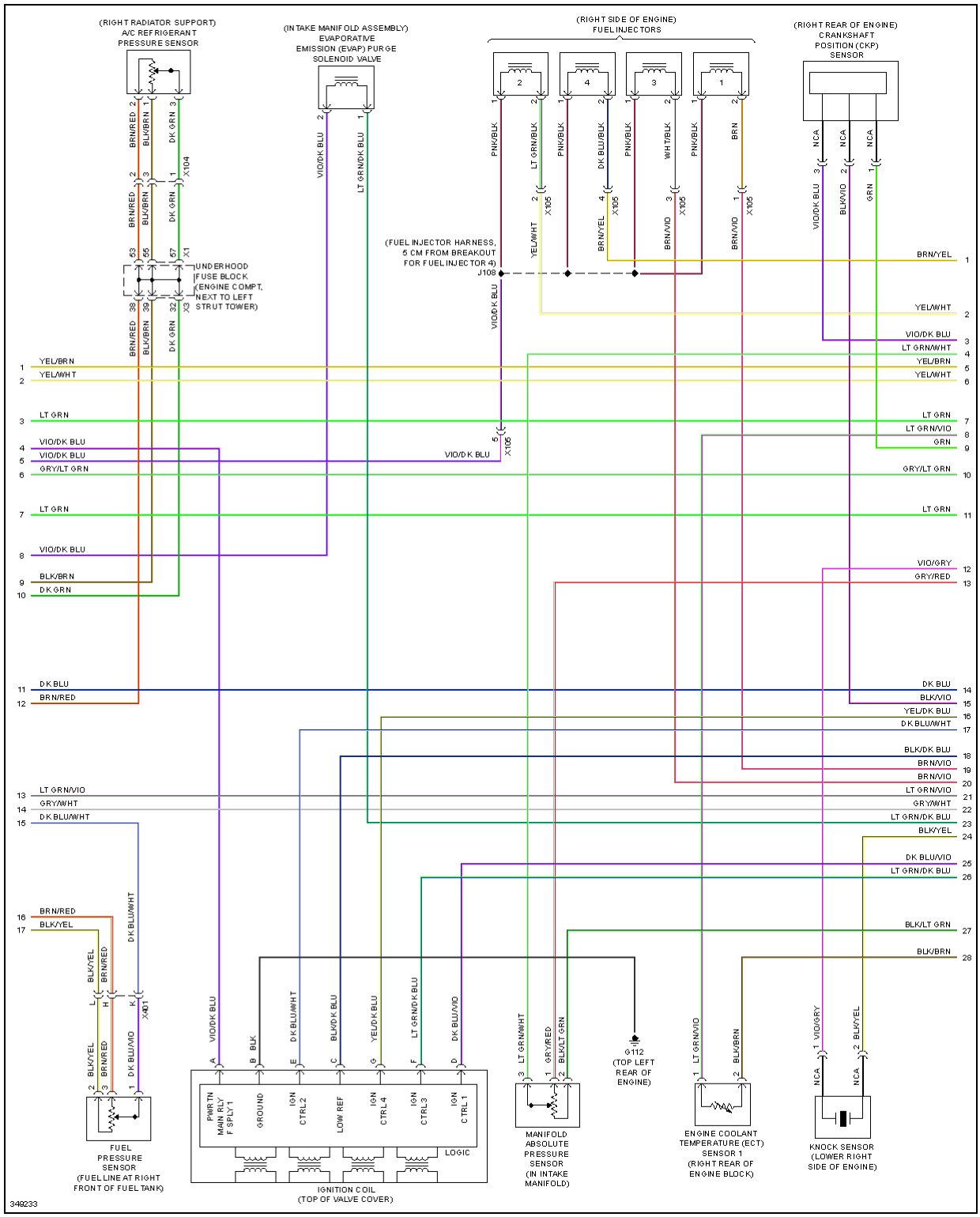

Fig. 26: 1.8L VIN H, Engine Performance Circuit (3 of 4)

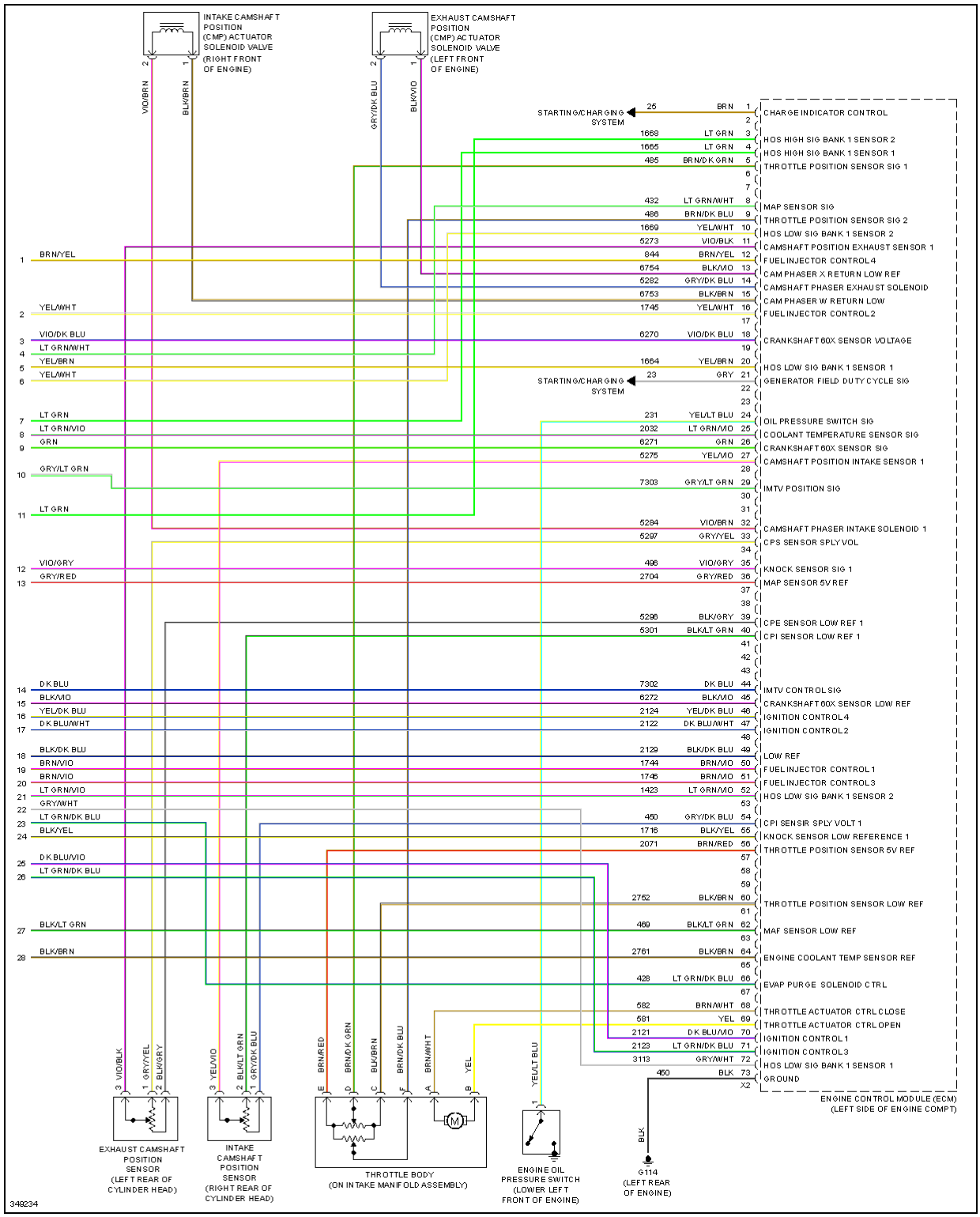

Fig. 27: 1.8L VIN H, Engine Performance Circuit (4 of 4)

EXTERIOR LIGHTS

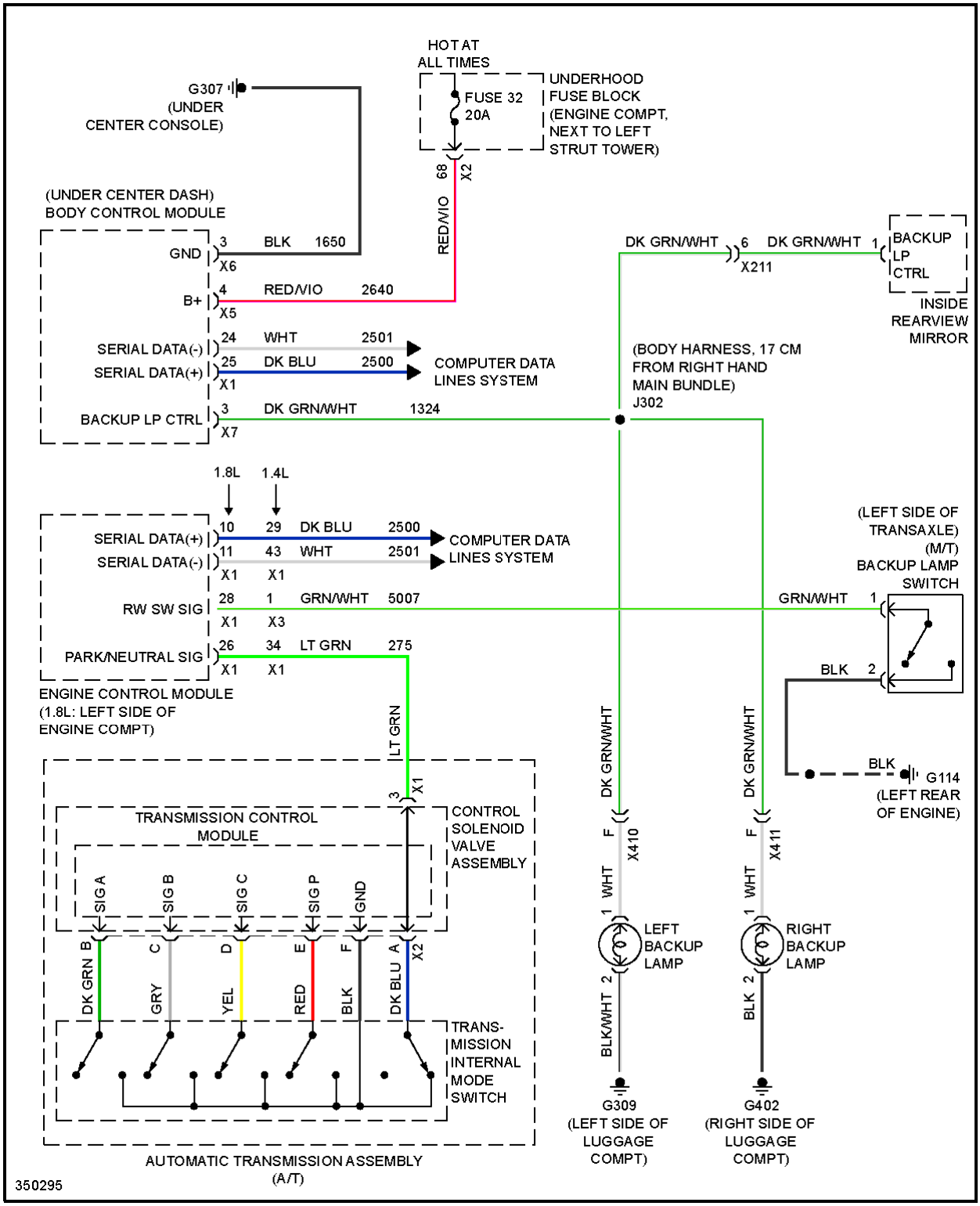

Fig. 28: Backup Lamps Circuit

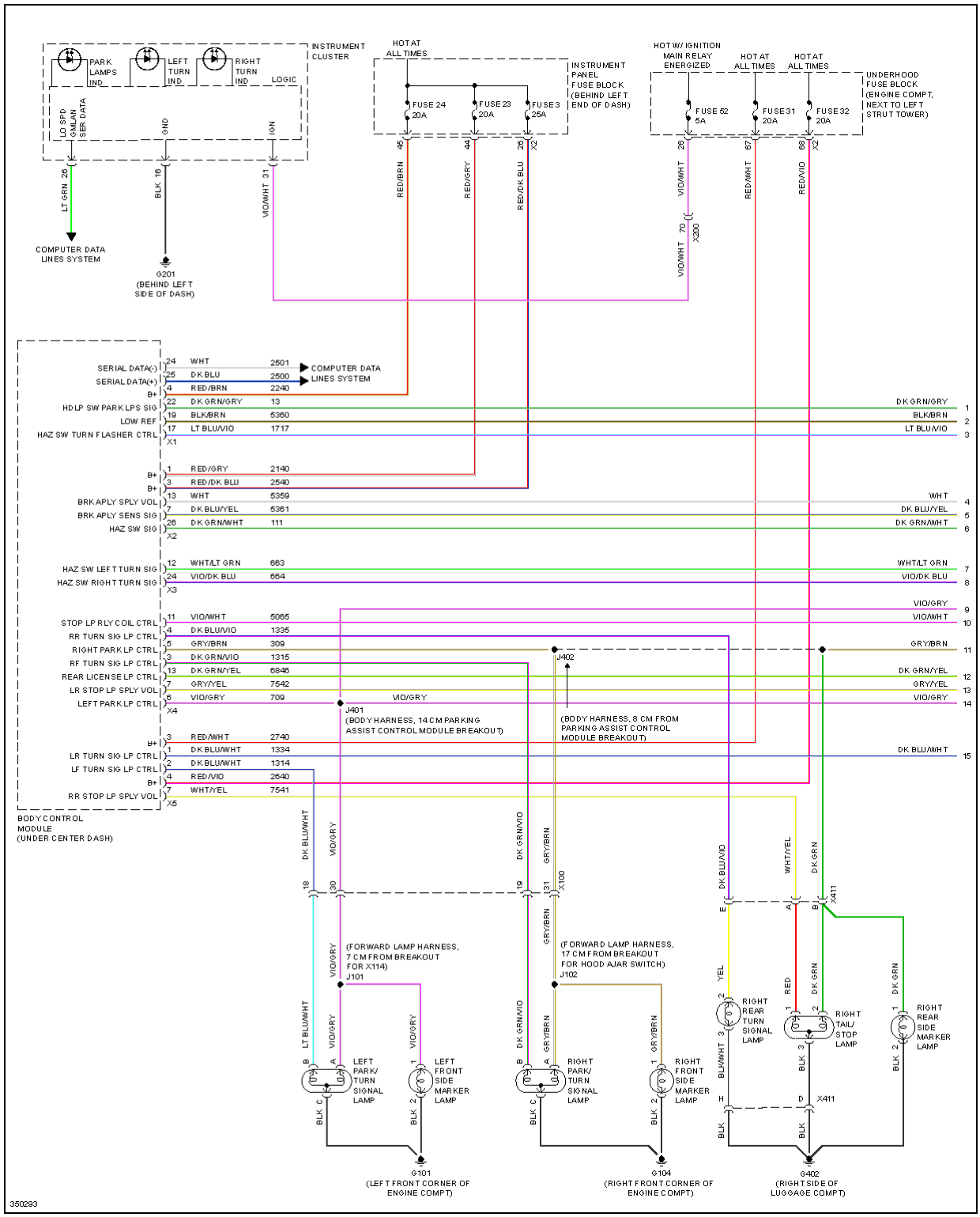

Fig. 29: Exterior Lamps Circuit (1 of 2)

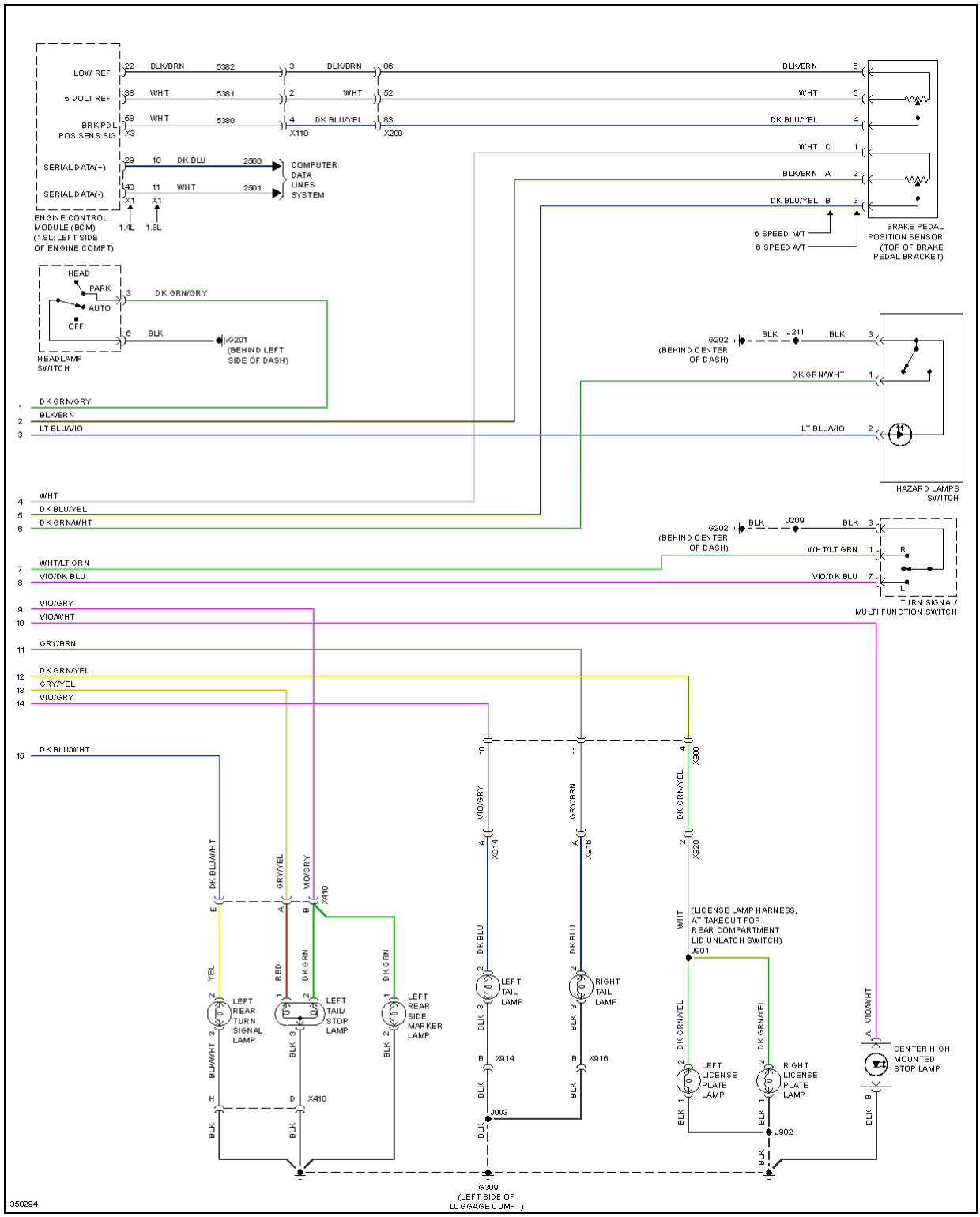

Fig. 30: Exterior Lamps Circuit (2 of 2)

GROUND DISTRIBUTION

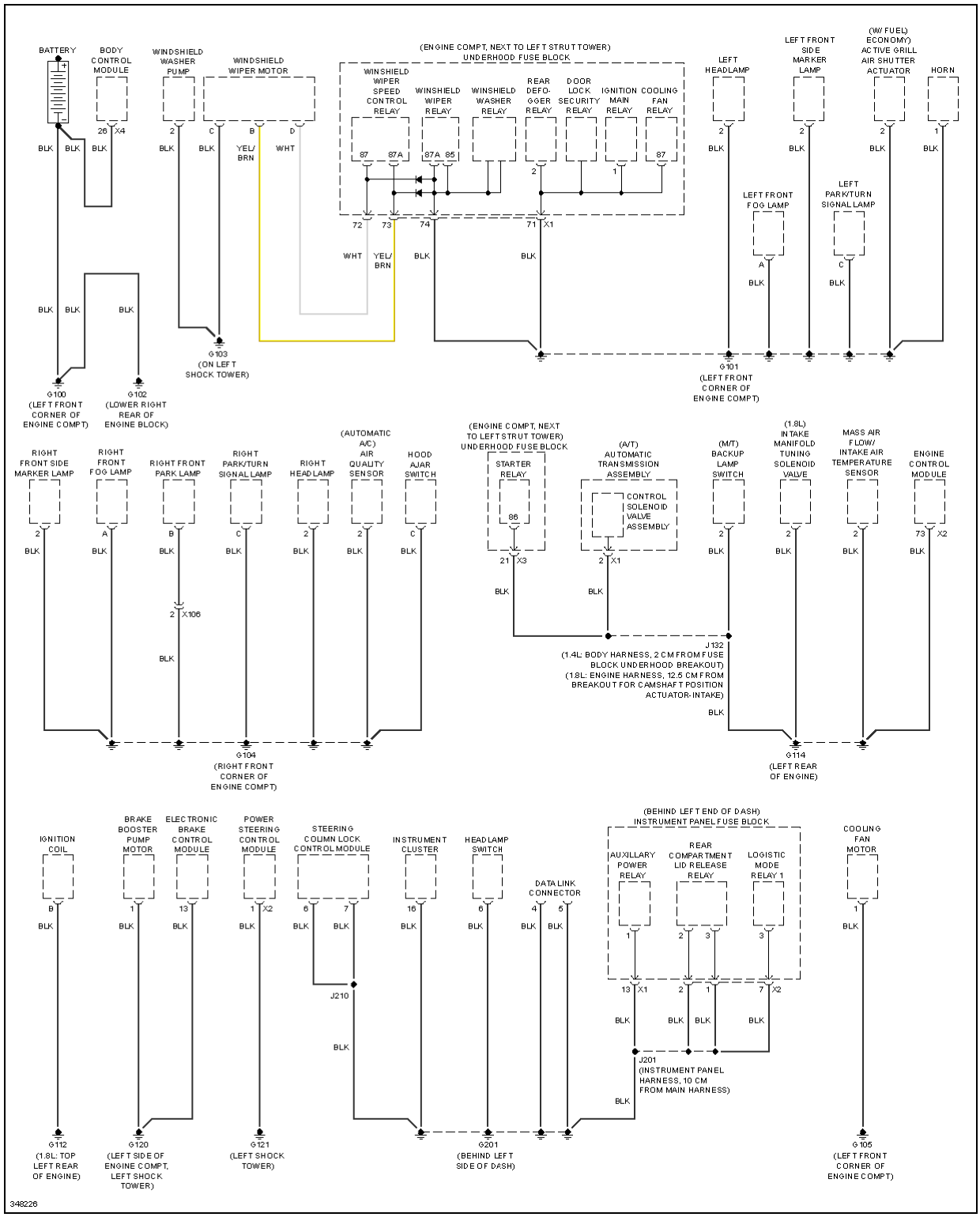

Fig. 31: Ground Distribution Circuit (1 of 3)

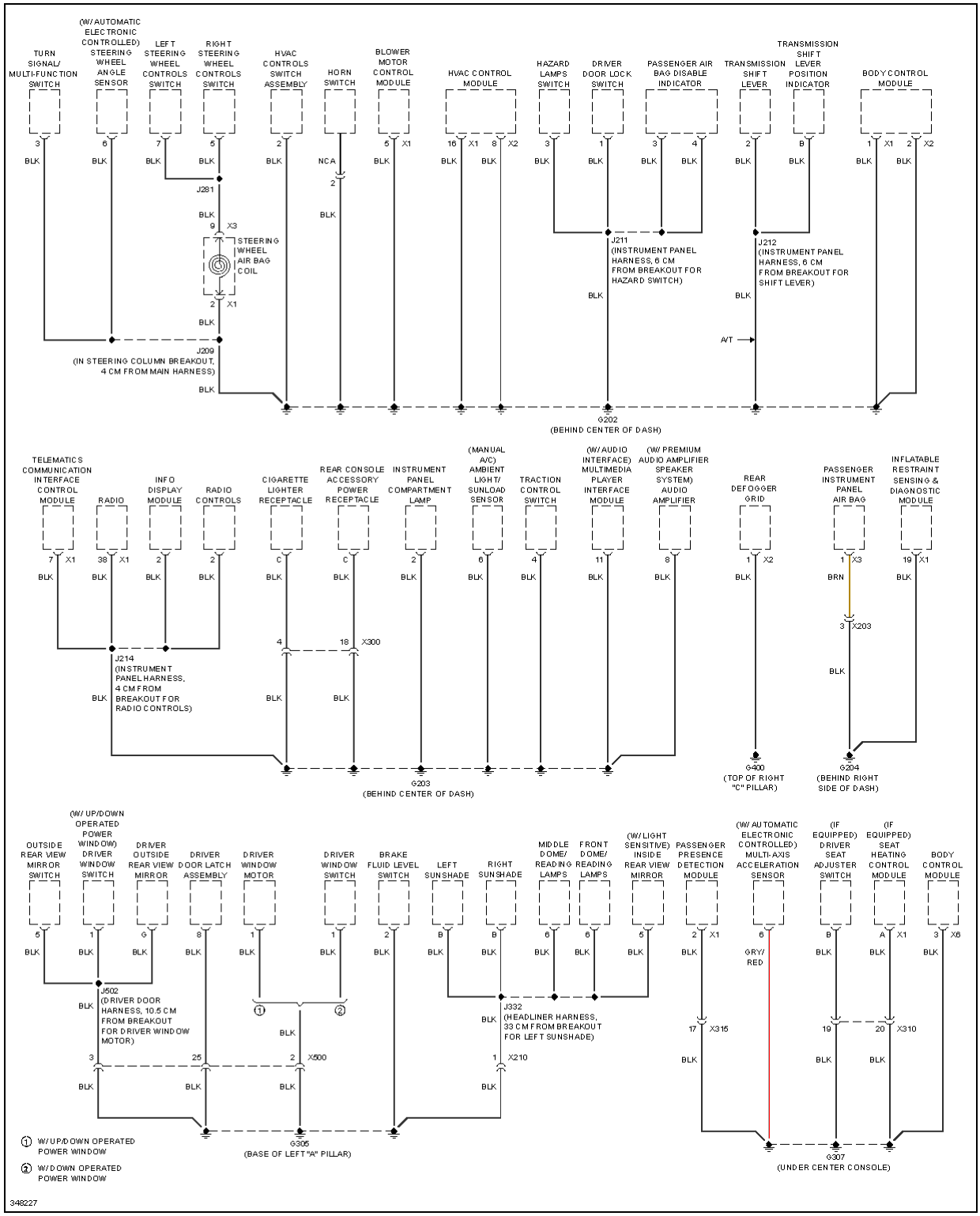

Fig. 32: Ground Distribution Circuit (2 of 3)

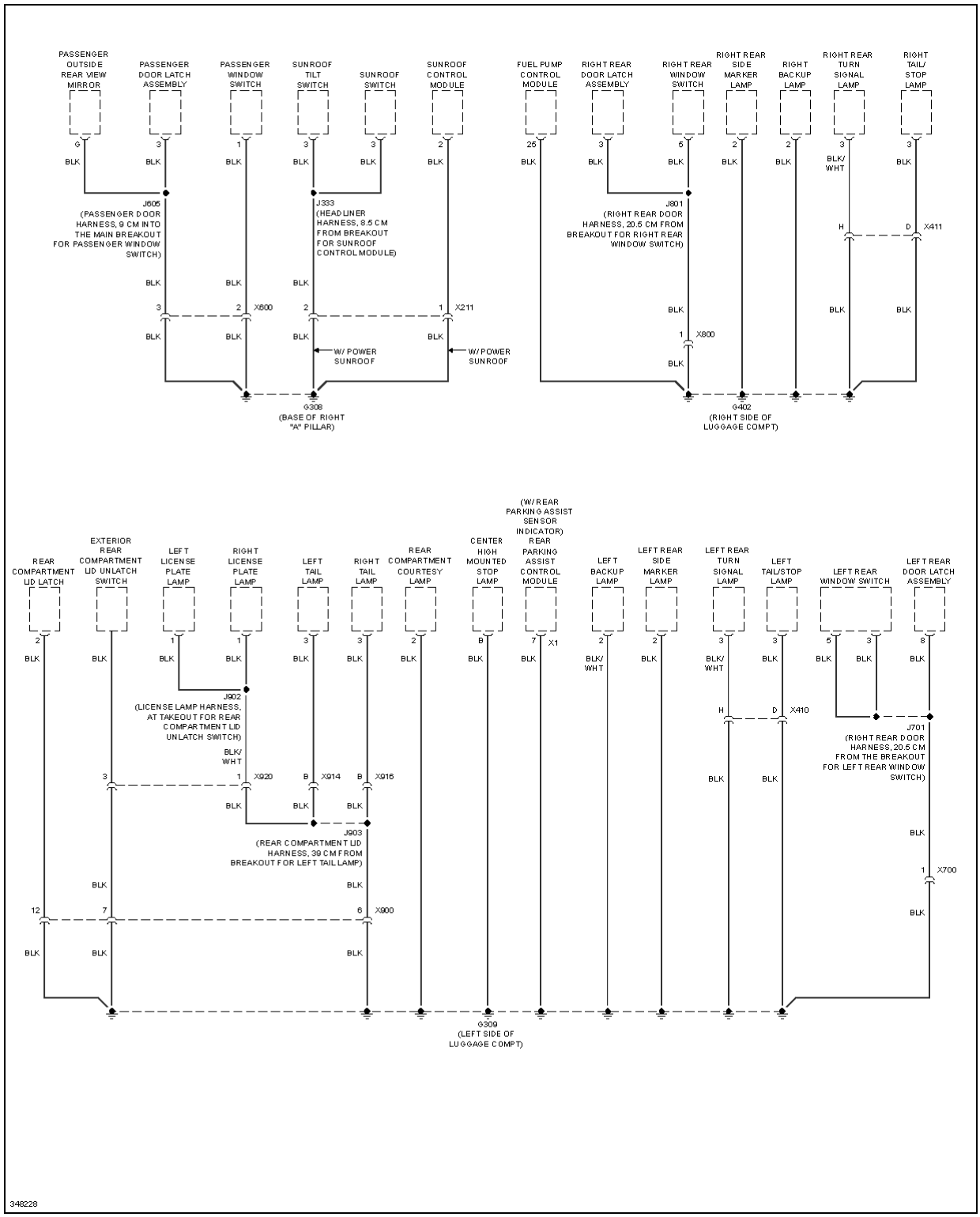

Fig. 33: Ground Distribution Circuit (3 of 3)

HEADLIGHTS

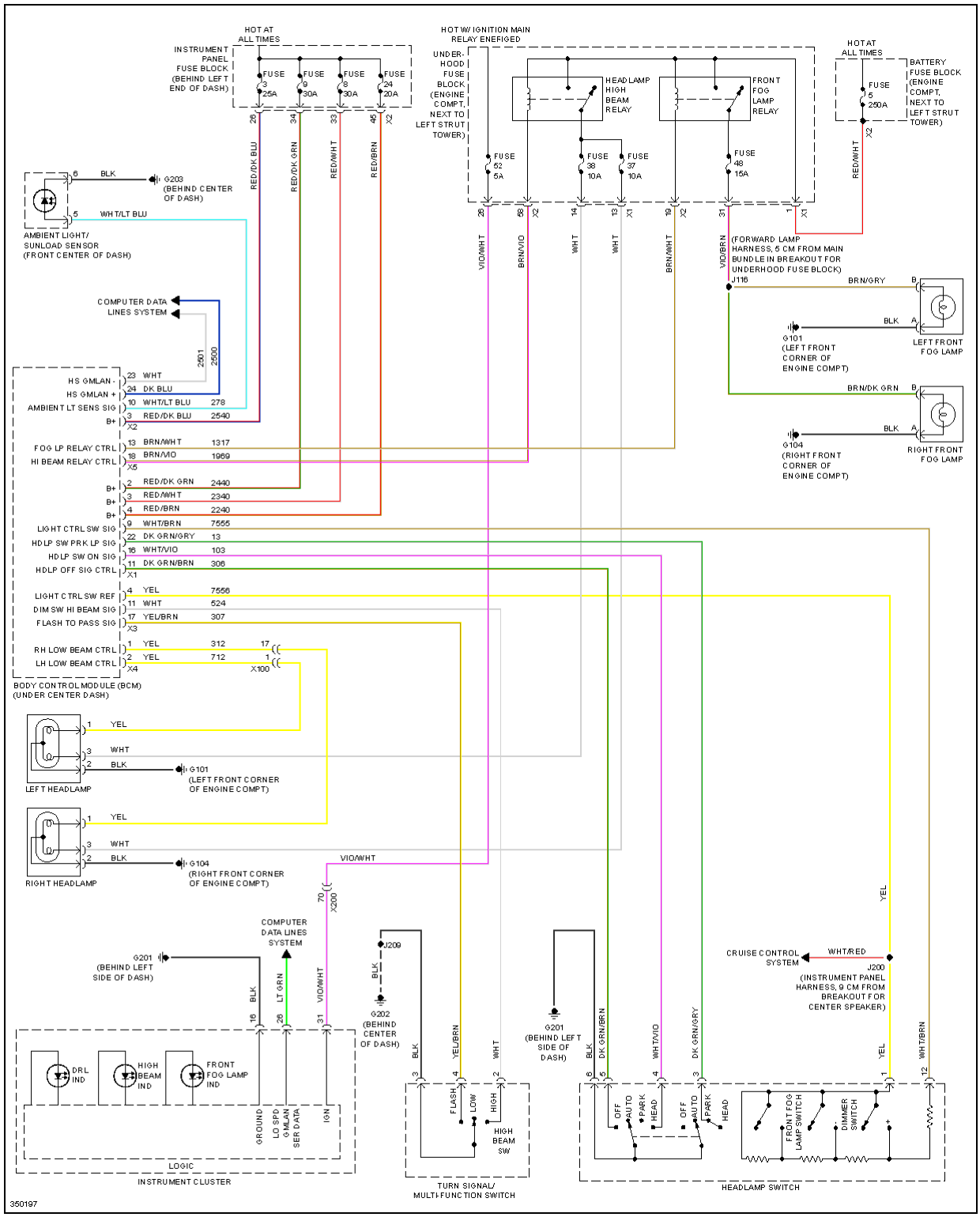

Fig. 34: Headlights Circuit

HORN

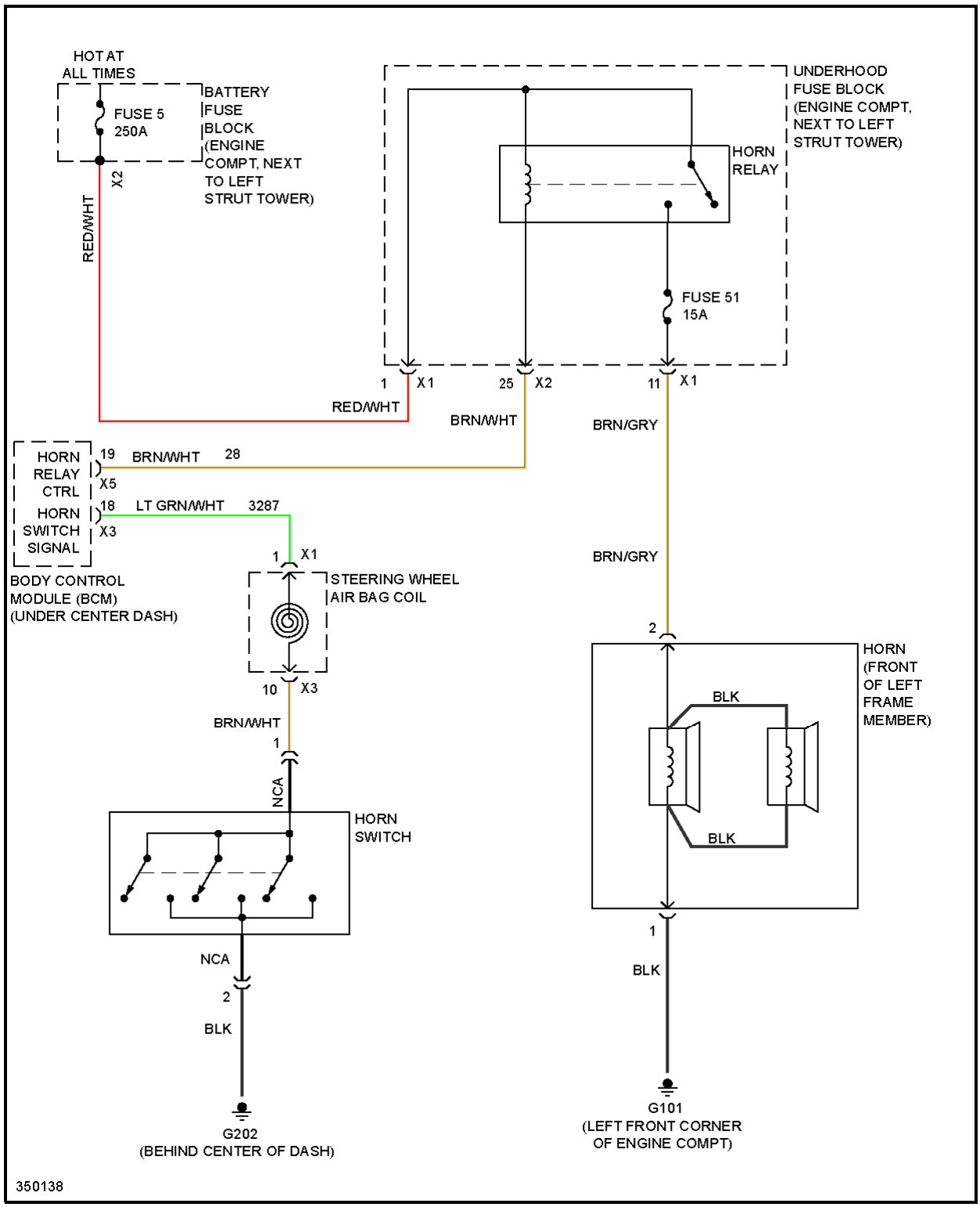

Fig. 35: Horn Circuit

INSTRUMENT CLUSTER

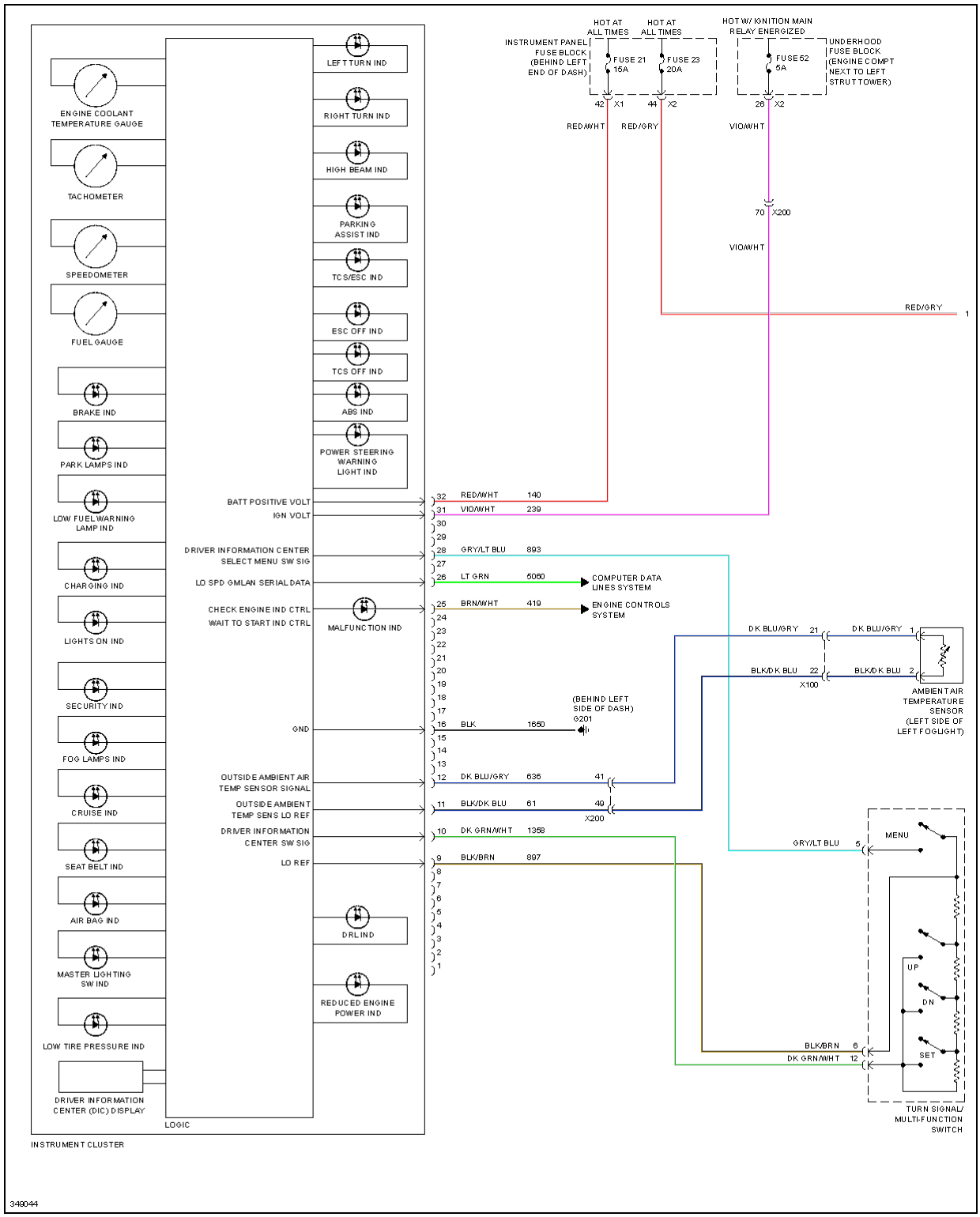

Fig. 36: Instrument Cluster Circuit (1 of 2)

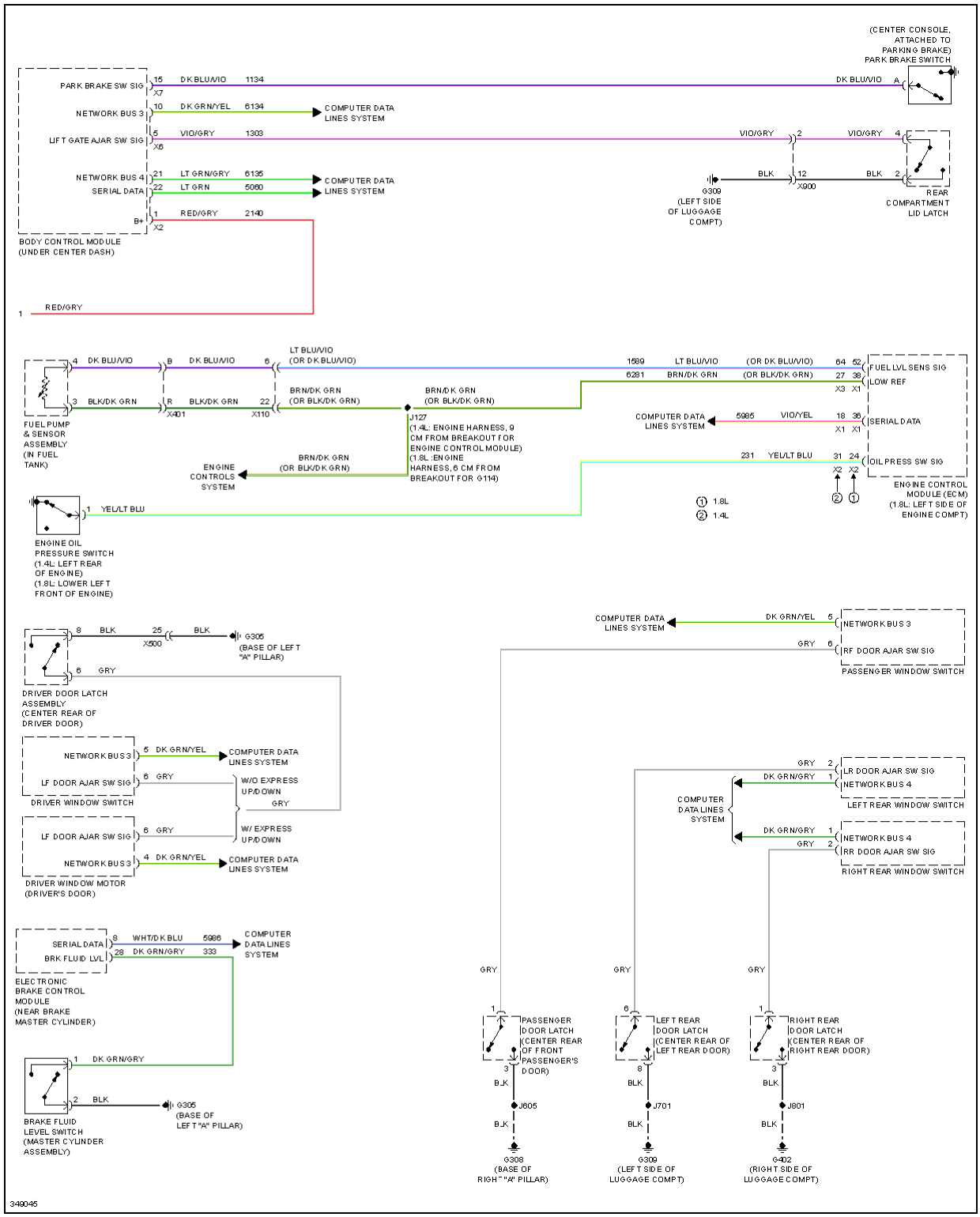

Fig. 37: Instrument Cluster Circuit (2 of 2)

INTERIOR LIGHTS

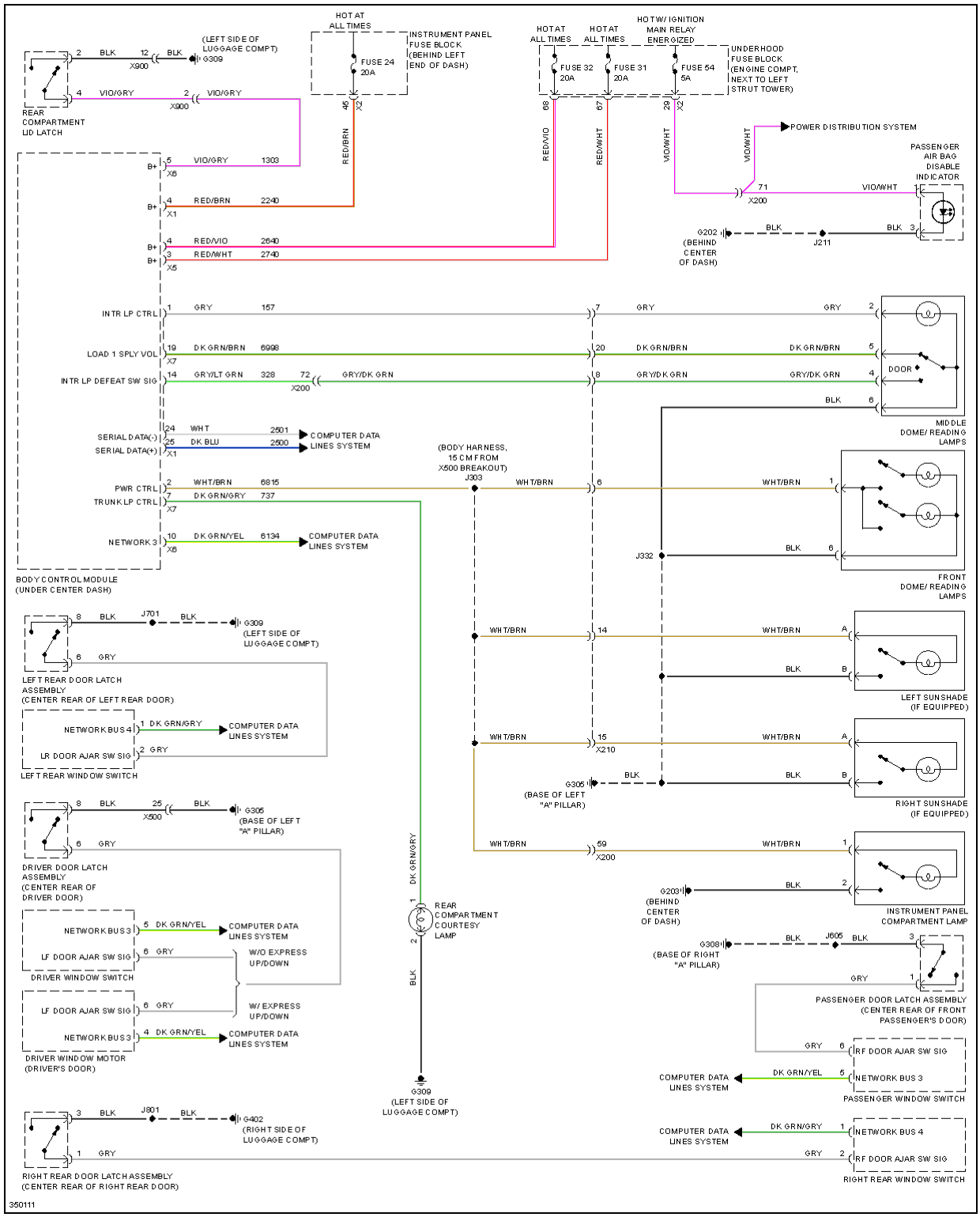

Fig. 38: Courtesy Lamps Circuit

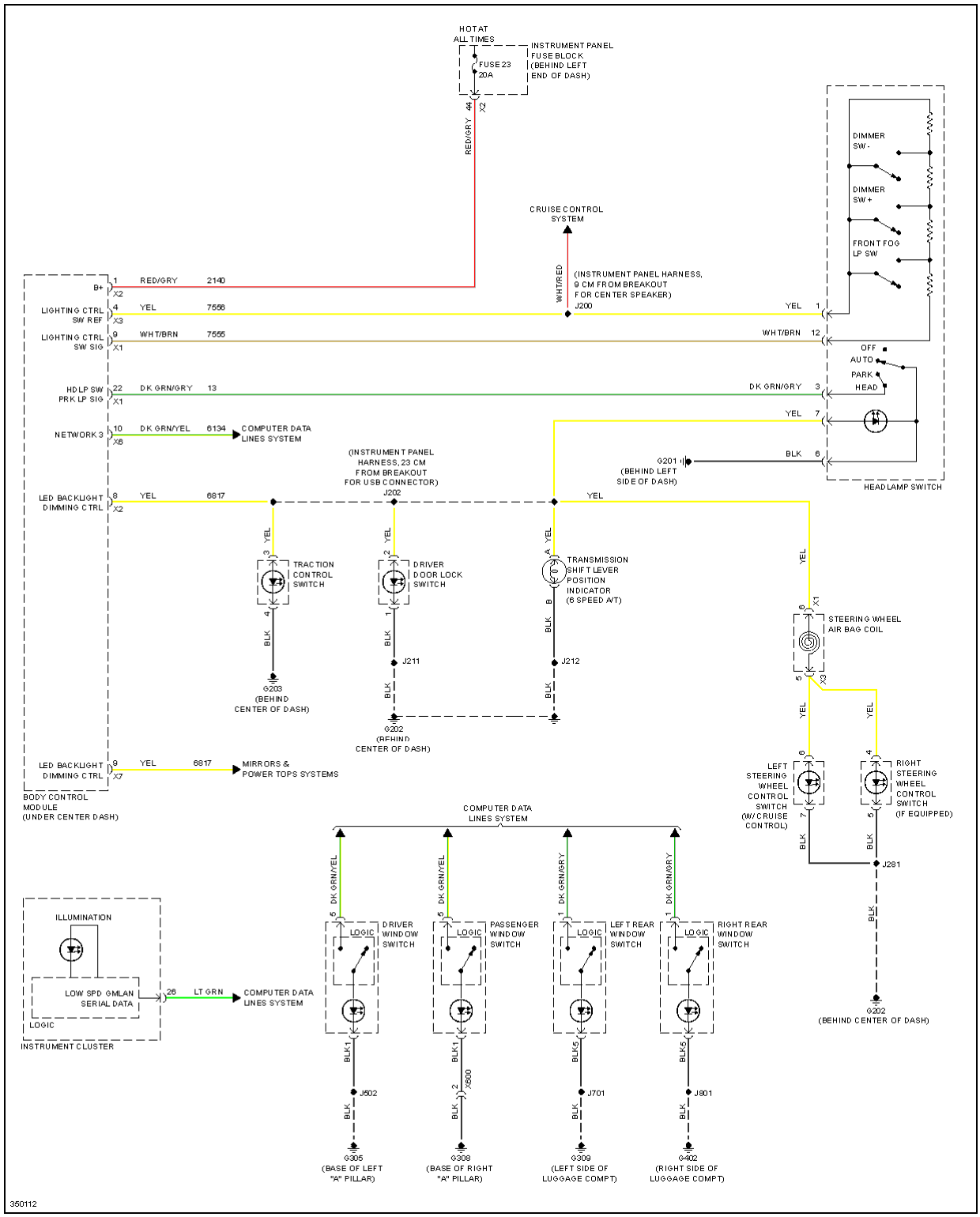

Fig. 39: Instrument Illumination Circuit

NAVIGATION

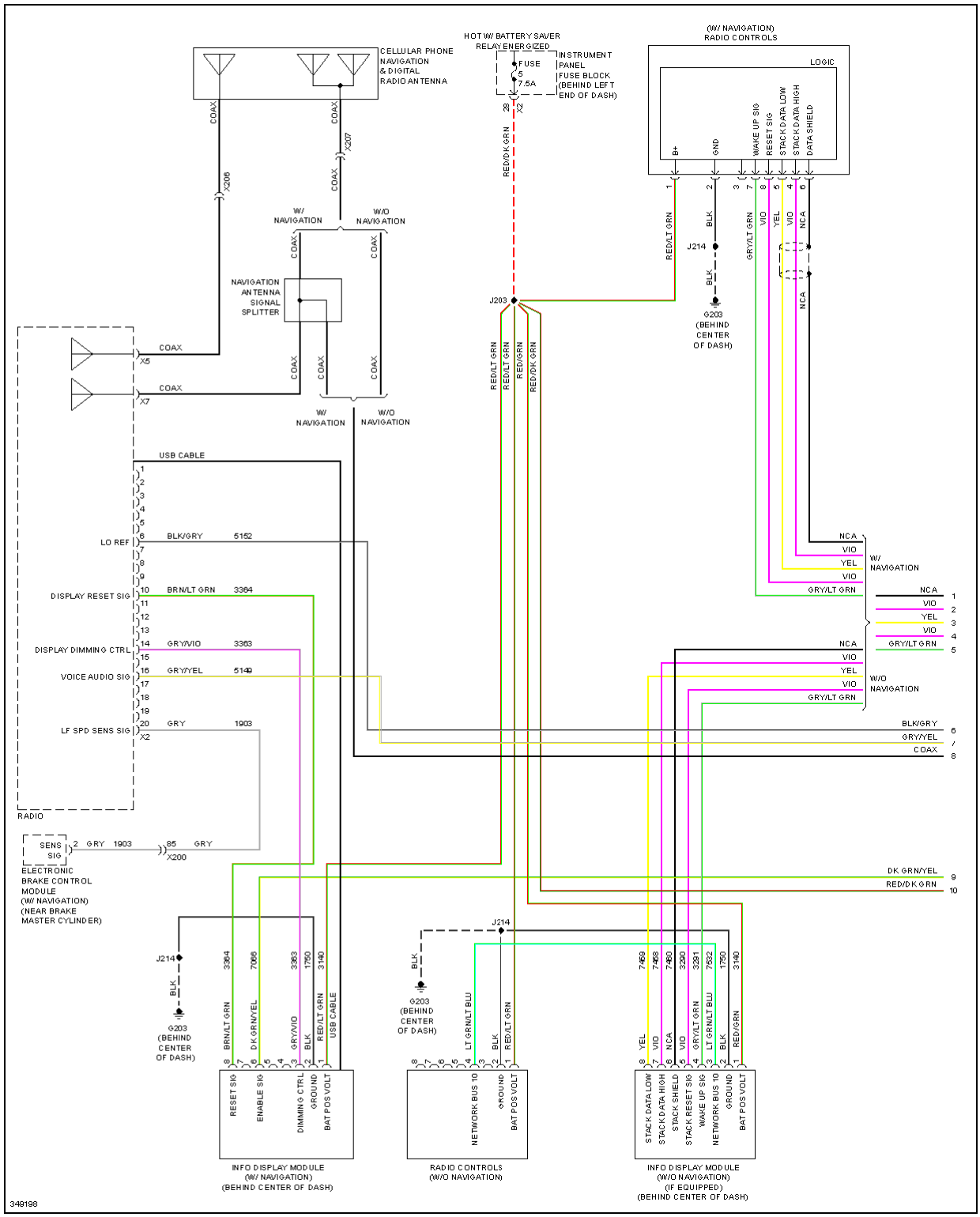

Fig. 40: Navigation Circuit, W/ Amplifier (1 of 3)

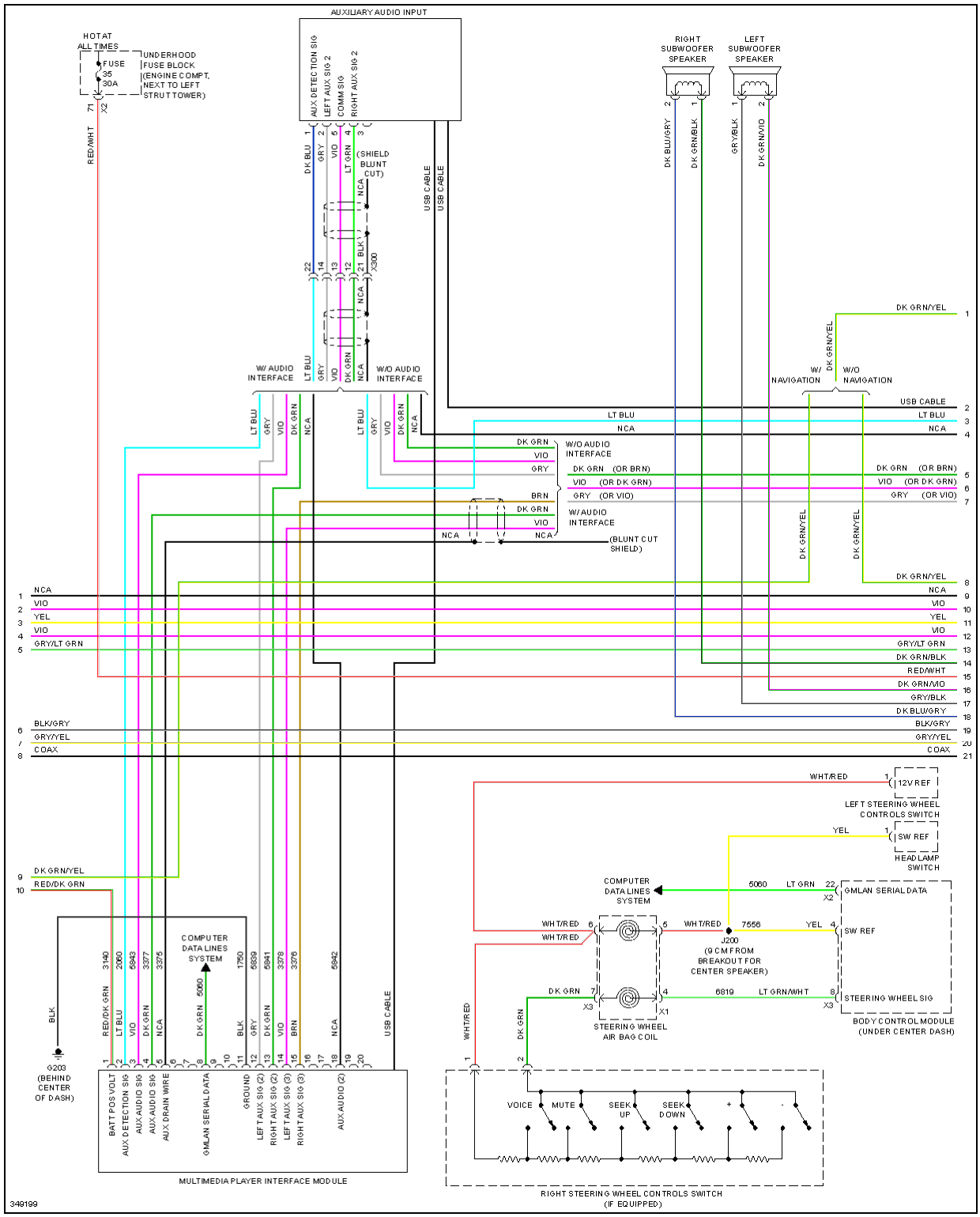

Fig. 41: Navigation Circuit, W/ Amplifier (2 of 3)

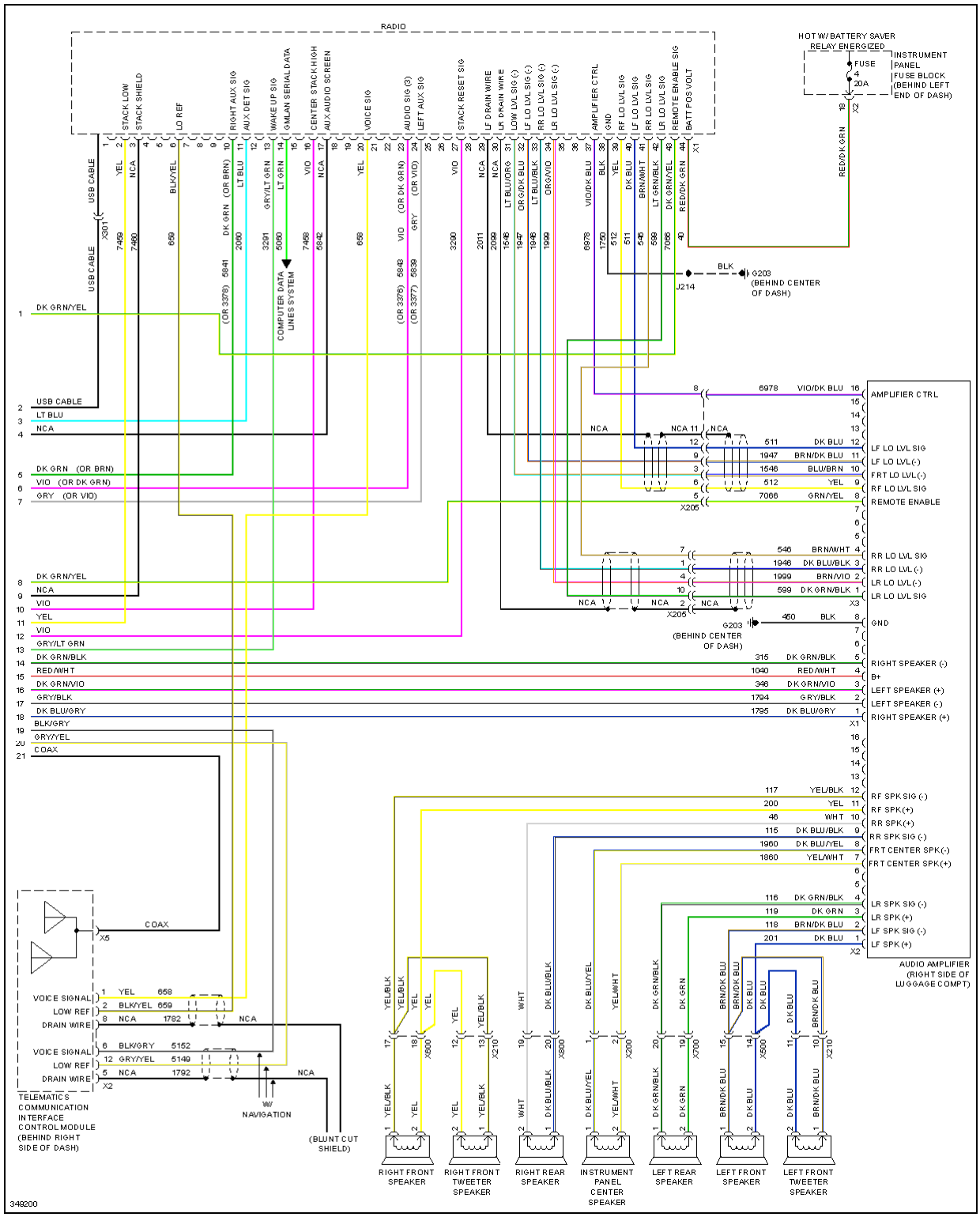

Fig. 42: Navigation Circuit, W/ Amplifier (3 of 3)

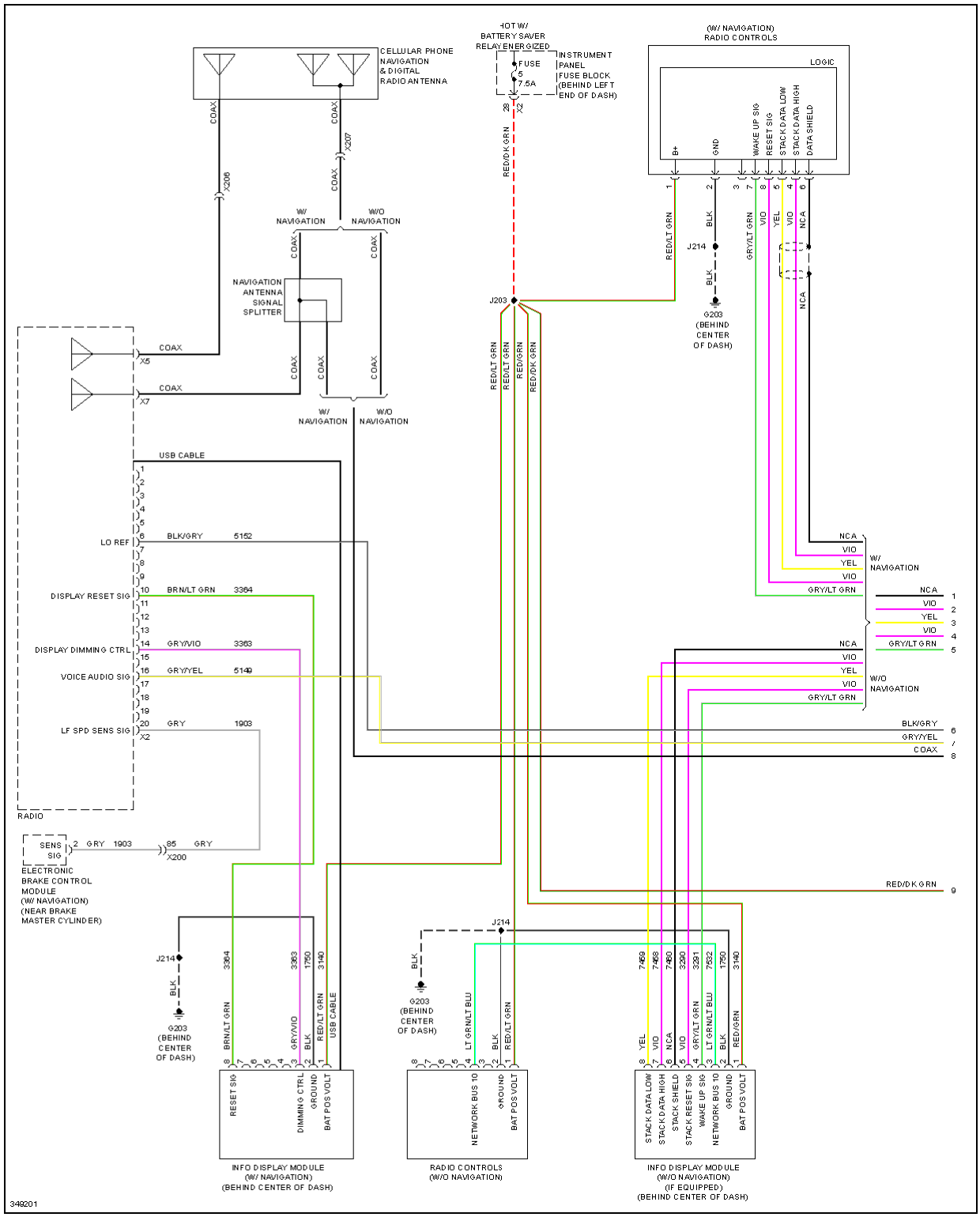

Fig. 43: Navigation Circuit, W/O Amplifier (1 of 3)

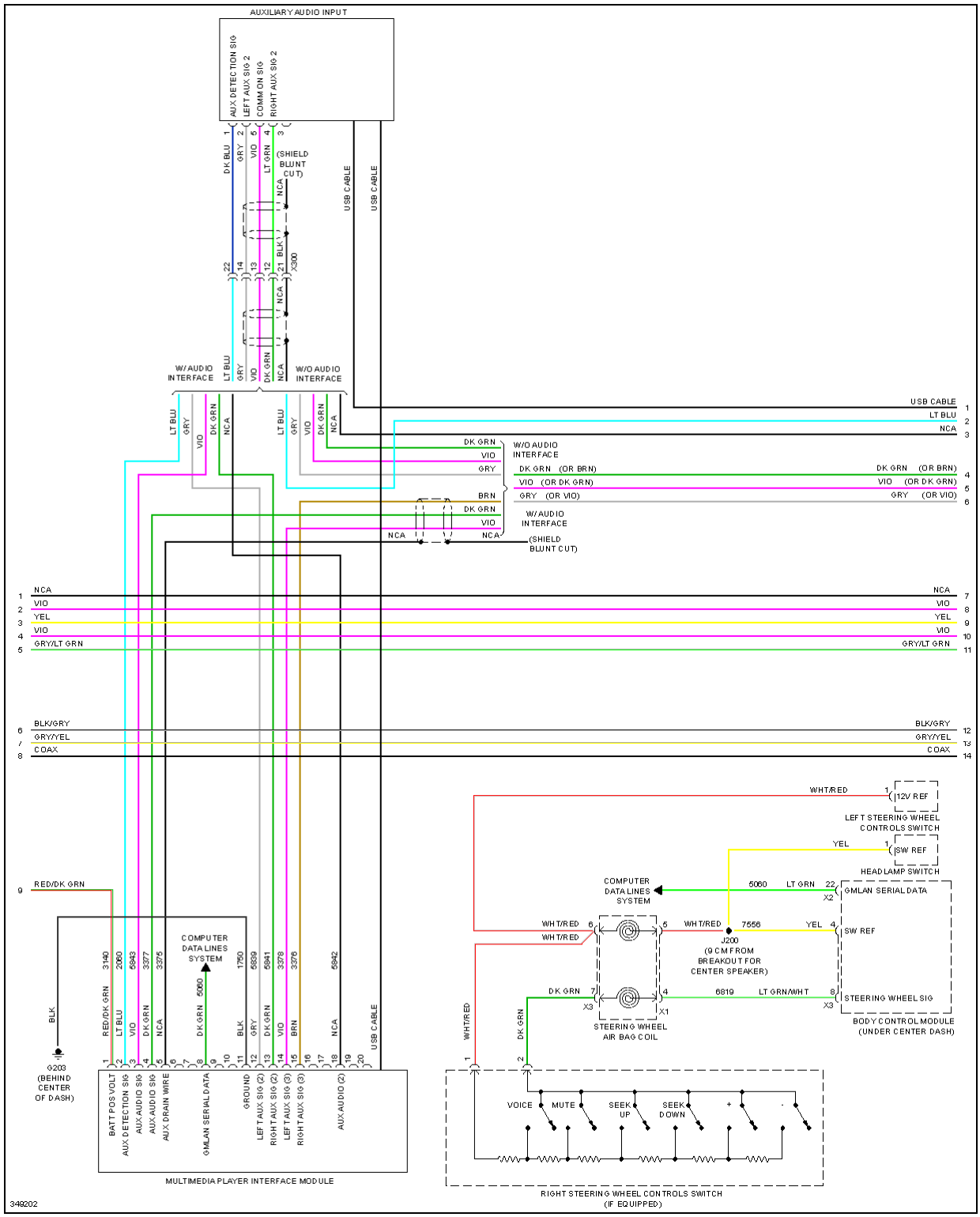

Fig. 44: Navigation Circuit, W/O Amplifier (2 of 3)

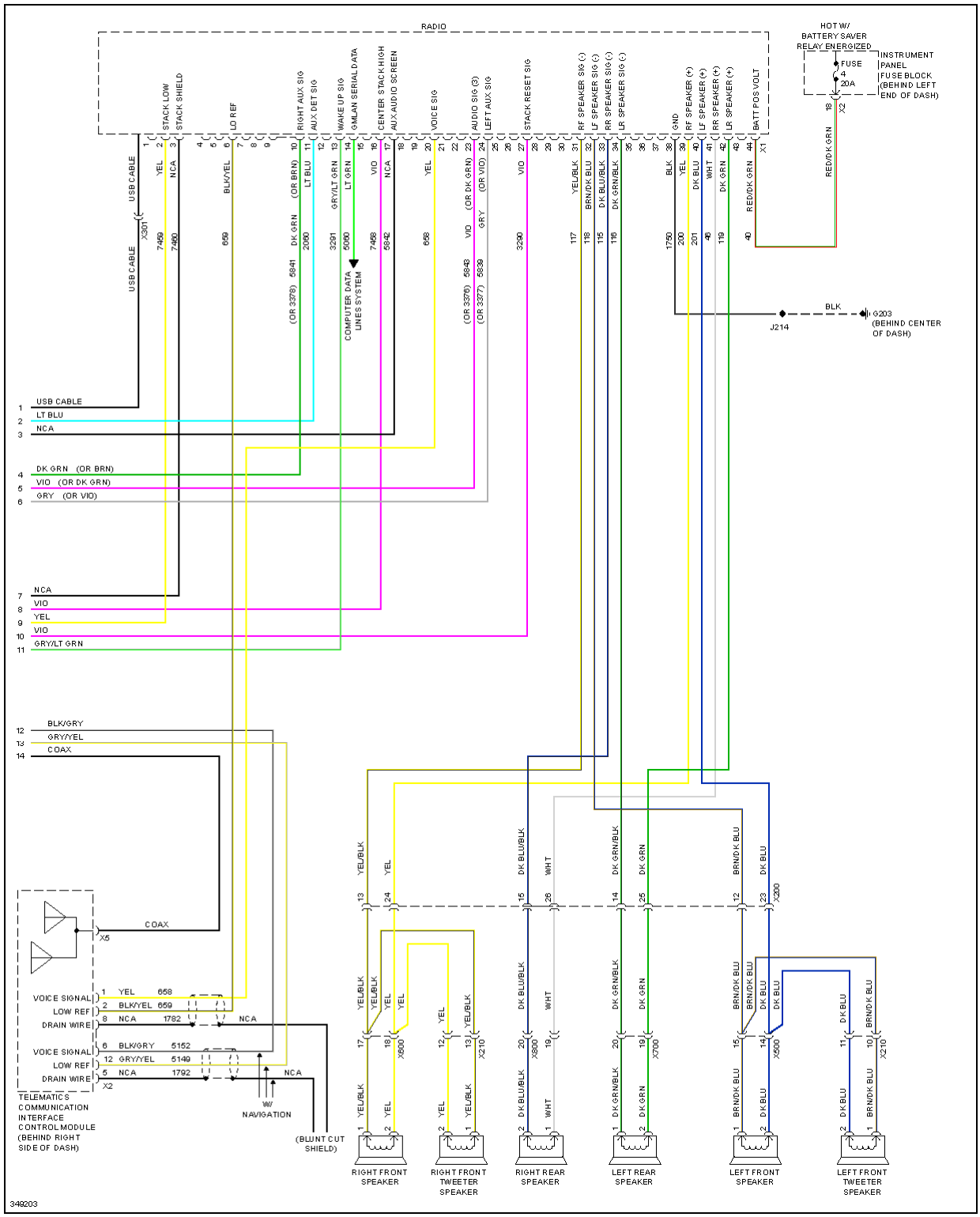

Fig. 45: Navigation Circuit, W/O Amplifier (3 of 3)

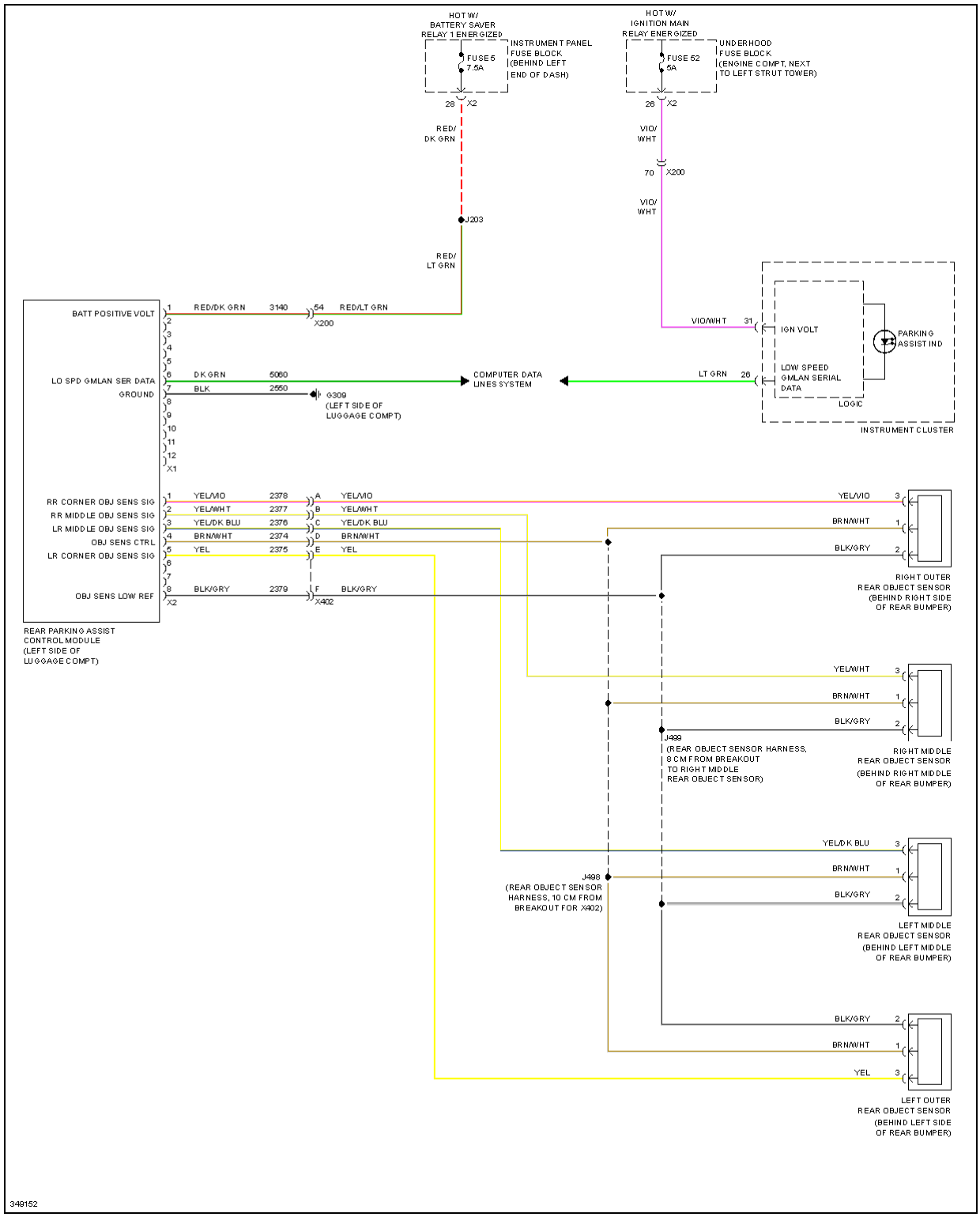

Fig. 46: Parking Assistant Circuit

POWER DISTRIBUTION

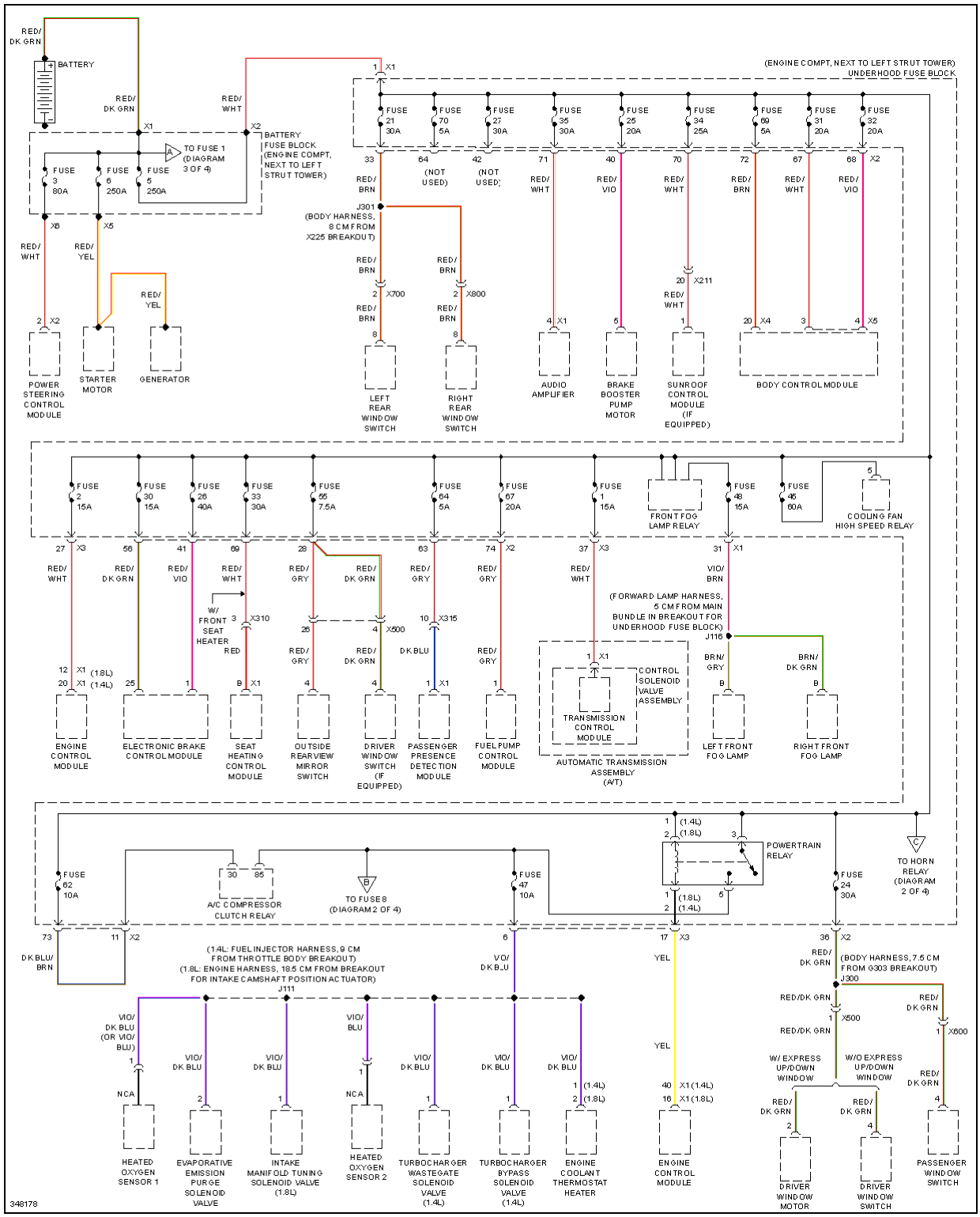

Fig. 47: Power Distribution Circuit (1 of 4)

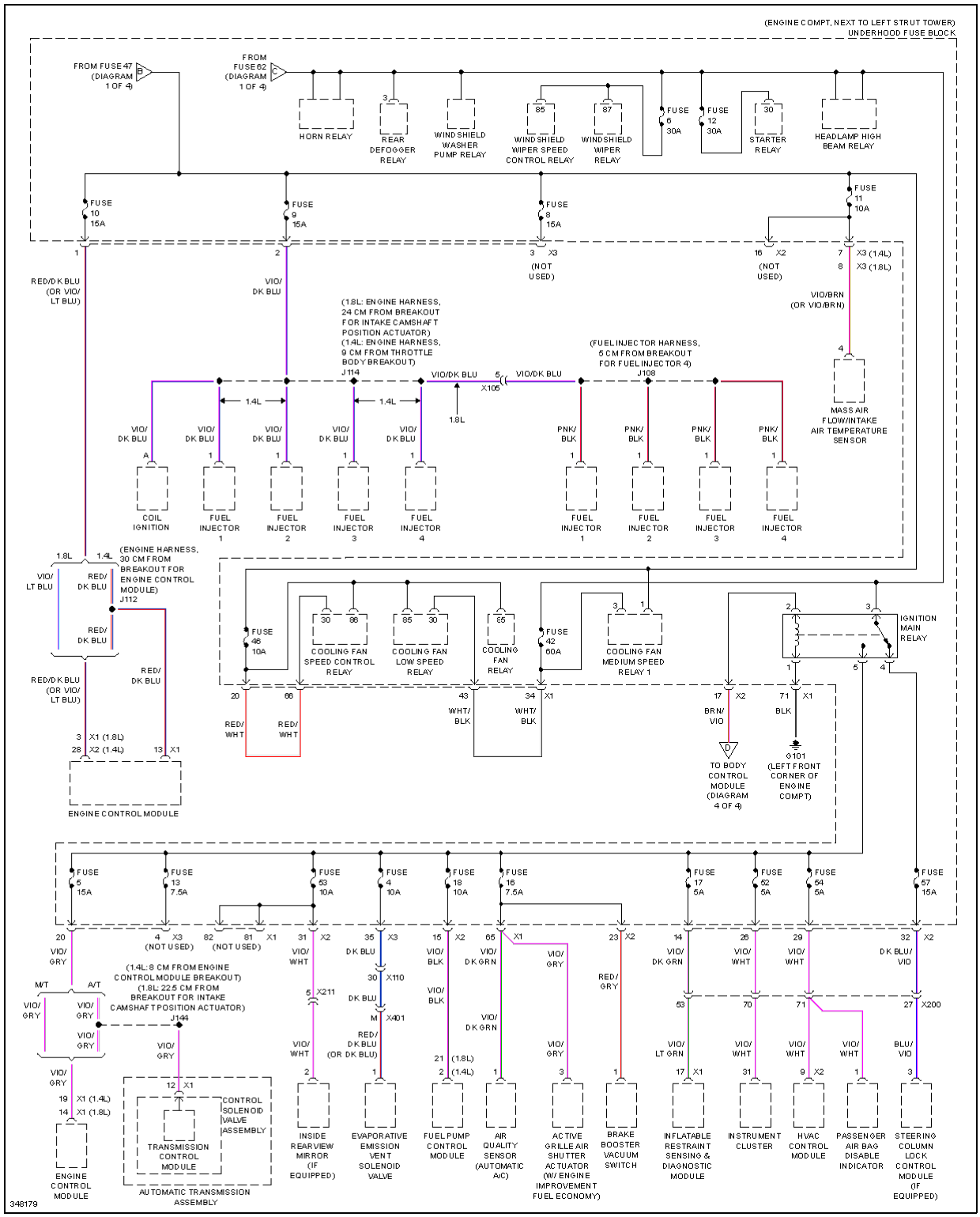

Fig. 48: Power Distribution Circuit (2 of 4)

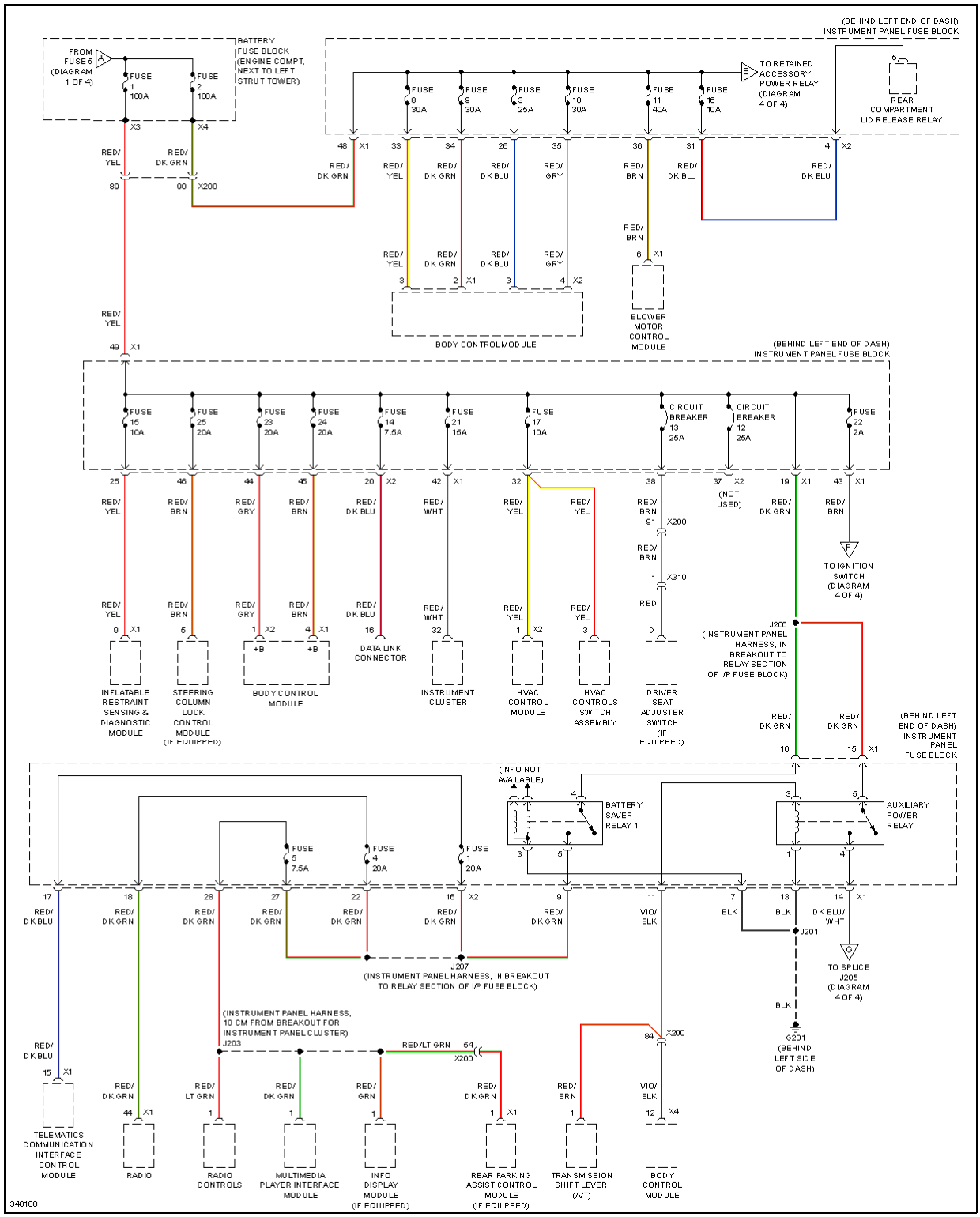

Fig. 49: Power Distribution Circuit (3 of 4)

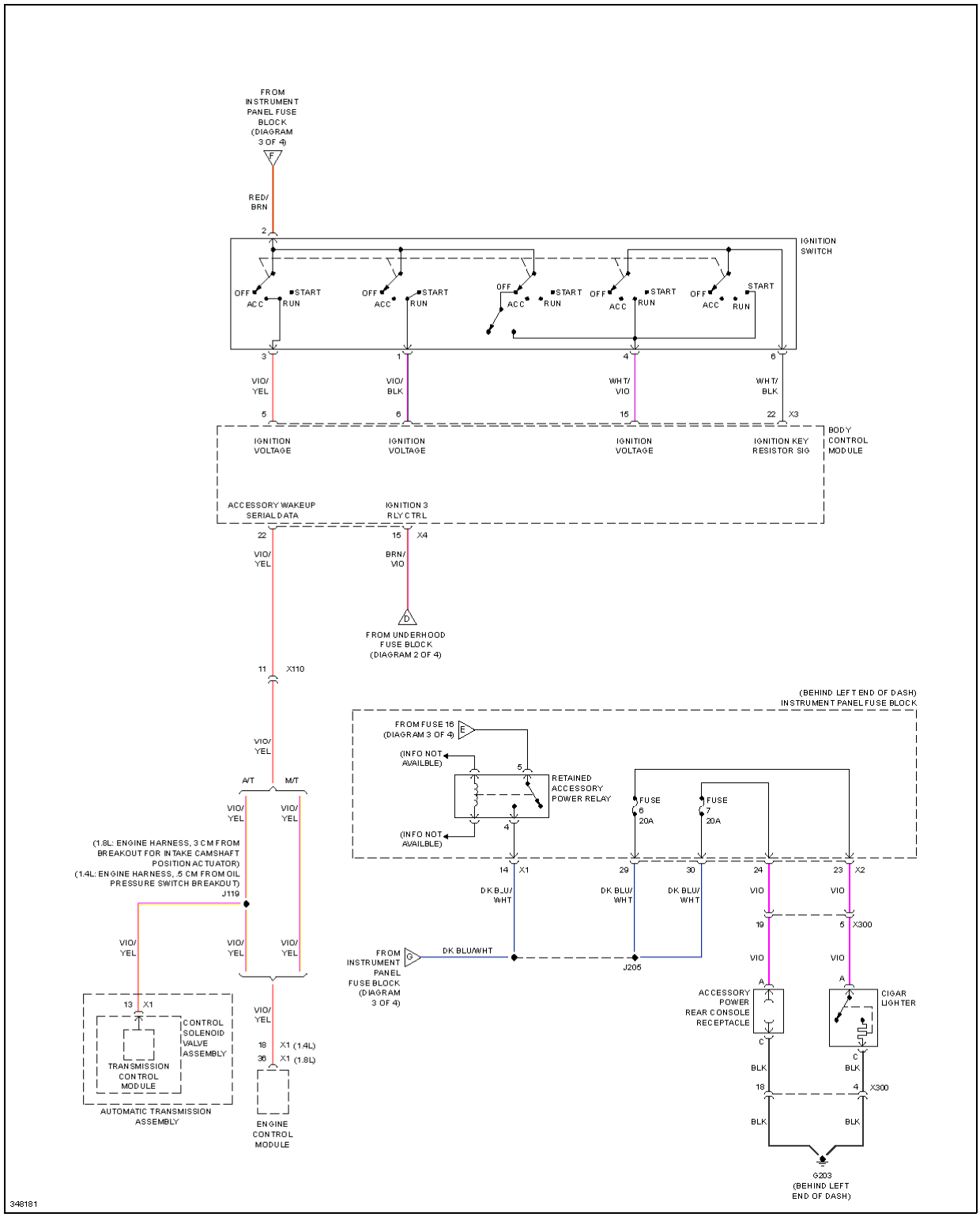

Fig. 50: Power Distribution Circuit (4 of 4)

POWER DOOR LOCKS

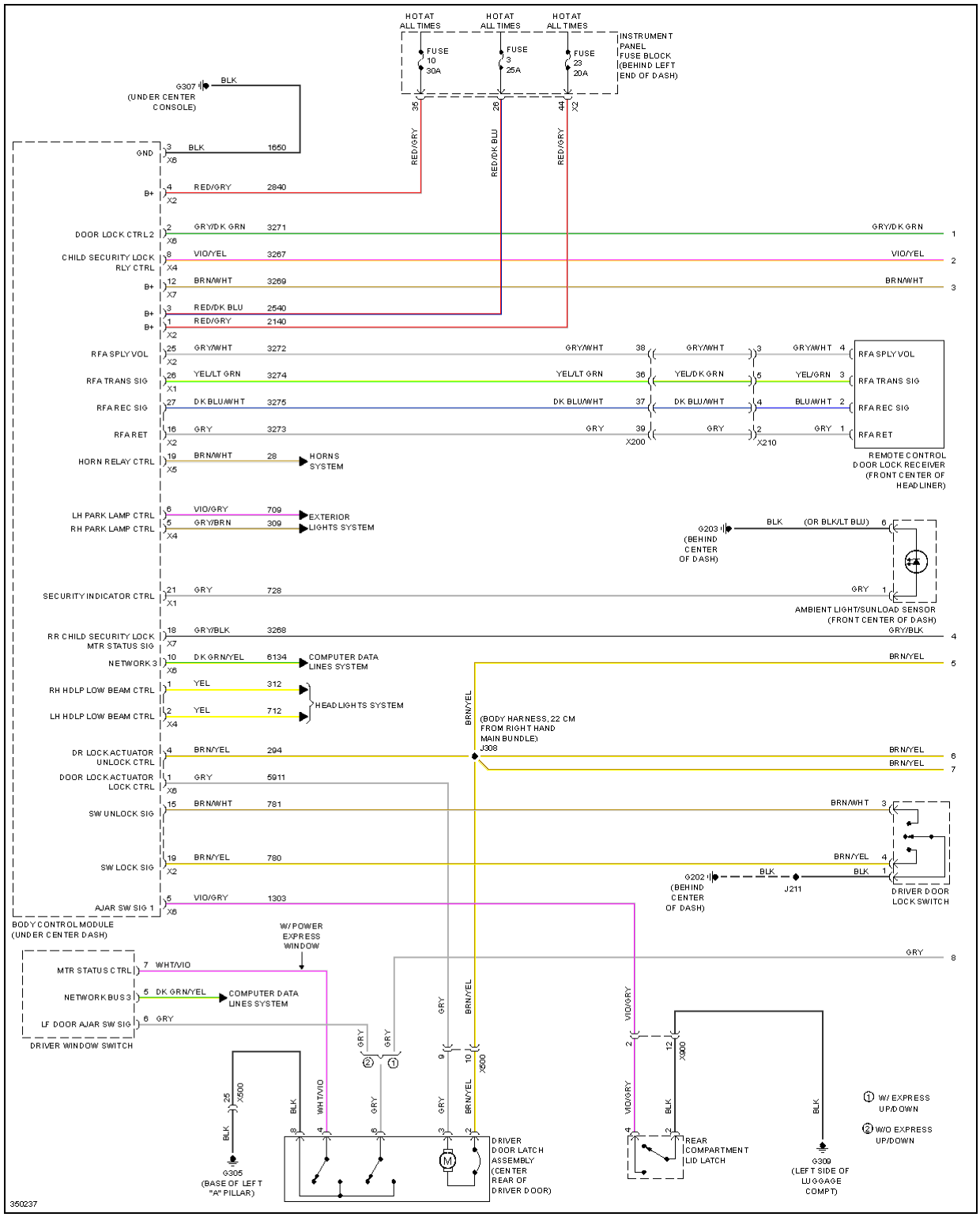

Fig. 51: Power Door Locks Circuit (1 of 2)

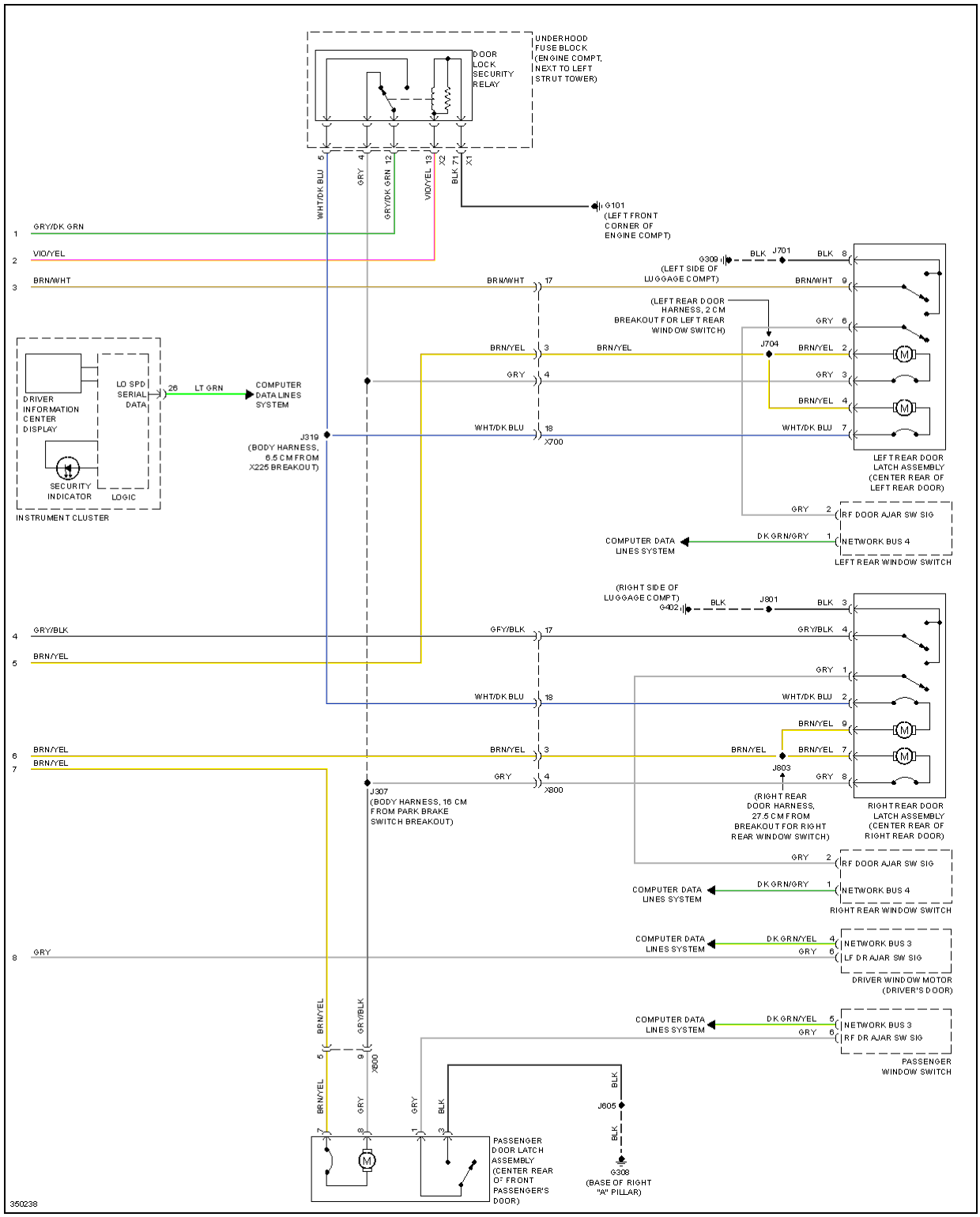

Fig. 52: Power Door Locks Circuit (2 of 2)

POWER MIRRORS

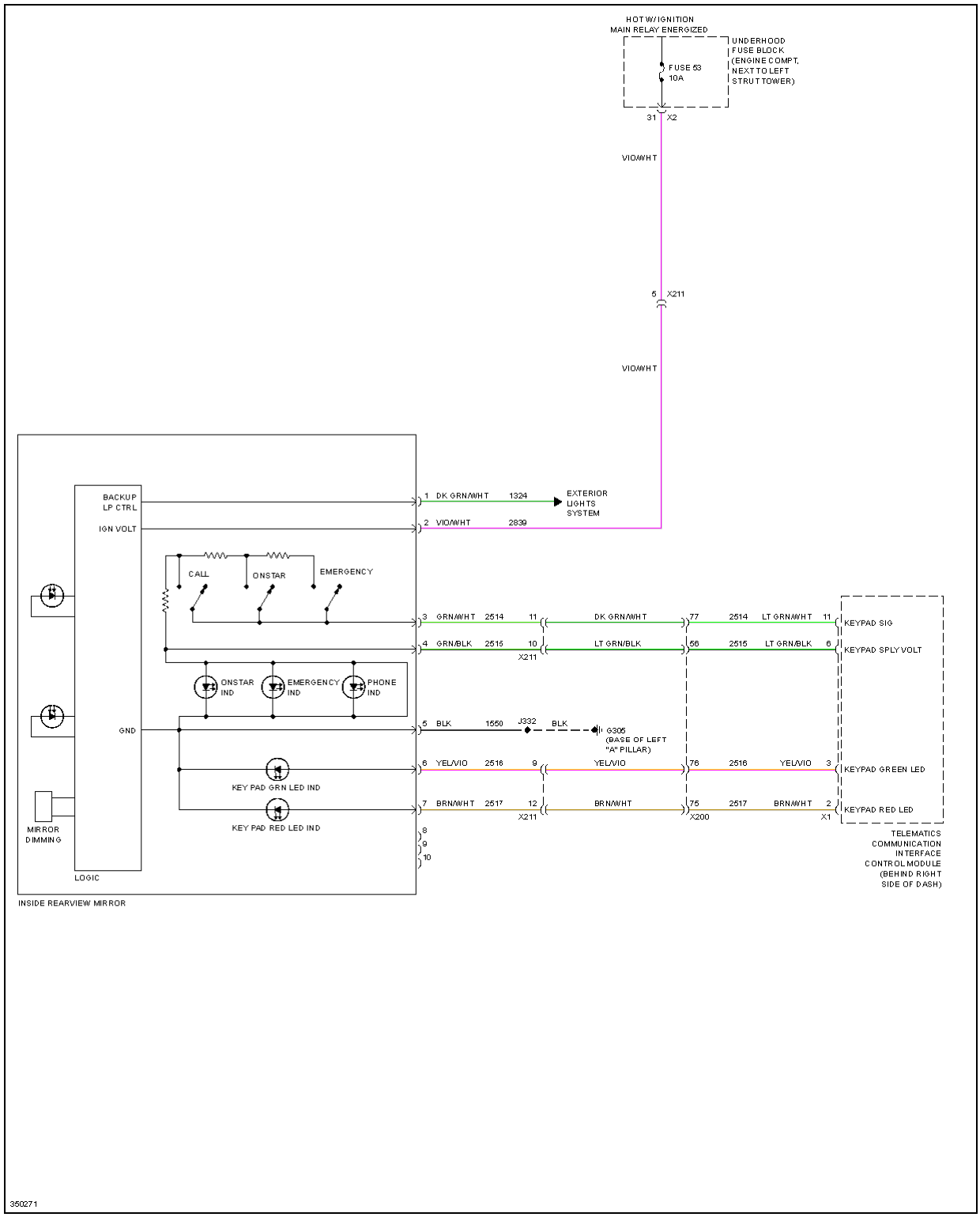

Fig. 53: Electrochromic Mirror Circuit

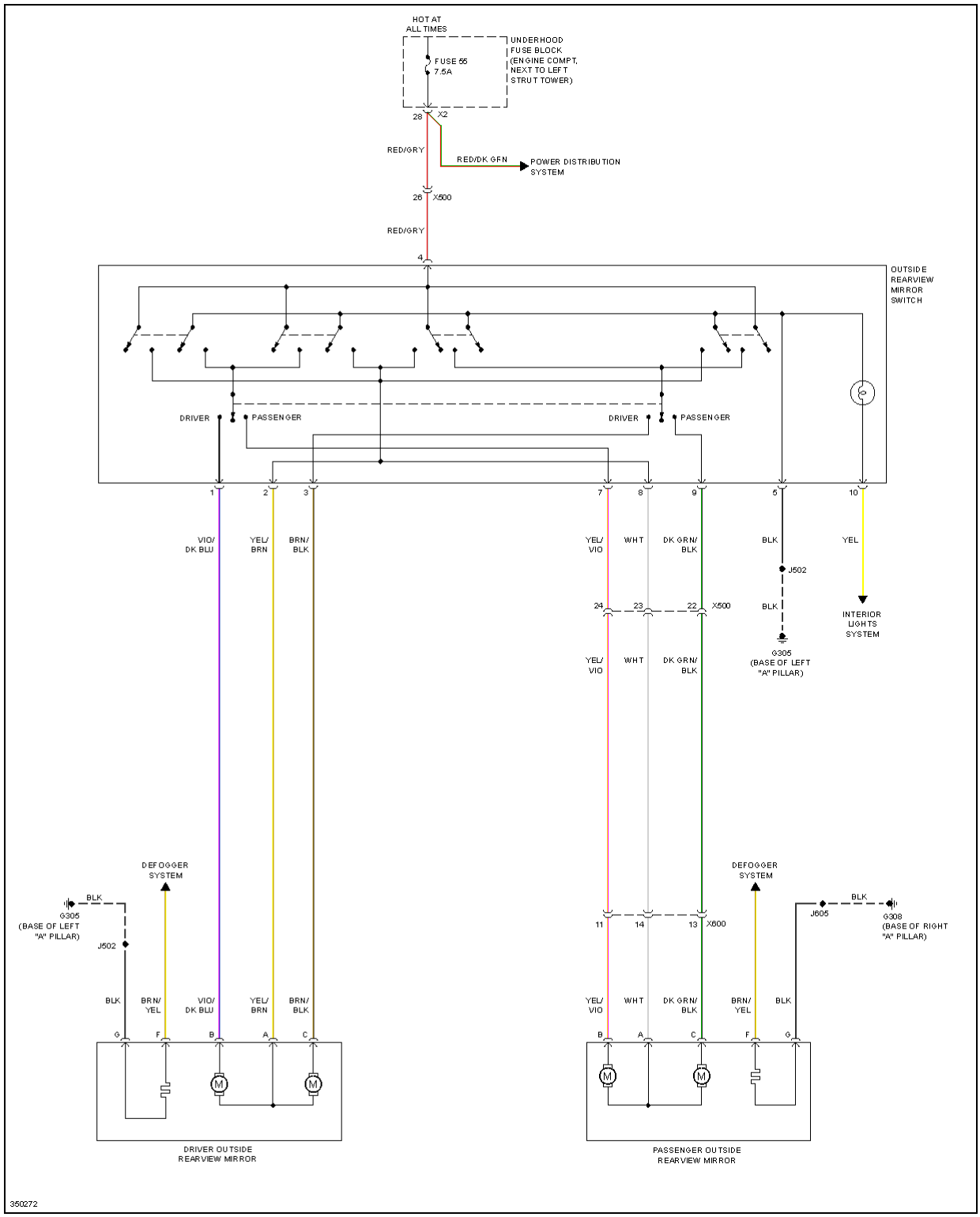

Fig. 54: Power Mirrors Circuit

POWER SEATS

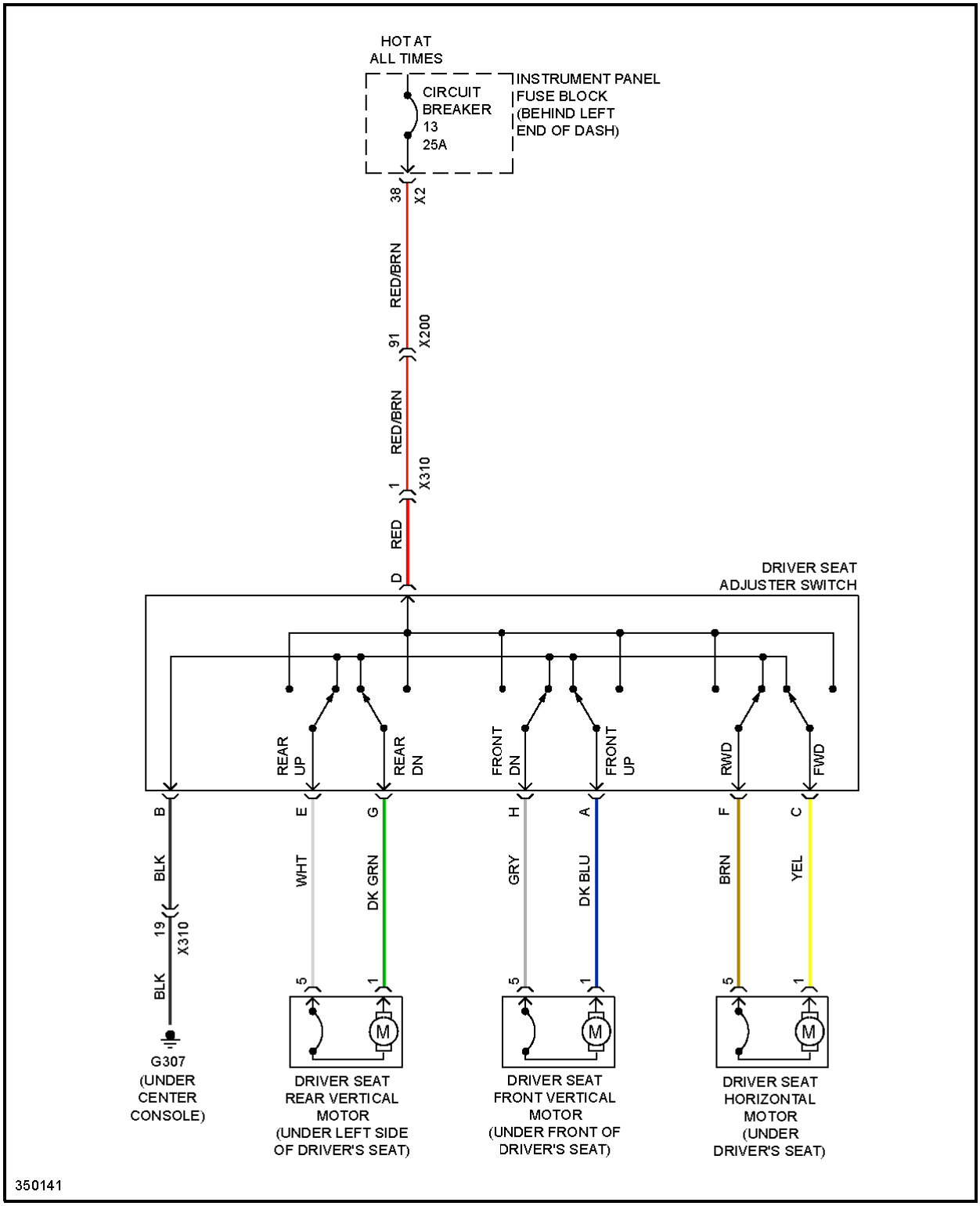

Fig. 55: Driver Power Seat Circuit

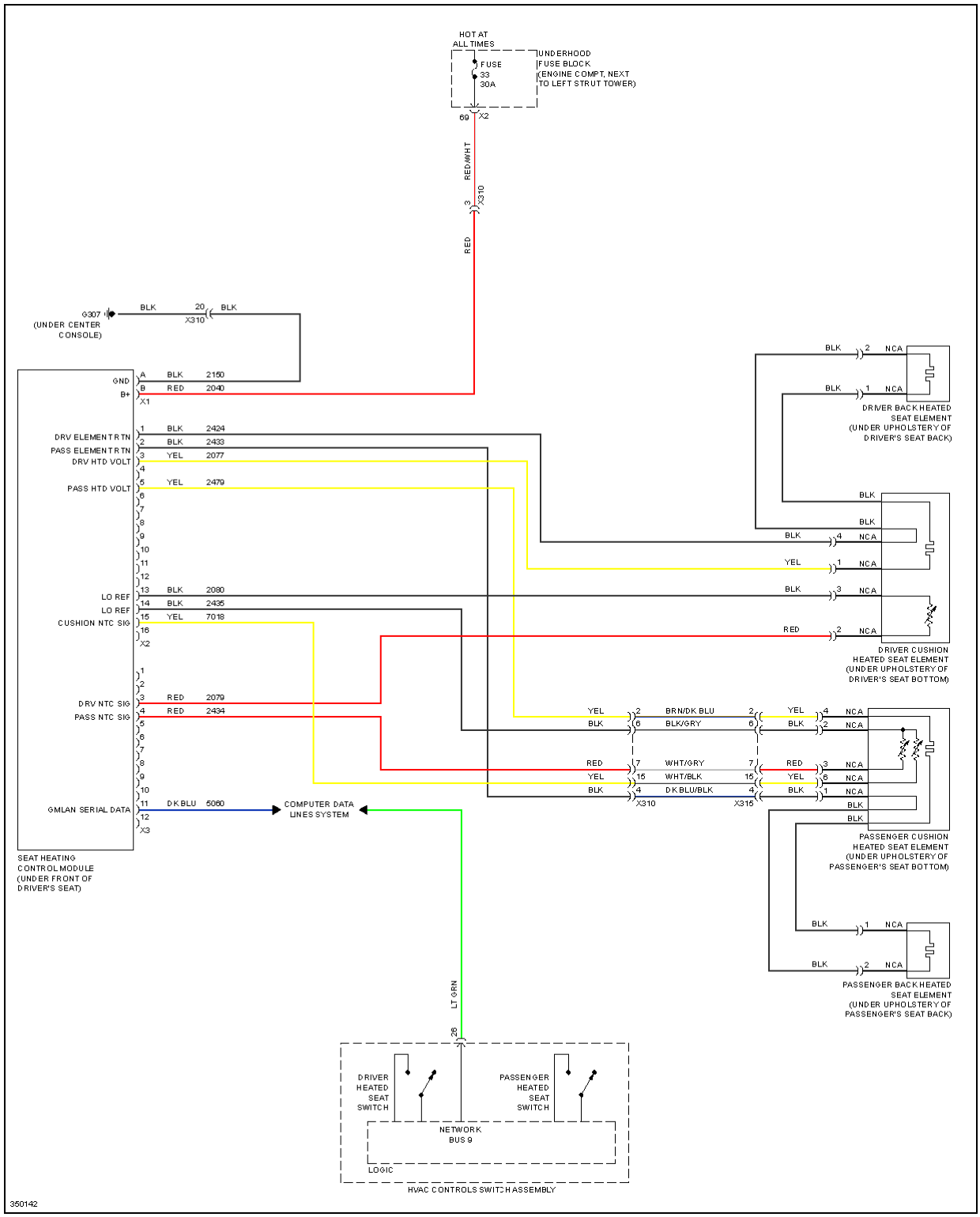

Fig. 56: Heated Seats Circuit

POWER TOP/SUNROOF

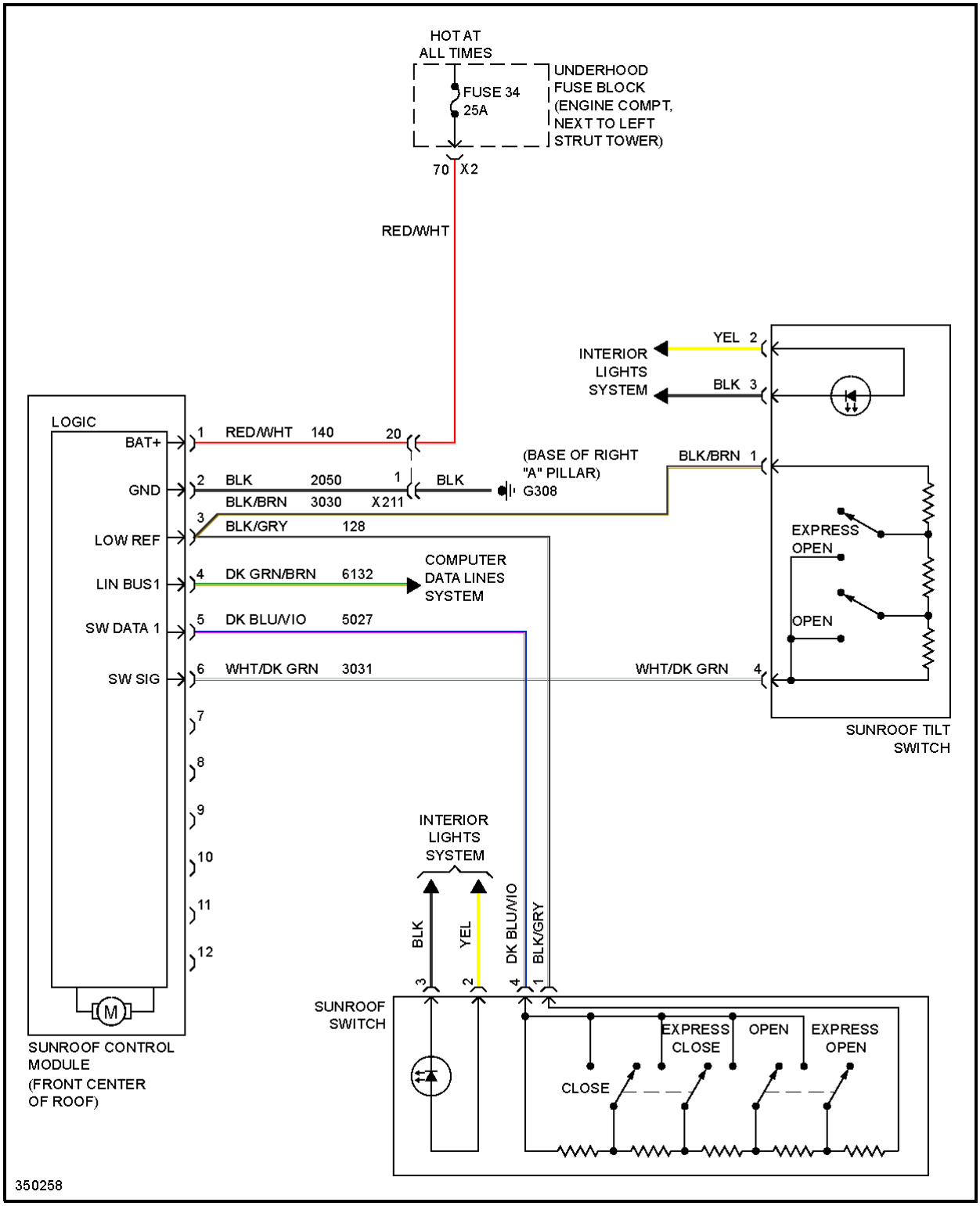

Fig. 57: Power Top/Sunroof Circuit

POWER WINDOWS

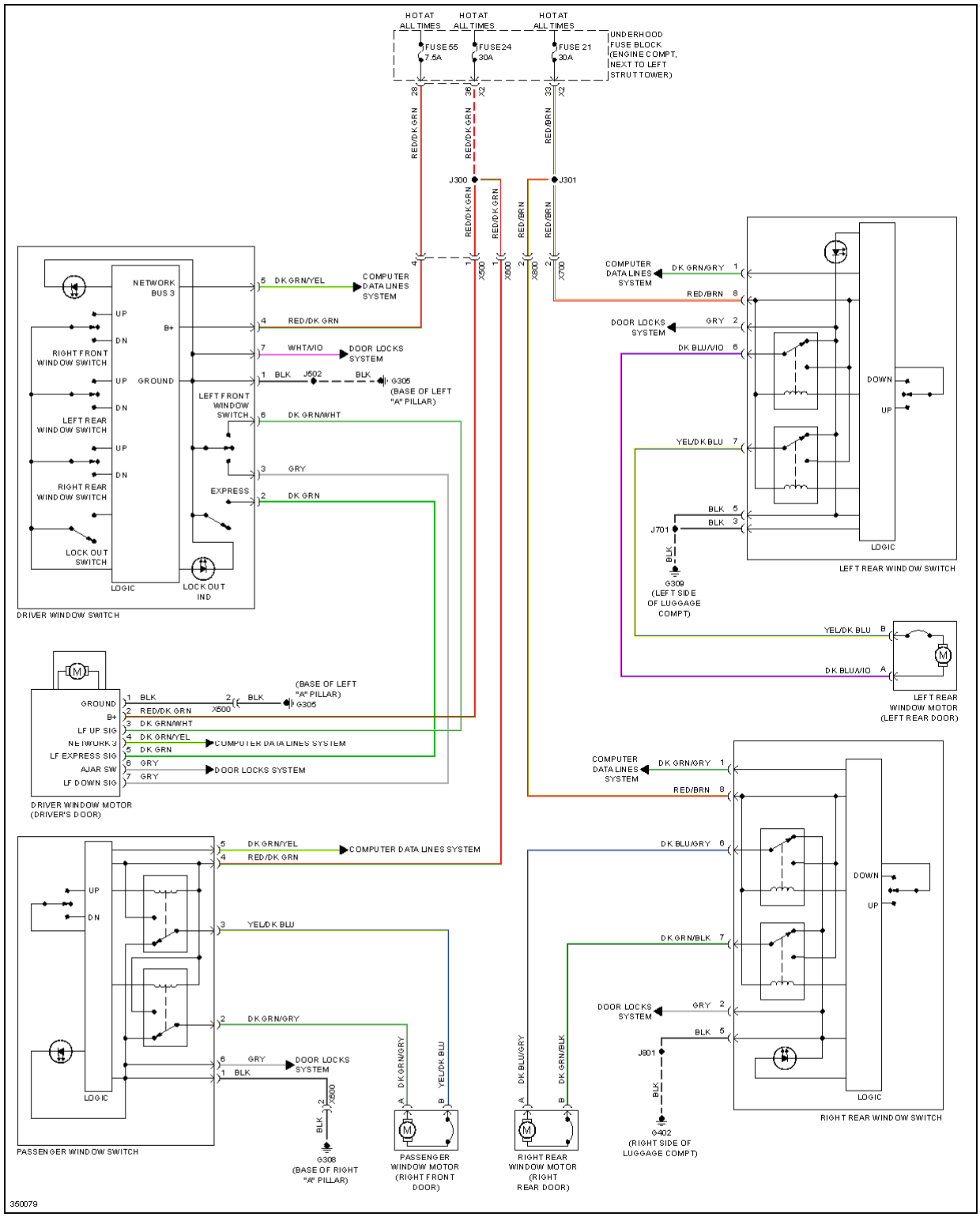

Fig. 58: Power Windows Circuit, W/ Express Up/Down

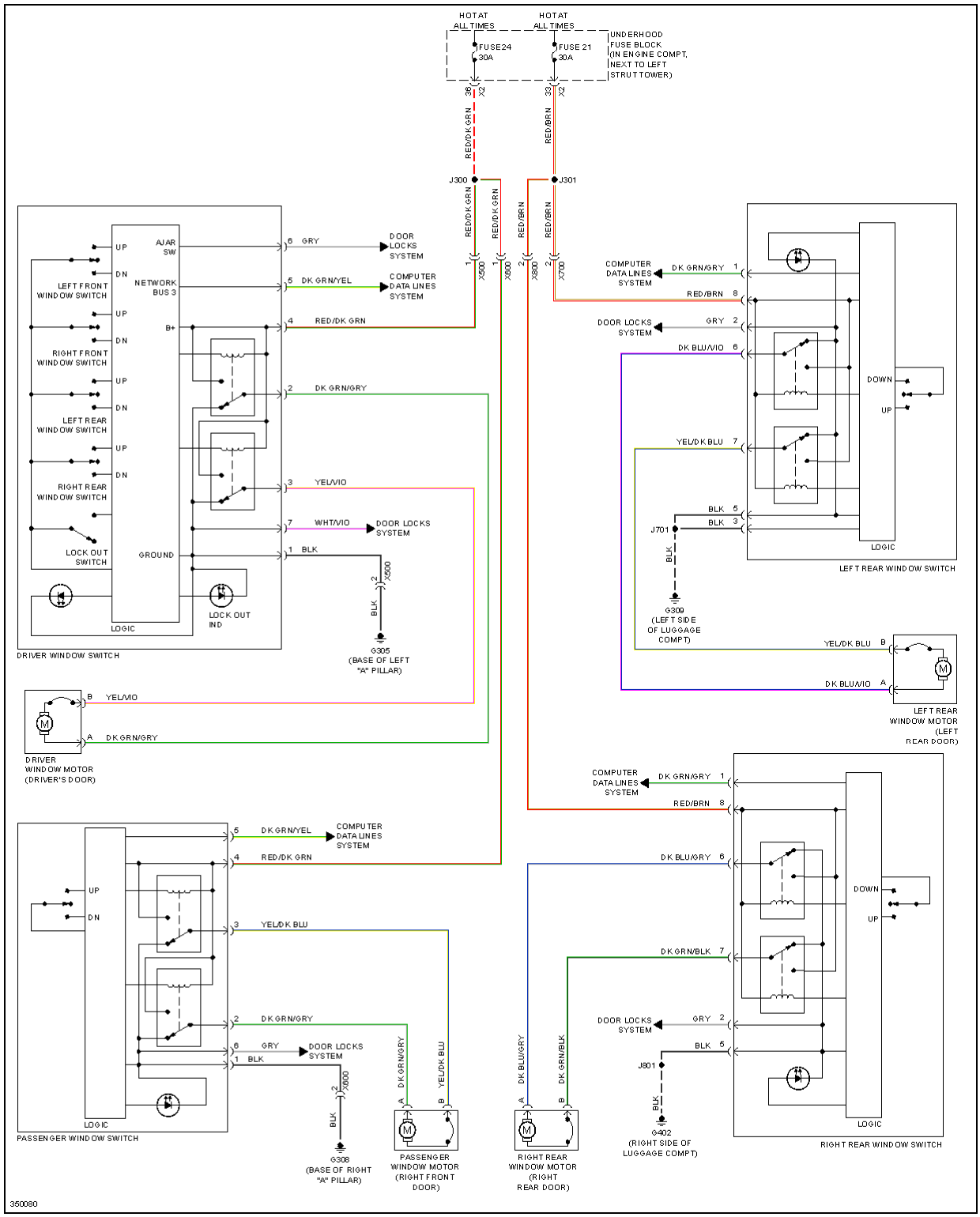

Fig. 59: Power Windows Circuit, W/O Express Up/Down

RADIO

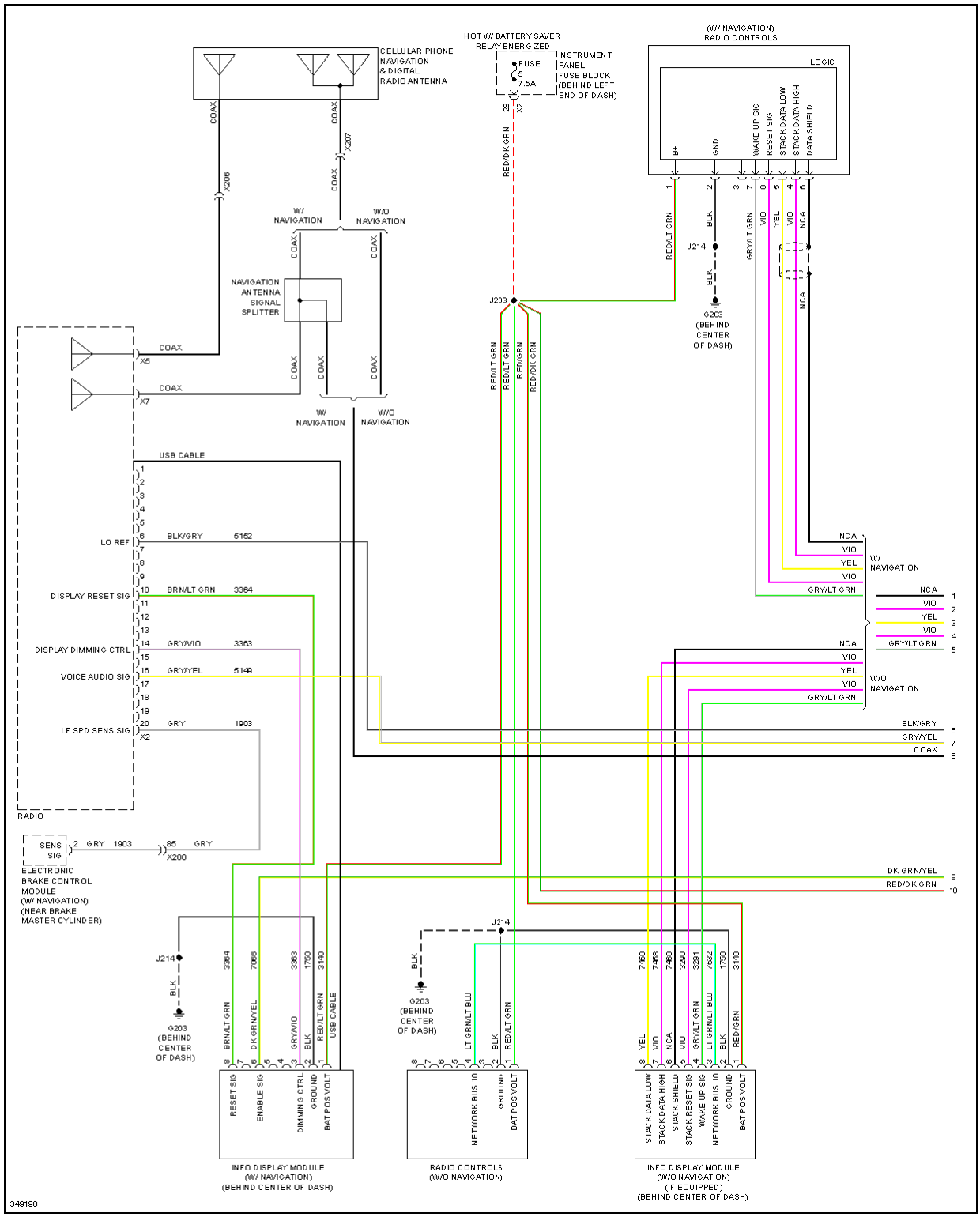

Fig. 60: Radio Circuit, W/ Amplifier (1 of 3)

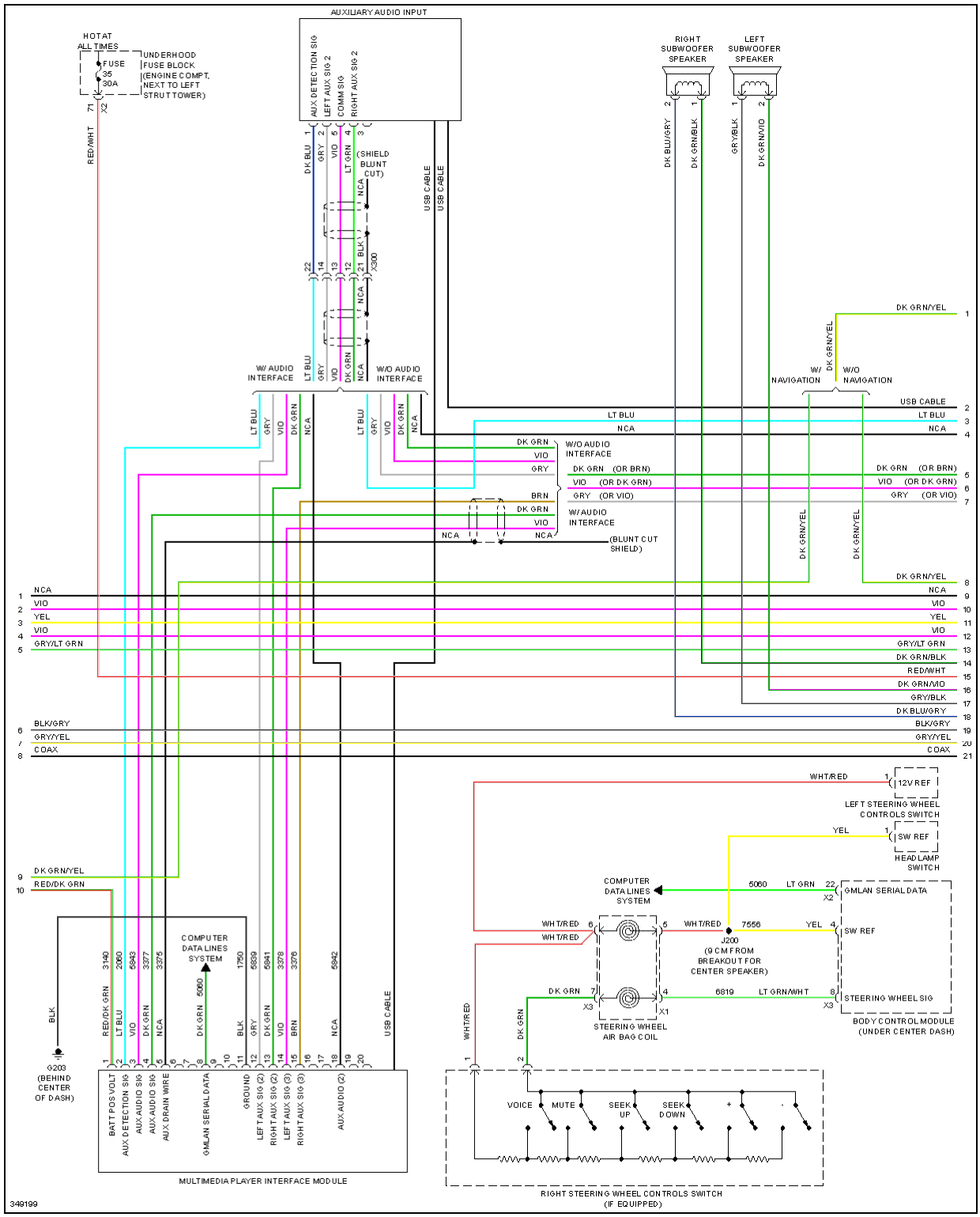

Fig. 61: Radio Circuit, W/ Amplifier (2 of 3)

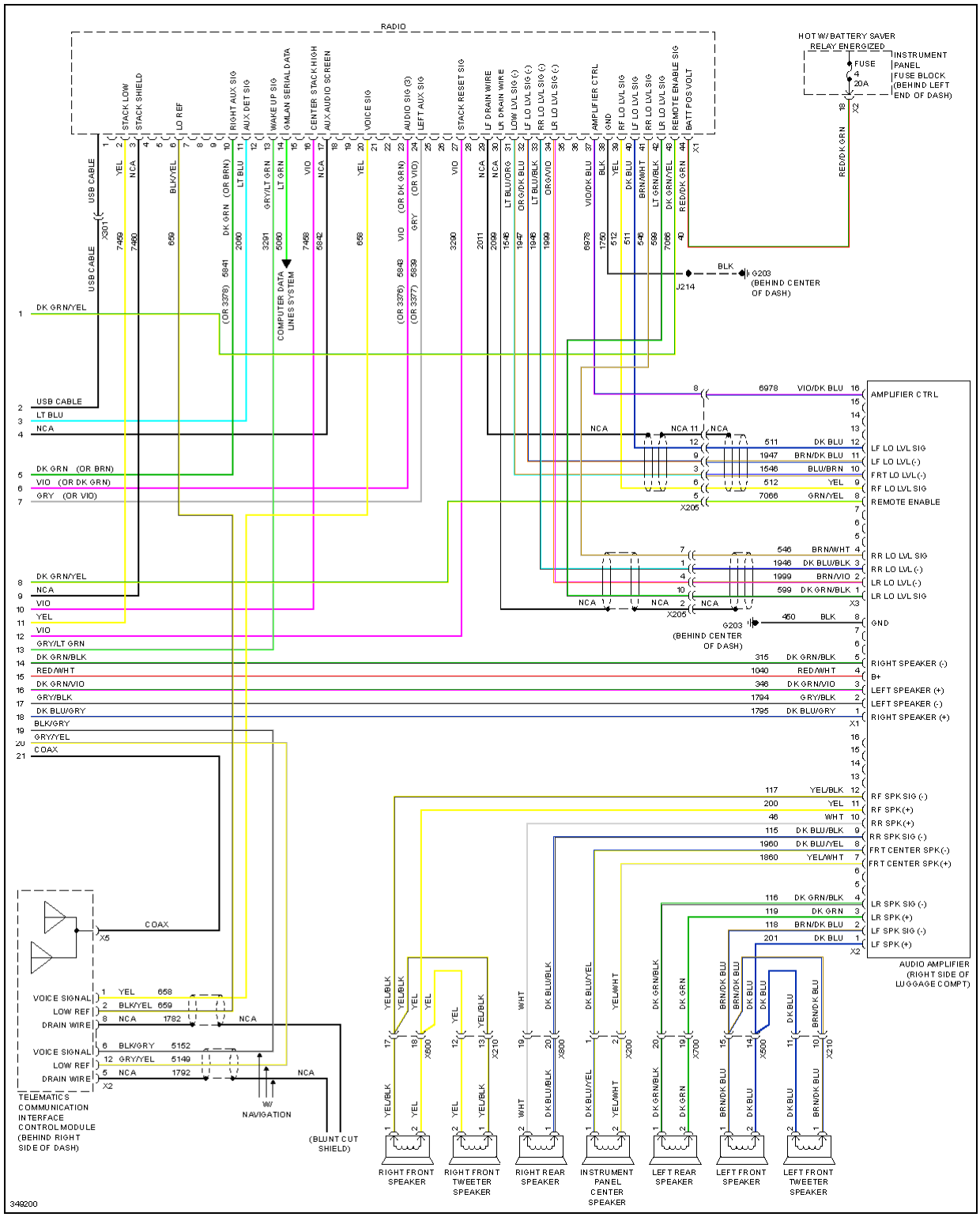

Fig. 62: Radio Circuit, W/ Amplifier (3 of 3)

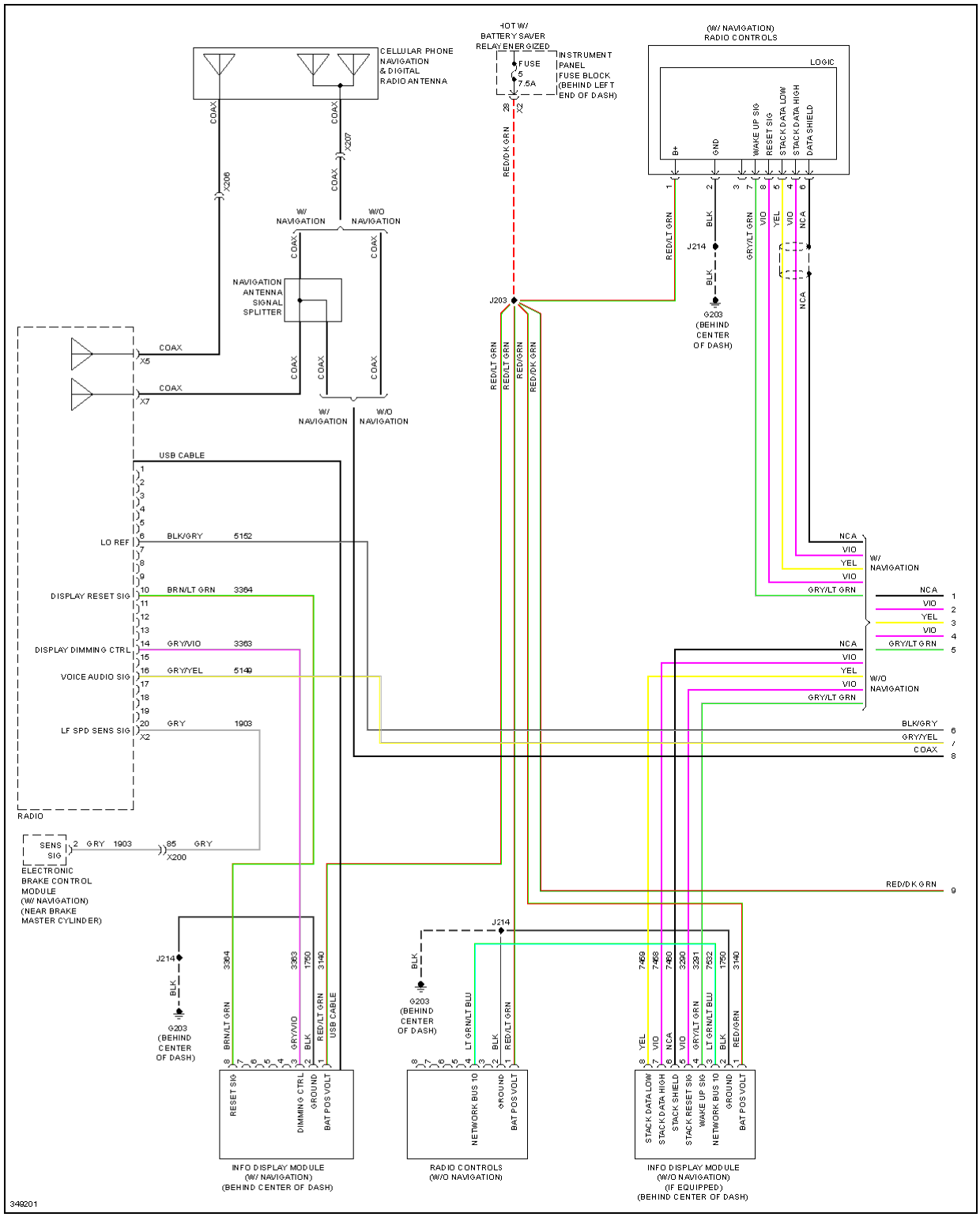

Fig. 63: Radio Circuit, W/O Amplifier (1 of 3)

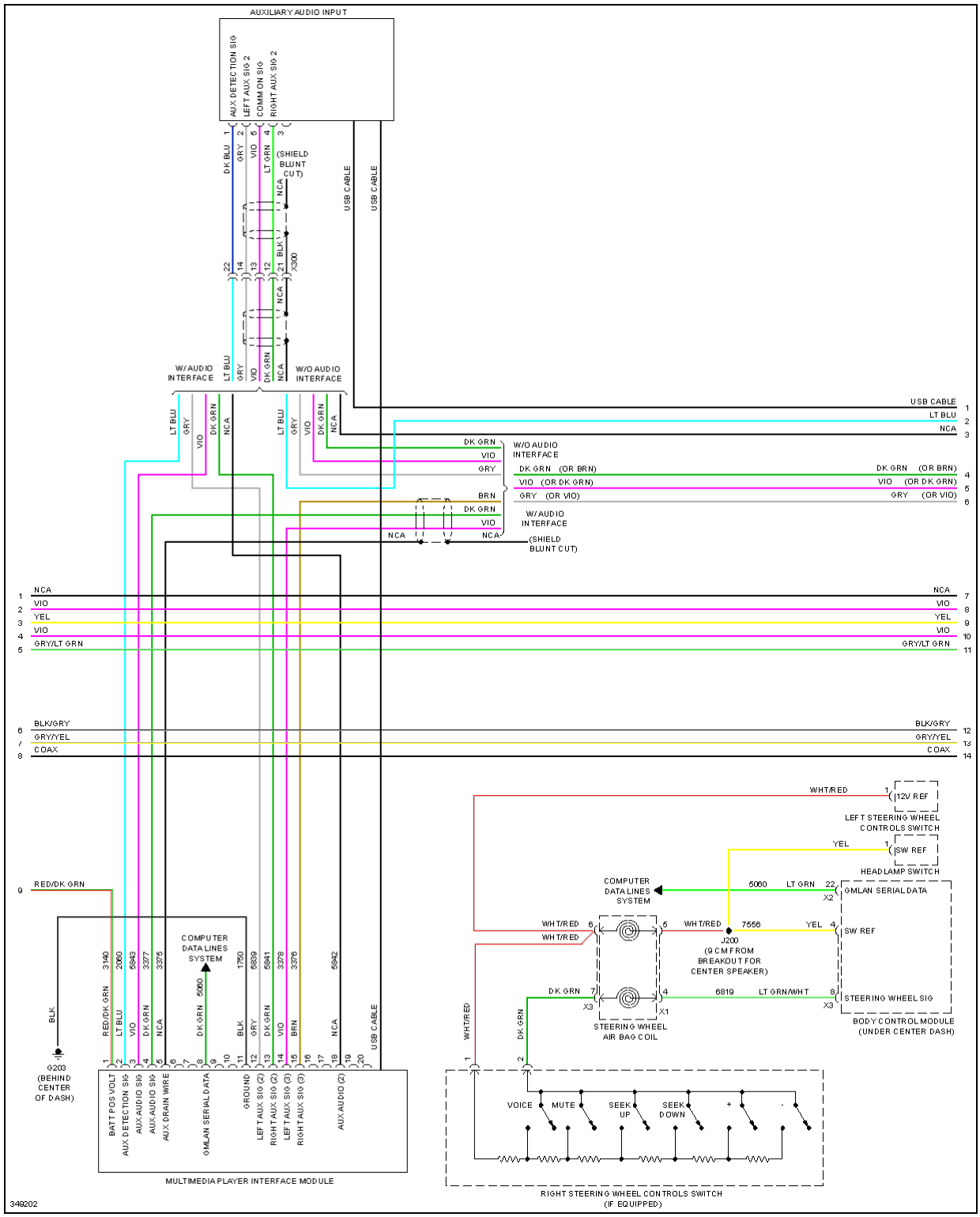

Fig. 64: Radio Circuit, W/O Amplifier (2 of 3)

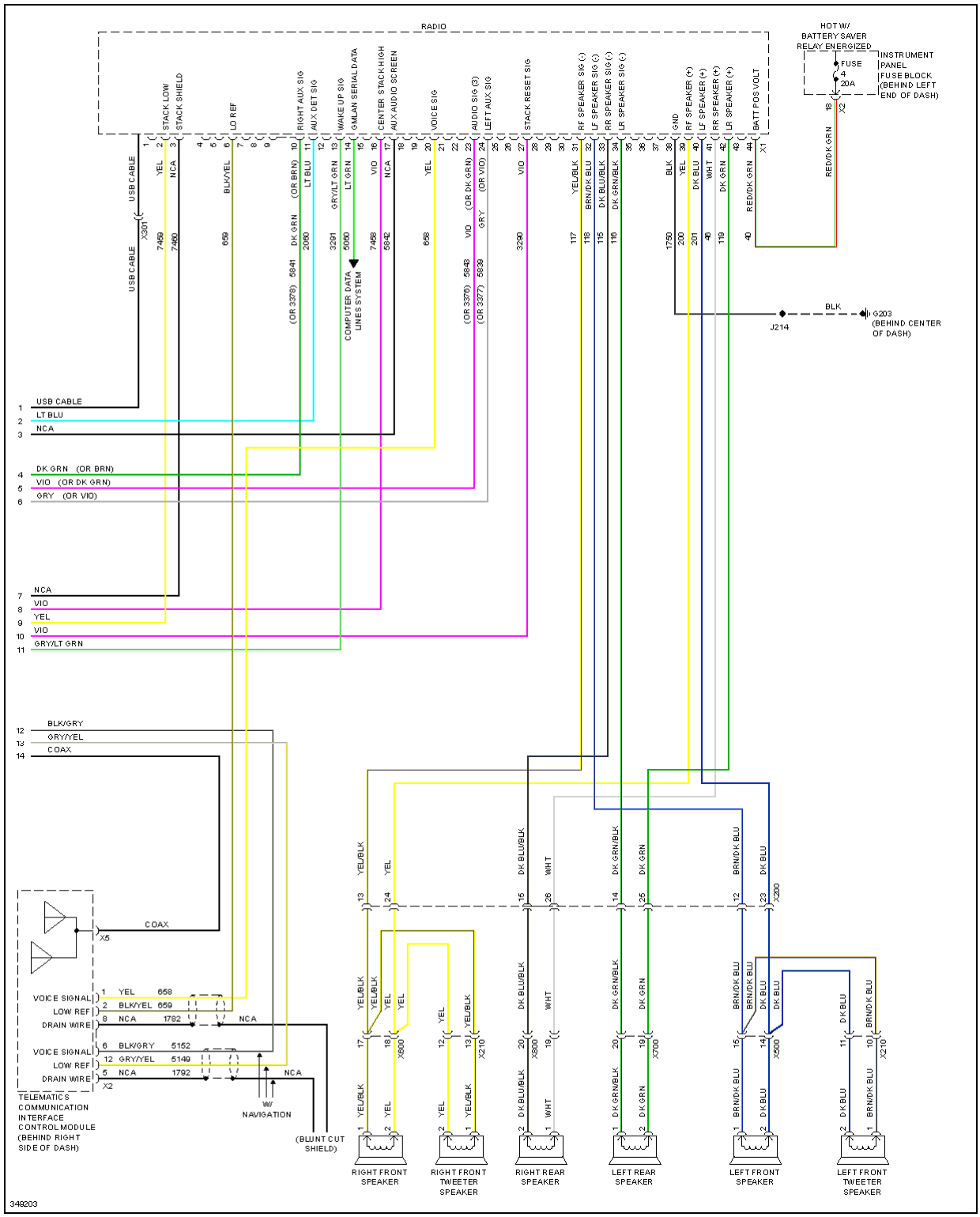

Fig. 65: Radio Circuit, W/O Amplifier (3 of 3)

SHIFT INTERLOCK

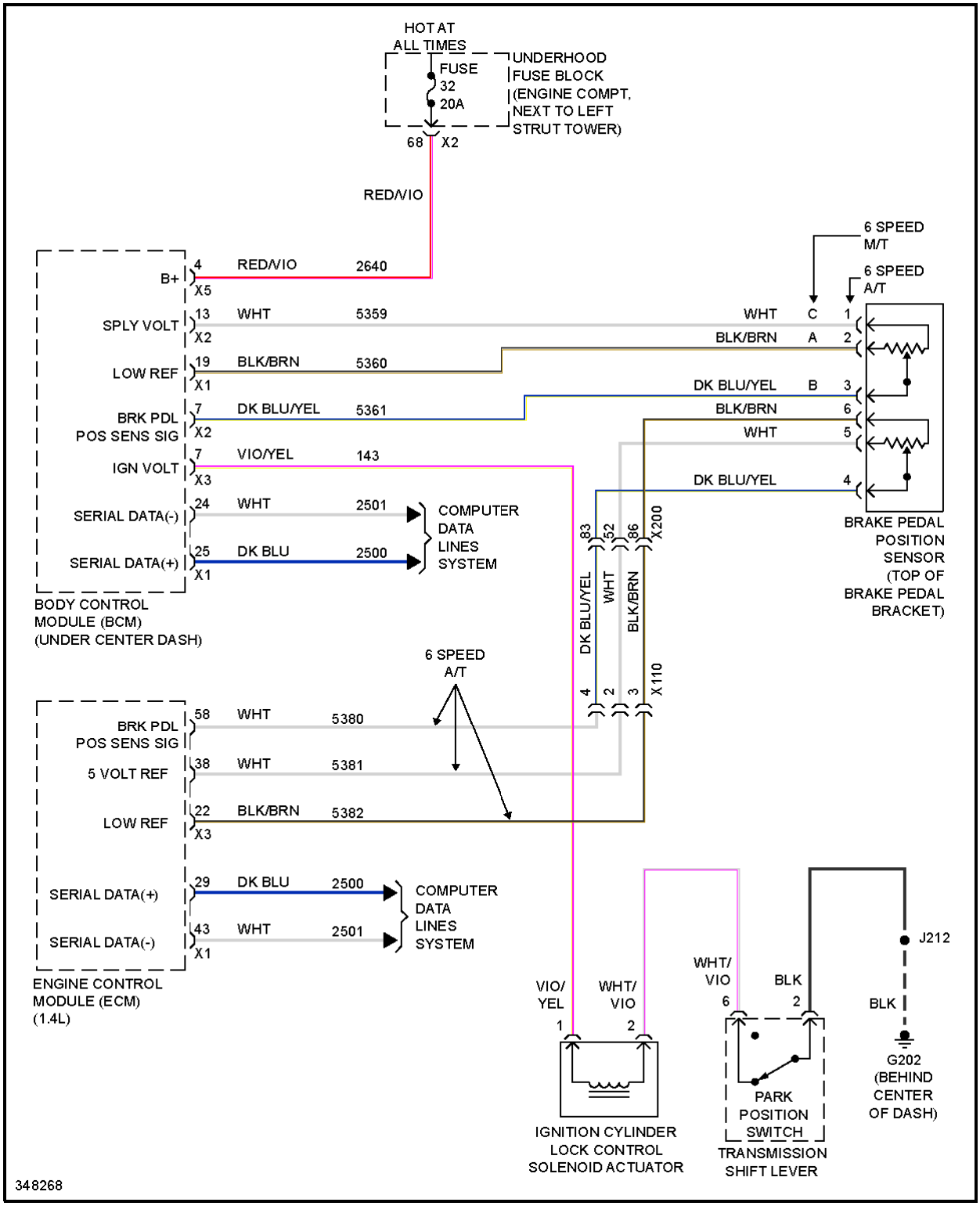

Fig. 66: Ignition Lock Solenoid Circuit

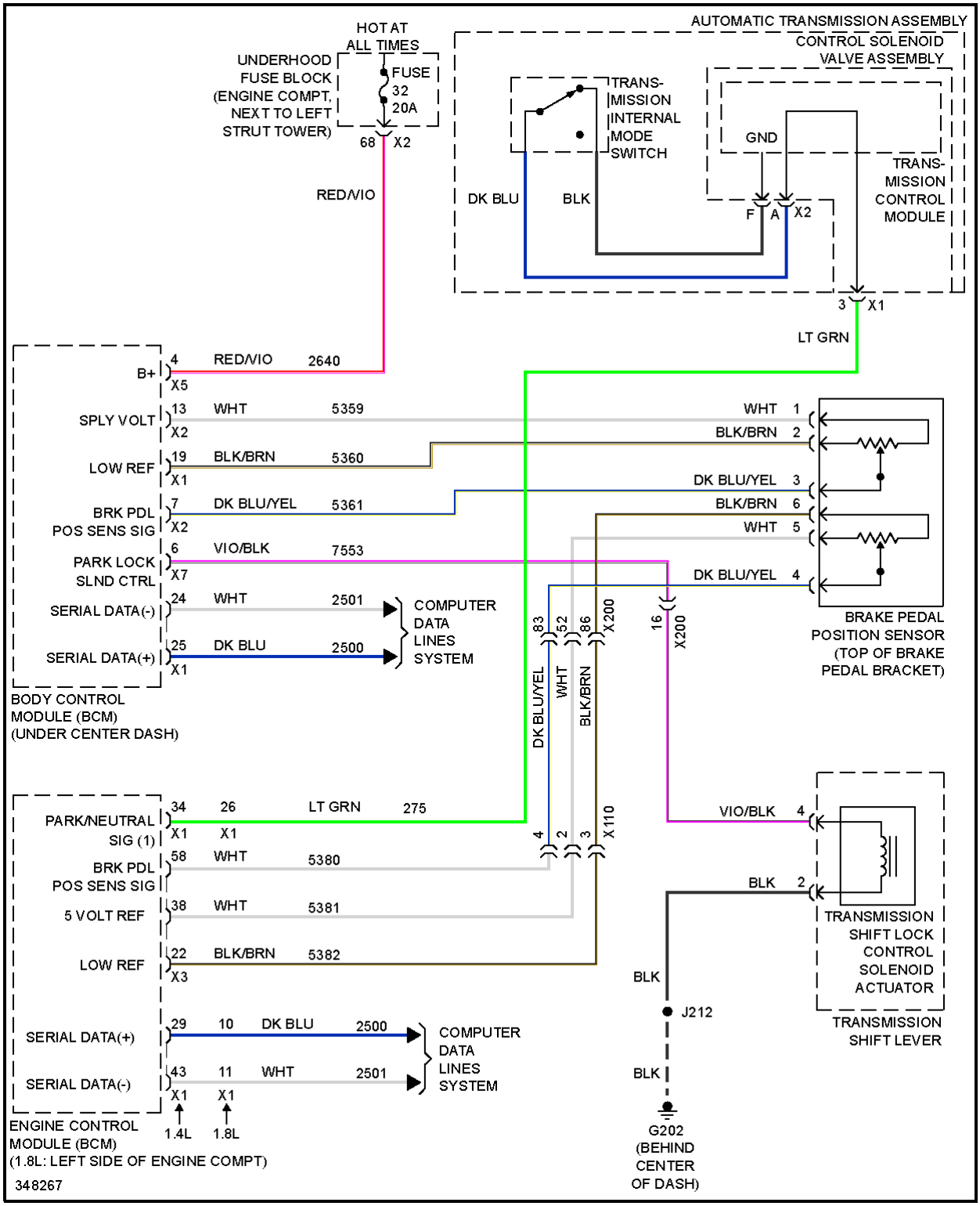

Fig. 67: Shift Interlock Circuit

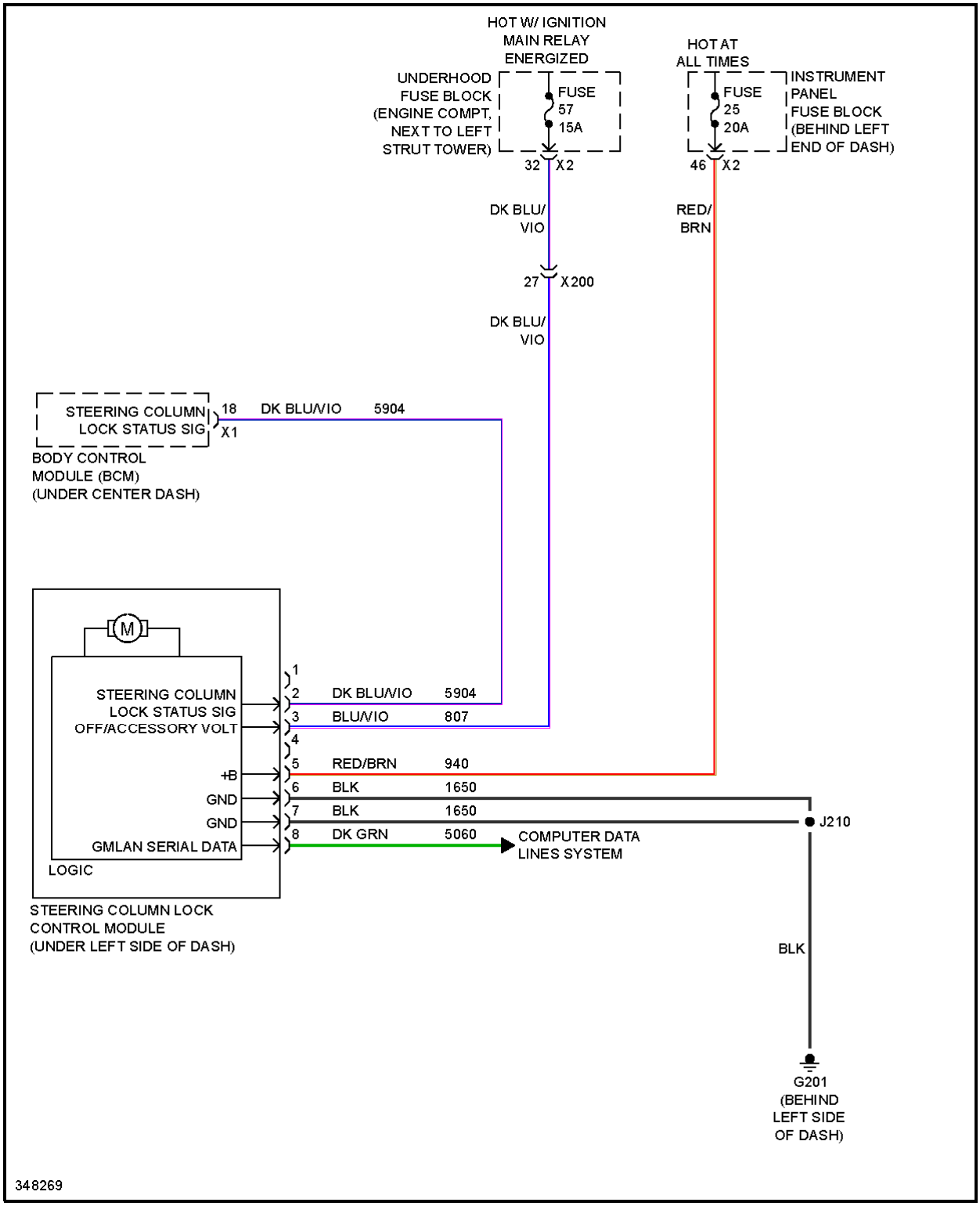

Fig. 68: Steering Lock Circuit

STARTING/CHARGING

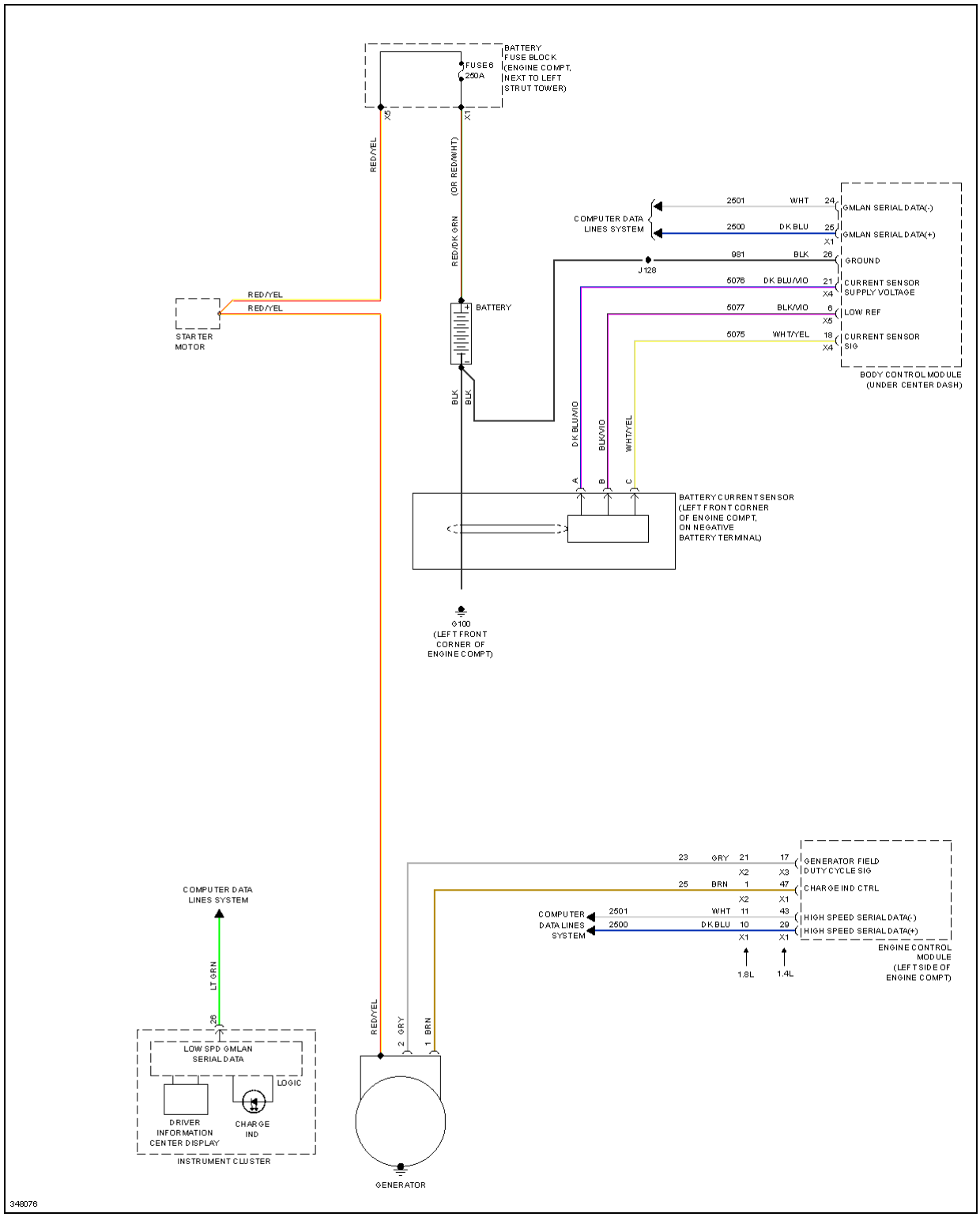

Fig. 69: Charging Circuit

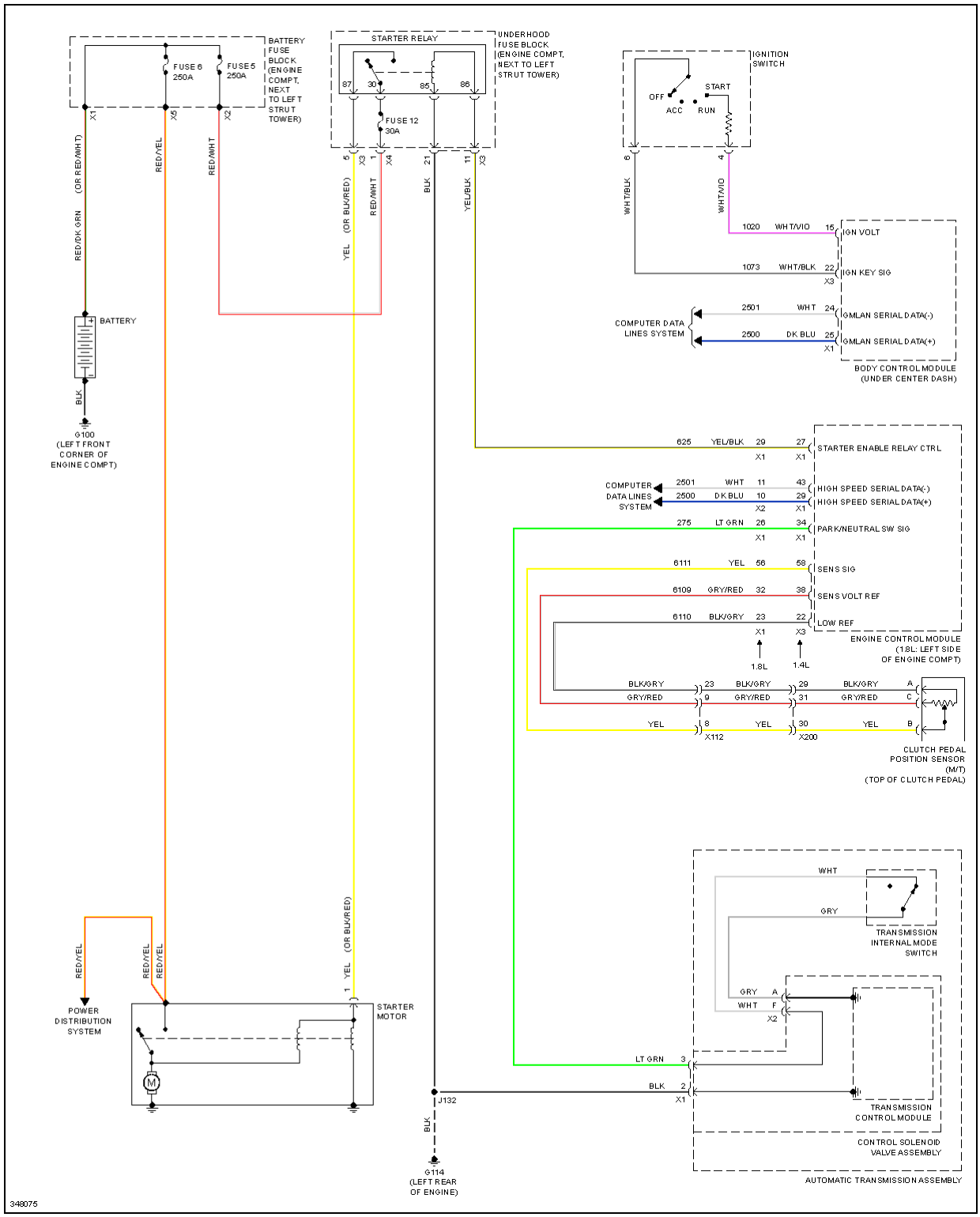

Fig. 70: Starting Circuit

SUPPLEMENTAL RESTRAINTS

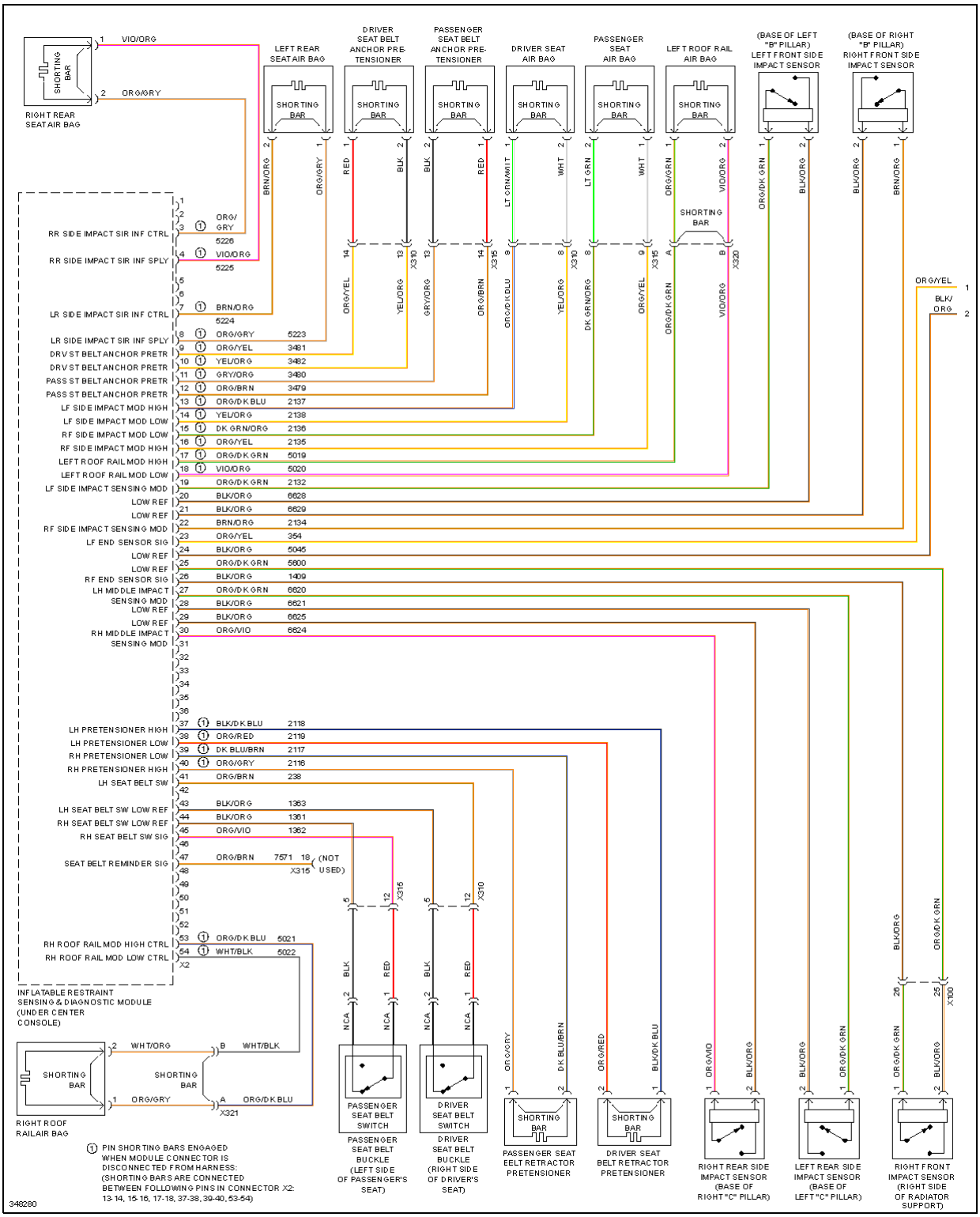

Fig. 71: Supplemental Restraints Circuit (1 of 2)

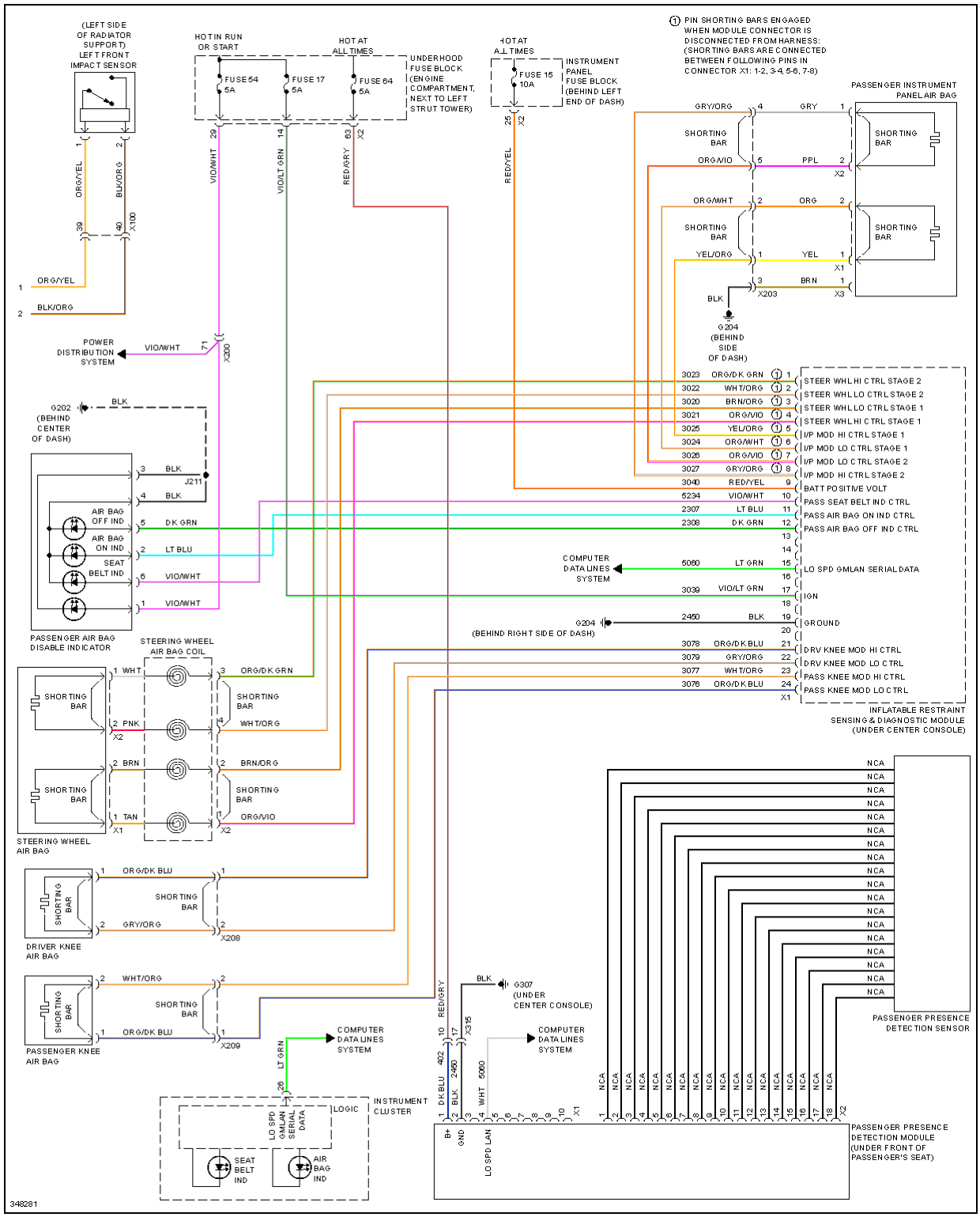

Fig. 72: Supplemental Restraints Circuit (2 of 2)

TRANSMISSION

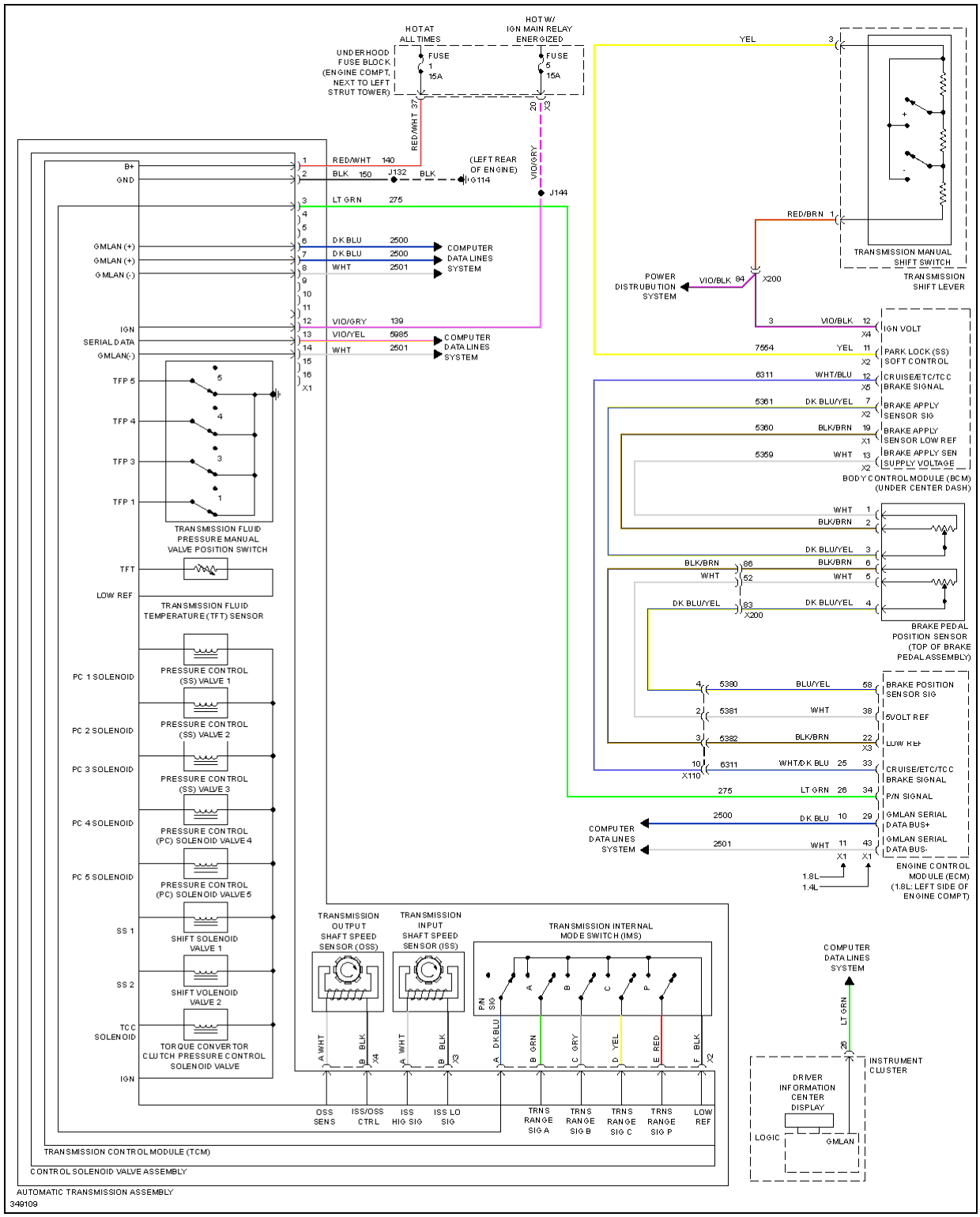

Fig. 73: Transmission Circuit

TRUNK, TAILGATE, FUEL DOOR

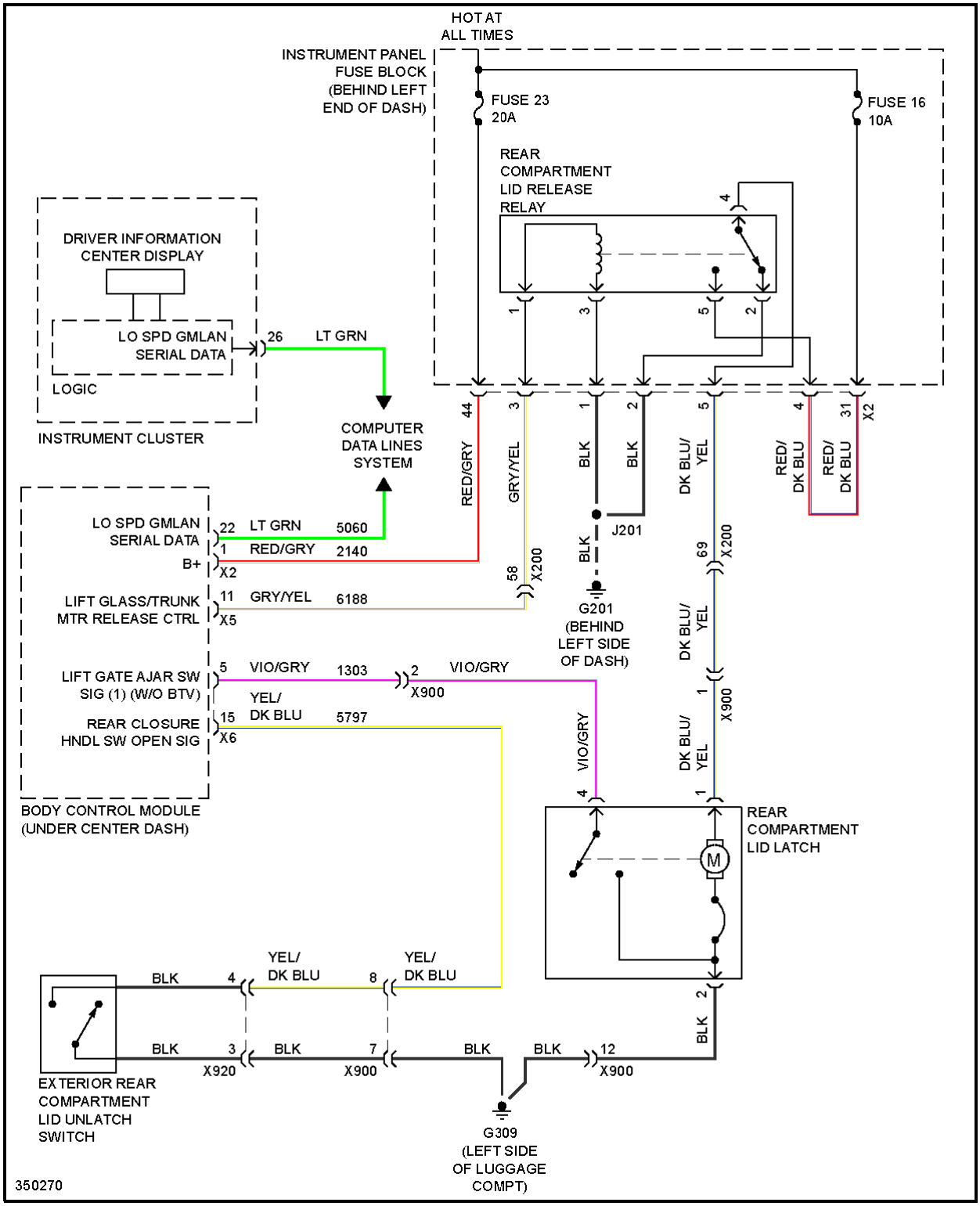

Fig. 74: Trunk Release Circuit

WARNING SYSTEMS

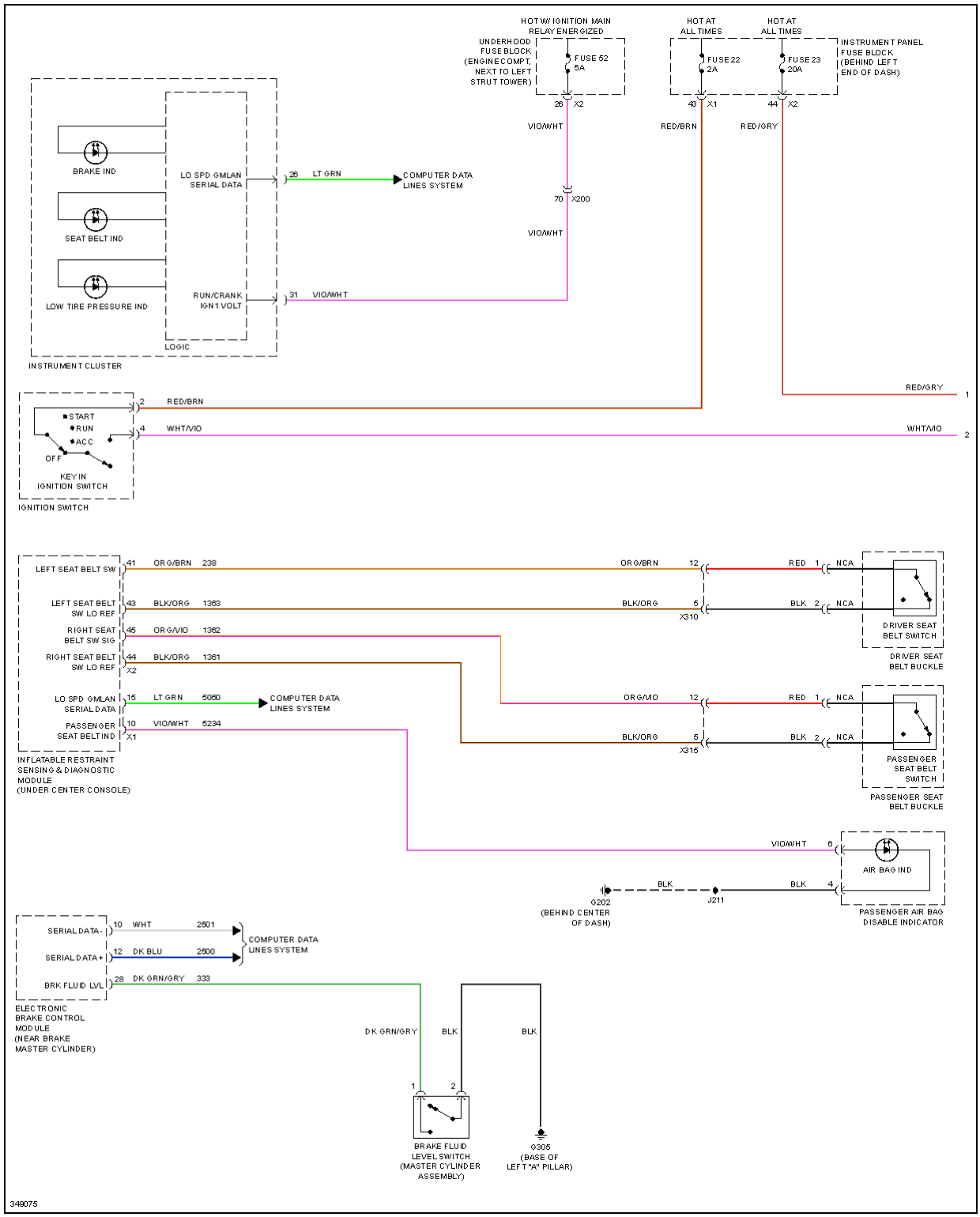

Fig. 75: Warning Systems Circuit (1 of 2)

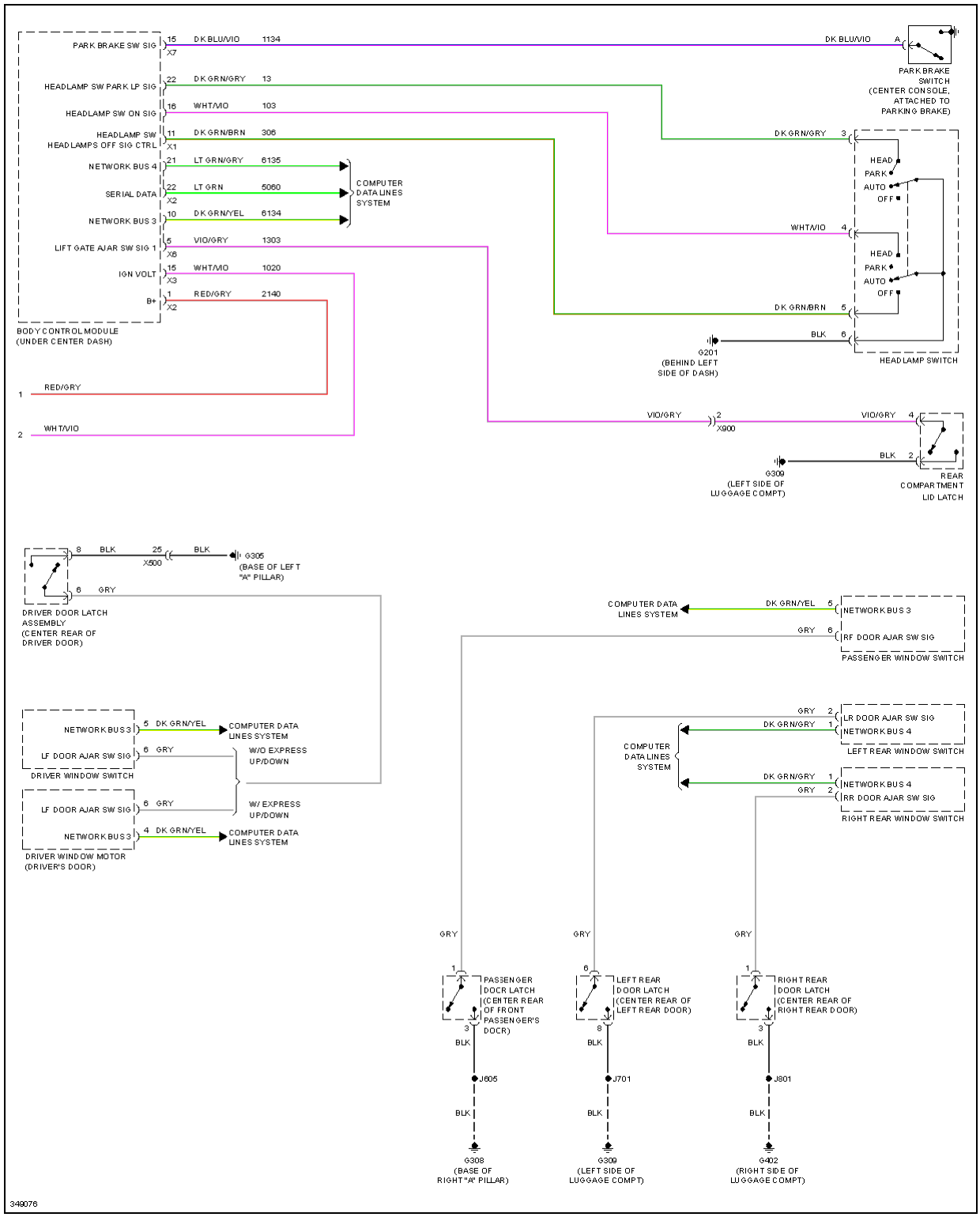

Fig. 76: Warning Systems Circuit (2 of 2)

WIPER/WASHER

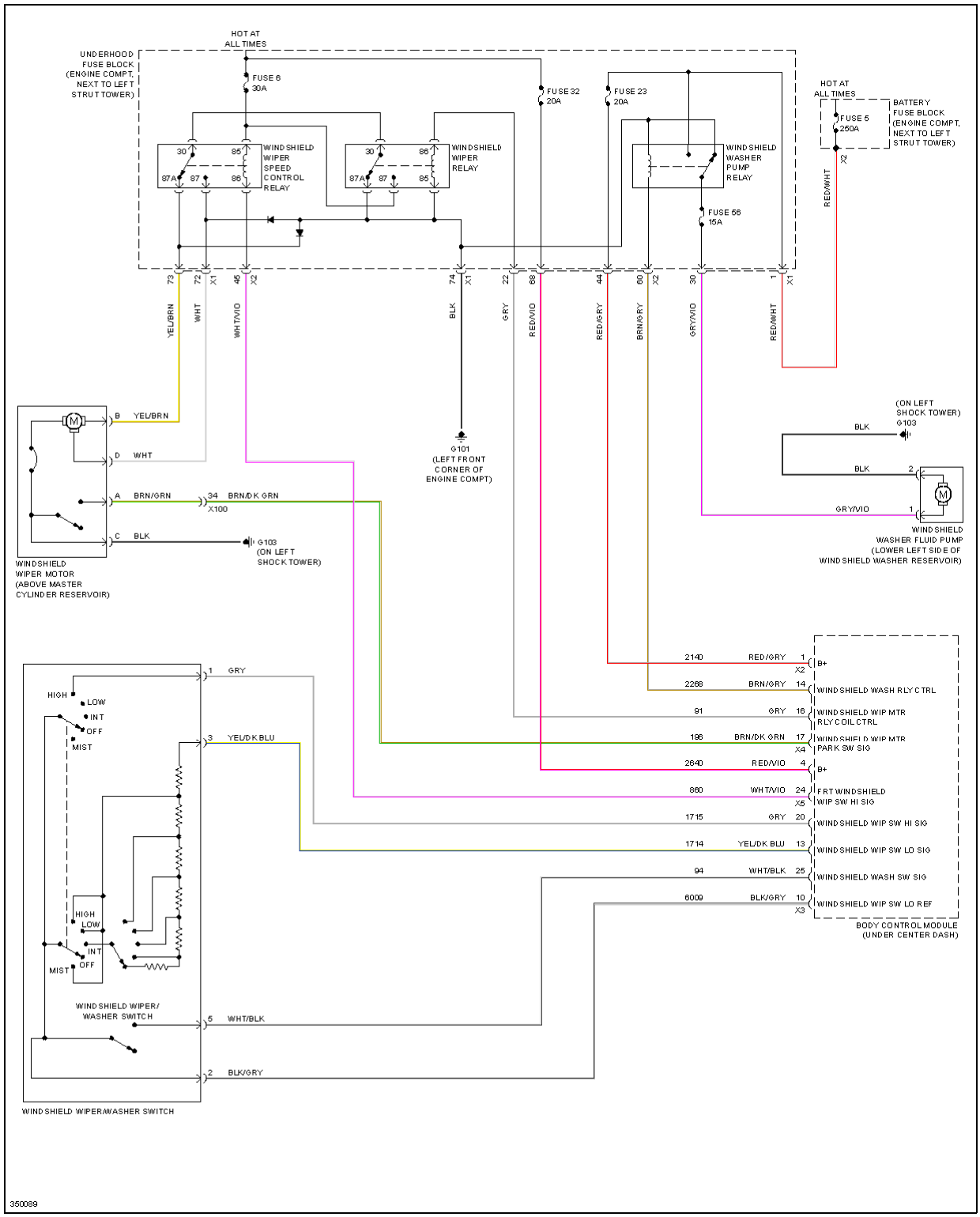

Fig. 77: Wiper/Washer Circuit